ACHSSTPG-P074(056)E

Dist	COUNTY	ROUTE	POST MILES TOTAL PROJECT	SHEET No.	TOTAL SHEETS
08	Riv	74	27.4/27.7	1	58

STATE OF CALIFORNIA
DEPARTMENT OF TRANSPORTATION

PROJECT PLANS FOR CONSTRUCTION ON
STATE HIGHWAY

IN RIVERSIDE COUNTY
IN PERRIS
AT ROUTE 74/215
NORTHBOUND CONNECTOR RAMPS

TO BE SUPPLEMENTED BY STANDARD PLANS DATED MAY 2006

INDEX OF PLANS

SHEET No.	DESCRIPTION
1	TITLE AND LOCATION MAP
2-3	TYPICAL CROSS SECTIONS
4-5	LAYOUTS
6-7	CONSTRUCTION DETAILS
8-9	UTILITY PLANS
10-11	TRAFFIC HANDLING PLANS, DETAILS AND QUANTITIES
12	DETOUR PLAN
13	CONSTRUCTION AREA SIGNS
14-15	PAVEMENT DELINEATION PLANS, DETAILS AND QUANTITIES
16-17	SUMMARY OF QUANTITIES
18-20	SIGN DETAILS AND QUANTITIES
21-28	ELECTRICAL PLANS
29-58	REVISED AND NEW STANDARD PLANS

THE STANDARD PLANS LIST APPLICABLE TO THIS CONTRACT IS INCLUDED IN THE NOTICE TO BIDDERS AND SPECIAL PROVISIONS BOOK.

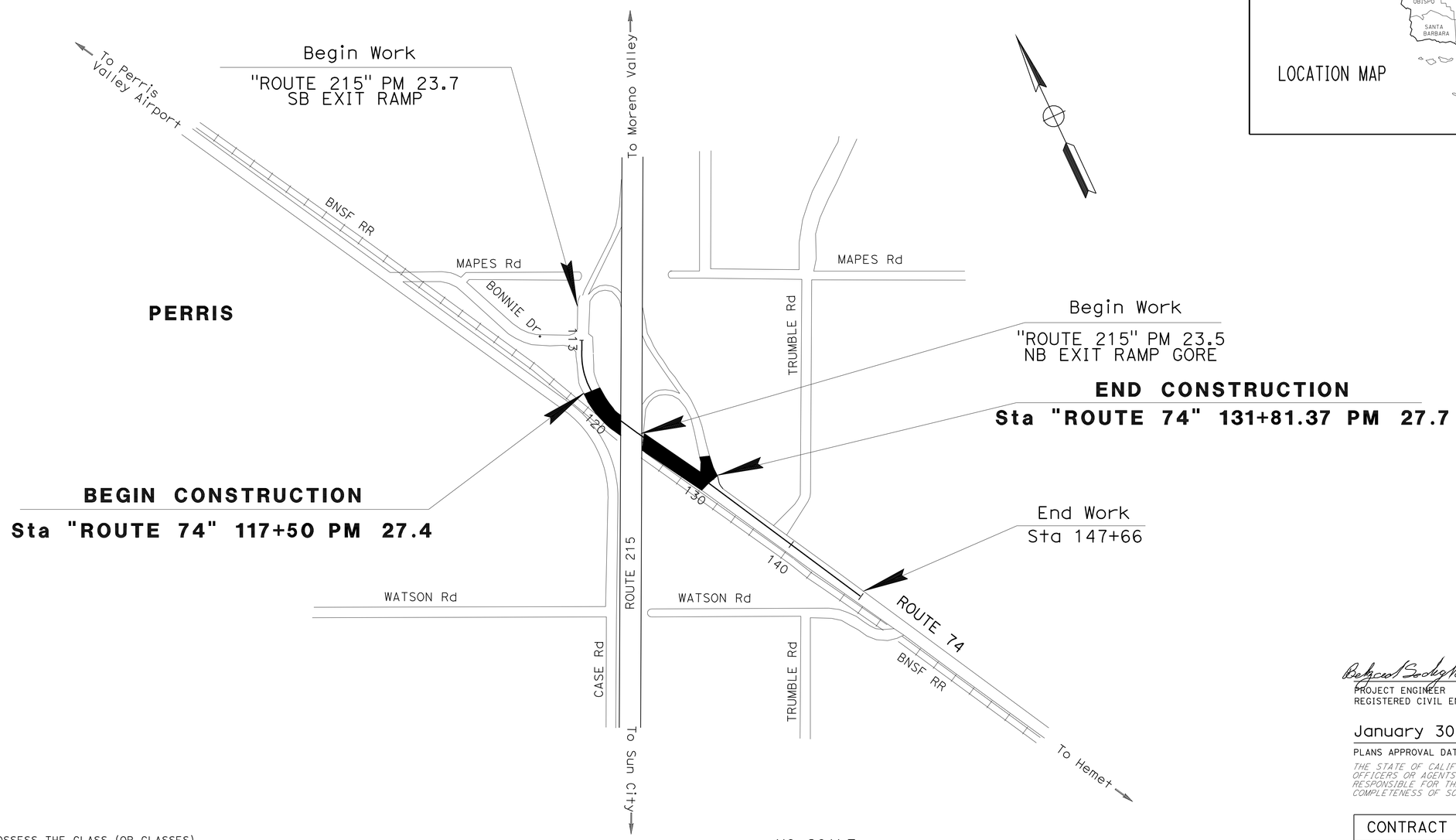

NO SCALE

THE CONTRACTOR SHALL POSSESS THE CLASS (OR CLASSES) OF LICENSE AS SPECIFIED IN THE "NOTICE TO BIDDERS."

PROJECT MANAGER: CHARLES CHEN
DESIGN ENGINEER: MICHELLE TAVAKOLI

Behzad Sedighi 1-23-12
PROJECT ENGINEER DATE
REGISTERED CIVIL ENGINEER

January 30, 2012
PLANS APPROVAL DATE

REGISTERED PROFESSIONAL ENGINEER BEHZAD SEDIGHI No. 50460 Exp. 6/30/13 CIVIL STATE OF CALIFORNIA

THE STATE OF CALIFORNIA OR ITS OFFICERS OR AGENTS SHALL NOT BE RESPONSIBLE FOR THE ACCURACY OR COMPLETENESS OF SCANNED COPIES OF THIS PLAN SHEET.

CONTRACT No.	08-0M8704
PROJECT ID	0800000503

LAST REVISION 01-20-12
DATE PLOTTED => 03-APR-2012
TIME PLOTTED => 14:32

Dist	COUNTY	ROUTE	POST MILES TOTAL PROJECT	SHEET No.	TOTAL SHEETS
08	Riv	74	27.4/27.7	2	58

REGISTERED CIVIL ENGINEER 12-29-11 DATE

1-30-12
PLANS APPROVAL DATE

REGISTERED PROFESSIONAL ENGINEER BEHZAD SEDIGHI No. 50460 Exp. 6/30/13 CIVIL STATE OF CALIFORNIA

THE STATE OF CALIFORNIA OR ITS OFFICERS OR AGENTS SHALL NOT BE RESPONSIBLE FOR THE ACCURACY OR COMPLETENESS OF SCANNED COPIES OF THIS PLAN SHEET.

NOTES:

1. DIMENSIONS OF THE PAVEMENT STRUCTURES (STRUCTURAL SECTIONS) ARE SUBJECT TO TOLERANCES SPECIIFIED IN THE STANDARD SPECIFICATIONS.
2. EXACT LOCATIONS AND TYPES OF DIKE AND CURB ARE SHOWN ON THE LAYOUT AND SUMMARY OF QUANTITIES SHEETS.

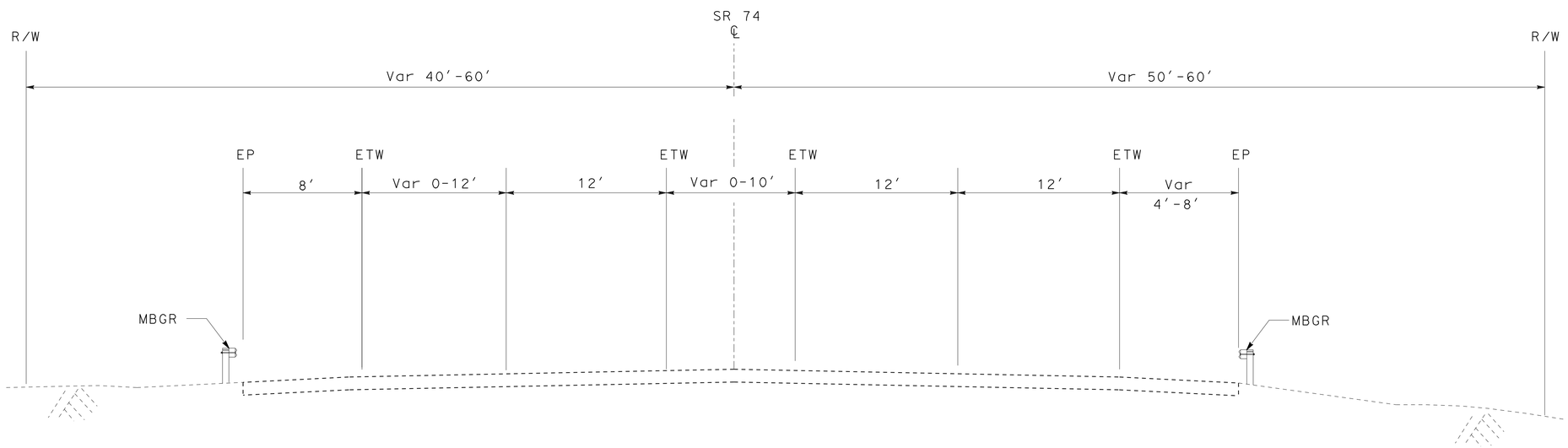

STATE ROUTE 74

Sta 121+00 TO Sta 131+00

TYPICAL CROSS SECTION

NO SCALE

X-1

STATE OF CALIFORNIA - DEPARTMENT OF TRANSPORTATION
Caltrans® TRAFFIC OPERATIONS

FUNCTIONAL SUPERVISOR: BEHZAD SEDIGHI

CALCULATED-DESIGNED BY: MICHELLE TAVAKOLI
CHECKED BY: BEHZAD SEDIGHI

REVISED BY
DATE REVISED

LAST REVISION 12-28-11
DATE PLOTTED => 31-JAN-2012
TIME PLOTTED => 14:48

Dist	COUNTY	ROUTE	POST MILES TOTAL PROJECT	SHEET No.	TOTAL SHEETS
08	Riv	74	27.4/27.7	3	58

REGISTERED CIVIL ENGINEER 12-29-11 DATE

1-30-12
PLANS APPROVAL DATE

REGISTERED PROFESSIONAL ENGINEER BEHZAD SEDIGHI No. 50460 Exp 6/30/13 CIVIL STATE OF CALIFORNIA

THE STATE OF CALIFORNIA OR ITS OFFICERS OR AGENTS SHALL NOT BE RESPONSIBLE FOR THE ACCURACY OR COMPLETENESS OF SCANNED COPIES OF THIS PLAN SHEET.

NOTES:

1. DIMENSIONS OF THE PAVEMENT STRUCTURES (STRUCTURAL SECTIONS) ARE SUBJECT TO TOLERANCES SPECIIFIED IN THE STANDARD SPECIFICATIONS.
2. EXACT LOCATIONS AND TYPES OF DIKE AND CURB ARE SHOWN ON THE LAYOUT AND SUMMARY OF QUANTITIES SHEETS.

LEGEND:

EXISTING ROCK BLANKET

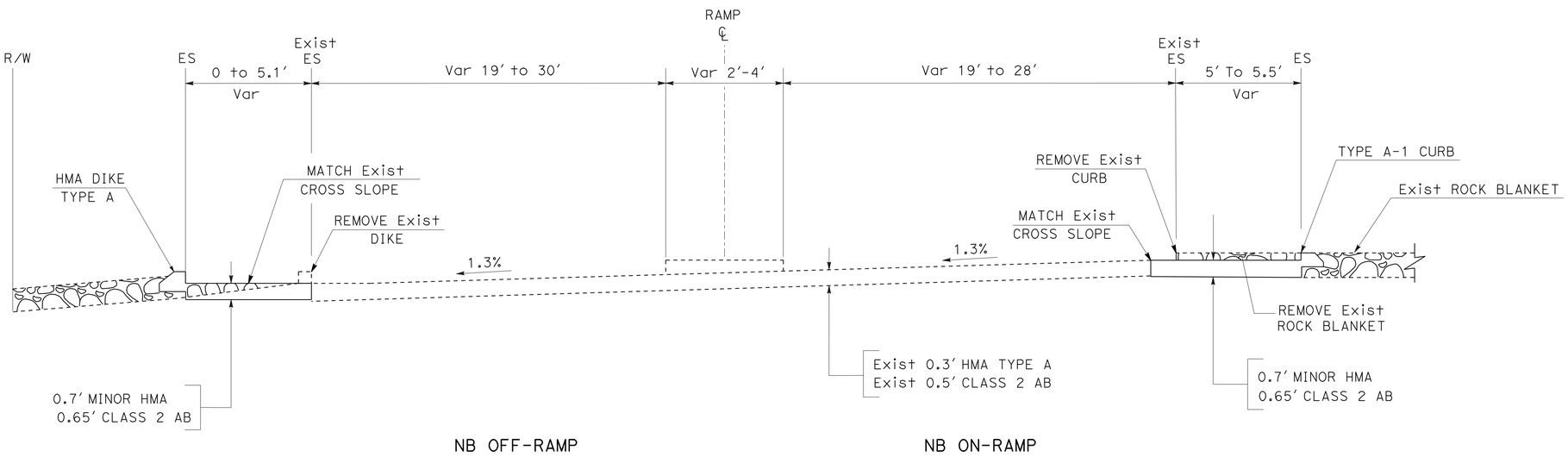

I-215 NORTHBOUND RAMP

TYPICAL CROSS SECTIONS

NO SCALE

X-2

STATE OF CALIFORNIA - DEPARTMENT OF TRANSPORTATION
DESIGN
Caltrans

FUNCTIONAL SUPERVISOR: BEHZAD SEDIGHI
CALCULATED-DESIGNED BY: MICHELLE TAVAKOLI
CHECKED BY: BEHZAD SEDIGHI
REVISED BY
DATE REVISED

LAST REVISION 12-28-11
DATE PLOTTED => 01-FEB-2012
TIME PLOTTED => 09:47

Dist	COUNTY	ROUTE	POST MILES TOTAL PROJECT	SHEET No.	TOTAL SHEETS
08	Riv	74	27.4/27.7	4	58

REGISTERED CIVIL ENGINEER 12-29-11 DATE

1-30-12
PLANS APPROVAL DATE

REGISTERED PROFESSIONAL ENGINEER BEHZAD SEDIGHI No. 50460 Exp. 6/30/13 CIVIL STATE OF CALIFORNIA

THE STATE OF CALIFORNIA OR ITS OFFICERS OR AGENTS SHALL NOT BE RESPONSIBLE FOR THE ACCURACY OR COMPLETENESS OF SCANNED COPIES OF THIS PLAN SHEET.

NOTE:

FOR ACCURATE RIGHT OF WAY DATA, CONTACT RIGHT OF WAY ENGINEERING AT THE DISTRICT OFFICE.

ABBREVIATION:

BNSF - BURLINGTON NORTHERN SANTA FE RAILWAY

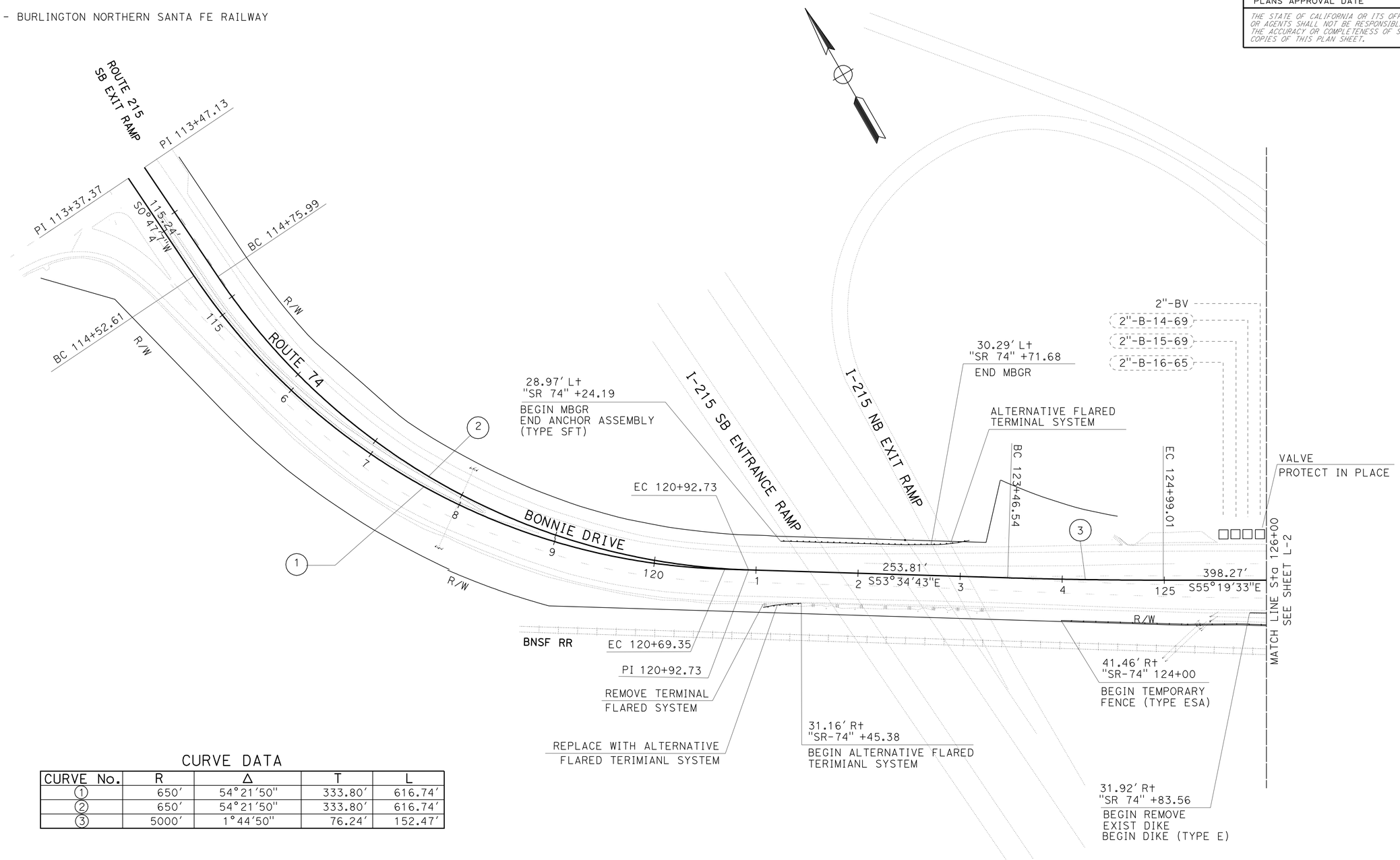

CURVE DATA

CURVE No.	R	Δ	T	L
1	650'	54°21'50"	333.80'	616.74'
2	650'	54°21'50"	333.80'	616.74'
3	5000'	1°44'50"	76.24'	152.47'

LAYOUT

SCALE: 1" = 50'

L-1

STATE OF CALIFORNIA - DEPARTMENT OF TRANSPORTATION
Caltrans
DESIGN

FUNCTIONAL SUPERVISOR: BEHZAD SEDIGHI
CALCULATED-DESIGNED BY: MICHELLE TAVAKOLI
CHECKED BY: BEHZAD SEDIGHI
REVISED BY
DATE REVISED

LAST REVISION 12-28-11
DATE PLOTTED => 06-FEB-2012
TIME PLOTTED => 06:20

Dist	COUNTY	LOCATION CODE	POST MILES TOTAL PROJECT	SHEET No.	TOTAL SHEETS
08	Riv	74	27.4/27.7	5	58

REGISTERED CIVIL ENGINEER 12-29-11 DATE

1-30-12
PLANS APPROVAL DATE

REGISTERED PROFESSIONAL ENGINEER BEHZAD SEDIGHI No. 50460 Exp 6/30/13 CIVIL STATE OF CALIFORNIA

THE STATE OF CALIFORNIA OR ITS OFFICERS OR AGENTS SHALL NOT BE RESPONSIBLE FOR THE ACCURACY OR COMPLETENESS OF SCANNED COPIES OF THIS PLAN SHEET.

NOTES:

1. FOR ACCURATE RIGHT OF WAY DATA, CONTACT RIGHT OF WAY ENGINEERING AT THE DISTRICT OFFICE.
2. FOR REMOVE CURB AND ROCK BLANKET, SEE CONSTRUCTION DETAILS.

LEGEND:

EXISTING ROCK BLANKET

REMOVE CURB AND ROCK BLANKET

CURVE DATA

CURVE No.	R	Δ	T	L
4	5000′	1°59′54″	87.20′	174.38′

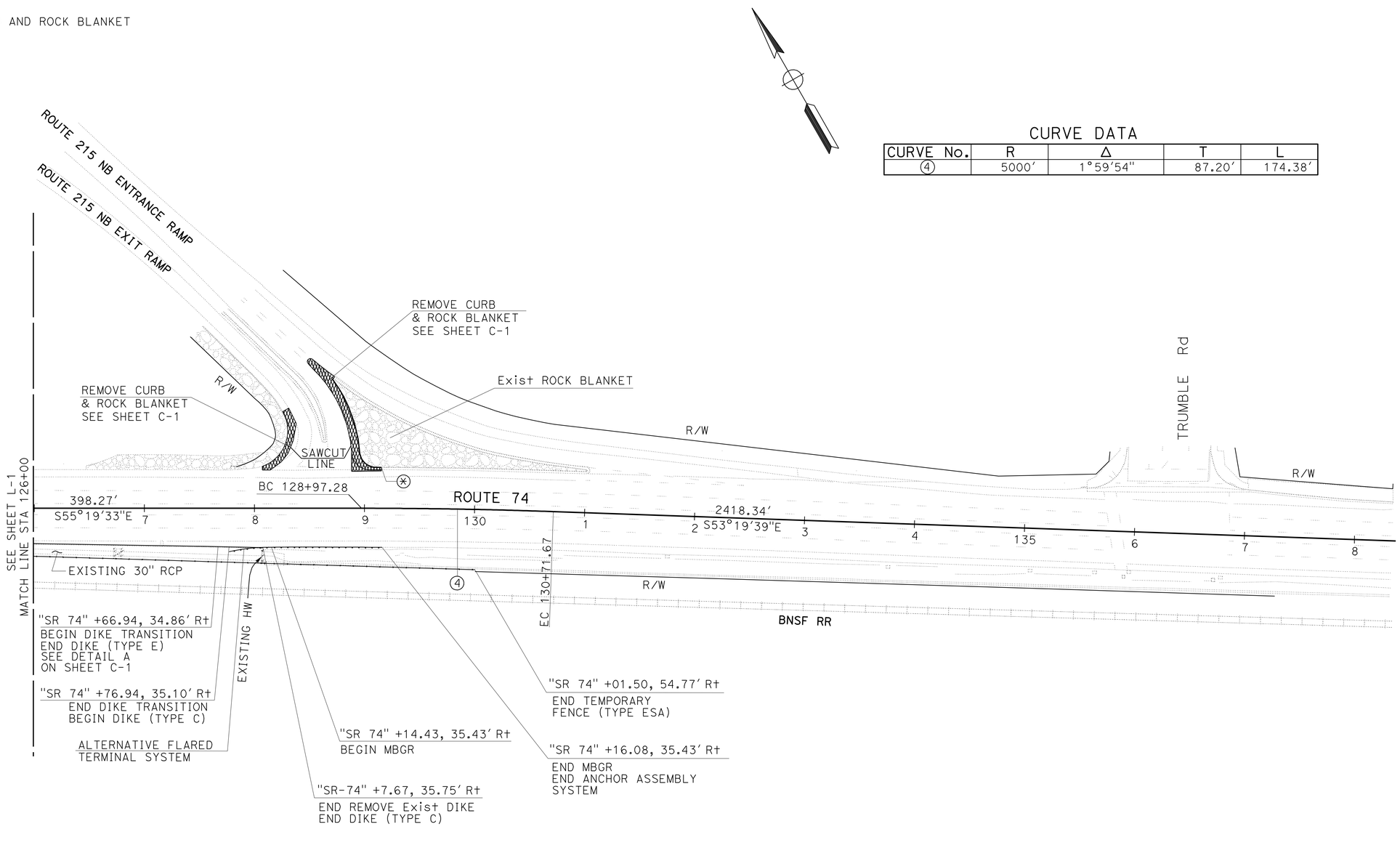

LAYOUT

SCALE: 1" = 50′ **L-2**

STATE OF CALIFORNIA - DEPARTMENT OF TRANSPORTATION
Caltrans®
DESIGN

FUNCTIONAL SUPERVISOR: BEHZAD SEDIGHI
CALCULATED-DESIGNED BY: MICHELLE TAVAKOLI
CHECKED BY: BEHZAD SEDIGHI
REVISED BY
DATE REVISED

LAST REVISION 12-28-11
DATE PLOTTED => 06-FEB-2012
TIME PLOTTED => 06:20

Dist	COUNTY	LOCATION CODE	POST MILES TOTAL PROJECT	SHEET No.	TOTAL SHEETS
08	Riv	74	27.4/27.7	6	58

Behzad Sedighi 01-23-11
REGISTERED CIVIL ENGINEER DATE

1-30-12
PLANS APPROVAL DATE

REGISTERED PROFESSIONAL ENGINEER
BEHZAD SEDIGHI
No. 50460
Exp. 6/30/13
CIVIL
STATE OF CALIFORNIA

THE STATE OF CALIFORNIA OR ITS OFFICERS OR AGENTS SHALL NOT BE RESPONSIBLE FOR THE ACCURACY OR COMPLETENESS OF SCANNED COPIES OF THIS PLAN SHEET.

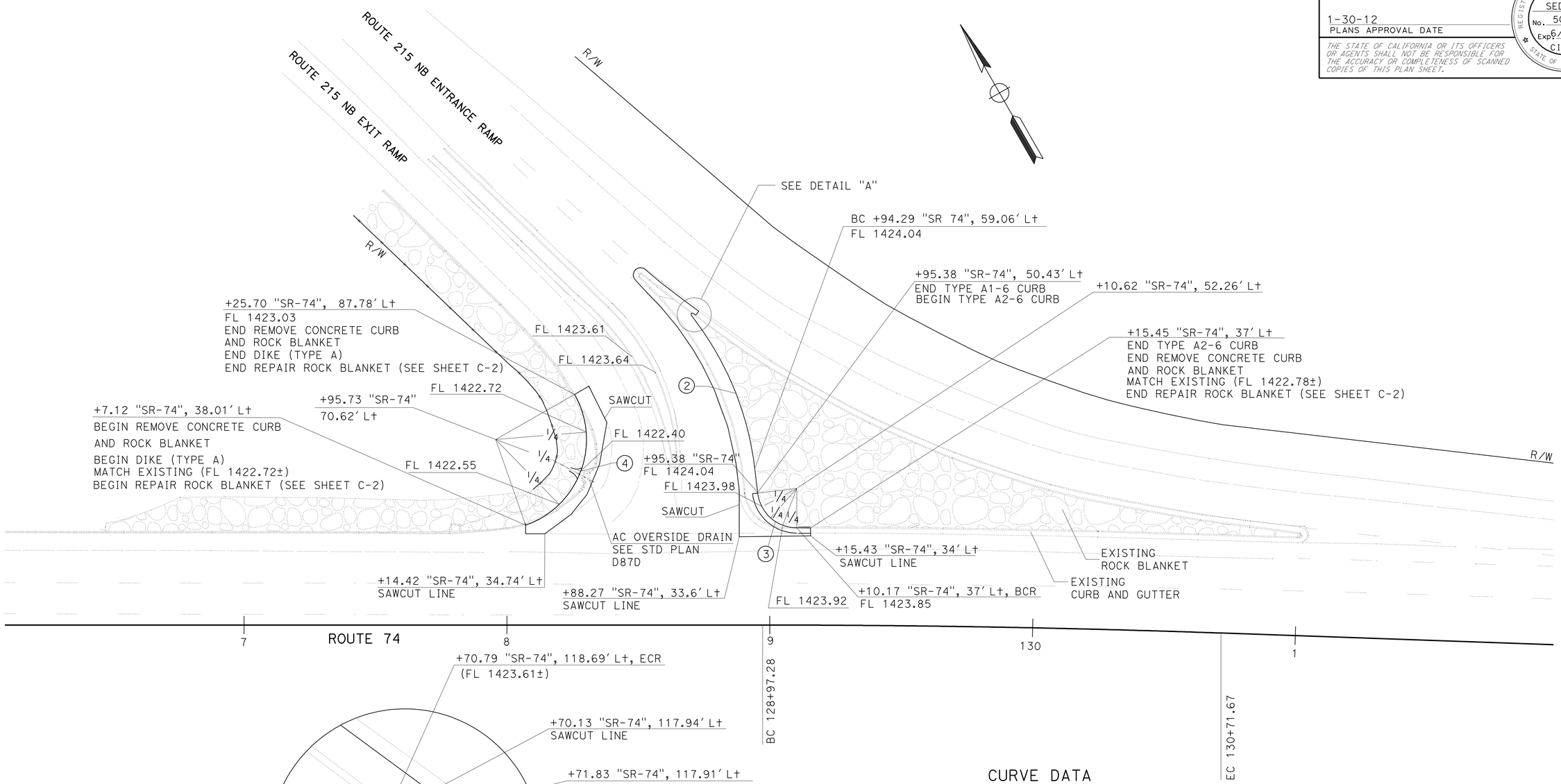

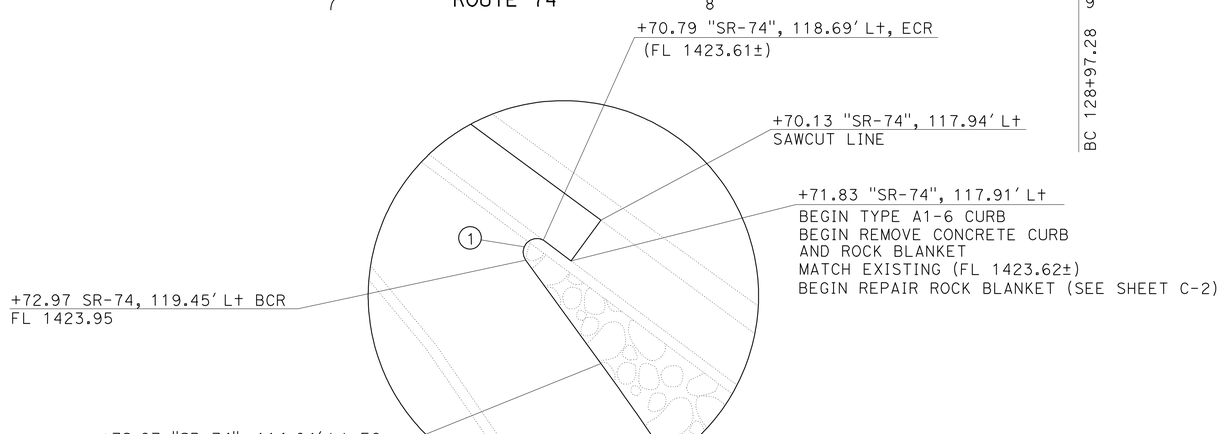

DETAIL "A"

CURVE DATA

CURVE No.	R	Δ	T	L
1	1'	154°46'54"	2.30'	1.39'
2	116'	29°14'47"	30.21'	59.11'
3	15'	83°59'54"	13.82'	22.50'
4	35'	100°32'25"	41.56'	60.61'

CONSTRUCTION DETAILS

SCALE: 1" = 20'

C-1

STATE OF CALIFORNIA - DEPARTMENT OF TRANSPORTATION
Caltrans
DESIGN

FUNCTIONAL SUPERVISOR: BEHZAD SEDIGHI
CALCULATED-DESIGNED BY: MICHELLE TAVAKOLI
CHECKED BY: BEHZAD SEDIGHI
REVISED BY
DATE REVISED

LAST REVISION 01-20-12
DATE PLOTTED => 06-FEB-2012
TIME PLOTTED => 06:20

Dist	COUNTY	ROUTE	POST MILES TOTAL PROJECT	SHEET No.	TOTAL SHEETS
08	Riv	74	27.4/27.7	7	58

REGISTERED CIVIL ENGINEER 12-29-11 DATE

1-30-12
PLANS APPROVAL DATE

REGISTERED PROFESSIONAL ENGINEER BEHZAD SEDIGHI No. 50460 Exp. 6/30/13 CIVIL STATE OF CALIFORNIA

THE STATE OF CALIFORNIA OR ITS OFFICERS OR AGENTS SHALL NOT BE RESPONSIBLE FOR THE ACCURACY OR COMPLETENESS OF SCANNED COPIES OF THIS PLAN SHEET.

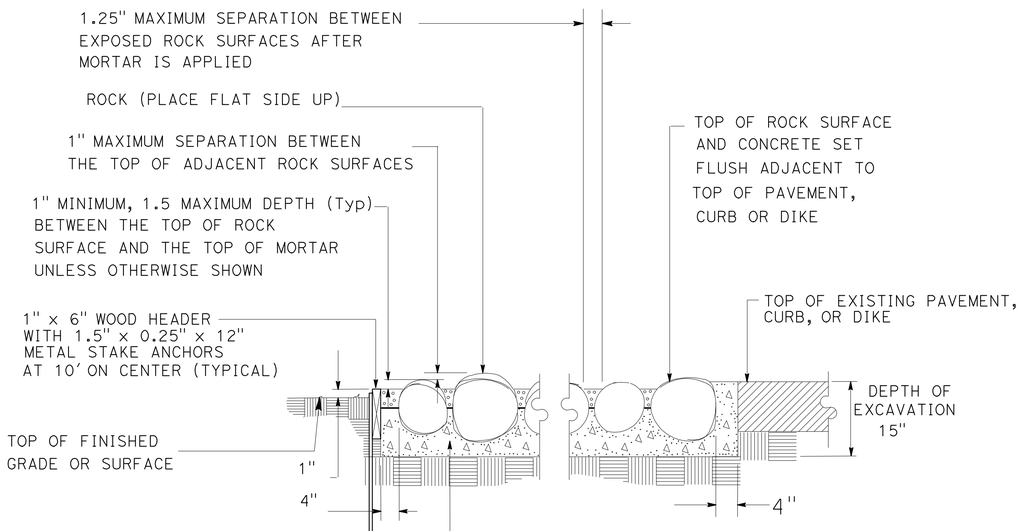

TYPE 1 ROCK BLANKET DETAIL

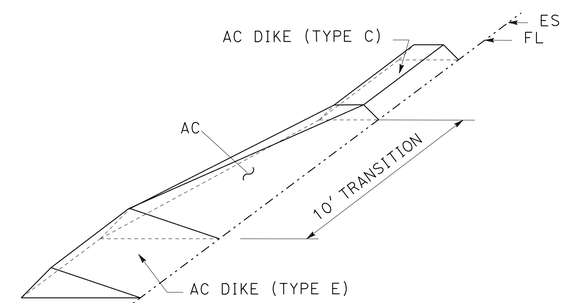

HMA DIKE TRANSITIONS

DETAIL A

CONSTRUCTION DETAILS

NO SCALE

C-2

STATE OF CALIFORNIA - DEPARTMENT OF TRANSPORTATION
Caltrans
DESIGN

FUNCTIONAL SUPERVISOR: BEHZAD SEDIGHI
CALCULATED-DESIGNED BY: MICHELLE TAVAKOLI
CHECKED BY: BEHZAD SEDIGHI
REVISED BY
DATE REVISED

LAST REVISION 12-28-11
DATE PLOTTED => 01-FEB-2012
TIME PLOTTED => 12:52

Dist	COUNTY	ROUTE	POST MILES TOTAL PROJECT	SHEET No.	TOTAL SHEETS
08	Riv	74	27.4/27.7	8	58

REGISTERED CIVIL ENGINEER 2-06-12 DATE

1-30-12
PLANS APPROVAL DATE

REGISTERED PROFESSIONAL ENGINEER BEHZAD SEDIGHI No. 50460 Exp. 6/30/13 CIVIL STATE OF CALIFORNIA

THE STATE OF CALIFORNIA OR ITS OFFICERS OR AGENTS SHALL NOT BE RESPONSIBLE FOR THE ACCURACY OR COMPLETENESS OF SCANNED COPIES OF THIS PLAN SHEET.

POTHOLE TABLE

POTHOLE No.	EXISTING UTILITIES	Sta	OFFSET	OG Elev	DEPTH	REMARKS
PH1	VERIZON LINE	118+56.83	32.03' Rt	1424.33	15'	NO UTILITY WAS LOCATED AT THIS DEPTH

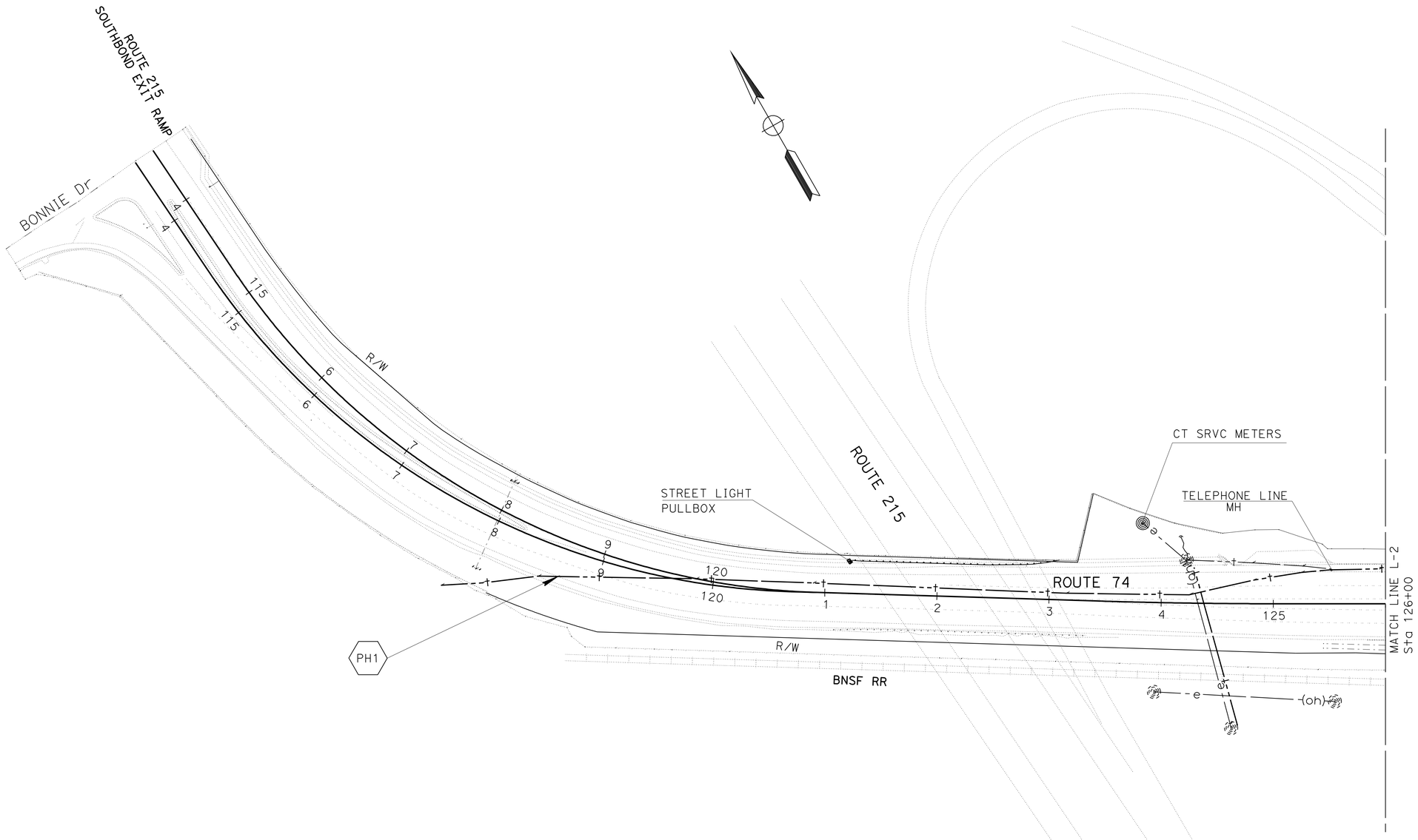

UTILITY PLAN

SCALE: 1" = 50' **U-1**

STATE OF CALIFORNIA - DEPARTMENT OF TRANSPORTATION
Caltrans
DESIGN

FUNCTIONAL SUPERVISOR: BEHZAD SEDIGHI
CALCULATED-DESIGNED BY: MICHELLE TAVAKOLI
CHECKED BY: BEHZAD SEDIGHI
REVISED BY
DATE REVISED

LAST REVISION 02-06-12
DATE PLOTTED => 07-FEB-2012
TIME PLOTTED => 10:35

Dist	COUNTY	ROUTE	POST MILES TOTAL PROJECT	SHEET No.	TOTAL SHEETS
08	Riv	74	27.4/27.7	9	58

REGISTERED CIVIL ENGINEER 2-06-12 DATE

1-30-12
PLANS APPROVAL DATE

REGISTERED PROFESSIONAL ENGINEER BEHZAD SEDIGHI No. 50460 Exp. 6/30/13 CIVIL STATE OF CALIFORNIA

THE STATE OF CALIFORNIA OR ITS OFFICERS OR AGENTS SHALL NOT BE RESPONSIBLE FOR THE ACCURACY OR COMPLETENESS OF SCANNED COPIES OF THIS PLAN SHEET.

POTHOLE TABLE

POTHOLE No.	EXISTING UTILITIES	Sta	OFFSET	OG Elev	DEPTH	REMARKS
PH2	ENCASEMENT TELEPHONE LINE	127+87.54	29.13′ Lt	1423.24	7.73′	
PH3	ENCASEMENT TELEPHONE LINE	127+14.79	30.68′ Lt	1422.49	6.81′	
PH4	ENCASEMENT TELEPHONE LINE	128+92.12	39.31′ Lt	1423.98	7.6′	
PH5	ENCASEMENT TELEPHONE LINE	130+04.73	74.60′ Lt	1421.32	4.89′	
PH6	SEWER MANHOLE	127+15.93	32.50′ Rt	1422.60	6.80′	DEPTH IS TO FLOW LINE
PH7	SEWER MANHOLE	131+64.57	40.52′ Rt	1420.85	6.49′	DEPTH IS TO FLOW LINE

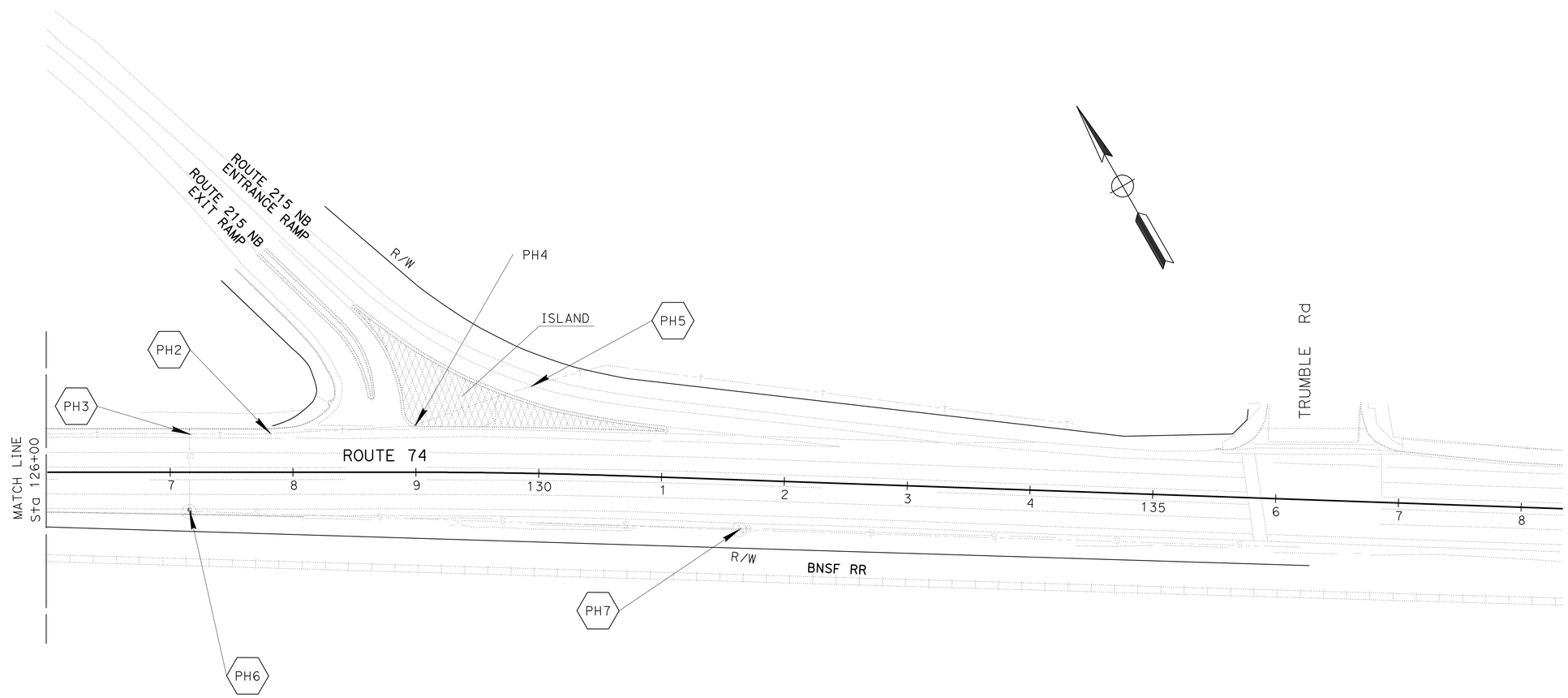

UTILITY PLAN

SCALE: 1" = 50′ **U-2**

STATE OF CALIFORNIA - DEPARTMENT OF TRANSPORTATION
Caltrans® **DESIGN**

FUNCTIONAL SUPERVISOR: BEHZAD SEDIGHI
CALCULATED-DESIGNED BY: MICHELLE TAVAKOLI
CHECKED BY: BEHZAD SEDIGHI
REVISED BY
DATE REVISED

LAST REVISION 02-06-12 | DATE PLOTTED => 07-FEB-2012 | TIME PLOTTED => 10:35

Dist	COUNTY	ROUTE	POST MILES TOTAL PROJECT	SHEET No.	TOTAL SHEETS
08	Riv	74	27.4/27.7	10	58

REGISTERED CIVIL ENGINEER — DATE 12-29-11

1-30-12
PLANS APPROVAL DATE

REGISTERED PROFESSIONAL ENGINEER — TRAN HOANG No. 54996 Exp. 6/30/12 CIVIL — STATE OF CALIFORNIA

THE STATE OF CALIFORNIA OR ITS OFFICERS OR AGENTS SHALL NOT BE RESPONSIBLE FOR THE ACCURACY OR COMPLETENESS OF SCANNED COPIES OF THIS PLAN SHEET.

NOTES:

1. FLASHING ARROW SIGN SHALL BE EITHER TYPE I OR TYPE II AND BE OPERATING AT ALL TIMES.
2. LOCATIONS OF THE PCMS WILL BE DETERMINED BY THE ENGINEER IN THE FIELD.
3. REFER TO STANDARD PLANS T11, T13, AND T14 FOR TRAFFIC CONTROL DURING WORK PERIODS.
4. REMOVE TEMPORARY PAINTED PAVEMENT MARKINGS WHEN NO LONGER NEEDED.

LEGEND:

- CHANNELIZER AT 10′ SPACING ON CENTER (OR AS NOTED)
- CONSTRUCTION AREA
- CONSTRUCTION AREA SIGN (ONE POST)
- DIRECTION OF TRAVEL
- PORTABLE CHANGEABLE MESSAGE SIGN (PCMS)
- PORTABLE FLASHING BEACON
- PORTABLE SIGN ON TYPE II BARRICADE

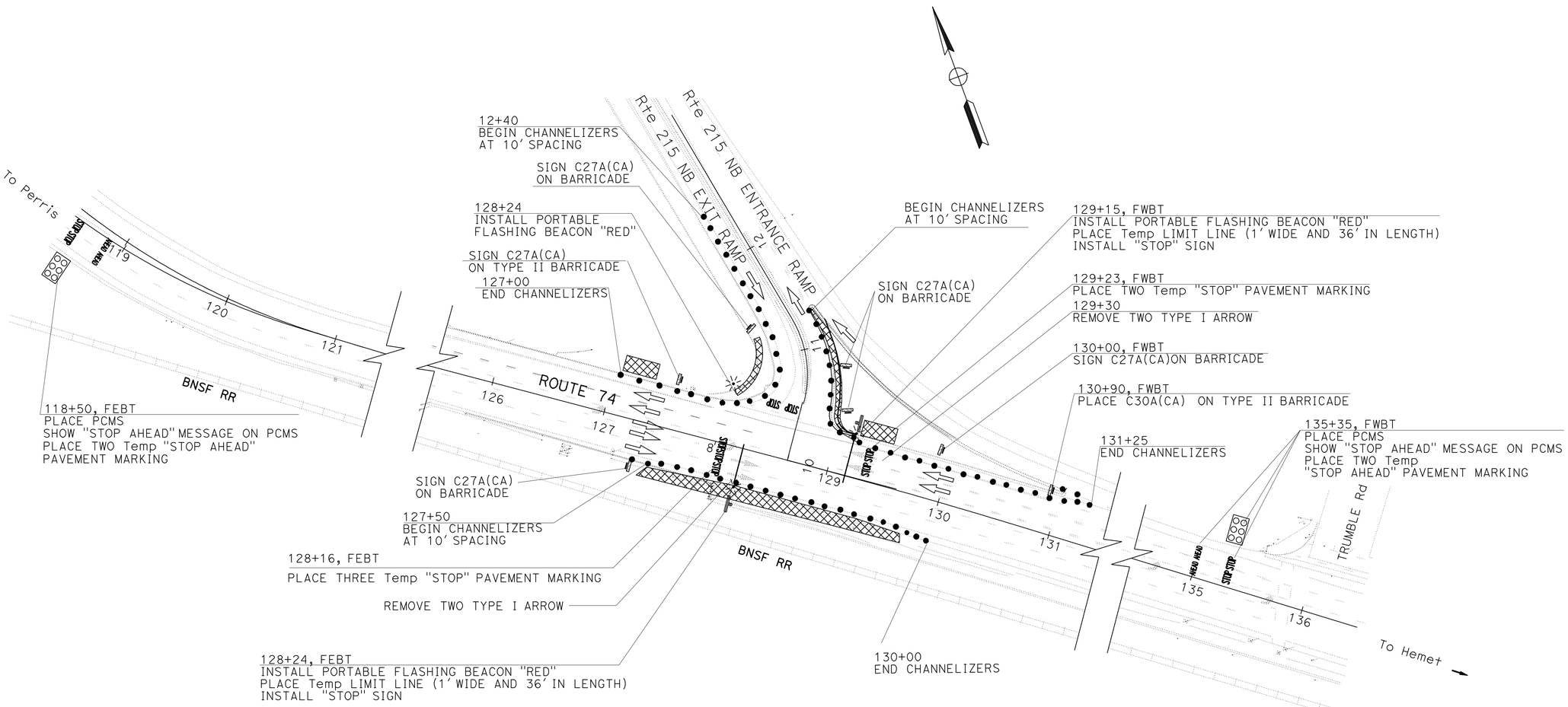

TRAFFIC HANDLING AT INTERSECTION

Rte 74 and Rte 215 Exit

APPROVED FOR TRAFFIC HANDLING WORK ONLY

TRAFFIC HANDLING PLAN

NO SCALE **TH-1**

STATE OF CALIFORNIA - DEPARTMENT OF TRANSPORTATION
Caltrans® **TRAFFIC DESIGN**

FUNCTIONAL SUPERVISOR: W.E.WASSER
CALCULATED-DESIGNED BY: DARYUSH NAMI
CHECKED BY: TRAN HOANG
REVISED BY / DATE REVISED

LAST REVISION 12-28-11 | DATE PLOTTED => 06-FEB-2012 | TIME PLOTTED => 06:20

Dist	COUNTY	ROUTE	POST MILES TOTAL PROJECT	SHEET No.	TOTAL SHEETS
08	Riv	74	27.4/27.7	11	58

REGISTERED CIVIL ENGINEER DATE 12-29-11

1-30-12
PLANS APPROVAL DATE

REGISTERED PROFESSIONAL ENGINEER TRAN HOANG No. 54996 Exp. 6/30/12 CIVIL STATE OF CALIFORNIA

THE STATE OF CALIFORNIA OR ITS OFFICERS OR AGENTS SHALL NOT BE RESPONSIBLE FOR THE ACCURACY OR COMPLETENESS OF SCANNED COPIES OF THIS PLAN SHEET.

NOTE:

1. REFER TO STANDARD PLANS T11, T13, AND T14 FOR TRAFFIC CONTROL DURING WORK PERIODS.

TRAFFIC HANDLING QUANTITIES

SHEET NUMBER	(N) STOP SIGN	FLASHING BEACON (PORTABLE)	PORTABLE CHANGEABLE MESSAGE SIGN	TYPE II BARRICADE	CHANNELIZER (SURFACE MOUNTED)	TEMPORARY PAVEMENT MARKING (PAINT)			REMOVE PAINTED PAVEMENT MARKING		
	EA	EA	EA	EA	EA	9 EA "STOP"	4 EA "AHEAD"	LIMIT LINE	9 EA "STOP"	4 EA "AHEAD"	LIMIT LINE
						SQFT	SQFT	SQFT	SQFT	SQFT	SQFT
TH-1	2	3	2	7	110	198	124	72	459	256	72
						394			787		
TH-2	-	-	1	5	56	-			-		
DE-1	-	-	2	-	-	-			-		
TOTAL	2	3	5	12	166	394			787		

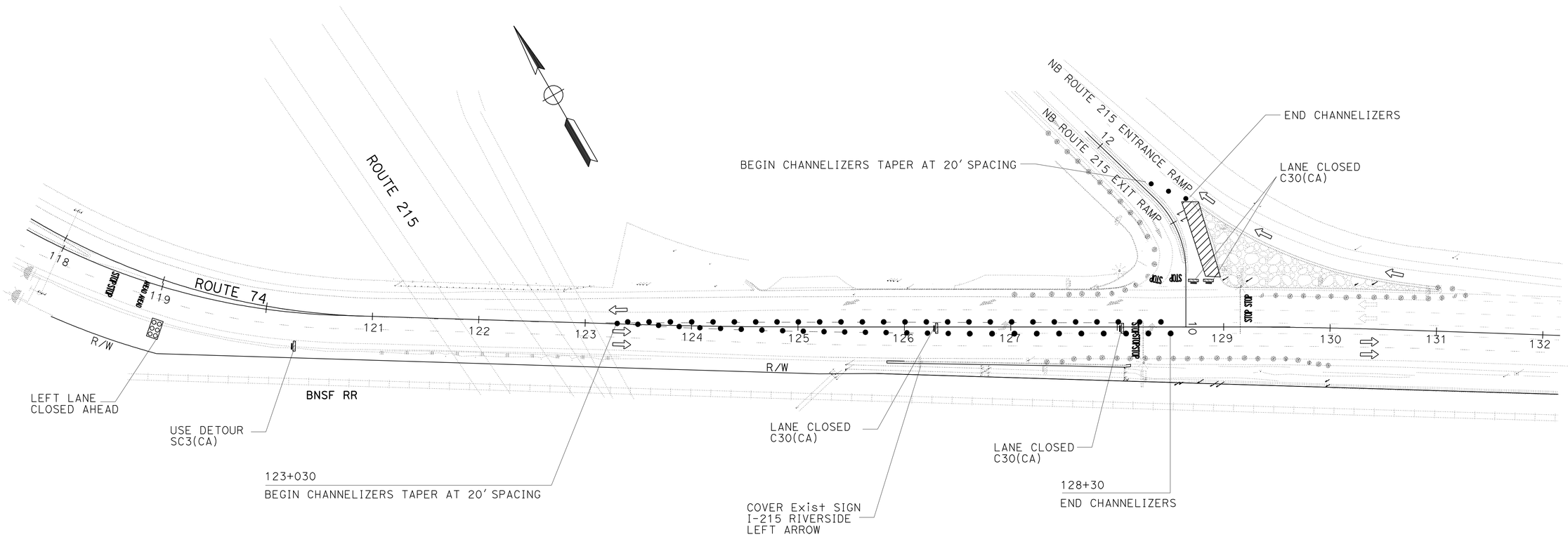

TRAFFIC HANDLING AT INTERSECTION

Rte 74 and Rte 215 Exit
While On-ramp IS CLOSED

APPROVED FOR TRAFFIC HANDLING WORK ONLY

TRAFFIC HANDLING PLAN

NO SCALE

TH-2

REVISED BY | DATE REVISED
DARYUSH NAMI | TRAN HOANG
CALCULATED-DESIGNED BY | CHECKED BY
FUNCTIONAL SUPERVISOR | W.E. WASSER

STATE OF CALIFORNIA - DEPARTMENT OF TRANSPORTATION
Caltrans® TRAFFIC DESIGN

LAST REVISION 12-28-11 | DATE PLOTTED => 06-FEB-2012 | TIME PLOTTED => 06:20

Dist	COUNTY	ROUTE	POST MILES TOTAL PROJECT	SHEET No.	TOTAL SHEETS
08	Riv	74	27.4/27.7	12	58

REGISTERED CIVIL ENGINEER 01-23-12 DATE

1-30-12
PLANS APPROVAL DATE

REGISTERED PROFESSIONAL ENGINEER TRAN HOANG No. 54996 Exp. 6/30/12 CIVIL STATE OF CALIFORNIA

THE STATE OF CALIFORNIA OR ITS OFFICERS OR AGENTS SHALL NOT BE RESPONSIBLE FOR THE ACCURACY OR COMPLETENESS OF SCANNED COPIES OF THIS PLAN SHEET.

NOTES:

1. LOCATIONS OF CONSTRUCTION AREA SIGNS AND PCMS ARE APPROXIMATE. EXACT LOCATIONS TO BE DETERMINED BY THE ENGINEER IN THE FIELD.
2. USE STANDARD PLAN T14 FOR TRAFFIC CONTROL DURING RAMP CLOSURE.
3. DO NOT CLOSE MORE THAN ONE CONNECTOR PER DETOUR.
4. TRAFFIC DETOUR No. 1 IS FOR EXIT RAMP CLOSURE.
5. TRAFFIC DETOUR No. 2 IS FOR ENTRANCE RAMP CLOSURE.

LEGEND:

- PORTABLE CHANGEABLE MESSAGE SIGN(PCMS)
- ONE POST CONSTRUCTION AREA SIGN
- TWO POST CONSTRUCTION AREA SIGN
- DIRECTION OF TRAFFIC DETOUR No. 1
- DIRECTION OF TRAFFIC DETOUR No. 2
- CLOSURE AREA

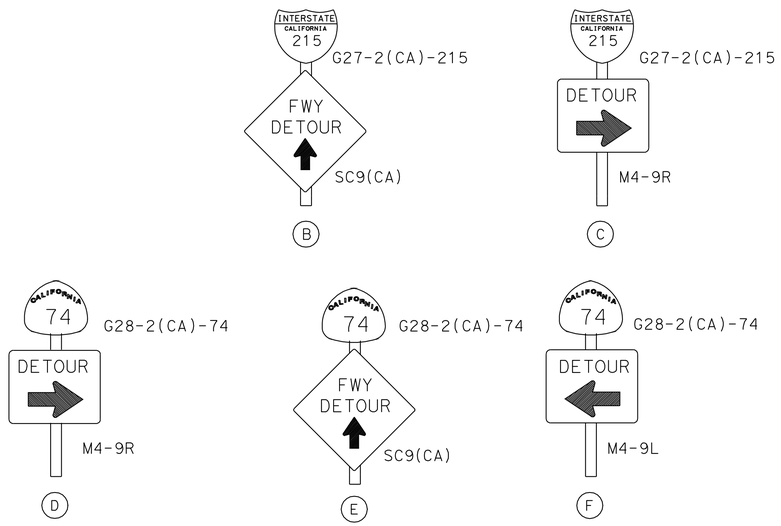

CONSTRUCTION AREA DETOUR SIGNS

SIGN No.	SIGN CODE	PANEL SIZE	No. OF POST AND SIZE	No. OF SIGNS 1 POST	SIGN MESSAGE
A	W20-2	48" X 48"	1 - 6" X 6" X 18'	1	DETOUR AHEAD
B	G27-2(CA)-215 SC9(CA)	36" X 42" 36" X 36"	1 - 6" X 6" X 18'	5	INTERSTATE CALIFORNIA 215 FWY DETOUR/ARROW
C	G27-2(CA)-215 M4-9R	36" X 42" 48" X 36"	1 - 6" X 6" X 18'	2	INTERSTATE CALIFORNIA 215 DETOUR/ARROW RIGHT
D	G28-2(CA)-74 M4-9R	36" X 36" 48" X 36"	1 - 6" X 6" X 18'	2	CALIFORNIA 74 DETOUR/ARROW RIGHT
E	G28-2(CA)-74 SC9(CA)	36" X 36" 36" X 36"	1 - 6" X 6" X 18'	2	CALIFORNIA 74 FWY DETOUR/ARROW
F	G28-2(CA)-74 M4-9L	48" X 36" 36" X 36"	1 - 6" X 6" X 18'	2	CALIFORNIA 74 DETOUR/ARROW LEFT
G	M4-8a	24" X 18"	1 - 4" X 4" X 12'	2	END DETOUR

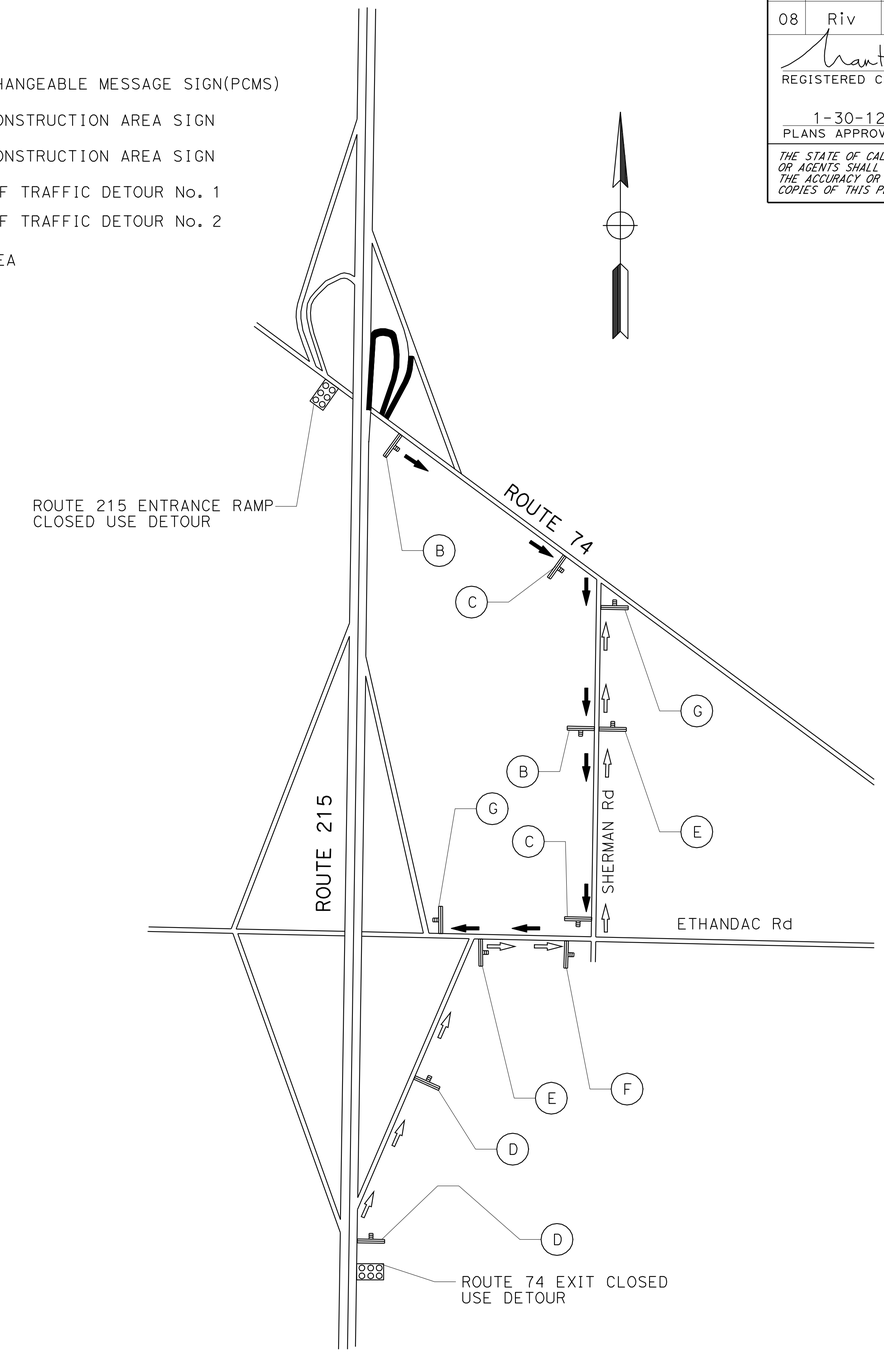

DETOUR FOR 215/74 CONNECTOR CLOSURES

APPROVED FOR DETOUR WORK ONLY.

DETOUR PLAN

NO SCALE **DE-1**

STATE OF CALIFORNIA - DEPARTMENT OF TRANSPORTATION
Caltrans
DESIGN

FUNCTIONAL SUPERVISOR: W.E WASSER
DARYUSH NAMI / TRAN HOANG
CALCULATED-DESIGNED BY / CHECKED BY
REVISED BY / DATE REVISED

LAST REVISION 01-20-12 | DATE PLOTTED => 31-JAN-2012 | TIME PLOTTED => 15:51

Dist	COUNTY	ROUTE	POST MILES TOTAL PROJECT	SHEET No.	TOTAL SHEETS
08	Riv	74	27.4/27.7	13	58

REGISTERED CIVIL ENGINEER 12-29-11 DATE

1-30-12
PLANS APPROVAL DATE

REGISTERED PROFESSIONAL ENGINEER TRAN HOANG No. 54996 Exp. 6/30/12 CIVIL STATE OF CALIFORNIA

THE STATE OF CALIFORNIA OR ITS OFFICERS OR AGENTS SHALL NOT BE RESPONSIBLE FOR THE ACCURACY OR COMPLETENESS OF SCANNED COPIES OF THIS PLAN SHEET.

NOTES:

1. LOCATIONS OF CONSTRUCTION AREA SIGNS AND PCMS ARE APPROXIMATE. EXACT LOCATIONS WILL BE DETERMINED BY THE ENGINEER IN THE FIELD.
2. REFER TO STANDARD PLANS T11, T13 AND T14 FOR TRAFFIC CONTROL.
3. DETOUR THE PEDESTRIAN TRAFFIC TO NEXT AVAILABLE CROSSWALK WHEN LANE CLOSURES OR CONSTRUCTION ZONE BLOCK ANY CROSSWALK.

LEGEND:

- CONSTRUCTION AREA
- CONSTRUCTION AREA SIGN (ONE POST)
- CONSTRUCTION AREA SIGN (TWO POST)

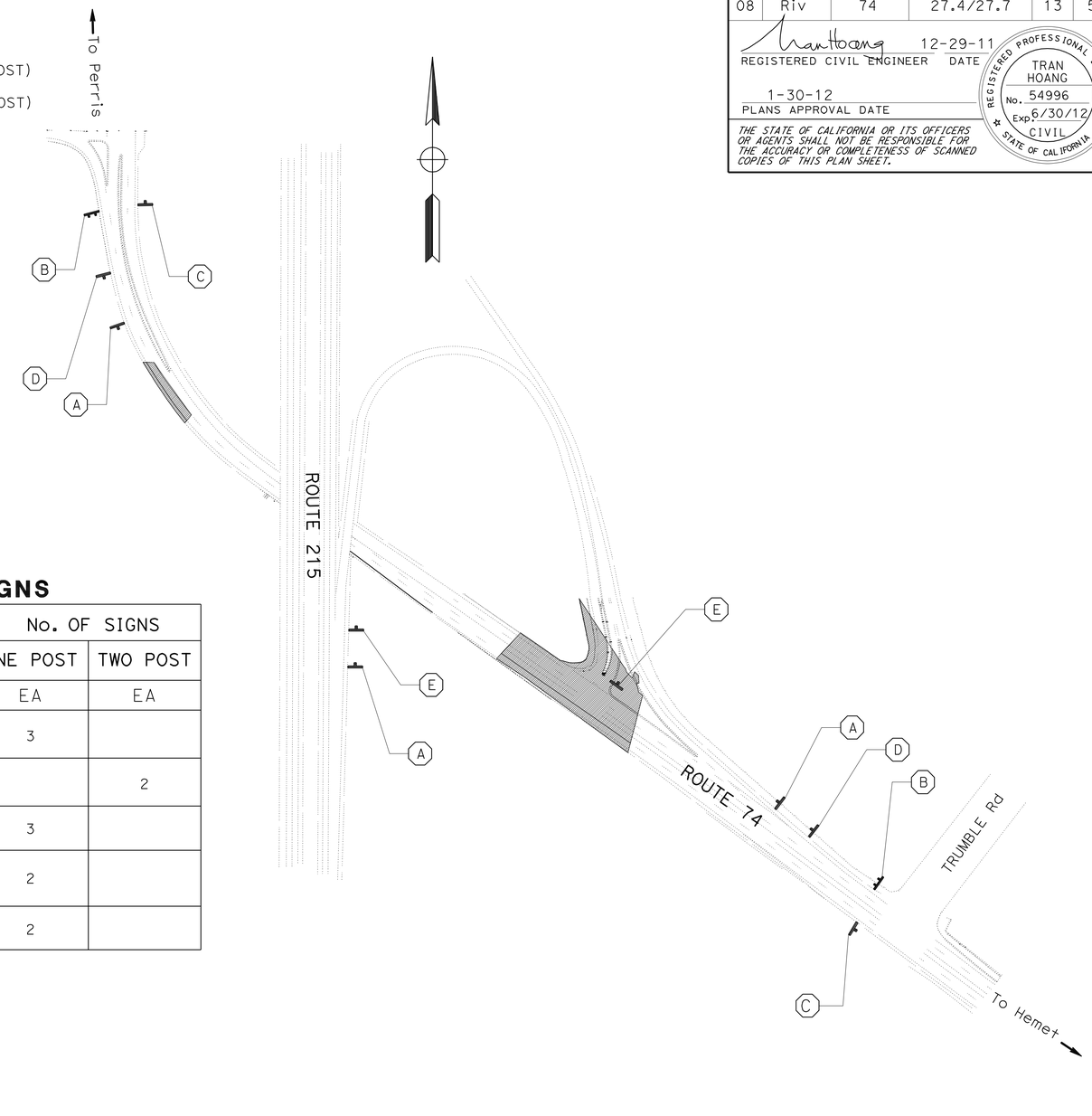

STATIONARY MOUNTED CONSTRUCTION AREA SIGNS

SIGN No.	SIGN CODE FEDERAL	SIGN CODE CALIFORNIA	PANEL SIZE	No. OF POSTS & POST SIZE	SIGN MESSAGE	No. OF SIGNS ONE POST EA	No. OF SIGNS TWO POST EA
A	W20-1	C23(CA)	48" X 48"	1 - 6" X 6"	ROAD WORK AHEAD	3	
B	-	C40(CA)	72" X 36"	2 - 4" X 6"	TRAFFIC FINES DOUBLED IN CONSTRUCTION ZONE		2
C	G20-2	C14(CA)	48" X 24"	1 - 4" X 6"	END ROAD WORK	3	
D	W11-1	W79(CA)	30" X 30"	1 - 6" X 6"	BICYCLE(BLK ON ORANGE)	2	
	W16-1	W79A(CA)	36" X 30"		SHARE THE ROAD(BLK ON ORANGE)		
E	-	SC6-4(CA)	48" X 60"	1 - 6" X 6"	RAMP CLOSED (MORE THAN ONE DAY)	2	

APPROVED FOR CONSTRUCTION AREA SIGN WORK ONLY

CONSTRUCTION AREA SIGNS

NO SCALE

CS-1

STATE OF CALIFORNIA - DEPARTMENT OF TRANSPORTATION
Caltrans TRAFFIC DESIGN

FUNCTIONAL SUPERVISOR: W.E. WASSER
CALCULATED-DESIGNED BY: DARYUSH NAMI
CHECKED BY: TRAN HOANG
REVISED BY
DATE REVISED

LAST REVISION 12-28-11
DATE PLOTTED => 01-FEB-2012
TIME PLOTTED => 13:34

Dist	COUNTY	ROUTE	POST MILES TOTAL PROJECT	SHEET No.	TOTAL SHEETS
08	Riv	74	27.4/27.7	14	58

REGISTERED CIVIL ENGINEER 12-29-11 DATE

1-30-12
PLANS APPROVAL DATE

REGISTERED PROFESSIONAL ENGINEER TRAN HOANG No. 54996 Exp. 6/30/12 CIVIL STATE OF CALIFORNIA

THE STATE OF CALIFORNIA OR ITS OFFICERS OR AGENTS SHALL NOT BE RESPONSIBLE FOR THE ACCURACY OR COMPLETENESS OF SCANNED COPIES OF THIS PLAN SHEET.

LEGEND:

- DIRECTION OF TRAVEL
- PAVEMENT STRIPE TERMINATION
- XXX REMOVE Exist TRAFFIC STRIPE
- XXX PAVEMENT STRIPE DETAIL
- TYPE IV (LT) ARROW (THERMOPLASTIC PAVEMENT MARKING)
- TYPE III (B) ARROW (THERMOPLASTIC PAVEMENT MARKING)
- TYPE VI ARROW (THERMOPLASTIC PAVEMENT MARKING)
- TYPE I ARROW (THERMOPLASTIC PAVEMENT MARKING)

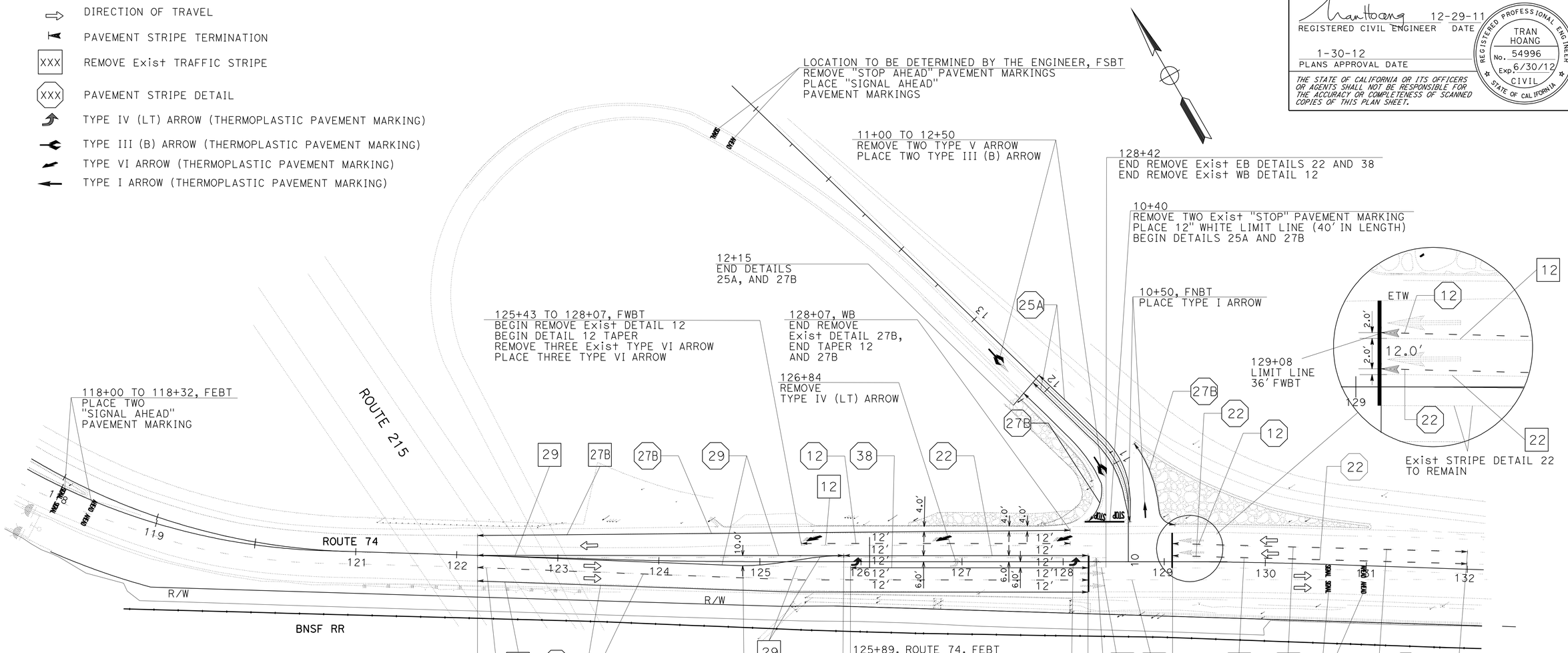

PAVEMENT DELINEATION PLAN

SCALE: 1" = 50'

PD-1

APPROVED FOR PAVEMENT DELINEATION ONLY.

STATE OF CALIFORNIA - DEPARTMENT OF TRANSPORTATION
Caltrans® **TRAFFIC DESIGN**

FUNCTIONAL SUPERVISOR: W.E. WASSER
CALCULATED-DESIGNED BY: DARYUSH NAMI
CHECKED BY: TRAN HOANG
REVISED BY
DATE REVISED

LAST REVISION 12-28-11
DATE PLOTTED => 06-FEB-2012
TIME PLOTTED => 11:24

Dist	COUNTY	ROUTE	POST MILES TOTAL PROJECT	SHEET No.	TOTAL SHEETS
08	Riv	74	27.4/27.7	15	58

REGISTERED CIVIL ENGINEER DATE 12-29-11

1-30-12
PLANS APPROVAL DATE

REGISTERED PROFESSIONAL ENGINEER TRAN HOANG No. 54996 Exp. 6/30/12 CIVIL STATE OF CALIFORNIA

THE STATE OF CALIFORNIA OR ITS OFFICERS OR AGENTS SHALL NOT BE RESPONSIBLE FOR THE ACCURACY OR COMPLETENESS OF SCANNED COPIES OF THIS PLAN SHEET.

PAVEMENT DELINEATION QUANTITIES

LOCATION & DIR	FROM STATION	TO STATION	DETAIL	REMOVE THERMOPLASTIC PAVEMENT MARKING	REMOVE PAVEMENT MARKER	REMOVE THERMOPLASTIC TRAFFIC STRIPE		PAVEMENT MARKER (RETROREFLECTIVE)			THERMOPLASTIC TRAFFIC STRIPE (SPRAYABLE)		THERMOPLASTIC PAVEMENT MARKING
						YELLOW (HAZARDOUS WASTE)	WHITE	TYPE G	TYPE D	TYPE H	4 INCH YELLOW	4 INCH WHITE	
				SQFT	EA	LF	LF	EA	EA	EA	LF	LF	SQFT
Rte 215 EXIT RAMP SB	15+90	16+20	STOP AHEAD	115									
Rte 215 EXIT RAMP SB	15+90	16+20	SIGNAL AHEAD										63
Rte 215 EXIT RAMP SB	11+00	12+50	TYPE V ARROW	228									
Rte 215 EXIT RAMP SB	11+00	12+50	TYPE III(B) ARROW										146
Rte 215 EXIT RAMP SB	10+50	12+15	27B				175					175	
Rte 215 EXIT RAMP SB	10+50	12+15	25A		10	175				10	175		
Rte 215 Entr RAMP NB	10+50	12+15	25A		10	175				10	175		
Rte 215 Entr RAMP NB	10+50	11+25	27B				85					85	
Rte 215 EXIT RAMP SB	10+50		STOP	102									
Rte 215 EXIT RAMP SB	10+50		12" LIMIT LINE(40')	40									40
Rte 215 Entr RAMP NB	10+50		TYPE I (24') ARROW										31
Rte 74 WB	122+20	128+07	27B				587					587	
Rte 74 WB	125+43	128+07	12					8				264	
Rte 74 WB	125+43	128+07	12		8		66					264	
Rte 74 EB	122+20	126+09	29		36	1556							
Rte 74 WB	126+09	128+42	22		24	466							
Rte 74 EB	122+20	125+83	29						34		726		
Rte 74 EB	125+83	128+24	22						24		241		
Rte 74 EB	126+83	128+42	38	159	9								
Rte 74 EB	125+89	128+24	38					12					235
Rte 74 EB	128+50	129+50	TYPE V ARROW	228									
Rte 74 WB	129+50	129+50	TYPE V ARROW	228									
Rte 74 EB	118+00	118+32	SIGNAL AHEAD										63
Rte 74 EB	118+00	118+32	SIGNAL AHEAD										63
Rte 74 WB	125+43	128+07	TYPE VI ARROW	297									126
Rte 74 EB	126+90	128+32	ARROW TYPE IV	96									
Rte 74 EB	125+89	128+04	ARROW TYPE IV										30
Rte 74 EB	128+24		12" LIMIT LINE(36')										36
Rte 74 EB	128+24	129+08	12		4		21						
Rte 74 WB	129+08		12" LIMIT LINE(36')										36
Rte 74 WB	129+08	132+00	12		9		73						
Rte 74 WB	129+08	132+00	12					9				292	
Rte 74 WB	129+08	132+00	22		28	584							
Rte 74 WB	129+08	132+00	22						28		292		
Rte 74 EB	130+00	131+00	SIGNAL AHEAD	266									
SUBTOTAL				1759	138	2956	1007	29	86	20	1609	1667	869
TOTAL				1759	138	2956	1007	135			3276		869

APPROVED FOR PAVEMENT DELINEATION QUANTITIES ONLY.

PAVEMENT DELINEATION QUANTITIES

PDQ-1

REVISED BY | DATE REVISED
DARYUSH NAMI | TRAN HOANG
CALCULATED-DESIGNED BY | CHECKED BY
FUNCTIONAL SUPERVISOR | W.E. WASSER
STATE OF CALIFORNIA - DEPARTMENT OF TRANSPORTATION
Caltrans TRAFFIC DESIGN

LAST REVISION 12-28-11 | DATE PLOTTED => 31-JAN-2012 | TIME PLOTTED => 15:40

Dist	COUNTY	ROUTE	POST MILES TOTAL PROJECT	SHEET No.	TOTAL SHEETS
08	Riv	74	27.4/27.7	16	58

REGISTERED CIVIL ENGINEER 12-29-11 DATE

1-30-12
PLANS APPROVAL DATE

REGISTERED PROFESSIONAL ENGINEER BEHZAD SEDIGHI No. 50460 Exp. 6/30/13 CIVIL STATE OF CALIFORNIA

THE STATE OF CALIFORNIA OR ITS OFFICERS OR AGENTS SHALL NOT BE RESPONSIBLE FOR THE ACCURACY OR COMPLETENESS OF SCANNED COPIES OF THIS PLAN SHEET.

METAL BEAM GUARD RAILING

ROUTE	LOCATION	METAL BEAM GUARD RAILING (WOOD POST)	END ANCHOR ASSEMBLY (TYPE SFT)	ALTERNATIVE FLARED TERMINAL SYSTEM	REMOVE METAL BEAM GUARD RAILING
		LF	EA	EA	LF
Rte 74	Sta 121+24.19, 28.97′ Lt TO Sta 122+71.68, 30.29′ Lt	148			
Rte 74	Sta 121+24.19, 28.97′ Lt		1		
Rte 74	Sta 122+71.68, 30.29′ Lt			1	
Rte 74	Sta 121+7.88, 31.82′ Rt TO Sta 121+45.38, 31.16′ Rt				38
Rte 74	Sta 121+45.38, 31.16′ Rt			1	
Rte 74	Sta 128+15.93, 35.43′ Rt TO Sta 129+16.08, 35.43′ Rt	100			
Rte 74	Sta 128+14.43, 35.43′ Rt			1	
Rte 74	Sta 129+16.08, 35.43′ Rt		1		
	TOTAL	248	2	3	38

TEMPORARY WATER POLLUTION CONTROL

ITEM	QUANTITY
	LF
TEMPORARY FIBER ROLL	150

MISCELLANEOUS QUALITIES

LOCATION	STATION	REMOVE CONCRETE CURB AND ROCK BLANKET	REPAIR EXISTING ROCK BLANKET	TEMPORARY FENCE (TYPE ESA)
		CY	SQYD	LF
Rte 74	Sta 128+07.12, 38.01′ Lt TO Sta 128+25.70, 87.78′ Lt	19	17	
Rte 74	Sta 128+70.13, 17.94 ′Lt TO Sta 129+15.43, 34.0 ′Lt	40	31	
Rte 74	Sta 127+54.06, 153′ Lt TO Sta 127+93.67, 38.6′ Lt Sta 128+70.79, 118.69′ Lt TO Sta 129+15.43, 34′ Lt		140	
Rte 74	Sta 124+00.00, 41.46′ Rt TO Sta 130+01.50, 54.77′ Rt			602
	TOTAL	59	188	602

SUMMARY OF QUANTITIES

Q-1

STATE OF CALIFORNIA - DEPARTMENT OF TRANSPORTATION
Caltrans DESIGN

CONSULTANT FUNCTIONAL SUPERVISOR: BEHZAD SEDIGHI
CALCULATED-DESIGNED BY: MICHELLE TAVAKOLI
CHECKED BY: BEHZAD SEDIGHI
REVISED BY
DATE REVISED

LAST REVISION 12-28-11
DATE PLOTTED => 31-JAN-2012
TIME PLOTTED => 15:40

Dist	COUNTY	ROUTE	POST MILES TOTAL PROJECT	SHEET No.	TOTAL SHEETS
08	Riv	74	27.4/27.7	17	58

REGISTERED CIVIL ENGINEER 12-29-11 DATE

1-30-12
PLANS APPROVAL DATE

REGISTERED PROFESSIONAL ENGINEER BEHZAD SEDIGHI No. 50460 Exp. 6/30/13 CIVIL STATE OF CALIFORNIA

THE STATE OF CALIFORNIA OR ITS OFFICERS OR AGENTS SHALL NOT BE RESPONSIBLE FOR THE ACCURACY OR COMPLETENESS OF SCANNED COPIES OF THIS PLAN SHEET.

HOT MIX ASPHALT DIKE

LOCATION	STATION	REMOVE ASPHALT CONCRETE DIKE	PLACE HMA DIKE (TYPE E)	PLACE HMA DIKE (TYPE C)	PLACE HMA DIKE (TYPE A)	MINOR HOT MIX ASPHALT *
		LF	LF	LF	LF	TON
Rte 74	Sta 125+83.56, 31.92′ Rt TO Sta 128+07.67, 35.75′ Rt	225				
Rte 74	Sta 125+83.56, 31.92′ Rt TO Sta 127+76.94, 35.10′ Rt		194			5.1
Rte 74	Sta 127+76.94, 35.10′ Rt TO Sta 128+07.67, 35.75′ Rt			31		0.3
Rte 74	Sta 128+7.12, 38.01′ Lt TO Sta 128+25.70, 87.78′ Lt				61	1.6
	TOTAL	225	194	31	61	7

* SEE PAVEMENT STRUCTURE QUANTITIES FOR TOTAL.

CURB AND GUTTER QUANTITIES

LOCATION	STATION	MINOR CONCRETE (CURB)	
		CURB TYPE A1-6	CURB TYPE A2-6
		CY	CY
Rte 74	Sta 128+71.83, 117.91′ Lt TO Sta 128+95.38, 50.43′ Lt	2	
Rte 74	Sta 128+95.38, 50.43′ Lt TO Sta 129+15.50, 37.00′ Lt		2
	SUBTOTAL	2	2
	TOTAL	4	

PAVEMENT STRUCTURE QUANTITIES

LOCATION	STATION	MINOR HOT MIX ASPHALT	CLASS 2 AGGREGATE BASE
		TON	CY
Rte 74	Sta 128+07.12, 38.01′ Lt TO Sta 128+33.60, 37.03′ Lt	21	10
Rte 74	Sta 128+72.97, 119.45′ Lt TO Sta 129+10.17, 37.00′ Lt	46	21
	SUBTOTAL	67	31
	FROM HOT MIX ASPHALT DIKE TABLE	7	
	TOTAL	74	31

SUMMARY OF QUANTITIES

Q-2

REVISED BY | DATE REVISED
MICHELLE TAVAKOLI | BEHZAD SEDIGHI
CALCULATED-DESIGNED BY | CHECKED BY
CONSULTANT FUNCTIONAL SUPERVISOR: BEHZAD SEDIGHI
STATE OF CALIFORNIA - DEPARTMENT OF TRANSPORTATION
Caltrans DESIGN

LAST REVISION 12-28-11 | DATE PLOTTED => 06-FEB-2012 | TIME PLOTTED => 11:24

Dist	COUNTY	ROUTE	POST MILES TOTAL PROJECT	SHEET No.	TOTAL SHEETS
08	Riv	74	27.4/27.7	18	58

REGISTERED CIVIL ENGINEER 12-29-11 DATE

1-30-12
PLANS APPROVAL DATE

REGISTERED PROFESSIONAL ENGINEER TRAN HOANG No. 54996 Exp. 6/30/12 CIVIL STATE OF CALIFORNIA

THE STATE OF CALIFORNIA OR ITS OFFICERS OR AGENTS SHALL NOT BE RESPONSIBLE FOR THE ACCURACY OR COMPLETENESS OF SCANNED COPIES OF THIS PLAN SHEET.

NOTES:

1. EXACT LOCATION AND POSITION OF ROADSIDE SIGNS TO BE DETERMINED BY THE ENGINEER.
2. POST LENGTHS GIVEN ARE APPROXIMATE.
3. "C" DIM = VERTICIAL CLEARANCE EP TO BOTTOM OF SIGN PANEL.
4. CONTRACTOR SHALL VERIFY ALL FIELD CONDITIONS BEFORE SIGN FABRICATION.
5. REFER TO ELECTRICAL PLAN SHEETS E-2 AND E-3 FOR SIGNS MOUNTED ON SIGNAL MAST ARMS AND ON SIGNAL POLES.
6. REFER TO STANDARD PLAN ES-70 FOR SIGN MOUNTING NOTES BY MAST ARM METHOD INSTALLATION AS NEEDED.

LEGEND:

- DIRECTION OF TRAVEL
- ROADSIDE SIGN - (ONE POST)
- ROADSIDE SIGN - (TWO POST)
- X — SIGN NUMBER

G7-1(CA), D3(MUTCD)

State Route 74 (22" x 72")

3" RADIUS, 1.00" BORDER, WHITE ON GREEN; [STATE ROUTE 74] 6" C

S1-9

G8-1(CA), D1-1(MUTCD)

⇦ FWY 215 NORTH (22" x 72")

3" RADIUS, 1.00" BORDER, WHITE ON GREEN; STANDARD ARROW CUSTOM 11.13" X 6.75" [FWY] 6" C; [215] 6" C; [NORTH] 6" C 75% SPACING

S1-11

G8-7(CA), D1-2(MUTCD)

⇦ HEMET
PERRIS ⇨

48" x 84"; 9.5"

6.00" RADIUS, 1.25" BORDER, WHITE ON GREEN; STANDARD ARROW CUSTOM 13.38" X 8.13" [HEMET] 8" E MOD; [PERRIS] 8" E MOD; STANDARD ARROW CUSTOM 13.38" X 8.13"

S1-3

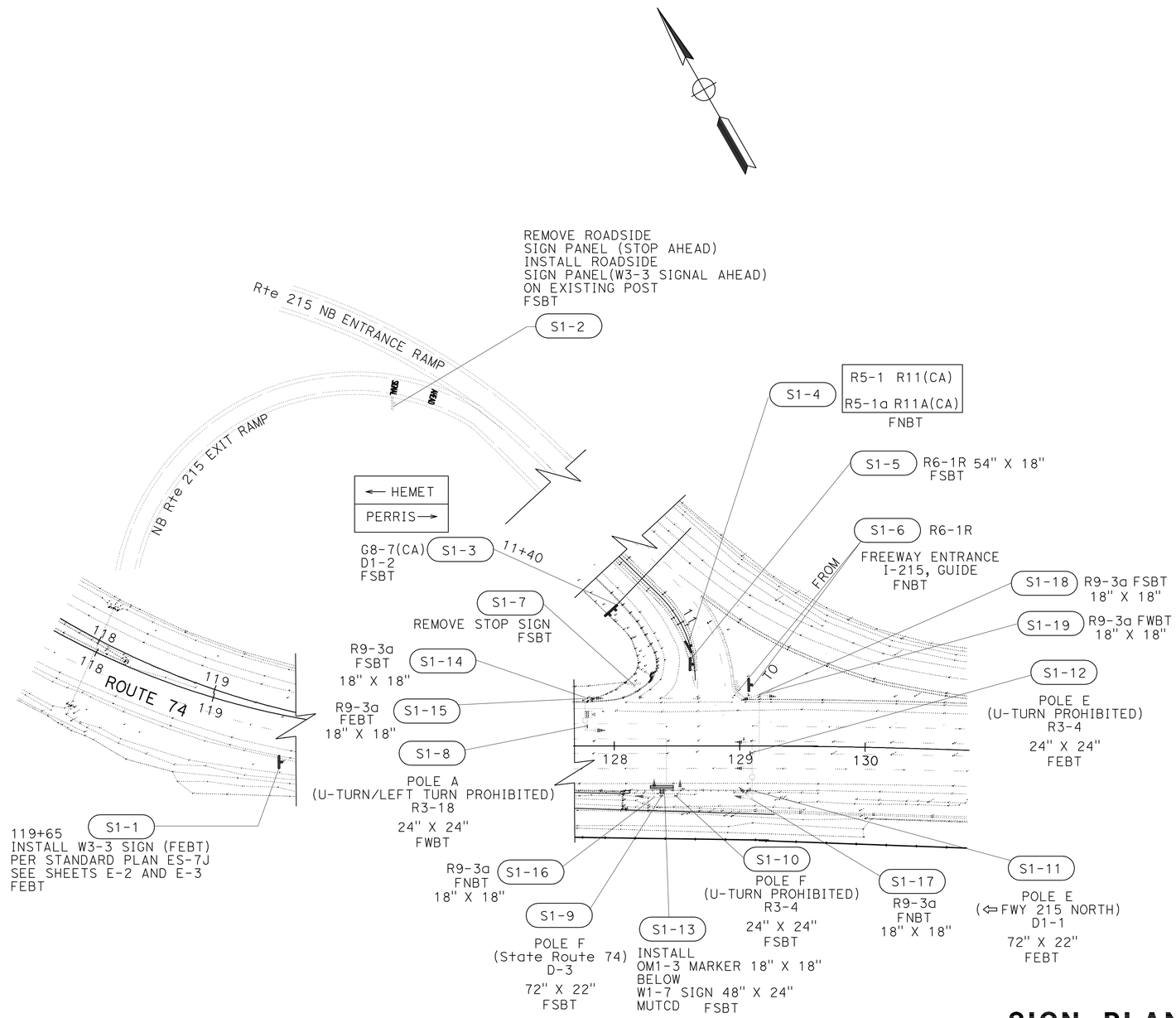

SIGN PLAN

SCALE: 1" = 50′ **S-1**

APPROVED FOR PAVEMENT DELINEATION AND SIGNING WORK ONLY

STATE OF CALIFORNIA - DEPARTMENT OF TRANSPORTATION
Caltrans® **TRAFFIC DESIGN**

FUNCTIONAL SUPERVISOR: W.E. WASSER
CALCULATED-DESIGNED BY: DARYUSH NAMI
CHECKED BY: TRAN HOANG
REVISED BY
DATE REVISED

LAST REVISION 12-28-11
DATE PLOTTED => 06-FEB-2012
TIME PLOTTED => 06:20

Dist	COUNTY	ROUTE	POST MILES TOTAL PROJECT	SHEET No.	TOTAL SHEETS
08	Riv	74	27.4/27.7	19	58

REGISTERED CIVIL ENGINEER 12-29-11 DATE

1-30-12
PLANS APPROVAL DATE

REGISTERED PROFESSIONAL ENGINEER TRAN HOANG No. 54996 Exp. 6/30/12 CIVIL STATE OF CALIFORNIA

THE STATE OF CALIFORNIA OR ITS OFFICERS OR AGENTS SHALL NOT BE RESPONSIBLE FOR THE ACCURACY OR COMPLETENESS OF SCANNED COPIES OF THIS PLAN SHEET.

NOTES:

1. EXACT LOCATION AND POSITION OF ROADSIDE SIGNS TO BE DETERMINED BY ENGINEER.
2. POST LENGTHS GIVEN ARE APPROXIMATE.
3. CONTRACTOR SHALL VERIFY ALL FIELD CONDITIONS BEFORE SIGN FABRICATION.
4. REFER TO ELECTRICAL PLANS FOR INSTALLATIONS AND LOCATIONS OF ADVANCE FLASHING BEACON AND OF MAST ARM HANGER ASSEMBLY SIGNS.

ROADSIDE SIGN QUANTITIES

SIGN No. (X-X)	LOCATION/ STATION	DIRECTION	SIGN CODE FEDERAL	SIGN CODE CALIFORNIA	PANEL SIZE L x D	POST LENGTH LEFT	POST LENGTH RIGHT	4" x 4"	4" x 6"	6" x 6"	ROADSIDE SIGN ONE POST	ROADSIDE SIGN TWO POST	REMOVE ROADSIDE SIGN (WOOD POST)	RELOCATE ROADSIDE SIGN-ONE POST	(N) REMOVE ROADSIDE SIGN PANEL	INSTALL ROADSIDE SIGN PANEL ON EXISTING POST	INSTALL SIGN (STRAP AND SADDLE BRACKET METHOD)	INSTALL SIGN (MAST-ARM HANGER METHOD)	REMARKS
						LF	LF				EA	EA	EA	EA	EA	EA	EA	EA	
S1-1	119+65 Rte 74	EB	W3-3	W41(CA)	48" X 48"												1		SIGNAL AHEAD (ON FLASHING BEACON)
S1-2	EXIT RAMP	SB	W3-3	W41(CA)	48" X 48"										1	1			SIGNAL AHEAD
S1-3	11+40 EXIT RAMP	SB	D1-2	G8-7(CA)	84" X 48"	16	16		X			1							(LEFT ARROW) HEMET PERRIS (RIGHT ARROW)
S1-4	10+80 EXIT RAMP	NB	R5-1 R5-1a	R11(CA) R11A(CA)	36" X 36" 36" X 24"		12		X		1								DO NOT ENTER WRONG WAY
S1-5	10+60 EXIT RAMP	SB	R6-1R	R10(CA)	54" X 18"		8		X		1								ONE WAY(Right)
S1-6	10+40 ENTRANCE RAMP	NB	M3-1, M6-2 ----------	G47(CA), G44(CA) G92(CA), G27-1(CA)	Exist									1					FWY Entrance I-215 Shield NORTH ARROW
S1-7	EXIT RAMP	SB	R1-1	R1-1	Exist								1						STOP
S1-8	127+75 Rte 74	FWBT	R3-18	R34.2(CA)	24" X 24"													1	U-TURN/LEFT TURN PROHIBITED (ON MAST ARM)
S1-9	128+40 Rte 74	FSBT	D3	G7-1(CA)	72" X 22"													1	STATE Rte 74 (ON MAST ARM)
S1-10	128+40 Rte 74	FSBT	R3-4	R34(CA)	24" X 24"													1	U-TURN PROHIBITED (ON MAST ARM)
S1-11	129+10 Rte 74	FEBT	D1-1	G8-1(CA)	72" X 22"													1	FWY 215 NORTH ARROW (ON MAST ARM)
S1-12	129+10 Rte 74	FEBT	R3-4	R34(CA)	24" X 24"													1	U-TURN PROHIBITED (ON MAST ARM)
S1-13	128+40 Rte 74	FSBT	W1-7 OM1-3		48" X 24" 18" X 18"				X		1								TWO DIRECTION LARGE ARROW OM1-3 MARKER
S1-14	127+75 Rte 74	FSBT	R9-3a		18" X 18"												1		NO PEDESTRIAN CROSSING (POLE A) SEE SHEET E-1
S1-15	127+75 Rte 74	FEBT	R9-3a		18" X 18"												1		NO PEDESTRIAN CROSSING (POLE A) SEE SHEET E-1
S1-16	128+30 Rte 74	FNBT	R9-3a		18" X 18"												1		NO PEDESTRIAN CROSSING (POLE F) SEE SHEET E-1
S1-17	129+10 Rte 74	FNBT	R9-3a		18" X 18"												1		NO PEDESTRIAN CROSSING (POLE E) SEE SHEET E-1
S1-18	129+10 Rte 74	FSBT	R9-3a		18" X 18"												1		NO PEDESTRIAN CROSSING (POLE D) SEE SHEET E-1
S1-19	129+10 Rte 74	FWBT	R9-3a		18" X 18"												1		NO PEDESTRIAN CROSSING (POLE D) SEE SHEET E-1
								TOTAL			3	1	1	1	1	1	7	5	

(N) - NOT A SEPARATE PAY ITEM, FOR INFORMATION ONLY.

APPROVED FOR SIGN QUANTITIES ONLY.

SIGN QUANTITIES

SQ-1

STATE OF CALIFORNIA - DEPARTMENT OF TRANSPORTATION
Caltrans
TRAFFIC DESIGN

FUNCTIONAL SUPERVISOR: W.E. WASSER
CALCULATED-DESIGNED BY: PATTI BARTOLI
CHECKED BY: DAN NAMI
REVISED BY
DATE REVISED

LAST REVISION 12-28-11
DATE PLOTTED => 06-FEB-2012
TIME PLOTTED => 06:20

Dist	COUNTY	ROUTE	POST MILES TOTAL PROJECT	SHEET No.	TOTAL SHEETS
08	Riv	74	27.4/27.7	20	58

REGISTERED CIVIL ENGINEER 12-29-11 DATE

1-30-12
PLANS APPROVAL DATE

REGISTERED PROFESSIONAL ENGINEER TRAN HOANG No. 54996 Exp. 6/30/12 CIVIL STATE OF CALIFORNIA

THE STATE OF CALIFORNIA OR ITS OFFICERS OR AGENTS SHALL NOT BE RESPONSIBLE FOR THE ACCURACY OR COMPLETENESS OF SCANNED COPIES OF THIS PLAN SHEET.

ROADSIDE SIGN PANEL QUANTITIES

SIGN No. (X-X)	SIGN CODE		SIGN DIMENSION L X D	SINGLE FACED	DOUBLE FACED	BACKGROUND		LEGEND		PROTECTIVE OVERLAY	FURNISH SINGLE SHEET ALUMINUM SIGN				SIGN MESSAGE/DESCRIPTION
											FRAMED		UNFRAMED		
						SHEETING COLOR	RETRO-REFLECTIVE ASTM TYPE	SHEETING COLOR	RETRO-REFLECTIVE ASTM TYPE		0.063"	0.080"	0.063"	0.080"	
	FEDERAL	CALIFORNIA								PREMIUM	SQFT	SQFT	SQFT	SQFT	
S1-1	W3-3	W41(CA)	48" X 48"	X		YELLOW	IX	RED/GREEN BLACK	IX	X				16.0	SIGNAL AHEAD (ON FLASHING BEACON)
S1-2	W3-3	W41(CA)	48" X 48"	X		YELLOW	IX	RED/GREEN BLACK	IX	X				16.0	SIGNAL AHEAD
S1-3	D1-2	G8-7(CA)	84" X 48"	X		GREEN	III	WHITE	IX	X		28.0			(LEFT ARROW) HEMET PERRIS (RIGHT ARROW)
S1-4	R5-1	R11	36" X 36"	X		RED	IX	WHITE	IX	X			9.00		DO NOT ENTER
	R5-1a	R11A	36" X 24"	X		RED	IX	WHITE	IX	X			6.00		WRONG WAY
S1-5	R6-1R	R10(CA)	54" X 18"	X		WHITE	III	BLACK	-	X			6.75		ONE WAY(RT)
S1-8	R3-18	R34.2(CA)	24" X 24"	X		WHITE	III	BLACK/RED	-	X			4.00		U-TURN/LEFT TURN PROHIBITED (ON MAST ARM)
S1-9	D3	G7-1(CA)	72" X 22"	X		GREEN	III	WHITE	IX	X	11.0				STATE Rte 74 (ON MAST ARM)
S1-10	R3-4	R34(CA)	24" X 24"	X		WHITE	III	BLACK/RED	-	X			4.00		U-TURN PROHIBITED (ON MAST ARM)
S1-11	D1-1	G8-1(CA)	72" X 22"	X		GREEN	III	WHITE	IX	X	11.0				FDWY 215 NORTH ARROW (ON MAST ARM)
S1-12	R3-4	R34(CA)	24" X 24"	X		WHITE	III	BLACK/RED	-	X			4.00		U-TURN PROHIBITED (ON MAST ARM)
S1-13	W1-7		48" X 24"	X		YELLOW	IX	BLACK	-	X				8.0	TWO DIRECTION LARGE ARROW
	OM1-3		18" X 18"	X		YELLOW	IX	-	-	X			2.25		OM1-3 MARKER
S1-14	R9-3a		18" X 18"	X		WHITE	III	BLACK	-	X			2.25		NO PEDESTRIAN CROSSING (ON SIGNAL POLE)
S1-15	R9-3a		18" X 18"	X		WHITE	III	BLACK	-	X			2.25		NO PEDESTRIAN CROSSING (ON SIGNAL POLE)
S1-16	R9-3a		18" X 18"	X		WHITE	III	BLACK	-	X			2.25		NO PEDESTRIAN CROSSING (ON SIGNAL POLE)
S1-17	R9-3a		18" X 18"	X		WHITE	III	BLACK	-	X			2.25		NO PEDESTRIAN CROSSING (ON SIGNAL POLE)
S1-18	R9-3a		18" X 18"	X		WHITE	III	BLACK	-	X			2.25		NO PEDESTRIAN CROSSING (ON SIGNAL POLE)
S1-19	R9-3a		18" X 18"	X		WHITE	III	BLACK	-	X			2.25		NO PEDESTRIAN CROSSING (ON SIGNAL POLE)
TOTAL											22.0	28.0	49.50	40.0	

APPROVED FOR SIGN QUANTITIES WORK ONLY.

SIGN QUANTITIES

SQ-2

REVISED BY | DATE REVISED
PATTI BARTOLI | DAN NAMI
CALCULATED-DESIGNED BY | CHECKED BY
FUNCTIONAL SUPERVISOR: W.E. WASSER

STATE OF CALIFORNIA - DEPARTMENT OF TRANSPORTATION
Caltrans
TRAFFIC DESIGN

LAST REVISION 12-28-11 | DATE PLOTTED => 31-JAN-2012 | TIME PLOTTED => 17:58

Dist	COUNTY	ROUTE	POST MILES TOTAL PROJECT	SHEET No.	TOTAL SHEETS
08	Riv	74	27.4/27.7	21	58

REGISTERED ELECTRICAL ENGINEER 12-29-11 DATE

1-30-12
PLANS APPROVAL DATE

REGISTERED PROFESSIONAL ENGINEER FERDINAND DE LA CRUZ No. E 17215 Exp. 6-30-13 ELECTRICAL STATE OF CALIFORNIA

THE STATE OF CALIFORNIA OR ITS OFFICERS OR AGENTS SHALL NOT BE RESPONSIBLE FOR THE ACCURACY OR COMPLETENESS OF SCANNED COPIES OF THIS PLAN SHEET.

NOTE:

FOR ACCURATE RIGHT OF WAY DATA, CONTACT RIGHT OF WAY ENGINEERING AT THE DISTRICT OFFICE.

PROJECT NOTE: (SHEET E-1 TO E-3)

1. INSTALL STATE-FURNISHED MODEL 2070 CONTROLLER ASSEMBLY AND BATTERY BACK-UP SYSTEM ON A MODIFIED FOUNDATION AS PER E-4, E-5 AND E-6.
2. INSTALL CDMA MODEM.
3. INSTALL VIVDS CAMERA ON LMA AS PER DETAILS ON SHEET SES-1.
4. INSTALL R3-4 SIGN AS PER ES-7N, DETAIL U.
5. INSTALL R3-18 SIGN AS PER ES-7N, DETAIL U.
6. INSTALL R9-3a SIGN ON POLE.
7. INSTALL RETROREFLECTIVE SHEETING STREET NAME SIGN.
8. INSTALL 120/240 V, TYPE III-CF SERVICE EQUIPMENT ENCLOSURE AS PER RSP ES-2C AND RSP ES-2F.
   METER A: 100 A, 240 V, 2P, CB (MAIN BREAKER)
   50 A, 120 V, 1P, CB (SIGNAL)
   CALTRANS ID No. : 08-56-074-0-027.500-M
   ADDRESS: 1610 HWY 74
   METER B: 100 A, 240 V, 2P, CB (MAIN BREAKER)
   30 A, 120 V, 1P, CB (LTG)
   15 A, 120 V, 1P, CB (LTG CONTROL)
   15 A, 120 V, 1P, CB (FLASHING BEACON)
   CALTRANS ID No. : 08-56-074-0-027.500-M
   ADDRESS: 1610 HWY 74
9. INSTALL TYPE 15-FBS ADVANCE FLASHING BEACON AS PER STANDARD PLAN ES-7J.

GENERAL NOTES: (THIS SHEET ONLY)

1. ALL TYPE 1-A FOUNDATIONS SHALL BE THE "ANCHOR BOLTS WITH SLEEVE NUTS" AS PER RSP ES-7B.
2. VIDEO DETECTION ZONES SHALL BE ESTABLISHED IN THE FIELD BY THE ENGINEER AND THE MANUFACTURER'S REPRESENTATIVE.

ABBREVIATIONS: (SHEETS E-1 AND E-2)

VIVDS : VIDEO IMAGE VEHICLE DETECTION SYSTEM
CDMA : CODE MULTIPLE DIVISION ACCESS

PHASE DIAGRAM

DETAIL "A"

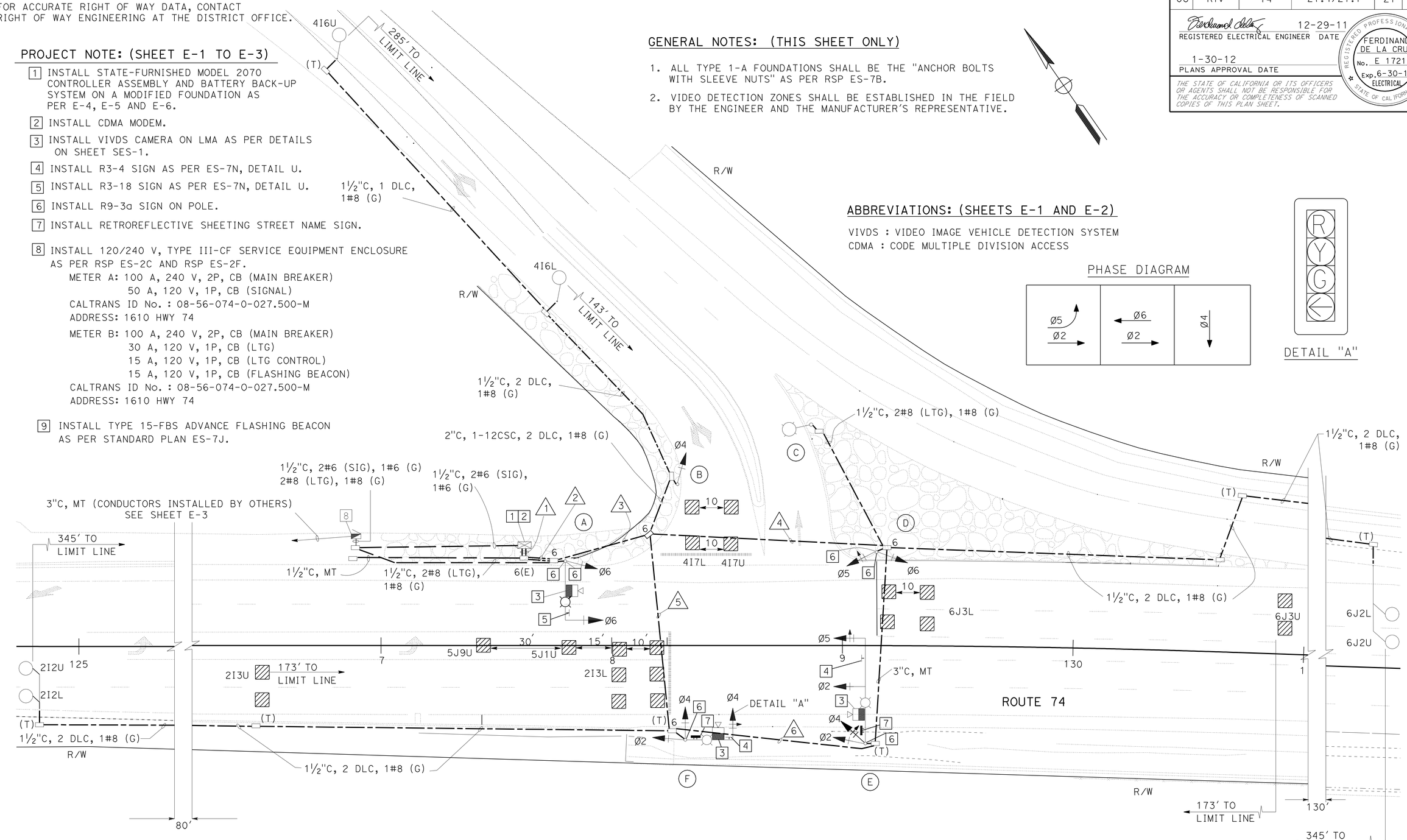

SIGNAL AND LIGHTING

APPROVED FOR ELECTRICAL WORK ONLY

SCALE: 1" = 20'

E-1

STATE OF CALIFORNIA - DEPARTMENT OF TRANSPORTATION
Caltrans® ELECTRICAL DESIGN A

FUNCTIONAL SUPERVISOR: FERDINAND DE LA CRUZ
CALCULATED-DESIGNED BY: NASIMA HYDER
CHECKED BY: FERDINAND DE LA CRUZ
REVISED BY
DATE REVISED

LAST REVISION 12-28-11
DATE PLOTTED => 01-MAR-2012
TIME PLOTTED => 08:49

Dist	COUNTY	ROUTE	POST MILES TOTAL PROJECT	SHEET No.	TOTAL SHEETS
08	Riv	74	27.4/27.7	22	58

REGISTERED ELECTRICAL ENGINEER 12-29-11 DATE

1-30-12
PLANS APPROVAL DATE

REGISTERED PROFESSIONAL ENGINEER FERDINAND DE LA CRUZ No. E 17215 Exp. 6-30-12 ELECTRICAL STATE OF CALIFORNIA

THE STATE OF CALIFORNIA OR ITS OFFICERS OR AGENTS SHALL NOT BE RESPONSIBLE FOR THE ACCURACY OR COMPLETENESS OF SCANNED COPIES OF THIS PLAN SHEET.

CONDUIT AND CONDUCTOR SCHEDULE

CONDUCTOR DESIGNATION			NUMBER OF CONDUCTORS					
			RUN NUMBER					
CABLE TYPE	Std	PHASE	1	2	3	4	5	6
VEH-PED 12CSC	A	6	1	1				
	B	4	1	1	1			
	C							
PPB 3CSC	D	5,6	1	1	1	1		
	E	2,4,5	2	2	2		2	2
	F	2,4	2	2	2		2	
TOTAL CABLES 12/3 CONDUCTORS			7	7	6	1	4	2
#8	LIGHTING				2	2	2	2
#8	GROUND		1	1	1	1	1	1
VIVDS COAXIAL CABLE			3	3	2		2	1
VIVDS POWER CABLE			3	3	2		2	1
TYPE B DLC		Ø1						
		Ø2	2	2	2		2	
		Ø3						
		Ø4	2	2	2			
		Ø5						
		Ø6	2	2	2	2		
		Ø7						
		Ø8						
TOTAL DLC's			6	6	6	2	2	
CONDUIT SIZE			2"-4"	2"-4"	4"	3"	4"	3"

POLE AND EQUIPMENT SCHEDULE

	STANDARD			VEH SIG MTG			PED SIGNAL MTG	PPB		HPS LUMINAIRE (W)	* RETROREFLECTIVE SHEETING SIGNS
No.	TYPE	SMA	LMA	MAST ARM	POLE	F DISTANCE		Ø	ARROW		
A	19-2-100	25'	12'	1-MAS	SV-1-T	-	-	-		200	
B	1-A	-	-	-	TV-1-T	-	-	-		-	
C	15	-	12'	-	-	-	-	-		200	
D	1-A	-	-	-	TV-2-T	-	-	-		-	
E	26-4-100	45'	12'	2-MAS	SV-2-T	20'	-	-		200	← FWY 215 NORTH
F	17-3-100	20'	12'	1-MAS	SV-2-T	-	-	-		200	STATE ROUTE 74

* FOR SIGN DETAILS SEE SHEET S-1
SEE SIGN SHEETS FOR ALL CONTRACTOR-FURNISHED SIGNS TO BE INTALLED ON SIGNAL POLES.

SIGNAL AND LIGHTING

NO SCALE

E-2

APPROVED FOR ELECTRICAL WORK ONLY

REVISED BY | DATE REVISED
NASIMA HYDER | FERDINAND DE LA CRUZ
CALCULATED-DESIGNED BY | CHECKED BY
FUNCTIONAL SUPERVISOR | FERDINAND DE LA CRUZ
STATE OF CALIFORNIA - DEPARTMENT OF TRANSPORTATION
Caltrans® ELECTRICAL DESIGN A

LAST REVISION 12-28-11 | DATE PLOTTED => 01-FEB-2012 | TIME PLOTTED => 06:40

Dist	COUNTY	ROUTE	POST MILES TOTAL PROJECT	SHEET No.	TOTAL SHEETS
08	Riv	74	27.4/27.7	23	58

REGISTERED ELECTRICAL ENGINEER 12-29-11 DATE

1-30-12
PLANS APPROVAL DATE

REGISTERED PROFESSIONAL ENGINEER
FERDINAND DE LA CRUZ
No. E 17215
Exp. 6-30-12
ELECTRICAL
STATE OF CALIFORNIA

THE STATE OF CALIFORNIA OR ITS OFFICERS OR AGENTS SHALL NOT BE RESPONSIBLE FOR THE ACCURACY OR COMPLETENESS OF SCANNED COPIES OF THIS PLAN SHEET.

NOTE:

FOR ACCURATE RIGHT OF WAY AND ACCESS DATA,
CONTACT RIGHT OF WAY ENGINEERING AT THE DISTRICT OFFICE.

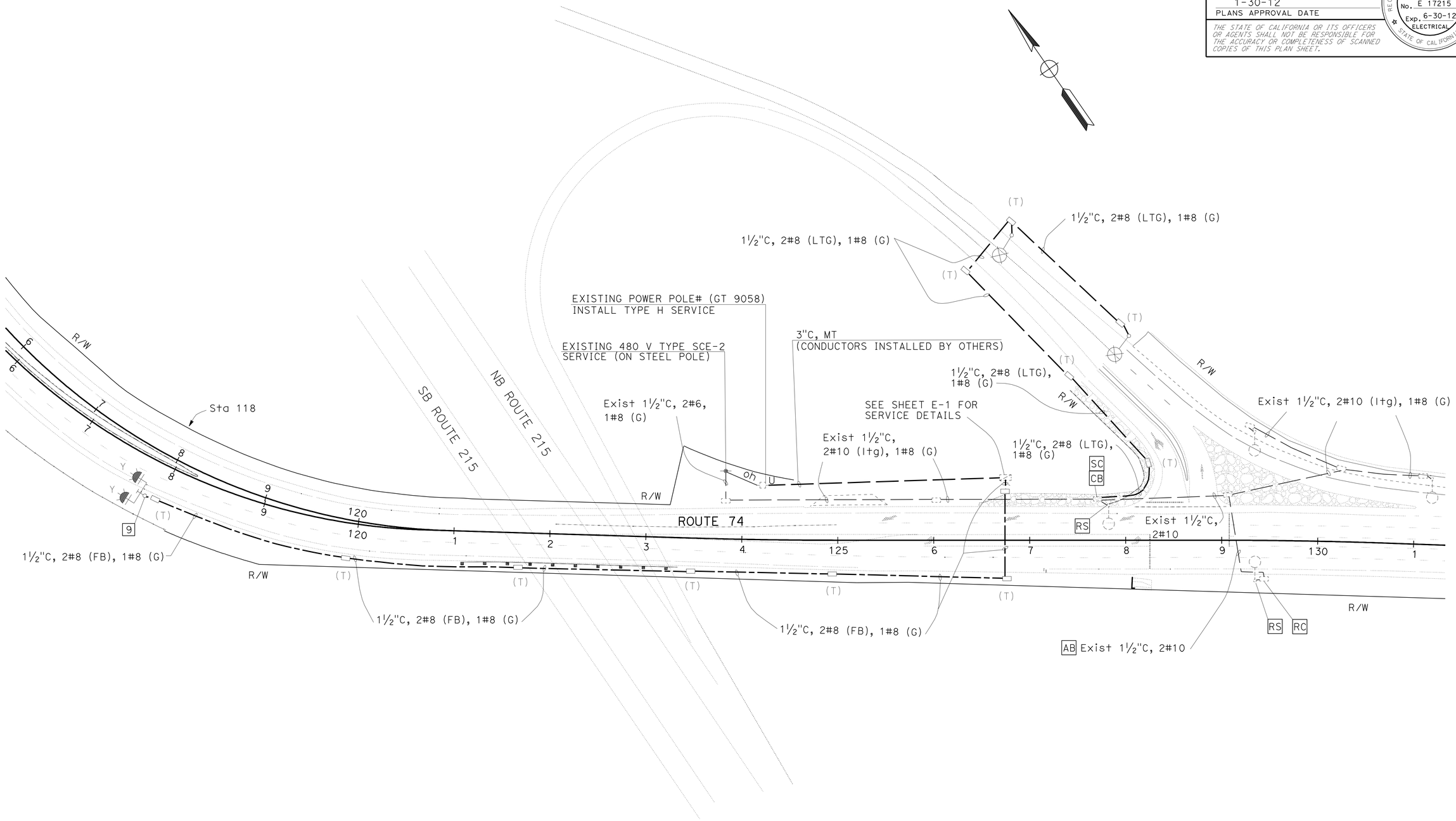

MODIFY LIGHTING FLASHING BEACON

SCALE: 1" = 50'

E-3

APPROVED FOR ELECTRICAL WORK ONLY

STATE OF CALIFORNIA - DEPARTMENT OF TRANSPORTATION
Caltrans

FUNCTIONAL SUPERVISOR: FERDINAND DE LA CRUZ
CALCULATED-DESIGNED BY: NASIMA HYDER
CHECKED BY: FERDINAND DE LA CRUZ
REVISED BY
DATE REVISED

LAST REVISION 12-28-11
DATE PLOTTED => 01-FEB-2012
TIME PLOTTED => 13:14

Dist	COUNTY	ROUTE	POST MILES TOTAL PROJECT	SHEET No.	TOTAL SHEETS
08	Riv	74	27.4/27.7	24	58

Theresa Gabriel 12-29-11
REGISTERED ELECTRICAL ENGINEER DATE

1-30-12
PLANS APPROVAL DATE

REGISTERED PROFESSIONAL ENGINEER THERESA A. GABRIEL No. E15129 Exp. 6-30-12 ELECT STATE OF CALIFORNIA

THE STATE OF CALIFORNIA OR ITS OFFICERS OR AGENTS SHALL NOT BE RESPONSIBLE FOR THE ACCURACY OR COMPLETENESS OF SCANNED COPIES OF THIS PLAN SHEET.

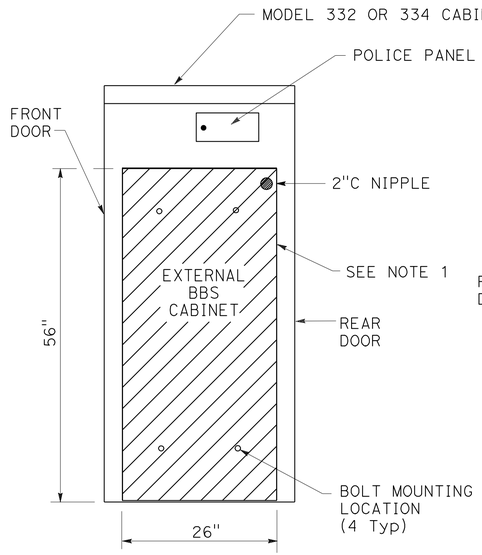

SIDE VIEW

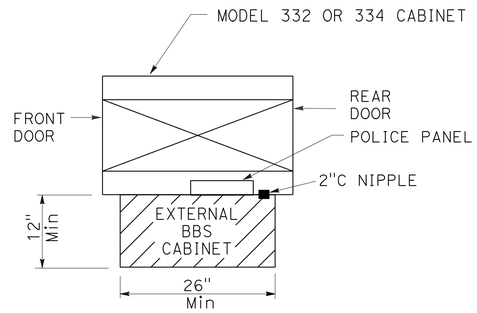

TOP VIEW

EXTERNAL BBS CABINET MOUNTED TO THE MODEL 332 OR 334 CABINET

NOTES: (THIS SHEET ONLY)

1. THE EXTERNAL BBS CABINET SHALL BE MOUNTED TO THE MODEL 332 OR 334 CABINET WITH FOUR 18-8 STAINLESS STEEL HEX HEAD, FULLY-THREADED, 3/8"-16 X 1" BOLTS; TWO WASHERS PER BOLT, DESIGNED FOR 3/8" BOLTS AND ARE 18-8 STAINLESS STEEL, 1" OUTSIDE DIAMETER, ROUND, AND FLAT; AND ONE K-LOCK NUT PER BOLT THAT IS 18-8 STAINLESS STEEL AND A HEX-NUT. THE ENGINEER WILL HAVE TO APPROVE THE BOLT MOUNTING LOCATION PRIOR TO INSTALLATION.
2. THE ANCHOR BOLTS SHALL BE 3/4" Dia X 15" WITH A 2"-90° BEND. THE CABINET MANUFACTURER'S SPECIFICATION SHALL DETERMINE THE LOCATION OF THE ANCHOR BOLTS IN THE FOUNDATION. THE ENGINEER WILL HAVE TO APPROVE THE ANCHOR BOLTS AND ITS LOCATION IN THE FOUNDATION PRIOR TO CONSTRUCTION.
3. THE CONTRACTOR SHALL VERIFY THE DIMENSIONS OF THE BBS CABINET PRIOR TO CONSTRUCTING THE FOUNDATION OF THE MODIFIED PORTION OF THE Std MODEL 332 AND 334 CABINET FOUNDATION. THE ENGINEER WILL HAVE TO APPROVE ANY NECESSARY DEVIATIONS PRIOR TO CONSTRUCTION.
4. ALL DIMENSIONS ARE NOMINAL.

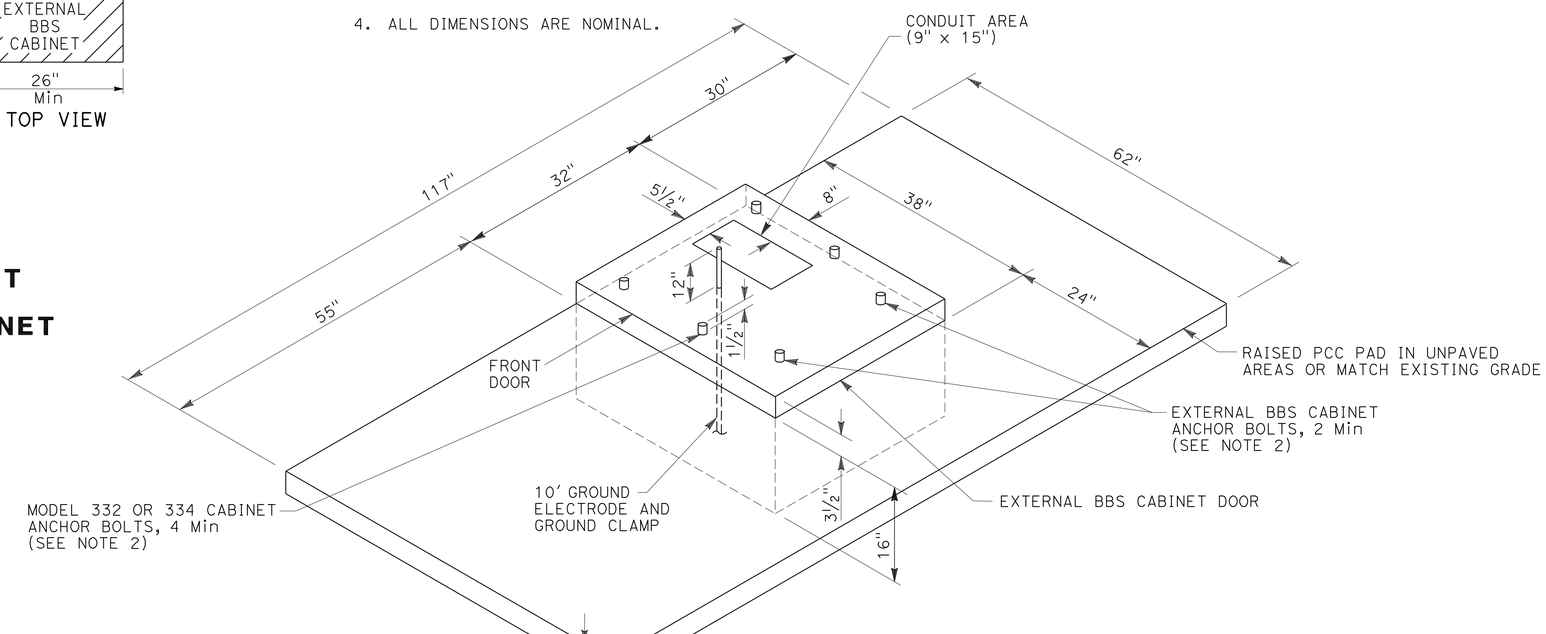

MODIFIED MODEL 332 AND 334 CABINET FOUNDATION DETAIL FOR BATTERY BACKUP SYSTEM (BBS)

(FOR DIMENSIONS AND DETAILS NOT SHOWN AND ADDITIONAL NOTES, SEE SHEET ES-3C OF THE STANDARD PLANS FOR MODEL 332 AND 334 CABINETS)

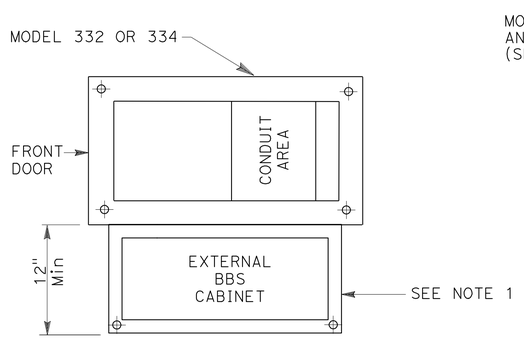

BASE PLAN FOR BBS MOUNTED TO THE MODEL 332 OR 334 CABINET

(FOR DIMENSIONS AND DETAILS NOT SHOWN, SEE SHEET A6-1 TO A6-4, CABINET HOUSING DETAILS OF THE TRANSPORTATION ELECTRICAL EQUIPMENT SPECIFICATION (TEES))

APPROVED FOR ELECTRICAL WORK ONLY

SIGNAL AND LIGHTING (BBS FOUNDATION DETAILS)

NO SCALE

E-4

STATE OF CALIFORNIA - DEPARTMENT OF TRANSPORTATION
Caltrans® ELECTRICAL DESIGN A

REVISED BY	DATE REVISED
THERESA A. GABRIEL	FERDINAND DE LA CRUZ
CALCULATED-DESIGNED BY	CHECKED BY
FUNCTIONAL SUPERVISOR	FERDINAND DE LA CRUZ

LAST REVISION 12-28-11 | DATE PLOTTED => 31-JAN-2012 | TIME PLOTTED => 18:18

Dist	COUNTY	ROUTE	POST MILES TOTAL PROJECT	SHEET No.	TOTAL SHEETS
08	Riv	74	27.4/27.7	25	58

Theresa Gabriel 12-29-11
REGISTERED ~~ELECTRICAL~~ ENGINEER DATE

1-30-12
PLANS APPROVAL DATE

REGISTERED PROFESSIONAL ENGINEER THERESA A. GABRIEL No. E15129 Exp 6-30-12 ELECT STATE OF CALIFORNIA

THE STATE OF CALIFORNIA OR ITS OFFICERS OR AGENTS SHALL NOT BE RESPONSIBLE FOR THE ACCURACY OR COMPLETENESS OF SCANNED COPIES OF THIS PLAN SHEET.

LEGEND: (THIS SHEET ONLY)

PTS = POWER TRANSFER SWITCH
UPS = UNINTERRUPTIBLE POWER SUPPLY
UPSC = UNINTERRUPTIBLE POWER SUPPLY CONTROLLER
UPSM = UPS MODE
BP = BYPASS
MBPS = MANUAL BYPASS SWITCH
AC+ = UNGROUNDED CONDUCTOR
AC- = GROUNDED CONDUCTOR
C = COMMON
Grn = GREEN
Blk = BLACK
Wht = WHITE
SF = STATE-FURNISHED
Batt = BATTERY
Temp = TEMPERATURE
TB = TERMINAL BOARD
Cntl = CONTROL
Gnd = GROUND

NOTES: (THIS SHEET ONLY)

1. TYPE B REFERS TO THE BBS EQUIPMENT FROM MANUFACTURER B.
2. CASE-1 REFERS TO THE SITUATION WHEN THE ENTIRE BBS EQUIPMENT INCLUDING THE BATTERIES ARE INSTALLED IN THE BBS CABINET.
3. THE LOCATION OF THE 2"C NIPPLE WILL BE DETERMINED BY THE ENGINEER IN THE FIELD.
4. THE CONTRACTOR SHALL FURNISH AND INSTALL A NEMA-1 ENCLOSURE WITH 30 A, 1P, 120/240 VOLTS RATED CIRCUIT BREAKER MANUFACTURED PER UL STANDARD 489.
5. A TEMPERATURE PROBE SHALL BE ATTACHED TO THE BATTERY BY TAPE OR ATTACHED TO THE NEGATIVE TERMINAL OF THE BATTERY.
6. THE ELECTRICAL POWER FOR THE COOLING FAN FOR THE BBS CABINET SHALL BE TAPPED FROM THE BOTTOM OF THE TB IN THE 332 CABINET.
7. THE CONTRACTOR SHALL PROVIDE A 9-WIRE WIRING HARNESS OR BUNDLED 9 MULTICOLOR CONDUCTORS, #18 AWG WIRES FROM THE RELAY ON THE INVERTER/CHARGER UNIT TO THE CONTROLLER. THE ENDS OF THE CONDUCTORS SHALL BE INSULATED WITH TAPE AND A SIX-FOOT COIL ON EACH END.

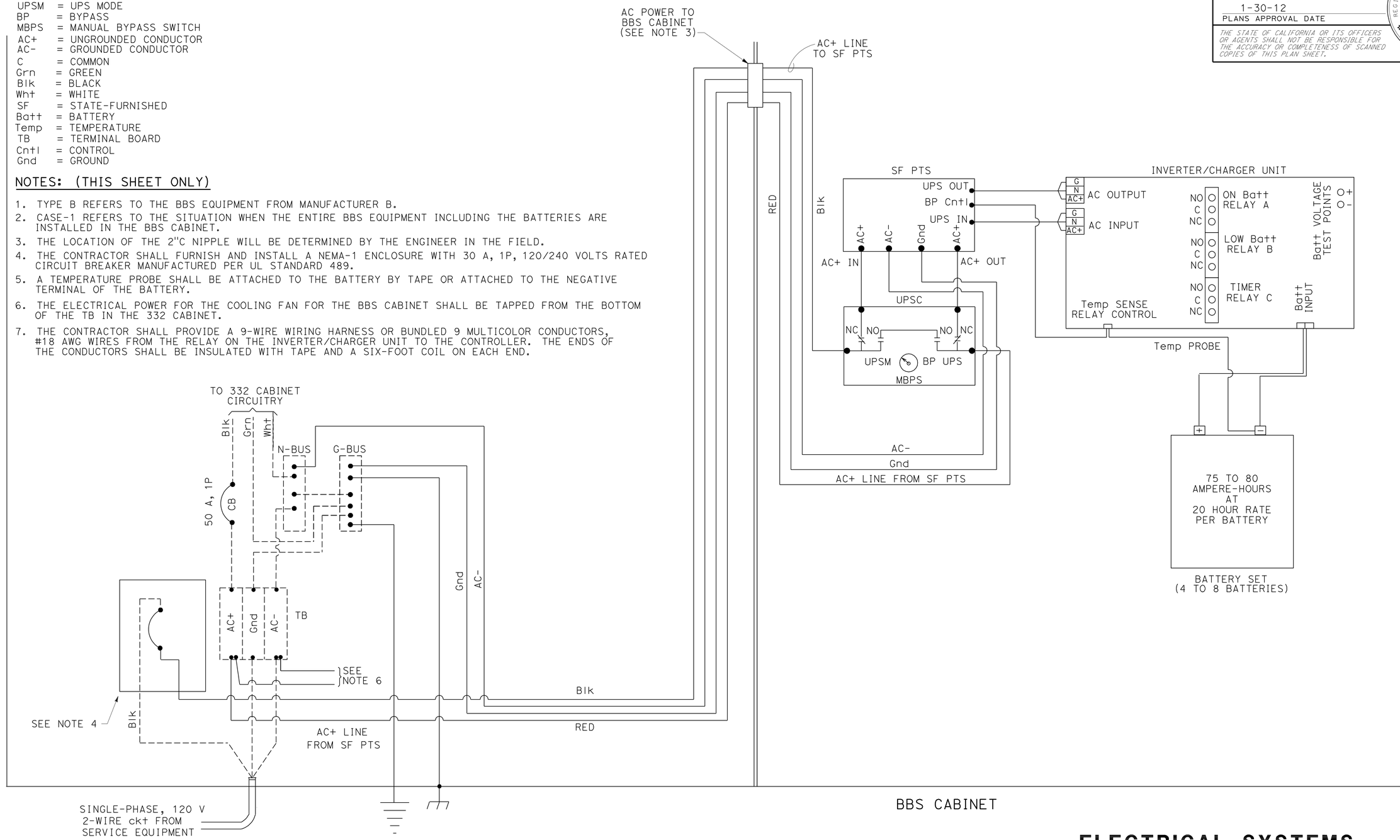

APPROVED FOR ELECTRICAL WORK ONLY

ELECTRICAL SYSTEMS (BBS POWER CONNECTION DIAGRAM, TYPE B, CASE-1)

NO SCALE

E-5

STATE OF CALIFORNIA - DEPARTMENT OF TRANSPORTATION
Caltrans® ELECTRICAL DESIGN A

FUNCTIONAL SUPERVISOR: FERDINAND DE LA CRUZ
CALCULATED-DESIGNED BY: THERESA A. GABIEL
CHECKED BY: FERDINAND DE LA CRUZ
REVISED BY
DATE REVISED

LAST REVISION 12-28-11
DATE PLOTTED => 31-JAN-2012
TIME PLOTTED => 18:18

Dist	COUNTY	ROUTE	POST MILES TOTAL PROJECT	SHEET No.	TOTAL SHEETS
08	Riv	74	27.4/27.7	26	58

Theresa Gabriel 12-29-11
REGISTERED ~~ELECTRICAL~~ ENGINEER DATE

1-30-12
PLANS APPROVAL DATE

REGISTERED PROFESSIONAL ENGINEER THERESA A. GABRIEL No. E15129 Exp. 6-30-12 ELECT STATE OF CALIFORNIA

THE STATE OF CALIFORNIA OR ITS OFFICERS OR AGENTS SHALL NOT BE RESPONSIBLE FOR THE ACCURACY OR COMPLETENESS OF SCANNED COPIES OF THIS PLAN SHEET.

LEGEND: (THIS SHEET ONLY)

PTS = POWER TRANSFER SWITCH
UPS = UNINTERRUPTIBLE POWER SUPPLY
UPSC = UNINTERRUPTIBLE POWER SUPPLY CONTROLLER
UPSM = UPS MODE
BP = BYPASS
MBPS = MANUAL BYPASS SWITCH
AC+ = UNGROUNDED CONDUCTOR
AC- = GROUNDED CONDUCTOR
C = COMMON
Grn = GREEN
Blk = BLACK
Wht = WHITE
SF = STATE-FURNISHED
TB = TERMINAL BOARD
Cntl = CONTROL
Gnd = GROUND
Temp = TEMPERATURE
Batt = BATTERY

NOTES: (THIS SHEET ONLY)

1. TYPE A REFERS TO THE BBS EQUIPMENT FROM MANUFACTURER A.
2. CASE-1 REFERS TO THE SITUATION WHEN THE ENTIRE BBS EQUIPMENT INCLUDING THE BATTERIES ARE INSTALLED IN THE BBS CABINET.
3. THE LOCATION OF THE 2"C NIPPLE WILL BE DETERMINED BY THE ENGINEER IN THE FIELD.
4. THE CONTRACTOR SHALL FURNISH AND INSTALL A NEMA-1 ENCLOSURE WITH 30 A, 1P, 120/240 VOLTS RATED CIRCUIT BREAKER MANUFACTURED PER UL STANDARD 489.
5. A TEMPERATURE PROBE SHALL BE ATTACHED TO THE BATTERY BY TAPE OR ATTACHED TO THE NEGATIVE TERMINAL OF THE BATTERY.
6. THE ELECTRICAL POWER FOR THE COOLING FAN FOR THE BBS CABINET SHALL BE TAPPED FROM THE BOTTOM OF THE TB IN THE 332 CABINET.
7. THE CONTRACTOR SHALL PROVIDE A 9-WIRE WIRING HARNESS OR BUNDLED 9 MULTICOLOR CONDUCTORS, #18 AWG WIRES FROM THE RELAY ON THE INVERTER/CHARGER UNIT TO THE CONTROLLER. THE ENDS OF THE CONDUCTORS SHALL BE INSULATED WITH TAPE AND A SIX-FOOT COIL ON EACH END.

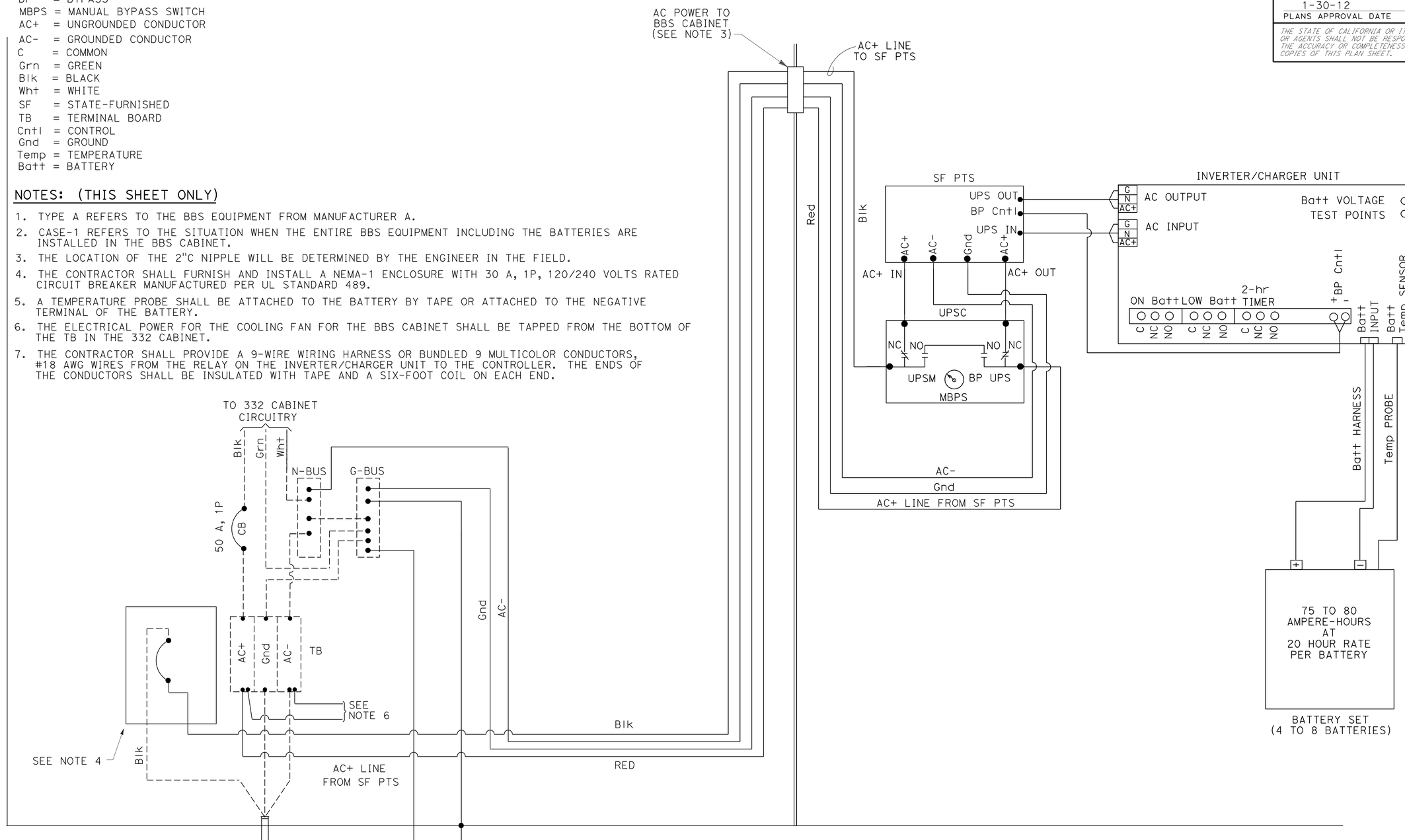

APPROVED FOR ELECTRICAL WORK ONLY

ELECTRICAL SYSTEMS (BBS POWER CONNECTION DIAGRAM, TYPE A, CASE-1)

NO SCALE

E-6

STATE OF CALIFORNIA - DEPARTMENT OF TRANSPORTATION
Caltrans® ELECTRICAL DESIGN B

FUNCTIONAL SUPERVISOR: FERDINAND DE LA CRUZ
CALCULATED-DESIGNED BY: TERESA A. GABRIEL
CHECKED BY: FERDINAND DE LA CRUZ
REVISED BY
DATE REVISED

LAST REVISION 12-28-11
DATE PLOTTED => 01-FEB-2012
TIME PLOTTED => 13:25

Dist	COUNTY	ROUTE	POST MILES TOTAL PROJECT	SHEET No.	TOTAL SHEETS
08	Riv	74	27.4/27.7	27	58

REGISTERED ELECTRICAL ENGINEER 12-29-11 DATE

1-30-12
PLANS APPROVAL DATE

REGISTERED PROFESSIONAL ENGINEER
FERDINAND DE LA CRUZ
No. E 17215
Exp. 6-30-12
ELECTRICAL
STATE OF CALIFORNIA

THE STATE OF CALIFORNIA OR ITS OFFICERS OR AGENTS SHALL NOT BE RESPONSIBLE FOR THE ACCURACY OR COMPLETENESS OF SCANNED COPIES OF THIS PLAN SHEET.

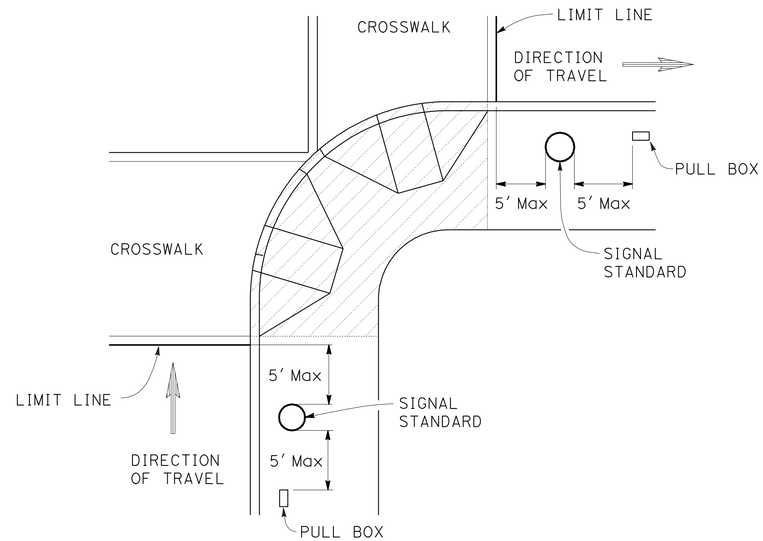

PULL BOX AND SIGNAL STANDARD LOCATION DETAIL

NOTES:

1. NO PULL BOX, CABINET, SIGNAL STANDARD, LIGHTING STANDARD, OR ANY ELECTRICAL OR NON-ELECTRICAL EQUIPMENT SHALL BE INSTALLED IN THE CURB RAMP AREA OR FUTURE CURB RAMP AREA.

   CURB RAMP AREA OR FUTURE CURB RAMP AREA

2. PULL BOXES SHALL NOT BE INSTALLED BETWEEN THE SIGNAL STANDARD AND THE CROSSWALKS.

APPROVED FOR ELECTRICAL WORK ONLY

MODIFY SIGNAL

NO SCALE

E-7

STATE OF CALIFORNIA - DEPARTMENT OF TRANSPORTATION
Caltrans® ELECTRICAL DESIGN A

FUNCTIONAL SUPERVISOR: FERDINAND DE LA CRUZ
CALCULATED-DESIGNED BY: NASIMA HYDER
CHECKED BY: FERDINAND DE LA CRUZ
REVISED BY
DATE REVISED

LAST REVISION 12-28-11
DATE PLOTTED => 31-JAN-2012
TIME PLOTTED => 18:25

DIST	COUNTY	ROUTE	POST MILES TOTAL PROJECT	SHEET No	TOTAL SHEETS
08	Riv	74	27.4/27.7	28	58

Eliseo Lopez 6/23/11
REGISTERED CIVIL ENGINEER DATE

1-30-12
PLANS APPROVAL DATE

REGISTERED PROFESSIONAL ENGINEER
ELISEO LOPEZ
No. C72910
Exp. 12/31/12
CIVIL
STATE OF CALIFORNIA

The State of California or its officers or agents shall not be responsible for the accuracy or completeness of electronic copies of this plan sheet.

NOTES:

1. All metallic conduits, bolts, straps and misc hardware shall be galvanized.

2. Elements (Total VIVDS assembly) shall have a maximum weight of 10 lbs and a maximum effective pressure area of 1 square foot.

3. Maximum of 2 VIVDS elements added per traffic signal structure. Maximum of 1 element per arm (luminaire arm or traffic signal arm). This detail shown applies only to newly Installed poles designed according to Standard Plans.

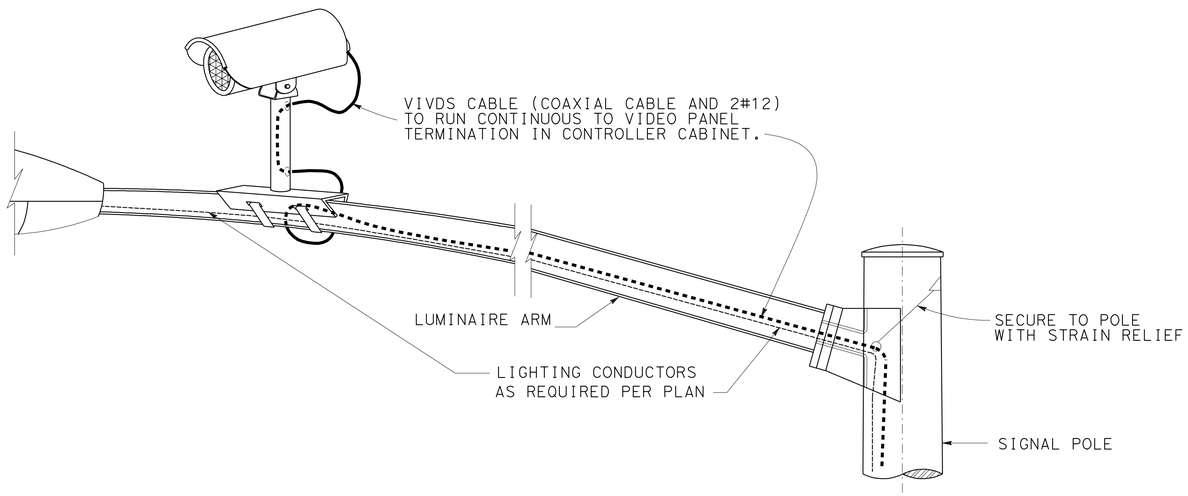

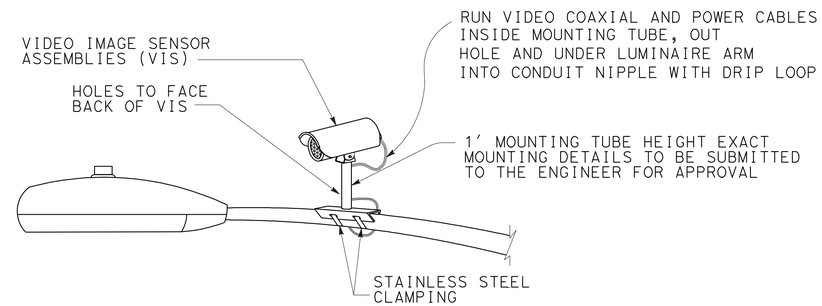

CAMERA MOUNTING DETAILS

NO SCALE

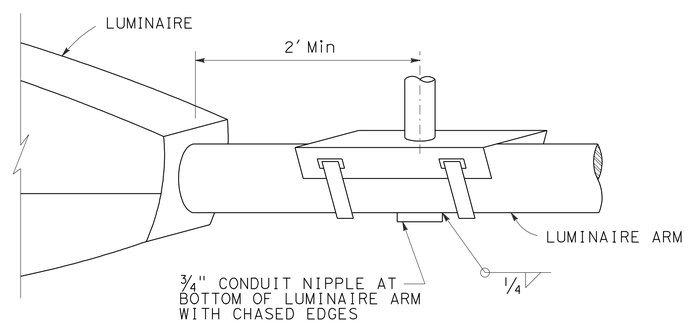

DETAIL A

NO SCALE

THE CONTRACTOR SHALL VERIFY ALL CONTROLLING FIELD DIMENSIONS BEFORE ORDERING OR FABRICATING ANY MATERIAL.

BRANCH CHIEF JEFFREY B WOODY	DESIGN	BY E LOPEZ	CHECKED K.C. LIU
	DETAILS	BY A R DUDSAK	CHECKED K.C.LIU
	QUANTITIES	BY X	CHECKED X

STATE OF CALIFORNIA
DEPARTMENT OF TRANSPORTATION

DIVISION OF ENGINEERING SERVICES
DESIGN AND TECHNICAL SERVICES
SPECIAL DESIGNS BRANCH A

BRIDGE NO. N/A
POST MILE

CAMERA MOUNTING DETAILS
SIGNAL AND LIGHTING SYSTEM

SES-1

(ENGLISH) SPECIAL DESIGNS BRANCH BORDER SHEET (REV. 7-1-09)

ORIGINAL SCALE IN INCHES FOR REDUCED PLANS 0 1 2 3

UNIT: 3620
PROJECT NUMBER & PHASE: 0800000503-1
CONTRACT NO.: 08-0M8701

DISREGARD PRINTS BEARING EARLIER REVISION DATES
REVISION DATES 6/24/11 6/24/11 6/23/11
SHEET X OF X

FILE => spec_des_br_prj/2011sd/08-0M8701/08-0m8701_ses-1.dgn

USERNAME => s128843 DATE PLOTTED => 31-JAN-2012 TIME PLOTTED => 18:20

Dist	COUNTY	ROUTE	POST MILES TOTAL PROJECT	SHEET No.	TOTAL SHEETS
08	Riv	74	27.4/27.7	29	58

Randell D. Hiatt
REGISTERED CIVIL ENGINEER

May 20, 2011
PLANS APPROVAL DATE

REGISTERED PROFESSIONAL ENGINEER
Randell D. Hiatt
No. C50200
Exp. 6-30-11
CIVIL
STATE OF CALIFORNIA

The State of California or its officers or agents shall not be responsible for the accuracy or completeness of electronic copies of this plan sheet.

To accompany plans dated 1-30-12

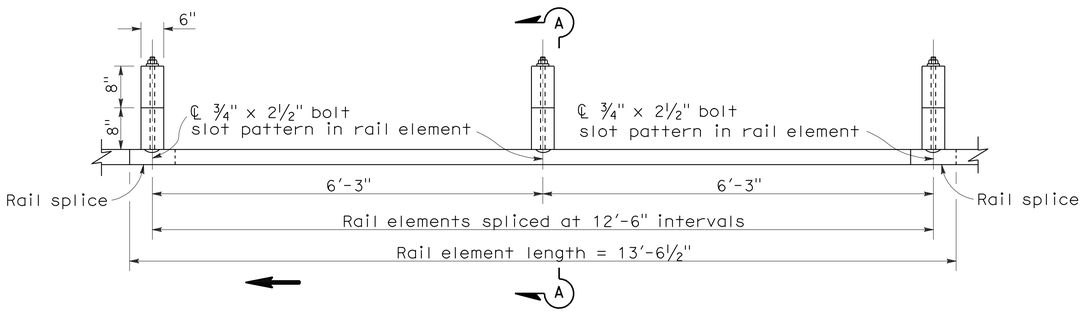

PLAN

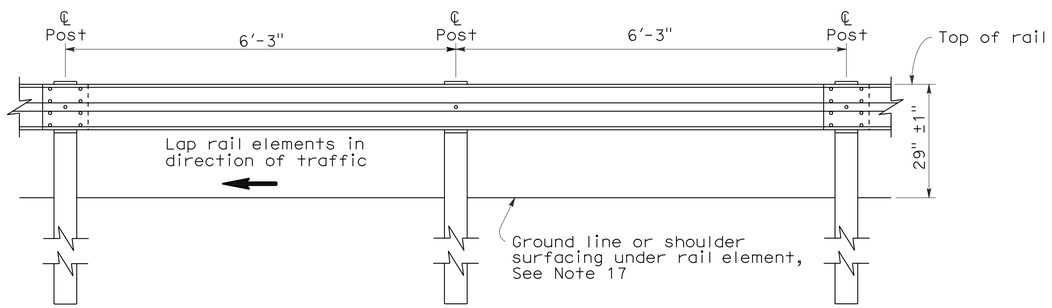

ELEVATION

METAL BEAM GUARD RAILING WITH WOOD POST AND BLOCKS

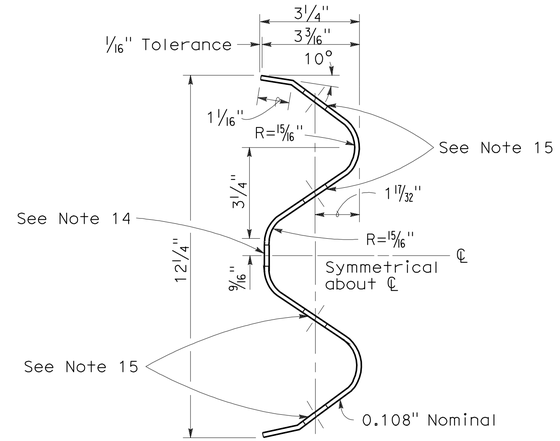

SECTION THRU RAIL ELEMENT

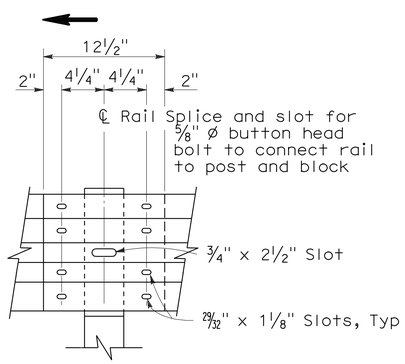

ELEVATION

RAIL ELEMENT SPLICE DETAIL

a) Connect the over lapped end of the rail elements with ⅝" ø x 1⅜" button head oval shoulder splice bolts inserted into the 29⁄32" x 1⅛" slots and bolted together with ⅝" ø recessed hex nuts. Recess of hex nut points toward rail element. A total of 8 bolts and nuts are to be used at each rail splice connection.

b) The ends of the rail elements are to be overlapped in the direction of traffic (see details).

c) Where end cap is to be attached to the end of a rail element, a total of 4 of the above described splice bolts and nuts are to be used.

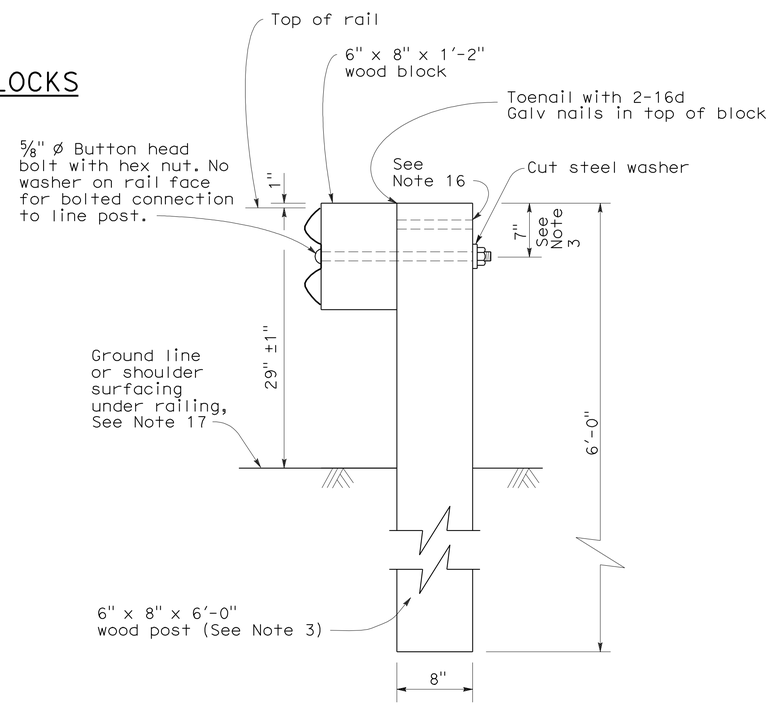

SECTION A-A

TYPICAL WOOD LINE POST INSTALLATION

See Note 4

NOTES:

1. For details of steel post installations, see Standard Plan A77A2.
2. For details of standard hardware used to construct guard railing, see Standard Plan A77B1.
3. For details of wood posts and wood blocks used to construct guard railing, see Standard Plan A77C1.
4. For additional installation details, see Standard Plan A77C3.
5. Guard railing post spacing to be 6'-3" center to center, except as otherwise noted.
6. For guard railing typical layouts, see the A77E, A77F and A77G Series of Standard Plans.
7. For terminal system end treatment details, see the A77L Series of Standard Plans. To connect railing to terminal system end treatment, transition the top of railing height at a ratio of 120:1 to terminal system end treatment height plus one 12'-6" standard railing section at the transitioned height for a horizontal connection to the end treatment.
8. For guard railing end anchor details, see Standard Plans A77H1 and A77I2.
9. For details of guard railing transition to bridge railing, see Standard Plan A77J4.
10. For additional details of guard railing connection to bridge railings, see Standard Plans A77J1, A77J2 and A77K1.
11. For guard railing connection details to abutments and walls, see Standard Plan A77J3.
12. Direction of adjacent traffic indicated by →.
13. For typical guard railing delineation and dike positioning details, see Standard Plan A77C4.
14. Slotted hole for bolted connection of rail element to block and post. See "Section Thru Rail Element".
15. Slotted holes for splice bolts to overlap ends of rail element. See "Section Thru Rail Element".
16. Additional hole in uppermost portion of line post is for potential future adjustments of railing height. See Standard Plan A77C1.
17. Install posts in soil.

STATE OF CALIFORNIA
DEPARTMENT OF TRANSPORTATION

METAL BEAM GUARD RAILING STANDARD RAILING SECTION (WOOD POST WITH WOOD BLOCK)

NO SCALE

RSP A77A1 DATED MAY 20, 2011 SUPERSEDES STANDARD PLAN A77A1 DATED MAY 1, 2006 - PAGE 41 OF THE STANDARD PLANS BOOK DATED MAY 2006.

REVISED STANDARD PLAN RSP A77A1

2006 REVISED STANDARD PLAN RSP A77A1

3-10-11

Dist	COUNTY	ROUTE	POST MILES TOTAL PROJECT	SHEET No.	TOTAL SHEETS
08	Riv	74	27.4/27.7	30	58

Randell D. Hiatt
REGISTERED CIVIL ENGINEER

May 20, 2011
PLANS APPROVAL DATE

REGISTERED PROFESSIONAL ENGINEER
Randell D. Hiatt
No. C50200
Exp. 6-30-11
CIVIL
STATE OF CALIFORNIA

The State of California or its officers or agents shall not be responsible for the accuracy or completeness of electronic copies of this plan sheet.

To accompany plans dated 1-30-12

NOTES:

1. When necessary to place dike in front of face of guard railing, only Type C dike may be used. For dike details, see Standard Plan A87B.
2. For standard railing post embedment, see Standard Plans A77C3.
3. Guard railing delineation to be used where shown on the Project Plans.
4. When dike or curb is placed under guard railing, the maximum height of the dike or curb shall be 4". Mountable dike should not be used. For dike and curb details, see Standard Plans A87A and A87B.
5. For details of typical distance between the face of rail and hinge point, see Standard Plan A77C3.
6. For steel line posts, use ¼ - 20 self-tapping screws in 0.22" diameter holes or ¼" bolts in 9/32" diameter holes.

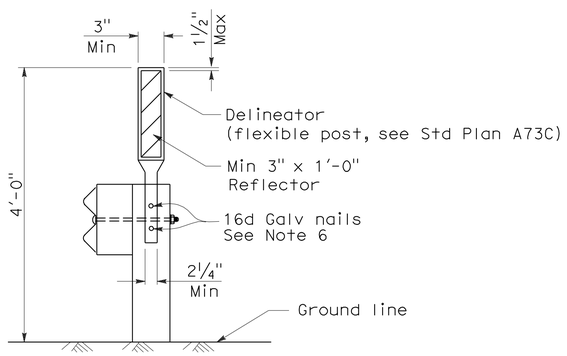

GUARD RAILING DELINEATION

See Note 3

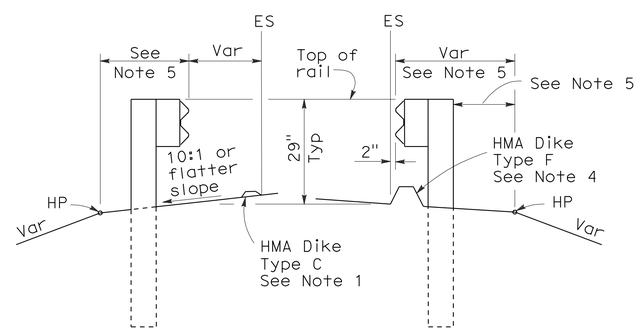

DIKE POSITIONING

See Note 1

STATE OF CALIFORNIA
DEPARTMENT OF TRANSPORTATION

METAL BEAM GUARD RAILING TYPICAL RAILING DELINEATION AND DIKE POSITIONING DETAILS

NO SCALE

RSP A77C4 DATED MAY 20, 2011 SUPERSEDES RSP A77C4 DATED JUNE 6, 2008 AND STANDARD PLAN A77C4 DATED MAY 1, 2006 - PAGE 47 OF THE STANDARD PLANS BOOK DATED MAY 2006.

REVISED STANDARD PLAN RSP A77C4

2006 REVISED STANDARD PLAN RSP A77C4

3-10-11

DIST	COUNTY	ROUTE	POST MILES TOTAL PROJECT	SHEET NO.	TOTAL SHEETS
08	Riv	74	27.4/27.7	31	58

REGISTERED CIVIL ENGINEER

November 17, 2006
PLANS APPROVAL DATE

REGISTERED PROFESSIONAL ENGINEER Michael Janzen No. 44788 Exp. 03-31-08 CIVIL STATE OF CALIFORNIA

The State of California or its officers or agents shall not be responsible for the accuracy or completeness of electronic copies of this plan sheet.

To accompany plans dated 1-30-12

2006 REVISED STANDARD PLAN RSP A87A

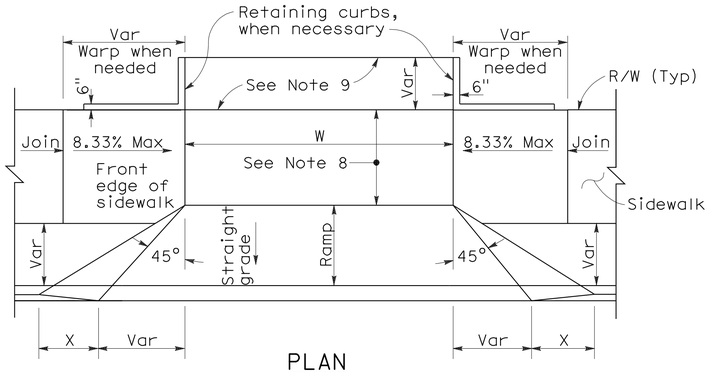

PLAN

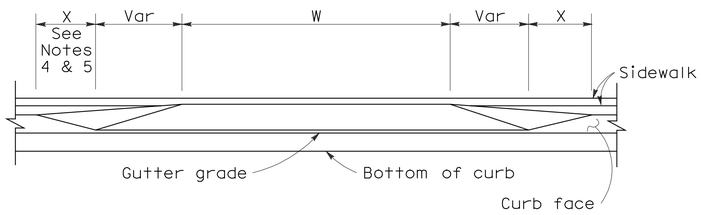

ELEVATION

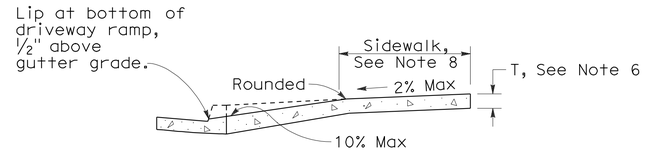

CASE A

Typical driveway, sidewalk not depressed

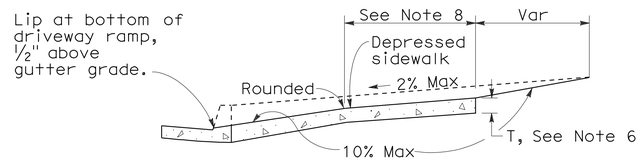

CASE B

Driveway with depressed sidewalk

SECTIONS

DRIVEWAYS

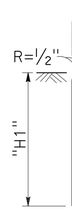

TYPE A1 CURBS

See Table A

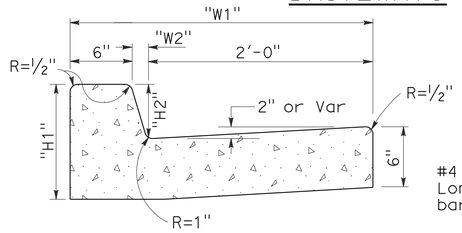

TYPE A2 CURBS

See Table A

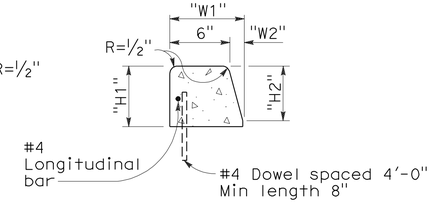

TYPE A3 CURBS

Superimposed on existing pavement
See Table A

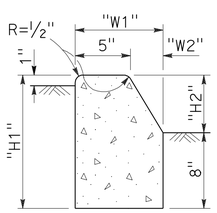

TYPE B1 CURBS

See Table A

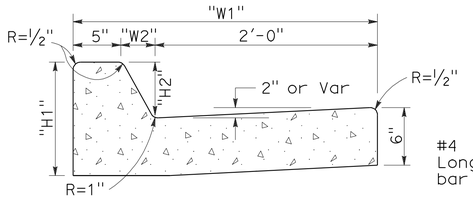

TYPE B2 CURBS

See Table A

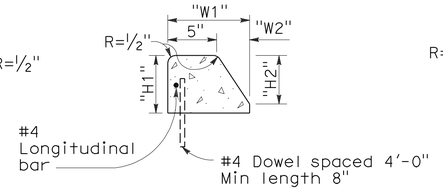

TYPE B3 CURBS

Superimposed on existing pavement
See Table A

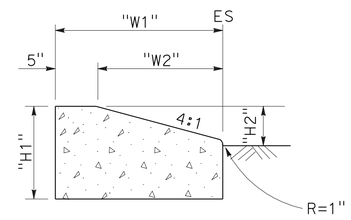

TYPE D CURBS

See Table A

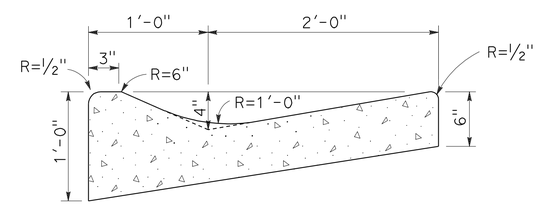

TYPE E CURB

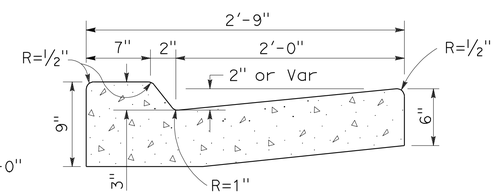

TYPE B4 CURBS

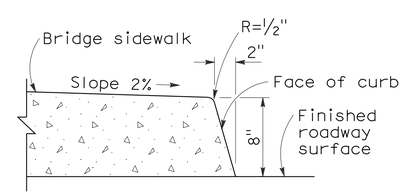

TYPE H CURB

On Bridges

CURBS

CURB QUANTITIES

TYPE	CUBIC YARDS PER LINEAR FOOT
A1-6	0.02585
A1-8	0.03084
A2-6	0.05903
A2-8	0.06379
A3-6	0.01036
A3-8	0.01435
B1-4	0.02185
B1-6	0.02930
B2-4	0.05515
B2-6	0.06171
B3-4	0.00641
B3-6	0.01074
B4	0.05709
D-4	0.04083
D-6	0.06804
E	0.06661

TABLE A

CURB TYPE	DIMENSIONS "H1"	"H2"	"W1"	"W2"
A1-6	1'-2"	6"	7½"	1½"
A1-8	1'-4"	8"	8"	2"
A2-6	1'-0"	6"	2'-7½"	1½"
A2-8	1'-2"	8"	2'-8"	2"
A3-6	6"	5"	7¼"	1¼"
A3-8	8"	7"	7¾"	1¾"
B1-4	1'-0"	4"	7½"	2½"
B1-6	1'-2"	6"	9"	4"
B2-4	10"	4"	2'-7½"	2½"
B2-6	1'-0"	6"	2'-9"	4"
B3-4	4"	3"	7"	2"
B3-6	6"	5"	8½"	3½"
D-4	10"	4"	1'-6"	1'-1"
D-6	1'-0"	6"	2'-2"	1'-8"

NOTES:

1. Case A driveway section typically applies.
2. Use Case B driveway section when ramp slopes would exceed 10% in Case A.
3. Use Case B driveway section when sidewalk cross slope would exceed 2% in Case A.
4. X=3'-0" except for curb heights over 10" where 4:1 slopes shall be used on curb slope.
5. X is a variable when sidewalk is located where wheelchairs may traverse the surface. Slopes shall not exceed 8.33%.
6. Sidewalk and ramp thickness "T" at driveway shall be 4" for residental and 6" for commercial.
7. Difference in slope of the driveway ramp and the slope of a line between the gutter and a point on the roadway 5'-0" from gutter line shall not exceed 15%. Reduce driveway ramp slope, not gutter slope, where required.
8. Minimum width of clear passageway for sidewalk shall be 4'-0".
9. Retaining curbs and acquisition of construction easement may be necessary for narrow sidewalks or curb heights in excess of 6".
10. Across the pedestrian route at curb ramp locations, the gutter pan slope shall not exceed 1" of depth for each 2'-0" of width.

STATE OF CALIFORNIA
DEPARTMENT OF TRANSPORTATION

CURBS AND DRIVEWAYS

NO SCALE

RSP A87A DATED NOVEMBER 17, 2006 SUPERSEDES STANDARD PLAN A87A DATED MAY 1, 2006 - PAGE 113 OF THE STANDARD PLANS BOOK DATED MAY 2006.

REVISED STANDARD PLAN RSP A87A

10-25-06

DIST	COUNTY	ROUTE	POST MILES TOTAL PROJECT	SHEET NO.	TOTAL SHEETS
08	Riv	74	27.4/27.7	32	58

Gregory A. Balzer
LICENSED LANDSCAPE ARCHITECT

June 5, 2009
PLANS APPROVAL DATE

LICENSED LANDSCAPE ARCHITECT
Gregory A. Balzer 2016
Gregory A. Balzer
10-8-09
(Renewal Date)
2-28-11
(Renewal Date)
5-14-09
Date
STATE OF CALIFORNIA

The State of California or its officers or agents shall not be responsible for the accuracy or completeness of electronic copies of this plan sheet.

To accompany plans dated 1-30-12

A

AB	aggregate base
ABS	acrylonitrile-butadiene-styrene
AC	asphalt concrete
Adj	adjacent/adjustable
AIC	auxiliary irrigation controller
Alt	alternative
AMEND	amendment
ARV	air release valve
AUTO	automatic
AUX	auxiliary
AVB	atmospheric vacuum breaker

B

B&B	balled and burlapped
B/B	brass/bronze
B/B/PL	brass/bronze/plastic
B/PL	brass/plastic
BFM	bonded fiber matrix
Bit Ctd	bituminous coated
BP	booster pump
BPA	backflow preventer assembly
BPAE	backflow preventer assembly in enclosure
BPE	backflow preventer enclosure
BV	ball valve

C

CAP	corrugated aluminum pipe
CARV	combination air release valve
CCA	cam coupler assembly
CEC	controller enclosure cabinet
CHDPE	corrugated high density polyethylene
CL	chain link
CNC	control and neutral conductors
Conc	concrete
Cond	conduit
CSP	corrugated steel pipe
CST	center strip
CV	check valve

D

Dia	diameter
DIP	ductile iron pipe
DN	diameter nominal

E

EA	each
Elect	electric/electrical
Elev	elevation
ENCL	enclosure
EP	edge of pavement
ES	edge of shoulder
EST	end strip
ESTB	establishment
ETW	edge of traveled way

F

F	full circle
F/P	full/part circle
FAU	filter assembly unit
FCV	flow control valve
FERT	fertilizer
FG	finished grade
FIPT	female iron pipe thread
FIS	fertilizer injector system
FL	flow line
FM	flow monitor
FS	flow sensor
Ft	foot/feet
FV	flush valve

G

GAL	Gallon(s)
Galv	galvanized
GARV	garden valve
GPH	gallons per hour
GPM	gallons per minute
GSP	galvanized steel pipe
GV	gate valve

H

H	half circle
HB	hose bib
HDPE	high density polyethylene
HP	horsepower/hinge point
HPL	high pressure line
Hwy	highway

I

IC	irrigation controller
ICC	irrigation controller(s) in controller enclosure cabinet
ID	inside diameter
In	inches
IFS	irrigation filtration system
IPS	iron pipe size
IPT	iron pipe thread
Irr	irrigation

L

L	length
LF	linear foot

M

Max	maximum
MBGR	metal beam guard railing
MCV	manual control valve
MIC	master irrigation controller
Min	minimum
MIPT	male iron pipe thread
Misc	miscellaneous
Mtl	material
MVP	maintenance vehicle pullout

N

NCN	no common name
NL	nozzle line
No.	number
NPT	national pipe thread

O

O/C	on center
OD	outside diameter
Oz	ounce

P

P	part circle
PB	pull box
PCC	portland cement concrete
PE	polyethylene
Pkt	packet
PL	plastic
PLT	plant/planting
PLT ESTB	plant establishment
PM	post mile
PR	pressure rated
PRLV	pressure relief valve
PSFM	polymer stabilized fiber matrix
PSI	pounds per square inch
PRV	pressure reducing valve
PVC	polyvinyl chloride
Pvmt	pavement

Q

Q	quarter circle
QCV	quick coupling valve

R

R	radius
RCP	reinforced concrete pipe
RCV	remote control valve
RCVM	remote control valve (master)
RCVMF	remote control valve (master) w/ flow meter
RCW	recycled/reclaimed water
RECP	rolled erosion control product
REQ	required
R/W	right of way

S

S	slip
SCC	sprinkler control conduit
SCH	schedule
SF	state-furnished
Shld	shoulder
SQFT	square foot/feet
SQYD	square yard(s)
SST	side strip
Sta	station
Std	standard
SW	sidewalk/sound wall

T

T	third circle/thread
TLS	truck loading standpipe
TQ	three quarter circle
TRM	turf reinforcement mat
TRVD	traveled
TT	two third circle
Typ	typical

U

UG	underground

V

VAU	valve assembly unit

W

W	width
W/	with
WM	water meter
WS	wye strainer
WSP	welded steel pipe
WWM	welded wire mesh

NOTE:

FOR ADDITIONAL ABBREVIATIONS, SEE STANDARD PLANS A10A AND A10B.

STATE OF CALIFORNIA
DEPARTMENT OF TRANSPORTATION

PLANTING AND IRRIGATION ABBREVIATIONS

NO SCALE

RSP H1 DATED JUNE 5, 2009 SUPERSEDES STANDARD PLAN H1
DATED MAY 1, 2006 - PAGE 201 OF THE STANDARD PLANS BOOK DATED MAY 2006.

REVISED STANDARD PLAN RSP H1

2006 REVISED STANDARD PLAN RSP H1

DIST	COUNTY	ROUTE	POST MILES TOTAL PROJECT	SHEET NO.	TOTAL SHEETS
08	Riv	74	27.4/27.7	33	58

LICENSED LANDSCAPE ARCHITECT

June 5, 2009
PLANS APPROVAL DATE

The State of California or its officers or agents shall not be responsible for the accuracy or completeness of electronic copies of this plan sheet.

LICENSED LANDSCAPE ARCHITECT — Gregory A. Balzer — 2016 — 9-10-09 Renewal Date — 2-28-11 Renewal Date — 5-14-09 Date — STATE OF CALIFORNIA

To accompany plans dated 1-30-12

EXISTING	PROPOSED	ITEM DESCRIPTION
		WATER METER (WM)
		BACKFLOW PREVENTER ASSEMBLY (BPA)
		BACKFLOW PREVENTER ASSEMBLY IN ENCLOSURE (BPAE)
		BACKFLOW PREVENTER ENCLOSURE (BPE)
		BOOSTER PUMP (BP)
		TRUCK LOADING STANDPIPE (TLS)
FS	FS	FLOW SENSOR (FS)
X	X	MASTER IRRIGATION CONTROLLER (MIC)
		AUXILIARY IRRIGATION CONTROLLER (AIC)
		IRRIGATION CONTROLLER (IC)/ IRRIGATION CONTROLLER (IC) (BATTERY) IRRIGATION CONTROLLER (IC) (SOLAR)
		IRRIGATION CONTROLLER(S) IN CONTROLLER ENCLOSURE CABINET (ICC)
		CONTROL AND NEUTRAL CONDUCTORS (CNC)
SCC	SCC	SPRINKLER CONTROL CONDUIT (SCC)
		IRRIGATION CROSSOVER
		EXTEND IRRIGATION CROSSOVER
		IRRIGATION SLEEVE
dip	DIP	DUCTILE IRON PIPE (SUPPLY LINE) (MAIN) (DIP)
		GALVANIZED STEEL PIPE (SUPPLY LINE) (MAIN) (GSP)
		GALVANIZED STEEL PIPE (SUPPLY LINE) (LATERAL) (GSP)
		PLASTIC PIPE (PR 200) (SUPPLY LINE) (MAIN)
		PLASTIC PIPE (PR 200) (SUPPLY LINE) (LATERAL)
		PLASTIC PIPE (IRRIGATION LINE)
		REMOTE CONTROL VALVE (RCV) REMOTE CONTROL VALVE (MASTER) (RCVM) REMOTE CONTROL VALVE (MASTER) W/FLOW METER (RCVMF)
		MANUAL CONTROL VALVE (MCV)
		VALVE ASSEMBLY UNIT (VAU)
		WYE STRAINER (WS)
		FILTER ASSEMBLY UNIT (FAU)
		GATE VALVE (GV)
		BALL VALVE (BV)

EXISTING	PROPOSED	ITEM DESCRIPTION
		QUICK COUPLING VALVE (QCV)
		CAM COUPLER ASSEMBLY (CCA)
		PRESSURE REDUCING VALVE (PRV)
		PRESSURE RELIEF VALVE (PRLV)
		FLOW CONTROL VALVE (FCV)
		COMBINATION AIR RELEASE VALVE (CARV)
		CHECK VALVE (CV)
		FLUSH VALVE (FV)
		NOZZLE LINE W/TURNING UNION
		IRRIGATION SYSTEM
		IRRIGATION SYSTEM TO BE REMOVED
		CHAIN LINK GATE
		QUICK COUPLING VALVE W/SPRINKLER PROTECTOR
3	3	SPRINKLER W/SPRINKLER PROTECTOR
	C	CONNECT TO EXISTING SYSTEM
		CAP
		CAP EXISTING

VALVE CODE

RCV SIZE
IRRIGATION CONTROLLER
CONTROLLER STATION
VALVE IN PARALLEL (IF APPLICABLE)
GPM
QUANTITY OF SPRINKLERS (WHEN SHOWN)

* 2½"-A-2b-40 -60

MCV SIZE
VALVE NUMBER
GPM
QUANTITY OF TYPE SPRINKLERS (WHEN SHOWN)

* 2"-3-30 -50

* VALVE CODES FOR EXISTING VALVES ARE SHOWN IN A DASHED ENCLOSURE.

STATE OF CALIFORNIA
DEPARTMENT OF TRANSPORTATION

PLANTING AND IRRIGATION SYMBOLS

NO SCALE

RSP H2 DATED JUNE 5, 2009 SUPERSEDES RSP H2 DATED MARCH 7, 2008 AND STANDARD PLAN H2 DATED MAY 1, 2006 - PAGE 202 OF THE STANDARD PLANS BOOK DATED MAY 2006.

REVISED STANDARD PLAN RSP H2

2006 REVISED STANDARD PLAN RSP H2

5-11-09

DIST	COUNTY	ROUTE	POST MILES TOTAL PROJECT	SHEET NO.	TOTAL SHEETS
08	Riv	74	27.4/27.7	34	58

LICENSED LANDSCAPE ARCHITECT

June 5, 2009
PLANS APPROVAL DATE

The State of California or its officers or agents shall not be responsible for the accuracy or completeness of electronic copies of this plan sheet.

Gregory A. Balzer 2016
10 Expiration
2-28-11
Renewal Date
5-14-09
Date
LICENSED LANDSCAPE ARCHITECT
STATE OF CALIFORNIA

To accompany plans dated 1-30-12

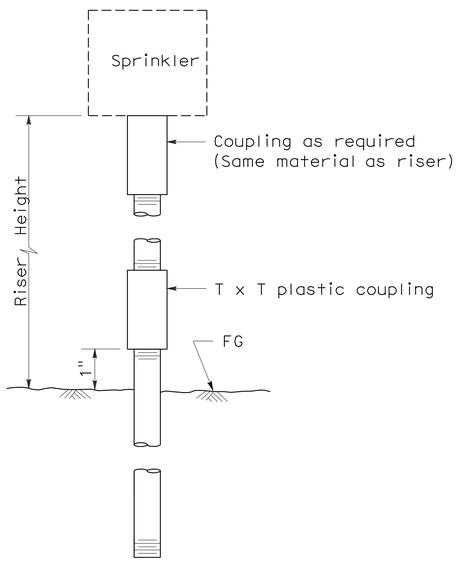

ELEVATION
RISER TYPE I

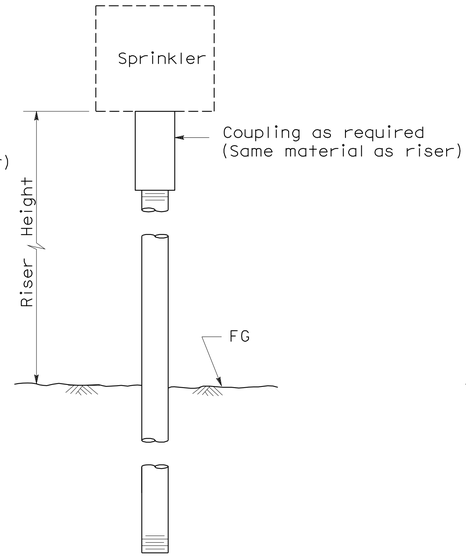

ELEVATION
RISER TYPE II

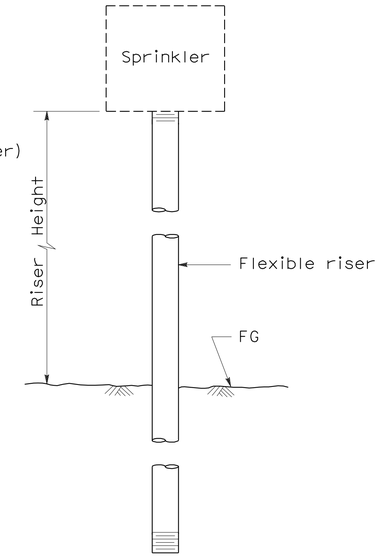

ELEVATION
RISER TYPE III

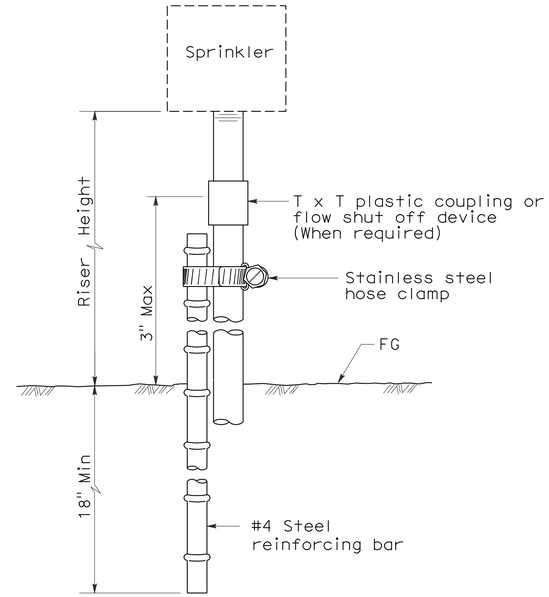

ELEVATION
RISER TYPE IV

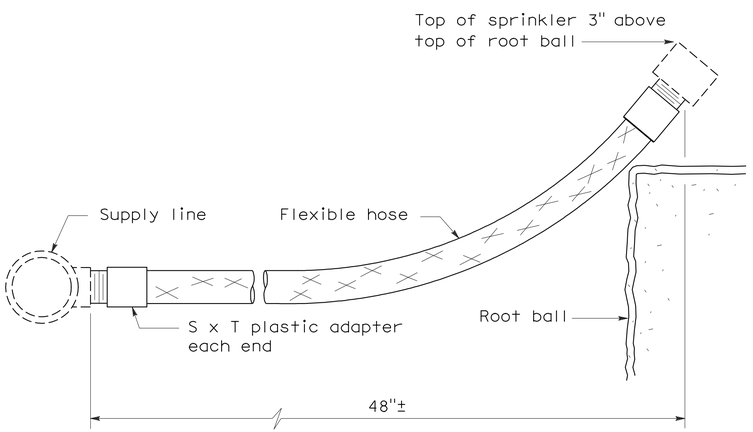

ELEVATION
RISER TYPE V

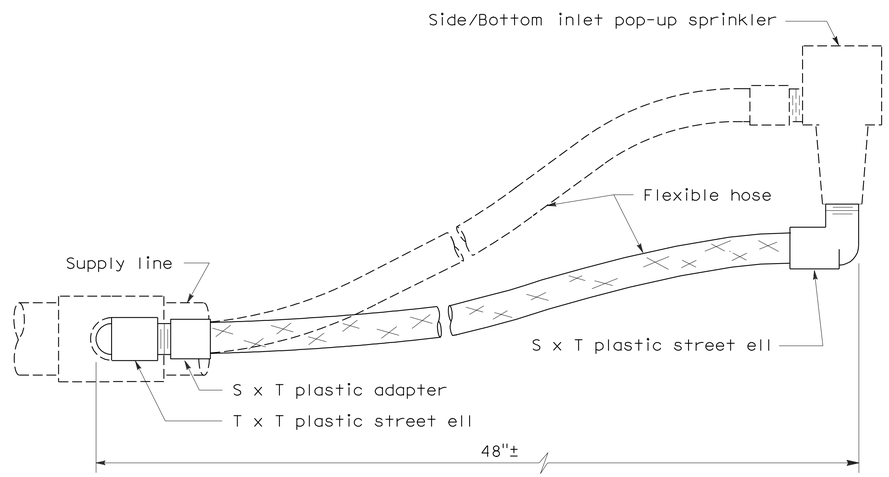

ELEVATION
RISER TYPE VI

STATE OF CALIFORNIA
DEPARTMENT OF TRANSPORTATION

PLANTING AND IRRIGATION DETAILS

NO SCALE

RSP H5 DATED JUNE 5, 2009 SUPERSEDES STANDARD PLAN H5
DATED MAY 1, 2006 - PAGE 205 OF THE STANDARD PLANS BOOK DATED MAY 2006.

REVISED STANDARD PLAN RSP H5

2006 REVISED STANDARD PLAN RSP H5

5-28-09

DIST	COUNTY	ROUTE	POST MILES TOTAL PROJECT	SHEET NO.	TOTAL SHEETS
08	Riv	74	27.4/27.7	35	58

Gregory A. Balzer
LICENSED LANDSCAPE ARCHITECT

June 5, 2009
PLANS APPROVAL DATE

The State of California or its officers or agents shall not be responsible for the accuracy or completeness of electronic copies of this plan sheet.

LICENSED LANDSCAPE ARCHITECT Gregory A. Balzer 2576 STATE OF CALIFORNIA
9-10-09 (Renewal Date)
2-28-11 (Renewal Date)
5-14-09 Date

To accompany plans dated 1-30-12

2006 REVISED STANDARD PLAN RSP H7

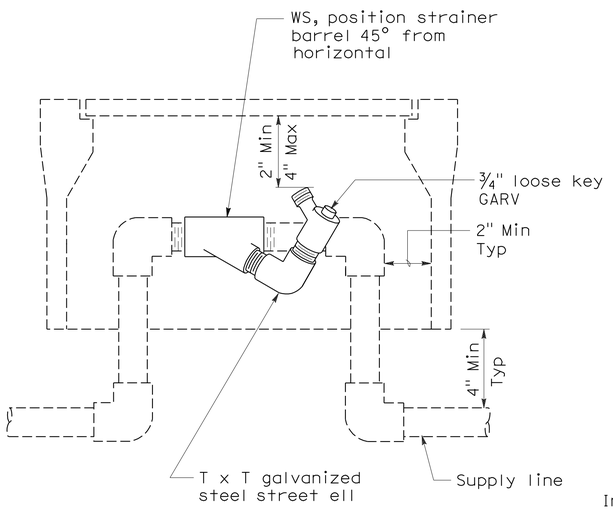

ELEVATION
WYE STRAINER

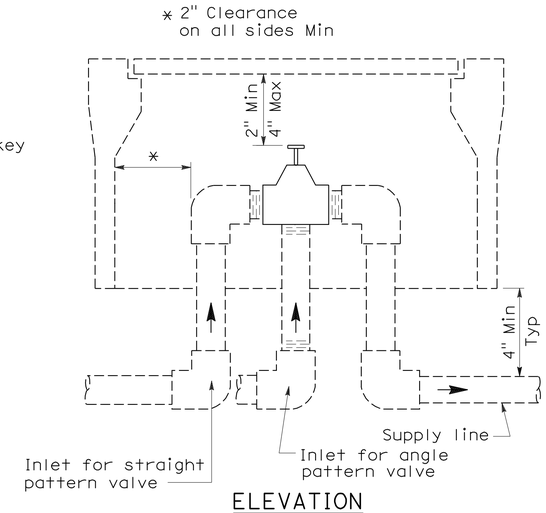

ELEVATION
VALVE

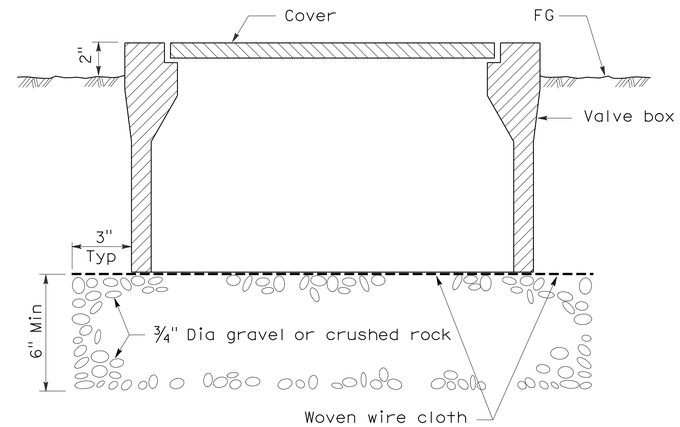

SECTION
VALVE BOX

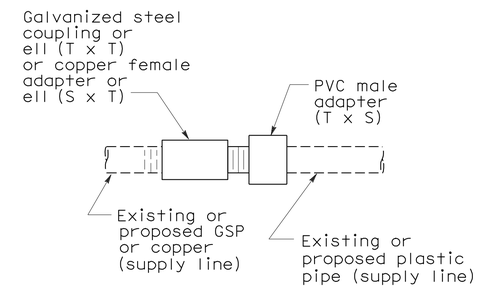

PLAN
GALVANIZED OR COPPER PIPE CONNECTION TO PLASTIC PIPE

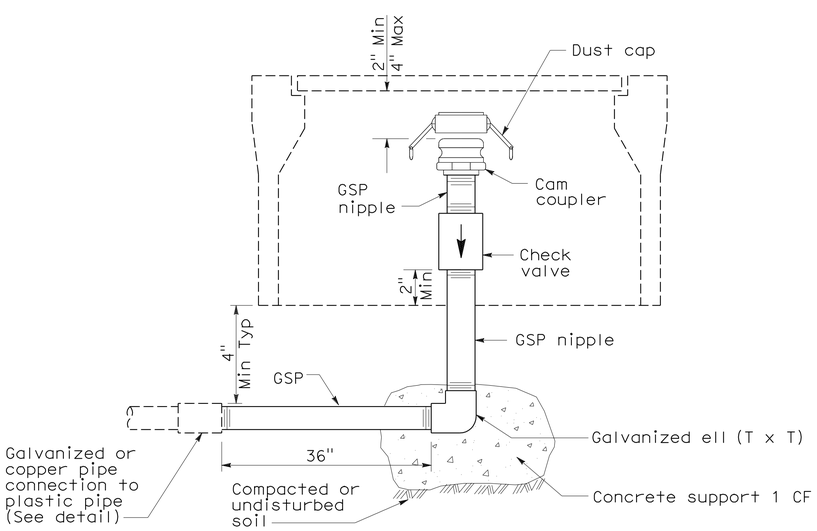

ELEVATION
CAM COUPLER ASSEMBLY

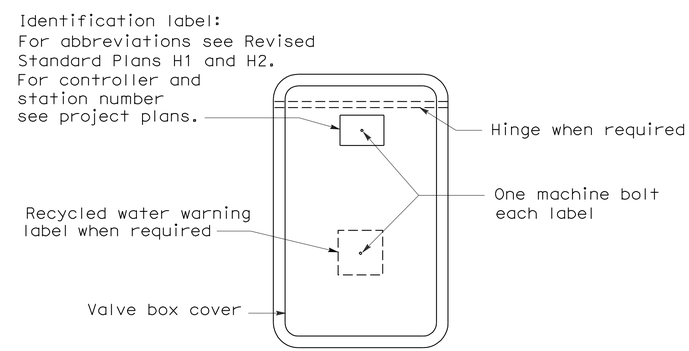

PLAN

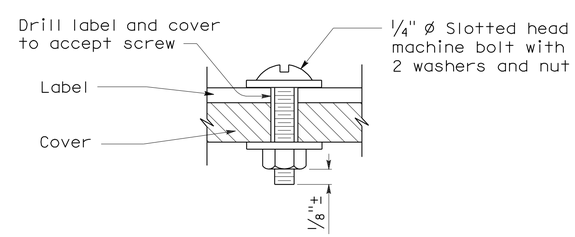

SECTION
VALVE BOX IDENTIFICATION

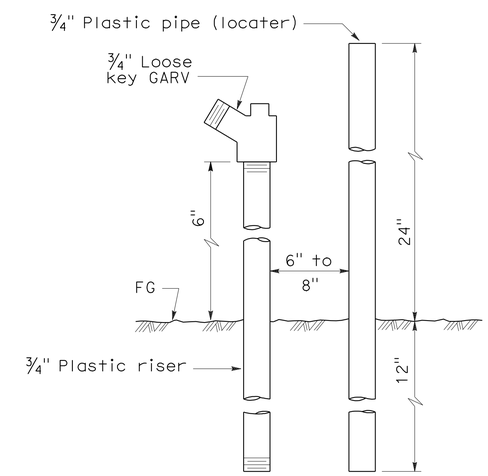

ELEVATION
FLUSH VALVE

STATE OF CALIFORNIA
DEPARTMENT OF TRANSPORTATION

PLANTING AND IRRIGATION DETAILS

NO SCALE

RSP H7 DATED JUNE 5, 2009 SUPERSEDES STANDARD PLAN H7
DATED MAY 1, 2006 - PAGE 207 OF THE STANDARD PLANS BOOK DATED MAY 2006.

REVISED STANDARD PLAN RSP H7

5-28-09

DIST	COUNTY	ROUTE	POST MILES TOTAL PROJECT	SHEET NO.	TOTAL SHEETS
08	Riv	74	27.4/27.7	36	58

Gregory A. Balzer
LICENSED LANDSCAPE ARCHITECT

June 5, 2009
PLANS APPROVAL DATE

LICENSED LANDSCAPE ARCHITECT Gregory A. Balzer 2016 STATE OF CALIFORNIA
Gregory A. Balzer
10-31-11 Expiration
2-28-11 Renewal Date
5-14-09 Date

The State of California or its officers or agents shall not be responsible for the accuracy or completeness of electronic copies of this plan sheet.

To accompany plans dated 1-30-12

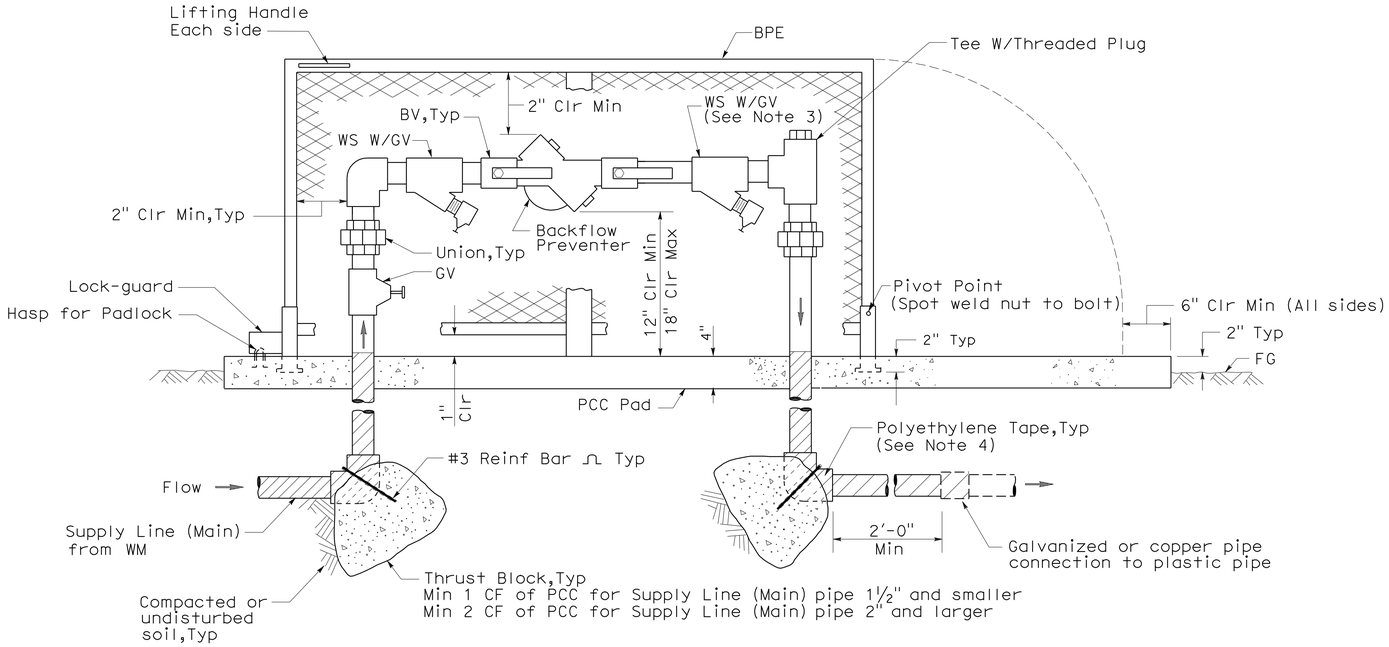

ELEVATION

BACKFLOW PREVENTER ASSEMBLY IN ENCLOSURE (ONE PIECE)

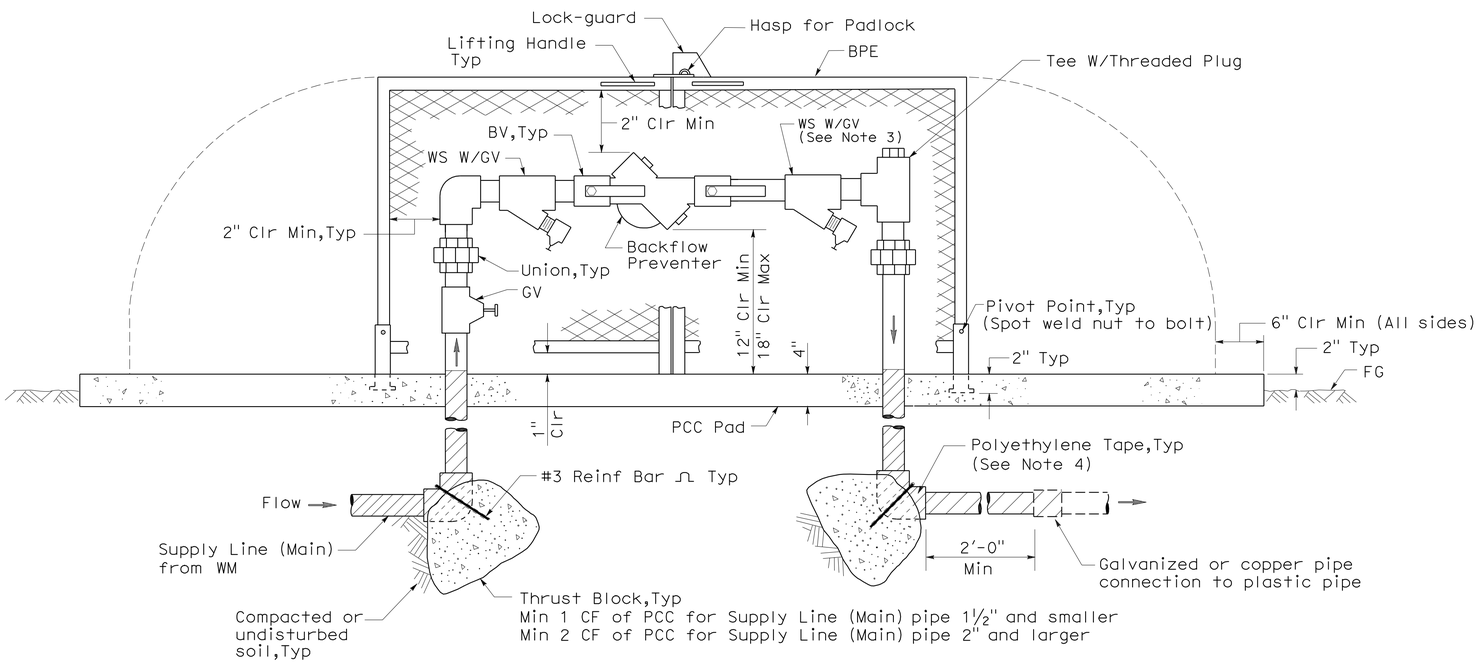

ELEVATION

BACKFLOW PREVENTER ASSEMBLY IN ENCLOSURE (TWO PIECE)

NOTES:

1. Wye strainer and fittings must be the same size as the backflow preventer shown on the plans.
2. Backflow preventer assembly manifold pipe must be the same pipe as the supply line (main) pipe to be installed from the water meter to the backflow preventer assembly.
3. Wye strainer location shown downstream of the backflow preventer is for District 11 projects only.
4. All metal in contact with soil and Portland Cement Concrete must be polyethylene wrapped using 2" wide plastic backed adhesive tape 20 mil thick with ½" overlap.

STATE OF CALIFORNIA
DEPARTMENT OF TRANSPORTATION

PLANTING AND IRRIGATION DETAILS

NO SCALE

RSP H8 DATED JUNE 5, 2009 SUPERSEDES STANDARD PLAN H8
DATED MAY 1, 2006 - PAGE 208 OF THE STANDARD PLANS BOOK DATED MAY 2006.

REVISED STANDARD PLAN RSP H8

2006 REVISED STANDARD PLAN RSP H8

5-28-09

DIST	COUNTY	ROUTE	POST MILES TOTAL PROJECT	SHEET NO.	TOTAL SHEETS
08	Riv	74	27.4/27.7	37	58

Randell D. Hiatt
REGISTERED CIVIL ENGINEER

June 6, 2008
PLANS APPROVAL DATE

REGISTERED PROFESSIONAL ENGINEER
Randell D. Hiatt
No. C50200
Exp. 6-30-09
CIVIL
STATE OF CALIFORNIA

The State of California or its officers or agents shall not be responsible for the accuracy or completeness of electronic copies of this plan sheet.

To accompany plans dated 1-30-12

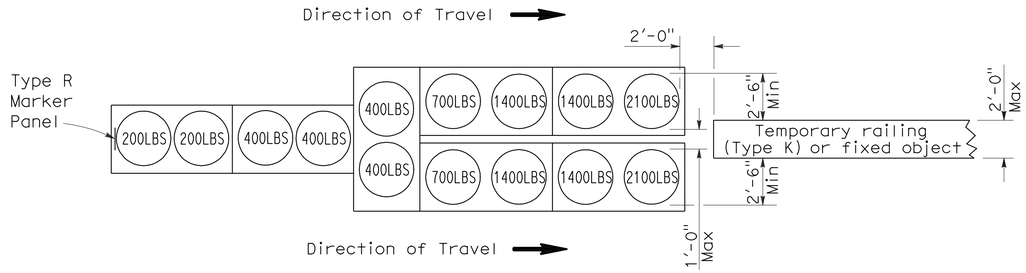

ARRAY `TU14'

Approach speed 45 mph or more

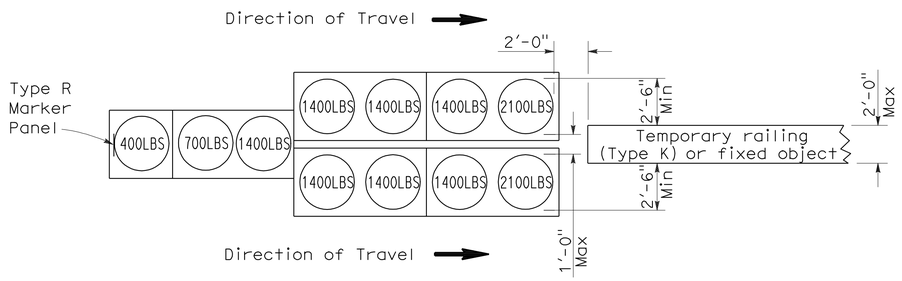

ARRAY `TU11'

Approach speed less than 45 mph

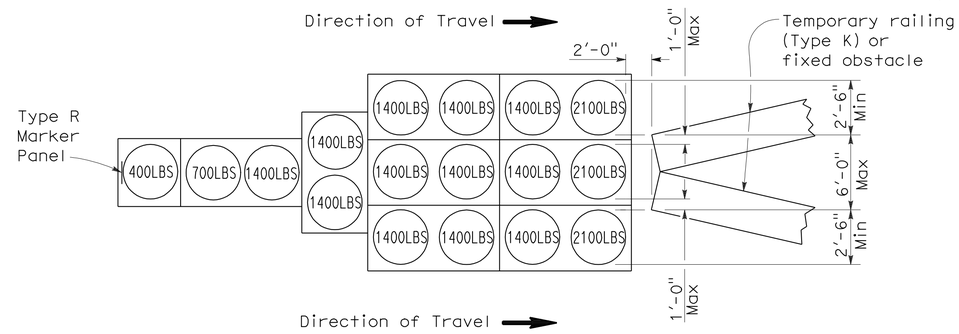

ARRAY `TU17'

Approach speed less than 45 mph

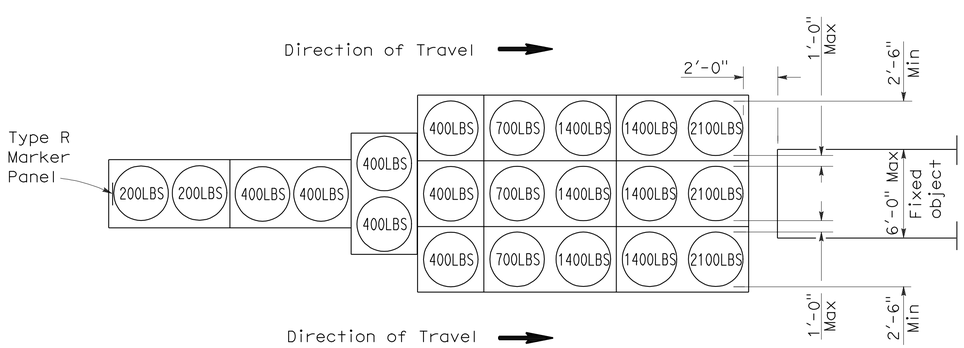

ARRAY `TU21'

Approach speed 45 mph or more

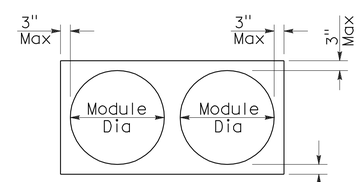

PLAN

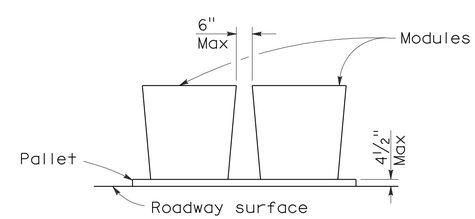

ELEVATION

CRASH CUSHION PALLET DETAIL

See Note 7

NOTES:

1. (XXX) Indicates sand filled module location and weight of sand in pounds for each module. Module spacing is based on the greater diameter of the module.
2. All sand weights are nominal.
3. Temporary crash cushion arrays shall not encroach on the traveled way.
4. Place the top of Type R marker panel 1" below the module lid.
5. Refer to Standard Plan A73B for marker details.
6. Approach speeds indicated conform to NCHRP 350 Report criteria.
7. Use of pallets is optional.

STATE OF CALIFORNIA
DEPARTMENT OF TRANSPORTATION

TEMPORARY CRASH CUSHION, SAND FILLED (UNIDIRECTIONAL)

NO SCALE

RSP T1A DATED JUNE 6, 2008 SUPERSEDES STANDARD PLAN T1A
DATED MAY 1, 2006 - PAGE 211 OF THE STANDARD PLANS BOOK DATED MAY 2006.

REVISED STANDARD PLAN RSP T1A

2006 REVISED STANDARD PLAN RSP T1A

5-15-08

DIST	COUNTY	ROUTE	POST MILES TOTAL PROJECT	SHEET NO.	TOTAL SHEETS
08	Riv	74	27.4/27.7	38	58

Randell D. Hiatt
REGISTERED CIVIL ENGINEER

June 6, 2008
PLANS APPROVAL DATE

REGISTERED PROFESSIONAL ENGINEER
Randell D. Hiatt
No. C50200
Exp. 6-30-09
CIVIL
STATE OF CALIFORNIA

The State of California or its officers or agents shall not be responsible for the accuracy or completeness of electronic copies of this plan sheet.

To accompany plans dated 1-30-12

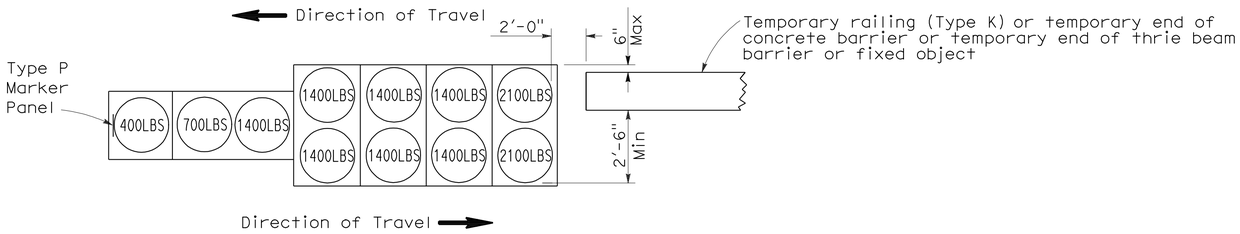

ARRAY 'TB11'

Approach speed less than 45 mph

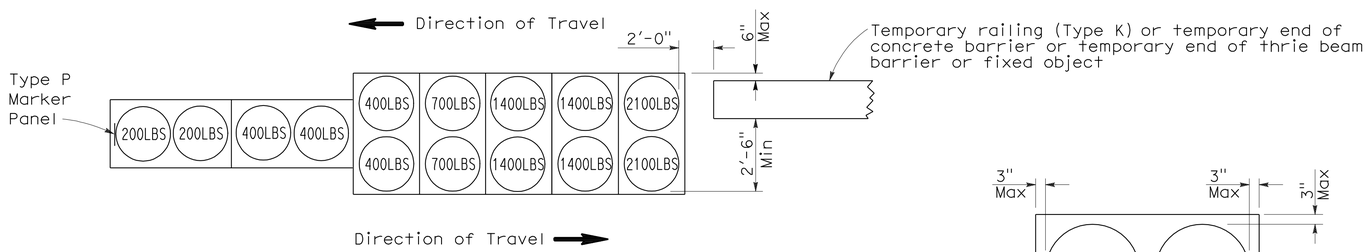

ARRAY 'TB14'

Approach speed 45 mph or more

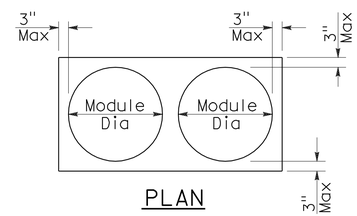

PLAN

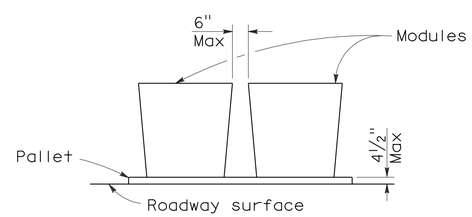

ELEVATION

CRASH CUSHION PALLET DETAIL

See Note 7

NOTES:

1. (XXX) Indicates sand filled module location and weight of sand in pounds for each module. Module spacing is based on the greater diameter of the module.
2. All sand weights are nominal.
3. Temporary crash cushion arrays shall not encroach on the traveled way.
4. Place the Type P marker panel so that the bottom of the panel rests upon the pallet.
5. Refer to Standard Plan A73B for marker details.
6. Approach speeds indicated conform to NCHRP 350 Report criteria.
7. Use of pallets is optional.

STATE OF CALIFORNIA
DEPARTMENT OF TRANSPORTATION

TEMPORARY CRASH CUSHION, SAND FILLED (BIDIRECTIONAL)

NO SCALE

RSP T1B DATED JUNE 6, 2008 SUPERSEDES STANDARD PLAN T1B
DATED MAY 1, 2006 - PAGE 212 OF THE STANDARD PLANS BOOK DATED MAY 2006.

REVISED STANDARD PLAN RSP T1B

2006 REVISED STANDARD PLAN RSP T1B

5-15-08

DIST	COUNTY	ROUTE	POST MILES TOTAL PROJECT	SHEET NO.	TOTAL SHEETS
08	Riv	74	27.4/27.7	39	58

Randell D. Hiatt
REGISTERED CIVIL ENGINEER

June 6, 2008
PLANS APPROVAL DATE

REGISTERED PROFESSIONAL ENGINEER
Randell D. Hiatt
No. C50200
Exp. 6-30-09
CIVIL
STATE OF CALIFORNIA

The State of California or its officers or agents shall not be responsible for the accuracy or completeness of electronic copies of this plan sheet.

To accompany plans dated 1-30-12

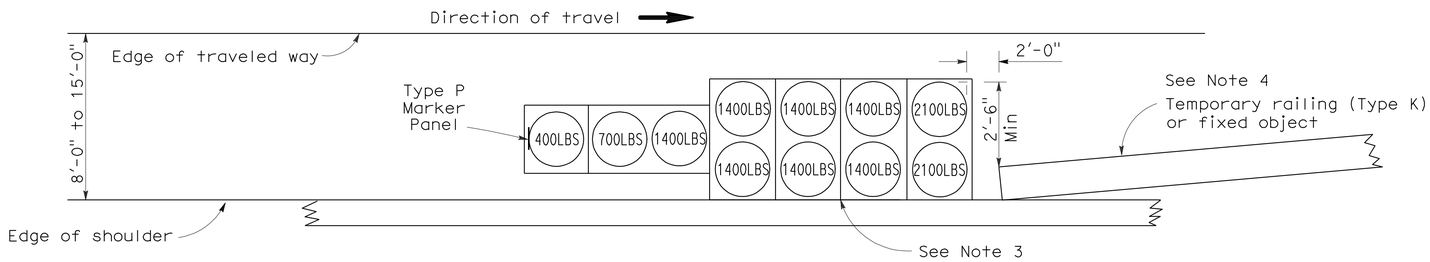

ARRAY 'TS11'

Approach speed less than 45 mph
See Note 9

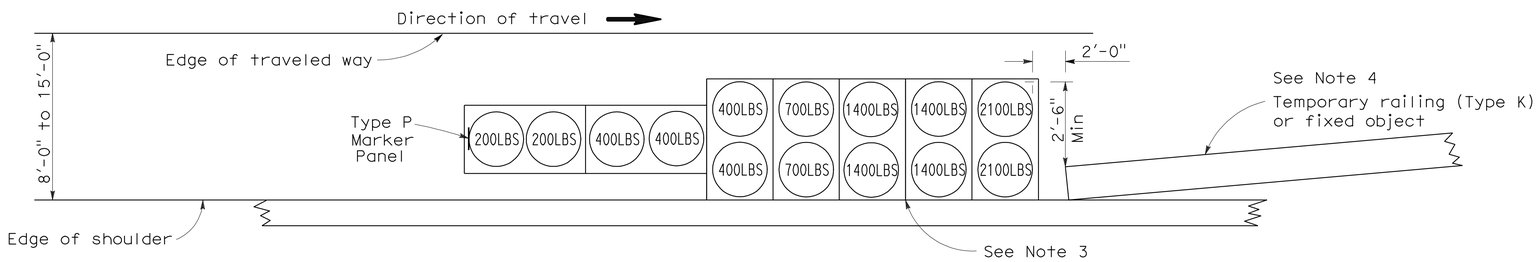

ARRAY 'TS14'

Approach speed 45 mph or more
See Note 9

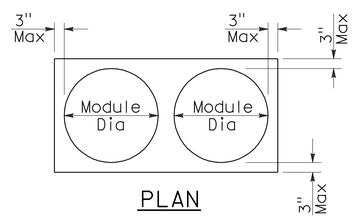

PLAN

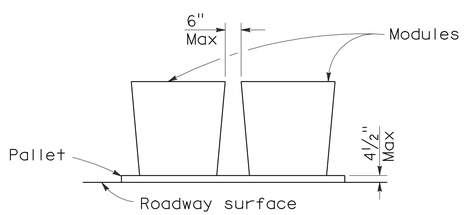

ELEVATION

CRASH CUSHION PALLET DETAIL

See Note 11

NOTES:

1. (XXX) Indicates sand filled module location and weight of sand in pounds for each module. Module spacing is based on the greater diameter of the module.
2. All sand weights are nominal.
3. The temporary crash cushion arrays shown on this plan shall be used only in locations where there will be traffic on one side of the temporary crash cushion array.
4. If the fixed object or approach end of the temporary railing is less than 15'-0" from the edge of traveled way, a temporary crash cushion is required in a construction or work zone.
5. Temporary crash cushion arrays shall not encroach on the traveled way.
6. Arrays for median shoulders shall conform to details shown on this plan for outside shoulders.
7. Place the Type P marker panel so that the bottom of the panel rests upon the pallet and faces traffic.
8. Refer to Standard Plan A73B for marker details.
9. For shoulder widths less than 8'-0", appropriate approved crash cushion protection, other than sand filled modules, shall be provided at fixed objects and at approach ends of temporary railing. The specific type of crash cushion shall be as shown on the project plans or as specified in the Special Provisions, or if not shown on the project plans or specified in the Special Provisions, shall be as approved by the Engineer.
10. Approach speeds indicated conform to NCHRP 350 Report criteria.
11. Use of pallets is optional.

STATE OF CALIFORNIA
DEPARTMENT OF TRANSPORTATION

TEMPORARY CRASH CUSHION, SAND FILLED (SHOULDER INSTALLATIONS)

NO SCALE

RSP T2 DATED JUNE 6, 2008 SUPERSEDES STANDARD PLAN T2
DATED MAY 1, 2006 - PAGE 213 OF THE STANDARD PLANS BOOK DATED MAY 2006.

REVISED STANDARD PLAN RSP T2

2006 REVISED STANDARD PLAN RSP T2

5-15-08

Dist	COUNTY	ROUTE	POST MILES TOTAL PROJECT	SHEET No.	TOTAL SHEETS
08	Riv	74	27.4/27.7	40	58

Randell D. Hiatt
REGISTERED CIVIL ENGINEER

May 20, 2011
PLANS APPROVAL DATE

REGISTERED PROFESSIONAL ENGINEER
Randell D. Hiatt
No. C50200
Exp. 6-30-11
CIVIL
STATE OF CALIFORNIA

The State of California or its officers or agents shall not be responsible for the accuracy or completeness of electronic copies of this plan sheet.

To accompany plans dated 1-30-12

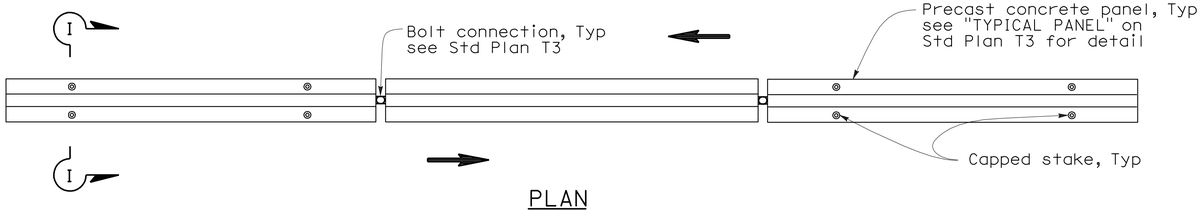

PLAN

RAILING STAKING CONFIGURATION FOR TWO-WAY TRAFFIC

See Note 1

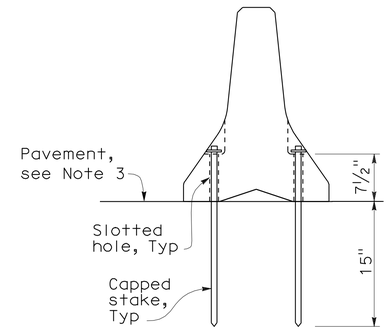

SECTION I-I

NOTES:

1. Where Type K Temporary Railing is placed as a temporary or long term barrier in two-way traffic on highways with less than 24" from the edge of traveled way, use four capped stakes per every other panel with end panels staked.
2. Where Type K Temporary Railing is placed 3" to 24" from the edge of an excavation on highways, use two capped stakes per panel along the traffic side.
3. Staked Type K Temporary Railing must be supported by at least 4" thick concrete, hot mix asphalt or existing asphalt concrete pavement.
4. The minimum yield strength for the washer must be 60,000 psi.
5. Direction of adjacent traffic indicated by ⟹.

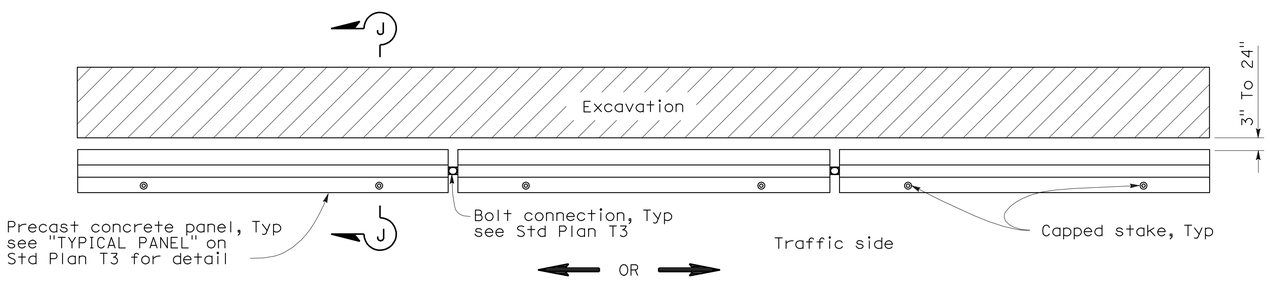

PLAN

RAILING STAKING CONFIGURATION ADJACENT TO AN EXCAVATION

See Note 2

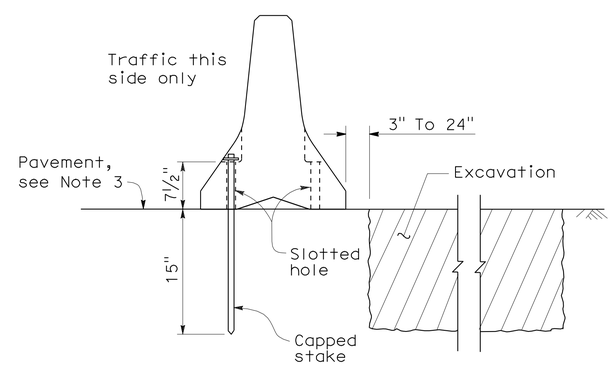

SECTION J-J

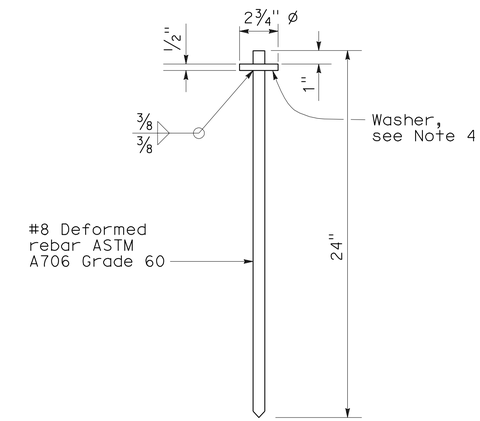

CAPPED STAKE DETAIL

STATE OF CALIFORNIA
DEPARTMENT OF TRANSPORTATION

TEMPORARY RAILING (TYPE K)

NO SCALE

NSP T3A DATED MAY 20, 2011 SUPPLEMENTS
THE STANDARD PLANS BOOK DATED MAY 2006.

NEW STANDARD PLAN NSP T3A

2006 NEW STANDARD PLAN NSP T3A

DIST	COUNTY	ROUTE	POST MILES TOTAL PROJECT	SHEET NO.	TOTAL SHEETS
08	Riv	74	27.4/27.7	41	58

LICENSED LANDSCAPE ARCHITECT

April 3, 2009
PLANS APPROVAL DATE

The State of California or its officers or agents shall not be responsible for the accuracy or completeness of electronic copies of this plan sheet.

LICENSED LANDSCAPE ARCHITECT — ROBERT B. SCHOTT — 3035 — Signature — 11-30-10 Renewal Date — 2-25-09 Date — STATE OF CALIFORNIA

To accompany plans dated 1-30-12

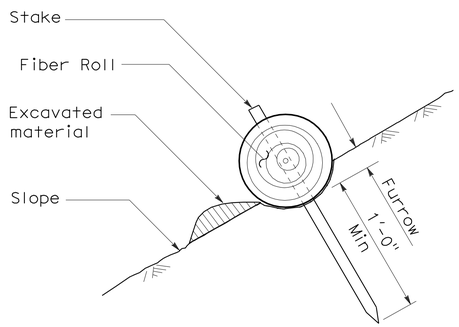

SECTION

TEMPORARY FIBER ROLL (TYPE 1)

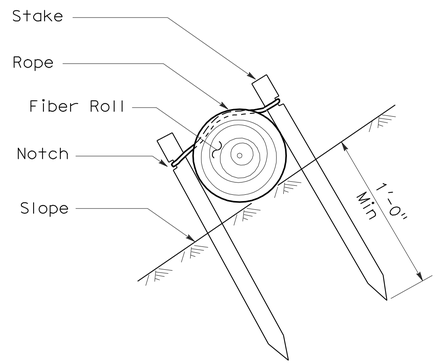

SECTION

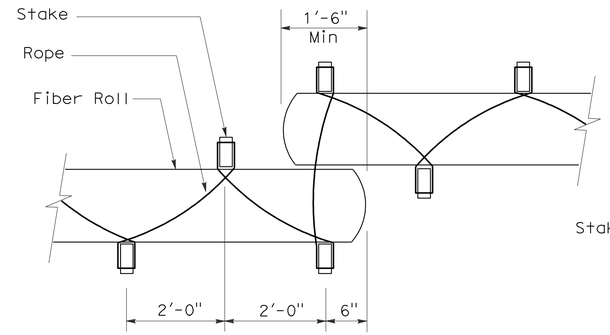

PLAN

TEMPORARY FIBER ROLL (TYPE 2)

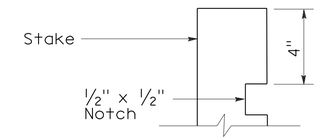

ELEVATION

STAKE NOTCH DETAIL

NOTES:

1. Temporary fiber roll spacing varies depending upon slope inclination.
2. Installations shown in the perspectives are for slope inclination of 10:1 and steeper.

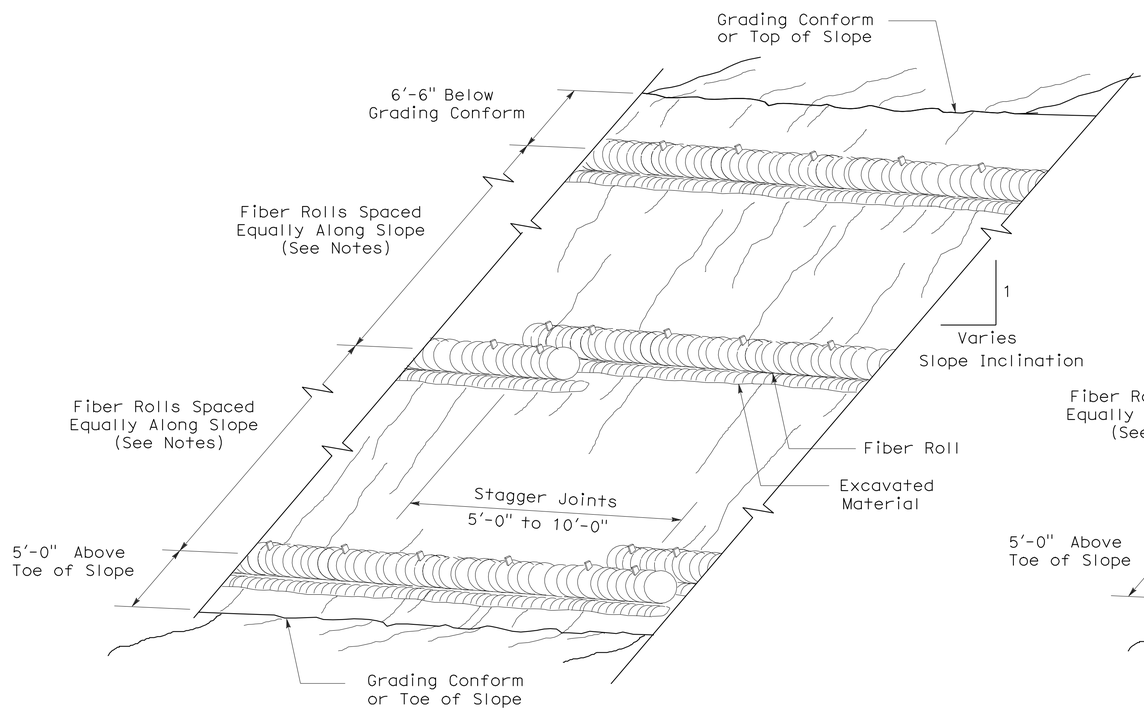

PERSPECTIVE

TEMPORARY FIBER ROLL (TYPE 1)

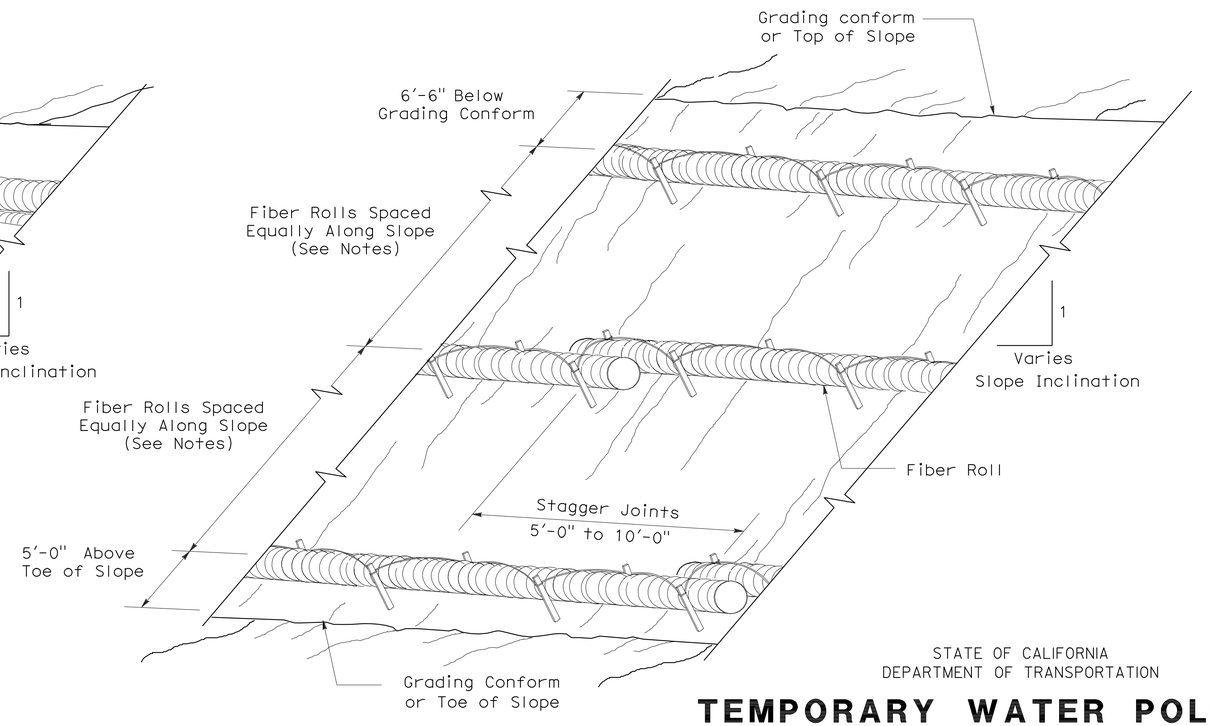

PERSPECTIVE

TEMPORARY FIBER ROLL (TYPE 2)

STATE OF CALIFORNIA
DEPARTMENT OF TRANSPORTATION

TEMPORARY WATER POLLUTION CONTROL DETAILS (TEMPORARY FIBER ROLL)

NO SCALE

RSP T56 DATED APRIL 3, 2009 SUPERSEDES STANDARD PLAN T56
DATED MAY 1, 2006 - PAGE 232 OF THE STANDARD PLANS BOOK DATED MAY 2006.

REVISED STANDARD PLAN RSP T56

2006 REVISED STANDARD PLAN RSP T56

2-23-09

DIST	COUNTY	ROUTE	POST MILES TOTAL PROJECT	SHEET NO.	TOTAL SHEETS
08	Riv	74	27.4/27.7	42	58

LICENSED LANDSCAPE ARCHITECT

April 3, 2009
PLANS APPROVAL DATE

The State of California or its officers or agents shall not be responsible for the accuracy or completeness of electronic copies of this plan sheet.

LICENSED LANDSCAPE ARCHITECT — Robert B. Schott — Signature — 11-30-10 Renewal Date — 2-25-09 Date — STATE OF CALIFORNIA

To accompany plans dated 1-30-12

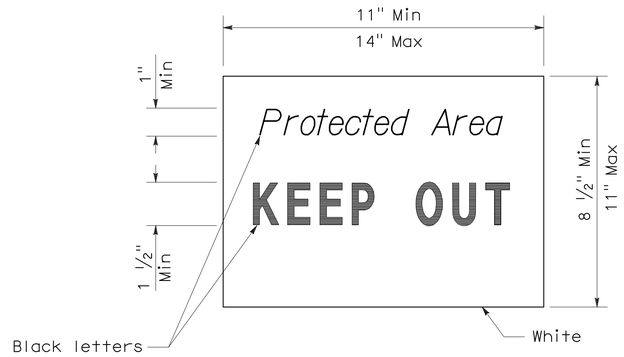

SIGN DETAIL

NOTE:

1. Temporary silt fence and temporary straw bale barrier shown for reference purposes only.

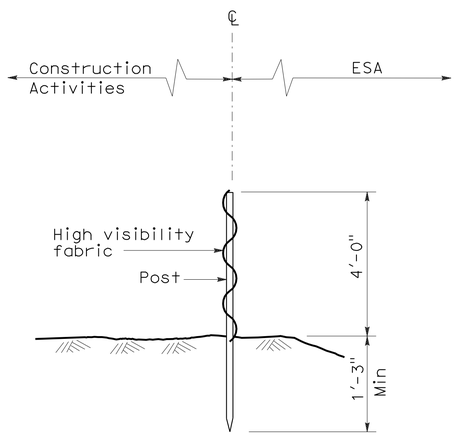

SECTION
TEMPORARY FENCE (TYPE ESA)

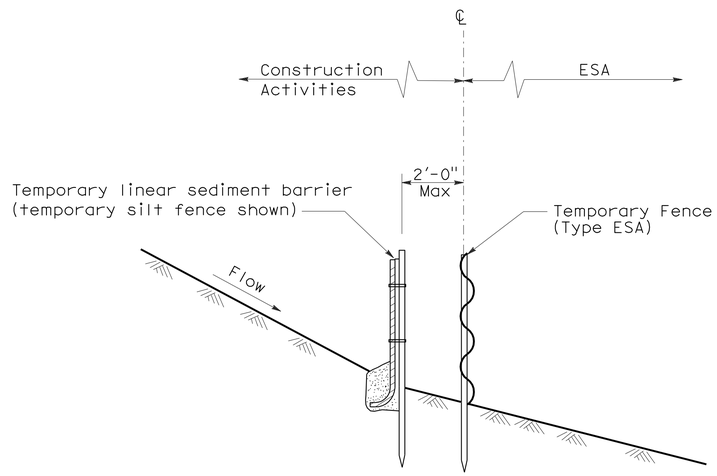

SECTION
PLACEMENT DETAIL
FOR TEMPORARY LINEAR SEDIMENT BARRIER
USED WITH TEMPORARY
FENCE (TYPE ESA)
(See Note 1)

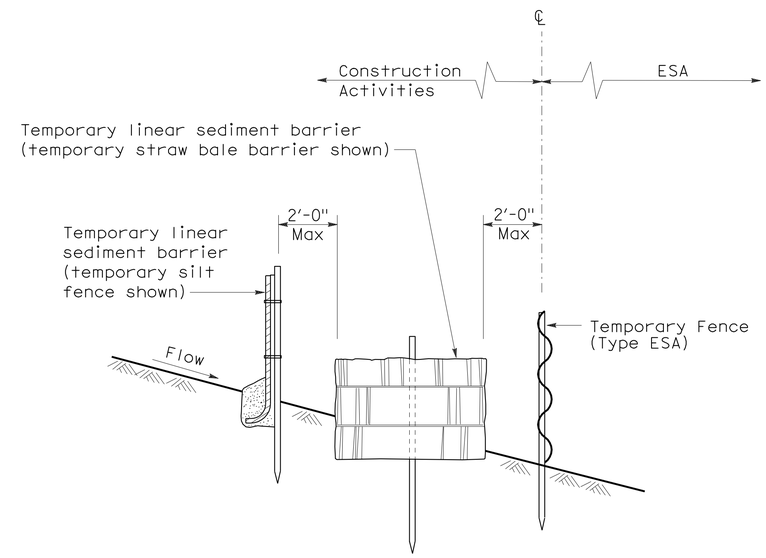

SECTION
PLACEMENT DETAIL
FOR TEMPORARY SILT FENCE
AND TEMPORARY STRAW BALE BARRIER
USED WITH TEMPORARY FENCE (TYPE ESA)
(See Note 1)

STATE OF CALIFORNIA
DEPARTMENT OF TRANSPORTATION

TEMPORARY WATER POLLUTION CONTROL DETAILS [TEMPORARY FENCE (TYPE ESA)]

NO SCALE

NSP T65 DATED APRIL 3, 2009 SUPPLEMENTS
THE STANDARD PLANS BOOK DATED MAY 2006.

NEW STANDARD PLAN NSP T65

2006 NEW STANDARD PLAN NSP T65

DIST	COUNTY	ROUTE	POST MILES TOTAL PROJECT	SHEET NO.	TOTAL SHEETS
08	Riv	74	27.4/27.7	43	58

REGISTERED ELECTRICAL ENGINEER

October 5, 2007
PLANS APPROVAL DATE

REGISTERED PROFESSIONAL ENGINEER Jeffery G. McRae No. E14512 Exp. 6-30-08 ELECTRICAL STATE OF CALIFORNIA

The State of California or its officers or agents shall not be responsible for the accuracy or completeness of electronic copies of this plan sheet.

To accompany plans dated 1-30-12

ELECTROLIERS

STANDARD TYPES
15, 15D
15 STRUCTURE
21, 21D STRUCTURE
30
31
32
35
36-20A

High mast light pole

Double Arm lighting standard

Existing electrolier

Electrolier foundation (Future installation)

NOTES:

1. Luminaires shall be 310 W HPS when installed on Type 21, 21D, 30, 31, 32, 35 and 36-20A Standards, unless otherwise specified. Luminaires shall be 200 W HPS when installed on other type standards or poles, unless otherwise specified.
2. Luminaires shall be the cutoff type, ANSI Type Ⅲ medium cutoff lighting distribution, unless otherwise specified.
3. Variations noted adjacent to symbol on project plans.

Electrolier (see project notes or project plans)

Luminaire on wood pole

STANDARD NOTES:

- AB — Abandon. If applied to conduit, remove conductors.
- BC — Install pull box in existing conduit run.
- BP — Pedestrian barricade, type as indicated on plan.
- CB — Install conduit into existing pull box.
- CC — Connect new and existing conduit. Remove existing conductors and install conductors as indicated.
- CF — Conduit to remain for future use. Remove conductors. Install pull wire or rope.
- DH — Detector handhole.
- FA — Foundation to be abandoned.
- IS — Install sign on signal mast arm.
- NS — No slip base on standard.
- PEC — Photoelectric control.
- PEU — Photoelectric unit.
- RC — Equipment or material to be removed and become the property of the Contractor.
- RE — Remove electrolier, fuses and ballast. Tape ends of conductors.
- RL — Relocate equipment.
- RR — Remove and reuse equipment.
- RS — Remove and salvage equipment.
- SC — Splice new to existing conductors.
- SD — Service disconnect.
- SF — Standard to remain for future use. Remove luminaire, pole conductors, fuses and ballast.
- TSP — Telephone service point.

ABBREVIATIONS AND EQUIPMENT DESIGNATIONS

PROPOSED	EXISTING	
BBS	bbs	Battery backup system
BC	bc	Bolt circle
C	C	Conduit
CCTV	cctv	Closed circuit television
CKT	ckt	Circuit
CMS	cms	Changeable message sign
DLC	dlc	Loop detector lead-in cable
EMS	ems	Extinguishable message sign
EVC	evc	Emergency vehicle cable
EVD	evd	Emergency vehicle detector
FB	fb	Flashing beacon
FBCA	fbca	Flashing beacon control assembly
FBS	fbs	Flashing beacon with slip base
FO	fo	Fiber optic
G	G	Ground (Equipment Grounding Conductor)
GFCI	GFCI	Ground fault circuit interrupt
HAR	har	Highway advisory radio
HEX	hex	Hexagonal
HPS	hps	High pressure sodium
IISNS	iisns	Internally illuminated street name sign
ISL	isl	Induction sign lighting
LED	led	Light emitting diode
LMA	lma	Luminaire mast arm
LPS	lps	Low pressure sodium
LTG	ltg	Lighting
LUM	lum	Luminaire
MAT	mat	Mast arm mounting vehicle signal faces, top attachment
MAS	mas	Mast arm mounting vehicle signal faces, side attachment
MAS-4A	mas-4A	Mast arm mounting vehicle signal faces, side attachment - 4 signal section
MAS-4B	mas-4B	
MAS-4C	mas-4C	
MAS-5A	mas-5A	Mast arm mounting vehicle signal faces, side attachment - 5 signal section
MAS-5B	mas-5B	
MC	mc	Mercury contactor
M/M	m/m	Multiple to multiple transformer
MT	mt	Conduit with pull wire or rope only
MTG	mtg	Mounting
	mv	Mercury vapor lighting fixture
N	N	Neutral (Grounded Conductor)
NC	NC	Normally closed
NO	NO	Normally open
PB	pb	Pull box
PEC	pec	Photoelectric control (Type Ⅰ, Ⅱ, Ⅲ, Ⅳ or Ⅴ as shown)
PED	ped	Pedestrian
PEU	peu	Photoelectric unit
PPB	ppb	Pedestrian push button
RL		Relocated equipment
RM	rm	Ramp metering
SB	sb	Slip base
SIC	sic	Signal interconnect cable
SIG	sig	Signal
SMA	sma	Signal mast arm
SNS	sns	Street name sign
SP	sp	Service point
TDC	tdc	Telephone demarcation cabinet
TMS	tms	Traffic monitoring station
TOS	tos	Traffic Operations System
VEH	veh	Vehicle
XFMR	xfmr	Transformer
COMM	comm	Communication
RWIS	rwis	Roadway weather information system

SOFFIT AND WALL MOUNTED LUMINAIRES

Pendant, 70 W HPS unless otherwise specified.

Flush, 70 W HPS unless otherwise specified.

Wall surface, 70 W HPS unless otherwise specified.

Existing soffit or wall luminaire to remain unmodified.

Existing soffit or wall luminaire to be modified as specified.

NOTE:

Arrow indicates "street side" of luminaire.

STATE OF CALIFORNIA
DEPARTMENT OF TRANSPORTATION

ELECTRICAL SYSTEMS (SYMBOLS AND ABBREVIATIONS)

NO SCALE

RSP ES-1A DATED OCTOBER 5, 2007 SUPERSEDES STANDARD PLAN ES-1A DATED MAY 1, 2006 - PAGE 400 OF THE STANDARD PLANS BOOK DATED MAY 2006.

REVISED STANDARD PLAN RSP ES-1A

2006 REVISED STANDARD PLAN RSP ES-1A

DIST	COUNTY	ROUTE	POST MILES TOTAL PROJECT	SHEET NO.	TOTAL SHEETS
08	Riv	74	27.4/27.7	44	58

REGISTERED ELECTRICAL ENGINEER

October 5, 2007
PLANS APPROVAL DATE

REGISTERED PROFESSIONAL ENGINEER
Jeffery G. McRae
No. E14512
Exp. 6-30-08
ELECTRICAL
STATE OF CALIFORNIA

The State of California or its officers or agents shall not be responsible for the accuracy or completeness of electronic copies of this plan sheet.

To accompany plans dated 1-30-12

CONDUIT

PROPOSED	EXISTING	
		Lighting Conduit, unless otherwise indicated or noted
		Traffic signal conduit
C	c	Communication conduit
T	t	Telephone conduit
F	f	Fire alarm conduit
FO	fo	Fiber optic conduit
		Conduit termination (RSP ES-9A C)
R	r	Conduit riser in/on structure or service pole

SERVICE EQUIPMENT

PROPOSED	EXISTING	
OH	oh	Overhead lines
U	U	Wood pole "U" indicates utility owned
		Pole guy with anchor
		Utility transformer - ground mounted
III		Service equipment enclosure type
		Service equipment enclosure door indicates front of enclosure
T	t	Telephone demarcation cabinet

POLE-MOUNTED SERVICE DESIGNATION

Type of installation

TYPE H SERVICE - 28'-10" ← Pole height above grade

ILLUMINATED OVERHEAD SIGN

PROPOSED	EXISTING	
		Overhead sign - Single post
		Overhead sign - Two post
		Overhead sign - Mounted on structure
		Overhead sign with electrolier

SIGNAL EQUIPMENT

PROPOSED	EXISTING	
		Pedestrian signal face
		Pedestrian push button post
		Pedestrian barricade
		Vehicle signal face (with backplate, 3-Section: red, yellow and green)
		Vehicle signal face with angle visors
PV	PV	Modifications of basic symbols: "L" indicates all non-arrow sections louvered "LG" indicates louvered green section only "PV" indicates 12" programmed visibility sections "8" indicates all 8" sections (only when specified)
		Type 15TS and Vehicle signal face
		Vehicle signal face with red, yellow and green left arrow sections
		Vehicle signal face with red and yellow sections and up green arrow
		Vehicle signal face (5 Section) with red, yellow and green sections and yellow and green right arrows
		Type 1 Standard and attached vehicle signal faces
		Standard with signal mast arm only and attached vehicle signal faces and internally illuminated street name sign
		Type 33 Standard, Left-turn vehicle signal face and sign
		Standard with luminaire and signal mast arms and attached vehicle signal faces
		Cantilever flashing beacon Type 9 Frame, with a sign unless otherwise specified or indicated
		Type 15-FBS Standard with two vehicle signal face sections with lens, backplate and visor with a sign
R	Y	Flashing beacon. One vehicle signal face section with lens, backplate and visor. "R" indicates red indication, "Y" indicates yellow indication
		Controller assembly. Door indicates front of cabinet

SIGNAL EQUIPMENT Cont

PROPOSED	EXISTING	
		Guard post
		Type 1 Standard with "Meter On" sign
		Emergency Vehicle detector

NOTES:

1. All signal sections shall be 12" unless shown otherwise.
2. Signal heads shall be provided with backplates unless shown otherwise.
3. Signal indication shall be LED.

STATE OF CALIFORNIA
DEPARTMENT OF TRANSPORTATION

ELECTRICAL SYSTEMS (SYMBOLS AND ABBREVIATIONS)

NO SCALE

RSP ES-1B DATED OCTOBER 5, 2007 SUPERCEDES STANDARD PLAN ES-1B DATED MAY 1, 2006 - PAGE 401 OF THE STANDARD PLANS BOOK DATED MAY 2006.

REVISED STANDARD PLAN RSP ES-1B

2006 REVISED STANDARD PLAN RSP ES-1B

DIST	COUNTY	ROUTE	POST MILES TOTAL PROJECT	SHEET NO.	TOTAL SHEETS
08	Riv	74	27.4/27.7	45	58

REGISTERED ELECTRICAL ENGINEER

October 5, 2007
PLANS APPROVAL DATE

REGISTERED PROFESSIONAL ENGINEER
Jeffery G. McRae
No. E14512
Exp. 6-30-08
ELECTRICAL
STATE OF CALIFORNIA

The State of California or its officers or agents shall not be responsible for the accuracy or completeness of electronic copies of this plan sheet.

To accompany plans dated 1-30-12

EQUIPMENT IDENTIFICATION

ILLUMINATED SIGN IDENTIFICATION NUMBER:

Sign No. 12345 — Sign number - Place on post or structure

10 ISL SCI 1.0

- 1.0 — Transformer rating (kVA)
- SCI — Lighting control type
- ISL — Number and type of fixtures

Do NOT place on standard or structure

ELECTROLIER OR EQUIPMENT IDENTIFICATION NUMBER:

12345 - 15'-0"

- 15'-0" — Mast arm length, if shown. Do not place on standard or structure.
- 12345 — Equipment number - Place on standard or structure. Existing equipment numbers are shown in parenthesis

CONDUIT AND CONDUCTOR IDENTIFICATION:

1½"C, 2#10, 15#14, 2 DLC

- 2#10, 15#14, 2 DLC — Number and size of conductors and cables
- 1½"C — Size of conduit in inches

Ø1, Ø2, Ø2P, etc.	Traffic phase identification for signal faces, detectors and phase diagrams
1 2 3	Project note numbers
A B C	Equipment description, installation or item numbers
1 2 3	Conduit run numbers

SIGNAL AND LIGHTING STANDARD (TYPICAL DESIGNATION):

19A - 3 - 100

- 100 — Wind velocity = 100 mph
- 3 — Case 3 arm loading
- 19A — Standard type
- Standard Plan sheet number
- Detail number or letter

MISCELLANEOUS EQUIPMENT

PROPOSED	EXISTING	
CMS	cms	Changeable message sign
		Closed circuit television camera
		Highway advisory radio pole and antenna
EMS	ems	Extinguishable message sign
M V	m v	Detection device M = Microwave sensor V = Video image sensor

WIRING DIAGRAM LEGEND

P	Pole
CB	Circuit breaker
A	Ampere
V	Volt
M	Metered
UM	Unmetered
NB	Neutral bus
GB	Ground bus
G	Equipment grounding conductor
N	Grounded conductor (Neutral)

- External conductor
- Conductor or bus
- Tie point
- Contactor coil
- Contactor, Contact NO
- Terminal blocks
- Contactor, Contact NC
- Enclosure bond
- Grounding electrode
- Circuit breaker
- Receptacle

PULL BOXES

PROPOSED	EXISTING	
		Pull box-No. 5 unless otherwise indicated or noted.
3	9A(21)	Pull box-Additional designations or descriptions

3 = No. 3½ pull box
5 = No. 5 pull box
6 = No. 6 pull box
7 = No. 7 (Ceiling pull box)
8 = No. 8 (Pendant soffit pull box)
9 = No. 9 pull box
9A = No. 9A pull box

(C) = Communications pull box
(E) = Pull box with extension
(S) = Sprinkler control pull box
(21) = Anchor bolts and conduit for future installation of Type 21 Standard
(T) = Traffic pull box

VEHICLE DETECTORS

5 J 9 U

- U = Upper
- L = Lower
- 9 — Slot number in input file
- J — Input file (I or J)
- 5 — Phase

PROPOSED	EXISTING	
		Type A detector loop. Outline of sawcut shown.
		Type B detector loop. Outline of sawcut shown.
		Type C detector loop. Outline of sawcut shown.
		Type D detector loop. Outline of sawcut shown.
		Type E detector loop. Outline of sawcut shown.
		Type Q detector loop. Outline of sawcut shown.
		Magnetic detector
DH	dh	Detector handhole
		Microwave or video detection zone

STATE OF CALIFORNIA
DEPARTMENT OF TRANSPORTATION

ELECTRICAL SYSTEMS (SYMBOLS AND ABBREVIATIONS)

NO SCALE

RSP ES-1C DATED OCTOBER 5, 2007 SUPERCEDES STANDARD PLAN ES-1C DATED MAY 1, 2006 - PAGE 402 OF THE STANDARD PLANS BOOK DATED MAY 2006.

REVISED STANDARD PLAN RSP ES-1C

2006 REVISED STANDARD PLAN RSP ES-1C

DIST	COUNTY	ROUTE	POST MILES TOTAL PROJECT	SHEET NO.	TOTAL SHEETS
08	Riv	74	27.4/27.7	46	58

REGISTERED ELECTRICAL ENGINEER

October 5, 2007
PLANS APPROVAL DATE

REGISTERED PROFESSIONAL ENGINEER
Jeffery G. McRae
No. E14512
Exp. 6-30-08
ELECTRICAL
STATE OF CALIFORNIA

The State of California or its officers or agents shall not be responsible for the accuracy or completeness of electronic copies of this plan sheet.

To accompany plans dated 1-30-12

2006 REVISED STANDARD PLAN RSP ES-2C

NOTES-TYPE III SERVICE EQUIPMENT ENCLOSURES:

1. Service equipment enclosure and metering equipment shall meet the requirements of the service utility. The meter area shall have a sealable, lockable, weathertight cover that can be removed without the use of tools.

2. Service equipment enclosures shall be factory wired and conform to NEMA standards.

3. Dimensions of service equipment enclosures shall meet the requirements of the service utility.

4. The dead front panels on Type III service equipment enclosures shall have a continuous stainless steel or aluminum piano hinge. The panel in front of the breakers shall be secured with a latch or captive screws. No live parts shall be mounted on the dead front panel.

5. The exterior door shall have provisions for padlocking. The padlock hole shall be a minimum diameter of 7/16".

6. Enclosures housing transformers of more than one kVA shall have effective screened ventilation louver of not less than 50 square inches. Screen shall be stainless steel No. 304, with a No. 10 size mesh. Framed screen shall be secured with at least four bolts.

7. Fasteners on the exterior of the enclosure shall be vandal-resistant and shall not be removable from the exterior. Exterior screws, nuts, bolts and washers shall be stainless steel.

8. Landing lugs for incoming service conductors shall be compatible with either copper or aluminum conductors sized to suit the conductors shown on the plan. Landing lugs shall be copper or tin-plated aluminum. Neutral bus shall be rated for 125 A and be suitable for copper or aluminum conductors unless otherwise specified. The terminal shall include but not be limited to:

   a) Incoming terminals (landing lugs)
   b) Neutral lugs
   c) Solid neutral terminal strip

9. At least 6 standard single pole circuit breaker spaces, 3/4" nominal, shall be provided for branch circuits. Circuit breaker interiors shall be copper. Interiors of enclosure shall accept plug-in or cable-in/cable-out circuit breakers.

10. Control wiring shall be 600 V, 14 stranded machine tool wire. Where subject to flexing, 19 strand wire shall be used.

11. Main bus shall be rated for 125 A and shall be tin-plated copper.

12. A plastic laminated wiring diagram shall be provided with brass mounting eyelets and attached to the inside of the enclosure and the wiring diagram shall be affixed to the interior with a UL or ETL approved method.

13. An engraved phenolic nameplate on the dead front panel indicating the function of each circuit or device shall be installed with stainless steel rivets or stainless steel screws:

    a) Adjacent to the breaker or device with character size a minimum of 1/8".

    b) At the top of the exterior door panel indicating State system number, voltage level and number of phases with character size a minimum of 3/16".

14. The plan shows the approximate location of devices within the enclosure. Components may be rearranged, however, the "working" clearances within the service equipment enclosure shall be maintained.

15. In unpaved areas a raised portland cement concrete pad 2'-0" x 4" x width of foundation shall be constructed in front of new service equipment enclosure installation. Pad shall be set to elevation of foundation.

16. Foundation shall extend 2" minimum beyond edge of service equipment enclosure.

17. Internal bus, where shown, is typical only. Alternative design of proposed service equipment enclosure shall be submitted to the Engineer for approval.

18. Plug-in circuit breakers may be mounted in the vertical or horizontal position. Cable-in/cable-out circuit breakers shall be mounted in the vertical position.

19. Type III-AF and Type III-BF service equipment enclosures shall have the meter viewing windows located on the front side of the service equipment enclosures.

20. Type III-AR and Type III-BR service equipment enclosures shall be similarly constructed as Type III-AF and Type III-BF respectively, except the meter viewing windows shall be located on the back side of the service equipment enclosures.

21. Minimum clearance shall be required for front and back of service equipment enclosure per National Electrical Code, Article 110.26, "Spaces About Electric Equipment (600 Volts, Nominal, or Less)."

STATE OF CALIFORNIA
DEPARTMENT OF TRANSPORTATION

ELECTRICAL SYSTEMS (SERVICE EQUIPMENT NOTES TYPE III SERIES)

NO SCALE

RSP ES-2C DATED OCTOBER 5, 2007 SUPERCEDES STANDARD PLAN ES-2C DATED MAY 1, 2006 - PAGE 405 OF THE STANDARD PLANS BOOK DATED MAY 2006.

REVISED STANDARD PLAN RSP ES-2C

DIST	COUNTY	ROUTE	POST MILES TOTAL PROJECT	SHEET NO.	TOTAL SHEETS
08	Riv	74	27.4/27.7	47	58

REGISTERED ELECTRICAL ENGINEER

October 5, 2007
PLANS APPROVAL DATE

REGISTERED PROFESSIONAL ENGINEER Jeffery G. McRae No. E14512 Exp. 6-30-08 ELECTRICAL STATE OF CALIFORNIA

The State of California or its officers or agents shall not be responsible for the accuracy or completeness of electronic copies of this plan sheet.

To accompany plans dated 1-30-12

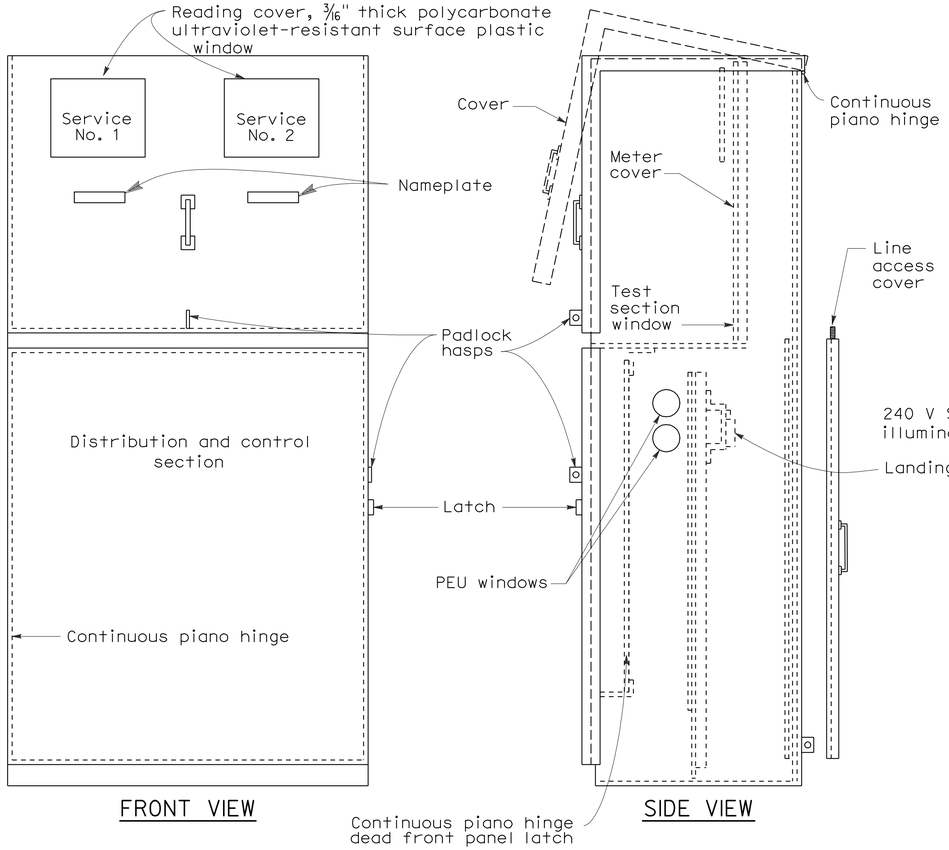

FRONT VIEW

SIDE VIEW

TYPE III-CF SERVICE EQUIPMENT ENCLOSURE WITH PROVISIONS FOR TWO 100 A METERS (TYPICAL)

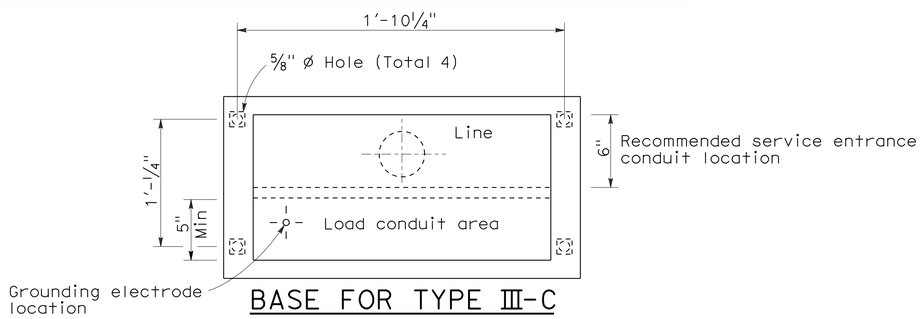

BASE FOR TYPE III-C SERVICE EQUIPMENT ENCLOSURE

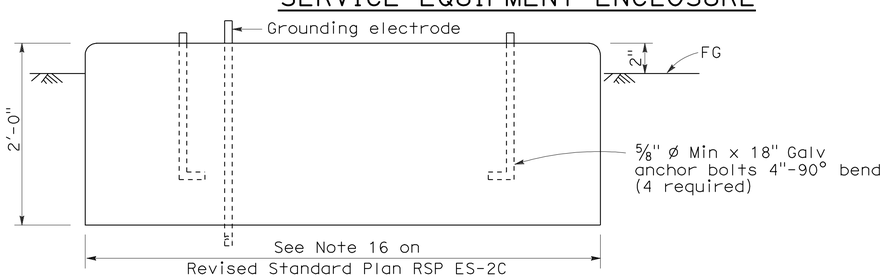

FOUNDATION DETAIL

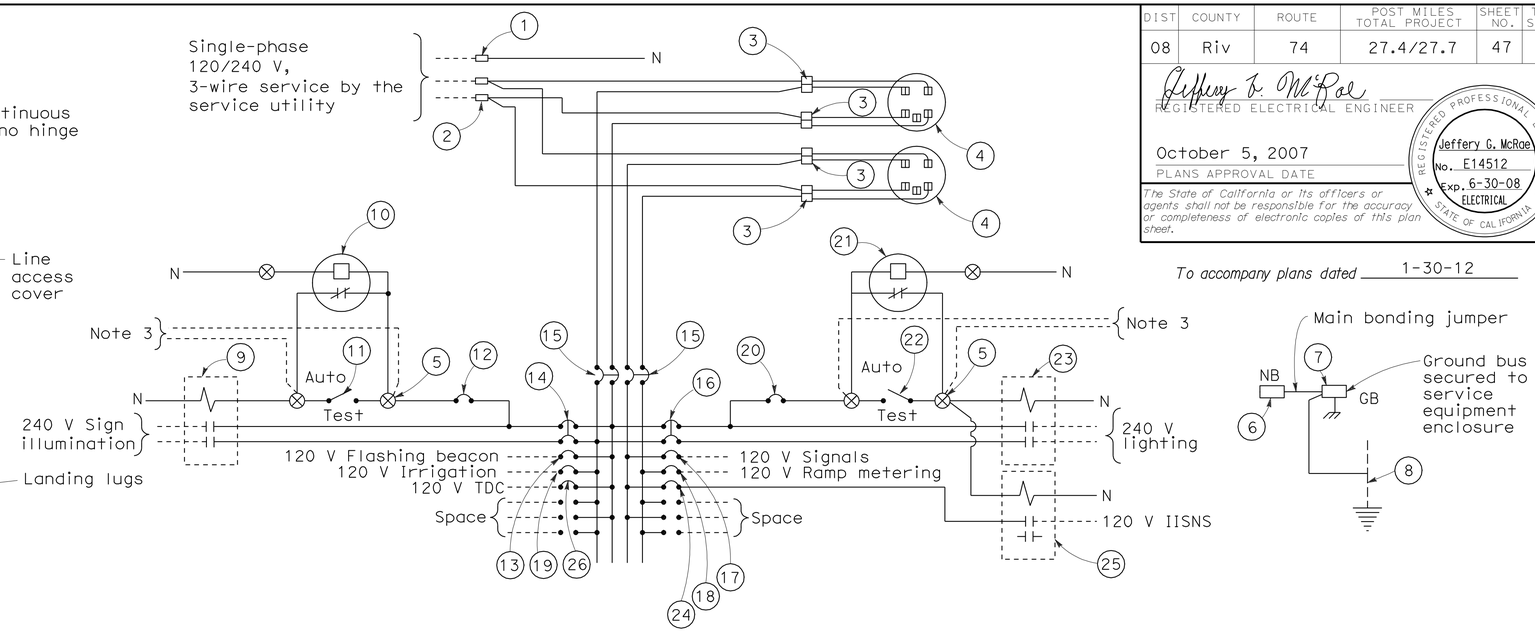

120/240 V SERVICE WIRING DIAGRAM (TYPICAL)

TYPE III-C SERVICE (120/240 V) EQUIPMENT LEGEND

ITEM No.	COMPONENT	NAME PLATE DESCRIPTION	ITEM No.	COMPONENT	NAME PLATE DESCRIPTION
1	Neutral lug		14	30 A, 240 V, 2P, CB	Sign Illumination
2	Landing lug (Note 6)		15	100 A, 240 V, 2P, CB	Main Breaker
3	Test bypass facility		16	30 A, 240 V, 2P, CB	Lighting
4	Meter socket and support		17	50 A, 120 V, 1P, CB	Signals
5	Terminal blocks		18	30 A, 120 V, 1P, CB	Ramp Metering
6	Neutral bus		19	20 A, 120 V, 1P, CB	Irrigation
7	Ground bus		20	15 A, 120 V, 1P, CB	Lighting Control
8	Grounding electrode		21	Photoelectric unit (Note 7)	
9	30 A, 2PNO, Contactor	Sign Illumination	22	15 A, 1P, Test switch	Lighting Control
10	Photoelectric unit (Note 7)		23	60 A, 2PNO Contactor	Lighting
11	15 A, 1P, Test switch	Sign Illumination Test Switch	24	15 A, 120 V, 1P, CB	IISNS
12	15 A, 120 V, 1P, CB	Sign Illumination Control	25	30 A, 2PNO Contactor	IISNS
13	15 A, 120 V, 1P, CB	Flashing Beacon	26	20 A, 120 V, 1P, CB	Telephone Demarcation Cabinet

NOTES: (FOR SERVICE EQUIPMENT ENCLOSURE)

1. Voltage ratings of service equipment shall conform to the service voltages indicated on the plans.
2. Unless otherwise indicated on the plans, service equipment items shall be provided for each service equipment enclosure as shown.
3. Connect to remote test switch mounted on lighting standards, sign post or structure when required.
4. Items No. 1 and 6 shall be isolated from the service equipment enclosure.
5. Meter sockets shall be 5 clip type.
6. The landing lug shall be suitable for multiple conductors.
7. Type V photoelectric control shall be used unless otherwise indicated on the plans.

STATE OF CALIFORNIA
DEPARTMENT OF TRANSPORTATION

ELECTRICAL SYSTEMS (SERVICE EQUIPMENT AND TYPICAL WIRING DIAGRAM TYPE III-C SERIES)

NO SCALE

RSP ES-2F DATED OCTOBER 5, 2007 SUPERCEDES STANDARD PLAN ES-2F DATED MAY 1, 2006 - PAGE 408 OF THE STANDARD PLANS BOOK DATED MAY 2006.

REVISED STANDARD PLAN RSP ES-2F

2006 REVISED STANDARD PLAN RSP ES-2F

8-17-07

DIST	COUNTY	ROUTE	POST MILES TOTAL PROJECT	SHEET NO.	TOTAL SHEETS
08	Riv	74	27.4/27.7	48	58

REGISTERED ELECTRICAL ENGINEER

June 6, 2008
PLANS APPROVAL DATE

REGISTERED PROFESSIONAL ENGINEER
Jeffery G. McRae
No. E14512
Exp. 6-30-10
ELECTRICAL
STATE OF CALIFORNIA

The State of California or its officers or agents shall not be responsible for the accuracy or completeness of electronic copies of this plan sheet.

To accompany plans dated 1-30-12

VISORS

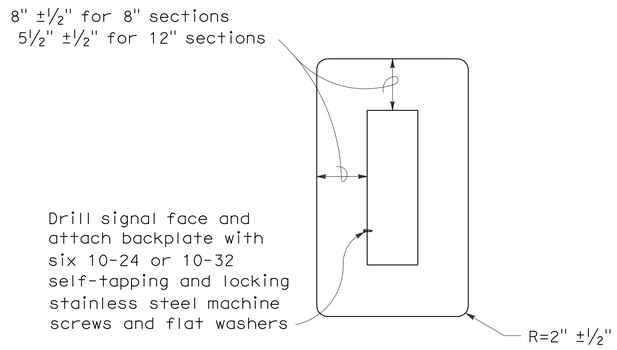

8" AND 12" SECTIONS

BACKPLATE

1/16" minimum thickness
3001-14 aluminum, or plastic when specified

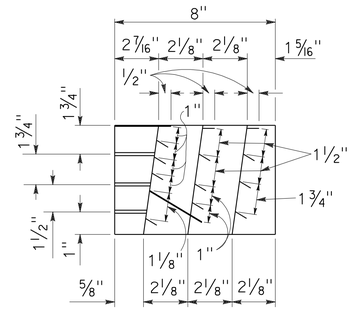

SECTION A-A

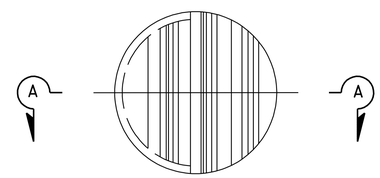

FRONT VIEW

DIRECTIONAL LOUVER

Directional louvers shall be oriented as directed by the Engineer and secured in place with one plated brass machine screw and nut.

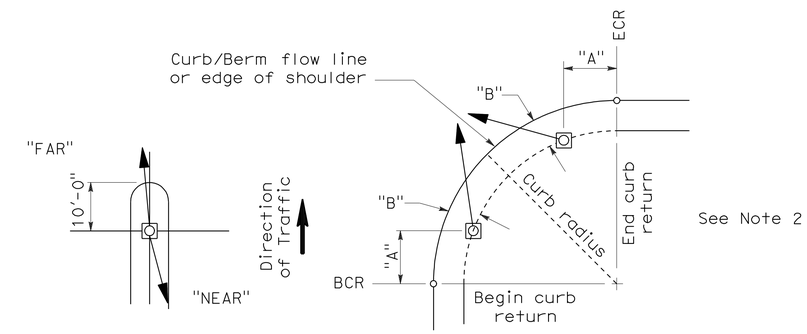

NOTES:

1. Typical signal pole placement unless dimensioned on plans.
2. For "A" and "B" dimensions, see Pole Schedule, or as directed by the Engineer.

SIGNAL STANDARD PLACEMENT DIMENSIONS AND EQUIPMENT LOCATIONS

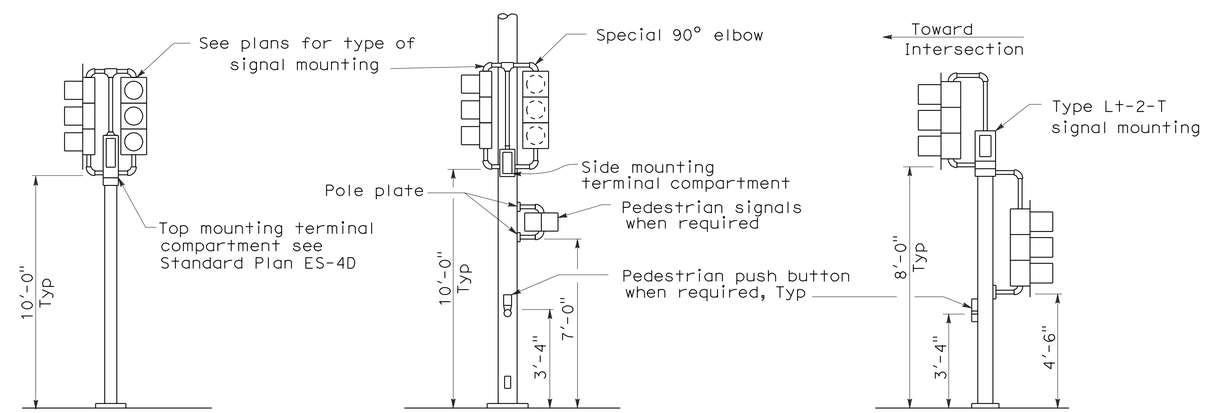

TOP MOUNTED SIGNALS (TV)

Type 1-A, 1-B, 1-C and 1-D standard as indicated on the plans

SIDE MOUNTED SIGNALS (SV AND SP)

Normally used on standards with luminaire or signal mast arm

LEFT TURN LANE SIGNAL

Type 1-A, 1-B, 1-C and 1-D standard as indicated on plans

TYPICAL SIGNAL INSTALLATIONS

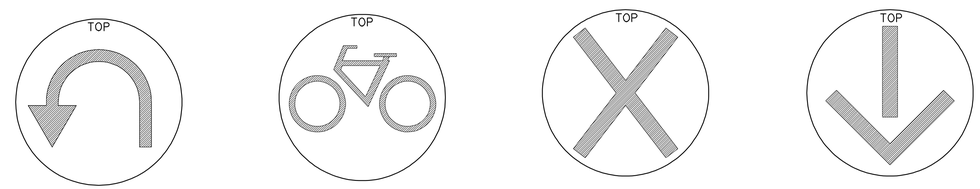

U-TURN SIGNAL FACE | BICYCLE SIGNAL FACE | LANE CONTROL SIGNAL FACE | LANE CONTROL SIGNAL FACE

STATE OF CALIFORNIA
DEPARTMENT OF TRANSPORTATION

ELECTRICAL SYSTEMS (SIGNAL HEADS AND MOUNTINGS)

NO SCALE

RSP ES-4C DATED JUNE 6, 2008 SUPERSEDES STANDARD PLAN ES-4C DATED MAY 1, 2006 - PAGE 420 OF THE STANDARD PLANS BOOK DATED MAY 2006.

REVISED STANDARD PLAN RSP ES-4C

2006 REVISED STANDARD PLAN RSP ES-4C

5-19-08

DIST	COUNTY	ROUTE	POST MILES TOTAL PROJECT	SHEET NO.	TOTAL SHEETS
08	Riv	74	27.4/27.7	49	58

REGISTERED ELECTRICAL ENGINEER

June 6, 2008
PLANS APPROVAL DATE

REGISTERED PROFESSIONAL ENGINEER Jeffery G. McRae No. E14512 Exp. 6-30-10 ELECTRICAL STATE OF CALIFORNIA

The State of California or its officers or agents shall not be responsible for the accuracy or completeness of electronic copies of this plan sheet.

To accompany plans dated 1-30-12

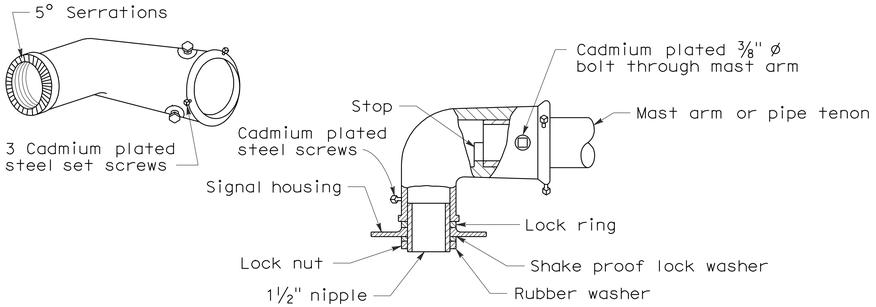

MAST ARM MOUNTING - TYPE "MAT"

For 2 NPS pipe, see Note 1.

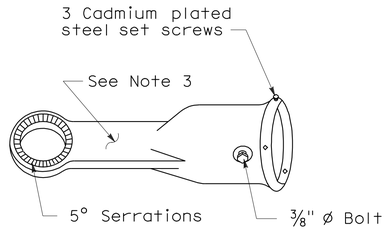

MAST ARM MOUNTING - TYPE "MAS"

For 2 NPS pipe. See Note 1.

SIGNAL SLIP FITTERS

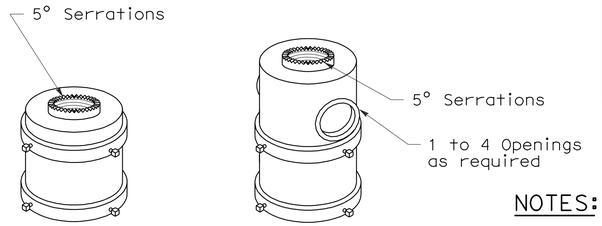

For one mounting For mulitiple mountings

TOP MOUNTINGS

For 4 NPS pipe, see Note 2.

NOTES:

1. After mast arm signal has been plumbed and secured, drill 7/16" hole through mast arm tenon in line with slip fitter hole. Place a cadmium plated ⅜" ø galvanized bolt with washer under bolt head through hole and secure with washer, nut, and locknut. Seal openings between mast arm mountings and mast arm with mastic.
2. (a) Threaded top mounted slip fitter openings shall be 1½ NPS.
   (b) Serrations in fittings shall match those on bottom of signal heads or in lock ring.
   (c) Top opening shall be offset when backplate is used.
3. Wireway shall have a cross section area of 0.95 square inch minimum. Minimum width of ½".

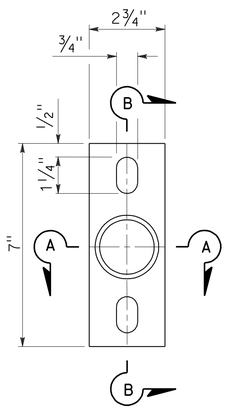

POLE PLATE

For side mountings

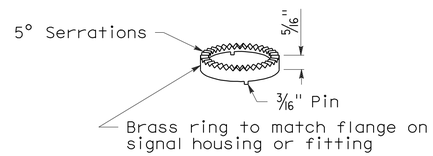

LOCK RING

Use where locking ring is not integral with signal housing or fitting.

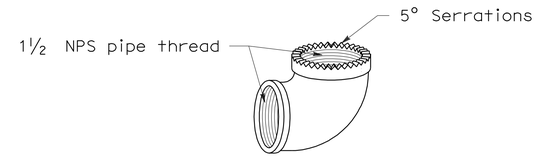

SPECIAL 90° ELBOW

One for each signal head, except those with special slip fitter mounting

MISCELLANEOUS MOUNTING HARDWARE

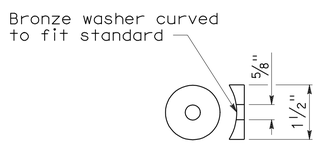

DETAIL "C"

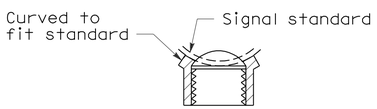

SECTION A-A

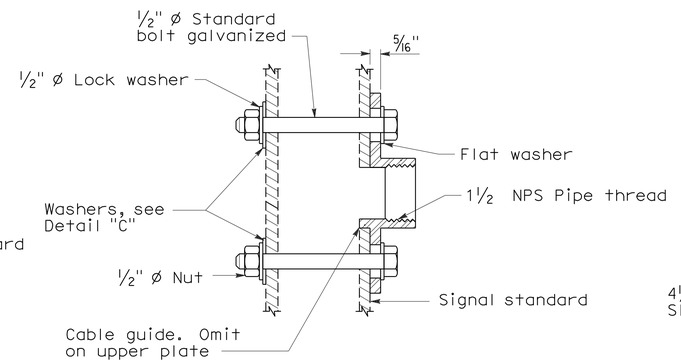

SECTION B-B

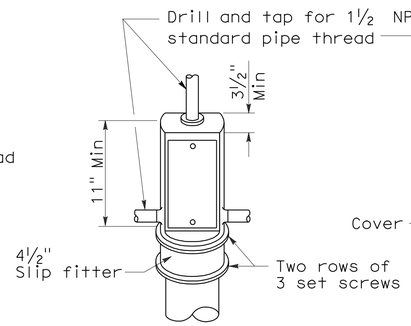

TOP MOUNTING

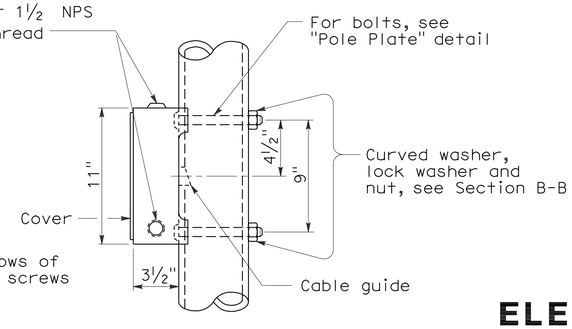

SIDE MOUNTING

TERMINAL COMPARTMENTS

STATE OF CALIFORNIA
DEPARTMENT OF TRANSPORTATION

ELECTRICAL SYSTEMS (SIGNAL HEADS AND MOUNTINGS)

NO SCALE

RSP ES-4D DATED June 6, 2008 SUPERSEDES STANDARD PLAN ES-4D
DATED MAY 1, 2006 - PAGE 421 OF THE STANDARD PLANS BOOK DATED MAY 2006.

REVISED STANDARD PLAN RSP ES-4D

2006 REVISED STANDARD PLAN RSP ES-4D

5-19-08

DIST	COUNTY	ROUTE	POST MILES TOTAL PROJECT	SHEET NO.	TOTAL SHEETS
08	Riv	74	27.4/27.7	50	58

REGISTERED ELECTRICAL ENGINEER

October 5, 2007
PLANS APPROVAL DATE

REGISTERED PROFESSIONAL ENGINEER Jeffery G. McRae No. E14512 Exp. 6-30-08 ELECTRICAL STATE OF CALIFORNIA

The State of California or its officers or agents shall not be responsible for the accuracy or completeness of electronic copies of this plan sheet.

To accompany plans dated 1-30-12

LOOP INSTALLATION PROCEDURE

1. Loops shall be centered in lanes.
2. Saw slots in pavement for loop conductors as shown in details.
3. Distance between side of loop and a lead-in saw cut from adjacent detectors shall be 2'-0" minimum. Distance between lead-in saw cuts shall be 6" minimum.
4. Bottom of saw slot shall be smooth with no sharp edges.
5. Slots shall be washed until clean, blown out and thoroughly dried before installing loop conductors.
6. Adjacent loops on the same sensor unit channel shall be wound in opposite directions.
7. Identify and tag loop circuit pairs in the pull box with loop number, start (S) and finish (F) of conductor. Identify and tag lead-in-cable with sensor number and phase.
8. Install loop conductor in slot using a 3/16" to 1/4" thick wood paddle. Hold loop conductors with wood paddles (at the bottom of the sawed slot) during sealant placement.
9. No more than 2 twisted pairs shall be installed in one sawed slot.
10. Allow additional 5'-0" of slack length of conductor for the lead-in run to pull box.
11. The additional length of each conductor for each loop shall be twisted together into a pair (6 turns per 3'-4" minimum) before being placed in the slot and conduit leading to pull box.
12. Test each loop circuit for continuity, circuit resistance and insulation resistance at the pull box before filling slots.
13. Fill slots as shown in details.
14. Splice loop conductors to lead-in-cable. Splices shall be soldered.
15. End of lead-in-cable and Type 2 loop conductor shall be waterproofed prior to installing in conduit to prevent moisture from entering the cable.
16. Lead-in-cable shall not be spliced between the pull box and the controller cabinet terminals.
17. Test each loop circuit for continuity, circuit resistance and insulation resistance at the controller cabinet location.
18. Where loop conductors are not to be spliced to a lead-in-cable, the ends of the conductors shall be taped and waterproofed with electrical insulating coating.

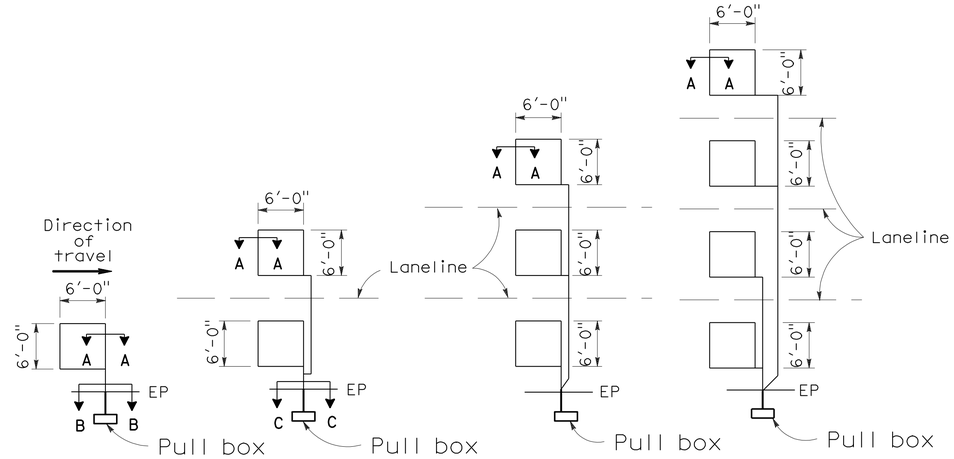

TYPE 1A INSTALLATION | TYPE 2A INSTALLATION | TYPE 3A INSTALLATION | TYPE 4A INSTALLATION

SAWCUT DETAILS

(Type A loop detector configurations illustrated)

1. 1A thru 4A = 1 Type A loop configuration in each lane.
2. 1B thru 4B = 1 Type B loop configuration in each lane.
3. 1C = 1 Type C loop configuration entering lanes as required.
4. 1D thru 4D = 1 Type D loop configuration in each lane.
5. 1E thru 4E = 1 Type E loop configuration in each lane.
6. 1Q thru 4Q = 1 Type Q loop configuration in each lane. (Use Type A, B, C, D, E or Q loop detector configurations only when specified or shown on plans)

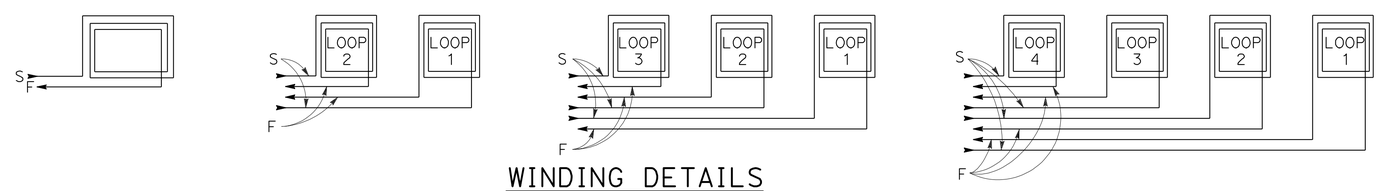

WINDING DETAILS

See Notes 6 and 7

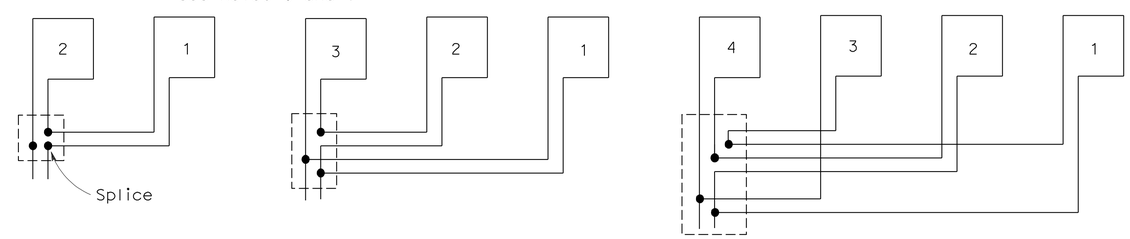

TYPICAL LOOP CONNECTIONS

(Dashed lines represent the pull box)

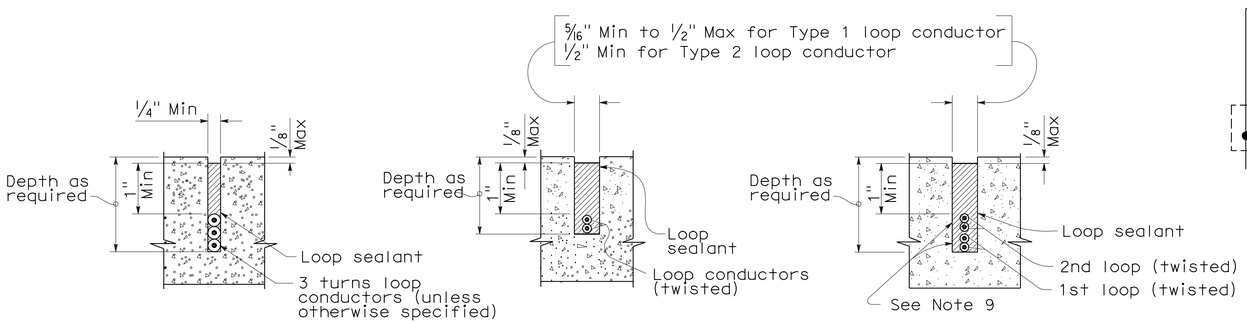

SECTION A-A | SECTION B-B | SECTION C-C

SLOT DETAILS - TYPE 1 AND TYPE 2 LOOP CONDUCTOR

STATE OF CALIFORNIA
DEPARTMENT OF TRANSPORTATION

ELECTRICAL SYSTEMS (DETECTORS)

NO SCALE

RSP ES-5A DATED OCTOBER 5, 2007 SUPERCEDES STANDARD PLAN ES-5A DATED MAY 1, 2006 - PAGE 423 OF THE STANDARD PLANS BOOK DATED MAY 2006.

REVISED STANDARD PLAN RSP ES-5A

2006 REVISED STANDARD PLAN RSP ES-5A

DIST	COUNTY	ROUTE	POST MILES TOTAL PROJECT	SHEET NO.	TOTAL SHEETS
08	Riv	74	27.4/27.7	51	58

REGISTERED CIVIL ENGINEER

October 5, 2007
PLANS APPROVAL DATE

REGISTERED PROFESSIONAL ENGINEER
Stanley P. Johnson
No. C57793
Exp. 3-31-08
CIVIL
STATE OF CALIFORNIA

The State of California or its officers or agents shall not be responsible for the accuracy or completeness of electronic copies of this plan sheet.

To accompany plans dated 1-30-12

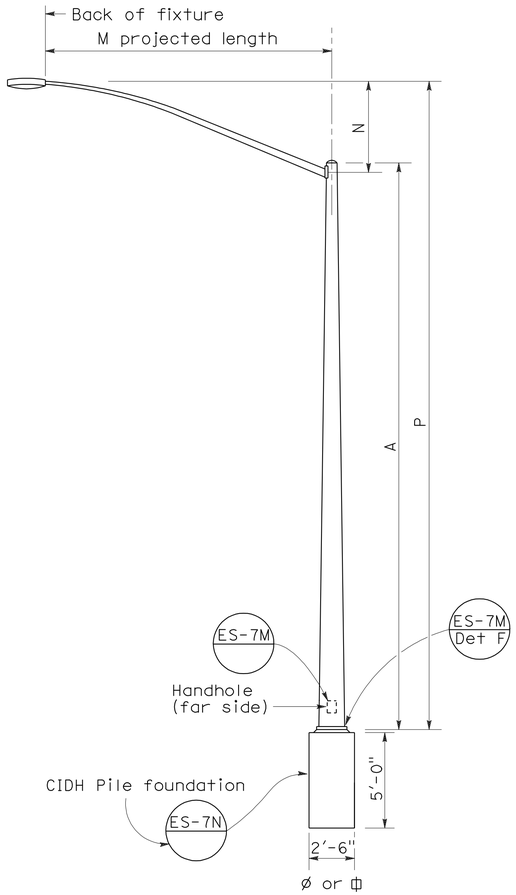

ELEVATION
TYPE 15 AND TYPE 21

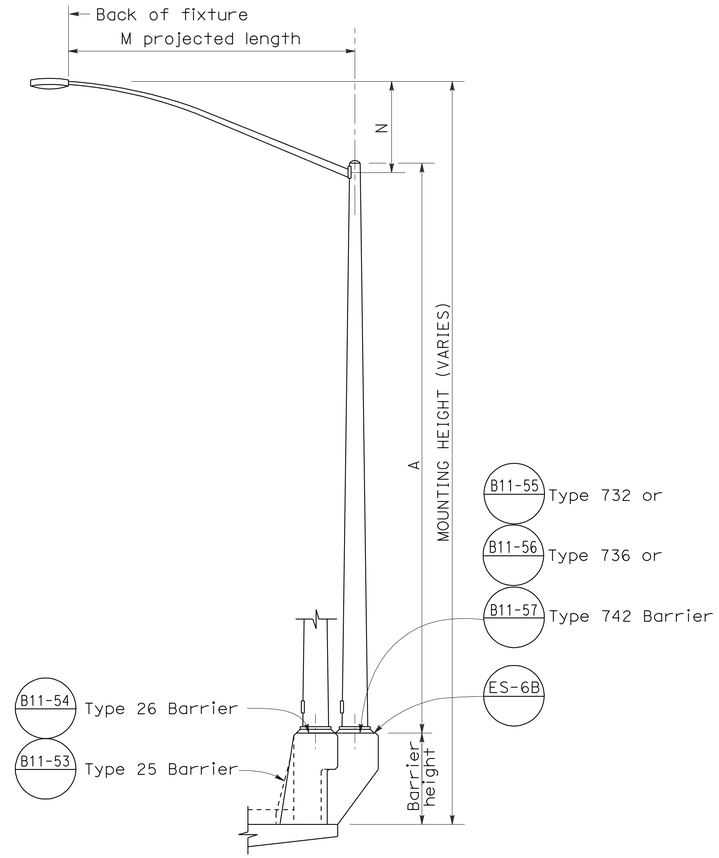

ELEVATION
TYPE 15 AND TYPE 21 BARRIER RAIL MOUNTED

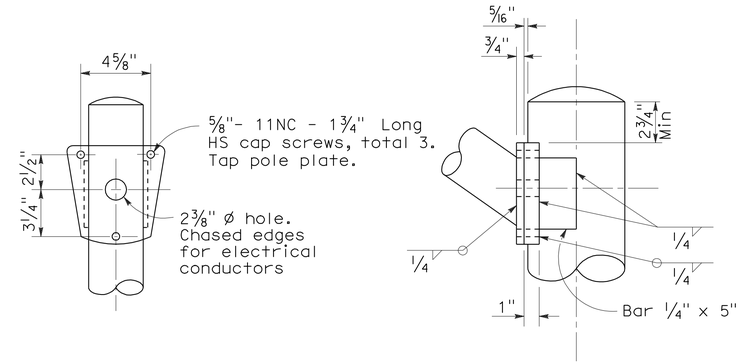

DETAIL R
LUMINAIRE ARM CONNECTION

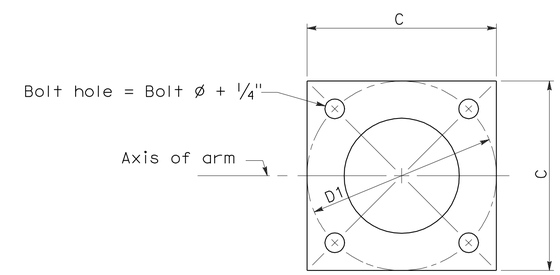

BASE PLATE

POLE TYPE	POLE DATA				BASE PLATE DATA				LUMINAIRE ARM
	A Height	Min OD Base	Min OD Top	Wall Thickness	C	D1 Bolt Circle	Thick-ness	Anchor Bolts Size	
15	30'	8"	3 7/8"	0.1196"	1'-0"	1'-0"	1"	1" ø x 3'-0" x 4"*	6' - 15' [12']
21	35'	8 5/8"	3 7/8"	0.1196"	1'-0"	1'-0"	1"	1 1/4"ø x 3'-0" x 4"*	6' - 15' [12']

* For barrier rail bolts, see Standard Plan ES-6B.

LUMINAIRE ARM DATA					
M Projected Length	N Rise	Min OD At Pole	Nominal Thickness	P Type 15	P Type 21
6'-0"	2'-0"±	3 1/4"	0.1196"	31'-6"±	36'-6"±
8'-0"	2'-6"±	3 1/2"	0.1196"	32'-0"±	37'-0"±
10'-0"	3'-3"±	3 7/8"	0.1196"	32'-9"±	37'-9"±
12'-0"	4'-3"±	3 7/8"	0.1196"	33'-9"±	38'-9"±
15'-0"	4'-9"±	4 1/4"	0.1196"	34'-3"±	39'-3"±

NOTES:

1. ☐ Indicates arm length to be used unless otherwise noted on the plans.
2. For Type 15-SB, use Type 15 standard with Type 30 slip base plate details, see Standard Plan ES-6F.
3. For additional notes, see Standard Plan ES-7M and ES-7N.

STATE OF CALIFORNIA
DEPARTMENT OF TRANSPORTATION

ELECTRICAL SYSTEMS (LIGHTING STANDARD TYPES 15 AND 21)

NO SCALE

RSP ES-6A DATED OCTOBER 5, 2007 SUPERCEDES STANDARD PLAN ES-6A DATED MAY 1, 2006 - PAGE 427 OF THE STANDARD PLANS BOOK DATED MAY 2006.

REVISED STANDARD PLAN RSP ES-6A

2006 REVISED STANDARD PLAN RSP ES-6A

DIST	COUNTY	ROUTE	POST MILES TOTAL PROJECT	SHEET NO.	TOTAL SHEETS
08	Riv	74	27.4/27.7	52	58

REGISTERED CIVIL ENGINEER

January 18, 2008
PLANS APPROVAL DATE

REGISTERED PROFESSIONAL ENGINEER
Stanley P. Johnson
No. C57793
Exp. 03-31-08
CIVIL
STATE OF CALIFORNIA

The State of California or its officers or agents shall not be responsible for the accuracy or completeness of electronic copies of this plan sheet.

To accompany plans dated 1-30-12

LUMINAIRE ARM DATA

PROJECTED LENGTH	THICKNESS	MINIMUM OD @ POLE	MOUNTING HEIGHT
* 6'-0"	0.1196"	3¼"	36'-9"±
8'-0"		3½"	37'-3"±
10'-0"		3¾"	38'-0"±
12'-0"		3¾"	39'-0"±
15'-0"		4¼"	39'-6"±
** 20'-0"	0.1793"	5"	37'-0"±

* Type 30 - arm length 6'-0" - 15'-0" maximum
** Type 31 - arm lengths 20'-0"

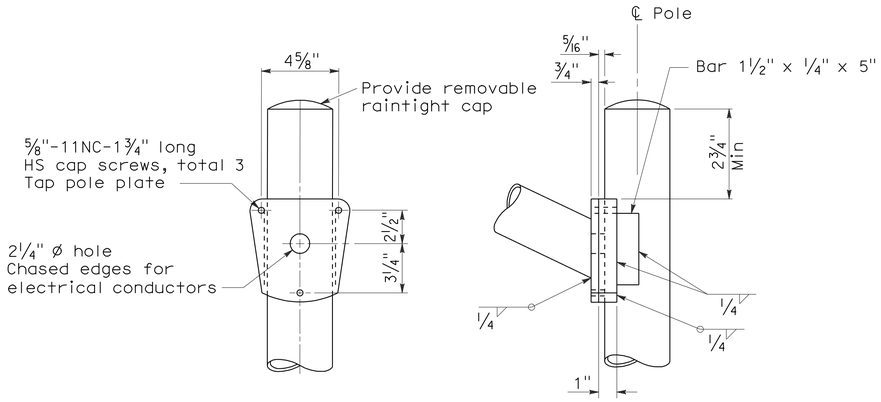

DETAIL A - TYPE 30

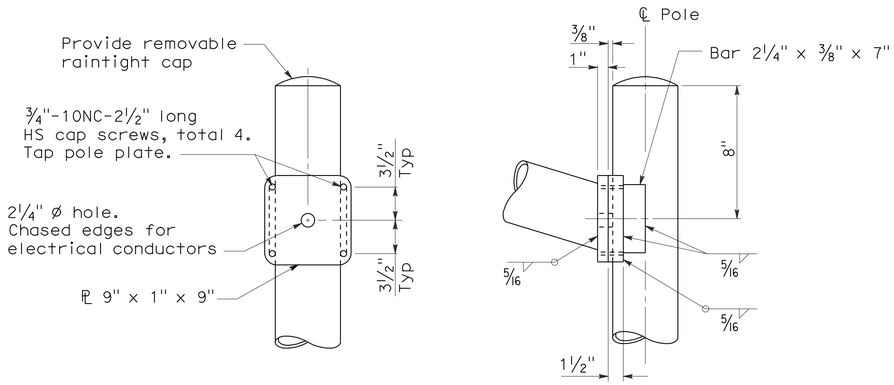

DETAIL A - TYPE 31

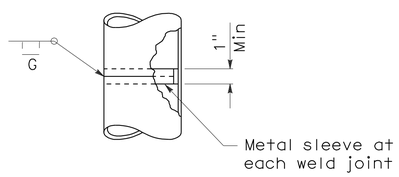

POLE SPLICE

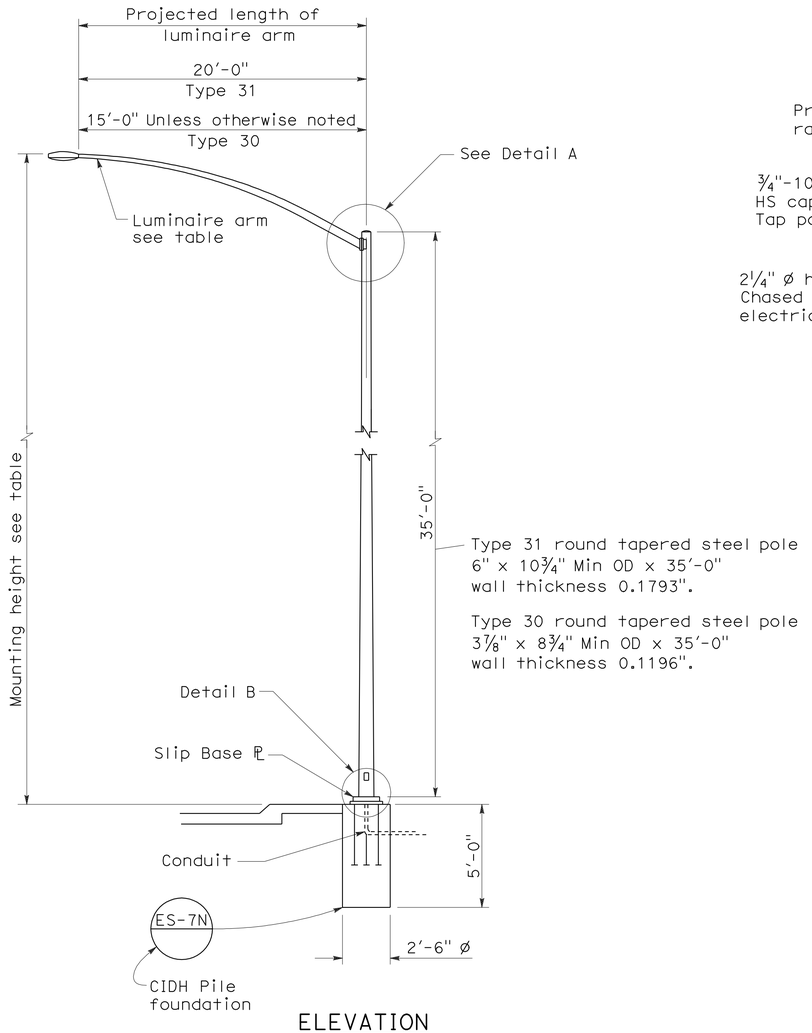

ELEVATION

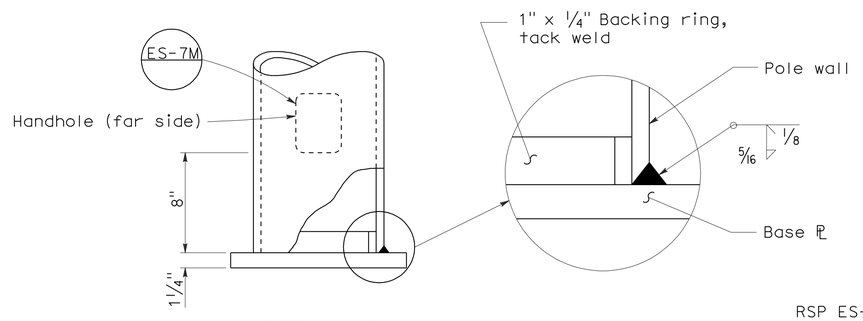

DETAIL B

NOTES:

1. Sheet steel shall have a minimum yield of 48,000 psi.
2. For slip base details see Standard Plan ES-6F.
3. For Type 30 fixed base use Type 15 base plate, and foundation shown on Revised Standard Plan RSP ES-6A. Use 1¼" Dia x 3'-6" x 4" anchor bolts.
4. For Type 31 fixed base use Type 32 base plate, anchor bolts and foundation on Standard Plan ES-6G.
5. Handhole shall be located on downstream side of traffic unless noted otherwise on plans.
6. For additional general notes refer to Standard Plan ES-7M.

STATE OF CALIFORNIA
DEPARTMENT OF TRANSPORTATION

ELECTRICAL SYSTEMS (LIGHTING STANDARD TYPES 30 AND 31)

NO SCALE

RSP ES-6E DATED JANUARY 18, 2008 SUPERCEDES STANDARD PLAN ES-6E DATED MAY 1, 2006 - PAGE 430 OF THE STANDARD PLANS BOOK DATED MAY 2006.

REVISED STANDARD PLAN RSP ES-6E

2006 REVISED STANDARD PLAN RSP ES-6E

11-19-07

DIST	COUNTY	ROUTE	POST MILES TOTAL PROJECT	SHEET NO.	TOTAL SHEETS
08	Riv	74	27.4/27.7	53	58

REGISTERED CIVIL ENGINEER

October 5, 2007
PLANS APPROVAL DATE

REGISTERED PROFESSIONAL ENGINEER
Stanley P. Johnson
No. C57793
Exp. 3-31-08
CIVIL
STATE OF CALIFORNIA

The State of California or its officers or agents shall not be responsible for the accuracy or completeness of electronic copies of this plan sheet.

To accompany plans dated 1-30-12

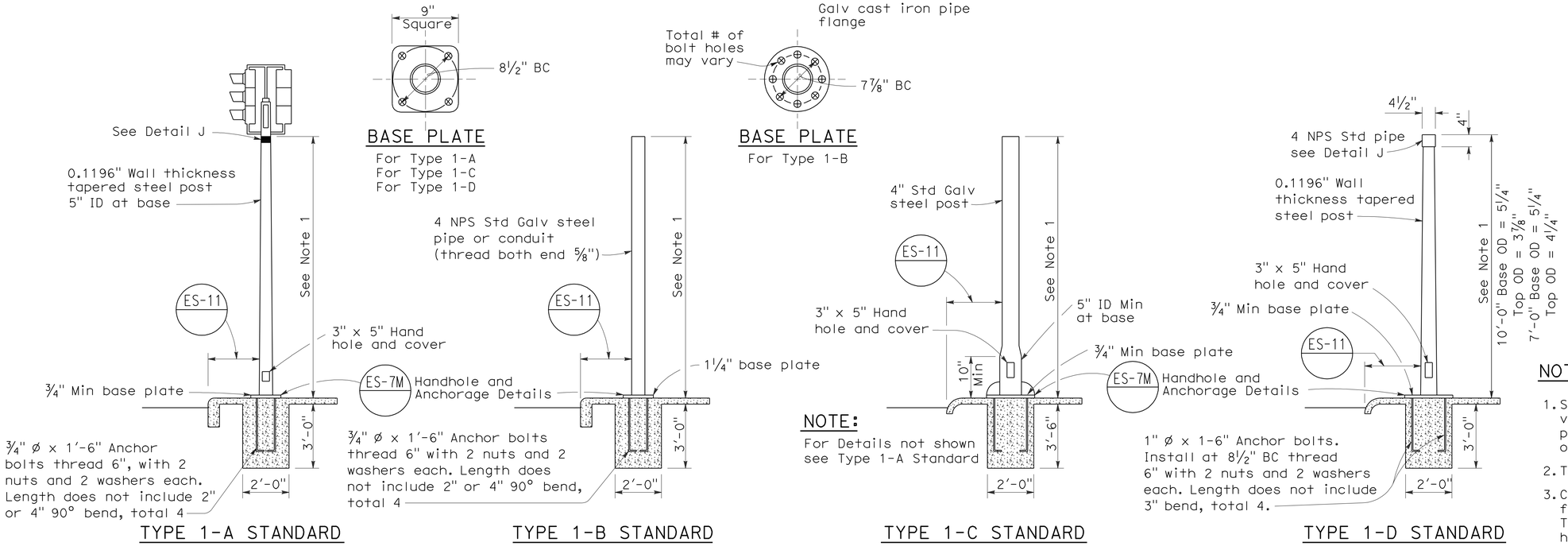

TYPE 1 SIGNAL STANDARDS

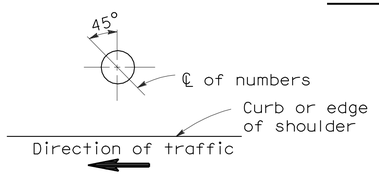

PLAN

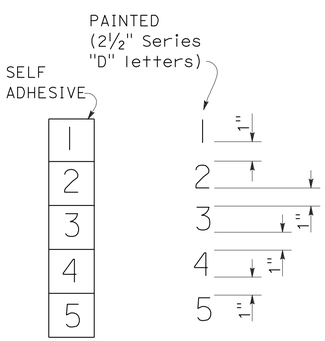

NUMBER DETAIL

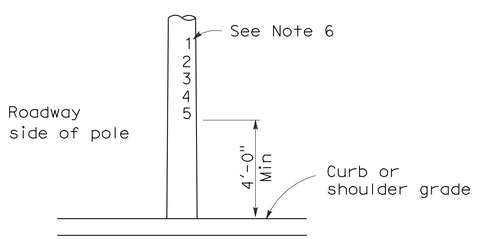

TYPICAL NUMBER FORMAT

LOCATION OF EQUIPMENT NUMBERS ON STANDARDS AND POSTS

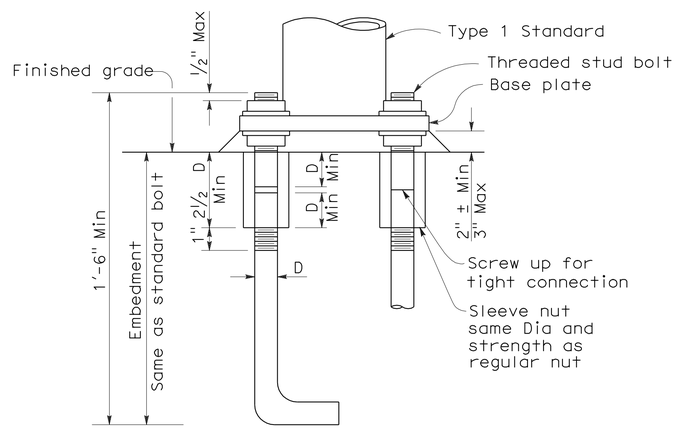

ANCHOR BOLTS WITH SLEEVE NUTS

Sleeve nuts to be used only when shown or specified on Project Plans

D = Diameter of anchor bolt

NOTES:

1. Standards shall be 10'-0" ± 2" for vehicle signals and 7'-0" ± 2" for pedestrian signals unless otherwise noted on plans.
2. Top of standards shall be 4½" OD.
3. Conduits shall extend 2" maximum above finished surface of foundation and for Types 1-A, 1-C and 1-D shall be sloped toward handhole.
4. Anchor bolts shall be bonded to conduit or grounding conductor.
5. Conduit between standard and adjacent pull box shall be 2" minimum.
6. Paint numbers on roadway side facing traffic when electrolier or post is left of direction of traffic.

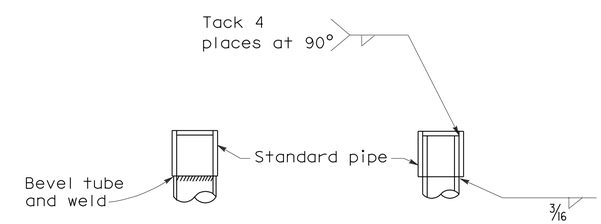

DETAIL J

Tube may be inserted into pipe or butted as required

STATE OF CALIFORNIA
DEPARTMENT OF TRANSPORTATION

ELECTRICAL SYSTEMS (SIGNAL AND LIGHTING STANDARD TYPE 1 STANDARD AND EQUIPMENT NUMBERING)

NO SCALE

RSP ES-7B DATED OCTOBER 5, 2007 SUPERCEDES STANDARD PLAN ES-7B DATED MAY 1, 2006 - PAGE 438 OF THE STANDARD PLANS BOOK DATED MAY 2006.

REVISED STANDARD PLAN RSP ES-7B

2006 REVISED STANDARD PLAN RSP ES-7B

7-10-07

DIST	COUNTY	ROUTE	POST MILES TOTAL PROJECT	SHEET NO.	TOTAL SHEETS
08	Riv	74	27.4/27.7	54	58

REGISTERED CIVIL ENGINEER

October 5, 2007
PLANS APPROVAL DATE

REGISTERED PROFESSIONAL ENGINEER Stanley P. Johnson No. C57793 Exp. 3-31-08 CIVIL STATE OF CALIFORNIA

The State of California or its officers or agents shall not be responsible for the accuracy or completeness of electronic copies of this plan sheet.

To accompany plans dated 1-30-12

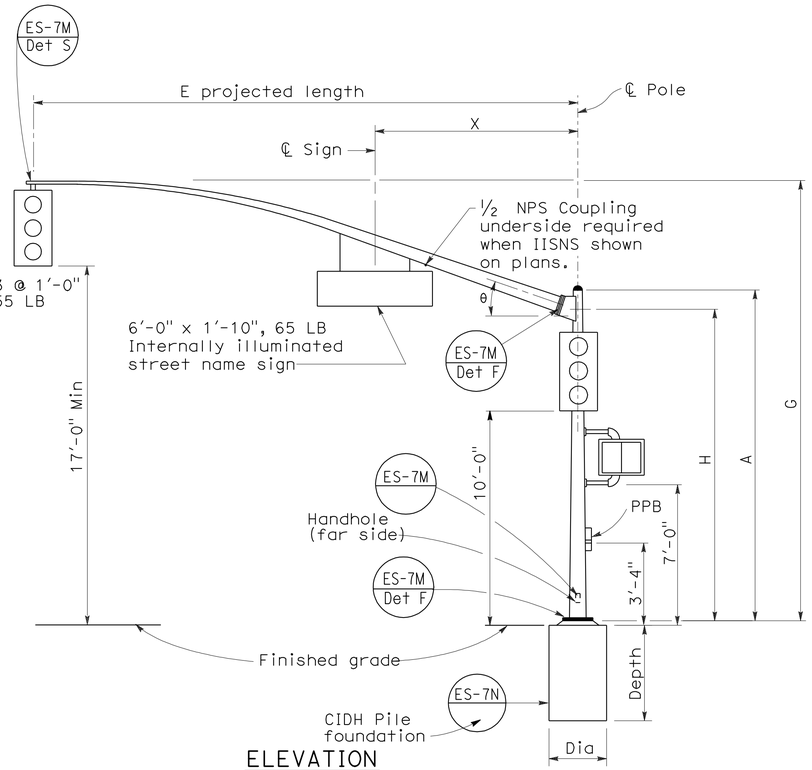

ELEVATION

TYPE 16-2-100, 18-2-100

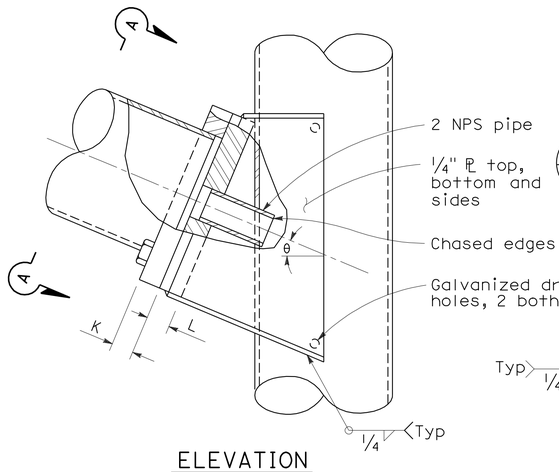

ELEVATION

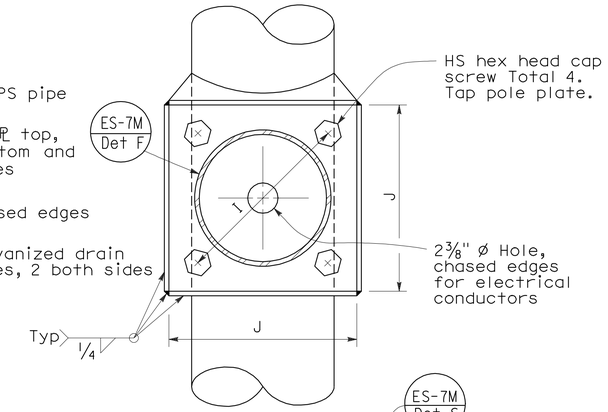

VIEW A-A

SIGNAL ARM CONNECTION DETAILS

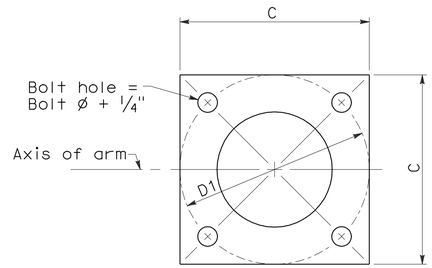

BASE PLATE

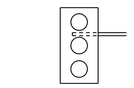

Required for
Type 17-2-100
Type 17A-2-100

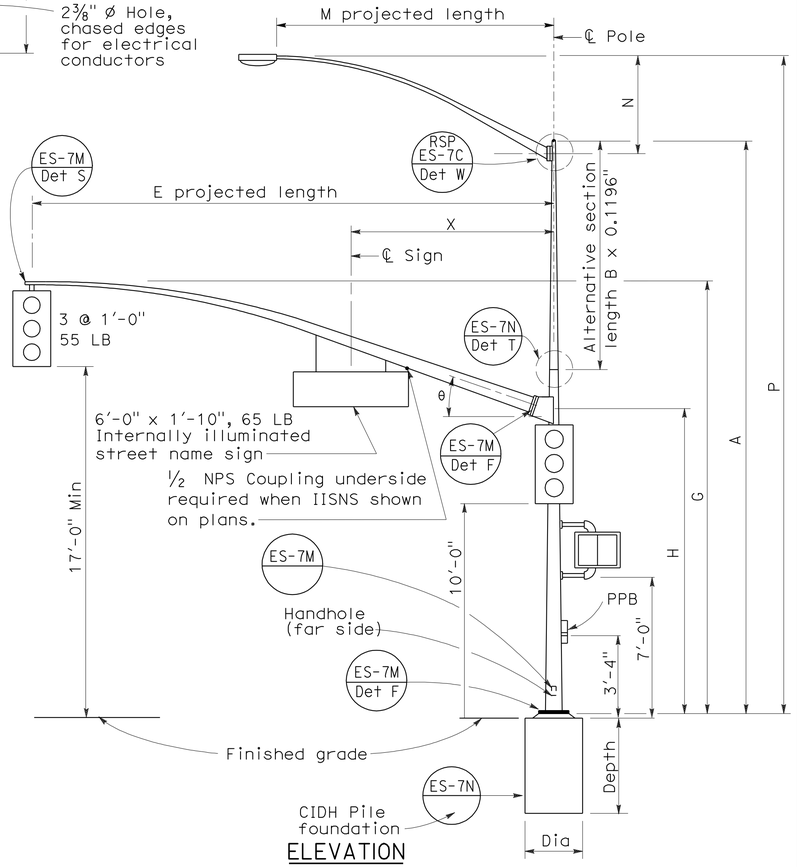

ELEVATION

TYPE 17-2-100, 17A-2-100, 19-2-100, 19A-2-100

SIGNAL ARM DATA											
E Projected Length	G Mounting Height	H	Min OD At Pole	Thickness	I Bolt Circle	HS Cap Screws	J Plate Size	K Arm ℙ Thickness	L Pole ℙ Thickness	θ	X Max
15'-0"	21'-8"±	17'-6"	6⅝"	0.1793"	12"	1¼"-7NC-3"	1'-0"	1¼"	1½"	23°	10'-6"
20'-0"	21'-8"±		6⅝"								
25'-0"	22'-8"±	16'-0"	7 5/16"								
30'-0"	23'-0"±		8"								

LUMINAIRE ARM DATA					
M Projected Length	N Rise	Min OD at Pole	Thickness	P Mounting Height 30'-0" Pole	P Mounting Height 35'-0" Pole
6'-0"	2'-0"±	3¼"	0.1196"	31'-6"±	36'-6"±
8'-0"	2'-6"±	3½"		32'-0"±	37'-0"±
10'-0"	3'-3"±	3⅞"		32'-9"±	37'-9"±
12'-0"	4'-3"±			33'-9"±	38'-9"±
15'-0"	4'-9"±	4¼"		34'-3"±	39'-3"±

Pole Type	Load Case	Wind Velocity mph	POLE DATA: A Height	Min OD Base	Min OD Top	Thickness	Alternative Section B Length	Alternative Section Bottom	Alternative Section Top	BASE PLATE DATA: C	D1 Bolt Circle	Thickness	Anchor Bolts Size	Luminaire Arm	Signal Arm	CIDH PILE FOUNDATION: Diameter	Depth	Reinforced
16-2-100	2	100	18'-6"	10¾"	8¼"	0.1793"	None			1'-6"	1'-5½"	1½"	2"Ø x 42" x 6"	None	15'-0", 20'-0"	2'-6"	7'-2"	Yes
17-2-100			30'-0"		6⅝"		10'-0"	8"	6⅝"					6'-15' [12'-0"]				
17A-2-100			35'-0"		5 15/16"		15'-0"		5 15/16"					6'-15' [15'-0"]				
18-2-100			17'-0"		8 7/16"		None							None	25'-0", 30'-0"			
19-2-100			30'-0"		6⅝"	0.2391"	10'-0"	8"	6⅝"					6'-15' [12'-0"]				
19A-2-100			35'-0"		5 15/16"		15'-0"		5 5/16"					6'-15' [15'-0"]				

☐ Indicates arm length to be used unless otherwise noted on plans.

STATE OF CALIFORNIA
DEPARTMENT OF TRANSPORTATION

ELECTRICAL SYSTEMS (SIGNAL AND LIGHTING STANDARD CASE 2 ARM LOADING WIND VELOCITY=100 MPH ARM LENGTHS 15' TO 30')

NO SCALE

RSP ES-7D DATED OCTOBER 5, 2007 SUPERCEDES STANDARD PLAN ES-7D DATED MAY 1, 2006 - PAGE 440 OF THE STANDARD PLANS BOOK DATED MAY 2006.

REVISED STANDARD PLAN RSP ES-7D

2006 REVISED STANDARD PLAN RSP ES-7D

DIST	COUNTY	ROUTE	POST MILES TOTAL PROJECT	SHEET NO.	TOTAL SHEETS
08	Riv	74	27.4/27.7	55	58

REGISTERED CIVIL ENGINEER

June 30, 2006
PLANS APPROVAL DATE

REGISTERED PROFESSIONAL ENGINEER — Jeffrey B. Woody — No. C41260 — Exp. 3-31-07 — CIVIL — STATE OF CALIFORNIA

The State of California or its officers or agents shall not be responsible for the accuracy or completeness of electronic copies of this plan sheet.

To accompany plans dated 1-30-12

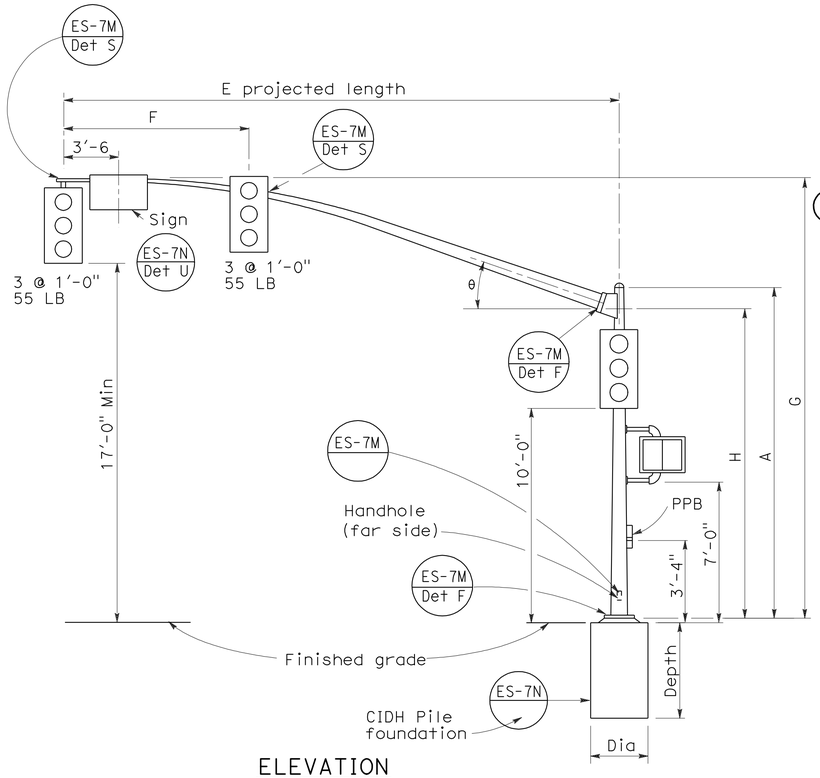

ELEVATION

TYPE 16-3-100, 18-3-100, 23-3-100, 27-3-100

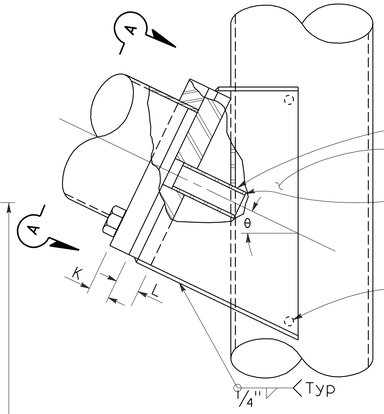

ELEVATION

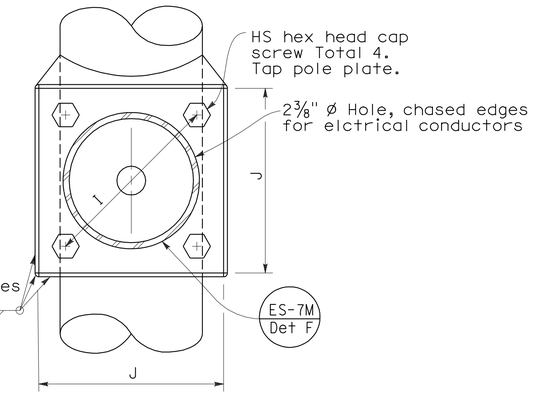

VIEW A-A

SIGNAL ARM CONNECTION DETAILS

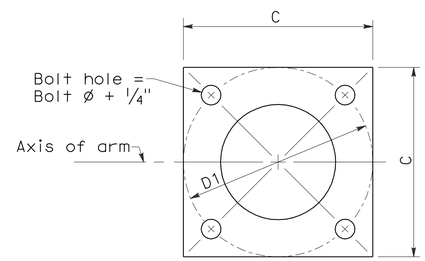

BASE PLATE

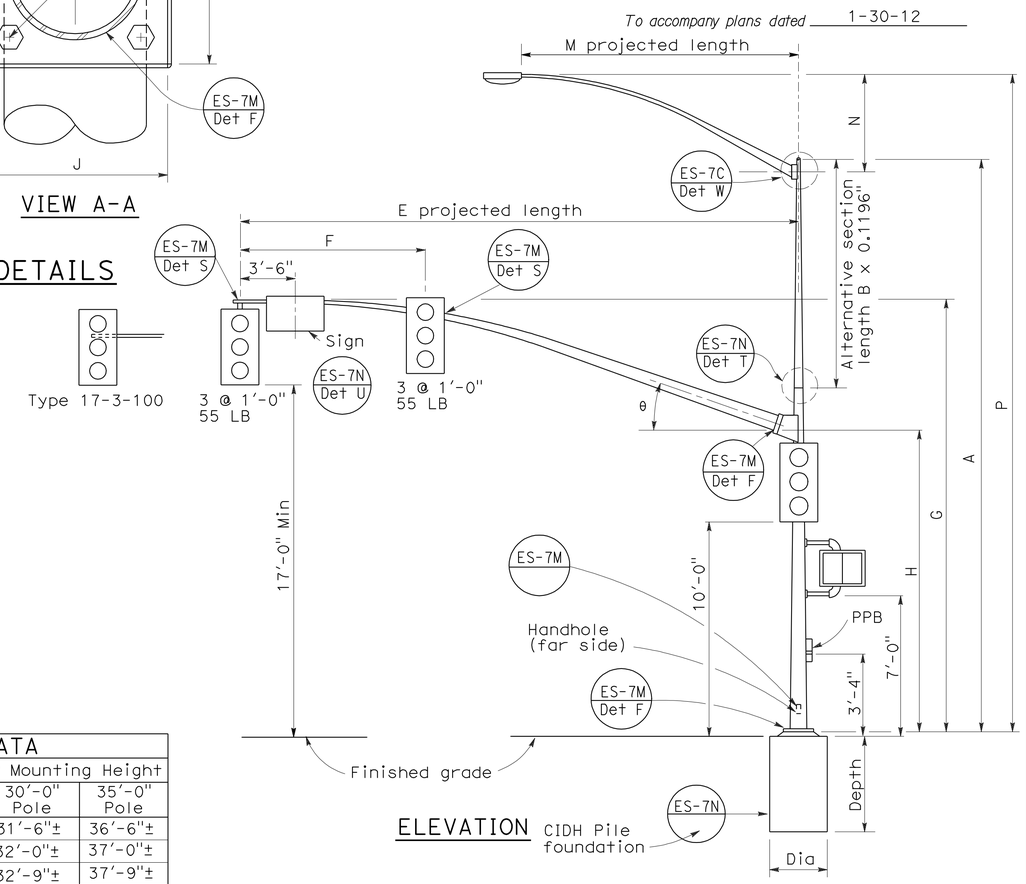

ELEVATION

TYPE 17-3-100, 24A-3-100, 19-3-100, 26-3-100, 19A-3-100, 26A-3-100, 24-3-100

SIGNAL ARM DATA

E Projected Length	F Min Spacing	G Mounting Height	H	Min OD At Pole	Thickness	I Bolt Circle	HS Cap Screws	J Plate Size	K Arm PL Thickness	L Pole PL Thickness	θ
15'-0"	8'-0"	21'-8"±	17'-6"	6 5/8"	0.1793"	12"	1 1/4"-7NC-3"	1'-0"	1 1/4"	1 1/2"	23°
20'-0"		21'-8"±		7"							
25'-0"	12'-0"	22'-8"±	16'-0"	7 5/16"	0.2391"						
30'-0"				8"							
35'-0"	14'-0"	23'-0"±		8 3/4"		13"		1'-1"	1 1/2"	1 3/4"	21°
40'-0"	15'-0"			9 3/8"							15°
45'-0"		23'-8"±		10 1/16"							

LUMINAIRE ARM DATA

M Projected Length	N Rise	Min OD at Pole	Thickness	P Mounting Height 30'-0" Pole	P Mounting Height 35'-0" Pole
6'-0"	2'-0"±	3 1/4"	0.1196"	31'-6"±	36'-6"±
8'-0"	2'-6"±	3 1/2"		32'-0"±	37'-0"±
10'-0"	3'-3"±	3 7/8"		32'-9"±	37'-9"±
12'-0"	4'-3"±			33'-9"±	38'-9"±
15'-0"	4'-9"±	4 1/4"		34'-3"±	39'-3"±

Pole Type	Load Case	Wind Velocity mph	POLE DATA A Height	Min OD Base	Min OD Top	Thickness	Alternative Section B Length	Alternative Section Bottom	Alternative Section Top	BASE PLATE DATA C	D1 Bolt Circle	Thickness	Anchor Bolts Size	Luminaire Arm	Signal Arm	CIDH PILE FOUNDATION Diameter	Depth	Reinforced
16-3-100	3	100	18'-6"	10 3/4"	8 1/4"	0.1793"	None			1'-6"	1'-5 1/2"	1 1/2"	2"Ø x 42" x 6"	None	15'-0", 20'-0"	3'-0"	9'-0"	Yes
17-3-100			30'-0"		6 5/8"		10'-0"	8"	7 5/16"					6'-15' [12'-0"]				
18-3-100			17'-0"		8 7/16"	0.2391"	None							None	25'-0", [30'-0"]			
19-3-100			30'-0"	1'-0"	7 7/8"		10'-0"	9 1/4"	7 7/8"					6'-15' [12'-0"]				
19A-3-100			35'-0"		7 3/16"		15'-0"		7 3/16"					6'-15' [15'-0"]				
23-3-100			17'-0"		9 5/8"		None							None	35'-0"			
24-3-100			30'-0"		7 7/8"		10'-0"	9 1/4"	7 7/8"					6'-15' [12'-0"]				
24A-3-100			35'-0"		7 3/16"		15'-0"		7 3/16"					6'-15' [15'-0"]				
26-3-100			30'-0"	1'-1/8"	8"	0.3125"	10'-0"	9 3/8"	8"					6'-15' [12'-0"]	40'-0", [45'-0"]			
26A-3-100			35'-0"		7 5/16"		15'-0"		7 5/16"					6'-15' [15'-0"]				
27-3-100			17'-0"		9 3/4"		None							None				

☐ Indicates arm length to be used unless otherwise noted on plans.

STATE OF CALIFORNIA
DEPARTMENT OF TRANSPORTATION

ELECTRICAL SYSTEMS (SIGNAL AND LIGHTING STANDARD CASE 3 ARM LOADING WIND VELOCITY=100 MPH ARM LENGTHS 15' TO 45')

NO SCALE

RSP ES-7E DATED JUNE 30, 2006 SUPERSEDES STANDARD PLAN DATED MAY 1, 2006 - PAGE 441 OF THE STANDARD PLANS BOOK DATED MAY 2006.

REVISED STANDARD PLAN RSP ES-7E

2006 REVISED STANDARD PLAN RSP ES-7E

5-9-06

DIST	COUNTY	ROUTE	POST MILES TOTAL PROJECT	SHEET NO.	TOTAL SHEETS
08	Riv	74	27.4/27.7	56	58

REGISTERED CIVIL ENGINEER

October 5, 2007
PLANS APPROVAL DATE

REGISTERED PROFESSIONAL ENGINEER Stanley P. Johnson No. C57793 Exp. 3-31-08 CIVIL STATE OF CALIFORNIA

The State of California or its officers or agents shall not be responsible for the accuracy or completeness of electronic copies of this plan sheet.

To accompany plans dated 1-30-12

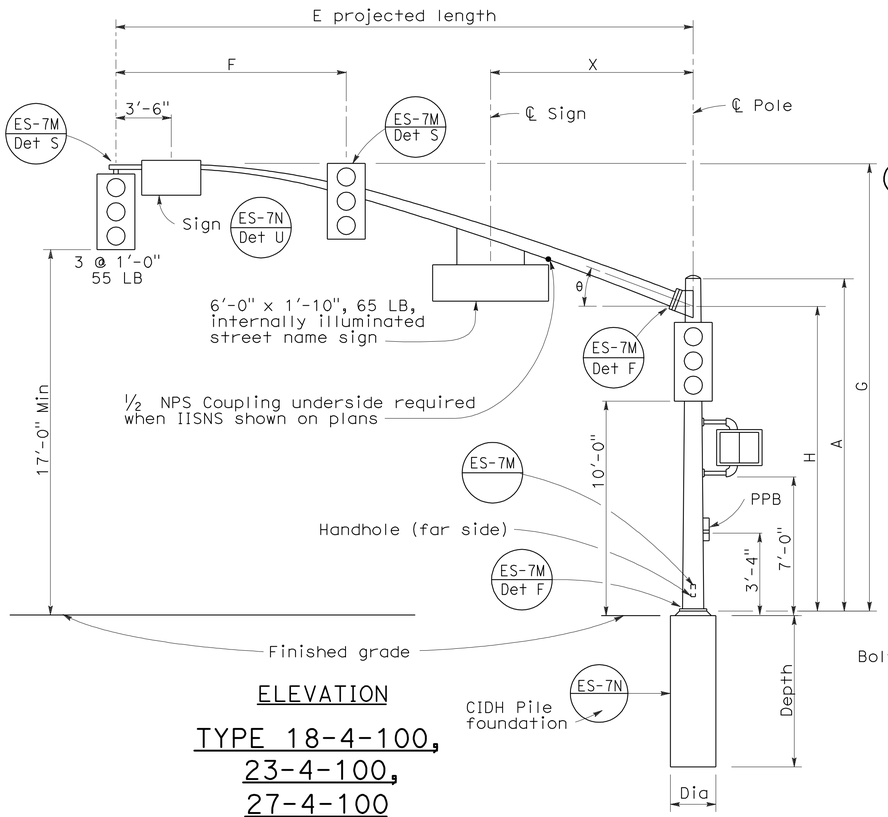

ELEVATION

TYPE 18-4-100, 23-4-100, 27-4-100

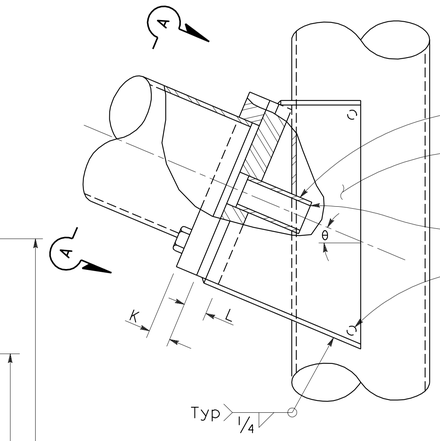

ELEVATION

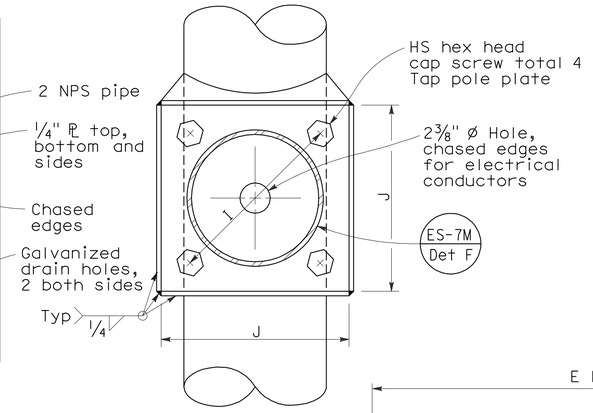

VIEW A-A

SIGNAL ARM CONNECTION DETAILS

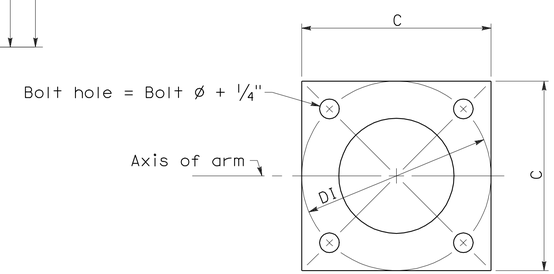

BASE PLATE

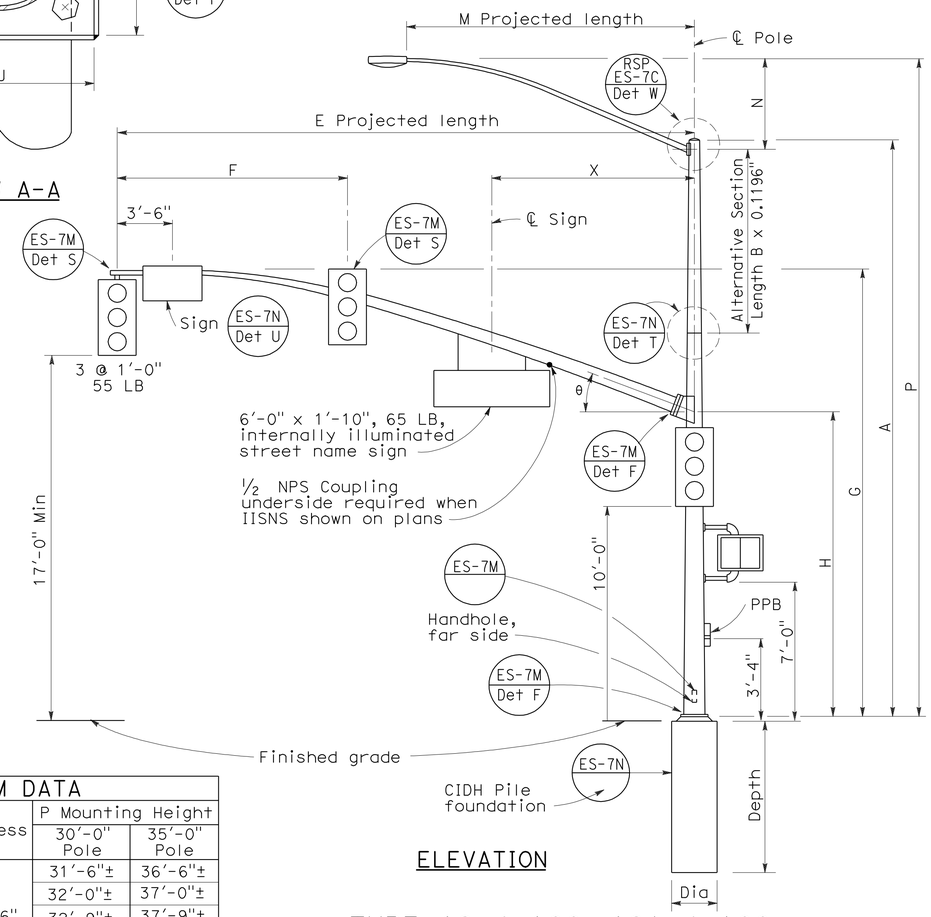

ELEVATION

TYPE 19-4-100, 19A-4-100, 24-4-100, 24A-4-100, 26-4-100, 26A-4-100

SIGNAL ARM DATA												
E Projected Length	F Min Spacing	G Mounting Height	H	Min OD at Pole	Thickness	I Bolt Circle	HS Cap Screws	J Plate Size	K Arm PL Thickness	L Pole PL Thickness	θ	X Max
25'-0"	10'-0"	22'-8"±	16'-0"	7 5/16"	0.2391"	12"	1¼"-7NC-3"	1'-0"	1¼"	1½"	23°	10'-6"
30'-0"	12'-0"	23'-0"±		8"								
35'-0"	14'-0"			8 11/16"		13½"		1'-1½"	1½"	1¾"	21°	
40'-0"	15'-0"			9⅜"							15°	13'-0"
45'-0"		23'-8"±		10¼"								

LUMINAIRE ARM DATA					
M Projected Length	N Rise	Min OD at Pole	Thickness	P Mounting Height 30'-0" Pole	P Mounting Height 35'-0" Pole
6'-0"	2'-0"±	3¼"	0.1196"	31'-6"±	36'-6"±
8'-0"	2'-6"±	3½"		32'-0"±	37'-0"±
10'-0"	3'-3"±	3⅞"		32'-9"±	37'-9"±
12'-0"	4'-3"±			33'-9"±	38'-9"±
15'-0"	4'-9"±	4¼"		34'-3"±	39'-3"±

POLE DATA									BASE PLATE DATA						CIDH PILE FOUNDATION		
Pole Type	Load Case	Wind Velocity mph	A Height	Min OD Base	Min OD Top	Thickness	Alternative Section B Length	Alternative Section Bottom	Alternative Section Top	C	DI Bolt Circle	Thickness	Anchor Bolts Size	Luminaire Arm	Signal Arm	Dia	Depth	Reinforced
18-4-100	4	100	17'-0"	12"	9"	0.2391"	None	9⅜"		1'-6"	1'-6"	1½"	2" Ø x 42" x 6"	None	25'-0", 30'-0"	3'-0"	9'-0"	Yes
19-4-100			30'-0"		8"		10'-0"		8"					6'-15' 12'-0"				
19A-4-100			35'-0"		7 5/16"		15'-0'		7 5/16"					6'-15' 15'-0"				
23-4-100			17'-0"		9"		None							None	35'-0"			
24-4-100			30'-0"		8"		10'-0"	9⅜"	8"					6'-15' 12'-0"				
24A-4-100			35'-0"		7 5/16"		15'-0"		7 5/16"					6'-15' 15'-0"				
26-4-100			30'-0"	12½"	8"	0.3125"	10'-0"	9¾"	8⅜"					6'-15' 12'-0"	40'-0", 45'-0"			
26A-4-100			35'-0"		7 5/16"		15'-0"		7 11/16"					6'-15' 15'-0"				
27-4-100			17'-0"		9¾"		None							None				

☐ Indicates arm length to be used unless otherwise noted on plans.

STATE OF CALIFORNIA
DEPARTMENT OF TRANSPORTATION

ELECTRICAL SYSTEMS (SIGNAL AND LIGHTING STANDARD CASE 4 ARM LOADING WIND VELOCITY=100 MPH ARM LENGTHS 25' TO 45')

NO SCALE

RSP ES-7F DATED OCTOBER 5, 2007 SUPERCEDES RSP ES-7F DATED NOVEMBER 17, 2006 AND STANDARD PLAN ES-7F DATED MAY 1, 2006 - PAGE 442 OF THE STANDARD PLANS BOOK DATED MAY 2006.

REVISED STANDARD PLAN RSP ES-7F

2006 REVISED STANDARD PLAN RSP ES-7F

7-10-07

DIST	COUNTY	ROUTE	POST MILES TOTAL PROJECT	SHEET NO.	TOTAL SHEETS
08	Riv	74	27.4/27.7	57	58

REGISTERED ELECTRICAL ENGINEER

January 20, 2012
PLANS APPROVAL DATE

REGISTERED PROFESSIONAL ENGINEER Jeffery G. McRae No. E14512 Exp. 6-30-12 ELECTRICAL STATE OF CALIFORNIA

The State of California or its officers or agents shall not be responsible for the accuracy or completeness of electronic copies of this plan sheet.

To accompany plans dated 1-30-12

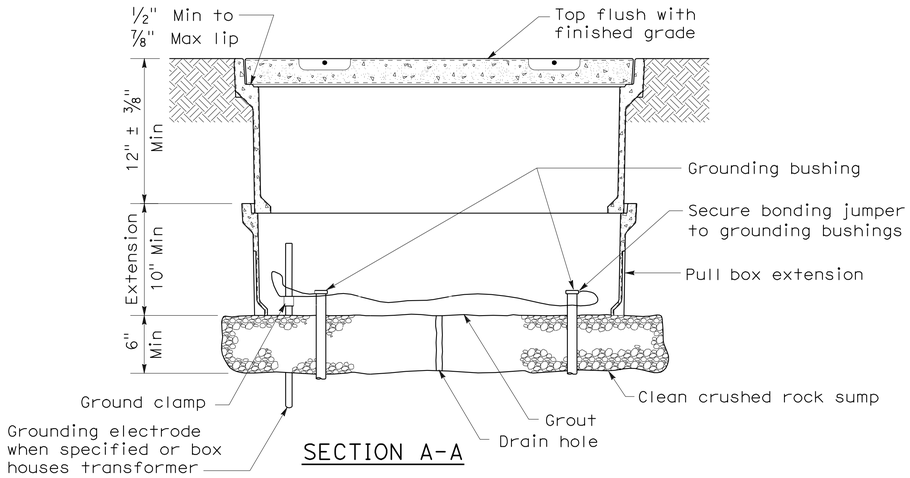

SECTION A-A

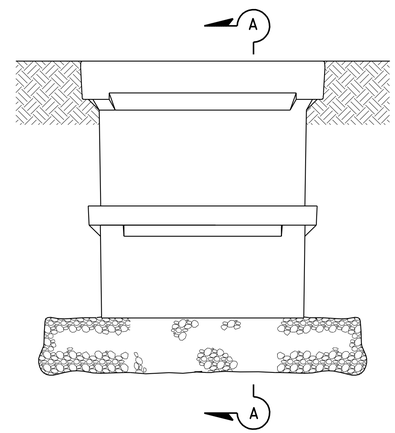

SIDE VIEW

INSTALLATION DETAILS

DETAIL A

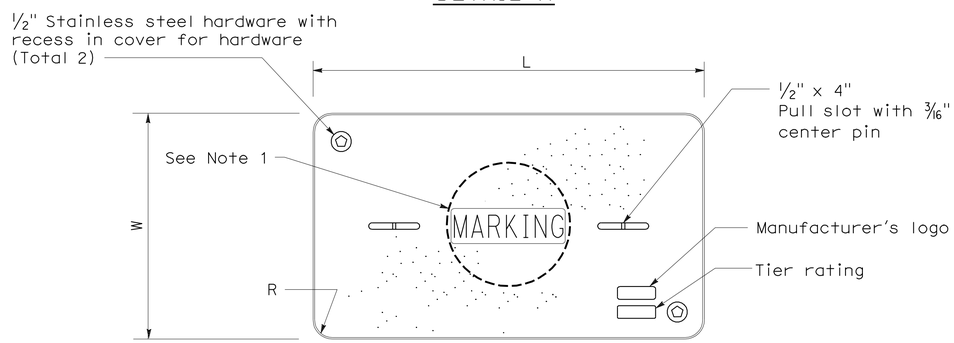

COVER TOP VIEW

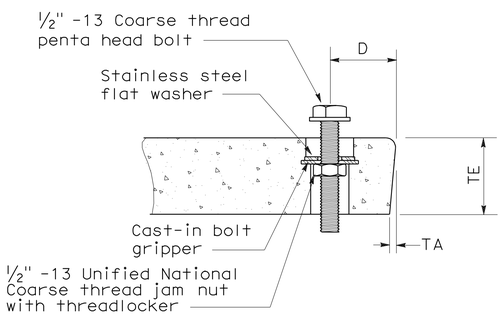

TYPICAL COVER CAPTIVE BOLT

(Or similar)

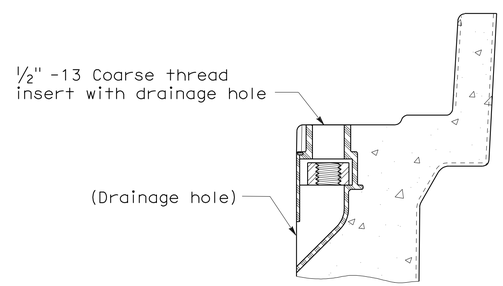

TYPICAL THREADED INSERT

(Or similar)

DIMENSION TABLE										
PULL BOX	PULL BOX			COVER						
	Minimum Depth Box	Minimum Depth Extension	Maximum Weight	L	W	R	TE	TA	D	Maximum Weight
No. 3 1/2	12"	N/A	40 lb	1' - 3 3/8"	10 1/8"	1 3/8"	2"	1/8"	1 3/4"	30 lb
No. 5	12"	10"	55 lb	1' - 11 1/4"	1' - 1 3/4"	1 3/8"	2"	1/8"	1 3/4"	60 lb
No. 6	12"	10"	70 lb	2' - 6 1/2"	1' - 5 1/2"	1 3/8"	2"	1/8"	2"	85 lb

NOTES ON PULL BOXES:

1. Pull box covers must be marked as follows: "SERVICE" Service circuits between service point and service disconnect; "SPRINKLER-CONTROL" sprinkler control circuits, 50 V or less; "CALTRANS" on all pull boxes, except pull boxes marked "SPRINKLER-CONTROL"; and "TELEPHONE" Telephone service;

   A) No. 3 1/2 pull box.
      1) "SIGNAL" - Traffic signal circuits with or without street or sign lighting circuits.
      2) "ST LIGHTING" - Street or sign lighting circuits where voltage is under 600 V.

   B) No. 5, 6, 9 or 9A pull box.
      1) "TRAFFIC SIGNAL" - Traffic signal circuits with or without street or sign lighting circuits.
      2) "STREET LIGHTING" - Street or sign lighting circuits where voltage is under 600 V.
      3) "STREET LIGHTING-HIGH VOLTAGE" - Street or sign lighting circuits where voltage is above 600 V.
      4) "IRRIGATION" - Circuits to irrigation controller 120 V or more.
      5) "RAMP METER" - Ramp meter circuits.
      6) "COUNT STATION" - Count or speed monitor circuits.
      7) "COMMUNICATIONS" - Communication circuits.
      8) "TOS COMMUNICATIONS" - TOS communication line.
      9) "TOS POWER" -TOS power.
      10) "TDC POWER" - Telephone demarcation cabinet power.
      11) "CCTV" - Closed circuit television circuits.
      12) "TMS" - Traffic monitoring station circuits.
      13) "CMS" - Changeable message sign circuits.
      14) "HAR" - Highway advisory radio circuits.

2. The nominal dimensions of the opening in which the cover sets must be the same as the cover dimensions (L and W) plus 1/8" or greater.

3. Covers and boxes must be interchangeable with California Standard. When interchanged with a standard, the top surfaces must be flush within 1/8". Top outside radius of covers and pull boxes must have a 1/8" radius.

4. Pull box extension may be another pull box as long as the bottom edge of the pull box can fit into the cover opening.

STATE OF CALIFORNIA
DEPARTMENT OF TRANSPORTATION

ELECTRICAL SYSTEMS (PULL BOX)

NO SCALE

NSP ES-8A DATED JANUARY 20, 2012 SUPPLEMENTS THE STANDARD PLANS BOOK DATED MAY 2006.

NEW STANDARD PLAN NSP ES-8A

2006 NEW STANDARD PLAN NSP ES-8A

9-28-11

DIST	COUNTY	ROUTE	POST MILES TOTAL PROJECT	SHEET NO.	TOTAL SHEETS
08	Riv	74	27.4/27.7	58	58

REGISTERED ELECTRICAL ENGINEER

January 20, 2012
PLANS APPROVAL DATE

REGISTERED PROFESSIONAL ENGINEER
Jeffery G. McRae
No. E14512
Exp. 6-30-12
ELECTRICAL
STATE OF CALIFORNIA

The State of California or its officers or agents shall not be responsible for the accuracy or completeness of electronic copies of this plan sheet.

To accompany plans dated 1-30-12

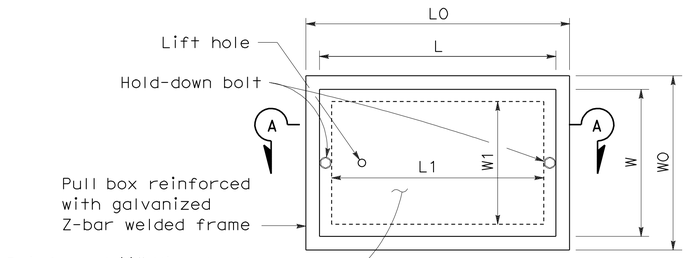

TOP VIEW

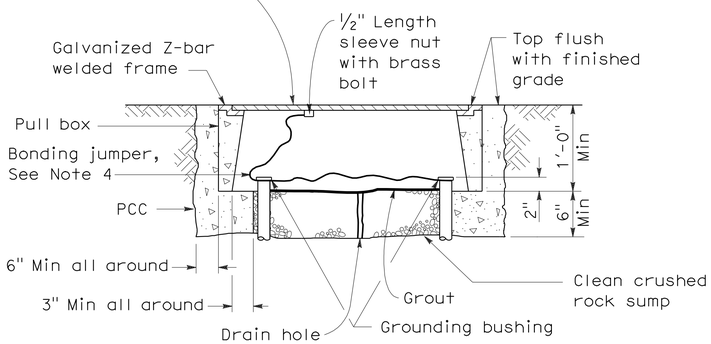

SECTION A-A

No. 3½(T), No. 5(T) AND No. 6(T) TRAFFIC PULL BOX

NOTES ON PULL BOXES:

1. Traffic pull box shall be provided with steel cover and special concrete footing. Steel cover shall have embossed non-skid pattern.
2. Steel reinforcing shall be as regularly used in the standard products of the respective manufacturer.
3. Pull box covers must be marked as follows: "SERVICE" Service circuits between service point and service disconnect; "SPRINKLER-CONTROL" Sprinkler control circuits, 50 V or less; "CALTRANS" On all pull boxes, except pull boxes marked "SPRINKLER-CONTROL"; and "TELEPHONE" Telephone service.
   A) No. 3½(T) pull box.
      1) "SIGNAL" - Traffic signal circuits with or without street or sign lighting circuits.
      2) "ST LIGHTING" - Street or sign lighting circuits where voltage is under 600 V.
   B) No. 5(T) or 6(T) pull box.
      1) "TRAFFIC SIGNAL" - Traffic signal circuits with or without street or sign lighting circuits.
      2) "STREET LIGHTING" - Street or sign lighting circuits where voltage is under 600 V.
      3) "STREET LIGHTING-HIGH VOLTAGE" - Street or sign lighting circuits where voltage is above 600 V.
      4) "IRRIGATION" - Circuits to irrigation controller 120 V or more.
      5) "RAMP METER" - Ramp meter circuits.
      6) "COUNT STATION" - Count or speed monitor circuits.
      7) "COMMUNICATION" - Communication circuits.
      8) "TOS COMMUNICATIONS" - TOS communications line.
      9) "TOS POWER" - TOS power.
      10) "TDC POWER" - Telephone demarcation cabinet power.
      11) "CCTV" - Closed circuit television circuits.
      12) "TMS" - Traffic monitoring station circuits.
      13) "CMS" - Changeable message sign circuits.
      14) "HAR" - Highway advisory radio circuits.
4. Bonding jumper for metal covers shall be 3' long, minimum.
5. The nominal dimensions of the opening in which the cover sets must be the same as the cover dimensions except the length and width dimensions shall be ⅛" greater.
6. Covers and boxes must be interchangeable with California standard male and female gages. When interchanged with a standard male or female gage, the top surfaces must be flush within ⅛".

DIMENSION TABLE

PULL BOX	BOX						COVER				
	Minimum * Thickness	Minimum Depth Box and Extension	WO	LO	L1	W1	L **	W **	R	Edge Thickness	Edge Taper
No. 3½(T)	1½"	1'-0"	1'-5"± 1"	1'-8⅞"±	1'-2½"±	10⅝"± 1"	1'-8"±	1'-1¾"±	0"	½"	None
No. 5(T)	1¾"	1'-0"	1'-11½"± 1"	2'-5½"±	1'-7"±	1'-1"± 1"	2'-3"±	1'-4"±	0"	½"	None
No. 6(T)	2"	1'-0"	2'-6"± 1"	2'-11½"±	1'-11½"±	1'-5"± 1"	2'-9"±	1'-8"±	0"	½"	None

* Excluding conduit web ** Top dimension

STATE OF CALIFORNIA
DEPARTMENT OF TRANSPORTATION

ELECTRICAL SYSTEMS (TRAFFIC RATED PULL BOX)

NO SCALE

NSP ES-8B DATED JANUARY 20, 2012 SUPPLEMENTS THE STANDARD PLANS BOOK DATED MAY 2006.

NEW STANDARD PLAN NSP ES-8B

2006 NEW STANDARD PLAN NSP ES-8B

9-28-11