Dist	COUNTY	ROUTE	POST MILES TOTAL PROJECT	SHEET No.	TOTAL SHEETS
08	SBd	40	R138.3/R154.5	1	43

STATE OF CALIFORNIA

DEPARTMENT OF TRANSPORTATION

ACIM-040-2(059)E

PROJECT PLANS FOR CONSTRUCTION ON

STATE HIGHWAY

IN SAN BERNARDINO COUNTY IN AND NEAR NEEDLES FROM BUZZARD WASH TO THE ARIZONA STATE LINE

TO BE SUPPLEMENTED BY 2010 STANDARD PLANS

INDEX OF PLANS

SHEET No.	DESCRIPTION
1	TITLE AND LOCATION MAP
2-4	TYPICAL CROSS SECTIONS
5-16	CONSTRUCTION DETAILS
17-18	CONSTRUCTION AREA SIGNS
19-20	DETOUR PLANS
21-22	PAVEMENT DELINEATION DETAILS
23-30	PAVEMENT DELINEATION QUANTITIES
31	SIGN QUANTITIES
32-35	SUMMARY OF QUANTITIES
36-37	ELECTRICAL PLANS
38-43	REVISED STANDARD PLANS

THE STANDARD PLANS LIST APPLICABLE TO THIS CONTRACT IS INCLUDED IN THE NOTICE TO BIDDERS AND SPECIAL PROVISIONS BOOK

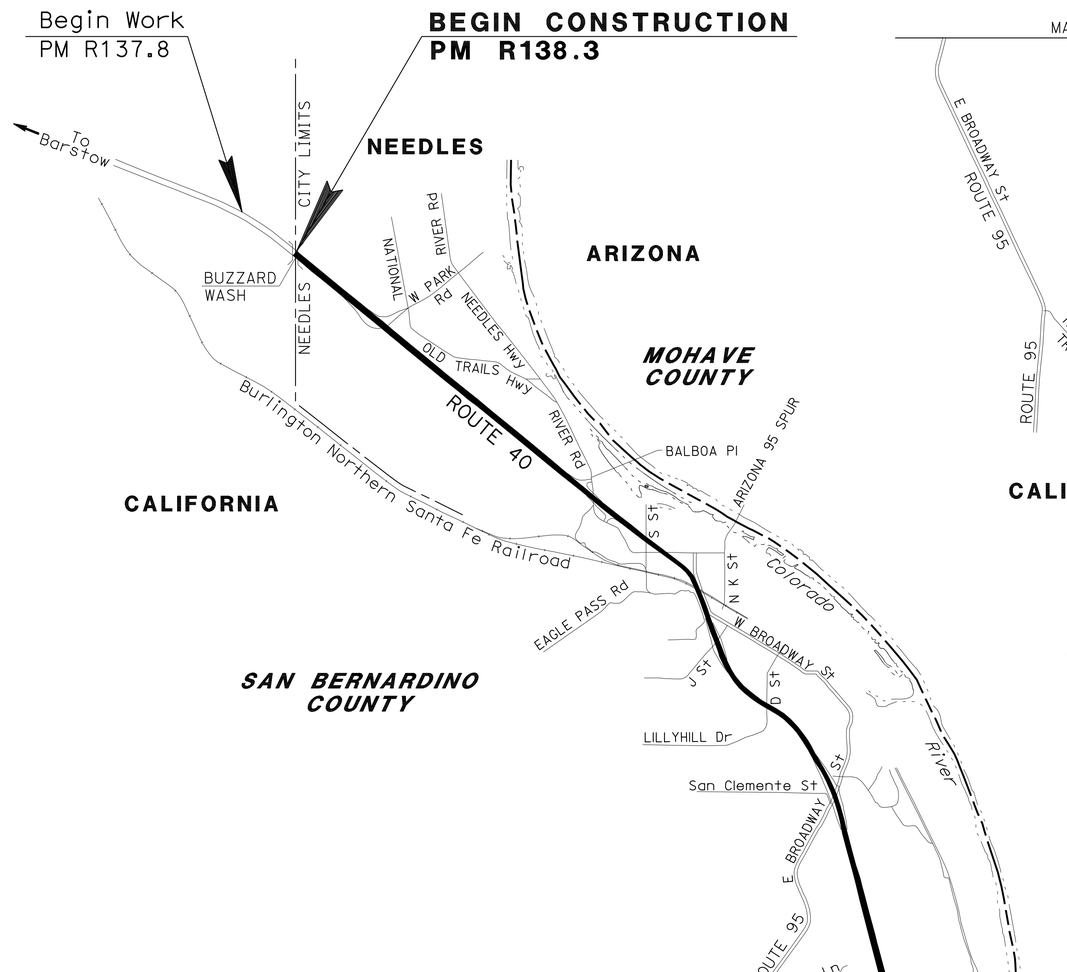

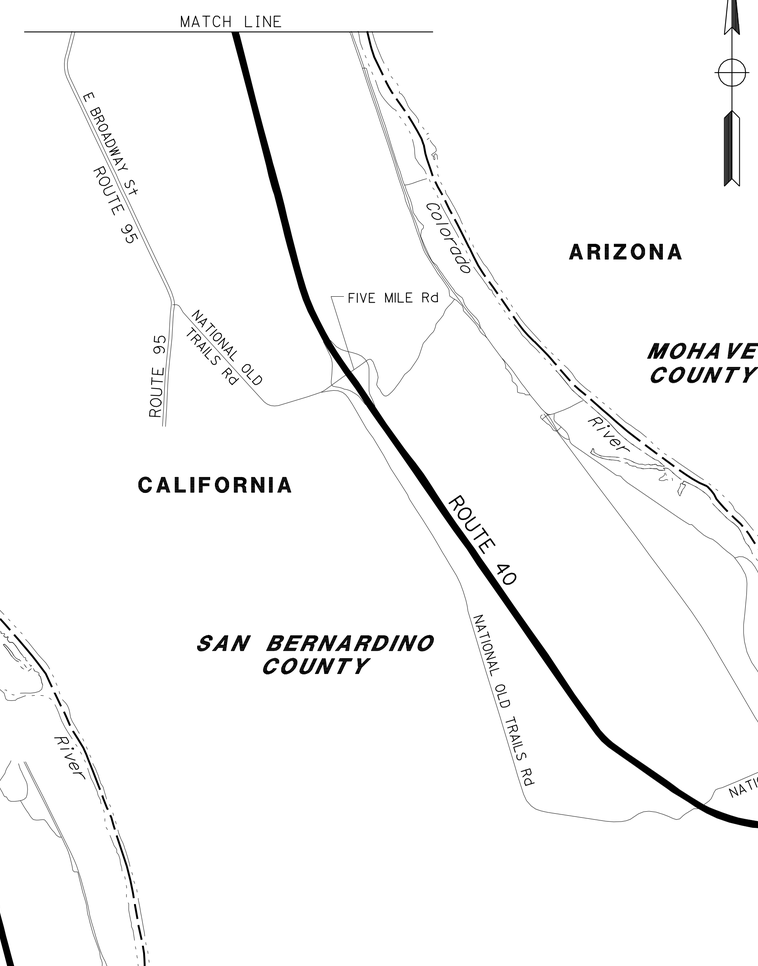

LOCATION MAP

Kamal McHantaf 8-20-12
PROJECT ENGINEER DATE
REGISTERED CIVIL ENGINEER

August 20, 2012
PLANS APPROVAL DATE

REGISTERED PROFESSIONAL ENGINEER
KAMAL McHANTAF
No. C51050
Exp. 9-30-13
CIVIL
STATE OF CALIFORNIA

THE STATE OF CALIFORNIA OR ITS OFFICERS OR AGENTS SHALL NOT BE RESPONSIBLE FOR THE ACCURACY OR COMPLETENESS OF SCANNED COPIES OF THIS PLAN SHEET.

THE CONTRACTOR SHALL POSSESS THE CLASS (OR CLASSES) OF LICENSE AS SPECIFIED IN THE "NOTICE TO BIDDERS."

NO SCALE

CONTRACT No.	08-0K2604
PROJECT ID	0800020491

PROJECT MANAGER: MOHAMMAD MOLLAZADEH
DESIGN ENGINEER: KAMAL McHANTAF

LAST REVISION 08-20-12 | DATE PLOTTED => 04-SEP-2012 | TIME PLOTTED => 09:20

Dist	COUNTY	ROUTE	POST MILES TOTAL PROJECT	SHEET No.	TOTAL SHEETS
08	SBd	40	R138.3/R154.5	2	43

Kamal McHantaf 8-20-12
REGISTERED CIVIL ENGINEER DATE

8-20-12
PLANS APPROVAL DATE

REGISTERED PROFESSIONAL ENGINEER KAMAL McHANTAF No. C51050 Exp. 9-30-13 CIVIL STATE OF CALIFORNIA

THE STATE OF CALIFORNIA OR ITS OFFICERS OR AGENTS SHALL NOT BE RESPONSIBLE FOR THE ACCURACY OR COMPLETENESS OF SCANNED COPIES OF THIS PLAN SHEET.

NOTES:

1. DIMENSIONS OF STRUCTURAL SECTIONS ARE SUBJECT TO TOLERANCES SPECIFIED IN THE STANDARD SPECIFICATIONS.
2. SUPERELEVATION AS SHOWN OR AS DIRECTED BY THE ENGINEER.
3. NO SURFACING, COLD PLANING, OR FOG SEAL SHALL BE ALLOWED ON APPROACH SLABS AND ON BRIDGE STRUCTURES.
4. EXISTING UTILITY FACILITIES HAVE NOT BEEN PLOTTED ON THESE PLANS.
5. EXISTING STRUCTURAL SECTIONS NOT SHOWN.
6. CENTERLINE, LANE WIDTH AND SHOULDER WIDTH SHOWN ARE APPROXIMATE.
7. SEE SHEET C-7 FOR PAVEMENT CONFORM DETAILS.
8. SEE SHEET Q-1 AND Q-2 FOR LOCATIONS, TYPES AND QUANTITIES OF REMOVAL, RECONSTRUCT AND CONSTRUCTION OF MBGR, TERMINAL SYSTEMS, END CAPS, CRASH CUSHIONS AND TRANSITION RAILING.
9. SEE QUANTITY SHEET Q-3 AND Q-4 FOR LOCATIONS, TYPES AND QUANTITIES OF REMOVAL AND CONSTRUCTION OF AC DIKES, COLD PLANE AND PAVEMENTS.

TYPICAL PAVEMENT STRUCTURAL SECTION:

1. 0.10′ RHMA-G
2. 0.25′ COLD PLANE
   0.25′ HMA-C
3. 0.40′ COLD PLANE
   0.40′ HMA-C
4. 0.15′ COLD PLANE
   0.15′ RHMA-G
5. 0.90′ JPCPRSC
   PLASTIC POLYETHYLENE BOND BREAKER
   0.40′ LCBRS

ABBREVIATION:

RHMA-G RUBBERIZED HOT MIX ASPHALT (GAP GRADED)
JPCPRSC JOINTED PLAIN CONCRETE PAVEMENT (RAMP TERMINI RAPID STRENGTH CONCRETE)
LCBRS LEAN CONCRETE BASE RAPID SETTING

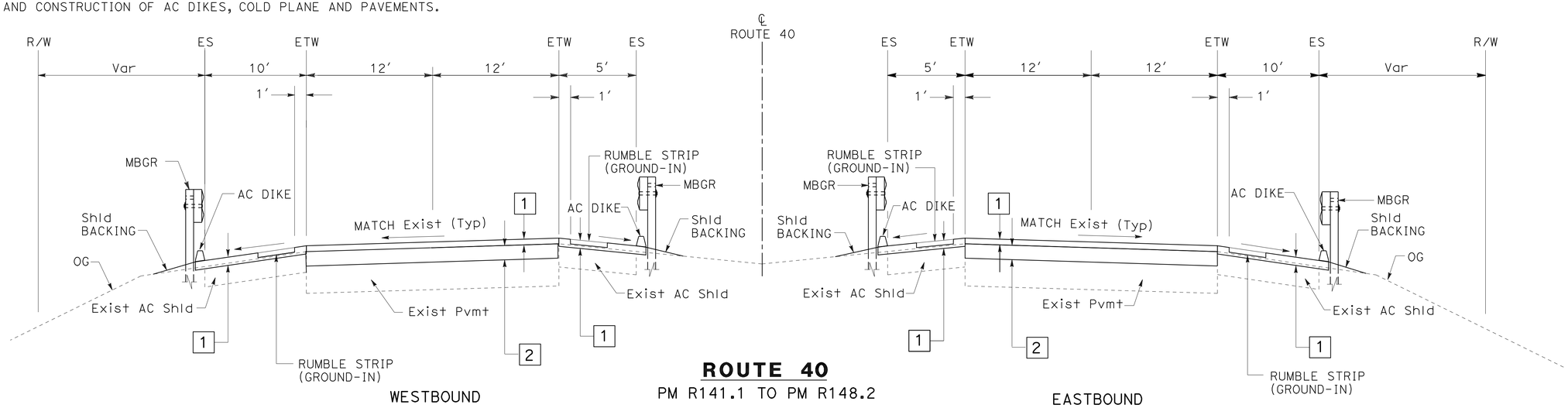

ROUTE 40
PM R141.1 TO PM R148.2

WESTBOUND

EASTBOUND

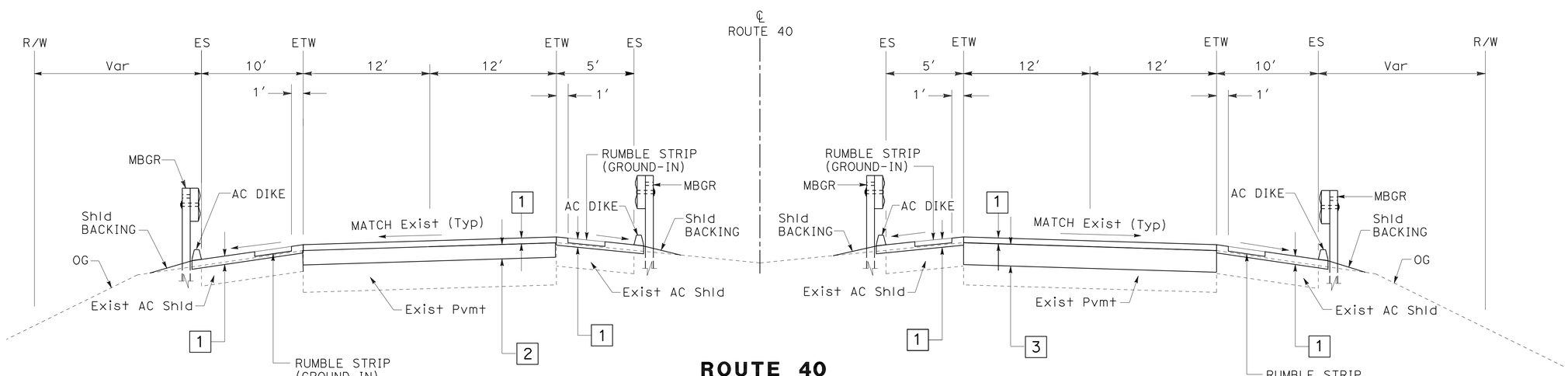

ROUTE 40
PM R138.3 TO PM R141.1

WESTBOUND

EASTBOUND

TYPICAL CROSS SECTIONS

NO SCALE

X-1

EXISTING UTILITY FACILITIES HAVE NOT BEEN PLOTTED ON THESE PLANS

STATE OF CALIFORNIA - DEPARTMENT OF TRANSPORTATION
Caltrans® MAINTENANCE DESIGN

FUNCTIONAL SUPERVISOR: MICHAEL RISTIC
CALCULATED-DESIGNED BY: KAMAL McHANTAF
CHECKED BY: MICHAEL RISTIC
REVISED BY
DATE REVISED

LAST REVISION 08-20-12
DATE PLOTTED => 04-SEP-2012
TIME PLOTTED => 09:20

Dist	COUNTY	ROUTE	POST MILES TOTAL PROJECT	SHEET No.	TOTAL SHEETS
08	SBd	40	R138.3/R154.5	3	43

Kamal McHantaf 8-20-12
REGISTERED CIVIL ENGINEER DATE

8-20-12
PLANS APPROVAL DATE

REGISTERED PROFESSIONAL ENGINEER KAMAL McHANTAF No. C51050 Exp. 9-30-13 CIVIL STATE OF CALIFORNIA

THE STATE OF CALIFORNIA OR ITS OFFICERS OR AGENTS SHALL NOT BE RESPONSIBLE FOR THE ACCURACY OR COMPLETENESS OF SCANNED COPIES OF THIS PLAN SHEET.

NOTE:

1. PM R151.7 TO PM R153.3 (NO MAINLINE WORK)

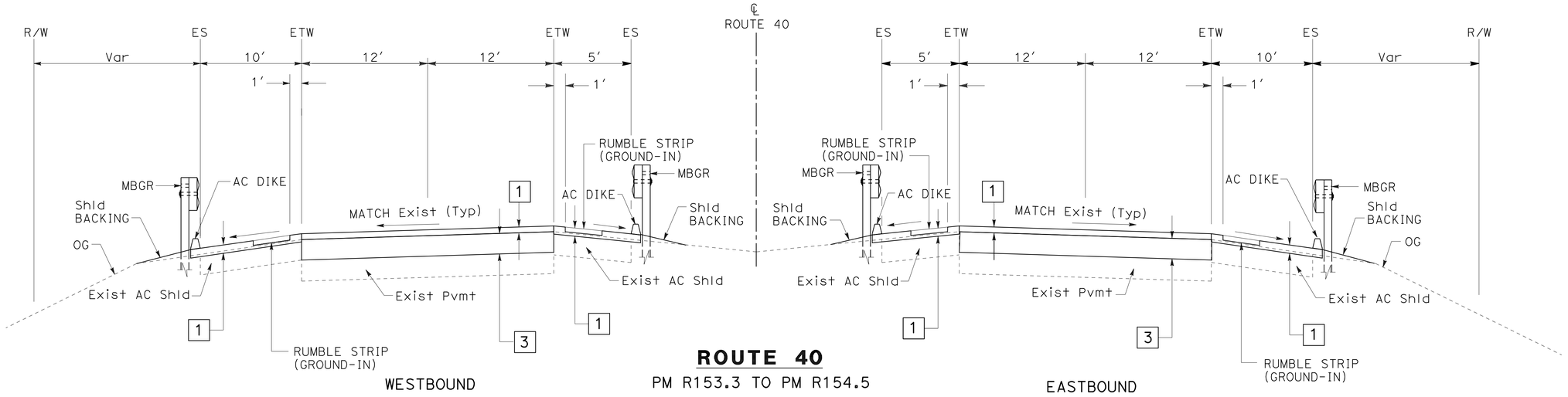

WESTBOUND

ROUTE 40

PM R153.3 TO PM R154.5

EASTBOUND

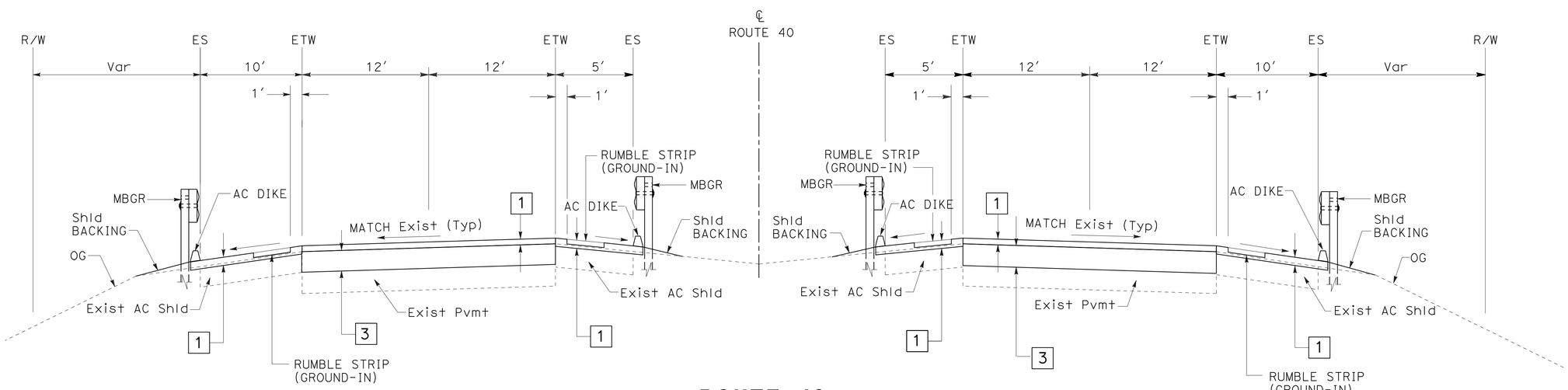

WESTBOUND

ROUTE 40

PM R148.2 TO PM R151.7

EASTBOUND

TYPICAL CROSS SECTIONS

NO SCALE

X-2

EXISTING UTILITY FACILITIES HAVE NOT BEEN PLOTTED ON THESE PLANS

STATE OF CALIFORNIA - DEPARTMENT OF TRANSPORTATION
Caltrans® MAINTENANCE DESIGN

FUNCTIONAL SUPERVISOR: MICHAEL RISTIC
CALCULATED-DESIGNED BY: KAMAL McHANTAF
CHECKED BY: MICHAEL RISTIC
REVISED BY
DATE REVISED

LAST REVISION 08-20-12
DATE PLOTTED => 04-SEP-2012
TIME PLOTTED => 09:20

Dist	COUNTY	ROUTE	POST MILES TOTAL PROJECT	SHEET No.	TOTAL SHEETS
08	SBd	40	R138.3/R154.5	4	43

Kamal McHantaf 8-20-12
REGISTERED CIVIL ENGINEER DATE

8-20-12
PLANS APPROVAL DATE

REGISTERED PROFESSIONAL ENGINEER
KAMAL McHANTAF
No. C51050
Exp. 9-30-13
CIVIL
STATE OF CALIFORNIA

THE STATE OF CALIFORNIA OR ITS OFFICERS OR AGENTS SHALL NOT BE RESPONSIBLE FOR THE ACCURACY OR COMPLETENESS OF SCANNED COPIES OF THIS PLAN SHEET.

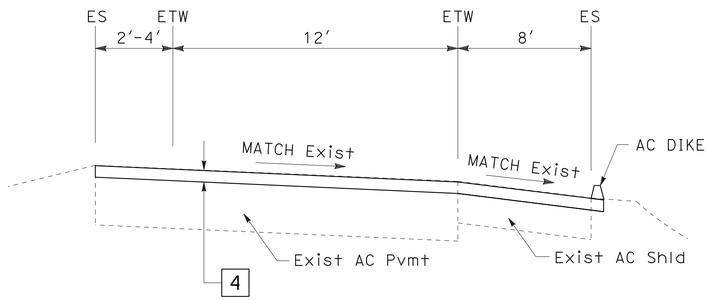

ROUTE 40 RAMPS

PARK Rd EB EXIT RAMP
PARK Rd WB ENTRANCE RAMP
RIVER Rd WB ENTRANCE RAMP
RIVER Rd EB EXIT RAMP
RIVER Rd WB EXIT RAMP
RIVER Rd EB EXIT RAMP
J STREET EB EXIT RAMP
J STREET WB ENTRANCE RAMP
J STREET WB EXIT RAMP
J STREET EB ENTRANCE RAMP
FIVE MILE Rd WB ENTRANCE RAMP
FIVE MILE Rd EB EXIT RAMP
FIVE MILE Rd EB ENTRANCE RAMP
FIVE MILE Rd WB EXIT RAMP
PARK MOABI Rd EB EXIT RAMP
PARK MOABI Rd WB ENTRANCE RAMP
PARK MOABI Rd WB EXIT RAMP
PARK MOABI Rd EB ENTRANCE RAMP

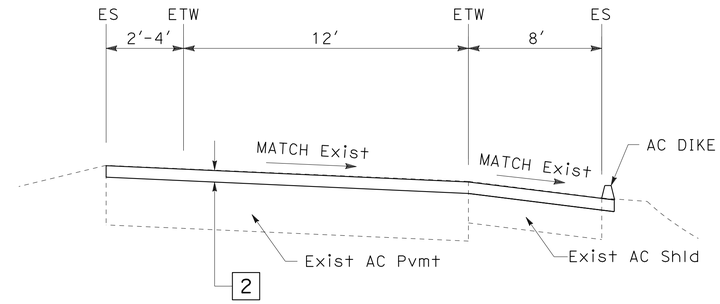

ROUTE 40 RAMPS

RTE 95 WB ENTRANCE RAMP
RTE 95 EB EXIT RAMP
RTE 95 WB EXIT RAMP
RTE 95 EB ENTRANCE RAMP

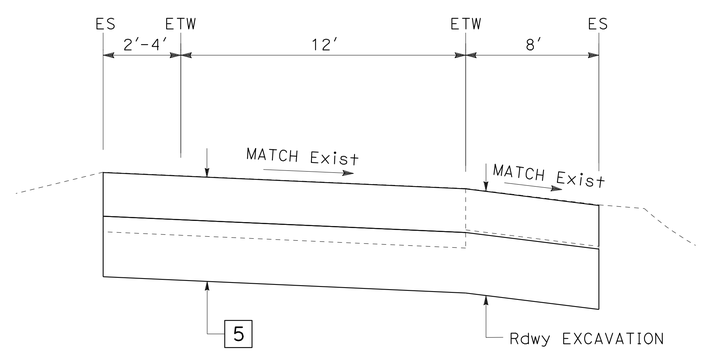

ROUTE 40 EXIT RAMP CONCRETE TERMINI

RTE 95 EB EXIT RAMP
RTE 95 WB EXIT RAMP
J STREET EB EXIT RAMP
J STREET WB EXIT RAMP

EXISTING UTILITY FACILITIES HAVE NOT BEEN PLOTTED ON THESE PLANS

TYPICAL CROSS SECTIONS

NO SCALE

X-3

REVISED BY | DATE REVISED
KAMAL McHANTAF | MICHAEL RISTIC
CALCULATED-DESIGNED BY | CHECKED BY
FUNCTIONAL SUPERVISOR: MICHAEL RISTIC
STATE OF CALIFORNIA - DEPARTMENT OF TRANSPORTATION
Caltrans® MAINTENANCE DESIGN

LAST REVISION 08-20-12 | DATE PLOTTED => 04-SEP-2012 | TIME PLOTTED => 09:20

Dist	COUNTY	ROUTE	POST MILES TOTAL PROJECT	SHEET No.	TOTAL SHEETS
08	SBd	40	R138.3/R154.5	5	43

Kamal McHantaf 8-20-12
REGISTERED CIVIL ENGINEER DATE

8-20-12
PLANS APPROVAL DATE

REGISTERED PROFESSIONAL ENGINEER
KAMAL McHANTAF
No. C51050
Exp. 9-30-13
CIVIL
STATE OF CALIFORNIA

THE STATE OF CALIFORNIA OR ITS OFFICERS OR AGENTS SHALL NOT BE RESPONSIBLE FOR THE ACCURACY OR COMPLETENESS OF SCANNED COPIES OF THIS PLAN SHEET.

NOTES:

1. SEE SHEETS Q-1 AND Q-2 FOR LOCATIONS, TYPES, AND QUANTITIES.
2. SEE STANDARD PLANS FOR DETAILS NOT SHOWN.
3. SEE SHEETS C-2 TO C-4 FOR THRIE BEAM CONNECTION DETAILS.

LEGEND:

⇨ DIRECTION OF TRAFFIC

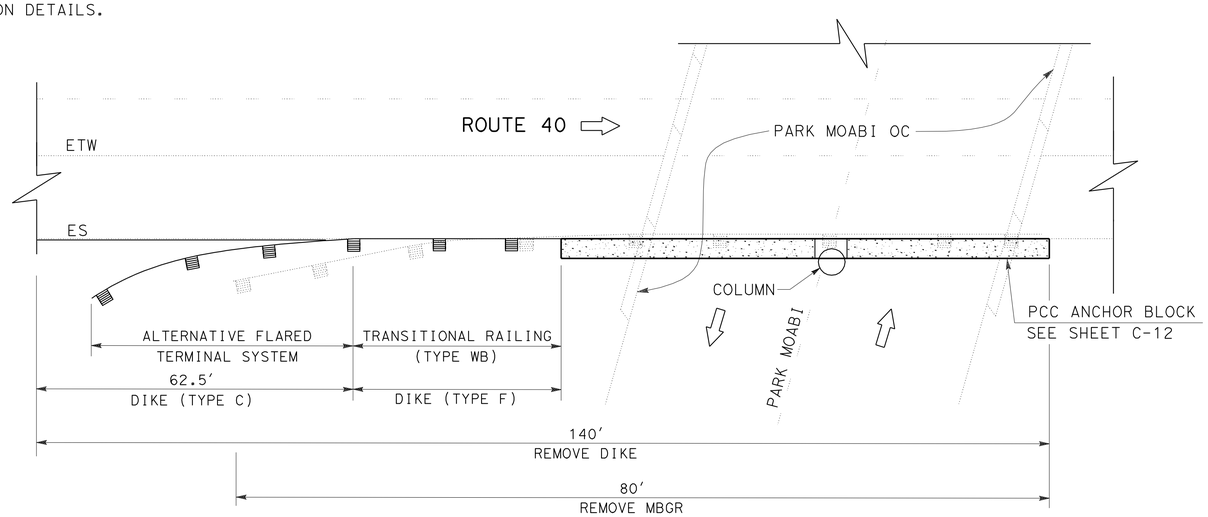

PARK MOABI OC
(WB AND EB)

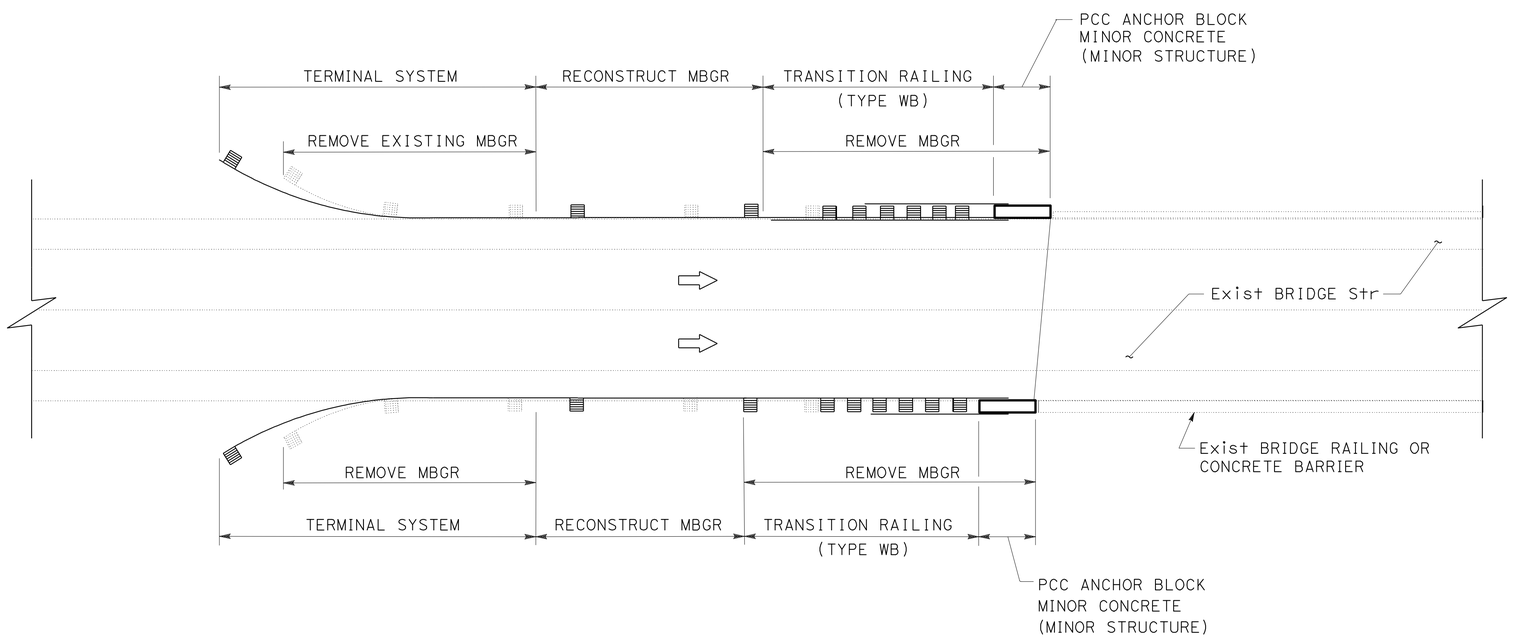

TYPICAL MBGR-BRIDGE CONNECTION

EXISTING UTILITY FACILITIES HAVE NOT BEEN PLOTTED ON THESE PLANS

CONSTRUCTION DETAILS
NO SCALE

C-1

STATE OF CALIFORNIA - DEPARTMENT OF TRANSPORTATION
Caltrans® MAINTENANCE DESIGN

FUNCTIONAL SUPERVISOR: MICHAEL RISTIC
CALCULATED-DESIGNED BY: KAMAL McHANTAF
CHECKED BY: MICHAEL RISTIC
REVISED BY
DATE REVISED

LAST REVISION 08-20-12
DATE PLOTTED => 04-SEP-2012
TIME PLOTTED => 09:21

Dist	COUNTY	ROUTE	POST MILES TOTAL PROJECT	SHEET No.	TOTAL SHEETS
08	SBd	40	R138.3/R154.5	6	43

Kamal McHantaf 8-20-12
REGISTERED CIVIL ENGINEER DATE

8-20-12
PLANS APPROVAL DATE

REGISTERED PROFESSIONAL ENGINEER KAMAL McHANTAF No. C51050 Exp. 9-30-13 CIVIL STATE OF CALIFORNIA

THE STATE OF CALIFORNIA OR ITS OFFICERS OR AGENTS SHALL NOT BE RESPONSIBLE FOR THE ACCURACY OR COMPLETENESS OF SCANNED COPIES OF THIS PLAN SHEET.

NOTES:

1. FOR DETAILS NOT SHOWN, SEE STANDARD PLAN A77J4
2. DEPENDENT DIMENSIONS WILL BE VERIFIED IN THE FIELD BEFORE FABRICATING ANY END CONNECTION TO CONFORM WITH EXISTING PAVED CONDITIONS.
3. WHEN END SECTION IS CALLED FOR, MODIFY TYPICAL TERMINAL SECTION TO FIT. SEE DETAIL E
4. ALL PLATES AND BOLTS ARE GALVANIZED.
5. CUT AND REMOVE PORTION OF TYPE 1, 2 AND BAGR AS REQUIRED.
6. EXTERIOR SPLICE BOLT HOLES SHALL BE THE STANDARD 7/8" X 1 1/8"SLOT SIZE FOR RAIL SPLICES AT POST #T4 AND THE CONNECTION TO THE CONCRETE BARRIER OR RAILING. INTERIOR SPLICE BOLT HOLES MAY BE INCREASED UP TO 1 1/4" DIA. WASHERS SHALL BE USED WITH SPLICE BOLTS ON BACK SIDE OF RAIL ELEMENT AT POST #T4 AND CONNECTION TO THE CONCRETE BARRIER OR RAILING.
7. TAPER THE TOP OF THE END OF THE BRIDGE RAILING AT 4:1 TO MATCH THE TOP ELEVATION OF THE THRIE BEAM RAIL ELEMENT.

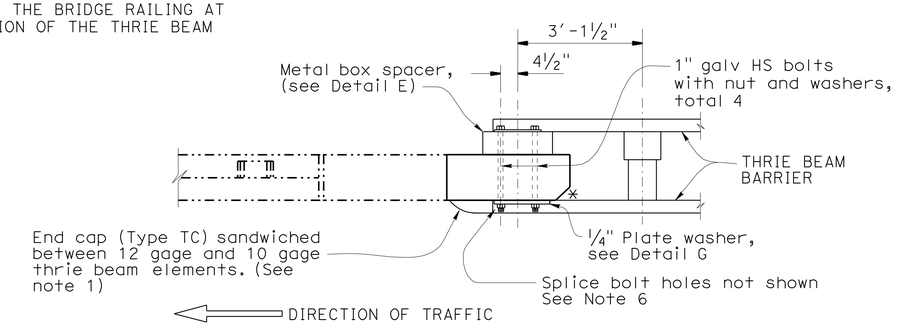

PLAN

* 5" x 5" chamfer

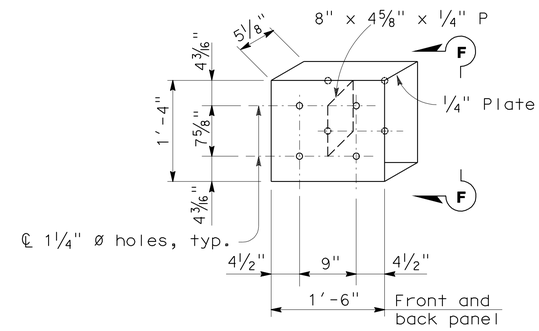

DETAIL E

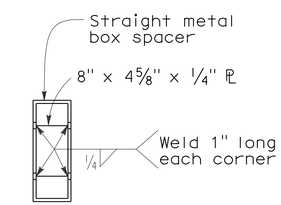

VIEW F-F

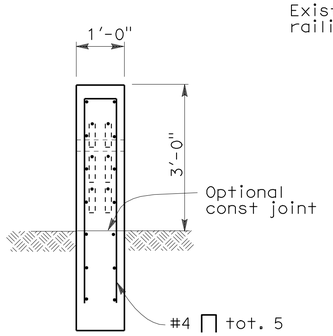

SECTION A-A

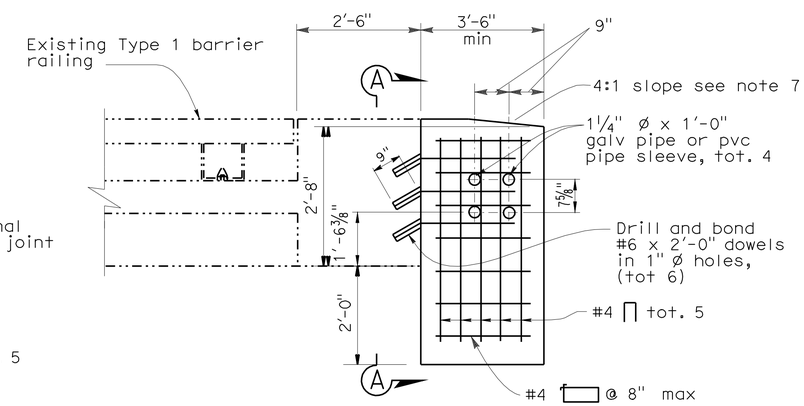

ELEVATION

TYPE I

TYPICAL SECTION

(TYPE 1 BARRIER)

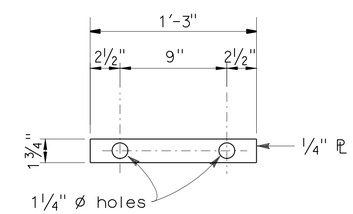

DETAIL G

THRIE BEAM CONNECTION DETAILS
BARRIER RAILING TYPE 1

EXISTING UTILITY FACILITIES HAVE NOT BEEN PLOTTED ON THESE PLANS

CONSTRUCTION DETAILS
NO SCALE
C-2

STATE OF CALIFORNIA - DEPARTMENT OF TRANSPORTATION
Caltrans® MAINTENANCE DESIGN
FUNCTIONAL SUPERVISOR: MICHAEL RISTIC
CALCULATED-DESIGNED BY: KAMAL McHANTAF
CHECKED BY: MICHAEL RISTIC
REVISED BY
DATE REVISED

LAST REVISION 08-20-12
DATE PLOTTED => 04-SEP-2012
TIME PLOTTED => 09:21

Dist	COUNTY	ROUTE	POST MILES TOTAL PROJECT	SHEET No.	TOTAL SHEETS
08	SBd	40	R138.3/R154.5	7	43

Kamal McHantaf 8-20-12
REGISTERED CIVIL ENGINEER DATE

8-20-12
PLANS APPROVAL DATE

REGISTERED PROFESSIONAL ENGINEER KAMAL McHANTAF No. C51050 Exp. 9-30-13 CIVIL STATE OF CALIFORNIA

THE STATE OF CALIFORNIA OR ITS OFFICERS OR AGENTS SHALL NOT BE RESPONSIBLE FOR THE ACCURACY OR COMPLETENESS OF SCANNED COPIES OF THIS PLAN SHEET.

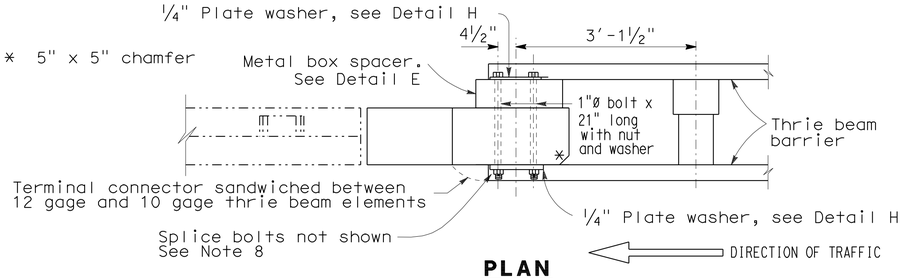

PLAN

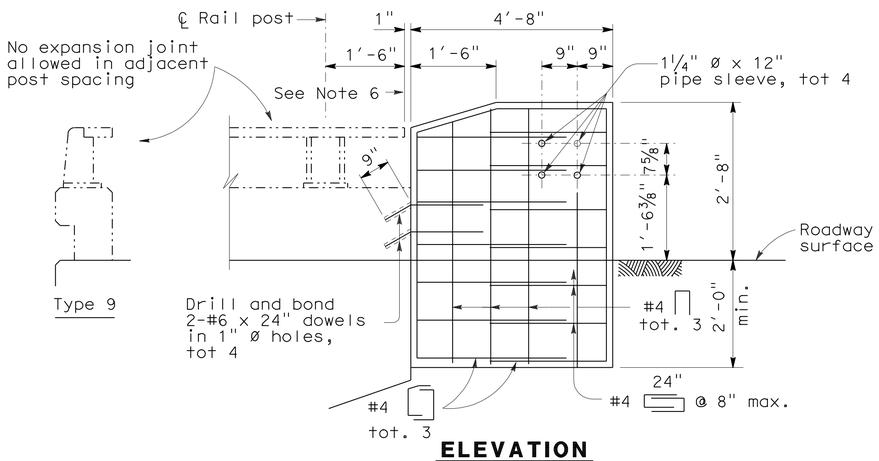

ELEVATION

EXISTING BARRIER RAILING TYPE 9
ALTERNATIVE 1

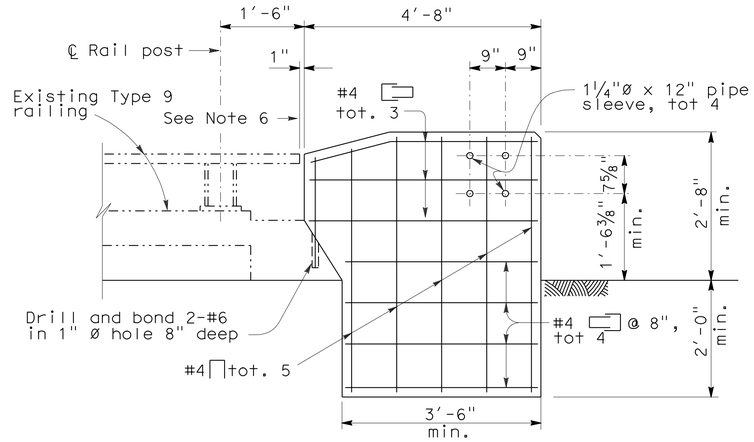

ELEVATION

EXISTING BARRIER RAILING TYPE 9
ALTERNATIVE 3

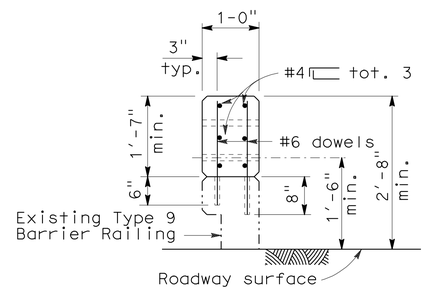

SECTION C-C

NOTES:

1. FOR DETAILS NOT SHOWN, SEE STANDARD PLANS A77J4.
2. DEPENDENT DIMENSIONS WILL BE VERIFIED IN THE FIELD BEFORE FABRICATING ANY END CONNECTION TO CONFORM WITH EXISTING PAVED CONDITIONS.
3. WHEN END SECTION IS CALLED FOR, MODIFY TYPICAL TERMINAL SECTION TO FIT. SEE DETAIL E SHEET C-4.
4. FOR THRIE BEAM CONNECTION, SEE STANDARD PLANS "THRIE BEAM BARRIER CONNECTIONS TO BRIDGE RAILING".
5. ALL PLATES AND BOLTS ARE GALVANIZED.
6. CUT AND REMOVE THAT PORTION OF TYPE 9, 9-11 AND BAGR AS REQUIRED.
7. IF RAIL IS NOT CONTINUOUS OVER 2 POSTS, USE SPLICE AT EXPANSION JOINT.SEE SHEET C-4.
8. EXTERIOR SPLICE BOLT HOLES SHALL BE THE STANDARD 7/8" X 1 1/8" SLOT SIZE FOR RAIL SPLICES AT POST # T4 AND THE CONNECTION TO THE CONCRETE BARRIER OR RAILING. INTERIOR SPLICE BOLT HOLES MAY BE INCREASED UP TO 1 1/8" DIA. WASHERS SHALL BE USED WITH SPLICE BOLTS ON BACK SIDE OF RAIL ELEMENT AT POST # T4 AND CONNECTION TO THE CONCRETE BARRIER OR RAILING.
9. TAPER THE TOP OF THE END OF THE BRIDGE RAILING AT 4:1 TO MATCH THE TOP ELEVATION OF THE THRIE BEAM RAIL ELEMENT.

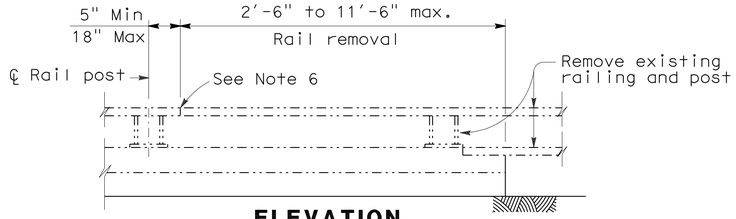

ELEVATION

RAIL REMOVAL

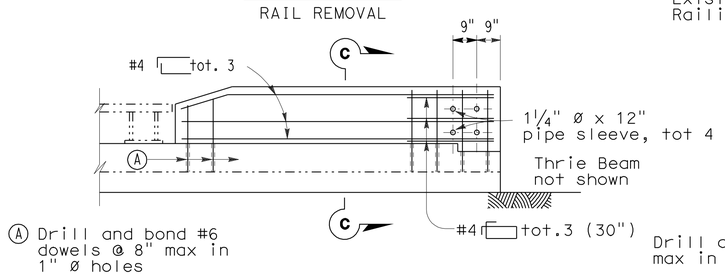

ELEVATION

NEW END POST

EXISTING BARRIER RAILING TYPE 9
ALTERNATIVE 2

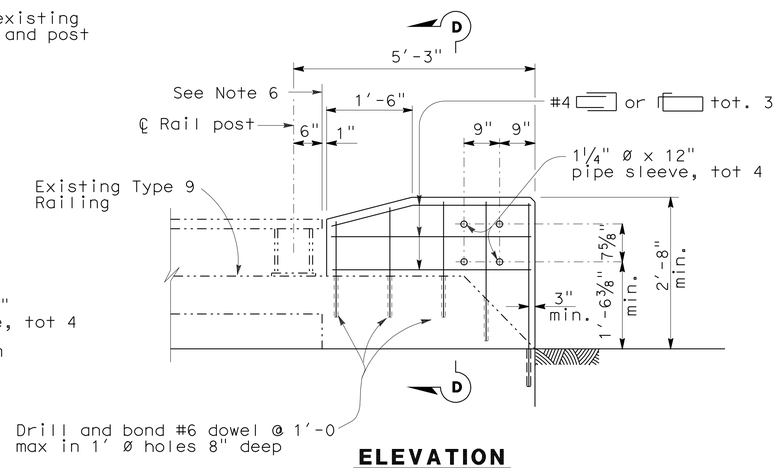

ELEVATION

EXISTING BARRIER RAILING TYPE 9
ALTERNATIVE 4

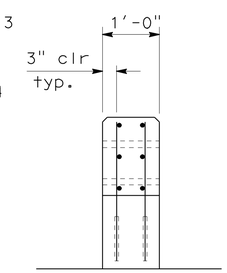

SECTION D-D

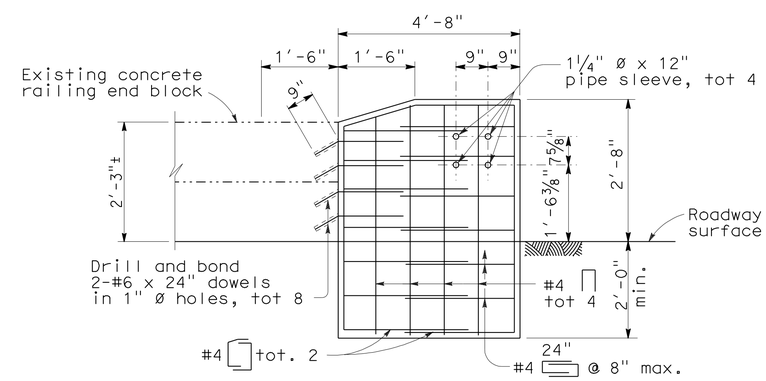

ELEVATION

EXISTING BARRIER RAILING TYPE 9
ALTERNATIVE 5

THRIE BEAM CONNECTION DETAILS
BARRIER RAILING TYPE 9

EXISTING UTILITY FACILITIES HAVE NOT BEEN PLOTTED ON THESE PLANS

CONSTRUCTION DETAILS

NO SCALE

C-3

REVISED BY | DATE REVISED
KAMAL McHANTAF | MICHAEL RISTIC
CALCULATED-DESIGNED BY | CHECKED BY
FUNCTIONAL SUPERVISOR | MICHAEL RISTIC
STATE OF CALIFORNIA - DEPARTMENT OF TRANSPORTATION
Caltrans MAINTENANCE DESIGN

LAST REVISION 08-20-12 | DATE PLOTTED => 04-SEP-2012 | TIME PLOTTED => 09:21

Dist	COUNTY	ROUTE	POST MILES TOTAL PROJECT	SHEET No.	TOTAL SHEETS
08	SBd	40	R138.3/R154.5	8	43

Kamal McHantaf 8-20-12
REGISTERED CIVIL ENGINEER DATE

8-20-12
PLANS APPROVAL DATE

REGISTERED PROFESSIONAL ENGINEER
KAMAL McHANTAF
No. C51050
Exp. 9-30-13
CIVIL
STATE OF CALIFORNIA

THE STATE OF CALIFORNIA OR ITS OFFICERS OR AGENTS SHALL NOT BE RESPONSIBLE FOR THE ACCURACY OR COMPLETENESS OF SCANNED COPIES OF THIS PLAN SHEET.

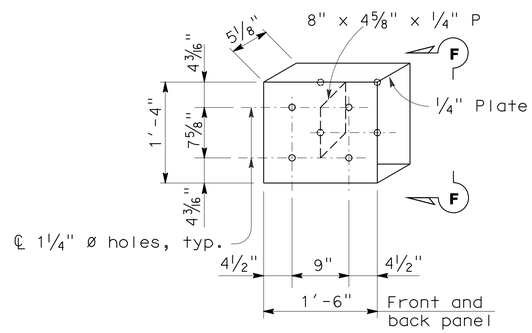

DETAIL E

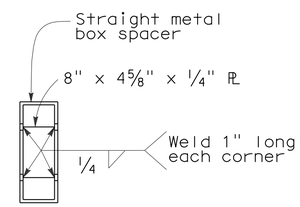

VIEW F-F

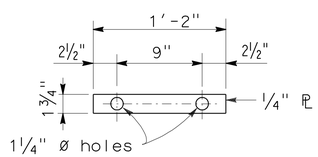

DETAIL H

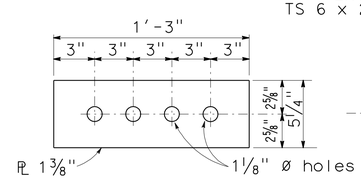

SPLICE PLATE

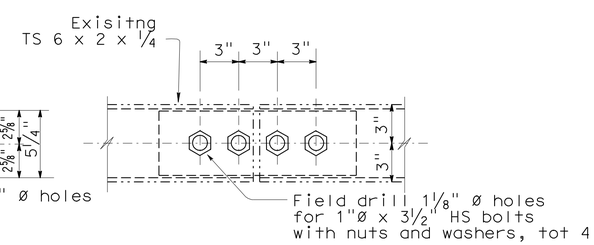

MODIFIED TUBE

RAIL SPLICE DETAIL

THRIE BEAM CONNECTION DETAILS
BARRIER RAILING TYPE 9

EXISTING UTILITY FACILITIES HAVE NOT BEEN PLOTTED ON THESE PLANS

CONSTRUCTION DETAILS
NO SCALE

C-4

REVISED BY | DATE REVISED
KAMAL McHANTAF | MICHAEL RISTIC
CALCULATED-DESIGNED BY | CHECKED BY
FUNCTIONAL SUPERVISOR | MICHAEL RISTIC
STATE OF CALIFORNIA - DEPARTMENT OF TRANSPORTATION
Caltrans® MAINTENANCE DESIGN

LAST REVISION 08-20-12 | DATE PLOTTED => 04-SEP-2012 | TIME PLOTTED => 09:21

Dist	COUNTY	ROUTE	POST MILES TOTAL PROJECT	SHEET No.	TOTAL SHEETS
08	SBd	40	R138.3/R154.5	9	43

REGISTERED CIVIL ENGINEER 8-20-12 DATE

8-20-12
PLANS APPROVAL DATE

REGISTERED PROFESSIONAL ENGINEER KAMAL McHANTAF No. C51050 Exp. 9-30-13 CIVIL STATE OF CALIFORNIA

THE STATE OF CALIFORNIA OR ITS OFFICERS OR AGENTS SHALL NOT BE RESPONSIBLE FOR THE ACCURACY OR COMPLETENESS OF SCANNED COPIES OF THIS PLAN SHEET.

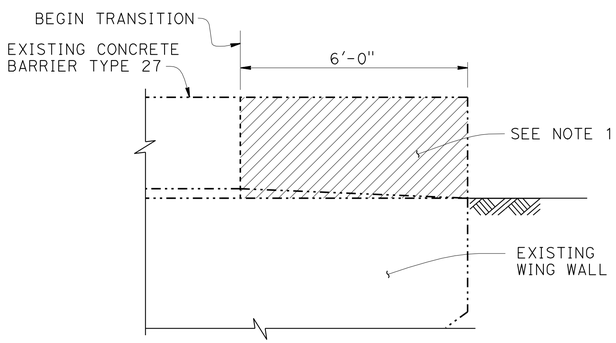

CONCRETE REMOVAL
1/2" = 1'-0"

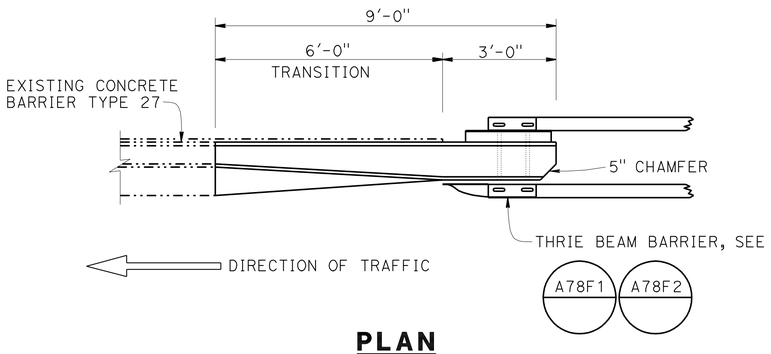

PLAN
1/2" = 1'-0"

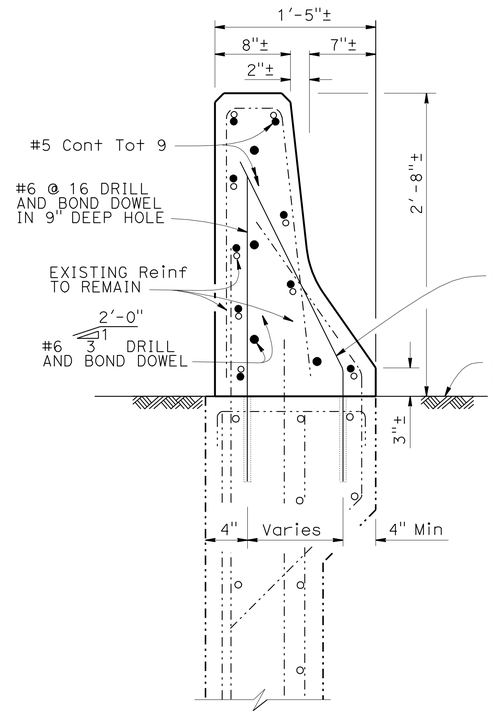

SECTION B-B
1 1/2" = 1'-0"

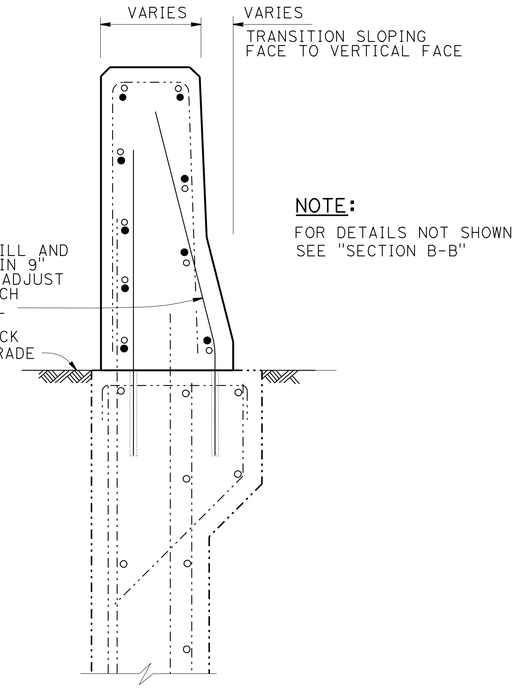

SECTION C-C
1 1/2" = 1'-0"

NOTE:
FOR DETAILS NOT SHOWN SEE "SECTION B-B"

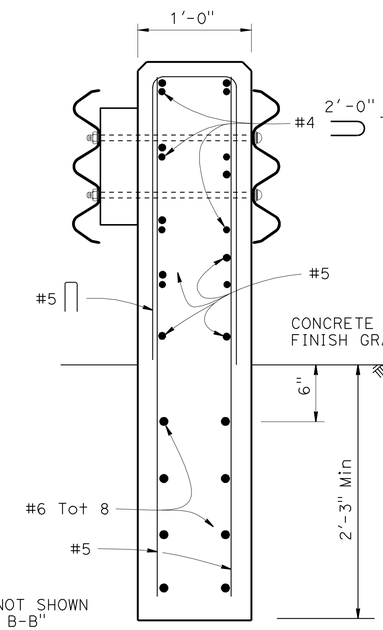

NOTE:
FOR DETAILS NOT SHOWN SEE, "SECTION B-B" AND "SECTION C-C"

SECTION D-D
1 1/2" = 1'-0"

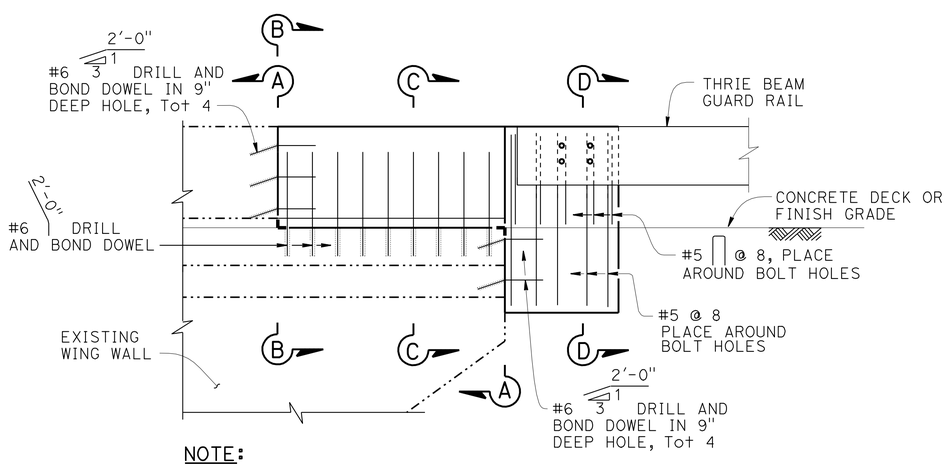

NOTE:
ALL Reinf NOT SHOWN

ELEVATION
1/2" = 1'-0"

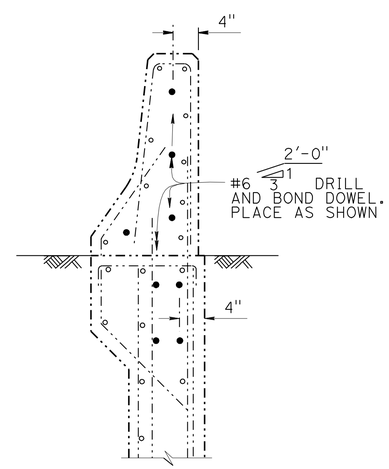

SECTION A-A
1" = 1'-0"

NOTES:

1. CUT AND REMOVE THE PORTION OF CONCRETE BARRIER TYPE 27 AS REQUIERED. EXISTING REINFORCEMENT TO REMAIN.
2. WINGWALL REINFORCEMENT TO REMAIN.

LEGEND:

- IndINDICATES EXISTING STRUCTURE
- IINDICATES NEW CONSTRUCTION
- CONCRETE REMOVAL
- INDICATES EXISTING REINFORCEMENT

NOTE:

1. THE CONTRACTOR SHALL VERIFY ALL CONTROLLING FIELD DIMENSIONS BEFORE ORDERING OR FABRICATING ANY MATERIAL.

EXISTING UTILITY FACILITIES HAVE NOT BEEN PLOTTED ON THESE PLANS

CONSTRUCTION DETAILS
NO SCALE

C-5

STATE OF CALIFORNIA - DEPARTMENT OF TRANSPORTATION
Caltrans® MAINTENANCE DESIGN

FUNCTIONAL SUPERVISOR: MICHAEL RISTIC
CALCULATED-DESIGNED BY: KAMAL McHANTAF
CHECKED BY: MICHAEL RISTIC
REVISED BY
DATE REVISED

LAST REVISION 08-20-12
DATE PLOTTED => 04-SEP-2012
TIME PLOTTED => 09:21

Dist	COUNTY	ROUTE	POST MILES TOTAL PROJECT	SHEET No.	TOTAL SHEETS
08	SBd	40	R138.3/R154.5	10	43

Kamal McHantaf 8-20-12
REGISTERED CIVIL ENGINEER DATE

8-20-12
PLANS APPROVAL DATE

REGISTERED PROFESSIONAL ENGINEER
KAMAL McHANTAF
No. C51050
Exp. 9-30-13
CIVIL
STATE OF CALIFORNIA

THE STATE OF CALIFORNIA OR ITS OFFICERS OR AGENTS SHALL NOT BE RESPONSIBLE FOR THE ACCURACY OR COMPLETENESS OF SCANNED COPIES OF THIS PLAN SHEET.

NOTES:

1. PLACE GROUND-IN INDENTATIONS RUMBLE STRIP PER STANDARD PLAN A40B.
2. LIMITS OF THE RUMBLE STRIPS AS SHOWN OR AS DIRECTED BY THE ENGINEER.

LEGEND:

RUMBLE STRIP

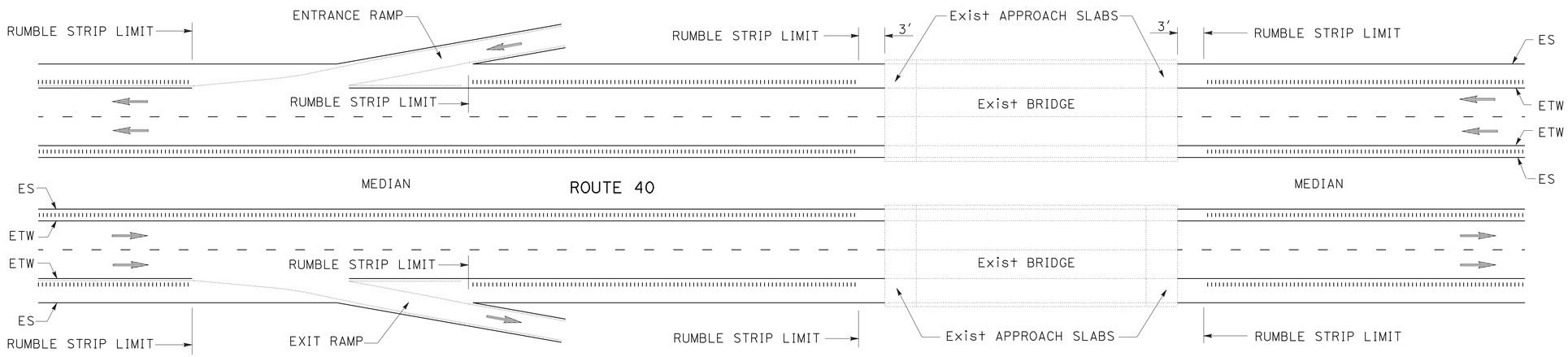

RUMBLE STRIP PLACEMENT

(AT RAMPS AND BRIDGES)

EXISTING UTILITY FACILITIES HAVE NOT BEEN PLOTTED ON THESE PLANS

CONSTRUCTION DETAILS

NO SCALE

C-6

REVISED BY | DATE REVISED
KAMAL McHANTAF | MICHAEL RISTIC
CALCULATED-DESIGNED BY | CHECKED BY
FUNCTIONAL SUPERVISOR: MICHAEL RISTIC
STATE OF CALIFORNIA - DEPARTMENT OF TRANSPORTATION
Caltrans® MAINTENANCE DESIGN

LAST REVISION 08-20-12 | DATE PLOTTED => 04-SEP-2012 | TIME PLOTTED => 09:21

Dist	COUNTY	ROUTE	POST MILES TOTAL PROJECT	SHEET No.	TOTAL SHEETS
08	SBd	40	R138.3/R154.5	11	43

Kamal McHantaf 8-20-12
REGISTERED CIVIL ENGINEER DATE

8-20-12
PLANS APPROVAL DATE

REGISTERED PROFESSIONAL ENGINEER
KAMAL McHANTAF
No. C51050
Exp. 9-30-13
CIVIL
STATE OF CALIFORNIA

THE STATE OF CALIFORNIA OR ITS OFFICERS OR AGENTS SHALL NOT BE RESPONSIBLE FOR THE ACCURACY OR COMPLETENESS OF SCANNED COPIES OF THIS PLAN SHEET.

LEGEND:

RHMA-G RUBBERIZED HOT MIX ASPHALT (GAP GRADED)

0.10' RHMA-G

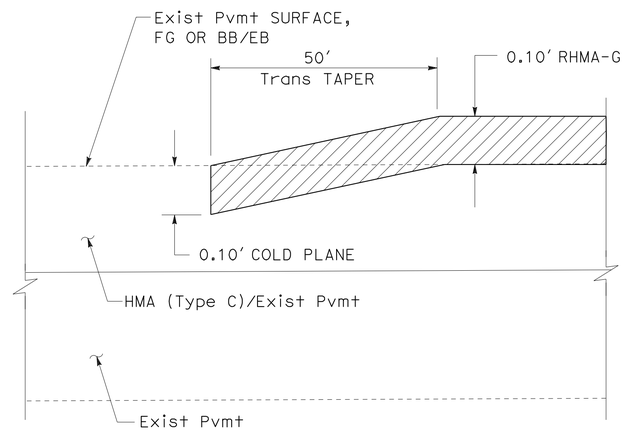

DETAIL "A"
PAVEMENT CONFORM

ENTRANCE / EXIT RAMP TO AND FROM MAINLINE
BEGIN / END BRIDGE
BEGIN / END CONSTRUCTION

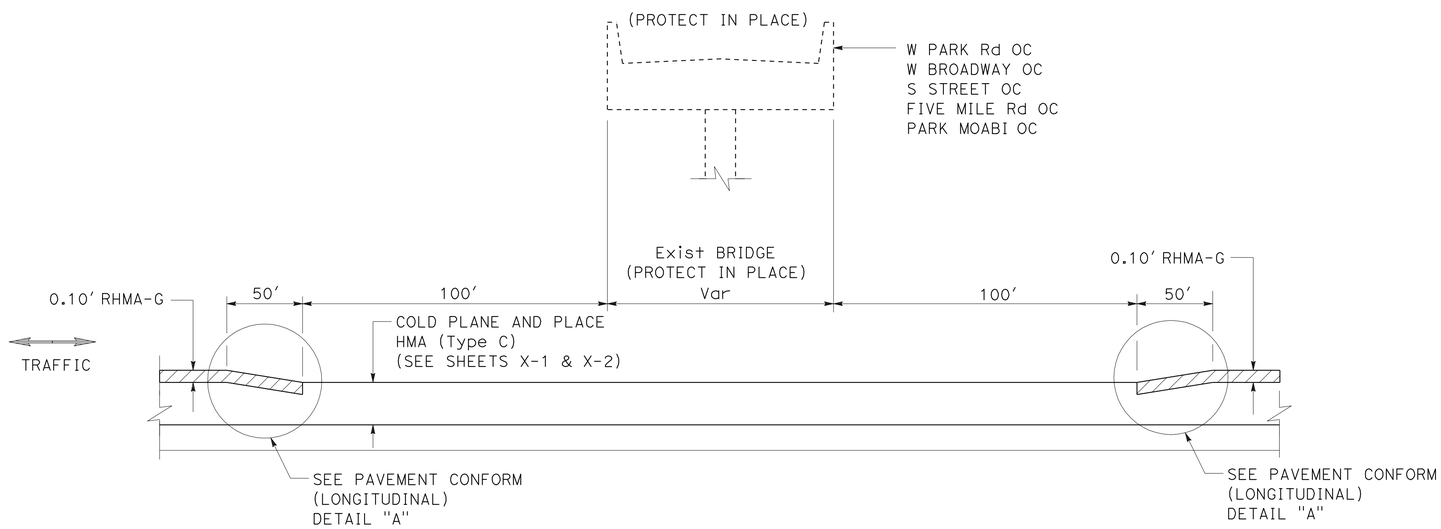

TAPER CONFORM TO EXISTING PAVEMENT

EXISTING UTILITY FACILITIES HAVE NOT BEEN PLOTTED ON THESE PLANS

CONSTRUCTION DETAILS
NO SCALE

C-7

REVISED BY | DATE REVISED
KAMAL McHANTAF | MICHAEL RISTIC
CALCULATED-DESIGNED BY | CHECKED BY
FUNCTIONAL SUPERVISOR: MICHAEL RISTIC
STATE OF CALIFORNIA - DEPARTMENT OF TRANSPORTATION
Caltrans MAINTENANCE DESIGN

LAST REVISION 08-20-12 | DATE PLOTTED => 04-SEP-2012 | TIME PLOTTED => 09:21

Dist	COUNTY	ROUTE	POST MILES TOTAL PROJECT	SHEET No.	TOTAL SHEETS
08	SBd	40	R138.3/R154.5	12	43

Kamal McHantaf 8-20-12
REGISTERED CIVIL ENGINEER DATE

8-20-12
PLANS APPROVAL DATE

REGISTERED PROFESSIONAL ENGINEER KAMAL McHANTAF No. C51050 Exp. 9-30-13 CIVIL STATE OF CALIFORNIA

THE STATE OF CALIFORNIA OR ITS OFFICERS OR AGENTS SHALL NOT BE RESPONSIBLE FOR THE ACCURACY OR COMPLETENESS OF SCANNED COPIES OF THIS PLAN SHEET.

NOTES:

1. DOWELS AND TIE BARS SPACING PER STANDARD PLANS P10 AND P18.
2. LONGITUDINAL WEAKENED PLANE JOINTS SHALL EXTEND TO AND TERMINATE AT THE TRANSVERSE JOINT WHERE NO SLAB WIDTH LESS THAN 2′ OR GREATER THAN 15′ RESULTS.
3. MATCH AND JOIN EXISTING GRADE ALONG EXISTING LOCAL STREET.
4. FOR DETAILS NOT SHOWN, SEE STD. PLANS P10, P12, P17, P18, P20, AND P30.
5. SEE SHEETS X-1, X-2, AND X-3 FOR PAVEMENT TYPICAL CROSS SECTIONS.
6. CONTRACTOR TO VERIFY EXISTING UTILITIES IF ANY.

ABBREVIATIONS:

RHMA-G	RUBBERIZED HOT MIX ASPHALT (GAP GRADED)
JPCPRSC	JOINTED PLAIN CONCRETE PAVEMENT (RAMP TERMINI RAPID STRENGTH CONCRETE)
LCBRS	LEAN CONCRETE RAPID SETTING

LEGEND:

[2] 0.25′ COLD PLANE
0.25′ HMA-C

[4] 0.15′ COLD PLANE
0.15′ RHMA-G

[5] 0.90′ JPCPRSC
PLASTIC POLYETHLENE BOND BREAKER
0.40′ LCBRS

⇨ DIRECTION OF TRAFFIC

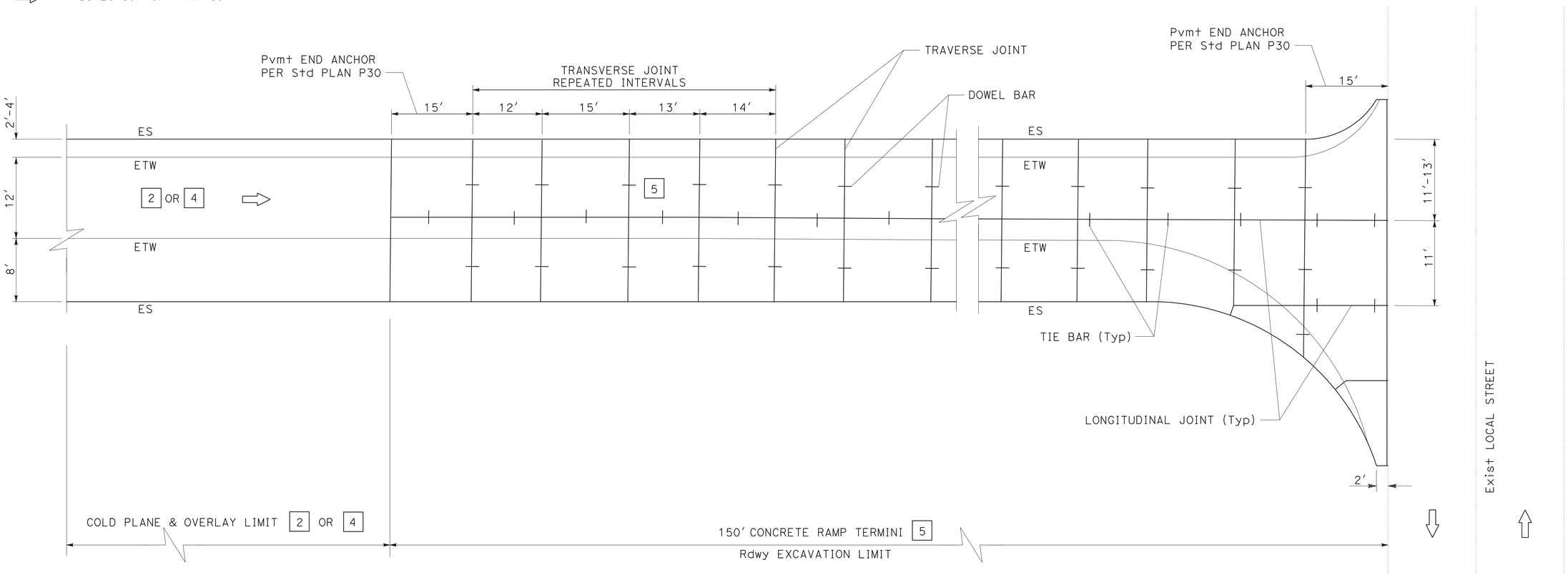

TYPICAL EXIT RAMP DETAIL

Rte 95 EB EXIT RAMP
Rte 95 WB EXIT RAMP
J STREET EB EXIT RAMP
J STREET WB EXIT RAMP

EXISTING UTILITY FACILITIES HAVE NOT BEEN PLOTTED ON THESE PLANS

CONSTRUCTION DETAILS

NO SCALE

C-8

STATE OF CALIFORNIA - DEPARTMENT OF TRANSPORTATION
Caltrans® MAINTENANCE DESIGN

FUNCTIONAL SUPERVISOR: MICHAEL RISTIC
CALCULATED-DESIGNED BY: KAMAL McHANTAF
CHECKED BY: MICHAEL RISTIC
REVISED BY
DATE REVISED

LAST REVISION 08-20-12
DATE PLOTTED => 04-SEP-2012
TIME PLOTTED => 09:21

Dist	COUNTY	ROUTE	POST MILES TOTAL PROJECT	SHEET No.	TOTAL SHEETS
08	SBd	40	R138.3/R154.5	13	43

Kamal McHantaf 8-20-12
REGISTERED CIVIL ENGINEER DATE

8-20-12
PLANS APPROVAL DATE

REGISTERED PROFESSIONAL ENGINEER KAMAL McHANTAF No. C51050 Exp. 9-30-13 CIVIL STATE OF CALIFORNIA

THE STATE OF CALIFORNIA OR ITS OFFICERS OR AGENTS SHALL NOT BE RESPONSIBLE FOR THE ACCURACY OR COMPLETENESS OF SCANNED COPIES OF THIS PLAN SHEET.

ABBREVIATIONS:

RHMA-G RUBBERIZED HOT MIX ASPHALT (GAP GRADED)
JPCPRSC JOINTED PLAIN CONCRETE PAVEMENT (RAMP TERMINI RAPID STRENGTH CONCRETE)
LCBRS LEAN CONCRETE RAPID SETTING

LEGEND:

[5] 0.90' JPCPRSC
PLASTIC POLYETHELENE BOND BREAKER
0.40' LCBRS

COLD PLANE 0.10'
0.10' RHMA-G

COLD PLANE 0.25'
0.25' HMA-C

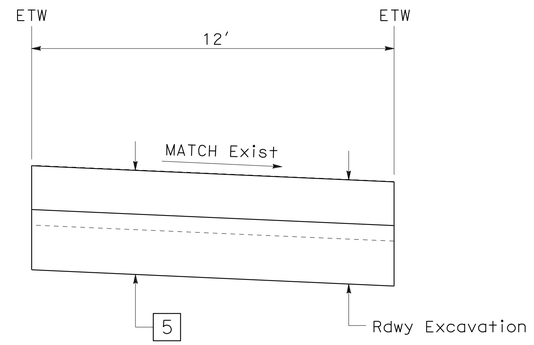

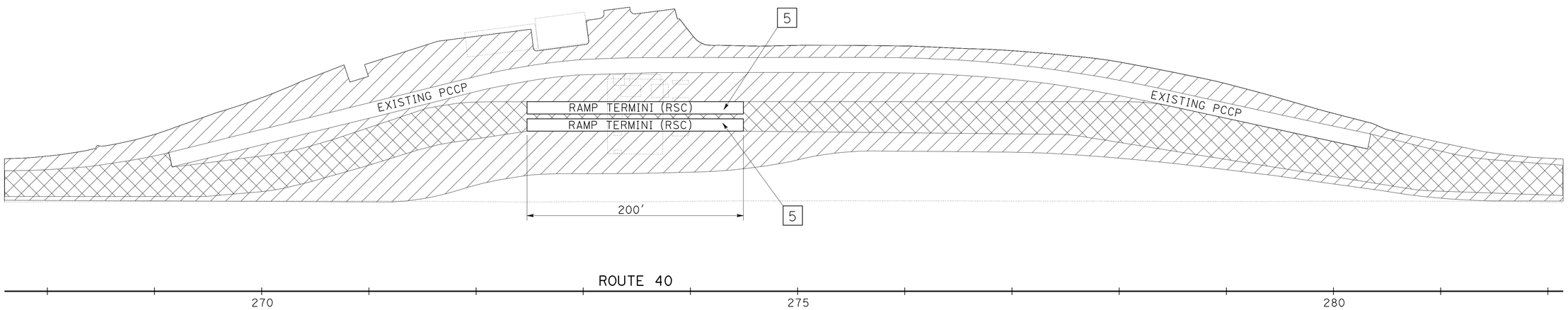

INSPECTION STATION
WESTBOUND AT PM R149.07

EXISTING UTILITY FACILITIES HAVE NOT BEEN PLOTTED ON THESE PLANS

CONSTRUCTION DETAILS
NO SCALE
C-9

REVISED BY | DATE REVISED
KAMAL McHANTAF | MICHAEL RISTIC
CALCULATED-DESIGNED BY | CHECKED BY
FUNCTIONAL SUPERVISOR: MICHAEL RISTIC
STATE OF CALIFORNIA - DEPARTMENT OF TRANSPORTATION
Caltrans® MAINTENANCE DESIGN

LAST REVISION 08-20-12 | DATE PLOTTED => 04-SEP-2012 | TIME PLOTTED => 09:21

Dist	COUNTY	ROUTE	POST MILES TOTAL PROJECT	SHEET No.	TOTAL SHEETS
08	SBd	40	R138.3/R154.5	14	43

Kamal McHantaf 8-20-12
REGISTERED CIVIL ENGINEER DATE

8-20-12
PLANS APPROVAL DATE

REGISTERED PROFESSIONAL ENGINEER
KAMAL McHANTAF
No. C51050
Exp. 9-30-13
CIVIL
STATE OF CALIFORNIA

THE STATE OF CALIFORNIA OR ITS OFFICERS OR AGENTS SHALL NOT BE RESPONSIBLE FOR THE ACCURACY OR COMPLETENESS OF SCANNED COPIES OF THIS PLAN SHEET.

NOTES:

1. SEE SHEET X-3 FOR RAMP CROSS-SECTIONS.
2. SEE QUANTITY SHEETS FOR QUANTITIES.
3. FOR Det WARNING SURFACE, USE YELLOW CONCRETE PAVERS.
4. FOR ACCURATE RIGHT OF WAY DATA, CONTACT RIGHT OF WAY ENGINEERING AT THE DISTRICT OFFICE.
5. RAMP SLOPE TO BE 7.5% OR FLATTER.
6. SIDEWALK SLOPE TO BE 1.5% OR FLATTER.

LEGEND:

⇨ DIRECTION OF TRAFFIC

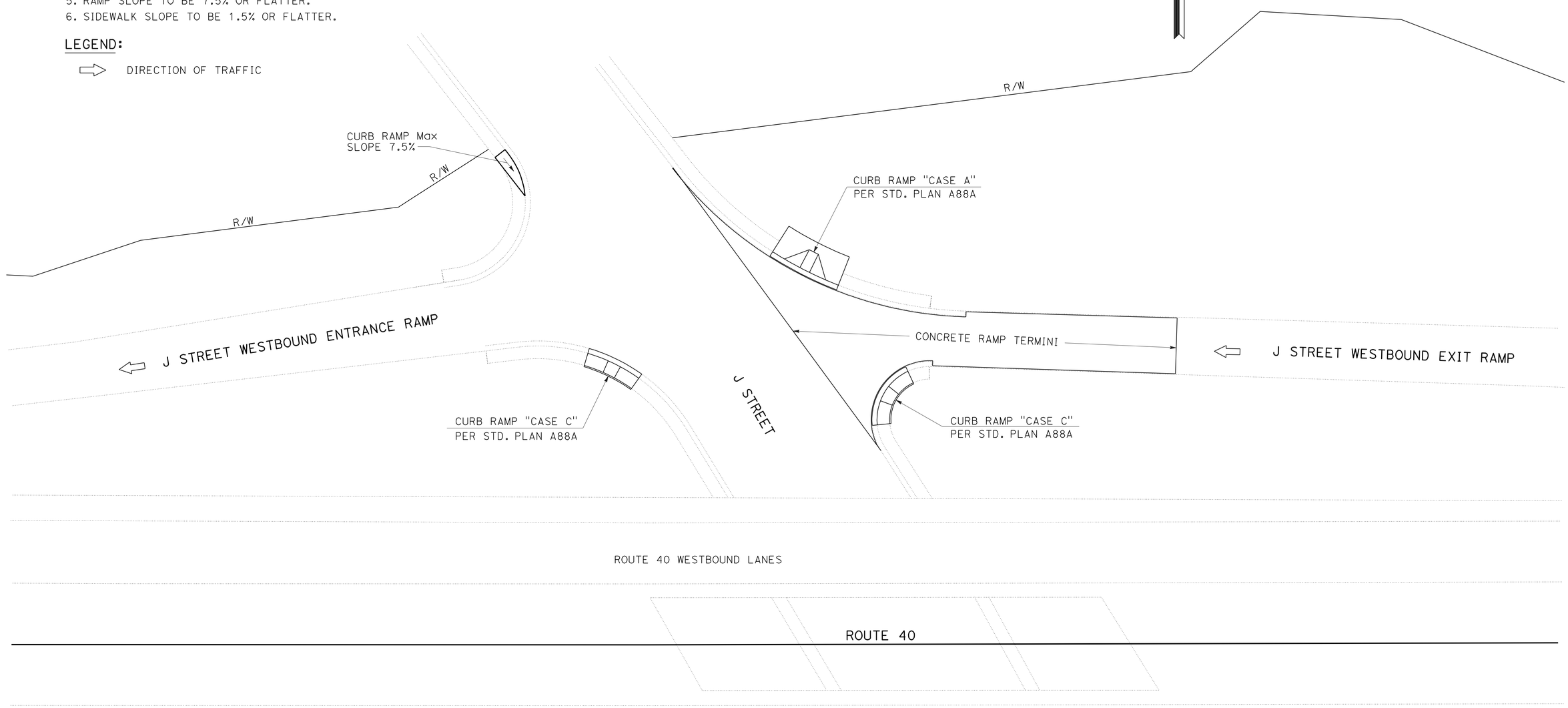

ROUTE 40/J STREET INTERCHANGE (NORTH SIDE)
CURB RAMP DETAILS

EXISTING UTILITY FACILITIES HAVE NOT BEEN PLOTTED ON THESE PLANS

CONSTRUCTION DETAILS
NO SCALE

C-10

REVISED BY | DATE REVISED
KAMAL McHANTAF | MICHAEL RISTIC
CALCULATED-DESIGNED BY | CHECKED BY
FUNCTIONAL SUPERVISOR
MICHAEL RISTIC
STATE OF CALIFORNIA - DEPARTMENT OF TRANSPORTATION
Caltrans® MAINTENANCE DESIGN

LAST REVISION 08-20-12 | DATE PLOTTED => 04-SEP-2012 | TIME PLOTTED => 09:21

Dist	COUNTY	ROUTE	POST MILES TOTAL PROJECT	SHEET No.	TOTAL SHEETS
08	SBd	40	R138.3/R154.5	15	43

Kamal McHantaf 8-20-12
REGISTERED CIVIL ENGINEER DATE

8-20-12
PLANS APPROVAL DATE

REGISTERED PROFESSIONAL ENGINEER
KAMAL McHANTAF
No. C51050
Exp. 9-30-13
CIVIL
STATE OF CALIFORNIA

THE STATE OF CALIFORNIA OR ITS OFFICERS OR AGENTS SHALL NOT BE RESPONSIBLE FOR THE ACCURACY OR COMPLETENESS OF SCANNED COPIES OF THIS PLAN SHEET.

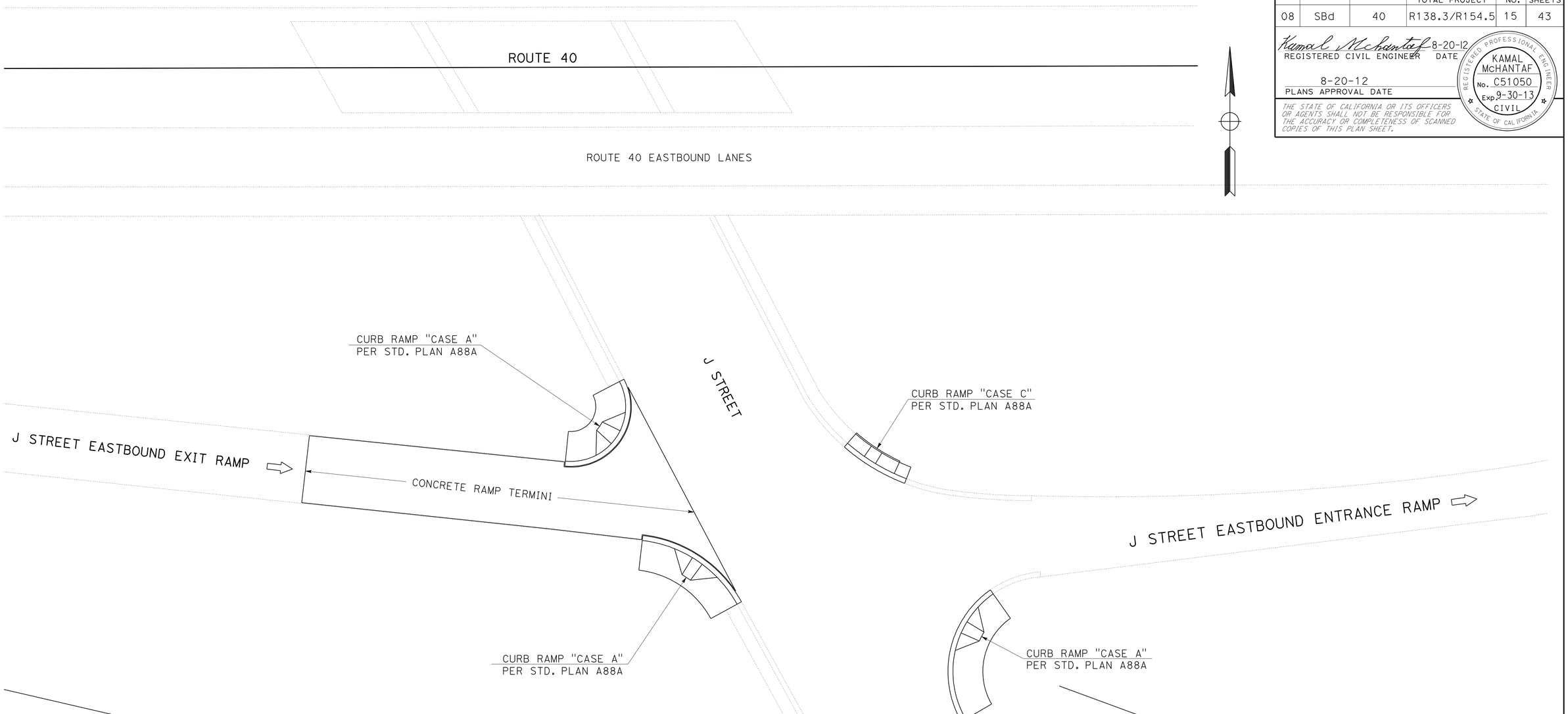

NOTES:

1. SEE SHEET X-3 FOR RAMP CROSS-SECTIONS.
2. SEE QUANTITY SHEETS FOR QUANTITIES.
3. FOR Det WARNING SURFACE, USE YELLOW CONCRETE PAVERS.
4. FOR ACCURATE RIGHT OF WAY DATA, CONTACT RIGHT OF WAY ENGINEERING AT THE DISTRICT OFFICE.
5. RAMP SLOPE TO BE 7.5% OR FLATTER.
6. SIDEWALK SLOPE TO BE 1.5% OR FLATTER.

LEGEND:

⇨ DIRECTION OF TRAFFIC

ROUTE 40/J STREET INTERCHANGE (SOUTH SIDE)
CURB RAMP DETAILS

EXISTING UTILITY FACILITIES HAVE NOT BEEN PLOTTED ON THESE PLANS

CONSTRUCTION DETAILS
NO SCALE

C-11

REVISED BY | DATE REVISED
KAMAL McHANTAF | MICHAEL RISTIC
CALCULATED-DESIGNED BY | CHECKED BY
FUNCTIONAL SUPERVISOR
MICHAEL RISTIC

STATE OF CALIFORNIA - DEPARTMENT OF TRANSPORTATION
Caltrans MAINTENANCE DESIGN

LAST REVISION 08-20-12 | DATE PLOTTED => 04-SEP-2012 | TIME PLOTTED => 09:21

Dist	COUNTY	ROUTE	POST MILES TOTAL PROJECT	SHEET No.	TOTAL SHEETS
08	SBd	40	R138.3/R154.5	16	43

REGISTERED CIVIL ENGINEER 8-20-12 DATE

8-20-12
PLANS APPROVAL DATE

REGISTERED PROFESSIONAL ENGINEER KAMAL McHANTAF No. C51050 Exp. 9-30-13 CIVIL STATE OF CALIFORNIA

THE STATE OF CALIFORNIA OR ITS OFFICERS OR AGENTS SHALL NOT BE RESPONSIBLE FOR THE ACCURACY OR COMPLETENESS OF SCANNED COPIES OF THIS PLAN SHEET.

NOTES:

1. Resin capsule anchorage is subject to approval of the engineer. Installation procedures shall comply with manufacturer's instructions.
2. Detail B is similar to Detail A except for anchorage devices.
3. The contractor shall verify all controlled field dimensions before ordering or fabricating any materials.

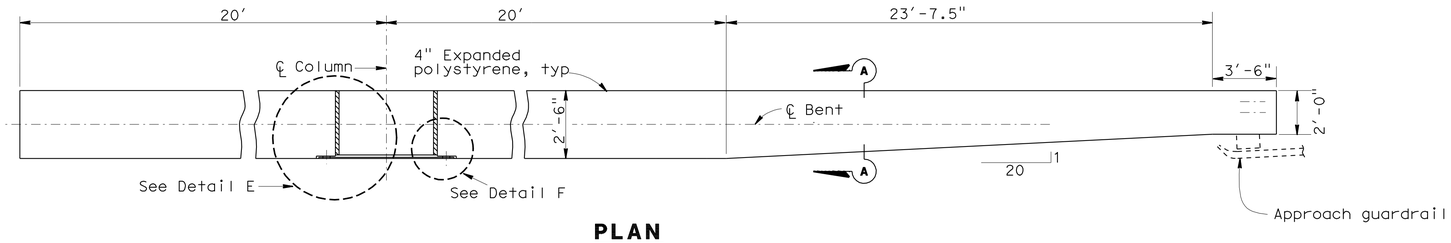

PLAN

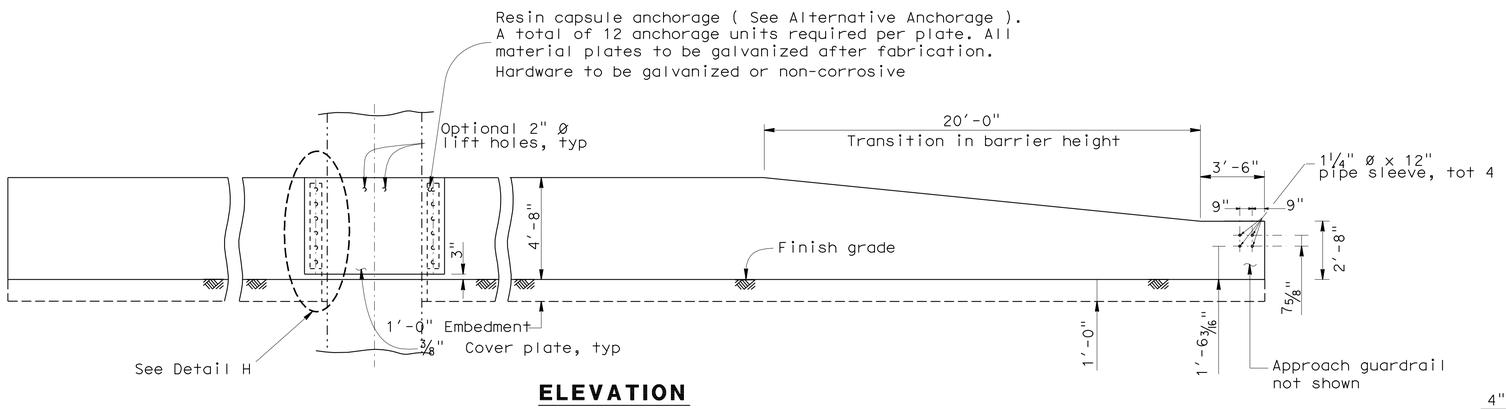

ELEVATION

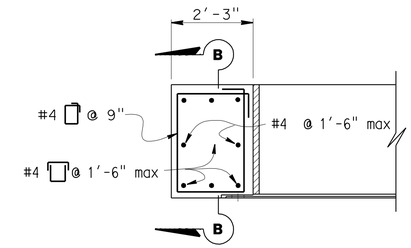

DETAIL E

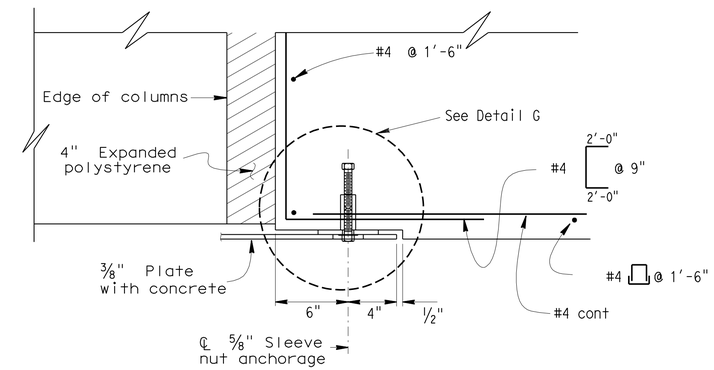

DETAIL F

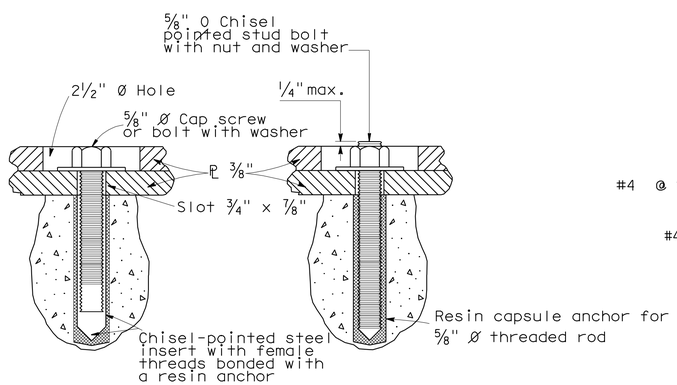

DETAIL A DETAIL B

ALTERNATIVE ANCHORAGE

SEE NOTES 1 AND 2

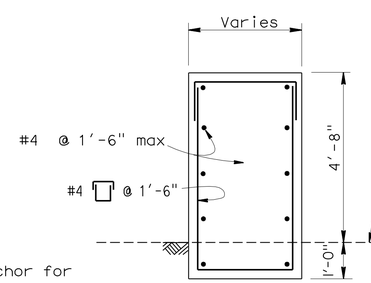

SECTION A-A

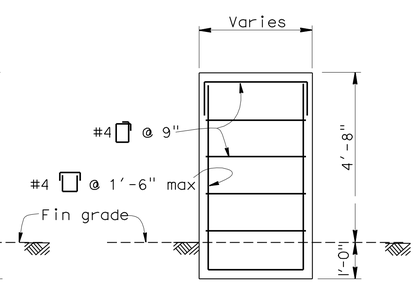

SECTION B-B

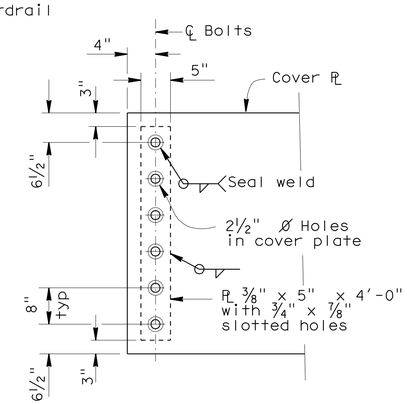

DETAIL H

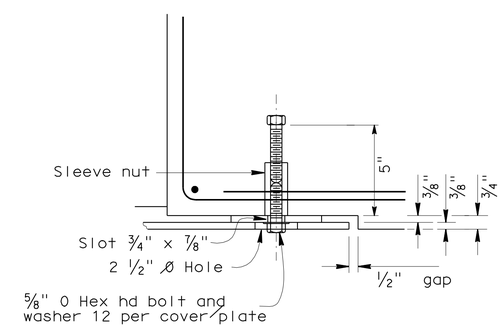

DETAIL G

PARK MOABI OC, EB AND WB
PCC ANCHOR BLOCK DETAIL

EXISTING UTILITY FACILITIES HAVE NOT BEEN PLOTTED ON THESE PLANS

CONSTRUCTION DETAILS

NO SCALE

C-12

STATE OF CALIFORNIA - DEPARTMENT OF TRANSPORTATION
Caltrans® MAINTENANCE DESIGN

FUNCTIONAL SUPERVISOR: MICHAEL RISTIC
CALCULATED-DESIGNED BY: KAMAL McHANTAF
CHECKED BY: MICHAEL RISTIC
REVISED BY
DATE REVISED

LAST REVISION 08-20-12
DATE PLOTTED => 04-SEP-2012
TIME PLOTTED => 09:21

Dist	COUNTY	ROUTE	POST MILES TOTAL PROJECT	SHEET No.	TOTAL SHEETS
08	SBd	40	R138.3/R154.5	17	43

W E Wasser 8-20-12
REGISTERED CIVIL ENGINEER DATE

8-20-12
PLANS APPROVAL DATE

REGISTERED PROFESSIONAL ENGINEER W. E. WASSER No. 37378 Exp. 6-30-14 CIVIL STATE OF CALIFORNIA

THE STATE OF CALIFORNIA OR ITS OFFICERS OR AGENTS SHALL NOT BE RESPONSIBLE FOR THE ACCURACY OR COMPLETENESS OF SCANNED COPIES OF THIS PLAN SHEET.

NOTES:

1. LOCATIONS AND POSITIONS OF THE CONSTRUCTION AREA SIGNS ARE APPROXIMATE. THE EXACT LOCATIONS AND POSTIONS WILL BE DETERMINED BY THE ENGINEER.
2. REFER TO Std PLANS T10, T10A AND T14 FOR TRAFFIC CONTROL REQUIREMENTS. REFER TO Std PLANS T15 AND T16 FOR MOVING LANE CLOSURES.
3. MINIMUM SPACING BETWEEN TWO CONSECUTIVE SIGNS SHALL BE 500 FEET OR AS DETERMINED BY THE ENGINEER.
4. EXISTING SIGNS TO BE PROTECTED IN PLACE.

LEGEND:

- CONSTRUCTION AREA SIGN (1 POST)
- CONSTRUCTION AREA SIGN (2 POST)
- CONSTRUCTION WORK AREA
- (X) CONSTRUCTION AREA SIGN CODE
- PORTABLE CHANGEABLE MESSAGE SIGN (PCMS)

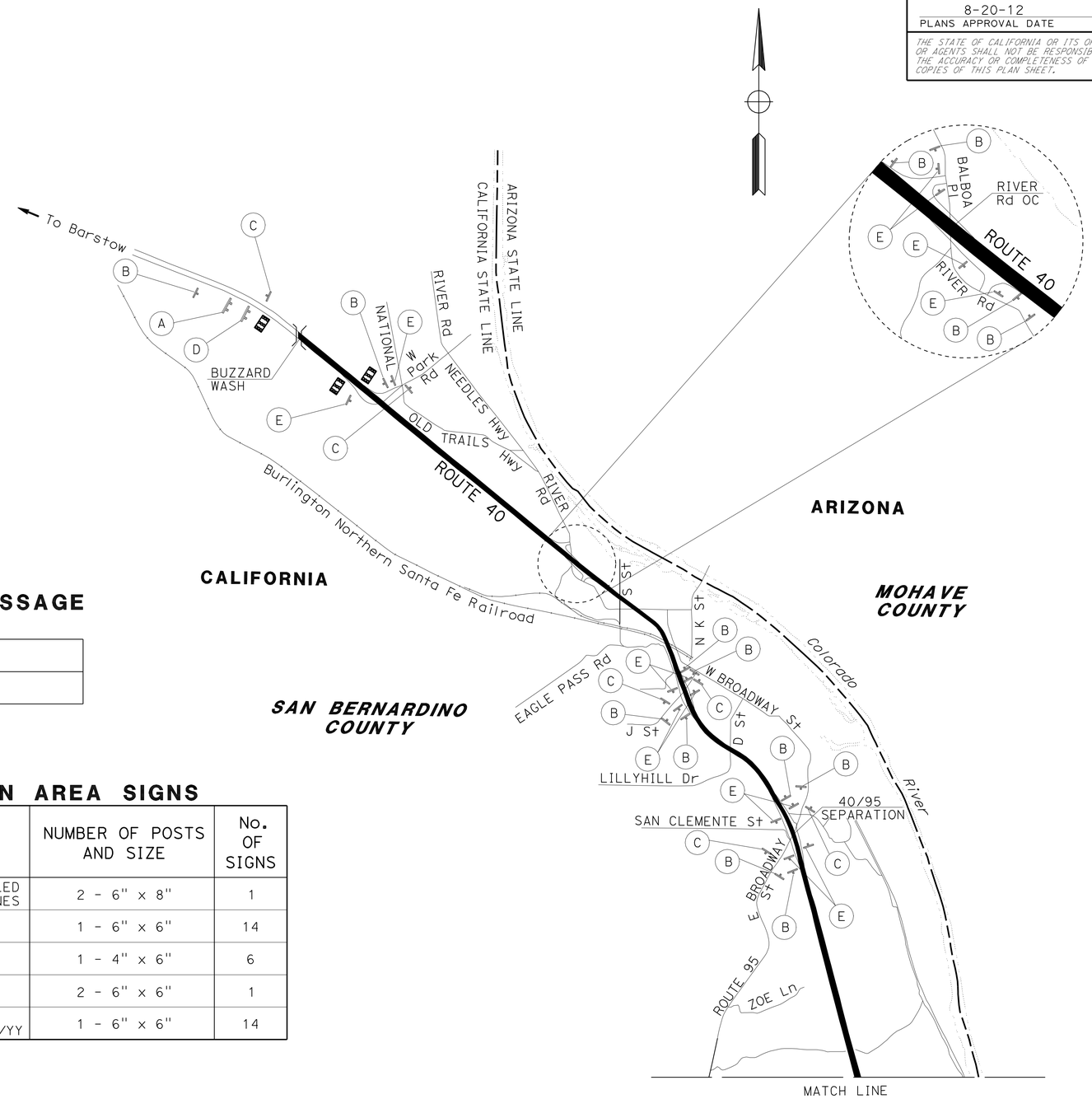

PORTABLE CHANGEABLE MESSAGE SIGNS (PCMS)

(EA)
4

STATIONARY MOUNTED CONSTRUCTION AREA SIGNS

SIGN No. (X)	SIGN CODE FEDERAL	SIGN CODE CALIFORNIA	PANEL SIZE	SIGN MESSAGE	NUMBER OF POSTS AND SIZE	No. OF SIGNS
A		C40<CA>	144" x 60"	TRAFFIC FINES DOUBLED IN CONSTRUCTION ZONES	2 - 6" x 8"	1
B	W20-1		48" x 48"	ROAD WORK AHEAD	1 - 6" x 6"	14
C	G20-2		48" x 24"	END ROAD WORK	1 - 4" x 6"	6
D	G20-1		90" x 48"	ROAD WORK NEXT 17 MILES	2 - 6" x 6"	1
E	SC6-4		48" x 70"	RAMP CLOSED DY/MM/YY THRU DY/MM/YY	1 - 6" x 6"	14

EXISTING UTILITY FACILITIES HAVE NOT BEEN PLOTTED ON THESE PLANS

APPROVED FOR CONSTRUCTION AREA SIGN WORK ONLY

CONSTRUCTION AREA SIGNS

NO SCALE

CS-1

STATE OF CALIFORNIA - DEPARTMENT OF TRANSPORTATION
Caltrans® TRAFFIC DESIGN

FUNCTIONAL SUPERVISOR: W. E. WASSER
CALCULATED-DESIGNED BY: PATTI BARTOLI
CHECKED BY: DARYUSH NAMI
REVISED BY
DATE REVISED

LAST REVISION 08-20-12
DATE PLOTTED => 04-SEP-2012
TIME PLOTTED => 09:21

Dist	COUNTY	ROUTE	POST MILES TOTAL PROJECT	SHEET No.	TOTAL SHEETS
08	SBd	40	R138.3/R154.5	18	43

W E Wasser 8-20-12
REGISTERED CIVIL ENGINEER DATE

8-20-12
PLANS APPROVAL DATE

REGISTERED PROFESSIONAL ENGINEER W. E. WASSER No. 37378 Exp. 6-30-14 CIVIL STATE OF CALIFORNIA

THE STATE OF CALIFORNIA OR ITS OFFICERS OR AGENTS SHALL NOT BE RESPONSIBLE FOR THE ACCURACY OR COMPLETENESS OF SCANNED COPIES OF THIS PLAN SHEET.

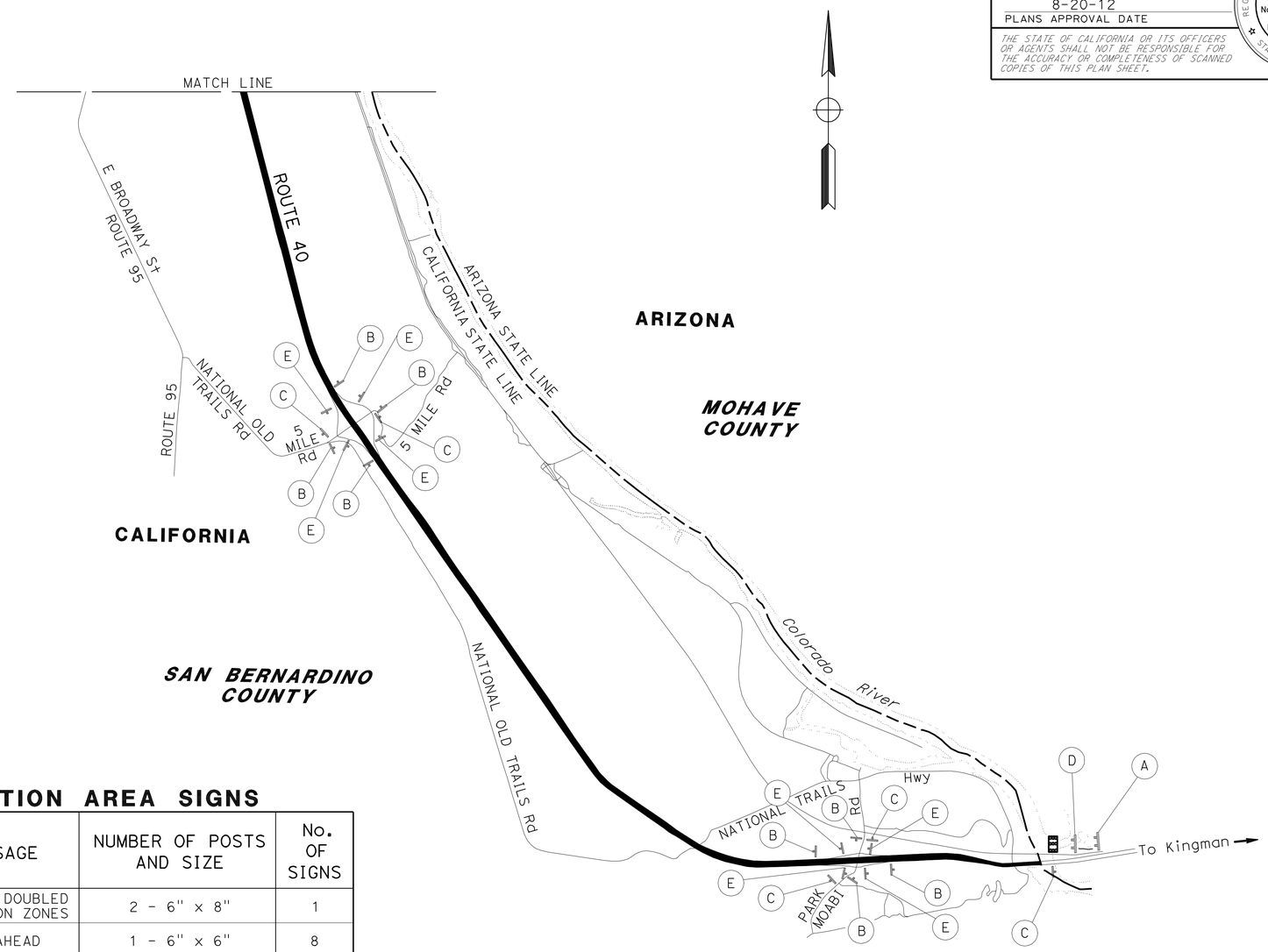

STATIONARY MOUNTED CONSTRUCTION AREA SIGNS

SIGN No. (X)	SIGN CODE FEDERAL	SIGN CODE CALIFORNIA	PANEL SIZE	SIGN MESSAGE	NUMBER OF POSTS AND SIZE	No. OF SIGNS
A		C40<CA>	144" x 60"	TRAFFIC FINES DOUBLED IN CONSTRUCTION ZONES	2 - 6" x 8"	1
B	W20-1		48" x 48"	ROAD WORK AHEAD	1 - 6" x 6"	8
C	G20-2		48" x 24"	END ROAD WORK	1 - 4" x 6"	5
D	G20-1		90" x 48"	ROAD WORK NEXT 17 MILES	2 - 6" x 6"	1
E	SC6-4		48" x 70"	RAMP CLOSED DY/MM/YY THRU DY/MM/YY	1 - 6" x 6"	8

EXISTING UTILITY FACILITIES HAVE NOT BEEN PLOTTED ON THESE PLANS *APPROVED FOR CONSTRUCTION AREA SIGN WORK ONLY*

CONSTRUCTION AREA SIGNS

NO SCALE

CS-2

STATE OF CALIFORNIA - DEPARTMENT OF TRANSPORTATION
Caltrans® TRAFFIC DESIGN

FUNCTIONAL SUPERVISOR: W. E. WASSER
CALCULATED-DESIGNED BY: PATTI BARTOLI
CHECKED BY: DARYUSH NAMI
REVISED BY
DATE REVISED

LAST REVISION 08-20-12 | DATE PLOTTED => 04-SEP-2012 | TIME PLOTTED => 09:21

Dist	COUNTY	ROUTE	POST MILES TOTAL PROJECT	SHEET No.	TOTAL SHEETS
08	SBd	40	R138.3/R154.5	19	43

W E Wasser 8-20-12
REGISTERED CIVIL ENGINEER DATE

8-20-12
PLANS APPROVAL DATE

REGISTERED PROFESSIONAL ENGINEER W. E. WASSER No. 37378 Exp. 6-30-14 CIVIL STATE OF CALIFORNIA

THE STATE OF CALIFORNIA OR ITS OFFICERS OR AGENTS SHALL NOT BE RESPONSIBLE FOR THE ACCURACY OR COMPLETENESS OF SCANNED COPIES OF THIS PLAN SHEET.

STATIONARY MOUNTED CONSTRUCTION AREA SIGNS

SIGN No. (X)	SIGN CODE FEDERAL	SIGN CODE CALIFORNIA	PANEL SIZE	SIGN MESSAGE	NUMBER OF POSTS AND SIZE	No. OF SIGNS
A	C-SPECIAL		108" x 52"	RIVER RD CUTOFF CLOSED USE DETOUR	2 - 6" x 8"	1
B	C-SPECIAL		84" x 48"	RIVER RD CUTOFF DETOUR (VERTICAL ARROW)	2 - 4" x 6"	1
C	M4-10(LT)		48" x 18"	DETOUR (LEFT)	1 - 4" x 4"	2
D	M4-10(RT)		48" x 18"	DETOUR (RIGHT)	1 - 4" x 4"	1
E		SC3<CA>	48" x 18"	DETOUR (ARROW)	1 - 4" x 4"	3
F	C-SPECIAL		84" x 48"	RIVER RD CUTOFF DETOUR (DIAGONAL ARROW)	2 - 4" x 6"	1
G	M4-8A		24" x 18"	END DETOUR	1 - 4" x 4"	1

LEGEND:

- CONSTRUCTION AREA SIGN (TWO POST)
- CONSTRUCTION AREA SIGN (ONE POST)
- (X) CONSTRUCTION AREA SIGN LETTER
- DIRECTION OF DETOUR
- RAMP CLOSED

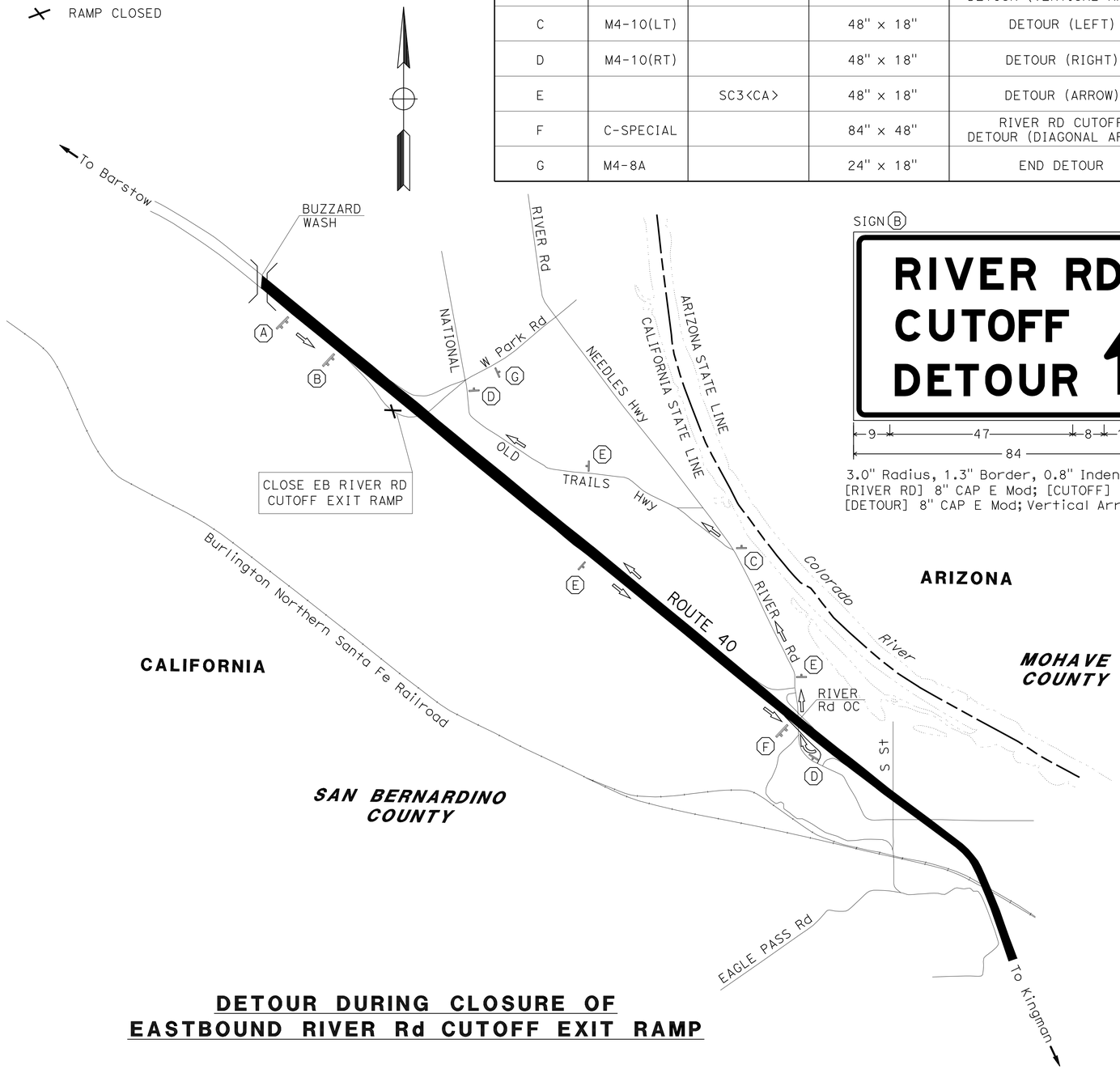

SIGN (B)

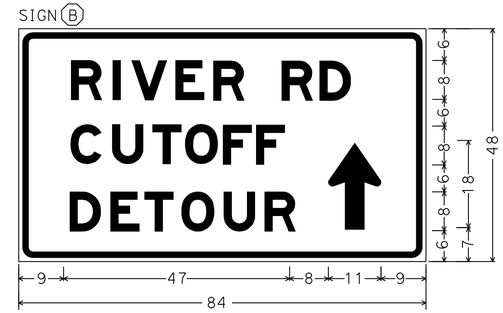

3.0" Radius, 1.3" Border, 0.8" Indent, Black on Orange
[RIVER RD] 8" CAP E Mod; [CUTOFF] 8" CAP E Mod;
[DETOUR] 8" CAP E Mod; Vertical Arrow Custom 17.9" X 10.9"; 90°

SIGN (F)

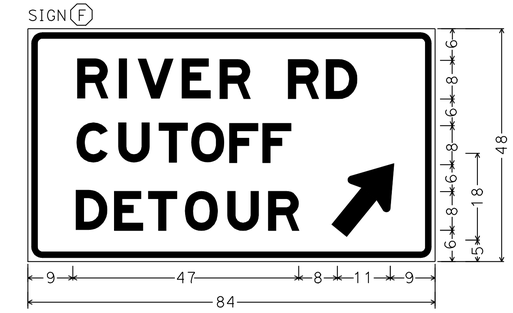

3.0" Radius, 1.3" Border, 0.8" Indent, Black on Orange
[RIVER RD] 8" CAP E Mod; [CUTOFF] 8" CAP E Mod
[DETOUR] 8" CAP E Mod
Diagonal Arrow Custom 17.9" X 10.9"; 45°

SIGN (A)

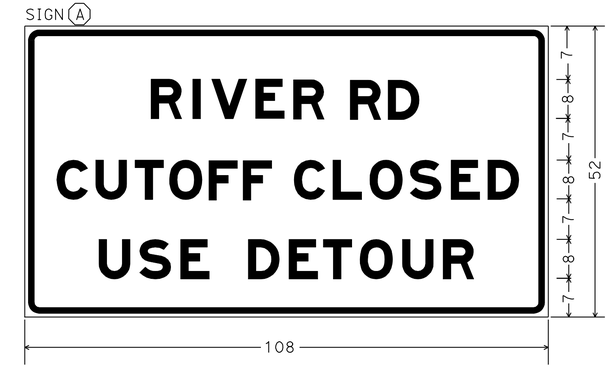

3.0" Radius, 1.3" Border, 0.8" Indent, Black on Orange
[RIVER RD] 8"E Mod; [CUTOFF CLOSED] 8"E Mod; [USE DETOUR] 8"E Mod

DETOUR DURING CLOSURE OF EASTBOUND RIVER Rd CUTOFF EXIT RAMP

EXISTING UTILITY FACILITIES HAVE NOT BEEN PLOTTED ON THESE PLANS

APPROVED FOR DETOUR WORK ONLY

DETOUR PLAN

NO SCALE

DE-1

REVISED BY | DATE REVISED
PATTI BARTOLI | DARYUSH NAMI
CALCULATED-DESIGNED BY | CHECKED BY
FUNCTIONAL SUPERVISOR: W. E. WASSER

STATE OF CALIFORNIA - DEPARTMENT OF TRANSPORTATION
Caltrans® TRAFFIC DESIGN

LAST REVISION 08-20-12 | DATE PLOTTED => 04-SEP-2012 | TIME PLOTTED => 09:21

Dist	COUNTY	ROUTE	POST MILES TOTAL PROJECT	SHEET No.	TOTAL SHEETS
08	SBd	40	R138.3/R154.5	20	43

W E Wasser 8-20-12
REGISTERED CIVIL ENGINEER DATE

8-20-12
PLANS APPROVAL DATE

REGISTERED PROFESSIONAL ENGINEER W. E. WASSER No. 37378 Exp. 6-30-14 CIVIL STATE OF CALIFORNIA

THE STATE OF CALIFORNIA OR ITS OFFICERS OR AGENTS SHALL NOT BE RESPONSIBLE FOR THE ACCURACY OR COMPLETENESS OF SCANNED COPIES OF THIS PLAN SHEET.

STATIONARY MOUNTED CONSTRUCTION AREA SIGNS

SIGN No. (X)	SIGN CODE FEDERAL	SIGN CODE CALIFORNIA	PANEL SIZE	SIGN MESSAGE	NUMBER OF POSTS AND SIZE	No. OF SIGNS
A	C-SPECIAL		108" x 52"	RIVER RD EAST RAMP CLOSED USE DETOUR	2 - 6" x 8"	1
B	C-SPECIAL		84" x 48"	RIVER RD DETOUR (VERTICAL ARROW)	2 - 4" x 6"	1
C	M4-10(LT)		48" x 18"	DETOUR (LEFT)	1 - 4" x 4"	1
D	M4-10(RT)		48" x 18"	DETOUR (RIGHT)	1 - 4" x 4"	1
E		SC3<CA>	48" x 18"	DETOUR (ARROW)	1 - 4" x 4"	2
F	M4-8A		24" x 18"	END DETOUR	1 - 4" x 4"	1

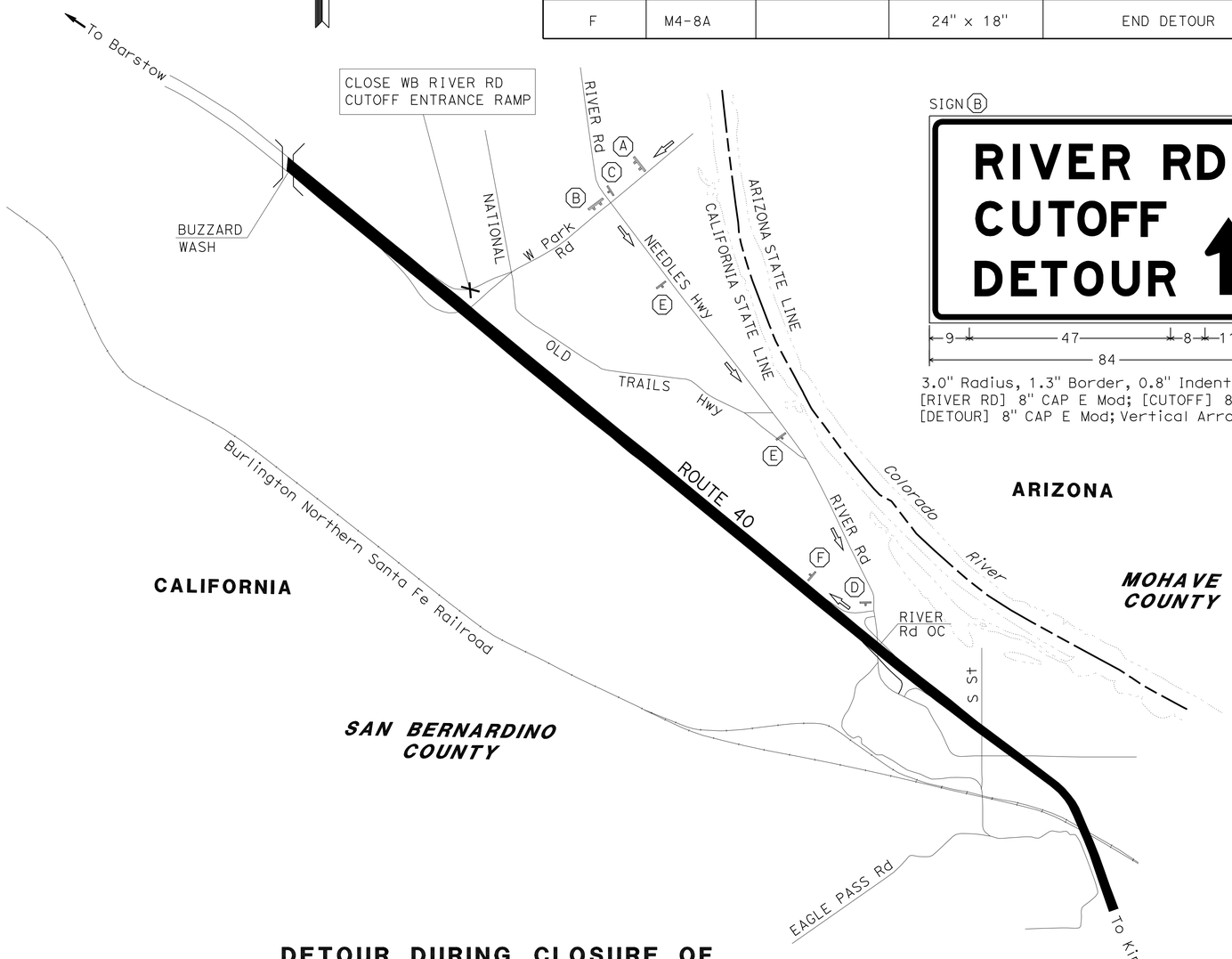

SIGN (B)

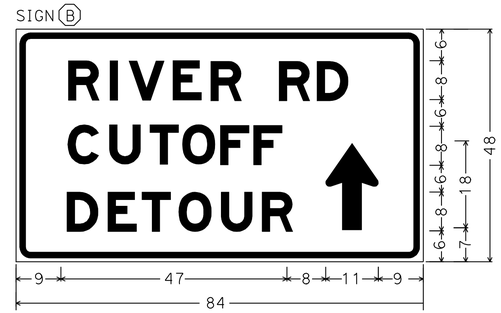

3.0" Radius, 1.3" Border, 0.8" Indent, Black on Orange
[RIVER RD] 8" CAP E Mod; [CUTOFF] 8" CAP E Mod;
[DETOUR] 8" CAP E Mod; Vertical Arrow Custom 17.9" X 10.9"; 90°

SIGN (A)

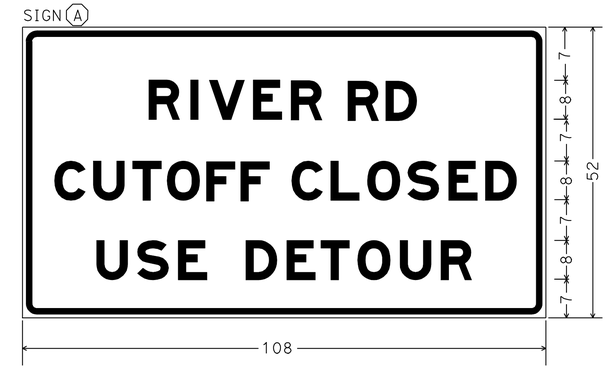

3.0" Radius, 1.3" Border, 0.8" Indent, Black on Orange
[RIVER RD] 8"E Mod; [CUTOFF CLOSED] 8"E Mod; [USE DETOUR] 8"E Mod

SIGN (F)

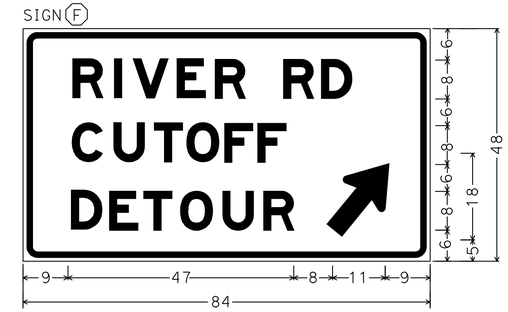

3.0" Radius, 1.3" Border, 0.8" Indent, Black on Orange
[RIVER RD] 8" CAP E Mod; [CUTOFF] 8" CAP E Mod
[DETOUR] 8" CAP E Mod
Diagonal Arrow Custom 17.9" X 10.9"; 45°

DETOUR DURING CLOSURE OF WESTBOUND RIVER Rd CUTOFF ENTRANCE RAMP

EXISTING UTILITY FACILITIES HAVE NOT BEEN PLOTTED ON THESE PLANS

APPROVED FOR DETOUR WORK ONLY

DETOUR PLAN

NO SCALE

DE-2

STATE OF CALIFORNIA - DEPARTMENT OF TRANSPORTATION
Caltrans® TRAFFIC DESIGN

FUNCTIONAL SUPERVISOR: W. E. WASSER
CALCULATED-DESIGNED BY: PATTI BARTOLI
CHECKED BY: DARYUSH NAMI
REVISED BY
DATE REVISED

LAST REVISION 08-20-12
DATE PLOTTED => 04-SEP-2012
TIME PLOTTED => 09:21

Dist	COUNTY	ROUTE	POST MILES TOTAL PROJECT	SHEET No.	TOTAL SHEETS
08	SBd	40	R138.3/R154.5	21	43

W E Wasser 8-20-12
REGISTERED CIVIL ENGINEER DATE

8-20-12
PLANS APPROVAL DATE

REGISTERED PROFESSIONAL ENGINEER W. E. WASSER No. 37378 Exp. 6-30-14 CIVIL STATE OF CALIFORNIA

THE STATE OF CALIFORNIA OR ITS OFFICERS OR AGENTS SHALL NOT BE RESPONSIBLE FOR THE ACCURACY OR COMPLETENESS OF SCANNED COPIES OF THIS PLAN SHEET.

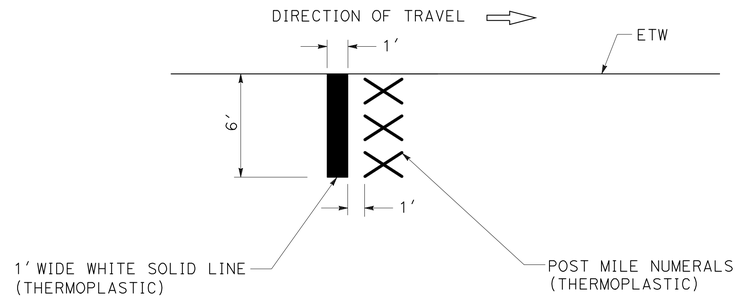

TYPICAL AIRCRAFT PAVEMENT MARKING

@ 5 MILE INTERVALS (FOR POSTMILES 140, 145 AND 150)

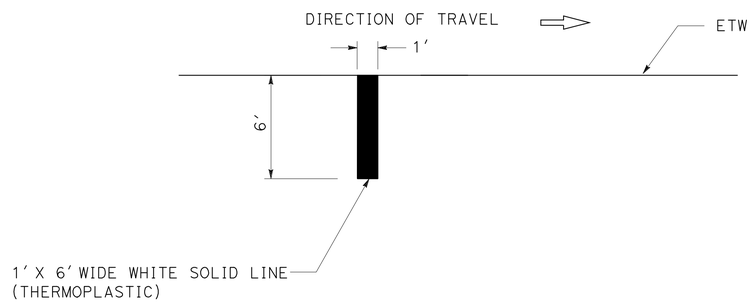

TYPICAL AIRCRAFT PAVEMENT MARKING

@ 1 MILE INTERVALS (FOR POSTMILES 139, 141, 142, 143, 144, 146, 147, 148, 149, 151, 152, 153, AND 154)

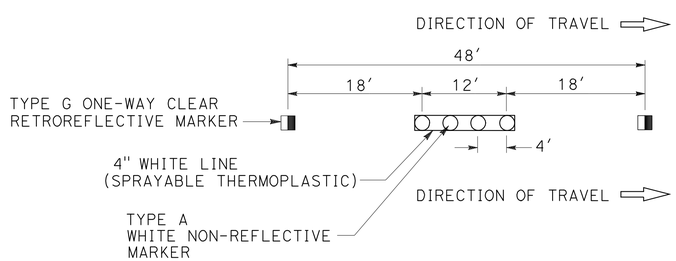

DETAIL 13 MODIFIED (13M)

INSTALL TYPE A NON-REFLECTIVE MARKER WITH STRIPING DETAIL 13M
INSTALL TYPE A MARKER BEFORE STRIPING TO GET THE PROPER BONDING

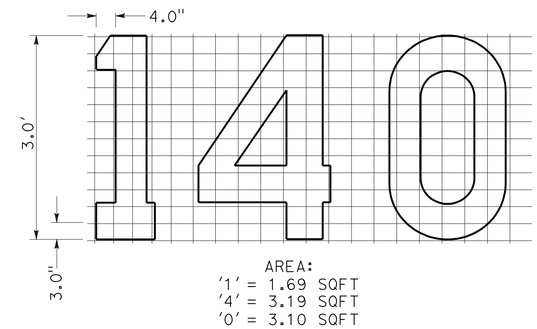

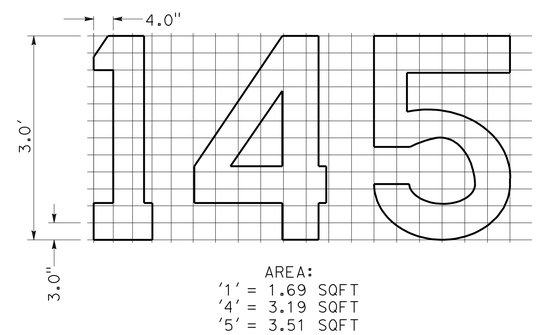

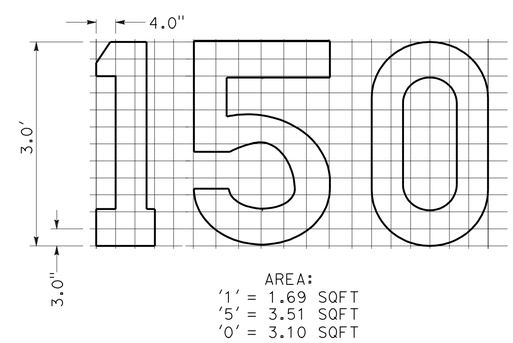

TYPICAL NUMERALS PAVEMENT MARKING

3' 0" X 6' 4" GRID

PAVEMENT DELINEATION DETAILS

NO SCALE

PDD-1

EXISTING UTILITY FACILITIES HAVE NOT BEEN PLOTTED ON THESE PLANS

APPROVED FOR PAVEMENT DELINEATION WORK ONLY

STATE OF CALIFORNIA - DEPARTMENT OF TRANSPORTATION
Caltrans® TRAFFIC DESIGN

FUNCTIONAL SUPERVISOR: W. E. WASSER
CALCULATED-DESIGNED BY: PATTI BARTOLI
CHECKED BY: DARYUSH NAMI
REVISED BY
DATE REVISED

LAST REVISION 08-20-12 | DATE PLOTTED => 04-SEP-2012 | TIME PLOTTED => 09:21

Dist	COUNTY	ROUTE	POST MILES TOTAL PROJECT	SHEET No.	TOTAL SHEETS
08	SBd	40	R138.3/R154.5	22	43

W E Wasser 8-20-12
REGISTERED CIVIL ENGINEER DATE

8-20-12
PLANS APPROVAL DATE

REGISTERED PROFESSIONAL ENGINEER W. E. WASSER No. 37378 Exp. 6-30-14 CIVIL STATE OF CALIFORNIA

THE STATE OF CALIFORNIA OR ITS OFFICERS OR AGENTS SHALL NOT BE RESPONSIBLE FOR THE ACCURACY OR COMPLETENESS OF SCANNED COPIES OF THIS PLAN SHEET.

NOTE:

1. REFER TO STANDARD PLANS A77EI, A77F1, A77F2, A77F3 AND A77F5 FOR GUARD RAIL LAYOUTS AND DETAILS.

LEGEND:

DIRECTION OF TRAVEL

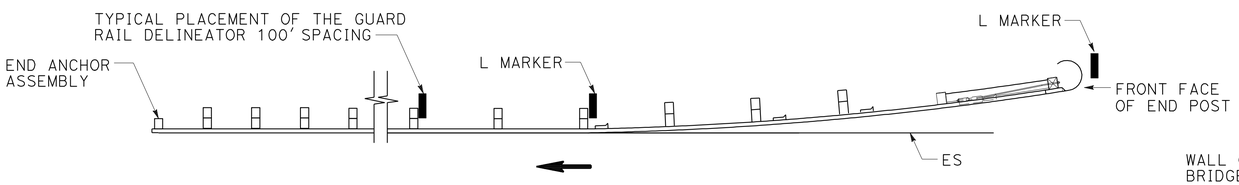

ALONG MBGR (TYPE 11B LAYOUT)

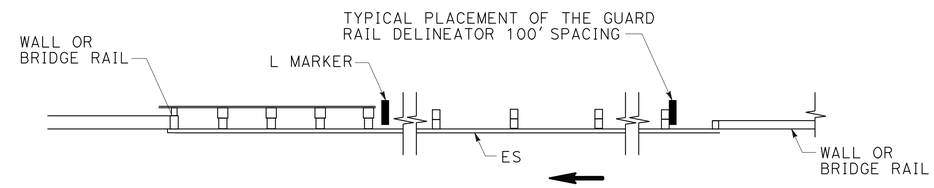

ALONG MBGR (TYPE 12D LAYOUT)

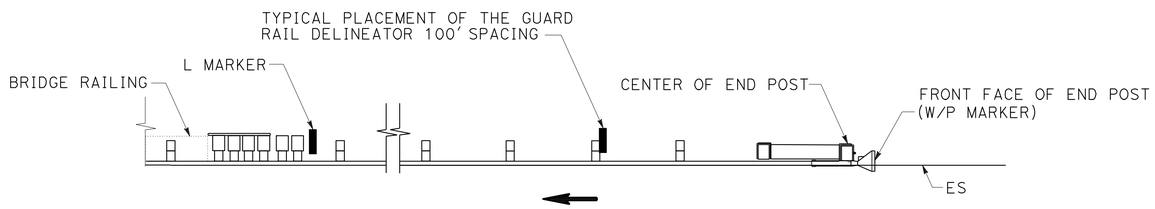

ALONG MBGR (TYPE 12A LAYOUT)

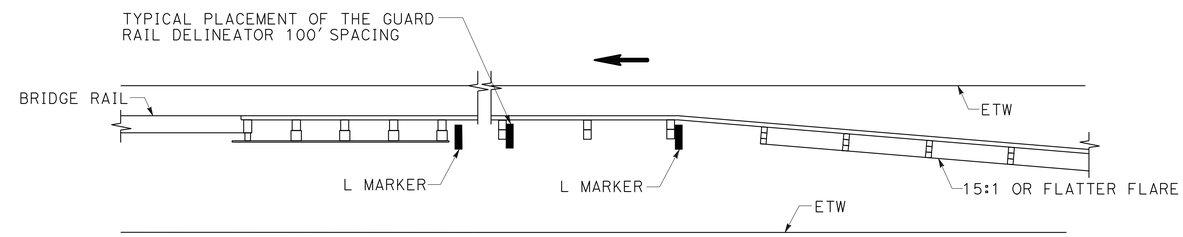

ALONG MBGR (TYPE 12E LAYOUT)

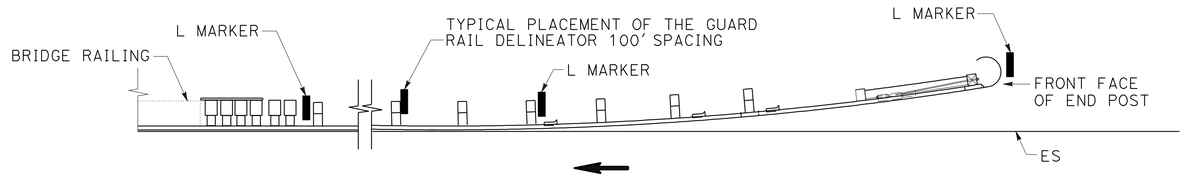

ALONG MBGR (TYPE 12B LAYOUT)

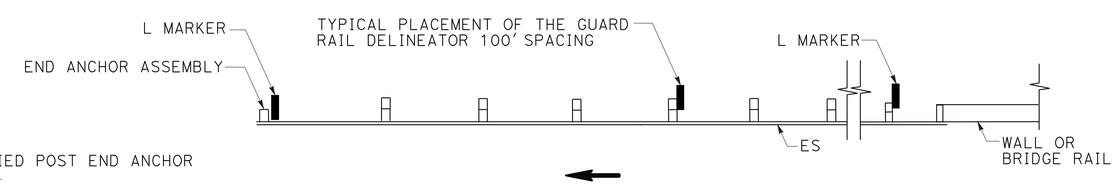

ALONG MBGR (TYPE 12DD LAYOUT)

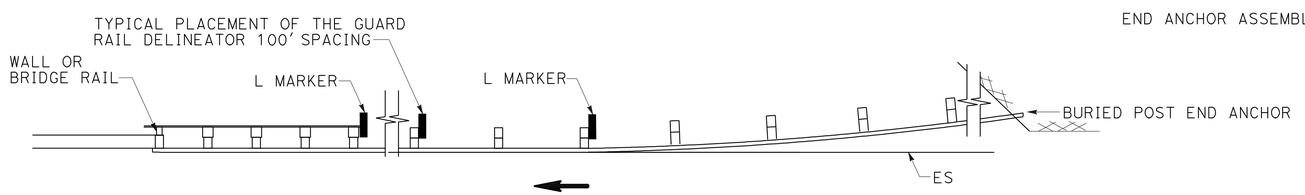

ALONG MBGR (TYPE 12C LAYOUT)

PLACEMENT OF GUARD RAIL DELINEATORS AND L MARKERS

PAVEMENT DELINEATION DETAILS

NO SCALE

PDD-2

EXISTING UTILITY FACILITIES HAVE NOT BEEN PLOTTED ON THESE PLANS

APPROVED FOR PAVEMENT DELINEATION WORK ONLY

STATE OF CALIFORNIA - DEPARTMENT OF TRANSPORTATION
Caltrans® TRAFFIC DESIGN

FUNCTIONAL SUPERVISOR: W. E. WASSER
CALCULATED-DESIGNED BY: PATTI BARTOLI
CHECKED BY: DARYUSH NAMI
REVISED BY
DATE REVISED

LAST REVISION 08-20-12 | DATE PLOTTED => 04-SEP-2012 | TIME PLOTTED => 09:21

Dist	COUNTY	ROUTE	POST MILES TOTAL PROJECT	SHEET No.	TOTAL SHEETS
08	SBd	40	R138.3/R154.5	23	43

W E Wasser 8-20-12
REGISTERED CIVIL ENGINEER DATE

8-20-12
PLANS APPROVAL DATE

REGISTERED PROFESSIONAL ENGINEER W. E. WASSER No. 37378 Exp. 6-30-14 CIVIL STATE OF CALIFORNIA

THE STATE OF CALIFORNIA OR ITS OFFICERS OR AGENTS SHALL NOT BE RESPONSIBLE FOR THE ACCURACY OR COMPLETENESS OF SCANNED COPIES OF THIS PLAN SHEET.

NOTE:

1. REMOVAL OF THERMOPLASTIC TRAFFIC STRIPE (SPRAYABLE) WILL BE REMOVED WITH COLD PLANING OF PAVEMENT AND WILL NOT BE A SEPARATE PAY ITEM.

PAVEMENT DELINEATION QUANTITIES

POSTMILE LIMITS	LOCATION	DETAIL No. OR PAVEMENT MARKING	REMOVE THERMOPLASTIC PAVEMENT MARKING	REMOVE THERMOPLASTIC TRAFFIC STRIPE	REMOVE PAVEMENT MARKER	THERMOPLASTIC TRAFFIC STRIPE (SPRAYABLE)			8" THERMOPLASTIC TRAFFIC STRIPE	PAVEMENT MARKER				THERMO-PLASTIC PAVEMENT MARKING
										NON-(REFLECTIVE)	(RETROREFLECTIVE)			
						4" YELLOW	4" WHITE	8" WHITE	WHITE	TYPE A	TYPE D	TYPE G	TYPE H	
			SQFT	LF	EA	LF	LF	LF	LF	EA	EA	EA	EA	SQFT
PM R138.3 TO PM R154.6	WB MAINLINE	13M			8,975		86,064			7,180		1,795		
		27B					86,064							
		25			1,795	86,064							1,795	
	EB MAINLINE	13M			1,795		86,064			7,180		1,795		
		27B					86,064							
		25			1,795	86,064							1,795	
	RIVER Rd CUTOFF EB EXIT RAMP (PARK Rd OC)	25A			130	3,075							130	
		27B					3,075							
		36			26			580				26		
		22			26	270					26			
		8" STRIPE	55											55
		TYPE V ARROW (2)	240											66
	RIVER Rd CUTOFF WB ENTRANCE RAMP (PARK Rd OC)	25A			57	1,340							57	
		27B					1,475							
		36A			8			170				8		
		8					240							
		TYPE I ARROW (2)	168											62
	WEST BROADWAY/RIVER Rd EB EXIT RAMP	25A			46	1,070							46	
		27B					1,330							
		36			25			575				25		
		22			5	105					12			
		8" STRIPE	40											40
		TYPE V ARROW (3)	360											99
		"STOP" (2)	102											44
		"AHEAD" (1)	64											31
		LIMIT LINE	22											22
	WEST BROADWAY/RIVER Rd EB ENTRANCE RAMP	25A			11	240							11	
		27B					640							
		36A			13			270				13		
		8					216							
		22			12	105					12			
		TYPE I ARROW (1)	84											31
		SUBTOTAL	1,135	0	14,719	531,160			0	14,360	7,546			450

EXISTING UTILITY FACILITIES HAVE NOT BEEN PLOTTED ON THESE PLANS

PAVEMENT DELINEATION QUANTITIES

PDQ-1

STATE OF CALIFORNIA - DEPARTMENT OF TRANSPORTATION
Caltrans® TRAFFIC DESIGN

FUNCTIONAL SUPERVISOR: W. E. WASSER
CALCULATED-DESIGNED BY: PATTI BARTOLI
CHECKED BY: DARYUSH NAMI
REVISED BY
DATE REVISED

LAST REVISION 08-20-12
DATE PLOTTED => 04-SEP-2012
TIME PLOTTED => 09:21

Dist	COUNTY	ROUTE	POST MILES TOTAL PROJECT	SHEET No.	TOTAL SHEETS
08	SBd	40	R138.3/R154.5	24	43

W E Wasser 8-20-12
REGISTERED CIVIL ENGINEER DATE

8-20-12
PLANS APPROVAL DATE

REGISTERED PROFESSIONAL ENGINEER W. E. WASSER No. 37378 Exp. 6-30-14 CIVIL STATE OF CALIFORNIA

THE STATE OF CALIFORNIA OR ITS OFFICERS OR AGENTS SHALL NOT BE RESPONSIBLE FOR THE ACCURACY OR COMPLETENESS OF SCANNED COPIES OF THIS PLAN SHEET.

PAVEMENT DELINEATION QUANTITIES

POSTMILE LIMITS	LOCATION	DETAIL No. OR PAVEMENT MARKING	REMOVE THERMOPLASTIC PAVEMENT MARKING	REMOVE THERMOPLASTIC TRAFFIC STRIPE	REMOVE PAVEMENT MARKER	THERMOPLASTIC TRAFFIC STRIPE (SPRAYABLE)			8" THERMOPLASTIC TRAFFIC STRIPE	PAVEMENT MARKER				THERMO-PLASTIC PAVEMENT MARKING
										NON-(REFLECTIVE)	(RETROREFLECTIVE)			
						4" YELLOW	4" WHITE	8" WHITE	WHITE	TYPE A	TYPE D	TYPE G	TYPE H	
			SQFT	LF	EA	LF	LF	LF	LF	EA	EA	EA	EA	SQFT
PM R138.3 TO PM R154.6	W BROADWAY/RIVER Rd WB EXIT RAMP	25A			33	750							33	
		27B					1,220							
		36			32			725				32		
		22			10	80					10			
		TYPE V ARROW (2)	240											66
		"STOP" (2)	102											44
		"AHEAD" (1)	64											31
		LIMIT LINE	60											60
	W BROADWAY/RIVER Rd WB ENTRANCE RAMP	25A			29	670							29	
		27B					900							
		36A			7			130				7		
		8					216							
		22			10	80					10			
		TYPE I ARROW (1)	84											31
	J St EB EXIT RAMP	25A			35	800							35	
		27B					1,200							
		36			29			660				29		
		TYPE V ARROW (4)	480											132
		"STOP" (3)	102											44
		"AHEAD" (1)	64											31
		LIMIT LINE	70											70
		8					140							
		4" STRIPE					60							
	J St EB ENTRANCE RAMP	25A			44	1,020							44	
		27B					750							
		36A			10			200				10		
		8					192							
		TYPE I ARROW (1)	84											31
	J St WB EXIT RAMP	25A			40	920							40	
		27B					1,350							
		36			29			660				29		
		TYPE V ARROW (2)	240											66
		"STOP" (2)	102											44
		"AHEAD" (1)	64											31
		LIMIT LINE	65											65
		SUBTOTAL	1,821	0	308	12,723			0	0	308			746

EXISTING UTILITY FACILITIES HAVE NOT BEEN PLOTTED ON THESE PLANS

PAVEMENT DELINEATION QUANTITIES

PDQ-2

REVISED BY | DATE REVISED
PATTI BARTOLI | DARYUSH NAMI
CALCULATED-DESIGNED BY | CHECKED BY
FUNCTIONAL SUPERVISOR
W. E. WASSER

STATE OF CALIFORNIA - DEPARTMENT OF TRANSPORTATION
Caltrans TRAFFIC DESIGN

LAST REVISION 08-20-12 | DATE PLOTTED => 04-SEP-2012 | TIME PLOTTED => 09:21

Dist	COUNTY	ROUTE	POST MILES TOTAL PROJECT	SHEET No.	TOTAL SHEETS
08	SBd	40	R138.3/R154.5	25	43

W E Wasser 8-20-12
REGISTERED CIVIL ENGINEER DATE

8-20-12
PLANS APPROVAL DATE

REGISTERED PROFESSIONAL ENGINEER W. E. WASSER No. 37378 Exp. 6-30-14 CIVIL STATE OF CALIFORNIA

THE STATE OF CALIFORNIA OR ITS OFFICERS OR AGENTS SHALL NOT BE RESPONSIBLE FOR THE ACCURACY OR COMPLETENESS OF SCANNED COPIES OF THIS PLAN SHEET.

PAVEMENT DELINEATION QUANTITIES

POSTMILE LIMITS	LOCATION	DETAIL No. OR PAVEMENT MARKING	REMOVE THERMOPLASTIC PAVEMENT MARKING	REMOVE THERMOPLASTIC TRAFFIC STRIPE	REMOVE PAVEMENT MARKER	THERMOPLASTIC TRAFFIC STRIPE (SPRAYABLE)			8" THERMOPLASTIC TRAFFIC STRIPE	PAVEMENT MARKER				THERMO-PLASTIC PAVEMENT MARKING
										NON-(REFLECTIVE)	(RETROREFLECTIVE)			
						4" YELLOW	4" WHITE	8" WHITE	WHITE	TYPE A	TYPE D	TYPE G	TYPE H	
			SQFT	LF	EA	LF	LF	LF	LF	EA	EA	EA	EA	SQFT
PM R138.3 TO PM R154.6	J St WB ENTRANCE RAMP	25A			20	450							20	
		27B					640							
		36A			8			160				8		
		8					79							
		TYPE I ARROW (1)	84											31
	E BROADWAY Rd/Jct Rte 95 EB EXIT RAMP	25A			72	1,700							72	
		27B					1,325							
		36			26			585				26		
		TYPE V ARROW (2)	240											66
		"STOP" (2)	102											44
		"AHEAD" (1)	64											31
		LIMIT LINE	60											60
	E BROADWAY Rd/Jct Rte 95 EB ENTRANCE RAMP	25A			38	885							38	
		27B					1,150							
		36A			12			250				12		
		8					264							
		TYPE I ARROW (1)	84											31
	E BROADWAY Rd/Jct Rte 95 WB ENTRANCE RAMP	25A			81	1,910							81	
		27B					1,350							
		36A			12			250				12		
		8					336							
		TYPE I ARROW (1)	84											31
	E BROADWAY Rd/Jct Rte 95 WB EXIT RAMP	25A			56	1,310							56	
		27B					1,855							
		36			26			580				26		
		TYPE V ARROW (4)	480											132
		"STOP" (1)	51											22
		8" STRIPE	81											81
		LIMIT LINE	22											22
		SUBTOTAL	1,352	0	351	15,079			0	0	351			551

EXISTING UTILITY FACILITIES HAVE NOT BEEN PLOTTED ON THESE PLANS

PAVEMENT DELINEATION QUANTITIES

PDQ-3

STATE OF CALIFORNIA - DEPARTMENT OF TRANSPORTATION
Caltrans® TRAFFIC DESIGN

FUNCTIONAL SUPERVISOR: W. E. WASSER
CALCULATED-DESIGNED BY: PATTI BARTOLI
CHECKED BY: DARYUSH NAMI
REVISED BY
DATE REVISED

LAST REVISION 08-20-12
DATE PLOTTED => 04-SEP-2012
TIME PLOTTED => 09:21

Dist	COUNTY	ROUTE	POST MILES TOTAL PROJECT	SHEET No.	TOTAL SHEETS
08	SBd	40	R138.3/R154.5	26	43

W E Wasser 8-20-12
REGISTERED CIVIL ENGINEER DATE

8-20-12
PLANS APPROVAL DATE

REGISTERED PROFESSIONAL ENGINEER W. E. WASSER No. 37378 Exp. 6-30-14 CIVIL STATE OF CALIFORNIA

THE STATE OF CALIFORNIA OR ITS OFFICERS OR AGENTS SHALL NOT BE RESPONSIBLE FOR THE ACCURACY OR COMPLETENESS OF SCANNED COPIES OF THIS PLAN SHEET.

PAVEMENT DELINEATION QUANTITIES

POSTMILE LIMITS	LOCATION	DETAIL No. OR PAVEMENT MARKING	REMOVE THERMOPLASTIC PAVEMENT MARKING	REMOVE THERMOPLASTIC TRAFFIC STRIPE	REMOVE PAVEMENT MARKER	THERMOPLASTIC TRAFFIC STRIPE (SPRAYABLE)			8" THERMOPLASTIC TRAFFIC STRIPE	PAVEMENT MARKER				THERMO-PLASTIC PAVEMENT MARKING
										NON-(REFLECTIVE)	(RETROREFLECTIVE)			
						4" YELLOW	4" WHITE	8" WHITE	WHITE	TYPE A	TYPE D	TYPE G	TYPE H	
			SQFT	LF	EA	LF	LF	LF	LF	EA	EA	EA	EA	SQFT
PM R138.3 TO PM R154.6	FIVE MILE Rd EB ENTRANCE RAMP	25A			48	1,120							48	
		27B					1,480							
		36A			12			255				12		
		8					216							
		TYPE I ARROW (2)	168											62
		8" STRIPE	71											71
	FIVE MILE Rd EB EXIT RAMP	25A			52	1,220							52	
		27B					1,480							
		36			24			529				24		
		TYPE V ARROW (2)	240											66
		"STOP" (2)	102											44
		"AHEAD" (1)	64											31
		LIMIT LINE	52											52
		8" STRIPE	105											105
	FIVE MILE Rd WB ENTRANCE RAMP	25A			64	1,500							64	
		27B					1,700							
		36A			13			270				13		
		8					312							
		TYPE I ARROW (1)	84											31
	FIVE MILE Rd WB EXIT RAMP	25A			63	1,480							63	
		27B					1,900							
		36			26			590				26		
		TYPE V ARROW (2)	240											66
		"STOP" (2)	102											44
		"AHEAD" (1)	64											31
		LIMIT LINE	45											45
		SUBTOTAL	1,337	0	302	14,052			0	0	302			648

EXISTING UTILITY FACILITIES HAVE NOT BEEN PLOTTED ON THESE PLANS

PAVEMENT DELINEATION QUANTITIES

PDQ-4

REVISED BY | DATE REVISED
PATTI BARTOLI | DARYUSH NAMI
CALCULATED-DESIGNED BY | CHECKED BY
FUNCTIONAL SUPERVISOR
W. E. WASSER

STATE OF CALIFORNIA - DEPARTMENT OF TRANSPORTATION
Caltrans® TRAFFIC DESIGN

LAST REVISION 08-20-12
DATE PLOTTED => 04-SEP-2012
TIME PLOTTED => 09:21

Dist	COUNTY	ROUTE	POST MILES TOTAL PROJECT	SHEET No.	TOTAL SHEETS
08	SBd	40	R138.3/R154.5	27	43

W E Wasser 8-20-12
REGISTERED CIVIL ENGINEER DATE

8-20-12
PLANS APPROVAL DATE

REGISTERED PROFESSIONAL ENGINEER W. E. WASSER No. 37378 Exp. 6-30-14 CIVIL STATE OF CALIFORNIA

THE STATE OF CALIFORNIA OR ITS OFFICERS OR AGENTS SHALL NOT BE RESPONSIBLE FOR THE ACCURACY OR COMPLETENESS OF SCANNED COPIES OF THIS PLAN SHEET.

PAVEMENT DELINEATION QUANTITIES

POSTMILE LIMITS	LOCATION	DETAIL No. OR PAVEMENT MARKING	REMOVE THERMOPLASTIC PAVEMENT MARKING	REMOVE THERMOPLASTIC TRAFFIC STRIPE	REMOVE PAVEMENT MARKER	THERMOPLASTIC TRAFFIC STRIPE (SPRAYABLE)			8" THERMOPLASTIC TRAFFIC STRIPE	PAVEMENT MARKER				THERMO-PLASTIC PAVEMENT MARKING
										NON-(REFLECTIVE)	(RETROREFLECTIVE)			
						4" YELLOW	4" WHITE	8" WHITE	WHITE	TYPE A	TYPE D	TYPE G	TYPE H	
			SQFT	LF	EA	LF	LF	LF	LF	EA	EA	EA	EA	SQFT
PM R138.3 TO PM R154.6	PARK MOABI Rd EB ENTRANCE RAMP	25A			41	960							41	
		27B					1,320							
		36A			16			342				16		
		8					408							
		TYPE I ARROW (1)	84											31
	PARK MOABI Rd EB EXIT RAMP	25A			33	766							33	
		27B					1,155							
		36			35			804				35		
		TYPE V ARROW (2)	240											66
		"STOP" (2)	102											44
		"AHEAD" (1)	64											31
		LIMIT LINE	50											50
	PARK MOABI Rd WB ENTRANCE RAMP	25A			31	710							31	
		27B					1,100							
		36A			18			390				18		
		8					216							
		TYPE I ARROW (1)	84											31
	PARK MOABI Rd WB EXIT RAMP	25A			33	750							33	
		27B					1,125							
		36			26			730				32		
		TYPE V ARROW (2)	240											66
		"STOP" (2)	102											44
		"AHEAD" (1)	64											31
		LIMIT LINE	60											60
		SUBTOTAL	1,090	0	233	10,776			0	0	239			454

EXISTING UTILITY FACILITIES HAVE NOT BEEN PLOTTED ON THESE PLANS

PAVEMENT DELINEATION QUANTITIES

PDQ-5

STATE OF CALIFORNIA - DEPARTMENT OF TRANSPORTATION
Caltrans® TRAFFIC DESIGN

FUNCTIONAL SUPERVISOR: W. E. WASSER
CALCULATED-DESIGNED BY: PATTI BARTOLI
CHECKED BY: DARYUSH NAMI
REVISED BY
DATE REVISED

LAST REVISION 08-20-12
DATE PLOTTED => 04-SEP-2012
TIME PLOTTED => 09:21

Dist	COUNTY	ROUTE	POST MILES TOTAL PROJECT	SHEET No.	TOTAL SHEETS
08	SBd	40	R138.3/R154.5	28	43

W E Wasser 8-20-12
REGISTERED CIVIL ENGINEER DATE

8-20-12
PLANS APPROVAL DATE

REGISTERED PROFESSIONAL ENGINEER W. E. WASSER No. 37378 Exp. 6-30-14 CIVIL STATE OF CALIFORNIA

THE STATE OF CALIFORNIA OR ITS OFFICERS OR AGENTS SHALL NOT BE RESPONSIBLE FOR THE ACCURACY OR COMPLETENESS OF SCANNED COPIES OF THIS PLAN SHEET.

CHANNELIZER (SURFACE MOUNTED) (LEFT IN PLACE)

EA
60

REMOVE CHANNELIZER

EA
60

PAVEMENT DELINEATION QUANTITIES

POSTMILE LIMITS	LOCATION	DETAIL No. OR PAVEMENT MARKING	REMOVE THERMOPLASTIC PAVEMENT MARKING	REMOVE THERMOPLASTIC TRAFFIC STRIPE	REMOVE PAVEMENT MARKER	THERMOPLASTIC TRAFFIC STRIPE (SPRAYABLE)			8" THERMOPLASTIC TRAFFIC STRIPE	PAVEMENT MARKER				THERMO-PLASTIC PAVEMENT MARKING
										NON-(REFLECTIVE)	(RETROREFLECTIVE)			
						4" YELLOW	4" WHITE	8" WHITE	WHITE	TYPE A	TYPE D	TYPE G	TYPE H	
			SQFT	LF	EA	LF	LF	LF	LF	EA	EA	EA	EA	SQFT
PM R138.3 TO PM R154.6	WESTBOUND AGRICULTURAL INSPECTION STATION	"STOP" (9)	408											198
		"AHEAD" (4)	192											124
		"TRUCKS" (1)	120											33
		"ONLY" (1)	51											22
		LIMIT LINE	68											68
		TYPE VI ARROW (3)	297											126
		25A			45	1,035								
		27B					1,400							
		9			16		700					16		
		13			40		300			32		8	45	
		38		1,650	70				1,650			70		
		4" WHITE SOLID					400							
		12" WHITE CHEVRON	500											500
	PARK MOABI Rd OC Br No. 54-669	21				380								
	FIVE MILE Rd OC Br No. 54-683	21				230								
		19				1,075								
	E BROADWAY St UC Br No. 54-819	21				510								
		38		460					460					
		5					940							
		TYPE IV ARROW (4)	60											60
	D St OC Br No. 54-815	21				190								
	J St UC Br No. 54-814	21				250								
		38A		100					100					
		TYPE VI ARROW (2)	96											30
	W BROADWAY/RIVER Rd OC Br No. 54-808	21				190								
		SUBTOTAL	1,792	2,210	171	7,600			2,210	32	139			1,161
		TOTAL	8,527	2,210	16,084	591,390			2,210	14,392	8,885			4,010

EXISTING UTILITY FACILITIES HAVE NOT BEEN PLOTTED ON THESE PLANS

PAVEMENT DELINEATION QUANTITIES

PDQ-6

STATE OF CALIFORNIA - DEPARTMENT OF TRANSPORTATION
Caltrans TRAFFIC DESIGN

FUNCTIONAL SUPERVISOR: W. E. WASSER
CALCULATED-DESIGNED BY: PATTI BARTOLI
CHECKED BY: DARYUSH NAMI
REVISED BY
DATE REVISED

LAST REVISION 08-20-12
DATE PLOTTED => 04-SEP-2012
TIME PLOTTED => 09:21

Dist	COUNTY	ROUTE	POST MILES TOTAL PROJECT	SHEET No.	TOTAL SHEETS
08	SBd	40	R138.3/R154.5	29	43

W E Wasser 8-20-12
REGISTERED CIVIL ENGINEER DATE

8-20-12
PLANS APPROVAL DATE

REGISTERED PROFESSIONAL ENGINEER W. E. WASSER No. 37378 Exp. 6-30-14 CIVIL STATE OF CALIFORNIA

THE STATE OF CALIFORNIA OR ITS OFFICERS OR AGENTS SHALL NOT BE RESPONSIBLE FOR THE ACCURACY OR COMPLETENESS OF SCANNED COPIES OF THIS PLAN SHEET.

NOTE:

1. REMOVE MARKER INCLUDES L-MARKERS AND DELINEATORS.

DELINEATOR AND MARKER QUANTITIES

POSTMILE	DIRECTION	LOCATION	APPROACH ORIENTATION	DELINEATOR (CLASS 1) TYPE F	OBJECT MARKER TYPE L-1	OBJECT MARKER TYPE P	REMOVE MARKER	RESET MILEPOST MARKER
				EA	EA	EA	EA	EA
R138.29	WB	BUZZARD WASH (APPROACH)	INSIDE Shld	1		1	3	
			OUTSIDE Shld	1		1	3	1
R138.53	WB	BUZZARD WASH (APPROACH)	INSIDE Shld		1		2	
			OUTSIDE Shld		1		2	1
R139.12	WB	PARK Rd OC	INSIDE Shld				1	
			OUTSIDE Shld		2			
R139.26	WB	COYOTE WASH (APPROACH)	INSIDE Shld		1		3	
			OUTSIDE Shld		1		1	
R139.86	WB	FOX WASH (APPROACH)	INSIDE Shld		2	1	3	
			OUTSIDE Shld		2	1	4	
R140.03	WB	FOX WASH OVERFLOW (APPROACH)	INSIDE Shld		2	1	3	
			OUTSIDE Shld		2	1	3	
R140.14	WB	LEMMING WASH (APPROACH)	INSIDE Shld	1		1	3	
			OUTSIDE Shld	1		1	4	
R140.77	WB	ROADRUNNER WASH (APPROACH)	INSIDE Shld	1	2	1	4	
			OUTSIDE Shld	1		1	3	
R141.00	WB	VER Rd OC COLUMN EXIT RAMP	INSIDE Shld				2	
			OUTSIDE Shld		1			
R141.10	WB	SIGN POST	INSIDE Shld					
			OUTSIDE Shld		1		2	
R141.51	WB	S St CHANNEL (APPROACH)	INSIDE Shld		1	1	2	
			OUTSIDE Shld					
R141.51	WB	ARCH St UC/ S St CHANNEL	INSIDE Shld					
			OUTSIDE Shld		1	1	7	
R141.67	WB	ARCH St UC (APPROACH)	INSIDE Shld		1	1	2	
			OUTSIDE Shld					
R141.67	WB	NEEDLES OH/ ARCH St UC	INSIDE Shld					
			OUTSIDE Shld	16	1		20	1
R142.03	WB	NEEDLES OH (APPROACH)	INSIDE Shld		2	1	2	
			OUTSIDE Shld					
R142.20	WB	L STREET UC/ NEEDLES OH	INSIDE Shld					
			OUTSIDE Shld	8		1	11	2
R142.23	WB	L STREET UC (APPROACH)	INSIDE Shld		1	1	2	
			OUTSIDE Shld	1	1	1	3	1
R142.37	WB	J STREET UC (DEPARTURE)	INSIDE Shld					
			OUTSIDE Shld	3			3	
			SUBTOTAL	41	43		98	6

DELINEATOR AND MARKER QUANTITIES

POSTMILE	DIRECTION	LOCATION	APPROACH ORIENTATION	DELINEATOR (CLASS 1) TYPE F	OBJECT MARKER TYPE L-1	OBJECT MARKER TYPE P	REMOVE MARKER	RESET MILEPOST MARKER
				EA	EA	EA	EA	EA
R142.40	WB	J STREET UC (APPROACH)	INSIDE Shld	1	2	1	5	
			OUTSIDE Shld	4	2	1	8	1
R142.63	WB	SIGN POST	INSIDE Shld					
			OUTSIDE Shld		2		4	
R143.31	WB	DRAINAGE/TERRAIN	INSIDE Shld					
			OUTSIDE Shld	8	2		12	
R143.74	WB	Jct 40/95 Sep (DEPARTURE)	INSIDE Shld					
			OUTSIDE Shld	8	2		10	
R143.78	WB	Jct 40/95 Sep (APPROACH)	INSIDE Shld	1	2	1	4	
			OUTSIDE Shld	6	2	1	10	1
R144.38	WB	ICE HOUSE DITCH	INSIDE Shld	1	2		2	
			OUTSIDE Shld		1		2	1
R145.65	WB	AIRPORT WASH (APPROACH)	INSIDE Shld	2	3		6	
			OUTSIDE Shld	1	1		4	1
R146.13	WB	MANZANITA WASH (APPROACH)	INSIDE Shld		3		2	
			OUTSIDE Shld		3		3	1
R147.27	WB	MESQUITE WASH (APPROACH)	INSIDE Shld	2	3		7	
			OUTSIDE Shld	1	1		3	1
R148.88	WB	OCOTILLO WASH (APPROACH)	INSIDE Shld		3		3	
			OUTSIDE Shld		3		2	
R149.27	WB	PALO VERDE WASH (APPROACH)	INSIDE Shld		2		4	
			OUTSIDE Shld	2	1		5	1
R149.86	WB	BEALE WASH (APPROACH)	INSIDE Shld		2		4	
			OUTSIDE Shld		1		5	1
R150.25	WB	SAGE WASH (APPROACH)	INSIDE Shld		2		4	
			OUTSIDE Shld		1		5	1
R153.30	WB	DRAINAGE/TERRIAN	INSIDE Shld					
			OUTSIDE Shld		2		2	
R154.42	WB	MARINA Rd UC (DEPARTURE)	INSIDE Shld					
			OUTSIDE Shld		2		1	
R154.45	WB	COLORADO RIVER /MARINA Rd UC	INSIDE Shld					
			OUTSIDE Shld	3	1		4	1
			SUBTOTAL	40	55		121	10

EXISTING UTILITY FACILITIES HAVE NOT BEEN PLOTTED ON THESE PLANS

PAVEMENT DELINEATION QUANTITIES

PDQ-7

STATE OF CALIFORNIA - DEPARTMENT OF TRANSPORTATION
Caltrans TRAFFIC DESIGN

FUNCTIONAL SUPERVISOR: W. E. WASSER
CALCULATED-DESIGNED BY: DARYUSH NAMI
CHECKED BY: PATTI BARTOLI
REVISED BY
DATE REVISED

LAST REVISION 08-20-12 | DATE PLOTTED => 04-SEP-2012 | TIME PLOTTED => 09:21

Dist	COUNTY	ROUTE	POST MILES TOTAL PROJECT	SHEET No.	TOTAL SHEETS
08	SBd	40	R138.3/R154.5	30	43

W E Wasser 8-20-12
REGISTERED CIVIL ENGINEER DATE

8-20-12
PLANS APPROVAL DATE

REGISTERED PROFESSIONAL ENGINEER W. E. WASSER No. 37378 Exp. 6-30-14 CIVIL STATE OF CALIFORNIA

THE STATE OF CALIFORNIA OR ITS OFFICERS OR AGENTS SHALL NOT BE RESPONSIBLE FOR THE ACCURACY OR COMPLETENESS OF SCANNED COPIES OF THIS PLAN SHEET.

DELINEATOR AND MARKER QUANTITIES

POSTMILE	DIRECTION	LOCATION	APPROACH ORIENTATION	DELINEATOR (CLASS 1) TYPE F	OBJECT MARKER TYPE L-1	OBJECT MARKER TYPE P	REMOVE MARKER	RESET MILEPOST MARKER
				EA	EA	EA	EA	EA
R138.51	EB	BUZZARD WASH (APPROACH)	INSIDE Shld		1		2	0
			OUTSIDE Shld		3		3	1
R139.05	EB	DRAINAGE/TERRAIN	INSIDE Shld	1	2		1	
			OUTSIDE Shld					
R139.23	EB	COYOTE WASH (APPROACH)	INSIDE Shld		3		3	
			OUTSIDE Shld	1	1		2	1
R139.81	EB	FOX WASH (APPROACH)	INSIDE Shld	1	2	1	2	
			OUTSIDE Shld	1	2	1	2	1
R140.01	EB	FOX WASH OVERFLOW	INSIDE Shld		2	1	3	
			OUTSIDE Shld	1	2	1	3	1
R140.11	EB	LEMMING WASH (APPROACH)	INSIDE Shld			1	2	
			OUTSIDE Shld	1		1	2	2
R140.72	EB	ROAD RUNNER WASH (APPROACH)	INSIDE Shld	1	2	1	2	
			OUTSIDE Shld	1		1	2	1
R141.48	EB	S STREET CHANNEL (APPROACH)	INSIDE Shld		1	1	2	
			OUTSIDE Shld	2		1	4	
R141.62	EB	ARCH STREET UC (APPROACH)	INSIDE Shld	5		1	8	
			OUTSIDE Shld	4		1	6	1
R141.97	EB	NEEDLES OH	INSIDE Shld	1		1	2	
			OUTSIDE Shld	15		1	18	2
R142.20	EB	L STREET UC	INSIDE Shld	1		1		
			OUTSIDE Shld	10		1	13	2
R142.38	EB	J STREET UC	INSIDE Shld		2	1	2	
			OUTSIDE Shld		3	1	2	1
R143.40	EB	DRAINAGE/TERRAIN	INSIDE Shld					
			OUTSIDE Shld	5	2		7	
R143.75	EB	ROUTE 40/95 SEPARATION	INSIDE Shld	2	3	1	5	
			OUTSIDE Shld	1	3	1	3	
R144.38	EB	ICE HOUSE DITCH (APPROACH)	INSIDE Shld	2	3		5	
			OUTSIDE Shld	0	3		2	1
R144.40	EB	ICE HOUSE DITCH (DEPARTURE)	INSIDE Shld	0	2			
			OUTSIDE Shld	1	0			
R145.61	EB	AIRPORT WASH	INSIDE Shld	5	2		5	
			OUTSIDE Shld	2	3		3	1
R146.12	EB	MANZANITA WASH (APPROACH)	INSIDE Shld	1	3		3	
			OUTSIDE Shld	1	3		4	1
			SUBTOTAL	66	73		123	16

DELINEATOR AND MARKER QUANTITIES

POSTMILE	DIRECTION	LOCATION	APPROACH ORIENTATION	DELINEATOR (CLASS 1) TYPE F	OBJECT MARKER TYPE L-1	OBJECT MARKER TYPE P	REMOVE MARKER	RESET MILEPOST MARKER
				EA	EA	EA	EA	EA
R147.25	EB	MESQUITE WASH	INSIDE Shld	2	3		4	
			OUTSIDE Shld	1	3		4	1
R148.87	EB	OCOTILLO WASH (APPROACH)	INSIDE Shld	1	1		1	
			OUTSIDE Shld		3		2	1
R148.88	EB	OCOTILLO WASH (DEPARTURE)	INSIDE Shld					
			OUTSIDE Shld		2			
R149.27	EB	PALO VERDE WASH (APPROACH)	INSIDE Shld		2		1	
			OUTSIDE Shld		1		3	1
R149.85	EB	BEALE WASH (APPROACH)	INSIDE Shld		2		3	
			OUTSIDE Shld		1		2	1
R150.25	EB	SAGE WASH (APPROACH)	INSIDE Shld		2		3	
			OUTSIDE Shld		3		2	1
R153.32	EB	PARK MOABI Rd OC	INSIDE Shld					
			OUTSIDE Shld		2		4	
R154.25	EB	BAT CAVE WASH	INSIDE Shld	2	2		4	
			OUTSIDE Shld	1	2		3	
R154.42	EB	MARINA Rd UC (APPROACH)	INSIDE Shld					
			OUTSIDE Shld	2	3		6	1
R154.45	EB	MARINA Rd UC (DEPARTURE)	INSIDE Shld					
			OUTSIDE Shld	2	1		5	1
			SUBTOTAL	11	33		47	7
			TOTAL	158	204		389	39

EXISTING UTILITY FACILITIES HAVE NOT BEEN PLOTTED ON THESE PLANS

PAVEMENT DELINEATION QUANTITIES

PDQ-8

STATE OF CALIFORNIA - DEPARTMENT OF TRANSPORTATION
Caltrans® TRAFFIC DESIGN

FUNCTIONAL SUPERVISOR: W. E. WASSER
CALCULATED-DESIGNED BY: DARYUSH NAMI
CHECKED BY: PATTI BARTOLI
REVISED BY
DATE REVISED

LAST REVISION 08-20-12
DATE PLOTTED => 04-SEP-2012
TIME PLOTTED => 09:21

Dist	COUNTY	ROUTE	POST MILES TOTAL PROJECT	SHEET No.	TOTAL SHEETS
08	SBd	40	R138.3/R154.5	31	43

W E Wasser 8-20-12
REGISTERED CIVIL ENGINEER DATE

8-20-12
PLANS APPROVAL DATE

REGISTERED PROFESSIONAL ENGINEER W. E. WASSER No. 37378 Exp. 6-30-14 CIVIL STATE OF CALIFORNIA

THE STATE OF CALIFORNIA OR ITS OFFICERS OR AGENTS SHALL NOT BE RESPONSIBLE FOR THE ACCURACY OR COMPLETENESS OF SCANNED COPIES OF THIS PLAN SHEET.

NOTES:

1. EXACT LOCATION AND POSITION OF ROADSIDE SIGNS TO BE DETERMINED BY THE ENGINEER.
2. POST LENGTHS GIVEN ARE APPROXIMATE.
3. "VC" DIM = VERTICAL CLEARANCE EP TO BOTTOM OF SIGN PANEL.

ROADSIDE SIGN QUANTITIES

POST MILE	DIRECTION	SIGN CODE		PANEL SIZE	"VC" DIMENSION	POST LENGTH		POST SIZE	ROADSIDE SIGN - ONE POST	RESET ROADSIDE SIGN (TWO POST)	REMARKS
						L†	R†				
		FEDERAL	CALIFORNIA		FT	FT			EA	EA	
R138.5	EASTBOUND		R48-2(CA)	36" X 48"	7		16	4' X 6"	1		SPEED ENFORCED BY AIRCRAFT
R140.7	EASTBOUND	G-SPECIAL		Exist						1	Rte 40 BUSINESS LOOP, NEXT RIGHT
R143.3	EASTBOUND	G-SPECIAL		Exist						1	DESERT INFORMATION W/ARROW
R149.1	WESTBOUND	R-SPECIAL		Exist						1	ALL OTHER VEHICLES/COMMERICAL TRUCKS ONLY
								TOTAL	1	3	

ROADSIDE SIGN PANEL QUANTITIES

POST MILE	SIGN CODE		SIGN DIMENSION L x D	SINGLE FACED	BACKGROUND		LEGEND		PROTECTIVE OVERLAY	FURNISH SINGLE SHEET ALUMINUM SIGN	SIGN MESSAGE/DESCRIPTION
					SHEETING COLOR	RETRO-REFLECTIVE ASTM TYPE	SHEETING COLOR	RETRO-REFLECTIVE ASTM TYPE	PREMIUM	(.063"-UNFRAMED)	
	FEDERAL	CALIFORNIA								SQFT	
R138.5		R48-2(CA)	36 x 48	x	WHITE	IV	BLACK	-	x	12.0	SPEED ENFORCED BY AIRCRAFT
									TOTAL	12.0	

EXISTING UTILITY FACILITIES HAVE NOT BEEN PLOTTED ON THESE PLANS

SIGN QUANTITIES

SQ-1

STATE OF CALIFORNIA - DEPARTMENT OF TRANSPORTATION
Caltrans TRAFFIC DESIGN

FUNCTIONAL SUPERVISOR: W. E. WASSER
CALCULATED-DESIGNED BY: PATTI BARTOLI
CHECKED BY: DARYUSH NAMI
REVISED BY
DATE REVISED

LAST REVISION 08-20-12
DATE PLOTTED => 04-SEP-2012
TIME PLOTTED => 09:21

Dist	COUNTY	ROUTE	POST MILES TOTAL PROJECT	SHEET No.	TOTAL SHEETS
08	SBd	40	R138.3/R154.5	32	43

Kamal McHantaf 9-4-12
REGISTERED CIVIL ENGINEER DATE

8-20-12
PLANS APPROVAL DATE

REGISTERED PROFESSIONAL ENGINEER KAMAL McHANTAF No. C51050 Exp. 9-30-13 CIVIL STATE OF CALIFORNIA

THE STATE OF CALIFORNIA OR ITS OFFICERS OR AGENTS SHALL NOT BE RESPONSIBLE FOR THE ACCURACY OR COMPLETENESS OF SCANNED COPIES OF THIS PLAN SHEET.

ABBREVIATIONS:

OVFLW	OVERFLOW
(APP)	APPROACH
(DEP)	DEPARTURE
BARR	BARRIER

METAL BEAM RAILING AND HMA DIKE QUANTITIES

PM	LOCATION	BRIDGE No.	DIRECTION	Exist BRIDGE RAILING	LAYOUT TYPE		RECONSTRUCT MBGR		MBGR (WOOD POST)		DBL MBGR (WOOD POST)		Alt IN-LINE TERMINAL SYSTEM		Alt FLARED TERMINAL SYSTEM		(N) BURIED POST ANCHOR		TRANSITION RAILING (TYPE WB)		END CAP (TYPE TC)		END ANCHOR ASSEMBLY (TYPE SFT)		END CAP (TYPE A)		Alt CRASH CUSHION		REMOVE MBGR		MINOR CONCRETE (MINOR STRUCTURE)		PLACE HMA DIKE (TYPE C)		PLACE HMA DIKE (TYPE F)		HMA (FOR AC DIKES & Misc AREAS)		REMOVE AC DIKE	
							LF		LF		LF		EA		EA		EA		EA		EA		EA		EA		EA		LF		CY		LF		LF		TON		LF	
				TYPE	Lt	Rt	Lt	Rt	Lt	Rt	Lt	Rt	Lt	Rt	Lt	Rt	Lt	Rt	Lt	Rt	Lt	Rt	Lt	Rt	Lt	Rt	Lt	Rt	Lt	Rt	Lt	Rt	Lt	Rt	Lt	Rt	Lt	Rt	Lt	Rt	Lt	Rt
R138.505	BUZZARD WASH (APP)	54-701R	EB	TYPE 1	12A	12B	25.0	50.0	250.0				1			1			1	1	1	1							75.0	62.5	0.8	0.8		38		75		1.3		113
R139.048	DRAINAGE/TERRAIN		EB		11B		62.5								1								1						37.5												
R139.117	PARK Rd OC		EB		14A		50.0				75.0												1				1		75.0												
R139.228	COYOTE WASH (APPROACH)	54-703	EB	TYPE 1	12B	12A	25.0	75.0	250.0					1	1				1	1	1	1							62.5	75.0	0.8	0.8		50		100		1.7		150
R139.811	FOX WASH (APPROACH)	54-704R	EB	TYPE 1	12B	12B	75.0	62.5							1	1			1	1	1	1							62.5	62.5	0.8	0.8		38		88		1.5		125
R140.005	FOX WASH OVFLW (APP)	54-705R	EB	TYPE 1	12B	12B	25.0	62.5	250.0						1	1			1	1	1	1							62.5	62.5	0.8	0.8		38		88		1.5		125
R140.108	LEMMING WASH (APPROACH)	54-706R	EB	TYPE 1	12A	12A	25.0	75.0					1	1					1	1	1	1							75.0	75.0	0.8	0.8		50		100		1.7		150
R140.719	ROADRUNNER WASH (APP)	54-707R	EB	TYPE 1	12B	12A	87.5	75.0	187.5					1	1				1	1	1	1							62.5	75.0	0.8	0.8		50		100		1.7		150
R141.017	RIVER Rd OC		EB		14A		50.0				75.0												1				1		75.0												
R141.476	S STREET CHANNEL (APP)	54-811R	EB	TYPE 9	12E	12A	50.0	150.0			100.0			1					1	1	1	1					1		62.5	75.0	0.8	0.8		50		175		2.7		225
R141.616	ARCH STREET UC (APP)	54-812R	EB	TYPE 9	12D	12D	531.0	433.0											1	1	1	1			1	1			25.0	25.0	0.8	0.8				458		6.1		458
R141.966	NEEDLES OH	54-813R	EB	TYPE 9	12E	12D	50.0	1530.0			100.0								1	1	1	1				1	1		62.5	25.0	0.8	0.8				1555		20.8		1555
R142.203	L STREET UC	54-820R	EB	TYPE 9	12E	12D	50.0	1010.0			100.0								1	1	1	1				1	1		62.5	25.0	0.8	0.8				1035		13.8		1035
R142.376	J STREET UC	54-814R	EB	TYPE 9	12E	12B	50.0	25.0			100.0					1			1	1	1	1					1		62.5	62.5	0.8	0.8		38		50		1.0		88
R142.971	D STREET OC		EB		14A		50.0				75.0												1				1		75.0												
R143.400	SIGN/DRAINAGE/TERRAIN		EB			11B	0.0	512.5								1								1					0.0	37.5				38		513		7.1		550
R143.749	Rte 40/95 Sep (APP)	54-819R	EB	TYPE 9	12B	12B	237.5	62.5							1	1			1	1	1	1							62.5	62.5	0.8	0.8		38		88		1.5		125
R144.376	ICE HOUSE DITCH (APP)	54-508	EB	Conc BARR	12B	12B	262.5	50.0	12.5						1	1			1	1	1	1							62.5	62.5	0.8	0.8				14		0.2		14
R144.404	ICE HOUSE DITCH (DEP)	54-508	EB	Conc BARR	12DD		25.0																1		1						0.8									
R145.612	AIRPORT WASH	54-507	EB	Conc BARR	12C	12B	550.0	237.5								1	1		1	1	1	1							25.0	62.5	0.8	0.8		38	22	263	0.3	3.8	22	300
R146.116	MANZANITA WASH (APP)	54-506	EB	Conc BARR	12B	12B	137.5	75.0	137.5						1	1			1	1	1	1							62.5	62.5	0.8	0.8		38		100		1.6		138
R147.251	MESQUITE WASH (APP)	54-505	EB	Conc BARR	12B	12B	200.0	112.5	75.0						1	1			1	1	1	1							62.5	62.5	0.8	0.8								
R148.198	NATIONAL TRAILS OC		EB		14A		50.0				75.0												1				1		75.0												
R148.873	OCOTILLO WASH (APP)	54-504	EB	Conc BARR	12A	12B	62.5	50.0	212.5				1			1			1	1	1	1							75.0	62.5	0.8	0.8		38		75		1.3		113
R148.884	OCOTILLO WASH (DEP)	54-504	EB	Conc BARR		12DD		12.5																1		1						0.8				13		0.2		13
R149.266	PALO VERDE WASH (APP)	54-503	EB	TYPE 1	12E	12B	112.5	12.5	162.5		187.5					1			1	1	1	1					1		62.5	62.5	0.8	0.8		38		38		0.8		75
R149.848	BEALE WASH (APPROACH)	54-502	EB	Conc BARR	12E	12A	112.5	37.5	162.5		187.5			1					1	1	1	1					1		62.5	75.0	0.8	0.8		50		63		1.2		113
R150.245	SAGE WASH (APPROACH)	54-501	EB	Conc BARR	12E	12B	112.5	50.0	162.5		187.5					1			1	1	1	1					1		62.5	62.5	0.8	0.8		38		75		1.3		113
R153.315	PARK MOABI Rd OC	54-669	EB		14A	11B	50.0	50.0			75.0					1							1	1			1		75.0	37.5		34.4								
R154.246	BAT CAVE WASH		EB		11B	11B	287.5	87.5							1	1							1	1					37.5	37.5										
R154.424	MARINA Rd UC (APP)	54-670	EB	TYPE 1		12B		187.5								1				1		1								62.5		0.8				180		2.4		180
R154.451	MARINA Rd UC (DEP)	54-670	EB	TYPE 1		12D		237.0												1		1				1				25.0		0.8				262		3.5		262
SUBTOTAL							8728.5		1862.5		1337.5		8		26				42		42		12		7		12		3062.5		69.6		668		5530		79.0		6192	

SUMMARY OF QUANTITIES

Q-1

EXISTING UTILITY FACILITIES HAVE NOT BEEN PLOTTED ON THESE PLANS

REVISED BY | DATE REVISED

KAMAL McHANTAF | MICHAEL RISTIC

CALCULATED-DESIGNED BY | CHECKED BY

FUNCTIONAL SUPERVISOR: MICHAEL RISTIC

STATE OF CALIFORNIA - DEPARTMENT OF TRANSPORTATION
Caltrans® MAINTENANCE DESIGN

LAST REVISION 09-04-12
DATE PLOTTED => 04-SEP-2012
TIME PLOTTED => 09:21

Dist	COUNTY	ROUTE	POST MILES TOTAL PROJECT	SHEET No.	TOTAL SHEETS
08	SBd	40	R138.3/R154.5	33	43

Kamal McHantaf 9-4-12
REGISTERED CIVIL ENGINEER DATE

8-20-12
PLANS APPROVAL DATE

REGISTERED PROFESSIONAL ENGINEER KAMAL McHANTAF No. C51050 Exp. 9-30-13 CIVIL STATE OF CALIFORNIA

THE STATE OF CALIFORNIA OR ITS OFFICERS OR AGENTS SHALL NOT BE RESPONSIBLE FOR THE ACCURACY OR COMPLETENESS OF SCANNED COPIES OF THIS PLAN SHEET.

ABBREVIATIONS:

OVFLW OVERFLOW
(APP) APPROACH
(DEP) DEPARTURE

METAL BEAM RAILING AND HMA DIKE QUANTITIES

PM	LOCATION	BRIDGE No.	DIRECTION	Exist BRIDGE RAILING	LAYOUT TYPE		RECONSTRUCT MBGR		MBGR (WOOD POST)		DBL MBGR (WOOD POST)		Alt IN-LINE TERMINAL SYSTEM		Alt FLARED TERMINAL SYSTEM		(N) BURIED POST ANCHOR		TRANSITION RAILING (TYPE WB)		END CAP (TYPE TC)		END ANCHOR ASSEMBLY (TYPE SFT)		END CAP (TYPE A)		Alt CRASH CUSHION		REMOVE MBGR		MINOR CONCRETE (MINOR STRUCTURE)		PLACE HMA DIKE (TYPE C)		PLACE HMA DIKE (TYPE F)		HMA (FOR AC DIKES & Misc AREAS)		REMOVE AC DIKE	
							LF		LF		LF		EA		EA		EA		EA		EA		EA		EA		EA		LF		CY		LF		LF		TON		LF	
				TYPE	Lt	Rt	Lt	Rt	Lt	Rt	Lt	Rt	Lt	Rt	Lt	Rt	Lt	Rt	Lt	Rt	Lt	Rt	Lt	Rt	Lt	Rt	Lt	Rt	Lt	Rt	Lt	Rt	Lt	Rt	Lt	Rt	Lt	Rt	Lt	Rt
R138.289	BUZZARD WASH (APPROACH)	54-700L	WB	TYPE 1	12A	12A	100.0	150.0	175.0				1	1					1	1	1	1							75.0	75.0	0.8	0.8		50		175		2.7		225
R138.533	BUZZARD WASH (APPROACH)	54-701L	WB	TYPE 1	12A	12A	25.0	25.0	250.0				1	1					1	1	1	1							75.0	75.0	0.8	0.8		50		50		1.1		100
R139.117	PARK Rd OC	54-702	WB		11B		62.5								1								1						37.5											
R139.117	PARK Rd OC	54-702	WB		14A		50.0				75.0												1				1		75.0											
R139.264	COYOTE WASH (APPROACH)	54-703	WB	TYPE 1	12A	12A	25.0	25.0	250.0				1	1					1	1	1	1							75.0	75.0	0.8	0.8		50		50		1.1		100
R139.862	FOX WASH (APPROACH)	54-704L	WB	TYPE 1	12B	12B	25.0	25.0	250.0						1	1			1	1	1	1							62.5	62.5	0.8	0.8								
R140.033	FOX WASH OVFLW (APP)	54-705L	WB	TYPE 1	12B	12B	25.0	25.0	250.0						1	1			1	1	1	1							62.5	62.5	0.8	0.8		38		50		1.0		88
R140.136	LEMMING WASH (APPROACH)	54-706L	WB	TYPE 1	12B	12B	25.0	25.0	250.0						1	1			1	1	1	1							62.5	62.5	0.8	0.8		38		50		1.0		88
R140.770	ROADRUNNER WASH (APP)	54-707L	WB	TYPE 1	12E	12B	50.0	50.0	225.0		100.0					1			1	1	1	1					1		62.5	62.5	0.8	0.8		38		75		1.3		113
R141.000	RIVER Rd OC COLUMN/EXIT-RAMP	54-808	WB					62.5																1																
R141.017	RIVER Rd OC		WB		14A		50.0				75.0												1				1		75.0											
R141.097	SIGN POST		WB			11A		75.0						1										1						50.0				50		75		1.4		125
R141.506	S St CHANNEL (APPROACH)	54-811L	WB	TYPE 9	12E		50.0				100.0								1		1						1		62.5		0.8									
R141.506	ARCH St UC/S St Chnl	54-811L	WB	TYPE 9		12D		682.0												1		1				1				25.0		1.6				707		9.5		707
R141.671	ARCH St UC (APPROACH)	54-812L	WB	TYPE 9	12E		50.0				100.0								1		1						1		62.5	0.0	0.8									
R141.671	NEEDLES OH/ARCH St UC	54-812L	WB	TYPE 9		12D		1581.0												1		1				1				25.0		1.6				351		4.7		351
R142.027	NEEDLES OH (APPROACH)	54-813L	WB	TYPE 9	12E		50.0				100.0								1		1						1		62.5	0.0	0.8									
R142.198	L STREET UC/NEEDLES OH	54-820L	WB	TYPE 9		12D		775.0												1		1				1				25.0		1.6				800		10.7		800
R142.225	L STREET UC (APPROACH)	54-820L	WB	TYPE 9	12E	12C	50.0	125.0			100.0							1	1	1	1	1					1		62.5	25.0	0.8	0.8				150		2.0		150
R142.370	J STREET UC (DEPARTURE)	54-814L	WB	TYPE 9		12DD		250.0																1		1						0.8				250		3.3		250
R142.397	J STREET UC (APPROACH)	54-814L	WB	TYPE 9	12B	12B	162.5	437.5	112.5						1	1			1	1	1	1							62.5	62.5	0.8	0.8		38		463		6.5		500
R142.633	SIGN POST		WB			11B		50								1								1						37.5				38		50		1.0		88
R142.971	D STREET OC		WB		14A		50.0				75.0												1				1		75.0											
R143.310	DRAINAGE/TERRAIN		WB			11B		774.5								1								1						37.5				7		781		10.5		787
R143.739	Jct Rte 40/95 Sep (DEP)	54-819L	WB	TYPE 9		12DD		775.0																1		1						0.8								
R143.779	Jct Rte 40/95 Sep (APP)	54-819L	WB	TYPE 9	12B	12B	162.5	562.5	112.5						1	1			1	1	1	1							62.5	62.5	0.8	0.8		38		208		3.1		245
R144.376	ICE HOUSE DITCH	54-508	WB	TYPE 1	12C	12A	112.5	75.0						1			1		1	1	1	1							25.0	75.0	0.8	0.8				150		2.0		150
R145.646	AIRPORT WASH (APPROACH)	54-507	WB	TYPE 1	12B	12A	212.5	112.5	62.5					1	1				1	1	1	1							62.5	75.0	0.8	0.8		50		138		2.2		188
R146.131	MANZANITA WASH (APP)	54-506	WB	TYPE 1	12B	12B	12.5	12.5	262.5						1	1			1	1	1	1							62.5	62.5	0.8	0.8		38		38		0.8		75
R147.266	MESQUITE WASH (APP)	54-505	WB	TYPE 1	12B	12A	237.5	50.0	37.5					1	1				1	1	1	1							62.5	75.0	0.8	0.8		50		75		1.4		125
R142.971	NATIONAL TRAILS OC		WB		14A		50.0				75.0												1				1		75.0											
R148.884	OCOTILLO WASH (APP)	54-504	WB	TYPE 1	12B	12B	75.0	62.5	200.0						1	1			1	1	1	1							62.5	62.5	0.8	0.8		38		88		1.5		125
R149.266	PALO VERDE WASH (APP)	54-503	WB	TYPE 1	12E	12A	112.5	200			187.5			1					1	1	1	1					1		62.5	75.0	0.8	0.8		50		225		3.4		275
R149.856	BEALE WASH (APPROACH)	54-502	WB	TYPE 1	12E	12A	112.5	62.5			187.5			1					1	1	1	1					1		62.5	75.0	0.8	0.8		50		88		1.6		138
R150.253	SAGE WASH (APPROACH)	54-501	WB	TYPE 1	12E	12A	112.5	62.5			187.5			1					1	1	1	1					1		62.5	75.0	0.8	0.8		50		88		1.6		138
R153.300	DRAINAGE/TERRAIN		WB			11B		50.0								1								1						37.5				38		50		1.0		88
R153.315	PARK MOABI		WB		14A		50.0				75.0												1				1		75.0			34.4								
R154.424	MARINA Rd UC (DEP)	54-670	WB	TYPE 1		12DD		89.0																1		1						0.8				89		1.2		89
R154.451	COLORADO RIVER/MARINA Rd UC	54-670	WB	TYPE 1		12D		289.0												1		1				1				25.0		1.6				314		4.2		314
PARK Rd OC (APPROACH)		54-702	NB	TYPE 1	12B	12B	37.5	637.5	237.5						1	1			1	1	1	1							62.5	62.5	0.8	0.8	38		63		1.1		100	
PARK Rd OC (DEPARTURE)		54-702	NB	TYPE 1		12DD		775.0																1		1						0.8				340		4.5		340
WB ENTRANCE RAMP FROM PARK Rd					11B		62.5								1								1						37.5											
EB EXIT RAMP TO RIVER Rd					12DD		100.0																1		1						0.8									
WB EXIT RAMP TO RIVER Rd					12DD		100.0																1		1						0.8									
SUBTOTAL							11353.0		2675.0		1437.5		13		24				45		45		18		10		13		3350.0		78.4		837		6031		87.4		6862	
TOTAL (SHEET Q-1 AND Q-2)							20081.5		4537.5		2775.0		21		50				87		87		30		17		25		6412.5		148.0		1505		11561		166.4 **		13054 **	

(N) - NOT A SEPARATE PAY ITEM, FOR INFORMATION ONLY.
** THE OVERALL TOTAL QUANTITIES FOR THE ITEM(S) ARE ON SHEET Q-4

EXISTING UTILITY FACILITIES HAVE NOT BEEN PLOTTED ON THESE PLANS

SUMMARY OF QUANTITIES

Q-2

REVISED BY | DATE REVISED
KAMAL McHANTAF | MICHAEL RISTIC
CALCULATED-DESIGNED BY | CHECKED BY
FUNCTIONAL SUPERVISOR
MICHAEL RISTIC
STATE OF CALIFORNIA - DEPARTMENT OF TRANSPORTATION
Caltrans MAINTENANCE DESIGN

LAST REVISION 09-04-12 | DATE PLOTTED => 04-SEP-2012 | TIME PLOTTED => 09:21

Dist	COUNTY	ROUTE	POST MILES TOTAL PROJECT	SHEET No.	TOTAL SHEETS
08	SBd	40	R138.3/R154.5	34	43

REGISTERED CIVIL ENGINEER 8-20-12 DATE

8-20-12
PLANS APPROVAL DATE

REGISTERED PROFESSIONAL ENGINEER KAMAL McHANTAF No. C51050 Exp. 9-30-13 CIVIL STATE OF CALIFORNIA

THE STATE OF CALIFORNIA OR ITS OFFICERS OR AGENTS SHALL NOT BE RESPONSIBLE FOR THE ACCURACY OR COMPLETENESS OF SCANNED COPIES OF THIS PLAN SHEET.

ROADWAY QUANTITIES

	ROUTE	POSTMILE		LOCATION / DIRECTION	LENGTH	TRAVELED WAY	SHOULDERS WIDTH L+	SHOULDERS WIDTH R+	RUMBLE STRIP	COLDPLANE AC	RHMA-G 0.1′	RHMA-G 0.15′	HMA (TYPE C) 0.25′	HMA (TYPE C) 0.4′	TACK COAT
					(FT)	(FT)	(FT)		(STA)	(SQYD)	(TON)	(TON)	(TON)	(TON)	(TON)
RAMPS	40			PARK Rd EB EXIT RAMP	2900	12	2	8		7089		717.8			2.1
	40			PARK Rd WB ENTRANCE RAMP	1500	12	2	8		3667		371.3			1.1
	40			RIVER Rd WB ENTRANCE RAMP	1100	12	2	8		2689		272.3			0.8
	40			RIVER Rd EB EXIT RAMP	1450	12	2	8		3544		358.9			1.0
	40			RIVER Rd WB EXIT RAMP	1600	12	2	8		3911		396.0			1.1
	40			RIVER Rd EB ENTRANCE RAMP	900	12	2	8		2200		222.8			0.6
	40			J STREET EB EXIT RAMP	1100	12	2	8		2689		272.3			0.8
	40			J STREET WB ENTRANCE RAMP	800	12	2	8		1956		198.0			0.6
	40			J STREET WB EXIT RAMP	1150	12	2	8		2811		284.6			0.8
	40			J STREET EB ENTRANCE RAMP	1000	12	2	8		2444		247.5			0.7
	40			Rte 95 WB ENTRANCE RAMP	1600	12	2	8		3911			660.0		1.1
	40			Rte 95 EB EXIT RAMP	1650	12	2	8		4033			680.6		1.2
	40			Rte 95 WB EXIT RAMP	1850	12	2	8		4522			763.1		1.3
	40			Rte 95 EB ENTRANCE RAMP	1350	12	2	8		3300			556.9		1.0
	40			FIVE MILE Rd WB ENTRANCE RAMP	1800	12	2	8		4400		445.5			1.3
	40			FIVE MILE Rd EB EXIT RAMP	1650	12	2	8		4033		408.4			1.2
	40			FIVE MILE Rd EB ENTRANCE RAMP	1600	12	2	8		3911		396.0			1.1
	40			FIVE MILE Rd WB EXIT RAMP	2000	12	2	8		4889		495.0			1.4
	40			PARK MOABI Rd EB EXIT RAMP	1200	12	2	8		2933		297.0			0.9
	40			PARK MOABI Rd WB ENTRANCE RAMP	1300	12	2	8		3178		321.8			0.9
	40			PARK MOABI Rd WB EXIT RAMP	1150	12	2	8		2811		284.6			0.8
	40			PARK MOABI Rd EB ENTRANCE RAMP	1400	12	2	8		3422		346.5			1.0
MAINLINE	40	138.3	141.1	EB	14784	24	5	10	296	39424	4324.3			10644.5	27.5
	40	141.1	148.2	EB	37488	24	5	10	750	99968	10965.2		16869.6		69.8
	40	148.2	151.7	EB	18480	24	5	10	370	49280	5405.4			13305.6	34.4
	40	153.3	154.6	EB	6864	24	5	10	137	18304	2007.7			4942.1	12.8
	40	138.3	148.2	WB	52272	24	5	10	1045	139392	15289.6		23522.4		97.3
	40	148.2	151.7	WB	18480	24	5	10	370	49280	5405.4			13305.6	34.4
	40	153.3	154.6	WB	6864	24	5	10	137	18304	2007.7			4942.1	12.8
								TOTAL	3105	492295	51741.6		90192.5		311.8 *

* THE OVERALL TOTAL QUANTITIES FOR THE ITEM(S) ARE ON SHEET Q-4

SHOULDER BACKING

ROUTE	POSTMILE FROM	POSTMILE TO	LENGTH	SHOULDER BACKING
			(FT)	(TON)
40	138.3	154.6	86064	3744
TOTAL				3744

STORM WATER POLLUTION CONTROL QUANTITIES

ITEM DESCRIPTION	UNIT	QUANTITY
TEMPORARY CONCRETE WASHOUT BIN	EA	2

EXIT RAMP CONCRETE TERMINI

ROUTE	RAMP	LENGTH	WIDTH	LEAN CONCRETE BASE RAPID SETTING	JOINTED PLAIN CONCRETE PAVEMENT (RAMP TERMINI WITH RAPID STRENGTH CONCRETE)	ROADWAY EXCAVATION	SEAL PAVEMENT JOINT	PLASTIC POLYETHYLENE BOND BREAKER (N)
		(FT)	(FT)	(CY)	(CY)	(CY)	(LF)	(SQYD)
40	Rte 95 EASTBOUND EXIT RAMP	150	24	80	120	200	405	400
40	Rte 95 WESTBOUND EXIT RAMP	150	24	80	120	200	405	400
40	J STREET EB EXIT RAMP	150	24	80	120	200	405	400
40	J STREET WB EXIT RAMP	150	24	80	120	200	405	400
40	AGGRICULTURAL STATION	200	24	107	160	267	540	533
TOTAL				427	640	1067 *	2160	

(N) - NOT A SEPARATE PAY ITEM, FOR INFORMATION ONLY.
* THE OVERALL TOTAL QUANTITIES FOR THE ITEM(S) ARE ON SHEET Q-4

MINOR CONCRETE MISCELLANEOUS CONSTRUCTION

RAMP	CORNER	CURB RAMP CASE	CURB (FT)	SIDEWALK (SQFT)	MINOR CONCRETE (MISCELLANEOUS CONSTRUCTION) (CY)
J STREET EB EXIT RAMP	NW	A	28	340	6.0
	SW	A	28	340	6.0
J STREET EB ENTRANCE RAMP	NE	C	22	130	3.0
	SE	A	28	340	6.0
J STREET WB EXIT RAMP	NE	A	28	340	6.0
	SE	C	22	130	3.0
J STREET WB ENTRANCE RAMP	NW	SPECIAL	20	100	3.0
	SW	C	22	130	3.0
				TOTAL	36

EXISTING UTILITY FACILITIES HAVE NOT BEEN PLOTTED ON THESE PLANS

SUMMARY OF QUANTITIES

Q-3

REVISED BY | DATE REVISED
KAMAL McHANTAF | MICHAEL RISTIC
CALCULATED-DESIGNED BY | CHECKED BY
FUNCTIONAL SUPERVISOR: MICHAEL RISTIC
STATE OF CALIFORNIA - DEPARTMENT OF TRANSPORTATION
Caltrans® MAINTENANCE DESIGN

LAST REVISION 08-20-12 | DATE PLOTTED => 04-SEP-2012 | TIME PLOTTED => 09:21

Dist	COUNTY	ROUTE	POST MILES TOTAL PROJECT	SHEET No.	TOTAL SHEETS
08	SBd	40	R138.3/R154.5	35	43

Kamal McHantaf 8-20-12
REGISTERED CIVIL ENGINEER DATE

8-20-12
PLANS APPROVAL DATE

REGISTERED PROFESSIONAL ENGINEER KAMAL McHANTAF No. C51050 Exp. 9-30-13 CIVIL STATE OF CALIFORNIA

THE STATE OF CALIFORNIA OR ITS OFFICERS OR AGENTS SHALL NOT BE RESPONSIBLE FOR THE ACCURACY OR COMPLETENESS OF SCANNED COPIES OF THIS PLAN SHEET.

OVERSIZE DRAIN & DOWN DRAIN QUANTITIES

LOCATION/PM FROM		TO		DIRECTION	No. OF LOCATIONS EA L+	EA R+	TOTAL LENGTH LF L+	LF R+	ROADWAY EXCAVATION CY L+	CY R+	PLACE HMA (Misc AREA) SQYD L+	SQYD R+	HMA (FOR AC DIKES & Misc AREAS) TON L+	TON R+	TACK COAT TON L+	TON R+	DESCRIPTION
PROJECT LIMIT	R138.3	PROJECT LIMIT	R154.6	EB	26	60	490	980	21	45	255	533	43.2	90.3	0.1	0.2	RECONSTRUCT HMA OVERSIDE DRAINS PER STD. D87D
PROJECT LIMIT	R138.3	PROJECT LIMIT	R154.6	WB	9	55	125	811	6	38	72	456	12.2	77.3	0.1	0.1	
PROJECT LIMIT	R138.3	PROJECT LIMIT	R154.6	EB	1	25			1	7	3	83	0.6	14.1	0.1	0.1	RECONSTRUCT GUTTER FLARE AT DOWN DRAIN PER STD. D87A
PROJECT LIMIT	R138.3	PROJECT LIMIT	R154.6	WB	1	38			1	11	3	127	0.6	21.4	0.1	0.1	
SUBTOTAL									130		1532		259.7		1.0		
TOTAL FROM SHEET Q-3									1067						311.8		
TOTAL									1197		1532		259.7 *		312.8		

* THE OVERALL TOTAL QUANTITIES FOR THE ITEM(S) ARE ON THE TABLE BELOW.

HMA DIKE QUANTITIES

LOCATION/PM FROM		TO		DIRECTION	PLACE HMA DIKE (TYPE D) LF L+	LF R+	HMA (FOR AC DIKES & Misc AREAS) TON L+	TON R+	REMOVE AC DIKE LF L+	LF R+
BUZZARD WASH	R138.30	BUZZARD WASH	R138.51	EB		1014		60.2		1014
BUZZARD WASH	R139.53	COYOTE WASH	R139.23	EB		142		8.4		142
COYOTE WASH	R139.26	FOX WASH	R139.81	EB		396		23.5		396
FOX WASH	R139.85	FOX WASH OVERFLOW	R140.01	EB		708		42.0		708
FOX WASH OVERFLOW	R140.03	LEMMING WASH	R140.11	EB		221		13.1		221
LEMMING WASH	R140.14	ROADRUNNER WASH	R140.72	EB		1118		66.3		1118
ROADRUNNER WASH	R140.77	S STREET CHANNEL	R141.48	EB		1880		111.5		1880
S STREET CHANNEL	R141.51	ARCH STREET UC	R141.62	EB						
ARCH STREET UC	R141.66	NEEDLES OH	R141.97	EB						
NEEDLES OH	R142.02	L STREET UC	R142.20	EB						
L STREET UC	R142.23	J STREET UC	R142.38	EB		606		36.0		606
J STREET UC	R142.40	Rte 40/95 Sep	R143.75	EB		4886		289.9		4886
Rte 40/95 Sep	R143.79	ICE HOUSE DITCH	R144.35	EB		1414		83.9		1414
ICE HOUSE DITCH	R144.38	AIRPORT WASH	R145.61	EB	3836	2765	227.6	164.1	3836	2765
AIRPORT WASH	R145.65	MANZANITA WASH	R146.12	EB		1750		103.8		1750
MANZANITA WASH	R146.13	OCOTILLO WASH	R148.87	EB	5259	5515	312.0	327.2	5259	5515
OCOTILLO WASH	R148.88	PALO VERDE WASH	R149.27	EB		201		11.9		201
PALO VERDE WASH	R149.27	BEALE WASH	R149.85	EB		2883		171.1		2883
BEALE WASH	R149.86	SAGE WASH	R150.25	EB	343	1896	20.4	112.5	343	1896
SAGE WASH	R150.25	BEGIN CONSTRUCTION	R151.67	EB	3131	6610	185.8	392.2	3131	6610
END CONSTRUCTION	R153.26	MARINA Rd UC	R154.42	EB	1427	2884	84.7	171.1	1427	2884
MARINA Rd UC	R154.45	COLORADO RIVER BRIDGE	R154.51	EB		262		15.5		262
BUZZARD WASH	R138.30	BUZZARD WASH	R138.51	WB		904		53.6		904
BUZZARD WASH	R138.53	COYOTE WASH	R139.23	WB		2353		139.6		2353
COYOTE WASH	R139.26	FOX WASH	R139.81	WB		434		25.8		434
FOX WASH	R139.85	FOX WASH OVERFLOW	R140.01	WB		282		16.7		282
FOX WASH OVERFLOW	R140.03	LEMMING WASH	R140.11	WB		1572		93.3		1572
LEMMING WASH	R140.14	ROADRUNNER WASH	R140.72	WB		1893		112.3		1893
ROAD RUNNER WASH	R140.77	S STREET CHANNEL	R141.48	WB						
S STREET CHANNEL	R141.51	ARCH STREET UC	R141.62	WB						
ARCH STREET UC	R141.51	NEEDLES OH	R141.97	WB		797		47.3		797
NEEDLES OH	R141.66	L STREET UC	R142.20	WB						
L STREET UC	R142.02	J STREET UC	R142.38	WB		237		14.1		237
J STREET UC	R142.40	Rte 40/95 Sep	R143.75	WB		2853		169.3		2853
Rte 40/95 Sep	R143.79	ICE HOUSE DITCH	R144.35	WB		2125		126.1		2125
ICE HOUSE DITCH	R144.38	AIRPORT WASH	R145.61	WB		6201		367.9		6201
AIRPORT WASH	R145.65	MANZANITA WASH	R146.12	WB		2289		135.8		2289
MANZANITA WASH	R146.13	OCOTILLO WASH	R148.87	WB		12911		766.0		12911
OCOTILLO WASH	R148.88	PALO VERDE WASH	R149.27	WB		453		26.9		453
PALO VERDE WASH	R149.27	BEALE WASH	R149.85	WB		2668		158.3		2668
BEALE WASH	R149.86	SAGE WASH	R150.25	WB		2003		118.8		2003
SAGE WASH	R150.25	BEGIN CONSTRUCTION	R151.67	WB	2996	7406	177.8	439.4	2996	7406
END CONSTRUCTION	R153.26	MARINA Rd UC	R154.42	WB	1607	5527	95.3	327.9	1607	5527
MARINA Rd UC	R154.45	COLORADO RIVER BRIDGE	R154.51	WB						
SUBTOTAL					108658		6446.9		108658	
TOTAL FROM SHEET Q-2							166.4		13054	
TOTAL FROM ABOVE TABLE							259.7			
TOTAL					108658		6873.0		121712	

EXISTING UTILITY FACILITIES HAVE NOT BEEN PLOTTED ON THESE PLANS

SUMMARY OF QUANTITIES Q-4

REVISED BY | DATE REVISED
KAMAL McHANTAF | MICHAEL RISTIC
CALCULATED-DESIGNED BY | CHECKED BY
FUNCTIONAL SUPERVISOR: MICHAEL RISTIC
STATE OF CALIFORNIA - DEPARTMENT OF TRANSPORTATION
Caltrans® MAINTENANCE DESIGN

LAST REVISION 08-20-12 | DATE PLOTTED => 04-SEP-2012 | TIME PLOTTED => 09:21

Dist	COUNTY	ROUTE	POST MILES TOTAL PROJECT	SHEET No.	TOTAL SHEETS
08	SBd	40	R138.3/R154.5	36	43

REGISTERED ELECTRICAL ENGINEER 8-20-12 DATE

8-20-12
PLANS APPROVAL DATE

REGISTERED PROFESSIONAL ENGINEER FERDINAND DE LA CRUZ No. E 17215 Exp. 6-30-14 ELECTRICAL STATE OF CALIFORNIA

THE STATE OF CALIFORNIA OR ITS OFFICERS OR AGENTS SHALL NOT BE RESPONSIBLE FOR THE ACCURACY OR COMPLETENESS OF SCANNED COPIES OF THIS PLAN SHEET.

GENERAL NOTES (THIS SHEET ONLY):

1. PRIOR TO CONSTRUCTION, THE CONTRACTOR SHALL VERIFY ALL LOCATIONS OF EXISTING PIEZO-ELECTRIC AXLE SENSORS AND INDUCTIVE LOOP DETECTORS.
2. EXISTING LOOPS DETECTORS AND PIEZO-ELECTRIC AXLE SENSORS SHOWN SHALL BE ABANDONED.
3. THE CONTRACTOR SHALL NOTIFY THE ENGINEER 3 WORKING DAYS PRIOR TO INSTALLING INDUCTIVE LOOP DETECTORS AND PIEZO-ELECTRIC AXLE SENSORS.
4. FOR PIEZO-ELECTRIC AXLE SENSOR INSTALLATION DETAILS SEE SHEET E-2.
5. NEW PIEZO-ELECTRIC AXLE SENSORS LEAD CABLE SHALL NOT BE SPLICED AND SHALL RUN CONTNUOUSLY TO THE EXISTING CABINET.
6. FOR ACCURATE RIGHT OF WAY, CONTACT RIGHT OF WAY ENGINEERING AT THE DISTRICT OFFICE.
7. TYPE 1 CONDUIT SHALL BE USED FOR SHOULDER TERMINATIONS ONLY.
8. CONTRACTOR MUST PROVIDE THE GPS COORDINATES FOR EACH BURIED PULL BOX (DEGREE, MINUTES, SECONDS FORMAT).

LEGEND:

EXISTING PIEZO-ELECTRIC AXLE SENSOR

NEW PIEZO-ELECTRIC AXLE SENSORS (SEE E-2 FOR DETAILS)

PROJECT NOTE (THIS SHEET ONLY):

1 AFTER THE EXISTING PULL BOX IN THE SHOULDER ARE REMOVED THE CONTRACTOR SHALL FILL THE VOID WITH A 3 SACK SLURRY. THE LAST 4" SHALL BE FILLED WITH ASPHALT CONCRETE OR AS DIRECTED BY THE ENGINEEER.

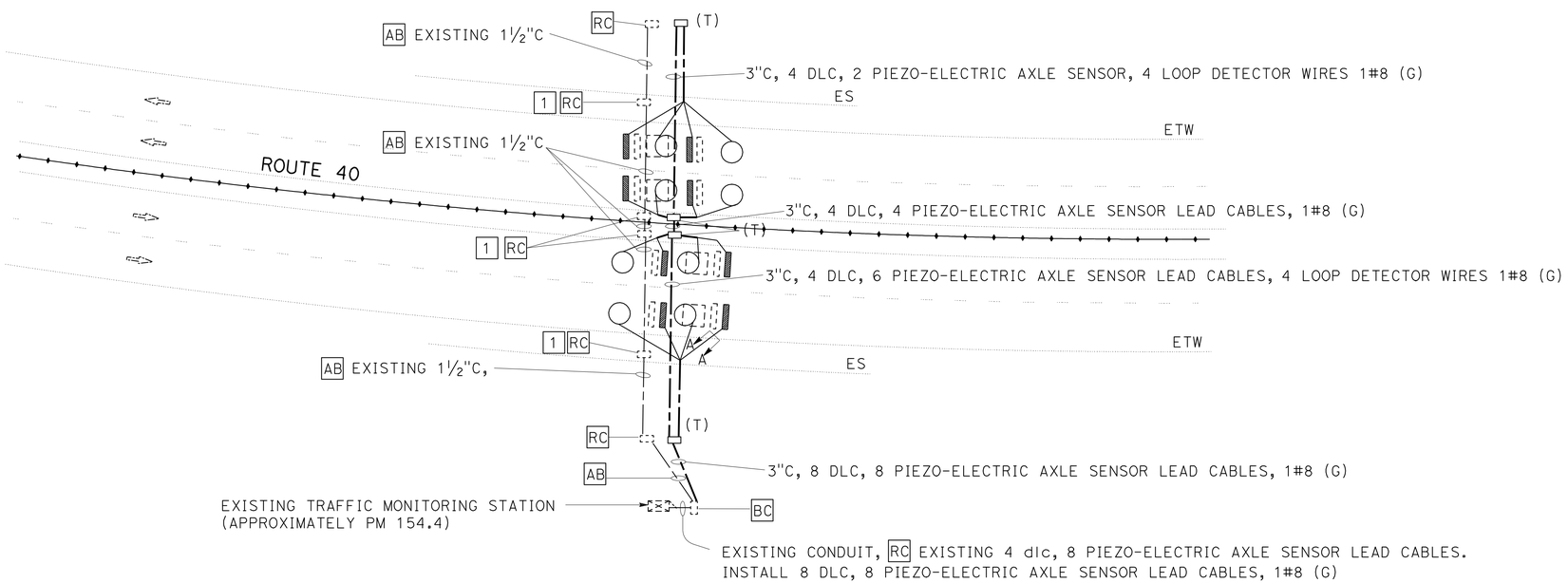

MODIFY TRAFFIC MONITORING STATION (COUNT)

NO SCALE

E-1

EXISTING UTILITY FACILITIES HAVE NOT BEEN PLOTTED ON THESE PLANS *APPROVED FOR ELECTRICAL WORK ONLY*

REVISED BY | DATE REVISED
LUIS PENALOZA Jr. | FERDINAND DE LA CRUZ
CALCULATED-DESIGNED BY | CHECKED BY
FUNCTIONAL SUPERVISOR
FERDINAND DE LA CRUZ

STATE OF CALIFORNIA - DEPARTMENT OF TRANSPORTATION
Caltrans ELECTRICAL DESIGN B

LAST REVISION 08-20-12 | DATE PLOTTED => 04-SEP-2012 | TIME PLOTTED => 09:21

Dist	COUNTY	ROUTE	POST MILES TOTAL PROJECT	SHEET No.	TOTAL SHEETS
08	SBd	40	R138.3/R154.5	37	43

REGISTERED ELECTRICAL ENGINEER 8-20-12 DATE

8-20-12
PLANS APPROVAL DATE

REGISTERED PROFESSIONAL ENGINEER FERDINAND DE LA CRUZ No. E 17215 Exp. 6-30-14 ELECTRICAL STATE OF CALIFORNIA

THE STATE OF CALIFORNIA OR ITS OFFICERS OR AGENTS SHALL NOT BE RESPONSIBLE FOR THE ACCURACY OR COMPLETENESS OF SCANNED COPIES OF THIS PLAN SHEET.

PIEZO-ELECTRIC AXLE SENSOR INSTALLATION PROCEDURE:

1. MARK THE POSITION OF THE PIEZO-ELECTRIC AXLE SENSORS AS DIRECTED BY THE ENGINEER. PIEZO-ELECTRIC AXLE SENSOR CHANNELS MUST BE PERPENDICULAR TO TRAFFIC.
2. MARK THE HOME RUN CUTS AS SHOWN IN THE PIEZO-ELECTRIC AXLE SENSOR INSTALATION DETAIL.
3. USING A CONCRETE SAW, CUT THE PIEZO-ELECTRIC AXLE SENSOR CHANNELS ¾" WIDE BY 1½" DEEP IN A SINGLE PASS. CUTS SHALL BE STRAIGHT AND TRUE.
4. DRILL ½" Dia HOLES 1" DEEP AT A 45 DEGREE ANGLE AT THE BOTTOM OF EACH PIEZO-ELECTRIC AXLE SENSOR CHANNEL. HOLES SHALL BE 12" APART AND ON ALTERNATING SIDES OF THE CHANNEL.
5. WASH OUT THE CHANNELS AND ALL SAW CUTS THOROUGHLY WITH HIGH PRESSURE WATER. DRY COMPLETELY WITH AN AIR COMPRESSOR. IN PCC PAVEMENT ONLY, WIPE OUT THE CHANNELS WITH LACQUER THINNER AND CLEAN COTTON RAGS.
6. PLACE 4" DUCT TAPE STRIPS ON THE PAVEMENT AROUND THE CHANNELS.
7. ENSURE THAT EACH PIEZO-ELECTRIC AXLE SENSOR IS STRAIGHT AND FLAT. BEND EACH END DOWN SLIGHTLY AND PLACE THE INSTALLATION CLIPS ON THE PIEZO-ELECTRIC AXLE SENSOR EVERY 6" ALONG THE LENGTH. SEE SECTION B-B BELOW.
8. BLOCK OFF THE CABLE END OF THE CHANNEL WITH DUCT TAPE TO PREVENT THE EPOXY GROUT FROM FLOWING OUT OF THE CHANNEL.
9. ATTACH STATIC MIXING TUBE ONTO CARTRIDGE.
10. HALF FILL THE CHANNEL WITH EPOXY GROUT. ENSURE THAT THE BOTTOM OF THE CHANNEL IS COMPLETELY COVERED, AND THAT THE HOLES DRILLED IN STEP 4 ARE FILLED.
11. PLACE THE PIEZO-ELECTRIC AXLE SENSOR IN THE CHANNEL ¾" BELOW THE ROAD SURFACE (AS SHOWN IN SECTION B-B BELOW), WITH NO VOIDS BENEATH THE PIEZO-ELECTRIC AXLE SENSOR.
12. COMPLETELY FILL THE CHANNEL WITH EPOXY GROUT. SMOOTH OUT THE EPOXY GROUT ON TOP OF THE PIEZO-ELECTRIC AXLE SENSOR TO ROAD LEVEL, WITH NO TROUGH ON TOP.
13. WHEN EPOXY GROUT HAS BEGUN TO SET, REMOVE THE DUCT TAPE FROM THE PAVEMENT. REMOVE THE DUCT SEAL FROM THE END OF THE CHANNEL.
14. SEAL ALL SAW CUTS. ELASTOMERIC SEALANT SHALL BE USED ONLY IN ALL CUTS CONTAINING SCREENED TRANSMISSION CABLE.
15. REMOVE ANY HIGH SPOTS IN THE EPOXY GROUT WITH A HAND GRINDER.
16. CLEAN UP THE SITE. WHEN ALL SEALANTS ARE COMPLETELY CURED, LANES MAY BE OPENED TO TRAFFIC.

DETAILED PIEZO SENSOR INSTALLATION - ELEVATION

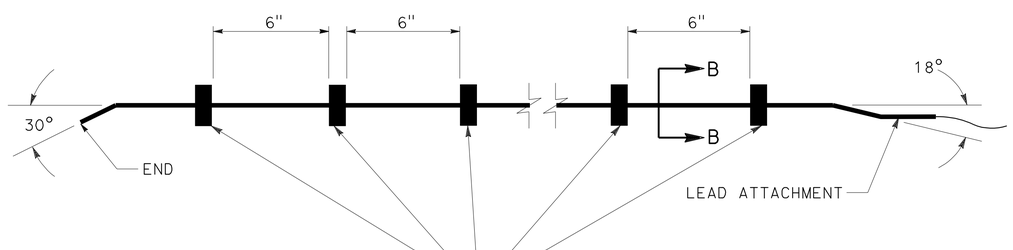

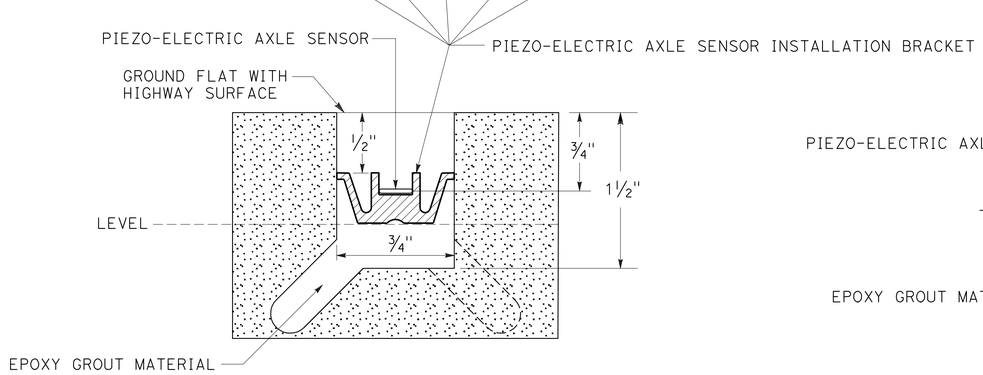

DETAIL "A"

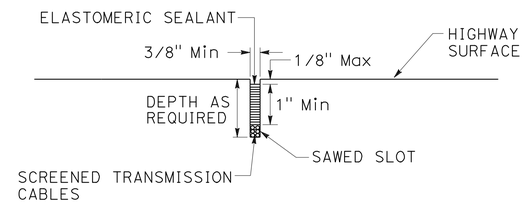

SECTION A-A

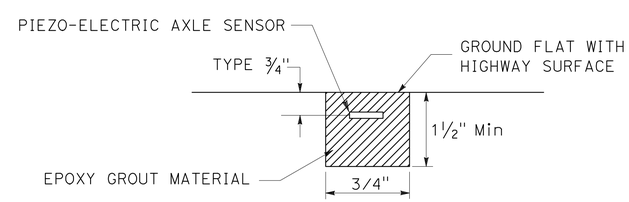

SECTION B-B

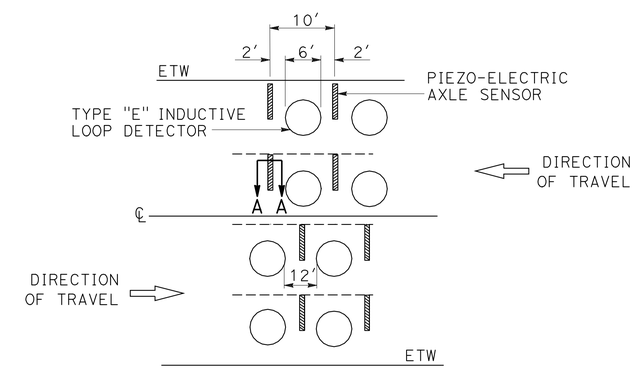

TYPICAL AXLE SENSOR INSTALLATION

SEE DETAIL "A" (THIS SHEET)

MODIFY TRAFFIC MONITORING SYSTEM
(INSTALLATION DETAILS)

NO SCALE

E-2

EXISTING UTILITY FACILITIES HAVE NOT BEEN PLOTTED ON THESE PLANS *APPROVED FOR ELECTRICAL WORK ONLY*

STATE OF CALIFORNIA - DEPARTMENT OF TRANSPORTATION
Caltrans ELECTRICAL DESIGN B

FUNCTIONAL SUPERVISOR: FERDINAND DE LA CRUZ
CALCULATED-DESIGNED BY: LUIS PENALOZA Jr.
CHECKED BY: FERDINAND DE LA CRUZ
REVISED BY / DATE REVISED

LAST REVISION 08-20-12 | DATE PLOTTED => 04-SEP-2012 | TIME PLOTTED => 09:22

Dist	COUNTY	ROUTE	POST MILES TOTAL PROJECT	SHEET No.	TOTAL SHEETS
08	SBd	40	R138.3/R154.5	38	43

REGISTERED CIVIL ENGINEER

April 20, 2012
PLANS APPROVAL DATE

REGISTERED PROFESSIONAL ENGINEER
Roberta L. McLaughlin
No. C40375
Exp. 3-31-13
CIVIL
STATE OF CALIFORNIA

THE STATE OF CALIFORNIA OR ITS OFFICERS OR AGENTS SHALL NOT BE RESPONSIBLE FOR THE ACCURACY OR COMPLETENESS OF SCANNED COPIES OF THIS PLAN SHEET.

TO ACCOMPANY PLANS DATED 8-20-12

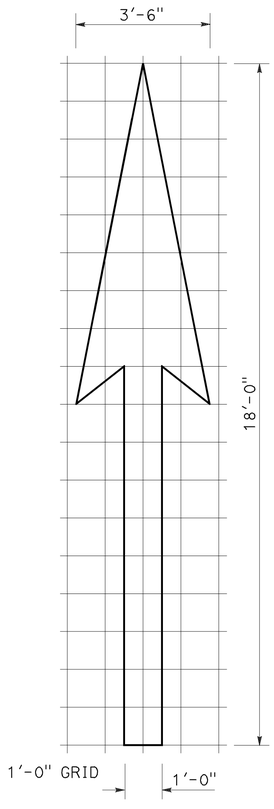

A=25 ft^2

TYPE I 18'-0" ARROW

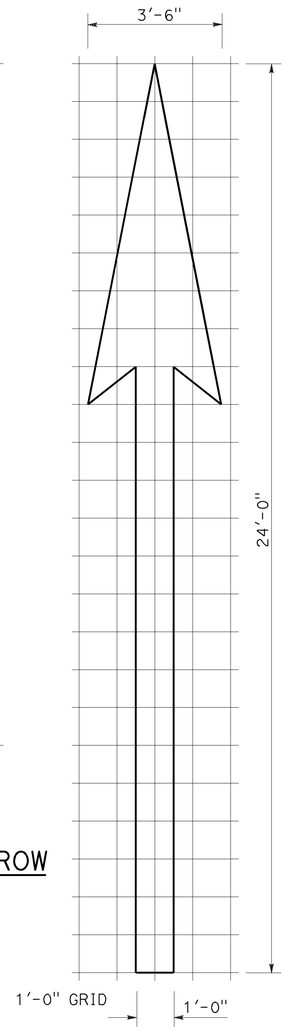

A=31 ft^2

TYPE I 24'-0" ARROW

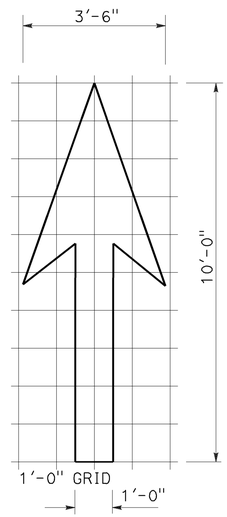

A=14 ft^2

TYPE I 10'-0" ARROW

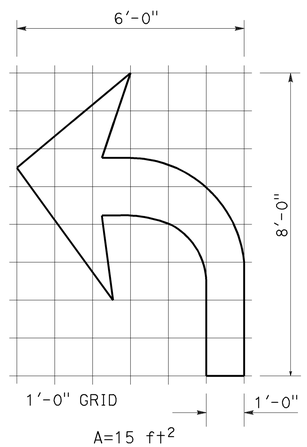

A=15 ft^2

TYPE IV (L) ARROW

(For Type IV (R) arrow, use mirror image)

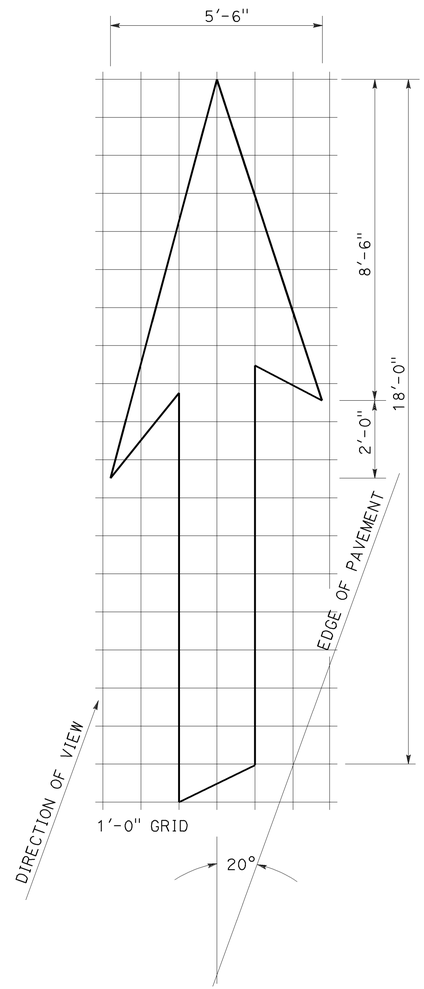

A=42 ft^2

TYPE VI ARROW

Right lane drop arrow
(For left lane, use mirror image)

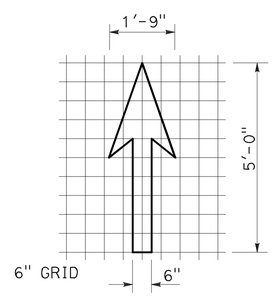

A=3.5 ft^2

BIKE LANE ARROW

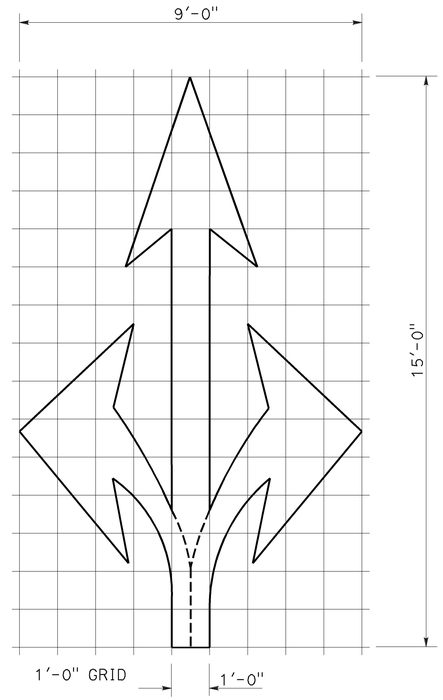

A=36 ft^2

TYPE VIII ARROW

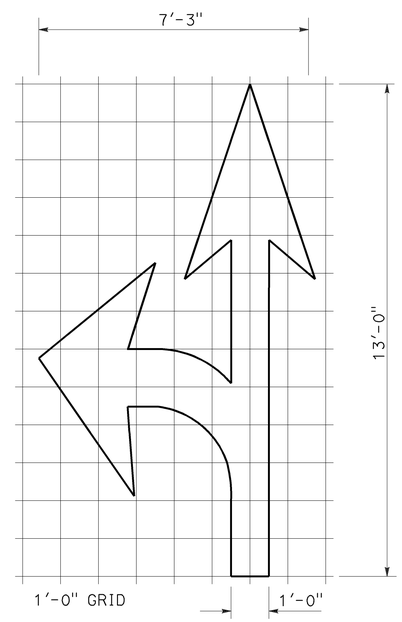

A=27 ft^2

TYPE VII (L) ARROW

(For Type VII (R) arrow, use mirror image)

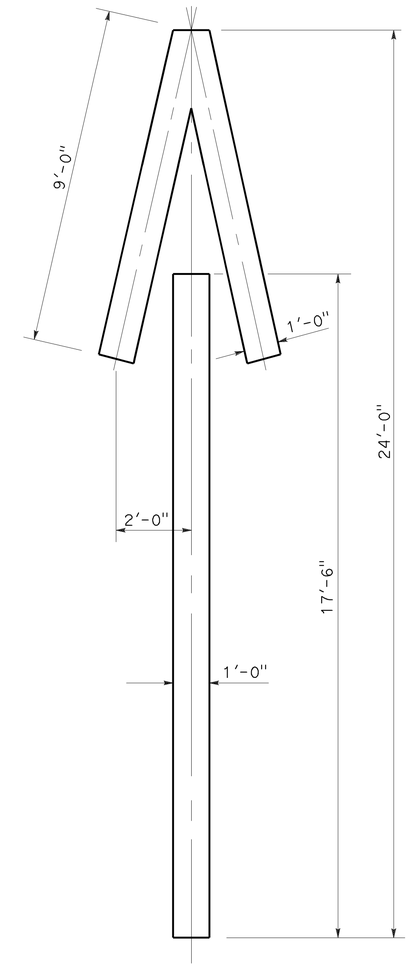

A=33 ft^2

TYPE V ARROW

NOTE:
Minor variations in dimensions may be accepted by the Engineer.

STATE OF CALIFORNIA
DEPARTMENT OF TRANSPORTATION

PAVEMENT MARKINGS ARROWS

NO SCALE

RSP A24A DATED APRIL 20, 2012 SUPERSEDES STANDARD PLAN A24A DATED MAY 20, 2011 - PAGE 13 OF THE STANDARD PLANS BOOK DATED 2010.

REVISED STANDARD PLAN RSP A24A

2010 REVISED STANDARD PLAN RSP A24A

3-14-12

Dist	COUNTY	ROUTE	POST MILES TOTAL PROJECT	SHEET No.	TOTAL SHEETS
08	SBd	40	R138.3/R154.5	39	43

REGISTERED CIVIL ENGINEER

July 20, 2012
PLANS APPROVAL DATE

REGISTERED PROFESSIONAL ENGINEER
Roberta L. McLaughlin
No. C40375
Exp. 3-31-13
CIVIL
STATE OF CALIFORNIA

THE STATE OF CALIFORNIA OR ITS OFFICERS OR AGENTS SHALL NOT BE RESPONSIBLE FOR THE ACCURACY OR COMPLETENESS OF SCANNED COPIES OF THIS PLAN SHEET.

TO ACCOMPANY PLANS DATED 8-20-12

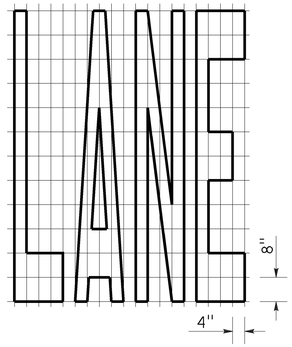

A=24 ft^2

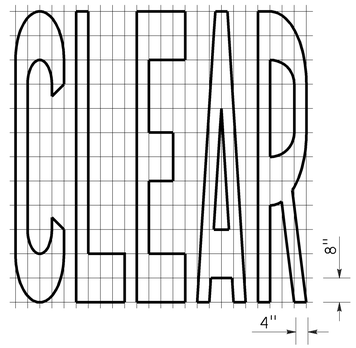

A=27 ft^2

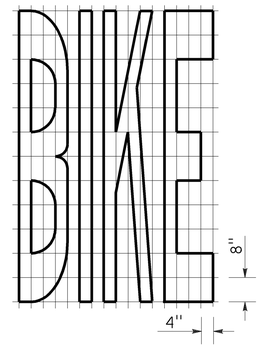

A=21 ft^2

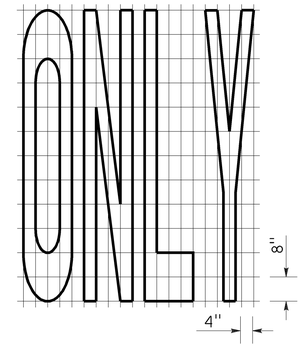

A=22 ft^2

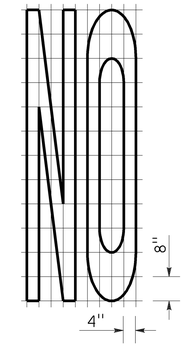

A=14 ft^2

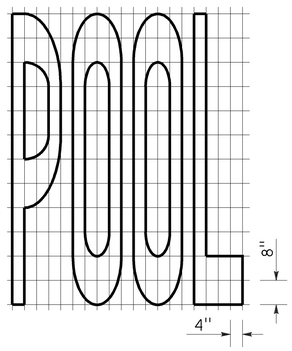

A=23 ft^2

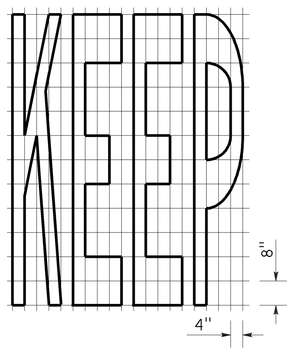

A=24 ft^2

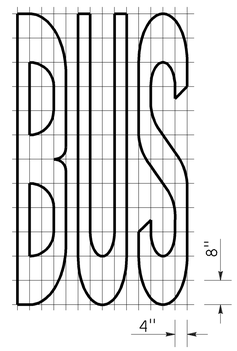

A=20 ft^2

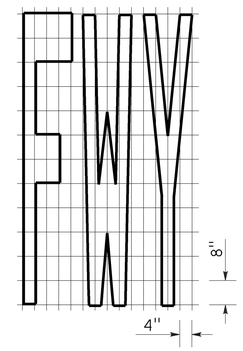

A=16 ft^2

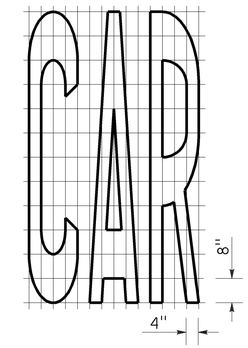

A=17 ft^2

WORD MARKINGS			
ITEM	ft^2	ITEM	ft^2
LANE	24	NO	14
POOL	23	BIKE	21
CAR	17	BUS	20
CLEAR	27	ONLY	22
KEEP	24	FWY	16

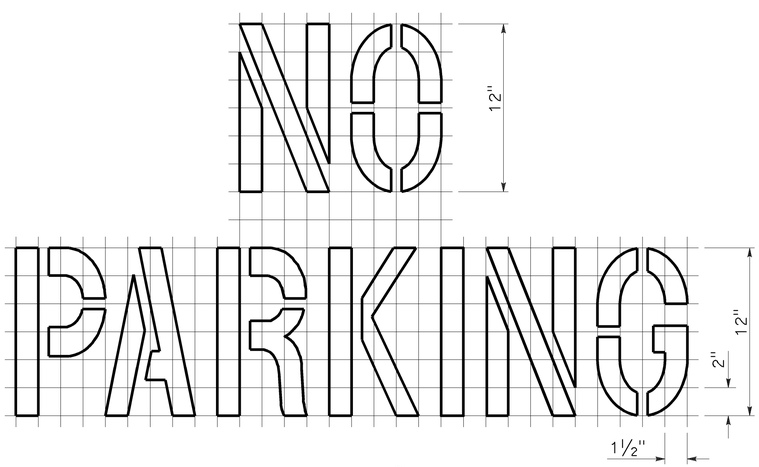

A=2 ft^2
See Notes 6 and 7

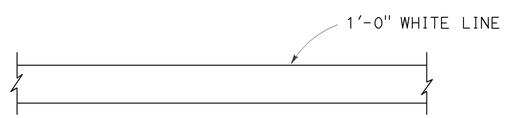

LIMIT LINE (STOP LINE)

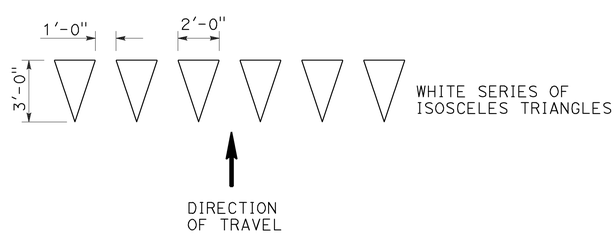

YIELD LINE

NOTES:

1. If a message consists of more than one word, it should read "UP", i.e., the first word should be nearest the driver.
2. The space between words should be at least four times the height of the characters for low speed roads, but not more than ten times the height of the characters. The space may be reduced appropriately where there is limited space because of local conditions.
3. Minor variations in dimensions may be accepted by the Engineer.
4. Portions of a letter, number or symbol may be separated by connecting segments not to exceed 2" in width.
5. The words "NO PARKING" pavement marking is to be used for parking facilities. For typical locations of markings, see Standard Plans A90A and A90B.
6. The words "NO PARKING", shall be painted in white letters no less than 1'-0" high on a contrasting background and located so that it is visible to traffic enforcement officials.

STATE OF CALIFORNIA
DEPARTMENT OF TRANSPORTATION

PAVEMENT MARKINGS WORDS, LIMIT AND YIELD LINES

NO SCALE

RSP A24E DATED JULY 20, 2012 SUPERSEDES STANDARD PLAN A24E
DATED MAY 20, 2011 - PAGE 17 OF THE STANDARD PLANS BOOK DATED 2010.

REVISED STANDARD PLAN RSP A24E

2010 REVISED STANDARD PLAN RSP A24E

6-12-12

DIST	COUNTY	ROUTE	POST MILES TOTAL PROJECT	SHEET NO.	TOTAL SHEETS
08	SBd	40	R138.3/R154.5	40	43

REGISTERED ELECTRICAL ENGINEER

January 20, 2012
PLANS APPROVAL DATE

REGISTERED PROFESSIONAL ENGINEER Jeffery G. McRae No. E14512 Exp. 6-30-12 ELECTRICAL STATE OF CALIFORNIA

THE STATE OF CALIFORNIA OR ITS OFFICERS OR AGENTS SHALL NOT BE RESPONSIBLE FOR THE ACCURACY OR COMPLETENESS OF SCANNED COPIES OF THIS PLAN SHEET.

TO ACCOMPANY PLANS DATED 8-20-12

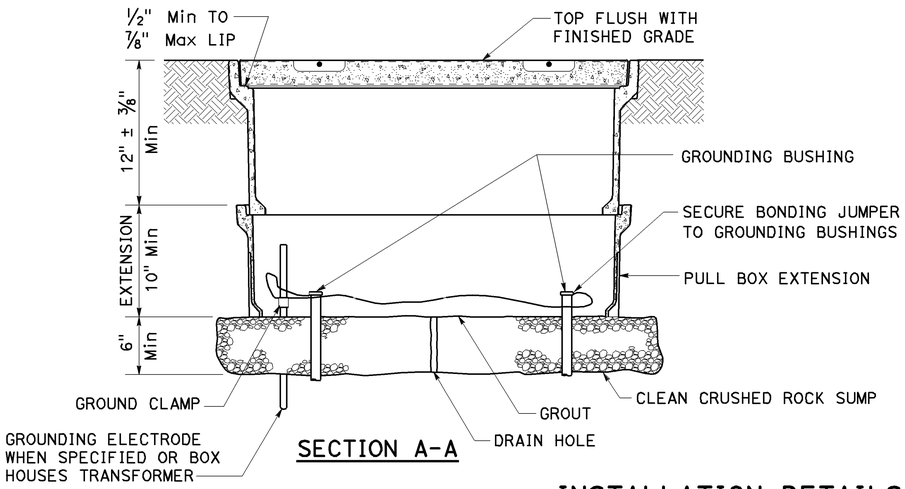

SECTION A-A

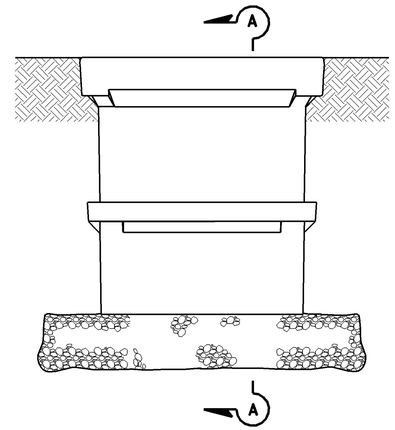

SIDE VIEW

INSTALLATION DETAILS

DETAIL A

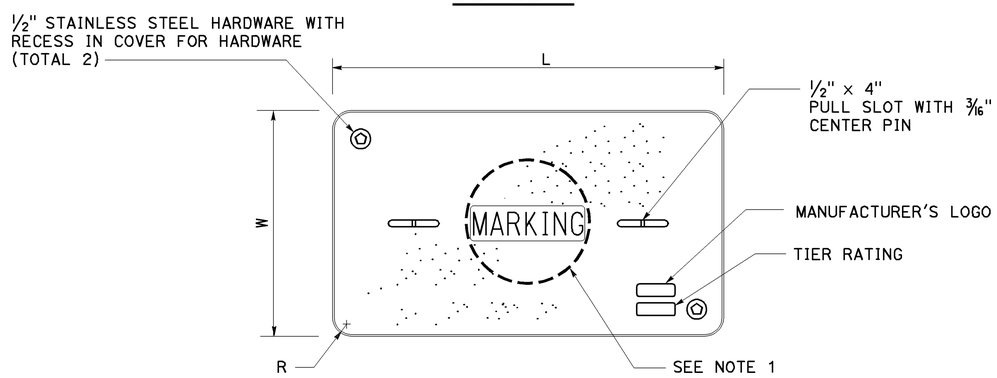

COVER TOP VIEW

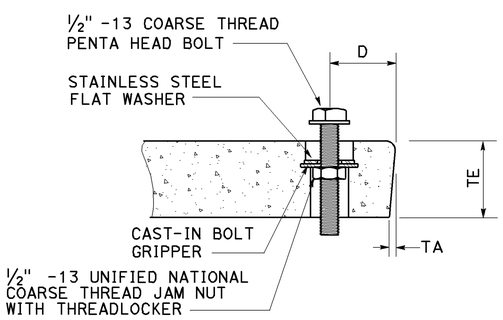

TYPICAL COVER CAPTIVE BOLT
OR SIMILAR

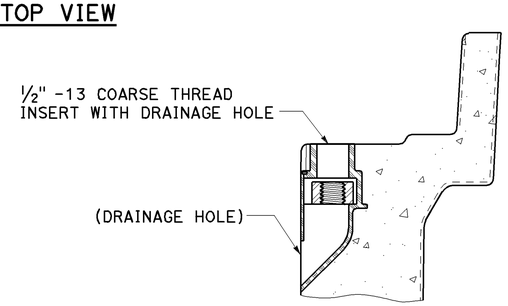

TYPICAL THREADED INSERT
OR SIMILAR

NOTES ON PULL BOXES:

1. Pull box covers must be marked as follows: "SERVICE" Service circuits between service point and service disconnect; "SPRINKLER-CONTROL" sprinkler control circuits, 50 V or less; "CALTRANS" on all pull boxes, except pull boxes marked "SPRINKLER-CONTROL"; and "TELEPHONE" Telephone service;
   - A) No. 3½ pull box.
     - 1) "SIGNAL" - Traffic signal circuits with or without street or sign lighting circuits.
     - 2) "ST LIGHTING" - Street or sign lighting circuits where voltage is under 600 V.
   - B) No. 5, 6, 9 or 9A pull box.
     - 1) "TRAFFIC SIGNAL" - Traffic signal circuits with or without street or sign lighting circuits.
     - 2) "STREET LIGHTING" - Street or sign lighting circuits where voltage is under 600 V.
     - 3) "STREET LIGHTING-HIGH VOLTAGE" - Street or sign lighting circuits where voltage is above 600 V.
     - 4) "IRRIGATION" - Circuits to irrigation controller 120 V or more.
     - 5) "RAMP METER" - Ramp meter circuits.
     - 6) "COUNT STATION" - Count or speed monitor circuits.
     - 7) "COMMUNICATIONS" - Communication circuits.
     - 8) "TOS COMMUNICATIONS" - TOS communication line.
     - 9) "TOS POWER" - TOS power.
     - 10) "TDC POWER" - Telephone demarcation cabinet power.
     - 11) "CCTV" - Closed circuit television circuits.
     - 12) "TMS" - Traffic monitoring station circuits.
     - 13) "CMS" - Changeable message sign circuits.
     - 14) "HAR" - Highway advisory radio circuits.
2. The nominal dimensions of the opening in which the cover sets must be the same as the cover dimensions (L and W) plus ⅛" or greater.
3. Covers and boxes must be interchangeable with California Standard. When interchanged with a standard, the top surfaces must be flush within ⅛". Top outside radius of covers and pull boxes must have a ⅛" radius.
4. Pull box extension may be another pull box as long as the bottom edge of the pull box can fit into the cover opening.

DIMENSION TABLE

PULL BOX	PULL BOX			COVER						
	MINIMUM DEPTH BOX	MINIMUM DEPTH EXTENSION	MAXIMUM WEIGHT	L	W	R	TE	TA	D	MAXIMUM WEIGHT
No. 3½	12"	N/A	40 lb	1' - 3⅜"	10⅛"	1⅜"	2"	⅛"	1¾"	30 lb
No. 5	12"	10"	55 lb	1' - 11¼"	1' - 1¾"	1⅜"	2"	⅛"	1¾"	60 lb
No. 6	12"	10"	70 lb	2' - 6½"	1' - 5½"	1⅜"	2"	⅛"	2"	85 lb

STATE OF CALIFORNIA
DEPARTMENT OF TRANSPORTATION

ELECTRICAL SYSTEMS (PULL BOX)

NO SCALE

RSP ES-8A DATED JANUARY 20, 2012 SUPPLEMENTS THE STANDARD PLANS BOOK DATED 2010.

REVISED STANDARD PLAN RSP ES-8A

2010 REVISED STANDARD PLAN RSP ES-8A

01-09-12

Dist	COUNTY	ROUTE	POST MILES TOTAL PROJECT	SHEET No.	TOTAL SHEETS
08	SBd	40	R138.3/R154.5	41	43

REGISTERED CIVIL ENGINEER

April 20, 2012
PLANS APPROVAL DATE

REGISTERED PROFESSIONAL ENGINEER William K. Farnbach No. C49042 Exp. 9-30-12 CIVIL STATE OF CALIFORNIA

THE STATE OF CALIFORNIA OR ITS OFFICERS OR AGENTS SHALL NOT BE RESPONSIBLE FOR THE ACCURACY OR COMPLETENESS OF SCANNED COPIES OF THIS PLAN SHEET.

TO ACCOMPANY PLANS DATED 8-20-12

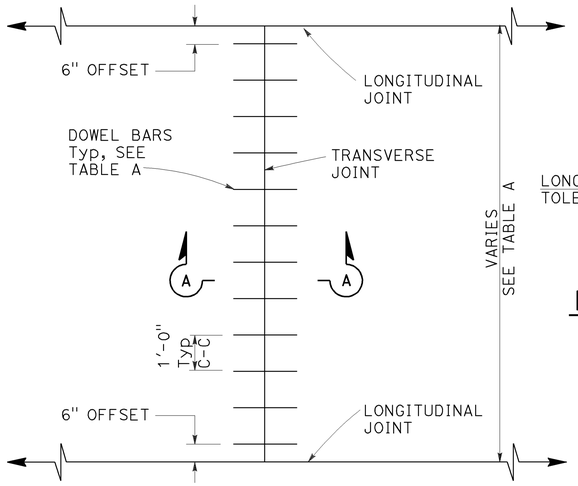

TRANSVERSE JOINT DOWEL BAR LAYOUT

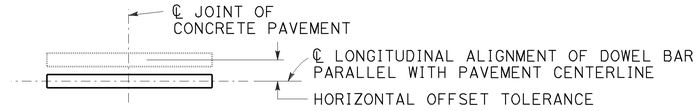

PLAN

HORIZONTAL OFFSET TOLERANCE

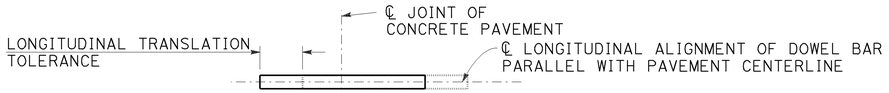

PLAN

LONGITUDINAL TRANSLATION TOLERANCE

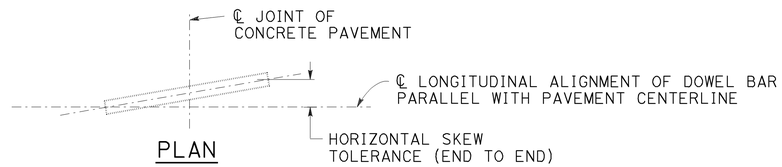

PLAN

HORIZONTAL SKEW TOLERANCE

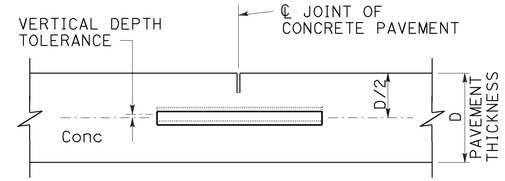

ELEVATION

VERTICAL DEPTH TOLERANCE

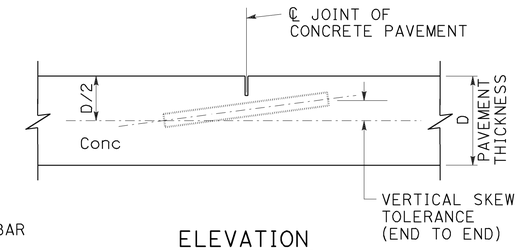

ELEVATION

VERTICAL SKEW TOLERANCE

NOTES:

1. See Standard Plan P1 for typical dowel bar placement and locations.
2. 1½" Dia dowel bars are to be used with a pavement thickness, D, equal to or greater than 0.70 feet. For pavement thickness, D, less than 0.70 feet, use 1¼" Dia dowel bars.
3. For widths not shown, see Project Plans.
4. If fresh concrete pavement is placed adjacent to existing concrete pavement, the top corner of the existing concrete pavement does not need to be rounded to the ¼" radius, as shown.
5. May also use ¾" Dia dowel bars 2'-4" ± ¼" in length. Center the length of dowel bars at the centerline of longitudinal joint.

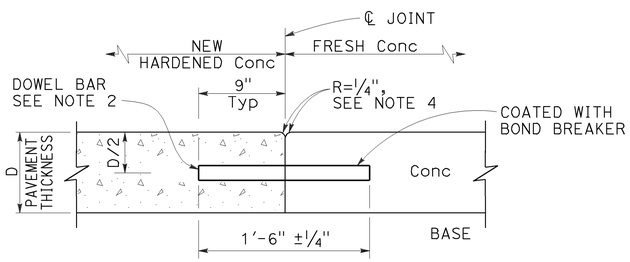

SECTION A-A

TRANSVERSE CONSTRUCTION JOINT DETAIL

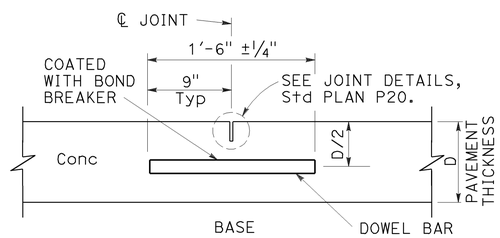

TRANSVERSE CONTRACTION JOINT

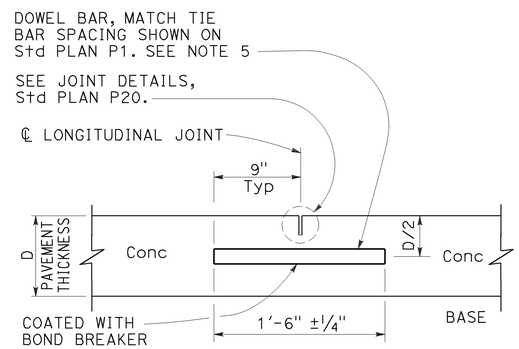

LONGITUDINAL CONTRACTION JOINT WITH DOWEL BARS

See Revised Std Plan RSP P18

TABLE A (See Note 3)

DOWEL BAR TRANSVERSE SPACING TABLE	
WIDTH BETWEEN LONGITUDINAL JOINTS	NUMBER OF DOWELS BETWEEN LONGITUDINAL JOINTS
14'-0"	14
13'-0"	13
12'-0"	12
11'-0"	11
10'-0"	10
8'-0"	8
5'-0"	5
4'-0"	4

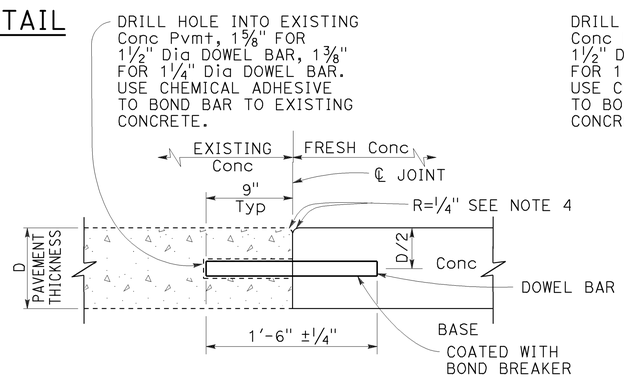

TRANSVERSE CONSTRUCTION JOINT FOR EXISTING CONCRETE PAVEMENT

Drill and bond locations

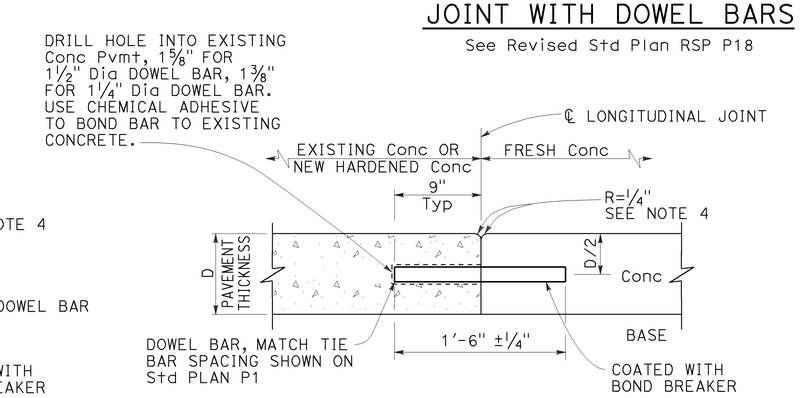

LONGITUDINAL CONSTRUCTION JOINT WITH DOWEL BARS

See Revised Std Plan RSP P18

STATE OF CALIFORNIA
DEPARTMENT OF TRANSPORTATION

CONCRETE PAVEMENT-DOWEL BAR DETAILS

NO SCALE

RSP P10 DATED APRIL 20, 2012 SUPERSEDES STANDARD PLAN P10 DATED MAY 20, 2011 - PAGE 131 OF THE STANDARD PLANS BOOK DATED 2010.

REVISED STANDARD PLAN RSP P10

2010 REVISED STANDARD PLAN RSP P10

2-22-12

Dist	COUNTY	ROUTE	POST MILES TOTAL PROJECT	SHEET No.	TOTAL SHEETS
08	SBd	40	R138.3/R154.5	42	43

William K. Farnbach
REGISTERED CIVIL ENGINEER

April 20, 2012
PLANS APPROVAL DATE

REGISTERED PROFESSIONAL ENGINEER William K. Farnbach No. C49042 Exp. 9-30-12 CIVIL STATE OF CALIFORNIA

THE STATE OF CALIFORNIA OR ITS OFFICERS OR AGENTS SHALL NOT BE RESPONSIBLE FOR THE ACCURACY OR COMPLETENESS OF SCANNED COPIES OF THIS PLAN SHEET.

TO ACCOMPANY PLANS DATED 8-20-12

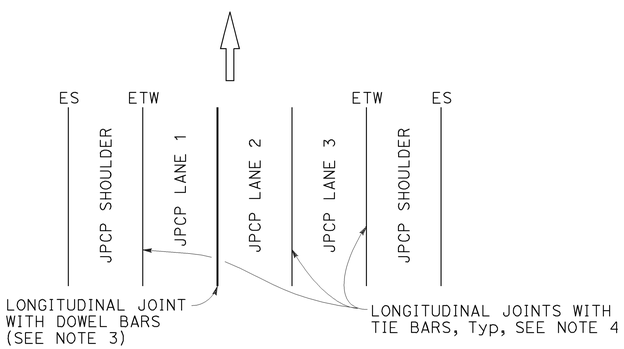

3 LANES WITH CONCRETE SHOULDERS
PLAN

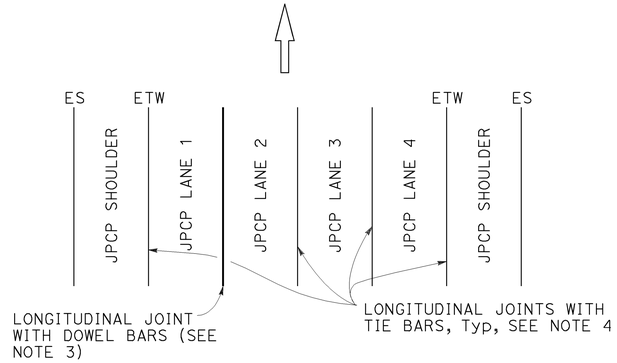

4 LANES WITH CONCRETE SHOULDERS
PLAN

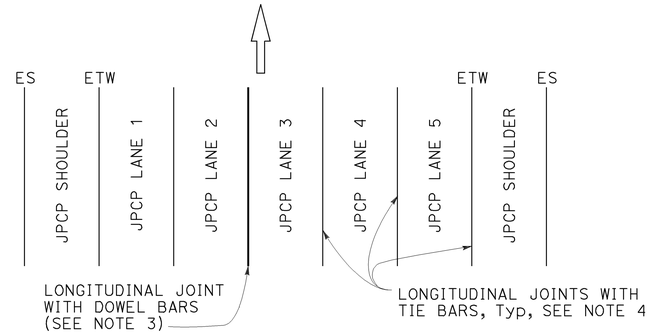

5 LANES WITH CONCRETE SHOULDERS
PLAN

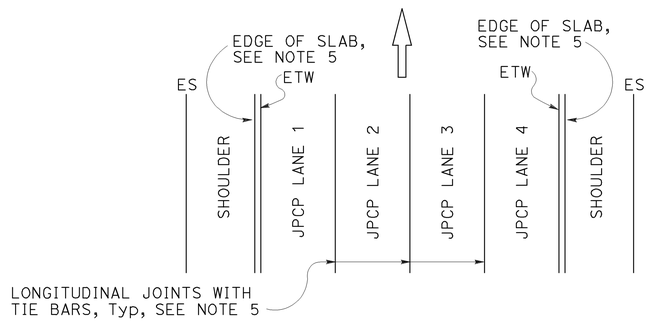

4 LANES OR LESS WITH AC SHOULDERS
PLAN

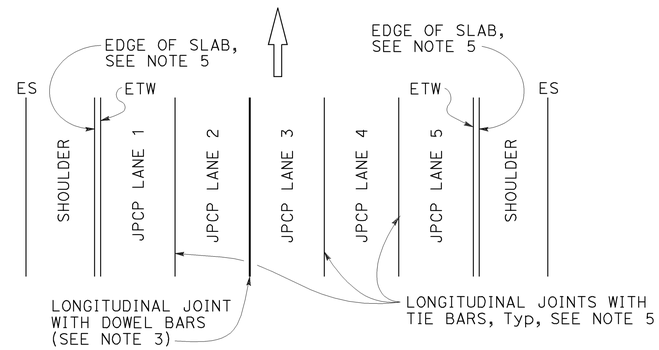

5 LANES WITH AC SHOULDERS
PLAN

NEW CONSTRUCTION

Location of Longitudinal Joints
For JPCP

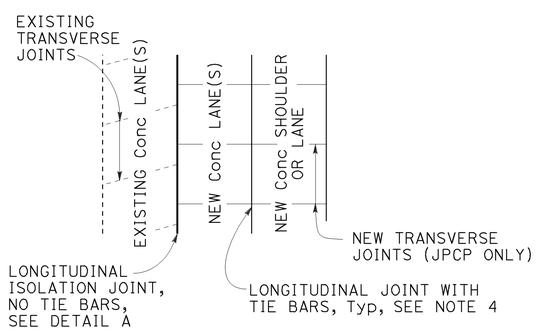

CASE 1
PLAN

Transverse Joints do not align between new and existing.

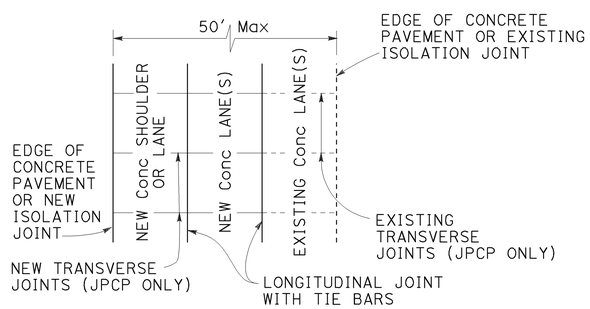

CASE 2
PLAN

Transverse Joints align between new and existing.

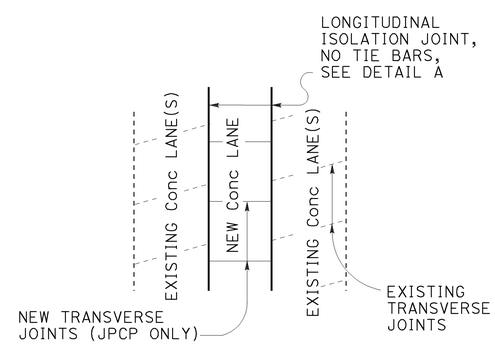

CASE 3 (INTERIOR LANE REPLACEMENT)
PLAN

Transverse Joints do not align between new and existing.

LANE/SHOULDER ADDITION OR RECONSTRUCTION

For JPCP and CRCP

NOTES:

1. Where Lean Concrete Base is not used as base material, the joint filler material used for the longitudinal isolation joint shall only extend to the bottom of the new concrete slab. See Detail A.
2. Use 5/8" ±1/16" dimension for silicone sealant.
3. See Revised Standard Plan RSP P10 for longitudinal joint with dowel bars.
4. See Standard Plan P1.
5. See Standard Plan P2.

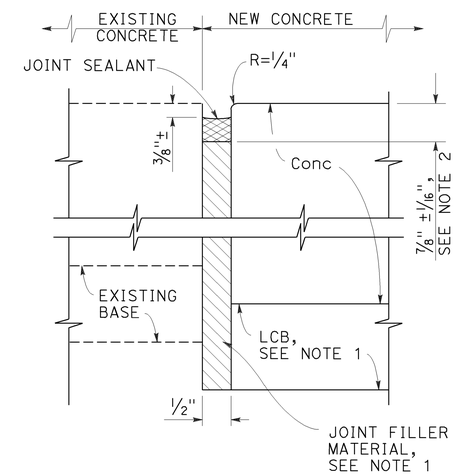

DETAIL "A"

ISOLATION JOINT

STATE OF CALIFORNIA
DEPARTMENT OF TRANSPORTATION

CONCRETE PAVEMENT-LANE SCHEMATICS AND ISOLATION JOINT DETAIL

NO SCALE

RSP P18 DATED APRIL 20, 2012 SUPERSEDES STANDARD PLAN P18
DATED MAY 20, 2011 - PAGE 135 OF THE STANDARD PLANS BOOK DATED 2010.

REVISED STANDARD PLAN RSP P18

2010 REVISED STANDARD PLAN RSP P18

2-22-12

Dist	COUNTY	ROUTE	POST MILES TOTAL PROJECT	SHEET No.	TOTAL SHEETS
08	SBd	40	R138.3/R154.5	43	43

William K. Farnbach
REGISTERED CIVIL ENGINEER

April 20, 2012
PLANS APPROVAL DATE

REGISTERED PROFESSIONAL ENGINEER William K. Farnbach No. C49042 Exp. 9-30-12 CIVIL STATE OF CALIFORNIA

THE STATE OF CALIFORNIA OR ITS OFFICERS OR AGENTS SHALL NOT BE RESPONSIBLE FOR THE ACCURACY OR COMPLETENESS OF SCANNED COPIES OF THIS PLAN SHEET.

TO ACCOMPANY PLANS DATED 8-20-12

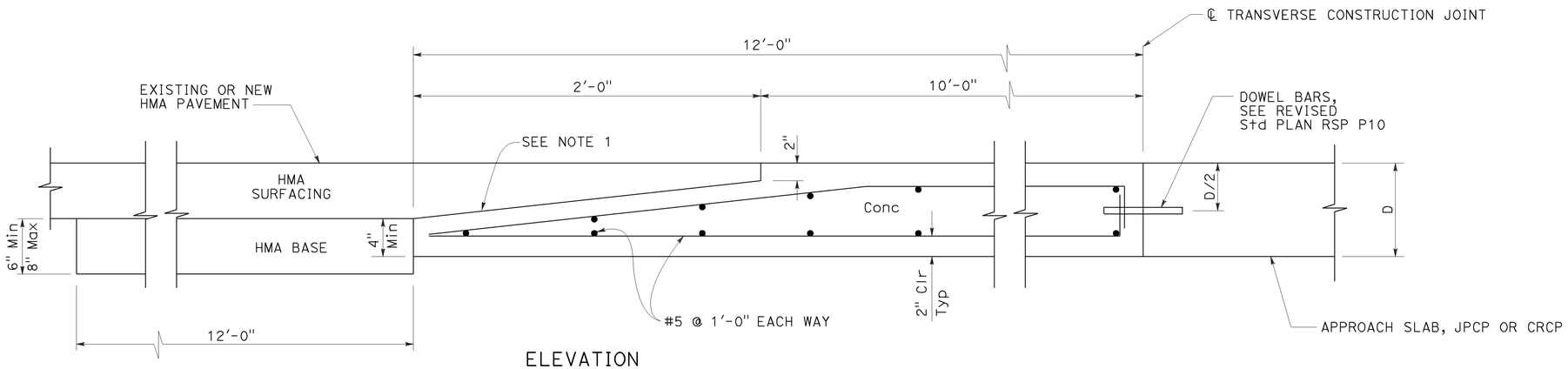

ELEVATION

CONCRETE PAVEMENT TRANSITION PANEL

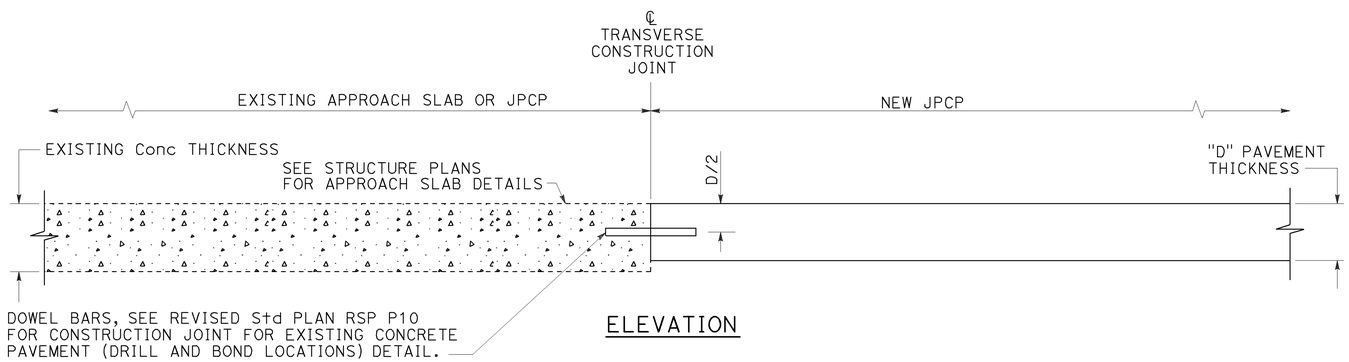

ELEVATION

TERMINAL JOINT TYPE 1

For Exist JPCP or Structure Approach Slab

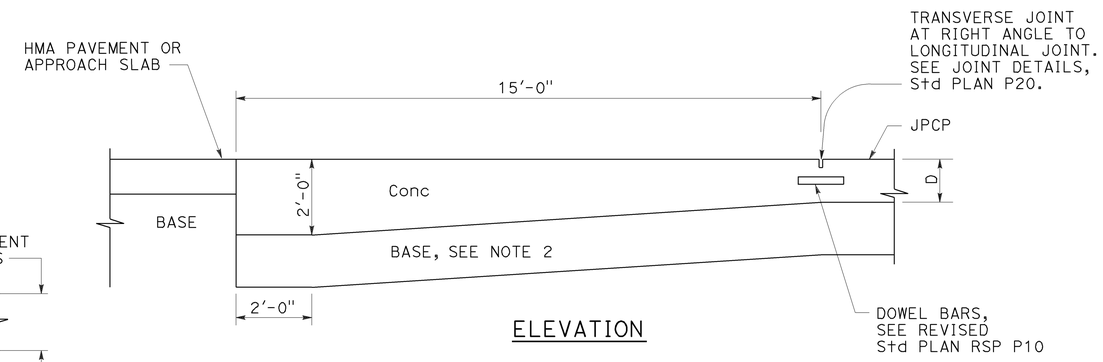

ELEVATION

PAVEMENT END ANCHOR

For HMA Pvmt or Structure Approach Slab

NOTES:

1. Heavy broom finish.
2. Maintain same base thickness as JPCP.

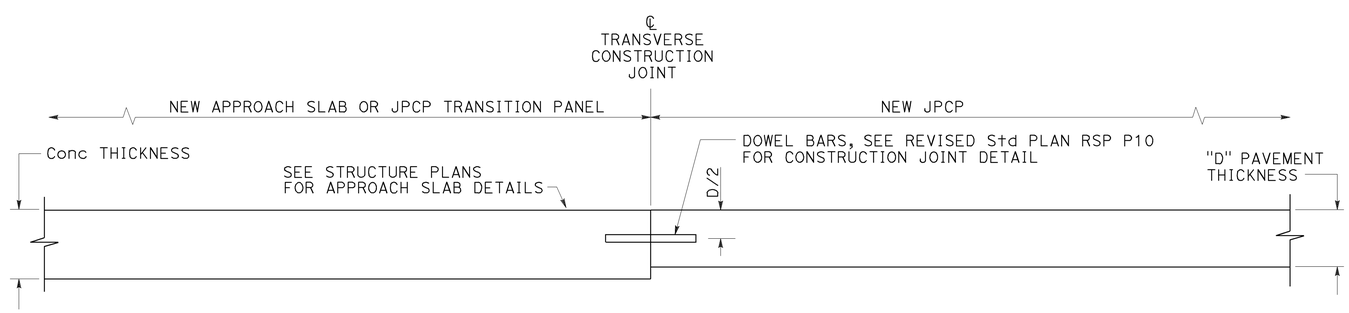

ELEVATION

TERMINAL JOINT TYPE 2

For JPCP Transition Panel or Structure Approach Slab

STATE OF CALIFORNIA
DEPARTMENT OF TRANSPORTATION

CONCRETE PAVEMENT-END PANEL PAVEMENT TRANSITIONS

NO SCALE

RSP P30 DATED APRIL 20, 2012 SUPERSEDES STANDARD PLAN P30
DATED MAY 20, 2011 - PAGE 137 OF THE STANDARD PLANS BOOK DATED 2010.

REVISED STANDARD PLAN RSP P30

2010 REVISED STANDARD PLAN RSP P30

2-22-12