Dist	COUNTY	ROUTE	POST MILES TOTAL PROJECT	SHEET No.	TOTAL SHEETS
08	SBd	18	49.0/51.7	101	179

REGISTERED CIVIL ENGINEER 6-26-15 DATE

6-26-15
PLANS APPROVAL DATE

REGISTERED PROFESSIONAL ENGINEER ALAN R. BISI No. 62808 Exp. 06-30-16 CIVIL STATE OF CALIFORNIA

THE STATE OF CALIFORNIA OR ITS OFFICERS OR AGENTS SHALL NOT BE RESPONSIBLE FOR THE ACCURACY OR COMPLETENESS OF SCANNED COPIES OF THIS PLAN SHEET.

NOTE:

FOR ACCURATE RIGHT OF WAY DATA, CONTACT RIGHT OF WAY ENGINEERING AT THE DISTRICT OFFICE.

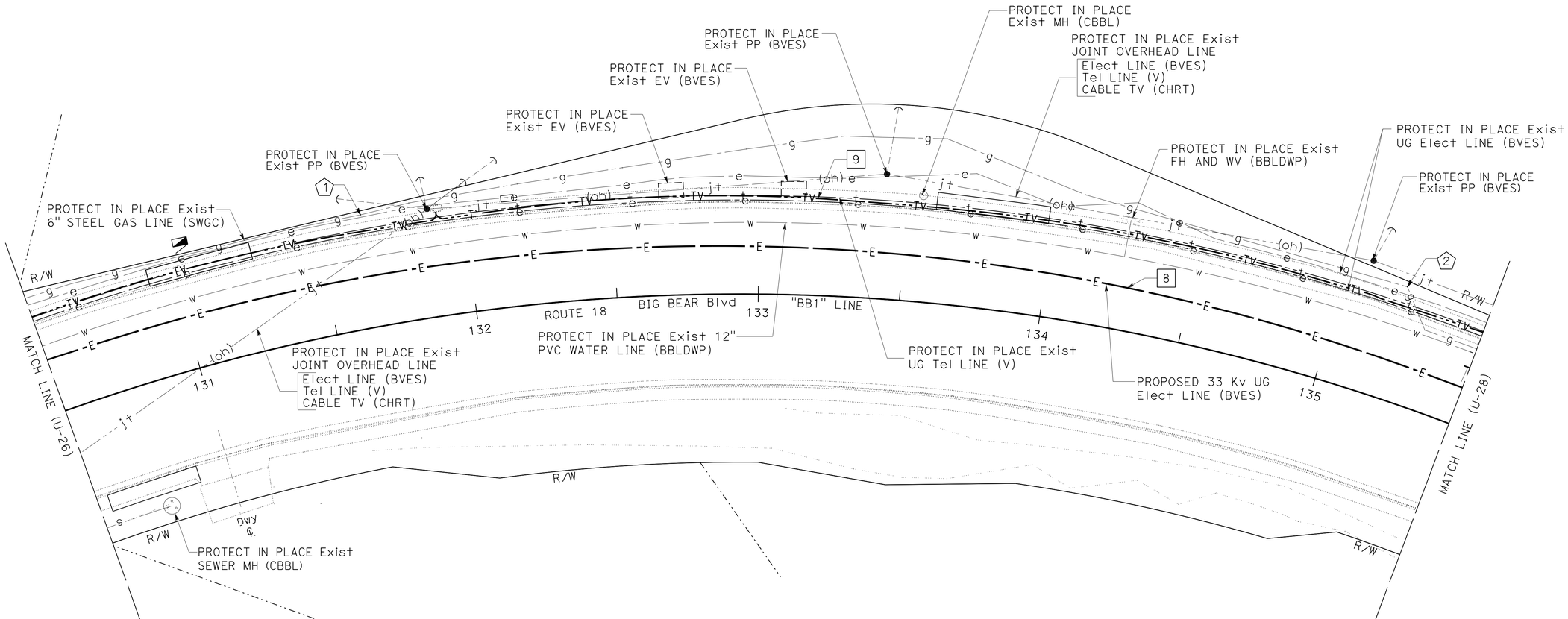

POTHOLE DATA TABLE

(X)	UTILITY	DESCRIPTION	POTHOLE COORDINATE NORTHING	POTHOLE COORDINATE EASTING	FS Elev	DEPTH (FT)	REMARKS
1	SWGC	6" Dia STEEL PIPE	1916787.1510	6898586.9770	6771.38	-3.50′	PROTECT IN PLACE
2	SWGC	6" Dia STEEL PIPE	1917134.3410	6898719.0850	6768.86	-4.8′	PROTECT IN PLACE

UTILITIES

SCALE 1"=20′

U-27

THIS PLAN TO BE USED FOR UTILITY INFORMATION ONLY

STATE OF CALIFORNIA - DEPARTMENT OF TRANSPORTATION
Caltrans
DESIGN

FUNCTIONAL SUPERVISOR: JUSTINE NIU
CALCULATED-DESIGNED BY: MAJID ALLYAS
CHECKED BY: ALAN R. BISI
REVISED BY
DATE REVISED

LAST REVISION 06-26-15
DATE PLOTTED => 01-DEC-2015
TIME PLOTTED => 08:10

Dist	COUNTY	ROUTE	POST MILES TOTAL PROJECT	SHEET No.	TOTAL SHEETS
08	SBd	18	49.0/51.7	102	179

REGISTERED CIVIL ENGINEER 6-26-15 DATE

6-26-15
PLANS APPROVAL DATE

REGISTERED PROFESSIONAL ENGINEER ALAN R. BISI No. 62808 Exp. 06-30-16 CIVIL STATE OF CALIFORNIA

THE STATE OF CALIFORNIA OR ITS OFFICERS OR AGENTS SHALL NOT BE RESPONSIBLE FOR THE ACCURACY OR COMPLETENESS OF SCANNED COPIES OF THIS PLAN SHEET.

NOTE:

FOR ACCURATE RIGHT OF WAY DATA, CONTACT RIGHT OF WAY ENGINEERING AT THE DISTRICT OFFICE.

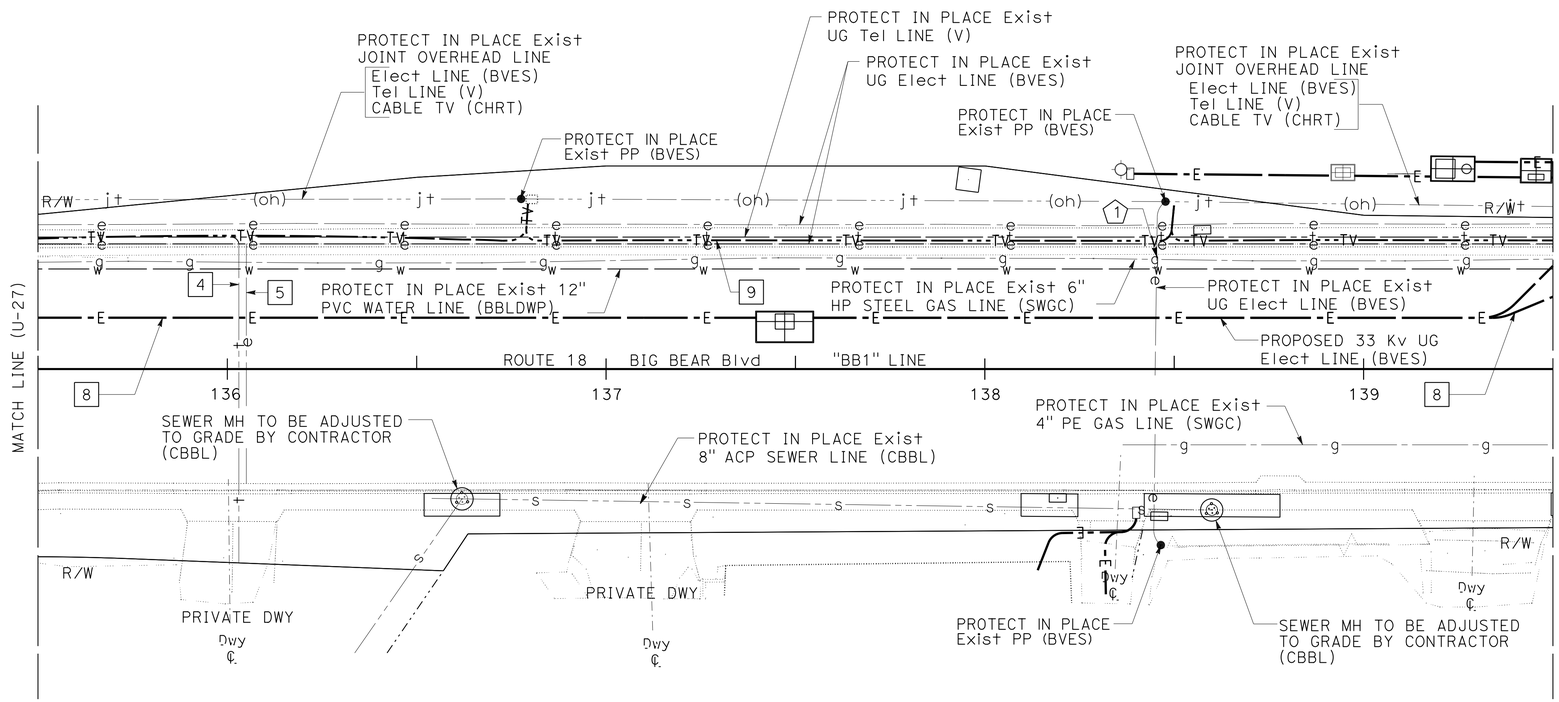

POTHOLE DATA TABLE

(X)	UTILITY	DESCRIPTION	POTHOLE COORDINATE NORTHING	POTHOLE COORDINATE EASTING	FS Elev	DEPTH (FT)	REMARKS
1	BVES	4'' PVC PIPE	1917386.9570	6898925.6230	6755.562	-5.1'	PROTECT IN PLACE
	V	(2)'3' PVC PIPE	1917386.9570	6898925.6230	6755.562	-5.1'	PROTECT IN PLACE

UTILITIES

SCALE 1"=20'

U-28

THIS PLAN TO BE USED FOR UTILITY INFORMATION ONLY

STATE OF CALIFORNIA - DEPARTMENT OF TRANSPORTATION
Caltrans DESIGN

FUNCTIONAL SUPERVISOR: JUSTINE NIU
CALCULATED-DESIGNED BY: MAJID ALLYAS
CHECKED BY: ALAN R. BISI
REVISED BY
DATE REVISED

LAST REVISION 06-26-15
DATE PLOTTED => 01-DEC-2015
TIME PLOTTED => 08:10

Dist	COUNTY	ROUTE	POST MILES TOTAL PROJECT	SHEET No.	TOTAL SHEETS
08	SBd	18	49.0/51.7	103	179

REGISTERED CIVIL ENGINEER 6-26-15 DATE

6-26-15
PLANS APPROVAL DATE

REGISTERED PROFESSIONAL ENGINEER ALAN R. BISI No. 62808 Exp. 06-30-16 CIVIL STATE OF CALIFORNIA

THE STATE OF CALIFORNIA OR ITS OFFICERS OR AGENTS SHALL NOT BE RESPONSIBLE FOR THE ACCURACY OR COMPLETENESS OF SCANNED COPIES OF THIS PLAN SHEET.

NOTE:

FOR ACCURATE RIGHT OF WAY DATA, CONTACT RIGHT OF WAY ENGINEERING AT THE DISTRICT OFFICE.

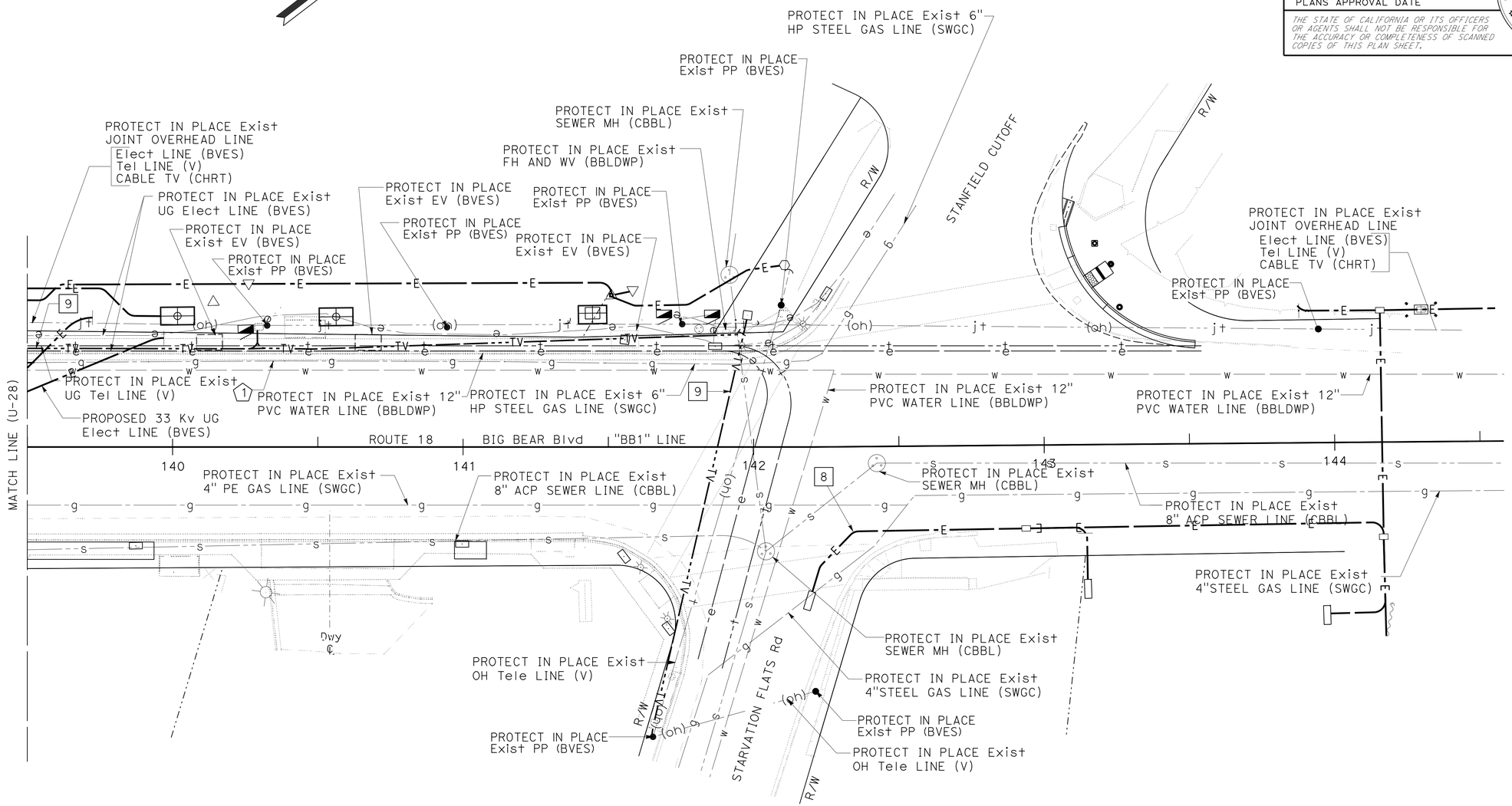

POTHOLE DATA TABLE

(X)	UTILITY	DESCRIPTION	POTHOLE COORDINATE NORTHING	POTHOLE COORDINATE EASTING	FS Elev	DEPTH (FT)	REMARKS
1	SWGC	6" Dia STEEL PIPE	1917537.0760	6899040.7910	6751.720	-4.8'	PROTECT IN PLACE

UTILITIES

SCALE 1"=20'

U-29

THIS PLAN TO BE USED FOR UTILITY INFORMATION ONLY

STATE OF CALIFORNIA - DEPARTMENT OF TRANSPORTATION
Caltrans DESIGN
FUNCTIONAL SUPERVISOR: JUSTINE NIU
CALCULATED-DESIGNED BY: MAJID ALLYAS
CHECKED BY: ALAN R. BISI
REVISED BY
DATE REVISED

LAST REVISION 06-26-15 DATE PLOTTED => 01-DEC-2015 TIME PLOTTED => 08:10

Dist	COUNTY	ROUTE	POST MILES TOTAL PROJECT	SHEET No.	TOTAL SHEETS
08	SBd	18	49.0/51.7	104	179

REGISTERED CIVIL ENGINEER 6-26-15 DATE

6-26-15
PLANS APPROVAL DATE

REGISTERED PROFESSIONAL ENGINEER DEAN D TO No. C81698 Exp. 3-31-16 CIVIL STATE OF CALIFORNIA

THE STATE OF CALIFORNIA OR ITS OFFICERS OR AGENTS SHALL NOT BE RESPONSIBLE FOR THE ACCURACY OR COMPLETENESS OF SCANNED COPIES OF THIS PLAN SHEET.

NOTE:

1. EXACT LOCATION OF SIGNS WILL BE DETERMINED BY THE ENGINEER.
2. SIGN POST LENGTH ARE APPROXIMATE, EXACT SIZE AND LENGTH WILL BE DETERMINED BY THE ENGINEER.

CONSTRUCTION AREA SIGNS

SIGN No. (X)	SIGN CODE		PANEL SIZE	SIGN MESSAGE	No. OF POST AND SIZE (in)	No. OF SIGNS (ea)
	FEDERAL	CALIFORNIA	(in)			
A		C40	72 x 36	TRAFFIC FINES DOUBLED IN CONSTRUCTION ZONE	2- 4" x 6"	2
B		C11	60 X 36	ROAD CONSTRUCTION NEXT 3 MILES	2- 4" x 6"	2
C	W20-1		48" x 48"	ROAD WORK AHEAD	1- 6" x 6"	35
D	G20-2		48 X 24	END ROAD WORK	2- 4" x 4"	2

PCMS

(ea)
2

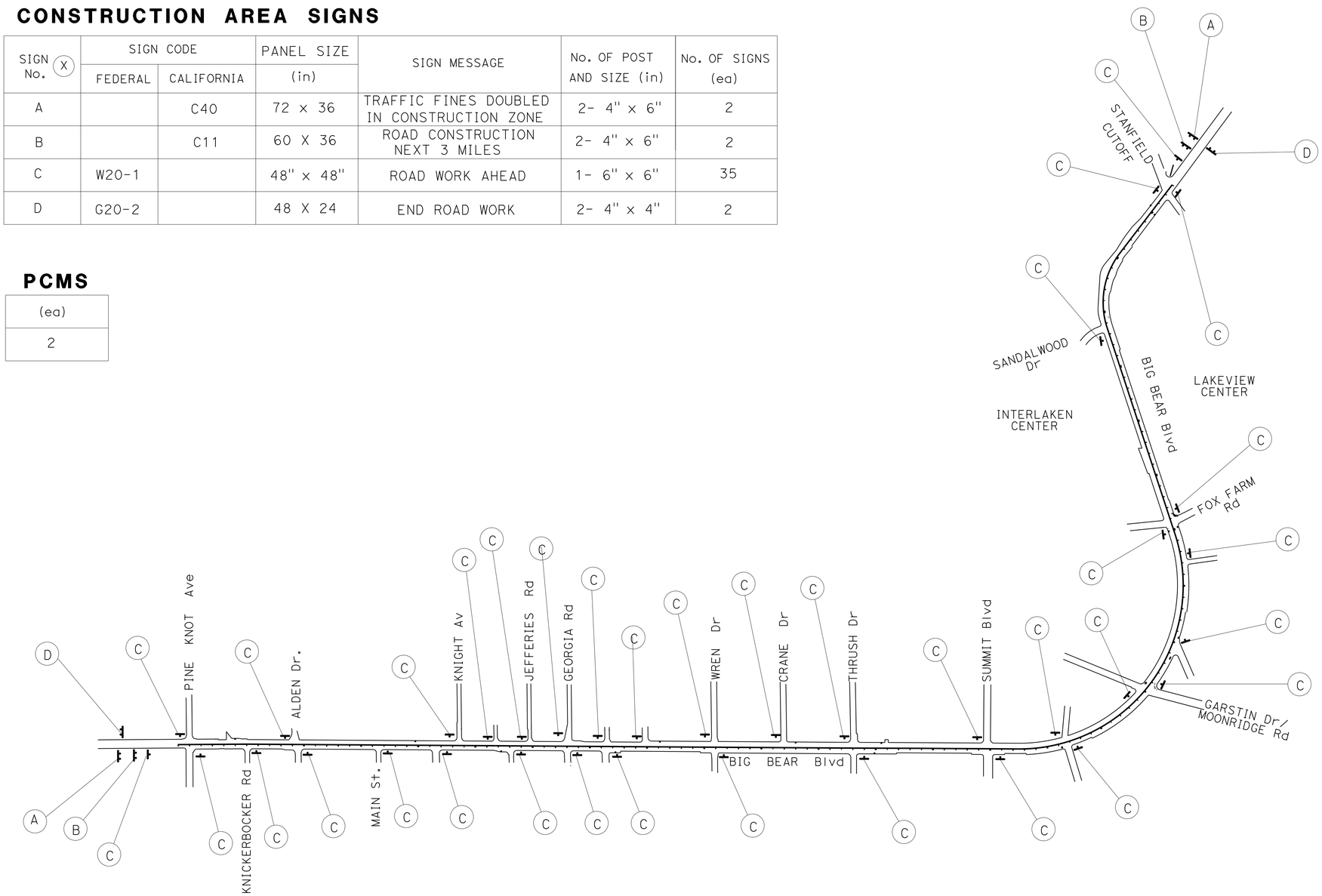

CONSTRUCTION AREA SIGNS

NO SCALE

CS-1

APPROVED FOR CONSTRUCTION AREA SIGN WORK ONLY

STATE OF CALIFORNIA - DEPARTMENT OF TRANSPORTATION
Caltrans
TRAFFIC DESIGN

FUNCTIONAL SUPERVISOR: MARIO AMANCIO
CALCULATED-DESIGNED BY: DEAN TO
CHECKED BY: TRAN HOANG
REVISED BY
DATE REVISED

LAST REVISION 06-26-15
DATE PLOTTED => 01-DEC-2015
TIME PLOTTED => 08:10

Dist	COUNTY	ROUTE	POST MILES TOTAL PROJECT	SHEET No.	TOTAL SHEETS
08	SBd	18	49.0/51.7	105	179

REGISTERED CIVIL ENGINEER 6-26-15 DATE

6-26-15
PLANS APPROVAL DATE

REGISTERED PROFESSIONAL ENGINEER DEAN D TO No. 81698 Exp. 03-31-16 CIVIL STATE OF CALIFORNIA

THE STATE OF CALIFORNIA OR ITS OFFICERS OR AGENTS SHALL NOT BE RESPONSIBLE FOR THE ACCURACY OR COMPLETENESS OF SCANNED COPIES OF THIS PLAN SHEET.

NOTE:
SEE THQ-1 FOR CONSTRUCTION AREA SIGN INFORMATION AND QUANTITES

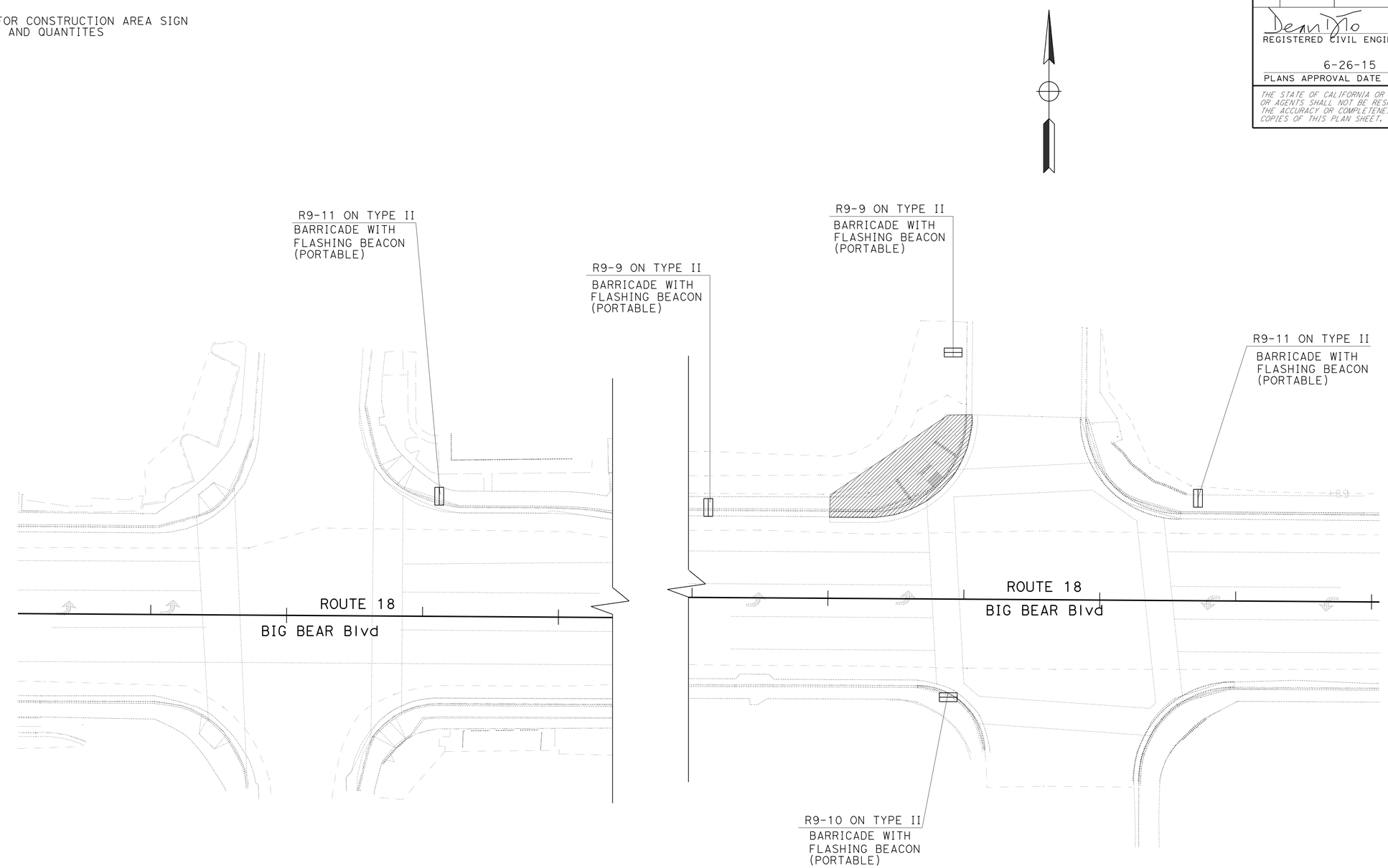

TYPICAL CROSSWALK CLOSURE AND PEDESTRIAL DETOUR

APPROVED FOR PEDSETRIAL DETOUR ONLY

MOTORIST INFORMATION PLAN

SCALE 1"=20'

MI-1

STATE OF CALIFORNIA - DEPARTMENT OF TRANSPORTATION
Caltrans® TRAFFIC DESIGN

FUNCTIONAL SUPERVISOR: PATRICK HALLY
CALCULATED-DESIGNED BY: DEAN TO
CHECKED BY: TRAN HOANG
REVISED BY
DATE REVISED

LAST REVISION 06-26-15
DATE PLOTTED => 01-DEC-2015
TIME PLOTTED => 08:10

Dist	COUNTY	ROUTE	POST MILES TOTAL PROJECT	SHEET No.	TOTAL SHEETS
08	SBd	18	49.0/51.7	106	179

REGISTERED CIVIL ENGINEER 6-26-15 DATE

6-26-15
PLANS APPROVAL DATE

REGISTERED PROFESSIONAL ENGINEER ALAN R. BISI No. 62808 Exp. 06-30-16 CIVIL STATE OF CALIFORNIA

THE STATE OF CALIFORNIA OR ITS OFFICERS OR AGENTS SHALL NOT BE RESPONSIBLE FOR THE ACCURACY OR COMPLETENESS OF SCANNED COPIES OF THIS PLAN SHEET.

CONSTRUCTION STAGING GENERAL NOTES:

1. ACTIVE STAGE AND PHASE CONSTRUCTION ACTIVITIES MUST BE COMPLETE TO THE SATISFACTION OF THE ENGINEER BEFORE BEGINNING CONSTRUCTION ACTIVITIES FOR SUBSEQUENT STAGE AND PHASE.
2. BUS STOPS IMPACTED BY CONSTRUCTION ACTIVITIES SHALL BE RELOCATED IN ACCORDANCE WITH ENGINEER'S DIRECTION.
3. CONTRACTOR SHALL LIMIT WORK AREA TO AN 800 LF CONTIGUOUS SEGMENT AT ANY TIME.
4. COLD PLANE AND ROADWAY PAVING OPERATIONS SHALL COMMENCE AT LAST STAGE OF PROJECT WITH EXCEPTION OF LOCATION 30 (SEE NOTE 5 BELOW). CONTRACTOR SHALL ENSURE CURB RAMPS ARE OPERATIONAL AND ADA COMPLIANT UNTIL FINAL PAVING OPERATIONS. ALL ROADWAY CUTS ADJACENT TO THE TRAVEL WAY SHALL BE BACKFILLED PER THE SPECIAL STANDARD PROVISIONS (SSPs).
5. PAVING AT LOCATION 30 MUST TAKE PLACE BEFORE CONCLSION OF STAGE 1 ACTIVITIES.
6. CONSTRUCTION STAGING SHALL FOLLOW THE CONCEPT PRESENTED IN THE CONTRACT PLANS UNLESS APPROVED BY THE ENGINEER. SAID STAGING REPRESENTS A COLLABORATIVE EFFORT BY CALTRANS AND UTILITY PURVEYORS TO COORDINATE CONSTRUCTION ACTIVITIES BETWEEN PARTIES. DEVIATION FROM THE SUPPLIED STAGING PLANS WILL RESULT IN OVERLAPPING CONSTRUCTION ACTIVITY BETWEEN THE RESPECTIVE CONTRACTORS AND WILL LIKELY RESULT IN DELAYS. THE STATE SHALL NOT BE HELD RESPONSIBLE FOR DELAYS RESULTING FROM UNAPPROVED DEVIATIONS FROM THE CONSTRUCTION STAGING PLAN.
7. CONTRACTOR SHALL PERFORM ROADWAY PAVING OPERATIONS AT LOCATION #30 (STANFIELD CUTOFF) BEFORE THE CONCLUSION OF CONSTRUCTION ACTIVITIES FOR STAGE 1 (SBD-18 STATION 93+50 - 145+50). ROADWAY PAVING SHALL BE COMPLETE, IN PLACE, WITH NECESSARY PAVEMENT STRIPING AND MARKINGS TO THE SATISFACTION OF THE ENGINEER.
8. CURB RAMP CONSTRUCTION AT LOCAL STREET INTERSECTIONS SHALL BE LIMITED TO ONE CURB RAMP AT A TIME WHERE THE LOCAL STREET WIDTH IS LESS THAN 28-FEET WIDE WITHIN 50-FEET OF THE LIMIT LINE.
9. ALL CONSTRUCTION ACTIVITY WITHIN THE VICINITY OF BIG BEAR MIDDLE SCHOOL SHALL BE SCHEDULED TO OCCUR DURING THE PERIOD OF JUNE 22, 2015 TO AUGUST 3, 2015 (SUMMER RECESS). THE AREA SUBJECT TO THIS RESTRICTION SPANS FROM MOUNTAINAIRE LANE TO EUREKA DRIVE (SBD-18 STA +/- 36+00 TO +/-51+00). THESE DATES ARE PRELIMINARY AND CONTRACTOR SHALL DETERMINE CURRENT SCHOOL SCHEDULES WITH THE BEAR VALLEY UNIFIED SCHOOL DISTRICT PRIOR TO CONSTRUCTION.
10. CONTRACTOR SHALL LIMIT WORK TO NO MORE THAN 800 LINEAR FEET AT ONE TIME DURING ANY PHASE UNLESS APPROVED BY ENGINEER. PEDESTRIAN ACCESS OR AN ALTERNATE PEDESTRIAN ROUTE MUST BE MAINTAINED AT ALL TIMES DURING CONSTRUCTION ACTIVITIES FOR SAID STAGE AND PHASE TO THE SATISFACTION OF THE ENGINEER.
11. DRIVEWAY CONSTRUCTION SHALL OCCUR DURING NON-BUSINESS HOURS WITHOUT APPROVAL FROM ENGINEER. SHOULD APPROVAL BE GRANTED, VEHICULAR ACCESS SHALL BE MAINTAINED DURING THE DURATION OF CONSTRUCTION ACTIVITY FOR SAID DRIVEWAY TO THE SATISFACTION OF THE ENGINEER. BUSINESSES SHALL BE NOTIFIED OF TYPE OF WORK AND EXPECTED DURATION BY ENGINEER AT LEAST 10-DAYS IN ADVANCE OF DRIVEWAY CONSTRUCTION ACTIVITIES.

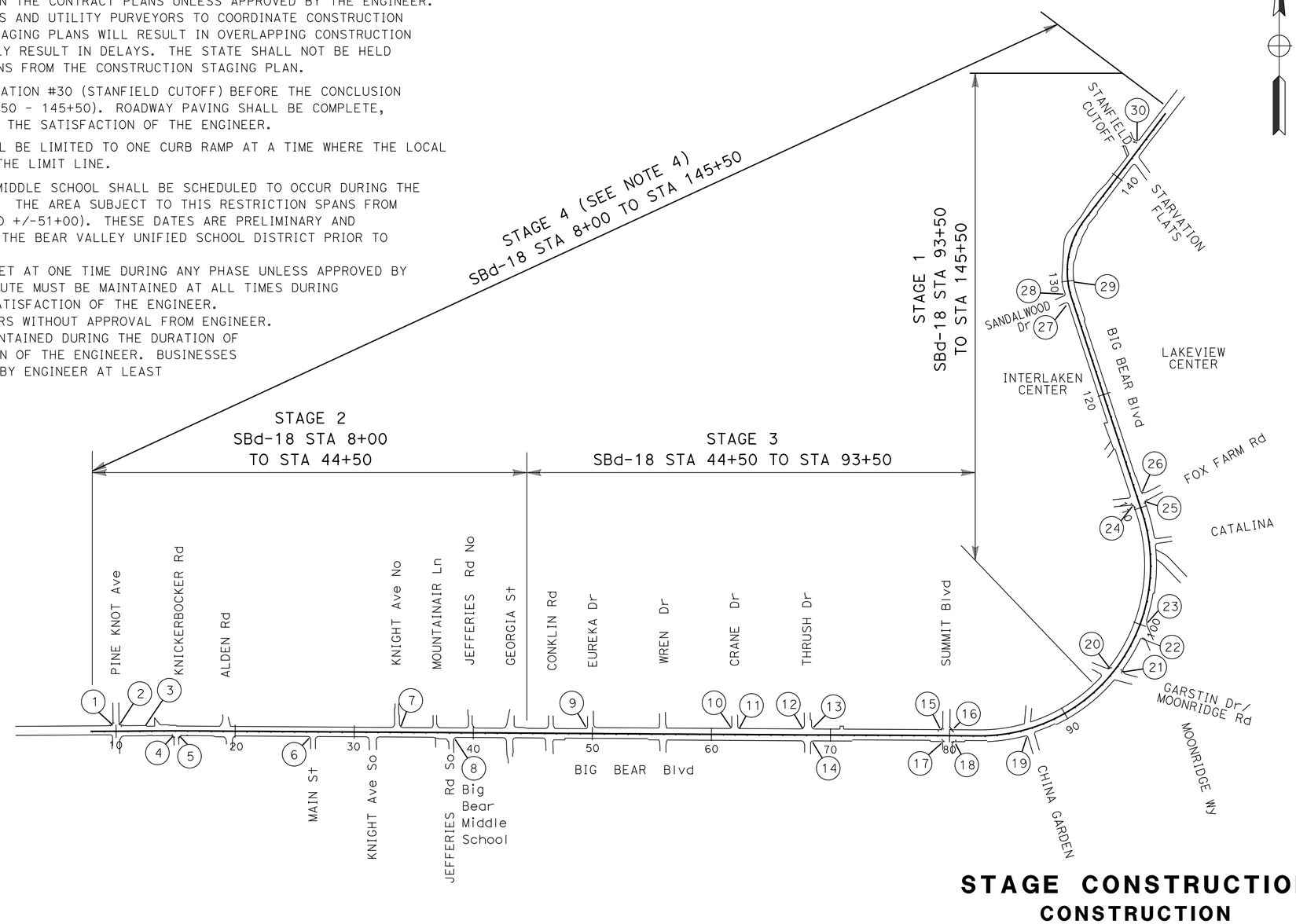

STAGE CONSTRUCTION
CONSTRUCTION STAGING OVERVIEW
NO SCALE

SC-1

STATE OF CALIFORNIA - DEPARTMENT OF TRANSPORTATION
Caltrans® DESIGN
FUNCTIONAL SUPERVISOR: JUSTINE NIU
CALCULATED-DESIGNED BY: MOHAMMAD ABDRABOH
CHECKED BY: ALAN R. BISI
REVISED BY
DATE REVISED

LAST REVISION 06-26-15
DATE PLOTTED => 01-DEC-2015
TIME PLOTTED => 08:10

Dist	COUNTY	ROUTE	POST MILES TOTAL PROJECT	SHEET No.	TOTAL SHEETS
08	SBd	18	49.0/51.7	107	179

REGISTERED CIVIL ENGINEER 6-26-15 DATE

6-26-15
PLANS APPROVAL DATE

REGISTERED PROFESSIONAL ENGINEER DEAN D TO No. 81698 Exp. 03-31-16 CIVIL STATE OF CALIFORNIA

THE STATE OF CALIFORNIA OR ITS OFFICERS OR AGENTS SHALL NOT BE RESPONSIBLE FOR THE ACCURACY OR COMPLETENESS OF SCANNED COPIES OF THIS PLAN SHEET.

NOTE:

1- REFER TO STANDARD PLAN T11 AND T13 FOR TRAFFIC CONTROL DURING CONSTRUCTION
2- DELINATOR (PORTABLE) SHOW ONLY FOR NON-WORKING HOURS
3- ONLY ONE CURB RAMP SHALL BE CONSTRUCTED AT A TIME
4- ONLY SIDEWALK ON ONE SIDE OF THE ROAD SHALL BE CONSTRUCTED AT A TIME
5- DRIVEWAY ACCESS SHALL BE PROVIDED AT ALL TIMES DURING THE AFFECTED BUSSINESS ' NORMAL OPERATING HOURS
6- DRIVEWAY CONSTRUCTION SHALL OCCUR DURING NON-BUSINESS HOURS UNLESS APPROVED BY ENGINEER

LEGEND:

WORK AREA

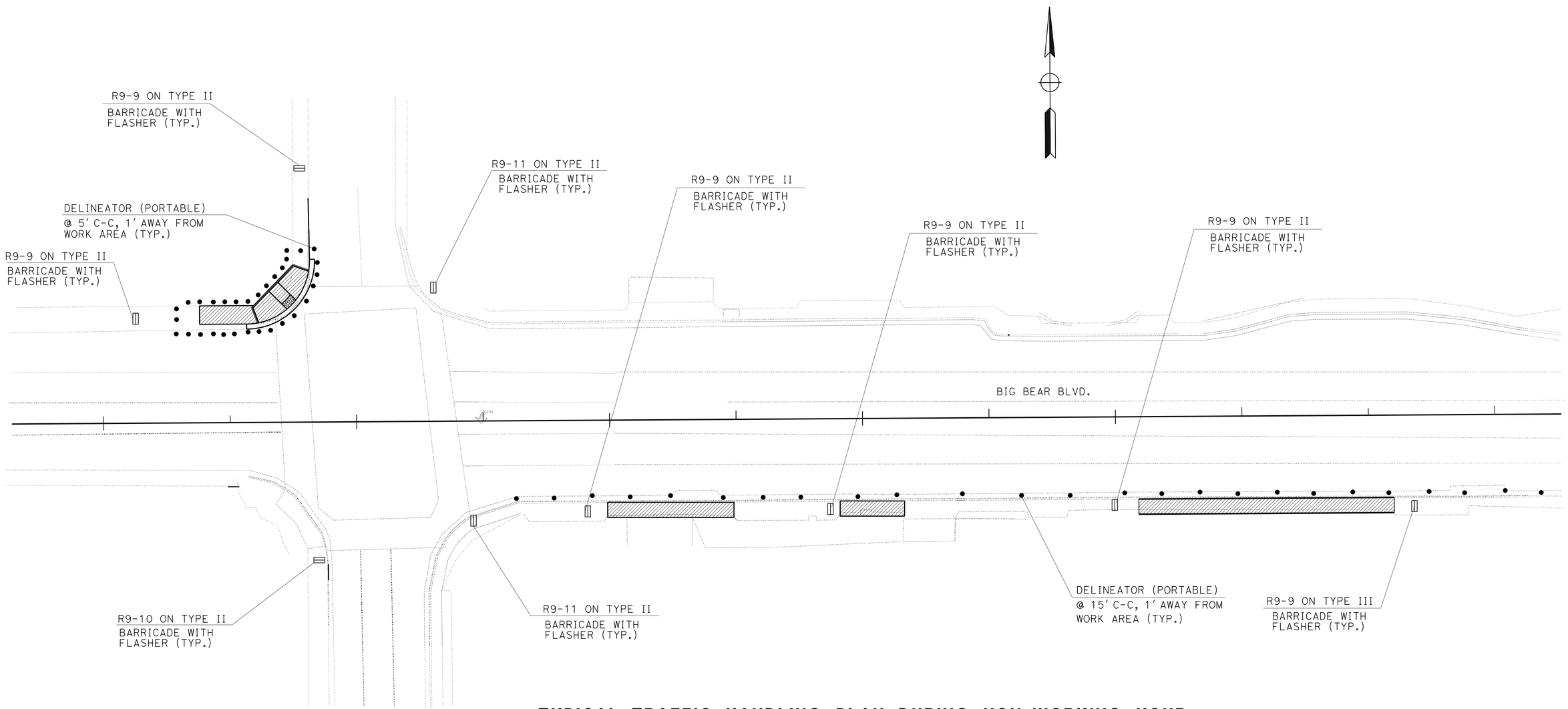

TYPICAL TRAFFIC HANDLING PLAN DURING NON-WORKING HOUR

TRAFFIC HANDLING PLAN

SCALE 1"=20'

TH-1

APPROVED FOR TRAFFIC HANDLING WORK ONLY

STATE OF CALIFORNIA - DEPARTMENT OF TRANSPORTATION
Caltrans® TRAFFIC DESIGN

FUNCTIONAL SUPERVISOR: MARIO AMANCIO
CALCULATED-DESIGNED BY: DEAN TO
CHECKED BY: TRAN HOANG
REVISED BY
DATE REVISED

LAST REVISION 06-26-15
DATE PLOTTED => 01-DEC-2015
TIME PLOTTED => 08:10

Dist	COUNTY	ROUTE	POST MILES TOTAL PROJECT	SHEET No.	TOTAL SHEETS
08	SBd	18	49.0/51.7	108	179

REGISTERED CIVIL ENGINEER DATE 6-26-15

PLANS APPROVAL DATE 6-26-15

REGISTERED PROFESSIONAL ENGINEER DEAN D TO No. C81698 Exp. 3-31-16 CIVIL STATE OF CALIFORNIA

THE STATE OF CALIFORNIA OR ITS OFFICERS OR AGENTS SHALL NOT BE RESPONSIBLE FOR THE ACCURACY OR COMPLETENESS OF SCANNED COPIES OF THIS PLAN SHEET.

CONSTRUCTION AREA SIGNS

SIGN CODE (N)	PANEL SIZE (IN X IN)	SIGN MESSAGE	MOUNTED ON TYPE II BARRICADE (EA) (N)
R9-9	24 x 12	SIDEWALK CLOSED	40
R9-10	24 x 12	SIDEWALK CLOSED USE OTHER SIDE	5
R9-11	24 x 12	SIDEWALK CLOSED AHEAD CROSS HERE	5

N = NOT A SPEPARATE PAY ITEM

TRAFFIC ITEM

TYPE II BARRICADE (EA)	DELINEATOR (CLASS 1) (EA)
50	170

N = NOT A SPEPARATE PAY ITEM

TRAFFIC HANDLING QUANTITIES
THQ-1

REVISED BY | DATE REVISED

DEAN TO | TRAN HOANG

CALCULATED-DESIGNED BY | CHECKED BY

FUNCTIONAL SUPERVISOR: MARIO AMANCIO

STATE OF CALIFORNIA - DEPARTMENT OF TRANSPORTATION

Caltrans® TRAFFIC DESIGN

LAST REVISION 06-26-15 | DATE PLOTTED => 01-DEC-2015 | TIME PLOTTED => 08:10

Dist	COUNTY	ROUTE	POST MILES TOTAL PROJECT	SHEET No.	TOTAL SHEETS
08	SBd	18	49.0/51.7	109	179

Dean D To 6-26-15
REGISTERED CIVIL ENGINEER DATE

6-26-15
PLANS APPROVAL DATE

REGISTERED PROFESSIONAL ENGINEER
DEAN D TO
No. 81698
Exp. 03-31-16
CIVIL
STATE OF CALIFORNIA

THE STATE OF CALIFORNIA OR ITS OFFICERS OR AGENTS SHALL NOT BE RESPONSIBLE FOR THE ACCURACY OR COMPLETENESS OF SCANNED COPIES OF THIS PLAN SHEET.

NOTES:

1. CROSSWALK AND LIMIT LINE SHALL BE 12" WHITE AND 12′ IN WIDTH UNLESS OTHERWISE NOTED.
2. ALL LIMIT LINE AND "STOP" PAVEMENT MARKING FROM MINOR ROAD NEAR ROUTE 18 SHALL BE REFESHED.
3. THE LIMIT LINES AND PAVEMENT "STOP" MARKING AT KNIGHT AVE, JEFFRIES Rd, EURAKA Dr, CRANE Dr., THRUSH Dr, MOONRIDGE WAY, AND SANDALWOOD Dr, SHALL BE DETERMINED BY THE ENGINEER.
4. EXISTING CROSSWALK SHALL BE REMOVED PRIOR TO PLACING NEW CROSSWALK.
5. EXACT CROSSWALK LOCATION SHALL BE DETERMINED BY THE ENGINEER.

LEGEND:

- DIRECTION OF TRAVEL
- STRIPING TERMINATION
- (No.) TRAFFIC STRIPE DETAIL NUMBER
- (XX) ROADSIDE SIGN (WITH SHEET NUMBER AND NUMBER)
- TYPE IV (LT) ARROW
- TYPE VI ARROW
- TYPE VII ARROW
- SIGNAL "SIGNAL" MARKING
- AHEAD "AHEAD" MARKING

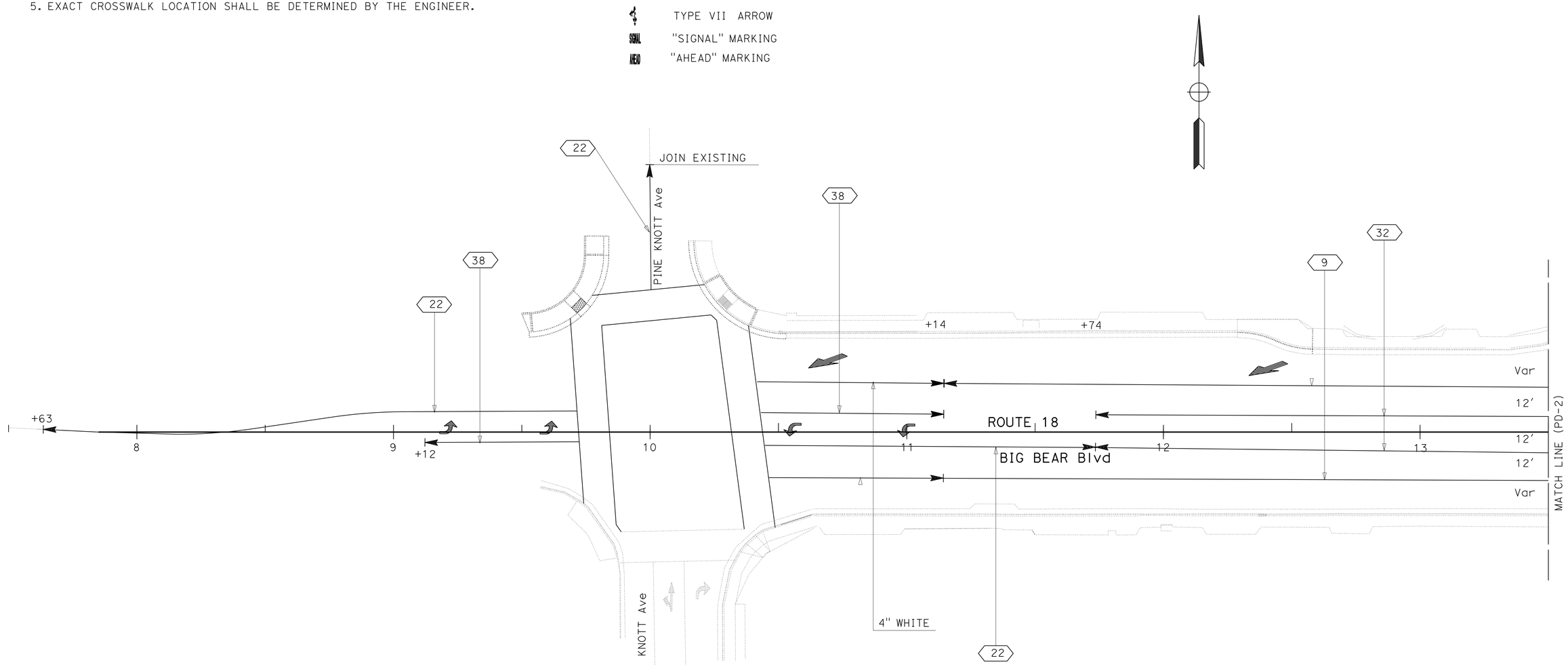

PAVEMENT DELINEATION PLAN

SCALE 1"=20′

PD-1

APPROVED FOR PAVEMENT DELINEATION WORK ONLY

STATE OF CALIFORNIA - DEPARTMENT OF TRANSPORTATION
Caltrans® **TRAFFIC DESIGN**

FUNCTIONAL SUPERVISOR: PATRICK HALLY
CALCULATED-DESIGNED BY: DEAN TO
CHECKED BY: TRAN HOANG
REVISED BY
DATE REVISED

LAST REVISION 06-26-15
DATE PLOTTED => 01-DEC-2015
TIME PLOTTED => 08:10

Dist	COUNTY	ROUTE	POST MILES TOTAL PROJECT	SHEET No.	TOTAL SHEETS
08	SBd	18	49.0/51.7	110	179

Dean D To 6-26-15
REGISTERED CIVIL ENGINEER DATE

6-26-15
PLANS APPROVAL DATE

REGISTERED PROFESSIONAL ENGINEER
DEAN D TO
No. 81698
Exp. 03-31-16
CIVIL
STATE OF CALIFORNIA

THE STATE OF CALIFORNIA OR ITS OFFICERS OR AGENTS SHALL NOT BE RESPONSIBLE FOR THE ACCURACY OR COMPLETENESS OF SCANNED COPIES OF THIS PLAN SHEET.

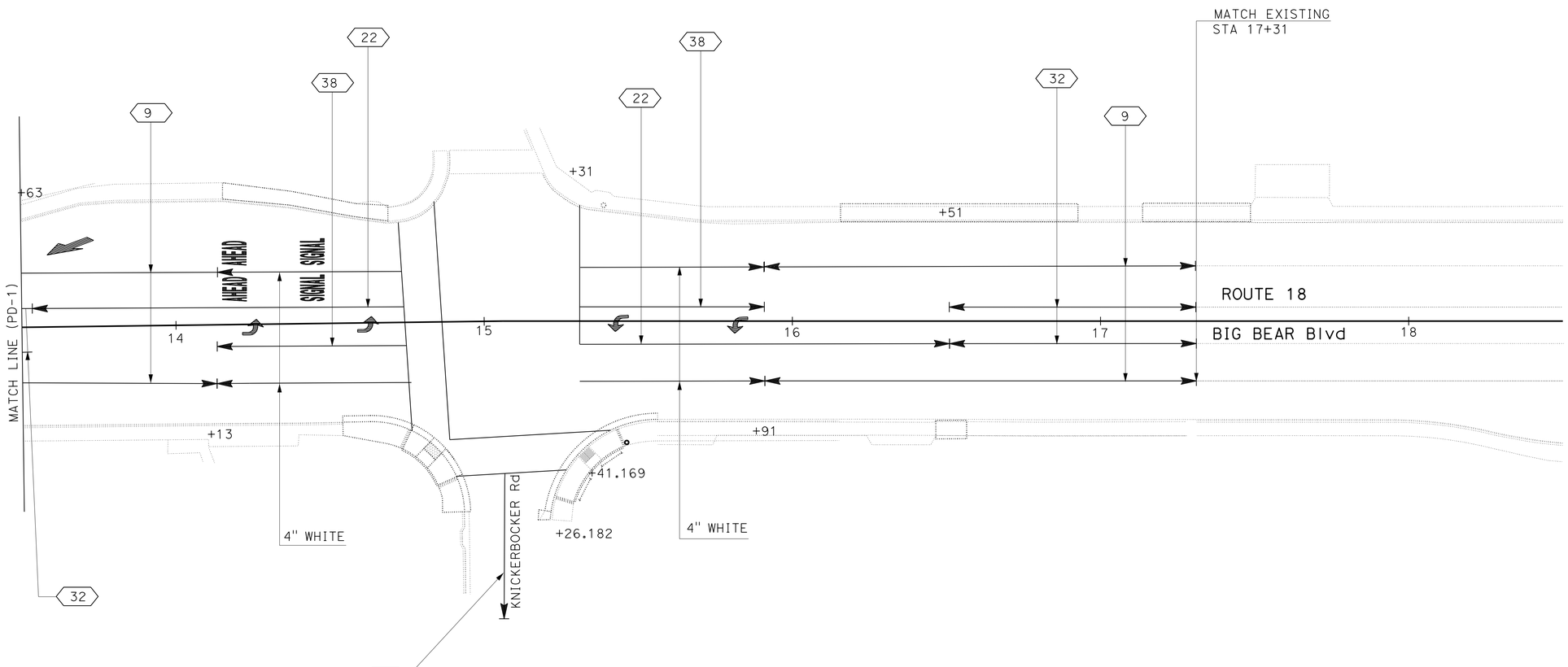

PAVEMENT DELINEATION PLAN

SCALE 1"=20'

PD-2

APPROVED FOR PAVEMENT DELINEATION WORK ONLY

STATE OF CALIFORNIA - DEPARTMENT OF TRANSPORTATION
Caltrans® **TRAFFIC DESIGN**

FUNCTIONAL SUPERVISOR: PATRICK HALLY
CALCULATED-DESIGNED BY: DEAN TO
CHECKED BY: TRAN HOANG
REVISED BY
DATE REVISED

LAST REVISION 06-26-15
DATE PLOTTED => 01-DEC-2015
TIME PLOTTED => 08:10

Dist	COUNTY	ROUTE	POST MILES TOTAL PROJECT	SHEET No.	TOTAL SHEETS
08	SBd	18	49.0/51.7	111	179

REGISTERED CIVIL ENGINEER 6-26-15 DATE

6-26-15
PLANS APPROVAL DATE

REGISTERED PROFESSIONAL ENGINEER
DEAN D TO
No. 81698
Exp. 03-31-16
CIVIL
STATE OF CALIFORNIA

THE STATE OF CALIFORNIA OR ITS OFFICERS OR AGENTS SHALL NOT BE RESPONSIBLE FOR THE ACCURACY OR COMPLETENESS OF SCANNED COPIES OF THIS PLAN SHEET.

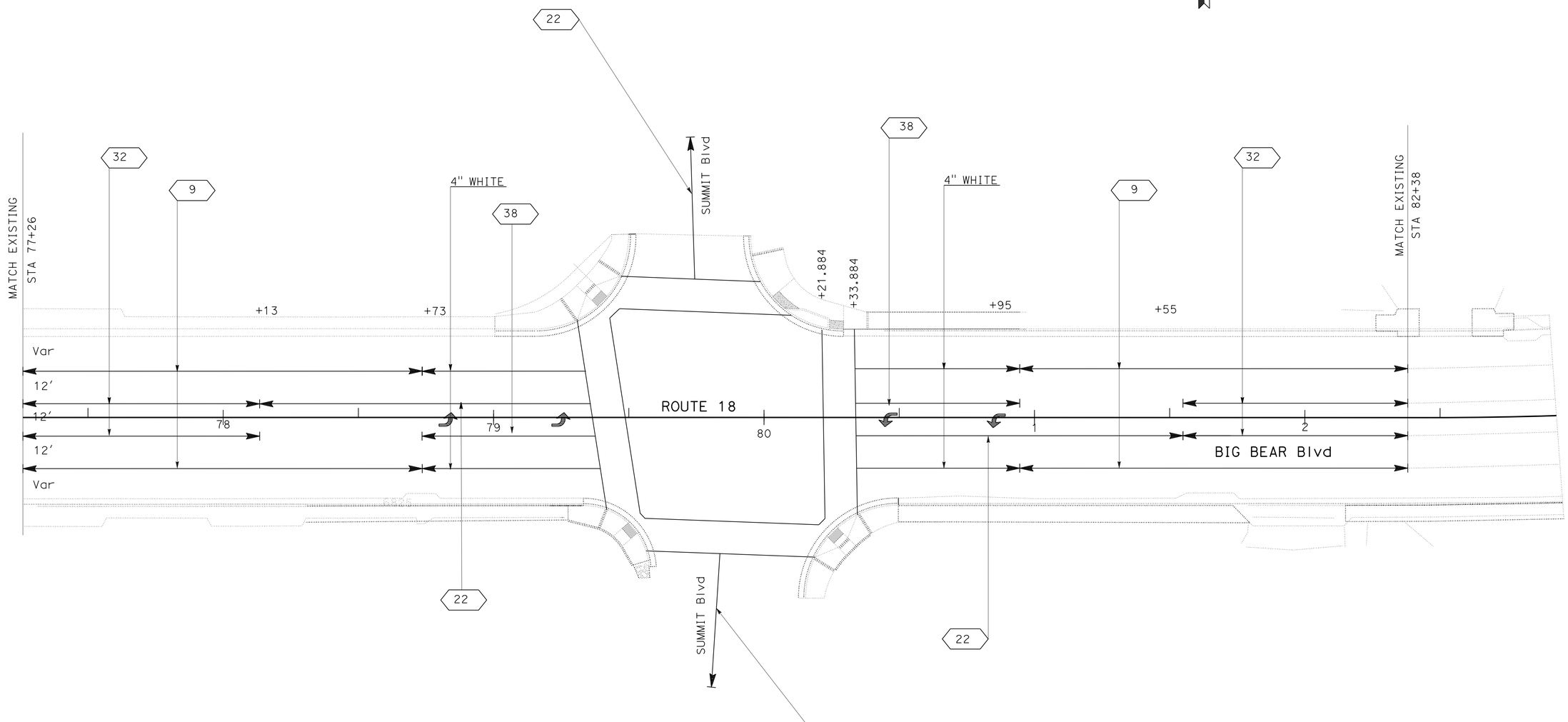

PAVEMENT DELINEATION PLAN

SCALE 1"=20'

PD-3

APPROVED FOR PAVEMENT DELINEATION WORK ONLY

STATE OF CALIFORNIA - DEPARTMENT OF TRANSPORTATION
Caltrans
TRAFFIC DESIGN

FUNCTIONAL SUPERVISOR: MARIO AMANCIO

CALCULATED-DESIGNED BY: DEAN TO
CHECKED BY: TRAN HOANG

REVISED BY | DATE REVISED

LAST REVISION 06-26-15 | DATE PLOTTED => 01-DEC-2015 | TIME PLOTTED => 08:10

Dist	COUNTY	ROUTE	POST MILES TOTAL PROJECT	SHEET No.	TOTAL SHEETS
08	SBd	18	49.0/51.7	112	179

REGISTERED CIVIL ENGINEER DATE 6-26-15

PLANS APPROVAL DATE 6-26-15

REGISTERED PROFESSIONAL ENGINEER DEAN D TO No. 81698 Exp. 03-31-16 CIVIL STATE OF CALIFORNIA

THE STATE OF CALIFORNIA OR ITS OFFICERS OR AGENTS SHALL NOT BE RESPONSIBLE FOR THE ACCURACY OR COMPLETENESS OF SCANNED COPIES OF THIS PLAN SHEET.

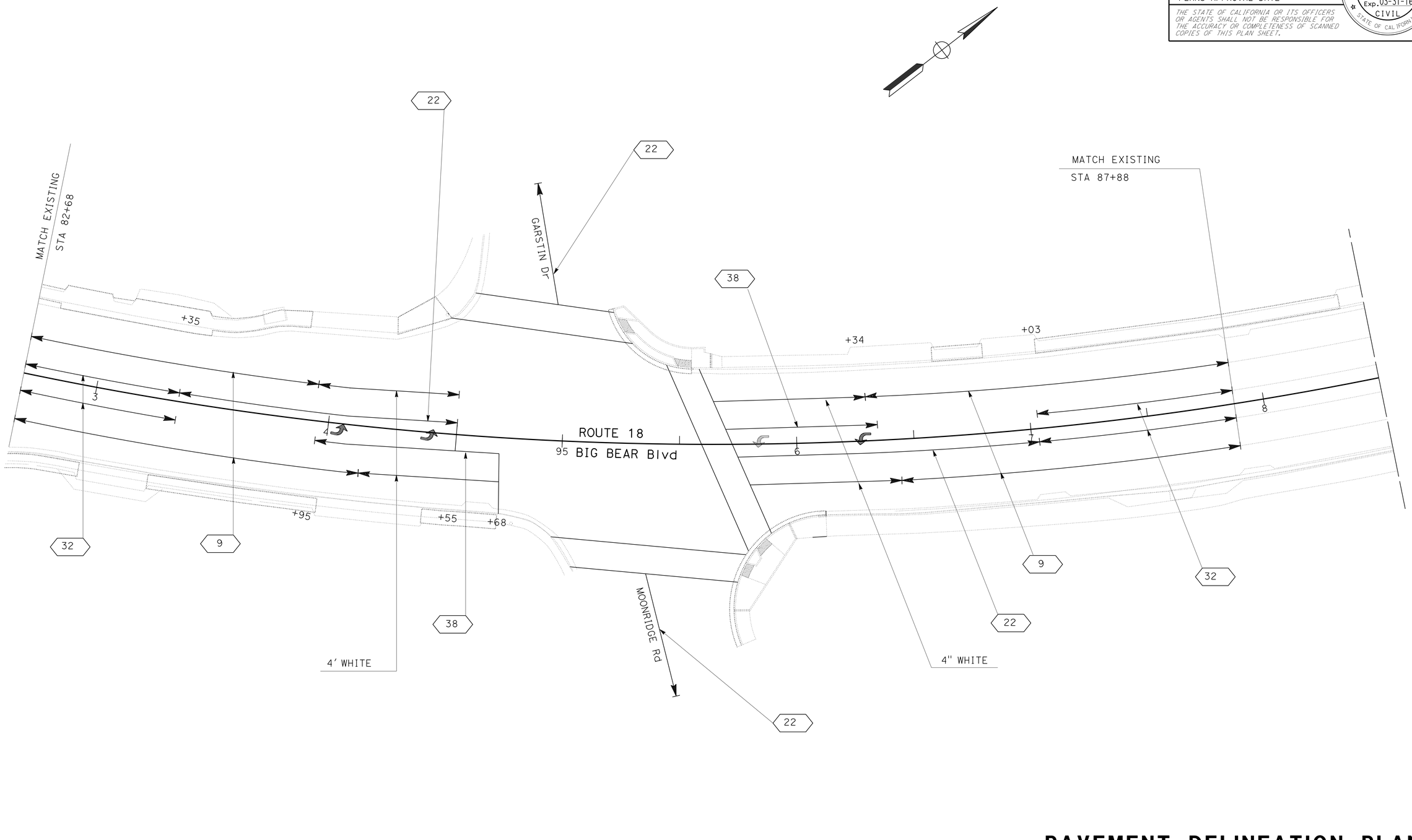

PAVEMENT DELINEATION PLAN

SCALE 1"=20'

PD-4

APPROVED FOR PAVEMENT DELINEATION WORK ONLY

STATE OF CALIFORNIA - DEPARTMENT OF TRANSPORTATION

Caltrans® **TRAFFIC DESIGN**

FUNCTIONAL SUPERVISOR: MARIO AMANCIO

DEAN TO — REVISED BY

TRAN HOANG — DATE REVISED

CALCULATED-DESIGNED BY

CHECKED BY

LAST REVISION 06-26-15 | DATE PLOTTED => 01-DEC-2015 | TIME PLOTTED => 08:10

Dist	COUNTY	ROUTE	POST MILES TOTAL PROJECT	SHEET No.	TOTAL SHEETS
08	SBd	18	49.0/51.7	113	179

Dean D To 6-26-15
REGISTERED CIVIL ENGINEER DATE

6-26-15
PLANS APPROVAL DATE

REGISTERED PROFESSIONAL ENGINEER
DEAN D TO
No. 81698
Exp. 03-31-16
CIVIL
STATE OF CALIFORNIA

THE STATE OF CALIFORNIA OR ITS OFFICERS OR AGENTS SHALL NOT BE RESPONSIBLE FOR THE ACCURACY OR COMPLETENESS OF SCANNED COPIES OF THIS PLAN SHEET.

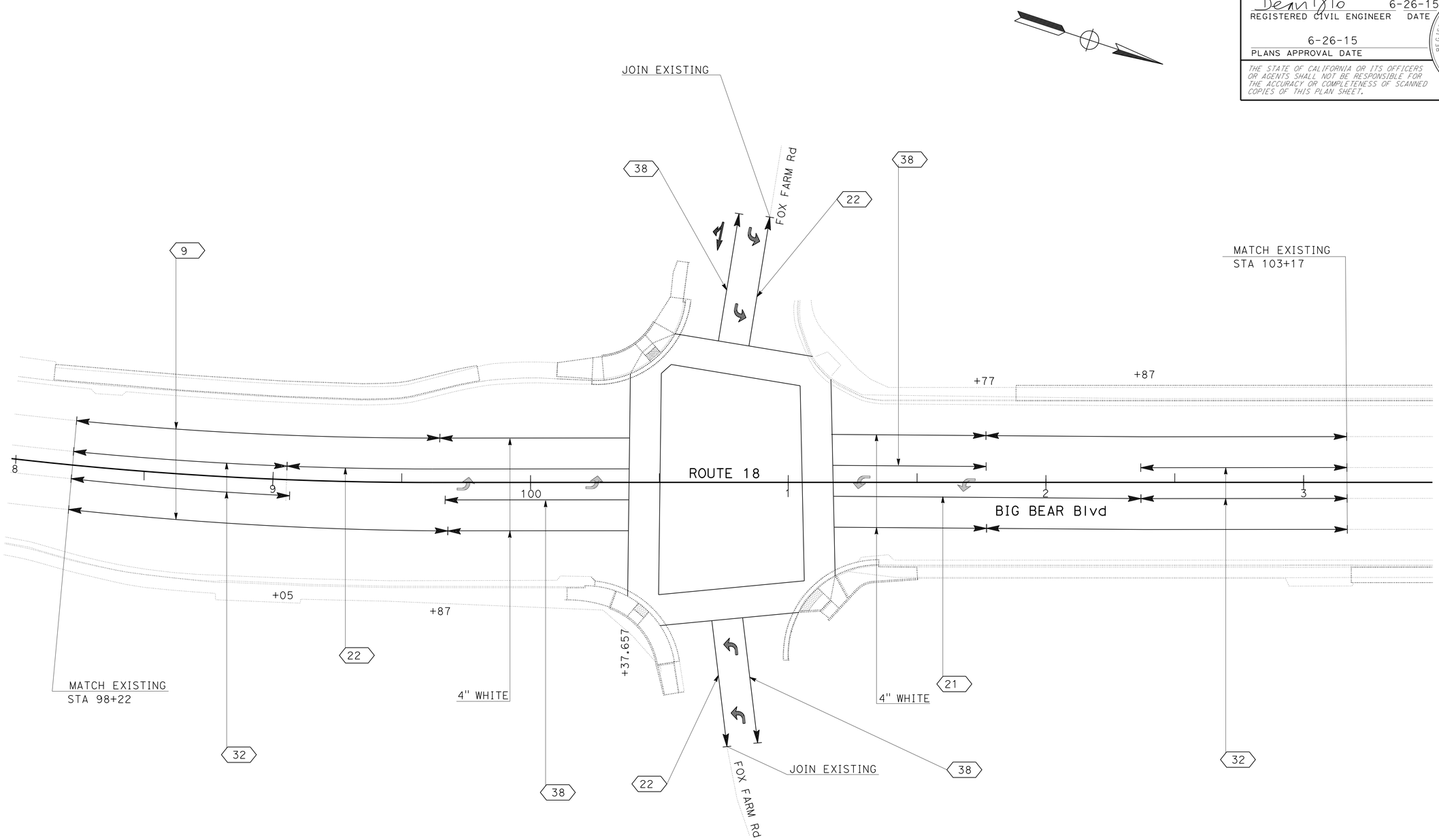

PAVEMENT DELINEATION PLAN

SCALE 1"=20'

PD-5

APPROVED FOR PAVEMENT DELINEATION WORK ONLY

REVISED BY	
DATE REVISED	
DEAN TO	
TRAN HOANG	
CALCULATED-DESIGNED BY	
CHECKED BY	
FUNCTIONAL SUPERVISOR	
MARIO AMANCIO	

STATE OF CALIFORNIA - DEPARTMENT OF TRANSPORTATION
Caltrans
TRAFFIC DESIGN

LAST REVISION 06-26-15 | DATE PLOTTED => 01-DEC-2015 | TIME PLOTTED => 08:10

Dist	COUNTY	ROUTE	POST MILES TOTAL PROJECT	SHEET No.	TOTAL SHEETS
08	SBd	18	49.0/51.7	114	179

REGISTERED CIVIL ENGINEER 6-26-15 DATE

6-26-15
PLANS APPROVAL DATE

REGISTERED PROFESSIONAL ENGINEER
DEAN D TO
No. 81698
Exp. 03-31-16
CIVIL
STATE OF CALIFORNIA

THE STATE OF CALIFORNIA OR ITS OFFICERS OR AGENTS SHALL NOT BE RESPONSIBLE FOR THE ACCURACY OR COMPLETENESS OF SCANNED COPIES OF THIS PLAN SHEET.

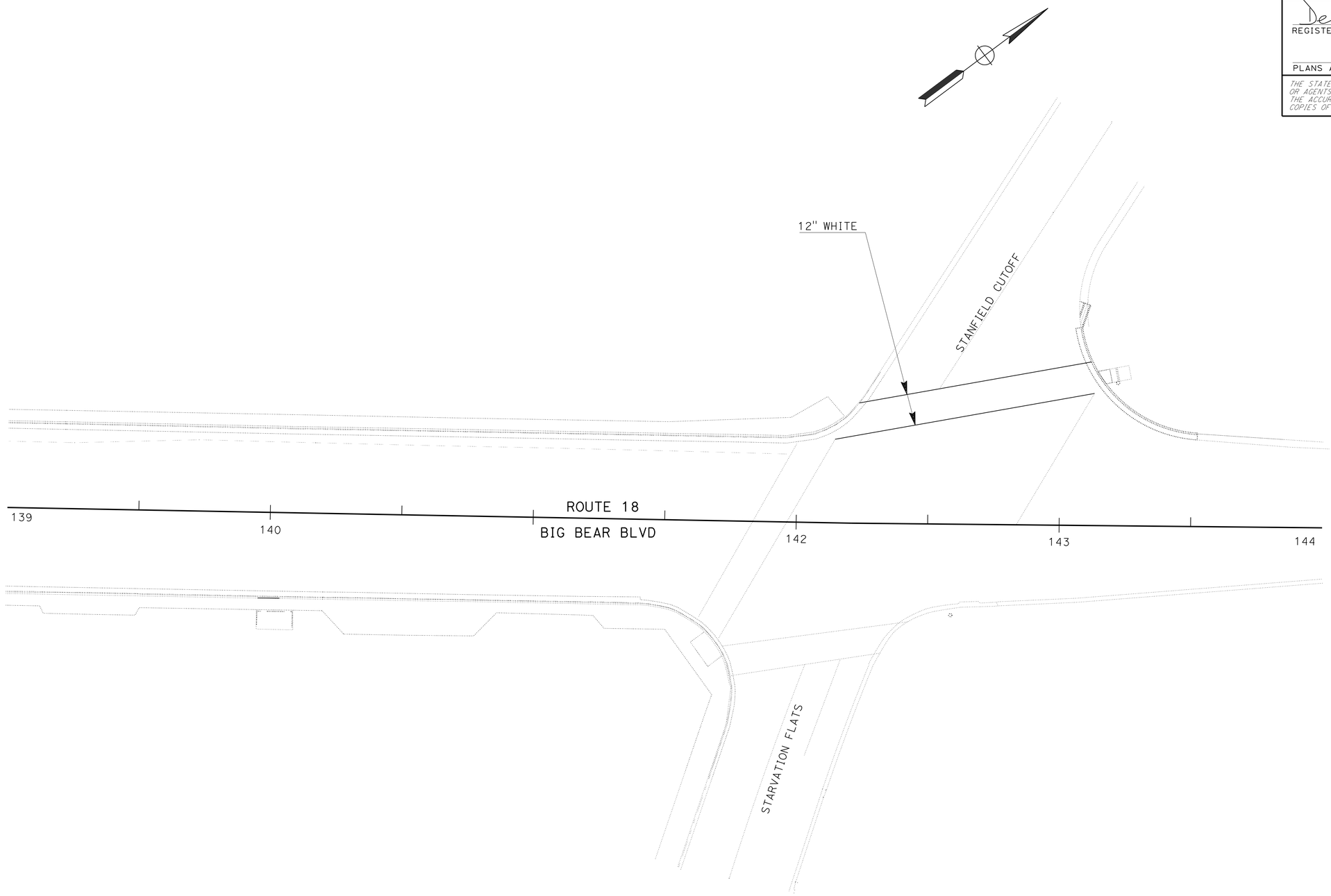

PAVEMENT DELINEATION PLAN

SCALE 1"=20'

PD-6

APPROVED FOR PAVEMENT DELINEATION WORK ONLY

REVISED BY | DATE REVISED

DEAN TO | TRAN HOANG

CALCULATED-DESIGNED BY | CHECKED BY

FUNCTIONAL SUPERVISOR: MARIO AMANCIO

STATE OF CALIFORNIA - DEPARTMENT OF TRANSPORTATION

Caltrans® **TRAFFIC DESIGN**

LAST REVISION 06-26-15 | DATE PLOTTED => 01-DEC-2015 | TIME PLOTTED => 08:10

Dist	COUNTY	ROUTE	POST MILES TOTAL PROJECT	SHEET No.	TOTAL SHEETS
08	SBd	18	49.0/51.7	115	179

REGISTERED CIVIL ENGINEER DATE 6-26-15

PLANS APPROVAL DATE 6-26-15

REGISTERED PROFESSIONAL ENGINEER DEAN D TO No. C81698 Exp. 3-31-16 CIVIL STATE OF CALIFORNIA

THE STATE OF CALIFORNIA OR ITS OFFICERS OR AGENTS SHALL NOT BE RESPONSIBLE FOR THE ACCURACY OR COMPLETENESS OF SCANNED COPIES OF THIS PLAN SHEET.

PAVEMENT DELINEATION QUANTITIES

SHEET No.	STATION LIMITS	LOCATION	DETAIL No. OR PAVEMENT MARKING	THERMOPLASTIC TRAFFIC STRIPE (SPRAYABLE)			PAVEMENT MARKER RETROREFLECTIVE -RECESSED		PAVEMENT MARKING	REMOVE THERMOPLASTIC PAVEMENT MARKING	REMOVE PAVEMENT MARKER	REMARK
				4" YELLOW	4" WHITE	8" WHITE	TYPE D	TYPE G				
				LF	LF	LF	EA	EA	SQFT	SQFT	EA	
PD-1	7+50 TO 13+50	LT, RT	9		482			11			63	
		LT, RT	22	412			38					
		LT, RT	32	362			16					
		LT, RT	38			120		6				
		LT, RT	4" WHITE		140							
		LT, RT	TYPE IV ARROW						60			
		LT	TYPE VI ARROW						84			
		LT, RT	12" WHITE						402	402		
PD-2	13+50 TO 18+50	LT, RT	9		380			10			47	
		LT, RT	22	290			28					
		LT, RT	32	186			9					
		LT, RT	38			130		7				
		LT, RT	4" WHITE		270							
		LT, RT	TYPE IV ARROW						60			
		LT	TYPE VI ARROW						42			
		LT, RT	12" WHITE						269	269		
		LT	"SIGNAL"						32			
		LT	"AHEAD"						31			
PD-3	77+31 TO 83+32	LT, RT	9		560			13			56	
		LT, RT	22	340			34					
		LT, RT	32	340			16					
		LT, RT	38			120		6				
		LT, RT	4" WHITE		240							
		LT, RT	TYPE IV ARROW						60			
		LT, RT	12" WHITE						525	525		
SUBTOTAL				1930	2072	370	141	53	1565	1196	166	
TOTAL (THIS SHEET)				4372			194		1565	1196	166	

PAVEMENT DELINEATION QUANTITIES
PDQ-1

REVISED BY | DATE REVISED
DEAN TO | TRAN HOANG
CALCULATED-DESIGNED BY | CHECKED BY
FUNCTIONAL SUPERVISOR: MARIO AMANCIO
STATE OF CALIFORNIA - DEPARTMENT OF TRANSPORTATION
Caltrans® TRAFFIC DESIGN

LAST REVISION 06-26-15 | DATE PLOTTED => 01-DEC-2015 | TIME PLOTTED => 08:10

Dist	COUNTY	ROUTE	POST MILES TOTAL PROJECT	SHEET No.	TOTAL SHEETS
08	SBd	18	49.0/51.7	116	179

REGISTERED CIVIL ENGINEER 6-26-15 DATE

6-26-15
PLANS APPROVAL DATE

REGISTERED PROFESSIONAL ENGINEER DEAN D TO No. C81698 Exp. 3-31-16 CIVIL STATE OF CALIFORNIA

THE STATE OF CALIFORNIA OR ITS OFFICERS OR AGENTS SHALL NOT BE RESPONSIBLE FOR THE ACCURACY OR COMPLETENESS OF SCANNED COPIES OF THIS PLAN SHEET.

PAVEMENT DELINEATION QUANTITIES

SHEET No.	STATION LIMITS	LOCATION	DETAIL No. OR PAVEMENT MARKING	THERMOPLASTIC TRAFFIC STRIPE (SPRAYABLE)			PAVEMENT MARKER RETROREFLECTIVE -RECESSED		THERMOPLASTIC PAVEMENT MARKING	REMOVE THERMOPLASTIC PAVEMENT MARKING	REMOVE PAVEMENT MARKER	REMARK
				4" YELLOW	4" WHITE	8" WHITE	TYPE D	TYPE G				
				LF	LF	LF	EA	EA	SQFT	SQFT	EA	
PD-4	86+68 TO 87+79	LT, RT	9		560			13			56	
		LT, RT	22	340			31					
		LT, RT	32	320			15					
		LT, RT	38			130		7				
		LT, RT	4" WHITE		260							
		LT, RT	TYPE IV ARROW						60			
		LT, RT	12" WHITE						445	445		
PD-5	98+22 TO 103+17	LT, RT	9		560			13			56	
		LT, RT	22	340			31					
		LT, RT	32	320			15					
		LT, RT	38			230		11				
		LT, RT	4" WHITE		240							
		LT, RT	TYPE IV ARROW						120			
		LT, RT	12" WHITE						581	581		
		LT	TYPE VII ARROW						27			
PD-6	139+00 TO 144+00	LT	12" WHITE						185	185		
	7+50 TO 146+50	LT, RT	"STOP"						462	120*		21 LIMIT LINE (17')
			12" WHITE						360	154*		21 "STOP" MARKING
SUBTOTAL				1320	1620	360	92	44	2240	1485	112	
TOTAL (THIS SHEET)				3300			136		2240	1485	112	
TOTAL (PDQ-1)				4372			194		1565	1196	166	
TOTAL				7672			330		3805	2681	278	

* INDICATE THE REMOVAL OF LIMIT LINE AND "STOP" PAVEMENT MARKING AT KNIGHT Ave, JEFFRIS Rd, EUREKA Dr, CRANE Dr, THRUSH Dr, MOONRIDGE WAY, AND SANDALWOOD Dr.

REVISED BY | DATE REVISED

DEAN TO | TRAN HOANG

CALCULATED-DESIGNED BY | CHECKED BY

FUNCTIONAL SUPERVISOR | MARIO AMANCIO

STATE OF CALIFORNIA - DEPARTMENT OF TRANSPORTATION

Caltrans® TRAFFIC DESIGN

PAVEMENT DELINEATION QUANTITIES
PDQ-2

LAST REVISION 06-26-15 | DATE PLOTTED => 01-DEC-2015 | TIME PLOTTED => 08:10

Dist	COUNTY	ROUTE	POST MILES TOTAL PROJECT	SHEET No.	TOTAL SHEETS
08	SBd	18	49.0/51.7	117	179

REGISTERED CIVIL ENGINEER 6-26-15 DATE

6-26-15
PLANS APPROVAL DATE

REGISTERED PROFESSIONAL ENGINEER DEAN D TO No. 81698 Exp. 03-31-16 CIVIL STATE OF CALIFORNIA

THE STATE OF CALIFORNIA OR ITS OFFICERS OR AGENTS SHALL NOT BE RESPONSIBLE FOR THE ACCURACY OR COMPLETENESS OF SCANNED COPIES OF THIS PLAN SHEET.

NOTE: SEE CALIFORNIA MUTCD 2012 FOR 5UC(E), 1 LINE HORIZONTAL ARROW.

D-3(P)

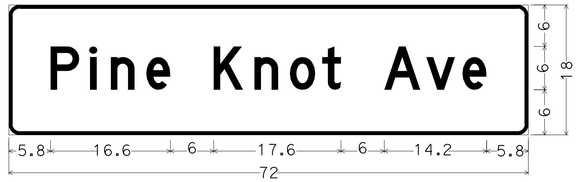

1.5" Radius, 0.5" Border, White on Green;
[Pine Knot Ave] 6"D;

D-3(B)

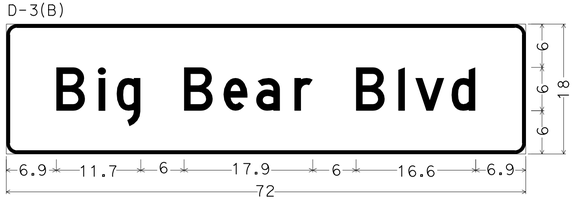

1.5" Radius, 0.5" Border, White on Green;
[Big Bear Blvd] 6"D;

D-3(K)

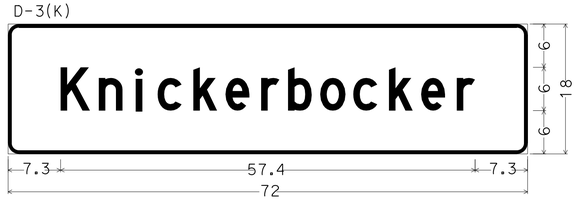

1.5" Radius, 0.5" Border, White on Green;
[Kinckerbocker] 6"D;

D-3(S)

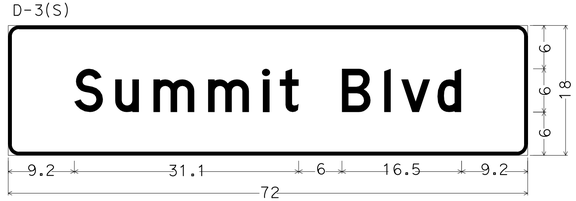

1.5" Radius, 0.5" Border, White on Green;
[Summit Blvd] 6"D;

D-3(G)

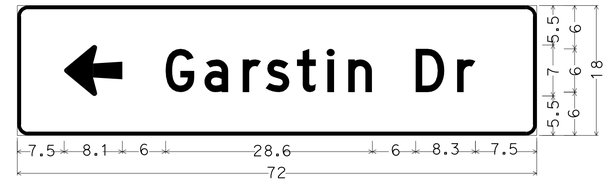

1.5" Radius, 0.5" Border, White on Green;
Arrow Custom - 8.1" 180°; [Garstin Dr] 6"D;

D-3(F)

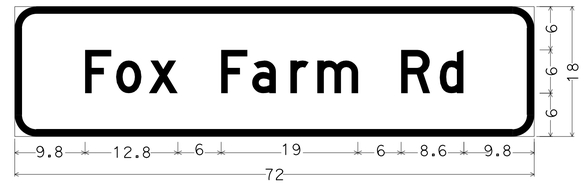

1.5" Radius, 0.5" Border, White on Green;
[Fox Farm Blvd] 6"D;

D-3(SC)

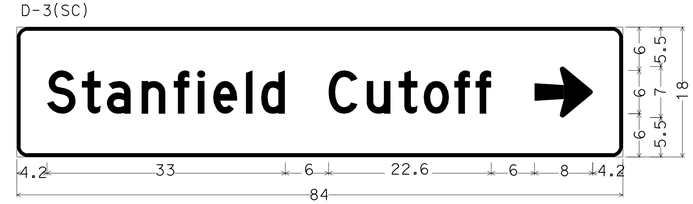

1.5" Radius, 0.5" Border, White on Green;
[Standfield Cutoff] 6"D 75% sapcing; Arrow Custom - 8.1" 0°;

D-3(SF)

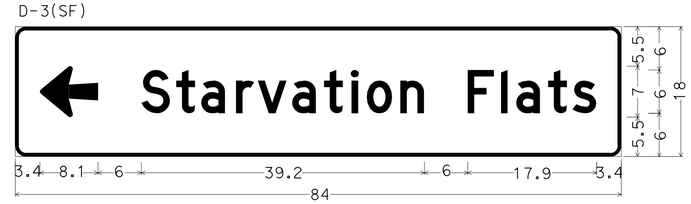

1.5" Radius, 0.5" Border, White on Green;
Arrow Custom - 8.1" 180°; [Starvation Flats] 6"D;

D-3(M)

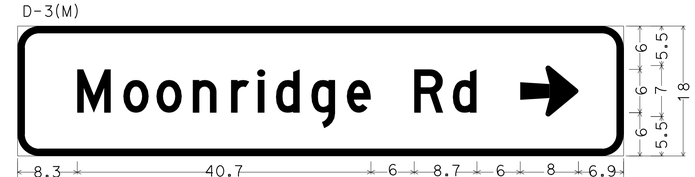

1.5" Radius, 0.5" Border, White on Green;
[Moonridge Rd] 6"D; Arrow Custom - 8.1";

APPROVED FOR SIGN WORK ONLY

SIGN DETAILS
NO SCALE

SD-1

STATE OF CALIFORNIA - DEPARTMENT OF TRANSPORTATION
Caltrans® TRAFFIC DESIGN

FUNCTIONAL SUPERVISOR: PATRICK HALLY
CALCULATED-DESIGNED BY: DEAN TO
CHECKED BY: TRAN HOANG
REVISED BY / DATE REVISED

LAST REVISION 06-26-15
DATE PLOTTED => 01-DEC-2015
TIME PLOTTED => 08:10

Dist	COUNTY	ROUTE	POST MILES TOTAL PROJECT	SHEET No.	TOTAL SHEETS
08	SBd	18	49.0/51.7	118	179

REGISTERED CIVIL ENGINEER 6-26-15 DATE

6-26-15
PLANS APPROVAL DATE

REGISTERED PROFESSIONAL ENGINEER DEAN D TO No. 81698 Exp. 03-31-16 CIVIL STATE OF CALIFORNIA

THE STATE OF CALIFORNIA OR ITS OFFICERS OR AGENTS SHALL NOT BE RESPONSIBLE FOR THE ACCURACY OR COMPLETENESS OF SCANNED COPIES OF THIS PLAN SHEET.

SIGN PANEL MATERIAL SUMMARY FROM ELECTRICAL PLANS

SHEET No.	SIGN CODE	No. OF SIGN (ea)	SIGN DIMENSION L x D (in x in)	SINGLE FACED	DOUBLE FACED	BACKGROUND		LEGEND		GRAFFITI FILM		ROADSIDE										OVERHEAD			REMARKS
												SINGLE-SHEET						LAMINATED							
												FRP	FRAMED ALUMINUM		UNFRAMED ALUMINUM						ROADSIDE FORMED	LAMINATED TYPE A	FORMED WITHOUT RSPF	FORMED WITH RSPF	
						SHEETING COLOR	RETROREFLECTIVE ASTM TYPE	SHEETING COLOR	RETROREFLECTIVE ASTM TYPE	STANDARD	PREMIUM	0.135 inch	0.063 inch	0.080 inch	0.063 inch	0.080 inch	0.125 inch	1 inch TYPE B	2.5 inch TYPE B	2.5 inch TYPE H					
												SQFT	SQFT	SQFT	SQFT	SQFT	SQFT	SQFT	SQFT	SQFT	SQFT	SQFT	SQFT	SQFT	
E-2	D-3(P)*	2	72 x 18	-	x	GREEN	XI	WHITE	XI	-	x	-	-	-	36.0	-	-	-	-	-	-	-	-	-	PINE KNOT AVE
	D-3(B)*	2	72 x 18	-	x	GREEN	XI	WHITE	XI	-	x	-	-	-	36.0	-	-	-	-	-	-	-	-	-	BIG BEAR BLVD
E-5	D-3(K)*	2	72 x 18	-	x	GREEN	XI	WHITE	XI	-	x	-	-	-	36.0	-	-	-	-	-	-	-	-	-	KNICKERBOCKER
	D-3(B)*	1	72 x 18	-	x	GREEN	XI	WHITE	XI	-	x	-	-	-	18.0	-	-	-	-	-	-	-	-	-	BIG BEAR BLVD
	R9-3a	2	18 x 18	x	-	WHITE	XI	BLACK	XI	-	x	-	-	-	4.5	-	-	-	-	-	-	-	-	-	KNICKERBOCKER
	R9-3b	1	18 x 12	-	x	WHITE	XI	BLACK	XI	-	x	-	-	-	1.5	-	-	-	-	-	-	-	-	-	
	R9-3b(L)	1	18 x 12	-	x	WHITE	XI	BLACK	XI	-	x	-	-	-	1.5	-	-	-	-	-	-	-	-	-	
E-8	D-3(S)*	2	72 x 18	-	x	GREEN	XI	WHITE	XI	-	x	-	-	-	36.0	-	-	-	-	-	-	-	-	-	SUMMIT BLVD
	D-3(B)*	2	72 x 18	-	x	GREEN	XI	WHITE	XI	-	x	-	-	-	36.0	-	-	-	-	-	-	-	-	-	BIG BEAR BLVD
E-11	D-3(G)*	2	72 x 18	-	x	GREEN	XI	WHITE	XI	-	x	-	-	-	36.0	-	-	-	-	-	-	-	-	-	GARSTIN DR WITH ARROW
	D-3(B)*	2	72 x 18	-	x	GREEN	XI	WHITE	XI	-	x	-	-	-	36.0	-	-	-	-	-	-	-	-	-	BIG BEAR BLVD
	D-3(M)*	2	84 x 18	-	x	GREEN	XI	WHITE	XI	-	x	-	-	-	21.0	-	-	-	-	-	-	-	-	-	MOONRIDGE RD WITH ARROW
E-14	D-3(F)*	2	72 x 18	-	x	GREEN	XI	WHITE	XI	-	x	-	-	-	36.0	-	-	-	-	-	-	-	-	-	FOX FARM RD
	D-3(B)*	2	72 x 18	-	x	GREEN	XI	WHITE	XI	-	x	-	-	-	36.0	-	-	-	-	-	-	-	-	-	BIG BEAR BLVD
E-17	D-3(SC)*	1	84 x 18	-	x	GREEN	XI	WHITE	XI	-	x	-	-	-	21.0	-	-	-	-	-	-	-	-	-	STANDFIELD CTOFF WITH ARROW
	D-3(B)*	2	72 x 18	-	x	GREEN	XI	WHITE	XI	-	x	-	-	-	36.0	-	-	-	-	-	-	-	-	-	BIG BEAR BLVD
	D-3(SF)*	1	84 x 18	-	x	GREEN	XI	WHITE	XI	-	x	-	-	-	21.0	-	-	-	-	-	-	-	-	-	STARVATION FLATS WITH ARROW
								TOTAL				-	-	-	448.5	-	-	-	-	-	-	-	-	-	

* INSTALL SIGN (MAST ARM HANGER ASSEMBLY); NOT A SEPARATE PAY ITEM, FOR INFORMATION ONLY.
REFER TO ELECTRICAL PLANS FOR INSTALLATIONS AND LOCATIONS OF MAST ARM HANGER ASSEMBLY SIGNS.

SIGN QUANTITIES
(CONTRACTOR FURNISHED)
SQ-1

REVISED BY | DATE REVISED
DEAN TO | TRAN HOANG
CALCULATED-DESIGNED BY | CHECKED BY
FUNCTIONAL SUPERVISOR
MARIO AMANCIO
STATE OF CALIFORNIA - DEPARTMENT OF TRANSPORTATION
Caltrans TRAFFIC DESIGN

LAST REVISION 06-26-15 | DATE PLOTTED => 01-DEC-2015 | TIME PLOTTED => 08:10

Dist	COUNTY	ROUTE	POST MILES TOTAL PROJECT	SHEET No.	TOTAL SHEETS
08	SBd	18	49.0/51.7	119	179

REGISTERED CIVIL ENGINEER 6-26-15 DATE

6-26-15
PLANS APPROVAL DATE

REGISTERED PROFESSIONAL ENGINEER ALAN R. BISI No. 62808 Exp. 06-30-16 CIVIL STATE OF CALIFORNIA

THE STATE OF CALIFORNIA OR ITS OFFICERS OR AGENTS SHALL NOT BE RESPONSIBLE FOR THE ACCURACY OR COMPLETENESS OF SCANNED COPIES OF THIS PLAN SHEET.

ROADWAY QUANTITIES

QUADRANT	LOCATION		HOT MIX ASPHALT (TYPE A)	PLACE HMA (Misc AREA)	CLASS 2 AGGREGATE BASE	LIQUID ASPHALT (PRIME COAT)	PAINT BINDER (TACK COAT)	COLD PLANE ASPHALT CONCRETE PAVEMENT (0.25' MINIMUM)	ROADWAY EXCAVATION	MINOR CONCRETE (CURB, GUTTER, SIDEWALK, AND CURB RAMP)	JOINTED Conc PAVEMENT (RSC)	PRE/POST CONSTRUCTION SURVEY	REMOVE CONCRETE (MISCELLANEOUS)
		No.	TON	SQYD	CY	TON	TON	SQYD	CY	CY	CY	EA	CY
NW	PINE KNOT Ave	1	32.98	174.30	17.87	0.19	0.09	157.38	22.08	9.20		1	6.88
NE	PINE KNOT Ave	2	31.80	171.06	17.76	0.18	0.09	157.38	21.54	8.30		1	7.20
N	SIDEWALK	3	0.00	0.00	10.48	0.01	0.01	0.00	12.44	4.22			4.05
SW	KNICKERBOCKER Rd	4	22.60	108.78	17.26	0.12	0.06	89.64	21.63	7.08		1	5.55
SE	KNICKERBOCKER Rd	5	27.92	148.18	16.39	0.16	0.07	134.47	19.94	6.91		1	6.46
SW	MAIN St	6	1.76	004.90	0.98	4.90	0.01	000.00	1.55	1.34			1.24
NE	KNIGHT Ave No	7	21.07	109.17	17.09	0.12	0.05	98.02	20.56	6.56		1	6.07
SE	JEFFERIES Rd So	8	26.96	141.56	16.02	0.15	0.07	128.39	19.51	6.80		1	6.95
NW	EUREKA Dr	9	19.31	102.63	10.90	0.11	0.05	94.48	13.21	4.29		1	3.95
NW	CRANE Dr	10	32.81	175.93	12.26	0.19	0.08	161.93	15.28	7.94		1	7.40
NE	CRANE Dr	11	22.06	117.82	15.73	0.13	0.06	107.96	18.90	6.47		1	4.88
NW	THRUSH Dr	12	33.30	181.15	12.74	0.20	0.10	165.55	15.96	5.65		1	8.82
NE	THRUSH Dr	13	39.95	181.97	12.40	0.20	0.10	165.55	15.77	7.89		1	8.39
SE	THRUSH Dr	14	29.78	149.66	11.84	0.17	0.08	135.47	15.21	6.18		1	5.88
NW	SUMMIT Blvd	15	48.72	223.06	28.24	0.26	0.15	206.24	36.27	12.78		1	8.74
NE	SUMMIT Blvd	16	33.29	167.35	22.94	0.18	0.08	154.16	27.46	11.75		1	6.16
SW	SUMMIT Blvd	17	27.07	164.34	14.40	0.20	0.09	157.38	19.36	8.18		1	4.97
SE	SUMMIT Blvd	18	45.71	201.71	20.64	0.21	0.10	188.43	24.80	11.08		1	7.62
SW	CHINA GARDEN	19	27.31	148.53	11.76	0.16	0.07	140.19	14.11	5.84		1	5.79
NW	GARSTIN/MOONRIDGE Rd	20	30.02	124.79	17.89	0.15	0.08	114.92	23.47	6.63		1	5.70
NE	GARSTIN/MOONRIDGE Rd	21	42.24	225.03	33.34	0.24	0.11	206.46	39.87	14.96		1	8.72
SE	MOONRIDGE Wy	22	89.57	417.05	39.00	0.46	0.20	401.06	41.60	9.55		1	7.31
NE	MOONRIDGE Wy	23	25.64	229.00	29.14	0.24	0.11	215.96	30.85	8.78		1	9.41
NE	FOX FARM Rd	26	29.56	197.49	22.43	0.21	0.09	185.63	23.56	6.96		1	6.61
SE	FOX FARM Rd	25	42.97	199.62	30.84	0.21	0.09	185.63	32.67	7.59		1	7.88
SW	FOX FARM Rd	24	35.26	185.53	39.12	0.20	0.09	179.26	42.11	12.25		1	8.31
SW	SANDALWOOD Dr	27	29.04	156.09	20.00	0.17	0.08	143.62	20.53	4.86		1	5.65
NW	SANDALWOOD Dr	28	28.82	155.50	30.61	0.17	0.08	143.62	32.80	6.69		1	6.65
E	SIDEWALK	29	0.00	0.00	4.51	0.00	0.00	0.00	5.17	1.13			1.10
NW	STANFIELD CUTOFF	30	26.77	73.07	48.23	0.15	0.10	73.07	51.95	4.38			1.50
ROADWAY SUB TOTAL			904.29	4635.27	602.81	5.14	2.44	4291.85	700.16	222.24	0.00	26	185.84
SIDEWALK, DRIVEWAY SUB TOTAL*			0.00	0.00	1561.70	0.00	0.00	0.00	1561.70	481.40	65.20	0	425.40
GRAND TOTAL			904.29	4635.27	2164.51	5.14	2.44	4291.85	2261.86	703.64	65.20	26	611.24

* FOR SIDEWALK AND DRIVEWAY QUANTITIES, SEE Q-2,3,AND 4

ADJUST MONUMENT TO GRADE

LOCATION *	EA
SBd-18 PM 49.0-51.7	15
TOTAL	15

* EXACT LOCATION SHALL BE DETERMINED BY THE ENGINEER

ROCK BLANKET

LOCATION		QUADRANT	ROCK BLANKET
	No.		SQYD
CRANE Dr	10	NW	11.71
CRANE Dr	11	NE	5.12
THRUSH Dr	12	NW	34.09
THRUSH Dr	13	NE	27.29
THRUSH Dr	14	SE	13.35
SUMMIT Blvd	17	SW	3.38
FOX FARM Rd	26	NE	18.68
SANDALWOOD Dr	27	SW	18.94
TOTAL			132.56

WARNING RAIL

LOCATION			WARNING RAIL
	No.	QUADRANT	LF
KNICKERBOCKER Rd	5	SE	24.0
CRANE Dr	10	NW	15.5
Rt Sta 17+27 TO Rt Sta 17+32		PARKWAY	5.0
Rt Sta 20+56 TO Rt Sta 20+61		PARKWAY	5.0
Rt Sta 21+40 TO Rt Sta 21+45		PARKWAY	5.0
Rt Sta 34+86 TO Rt Sta 34+91		PARKWAY	5.0
Rt Sta 90+54 TO Rt Sta 90+59		PARKWAY	5.0
Rt Sta 93+71 TO Rt Sta 93+76		PARKWAY	5.0
TOTAL			69.5

SUMMARY OF QUANTITIES
Q-1

STATE OF CALIFORNIA - DEPARTMENT OF TRANSPORTATION
Caltrans DESIGN

FUNCTIONAL SUPERVISOR: JUSTINE NIU
CALCULATED-DESIGNED BY: ALAN BISI
CHECKED BY: ANNABELL WANG
REVISED BY
DATE REVISED

LAST REVISION 06-26-15
DATE PLOTTED => 01-DEC-2015
TIME PLOTTED => 08:10

Dist	COUNTY	ROUTE	POST MILES TOTAL PROJECT	SHEET No.	TOTAL SHEETS
08	SBd	18	49.0/51.7	120	179

REGISTERED CIVIL ENGINEER 6-26-15 DATE

6-26-15
PLANS APPROVAL DATE

REGISTERED PROFESSIONAL ENGINEER ALAN R. BISI No. 62808 Exp. 06-30-16 CIVIL STATE OF CALIFORNIA

THE STATE OF CALIFORNIA OR ITS OFFICERS OR AGENTS SHALL NOT BE RESPONSIBLE FOR THE ACCURACY OR COMPLETENESS OF SCANNED COPIES OF THIS PLAN SHEET.

SIDEWALK AND DRIVEWAY QUANTITIES

(TABLE 1 OF 5)

DIRECTION		LOCATION SBd-18 STATION "BB1"		SIDEWALK			DRIVE-WAY	
				MINOR Conc (CURB,GUTTER, SW & CURB RAMP)	CLASS 2 AB	ROADWAY Ex	JOINTED Conc PAVEMENT (RSC)	REMOVE CONC (Misc)
LT	RT	FROM	TO	CY	CY	CY	CY	CY
X		10+53.00	11+04.00	3.4	11.3	11.3		2.4
X		11+43.00	11+83.00	2.6	8.8	8.8		2.0
	X	11+91.00	12+17.00	1.7	5.7	5.7		1.3
X		11+95.00					1.0	1.0
X		12+29.00	12+58.00	1.9	6.4	6.4		1.5
	X	12+36.00	12+65.00	1.9	6.4	6.4		1.5
X		12+63.00					0.8	0.8
	X	13+09.00	14+10.00	6.7	22.4	22.4		4.6
X		13+25.00	13+81.00	3.7	12.3	12.3		2.7
	X	14+10.00	14+45.00	2.3	7.8	7.8		1.8
X		14+16.00	14+69.00	3.6	11.9	11.9		2.7
	X	14+25.00					3.6	3.6
	X	15+63.00					2.6	2.6
	X	15+76.00	16+24.00	3.2	10.7	10.7		2.3
	X	15+76.00	16+24.00	0.8				
X		16+16.00	16+93.00	5.2	17.2	17.2		3.8
	X	16+35.00					3.2	3.2
	X	16+47.00	16+57.00	0.8	2.7	2.7		0.6
X		17+14.00	17+49.00	2.3	7.8	7.8		1.7
	X	17+25.00	18+98.00	11.5	38.3	38.3		8.6
	X	17+32.00	17+62.00	0.5				
X		17+62.00					1.8	1.8
X		18+44.00	18+79.00	2.1	6.6	6.6		1.6
X		18+90.00					2.2	2.2
X		19+50.00	20+02.00	3.4	11.4	11.4		2.6
	X	20+46.00	21+23.00	5.1	17.0	17.0		3.8
X		20+84.00	21+64.00	5.3	17.8	17.8		4.0
	X	21+39.50	21+58.00	1.2	4.1	4.1		0.9
	X	21+82.00	21+99.00	1.1	3.8	3.8		0.9
X		21+94.50	22+56.00	4.1	13.7	13.7		3.1
	X	22+10.50	22+19.00	0.6	1.9	1.9		0.4
	X	22+34.00	22+70.50	2.4	8.1	8.1		1.8
	X	22+85.00	23+08.50	1.6	5.2	5.2		1.1
X		23+05.50	23+45.50	2.7	8.9	8.9		2.0
	X	23+24.50	23+60.00	2.4	7.9	7.9		1.7
	X	23+75.00	24+12.50	2.5	8.3	8.3		1.8
	X	24+28.00	24+68.00	2.7	8.9	8.9		1.9
X		24+86.00	25+26.00	2.7	8.9	8.9		2.0
	X	25+03.00	25+77.00	4.9	16.4	16.4		3.7
	X	25+95.00	26+00.00	0.3	1.1	1.1		0.3
X		26+05.50	26+71.00	4.4	14.6	14.6		3.3
	X	26+99.00	27+03.00	0.3	0.9	0.9		0.2
	X	27+18.00	27+46.00	1.9	6.2	6.2		1.4
			SUB TOTAL	103.80	341.40	341.40	15.20	91.20

(TABLE 2 OF 5)

DIRECTION		LOCATION SBd-18 STATION "BB1"		SIDEWALK			DRIVE-WAY	
				MINOR Conc (CURB,GUTTER, SW & CURB RAMP)	CLASS 2 AB	ROADWAY Ex	JOINTED Conc PAVEMENT (RSC)	REMOVE CONC (Misc)
LT	RT	FROM	TO	CY	CY	CY	CY	CY
X		27+35.00	27+47.00	0.8	2.7	2.7		0.6
X		27+70.00	28+11.50	2.8	9.2	9.2		2.0
	X	28+00.00					1.6	1.6
X		28+66.00	28+96.00	2.0	6.7	6.7		1.5
X		29+69.00	29+96.00	1.8	6.0	6.0		1.3
X		30+21.00	30+89.00	4.5	15.1	15.1		3.2
X		31+69.00	32+08.50	2.6	8.8	8.8		1.9
X		32+37.50	33+11.50	4.9	16.4	16.4		3.7
X		32+50.00	33+12.00	1.0				
	X	32+86.00	33+20.00	2.3	7.6	7.6		1.7
	X	33+55.50	34+11.00	3.7	12.3	12.3		2.8
X		33+98.00	34+73.00	5.0	16.7	16.7		4.4
X		34+00.00	34+73.00	1.1				
	X	34+80.00	35+49.00	4.6	15.3	15.3		3.4
	X	35+75.50	36+00.00	1.6	5.4	5.4		1.2
X		35+99.00	36+25.00	1.7	5.8	5.8		1.5
	X	36+44.00	36+66.00	0.3				
	X	36+44.00	37+00.00	3.7	12.4	12.4		3.1
X		37+23.00	37+81.00	3.9	12.9	12.9		2.9
X		37+94.50	38+65.00	3.4	11.3	11.3		3.5
	X	38+62.50	39+78.00	6.7	22.4	22.4		6.7
X		39+12.00	39+38.00	1.7	5.8	5.8		1.3
	X	39+98.00					5.3	5.3
X		40+20.00	41+57.50	9.2	30.6	30.6		6.7
	X	40+19.00	42+51.50	13.7	45.6	45.6		14.5
	X	44+46.00					1.2	1.2
	X	44+62.00	44+91.50	2.0	6.6	6.6		1.5
	X	45+05.00					3.7	3.7
X		45+17.00	45+37.00	1.3	4.4	4.4		1.0
	X	45+19.00	45+85.00	4.4	14.7	14.7		3.2
	X	45+19.00	45+85.00	1.0				
X		45+72.00	46+02.00	2.0	6.7	6.7		1.4
X		46+95.00	47+13.00	1.2	4.0	4.0		1.0
X		47+69.50	48+14.00	3.0	9.9	9.9		2.1
	X	49+00.00	49+38.00	2.3	7.7	7.7		2.3
	X	49+52.00					1.5	1.5
	X	49+63.50	50+61.50	5.9	19.6	19.6		5.9
X		51+61.00	51+97.50	2.4	8.1	8.1		1.8
X		53+20.00	53+60.00	2.7	8.9	8.9		2.0
			SUB TOTAL	111.20	359.60	359.60	13.30	103.40
			SHEET TOTAL	215.00	701.00	701.00	28.50	194.60

SUMMARY OF QUANTITIES
Q-2

STATE OF CALIFORNIA - DEPARTMENT OF TRANSPORTATION
Caltrans DESIGN

FUNCTIONAL SUPERVISOR: JUSTINE NIU
CALCULATED-DESIGNED BY: ALAN BISI
CHECKED BY: ANNABELL WANG
REVISED BY
DATE REVISED

LAST REVISION 06-26-15 | DATE PLOTTED => 01-DEC-2015 | TIME PLOTTED => 08:10

Dist	COUNTY	ROUTE	POST MILES TOTAL PROJECT	SHEET No.	TOTAL SHEETS
08	SBd	18	49.0/51.7	121	179

REGISTERED CIVIL ENGINEER 6-26-15 DATE

6-26-15
PLANS APPROVAL DATE

REGISTERED PROFESSIONAL ENGINEER ALAN R. BISI No. 62808 Exp. 06-30-16 CIVIL STATE OF CALIFORNIA

THE STATE OF CALIFORNIA OR ITS OFFICERS OR AGENTS SHALL NOT BE RESPONSIBLE FOR THE ACCURACY OR COMPLETENESS OF SCANNED COPIES OF THIS PLAN SHEET.

SIDEWALK AND DRIVEWAY QUANTITIES

(TABLE 3 OF 5)

DIRECTION		LOCATION SBd-18 STATION "BB1"		SIDEWALK			DRIVE-WAY	
				MINOR Conc (CURB,GUTTER, SW & CURB RAMP)	CLASS 2 AB	ROADWAY Ex	JOINTED Conc PAVEMENT (RSC)	REMOVE Conc (Misc)
LT	RT	FROM	TO	CY	CY	CY	CY	CY
	X	53+20.50	53+32.50	0.8	2.7	2.7		0.7
	X	53+94.50	54+09.50	1.0	3.3	3.3		0.8
X		54+50.00	54+65.50	1.0	3.3	3.3		0.7
	X	54+70.50	55+11.00	2.7	9.0	9.0		1.9
	X	55+30.50	55+39.50	0.6	2.0	2.0		0.5
X		56+41.00	56+64.00	1.5	5.1	5.1		1.1
X		56+90.00	57+19.00	1.9	6.4	6.4		1.6
X		57+36.00					3.3	3.3
X		57+45.00	57+75.00	2.0	6.7	6.7		1.5
	X	57+89.00	58+20.00	2.1	6.9	6.9		1.5
X		59+19.00	59+60.50	2.8	9.2	9.2		2.0
X		60+76.00	60+99.50	1.6	5.2	5.2		1.1
	X	61+09.50	61+78.50	4.6	15.3	15.3		3.3
X		61+26.00	61+41.00	1.0	3.2	3.2		0.7
X		62+46.00	62+66.00	1.3	4.4	4.4		1.0
X		63+86.00	64+14.00	1.8	6.1	6.1		1.3
	X	64+15.00	64+60.00	3.0	10.0	10.0		2.2
X		65+74.50	65+98.50	1.6	5.3	5.3		1.2
X		66+36.00	66+93.00	3.8	12.7	12.7		2.9
X		67+39.00	67+53.00	1.0	3.2	3.2		0.7
	X	68+54.00	69+40.00	5.7	19.1	19.1		4.3
X		68+62.00	68+77.00	1.0	3.3	3.3		0.8
X		69+18.00	69+50.00	2.1	7.1	7.1		1.5
X		70+61.50	71+39.50	5.2	17.3	17.3		3.7
	X	70+78.00	72+59.00	12.1	40.2	40.2		9.1
	X	71+83.00	72+59.00	1.2				
X		73+34.50	74+50.00	7.7	25.7	25.7		5.4
	X	74+80.00	75+05.00	0.4				
	X	74+80.00	75+07.00	1.8	6.1	6.1		1.4
X		74+94.00	75+03.00	0.6	2.0	2.0		0.4
	X	75+34.00	75+72.00	2.5	8.4	8.4		1.8
	X	75+34.00	75+72.00	0.6				
	X	75+88.00	76+20.00	2.1	7.0	7.0		1.5
	X	75+88.00	76+20.00	0.5				
	X	76+31.00	76+61.00	2.0	6.7	6.7		1.5
	X	76+31.00	76+61.00	0.5				
X		76+56.50	77+30.00	4.9	16.3	16.3		3.5
	X	76+90.00	77+20.00	2.0	6.8	6.8		1.5
	X	76+90.00	77+20.00	0.5				
	X	77+56.00	77+95.00	2.6	8.8	8.8		1.9
	X	77+56.00	77+95.00	0.6				
			SUB TOTAL	92.70	294.80	294.80	3.30	68.30

(TABLE 4 OF 5)

DIRECTION		LOCATION SBd-18 STATION "BB1"		SIDEWALK			DRIVE-WAY	
				MINOR Conc (CURB,GUTTER, SW & CURB RAMP)	CLASS 2 AB	ROADWAY Ex	JOINTED Conc PAVEMENT (RSC)	REMOVE CONC (Misc)
LT	RT	FROM	TO	CY	CY	CY	CY	CY
	X	78+31.00	79+33.00	6.8	22.8	22.8		5.1
	X	78+31.00	79+38.00	0.1				
	X	79+28.00	79+52.00	0.4				
X		80+30.00	80+94.50	4.3	14.3	14.3		3.2
	X	80+48.00	80+79.00	8.7	29.1	29.1		6.3
	X	82+15.00	82+45.00	2.0	6.7	6.7		1.4
X		82+50.00					2.7	2.7
	X	82+69.00					5.1	5.1
	X	82+85.00	83+50.00	4.3	14.4	14.4		3.1
	X	83+63.00					12.7	12.7
X		83+65.00					2.7	2.7
X		83+82.00	84+09.00	1.8	6.0	6.0		1.3
X		85+62.00	86+07.00	3.0	10.0	10.0		2.2
X		86+35.00					2.0	2.0
X		86+44.00	86+87.00	2.9	9.6	9.6		2.1
X		88+69.00	89+06.50	2.5	8.4	8.4		1.7
	X	88+81.50	89+00.00	1.2	4.1	4.1		0.9
	X	89+56.50	90+11.50	3.7	12.2	12.2		2.9
X		90+13.50	90+52.50	2.6	8.7	8.7		1.9
	X	90+46.50	91+24.00	5.2	17.2	17.2		3.9
X		91+21.50	91+53.50	2.1	7.1	7.1		1.6
	X	91+45.50	92+68.00	8.2	27.2	27.2		6.1
X		92+15.00	92+77.00	4.2	13.9	13.9		3.0
	X	92+88.00	92+98.50	0.7	2.3	2.3		0.5
X		93+01.00	93+10.50	0.6	2.1	2.1		0.5
	X	93+28.00	93+99.00	4.7	15.8	15.8		3.6
X		93+45.00	93+88.00	2.8	9.4	9.4		2.4
	X	94+42.50	94+74.00	2.1	7.0	7.0		1.5
X		96+61.00	96+80.00	1.3	4.2	4.2		0.9
X		96+93.00					1.8	1.8
X		98+24.00	98+37.00	0.9	3.0	3.0		0.7
X		98+74.50	99+20.00	3.0	10.1	10.1		2.2
X		100+58.00	100+68.00	0.7	2.2	2.2		0.5
X		100+81.00					0.9	0.9
X		101+74.00	101+88.00	0.9	3.1	3.1		0.6
X		102+16.00	102+28.00	0.8	2.7	2.7		0.6
X		102+92.00	103+02.00	0.7	2.2	2.2		0.5
	X	103+00.00	103+79.00	5.3	17.6	17.6		4.0
X		103+23.50	103+33.00	0.6	2.1	2.1		0.4
	X	103+98.00					5.5	5.5
	X	104+17.00	104+27.00	0.7	2.2	2.2		0.5
			SUB TOTAL	89.80	297.70	297.70	33.40	99.50
			SHEET TOTAL	182.50	592.50	592.50	36.70	167.80

SUMMARY OF QUANTITIES
Q-3

STATE OF CALIFORNIA - DEPARTMENT OF TRANSPORTATION
Caltrans DESIGN

FUNCTIONAL SUPERVISOR: JUSTINE NIU
CALCULATED-DESIGNED BY: ALAN BISI
CHECKED BY: ANNABELL WANG
REVISED BY / DATE REVISED

LAST REVISION 06-26-15 | DATE PLOTTED => 01-DEC-2015 | TIME PLOTTED => 08:10

Dist	COUNTY	ROUTE	POST MILES TOTAL PROJECT	SHEET No.	TOTAL SHEETS
08	SBd	18	49.0/51.7	122	179

REGISTERED CIVIL ENGINEER 6-26-15 DATE

6-26-15
PLANS APPROVAL DATE

REGISTERED PROFESSIONAL ENGINEER ALAN R. BISI No. 62808 Exp. 06-30-16 CIVIL STATE OF CALIFORNIA

THE STATE OF CALIFORNIA OR ITS OFFICERS OR AGENTS SHALL NOT BE RESPONSIBLE FOR THE ACCURACY OR COMPLETENESS OF SCANNED COPIES OF THIS PLAN SHEET.

SIDEWALK AND DRIVEWAY QUANTITIES
(TABLE 5 OF 5)

DIRECTION		LOCATION SBd-18 STATION "BB1"		SIDEWALK			DRIVE-WAY	
				MINOR Conc (CURB,GUTTER, SW & CURB RAMP)	CLASS 2 AB	ROADWAY Ex	JOINTED Conc PAVEMENT (RSC)	REMOVE CONC (Misc)
LT	RT	FROM	TO	CY	CY	CY	CY	CY
X		104+15.00	104+30.00	0.9	2.9	2.9		0.7
	X	105+50.00	105+90.00	2.0	6.7	6.7		2.0
X		108+11.50	109+80.50	11.3	37.6	37.6		9.0
	X	109+69.00	110+14.00	3.7	12.4	12.4		2.9
X		110+10.00	110+24.00	0.9	3.1	3.1		0.9
X		111+39.00	112+16.00	5.1	17.1	17.1		3.4
	X	113+20.00	113+39.00	1.0	3.3	3.3		1.0
	X	113+20.00	113+39.00	0.3				
X		113+45.00	113+66.00	1.4	4.7	4.7		1.0
X		114+4.500	114+11.50	0.5	1.6	1.6		0.3
	X	114+65.00	114+85.00	1.0	3.2	3.2		1.0
	X	116+58.00	116+66.00	0.5	1.8	1.8		0.4
	X	117+70.50	118+00.00	2.0	6.6	6.6		1.4
X		119+73.50	120+34.50	4.1	13.6	13.6		3.0
X		120+65.50	121+19.50	3.6	12.0	12.0		2.6
X		121+69.00	122+31.00	4.1	13.8	13.8		3.0
	X	125+09.50	126+44.50	9.0	22.0	22.0		6.8
X		125+16.00	126+15.00	6.6	22.0	22.0		4.7
X		126+97.00	128+07.00	7.3	24.4	24.4		5.4
X		129+10.00	129+24.00	0.9	3.1	3.1		0.7
	X	129+41.00	129+62.00	1.3	4.3	4.3		1.3
	X	129+41.00	129+62.00	0.3				
	X	130+54.00	130+89.00	2.3	7.8	7.8		1.8
X		130+91.00	131+27.00	2.4	8.0	8.0		1.8
X		130+91.00	131+27.00	0.6				
X		133+60.00	133+98.00	2.5	8.4	8.4		1.9
	X	136+52.00	136+72.00	1.3	4.4	4.4		1.0
	X	138+09.50	138+24.50	1.0	3.3	3.3		0.8
	X	138+42.00	138+78.00	2.4	8.0	8.0		1.6
	X	139+50.00	139+93.50	2.9	9.7	9.7		2.1
	X	140+97.00	141+08.00	0.7	2.4	2.4		0.5
			SUB TOTAL	83.90	268.20	268.20	00.00	63.00
			GRAND TOTAL	481.40	1561.70	1561.70	65.20	425.40

* SEWER MANHOLE FRAME AND COVER SHALL BE SUPPLIED BY CITY OF BIG BEAR LAKE

DRAINAGE STRUCTURE QUANTITIES

DIRECTION		LOCATION SBd-18 STATION "BB1"	TYPE	DESCRIPTION	MINOR Conc MINOR STRUCTURE	Misc IRON AND STEEL	24-12X GRATE (N)	DRAINAGE INLET MARKER (STAMPED Conc TYPE)
LT	RT				CY	lb	EA	EA
	X	Sta 14+50	OL-7	ADJUST DI	0.56	170.0		1
	X	Sta 17+30		PARKWAY	0.30	189.6		
	X	Sta 20+59		PARKWAY	0.30	189.6		
	X	Sta 21+43		PARKWAY	0.30	189.6		
	X	Sta 33+10	GO	ADJUST DI	0.49	239.0	1	1
	X	Sta 34+89		PARKWAY	0.30	189.6		
	X	Sta 36+50	OL-7	ADJUST DI	0.56	170.0		1
	X	Sta 64+41	GO	ADJUST DI	0.49	239.0	1	1
X		Sta 64+41	OS	ADJUST DI	0.56	174.0		1
	X	Sta 68+50	OS	ADJUST DI	0.56	174.0		1
	X	Sta 70+75	OS	ADJUST DI	0.56	174.0		1
	X	Sta 81+50	OL-7	ADJUST DI	0.56	170.0		1
	X	Sta 89+50	GO	ADJUST DI	0.49	239.0	1	1
	X	Sta 90+57		PARKWAY	0.30	189.6		
	X	Sta 93+74		PARKWAY	0.30	189.6		
	X	Sta 97+09	OS	ADJUST DI	0.56	174.0		1
X		Sta 97+95	GO	ADJUST DI	0.49	239.0	1	1
	X	Sta 98+75	GO	ADJUST DI	0.49	239.0	1	1
	X	Sta 100+50	GO	ADJUST DI	0.49	239.0	1	1
	X	Sta 105+83		PARKWAY	0.30	189.6		
	X	Sta 111+36	GO	ADJUST DI	0.49	239.0	1	1
	X	Sta 116+62	GO	ADJUST DI	0.49	239.0	1	1
TOTAL					9.94	4445.2	8	15

ADJUST WATER VALVE COVER QUANTITIES

DIRECTION		LOCATION SBd-18 STATION "BB1"	ADJUST WATER VALVE COVER
LT	RT		EA
X		9+85.00	2
X		10+31.00	1
X		33+59.00	1
X		49+77.00	2
X		61+93.00	2
X		67+91.00	3
X		68+14.00	3
X		86+50.00	1
X		95+17.00	3
	X	100+09.00	1
X		110+52.00	4
X		128+37.00	1
TOTAL			24

ADJUST MANHOLE QUANTITIES

DIRECTION		LOCATION SBd-18 STATION "BB1"	ADJUST MANHOLE	MANHOLE TYPE
LT	RT		EA	
X		10+99.00	1	TELEPHONE
X		16+34.00	1	TELEPHONE
X		19+90.00	1	TELEPHONE
X		28+58.00	1	TELEPHONE
X		32+84.00	1	TELEPHONE
X		37+75.00	1	TELEPHONE
X		45+30.00	1	TELEPHONE
X		56+54.00	1	TELEPHONE
X		62+56.00	1	TELEPHONE
	X	71+47.00	1	SEWER*
X		73+89.00	1	TELEPHONE
	X	74+92.00	1	SEWER
	X	77+81.00	1	SEWER
	X	78+34.00	1	SEWER
X		80+49.00	1	TELEPHONE
	X	81+00.00	1	SEWER
	X	83+33.00	1	SEWER
X		84+00.00	1	STORM DRAIN
X		92+74.00	1	TELEPHONE
	X	100+29.00	1	SEWER
	X	103+00.00	1	SEWER
	X	105+74.00	1	SEWER
X		108+40.00	1	STORM DRAIN
	X	110+71.00	1	SEWER
	X	113+27.00	1	STORM DRAIN
X		114+15.00	1	TELEPHONE
X		120+05.00	1	TELEPHONE
	X	126+16.00	1	TELEPHONE
	X	136+62.00	1	SEWER
	X	138+60.00	1	SEWER
		TOTAL	30	

REMOVE CHAIN LINK FENCE

DIRECTION		LOCATION SBd-18 STATION "BB1"		REMOVE CHAIN LINK FENCE
LT	RT	FROM	TO	FT
	X	79+22.00	79+54.00	64.00
TOTAL				64.00

CHAIN LINK FENCE

DIRECTION		LOCATION SBd-18 STATION "BB1"		CHAIN LINK FENCE (CL4)
LT	RT	FROM	TO	FT
	X	79+22.00	79+54.00	64.00
TOTAL				64.00

SUMMARY OF QUANTITIES
Q-4

STATE OF CALIFORNIA - DEPARTMENT OF TRANSPORTATION
Caltrans DESIGN
FUNCTIONAL SUPERVISOR JUSTINE NIU
CALCULATED-DESIGNED BY ANNABELL WANG
CHECKED BY ALAN BISI
REVISED BY
DATE REVISED

LAST REVISION 06-26-15
DATE PLOTTED => 01-DEC-2015
TIME PLOTTED => 08:10

Dist	COUNTY	ROUTE	POST MILES TOTAL PROJECT	SHEET No.	TOTAL SHEETS
08	SBd	18	49.0/51.7	123	179

REGISTERED CIVIL ENGINEER 6-26-15 DATE

6-26-15
PLANS APPROVAL DATE

REGISTERED PROFESSIONAL ENGINEER FERDINAND DE LA CRUZ No. 66070 Exp. 06-30-16 ELECTRICAL STATE OF CALIFORNIA

THE STATE OF CALIFORNIA OR ITS OFFICERS OR AGENTS SHALL NOT BE RESPONSIBLE FOR THE ACCURACY OR COMPLETENESS OF SCANNED COPIES OF THIS PLAN SHEET.

NOTES: (THIS SHEET ONLY)

1. FOR ACCURATE RIGHT OF WAY DATA, CONTACT RIGHT OF WAY ENGINEERING AT THE DISTRICT OFFICE.
2. AB ALL EXISTING LOOP DETECTORS.

LEGEND: (THIS SHEET ONLY)

1 RS EXISTING TYPE III-CF SERVICE EQUIPMENT ENCLOSURE. REUSE EXISTING FOUNDATION.
2 RS EXISTING CONTROLLER CABINET.
3 RS EXISTING POLE AND EQUIPMENT.
4 RR EXISTING "NO U TURN" SIGN. SEE POLE AND EQUIPMENT SCHEDULE ON SHEET E-3.

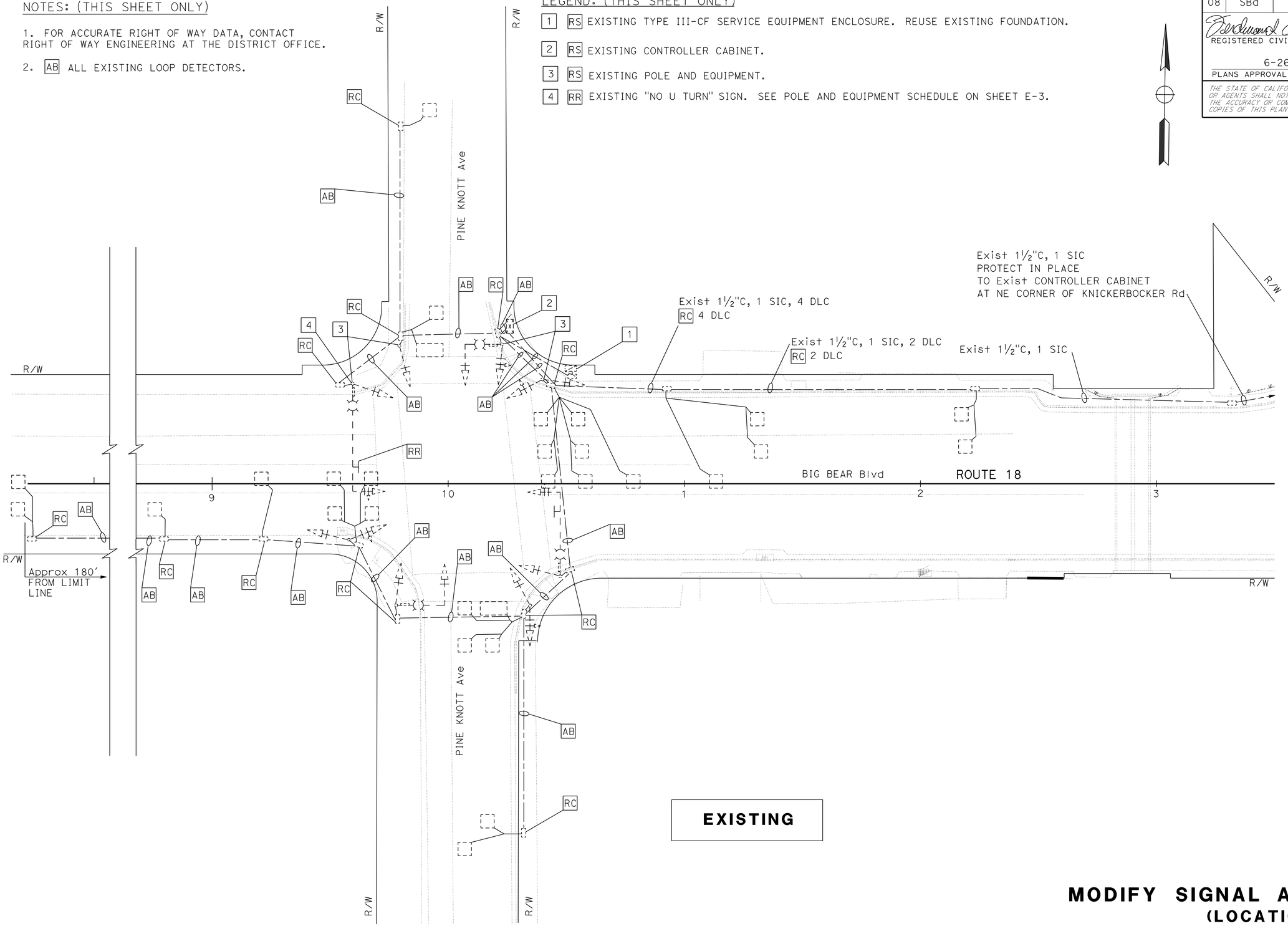

EXISTING

MODIFY SIGNAL AND LIGHTING
(LOCATION 1)
SCALE 1" = 20'

E-1

APPROVED FOR ELECTRICAL WORK ONLY

STATE OF CALIFORNIA - DEPARTMENT OF TRANSPORTATION
Caltrans
ELECTRICAL DESIGN B

FUNCTIONAL SUPERVISOR: FERDINAND DE LA CRUZ
CALCULATED-DESIGNED BY: LUIS PENALOZA
CHECKED BY: FERDINAND DE LA CRUZ
REVISED BY
DATE REVISED

LAST REVISION 06-26-15
DATE PLOTTED => 01-DEC-2015
TIME PLOTTED => 08:10

Dist	COUNTY	ROUTE	POST MILES TOTAL PROJECT	SHEET No.	TOTAL SHEETS
08	SBd	18	49.0/51.7	124	179

REGISTERED CIVIL ENGINEER 6-26-15 DATE

6-26-15
PLANS APPROVAL DATE

REGISTERED PROFESSIONAL ENGINEER FERDINAND DE LA CRUZ No. 66070 Exp. 06-30-16 ELECTRICAL STATE OF CALIFORNIA

THE STATE OF CALIFORNIA OR ITS OFFICERS OR AGENTS SHALL NOT BE RESPONSIBLE FOR THE ACCURACY OR COMPLETENESS OF SCANNED COPIES OF THIS PLAN SHEET.

NOTES: (SHEET E-2 AND E-3 ONLY)

1. FOR ACCURATE RIGHT OF WAY DATA, CONTACT RIGHT OF WAY ENGINEERING AT THE DISTRICT OFFICE.
2. SEE ROADWAY CONSTRUCTION DETAILS FOR EXACT LOCATION OF SIGNAL AND LIGHTING STANDARDS.

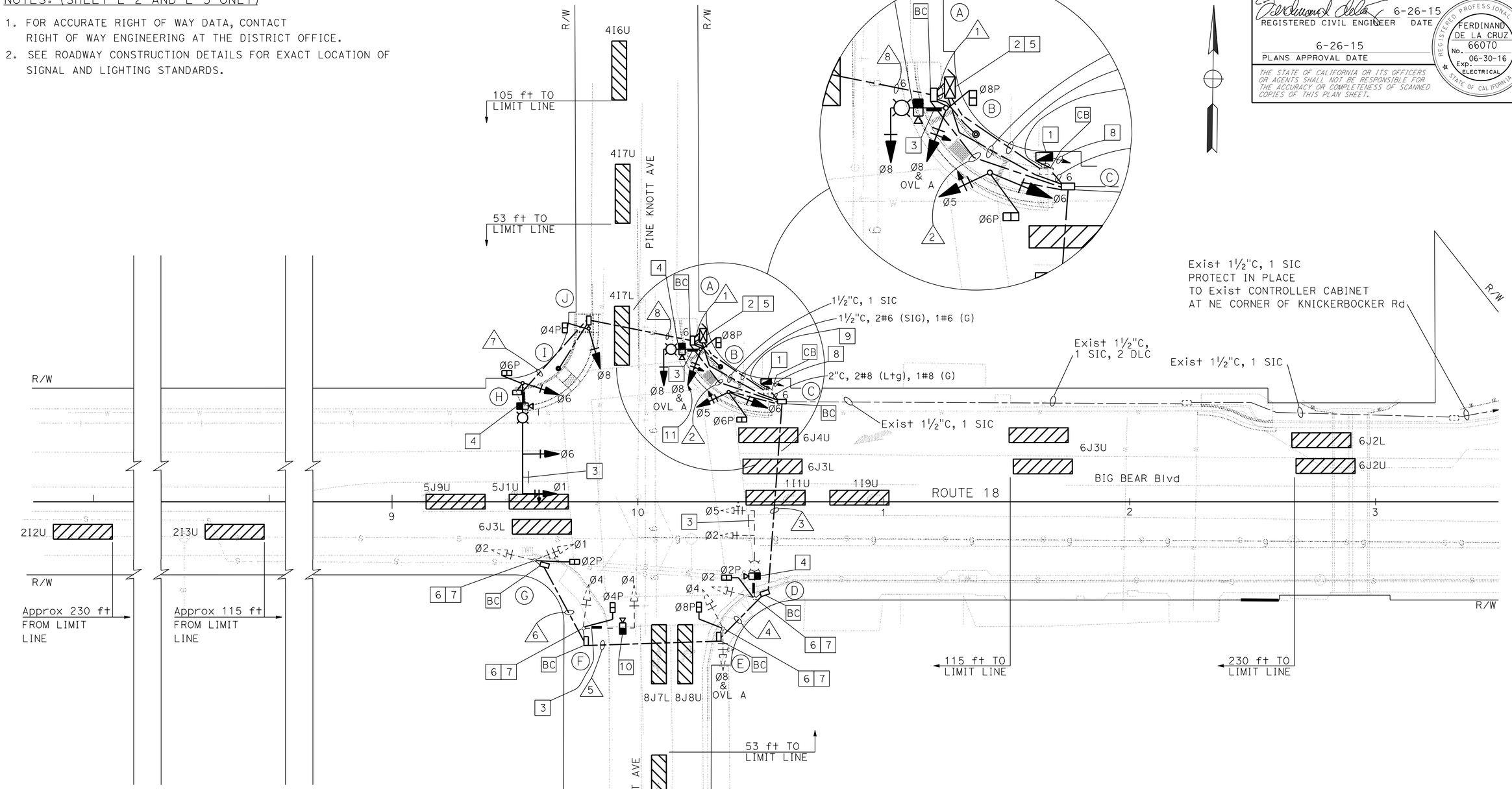

PROPOSED

MODIFY SIGNAL AND LIGHTING
(LOCATION 1)
SCALE 1" = 20'

E-2

APPROVED FOR ELECTRICAL WORK ONLY

STATE OF CALIFORNIA - DEPARTMENT OF TRANSPORTATION
Caltrans®
ELECTRICAL DESIGN B

FUNCTIONAL SUPERVISOR: FERDINAND DE LA CRUZ
CALCULATED-DESIGNED BY: LUIS PENALOZA
CHECKED BY: FERDINAND DE LA CRUZ
REVISED BY
DATE REVISED

LAST REVISION 06-26-15 | DATE PLOTTED => 01-DEC-2015 | TIME PLOTTED => 08:11

Dist	COUNTY	ROUTE	POST MILES TOTAL PROJECT	SHEET No.	TOTAL SHEETS
08	SBd	18	49.0/51.7	125	179

REGISTERED CIVIL ENGINEER 6-26-15 DATE

6-26-15
PLANS APPROVAL DATE

REGISTERED PROFESSIONAL ENGINEER FERDINAND DE LA CRUZ No. 66070 Exp. 06-30-16 ELECTRICAL STATE OF CALIFORNIA

THE STATE OF CALIFORNIA OR ITS OFFICERS OR AGENTS SHALL NOT BE RESPONSIBLE FOR THE ACCURACY OR COMPLETENESS OF SCANNED COPIES OF THIS PLAN SHEET.

LEGEND: (SHEET E-2 AND E-3 ONLY)

1. INSTALL 120/240 V, 1Ø, 3 WIRE, TYPE III-CF SERVICE EQUIPMENT ENCLOSURE ON EXISTING FOUNDATION, WITH THE FOLLOWING CIRCUIT BREAKERS:
   - METER A: 100 A, 240 V, 2P, CB. MAIN BREAKER (TC-1)
     50 A, 120 V, 1P, CB. (SIGNAL)
   - METER B: 100 A, 240 V, 2P, CB. MAIN BREAKER (LS-3)
     30 A, 240 V, 2P, CB. (LIGHTING)
     15 A, 120 V, 1P, CB. (LIGHTING CONTROL)
2. INSTALL DEPARTMENT FURNISHED MODEL 2070 CONTROLLER ASSEMBLY WITH TYPE 332 CABINET AND BATTERY BACKUP SYSTEM. REFER TO SHEETS E-20, E-21 AND E-22 FOR DETAILS.
3. FOR SIGN DETAILS AND STREET NAME SIGNS, SEE SQ-1 PLAN SHEET.
4. INSTALL VIVDS CAMERA PER STANDARD PLAN ES-7R, DETAIL B.
5. INSTALL LONG TERM EVOLUTION (LTE) MODEM IN CONTROLLER CABINET.
6. RS EXISTING PEDESTRIAN PUSH BUTTON. INSTALL APS.
7. RS EXISTING PEDESTRIAN SIGNAL HEAD. INSTALL LED COUNTDOWN PEDESTRIAN SIGNAL FACE MODULE.
8. EXISTING 3"C, 3#2 (POWER FROM BVE). BVE SHALL CONNECT TO THIS EXISTING CONDUIT AND PROVIDE SERVICE EQUIPMENT ENCLOSURE WITH POWER.
9. EXIST 1½"C, 2#6, 2#10, 2#12, 1#8. RC 2#6, 2#10, 2#12, 1#8.
   INSTALL 2#6 (SIG), 1#8 (LTG), 1#6 (G).
10. INSTALL VIVDS CAMERA PER STANDARD PLAN ES-7R, DETAIL A.
11. INSTALL VEHICLE SIGNAL FACE PER DETAIL 'C' SHOWN ON THIS SHEET.
12. REFER TO DETAIL 'D' ON THIS SHEET.
13. REFER TO DETAIL 'E' ON THIS SHEET.

ABBREVIATIONS:

BVE	-	BEAR VALLEY ELECTRIC
TC-1	-	SCE TRAFFIC CONTROL RATE
LS-3	-	SCE LIGHTING RATE

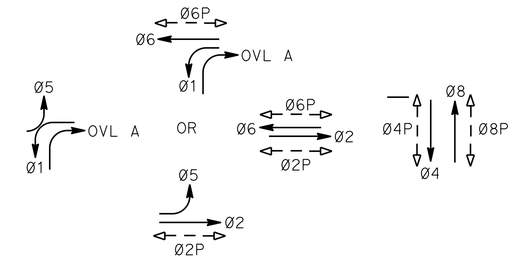

PHASE DIAGRAM
STEADY DEMAND SEQUENCE

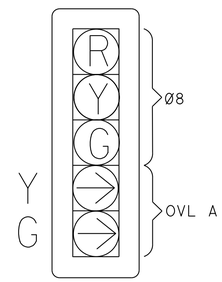

DETAIL 'C'

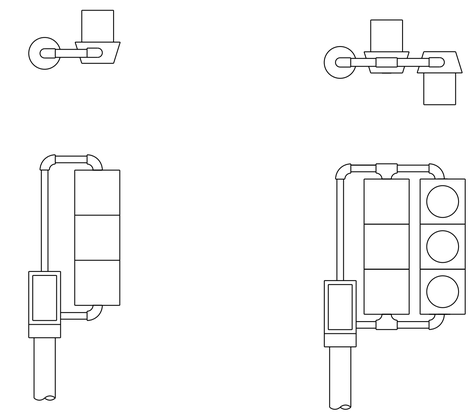

DETAIL 'D'
(MODIFIED TV-1-T)

DETAIL 'E'
(MODIFIED TV-2-T)

CONDUCTOR AND CONDUIT SCHEDULE

CABLE SCHEDULE			CONDUIT RUN AND SIZE							
CABLE TYPE	POLE	PHASE	1	2	3	4	5	6	7	8
VEH-PED 12CSC	Ⓐ	8,OVL A,8P	1							
	Ⓑ	6,8	2							
	Ⓒ	5,6,6P	1	1						
	Ⓓ	2,5,2P / 8	1	1	1	1				
	Ⓔ	8,OVL A,8P / 4 / 2	2	2	2	2				
	Ⓕ	4,4P / 2	1	1	1	1	1	1		
	Ⓖ	1,2,2P / 4	1	1	1	1	1	1	1	
	Ⓗ	1,6,6P	1						1	1
PPB 3CSC	Ⓘ	4,6	2							2
	Ⓙ	8,4P	1							1
		TOTAL	9/8	6/4	5/4	4/3	2/2	1/1	1	2/2
AWG		CIRCUIT								
#8		LIGHTING		2	2				2	2
#8		GROUND	1	1	1	1	1	1	1	1
VIVID POWER CABLE			4	2	2	1	1		1	1
VIVID VIDEO CABLE			4	2	2	1	1		1	1
CONDUIT SIZE			2-4"	4"	4"	3.5"	3"	2"	2"	3"

POLE and EQUIPMENT SCHEDULE

No.	STANDARD TYPE	STANDARD SMA	STANDARD LMA	VEH SIG MTG Mast Arm	VEH SIG MTG POLE	PED SIG Mtg	PPB Ø	PPB ARROW	LED LUM	SPECIAL REQUIREMENTS
Ⓐ	17-3-100	15'	12'	MAS	SV-1-T	SP-1-T			165 W	INSTALL D3 SIGN (BIG BEAR Blvd) [3]
Ⓑ	PPB POST						6 8	← →		
Ⓒ	1-A				[13]	SP-1-T				
*Ⓓ	24-4-80	35'	12'	MAS MAS	SV-1-T	SP-1-T	8	←	165 W	RC IISNS. INSTALL D3 SIGN (PINE KNOTT Ave) RC Exist Lum. INSTALL LED Lum. [3]
*Ⓔ	1-A				TV-2-T	SP-1-T	2	→		
*Ⓕ	16-2-80	20'	12'	MAS	SV-1-T	SP-1-T	2	←	165 W	RC IISNS. INSTALL D3 SIGN (BIG BEAR Blvd) RC Exist Lum. INSTALL LED Lum. [3]
*Ⓖ	1-A				TV-2-T	SP-1-T	4	→		
Ⓗ	26-4-100	45'	15'	MAS MAS	SV-1-T	SP-1-T			165 W	RC IISNS. INSTALL D3 SIGN (PINE KNOTT Ave) INSTALL EXISTING "NO U TURN" SIGN. F=16 ft [3]
Ⓘ	PPB POST						4 6	← →		
Ⓙ	1-A				[12]	SP-1-T				

* EXISTING EQUIPMENT. TO REMAIN.

MODIFY SIGNAL AND LIGHTING
(LOCATION 1)
NO SCALE

E-3

APPROVED FOR ELECTRICAL WORK ONLY

STATE OF CALIFORNIA - DEPARTMENT OF TRANSPORTATION
ELECTRICAL DESIGN B
Caltrans
FUNCTIONAL SUPERVISOR: FERDINAND DE LA CRUZ
CALCULATED-DESIGNED BY: LUIS PENALOZA
CHECKED BY: FERDINAND DE LA CRUZ
REVISED BY
DATE REVISED

LAST REVISION 06-26-15
DATE PLOTTED => 01-DEC-2015
TIME PLOTTED => 08:11

Dist	COUNTY	ROUTE	POST MILES TOTAL PROJECT	SHEET No.	TOTAL SHEETS
08	SBd	18	49.0/51.7	126	179

REGISTERED CIVIL ENGINEER 6-26-15 DATE

6-26-15
PLANS APPROVAL DATE

REGISTERED PROFESSIONAL ENGINEER FERDINAND DE LA CRUZ No. 66070 Exp. 06-30-16 ELECTRICAL STATE OF CALIFORNIA

THE STATE OF CALIFORNIA OR ITS OFFICERS OR AGENTS SHALL NOT BE RESPONSIBLE FOR THE ACCURACY OR COMPLETENESS OF SCANNED COPIES OF THIS PLAN SHEET.

LEGEND (THIS SHEET ONLY):

1 RS EXISTING TYPE III-CF SERVICE EQUIPMENT ENCLOSURE. REUSE EXISTING FOUNDATION.

2 RS EXISTING CONTROLLER CABINET.

NOTES:

1. FOR ACCURATE RIGHT OF WAY DATA, CONTACT RIGHT OF WAY ENGINEERING AT THE DISTRICT OFFICE.
2. AB ANY EXISTING LOOP DETECTORS.

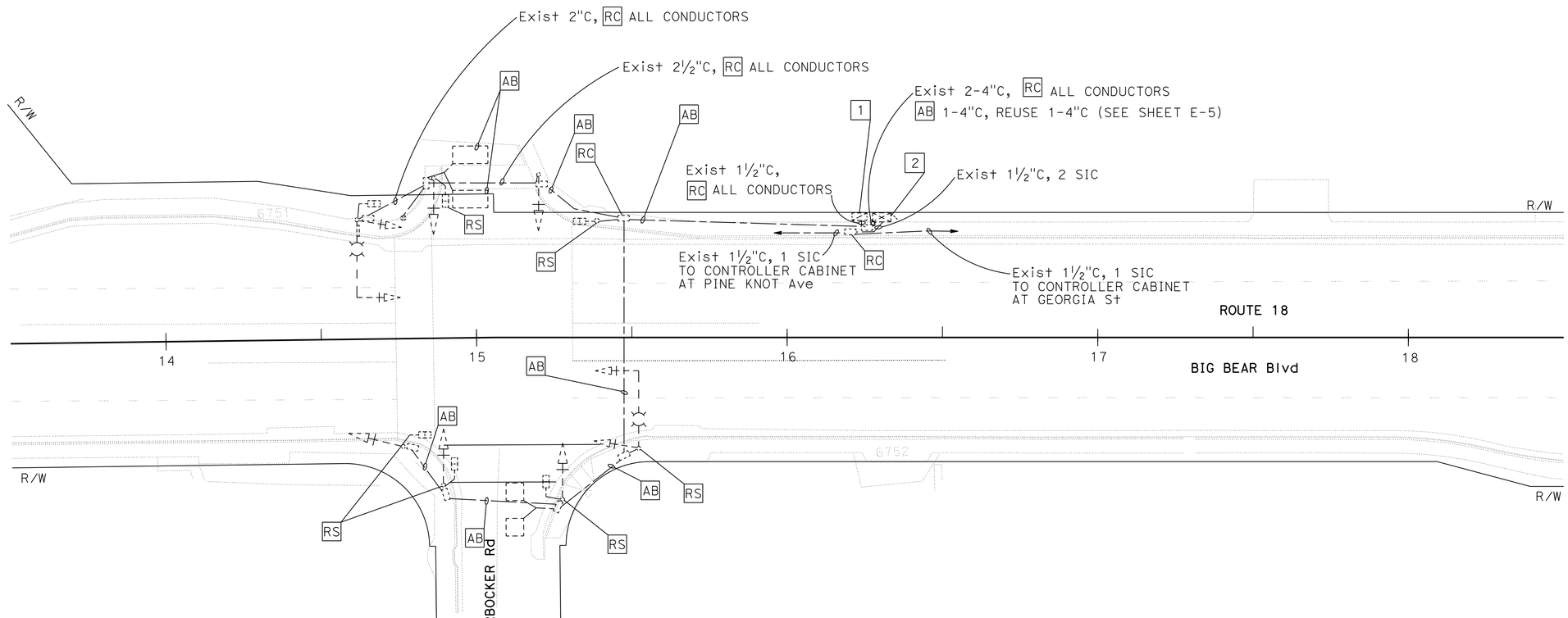

EXISTING

MODIFY SIGNAL AND LIGHTING
(LOCATION 2)
SCALE 1" = 20'

E-4

APPROVED FOR ELECTRICAL WORK ONLY

STATE OF CALIFORNIA - DEPARTMENT OF TRANSPORTATION
Caltrans
ELECTRICAL DESIGN B

FUNCTIONAL SUPERVISOR: FERDINAND DE LA CRUZ
CALCULATED-DESIGNED BY: LUIS PENALOZA
CHECKED BY: FERDINAND DE LA CRUZ
REVISED BY
DATE REVISED

LAST REVISION 06-26-15
DATE PLOTTED => 01-DEC-2015
TIME PLOTTED => 08:11

Dist	COUNTY	ROUTE	POST MILES TOTAL PROJECT	SHEET No.	TOTAL SHEETS
08	SBd	18	49.0/51.7	127	179

REGISTERED CIVIL ENGINEER 6-26-15 DATE

6-26-15
PLANS APPROVAL DATE

REGISTERED PROFESSIONAL ENGINEER FERDINAND DE LA CRUZ No. 66070 Exp. 06-30-16 ELECTRICAL STATE OF CALIFORNIA

THE STATE OF CALIFORNIA OR ITS OFFICERS OR AGENTS SHALL NOT BE RESPONSIBLE FOR THE ACCURACY OR COMPLETENESS OF SCANNED COPIES OF THIS PLAN SHEET.

NOTES: (SHEET E-5 AND E-6 ONLY)

1. FOR ACCURATE RIGHT OF WAY DATA, CONTACT RIGHT OF WAY ENGINEERING AT THE DISTRICT OFFICE.
2. SEE ROADWAY CONSTRUCTION DETAILS FOR EXACT LOCATION OF SIGNAL AND LIGHTING STANDARDS.

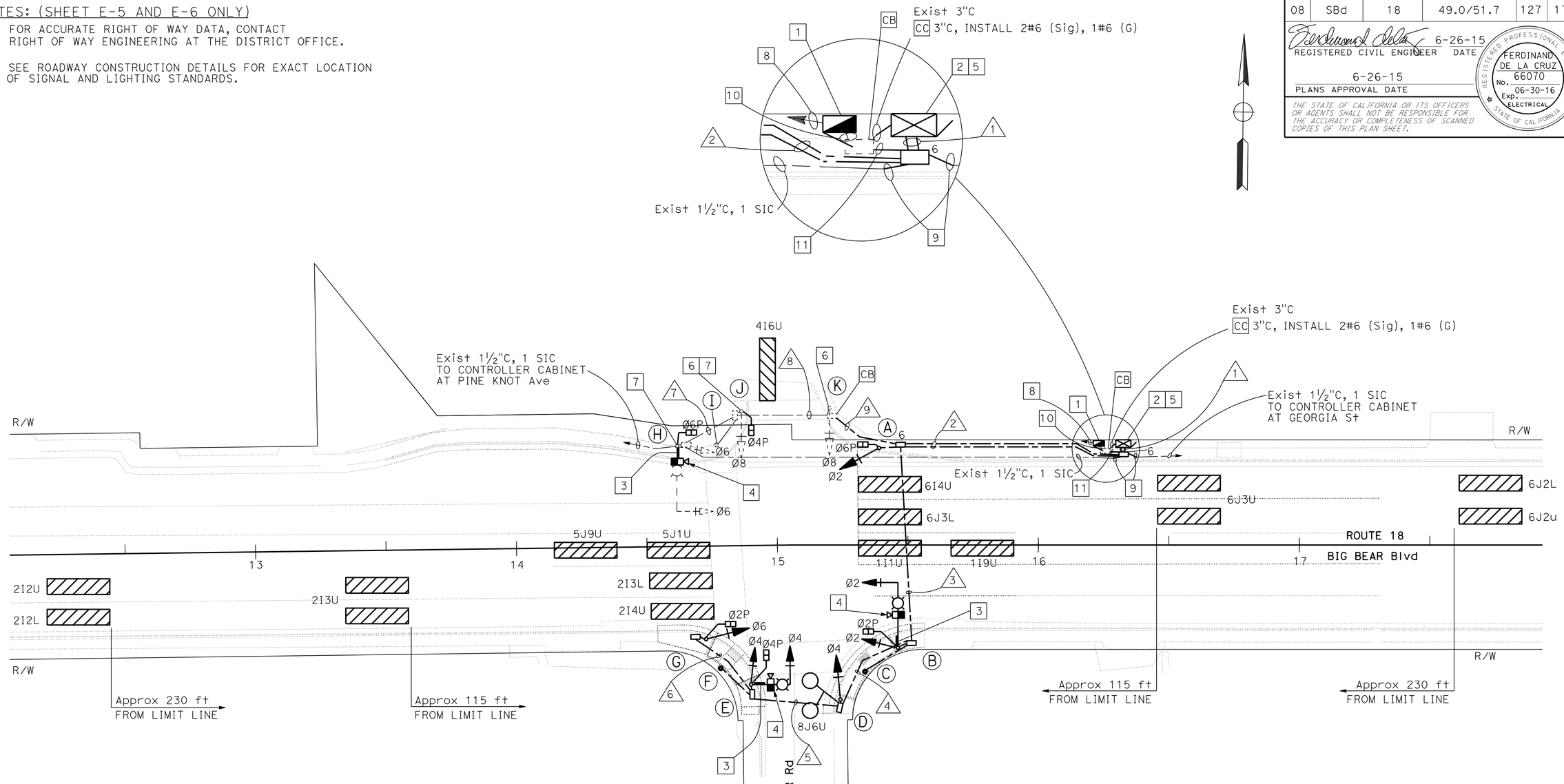

PROPOSED

MODIFY SIGNAL AND LIGHTING
(LOCATION 2)
SCALE 1" = 20'

E-5

APPROVED FOR ELECTRICAL WORK ONLY

STATE OF CALIFORNIA - DEPARTMENT OF TRANSPORTATION
Caltrans
ELECTRICAL DESIGN B

FUNCTIONAL SUPERVISOR: FERDINAND DE LA CRUZ
CALCULATED-DESIGNED BY: LUIS PENALOZA
CHECKED BY: FERDINAND DE LA CRUZ
REVISED BY / DATE REVISED

LAST REVISION 06-26-15 | DATE PLOTTED => 01-DEC-2015 | TIME PLOTTED => 08:11

Dist	COUNTY	ROUTE	POST MILES TOTAL PROJECT	SHEET No.	TOTAL SHEETS
08	SBd	18	49.0/51.7	128	179

REGISTERED CIVIL ENGINEER 6-26-15 DATE

6-26-15
PLANS APPROVAL DATE

REGISTERED PROFESSIONAL ENGINEER FERDINAND DE LA CRUZ No. 66070 Exp. 06-30-16 ELECTRICAL STATE OF CALIFORNIA

THE STATE OF CALIFORNIA OR ITS OFFICERS OR AGENTS SHALL NOT BE RESPONSIBLE FOR THE ACCURACY OR COMPLETENESS OF SCANNED COPIES OF THIS PLAN SHEET.

LEGEND: (SHEET E-5 AND E-6 ONLY)

1. INSTALL 120/240 V, 1Ø, 3 WIRE, TYPE III-CF SERVICE EQUIPMENT ENCLOSURE ON EXISTING FOUNDATION, WITH THE FOLLOWING CIRCUIT BREAKERS:
   - METER A: 100 A, 240 V, 2P, CB. MAIN BREAKER (TC-1)
     50 A, 120 V, 1P, CB. (SIG)
   - METER B: 100 A, 240 V, 2P, CB. MAIN BREAKER (LS-3)
     30 A, 240 V, 2P, CB. (LIGHTING)
     15 A, 120 V, 1P, CB. (LIGHTING CONTROL)
2. INSTALL DEPARTMENT FURNISHED MODEL 2070 CONTROLLER ASSEMBLY WITH TYPE 332 CABINET AND BATTERY BACKUP SYSTEM. REFER TO SHEETS E-20, E-21 AND E-22 FOR DETAILS.
3. FOR SIGN DETAILS AND STREET NAME SIGNS, SEE SQ-1 PLAN SHEET.
4. INSTALL VIVDS CAMRERA PER ES-7R, DETAIL B.
5. INSTALL LONG TERM EVOLUTION (LTE) MODEM IN CONTROLLER CABINET.
6. RS EXISTING PEDESTRIAN PUSH BUTTON. INSTALL APS.
7. RS EXISTING PEDESTRIAN SIGNAL HEAD. INSTALL LED COUNTDOWN PEDESTRIAN SIGNAL FACE MODULE.
8. EXISTING 3"C, 3#2 (POWER FROM BVE). BVE SHALL CONNECT TO THIS EXISTING CONDUIT AND PROVIDE SERVICE EQUIPMENT ENCLOSURE WITH POWER.
9. 1½"C, CC 1½"C. RR EXISTING SIC.
10. Exist 1½"C, INSTALL 2#6 (Sig), 2#8 (Ltg), 1#6 (G).
11. 1½"C, 2#8 (Ltg), 1#8 (G).
12. REFER TO DETAIL 'D' ON THIS SHEET.

ABBREVIATIONS:

SCE	-	SOUTHERN CALIFORNIA EDISON
TC-1	-	SCE TRAFFIC CONTROL RATE
LS-3	-	SCE LIGHTING RATE

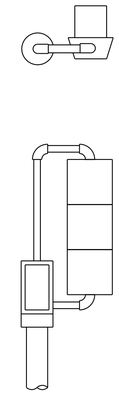

DETAIL 'D'
(MODIFIED TV-1-T)

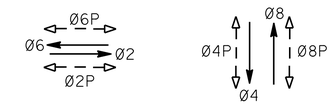

PHASE DIAGRAM
STEADY DEMAND SEQUENCE

POLE and EQUIPMENT SCHEDULE

POLE	STANDARD TYPE	STANDARD SMA	STANDARD LMA	VEH SIG MTG MAST ARM	VEH SIG MTG POLE	PED SIG MTG	APS PPB Ø	APS PPB ARROW	LED LUM (W)	SPECIAL REQUIREMENTS
Ⓐ	1-A				12	SP-1-T				
Ⓑ	19-3-100	25'	15'	MAS	SV-1-T	SP-1-T			165	INSTALL D3 SIGN (KNICKERBOCKER Rd) 3
Ⓒ	PPB POST						2	→		
Ⓓ	1-A				12					
Ⓔ	17-3-100	15'	12'	MAS	SV-1-T	SP-1-T			165	INSTALL D3 SIGN (BIG BEAR Blvd) 3
Ⓕ	PPB POST						4 2	→ ←		
Ⓖ	1-A				12	SP-1-T				
*Ⓗ	19-2-80	25'	12'	MAS	SV-1-T	SP-1-T			165	RC EXISTING IISNS. INSTALL D3 SIGN (KNICKERBOCKER Rd) 3 RC EXISTING Lum. INSTALL LED Lum.
*Ⓘ	PPB POST						4	←		
*Ⓙ	1-A				SV-1-T	SP-1-T	6	→		
*Ⓚ	1-A				SV-1-T		6	←		

* EXISTING. TO REMAIN

CONDUCTOR AND CONDUIT SCHEDULE

CABLE SCHEDULE			CONDUIT RUN AND SIZE								
CABLE TYPE	POLE	PHASE	1	2	3	4	5	6	*7	*8	9
VEH-PED 12CSC	Ⓐ	2,6P	1	1							
	Ⓑ	2,2P	1	1	1						
	Ⓒ	2	1	1	1						
	Ⓓ	4	1	1	1	1					
	Ⓔ	4,4P	1	1	1	1	1				
	Ⓕ	2,4	2	2	2	2	2				
	Ⓖ	6,2P	1	1	1	1	1	1			
	Ⓗ	6,6P	1	1					1	1	1
	Ⓘ	4	1	1						1	1
	Ⓙ	8,4P / 6	1 / 1	1 / 1						1 / 1	1 / 1
	Ⓚ	8 / 6	1 / 1	1 / 1							1 / 1
PPB 3CSC		TOTAL	8 / 6	8 / 6	4 / 3	3 / 2	2 / 2	1 / 0	1 / 0	2 / 2	3 / 3
AWG		CIRCUIT									
#8		LIGHTING		2	2	2	2		2	2	2
#8		GROUND	1	1	1	1	1	1	1	1	1
SIC			2								
VIVID POWER CABLE			3	3	2	1	1		1	1	1
VIVID VIDEO CABLE			3	3	2	1	1		1	1	1
DETECTORS-TYPE B DLC											
PHASE											
Ø8			1	1	1	1					
TOTAL			1	1	1	1					
CONDUIT SIZE			2-4"	2-4"	4"	3.5"	3"	2"	2"	2.5"	3.5"

* EXISTING CONDUIT

MODIFY SIGNAL AND LIGHTING
(LOCATION 2)
SCALE 1" = 20'

E-6

APPROVED FOR ELECTRICAL WORK ONLY

STATE OF CALIFORNIA - DEPARTMENT OF TRANSPORTATION
Caltrans
ELECTRICAL DESIGN B
FUNCTIONAL SUPERVISOR: FERDINAND DE LA CRUZ
CALCULATED-DESIGNED BY: LUIS PENALOZA
CHECKED BY: FERDINAND DE LA CRUZ
REVISED BY
DATE REVISED

LAST REVISION 06-26-15
DATE PLOTTED => 01-DEC-2015
TIME PLOTTED => 08:11

Dist	COUNTY	ROUTE	POST MILES TOTAL PROJECT	SHEET No.	TOTAL SHEETS
08	SBd	18	49.0/51.7	129	179

REGISTERED CIVIL ENGINEER 6-26-15 DATE

6-26-15
PLANS APPROVAL DATE

REGISTERED PROFESSIONAL ENGINEER FERDINAND DE LA CRUZ No. 66070 Exp. 06-30-16 ELECTRICAL STATE OF CALIFORNIA

THE STATE OF CALIFORNIA OR ITS OFFICERS OR AGENTS SHALL NOT BE RESPONSIBLE FOR THE ACCURACY OR COMPLETENESS OF SCANNED COPIES OF THIS PLAN SHEET.

LEGEND: (THIS SHEET ONLY)

1 RS EXISTING TYPE III-CF SERVICE EQUIPMENT ENCLOSURE. REUSE EXISTING FOUNDATION.

2 RR EXISTING "NO U TURN" SIGN.
SEE POLE AND EQUIPMENT SCHEDULE ON SHEET E-9.

3 RS EXISTING CONTROLLER CABINET.

4 RS EXISTING POLE AND EQUIPMENT.

NOTE:

FOR ACCURATE RIGHT OF WAY DATA, CONTACT
RIGHT OF WAY ENGINEERING AT THE DISTRICT OFFICE.

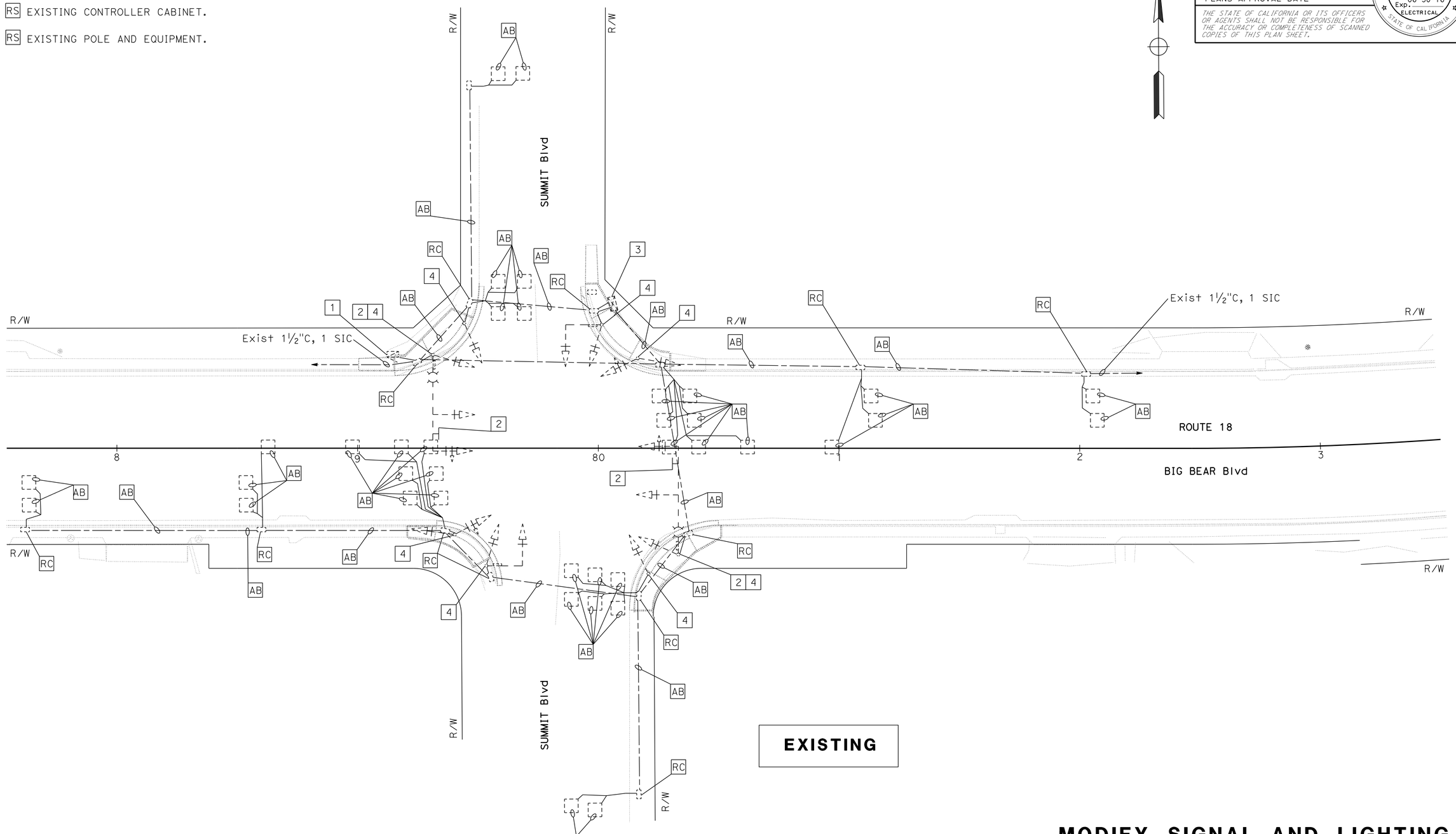

MODIFY SIGNAL AND LIGHTING
(LOCATION 3)
SCALE 1" = 20'

E-7

APPROVED FOR ELECTRICAL WORK ONLY

STATE OF CALIFORNIA - DEPARTMENT OF TRANSPORTATION
Caltrans
ELECTRICAL DESIGN B

FUNCTIONAL SUPERVISOR: FERDINAND DE LA CRUZ
CALCULATED-DESIGNED BY: LUIS PENALOZA
CHECKED BY: FERDINAND DE LA CRUZ
REVISED BY
DATE REVISED

LAST REVISION 06-26-15
DATE PLOTTED => 01-DEC-2015
TIME PLOTTED => 08:11

Dist	COUNTY	ROUTE	POST MILES TOTAL PROJECT	SHEET No.	TOTAL SHEETS
08	SBd	18	49.0/51.7	130	179

REGISTERED CIVIL ENGINEER 6-26-15 DATE

6-26-15
PLANS APPROVAL DATE

REGISTERED PROFESSIONAL ENGINEER FERDINAND DE LA CRUZ No. 66070 Exp. 06-30-16 ELECTRICAL STATE OF CALIFORNIA

THE STATE OF CALIFORNIA OR ITS OFFICERS OR AGENTS SHALL NOT BE RESPONSIBLE FOR THE ACCURACY OR COMPLETENESS OF SCANNED COPIES OF THIS PLAN SHEET.

NOTES: (SHEET E-8 AND E-9 ONLY)

1. SEE SHEET E-9 FOR LEGEND AND SCHEDULES.
2. FOR ACCURATE RIGHT OF WAY DATA, CONTACT RIGHT OF WAY ENGINEERING AT THE DISTRICT OFFICE.
3. SEE ROADWAY CONSTRUCTION DETAILS FOR EXACT LOCATION OF SIGNAL AND LIGHTING STANDARDS.

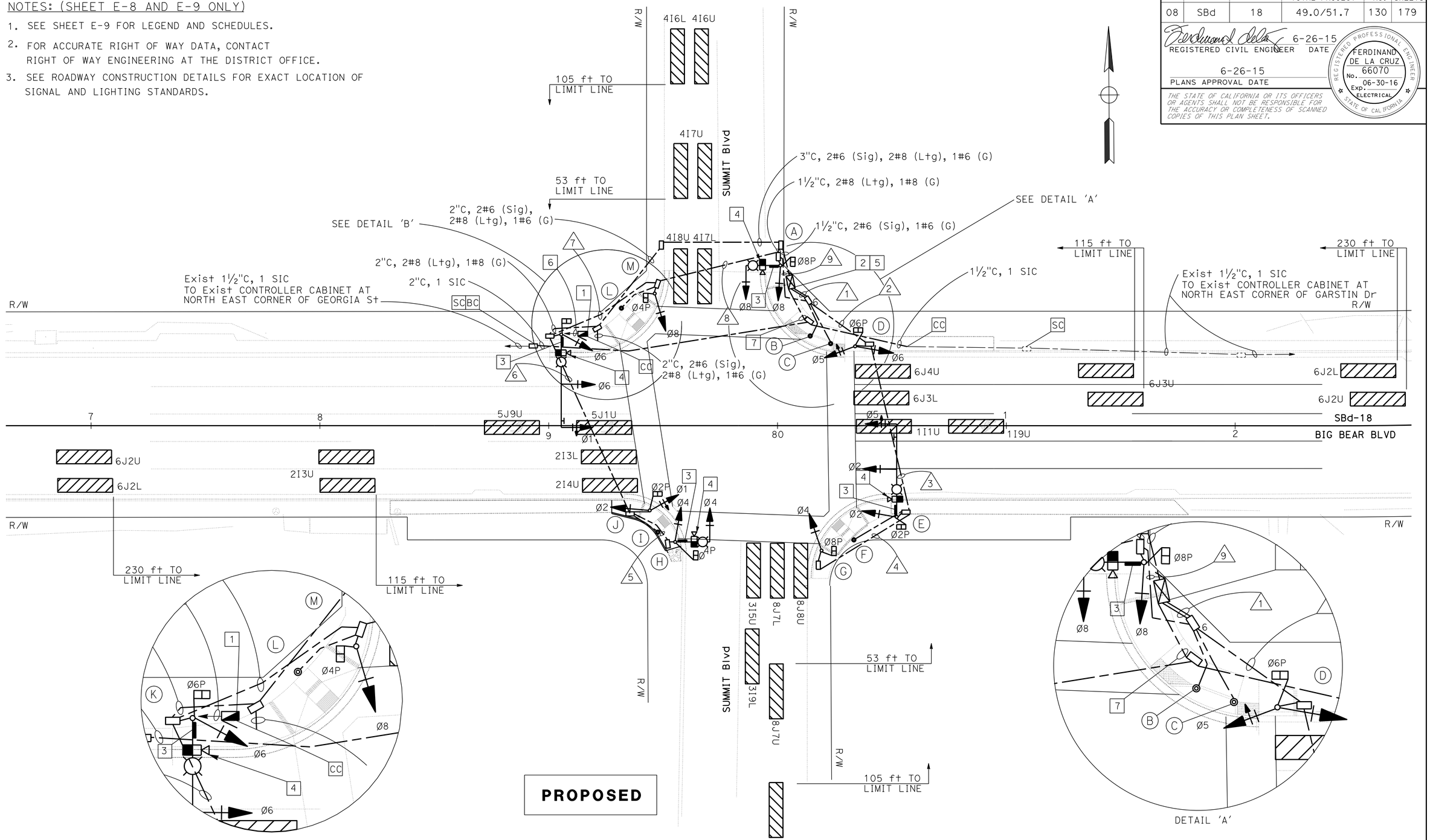

MODIFY SIGNAL AND LIGHTING
(LOCATION 3)
SCALE 1" = 20'

E-8

APPROVED FOR ELECTRICAL WORK ONLY

STATE OF CALIFORNIA - DEPARTMENT OF TRANSPORTATION
Caltrans
ELECTRICAL DESIGN B

FUNCTIONAL SUPERVISOR: FERDINAND DE LA CRUZ
CALCULATED-DESIGNED BY: LUIS PENALOZA
CHECKED BY: FERDINAND DE LA CRUZ
REVISED BY
DATE REVISED

LAST REVISION 06-26-15
DATE PLOTTED => 01-DEC-2015
TIME PLOTTED => 08:11

Dist	COUNTY	ROUTE	POST MILES TOTAL PROJECT	SHEET No.	TOTAL SHEETS
08	SBd	18	49.0/51.7	131	179

REGISTERED CIVIL ENGINEER 6-26-15 DATE

6-26-15
PLANS APPROVAL DATE

REGISTERED PROFESSIONAL ENGINEER FERDINAND DE LA CRUZ No. 66070 Exp. 06-30-16 ELECTRICAL STATE OF CALIFORNIA

THE STATE OF CALIFORNIA OR ITS OFFICERS OR AGENTS SHALL NOT BE RESPONSIBLE FOR THE ACCURACY OR COMPLETENESS OF SCANNED COPIES OF THIS PLAN SHEET.

LEGEND: (SHEET E-8 AND E-9 ONLY)

1. INSTALL 120/240 V, 1Ø, 3 WIRE, TYPE III-CF SERVICE EQUIPMENT ENCLOSURE ON EXISTING FOUNDATION, WITH THE FOLLOWING CIRCUIT BREAKERS:
   - METER A: 100 A, 240 V, 2P, CB. MAIN BREAKER (TC-1)
     50 A, 120 V, 1P, CB. (SIGNALS)
   - METER B: 100 A, 240 V, 2P, CB. MAIN BREAKER (LS-3)
     30 A, 240 V, 2P, CB. (LIGHTING)
     15 A, 120 V, 1P, CB. (LIGHTING CONTROL)
2. INSTALL DEPARTMENT FURNISHED MODEL 2070 CONTROLLER ASSEMBLY WITH TYPE 332 CABINET AND BATTERY BACKUP SYSTEM. REFER TO SHEETS E-20, E-21 AND E-22 FOR DETAILS.
3. FOR SIGN DETAILS AND STREET NAME SIGNS, SEE SQ-1 PLAN SHEET.
4. INSTALL VIVDS CAMRERA PER ES-7R, DETAIL B.
5. INSTALL LONG TERM EVOLUTION (LTE) MODEM IN CONTROLLER CABINET.
6. EXISTING 3"C, 3#2 (POWER FROM BVE). BVE SHALL CONNECT TO THIS EXISTING CONDUIT AND PROVIDE SERVICE EQUIPMENT ENCLOSURE WITH POWER.
7. 1½"C, 2 SIC.
8. REFER TO DETAIL 'D' ON THIS SHEET.
9. REFER TO DETAIL 'E' ON THIS SHEET.
10. REFER TO DETAIL 'F' ON THIS SHEET.

ABBREVIATIONS:

BVE	-	BEAR VALLEY ELECTRIC
TC-1	-	SCE TRAFFIC CONTROL RATE
LS-3	-	SCE LIGHTING RATE

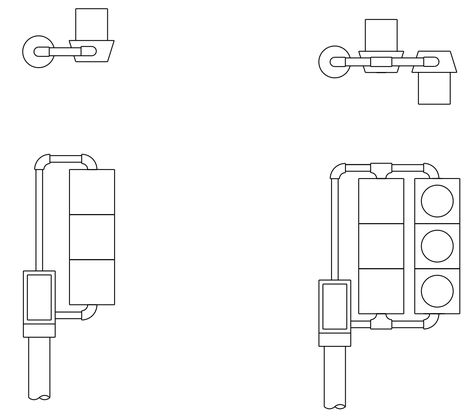

DETAIL 'D'
(MODIFIED TV-1-T)

DETAIL 'E'
(MODIFIED TV-2-T)

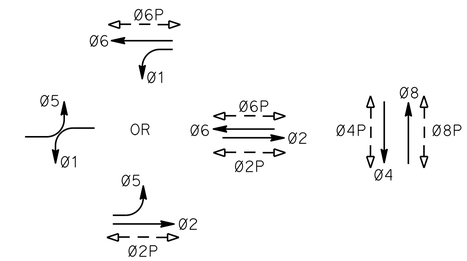

PHASE DIAGRAM
STEADY DEMAND SEQUENCE

CONDUCTOR AND CONDUIT SCHEDULE

CABLE SCHEDULE			CONDUIT RUN AND SIZE								
CABLE TYPE	POLE	PHASE	1	2	3	4	5	6	7	8	9
VEH-PED 12CSC	A	8,8P	1								1
	B	6		1							
	C	8		1							
	D	5,6,6P	1	1							
	E	2,5,2P	1	1	1						
	F	2,8		2	2	2					
	G	4,8P	1	1	1	1					
	H	4,4P	1				1	1	1	1	1
	I	2,4		2				2	2	2	2
	J	1,2,2P	1					1	1	1	1
	K	1,6,6P	1						1	1	1
PPB 3CSC	L	4,6		2						2	2
	M	8,4P	1							1	1
		TOTAL	8/8	3/2	2/2	1/0	1/0	2/2	3/2	4/4	5/4
AWG		CIRCUIT									
#8		LIGHTING		2	2		2	2			2
#8		GROUND	1	1	1	1	1	1	1	1	1
VIVID POWER CABLE			4	1			1	1	2	2	3
VIVID VIDEO CABLE			4	1			1	1	2	2	3
CONDUIT SIZE			2-4"	3.5"	3"	2"	2"	3"	3.5"	4"	4"

POLE AND EQUIPMENT SCHEDULE

No.	STANDARD TYPE	STANDARD SMA	STANDARD LMA	VEH SIG MTG Mast Arm	VEH SIG MTG POLE	PED SIG Mtg	PPB Ø	PPB ARROW	LED LUM	SPECIAL REQUIREMENTS	
A	17-3-100	15'	15'	MAS	SV-1-T	SP-1-T			165 W	INSTALL D3 SIGN (BIG BEAR BLVD)	3
B	PPB POST						6	←			10
C	PPB POST						8	→			10
D	1-A				9	SP-1-T					
E	26-4-100	40'	15'	MAS MAS	SV-1-T	SP-1-T			165 W	INSTALL D3 SIGN (SUMMIT BLVD) INSTALL EXISTING "NO U TURN" SIGN. F=19 ft	3
F	PPB POST						8 2	← →			
G	1-A				8	SP-1-T					
H	17-3-100	15'	15'	MAS	SV-1-T	SP-1-T			165 W	INSTALL D3 SIGN (BIG BEAR BLVD)	3
I	PPB POST						2 4	← →			
J	1-A				9	SP-1-T					
K	26-4-100	40'	15'	MAS MAS	SV-1-T	SP-1-T			165 W	INSTALL D3 SIGN (SUMMIT BLVD) INSTALL EXISTING "NO U TURN" SIGN. F=18 ft	3
L	PPB POST						4 6	← →			
M	1-A				8	SP-1-T					

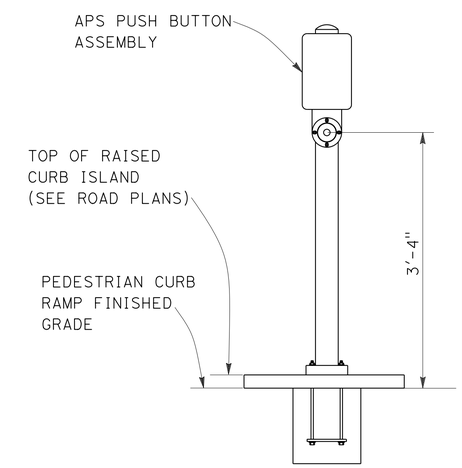

PUSH BUTTON ASSEMBLY POST
DETAIL "F"

MODIFY SIGNAL AND LIGHTING
(LOCATION 3)
SCALE 1" = 20'

E-9

APPROVED FOR ELECTRICAL WORK ONLY

STATE OF CALIFORNIA - DEPARTMENT OF TRANSPORTATION
Caltrans
ELECTRICAL DESIGN B

LUIS PENALOZA — REVISED BY
FERDINAND DE LA CRUZ — DATE REVISED
FUNCTIONAL SUPERVISOR: FERDINAND DE LA CRUZ
CALCULATED-DESIGNED BY
CHECKED BY

LAST REVISION 06-26-15 | DATE PLOTTED => 01-DEC-2015 | TIME PLOTTED => 08:11

Dist	COUNTY	ROUTE	POST MILES TOTAL PROJECT	SHEET No.	TOTAL SHEETS
08	SBd	18	49.0/51.7	132	179

REGISTERED CIVIL ENGINEER 6-26-15 DATE

6-26-15
PLANS APPROVAL DATE

REGISTERED PROFESSIONAL ENGINEER FERDINAND DE LA CRUZ No. 66070 Exp. 06-30-16 ELECTRICAL STATE OF CALIFORNIA

THE STATE OF CALIFORNIA OR ITS OFFICERS OR AGENTS SHALL NOT BE RESPONSIBLE FOR THE ACCURACY OR COMPLETENESS OF SCANNED COPIES OF THIS PLAN SHEET.

NOTES:

1. FOR ACCURATE RIGHT OF WAY DATA, CONTACT RIGHT OF WAY ENGINEERING AT THE DISTRICT OFFICE.
2. AB ALL EXISTING LOOP DETECTORS ON BIG BEAR BLVD AND GARSTIN DRIVE/MOONRIDGE ROAD.

LEGEND: (THIS SHEET ONLY)

1 RS EXISTING TYPE III-CF SERVICE EQUIPMENT ENCLOSURE. REUSE EXISTING FOUNDATION.
2 RR EXISTING "NO U TURN" SIGN. SEE POLE AND EQUIPMENT SCHEDULE ON SHEET E-12.
3 RS EXISTING POLE AND ELECTRICAL EQUIPMENT.
4 RS EXISTING CONTROLLER CABINET.
5 AB EXISTING CONDUIT. REUSE EXISTING SIC CABLE.

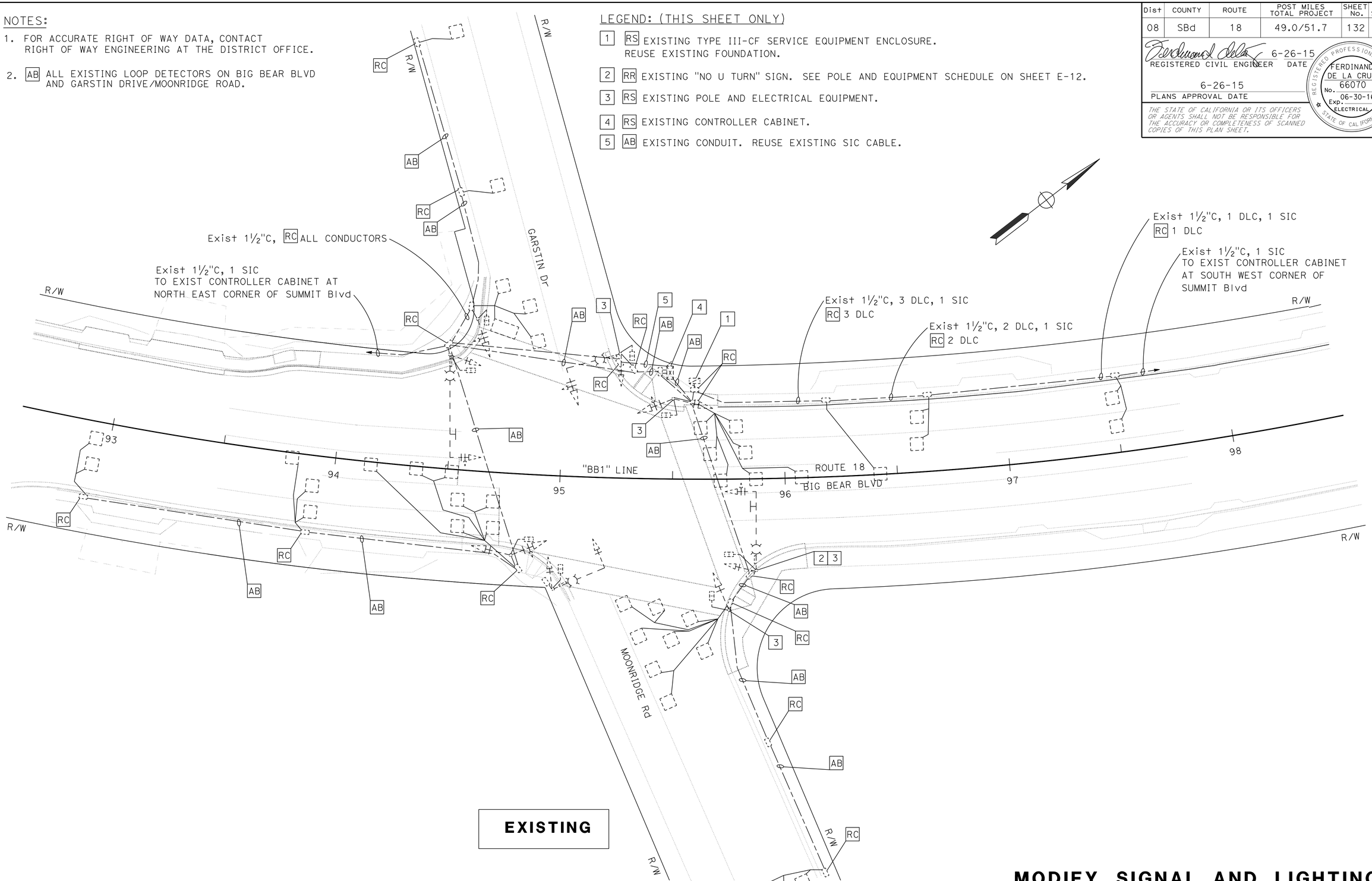

APPROVED FOR ELECTRICAL WORK ONLY

MODIFY SIGNAL AND LIGHTING
(LOCATION 4)
SCALE 1" = 20'

E-10

STATE OF CALIFORNIA - DEPARTMENT OF TRANSPORTATION
Caltrans
ELECTRICAL DESIGN B

FUNCTIONAL SUPERVISOR: FERDINAND DE LA CRUZ
CALCULATED-DESIGNED BY: LUIS PENALOZA
CHECKED BY: FERDINAND DE LA CRUZ
REVISED BY
DATE REVISED

LAST REVISION 06-26-15
DATE PLOTTED => 01-DEC-2015
TIME PLOTTED => 08:11

Dist	COUNTY	ROUTE	POST MILES TOTAL PROJECT	SHEET No.	TOTAL SHEETS
08	SBd	18	49.0/51.7	133	179

REGISTERED CIVIL ENGINEER 6-26-15 DATE

6-26-15
PLANS APPROVAL DATE

REGISTERED PROFESSIONAL ENGINEER FERDINAND DE LA CRUZ No. 66070 Exp. 06-30-16 ELECTRICAL STATE OF CALIFORNIA

THE STATE OF CALIFORNIA OR ITS OFFICERS OR AGENTS SHALL NOT BE RESPONSIBLE FOR THE ACCURACY OR COMPLETENESS OF SCANNED COPIES OF THIS PLAN SHEET.

NOTES: (SHEET E-11 AND E-12 ONLY)

1. FOR ACCURATE RIGHT OF WAY DATA, CONTACT RIGHT OF WAY ENGINEERING AT THE DISTRICT OFFICE.
2. SEE ROADWAY CONSTRUCTION DETAILS FOR EXACT LOCATION OF SIGNAL AND LIGHTING STANDARDS.

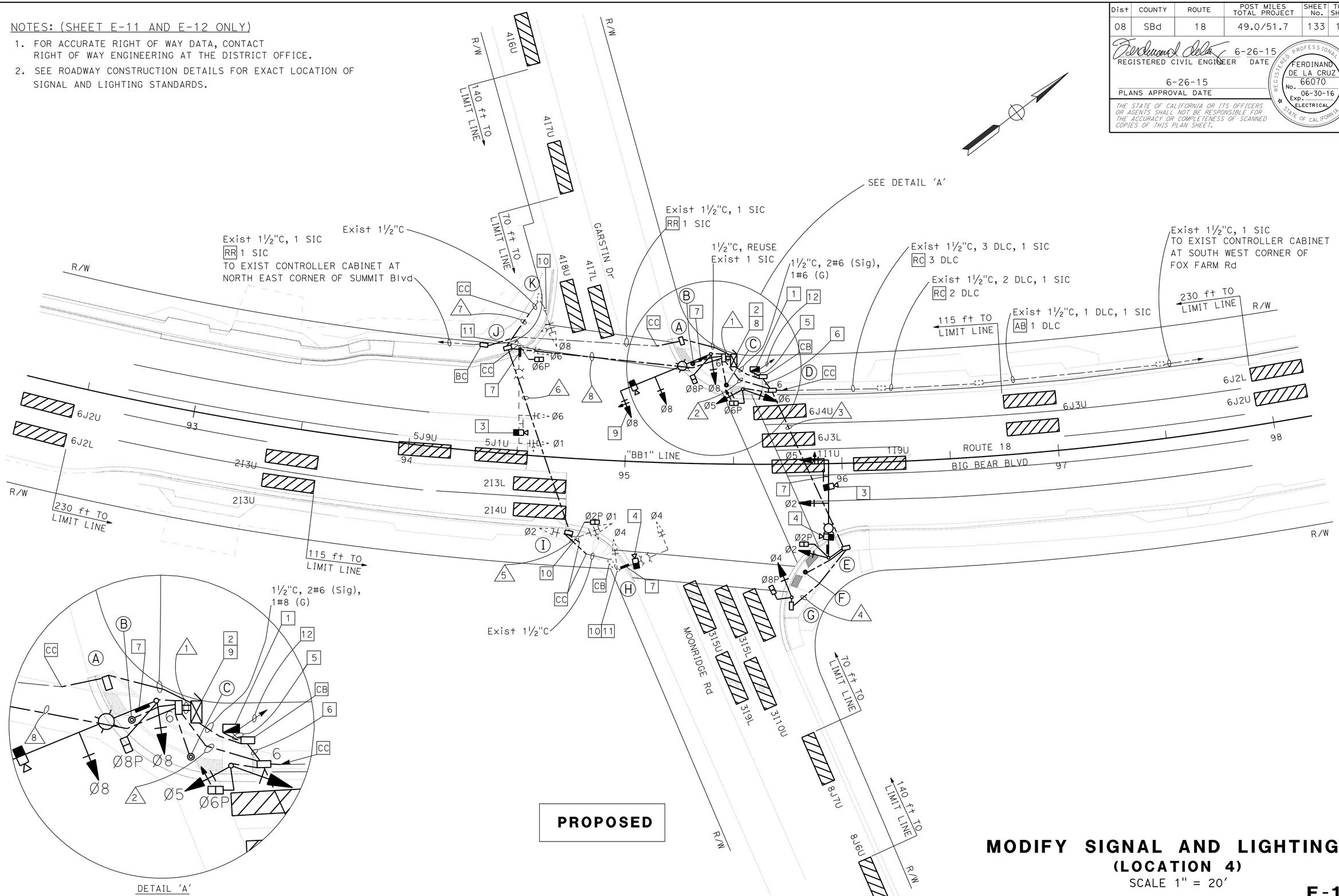

APPROVED FOR ELECTRICAL WORK ONLY

MODIFY SIGNAL AND LIGHTING
(LOCATION 4)
SCALE 1" = 20'

E-11

STATE OF CALIFORNIA - DEPARTMENT OF TRANSPORTATION
Caltrans
ELECTRICAL DESIGN B

FUNCTIONAL SUPERVISOR: FERDINAND DE LA CRUZ
CALCULATED-DESIGNED BY: LUIS PENALOZA
CHECKED BY: FERDINAND DE LA CRUZ
REVISED BY
DATE REVISED

LAST REVISION 06-26-15
DATE PLOTTED => 01-DEC-2015
TIME PLOTTED => 08:11

Dist	COUNTY	ROUTE	POST MILES TOTAL PROJECT	SHEET No.	TOTAL SHEETS
08	SBd	18	49.0/51.7	134	179

REGISTERED CIVIL ENGINEER 6-26-15 DATE

6-26-15
PLANS APPROVAL DATE

REGISTERED PROFESSIONAL ENGINEER FERDINAND DE LA CRUZ No. 66070 Exp. 06-30-16 ELECTRICAL STATE OF CALIFORNIA

THE STATE OF CALIFORNIA OR ITS OFFICERS OR AGENTS SHALL NOT BE RESPONSIBLE FOR THE ACCURACY OR COMPLETENESS OF SCANNED COPIES OF THIS PLAN SHEET.

LEGEND: (SHEET E-11 AND E-12 ONLY)

1. INSTALL 120/240 V, 1Ø, 3 WIRE, TYPE III-CF SERVICE EQUIPMENT ENCLOSURE ON EXISTING FOUNDATION, WITH THE FOLLOWING CIRCUIT BREAKERS:
   METER A: 100 A, 240 V, 2P, CB. MAIN BREAKER (TC-1)
   50 A, 120 V, 1P, CB. (SIGNALS)
   METER B: 100 A, 240 V, 2P, CB. MAIN BREAKER (LS-3)
   30 A, 240 V, 2P, CB. (LIGHTING)
   15 A, 120 V, 1P, CB. (LIGHTING CONTROL)
2. INSTALL DEPARTMENT FURNISHED MODEL 2070 CONTROLLER ASSEMBLY WITH TYPE 332 CABINET AND BATTERY BACKUP SYSTEM. REFER TO SHEETS E-20, E-21 AND E-22 FOR DETAILS.
3. INSTALL VIVDS CAMRERA PER ES-7R, DETAIL A.
4. INSTALL VIVDS CAMRERA PER ES-7R, DETAIL B.
5. EXISTING 1½"C, 2#6 (Sig), 2#10 (L+g), 2#12 (IISNS), 1#8 (G)
   RC 2#6 (Sig), 2#10 (L+g), 2#12 (IISNS), 1#8 (G)
   CC 1½"C, INSTALL 2#6 (Sig), 2#8 (L+g), 1#6 (G)
6. 1½"C, 2#8 (L+g), 1#8 (G)
7. FOR SIGN DETAILS AND STREET NAME SIGNS, SEE SQ-1 PLAN SHEET.
8. INSTALL LONG TERM EVOLUTION (LTE) MODEM IN CONTROLLER CABINET.
9. INSTALL VEHICLE SIGNAL FACE PER DETAIL 'C' SHOWN ON THIS SHEET.
10. RS EXISTING PEDESTRIAN PUSH BUTTON. INSTALL APS.
11. RS EXISTING PEDESTRIAN SIGNAL HEAD. INSTALL LED COUNTDOWN PEDESTRIAN SIGNAL FACE MODULE.
12. EXISTING 3"C, 3#2 (POWER FROM BVE). BVE SHALL CONNECT TO THIS EXISTING CONDUIT AND PROVIDE SERVICE EQUIPMENT ENCLOSURE WITH POWER.
13. REFER TO DETAIL 'D' ON THIS SHEET.
14. REFER TO DETAIL 'E' ON THIS SHEET.
15. REFER TO DETAIL 'F' ON THIS SHEET.

ABBREVIATIONS:

SCE	-	SOUTHERN CALIFORNIA EDISON
TC-1	-	SCE TRAFFIC CONTROL RATE
LS-3	-	SCE LIGHTING RATE

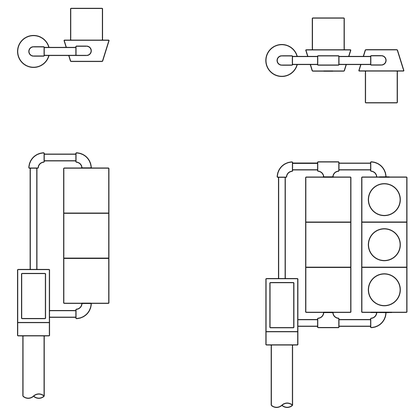

DETAIL 'D' (MODIFIED TV-1-T)

DETAIL 'E' (MODIFIED TV-2-T)

DETAIL 'C'

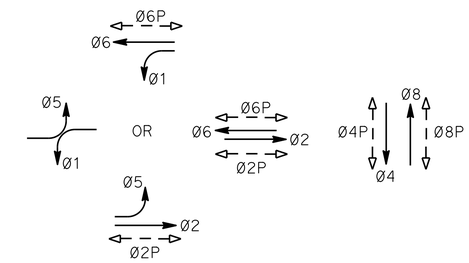

PHASE DIAGRAM
STEADY DEMAND SEQUENCE

POLE and EQUIPMENT SCHEDULE

POLE	STANDARD TYPE	STANDARD SMA	STANDARD LMA	VEH SIG MTG MAST ARM	VEH SIG MTG POLE	PED SIG MTG	APS PPB Ø	APS PPB ARROW	LED LUM (W)	SPECIAL REQUIREMENTS
Ⓐ	26-4-100	45'	15'	MAS MAS	SV-1-T	SP-1-T			165	INSTALL D3 SIGN (BIG BEAR BLVD). F=18 ft [7]
Ⓑ	PPB						6	←		[15]
Ⓒ	PPB						8	→		[15]
Ⓓ	1-A				[14]	SP-1-T				
Ⓔ	26-4-100	45'	15'	MAS MAS	SV-1-T	SP-1-T			165	INSTALL D3 SIGN (MOONRIDGE Rd). INSTALL EXISTING "NO U TURN" SIGN. F=20 ft [7]
Ⓕ	PPB						2 8	→ ←		[15]
Ⓖ	1-A				[13]	SP-1-T				
*Ⓗ	19-2-80	25'	15'	MAS	SV-1-T	SP-1-T	2	←	165	[RC] EXISTING Lum. INSTALL LED Lum. [RC] EXISTING IISNS. INSTALL D3 SIGN (BIG BEAR BLVD). [7]
*Ⓘ	1-A				TV-2-T	SP-1-T				
*Ⓙ	26-4-80	45'	15'	MAS MAS	SV-1-T	SP-1-T			165	[RC] EXISTING Lum. INSTALL LED Lum. [RC] EXISTING IISNS. INSTALL D3 SIGN (GARSTIN Dr). [7]
*Ⓚ	1-A				TV-1-T	SP-1-T	6	→		

* EXISTING. TO REMAIN.

CONDUCTOR AND CONDUIT SCHEDULE

CABLE TYPE	POLE	PHASE	1	2	3	4	5	6	7	8
VEH-PED 12CSC	Ⓐ	8,8P	1							
	Ⓑ	6	1							
	Ⓒ	8	1							
	Ⓓ	5,6,6P	1	1						
	Ⓔ	2,5,2P	1	1	1					
	Ⓕ	2,8	2	2	2					
	Ⓖ	4,8P	1	1	1	1				
PPB 3CSC	Ⓗ	4	1				1	1		1
		2	1				1	1		1
	Ⓘ	1,2,2P	1					1		1
	Ⓙ	1,6,6P	1							1
	Ⓚ	8	1						1	
		6	1						1	
		TOTAL	8 / 6	3 / 2	2 / 2	1 / 0	1 / 1	2 / 1	1 / 1	3 / 1
AWG	CIRCUIT									
#8	LIGHTING			2	2		2	2		2
#8	GROUND		1	1	1	1	1	1	1	1
VIVID POWER CABLE			4	2	2		1	1		2
VIVID VIDEO CABLE			4	2	2		1	1		2
CONDUIT SIZE			2-4"	3.5"	3"	2"	2.5"	3"	2"	3.5"

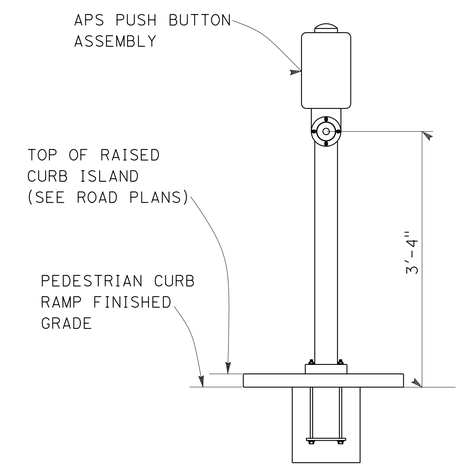

PUSH BUTTON ASSEMBLY POST
DETAIL "F"

MODIFY SIGNAL AND LIGHTING
(LOCATION 4)
SCALE 1" = 20'

E-12

APPROVED FOR ELECTRICAL WORK ONLY

STATE OF CALIFORNIA - DEPARTMENT OF TRANSPORTATION
Caltrans
ELECTRICAL DESIGN B
FUNCTIONAL SUPERVISOR: FERDINAND DE LA CRUZ
CALCULATED-DESIGNED BY: LUIS PENALOZA
CHECKED BY: FERDINAND DE LA CRUZ
REVISED BY
DATE REVISED

LAST REVISION 06-26-15 | DATE PLOTTED => 01-DEC-2015 | TIME PLOTTED => 08:11

Dist	COUNTY	ROUTE	POST MILES TOTAL PROJECT	SHEET No.	TOTAL SHEETS
08	SBd	18	49.0/51.7	135	179

REGISTERED CIVIL ENGINEER 6-26-15 DATE

6-26-15
PLANS APPROVAL DATE

REGISTERED PROFESSIONAL ENGINEER FERDINAND DE LA CRUZ No. 66070 Exp. 06-30-16 ELECTRICAL STATE OF CALIFORNIA

THE STATE OF CALIFORNIA OR ITS OFFICERS OR AGENTS SHALL NOT BE RESPONSIBLE FOR THE ACCURACY OR COMPLETENESS OF SCANNED COPIES OF THIS PLAN SHEET.

LEGEND (THIS SHEET ONLY):

1 RS EXISTING TYPE III-CF SERVICE EQUIPMENT ENCLOSURE. REUSE EXISTING FOUNDATION.

2 RS EXISTING CONTROLLER CABINET.

3 RR EXISTING "NO U TURN" SIGN. SEE POLE AND EQUIPMENT SCHEDULE ON SHEET E-15.

4 RS EXISTING POLE AND ELECTRICAL EQUIPMENT.

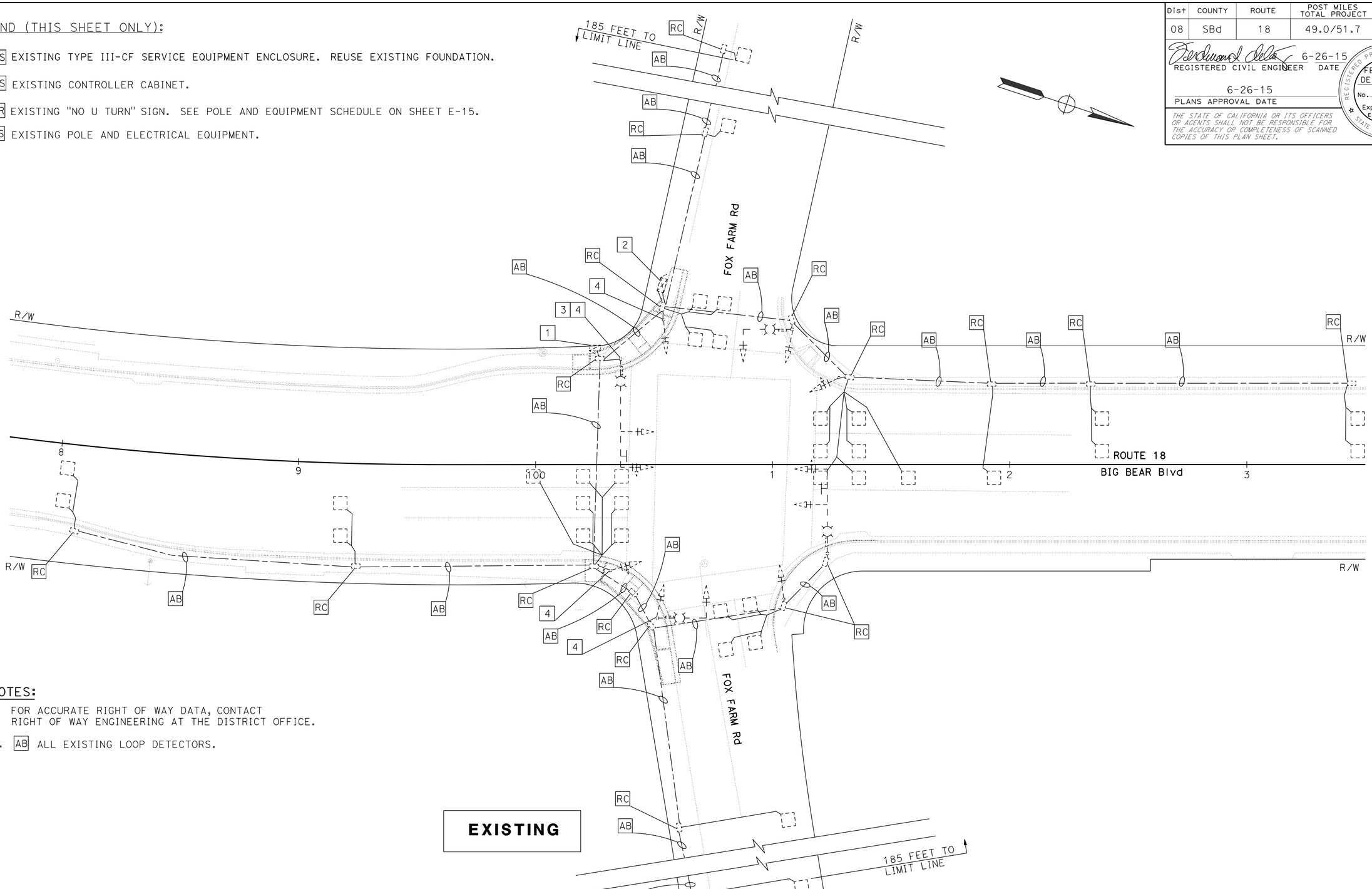

NOTES:

1. FOR ACCURATE RIGHT OF WAY DATA, CONTACT RIGHT OF WAY ENGINEERING AT THE DISTRICT OFFICE.
2. AB ALL EXISTING LOOP DETECTORS.

EXISTING

MODIFY SIGNAL AND LIGHTING
(LOCATION 5)
SCALE 1" = 20'

E-13

APPROVED FOR ELECTRICAL WORK ONLY

REVISED BY | DATE REVISED
LUIS PENALOZA | FERDINAND DE LA CRUZ
CALCULATED-DESIGNED BY | CHECKED BY
FUNCTIONAL SUPERVISOR | FERDINAND DE LA CRUZ
STATE OF CALIFORNIA - DEPARTMENT OF TRANSPORTATION
Caltrans
ELECTRICAL DESIGN B

LAST REVISION 06-26-15 | DATE PLOTTED => 01-DEC-2015 TIME PLOTTED => 08:11

Dist	COUNTY	ROUTE	POST MILES TOTAL PROJECT	SHEET No.	TOTAL SHEETS
08	SBd	18	49.0/51.7	136	179

REGISTERED CIVIL ENGINEER 6-26-15 DATE

6-26-15
PLANS APPROVAL DATE

REGISTERED PROFESSIONAL ENGINEER FERDINAND DE LA CRUZ No. 66070 Exp. 06-30-16 ELECTRICAL STATE OF CALIFORNIA

THE STATE OF CALIFORNIA OR ITS OFFICERS OR AGENTS SHALL NOT BE RESPONSIBLE FOR THE ACCURACY OR COMPLETENESS OF SCANNED COPIES OF THIS PLAN SHEET.

NOTES: (SHEET E-14 AND E-15 ONLY)

1. FOR ACCURATE RIGHT OF WAY DATA, CONTACT RIGHT OF WAY ENGINEERING AT THE DISTRICT OFFICE.
2. SEE ROADWAY CONSTRUCTION DETAILS FOR EXACT LOCATION OF SIGNAL AND LIGHTING STANDARDS.

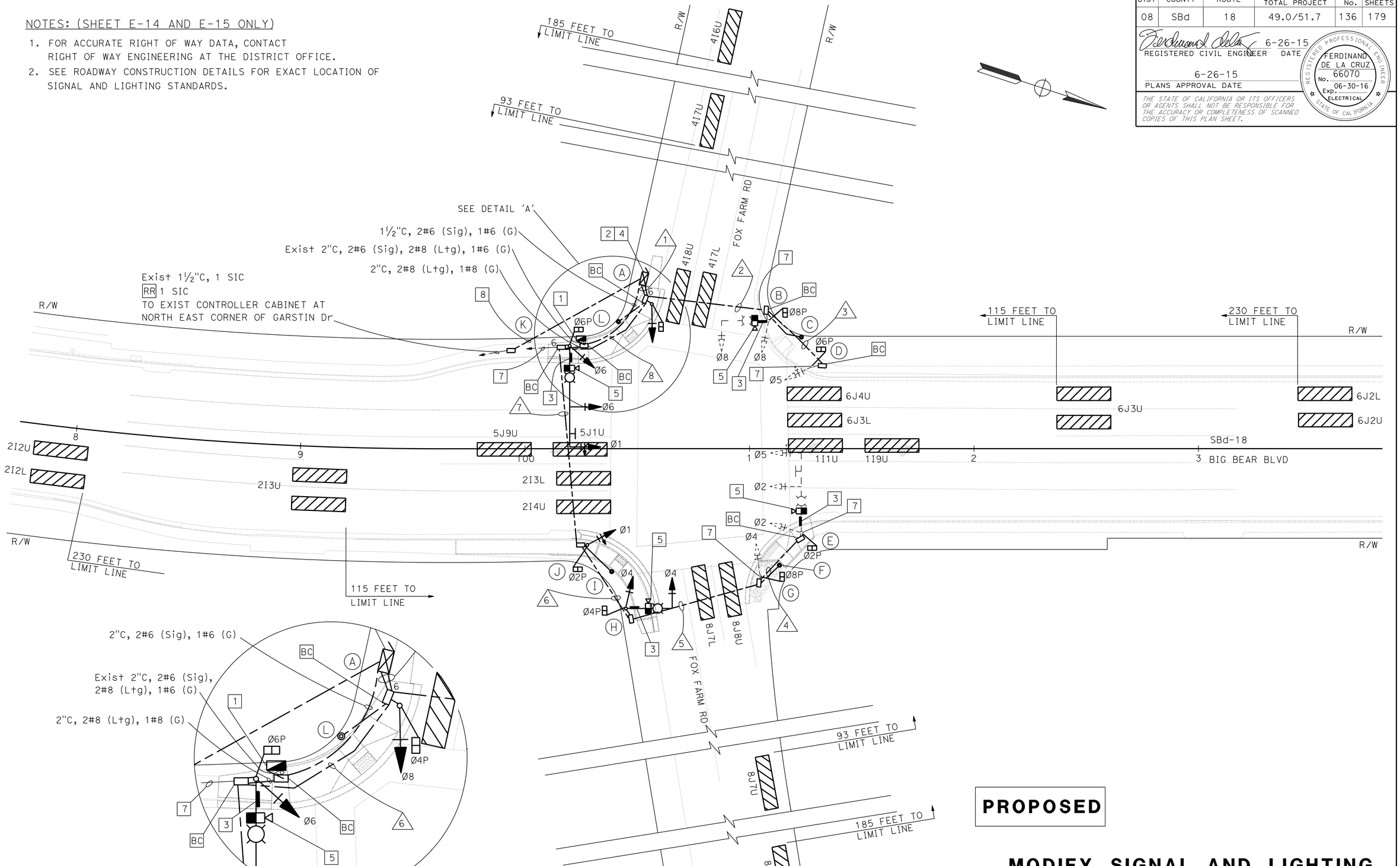

PROPOSED

MODIFY SIGNAL AND LIGHTING
(LOCATION 5)
SCALE 1" = 20'

E-14

APPROVED FOR ELECTRICAL WORK ONLY

STATE OF CALIFORNIA - DEPARTMENT OF TRANSPORTATION
Caltrans®
ELECTRICAL DESIGN B

FUNCTIONAL SUPERVISOR: FERDINAND DE LA CRUZ
CALCULATED-DESIGNED BY: LUIS PENALOZA
CHECKED BY: FERDINAND DE LA CRUZ
REVISED BY
DATE REVISED

LAST REVISION 06-26-15
DATE PLOTTED => 01-DEC-2015
TIME PLOTTED => 08:11

Dist	COUNTY	ROUTE	POST MILES TOTAL PROJECT	SHEET No.	TOTAL SHEETS
08	SBd	18	49.0/51.7	137	179

REGISTERED CIVIL ENGINEER 6-26-15 DATE

6-26-15
PLANS APPROVAL DATE

REGISTERED PROFESSIONAL ENGINEER FERDINAND DE LA CRUZ No. 66070 Exp. 06-30-16 ELECTRICAL STATE OF CALIFORNIA

THE STATE OF CALIFORNIA OR ITS OFFICERS OR AGENTS SHALL NOT BE RESPONSIBLE FOR THE ACCURACY OR COMPLETENESS OF SCANNED COPIES OF THIS PLAN SHEET.

LEGEND: (SHEET E-14 AND E-15 ONLY)

1. INSTALL 120/240 V, 1Ø, 3 WIRE, TYPE III-CF SERVICE EQUIPMENT ENCLOSURE ON EXISTING FOUNDATION, WITH THE FOLLOWING CIRCUIT BREAKERS:
   - METER A: 100 A, 240 V, 2P, CB. MAIN BREAKER (TC-1)
     50 A, 120 V, 1P, CB. (SIGNALS)
   - METER B: 100 A, 240 V, 2P, CB. MAIN BREAKER (LS-3)
     30 A, 240 V, 2P, CB. (LIGHTING)
     15 A, 120 V, 1P, CB. (LIGHTING CONTROL)
2. INSTALL DEPARTMENT FURNISHED MODEL 2070 CONTROLLER ASSEMBLY WITH TYPE 332 CABINET AND BATTERY BACKUP SYSTEM. REFER TO SHEETS E-20, E-21 AND E-22 FOR DETAILS.
3. FOR SIGN DETAILS AND STREET NAME SIGNS, SEE SQ-1 PLAN SHEET.
4. INSTALL LONG TERM EVOLUTION (LTE) MODEM IN CONTROLLER CABINET.
5. INSTALL VIVDS CAMRERA PER ES-7R, DETAIL B.
6. RS EXISTING PEDESTRIAN SIGNAL HEAD. INSTALL LED COUNTDOWN PEDESTRIAN SIGNAL FACE MODULE.
7. EXISTING 3"C, 3#2 (POWER FROM BVE). BVE SHALL CONNECT TO THIS EXISTING CONDUIT AND PROVIDE SERVICE EQUIPMENT ENCLOSURE WITH POWER.
8. 1½"C, INSTALL EXISTING 1 SIC. CONDUIT SHOWN OUTSIDE OF CATRANS RIGHT OF WAY FOR DIAGRAMATICAL PURPOSES ONLY. CONDUIT MUST BE INSATLLED WITHIN CALTRANS RIGHT OR WAY.
9. REFER TO DETAIL 'D' ON THIS SHEET.

ABBREVIATIONS:

BVE	-	BEAR VALLEY ELECTRIC
TC-1	-	SCE TRAFFIC CONTROL RATE
LS-3	-	SCE LIGHTING RATE

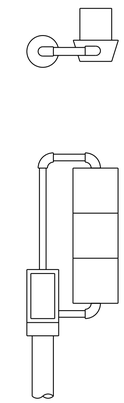

DETAIL 'D'
(MODIFIED TV-1-T)

CONDUCTOR AND CONDUIT SCHEDULE

CABLE SCHEDULE			CONDUIT RUN AND SIZE							
CABLE TYPE	POLE	PHASE	1	2	3	4	5	6	7	8
VEH-PED 12CSC	A	8,4P	1							
	B	8,8P	1	1						
	C	6,8		2	2					
	D	5,6P	1	1	1					
	E	2,5,2P 8	1	1			1	1	1	1
	F	2		1				1	1	1
	G	4,8P	1				1	1	1	1
	H	4,4P	1					1	1	1
	I	2,4		2					2	2
	J	1,2P	1						1	1
	K	1,6,6P	1							1
PPB 3CSC	L	4,6		2						
		TOTAL	8/8	2/2	1/0	1/1	2/2	3/2	4/4	5/4

AWG	CIRCUIT	1	2	3	4	5	6	7	8
#8	LIGHTING		2		2	2	2	2	2
#8	GROUND	1	1	1	1	1	1	1	1
VIVID POWER CABLE		4	1		1	1	2	2	3
VIVID VIDEO CABLE		4	1		1	1	2	2	3
CONDUIT SIZE		2-4"	3"	2"	2.5"	3"	3.5"	4"	4"

POLE and EQUIPMENT SCHEDULE

	STANDARD			VEH SIG MTG		PED SIG M+g	PPB		LED LUM (W)	SPECIAL REQUIREMENTS
No.	TYPE	SMA	LMA	Mast Arm	POLE		Ø	ARROW		
A	1-A				9	SP-1-T				
B	* 17-2-80	30'	12'	MAS	SV-1-T	SP-1-T			165	RC EXISTING IISNS. INSTALL D3 SIGN (BIG BEAR BLVD) RC EXISTING Lum. INSTALL LED Lum. 3
C	PPB POST						6 8	← →		
D	* 1-A				TV-1-T	SP-1-T				
E	* 24-4-80	35'	12'	MAS MAS	SV-1-T	SP-1-T	8	←	165	RC EXISTING IISNS. INSTALL D3 SIGN (FOX FARM Rd) RC EXISTING Lum. INSTALL LED Lum. 3
F	PPB POST						2	→		
G	* 1-A				TV-1-T	SP-1-T				
H	17-3-100	20'	12'	MAS	SV-1-T	SP-1-T			165	INSTALL D3 SIGN (BIG BEAR BLVD) 3
I	PPB POST						2 4	← →		
J	1-A				9	SP-1-T				
K	26-4-100	45'	12'	MAS MAS	SV-1-T	SP-1-T			165	INSTALL D3 SIGN (FOX FARM Rd) INSTALL EXISTING "NO U TURN" SIGN. F=17 ft 3
L	PPB POST						4 6	← →		

* EXISTING. TO REMAIN.

MODIFY SIGNAL AND LIGHTING
(LOCATION 5)
SCALE 1" = 20'

E-15

APPROVED FOR ELECTRICAL WORK ONLY

STATE OF CALIFORNIA - DEPARTMENT OF TRANSPORTATION
Caltrans® ELECTRICAL DESIGN B

FUNCTIONAL SUPERVISOR: FERDINAND DE LA CRUZ
CALCULATED-DESIGNED BY: LUIS PENALOZA
CHECKED BY: FERDINAND DE LA CRUZ
REVISED BY / DATE REVISED

LAST REVISION 06-26-15
DATE PLOTTED => 01-DEC-2015
TIME PLOTTED => 08:11

Dist	COUNTY	ROUTE	POST MILES TOTAL PROJECT	SHEET No.	TOTAL SHEETS
08	SBd	18	49.0/51.7	138	179

REGISTERED CIVIL ENGINEER 6-26-15 DATE

6-26-15
PLANS APPROVAL DATE

REGISTERED PROFESSIONAL ENGINEER FERDINAND DE LA CRUZ No. 66070 Exp. 06-30-16 ELECTRICAL STATE OF CALIFORNIA

THE STATE OF CALIFORNIA OR ITS OFFICERS OR AGENTS SHALL NOT BE RESPONSIBLE FOR THE ACCURACY OR COMPLETENESS OF SCANNED COPIES OF THIS PLAN SHEET.

LEGEND (THIS SHEET ONLY):

1 RS EXISTING TYPE III-CF SERVICE EQUIPMENT ENCLOSURE. REUSE EXISTING FOUNDATION.

2 RS EXISTING CONTROLLER CABINET.

3 RR EXISTING "NO U TURN" SIGN. SEE POLE AND EQUIPMENT SCHEDULE ON SHEET E-18.

4 RS EXISTING POLE AND EQUIPMENT.

5 RS EXISTING TYPE 1 STANDARD AND EQUIPMENT.

6 RR EXISTING "NO PED CROSSING" SIGN. SEE POLE AND EQUIPMENT SCHEDULE ON SHEET E-18.

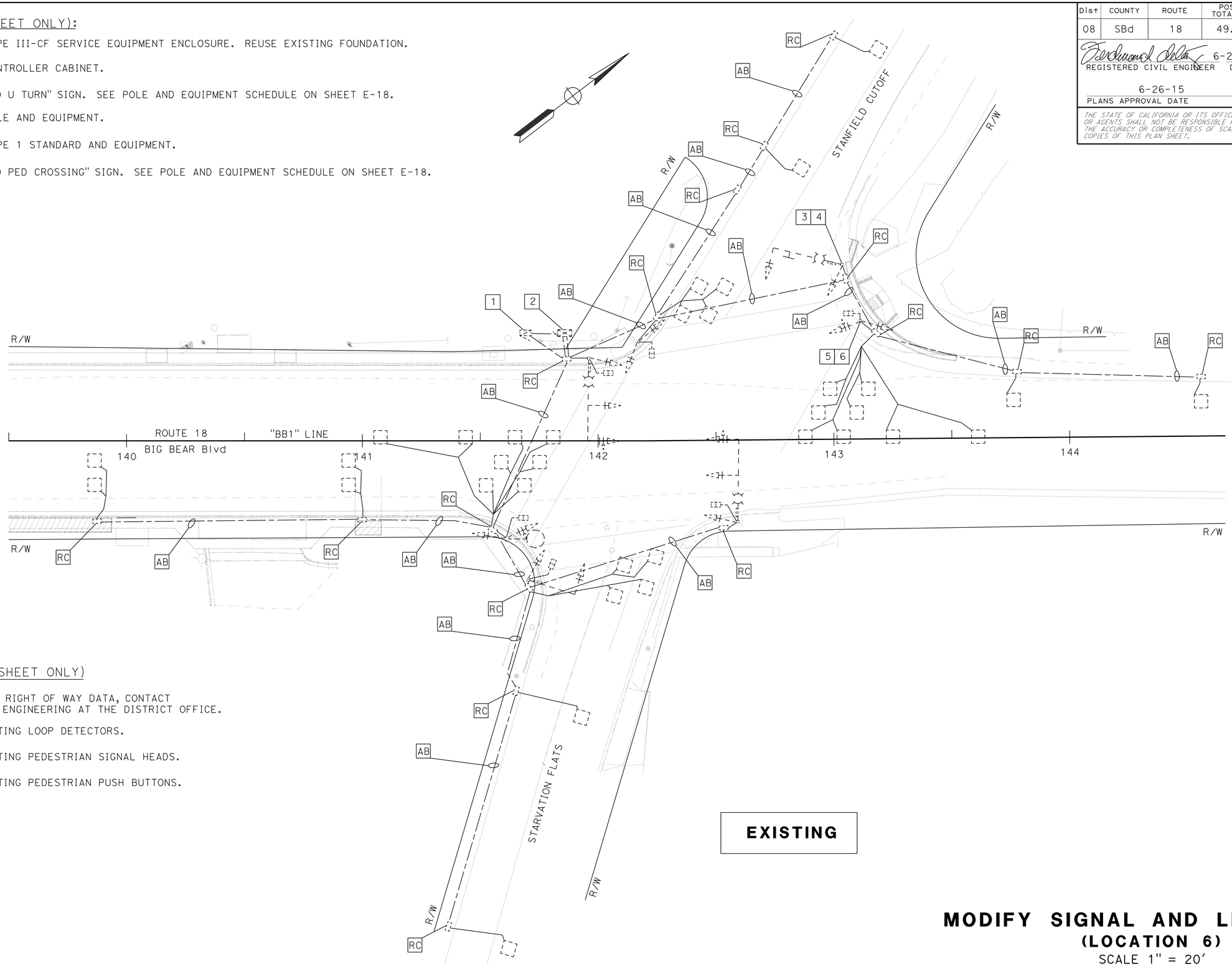

NOTES: (THIS SHEET ONLY)

1. FOR ACCURATE RIGHT OF WAY DATA, CONTACT RIGHT OF WAY ENGINEERING AT THE DISTRICT OFFICE.
2. AB ALL EXISTING LOOP DETECTORS.
3. RS ALL EXISTING PEDESTRIAN SIGNAL HEADS.
4. RS ALL EXISTING PEDESTRIAN PUSH BUTTONS.

EXISTING

MODIFY SIGNAL AND LIGHTING
(LOCATION 6)
SCALE 1" = 20'

E-16

APPROVED FOR ELECTRICAL WORK ONLY

STATE OF CALIFORNIA - DEPARTMENT OF TRANSPORTATION
Caltrans
ELECTRICAL DESIGN B

FUNCTIONAL SUPERVISOR: FERDINAND DE LA CRUZ
CALCULATED-DESIGNED BY: LUIS PENALOZA
CHECKED BY: FERDINAND DE LA CRUZ
REVISED BY
DATE REVISED

LAST REVISION 06-26-15
DATE PLOTTED => 01-DEC-2015
TIME PLOTTED => 08:11

Dist	COUNTY	ROUTE	POST MILES TOTAL PROJECT	SHEET No.	TOTAL SHEETS
08	SBd	18	49.0/51.7	139	179

REGISTERED CIVIL ENGINEER 6-26-15 DATE

6-26-15
PLANS APPROVAL DATE

REGISTERED PROFESSIONAL ENGINEER FERDINAND DE LA CRUZ No. 66070 Exp. 06-30-16 ELECTRICAL STATE OF CALIFORNIA

THE STATE OF CALIFORNIA OR ITS OFFICERS OR AGENTS SHALL NOT BE RESPONSIBLE FOR THE ACCURACY OR COMPLETENESS OF SCANNED COPIES OF THIS PLAN SHEET.

NOTES: (SHEET E-17 AND E-18 ONLY)

1. FOR ACCURATE RIGHT OF WAY DATA, CONTACT RIGHT OF WAY ENGINEERING AT THE DISTRICT OFFICE.
2. SEE ROADWAY CONSTRUCTION DETAILS FOR EXACT LOCATION OF SIGNAL AND LIGHTING STANDARDS.

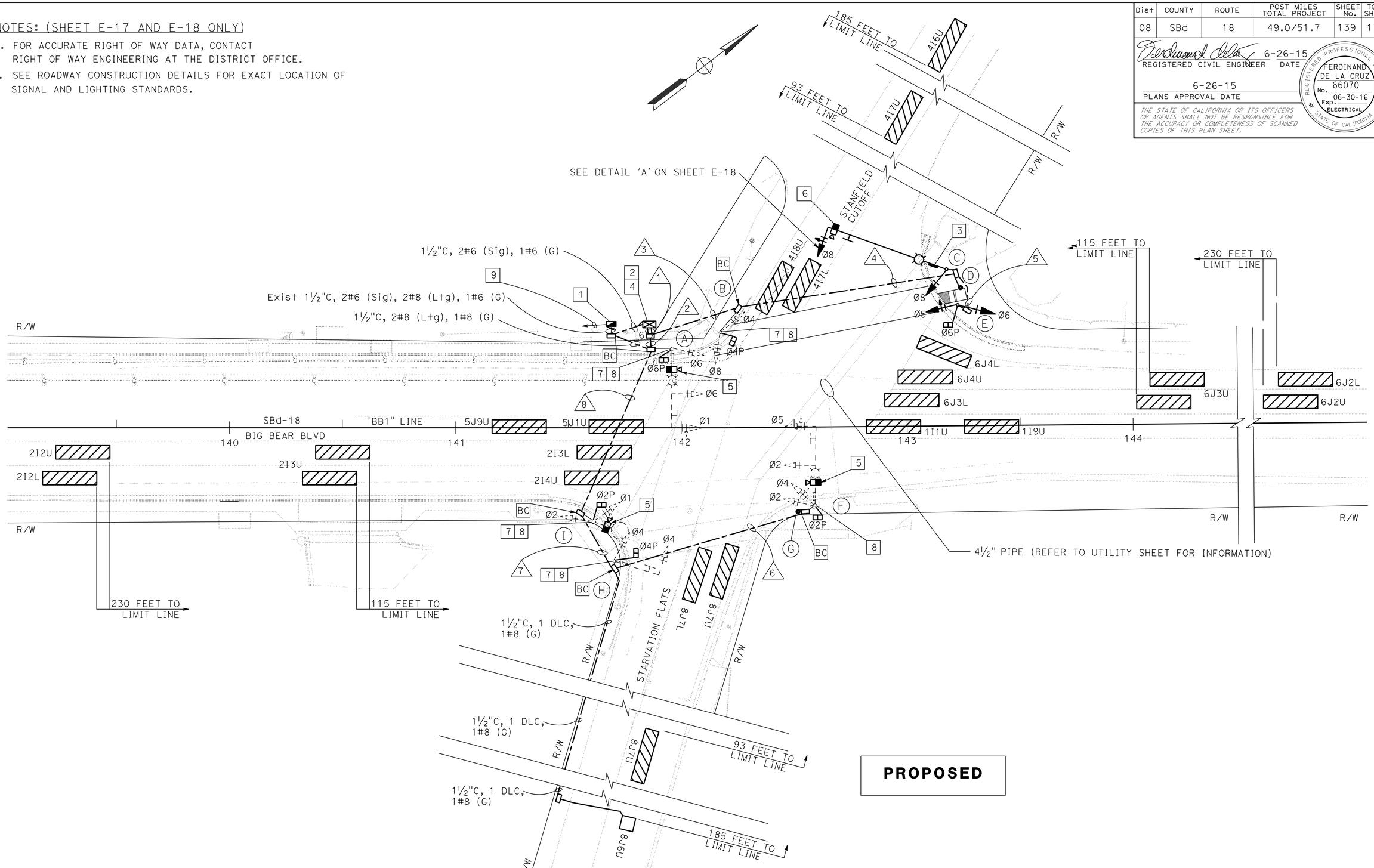

PROPOSED

MODIFY SIGNAL AND LIGHTING
(LOCATION 6)
SCALE 1" = 20'

E-17

APPROVED FOR ELECTRICAL WORK ONLY

STATE OF CALIFORNIA - DEPARTMENT OF TRANSPORTATION
Caltrans
ELECTRICAL DESIGN B

FUNCTIONAL SUPERVISOR: FERDINAND DE LA CRUZ
CALCULATED-DESIGNED BY: LUIS PENALOZA
CHECKED BY: FERDINAND DE LA CRUZ
REVISED BY
DATE REVISED

LAST REVISION 06-26-15
DATE PLOTTED => 01-DEC-2015
TIME PLOTTED => 08:11

Dist	COUNTY	ROUTE	POST MILES TOTAL PROJECT	SHEET No.	TOTAL SHEETS
08	SBd	18	49.0/51.7	140	179

REGISTERED CIVIL ENGINEER 6-26-15 DATE

6-26-15
PLANS APPROVAL DATE

REGISTERED PROFESSIONAL ENGINEER FERDINAND DE LA CRUZ No. 66070 Exp. 06-30-16 ELECTRICAL STATE OF CALIFORNIA

THE STATE OF CALIFORNIA OR ITS OFFICERS OR AGENTS SHALL NOT BE RESPONSIBLE FOR THE ACCURACY OR COMPLETENESS OF SCANNED COPIES OF THIS PLAN SHEET.

LEGEND (SHEET E-17 AND E-18 ONLY):

1. INSTALL 120/240 V, 1Ø, 3 WIRE, TYPE III-CF SERVICE EQUIPMENT ENCLOSURE ON EXISTING FOUNDATION, WITH THE FOLLOWING CIRCUIT BREAKERS:
   METER A: 100 A, 240 V, 2P, CB. MAIN BREAKER (TC-1)
   50 A, 120 V, 1P, CB. (SIGNAL)
   METER B: 100 A, 240 V, 2P, CB. MAIN BREAKER (LS-3)
   30 A, 240 V, 2P, CB. (LIGHTING)
   15 A, 120 V, 1P, CB. (LIGHTING CONTROL)
2. INSTALL DEPARTMENT FURNISHED MODEL 2070 CONTROLLER ASSEMBLY WITH TYPE 332 CABINET AND BATTERY BACKUP SYSTEM. REFER TO SHEETS E-20, E-21 AND E-22 FOR DETAILS.
3. FOR SIGN DETAILS AND STREET NAME SIGNS, SEE SQ-1 PLAN SHEET.
4. INSTALL LONG TERM EVOLUTION (LTE) MODEM IN CONTROLLER CABINET.
5. INSTALL VIVDS CAMRERA PER ES-7R, DETAIL B.
6. INSTALL VIVDS CAMRERA PER ES-7R, DETAIL A.
7. RS EXISTING PEDESTRIAN PUSH BUTTON. INSTALL APS.
8. RS EXISTING PEDESTRIAN SIGNAL HEAD. INSTALL LED COUNTDOWN PEDESTRIAN SIGNAL FACE MODULE.
9. EXISTING 3"C, 3#2 (POWER FROM BVE). BVE SHALL CONNECT TO THIS EXISTING CONDUIT AND PROVIDE SERVICE EQUIPMENT ENCLOSURE WITH POWER.
10. REFER TO DETAIL 'E' ON THIS SHEET.

ABBREVIATIONS:

BVE	-	BEAR VALLEY ELECTRIC
TC-1	-	SCE TRAFFIC CONTROL RATE
LS-3	-	SCE LIGHTING RATE

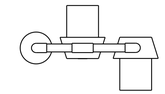

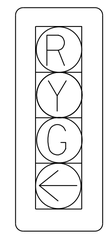

DETAIL 'A'

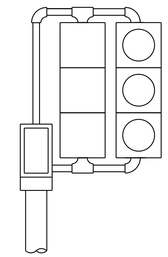

DETAIL 'E'
(MODIFIED TV-2-T)

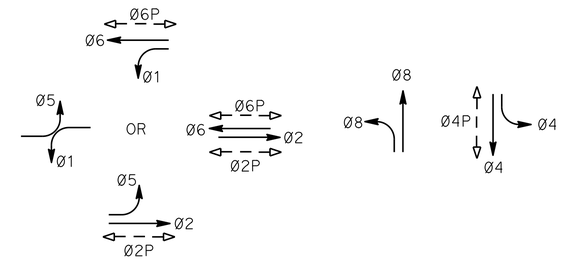

PHASE DIAGRAM
STEADY DEMAND SEQUENCE

CONDUCTOR AND CONDUIT SCHEDULE

CABLE SCHEDULE			CONDUIT RUN AND SIZE							
CABLE TYPE	POLE	PHASE	1	2	3	4	5	6	7	8
VEH-PED 12CSC	Ⓐ	1,6,6P / 4	1 / 1	1 / 1						
	Ⓑ	4,8,4P / 6	2 / 1		2 /	1				
	Ⓒ	8	1		1 /	1				
	Ⓓ	6	1		1 /	1	1			
	Ⓔ	5,6,6P	1		1 /	1	1			
	Ⓕ	2,4,5,2P	2	2				2	2	2
	Ⓖ	2	1	1				1	1	1
	Ⓗ	4,4P / 2	1 / 1	1 / 1					1 / 1	1 / 1
PPB 3CSC	Ⓘ	1,2,2P / 4	1 / 1	1 / 1						1 / 1
		TOTAL	9 / 6	5 / 4	4 / 2	2 / 1	1 / 0	2 / 1	3 / 2	4 / 3
AWG		CIRCUIT								
#8		LIGHTING		2	2	2		2	2	2
#8		GROUND	1	1	1	1	1	1	1	1
VIVID POWER CABLE			4	3	1	1		1	1	2
VIVID VIDEO CABLE			4	3	1	1		1	1	2
DETECTORS-TYPE B DLC										
PHASE										
Ø8			1	1					1	1
TOTAL			1	1					1	1
CONDUIT SIZE			2-4"	4"	3.5"	3"	2"	3"	3.5"	4"

POLE and EQUIPMENT SCHEDULE

No.	STANDARD TYPE	STANDARD SMA	STANDARD LMA	VEH SIG MTG Mast Arm	VEH SIG MTG POLE	PED SIG Mtg	PPB Ø	PPB ARROW	LED LUM (W)	SPECIAL REQUIREMENTS
Ⓐ	* 23-4-80	35'	12'	MAS MAS	SV-1-T	SP-1-T	4	←	165	RC EXISTING IISNS. INSTALL D3 SIGN (STANFIELD CUTOFF) RC EXISTING Lum. INSTALL LED Lum. [3]
Ⓑ	* 1-A				TV-2-T	SP-1-T	6	→		
Ⓒ	29-5-100	55'	15'	MAS	SV-1-T				165	INSTALL D3 SIGN (BIG BEAR BLVD) INSTALL EXISTING "NO U TURN" SIGN. [3]
Ⓓ	PPB POST						6	←		
Ⓔ	1-A				[10]	SP-1-T				
Ⓕ	* 23-4-80	35'	12'	MAS MAS	SV-2-T	SP-1-T				RC EXISTING IISNS. INSTALL D3 SIGN (STARVATION FLATS) RC EXISTING Lum. INSTALL LED Lum. [3]
Ⓖ	PPB POST						2	←		
Ⓗ	* 17-3-100	20'		MAS	SV-1-T	SP-1-T	2	→		RC EXISTING IISNS. INSTALL D3 SIGN (BIG BEAR BLVD) [3]
Ⓘ	* 15-TS		15'		SV-2-T	SP-1-T	4	→	165	RC EXISTING Lum. INSTALL LED Lum.

* EXISTING. TO REMAIN.

MODIFY SIGNAL AND LIGHTING
(LOCATION 6)
SCALE 1" = 20'

E-18

APPROVED FOR ELECTRICAL WORK ONLY

STATE OF CALIFORNIA - DEPARTMENT OF TRANSPORTATION
ELECTRICAL DESIGN B
Caltrans
LUIS PENALOZA | FERDINAND DE LA CRUZ | FERDINAND DE LA CRUZ | FERDINAND DE LA CRUZ
CALCULATED-DESIGNED BY | CHECKED BY | FUNCTIONAL SUPERVISOR | REVISED BY | DATE REVISED

LAST REVISION 06-26-15 | DATE PLOTTED => 01-DEC-2015 | TIME PLOTTED => 08:11

Dist	COUNTY	ROUTE	POST MILES TOTAL PROJECT	SHEET No.	TOTAL SHEETS
08	SBd	18	49.0/51.7	141	179

REGISTERED CIVIL ENGINEER 6-26-15 DATE

6-26-15
PLANS APPROVAL DATE

REGISTERED PROFESSIONAL ENGINEER FERDINAND DE LA CRUZ No. 66070 Exp. 06-30-16 ELECTRICAL STATE OF CALIFORNIA

THE STATE OF CALIFORNIA OR ITS OFFICERS OR AGENTS SHALL NOT BE RESPONSIBLE FOR THE ACCURACY OR COMPLETENESS OF SCANNED COPIES OF THIS PLAN SHEET.

PULL BOXES QUANTITIES

DIRECTION		LOCATION SBd-18 STATION "BB1"	REPLACE PULL BOX
LT	RT		EA
X		10+92.00	1
	X	12+00.00	1
X		13+32.00	1
X		14+65.00	1
X		16+20.00	1
X		16+23.00	1
X		16+64.00	1
X		18+50.00	1
X		22+52.00	1
X		26+53.00	1
X		27+40.00	1
X		27+42.00	1
X		30+36.00	1
X		37+25.00	1
X		39+27.00	1
X		41+46.00	1
X		45+25.00	1
X		46+98.00	1
X		47+03.00	1
X		51+76.00	1
X		53+38.00	1
X		56+54.00	1
X		57+62.00	1
X		59+34.00	1
	X	77+62.00	1
X		83+97.00	1
X		86+53.00	1
X		88+71.00	1
X		90+35.00	1
X		92+38.00	1
	X	93+90.00	1
X		96+66.00	1
X		113+55.00	1
X		125+61.00	1
X		127+62.00	1
	X	138+19.00	1
	X	139+87.00	1
	X	141+00.00	1
		TOTAL	38

APPROVED FOR ELECTRICAL WORK ONLY

REPLACE PULL BOX

E-19

STATE OF CALIFORNIA - DEPARTMENT OF TRANSPORTATION
Caltrans® **ELECTRICAL DESIGN B**

FUNCTIONAL SUPERVISOR: FERDINAND DE LA CRUZ
CALCULATED-DESIGNED BY: LUIS PENALOZA
CHECKED BY: FERDINAND DE LA CRUZ
REVISED BY
DATE REVISED

LAST REVISION 06-26-15
DATE PLOTTED => 01-DEC-2015
TIME PLOTTED => 08:11

Dist	COUNTY	ROUTE	POST MILES TOTAL PROJECT	SHEET No.	TOTAL SHEETS
08	SBd	18	49.0/51.7	142	179

REGISTERED CIVIL ENGINEER 6-26-15 DATE

6-26-15
PLANS APPROVAL DATE

REGISTERED PROFESSIONAL ENGINEER FERDINAND DE LA CRUZ No. 66070 Exp. 06-30-16 ELECTRICAL STATE OF CALIFORNIA

THE STATE OF CALIFORNIA OR ITS OFFICERS OR AGENTS SHALL NOT BE RESPONSIBLE FOR THE ACCURACY OR COMPLETENESS OF SCANNED COPIES OF THIS PLAN SHEET.

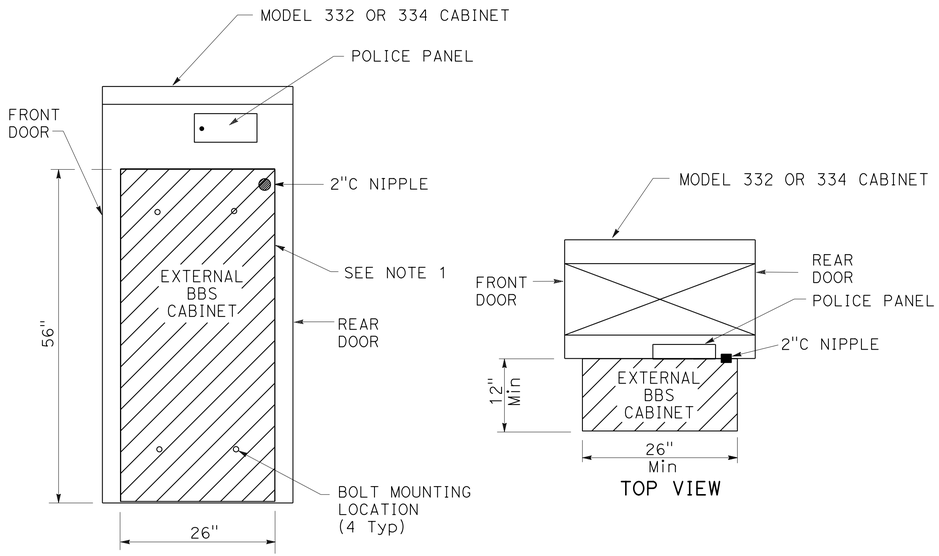

SIDE VIEW

EXTERNAL BBS CABINET MOUNTED TO THE MODEL 332 OR 334 CABINET

NOTES: (THIS SHEET ONLY)

1. THE EXTERNAL BBS CABINET SHALL BE MOUNTED TO THE MODEL 332 OR 334 CABINET WITH FOUR 18-8 STAINLESS STEEL HEX HEAD, FULLY-THREADED, ⅜"-16 X 1" BOLTS; TWO WASHERS PER BOLT, DESIGNED FOR ⅜" BOLTS AND ARE 18-8 STAINLESS STEEL, 1" OUTSIDE DIAMETER, ROUND, AND FLAT; AND ONE K-LOCK NUT PER BOLT THAT IS 18-8 STAINLESS STEEL AND A HEX-NUT. THE ENGINEER WILL HAVE TO APPROVE THE BOLT MOUNTING LOCATION PRIOR TO INSTALLATION.
2. THE ANCHOR BOLTS SHALL BE ¾" Dia X 15" WITH A 2"-90° BEND. THE CABINET MANUFACTURER'S SPECIFICATION SHALL DETERMINE THE LOCATION OF THE ANCHOR BOLTS IN THE FOUNDATION. THE ENGINEER WILL HAVE TO APPROVE THE ANCHOR BOLTS AND ITS LOCATION IN THE FOUNDATION PRIOR TO CONSTRUCTION.
3. THE CONTRACTOR SHALL VERIFY THE DIMENSIONS OF THE BBS CABINET PRIOR TO CONSTRUCTING THE FOUNDATION OF THE MODIFIED PORTION OF THE Std MODEL 332 AND 334 CABINET FOUNDATION. THE ENGINEER WILL HAVE TO APPROVE ANY NECESSARY DEVIATIONS PRIOR TO CONSTRUCTION.
4. ALL DIMENSIONS ARE NOMINAL.

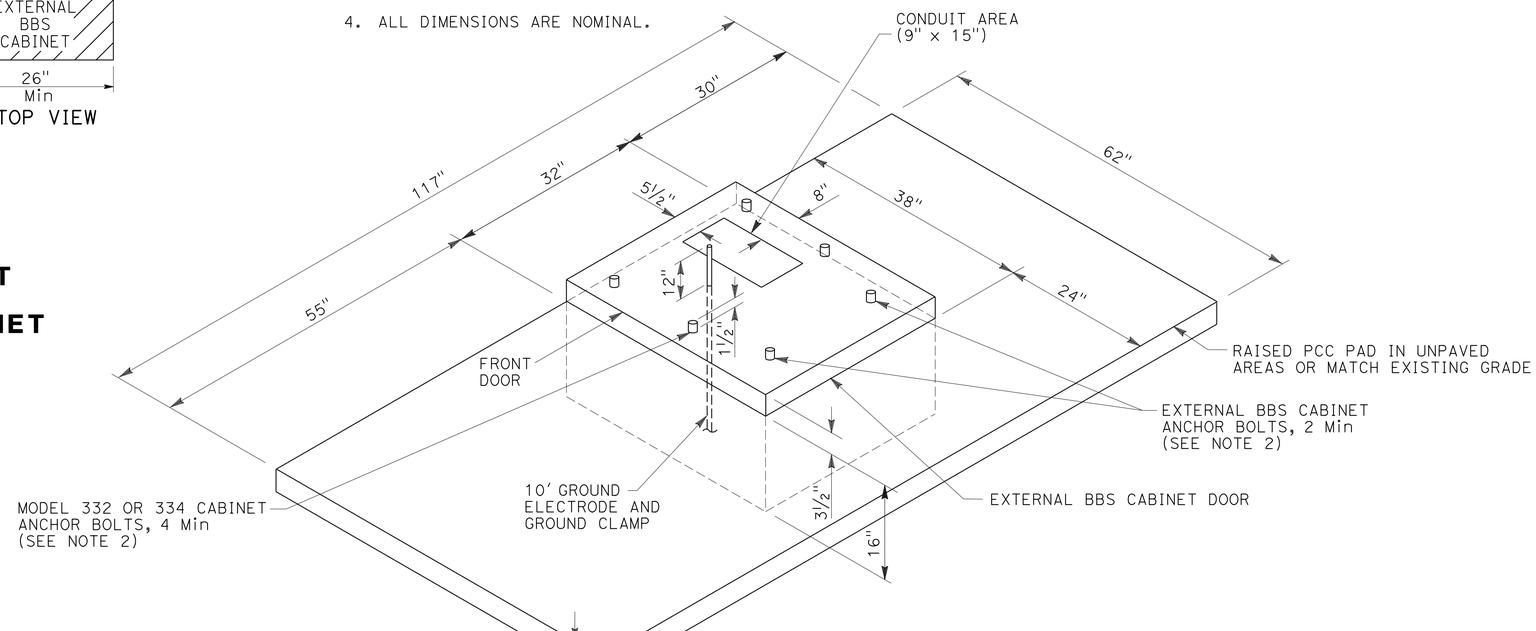

MODIFIED MODEL 332 AND 334 CABINET FOUNDATION DETAIL FOR BATTERY BACKUP SYSTEM (BBS)

(FOR DIMENSIONS AND DETAILS NOT SHOWN AND ADDITIONAL NOTES, SEE SHEET ES-3C OF THE STANDARD PLANS FOR MODEL 332 AND 334 CABINETS)

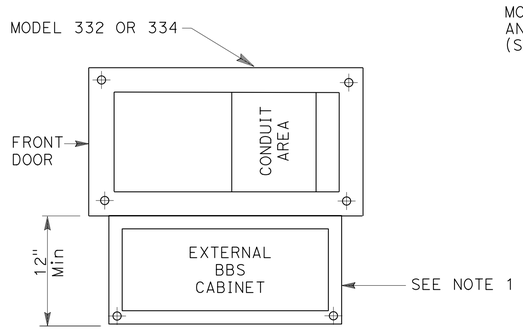

BASE PLAN FOR BBS MOUNTED TO THE MODEL 332 OR 334 CABINET

(FOR DIMENSIONS AND DETAILS NOT SHOWN, SEE SHEET A6-1 TO A6-4, CABINET HOUSING DETAILS OF THE TRANSPORTATION ELECTRICAL EQUIPMENT SPECIFICATION (TEES))

ELECTRICAL DETAILS
(BBS FOUNDATION DETAILS)

NO SCALE

E-20

APPROVED FOR ELECTRICAL WORK ONLY

REVISED BY | DATE REVISED
LUIS PENALOZA | FERDINAND DE LA CRUZ
CALCULATED-DESIGNED BY | CHECKED BY
FUNCTIONAL SUPERVISOR | FERDINAND DE LA CRUZ

STATE OF CALIFORNIA - DEPARTMENT OF TRANSPORTATION
Caltrans
ELECTRICAL DESIGN B

LAST REVISION 06-26-15 | DATE PLOTTED => 01-DEC-2015 | TIME PLOTTED => 08:11

Dist	COUNTY	ROUTE	POST MILES TOTAL PROJECT	SHEET No.	TOTAL SHEETS
08	SBd	18	49.0/51.7	143	179

REGISTERED CIVIL ENGINEER 6-26-15 DATE

6-26-15
PLANS APPROVAL DATE

REGISTERED PROFESSIONAL ENGINEER FERDINAND DE LA CRUZ No. 66070 Exp. 06-30-16 ELECTRICAL STATE OF CALIFORNIA

THE STATE OF CALIFORNIA OR ITS OFFICERS OR AGENTS SHALL NOT BE RESPONSIBLE FOR THE ACCURACY OR COMPLETENESS OF SCANNED COPIES OF THIS PLAN SHEET.

LEGEND: (THIS SHEET ONLY)

PTS = POWER TRANSFER SWITCH
UPS = UNINTERRUPTIBLE POWER SUPPLY
UPSC = UNINTERRUPTIBLE POWER SUPPLY CONTROLLER
UPSM = UPS MODE
BP = BYPASS
MBPS = MANUAL BYPASS SWITCH
AC+ = UNGROUNDED CONDUCTOR
AC- = GROUNDED CONDUCTOR
C = COMMON
Grn = GREEN
Blk = BLACK
Wht = WHITE
SF = STATE-FURNISHED
Batt = BATTERY
Temp = TEMPERATURE
TB = TERMINAL BOARD
Cntl = CONTROL
Gnd = GROUND

NOTES: (THIS SHEET ONLY)

1. TYPE B REFERS TO THE BBS EQUIPMENT FROM MANUFACTURER B.
2. CASE-1 REFERS TO THE SITUATION WHEN THE ENTIRE BBS EQUIPMENT INCLUDING THE BATTERIES ARE INSTALLED IN THE BBS CABINET.
3. THE LOCATION OF THE 2"C NIPPLE WILL BE DETERMINED BY THE ENGINEER IN THE FIELD.
4. THE CONTRACTOR SHALL FURNISH AND INSTALL A NEMA-1 ENCLOSURE WITH 30 A, 1P, 120/240 VOLTS RATED CIRCUIT BREAKER MANUFACTURED PER UL STANDARD 489.
5. A TEMPERATURE PROBE SHALL BE ATTACHED TO THE BATTERY BY TAPE OR ATTACHED TO THE NEGATIVE TERMINAL OF THE BATTERY.
6. THE ELECTRICAL POWER FOR THE COOLING FAN FOR THE BBS CABINET SHALL BE TAPPED FROM THE BOTTOM OF THE TB IN THE 332 CABINET.
7. THE CONTRACTOR SHALL PROVIDE A 9-WIRE WIRING HARNESS OR BUNDLED 9 MULTICOLOR CONDUCTORS, #18 AWG WIRES FROM THE RELAY ON THE INVERTER/CHARGER UNIT TO THE CONTROLLER. THE ENDS OF THE CONDUCTORS SHALL BE INSULATED WITH TAPE AND A SIX-FOOT COIL ON EACH END.

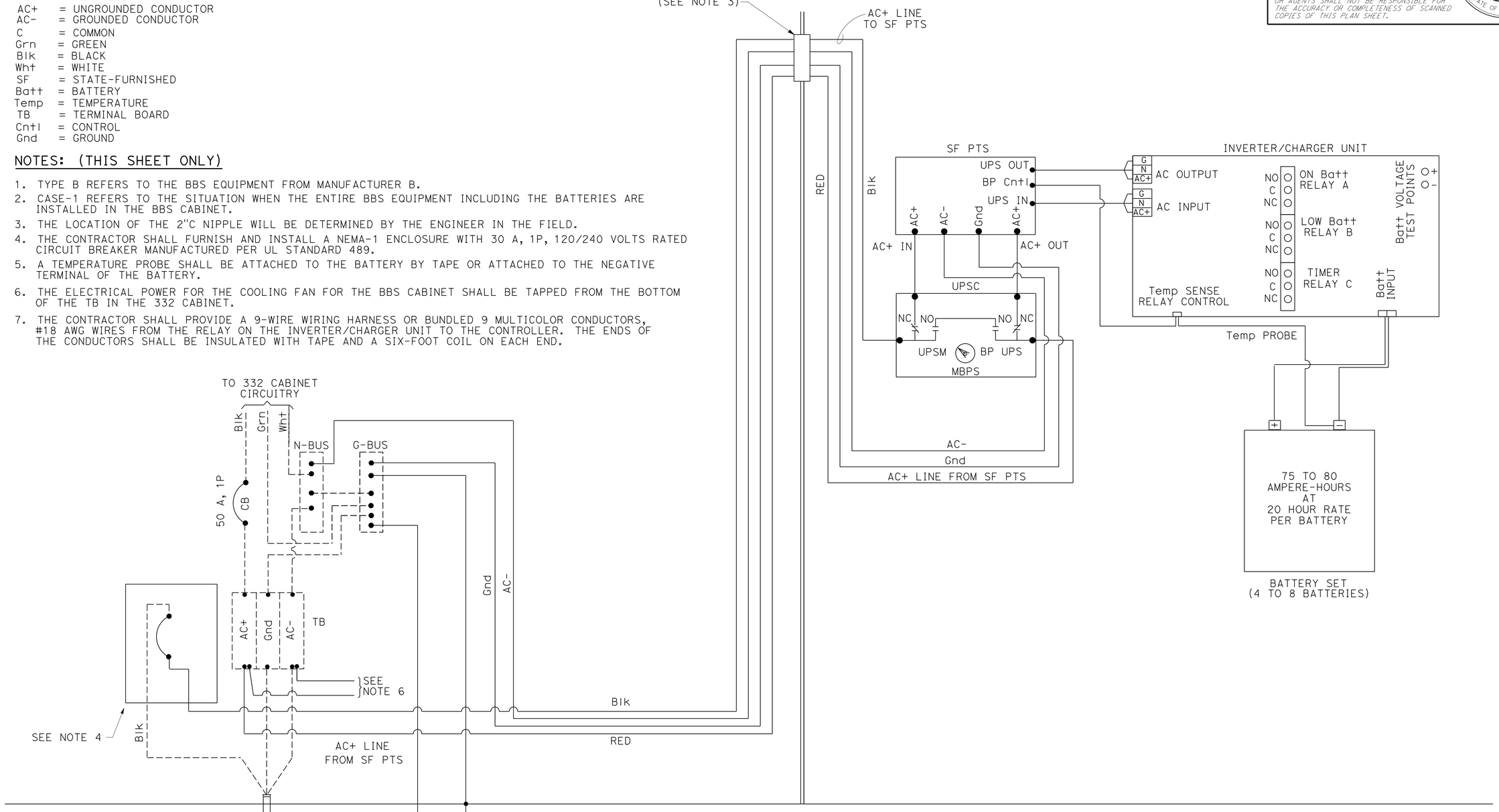

ELECTRICAL DETAILS
(BBS POWER CONNECTION DIAGRAM, TYPE B, CASE-1)

NO SCALE

E-21

APPROVED FOR ELECTRICAL WORK ONLY

STATE OF CALIFORNIA - DEPARTMENT OF TRANSPORTATION
Caltrans
ELECTRICAL DESIGN B

FUNCTIONAL SUPERVISOR: FERDINAND DE LA CRUZ
CALCULATED-DESIGNED BY: LUIS PENALOZA
CHECKED BY: FERDINAND DE LA CRUZ
REVISED BY
DATE REVISED

LAST REVISION 06-26-15
DATE PLOTTED => 01-DEC-2015
TIME PLOTTED => 08:11

Dist	COUNTY	ROUTE	POST MILES TOTAL PROJECT	SHEET No.	TOTAL SHEETS
08	SBd	18	49.0/51.7	144	179

REGISTERED CIVIL ENGINEER 6-26-15 DATE

6-26-15
PLANS APPROVAL DATE

REGISTERED PROFESSIONAL ENGINEER FERDINAND DE LA CRUZ No. 66070 Exp. 06-30-16 ELECTRICAL STATE OF CALIFORNIA

THE STATE OF CALIFORNIA OR ITS OFFICERS OR AGENTS SHALL NOT BE RESPONSIBLE FOR THE ACCURACY OR COMPLETENESS OF SCANNED COPIES OF THIS PLAN SHEET.

LEGEND: (THIS SHEET ONLY)

PTS = POWER TRANSFER SWITCH
UPS = UNINTERRUPTIBLE POWER SUPPLY
UPSC = UNINTERRUPTIBLE POWER SUPPLY CONTROLLER
UPSM = UPS MODE
BP = BYPASS
MBPS = MANUAL BYPASS SWITCH
AC+ = UNGROUNDED CONDUCTOR
AC- = GROUNDED CONDUCTOR
C = COMMON
Grn = GREEN
Blk = BLACK
Wht = WHITE
SF = STATE-FURNISHED
TB = TERMINAL BOARD
Cntl = CONTROL
Gnd = GROUND
Temp = TEMPERATURE
Batt = BATTERY

NOTES: (THIS SHEET ONLY)

1. TYPE A REFERS TO THE BBS EQUIPMENT FROM MANUFACTURER A.
2. CASE-1 REFERS TO THE SITUATION WHEN THE ENTIRE BBS EQUIPMENT INCLUDING THE BATTERIES ARE INSTALLED IN THE BBS CABINET.
3. THE LOCATION OF THE 2"C NIPPLE WILL BE DETERMINED BY THE ENGINEER IN THE FIELD.
4. THE CONTRACTOR SHALL FURNISH AND INSTALL A NEMA-1 ENCLOSURE WITH 30 A, 1P, 120/240 VOLTS RATED CIRCUIT BREAKER MANUFACTURED PER UL STANDARD 489.
5. A TEMPERATURE PROBE SHALL BE ATTACHED TO THE BATTERY BY TAPE OR ATTACHED TO THE NEGATIVE TERMINAL OF THE BATTERY.
6. THE ELECTRICAL POWER FOR THE COOLING FAN FOR THE BBS CABINET SHALL BE TAPPED FROM THE BOTTOM OF THE TB IN THE 332 CABINET.
7. THE CONTRACTOR SHALL PROVIDE A 9-WIRE WIRING HARNESS OR BUNDLED 9 MULTICOLOR CONDUCTORS, #18 AWG WIRES FROM THE RELAY ON THE INVERTER/CHARGER UNIT TO THE CONTROLLER. THE ENDS OF THE CONDUCTORS SHALL BE INSULATED WITH TAPE AND A SIX-FOOT COIL ON EACH END.

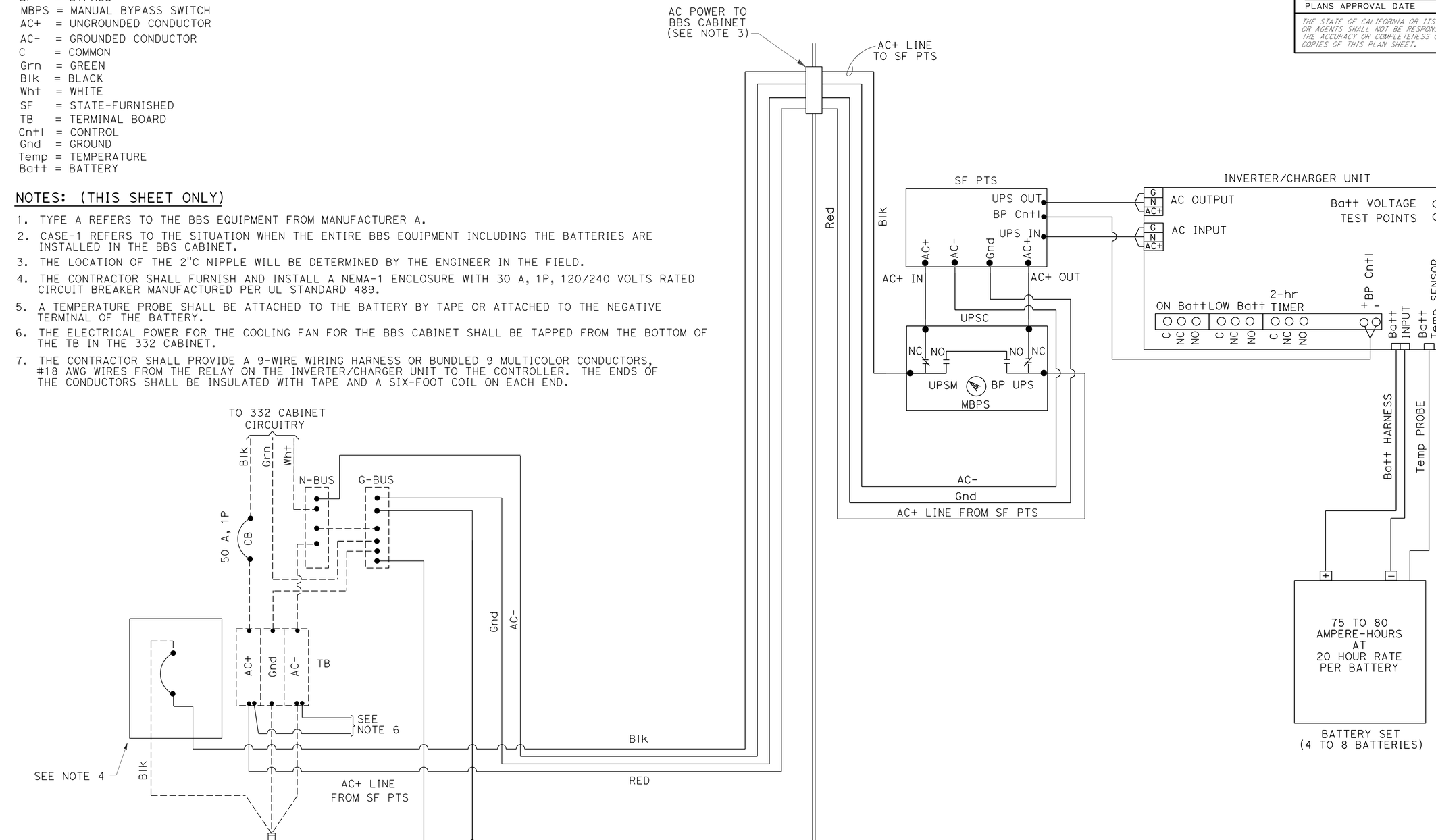

ELECTRICAL DETAILS
(BBS POWER CONNECTION DIAGRAM, TYPE A, CASE-1)

NO SCALE

E-22

APPROVED FOR ELECTRICAL WORK ONLY

STATE OF CALIFORNIA - DEPARTMENT OF TRANSPORTATION
Caltrans®
ELECTRICAL DESIGN B

FUNCTIONAL SUPERVISOR: FERDINAND DE LA CRUZ
CALCULATED-DESIGNED BY: LUIS PENALOZA
CHECKED BY: FERDINAND DE LA CRUZ
REVISED BY
DATE REVISED

LAST REVISION 06-26-15
DATE PLOTTED => 01-DEC-2015
TIME PLOTTED => 08:11

Dist	COUNTY	ROUTE	POST MILES TOTAL PROJECT	SHEET No.	TOTAL SHEETS
08	SBd	18	49.0/51.7	145	179

REGISTERED CIVIL ENGINEER 6-26-15 DATE

6-26-15
PLANS APPROVAL DATE

REGISTERED PROFESSIONAL ENGINEER FERDINAND DE LA CRUZ No. 66070 Exp. 06-30-16 ELECTRICAL STATE OF CALIFORNIA

THE STATE OF CALIFORNIA OR ITS OFFICERS OR AGENTS SHALL NOT BE RESPONSIBLE FOR THE ACCURACY OR COMPLETENESS OF SCANNED COPIES OF THIS PLAN SHEET.

NOTE:
1. THE QUANTITIES SHOWN IN TABLES ARE NOT SEPARATE PAY ITEMS, FOR INFORMATION ONLY. FOR COMPLETE ELECTRICAL WORK, SEE ELECTRICAL PLAN SHEETS.

MODIFY SIGNAL AND LIGHTING (LOCATIONS)

LOCATION	SHEET No.	1.5 "C TYPE 3	2 "C TYPE 3	2.5"C TYPE 3	3"C TYPE 3	3.5"C TYPE 3	4"C TYPE 3	No. 5 PB	No. 6 PB	No. 6 (G)	No. 8 (G)	No. 6 CONDUCTOR	No. 8 CONDUCTOR	SIC	3 CSC CABLE	12 CSC CABLE	DLC CABLE	VIVIDS POWER CABLE	VIVIDS VIDEO CABLE	TYPE E LOOPS
		LF	LF	LF	LF	LF	LF	EA	EA	LF	LF	LF	LF	LF	LF	LF	LF	LF	LF	EA
1	E-2	100	90	0	110	30	150	6	2	40	350	80	950	50	1,100	1,400	0	550	550	0
2	E-5	20	80	60	50	100	300	4	2	20	530	40	750	40	1,250	1,650	250	700	700	2
3	E-8	80	300	0	180	100	120	13	1	150	650	300	540	0	1,000	1,200	0	550	550	0
4	E-11	100	80	30	200	150	50	6	2	20	450	40	750	0	600	1,000	0	660	660	0
5	E-14	120	50	50	150	50	180	9	2	60	450	120	760	0	1,200	1,300	0	700	700	0
6	E-17	250	50	0	200	100	120	9	1	30	650	60	860	0	760	1,300	350	550	550	1

MODIFY SIGNAL AND LIGHTING (LOCATIONS)

LOCATION	SHEET No.	TYPE III-CF SERVICE EQUIPMENT ENCLOSURE	MODEL 332 CABINET	MODEL 332 CABINET FOUNDATION	BATTERY BACK-UP SYSTEM	PPB POST	1-A POLE	17-3-100 POLE	19-3-100 POLE	26-4-100 POLE	29-5-100 POLE	FOUNDATION PPB POST	FOUNDATION 1-A POLE	STANDARD FOUNDATION CASE 3	STANDARD FOUNDATION CASE 4	STANDARD FOUNDATION CASE 5
		EA	EA	EA	EA	EA	EA	EA	EA	EA	EA	EA	EA	EA	EA	EA
1	E-2	1	1	1	1	2	2	1	0	1	0	2	2	1	1	0
2	E-5	1	1	1	1	2	3	1	1	0	0	2	3	2	0	0
3	E-8	1	1	1	1	5	4	2	0	2	0	5	4	2	2	0
4	E-11	1	1	1	1	3	1	0	0	2	0	3	1	0	2	0
5	E-14	1	1	1	1	4	2	1	0	1	0	4	2	1	1	0
6	E-17	1	1	1	1	2	1	0	0	0	1	2	1	0	0	1

REPLACE PULL BOX

SHEET No.	No. 5 PULL BOX
	EA
E-19	38

APPROVED FOR ELECTRICAL WORK ONLY

ELECTRICAL QUANTITIES
E-23

REVISED BY | DATE REVISED
LUIS PENALOZA | FERDINAND DE LA CRUZ
CALCULATED-DESIGNED BY | CHECKED BY
FUNCTIONAL SUPERVISOR | FERDINAND DE LA CRUZ
STATE OF CALIFORNIA - DEPARTMENT OF TRANSPORTATION
Caltrans® ELECTRICAL DESIGN B

LAST REVISION 06-26-15 | DATE PLOTTED => 01-DEC-2015 TIME PLOTTED => 08:11

M

Maint	MAINTENANCE
Max	MAXIMUM
MB	METAL BEAM
MBB	METAL BEAM BARRIER
MBGR	METAL BEAM GUARD RAILING
Med	MEDIAN
MGS	MIDWEST GUARDRAIL SYSTEM
MH	MANHOLE
Min	MINIMUM
Misc	MISCELLANEOUS
Misc I & S	MISCELLANEOUS IRON AND STEEL
Mkr	MARKER
Mod	MODIFIED,
	MODIFY
Mon	MONUMENT
MP	METAL PLATE
MPGR	METAL PLATE GUARD RAILING
MR	MOVEMENT RATING
MSE	MECHANICALLY STABILIZED EMBANKMENT
Mt	MOUNTAIN, MOUNT
Mtl	MATERIAL
MVP	MAINTENANCE VEHICLE PULLOUT

N

N	NORTH
NB	NORTHBOUND
No.	NUMBER (MUST HAVE PERIOD)
Nos.	NUMBERS (MUST HAVE PERIOD)
NPS	NOMINAL PIPE SIZE
NS	NEAR SIDE
NSP	NEW STANDARD PLAN
NTS	NOT TO SCALE

O

Oblr	OBLITERATE
OC	OVERCROSSING
OD	OUTSIDE DIAMETER
OF	OUTSIDE FACE
OG	ORIGINAL GROUND
OGAC	OPEN GRADED ASPHALT CONCRETE
OGFC	OPEN GRADED FRICTION COURSE
OH	OVERHEAD
OHWM	ORDINARY HIGH WATER MARK
O-O	OUT TO OUT
Opp	OPPOSITE
OSD	OVERSIDE DRAIN

P

P	PAGE
PAP	PERFORATED ALUMINUM PIPE
PB	PULL BOX
PC	POINT OF CURVATURE,
	PRECAST
PCC	POINT OF COMPOUND CURVE,
	PORTLAND CEMENT CONCRETE
PCMS	PORTABLE CHANGEABLE MESSAGE SIGN
PCP	PERFORATED CONCRETE PIPE,
	PRESTRESSED CONCRETE PIPE
PCVC	POINT OF COMPOUND VERTICAL CURVE
PEC	PERMIT TO ENTER AND CONSTRUCT
Ped	PEDESTRIAN
Ped OC	PEDESTRIAN OVERCROSSING
Ped UC	PEDESTRIAN UNDERCROSSING
Perm Mtl	PERMEABLE MATERIAL

P continued

PG	PROFILE GRADE
PI	POINT OF INTERSECTION
PJP	PARTIAL JOINT PENETRATION
Pkwy	PARKWAY
ℙ,PL	PLATE
P/L	PROPERTY LINE
PM	POST MILE,
	TIME FROM NOON TO MIDNIGHT
PN	PAVING NOTCH
POC	POINT OF HORIZONTAL CURVE
POT	POINT OF TANGENT
POVC	POINT OF VERTICAL CURVE
PP	PIPE PILE,
	PLASTIC PIPE,
	POWER POLE
PPL	PREFORMED PERMEABLE LINER
PPP	PERFORATED PLASTIC PIPE
PRC	POINT OF REVERSE CURVE
PRF	PAVEMENT REINFORCING FABRIC
PRVC	POINT OF REVERSE VERTICAL CURVE
PS&E	PLANS, SPECIFICATIONS AND ESTIMATES
PS, P/S	PRESTRESSED
PSP	PERFORATED STEEL PIPE
PT	POINT OF TANGENCY
PVC	POLYVINYL CHLORIDE
Pvmt	PAVEMENT

Q

Qty	QUANTITY

R

R	RADIUS
R & D	REMOVE AND DISPOSE
R & S	REMOVE AND SALVAGE
R/C	RATE OF CHANGE
RCA	REINFORCED CONCRETE ARCH
RCB	REINFORCED CONCRETE BOX
RCP	REINFORCED CONCRETE PIPE
RCPA	REINFORCED CONCRETE PIPE ARCH
Rd	ROAD
Reinf	REINFORCED,
	REINFORCEMENT,
	REINFORCING
Rel	RELOCATE
Repl	REPLACEMENT
Ret	RETAINING
Rev	REVISED, REVISION
Rdwy	ROADWAY
RHMA	RUBBERIZED HOT MIX ASPHALT
Riv	RIVER
RM	ROAD-MIXED
RP	RADIUS POINT,
	REFERENCE POINT
RR	RAILROAD
RSP	ROCK SLOPE PROTECTION,
	REVISED STANDARD PLAN
Rt	RIGHT
Rte	ROUTE
RW	REDWOOD,
	RETAINING WALL
R/W	RIGHT OF WAY
Rwy	RAILWAY

S

S	SOUTH,
	SUPPLEMENT
SAE	STRUCTURE APPROACH EMBANKMENT
Salv	SALVAGE
SAPP	STRUCTURAL ALUMINUM PLATE PIPE
SB	SOUTHBOUND
SC	SAND CUSHION
SCSP	SLOTTED CORRUGATED STEEL PIPE
SD	STORM DRAIN
Sec	SECOND,
	SECTION
Sep	SEPARATION
SG	SUBGRADE
Shld	SHOULDER
Sht	SHEET
Sim	SIMILAR
℄	STATION LINE
SM	SELECTED MATERIAL
Spec	SPECIAL,
	SPECIFICATIONS
SPP	SLOTTED PLASTIC PIPE
SS	SLOPE STAKE
SSBM	STRAP AND SADDLE BRACKET METHOD
SSD	STRUCTURAL SECTION DRAIN
SSPA	STRUCTURAL STEEL PLATE ARCH
SSPP	STRUCTURAL STEEL PLATE PIPE
SSPPA	STRUCTURAL STEEL PLATE PIPE ARCH
SSRP	STEEL SPIRAL RIB PIPE
St	STREET
Sta	STATION
STBB	SINGLE THRIE BEAM BARRIER
Std	STANDARD
Str	STRUCTURE
Surf	SURFACING
SW	SIDEWALK,
	SOUND WALL
Swr	SEWER
Sym	SYMMETRICAL
S4S	SURFACE 4 SIDES

T

T	SEMI-TANGENT
Tan	TANGENT
TBB	THRIE BEAM BARRIER
Tbr	TIMBER
TC	TOP OF CURB
TCB	TRAFFIC CONTROL BOX
TCE	TEMPORARY CONSTRUCTION EASEMENT
Tel	TELEPHONE
Temp	TEMPORARY
TG	TOP OF GRADE
Tot	TOTAL
TP	TELEPHONE POLE
TPB	TREATED PERMEABLE BASE
TPM	TREATED PERMEABLE MATERIAL
Trans	TRANSITION

T continued

TS	TRANSVERSE,
	TRAFFIC SIGNAL,
	TUBULAR STEEL
Typ	TYPICAL

U

UC	UNDERCROSSING
UD	UNDERDRAIN
UG	UNDERGROUND
UON	UNLESS OTHERWISE NOTED
UP	UNDERPASS

V

V	VALVE,
	DESIGN SPEED
Var	VARIABLE,
	VARIES
VC	VERTICAL CURVE
VCP	VITRIFIED CLAY PIPE
Vert	VERTICAL
Via	VIADUCT
Vol	VOLUME

W

W	WEST,
	WIDTH
WB	WESTBOUND
WH	WEEP HOLE
WM	WIRE MESH
WS	WATER SURFACE
WSP	WELDED STEEL PIPE
Wt	WEIGHT
WV	WATER VALVE
WW	WINGWALL
WWLOL	WINGWALL LAYOUT LINE

X

X Sec	CROSS SECTION
Xing	CROSSING

Y

Yr	YEAR
Yrs	YEARS

Dist	COUNTY	ROUTE	POST MILES TOTAL PROJECT	SHEET No.	TOTAL SHEETS
08	SBd	18	49.0/51.7	146	179

Grace M. Tsushima
REGISTERED CIVIL ENGINEER

July 19, 2013
PLANS APPROVAL DATE

REGISTERED PROFESSIONAL ENGINEER
Grace M. Tsushima
No. C49814
Exp. 9-30-14
CIVIL
STATE OF CALIFORNIA

THE STATE OF CALIFORNIA OR ITS OFFICERS OR AGENTS SHALL NOT BE RESPONSIBLE FOR THE ACCURACY OR COMPLETENESS OF SCANNED COPIES OF THIS PLAN SHEET.

TO ACCOMPANY PLANS DATED 6-26-15

UNIT OF MEASUREMENT SYMBOLS:

Some of the symbols used in the project plan quantity tables and in the Bid Item List are:

TABLE A

SYMBOL USED	DEFINITIONS
ACRE	ACRE
CF	CUBIC FOOT
CY	CUBIC YARD
EA	EACH
GAL	GALLON
LB	POUND
LF	LINEAR FOOT
SQFT	SQUARE FOOT
SQYD	SQUARE YARD
STA	100 FEET
TAB	TABLET
TON	2,000 POUNDS

Some of the symbols used in the plans other than in the project plan quantity tables are:

TABLE B

SYMBOL USED	DEFINITIONS
ksi	KIPS PER SQUARE INCH
ksf	KIPS PER SQUARE FOOT
psi	POUNDS PER SQUARE INCH
psf	POUNDS PER SQUARE FOOT
lb/ft^3, pcf	POUNDS PER CUBIC FOOT
tsf	TONS PER SQUARE FOOT
mph, MPH *	MILES PER HOUR
ø	NOMINAL DIAMETER
oz	OUNCE
lb	POUND
kip	1,000 POUNDS
cal	CALORIE
ft	FOOT OR FEET
gal	GALLON

* For use on a sign panel only

STATE OF CALIFORNIA
DEPARTMENT OF TRANSPORTATION

ABBREVIATIONS (SHEET 2 OF 2)

NO SCALE

RSP A10B DATED JULY 19, 2013 SUPERSEDES STANDARD PLAN A10B DATED MAY 20, 2011 - PAGE 2 OF THE STANDARD PLANS BOOK DATED 2010.

REVISED STANDARD PLAN RSP A10B

2010 REVISED STANDARD PLAN RSP A10B

6-7-13

Dist	COUNTY	ROUTE	POST MILES TOTAL PROJECT	SHEET No.	TOTAL SHEETS
08	SBd	18	49.0/51.7	147	179

REGISTERED CIVIL ENGINEER

July 18, 2014
PLANS APPROVAL DATE

Glenn DeCou No. C34547 Exp. 9-30-15 CIVIL — REGISTERED PROFESSIONAL ENGINEER — STATE OF CALIFORNIA

THE STATE OF CALIFORNIA OR ITS OFFICERS OR AGENTS SHALL NOT BE RESPONSIBLE FOR THE ACCURACY OR COMPLETENESS OF SCANNED COPIES OF THIS PLAN SHEET.

TO ACCOMPANY PLANS DATED 6-26-15

2010 REVISED STANDARD PLAN RSP A85

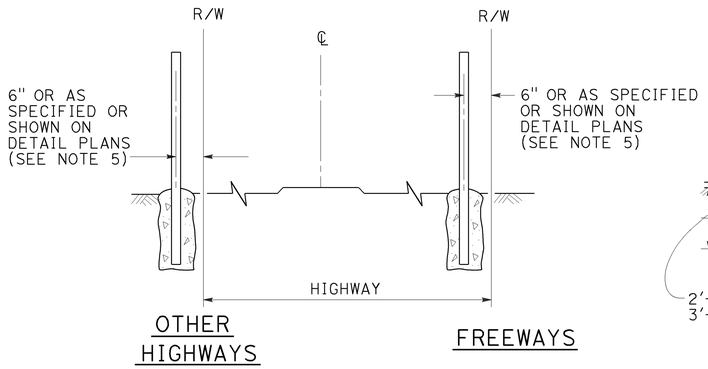

FENCE LOCATION

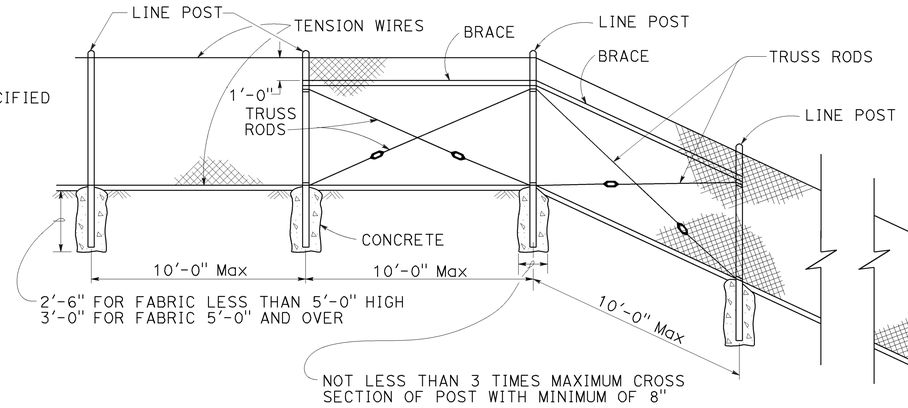

CHAIN LINK FENCE ON SHARP BREAK IN GRADE

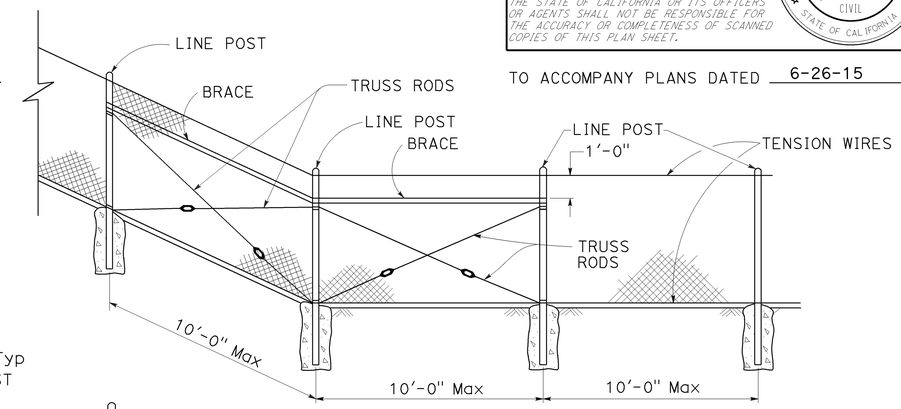

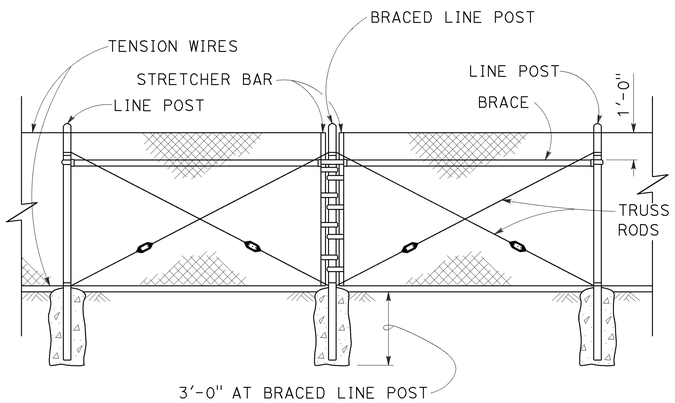

BRACED LINE POST INSTALLATION

Braced line post at intervals not exceeding 1000'

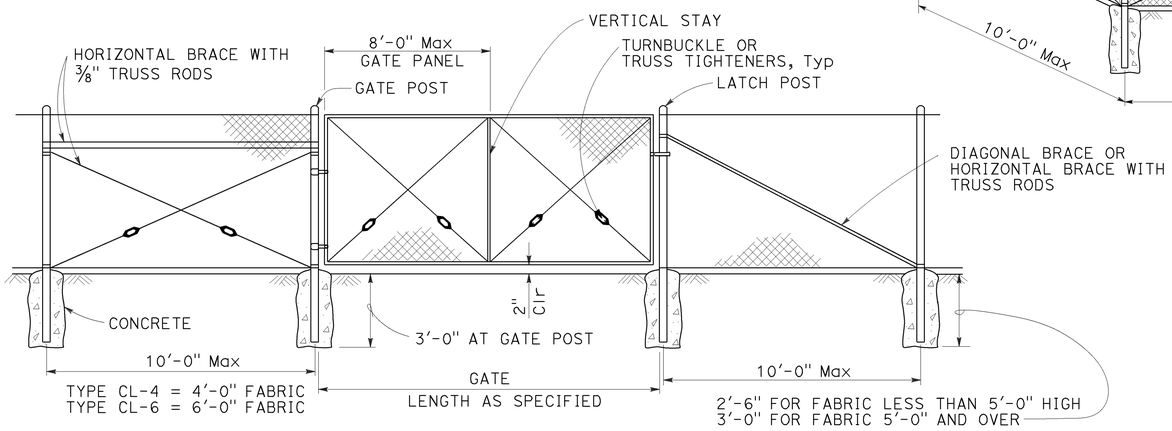

CHAIN LINK GATE INSTALLATION

GATE POST			
FENCE HEIGHT	GATE WIDTHS	ROUND OD PIPE	WEIGHT (lb/ft)
6'-0" AND LESS	UP THRU 6'-0"	2.875"	5.80
	OVER 6'-0" THRU 12'-0"	4.500"	10.80
	OVER 12'-0" THRU 18'-0"	5.563"	14.63
	OVER 18'-0" TO 24'-0" Max	6.625"	18.99
OVER 6'-0" TO 8'-0" Max	UP THRU 6'-0"	3.500"	7.58
	OVER 6'-0" THRU 12'-0"	5.563"	14.63
	OVER 12'-0" THRU 18'-0"	6.625"	18.99
	OVER 18'-0" TO 24'-0" Max	8.625"	28.58

Above post dimensions and weights are minimums. Larger sizes may be used upon approval.

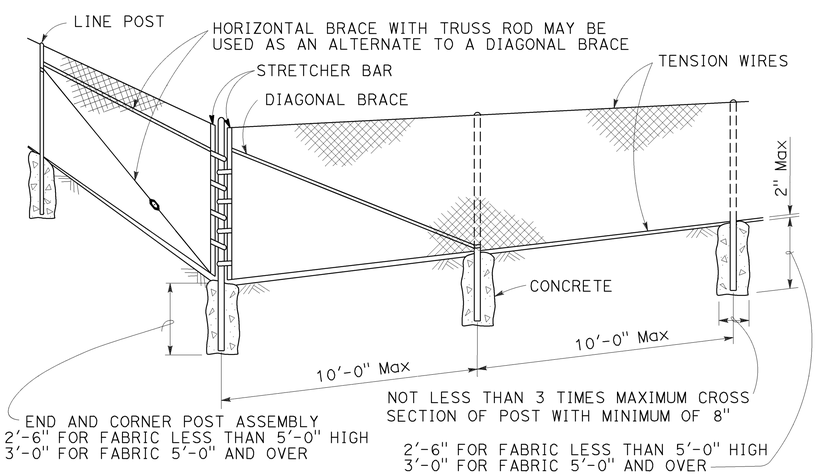

CORNER POST

NOTES:

1. The table below shows minimum sized posts and braces complying with the specifications. Larger or heavier post and brace sizes may be used upon approval.
2. Sections shown in the tables must also comply with the strength requirements and other provisions of the Specifications.
3. Other sections which comply with the strength requirements and other provisions of the Specifications may be used upon approval.
4. Options exercised shall be uniform on any one project.
5. Offset to be 2'-0" at monument locations, measured at right angles to R/W lines. Taper to achieve offset to be at least 20'-0" long.
6. See Revised Standard Plan RSP A85B for Brace, Stretcher Bar, and Truss Tightener Details.

TYPICAL MEMBER DIMENSIONS (See Notes)										
FENCE HEIGHT	LINE POSTS				END, LATCH AND CORNER POSTS		BRACES			
	ROUND OD PIPE	WEIGHT (lb/ft)	ROLL FORMED SECTION	ROLL FORMED WEIGHT (lb/ft)	ROUND OD PIPE	WEIGHT (lb/ft)	ROUND OD PIPE	WEIGHT (lb/ft)	ROLL FORMED SECTION	ROLL FORMED WEIGHT (lb/ft)
6'-0" AND LESS	1.900"	2.72	1.875" x 1.625"	1.85	2.375"	3.65	1.66"	2.27	1.625" x 1.25"	1.35
OVER 6'-0" TO 8'-0" Max	2.375"	3.65	2.25" x 1.70"	2.78	2.875"	5.80	1.66"	2.27	1.625" x 1.25"	1.35

STATE OF CALIFORNIA
DEPARTMENT OF TRANSPORTATION

CHAIN LINK FENCE

NO SCALE

RSP A85 DATED JULY 18, 2014 SUPERSEDES STANDARD PLAN A85 DATED MAY 20, 2011 - PAGE 112 OF THE STANDARD PLANS BOOK DATED 2010.

REVISED STANDARD PLAN RSP A85

7-1-14

Dist	COUNTY	ROUTE	POST MILES TOTAL PROJECT	SHEET No.	TOTAL SHEETS
08	SBd	18	49.0/51.7	148	179

REGISTERED CIVIL ENGINEER

October 19, 2012
PLANS APPROVAL DATE

REGISTERED PROFESSIONAL ENGINEER Glenn DeCou No. C34547 Exp. 9-30-13 CIVIL STATE OF CALIFORNIA

THE STATE OF CALIFORNIA OR ITS OFFICERS OR AGENTS SHALL NOT BE RESPONSIBLE FOR THE ACCURACY OR COMPLETENESS OF SCANNED COPIES OF THIS PLAN SHEET.

TO ACCOMPANY PLANS DATED 6-26-15

2010 REVISED STANDARD PLAN RSP A85B

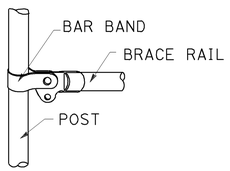

BRACE RAIL

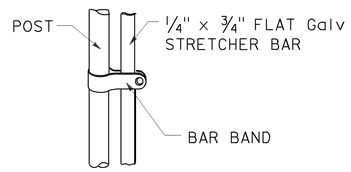

STRETCHER BAR

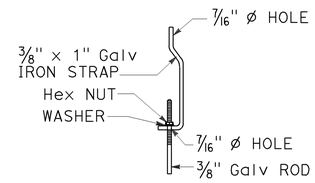

TRUSS TIGHTENER

NOTES:

1. All material for abutment connection to be galvanized.
2. The chain link fabric shall be replaced by barbed wire strands at 12" maximum centers between the double posts.
3. When the width of the culvert makes it necessary to anchor a post to the top of the culvert, a cast iron shoe or other device approved by the Engineer shall be used.
4. Fencing over stream and around headwall may also use Barbed Wire or Wire Mesh fencing with either wood post or steel post installation.
5. See Standard Plan A85 for Chain Link fence dimensions. See Standard Plan A86 for Barbed Wire and Wire Mesh fence dimensions and for wood post and steel post installation.

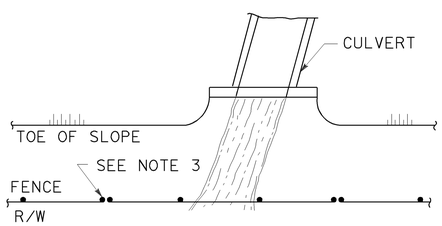

PLAN

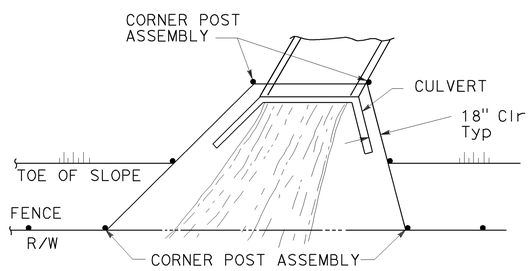

PLAN

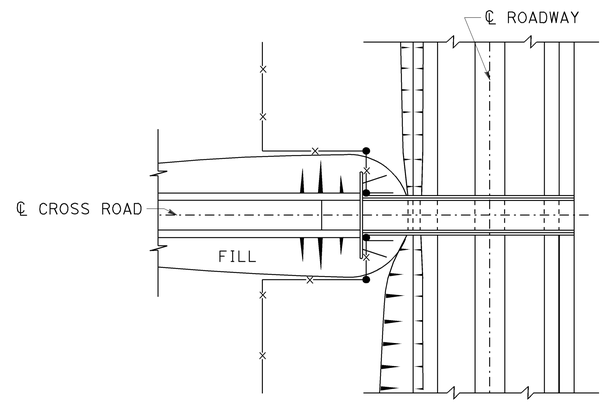

PLAN OF ROADWAY - OVERCROSSING

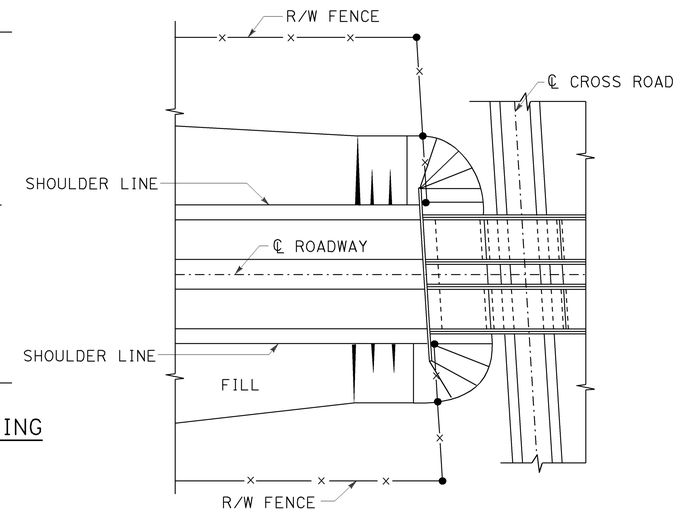

PLAN OF ROADWAY - UNDERCROSSING

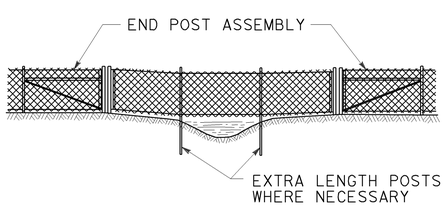

ELEVATION

INSTALLATION OVER STREAM

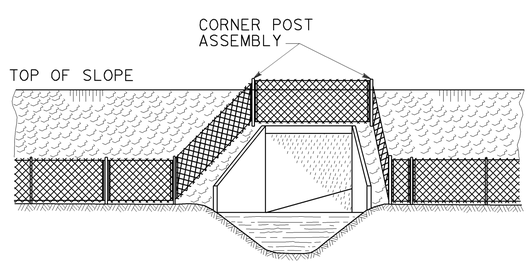

ELEVATION

INSTALLATION AROUND HEADWALL

See Note 4

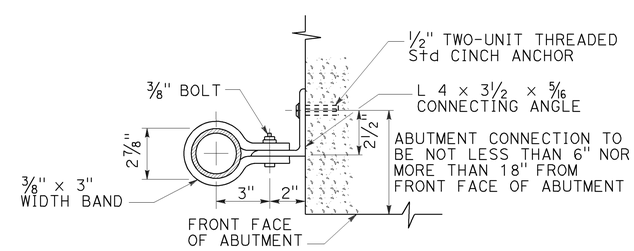

ABUTMENT CONNECTION

TYPICAL INSTALLATION AT BRIDGES

STATE OF CALIFORNIA
DEPARTMENT OF TRANSPORTATION

CHAIN LINK FENCE DETAILS

NO SCALE

RSP A85B DATED OCTOBER 19, 2012 SUPERSEDES STANDARD PLAN A85B DATED MAY 20, 2011 - PAGE 114 OF THE STANDARD PLANS BOOK DATED 2010.

REVISED STANDARD PLAN RSP A85B

7-19-12

Dist	COUNTY	ROUTE	POST MILES TOTAL PROJECT	SHEET No.	TOTAL SHEETS
08	SBd	18	49.0/51.7	149	179

REGISTERED CIVIL ENGINEER

July 19, 2013
PLANS APPROVAL DATE

REGISTERED PROFESSIONAL ENGINEER Michael Janzen No. 44788 Exp. 03-31-14 CIVIL STATE OF CALIFORNIA

THE STATE OF CALIFORNIA OR ITS OFFICERS OR AGENTS SHALL NOT BE RESPONSIBLE FOR THE ACCURACY OR COMPLETENESS OF SCANNED COPIES OF THIS PLAN SHEET.

TO ACCOMPANY PLANS DATED 6-26-15

2010 REVISED STANDARD PLAN RSP A87A

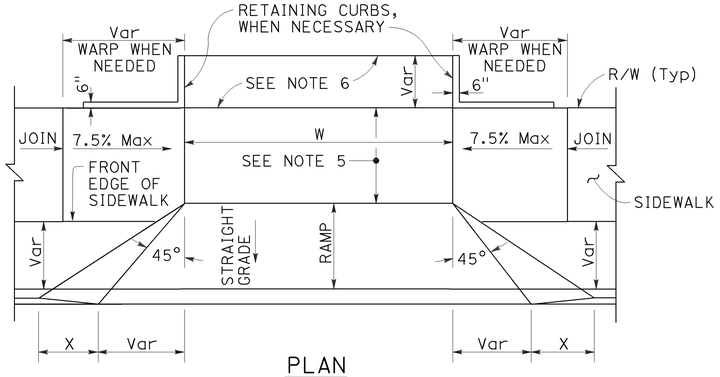

PLAN

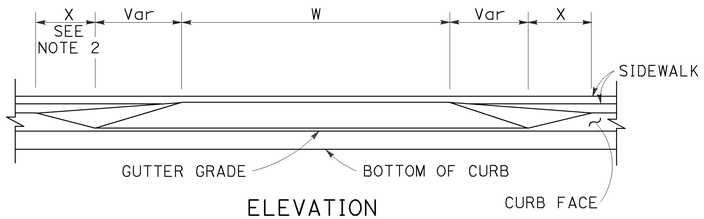

ELEVATION

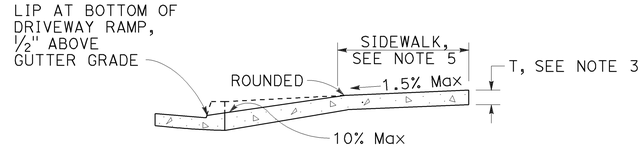

CASE A

Typical driveway, sidewalk not depressed

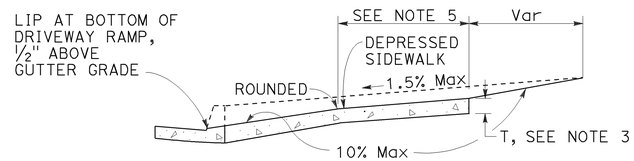

CASE B

Driveway with depressed sidewalk

SECTIONS

DRIVEWAYS

TABLE A

CURB TYPE	DIMENSIONS			
	"H1"	"H2"	"W1"	"W2"
A1-6	1'-2"	6"	7½"	1½"
A1-8	1'-4"	8"	8"	2"
A2-6	1'-0"	6"	2'-7½"	1½"
A2-8	1'-2"	8"	2'-8"	2"
A3-6	6"	5"	7¼"	1¼"
A3-8	8"	7"	7¾"	1¾"
B1-4	1'-0"	4"	7½"	2½"
B1-6	1'-2"	6"	9"	4"
B2-4	10"	4"	2'-7½"	2½"
B2-6	1'-0"	6"	2'-9"	4"
B3-4	4"	3"	7"	2"
B3-6	6"	5"	8½"	3½"
D-4	10"	4"	1'-6"	1'-1"
D-6	1'-0"	6"	2'-2"	1'-9"

CURB QUANTITIES

TYPE	CUBIC YARDS PER LINEAR FOOT
A1-6	0.02585
A1-8	0.03084
A2-6	0.05903
A2-8	0.06379
A3-6	0.01036
A3-8	0.01435
B1-4	0.02185
B1-6	0.02930
B2-4	0.05515
B2-6	0.06171
B3-4	0.00641
B3-6	0.01074
B4	0.05709
D-4	0.04083
D-6	0.06804
E	0.06661

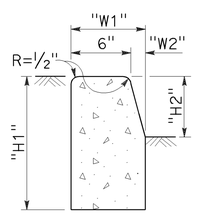

TYPE A1 CURBS

See Table A

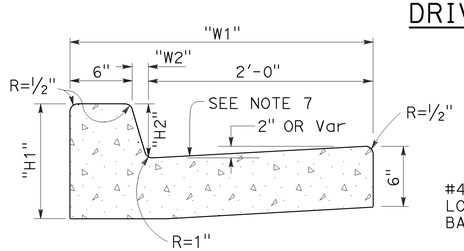

TYPE A2 CURBS

See Table A

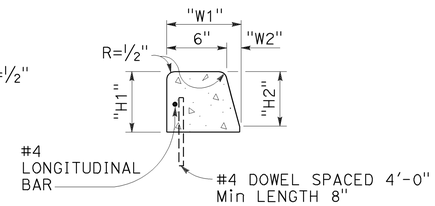

TYPE A3 CURBS

Superimposed on existing pavement
See Table A

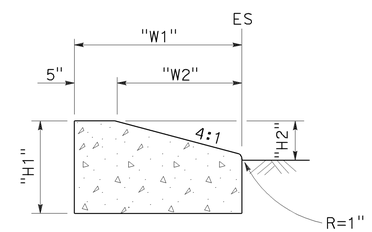

TYPE D CURBS

See Table A

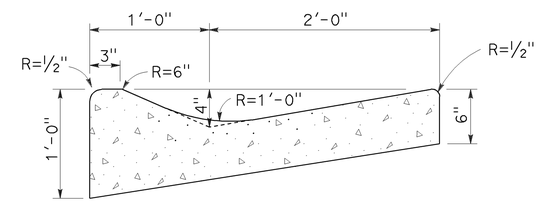

TYPE E CURB

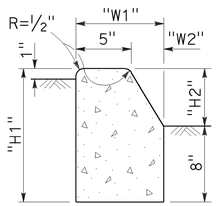

TYPE B1 CURBS

See Table A

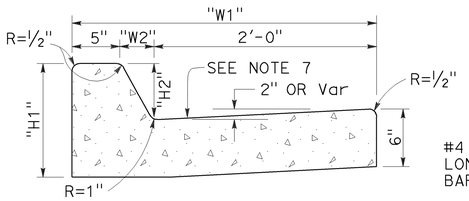

TYPE B2 CURBS

See Table A

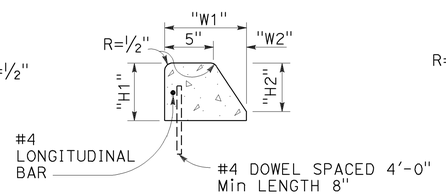

TYPE B3 CURBS

Superimposed on existing pavement
See Table A

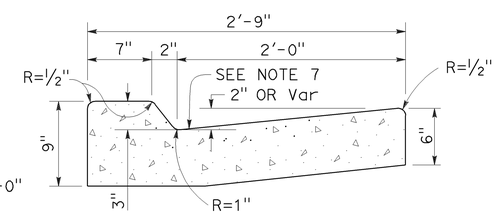

TYPE B4 CURBS

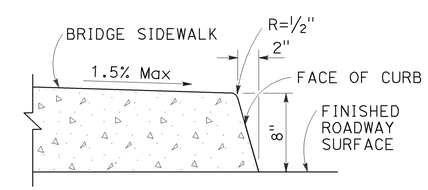

TYPE H CURB

On Bridges

CURBS

NOTES:

1. Case A driveway section typically applies.
2. X=3'-0" except for curb heights over 10" where 4:1 slopes shall be used on curb slope.
3. Sidewalk and ramp thickness "T" at driveway shall be 4" for residental and 6" for commercial.
4. Difference in slope of the driveway ramp and the slope of a line between the gutter and a point on the roadway 5'-0" from gutter line shall not exceed 15%. Reduce driveway ramp slope, not gutter slope, where required.
5. Minimum width of clear passageway for sidewalk shall be 4'-2".
6. Retaining curbs and acquisition of construction easement may be necessary for narrow sidewalks or curb heights in excess of 6".
7. Across the pedestrian route at curb ramp locations, the gutter pan slope shall not exceed 1" of depth for each 2'-0" of width.

STATE OF CALIFORNIA
DEPARTMENT OF TRANSPORTATION

CURBS AND DRIVEWAYS

NO SCALE

RSP A87A DATED JULY 19, 2013 SUPERSEDES STANDARD PLAN A87A
DATED MAY 20, 2011 - PAGE 119 OF THE STANDARD PLANS BOOK DATED 2010.

REVISED STANDARD PLAN RSP A87A

Dist	COUNTY	ROUTE	POST MILES TOTAL PROJECT	SHEET No.	TOTAL SHEETS
08	SBd	18	49.0/51.7	150	179

REGISTERED CIVIL ENGINEER

March 21, 2014
PLANS APPROVAL DATE

REGISTERED PROFESSIONAL ENGINEER Hector David Cordova No. C41957 Exp. 3-31-14 CIVIL STATE OF CALIFORNIA

THE STATE OF CALIFORNIA OR ITS OFFICERS OR AGENTS SHALL NOT BE RESPONSIBLE FOR THE ACCURACY OR COMPLETENESS OF SCANNED COPIES OF THIS PLAN SHEET.

TO ACCOMPANY PLANS DATED 6-26-15

2010 REVISED STANDARD PLAN RSP A88A

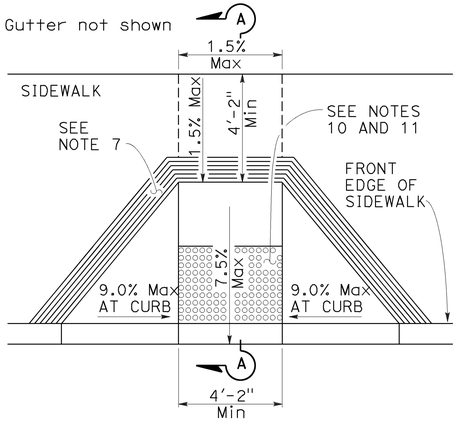

CASE A

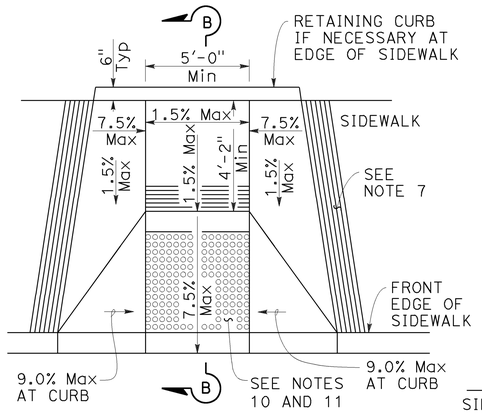

CASE B

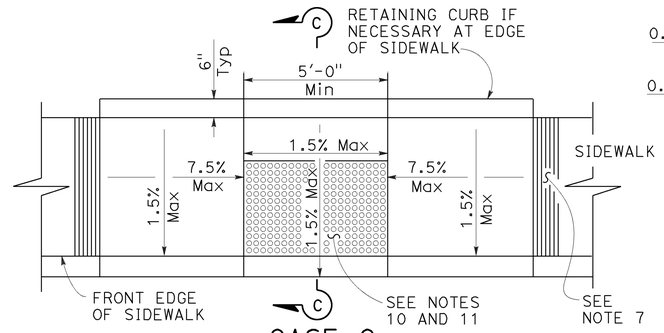

CASE C

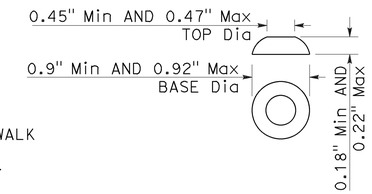

RAISED TRUNCATED DOME

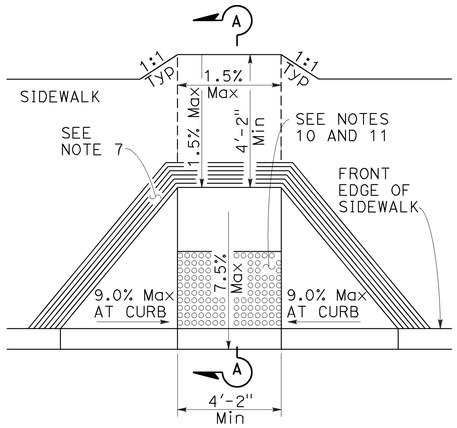

CASE D

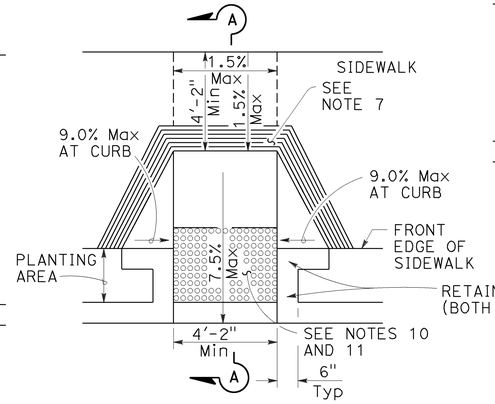

CASE E

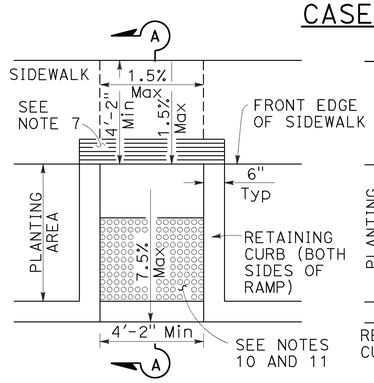

CASE F

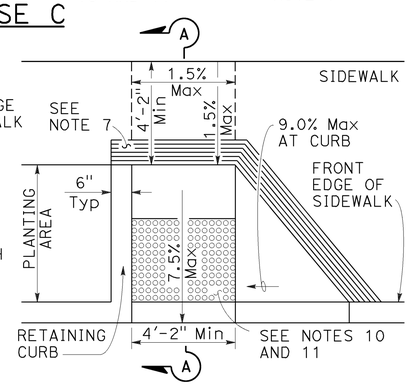

CASE G

See Note 4

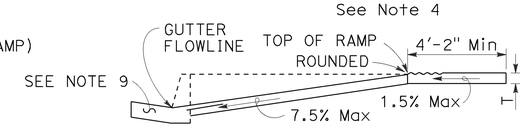

SECTION A-A

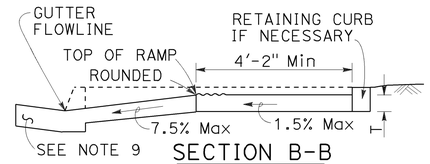

SECTION B-B

Depress entire sidewalk as required

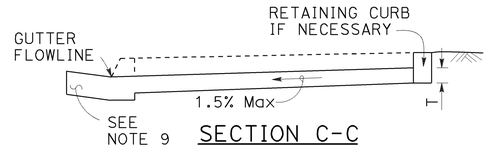

SECTION C-C

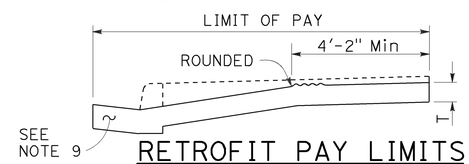

RETROFIT PAY LIMITS

Existing curb and sidewalk

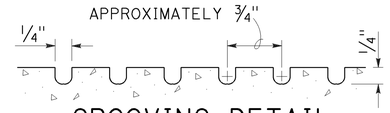

GROOVING DETAIL

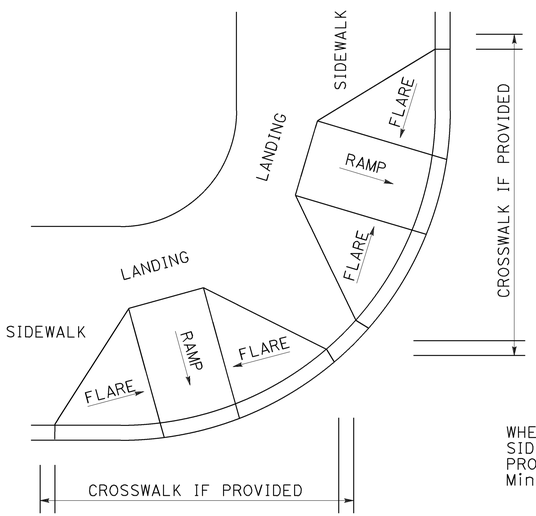

DETAIL A

TYPICAL TWO-RAMP CORNER INSTALLATION

See Note 1

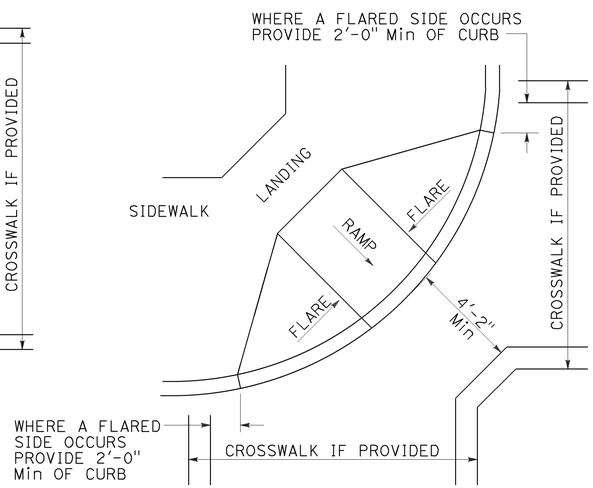

DETAIL B

TYPICAL ONE-RAMP CORNER INSTALLATION

See Notes 1 and 3

NOTES:

1. As site conditions dictate, Case A through Case G curb ramps may be used for corner installations similar to those shown in Detail A and Detail B. The case of curb ramps used in Detail A do not have to be the same. Case A through Case G curb ramps also may be used at mid block locations, as site conditions dictate.
2. If distance from curb to back of sidewalk is too short to accommodate ramp and 4'-2" platform (landing) as shown in Case A, the sidewalk may be depressed longitudinally as in Case B, or C or may be widened as in Case D.
3. When ramp is located in center of curb return, crosswalk configuration must be similar to that shown for Detail B.
4. As site conditions dictate, the retaining curb side and the flared side of the Case G ramp shall be constructed in reversed position.
5. If located on a curve, the sides of the ramp need not be parallel, but the minimum width of the ramp shall be 4'-2".
6. Side slope of ramp flares vary uniformly from a maximum of 9.0% at curb to conform with longitudinal sidewalk slope adjacent to top of the ramp, except in Case C and Case F.
7. The curb ramp shall be outlined, as shown, with a 1'-0" wide border with 1/4" grooves approximately 3/4" on center. See grooving detail.
8. Transitions from ramps and landing to walks, gutters or streets shall be flush (no lip) and free of abrupt changes.
9. Counter slopes of adjoining gutters and road surfaces immediately adjacent to and within 24 inches of the curb ramp shall not be steeper than 1:20 (5.0%). Gutter pan slope shall not exceed 1" of depth for each 2'-0" of width.
10. Curb ramps shall have a detectable warning surface that extends the full width and 3'-0" depth of the ramp. A 4'-0" wide detectable warning surface may be used on a 4'-2" wide curb ramp. Detectable Warning Surfaces shall conform to the requirements in the Standard Specifications.
11. The edge of the detectable warning surface nearest the street shall be between 6" and 8" from the gutter flowline.
12. Sidewalk and ramp thickness, "T", shall be 3½" minimum.
13. Utility pull boxes, manholes, vaults and all other utility facilities within the boundaries of the curb ramp will be relocated or adjusted to grade by the owner prior to, or in conjunction with, curb ramp construction.
14. Detectable warning surface may have to be cut to allow removal of utility covers while maintaining full detectable warning width and depth.

RAISED TRUNCATED DOME PATTERN (IN-LINE)

DETECTABLE WARNING SURFACE

See Note 10

STATE OF CALIFORNIA
DEPARTMENT OF TRANSPORTATION

CURB RAMP DETAILS

NO SCALE

RSP A88A DATED MARCH 21, 2014 SUPERSEDES RSP A88A DATED JULY 19, 2013 AND STANDARD PLAN A88A DATED MAY 20, 2011 - PAGE 121 OF THE STANDARD PLANS BOOK DATED 2010.

REVISED STANDARD PLAN RSP A88A

2-25-14

Dist	COUNTY	ROUTE	POST MILES TOTAL PROJECT	SHEET No.	TOTAL SHEETS
08	SBd	18	49.0/51.7	151	179

REGISTERED CIVIL ENGINEER

March 21, 2014
PLANS APPROVAL DATE

REGISTERED PROFESSIONAL ENGINEER Hector David Cordova No. C41957 Exp. 3-31-14 CIVIL STATE OF CALIFORNIA

THE STATE OF CALIFORNIA OR ITS OFFICERS OR AGENTS SHALL NOT BE RESPONSIBLE FOR THE ACCURACY OR COMPLETENESS OF SCANNED COPIES OF THIS PLAN SHEET.

TO ACCOMPANY PLANS DATED 6-26-15

Gutter not shown

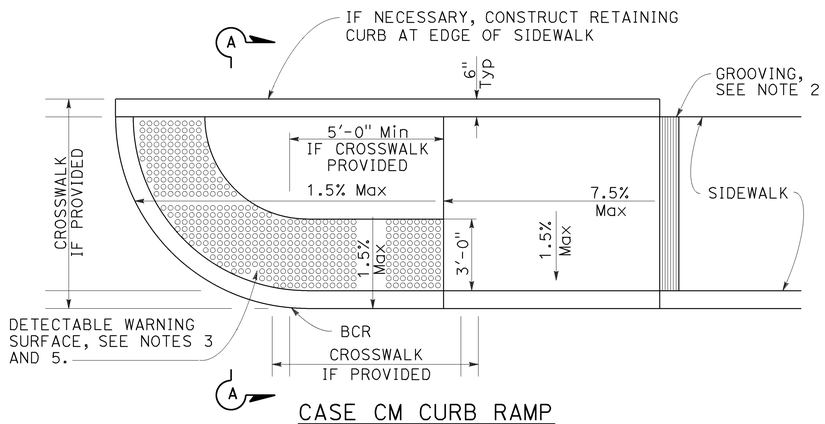

CASE CM CURB RAMP

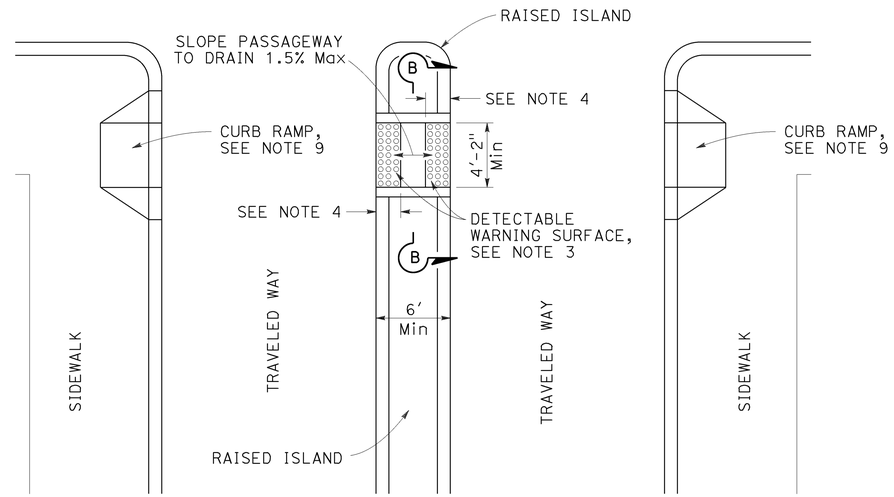

TYPE A PASSAGEWAY

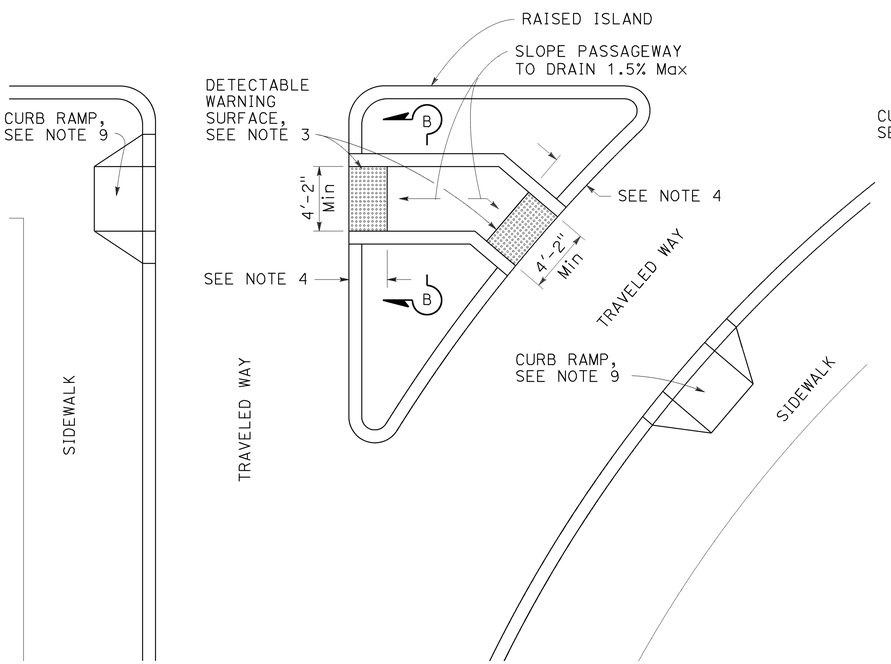

TYPE B PASSAGEWAY

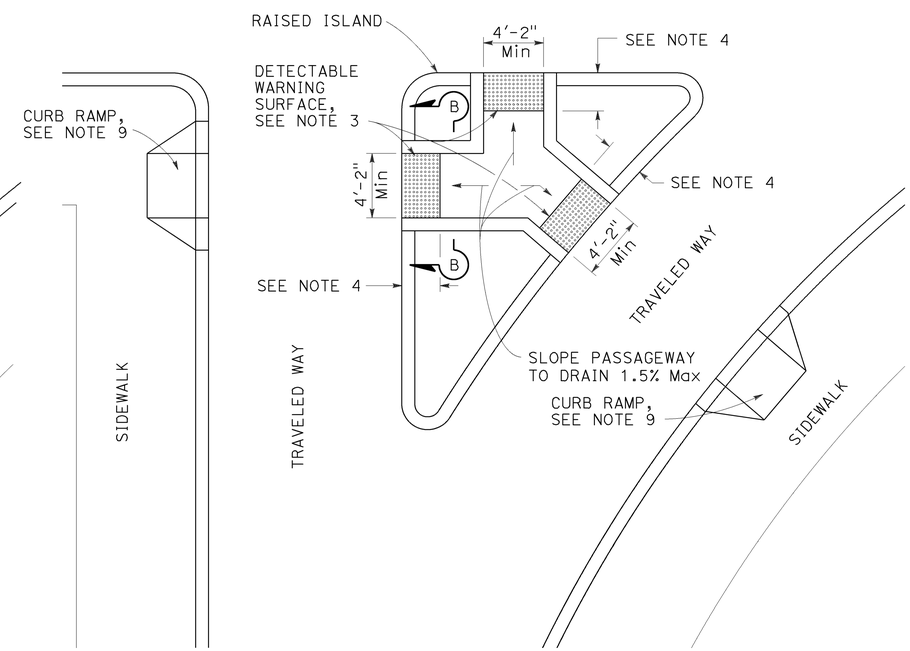

TYPE C PASSAGEWAY

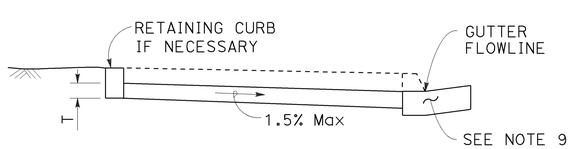

SECTION A-A

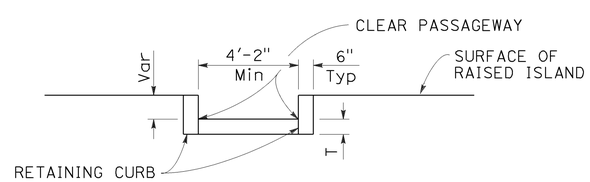

SECTION B-B

NOTES:

1. Sidewalk, ramp and passageway thickness, "T", shall be 3½" minimum.
2. For details of grooving used with Case CM curb ramp, see Revised Standard Plan RSP A88A.
3. For details of detectable warning surfaces, see Revised Standard Plan RSP A88A.
4. Where an island passageway length is greater than or equal to 6'-0", but less than 8'-0", each detectable warning surface shall extend the full width and 2'-0" depth of the passageway length. Where an island passageway length is greater than or equal to 8'-0", each detectable warning surface shall extend the full width and 3'-0" depth of the passageway length. A 4'-0" wide detectable warning surface may be used on a 4'-2" wide island passageway.
5. For Case CM curb ramp, the edge of the detectable warning surface nearest the street shall be between 6" and 8" from the gutter flowline.
6. Transitions from ramps to walks, gutters or streets shall be flush (no lip) and free of abrupt changes.
7. Utility pull boxes, manholes, vaults and all other utility facilities within the boundaries of the curb ramp will be relocated or adjusted to grade by the owner prior to, or in conjunction with, curb ramp construction.
8. Detectable warning surface may have to be cut to allow removal of utility covers while maintaining full detectable warning width and depth.
9. For additional curb ramp details, see Revised Standard Plan RSP A88A.

STATE OF CALIFORNIA
DEPARTMENT OF TRANSPORTATION

CURB RAMP AND ISLAND PASSAGEWAY DETAILS

NO SCALE

RSP A88B DATED MARCH 21, 2014 SUPERSEDES RSP A88B DATED JULY 19, 2013 AND STANDARD PLAN A88B DATED MAY 20, 2011 - PAGE 122 OF THE STANDARD PLANS BOOK DATED 2010.

REVISED STANDARD PLAN RSP A88B

2010 REVISED STANDARD PLAN RSP A88B

2-25-14

TO ACCOMPANY PLANS DATED 6-26-15

Dist	COUNTY	ROUTE	POST MILES TOTAL PROJECT	SHEET No.	TOTAL SHEETS
08	SBd	18	49.0/51.7	152	179

REGISTERED CIVIL ENGINEER

October 19, 2012
PLANS APPROVAL DATE

REGISTERED PROFESSIONAL ENGINEER Glenn DeCou No. C34547 Exp. 9-30-13 CIVIL STATE OF CALIFORNIA

THE STATE OF CALIFORNIA OR ITS OFFICERS OR AGENTS SHALL NOT BE RESPONSIBLE FOR THE ACCURACY OR COMPLETENESS OF SCANNED COPIES OF THIS PLAN SHEET.

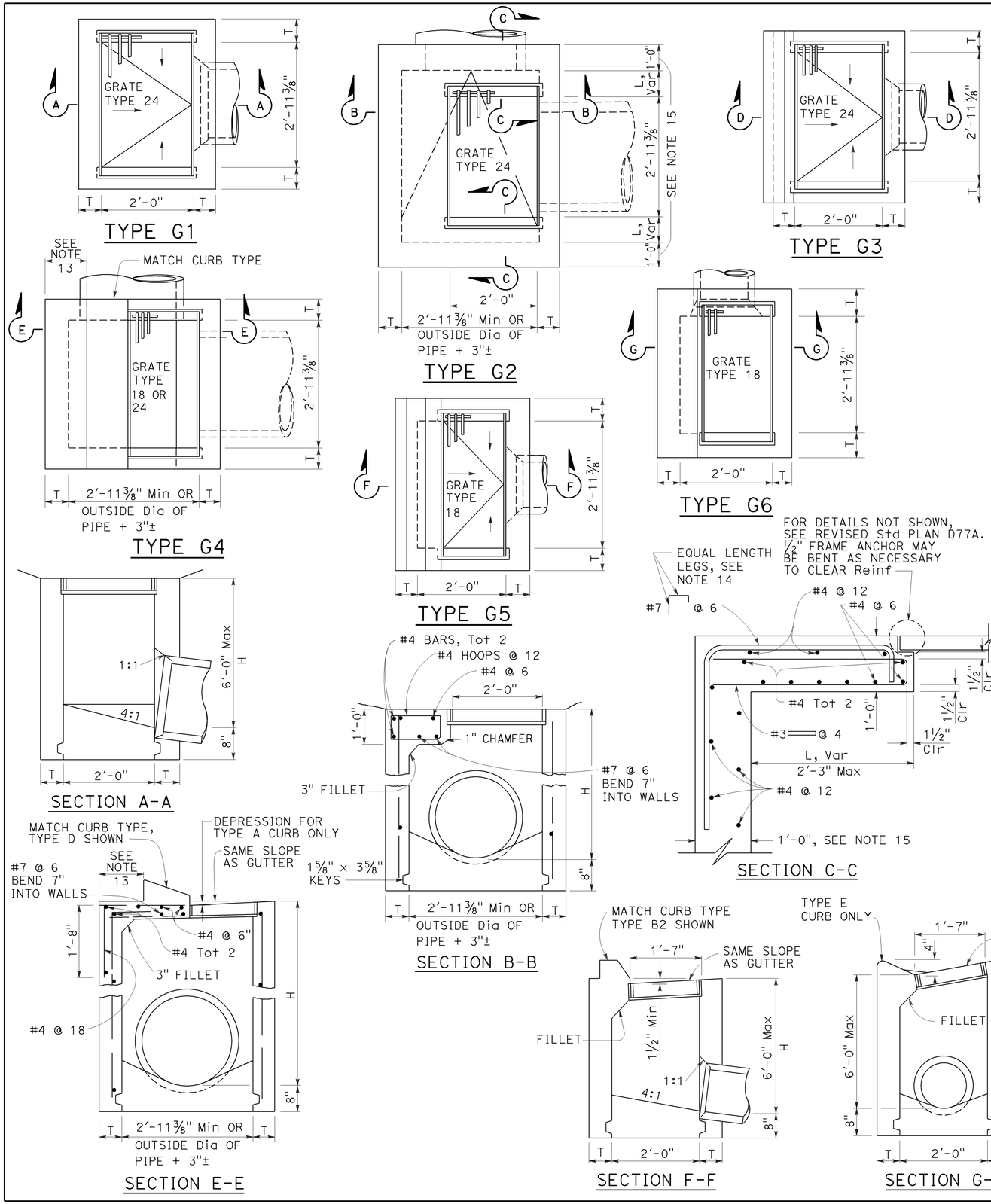

NOTES:

1. "H" is the difference in elevation between the outlet pipe flow line and the normal gutter grade line undepressed.
2. For "T" wall thickness, see Table A below.
3. Wall reinforcing not required when "H" is 8'-0" or less and the unsupported width or length is 7'-0" or less. Walls exceeding these limits shall be reinforced with #4 bars @ 1'-6" ± centers placed 1½" clear to inside of box unless otherwise shown.
4. Inlet bottom reinforcing not required. See Standard Plan D74C for alternative reinforced bottom and alternative half round bottom.
5. Steps-None required where "H" is less than 2'-6". Where "H" is 2'-6" or more, install steps with lowest rung 1'-0" above the floor and highest rung not more than 6" below top of inlet. The distance between steps shall not exceed 1'-0" and shall be uniform throughout the length of the wall. Place steps in the wall without an opening. Steps inserts may be substituted for the bar steps. Step inserts shall comply with State Industrial Safety requirements. See Standard Plan D74C for step details.
6. Details shown apply to both metal and concrete pipe.
7. Pipe(s) can be placed in any wall.
8. Curb section shall match adjacent curb.
9. Basin floors shall have wood trowel finish and a minimum slope of 12:3 from all directions toward outlet pipe.
10. Set inlet so that grate bars are parallel to direction of principal surface flow.
11. See Revised Standard Plans D77A and D77B for grate and frame details and weights of miscellaneous iron and steel.
12. See Standard Plan D78A for gutter depression details.
13. This dimenison will vary with different grates, curbs types, box width and wall thickness.
14. Bar may be rotated as necessary to clear opening. Where "L" is 6" or less, bar may be omitted.
15. Where "L" is 6" or less, wall thickness shall be as shown in Table A.
16. Cast-in-place inlets to be formed around all pipes/stubs intersecting the inlet, and concrete poured in one continuous operation. Precast inlets shall have mortared connections conforming to details for Type GCP Inlet shown on Standard Plan D75B. See Standard Specifications for mortar composition.

TABLE A

CONCRETE QUANTITIES				
TYPE	H=3'-0" TO 8'-0" (T=6")		H=8'-1" TO 20'-0" (T=8")	
	H=3'-0" (CY)	ADDITIONAL PCC PER FOOT (CY)	H=8'-1" (CY)	ADDITIONAL PCC PER FOOT (CY)
G-1	0.95	0.220	See Note A	SEE NOTE A
G-2*	1.31	0.255	3.50	0.357
G-3	1.03	0.220	See Note A	SEE NOTE A
G-4* (TYPE 24)	1.27	0.255	3.48	0.357
G-4* (TYPE 18)	1.30	0.255	3.50	0.357
G-5	1.02	0.220	SEE NOTE A	SEE NOTE A
G-6	1.04	0.220	SEE NOTE A	SEE NOTE A

TABLE BASED ON 8" FLOOR SLAB. NO DEDUCTIONS ARE TO BE MADE TO THESE QUANTITIES BECAUSE OF PIPE OPENINGS, DIFFERENT FLOOR ALTERNATIVES OR DIFFERENT CURB TYPES. * QUANTITIES FOR TYPE G-2 AND G-4 INLETS BASED ON THE MINIMUM INTERIOR DIMENSIONS.

NOTE A:

Maximum allowable height 6'-0".

STATE OF CALIFORNIA
DEPARTMENT OF TRANSPORTATION

DRAINAGE INLETS

NO SCALE

RSP D73 DATED OCTOBER 19, 2012 SUPERSEDES STANDARD PLAN D73 DATED MAY 20, 2011 - PAGE 156 OF THE STANDARD PLANS BOOK DATED 2010.

REVISED STANDARD PLAN RSP D73

2010 REVISED STANDARD PLAN RSP D73

7-19-12

Dist	COUNTY	ROUTE	POST MILES TOTAL PROJECT	SHEET No.	TOTAL SHEETS
08	SBd	18	49.0/51.7	153	179

REGISTERED CIVIL ENGINEER

April 19, 2013
PLANS APPROVAL DATE

Raymond Don Tsztoo No. C37332 Exp. 6-30-14 CIVIL STATE OF CALIFORNIA REGISTERED PROFESSIONAL ENGINEER

THE STATE OF CALIFORNIA OR ITS OFFICERS OR AGENTS SHALL NOT BE RESPONSIBLE FOR THE ACCURACY OR COMPLETENESS OF SCANNED COPIES OF THIS PLAN SHEET.

TO ACCOMPANY PLANS DATED 6-26-15

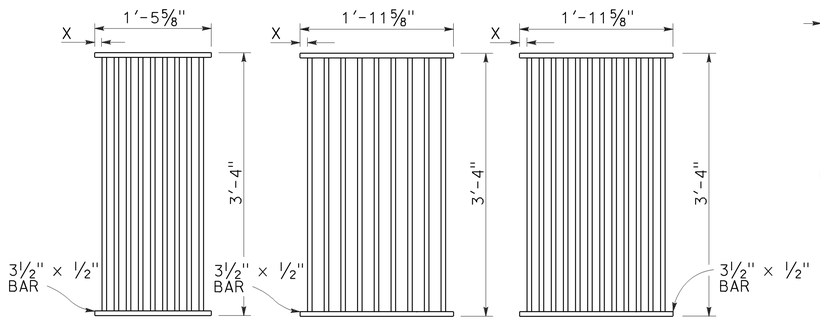

TYPE 18-9

1⅜" Clear spacing. Use within the roadbed on highways where bicycles and pedestrians are excluded.

TYPE 24-9

2" Clear spacing. Use in locations off the roadbed on all types of highways.

TYPE 24-12

1⅜" Clear spacing. Use within the roadbed on highways where bicycles and pedestrians are excluded.

RECTANGULAR GRATE DETAILS

(See table below)

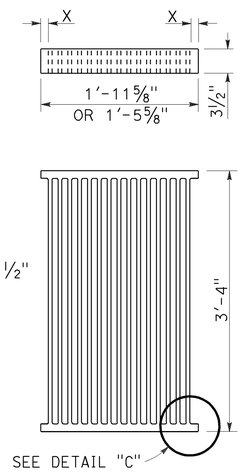

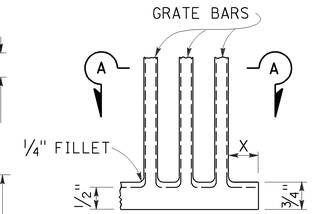

DETAIL "C"

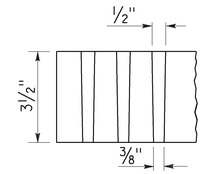

SECTION A-A

ALTERNATIVE CAST DUCTILE IRON GRATE OR CAST CARBON STEEL GRATE

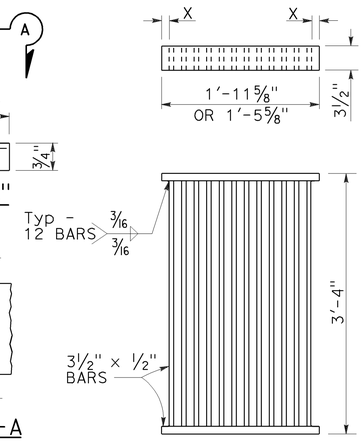

ALTERNATIVE WELDED GRATE

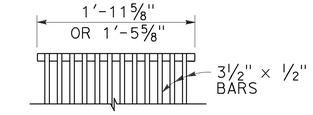

CAST END BLOCK

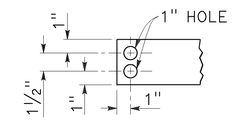

END OF BAR

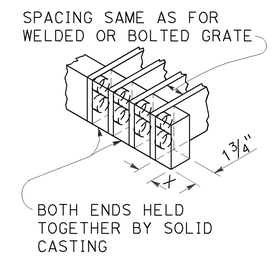

ALTERNATIVE CAST DUCTILE IRON OR CAST CARBON STEEL END BLOCK GRATE

NOTES:

1. Grate type numbers refer to approximate width of grate in inches and number of bars, respectively.
2. Contractor has the option of using cast ductile iron, cast carbon steel, welded, bolted, or cast end block grate.
3. Rounded top of bars optional on all grates.
4. Pipe inlets with a grate shall be placed so that bars parallel direction of principle surface flow.
5. Complete joint penetration butt welds may be substituted for the fillet welds on all anchors.
6. Standard square, hexagon, round or equivalent headed anchors may be substituted for the right angle hooks on the anchors shown on this plan.
7. Grate and frame weights are based on welded grates (weights of face angles, steps, protection bars, etc. are not included).
8. Connect chain to grate and frame only at locations shown on the plans. When chain is required, do not use cast ductile iron grates.

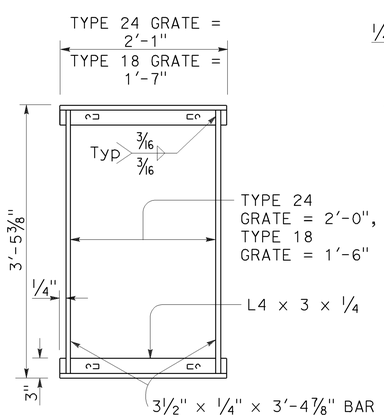

TYPICAL FRAME

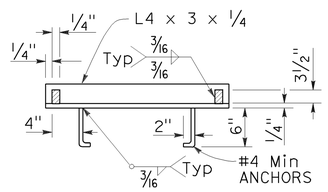

CROSS SECTION

(Thru frame)

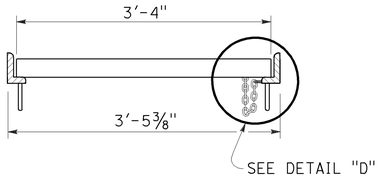

LONGITUDINAL SECTION

(Thru frame and grate)

RECTANGULAR FRAME DETAILS

(For all rectangular grates)

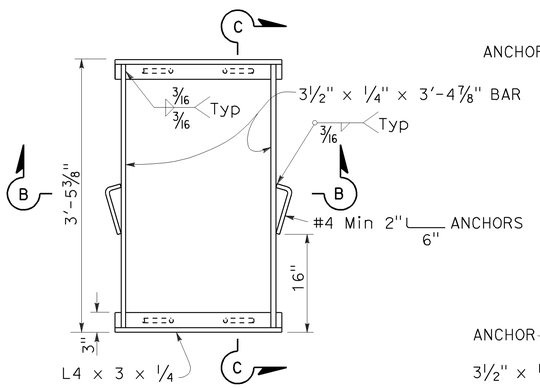

TYPICAL FRAME

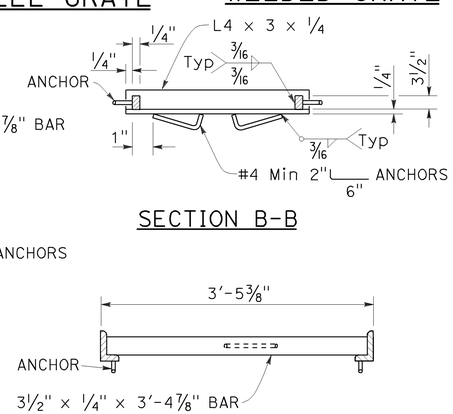

SECTION B-B

SECTION C-C

ALTERNATIVE ANCHOR FOR RECTANGULAR FRAME

(For details not shown, See Rectangular Frame Details)

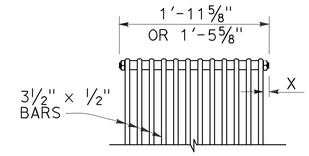

BOLTED END BLOCK

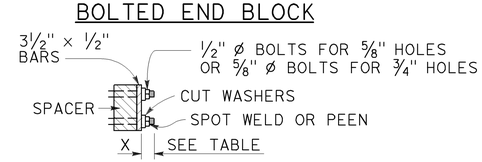

BOLTING DETAIL

ALTERNATIVE BOLTED GRATE

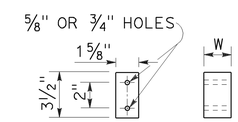

BAR SPACER

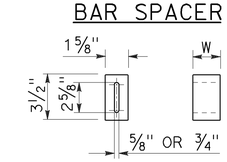

ALTERNATIVE SPACER

W = 1⅜" or 2"

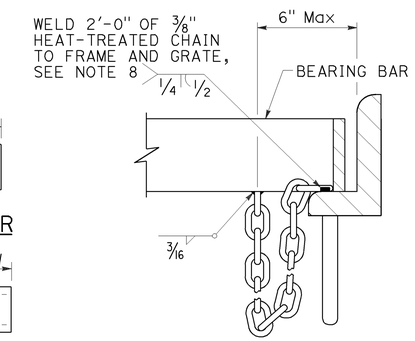

DETAIL "D"

(Steel grates only)

GRATE BAR SPACING TABLE

TYPE	No. OF BARS	CLEAR BAR SPACING	X
18-9	9	1⅜"	1 1/16"
24-9	9	2"	1 9/16"
24-12	12	1⅜"	1¼"

INLET TYPE	COVER TYPE	WEIGHT LB
OS	PLATE	174
OL-7	PLATE	170
OL-10	PLATE	170
OL-14	PLATE	170
OL-21	PLATE	170
OCP	PLATE	112
OCPI	PLATE	112
OCPI	REDWOOD	42
OMP	PLATE	177
OMPI	PLATE	177

INLET TYPE	GRATE TYPE	No. OF GRATES	WEIGHT LB
GDO	24-12	2	634
GOL-7	24-12	1	326
GOL-10	24-12	1	326
GO,G1,G2,G3,G4 (TYPE 24)	24-9	1	263
	24-12	1	326
G4 (TYPE 18),G5,G6	18-9	1	249
GT1	18-9	2	498
GT2	18-9	2	498
GT3	24-12	2	652
GT4	24-12	2	652
TRASH RACK			22
GRATE CHAIN			3

BASIS FOR Misc IRON & STEEL FINAL PAY WEIGHTS FOR DRAINAGE INLETS

(See Note 7)

STATE OF CALIFORNIA
DEPARTMENT OF TRANSPORTATION

GRATE DETAILS No. 1

NO SCALE

RSP D77A DATED APRIL 19, 2013 SUPERSEDES RSP D77A DATED JULY 20, 2012 AND STANDARD PLAN D77A DATED MAY 20, 2011 - PAGE 164 OF THE STANDARD PLANS BOOK DATED 2010.

REVISED STANDARD PLAN RSP D77A

2010 REVISED STANDARD PLAN RSP D77A

4-4-13

Dist	COUNTY	ROUTE	POST MILES TOTAL PROJECT	SHEET No.	TOTAL SHEETS
08	SBd	18	49.0/51.7	154	179

Raymond Don Tsztoo
REGISTERED CIVIL ENGINEER

April 19, 2013
PLANS APPROVAL DATE

REGISTERED PROFESSIONAL ENGINEER
Raymond Don Tsztoo
No. C37332
Exp. 6-30-14
CIVIL
STATE OF CALIFORNIA

THE STATE OF CALIFORNIA OR ITS OFFICERS OR AGENTS SHALL NOT BE RESPONSIBLE FOR THE ACCURACY OR COMPLETENESS OF SCANNED COPIES OF THIS PLAN SHEET.

TO ACCOMPANY PLANS DATED 6-26-15

2010 REVISED STANDARD PLAN RSP D77B

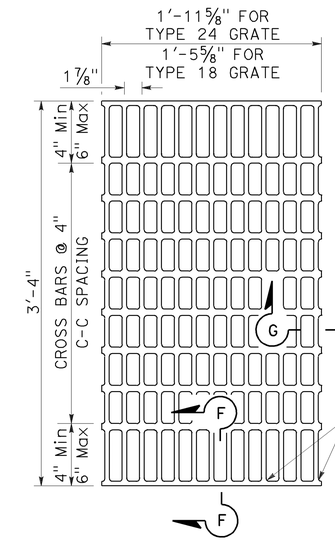

NOTES:

Bearing bars to be 3½" × ¼" bars on 1⅞" centers.

⅜"± ø Cross bars may be fillet welded, resistance welded or electroforged to bearing bars.

Weight of Type 24 grate = 141 LBS.

Weight of Type 18 grate = 107 LBS. (Type 24 grate shown).

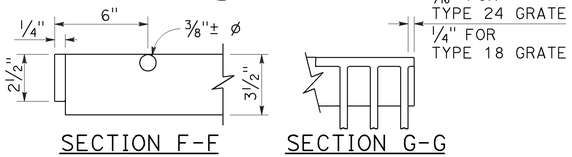

SECTION F-F SECTION G-G

TYPE 18-10 AND 24-13 GRATE

(Welded Steel)

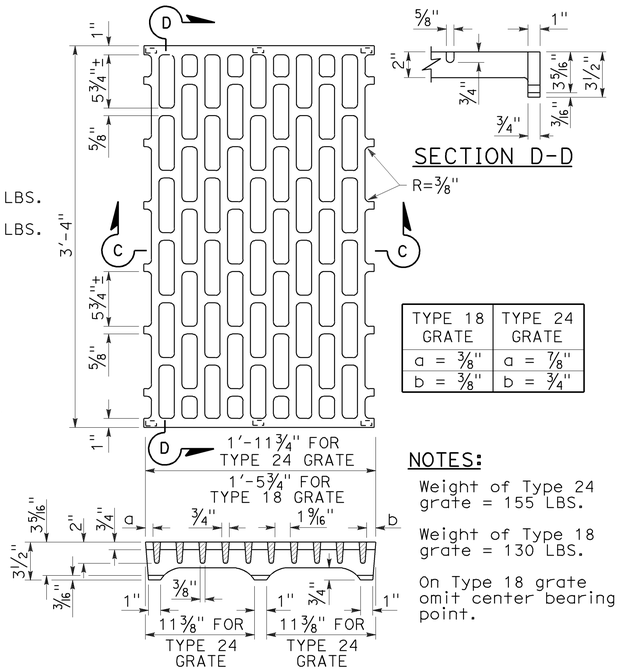

TYPE 18 GRATE	TYPE 24 GRATE
a = ⅜"	a = ⅞"
b = ⅜"	b = ¾"

NOTES:

Weight of Type 24 grate = 155 LBS.

Weight of Type 18 grate = 130 LBS.

On Type 18 grate omit center bearing point.

SECTION C-C

TYPE 18-8C AND 24-10C GRATE

(Cast ductile iron)

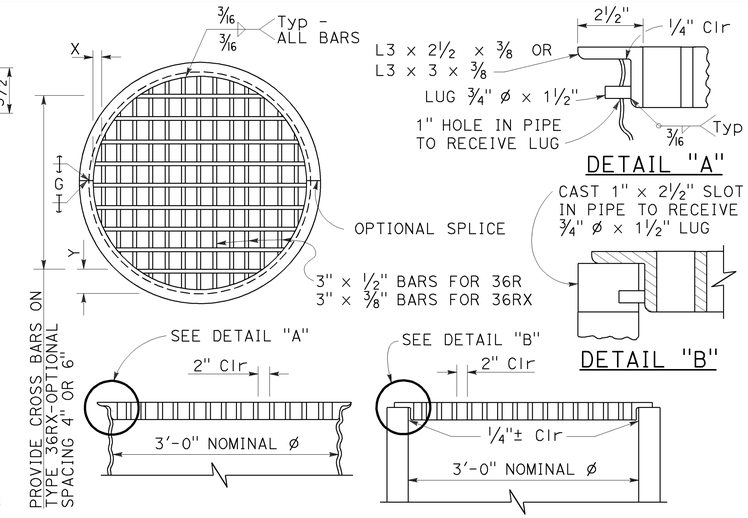

DETAIL "A"

DETAIL "B"

TYPE 36R AND 36RX GRATE DETAILS

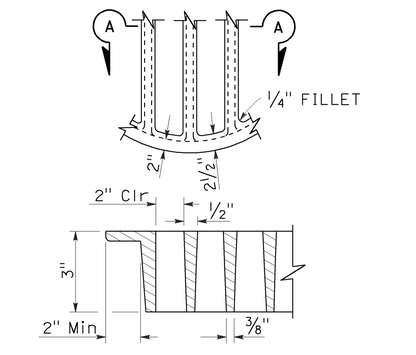

SECTION A-A

ALTERNATIVE CAST DUCTILE IRON GRATE OR CAST CARBON STEEL GRATE TYPE 36R AND 36RX

BASIS FOR Misc IRON AND STEEL FINAL PAY WEIGHTS FOR DRAINAGE INLETS

INLET TYPE	GRATE TYPE	No. OF GRATES	WEIGHT LB
GDO (SEE NOTE 4)	24-10C	2	391
	24-10S	2	456
	24-12X	2	473
	24-13	2	374
GO,GOL,G1,G2, G3,G4 (TYPE 24)	24-10C	1	202
	24-10S	1	229
	24-12X	1	239
	24-13	1	188
G4 (TYPE 18) G5,G6	18-8S	1	187
	18-9X	1	187
	18-10	1	149
GT1,GT2	18-8S	2	374
	18-9X	2	374
	18-10	2	298
GT3,GT4	24-10C	2	404
	24-10S	2	458
	24-12X	2	478
	24-13	2	376
ODI	36RX (Mod)	1	196
GMP,GCP,GCPI	36RX	1	215
ODI	36R (Mod)	1	220
GMP,GCP,GCPI	36R	1	236
TRASH RACK			22
GRATE CHAIN			3

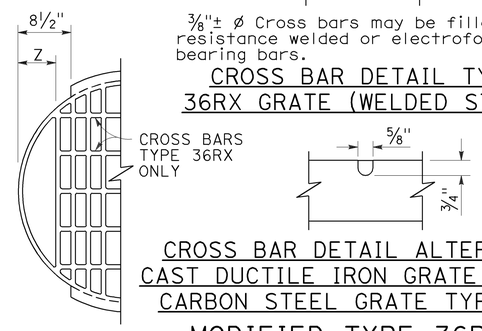

CROSS BAR DETAIL TYPE 36RX GRATE (WELDED STEEL)

CROSS BAR DETAIL ALTERNATIVE CAST DUCTILE IRON GRATE OR CAST CARBON STEEL GRATE TYPE 36RX

MODIFIED TYPE 36R AND 36RX GRATE FOR ODI INLET

NOTES:

1. When alternative grates are allowed - Final pay based on alternative with the lesser weight.
2. Use frame shown on Standard Plan D74A, D74B or RSP D77A as appropriate.
3. When Type 24-10S, 24-12X or 24-13 grates are used with GDO Inlets, a ¼" × 3½" × 3'-4⅞" steel bar shall be welded across the center of inlet frame to separate the individual grates.
4. See Revised Standard Plan RSP D77A for connecting chain to welded grate and frame. When chain is required, do not use cast ductile iron grate.

GRATE BAR SPACING TABLE

TYPE	No. OF BARS	CLEAR BAR SPACING	X	Y 4" SPACING	Y 6" SPACING	Z
36R	13	2"	2⅛"	-	-	-
36RX (STEEL)	15	2"	9/16"	3¾"	5¾"	-
36RX (CAST)	13	2"	2⅛"	3¾"	5¾"	-
36R Mod	12	2"	2⅛"	-	-	5"
36RX Mod (STEEL)	13	2"	9/16"	3¾"	5¾"	5 11/16"
36RX Mod (CAST)	12	2"	2⅛"	3¾"	5¾"	5"

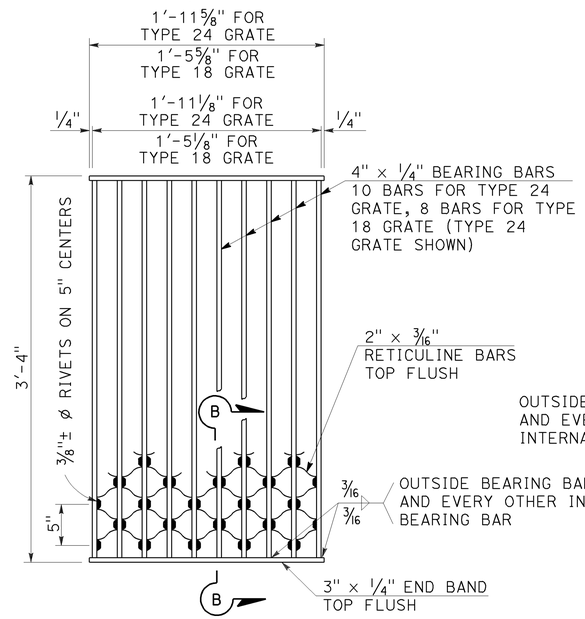

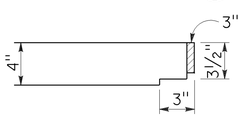

NOTES:

Weight of Type 24 grate = 182 LBS.
Weight of Type 18 grate = 145 LBS.

SECTION B-B

TYPE 18-8S AND 24-10S GRATE

(Welded Steel) Reticuline type

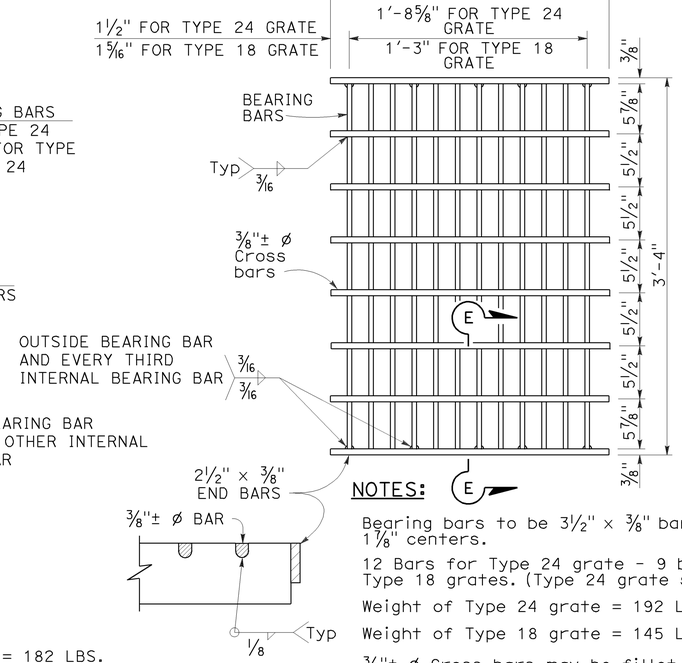

SECTION E-E

NOTES:

Bearing bars to be 3½" × ⅜" bars on 1⅞" centers.

12 Bars for Type 24 grate - 9 bars for Type 18 grates. (Type 24 grate shown).

Weight of Type 24 grate = 192 LBS.

Weight of Type 18 grate = 145 LBS.

⅜"± ø Cross bars may be fillet welded, resistance welded or electroforged to bearing bars.

TYPE 18-9X AND 24-12X GRATE

(Welded Steel)

STATE OF CALIFORNIA
DEPARTMENT OF TRANSPORTATION

GRATE DETAILS No. 2

NO SCALE

RSP D77B DATED APRIL 19, 2013 SUPERSEDES RSP D77B DATED JULY 20, 2012 AND STANDARD PLAN D77B DATED MAY 20, 2011 - PAGE 165 OF THE STANDARD PLANS BOOK DATED 2010.

REVISED STANDARD PLAN RSP D77B

4-4-13

Dist	COUNTY	ROUTE	POST MILES TOTAL PROJECT	SHEET No.	TOTAL SHEETS
08	SBd	18	49.0/51.7	155	179

REGISTERED CIVIL ENGINEER

April 19, 2013
PLANS APPROVAL DATE

REGISTERED PROFESSIONAL ENGINEER
Gurinderpal Bhullar
No. C48815
Exp. 9-30-14
CIVIL
STATE OF CALIFORNIA

THE STATE OF CALIFORNIA OR ITS OFFICERS OR AGENTS SHALL NOT BE RESPONSIBLE FOR THE ACCURACY OR COMPLETENESS OF SCANNED COPIES OF THIS PLAN SHEET.

TO ACCOMPANY PLANS DATED 6-26-15

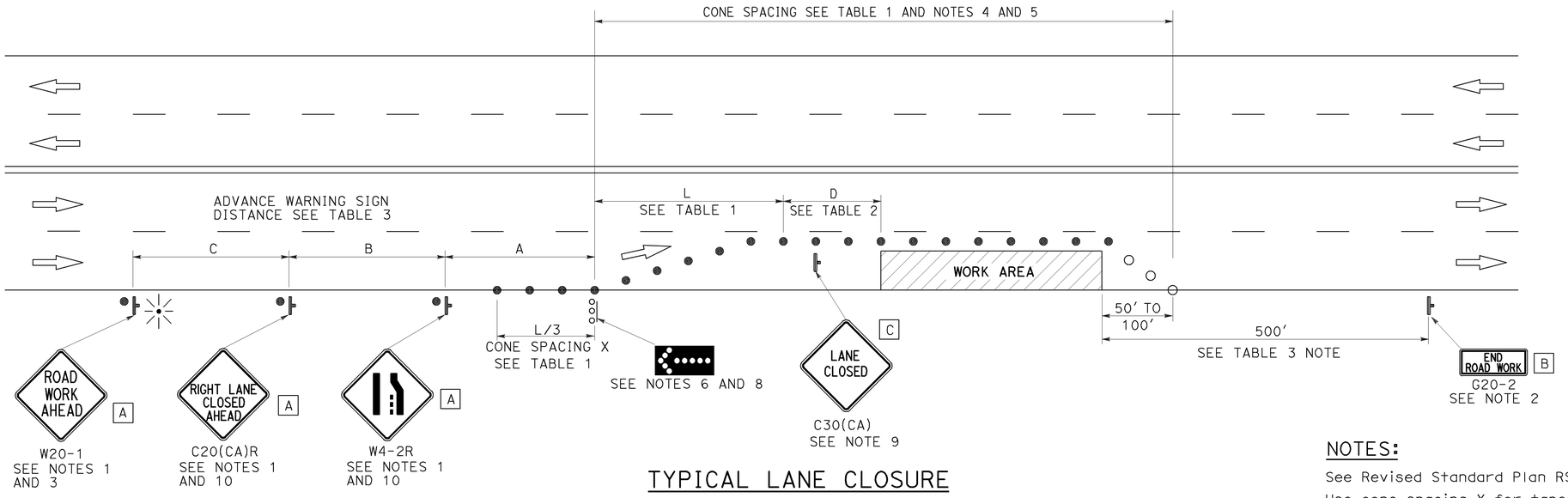

TYPICAL LANE CLOSURE

NOTES:

See Revised Standard Plan RSP T9 for tables.

Use cone spacing X for taper segment, Y for tangent segment or Z for conflict situations, as approriate, per Table 1, unless X, Y, or Z cone spacing is shown on this sheet.

Unless otherwise specified in the special provisions, all temporary warning signs shall have black legend on fluorescent orange background.

California codes are designated by (CA). Otherwise, Federal (MUTCD) codes are shown.

NOTES:

1. Each advance warning sign shall be equipped with at least two flags for daytime closure. Each flag shall be at least 16" x 16" in size and shall be orange or fluorescent red-orange in color. Flashing beacons shall be placed at the locations indicated for lane closure during hours of darkness.
2. A G20-2 "END ROAD WORK" sign, as appropriate, shall be placed at the end of the lane closure unless the end of work area is obvious, or ends within a larger project's limits.
3. If the W20-1 sign would follow within 2000' of a stationary W20-1 or G20-1 "ROAD WORK NEXT _____ MILES", use a C20(CA) sign for the first advance warning sign.
4. All cones used for lane closures during the hours of darkness shall be fitted with retroreflective bands (or sleeves) as specified in the specifications.
5. Portable delineators, placed at one-half the spacing indicated for traffic cones, may be used instead of cones for daytime closures only.
6. Flashing arrow sign shall be either Type I or Type II.
7. For approach speeds over 50 mph, use the "Traffic Control System for Lane Closure On Freeways And Expressways" plan for lane closure details and requirements.
8. A minimum 1500' of sight distance shall be provided where possible for vehicles approaching the first flashing arrow sign. Lane closures shall not begin at the top of crest vertical curve or on a horizontal curve.
9. Place a C30(CA) sign every 2000' throughout length of lane closure.
10. Median lane closures shall conform to the details as shown except that C20(CA)L and W4-2L signs shall be used.
11. At least one person shall be assigned to provide full time maintenance of traffic control devices for lane closure unless, otherwise directed by the Engineer.

LEGEND

- TRAFFIC CONE
- TRAFFIC CONE (OPTIONAL TAPER)
- TEMPORARY TRAFFIC CONTROL SIGN
- FLASHING ARROW SIGN (FAS)
- FAS SUPPORT OR TRAILER
- PORTABLE FLASHING BEACON

SIGN PANEL SIZE (Min)

A	48" x 48"
B	36" x 18"
C	30" x 30"

STATE OF CALIFORNIA
DEPARTMENT OF TRANSPORTATION

TRAFFIC CONTROL SYSTEM FOR LANE CLOSURE ON MULTILANE CONVENTIONAL HIGHWAYS

NO SCALE

RSP T11 DATED APRIL 19, 2013 SUPERSEDES STANDARD PLAN T11 DATED MAY 20, 2011 - PAGE 239 OF THE STANDARD PLANS BOOK DATED 2010.

REVISED STANDARD PLAN RSP T11

2010 REVISED STANDARD PLAN RSP T11

4-2-13

Dist	COUNTY	ROUTE	POST MILES TOTAL PROJECT	SHEET No.	TOTAL SHEETS
08	SBd	18	49.0/51.7	156	179

Devinder Singh
REGISTERED CIVIL ENGINEER

October 17, 2014
PLANS APPROVAL DATE

REGISTERED PROFESSIONAL ENGINEER
Devinder Singh
No. C50470
Exp. 6-30-15
CIVIL
STATE OF CALIFORNIA

THE STATE OF CALIFORNIA OR ITS OFFICERS OR AGENTS SHALL NOT BE RESPONSIBLE FOR THE ACCURACY OR COMPLETENESS OF SCANNED COPIES OF THIS PLAN SHEET.

TO ACCOMPANY PLANS DATED 6-26-15

2010 REVISED STANDARD PLAN RSP T13

NOTES:

See Revised Standard Plan RSP T9 for tables.

Use cone spacing X for taper segment, Y for tangent segment or Z for conflict situations, as approriate, per Table 1, unless X, Y, or Z cone spacing is shown on this sheet.

Unless otherwise specified in the special provisions, all temporary warning signs shall have black legend on fluorescent orange background.

California codes are designated by (CA). Otherwise, Federal (MUTCD) codes are shown.

TYPICAL LANE CLOSURE WITH REVERSIBLE CONTROL

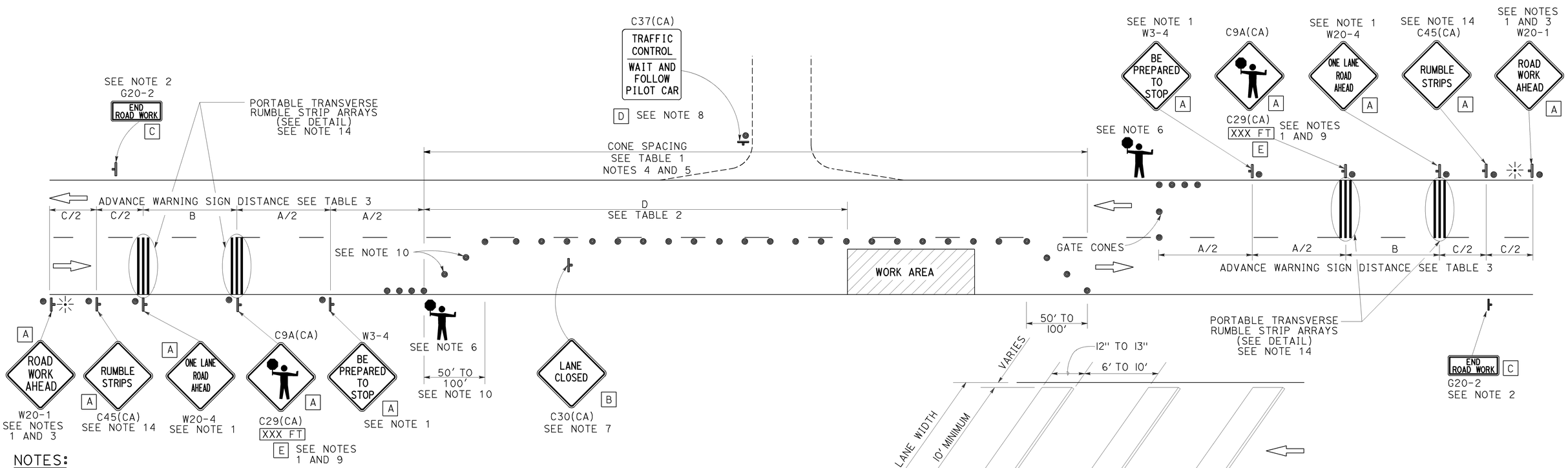

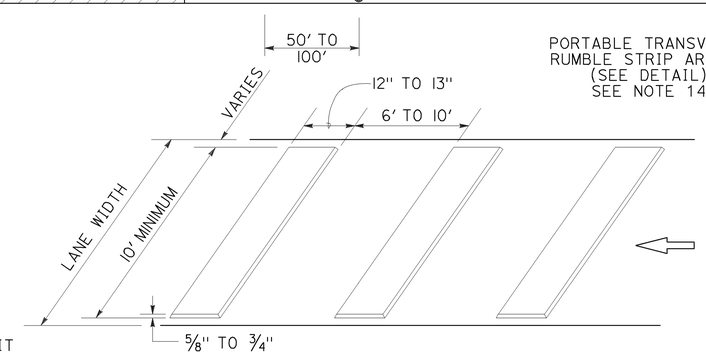

PORTABLE TRANSVERSE RUMBLE STRIP ARRAY DETAIL

NOTES:

1. Each advance warning sign in each direction of travel shall be equipped with at least two flags for daytime closure. Each flag shall be at least 16" x 16" in size and shall be orange or fluorescent red-orange in color. Flashing beacons shall be placed at the locations indicated for lane closure during hours of darkness.
2. A G20-2 "END ROAD WORK" sign, as appropriate, shall be placed at the end of the lane control unless the end of work area is obvious, or ends within a larger project's limits.
3. If the W20-1 sign would follow within 2000' of a stationary W20-1 or G20-1 "ROAD WORK NEXT _____ MILES", use a W20-4 sign for the first advance warning sign.
4. All cones used for lane closures during the hours of darkness shall be fitted with retroreflective bands (or sleeves) as specified in the specifications.
5. Portable delineators, placed at one-half the spacing indicated for traffic cones, may be used instead of cones for daytime closures only.
6. Additional advance flaggers may be required. Flagger should stand in a conspicuous place, be visible to approaching traffic as well as approaching vehicles after the first vehicle has stopped. During the hours of darkness, the flagging-station and flagger shall be illuminated and clearly visible to approaching traffic. The illumination footprint of the lighting on the ground shall be at least 20' in diameter. Place a minimum of four cones at 50' intervals in advance of flagger station as shown.
7. Place C30(CA) "LANE CLOSED" sign at 500' to 1000' intervals throughout extended work areas. They are optional if the work area is visible from the flagger station.
8. When a pilot car is used, place a C37(CA) "TRAFFIC CONTROL-WAIT AND FOLLOW PILOT CAR" sign with black legend on white background at all intersections, driveways and alleys without a flagger within traffic control area. Signs shall be clean and visible at all times. Where traffic can not be effectively self-regulated, at least one flagger shall be used at each intersection within traffic control area.
9. An optional C29(CA) sign may be placed below the C9A(CA) sign.
10. Either traffic cones or barricades shall be placed on the taper. Barricades shall be Type I, II, or III.
11. The color of the portable transverse rumble strips shall be black or orange. Use 2 arrays, each array shall consist of 3 rumble strips.
12. Portable transverse rumble strips shall not be placed on sharp horizontal or vertical curves nor shall they be placed through pedestrian crossings.
13. If the portable transverse rumble strips become out of alignment (skewed) by more than 6 inches, measured from one end to the other, they shall be readjusted to bring the placement back to the original location.
14. Portable transverse rumble strips are not required if any one of the following conditions is satisfied:
    A. Work duration occupies a location for four hours or less
    B. Posted speed limit is below 45 MPH
    C. Work is of emergency nature
    D. Work zone is in snow or icy weather conditions

LEGEND

- TRAFFIC CONE
- TEMPORARY TRAFFIC CONTROL SIGN
- PORTABLE FLASHING BEACON
- FLAGGER

SIGN PANEL SIZE (Min)

A	48" x 48"
B	30" x 30"
C	36" x 18"
D	36" x 42"
E	20" x 7"

STATE OF CALIFORNIA
DEPARTMENT OF TRANSPORTATION

TRAFFIC CONTROL SYSTEM FOR LANE CLOSURE ON TWO LANE CONVENTIONAL HIGHWAYS

NO SCALE

RSP T13 DATED OCTOBER 17, 2014 SUPERSEDES RSP T13 DATED JULY 18, 2014 AND RSP T13 DATED APRIL 19, 2013 AND STANDARD PLAN T13 DATED MAY 20, 2011 - PAGE 241 OF THE STANDARD PLANS BOOK DATED 2010.

REVISED STANDARD PLAN RSP T13

9-26-14

Dist	COUNTY	ROUTE	POST MILES TOTAL PROJECT	SHEET No.	TOTAL SHEETS
08	SBd	18	49.0/51.7	157	179

Theresa Gabriel
REGISTERED ELECTRICAL ENGINEER

July 19, 2013
PLANS APPROVAL DATE

REGISTERED PROFESSIONAL ENGINEER Theresa Aziz Gabriel No. E15129 Exp. 6-30-14 ELECTRICAL STATE OF CALIFORNIA

THE STATE OF CALIFORNIA OR ITS OFFICERS OR AGENTS SHALL NOT BE RESPONSIBLE FOR THE ACCURACY OR COMPLETENESS OF SCANNED COPIES OF THIS PLAN SHEET.

TO ACCOMPANY PLANS DATED 6-26-15

LEGEND:

AB	ABANDON. IF APPLIED TO CONDUIT, REMOVE CONDUCTORS
BC	INSTALL PULL BOX IN EXISTING CONDUIT RUN
BP	PEDESTRIAN BARRICADE, TYPE AS INDICATED ON PLAN
CB	INSTALL CONDUIT INTO EXISTING PULL BOX
CC	CONNECT NEW AND EXISTING CONDUIT. REMOVE EXISTING CONDUCTORS AND INSTALL CONDUCTORS AS INDICATED
CF	CONDUIT TO REMAIN FOR FUTURE USE. REMOVE CONDUCTORS. INSTALL PULL TAPE
DH	DETECTOR HANDHOLE
FA	FOUNDATION TO BE ABANDONED
IS	INSTALL SIGN ON SIGNAL MAST ARM
NS	NO SLIP BASE ON STANDARD
PEC	PHOTOELECTRIC CONTROL
PEU	PHOTOELECTRIC UNIT
RC	EQUIPMENT OR MATERIAL TO BE REMOVED AND BECOME THE PROPERTY OF THE CONTRACTOR
RE	REMOVE ELECTROLIER, FUSES AND BALLAST. TAPE ENDS OF CONDUCTORS
RL	RELOCATE EQUIPMENT
RR	REMOVE AND REUSE EQUIPMENT
RS	REMOVE AND SALVAGE EQUIPMENT
SC	SPLICE NEW TO EXISTING CONDUCTORS
SD	SERVICE DISCONNECT
TSP	TELEPHONE SERVICE POINT

ABBREVIATIONS

APS	ACCESSIBLE PEDESTRIAN SIGNAL
BBS	BATTERY BACKUP SYSTEM
BC	BOLT CIRCLE
BPB	BICYCLE PUSH BUTTON
C	CONDUIT
CB	CIRCUIT BREAKER
CCTV	CLOSED CIRCUIT TELEVISION
Ckt	CIRCUIT
CMS	CHANGEABLE MESSAGE SIGN
Ctid	CALTRANS IDENTIFICATION
Comm	COMMUNICATION
DLC	LOOP DETECTOR LEAD-IN CABLE
EMS	EXTINGUISHABLE MESSAGE SIGN
EVUC	EMERGENCY VEHICLE UNIT CABLE
EVUD	EMERGENCY VEHICLE UNIT DETECTOR
FB	FLASHING BEACON
FBCA	FLASHING BEACON CONTROL ASSEMBLY
FBS	FLASHING BEACON WITH SLIP BASE
FO	FIBER OPTIC
G	EQUIPMENT GROUNDING CONDUCTOR
GB	GROUND BUS
GFCI	GROUND FAULT CIRCUIT INTERRUPTER
HAR	HIGHWAY ADVISORY RADIO
Hex	HEXAGONAL
HPS	HIGH PRESSURE SODIUM
IISNS	INTERNALLY ILLUMINATED STREET NAME SIGN
ISL	INDUCTION SIGN LIGHTING
LED	LIGHT EMITTING DIODE
LMA	LUMINAIRE MAST ARM
LPS	LOW PRESSURE SODIUM
Ltg	LIGHTING
Lum	LUMINAIRE
M	METERED
MAT	MAST ARM MOUNTING TOP ATTACHMENT
MAS	MAST ARM MOUNTING SIDE ATTACHMENT
M/M	MULTIPLE TO MULTIPLE TRANSFORMER
Mtg	MOUNTING
MV	MERCURY VAPOR LIGHTING FIXTURE
MVDS	MICROWAVE VEHICLE DETECTION SYSTEM
N	NEUTRAL (GROUNDED CONDUCTOR)
NB	NEUTRAL BUS
NC	NORMALLY CLOSE
NO	NORMALLY OPEN
P	CIRCUIT BREAKER'S POLE
PB	PULL BOX
PBA	PUSH BUTTON ASSEMBLY
PEC	PHOTOELECTRIC CONTROL
Ped	PEDESTRIAN
PEU	PHOTOELECTRIC UNIT
PT	CONDUIT WITH PULL TAPE
RE	RELOCATED EQUIPMENT
RM	RAMP METERING
RWIS	ROADSIDE WEATHER INFORMATION SYSTEM
SB	SLIP BASE
SIC	SIGNAL INTERCONNECT CABLE
Sig	SIGNAL
SMA	SIGNAL MAST ARM
SNS	STREET NAME SIGN
SP	SERVICE POINT
TDC	TELEPHONE DEMARCATION CABINET
TMS	TRAFFIC MONITORING STATION
TOS	TRAFFIC OPERATIONS SYSTEM
Veh	VEHICLE
VIVDS	VIDEO IMAGE VEHICLE DETECTION SYSTEM
WIM	WEIGH-IN-MOTION
Xfmr	TRANSFORMER

SOFFIT AND WALL MOUNTED LUMINAIRES

PENDANT, 70 W HPS UNLESS OTHERWISE SPECIFIED

FLUSH, 70 W HPS UNLESS OTHERWISE SPECIFIED

WALL SURFACE, 70 W HPS UNLESS OTHERWISE SPECIFIED

EXISTING SOFFIT OR WALL LUMINAIRE TO REMAIN UNMODIFIED

EXISTING SOFFIT OR WALL LUMINAIRE TO BE MODIFIED AS SPECIFIED

NOTE:

Arrow indicates "street side" of luminaire.

COMMONLY USED SYMBOLS FOR UNITED STATES CUSTOMARY UNITS OF MEASUREMENT:

SYMBOL USED	DEFINITIONS
Ω	OHMS
min	MINUTE
s	SECOND
bps	BITS PER SECOND
Bps	BYTES PER SECOND
A	AMPERE
V	VOLT
V(dc)	VOLT (DIRECT CURRENT)
V(ac)	VOLT (ALTERNATING CURRENT)
FC	FOOT - CANDLE
W	WATTS
VA	VOLT-AMPERE
M	MEGA
k	KILO
m	MILLI
μ	MICRO
P	PICO
Hz	HERTZ

MISCELLANEOUS ELECTROLIERS

NEW	EXISTING	
		LUMINAIRE ON WOOD POLE
		NON-STANDARD ELECTROLIER (SEE PROJECT NOTES OR PROJECT PLANS)
		CITY ELECTROLIER
		ELECTROLIER FOUNDATION (FUTURE INSTALLATION)

NOTES:

1. HPS luminaires shall be 310 W HPS when installed on Type 21, 21D, 30, 31 and 32 Standards, unless otherwise specified. HPS luminaires shall be 200 W when installed on other type standards or poles, unless otherwise specified.
2. LED luminaires shall be 235 W when installed on Type 21, 21D, 30, 31 and 32 Standards, unless otherwise specified. LED luminaires shall be 165 W when installed on other type standards or poles, unless otherwise specified.
3. Luminaires shall be the cutoff type, ANSI Type III medium cutoff lighting distribution, unless otherwise specified.

STANDARD ELECTROLIER

NEW	EXISTING	STANDARD TYPE
		15
		15D
		15 STRUCTURE
		15D STRUCTURE
		21
		21D
		21 STRUCTURE
		21D STRUCTURE
		30
		31
		32

STATE OF CALIFORNIA
DEPARTMENT OF TRANSPORTATION

ELECTRICAL SYSTEMS (LEGEND AND ABBREVIATIONS)

NO SCALE

RSP ES-1A DATED JULY 19, 2013 SUPERSEDES STANDARD PLAN ES-1A DATED MAY 20, 2011 - PAGE 425 OF THE STANDARD PLANS BOOK DATED 2010.

REVISED STANDARD PLAN RSP ES-1A

2010 REVISED STANDARD PLAN RSP ES-1A

Dist	COUNTY	ROUTE	POST MILES TOTAL PROJECT	SHEET No.	TOTAL SHEETS
08	SBd	18	49.0/51.7	158	179

Theresa Gabriel
REGISTERED ELECTRICAL ENGINEER

July 19, 2013
PLANS APPROVAL DATE

REGISTERED PROFESSIONAL ENGINEER
Theresa Aziz Gabriel
No. E15129
Exp. 6-30-14
ELECTRICAL
STATE OF CALIFORNIA

THE STATE OF CALIFORNIA OR ITS OFFICERS OR AGENTS SHALL NOT BE RESPONSIBLE FOR THE ACCURACY OR COMPLETENESS OF SCANNED COPIES OF THIS PLAN SHEET.

TO ACCOMPANY PLANS DATED 6-26-15

CONDUIT

NEW	EXISTING	
		LIGHTING CONDUIT, UNLESS OTHERWISE INDICATED OR NOTED
		TRAFFIC SIGNAL CONDUIT
C	c	COMMUNICATION CONDUIT
T	t	TELEPHONE CONDUIT
F	f	FIRE ALARM CONDUIT
FO	fo	FIBER OPTIC CONDUIT
		CONDUIT TERMINATION
R	r	CONDUIT RISER ATTACHED TO THE STRUCTURE OR SERVICE POLE

SERVICE EQUIPMENT

NEW	EXISTING	
OH	oh	OVERHEAD LINES
U	U	WOOD POLE, "U" INDICATES UTILITY OWNED
		POLE GUY WITH ANCHOR
		UTILITY TRANSFORMER - GROUND MOUNTED
III	III	SERVICE EQUIPMENT ENCLOSURE TYPE. DOOR INDICATES FRONT OF ENCLOSURE
T	t	TELEPHONE DEMARCATION CABINET

POLE-MOUNTED SERVICE DESIGNATION

TYPE H SERVICE, 28'-10" — TYPE OF INSTALLATION AND POLE HEIGHT ABOVE GRADE

FLASHING BEACON

NEW	EXISTING	
R	R	FLASHING BEACON (ONE VEHICLE SIGNAL HEAD WITH BACKPLATE AND VISOR) "R" INDICATES RED INDICATION, "Y" INDICATES YELLOW INDICATION
Y Y	Y Y	FLASHING BEACON WITH TYPE 15-FBS STANDARD AND A SIGN.
R R	R R	FLASHING BEACON WITH TYPES 9, 9A OR 9B SIGN UNLESS OTHERWISE SPECIFIED OR INDICATED

SIGNAL EQUIPMENT

NEW	EXISTING	
C	C	PEDESTRIAN SIGNAL HEAD "C" INDICATES COUNTDOWN PEDESTRIAN HEAD
		PUSH BUTTON ASSEMBLY POST
		PEDESTRIAN BARRICADE
		VEHICLE SIGNAL HEAD (WITH BACKPLATE AND 3-SECTIONS: RED, YELLOW AND GREEN)
		VEHICLE SIGNAL HEAD WITH ANGLE VISOR
PV	PV	MODIFICATIONS OF BASIC SYMBOL: "L" INDICATES ALL NON-ARROW SECTIONS LOUVERED "LG" INDICATES LOUVERED GREEN SECTION ONLY "PV" INDICATES ALL 12" SECTIONS PROGRAMMED VISIBILITY "8" INDICATES ALL 8" SECTIONS (ONLY WHEN SPECIFIED)
		VEHICLE SIGNAL HEAD CONSISTING OF RED, YELLOW AND GREEN LEFT ARROW SECTIONS
		VEHICLE SIGNAL HEAD CONSISTING OF RED AND YELLOW SECTIONS WITH AN UP GREEN ARROW SECTION
		VEHICLE SIGNAL HEAD (5 SECTION) CONSISTING OF RED, YELLOW AND GREEN SECTIONS WITH YELLOW AND GREEN RIGHT ARROW SECTIONS
		TYPE 15TS STANDARD WITH VEHICLE SIGNAL HEAD AND LUMINAIRE
		TYPE 21TS STANDARD WITH VEHICLE SIGNAL HEAD AND LUMINAIRE
		STANDARD WITH LUMINAIRE AND SIGNAL MAST ARMS AND ATTACHED VEHICLE SIGNAL HEADS
		TYPE 1 STANDARD WITH ATTACHED VEHICLE SIGNAL HEADS
		STANDARD WITH A SIGNAL MAST ARM, ATTACHED VEHICLE SIGNAL HEADS AND INTERNALLY ILLUMINATED STREET NAME SIGN
		CONTROLLER ASSEMBLY. DOOR INDICATES FRONT OF CABINET

SIGNAL EQUIPMENT Cont

NEW	EXISTING	
		GUARD POST
		TYPE 1 STANDARD WITH RAMP METERING SIGN
		OPTICAL DETECTOR FOR THE EMERGENCY VEHICLE DETECTION SYSTEM

NOTES:

1. All signal sections shall be 12" unless shown otherwise.
2. Signal heads shall be provided with backplates unless shown otherwise.

ILLUMINATED OVERHEAD SIGN

NEW	EXISTING	
		SINGLE POST, SINGLE ILLUMINATED SIGN, BALANCED BUTTERFLY
		SINGLE POST, DOUBLE ILLUMINATED SIGN, BALANCED BUTTERFLY
		SINGLE POST, SINGLE ILLUMINATED SIGN, FULL CANTILEVER
		DOUBLE POST, SINGLE ILLUMINATED SIGN
		SINGLE ILLUMINATED SIGN MOUNTED ON STRUCTURE
		DOUBLE POST, SINGLE ILLUMINATED SIGN WITH ELECTROLIER

STATE OF CALIFORNIA
DEPARTMENT OF TRANSPORTATION

ELECTRICAL SYSTEMS (LEGEND AND ABBREVIATIONS)

NO SCALE

RSP ES-1B DATED JULY 19, 2013 SUPERSEDES STANDARD PLAN ES-1B DATED MAY 20, 2011 - PAGE 426 OF THE STANDARD PLANS BOOK DATED 2010.

REVISED STANDARD PLAN RSP ES-1B

2010 REVISED STANDARD PLAN RSP ES-1B

7-15-13

Dist	COUNTY	ROUTE	POST MILES TOTAL PROJECT	SHEET No.	TOTAL SHEETS
08	SBd	18	49.0/51.7	159	179

Theresa Gabriel
REGISTERED ELECTRICAL ENGINEER

July 19, 2013
PLANS APPROVAL DATE

REGISTERED PROFESSIONAL ENGINEER
Theresa Aziz Gabriel
No. E15129
Exp. 6-30-14
ELECTRICAL
STATE OF CALIFORNIA

THE STATE OF CALIFORNIA OR ITS OFFICERS OR AGENTS SHALL NOT BE RESPONSIBLE FOR THE ACCURACY OR COMPLETENESS OF SCANNED COPIES OF THIS PLAN SHEET.

TO ACCOMPANY PLANS DATED 6-26-15

EQUIPMENT IDENTIFICATION

ILLUMINATED SIGN IDENTIFICATION NUMBER:

SIGN No. 12345
10 ISL SCI 1.0

- SIGN NUMBER - PLACE ON POST OR STRUCTURE
- TRANSFORMER RATING (kVA)
- LIGHTING CONTROL TYPE
- NUMBER AND TYPE OF FIXTURES

DO NOT PLACE ON STANDARD OR STRUCTURE

ELECTROLIER OR EQUIPMENT IDENTIFICATION NUMBER:

12345 - 15'-0"

- MAST ARM LENGTH, IF SHOWN. DO NOT PLACE ON STANDARD OR STRUCTURE
- EQUIPMENT NUMBER - PLACE ON STANDARD OR STRUCTURE. EXISTING EQUIPMENT NUMBERS ARE SHOWN IN PARENTHESIS

CONDUIT AND CONDUCTOR IDENTIFICATION:

1½"C, 2#10, 15#14, 2 DLC, 12P#18 (PAIR)

- NUMBER AND SIZE OF CONDUCTORS AND CABLES
- SIZE OF CONDUIT IN INCHES

ø1, ø2, ø2P, etc.	TRAFFIC PHASE IDENTIFICATION FOR SIGNAL FACES, DETECTORS AND PHASE DIAGRAMS
1 2 3	LEGEND NUMBERS
A B C	EQUIPMENT, SIGNAL POLES, INSTALLATION OR ITEMS
1 2 3	CONDUIT RUN NUMBERS

SIGNAL AND LIGHTING STANDARD (TYPICAL DESIGNATION):

19A - 3 - 100

- WIND VELOCITY = 100 mph
- CASE 3 ARM LOADING
- STANDARD TYPE
- STANDARD PLAN SHEET NUMBER
- DETAIL, NUMBER, SECTION, TYPE OR ELEVATION

MISCELLANEOUS EQUIPMENT

NEW	EXISTING	
CMS	cms	CHANGEABLE MESSAGE SIGN
		CLOSED CIRCUIT TELEVISION CAMERA
		HIGHWAY ADVISORY RADIO POLE AND ANTENNA
EMS	ems	EXTINGUISHABLE MESSAGE SIGN
M V	m v	DETECTION DEVICE M = MICROWAVE SENSOR V = VIDEO IMAGE SENSOR

WIRING DIAGRAM LEGEND

----	EXTERNAL CONDUCTOR
	CONDUCTOR OR BUS
	TIE POINT
	CONTACTOR COIL
	CONTACTOR, NO CONTACT
	TERMINAL BLOCKS
	CONTACTOR, NC CONTACT
	ENCLOSURE BOND
	GROUNDING ELECTRODE
	CIRCUIT BREAKER
	RECEPTACLE

PULL BOXES

NEW	EXISTING	
		PULL BOX, No. 5 UNLESS OTHERWISE INDICATED OR NOTED
3	9A(21)	PULL BOX, ADDITIONAL DESIGNATIONS OR DESCRIPTIONS

3 No. 3½ PULL BOX
5 No. 5 PULL BOX
6 No. 6 PULL BOX
7 No. 7 (CEILING PULL BOX)
8 No. 8 (PENDANT SOFFIT PULL BOX)
9 No. 9 PULL BOX
9A No. 9A PULL BOX

(C) COMMUNICATIONS PULL BOX
(E) PULL BOX WITH EXTENSION
(S) SPRINKLER CONTROL PULL BOX
(21) ANCHOR BOLTS AND CONDUIT FOR FUTURE INSTALLATION OF TYPE 21 STANDARD
(T) TRAFFIC PULL BOX

VEHICLE DETECTORS

5 J 9 U

- VEHICLE DETECTOR DESIGNATION
- U = UPPER
  L = LOWER
- SLOT NUMBER IN INPUT FILE
- INPUT FILE (I OR J)
- PHASE

NEW	EXISTING	
		TYPE A DETECTOR LOOP. OUTLINE OF SAWCUT SHOWN
		TYPE B DETECTOR LOOP. OUTLINE OF SAWCUT SHOWN
		TYPE C DETECTOR LOOP. OUTLINE OF SAWCUT SHOWN
		TYPE D DETECTOR LOOP. OUTLINE OF SAWCUT SHOWN
		TYPE E DETECTOR LOOP. OUTLINE OF SAWCUT SHOWN
		TYPE Q DETECTOR LOOP. OUTLINE OF SAWCUT SHOWN
		MAGNETIC DETECTOR
DH	dh	DETECTOR HANDHOLE
		MICROWAVE OR VIDEO DETECTION ZONE

STATE OF CALIFORNIA
DEPARTMENT OF TRANSPORTATION

ELECTRICAL SYSTEMS (LEGEND AND ABBREVIATIONS)

NO SCALE

RSP ES-1C DATED JULY 19, 2013 SUPERSEDES STANDARD PLAN ES-1C DATED MAY 20, 2011 - PAGE 427 OF THE STANDARD PLANS BOOK DATED 2010.

REVISED STANDARD PLAN RSP ES-1C

2010 REVISED STANDARD PLAN RSP ES-1C

7-11-13

Dist	COUNTY	ROUTE	POST MILES TOTAL PROJECT	SHEET No.	TOTAL SHEETS
08	SBd	18	49.0/51.7	160	179

Theresa Gabriel
REGISTERED ELECTRICAL ENGINEER

October 30, 2015
PLANS APPROVAL DATE

REGISTERED PROFESSIONAL ENGINEER
Theresa Aziz Gabriel
No. E15129
Exp. 6-30-16
ELECTRICAL
STATE OF CALIFORNIA

THE STATE OF CALIFORNIA OR ITS OFFICERS OR AGENTS SHALL NOT BE RESPONSIBLE FOR THE ACCURACY OR COMPLETENESS OF SCANNED COPIES OF THIS PLAN SHEET.

TO ACCOMPANY PLANS DATED 6-26-15

2010 REVISED STANDARD PLAN RSP ES-2C

NOTES:

1. The plan shows the approximate location of devices within the enclosure. Components may be rearranged, however, the "working" clearances within the service equipment enclosure shall be maintained.

2. In unpaved areas a raised portland cement concrete pad 2'-0" x 4" x width of foundation shall be constructed in front of new service equipment enclosure installation. Pad shall be set to elevation of foundation.

3. Plug-in circuit breakers may be mounted in the vertical or horizontal position. Cable-in/cable-out circuit breakers shall be mounted in the vertical position.

4. Type III-AF and Type III-BF service equipment enclosures shall have the meter viewing windows located on the front side of the service equipment enclosures.

5. Type III-AR and Type III-BR service equipment enclosure shall be similarly constructed as Type III-AF and Type III-BF respectively, except the meter viewing windows shall be located on the back side of the service equipment enclosures.

STATE OF CALIFORNIA
DEPARTMENT OF TRANSPORTATION

ELECTRICAL SYSTEMS (SERVICE EQUIPMENT ENCLOSURE NOTES TYPE III SERIES)

NO SCALE

RSP ES-2C DATED OCTOBER 30, 2015 SUPERSEDES STANDARD PLAN ES-2C DATED MAY 20, 2011 - PAGE 430 OF THE STANDARD PLANS BOOK DATED 2010.

REVISED STANDARD PLAN RSP ES-2C

Dist	COUNTY	ROUTE	POST MILES TOTAL PROJECT	SHEET No.	TOTAL SHEETS
08	SBd	18	49.0/51.7	161	179

REGISTERED ELECTRICAL ENGINEER

October 30, 2015
PLANS APPROVAL DATE

REGISTERED PROFESSIONAL ENGINEER Theresa Aziz Gabriel No. E15129 Exp. 6-30-16 ELECTRICAL STATE OF CALIFORNIA

THE STATE OF CALIFORNIA OR ITS OFFICERS OR AGENTS SHALL NOT BE RESPONSIBLE FOR THE ACCURACY OR COMPLETENESS OF SCANNED COPIES OF THIS PLAN SHEET.

TO ACCOMPANY PLANS DATED 6-26-15

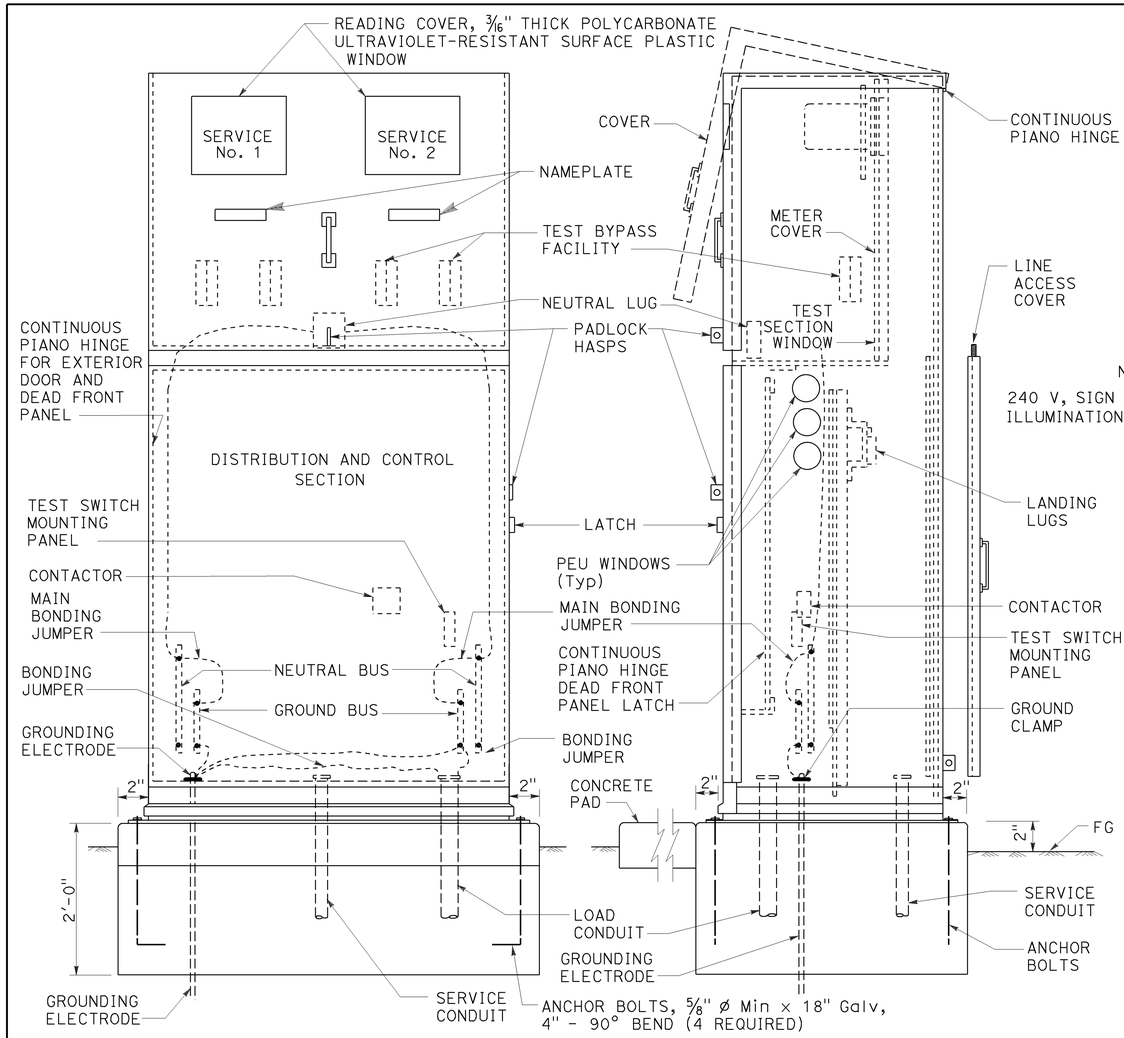

FRONT VIEW SIDE VIEW

TYPE III-CF SERVICE EQUIPMENT ENCLOSURE (TYPICAL)

DETAIL A

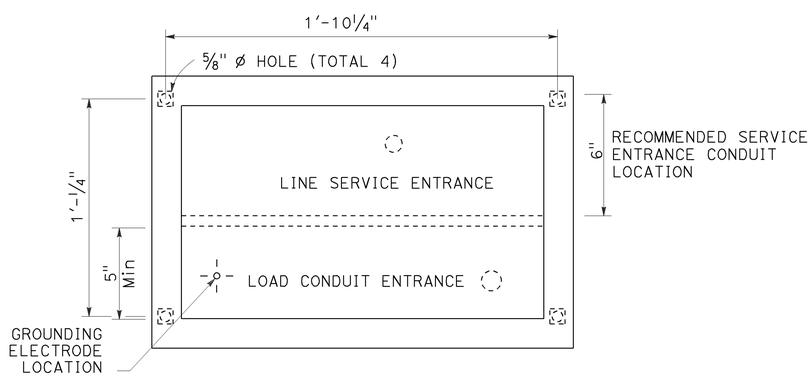

BASE FOR TYPE III-C SERVICE EQUIPMENT ENCLOSURE

DETAIL B

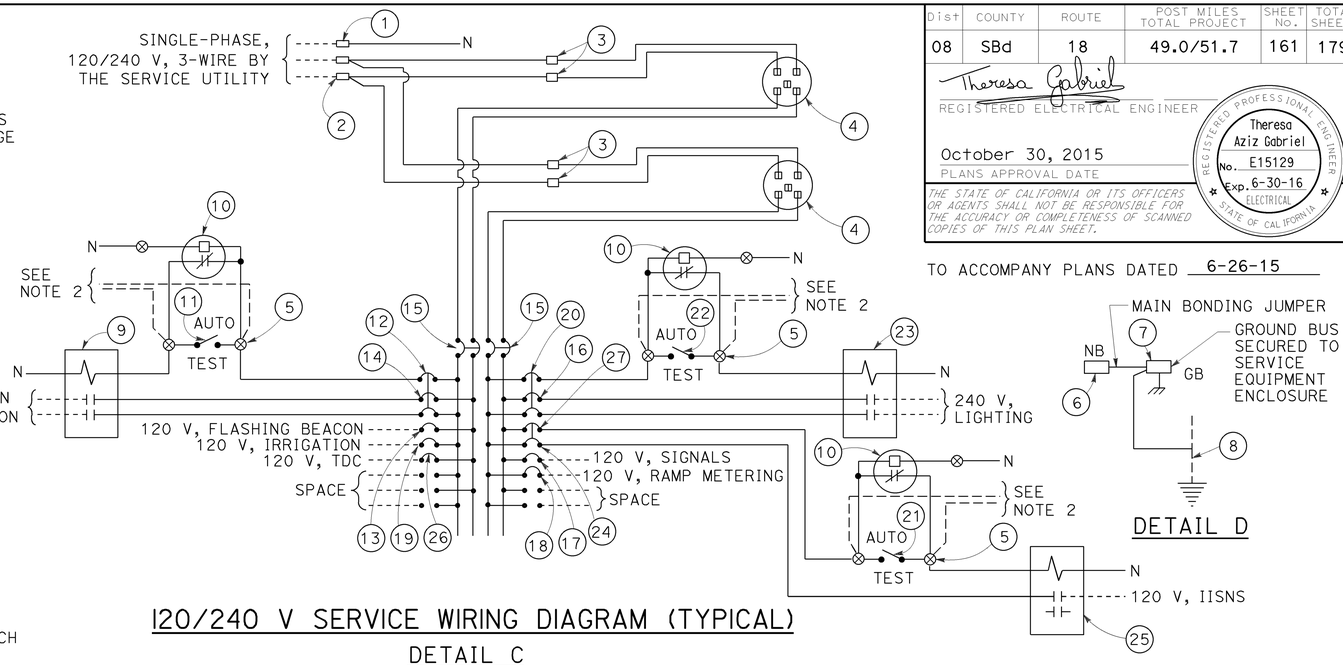

120/240 V SERVICE WIRING DIAGRAM (TYPICAL)

DETAIL C

DETAIL D

TYPE III-C SERVICE EQUIPMENT ENCLOSURE LEGEND (120/240 V)

ITEM	COMPONENT	NAMEPLATE DESCRIPTION	ITEM	COMPONENT	NAMEPLATE DESCRIPTION
1	NEUTRAL LUG		14	30 A, 240 V, 2P, CB	SIGN ILLUMINATION
2	LANDING LUG		15	100 A, 240 V, 2P, CB	MAIN BREAKER
3	TEST BYPASS FACILITY		16	30 A, 240 V, 2P, CB	LIGHTING
4	METER SOCKET AND SUPPORT		17	50 A, 120 V, 1P, CB	SIGNALS
5	TERMINAL BLOCKS		18	30 A, 120 V, 1P, CB	RAMP METERING
6	NEUTRAL BUS		19	20 A, 120 V, 1P, CB	IRRIGATION
7	GROUND BUS		20	15 A, 120 V, 1P, CB	LIGHTING CONTROL
8	GROUNDING ELECTRODE		21	15 A, 1P, TEST SWITCH	IISNS TEST SWITCH
9	30 A, 2P, NO CONTACTOR	SIGN ILLUMINATION	22	15 A, 1P, TEST SWITCH	LIGHTING TEST SWITCH
10	PHOTOELECTRIC UNIT (NOTE 4)	PEU	23	60 A, 2P, NO CONTACTOR	LIGHTING
11	15 A, 1P, TEST SWITCH	SIGN ILLUMINATION TEST SWITCH	24	15 A, 120 V, 1P, CB	IISNS
12	15 A, 120 V, 1P, CB	SIGN ILLUMINATION CONTROL	25	30 A, 2P, NO CONTACTOR	IISNS
13	15 A, 120 V, 1P, CB	FLASHING BEACON	26	20 A, 120 V, 1P, CB	TELEPHONE DEMARCATION CABINET
			27	15 A, 120 V, 1P, CB	IISNS CONTROL

NOTES:

1. Unless otherwise indicated on the plans, service equipment items shall be provided for each service equipment enclosure as shown.
2. Connect to remote test switch mounted on lighting standards, sign post or structure when required.
3. Items 1 and 6 shall be isolated from the service equipment enclosure.
4. Type V photoelectric control shall be used unless otherwise indicated on the plans.
5. Item 12, 20 and 27 shall be ganged operated CB.

STATE OF CALIFORNIA
DEPARTMENT OF TRANSPORTATION

ELECTRICAL SYSTEMS (SERVICE EQUIPMENT ENCLOSURE AND TYPICAL WIRING DIAGRAM TYPE III-C SERIES)

NO SCALE

RSP ES-2F DATED OCTOBER 30, 2015 SUPERSEDES STANDARD PLAN ES-2F DATED MAY 20, 2011 - PAGE 433 OF THE STANDARD PLANS BOOK DATED 2010.

REVISED STANDARD PLAN RSP ES-2F

2010 REVISED STANDARD PLAN RSP ES-2F

8-19-15

Dist	COUNTY	ROUTE	POST MILES TOTAL PROJECT	SHEET No.	TOTAL SHEETS
08	SBd	18	49.0/51.7	162	179

Theresa Gabriel
REGISTERED ELECTRICAL ENGINEER

October 30, 2015
PLANS APPROVAL DATE

REGISTERED PROFESSIONAL ENGINEER Theresa Aziz Gabriel No. E15129 Exp. 6-30-16 ELECTRICAL STATE OF CALIFORNIA

THE STATE OF CALIFORNIA OR ITS OFFICERS OR AGENTS SHALL NOT BE RESPONSIBLE FOR THE ACCURACY OR COMPLETENESS OF SCANNED COPIES OF THIS PLAN SHEET.

TO ACCOMPANY PLANS DATED 6-26-15

2010 REVISED STANDARD PLAN RSP ES-3C

NOTES:

1. Foundation shall be located to provide 2'-0" minimum clearance between face of curb and any portion of cabinet.
2. Controller units, plug-mounted equipment, shelf-mounted equipment and wall-mounted equipment shall be located to permit safe and easy removal or replacement without removing any other piece of equipment.
3. Cabinet fan may be installed at an alternate location near the top of the cabinet when approved by the Engineer.
4. Where telephone interconnect is required, a minimum of 5" clear vertical space shall be provided inside the cabinet for the equipment.
5. Telephone interconnect conductors shall be enclosed in a ¾"C or larger conduit through the foundation. Type 4 conduit shall be used to separate telephone and power conductors in cabinets.

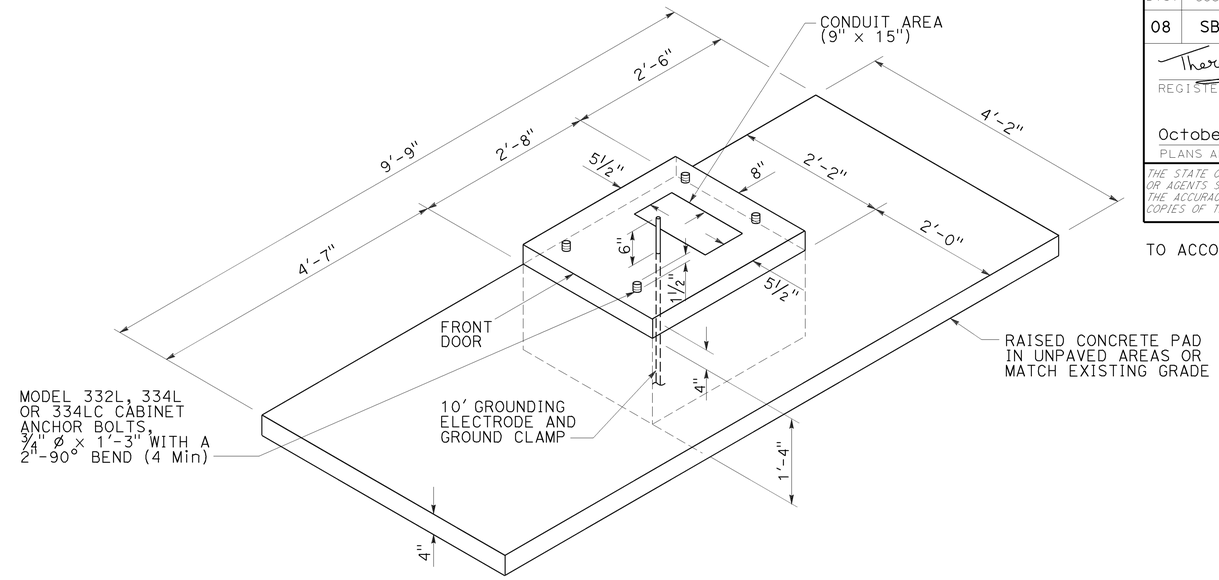

FOUNDATION AND PAD DETAIL

Model 332L, 334L and 334LC

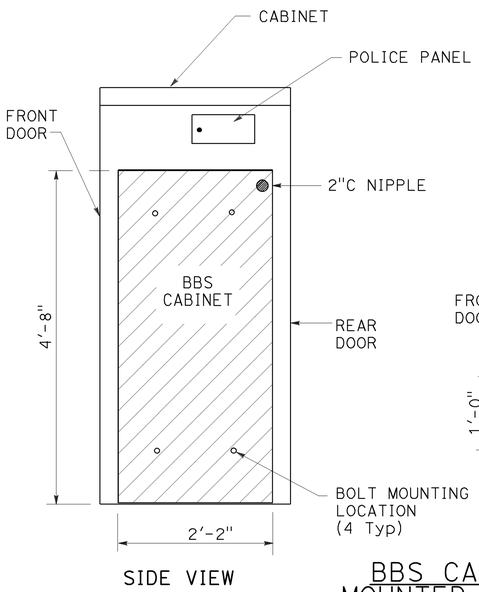

SIDE VIEW

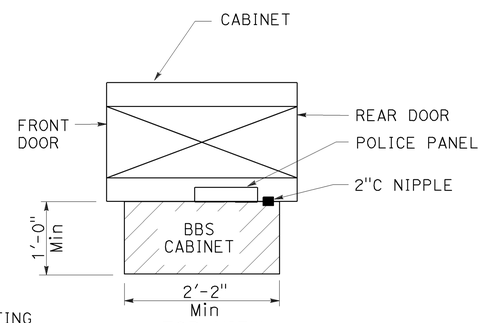

TOP VIEW

BBS CABINET MOUNTED TO THE MODEL 332L CABINET

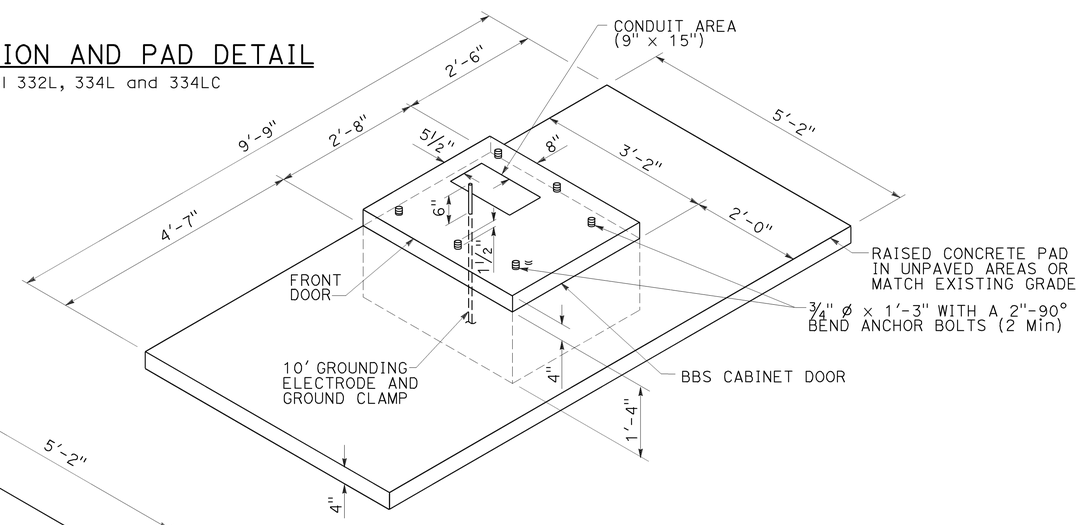

RIGHT SIDE INSTALLATION

DETAIL B

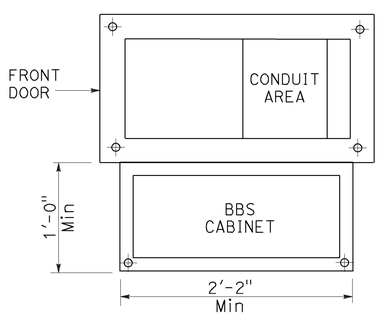

BASE PLAN FOR BBS MOUNTED TO THE MODEL 332L CABINET

(FOR DIMENSIONS AND DETAILS NOT SHOWN, SEE CABINET HOUSING DETAILS OF THE TRANSPORTATION ELECTRICAL EQUIPMENT SPECIFICATION (TEES))

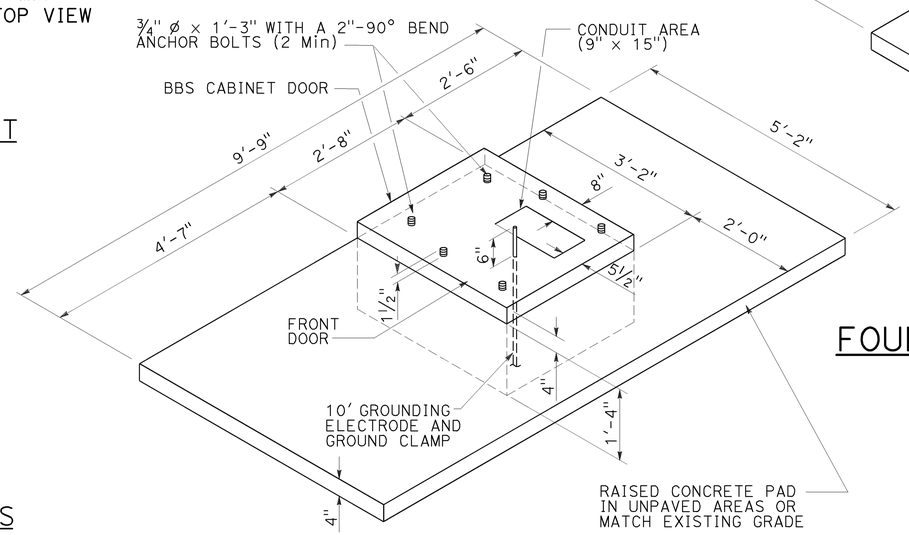

LEFT SIDE INSTALLATION

DETAIL A

MODIFIED MODEL 332L CABINET FOUNDATION DETAIL FOR BATTERY BACKUP SYSTEM

STATE OF CALIFORNIA
DEPARTMENT OF TRANSPORTATION

ELECTRICAL SYSTEMS (CONTROLLER CABINET FOUNDATION AND PAD DETAILS)

NO SCALE

RSP ES-3C DATED OCTOBER 30, 2015 SUPERSEDES STANDARD PLAN ES-3C DATED MAY 20, 2011 - PAGE 437 OF THE STANDARD PLANS BOOK DATED 2010.

REVISED STANDARD PLAN RSP ES-3C

9-2-15

Dist	COUNTY	ROUTE	POST MILES TOTAL PROJECT	SHEET No.	TOTAL SHEETS
08	SBd	18	49.0/51.7	163	179

Theresa Gabriel
REGISTERED ELECTRICAL ENGINEER

July 19, 2013
PLANS APPROVAL DATE

REGISTERED PROFESSIONAL ENGINEER
Theresa Aziz Gabriel
No. E15129
Exp. 6-30-14
ELECTRICAL
STATE OF CALIFORNIA

THE STATE OF CALIFORNIA OR ITS OFFICERS OR AGENTS SHALL NOT BE RESPONSIBLE FOR THE ACCURACY OR COMPLETENESS OF SCANNED COPIES OF THIS PLAN SHEET.

TO ACCOMPANY PLANS DATED 6-26-15

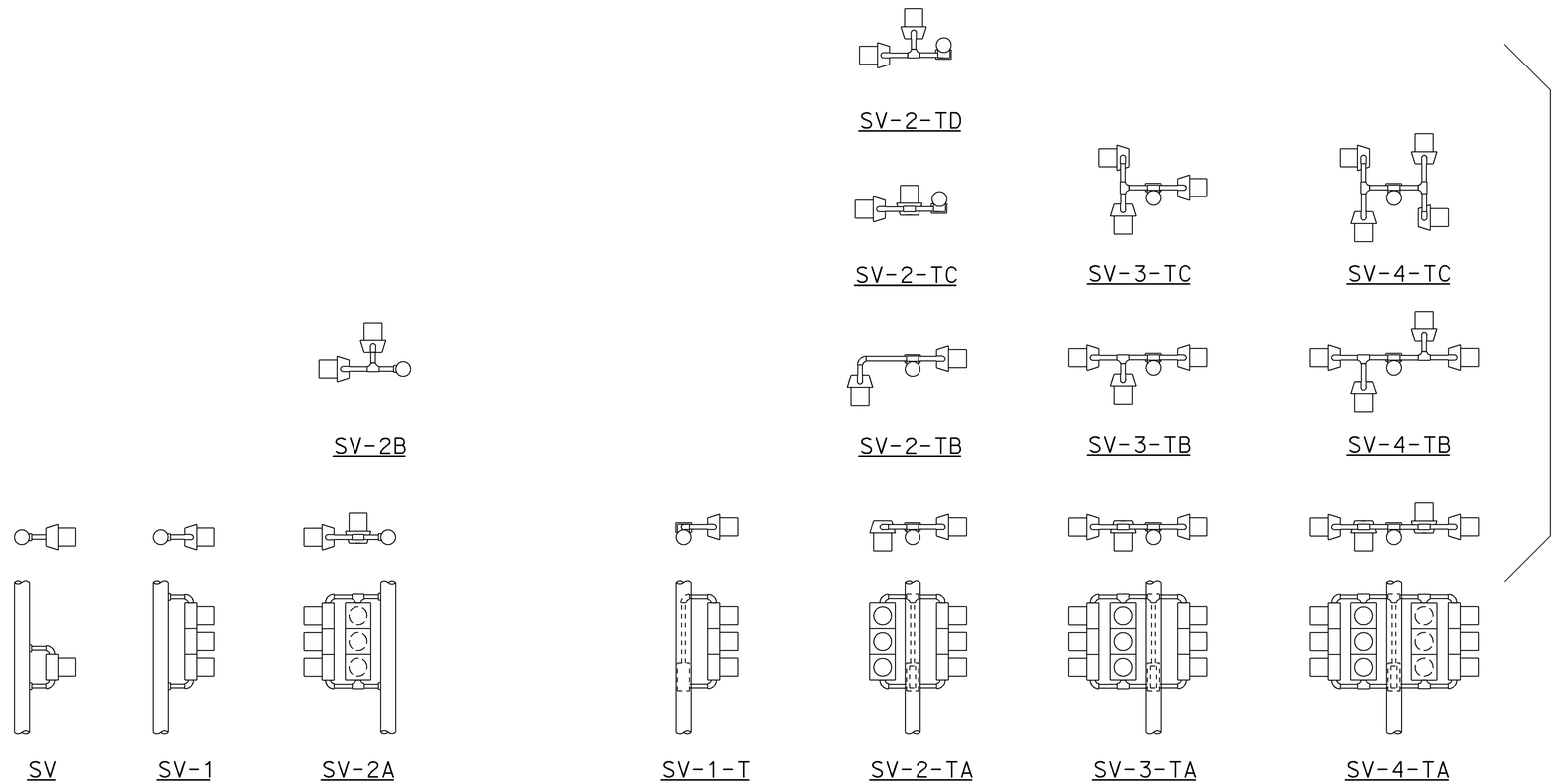

SIDE MOUNTINGS

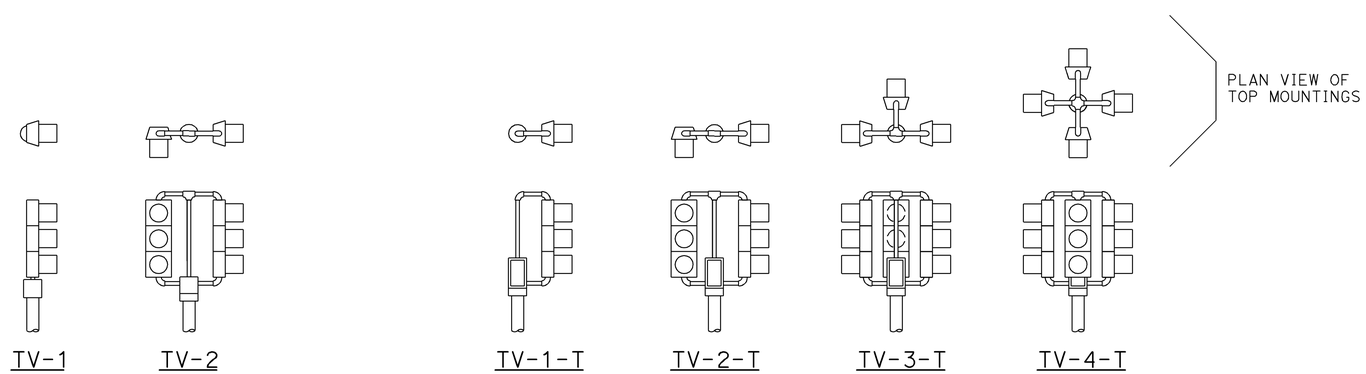

TOP MOUNTINGS

ABBREVIATIONS:

SV	SIDE MOUNTED VEHICLE SIGNALS
T	TERMINAL COMPARTMENT
TV	TOP MOUNTED VEHICLE SIGNALS
1, 2, 3, 4	NUMBER OF SIGNAL FACES (3 - SECTION, UNLESS OTHERWISE INDICATED)
A, B, C, D	CONFIGURATION OF SIGNALS

NOTES:

1. Mountings shall be oriented to provide maximum horizontal clearance to adjacent roadway.
2. Bracket arms shall be long enough to permit proper alignment of signals and backplate installation.
3. See Standard Plans ES-4D and ES-4E for attachment fitting details.

STATE OF CALIFORNIA
DEPARTMENT OF TRANSPORTATION

ELECTRICAL SYSTEMS (VEHICULAR SIGNAL HEADS AND MOUNTINGS)

NO SCALE

RSP ES-4A DATED JULY 19, 2013 SUPERSEDES STANDARD PLAN ES-4A DATED MAY 20, 2011 - PAGE 443 OF THE STANDARD PLANS BOOK DATED 2010.

REVISED STANDARD PLAN RSP ES-4A

2010 REVISED STANDARD PLAN RSP ES-4A

7-9-13

Dist	COUNTY	ROUTE	POST MILES TOTAL PROJECT	SHEET No.	TOTAL SHEETS
08	SBd	18	49.0/51.7	164	179

Theresa Gabriel
REGISTERED ELECTRICAL ENGINEER

October 17, 2014
PLANS APPROVAL DATE

REGISTERED PROFESSIONAL ENGINEER
Theresa Aziz Gabriel
No. E15129
Exp. 6-30-16
ELECTRICAL
STATE OF CALIFORNIA

THE STATE OF CALIFORNIA OR ITS OFFICERS OR AGENTS SHALL NOT BE RESPONSIBLE FOR THE ACCURACY OR COMPLETENESS OF SCANNED COPIES OF THIS PLAN SHEET.

TO ACCOMPANY PLANS DATED 6-26-15

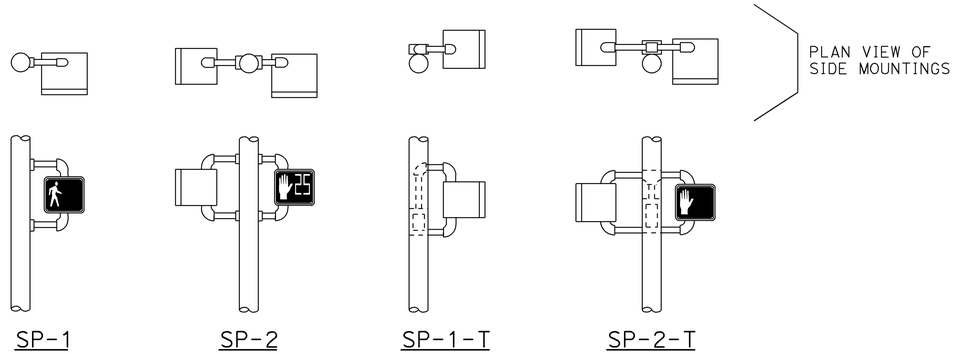

SP-1 SP-2 SP-1-T SP-2-T

SIDE MOUNTINGS

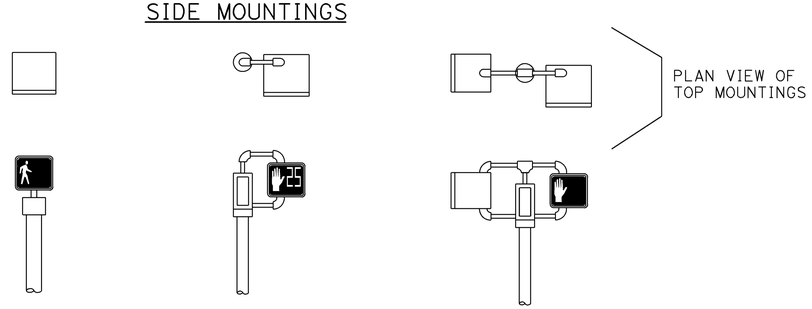

TP-1 TP-1-T TP-2-T

TOP MOUNTINGS

PEDESTRIAN SIGNALS AND MOUNTINGS

DETAIL A

PERSON WALKING INTERVAL FLASHING UPRAISED HAND INTERVAL STEADY UPRAISED HAND INTERVAL

PEDESTRIAN SIGNAL MODULE WITH COUNTDOWN

DETAIL B

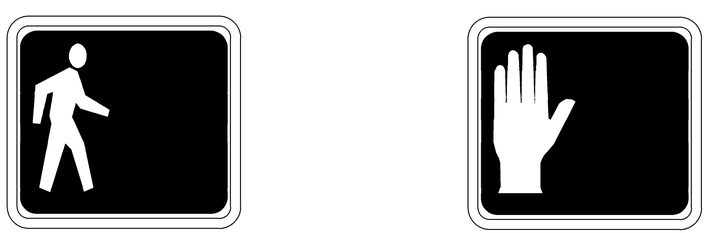

PERSON WALKING INTERVAL STEADY UPRAISED HAND INTERVAL

PEDESTRIAN SIGNAL MODULE WITHOUT COUNTDOWN

DETAIL C

NOTES:

1. Mounting shall be oriented to provide maximum horizontal clearance to adjacent roadway.
2. Bracket arms shall be long enough to permit proper alignment of signals.
3. See Standard Plan ES-4D for attachment fittings details.

ABBREVIATIONS:

1, 2	NUMBER OF SIGNAL FACES
SP	SIDE MOUNTED PEDESTRIAN SIGNAL
T	TERMINAL COMPARTMENT
TP	TOP MOUNTED PEDESTRIAN SIGNAL

STATE OF CALIFORNIA
DEPARTMENT OF TRANSPORTATION

ELECTRICAL SYSTEMS (PEDESTRIAN SIGNAL)

NO SCALE

RSP ES-4B DATED OCTOBER 17, 2014 SUPERSEDES RSP ES-4B DATED JULY 19, 2013 AND STANDARD PLAN ES-4B DATED MAY 20, 2011 - PAGE 444 OF THE STANDARD PLANS BOOK DATED 2010.

REVISED STANDARD PLAN RSP ES-4B

2010 REVISED STANDARD PLAN RSP ES-4B

9-23-14

Dist	COUNTY	ROUTE	POST MILES TOTAL PROJECT	SHEET No.	TOTAL SHEETS
08	SBd	18	49.0/51.7	165	179

Theresa Gabriel
REGISTERED ELECTRICAL ENGINEER

July 19, 2013
PLANS APPROVAL DATE

REGISTERED PROFESSIONAL ENGINEER
Theresa Aziz Gabriel
No. E15129
Exp. 6-30-14
ELECTRICAL
STATE OF CALIFORNIA

THE STATE OF CALIFORNIA OR ITS OFFICERS OR AGENTS SHALL NOT BE RESPONSIBLE FOR THE ACCURACY OR COMPLETENESS OF SCANNED COPIES OF THIS PLAN SHEET.

TO ACCOMPANY PLANS DATED 6-26-15

VISORS

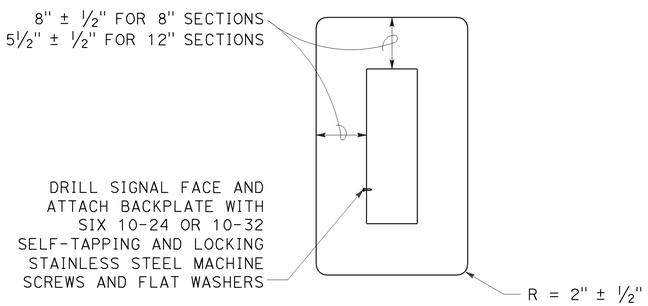

8" AND 12" SECTIONS

BACKPLATE

1/16" minimum thickness
3001-14 aluminum or plastic
when specified

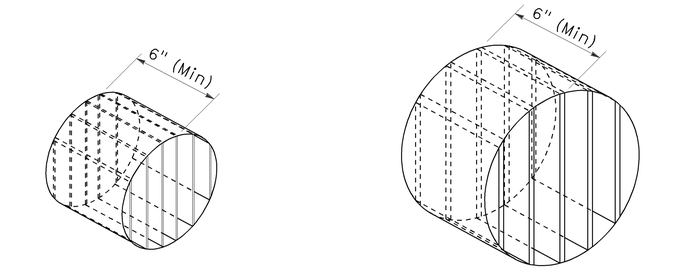

ISOMETRIC VIEW

ISOMETRIC VIEW

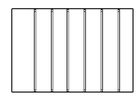

SECTION A-A

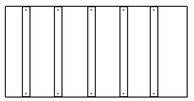

SECTION B-B

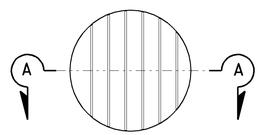

8" DIAMETER
FRONT VIEW

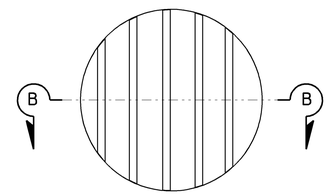

12" DIAMETER
FRONT VIEW

DIRECTIONAL LOUVER

Directional louvers shall be oriented as directed by the Engineer and secured in place with one plated brass machine screw and nut.

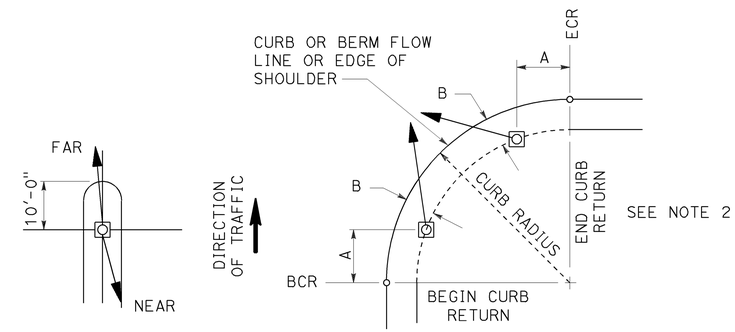

NOTES:

1. Typical signal pole placement unless dimensioned on plans.
2. For A and B dimensions, see Pole Schedule, or as directed by the Engineer.

SIGNAL STANDARD PLACEMENT DIMENSIONS AND EQUIPMENT LOCATIONS

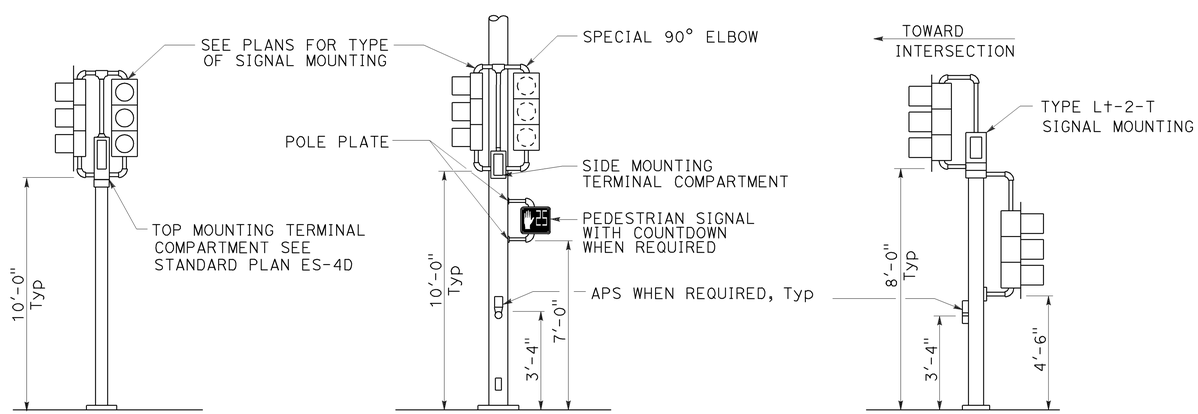

TOP MOUNTED SIGNALS (TV)

Type 1-A, 1-B, 1-C and 1-D standard as indicated on the plans

SIDE MOUNTED SIGNALS (SV AND SP)

Normally used on standards with luminaire or signal mast arm

LEFT TURN LANE SIGNAL

Type 1-A, 1-B, 1-C and 1-D standard as indicated on plans

TYPICAL SIGNAL INSTALLATIONS

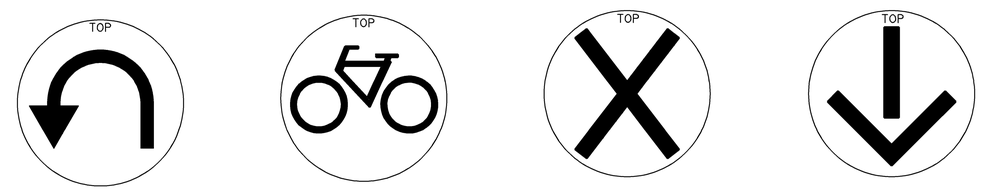

U-TURN

BICYCLE

LANE CONTROL

LANE CONTROL

SIGNAL FACES

STATE OF CALIFORNIA
DEPARTMENT OF TRANSPORTATION

ELECTRICAL SYSTEMS (VEHICULAR SIGNAL HEADS AND MOUNTINGS)

NO SCALE

RSP ES-4C DATED JULY 19, 2013 SUPERSEDES STANDARD PLAN ES-04C DATED MAY 20, 2011 - PAGE 445 OF THE STANDARD PLANS BOOK DATED 2010.

REVISED STANDARD PLAN RSP ES-4C

2010 REVISED STANDARD PLAN RSP ES-4C

7-10-13

Dist	COUNTY	ROUTE	POST MILES TOTAL PROJECT	SHEET No.	TOTAL SHEETS
08	SBd	18	49.0/51.7	166	179

Theresa Gabriel
REGISTERED ELECTRICAL ENGINEER

October 30, 2015
PLANS APPROVAL DATE

REGISTERED PROFESSIONAL ENGINEER Theresa Aziz Gabriel No. E15129 Exp. 6-30-16 ELECTRICAL STATE OF CALIFORNIA

THE STATE OF CALIFORNIA OR ITS OFFICERS OR AGENTS SHALL NOT BE RESPONSIBLE FOR THE ACCURACY OR COMPLETENESS OF SCANNED COPIES OF THIS PLAN SHEET.

TO ACCOMPANY PLANS DATED 6-26-15

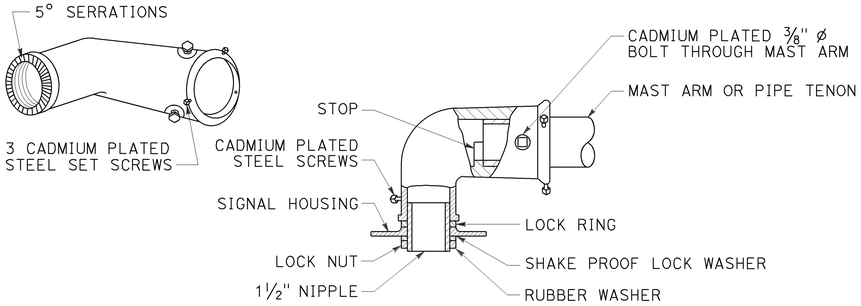

TYPE MAT
MAST ARM MOUNTING
For 2 NPS pipe, see Note 1.

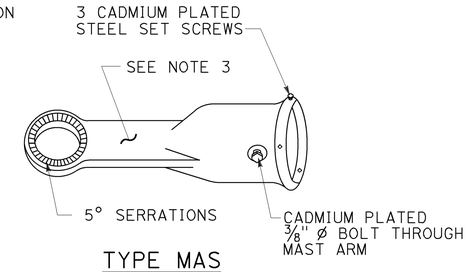

TYPE MAS
MAST ARM MOUNTING
For 2 NPS pipe, see Note 1.

SIGNAL SLIP FITTERS

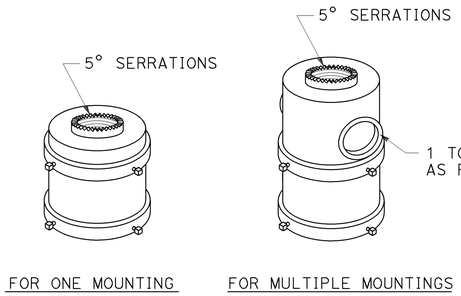

TOP MOUNTINGS
For 4 NPS pipe, see Note 2.

NOTES:

1. After mast arm signal has been plumbed and secured, drill 7/16" hole through mast arm tenon in line with slip fitter hole. Place a cadmium plated ⅜" ø galvanized bolt with washer under bolt head through hole and secure with washer, nut, and locknut. Seal openings between mast arm mountings and mast arm with mastic.
2. (A) Threaded top mounted slip fitter openings shall be 1½ NPS.
   (B) Serrations in fittings shall match those on bottom of signal heads or in lock ring.
   (C) Top opening shall be offset when backplate is used.
3. Wireway shall have a cross section area of 0.95 square inch minimum. Minimum width of ½".

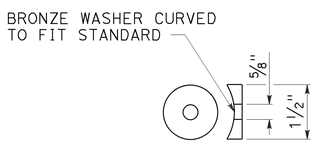

DETAIL C

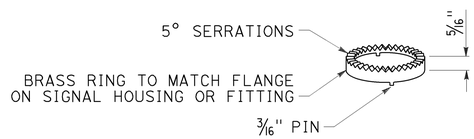

LOCK RING
Use where locking ring is not integral With signal housing or fitting.

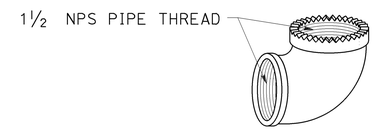

SPECIAL 90° ELBOW
One for each signal head, except those With special slip fitter mounting

MISCELLANEOUS MOUNTING HARDWARE

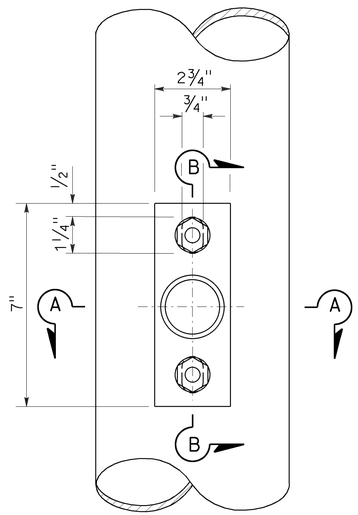

TOP VIEW

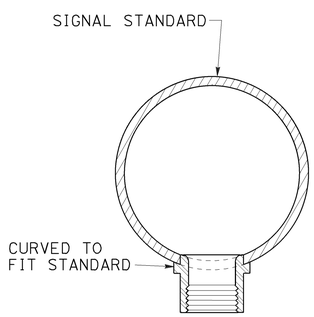

SECTION A-A

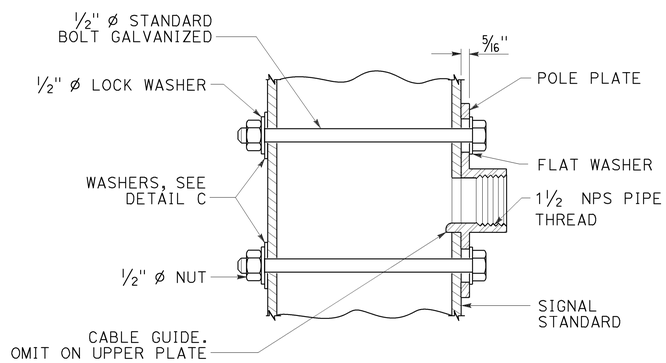

SECTION B-B

POLE PLATE FOR SIDE MOUNTED SIGNAL HEAD
WITHOUT TERMINAL COMPARTMENT

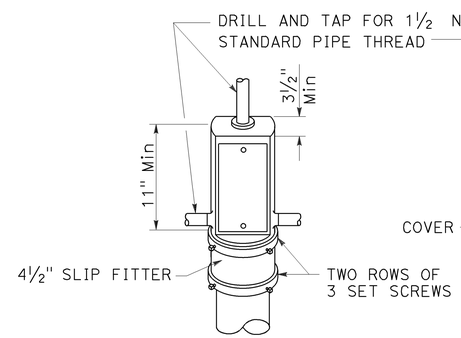

TOP MOUNTING

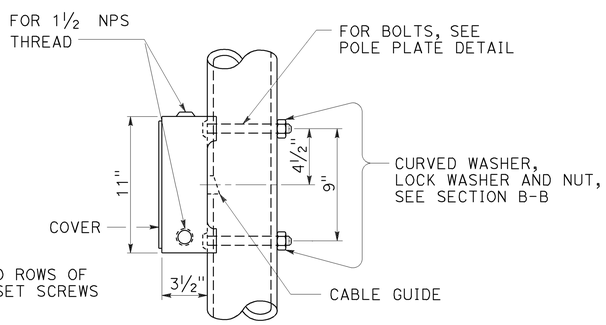

SIDE MOUNTING

TERMINAL COMPARTMENT

STATE OF CALIFORNIA
DEPARTMENT OF TRANSPORTATION

ELECTRICAL SYSTEMS (SIGNAL HEAD MOUNTING)

NO SCALE

RSP ES-4D DATED OCTOBER 30, 2015 SUPERSEDES STANDARD PLAN ES-4D DATED MAY 20, 2011 - PAGE 446 OF THE STANDARD PLANS BOOK DATED 2010.

REVISED STANDARD PLAN RSP ES-4D

2010 REVISED STANDARD PLAN RSP ES-4D

8-20-15

Dist	COUNTY	ROUTE	POST MILES TOTAL PROJECT	SHEET No.	TOTAL SHEETS
08	SBd	18	49.0/51.7	167	179

Theresa Gabriel
REGISTERED ELECTRICAL ENGINEER

July 19, 2013
PLANS APPROVAL DATE

REGISTERED PROFESSIONAL ENGINEER
Theresa Aziz Gabriel
No. E15129
Exp. 6-30-14
ELECTRICAL
STATE OF CALIFORNIA

THE STATE OF CALIFORNIA OR ITS OFFICERS OR AGENTS SHALL NOT BE RESPONSIBLE FOR THE ACCURACY OR COMPLETENESS OF SCANNED COPIES OF THIS PLAN SHEET.

TO ACCOMPANY PLANS DATED 6-26-15

2010 REVISED STANDARD PLAN RSP ES-4E

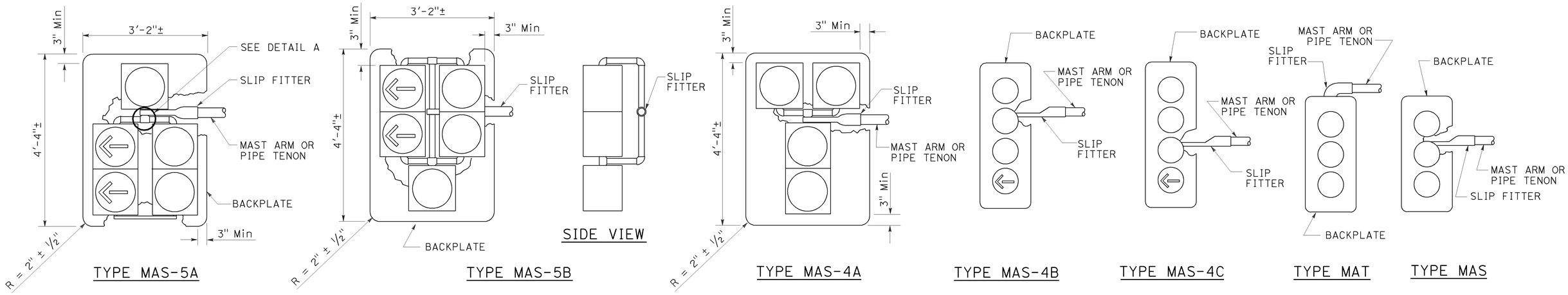

MAST ARM MOUNTINGS

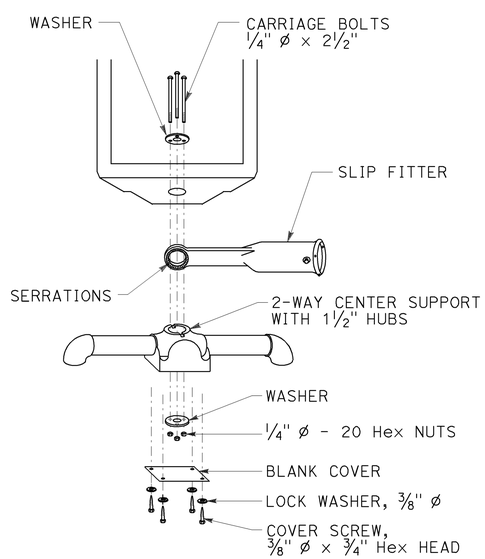

DETAIL A

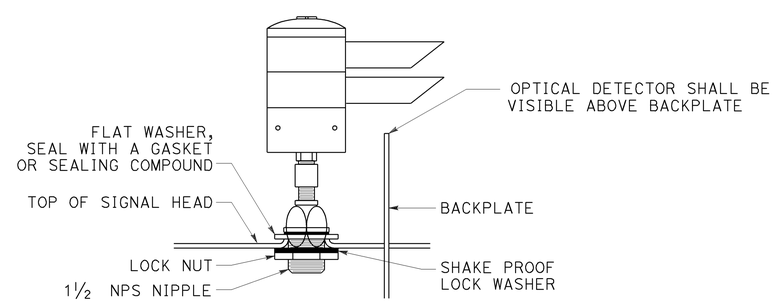

OPTICAL DETECTOR MOUNTING FOR EMERGENCY VEHICLE DETECTION SYSTEM

DETAIL B

STATE OF CALIFORNIA
DEPARTMENT OF TRANSPORTATION

ELECTRICAL SYSTEMS (VEHICULAR SIGNAL HEADS AND OPTICAL DETECTOR MOUNTING)

NO SCALE

RSP ES-4E DATED JULY 19, 2013 SUPERSEDES STANDARD PLAN ES-4E DATED MAY 20, 2011 - 447 OF THE STANDARD PLANS BOOK DATED 2010.

REVISED STANDARD PLAN RSP ES-4E

Dist	COUNTY	ROUTE	POST MILES TOTAL PROJECT	SHEET No.	TOTAL SHEETS
08	SBd	18	49.0/51.7	168	179

Theresa Gabriel
REGISTERED ELECTRICAL ENGINEER

October 30, 2015
PLANS APPROVAL DATE

REGISTERED PROFESSIONAL ENGINEER Theresa Aziz Gabriel No. E15129 Exp. 6-30-16 ELECTRICAL STATE OF CALIFORNIA

THE STATE OF CALIFORNIA OR ITS OFFICERS OR AGENTS SHALL NOT BE RESPONSIBLE FOR THE ACCURACY OR COMPLETENESS OF SCANNED COPIES OF THIS PLAN SHEET.

TO ACCOMPANY PLANS DATED 6-26-15

2010 REVISED STANDARD PLAN RSP ES-5A

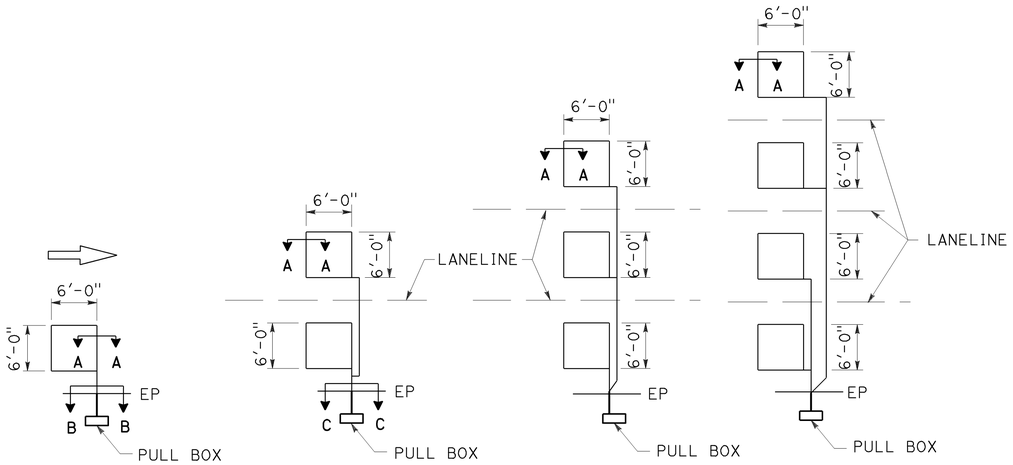

TYPE 1A INSTALLATION | TYPE 2A INSTALLATION | TYPE 3A INSTALLATION | TYPE 4A INSTALLATION

SAWCUT DETAILS

Type A loop detector configurations illustrated

1. 1A thru 4A = 1 Type A loop configuration in each lane.
2. 1B thru 4B = 1 Type B loop configuration in each lane.
3. 1C = 1 Type C loop configuration entering lanes as required.
4. 1D thru 4D = 1 Type D loop configuration in each lane.
5. 1E thru 4E = 1 Type E loop configuration in each lane.
6. 1Q thru 4Q = 1 Type Q loop configuration in each lane.
   Use Type A, B, C, D, E or Q loop detector configurations only when specified or shown on plans.

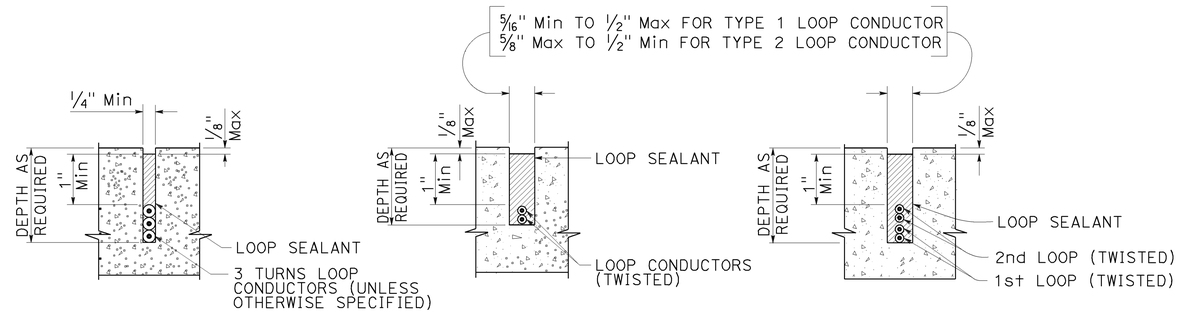

SECTION A-A | SECTION B-B | SECTION C-C

SLOT DETAILS - TYPE 1 AND TYPE 2 LOOP CONDUCTOR

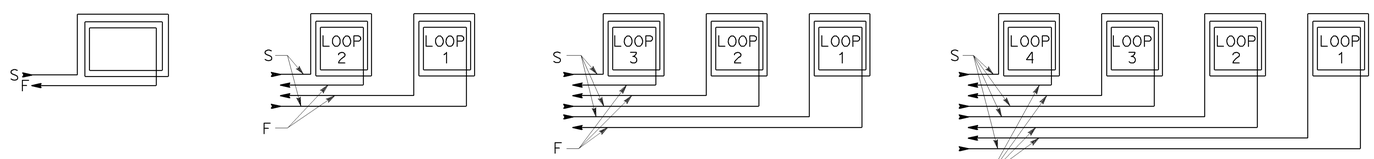

WINDING DETAILS

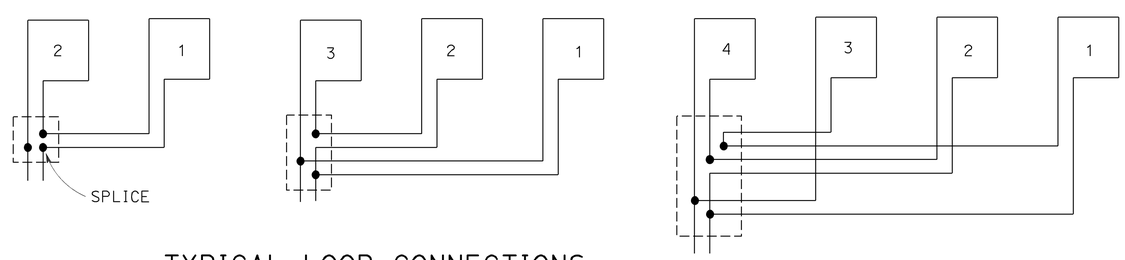

TYPICAL LOOP CONNECTIONS

Dashed lines represent the pull box

ABBREVIATIONS:

S - START
F - FINISH

STATE OF CALIFORNIA
DEPARTMENT OF TRANSPORTATION

ELECTRICAL SYSTEMS (LOOP DETECTORS)

NO SCALE

RSP ES-5A DATED OCTOBER 30, 2015 SUPERSEDES STANDARD PLAN ES-5A DATED MAY 20, 2011 - PAGE 448 OF THE STANDARD PLANS BOOK DATED 2010.

REVISED STANDARD PLAN RSP ES-5A

8-24-15

Dist	COUNTY	ROUTE	POST MILES TOTAL PROJECT	SHEET No.	TOTAL SHEETS
08	SBd	18	49.0/51.7	169	179

Theresa Gabriel
REGISTERED ELECTRICAL ENGINEER

July 19, 2013
PLANS APPROVAL DATE

REGISTERED PROFESSIONAL ENGINEER
Theresa Aziz Gabriel
No. E15129
Exp. 6-30-14
ELECTRICAL
STATE OF CALIFORNIA

THE STATE OF CALIFORNIA OR ITS OFFICERS OR AGENTS SHALL NOT BE RESPONSIBLE FOR THE ACCURACY OR COMPLETENESS OF SCANNED COPIES OF THIS PLAN SHEET.

TO ACCOMPANY PLANS DATED 6-26-15

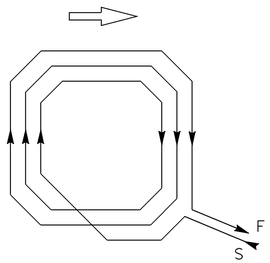

WINDING DETAIL

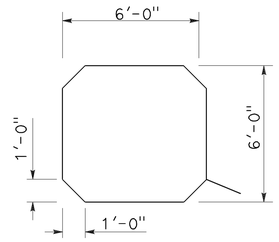

SAWCUT DETAIL

TYPE A LOOP DETECTOR CONFIGURATION

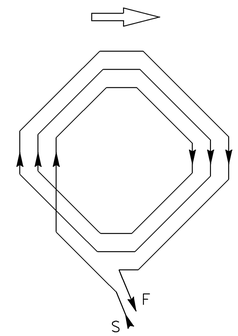

WINDING DETAIL

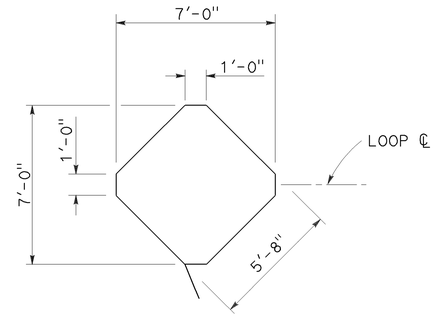

SAWCUT DETAIL

TYPE B LOOP DETECTOR CONFIGURATION

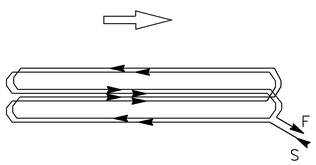

WINDING DETAIL

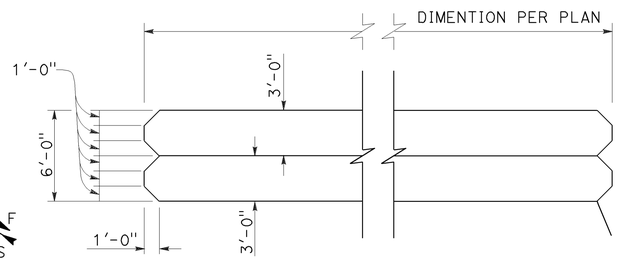

SAWCUT DETAIL

TYPE C LOOP DETECTOR CONFIGURATION

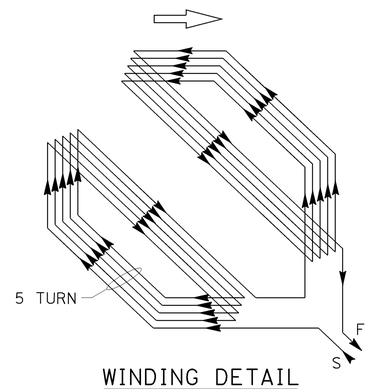

WINDING DETAIL

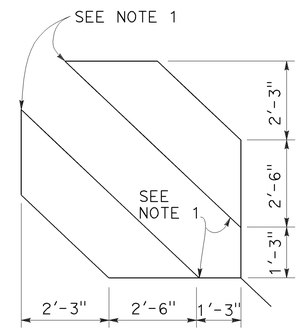

SAWCUT DETAIL

TYPE D LOOP DETECTOR CONFIGURATION

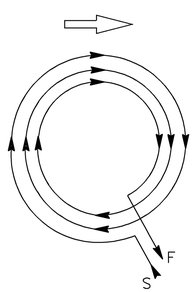

WINDING DETAIL

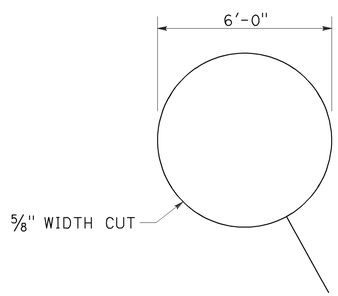

SAWCUT DETAIL

TYPE E LOOP DETECTOR CONFIGURATION

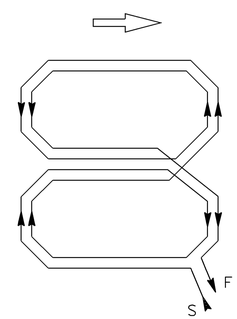

WINDING DETAIL

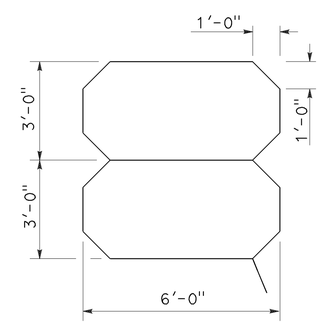

SAWCUT DETAIL

TYPE Q LOOP DETECTOR CONFIGURATION

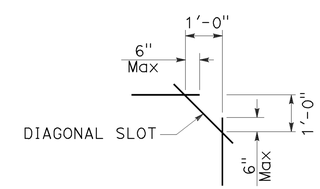

PLAN VIEW OF DIAGONAL SLOT AT CORNERS

NOTES:

1. Round corners of acute angle sawcuts to prevent damage to conductors.
2. Typical distance separating loops from edge to edge is 10' for Type A, B, D and E installation in single lane.

STATE OF CALIFORNIA
DEPARTMENT OF TRANSPORTATION

ELECTRICAL SYSTEMS (DETECTORS)

NO SCALE

RSP ES-5B DATED JULY 19, 2013 SUPERSEDES STANDARD PLAN ES-5B DATED MAY 20, 2011 - PAGE 449 OF THE STANDARD PLANS BOOK DATED 2010.

REVISED STANDARD PLAN RSP ES-5B

2010 REVISED STANDARD PLAN RSP ES-5B

7-9-13

Dist	COUNTY	ROUTE	POST MILES TOTAL PROJECT	SHEET No.	TOTAL SHEETS
08	SBd	18	49.0/51.7	170	179

Theresa Gabriel
REGISTERED ELECTRICAL ENGINEER

July 19, 2013
PLANS APPROVAL DATE

REGISTERED PROFESSIONAL ENGINEER
Theresa Aziz Gabriel
No. E15129
Exp. 6-30-14
ELECTRICAL
STATE OF CALIFORNIA

THE STATE OF CALIFORNIA OR ITS OFFICERS OR AGENTS SHALL NOT BE RESPONSIBLE FOR THE ACCURACY OR COMPLETENESS OF SCANNED COPIES OF THIS PLAN SHEET.

TO ACCOMPANY PLANS DATED 6-26-15

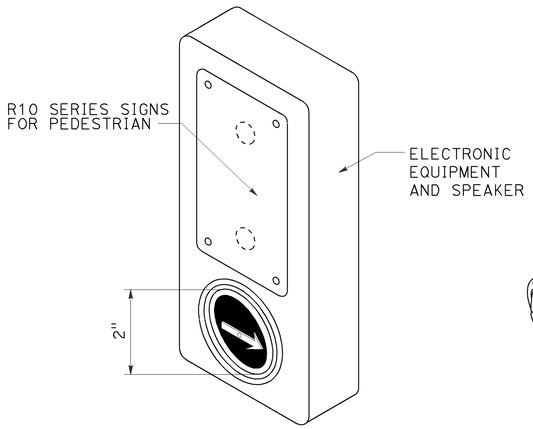

ACCESSIBLE PEDESTRIAN SIGNAL

DETAIL A
(See note 1 to 4)

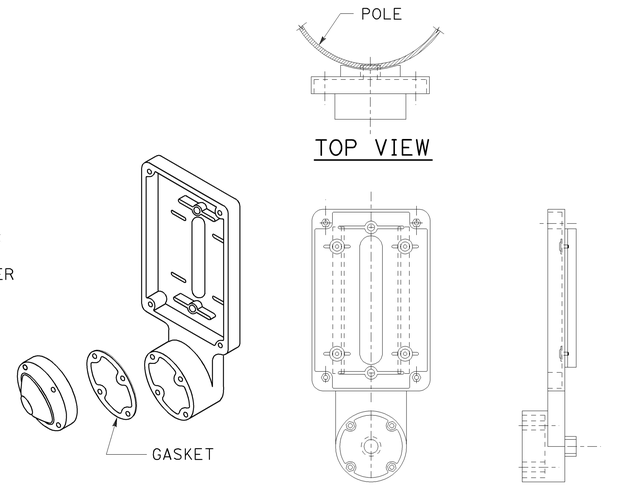

TYPE B PUSH BUTTON ASSEMBLY

DETAIL B
(See note 1 to 4)

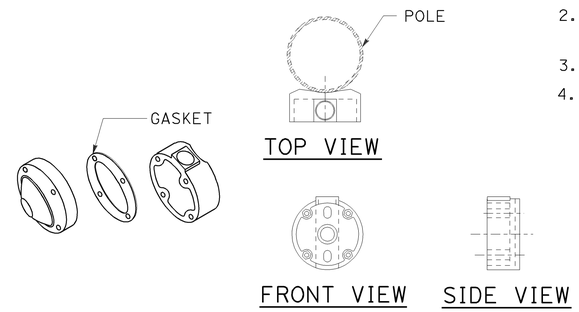

TYPE C PUSH BUTTON ASSEMBLY

DETAIL C
(See note 1 to 4)

NOTES:

1. Back casting shape to fit curvature of pole.
2. Provide cover fitting for top of post, when PBA is mounted on push button assembly post.
3. Install push button on crosswalk side of standard.
4. Use R10 series regulatory signs and plaques for pedestrian and bicycle facilities.

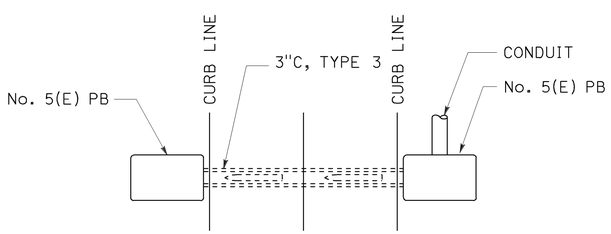

PLAN

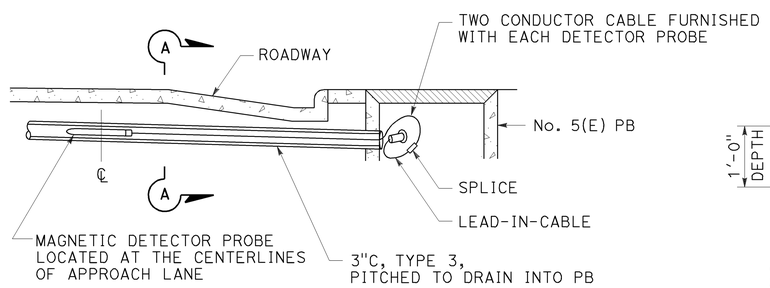

ELEVATION

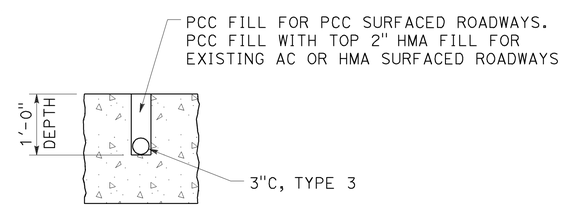

SECTION A-A

MAGNETIC VEHICLE DETECTOR

INSTALLATION DETAILS

DETAIL D

STATE OF CALIFORNIA
DEPARTMENT OF TRANSPORTATION

ELECTRICAL SYSTEMS (ACCESSIBLE PEDESTRIAN SIGNAL, PUSH BUTTON ASSEMBLIES AND MAGNETIC VEHICLE DETECTOR)

NO SCALE

RSP ES-5C DATED JULY 19, 2013 SUPERSEDES STANDARD PLAN ES-5C
DATED MAY 20, 2011 - PAGE 450 OF THE STANDARD PLANS BOOK DATED 2010.

REVISED STANDARD PLAN RSP ES-5C

2010 REVISED STANDARD PLAN RSP ES-5C

7-9-13

Dist	COUNTY	ROUTE	POST MILES TOTAL PROJECT	SHEET No.	TOTAL SHEETS
08	SBd	18	49.0/51.7	171	179

Theresa Gabriel
REGISTERED ELECTRICAL ENGINEER

July 19, 2013
PLANS APPROVAL DATE

REGISTERED PROFESSIONAL ENGINEER Theresa Aziz Gabriel No. E15129 Exp. 6-30-14 ELECTRICAL STATE OF CALIFORNIA

THE STATE OF CALIFORNIA OR ITS OFFICERS OR AGENTS SHALL NOT BE RESPONSIBLE FOR THE ACCURACY OR COMPLETENESS OF SCANNED COPIES OF THIS PLAN SHEET.

TO ACCOMPANY PLANS DATED 6-26-15

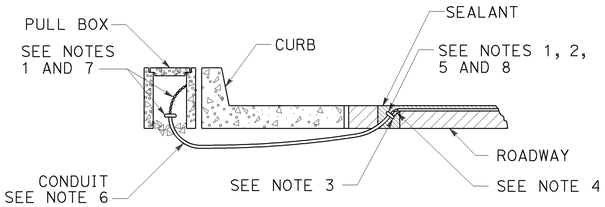

TYPE A
CURB TERMINATION DETAIL

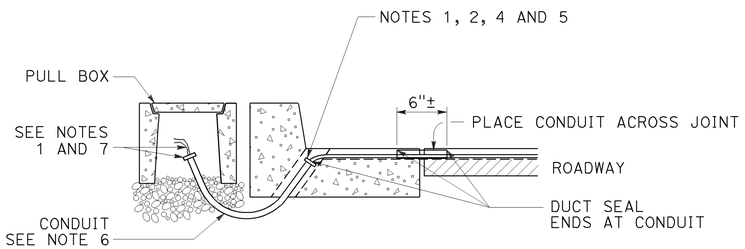

CROSS SECTION

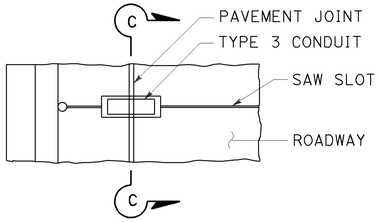

PLAN VIEW

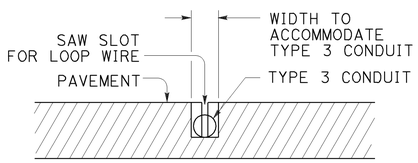

SECTION C-C

TYPE B
CURB TERMINATION DETAIL

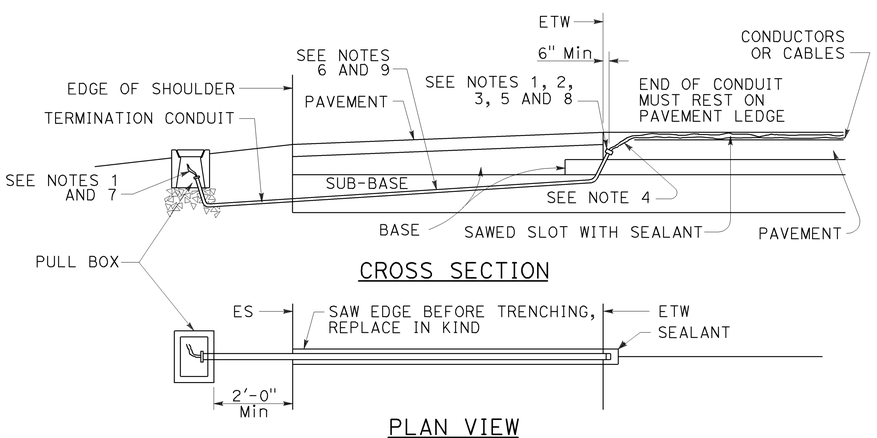

CROSS SECTION

PLAN VIEW

SHOULDER TERMINATION DETAILS

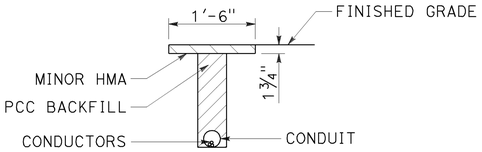

"T" TRENCH
DETAIL T

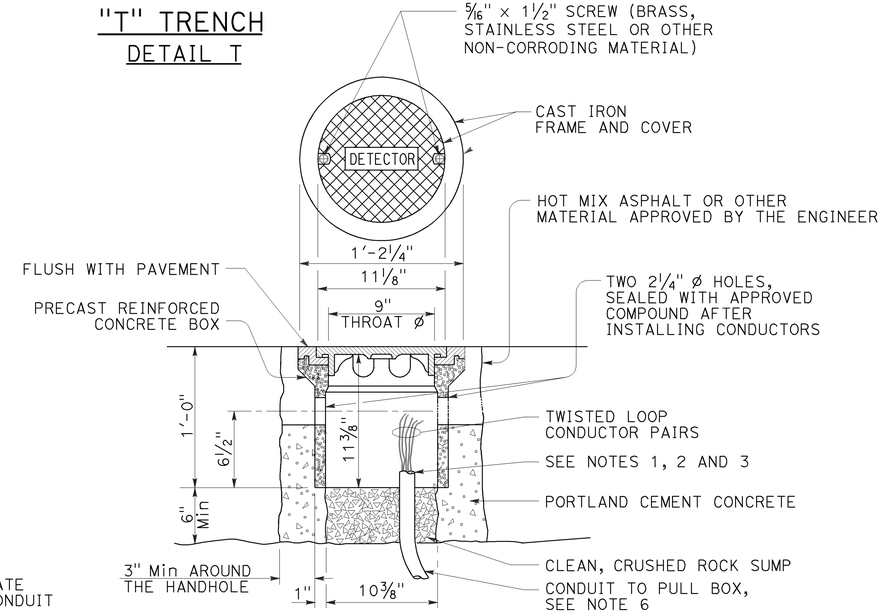

DETECTOR HANDHOLE DETAIL

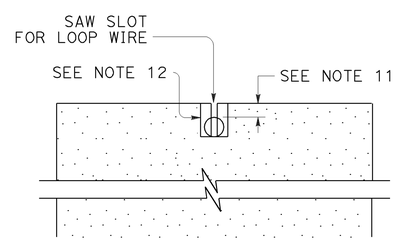

SECTION A-A

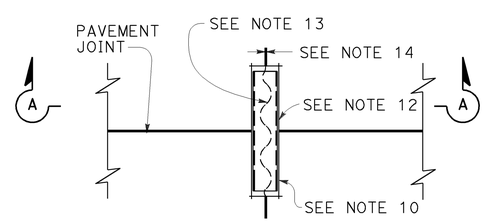

PLAN VIEW

TYPICAL LOOP LEAD-IN DETAIL
AT PAVEMENT JOINT

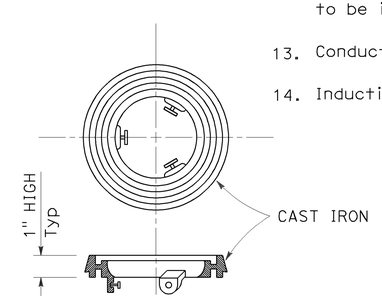

LOCKING GRADE RING

NOTES:

1. Bushing shall be used at end of conduit.
2. Tape detector conductors or cables 3" each side of bushings.
3. Install duct seal compound to each end of termination conduit before installing sealant.
4. Round all sharp edges where detector conductors or cables have to pass.
5. End of conduit shall be 3⅛" below roadway surface.
6. Conduit size / Loop conductors
   - 1"C minimum — 1 to 2 pairs
   - 1½"C minimum — 3 to 4 pairs
   - 2"C minimum — 5 or more pairs
7. Splice detector conductors or cables to detector lead-in-cable.
8. Location of detector handhole when shown on plans.
9. When the shoulder and traveled way are paved with the same material and there is no joint between them, the conduit shall extend only 2'-0" into the shoulder pavement.
10. ¾"C, Type 3 conduit 6" long minimum, plug both ends with duct compound to keep out sealant.
11. ½" Minimum between top of conduit and pavement surface.
12. Sawcut shall not exceed 1" in width and ⅛" longer than conduit to be installed.
13. Conductors with ½" minimum slack inside conduit.
14. Inductive loop detector saw slot.

STATE OF CALIFORNIA
DEPARTMENT OF TRANSPORTATION

ELECTRICAL SYSTEMS (CURB TERMINATION AND HANDHOLE)

NO SCALE

RSP ES-5D DATED JULY 19, 2013 SUPERSEDES STANDARD PLAN ES-5D DATED MAY 20, 2011 - PAGE 451 OF THE STANDARD PLANS BOOK DATED 2010.

REVISED STANDARD PLAN RSP ES-5D

2010 REVISED STANDARD PLAN RSP ES-5D

7-9-13

Dist	COUNTY	ROUTE	POST MILES TOTAL PROJECT	SHEET No.	TOTAL SHEETS
08	SBd	18	49.0/51.7	172	179

REGISTERED CIVIL ENGINEER

October 30, 2015
PLANS APPROVAL DATE

REGISTERED PROFESSIONAL ENGINEER Stanley P. Johnson No. C57793 Exp. 3-31-16 CIVIL STATE OF CALIFORNIA

THE STATE OF CALIFORNIA OR ITS OFFICERS OR AGENTS SHALL NOT BE RESPONSIBLE FOR THE ACCURACY OR COMPLETENESS OF SCANNED COPIES OF THIS PLAN SHEET.

TO ACCOMPANY PLANS DATED 6-26-15

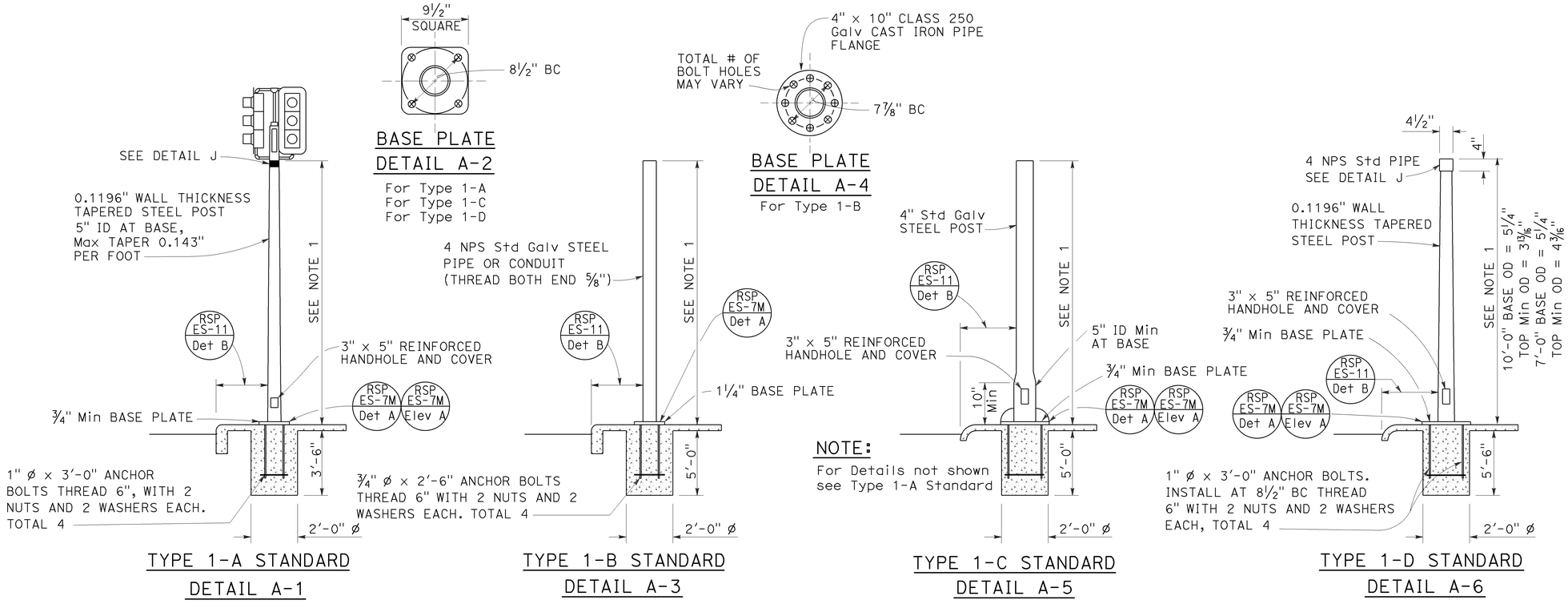

TYPE 1 SIGNAL STANDARDS
DETAIL A

NOTES:

1. Standards shall be 10'-0" ± 2" for vehicle signals and 7'-0" ± 2" for pedestrian signals unless shorter pole is noted on project plans.
2. Top of standards shall be 4½" OD.
3. Conduits shall extend 2" maximum above finished surface of foundation and for Types 1-A, 1-C and 1-D shall be sloped toward handhole.
4. Anchor bolts shall be bonded to conduit or grounding conductor.
5. For additional notes and details, see Revised Standard Plans RSP ES-7M and RSP ES-7N.
6. Pour foundation concrete against undisturbed soil.
7. For standards with handhole, locate in the downstream side of traffic.
8. Coupling nuts to be used only when shown or specified on project plans.

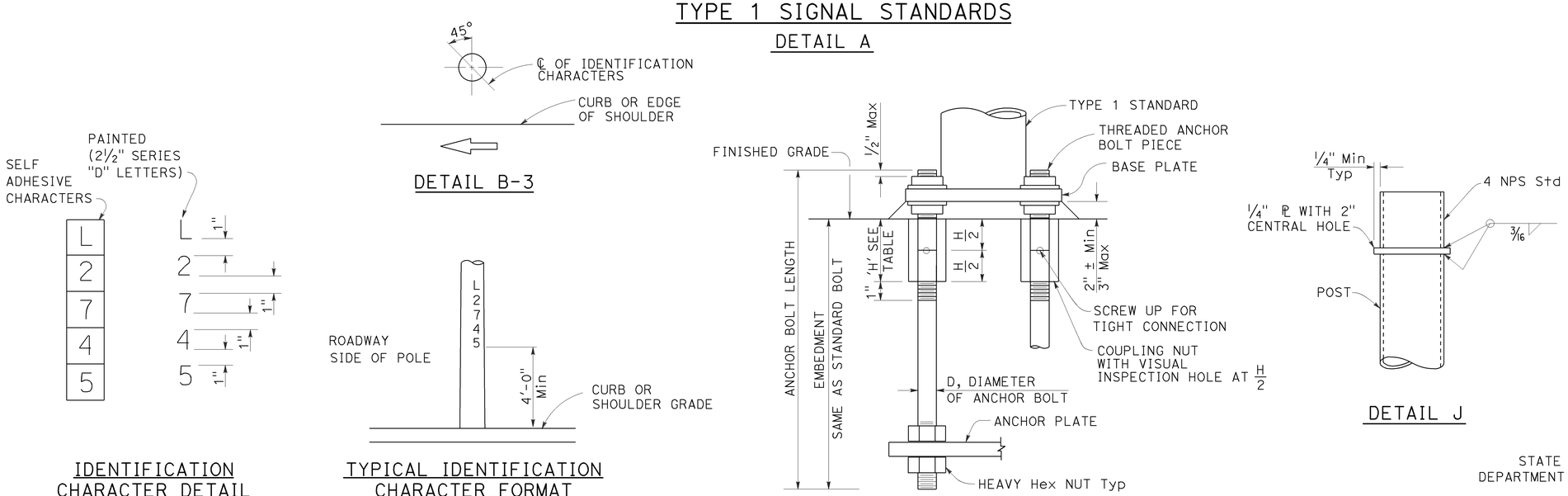

LOCATION OF EQUIPMENT IDENTIFICATION CHARACTERS ON STANDARDS AND POSTS
DETAIL B

COUPLING NUT TABLE	
BOLT DIAMETER	NUT TABLE THICKNESS 'H'
¾"	2¼"
1"	3"

STATE OF CALIFORNIA
DEPARTMENT OF TRANSPORTATION

ELECTRICAL SYSTEMS (SIGNAL AND LIGHTING STANDARD, TYPE 1 AND EQUIPMENT IDENTIFICATION CHARACTERS)

NO SCALE

RSP ES-7B DATED OCTOBER 30, 2015 SUPERSEDES STANDARD PLAN ES-7B DATED MAY 20, 2011 - PAGE 463 OF THE STANDARD PLANS BOOK DATED 2010.

REVISED STANDARD PLAN RSP ES-7B

2010 REVISED STANDARD PLAN RSP ES-7B

10-8-15

Dist	COUNTY	ROUTE	POST MILES TOTAL PROJECT	SHEET No.	TOTAL SHEETS
08	SBd	18	49.0/51.7	173	179

REGISTERED CIVIL ENGINEER

July 19, 2013
PLANS APPROVAL DATE

REGISTERED PROFESSIONAL ENGINEER Stanley P. Johnson No. C57793 Exp. 3-31-14 CIVIL STATE OF CALIFORNIA

THE STATE OF CALIFORNIA OR ITS OFFICERS OR AGENTS SHALL NOT BE RESPONSIBLE FOR THE ACCURACY OR COMPLETENESS OF SCANNED COPIES OF THIS PLAN SHEET.

TO ACCOMPANY PLANS DATED 6-26-15

NOTE:
Handhole shall be located on the downstream side of traffic.

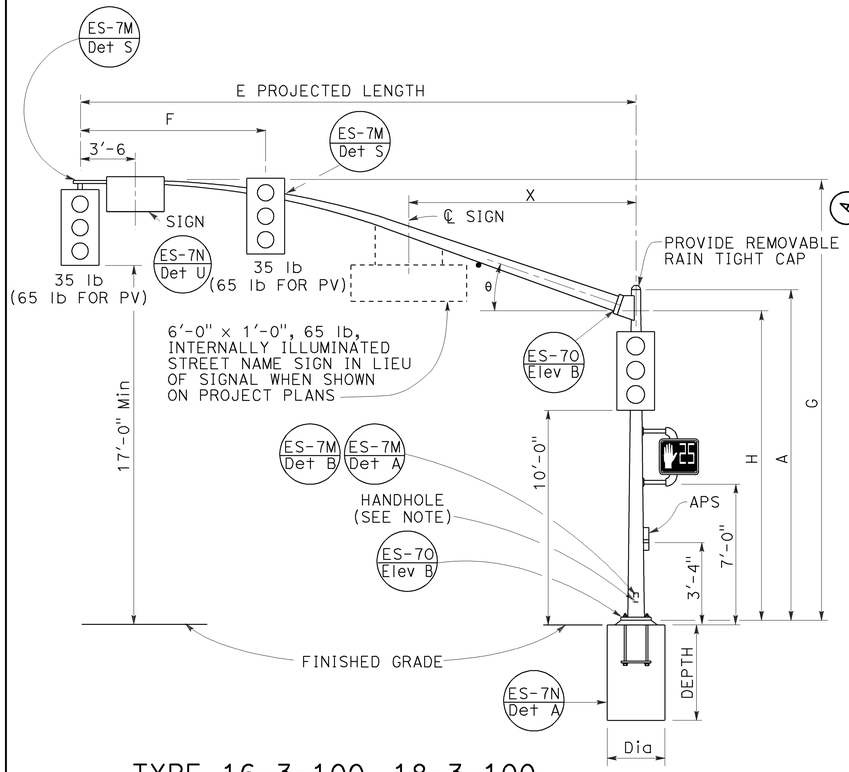

TYPE 16-3-100, 18-3-100, 23-3-100, 27-3-100
ELEVATION A

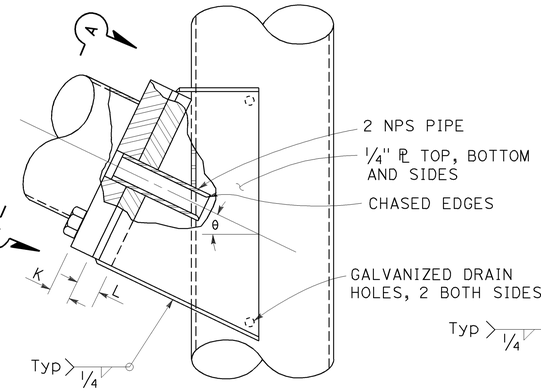

ELEVATION C

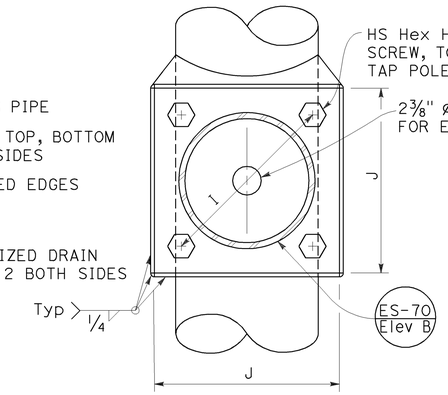

VIEW A-A

SIGNAL MAST ARM CONNECTION
DETAIL A

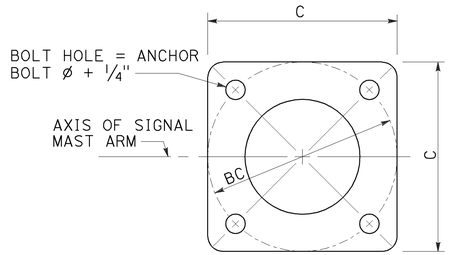

BASE PLATE
DETAIL B

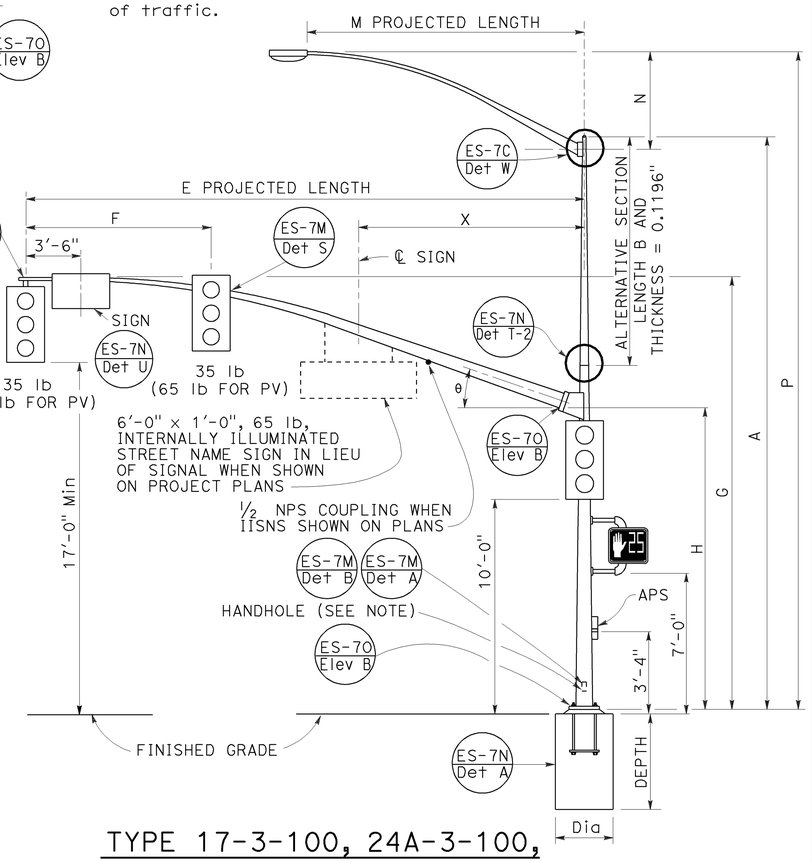

TYPE 17-3-100, 24A-3-100, 19-3-100, 26-3-100, 19A-3-100, 26A-3-100, 24-3-100
ELEVATION B

SIGNAL MAST ARM DATA												
E PROJECTED LENGTH	F Min SPACING	G MOUNTING HEIGHT	H	Min OD AT POLE	THICKNESS	I BOLT CIRCLE	HS CAP SCREWS	J PLATE SIZE	K MAST ARM ℙ THICKNESS	L POLE ℙ THICKNESS	θ	X Max
15'-0"	8'-0"	21'-8"±	17'-6"	7 3/8"	0.1793"	12"	1 1/4"-7NC-3"	1'-0"	1 1/4"	1 1/2"	23°	-
20'-0"		21'-8"±		7 3/8"								
25'-0"	12'-0"	22'-8"±	16'-0"	7 3/8"	0.2391"							10'-6"
30'-0"		23'-0"±		8"								
35'-0"	14'-0"			8 3/4"		13"		1'-1"	1 1/2"	1 3/4"	21°	
40'-0"	15'-0"			9 3/8"							15°	13'-0"
45'-0"		23'-8"±		10 1/16"								

LUMINAIRE MAST ARM DATA					
M PROJECTED LENGTH	N RISE	Min OD AT POLE	THICKNESS	P MOUNTING HEIGHT 30'-0" POLE	P MOUNTING HEIGHT 35'-0" POLE
6'-0"	2'-0"±	3 1/4"	0.1196"	31'-6"±	36'-6"±
8'-0"	2'-6"±	3 1/2"		32'-0"±	37'-0"±
10'-0"	3'-3"±	3 7/8"		32'-9"±	37'-9"±
12'-0"	4'-3"±			33'-9"±	38'-9"±
15'-0"	4'-9"±	4 1/4"		34'-3"±	39'-3"±

POLE TYPE	LOAD CASE	WIND VELOCITY (mph)	POLE DATA A HEIGHT	Min OD BASE	Min OD TOP	THICKNESS	ALTERNATIVE SECTION B LENGTH	BOTTOM	TOP	BASE PLATE DATA C	BC = BOLT CIRCLE	THICKNESS	ANCHOR BOLT SIZE	LUMINAIRE MAST ARM	SIGNAL MAST ARM	CIDH PILE FOUNDATION DIAMETER	DEPTH	REINFORCED
16-3-100	3	100	18'-6"	10 3/4"	8 1/16"	0.1793"	NONE			1'-5 1/2"	1'-5 1/2"	3"	1 1/2" ø x 42"	NONE	15'-0", [20'-0"]	3'-0"	8'-6"	YES
17-3-100			30'-0"		6 7/16"		10'-0"	7 7/8"	6 7/16"					6'-15' [12'-0"]				
18-3-100			17'-0"	1'-0"	8 5/16"	0.2391"	NONE			1'-7"			2" ø x 42"	NONE	25'-0", [30'-0"]		9'-6"	
19-3-100			30'-0"		7 11/16"		10'-0"	9 1/8"	7 11/16"					6'-15' [12'-0"]			11'-0"	
19A-3-100			35'-0"		6 15/16"		15'-0"		6 15/16"					6'-15' [15'-0"]				
23-3-100			17'-0"		9 9/16"		NONE							NONE	35'-0"			
24-3-100			30'-0"		7 11/16"		10'-0"	9 1/8"	7 11/16"					6'-15' [12'-0"]				
24A-3-100			35'-0"		6 15/16"		15'-0"		6 15/16"					6'-15' [15'-0"]				
26-3-100			30'-0"	1'-2"	7 13/16"	0.3125"	10'-0"	9 1/4"	7 13/16"	1'-11"	1'-9"		2 1/2" ø x 42"	6'-15' [12'-0"]	40'-0", [45'-0"]	3'-6"	12'-0"	
26A-3-100			35'-0"		7 1/16"		15'-0"		7 1/16"					6'-15' [15'-0"]				
27-3-100			17'-0"		9 11/16"		NONE							NONE				

[ ] INDICATES MAST ARM LENGTH TO BE USED UNLESS OTHERWISE NOTED ON PLANS.

STATE OF CALIFORNIA
DEPARTMENT OF TRANSPORTATION

ELECTRICAL SYSTEMS (SIGNAL AND LIGHTING STANDARD, CASE 3 SIGNAL MAST ARM LOADING, WIND VELOCITY=100 MPH AND SIGNAL MAST ARM LENGTHS 15' TO 45')

NO SCALE

RSP 7E DATED JULY 19, 2013 SUPERSEDES STANDARD PLAN 7E
DATED MAY 20, 2011 - PAGE 466 OF THE STANDARD PLANS BOOK DATED 2010.

REVISED STANDARD PLAN RSP ES-7E

2010 REVISED STANDARD PLAN RSP ES-7E

6-17-13

Dist	COUNTY	ROUTE	POST MILES TOTAL PROJECT	SHEET No.	TOTAL SHEETS
08	SBd	18	49.0/51.7	174	179

REGISTERED CIVIL ENGINEER

July 19, 2013
PLANS APPROVAL DATE

REGISTERED PROFESSIONAL ENGINEER Stanley P. Johnson No. C57793 Exp. 3-31-14 CIVIL STATE OF CALIFORNIA

THE STATE OF CALIFORNIA OR ITS OFFICERS OR AGENTS SHALL NOT BE RESPONSIBLE FOR THE ACCURACY OR COMPLETENESS OF SCANNED COPIES OF THIS PLAN SHEET.

NOTE:

TO ACCOMPANY PLANS DATED 6-26-15

1. Handhole shall be located on the downstream side of traffic.

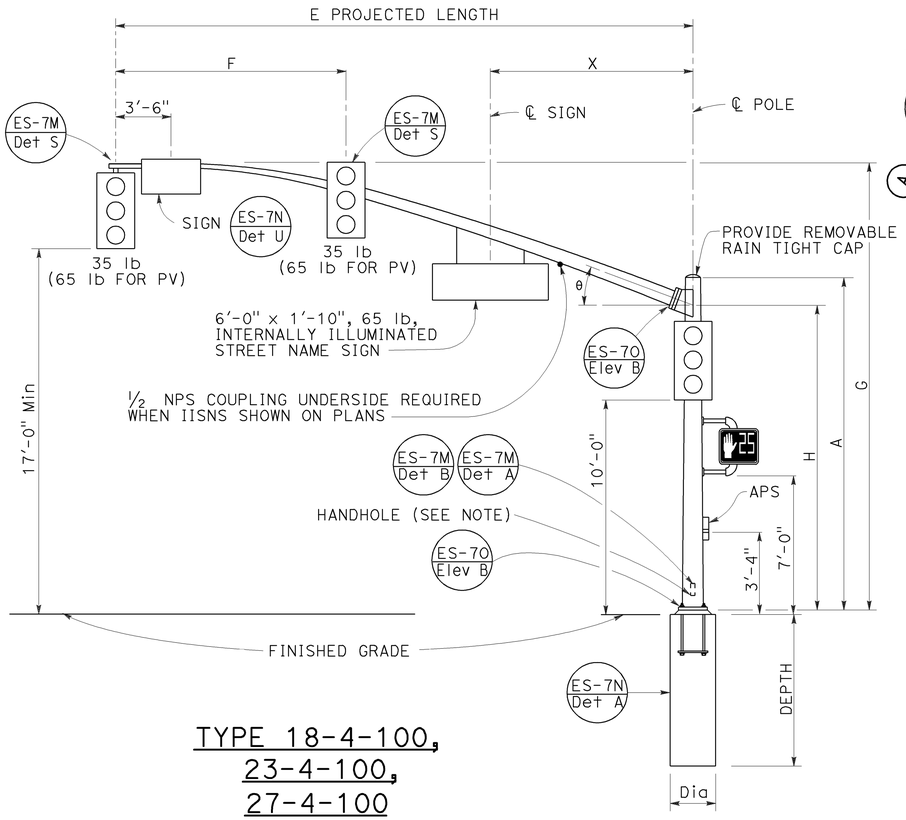

TYPE 18-4-100,
23-4-100,
27-4-100
ELEVATION A

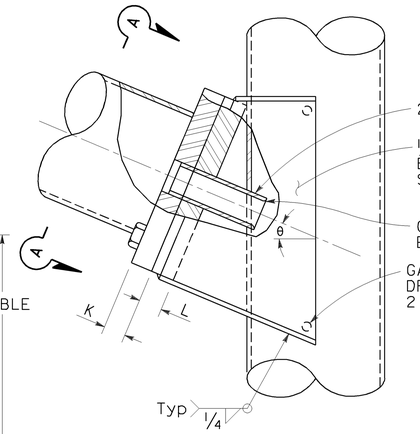

ELEVATION C

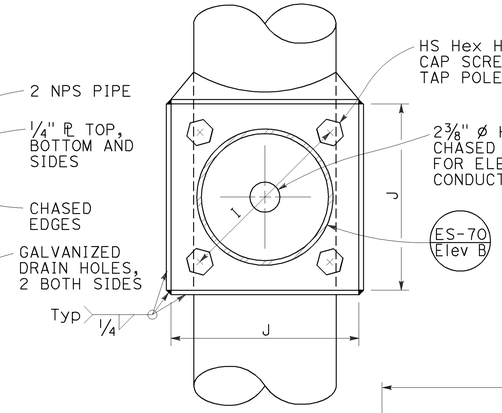

VIEW A-A

SIGNAL MAST ARM CONNECTION
DETAIL A

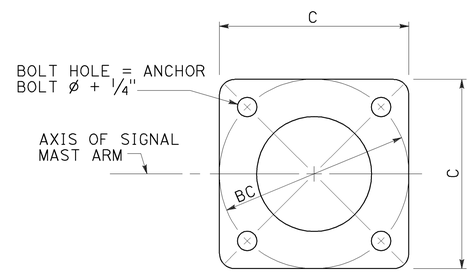

BASE PLATE
DETAIL B

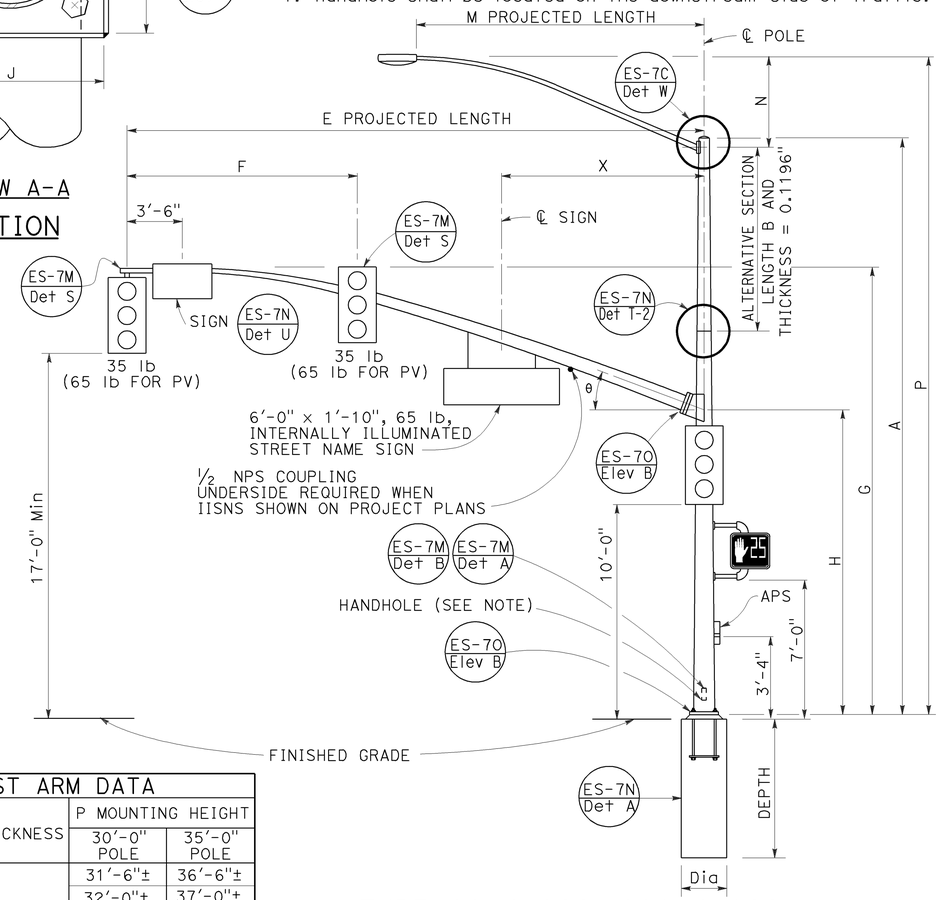

TYPE 19-4-100, 19A-4-100,
24-4-100, 24A-4-100,
26-4-100, 26A-4-100
ELEVATION B

SIGNAL MAST ARM DATA												
E PROJECTED LENGTH	F Min SPACING	G MOUNTING HEIGHT	H	Min OD AT POLE	THICKNESS	I BOLT CIRCLE	HS CAP SCREWS	J PLATE SIZE	K MAST ARM ℄ THICKNESS	L POLE ℄ THICKNESS	θ	X Max
25'-0"	10'-0"	22'-8"±	16'-0"	7⅜"	0.2391"	12"	1¼"-7NC-3"	1'-0"	1¼"	1½"	23°	10'-6"
30'-0"	12'-0"	23'-0"±		8"								
35'-0"	14'-0"			8 11/16"		13½"		1'-1½"	1½"	1¾"	21°	
40'-0"	15'-0"			9⅜"							15°	13'-0"
45'-0"		23'-8"±		10¼"								

LUMINAIRE MAST ARM DATA					
M PROJECTED LENGTH	N RISE	Min OD AT POLE	THICKNESS	P MOUNTING HEIGHT	
				30'-0" POLE	35'-0" POLE
6'-0"	2'-0"±	3¼"	0.1196"	31'-6"±	36'-6"±
8'-0"	2'-6"±	3½"		32'-0"±	37'-0"±
10'-0"	3'-3"±	3⅞"		32'-9"±	37'-9"±
12'-0"	4'-3"±			33'-9"±	38'-9"±
15'-0"	4'-9"±	4¼"		34'-3"±	39'-3"±

POLE TYPE	LOAD CASE	WIND VELOCITY (mph)	POLE DATA							BASE PLATE DATA				LUMINAIRE MAST ARM	SIGNAL MAST ARM	CIDH PILE FOUNDATION		
			A HEIGHT	Min OD BASE	Min OD TOP	THICKNESS	ALTERNATIVE SECTION B LENGTH	ALTERNATIVE SECTION BOTTOM	ALTERNATIVE SECTION TOP	C	BC = BOLT CIRCLE	THICKNESS	ANCHOR BOLT SIZE			Dia	DEPTH	REINFORCED
18-4-100	4	100	17'-0"	12⅛"	9 9/16"	0.3125"	NONE			1'-7"	1'-5½"	3"	2" Ø x 42"	NONE	25'-0", 30'-0"	3'-0"	11'-0"	YES
19-4-100			30'-0"		7 11/16"		10'-0"	9⅛"	7 11/16"					6'-15' 12'-0"				
19A-4-100			35'-0"		6 15/16"		15'-0'		6 15/16"					6'-15' 15'-0"				
23-4-100			17'-0"		9 9/16"		NONE							NONE	35'-0"			
24-4-100			30'-0"		7 11/16"		10'-0"	9⅛"	7 11/16"					6'-15' 12'-0"				
24A-4-100			35'-0"		6 15/16"		15'-0"		6 15/16"					6'-15' 15'-0"				
26-4-100			30'-0"	14"	8 3/16"		10'-0"	9⅝"	8 3/16"	23"	21"		2½" Ø x 42"	6'-15' 12'-0"	40'-0", 45'-0"	3'-6"	12'-0"	
26A-4-100			35'-0"		7 7/16"		15'-0"		7 7/16"					6'-15' 15'-0"				
27-4-100			17'-0"		10 1/16"		NONE							NONE				

INDICATES MAST ARM LENGTH TO BE USED UNLESS OTHERWISE NOTED ON PLANS.

STATE OF CALIFORNIA
DEPARTMENT OF TRANSPORTATION

ELECTRICAL SYSTEMS (SIGNAL AND LIGHTING STANDARD, CASE 4 SIGNAL MAST ARM LOADING, WIND VELOCITY=100 MPH AND SIGNAL MAST ARM LENGTHS 25' TO 45')

NO SCALE

RSP ES-7F DATED JULY 19, 2013 SUPERSEDES STANDARD PLAN ES-7F
DATED MAY 20, 2011 - PAGE 467 OF THE STANDARD PLANS BOOK DATED 2010.

REVISED STANDARD PLAN RSP ES-7F

2010 REVISED STANDARD PLAN RSP ES-7F

6-18-13

Dist	COUNTY	ROUTE	POST MILES TOTAL PROJECT	SHEET No.	TOTAL SHEETS
08	SBd	18	49.0/51.7	175	179

REGISTERED CIVIL ENGINEER

October 30, 2015
PLANS APPROVAL DATE

REGISTERED PROFESSIONAL ENGINEER Stanley P. Johnson No. C57793 Exp. 3-31-16 CIVIL STATE OF CALIFORNIA

THE STATE OF CALIFORNIA OR ITS OFFICERS OR AGENTS SHALL NOT BE RESPONSIBLE FOR THE ACCURACY OR COMPLETENESS OF SCANNED COPIES OF THIS PLAN SHEET.

TO ACCOMPANY PLANS DATED 6-26-15

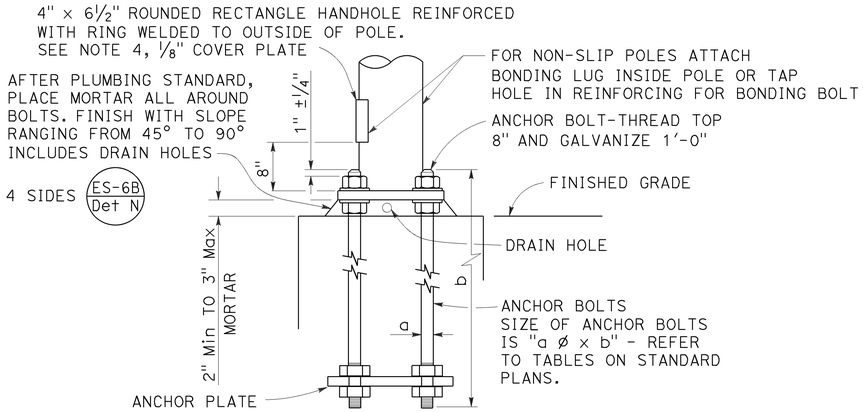

HANDHOLE AND ANCHORAGE
DETAIL A

IDENTIFICATION NUMBER

1. Attach a stamped metal tag with pole's identification number above the handhole. ¼" high number, minimum.
2. Attach a stamped metal tag with mast arm's identification number to the bottom of the signal mast arm near the pole plate. ¼" high number, minimum.

Type — Load case (Use SL for special load case) — Design wind velocity (mph) — Signal mast arm length (ft) { Near handhole: Maximum signal mast arm length for pole type; Near pole plate: Installed signal mast arm length } — Standard plan year — Only for poles or mast arms using Detail F — Only for poles or mast arms using ES-7D

26A - 3 - 100 - 45 - 10 - F or FB

SAMPLE IDENTIFICATION NUMBER

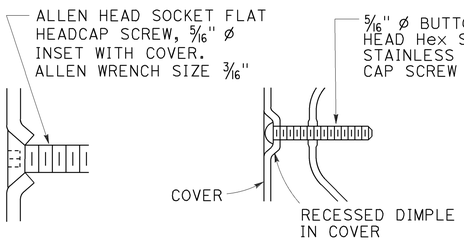

TYPICAL DETAIL
DETAIL B-1

ALTERNATIVE DETAIL
DETAIL B-2

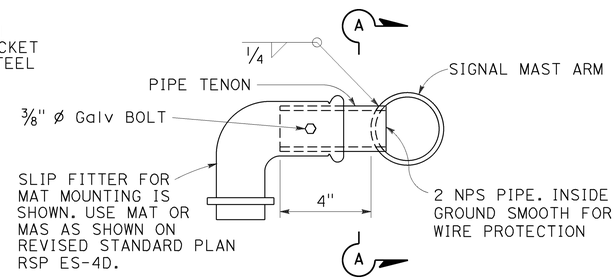

SIDE TENON
DETAIL S-1

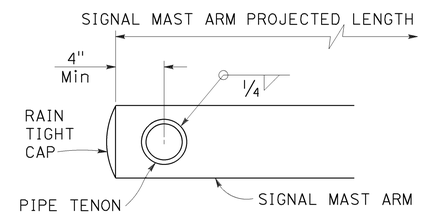

SECTION A-A

PIPE TENONS
DETAIL S

NOTES:

1. Provide a Hex nut, leveling nut and 2 washers for each bolt.
2. Luminaire mast arms shall be round, tapered steel tubes, taper of 0.1375" to 0.143-inch per foot with an end section 2⅜" OD for mounting hardware. Extensions of 2 NPS Standard pipe and 7" long may be used at the option of the manufacturer. When low pressure sodium luminaires are required, the extension shall be 1'-3".
3. Signal mast arms shall be round, tapered steel tubes, maximum taper 0.143-inch per foot.
4. Handhole reinforcement ring shall be ¼" x 2" for 0.1196" to 0.2391" thick poles, ⅜" x 2" for 0.3125" thick poles.
5. Handholes shall be located on the downstream side of traffic.
6. Detail F, fatigue resistant weld, is required at socket welded signal mast arm plate and pole base plate.
7. Cap screws shall be tightened by the turn-of-nut method ⅓ turn from a snug tight condition. No washer will be required.
8. Outside diameter, wall thickness, and corresponding section properties of poles and mast arms as shown in the Standard Plans are minimums. Unless otherwise specified, alternative sections shall require approval by the Engineer.
9. Wind Loading (3 seconds gust): 100 mph
10. Unit Stresses (Structural steel):
    fy = 55,000 psi (tapered steel tube and anchor bolts)
    fy = 50,000 psi (unless otherwise noted)
11. Unit Stresses (Reinforced concrete):
    f'c = 3,625 psi
    fy = 60,000 psi

WELD SIZE	WALL THICKNESS
3/16"	0.1196"
¼"	0.1793"
5/16"	0.2391"
⅜"	0.3125"

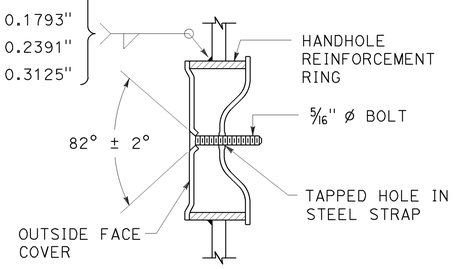

TAMPER RESISTANT HANDHOLE COVER
DETAIL B

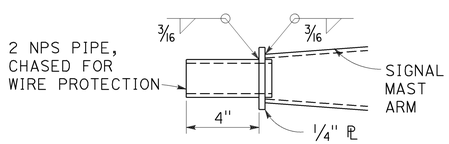

TIP TENON
DETAIL TL

This detail supersedes Detail S when so designated

WELD SIZE	WALL THICKNESS
⅛"	0.1196"
3/16"	0.1793"
¼"	0.2391"

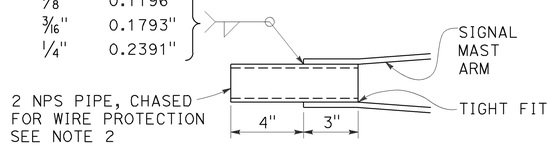

TIP TENON
DETAIL TS

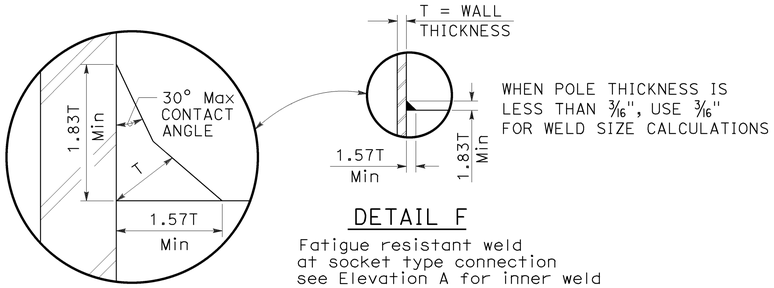

DETAIL F

Fatigue resistant weld at socket type connection see Elevation A for inner weld

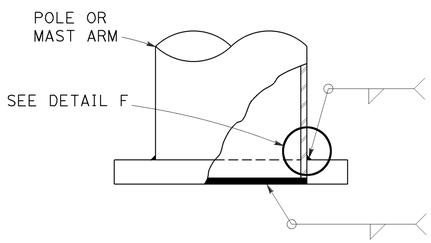

WELD SIZE	WALL THICKNESS
¼"	0.1196"
5/16"	0.1793"
⅜"	0.2391"
7/16"	0.3125"

⅛"	0.1196"
3/16"	0.1793"
¼"	0.2391"
5/16"	0.3125"

ELEVATION A

STATE OF CALIFORNIA
DEPARTMENT OF TRANSPORTATION

ELECTRICAL SYSTEMS (SIGNAL AND LIGHTING STANDARD, DETAIL No. 1)

NO SCALE

RSP ES-7M DATED OCTOBER 30, 2015 SUPERSEDES STANDARD PLAN ES-7M DATED MAY 20, 2011 - PAGE 474 OF THE STANDARD PLANS BOOK DATED 2010.

REVISED STANDARD PLAN RSP ES-7M

2010 REVISED STANDARD PLAN RSP ES-7M

9-1-15

Dist	COUNTY	ROUTE	POST MILES TOTAL PROJECT	SHEET No.	TOTAL SHEETS
08	SBd	18	49.0/51.7	176	179

REGISTERED CIVIL ENGINEER

October 30, 2015
PLANS APPROVAL DATE

REGISTERED PROFESSIONAL ENGINEER Stanley P. Johnson No. C57793 Exp. 3-31-16 CIVIL STATE OF CALIFORNIA

THE STATE OF CALIFORNIA OR ITS OFFICERS OR AGENTS SHALL NOT BE RESPONSIBLE FOR THE ACCURACY OR COMPLETENESS OF SCANNED COPIES OF THIS PLAN SHEET.

TO ACCOMPANY PLANS DATED 6-26-15

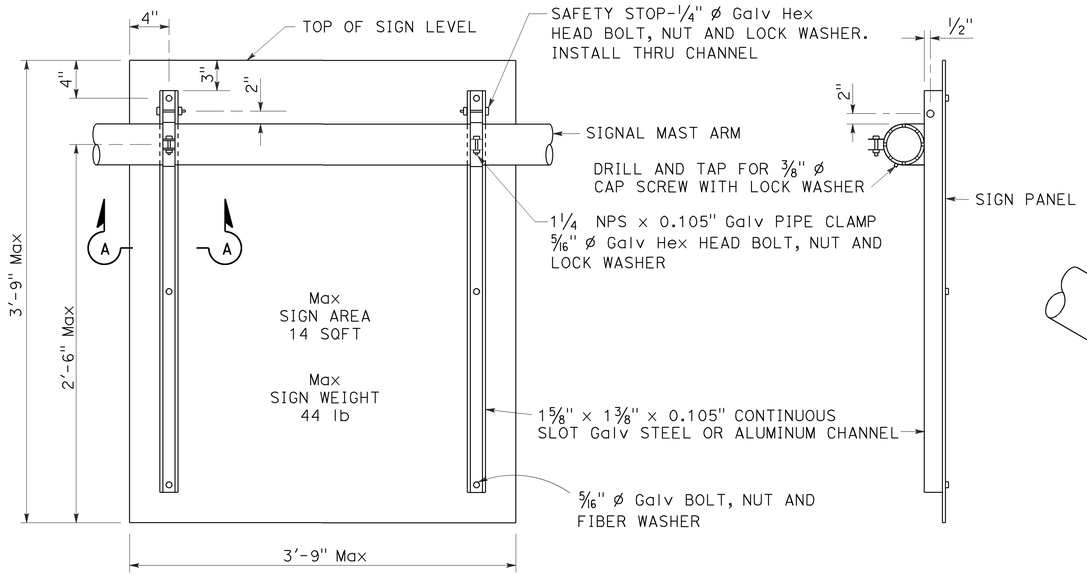

REAR VIEW

SIDE VIEW

SIGN MOUNTING DETAILS
DETAIL U

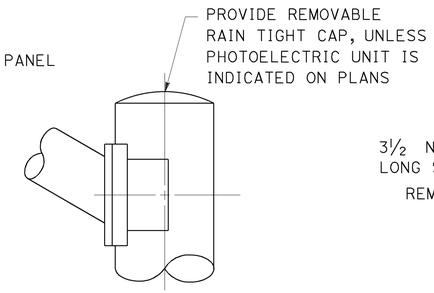

STANDARD TOP
DETAIL B-1

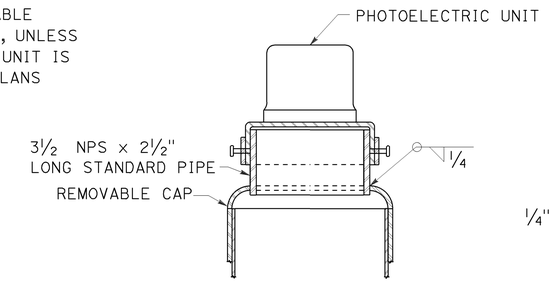

MOUNTING ADAPTER FOR
PHOTOELECTRIC UNIT
DETAIL B-2

POLE TOP DETAILS
DETAIL B

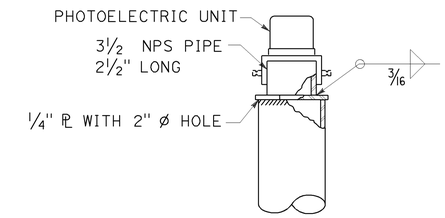

ALTERNATIVE
MOUNTING ADAPTER
DETAIL B-3

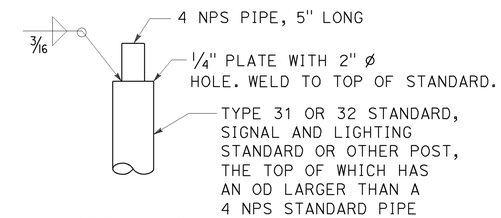

DETAIL C-1

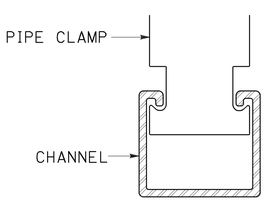

SECTION A-A

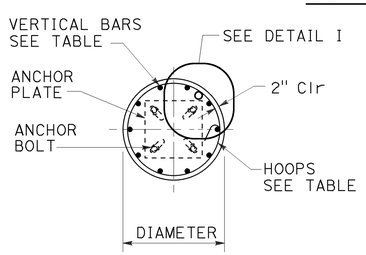

SECTION B-B

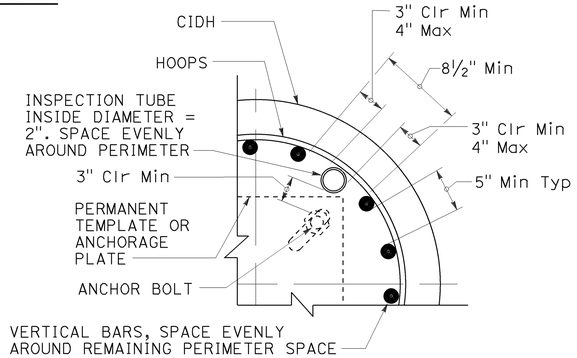

INSPECTION TUBE PLACEMENT
DETAIL I

CIDH REINFORCING AND INSPECTION TUBE SCHEDULE			
CIDH DIAMETER	VERTICAL BARS	HOOPS (WELDED)	INSPECTION TUBE
2 ft	8-#5	#4 AT 6	2
2.5 ft	10-#6		4*
3 ft	12-#7	#5 AT 6	
3.5 ft	14-#8		4
4 ft	18-#9	2-#4 AT 7	5
5 ft	22-#10	2-#5 AT 7	6
6 ft	26-#11	2-#6 AT 7	7

* FOR SLIP BASE VERSIONS WITH 3 ANCHOR BOLTS USE 3 INSPECTION TUBES.

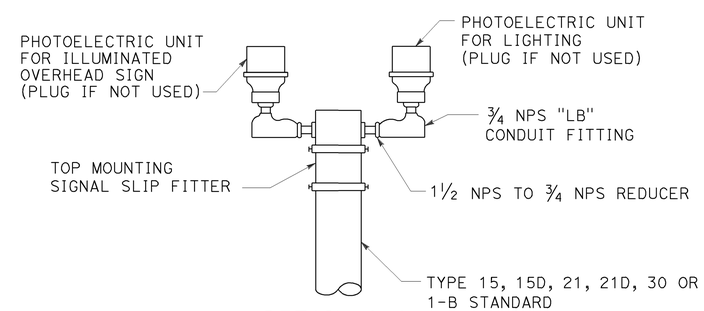

DETAIL C-2

DUAL PHOTOELECTRIC UNIT MOUNTING DETAIL
DETAIL C

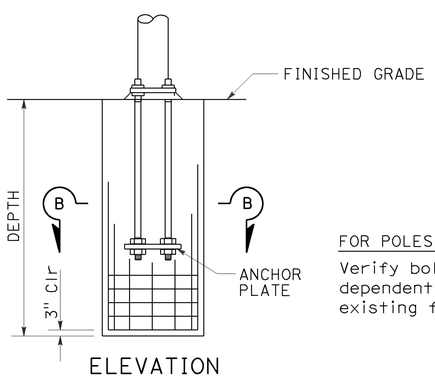

ELEVATION

FOR POLES TO BE INSTALLED ON EXISTING FOUNDATION:
Verify bolt circles, anchor bolt sizes and dependent dimensions for poles to be installed on existing foundations before fabricating the poles.

CAST-IN-DRILLED-HOLE PILE FOUNDATION, REINFORCED PILE
DETAIL A

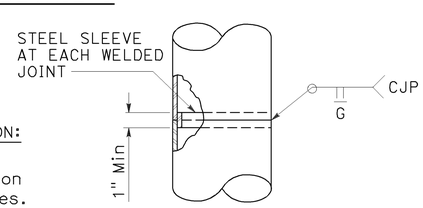

FOR UNIFORM TUBE THICKNESS
DETAIL T-1

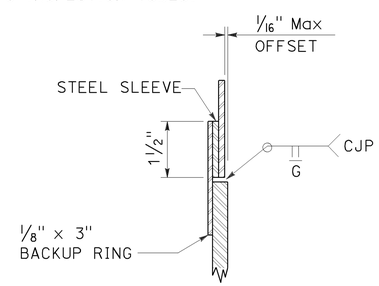

AT TUBE THICKNESS CHANGE
DETAIL T-2

POLE SPLICES
DETAIL T

STATE OF CALIFORNIA
DEPARTMENT OF TRANSPORTATION

ELECTRICAL SYSTEMS (SIGNAL AND LIGHTING STANDARD, DETAIL No. 2)

NO SCALE

RSP ES-7N DATED OCTOBER 30, 2015 SUPERSEDES STANDARD PLAN ES-7N DATED MAY 20, 2011 - PAGE 475 OF THE STANDARD PLANS BOOK DATED 2010.

REVISED STANDARD PLAN RSP ES-7N

2010 REVISED STANDARD PLAN RSP ES-7N

9-1-15

Dist	COUNTY	ROUTE	POST MILES TOTAL PROJECT	SHEET No.	TOTAL SHEETS
08	SBd	18	49.0/51.7	177	179

Theresa Gabriel
REGISTERED ELECTRICAL ENGINEER

July 19, 2013
PLANS APPROVAL DATE

REGISTERED PROFESSIONAL ENGINEER
Theresa Aziz Gabriel
No. E15129
Exp. 6-30-14
ELECTRICAL
STATE OF CALIFORNIA

THE STATE OF CALIFORNIA OR ITS OFFICERS OR AGENTS SHALL NOT BE RESPONSIBLE FOR THE ACCURACY OR COMPLETENESS OF SCANNED COPIES OF THIS PLAN SHEET.

TO ACCOMPANY PLANS DATED 6-26-15

2010 REVISED STANDARD PLAN RSP ES-10A

ISOFOOTCANDLE CURVE - MINIMUM

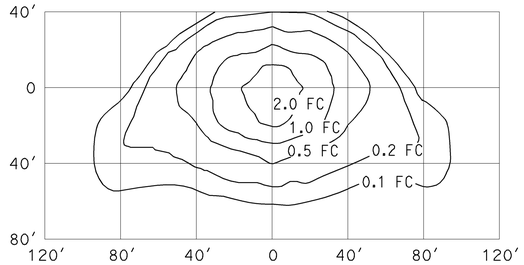

TYPE III MEDIUM CUTOFF

Cutoff Luminaire
34′ Mounting Height
Lamp operated at 22,000 lm
200-W high pressure sodium lamp
ANSI Designation S66

ISOFOOTCANDLE CURVE - MINIMUM

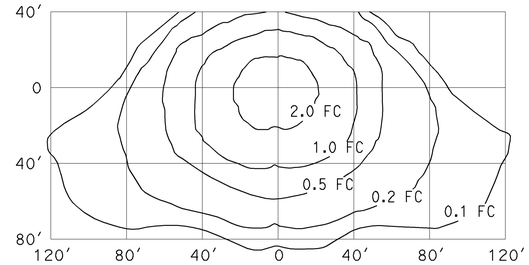

TYPE III MEDIUM CUTOFF

Cutoff Luminaire
40′ Mounting Height
Lamp operated at 37,000 lm
310-W high pressure sodium lamp
ANSI Designation S67

ISOFOOTCANDLE CURVE - MINIMUM

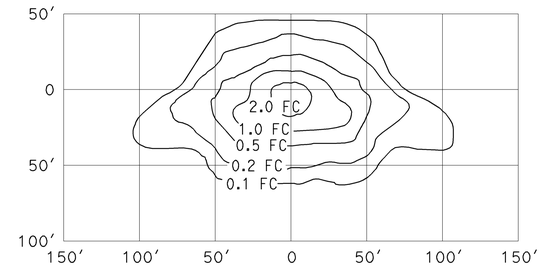

TYPE III MEDIUM CUTOFF

Cutoff Luminaire
30′ Mounting Height
Lamp operated at 16,000 lm
150-W high pressure sodium lamp
ANSI Designation S55

ISOFOOTCANDLE CURVE - MINIMUM

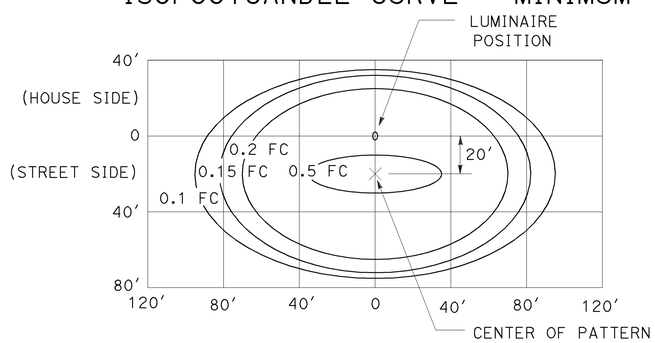

LED LUMINAIRE ROADWAY 1

165-W at 34′ Mounting Height

ISOFOOTCANDLE CURVE - MINIMUM

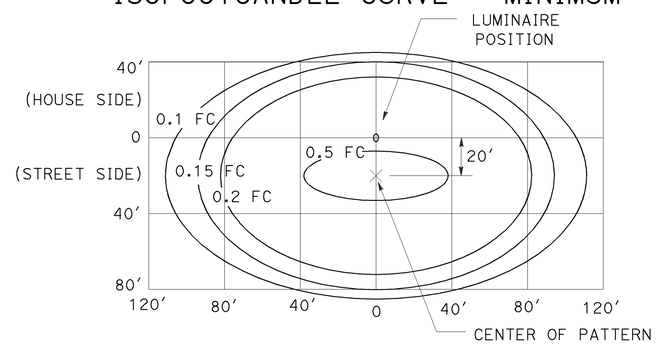

LED LUMINAIRE ROADWAY 2

235-W at 40′ Mounting Height

ISOFOOTCANDLE CURVE - MINIMUM

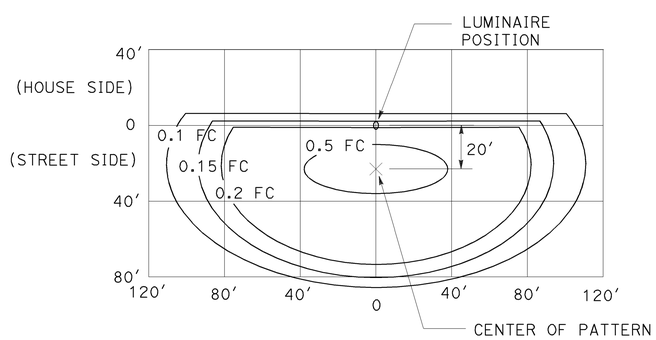

LED LUMINAIRE ROADWAY 3

235-W at 40′ Mounting Height
with back side control

ISOFOOTCANDLE CURVE - MINIMUM

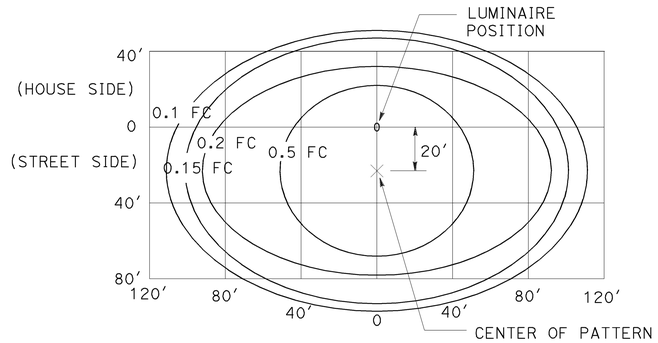

LED LUMINAIRE ROADWAY 4

300-W at 40′ Mounting Height

ISOFOOTCANDLE CURVE - MINIMUM

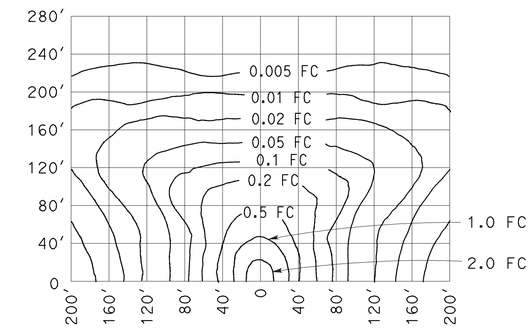

LOW PRESSURE SODIUM LUMINAIRE

40′ Mounting Height
Lamp operated at 33,000 lm
180-W low pressure sodium lamp

STATE OF CALIFORNIA
DEPARTMENT OF TRANSPORTATION

ELECTRICAL SYSTEMS (ISOFOOTCANDLE DIAGRAMS)

NO SCALE

RSP ES-10A DATED JULY 19, 2013 SUPERSEDES RSP ES-10A DATED JULY 20, 2012 THAT SUPPLEMENTS THE STANDARD PLANS BOOK DATED 2010.

REVISED STANDARD PLAN RSP ES-10A

Dist	COUNTY	ROUTE	POST MILES TOTAL PROJECT	SHEET No.	TOTAL SHEETS
08	SBd	18	49.0/51.7	178	179

REGISTERED CIVIL ENGINEER

July 19, 2013
PLANS APPROVAL DATE

REGISTERED PROFESSIONAL ENGINEER
Stanley P. Johnson
No. C57793
Exp. 3-31-14
CIVIL
STATE OF CALIFORNIA

THE STATE OF CALIFORNIA OR ITS OFFICERS OR AGENTS SHALL NOT BE RESPONSIBLE FOR THE ACCURACY OR COMPLETENESS OF SCANNED COPIES OF THIS PLAN SHEET.

TO ACCOMPANY PLANS DATED 6-26-15

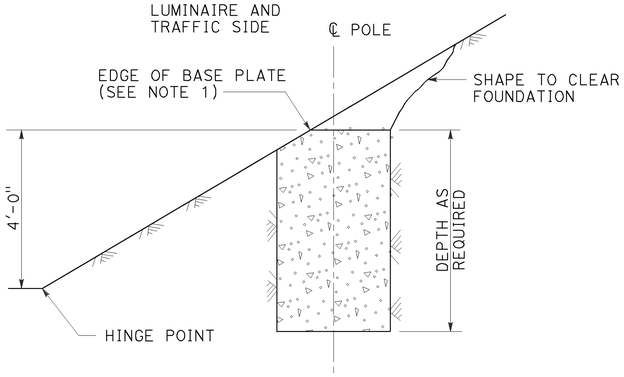

CUT SLOPES
STEEPER THAN 4:1,
LESS THAN 2:1
DETAIL A-1
See Note 2 and 3

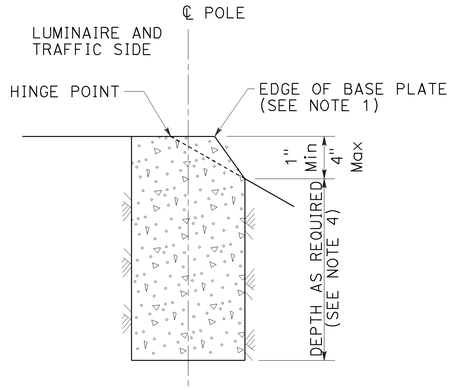

FILL SLOPES
STEEPER THAN 4:1,
LESS THAN 2:1
DETAIL A-2
See Note 2 and 3

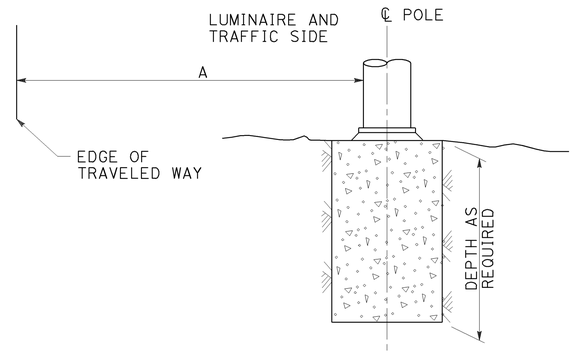

FLAT SECTIONS, CUT OR FILL SLOPES
4:1 OR FLATTER
DETAIL A-3
See Note 2

STANDARD TYPE	SETBACK (DIMENSION A)
32	30'-0" (Min)
31	20'-0" (Min)
15, 15D, 15-SB, 21, 21D, 30	ARM LENGTH (Min)

FOUNDATIONS ADJACENT TO ALL ROADWAYS EXCEPT
IN SIDEWALK, MEDIAN AND ISLAND AREAS
DETAIL A

NOTES:

1. Where a portion of the foundation is above grade, the top edges shall have a 1" chamfer.
2. Slopes shall be horizontal to vertical ratio (Horizontal : Vertical).
3. Horizontal setbacks on cut and fill slopes steeper than 4:1 shall not exceed the distance shown for flat sections.
4. CIDH embedment depth shall be increased beyond standard depths by the diameter of the CIDH.

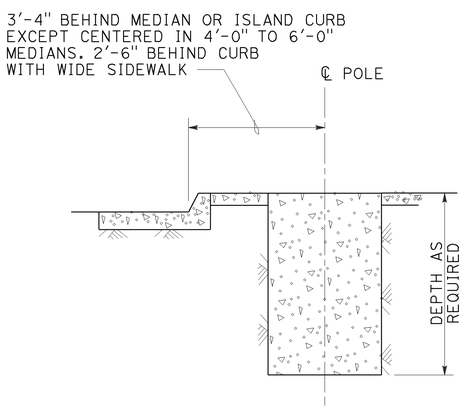

MEDIAN, ISLAND
OR WIDE SIDEWALK
DETAIL B-1
7' Wide and wider

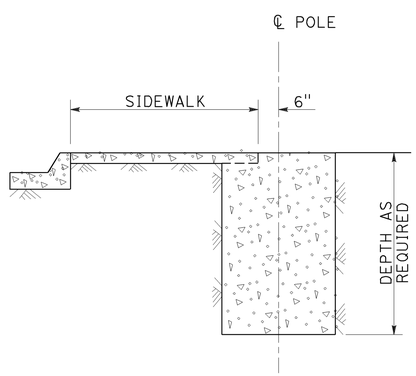

NARROW SIDEWALK
DETAIL B-2
Less than 7' wide

FOUNDATIONS IN SIDEWALK, MEDIAN AND ISLAND AREAS
DETAIL B

STATE OF CALIFORNIA
DEPARTMENT OF TRANSPORTATION

ELECTRICAL SYSTEMS (FOUNDATION INSTALLATIONS)

NO SCALE

RSP ES-11 DATED JULY 19, 2013 SUPERSEDES STANDARD PLAN ES-11
DATED MAY 20, 2011 - PAGE 488 OF THE STANDARD PLANS BOOK DATED 2010.

REVISED STANDARD PLAN RSP ES-11

2010 REVISED STANDARD PLAN RSP ES-11

7-9-13

Dist	COUNTY	ROUTE	POST MILES TOTAL PROJECT	SHEET No.	TOTAL SHEETS
08	SBd	18	49.0/51.7	179	179

Theresa Gabriel
REGISTERED ELECTRICAL ENGINEER

October 30, 2015
PLANS APPROVAL DATE

REGISTERED PROFESSIONAL ENGINEER
Theresa Aziz Gabriel
No. E15129
Exp. 6-30-16
ELECTRICAL
STATE OF CALIFORNIA

THE STATE OF CALIFORNIA OR ITS OFFICERS OR AGENTS SHALL NOT BE RESPONSIBLE FOR THE ACCURACY OR COMPLETENESS OF SCANNED COPIES OF THIS PLAN SHEET.

TO ACCOMPANY PLANS DATED 6-26-15

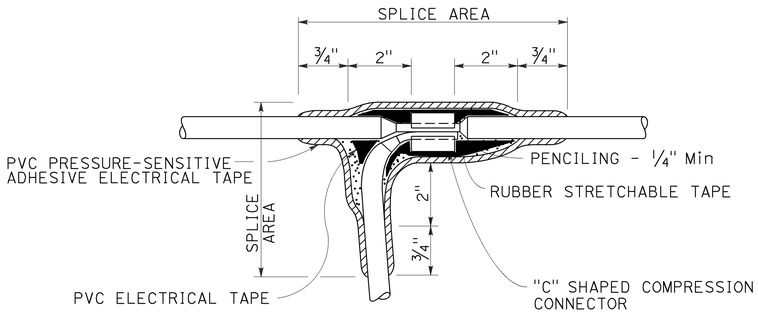

TYPE C SPLICE

See Note 3

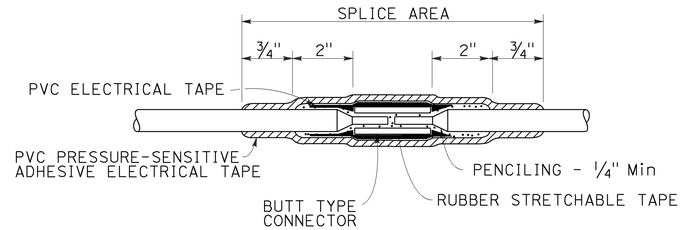

TYPE S SPLICE

See Note 4

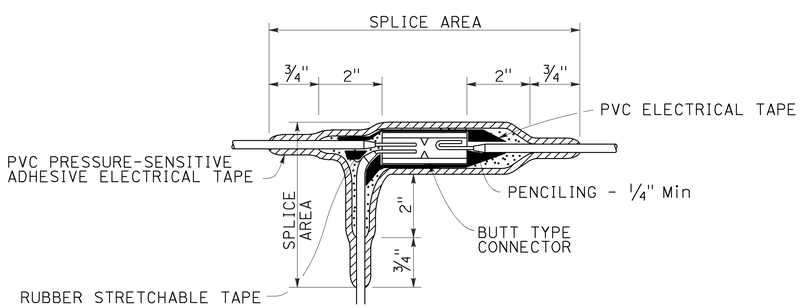

TYPE ST SPLICE

See Note 5

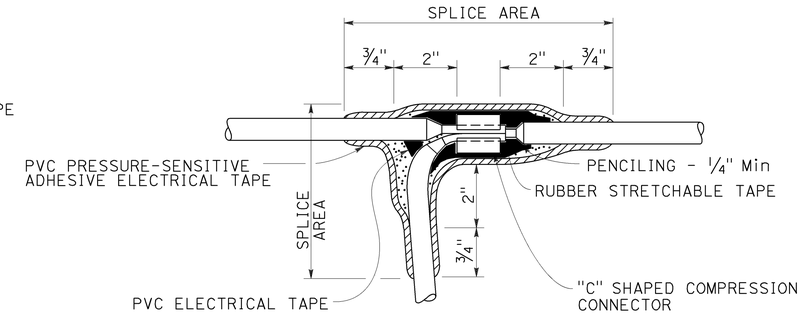

TYPE T SPLICE

See Note 5

NOTES:

1. Dimensions are minimum.
2. Rubber tapes shall be rolled after application.
3. Between 1 free-end and 1 through conductor.
4. Between 2 free-end conductors.
5. Between 3 free-end conductors.

STATE OF CALIFORNIA
DEPARTMENT OF TRANSPORTATION

ELECTRICAL SYSTEMS (SPLICING DETAILS)

NO SCALE

RSP ES-13A DATED OCTOBER 30, 2015 SUPERSEDES STANDARD PLAN ES-13A DATED MAY 20, 2011 - PAGE 491 OF THE STANDARD PLANS BOOK DATED 2010.

REVISED STANDARD PLAN RSP ES-13A

2010 REVISED STANDARD PLAN RSP ES-13A

9-28-15