DIST.	COUNTY	ROUTE	POST MILES TOTAL PROJECT	SHEET NO.	TOTAL SHEETS
03, 08	Sac, SBd	5, 15	23.3, R107.3	301	330

REGISTERED ELECTRICAL ENGINEER — 08-15-13 DATE

REGISTERED PROFESSIONAL ENGINEER — JASWINDER GILL — No. 18551 — Exp. 12-31-14 — ELEC — STATE OF CALIFORNIA

9-16-13
PLANS APPROVAL DATE

The State of California or its officers or agents shall not be responsible for the accuracy or completeness of electronic copies of this plan sheet.

CALIFORNIA STATE FIRE MARSHAL APPROVED
Approval of this plan does not authorize or approve any omission or deviation from applicable regulations. Final approval is subject to field inspection. One set of approved plans shall be available on the project site at all times.
Reviewed by: FRANCIS SOLICH
Approval date: 09-11-13

LIGHTING FIXTURE SCHEDULE

	MANUFACTURER	LAMP	DESCRIPTION
LED1	KENALL MIGHTY MAC-CD SERIES, COOPER FAIL-SAFE -FCC SERIES, OR EQUAL	MAX. 68 W LED ARRAY	CORNER MOUNTED VANDAL RESISTANT, 48 INCH LONG, MAXIMUM 68 WATTS INPUT LED ENGINE, 3200 MINIMUM DELIVERED LUMENS AT 5000 DEGREE KELVIN TEMPERATURE AT CRI OF 70. THE FIXTURE HOUSING SHALL BE MADE OF 16-GAUGE ONE-PIECE DIE-FORMED COLD ROLLED STEEL BODY PAINTED WHITE WITH PRISMATIC POLYCARBONATE INNER LENS AND CLEAR POLYCARBONATE OUTER LENS SECURED WITH THRU STUDS AND SHALL HAVE TAMPER RESISTANCE FASTENERS. FIXTURE SHALL HAVE AC LED ENGINE DRIVER, UL LISTED, 120V, 50,000 HOUR DESIGN LIFE, 0.9 MINIMUM POWER FACTOR, 5-YEAR WARRANTY, COMPLETE WITH INTERNAL THERMAL PROTECTION AND OVERLOAD PROTECTION. FIXTURE SHALL ALSO BE UL LISTED FOR WET LOCATION. TWO SCREW DRIVERS FOR TAMPERPROOF SCREW SHALL BE FURNISHED TO THE ENGINEER. OVERALL FIXTURE HEIGHT SHALL NOT EXCEED 8 INCHES.
LED2	LITHONIA STL SERIES COLUMBIA PTI SERIES OR EQUAL	MAX. 44 W LED ARRAY	SURFACE AND WALL MOUNTED, 12 INCH BY 48 INCH, MAXIMUM 44 W INPUT LED ENGINE, 4000 MINIMUM DELIVERED LUMENS AT 4000 DEGREE KELVIN TEMPERATURE AT CRI OF 80. THE FIXTURE HOUSING SHALL BE MADE OF ONE-PIECE DIE-FORMED COLD ROLLED STEEL BODY PAINTED WHITE COMPLETE WITH A WRAPAROUND LENS. FIXTURE SHALL HAVE AC LED ENGINE DRIVER, UL LISTED, 120V, 50,000 HOUR DESIGN LIFE, 0.9 MINIMUM POWER FACTOR, 5-YEAR WARRANTY, COMPLETE WITH INTERNAL THERMAL PROTECTION AND OVERLOAD PROTECTION. FIXTURE SHALL ALSO BE UL LISTED FOR DAMP LOCATION. TWO SCREW DRIVERS FOR TAMPERPROOF SCREW SHALL BE FURNISHED TO THE ENGINEER.
LED3	LSI INDUSTRIES- XAM SERIES BETA LIGHTING- THE EDGE SERIES OR EQUAL	140 W LED ARRAY	TYPE 15 LIGHTING STANDARD, 140 WATT, 277 VOLT, LIGHT EMITTING DIODES ARRAY, TYPE THREE, FULL CUTOF LUMINAIRE WITH ONE PIECE DIE-CAST, ALUMINUM ALLOY INTEGRAL COOLING ELECTRONIC MODULE DRIVER. THE LUMINAIRE SHALL HAVE ONE-PIECE DIE-CAST, ALUMINUM ALLOY HOUSING WITH SILICONE GASKET SEALS. ALL EXPOSED DIE-CAST SURFACE SHALL HAVE A SUPER TGIC THERMOSET POLYSTER POWDER COAT PAINT, BRONZE IN COLOR. THE FULL CUTOFF OPTICAL ASSEMBLY SHALL HAVE A FORWARD THROW REFLECTOR WITH NO BACK LIGHT TO THE HOUSE SIDE PERMITTED. FIXTURE SHAL HAVE FACTORY INSTALLED FUSES. POLE SHALL CONFORM TO STANDARD SPECIFICATIONS SECTION 86-2.04.
CFL1	LSI INDUSTRIES ABOLITE RLM SERIES TROY CLASSIC- HEAVY DUTY RLM SERIES, BARN LIGHT- WAREHOUSE SHADE SERIES OR EQUAL	ONE 42 W CFL	OUTDOOR WALL MOUNTED LUMINAIREAS SHOWN ON PLANS, 42- WATTS, 277 VOLTS, CUT-OFF LUMINAIRE, REMOTE ELECTRONIC BALLAST MOUNTED AT LOCATION SHOWN ON PLANS WITH SOCKET BASE SUITABLE FOR ONE 42W TRT COMPACT FLUORESCENT LAMPS WITH TEMPERED CLEAR LENSE. ALL EXPOSED DIE-CAST SURFACE SHALL HAVE A SUPER THERMOSET POLYSTER POWDER COAT PAINT. FOR FIXTURE FINISH SCHEDULE, SEE ARCHITECTURAL FINISH SCHEDULE PLAN. THE LAMP SHALL HAVE A WIREGAURD.
CFL2	LSI INDUSTRIES ABOLITE RLM SERIES TROY CLASSIC- HEAVY DUTY RLM SERIES, BARN LIGHT- WAREHOUSE SHADE SERIES OR EQUAL	ONE 42 W CFL	PENDANT OR STEM MOUNTED LUMINAIRE UNDER A CANOPY, 42- WATTS, 277 VOLTS, CUT-OFF LUMINAIRE, REMOTE ELECTRONIC BALLAST MOUNTED AT FIXTURE BASE WITH SOCKET BASE SUITABLE FOR ONE 42W TRT COMPACT FLUORESCENT LAMPS WITH TEMPERED CLEAR LENSE. ALL EXPOSED DIE-CAST SURFACE SHALL HAVE A SUPER THERMOSET POLYSTER POWDER COAT PAINT. FOR FIXTURE FINISH SCHEDULE, SEE ARCHITECTURAL FINISH SCHEDULE PLAN. THE LAMP SHALL HAVE A WIREGAURD.
MH1	LSI INDUSTRIES ABOLITE RLM SERIES TROY CLASSIC- HEAVY DUTY RLM SERIES, BARN LIGHT- WAREHOUSE SHADE SERIES OR EQUAL	ONE 100 W MH	POST-TOP LUMINAIRE, 100- WATTS, 277 VOLTS, METAL HALIDE LUMINAIRE, CUT-OFF, BALLAST MOUNTED INSIDE THE POLE WITH SOCKET BASE SUITABLE FOR ONE REMOTE 100W METAL HALIDE LAMPS WITH TEMPERED CLEAR LENS AND WIREGAURD. ALL EXPOSED DIE-CAST SURFACE SHALL HAVE A SUPER THERMOSET POLYSTER POWDER COAT PAINT. FOR FIXTURE FINISH SCHEDULE, SEE ARCHITECTURAL FINISH SCHEDULE PLAN.
MH3	LITHONIA TWP SERIES DAY BRITE WLM SERIES OR EQUAL	ONE 70 W MH	OUTDOOR WALL MOUNTED, 70 WATT, 120 VOLT, METAL HALIDE LUMINAIRE WITH INTEGRAL BALLAST. THE LUMINAIRE SHALL BE VANDAL- RESISTANCE WITH CLEAR PRISMATIC POLYCARBONATE LENS. HOUSING SHALL BE CONSTRUCTED FROM HEAVY-DUTY TWO PIECE DIE CAST ALUMINUM AND SHALL BE UL LISTED FOR WET LOCATION.
MH4	BRONZELITE G8000 SERIES, KIM LIGHTING LTV730 SERIES, OR EQUAL	ONE 150 W MH	FLAG POLE LUMINAIRE SHALL BE IN GROUND TYPE, 150W, 277 VOLT, METAL HALIDE LUMINAIRE WITH A FIBERGLASS COMPOSITE, SINGLE PIECE HOUSING, INTEGRAL BALLAST, HIGH TEMPERATURE RATED TEMPERED GLASS LENS WITH GUARD, SILICON GASKET FOR WATERTIGHT SEAL, AND SPECULAR SPUN ALUMINUM REFLECTOR WITH 15 DEGREE BEAM FOR AIMING AT THE FLAG. LUMINAIRE SHALL BE SUITABLE FOR INSTALLATION IN CONCRETE.

	BY	CHECKED
DESIGN	Jaswinder Gill	J. S. Sandhu
DETAILS	Ed D.Tapalla 9/09	Jaswinder Gill
QUANTITIES	Jaswinder Gill	J. S. Sandhu

STATE OF CALIFORNIA
DEPARTMENT OF TRANSPORTATION

DIVISION OF ENGINEERING SERVICES
ELECTRICAL-MECHANICAL-WATER AND WASTEWATER DESIGN

BRIDGE NO. 540004R/L
POST MILE R107.3

C. V. KANE
SAFETY ROADSIDE REST AREA REHABILITATION
LIGHTING SCHEDULE

SHEET **EE8-1.6**

DOES SD Imperial Rev. 9/02

ORIGINAL SCALE IN INCHES FOR REDUCED PLANS 0 1 2 3

UNIT 3596
PROJECT NUMBER & PHASE 08000002291

DISREGARD PRINTS BEARING EARLIER REVISION DATES →
REVISION DATES (PRELIMINARY STAGE ONLY): 12/17/09 02/08/10 04/08/10 6/04/10 10/25/10 01/26/11 11/4/11 1/23/12 8/15/13

SHEET OF

18-SEP-2013 13:11
ee8_1_06.dgn

DIST.	COUNTY	ROUTE	POST MILES TOTAL PROJECT	SHEET NO.	TOTAL SHEETS
03, 08	Sac, SBd	5, 15	23.3, R107.3	302	330

CALIFORNIA STATE FIRE MARSHAL APPROVED
Approval of this plan does not authorize or approve any omission or deviation from applicable regulations. Final approval is subject to field inspection. One set of approved plans shall be available on the project site at all times.
Reviewed by: FRANCIS SOLICH
Approval date: 09-11-13

Jaswinder S Gill 08-15-13
REGISTERED ELECTRICAL ENGINEER DATE

REGISTERED PROFESSIONAL ENGINEER JASWINDER GILL No. 18551 Exp. 12-31-14 ELEC STATE OF CALIFORNIA

9-16-13
PLANS APPROVAL DATE

The State of California or its officers or agents shall not be responsible for the accuracy or completeness of electronic copies of this plan sheet.

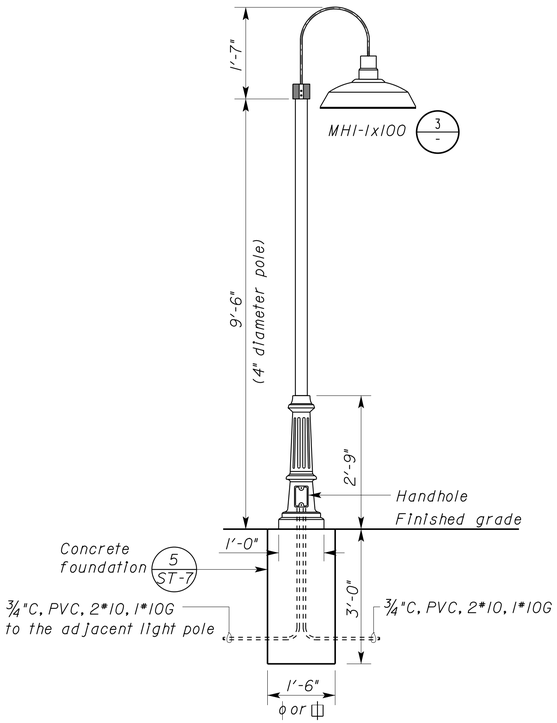

1 POST-TOP FIXTURE
NO SCALE

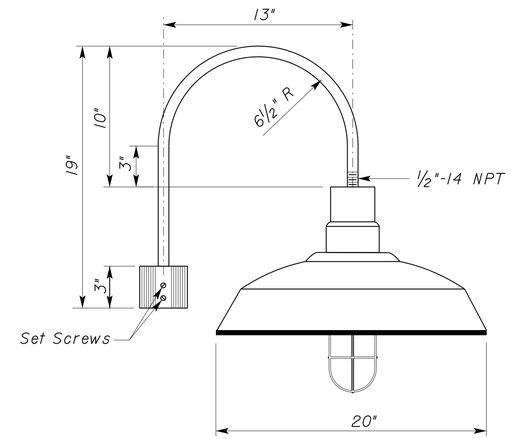

3 MH1-1x100
NO SCALE

Note:

(1) Adjust aiming angle so that flagpole is lighted.

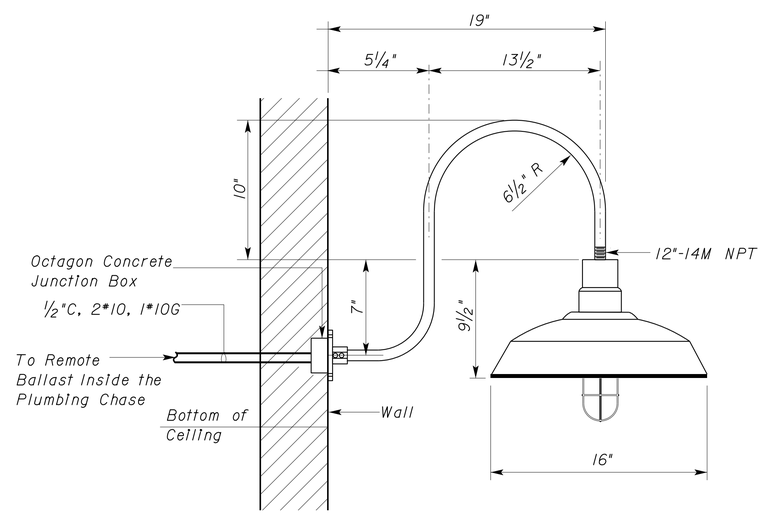

4 WALL MOUNT CFL1-1x42
NO SCALE

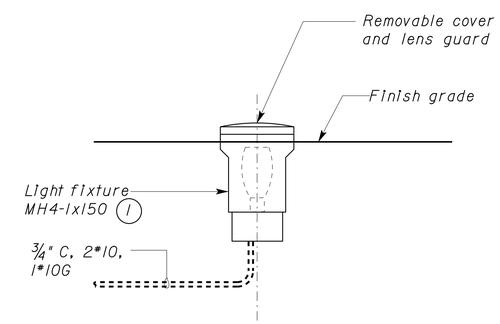

5 TYPE MH4 FLAGPOLE LUMINAIRE
NO SCALE

THIS DRAWING ACCURATE FOR ELECTRICAL WORK ONLY

DESIGN	BY Jaswinder Gill	CHECKED J. S. Sandhu	
DETAILS	BY Ed D.Tapalla 9/09	CHECKED Jaswinder Gill	
QUANTITIES	BY Jaswinder Gill	CHECKED J. S. Sandhu	

STATE OF CALIFORNIA DEPARTMENT OF TRANSPORTATION

DIVISION OF ENGINEERING SERVICES
ELECTRICAL-MECHANICAL-WATER AND WASTEWATER DESIGN

BRIDGE NO. 540004R/L
POST MILE R107.3

C. V. KANE
SAFETY ROADSIDE REST AREA REHABILITATION
LIGHTING DETAILS

SHEET EE8-1.7

DOES SD Imperial Rev. 9/02

ORIGINAL SCALE IN INCHES FOR REDUCED PLANS 0 1 2 3

UNIT 3596
PROJECT NUMBER & PHASE 08000002291

DISREGARD PRINTS BEARING EARLIER REVISION DATES →
REVISION DATES (PRELIMINARY STAGE ONLY) 6/14/10 10/25/10 01/28/11 11/4/11 1/27/12 8/15/13
SHEET OF

18-SEP-2013 13:12
ee8_1_07.dgn

DIST.	COUNTY	ROUTE	POST MILES TOTAL PROJECT	SHEET NO.	TOTAL SHEETS
03, 08	Sac, SBd	5, 15	23.3, R107.3	303	330

Jerome R. Marcotte 08/09/2013
REGISTERED CIVIL ENGINEER DATE

REGISTERED PROFESSIONAL ENGINEER J. MARCOTTE No. C 36844 Exp. 6-30-14 CIVIL STATE OF CALIFORNIA

9-16-13
PLANS APPROVAL DATE

The State of California or its officers or agents shall not be responsible for the accuracy or completeness of electronic copies of this plan sheet.

CALIFORNIA STATE FIRE MARSHAL APPROVED
Approval of this plan does not authorize or approve any omission or deviation from applicable regulations. Final approval is subject to field inspection. One set of approved plans shall be available on the project site at all times.
Reviewed by: FRANCIS SOLICH
Approval date: 09-11-13

ABBREVIATIONS

AB	AGGREGATE BASE	JB	JUNCTION BOX
ACP	ASBESTOS CONCRETE PIPE	lbs	POUNDS
AVC	AIR VOLUME CONTROLLER	L/S	LANDSCAPE
B	BUNG	Max	MAXIMUM
Bldg	BUILDING	MBV	MOTORIZED BALL VALVE
C	CONDUIT	MH	MANHOLE
C-C	CENTER TO CENTER	Min	MINIMUM
CI	CAST-IRON	NHT	NATIONAL HOSE THREAD
CL	CHAIN LINK	O.C.	ON CENTER
Conc	CONCRETE	OD	OUTSIDE DIAMETER
COTF	CLEANOUT TO FLOOR	OG	ORIGINAL GROUND
COTG	CLEANOUT TO GRADE	P/L	PROPERTY LINE
CSP	CORRUGATED STEEL PIPE	PCC	PORTLAND CEMENT CONCRETE
DI	DRAINAGE INLET	PG	PRESSURE GAUGE
Dia	DIAMETER	PRV	PRESSURE REGULATING VALVE
DP	DRAIN PIPE	PS	PRESSURE SWITCH
E	ELECTRICAL	psi	POUNDS PER SQUARE INCH
(E)	EXISTING	PVC	POLYVINYL CHLORIDE
EG	EXISTING GRADE	PW	POTABLE WATER
EL	ELEVATION	R	RADIUS
EP	EDGE OF PAVEMENT	RCP	REINFORCED CONCRETE PIPE
FF	FINISH FLOOR	RPM	REVOLUTIONS PER MINUTE
FG	FINISH GRADE	R/W	RIGHT-OF-WAY
FL	FLOW LINE	RW	RAW WATER
FS	FLOAT SWITCH	S	SLOPE
ft	FEET	Sch	SCHEDULE
Galv	GALVANIZED	SD	STORM DRAIN
gpm	GALLONS PER MINUTE	SP	SEWAGE PIPE
GSP	GALVANIZED STEEL PIPE	sq	SQUARE
HF	HOSE FAUCET	Sta	STATION
H	HEIGHT	Tot	TOTAL
HDPE	HIGH DENSITY POLYETHYLENE	Typ	TYPICAL
HMA	HOT MIX ASPHALT	U/G	UNDERGROUND
HP	HORSEPOWER	V	VOLT
Hz	HERTZ	W	WATER
ID	INSIDE DIAMETER	W/O	WITHOUT
IE	INVERT ELEVATION	WP	WATER PIPE
in	INCHES	WSP	WELDED STEEL PIPE

LEGEND

S	SANITARY SEWER	I / W-2	DETAIL / SHEET NUMBER
D	DRAIN	99.00	NEW GRADE IN FEET
RD	RETURN DRAIN	X (100.00)	EXISTING SPOT GRADE IN FEET
V	VENT		SURFACE DRAINAGE
FM	FORCE MAIN	[	ABANDON (E)
L	LEACH LINES		BENCHMARK ELEVATION
RW	RAW WATER	℄	CENTERLINE
PW	POTABLE WATER	ø	DIAMETER
			SECTION / ELEVATION LETTER / SHEET NUMBER

GENERAL WORK NOTES

The Contractor shall verify all controlling field dimensions and conditions before ordering or fabricating any materials.

The Contractor shall verify exact location of all underground facilities and utilities prior to start of construction.

No 90° bends allowed on drain or sewer pipe.

Type of Fitting	90° Bend	45° Bend	11 1/4° or 22 1/2° Bend	Tee or Dead end	Cross w/plug	Tee w/plug
Typical Installation	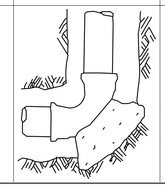	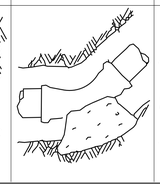	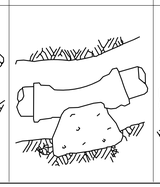	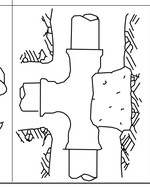	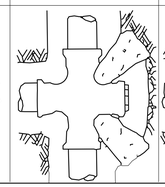	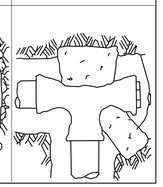

THRUST BLOCK BEARING AREA (SQ. FT.)

Type of Fitting / Size of Pipe	90° Bend	45° Bend	11 1/4° or 22 1/2° Bend	Tee or Dead End	Tee w/ Plug	Cross w/ Plug
4"	2	1	1	2	2	2
6"	4	4	2	4	4	4
8"	7	4	2	5	7	7
10"	12	6	3	8	12	12
12"	16	10	5	12	16	16
14"	20	12	6	14	20	20
16"	27	15	8	18	27	27
18"	45	25	13	32	45	45
24"	65	35	18	46	65	65

PIPE FITTINGS AND VALVES

- CAP, THREADED
- ELBOW, TURNED DOWN
- FLEXIBLE CONNECTOR
- REDUCED PRESSURE BACKFLOW PREVENTER
- REDUCER, CONCENTRIC
- REDUCER, ECCENTRIC
- PRESSURE GAUGE (WITH VALVE AND SNUBBER)
- UNION
- UNION, INSULATING
- VALVE, BALL
- VALVE, CHECK
- VALVE, GATE
- VALVE, SAFETY RELIEF
- VALVE, SOLENOID
- VALVE, PRESSURE REDUCING
- WATER / FLOW METER

THIS DRAWING ACCURATE FOR WATER WORK ONLY

	BY	CHECKED
DESIGN	Andy Quan	Don Hansen
DETAILS	Andy Quan	Don Hansen
QUANTITIES	Andy Quan	Don Hansen

STATE OF CALIFORNIA
DEPARTMENT OF TRANSPORTATION

DIVISION OF ENGINEERING SERVICES
ELECTRICAL-MECHANICAL-WATER AND WASTEWATER DESIGN

BRIDGE NO. 540004R/L
POST MILE R107.3

C. V. KANE
SAFETY ROADSIDE REST AREA REHABILITATION
NOTES, LEGENDS & ABBREVIATIONS

SHEET W-0

TAEMWW Imperial Rev. 7/10

ORIGINAL SCALE IN INCHES FOR REDUCED PLANS 0 1 2 3

UNIT 3616
PROJECT NUMBER & PHASE 08000002291
EA 0G840

DISREGARD PRINTS BEARING EARLIER REVISION DATES
REVISION DATES (PRELIMINARY STAGE ONLY) 08-14-09 10-15-09 12-17-09 02-18-10 04-15-10 09-27-10 11-19-10 01-03-12 08-09-13
SHEET OF

PRINTED ON: 18-SEP-2013 13:12

w_0.dgn

DIST.	COUNTY	ROUTE	POST MILES TOTAL PROJECT	SHEET NO.	TOTAL SHEETS
03, 08	Sac, SBd	5, 15	23.3, R107.3	304	330

REGISTERED CIVIL ENGINEER — DATE 08/09/2013

REGISTERED PROFESSIONAL ENGINEER — J. MARCOTTE — No. C 36844 — Exp. 6-30-14 — CIVIL — STATE OF CALIFORNIA

9-16-13
PLANS APPROVAL DATE

The State of California or its officers or agents shall not be responsible for the accuracy or completeness of electronic copies of this plan sheet.

CALIFORNIA STATE FIRE MARSHAL APPROVED
Approval of this plan does not authorize or approve any omission or deviation from applicable regulations. Final approval is subject to field inspection. One set of approved plans shall be available on the project site at all times.
Reviewed by: FRANCIS SOLICH
Approval date: 09-11-13

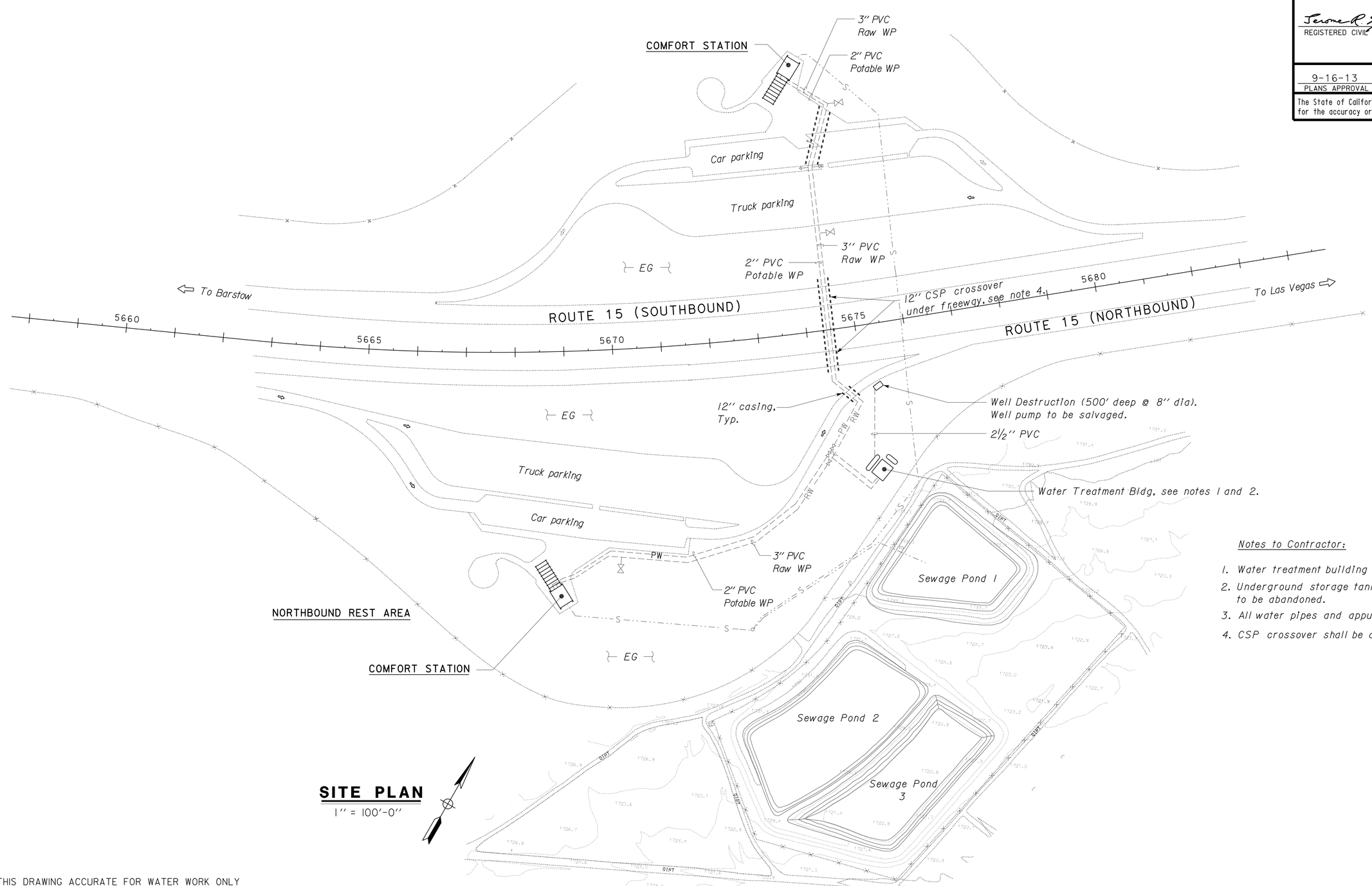

SITE PLAN
1" = 100'-0"

Notes to Contractor:

1. *Water treatment building equipment to be removed.*
2. *Underground storage tanks 2,000-gal and 12,000-gal to be abandoned.*
3. *All water pipes and appurtenances shall be abandoned.*
4. *CSP crossover shall be abandoned.*

THIS DRAWING ACCURATE FOR WATER WORK ONLY

DESIGN SUPERVISOR	DESIGN	BY Andy Quan	CHECKED Don Hansen
DESIGN ENGINEER	DETAILS	BY J.R.Stangl/AQ	CHECKED Don Hansen
	QUANTITIES	BY Andy Quan	CHECKED Don Hansen

STATE OF CALIFORNIA
DEPARTMENT OF TRANSPORTATION

DIVISION OF ENGINEERING SERVICES
ELECTRICAL-MECHANICAL-WATER AND WASTEWATER DESIGN

BRIDGE NO. 540004R/L
POST MILE R107.3

C. V. KANE SAFETY ROADSIDE REST AREA REHABILITATION
EXISTING SITE PLAN

SHEET **W-1**

TAEMWW Imperial Rev. 7/10

ORIGINAL SCALE IN INCHES FOR REDUCED PLANS 0 1 2 3

UNIT 3616
PROJECT NUMBER & PHASE 08000002291
EA 0G840

DISREGARD PRINTS BEARING EARLIER REVISION DATES →
REVISION DATES (PRELIMINARY STAGE ONLY) 08-14-09 10-15-09 12-17-09 02-18-10 04-15-10 06-17-10 11-19-10 01-03-12 08-09-13
SHEET OF

w_01.dgn

PRINTED ON: 18-SEP-2013 13:12

DIST.	COUNTY	ROUTE	POST MILES TOTAL PROJECT	SHEET NO.	TOTAL SHEETS
03, 08	Sac, SBd	5, 15	23.3, R107.3	305	330

REGISTERED CIVIL ENGINEER — DATE 08/09/2013

REGISTERED PROFESSIONAL ENGINEER — J. MARCOTTE — No. C 36844 — Exp. 6-30-14 — CIVIL — STATE OF CALIFORNIA

9-16-13
PLANS APPROVAL DATE

The State of California or its officers or agents shall not be responsible for the accuracy or completeness of electronic copies of this plan sheet.

CALIFORNIA STATE FIRE MARSHAL APPROVED

Approval of this plan does not authorize or approve any omission or deviation from applicable regulations. Final approval is subject to field inspection. One set of approved plans shall be available on the project site at all times.

Reviewed by: FRANCIS SOLICH
Approval date: 09-11-13

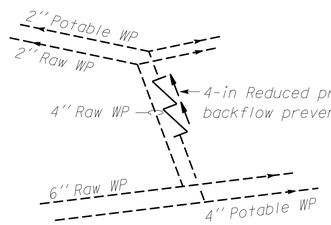

A DETAIL
NO SCALE

B DETAIL
NO SCALE

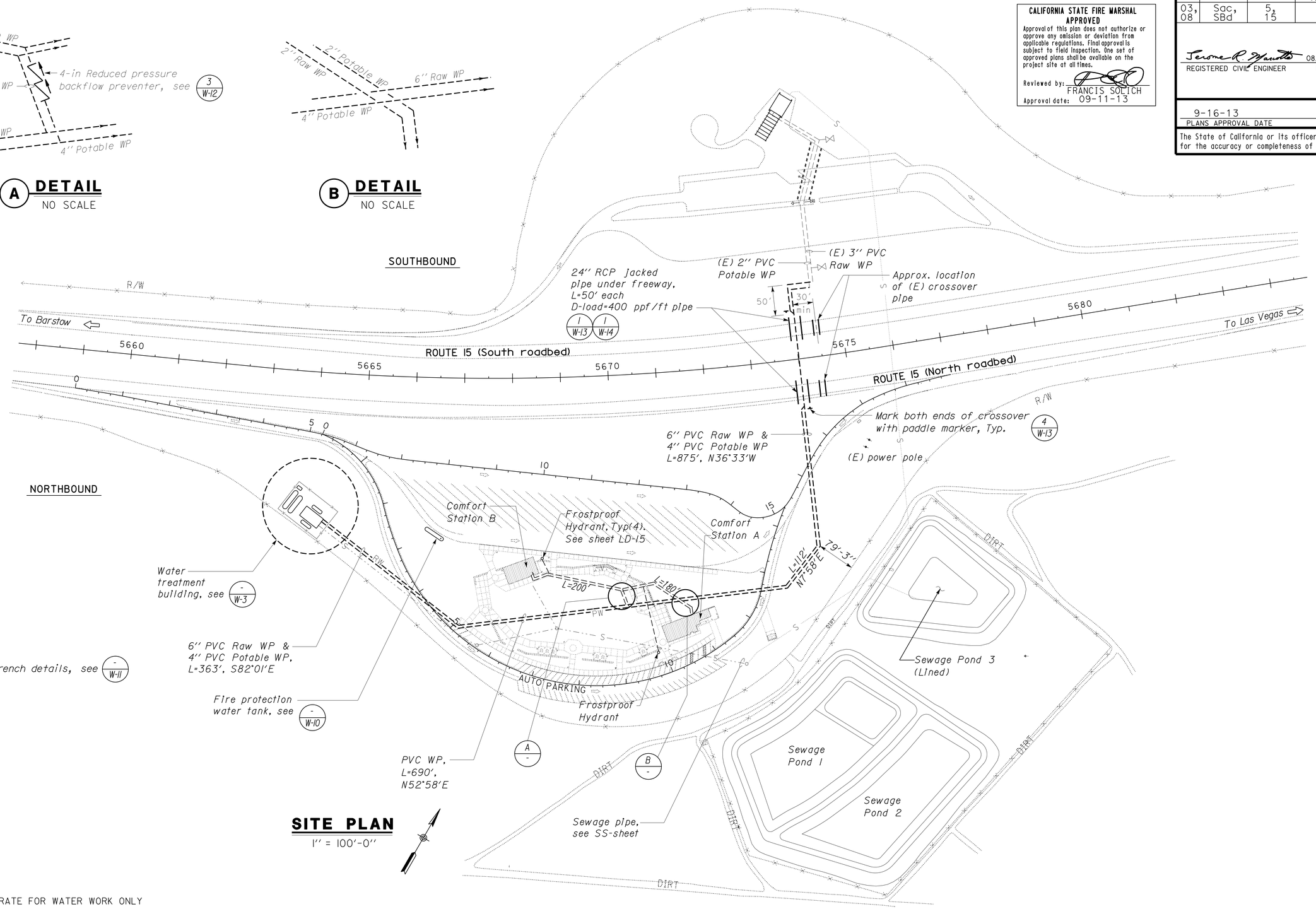

Note:
1. For pipe trench details, see -/W-11

SITE PLAN
1" = 100'-0"

THIS DRAWING ACCURATE FOR WATER WORK ONLY

	BY	CHECKED
DESIGN	Andy Quan	Don Hansen
DETAILS	J.R.Stangl / A.Q.	Don Hansen
QUANTITIES	Andy Quan	Don Hansen

STATE OF CALIFORNIA
DEPARTMENT OF TRANSPORTATION

DIVISION OF ENGINEERING SERVICES
ELECTRICAL-MECHANICAL-WATER AND WASTEWATER DESIGN

BRIDGE NO. 540004R/L
POST MILE R107.3

C. V. KANE SAFETY ROADSIDE REST AREA REHABILITATION
MODIFIED SITE PLAN

SHEET **W-2**

TAEMWW Imperial Rev. 7/10

ORIGINAL SCALE IN INCHES FOR REDUCED PLANS 0 1 2 3

UNIT 3616
PROJECT NUMBER & PHASE 08000002291
EA 0G840

DISREGARD PRINTS BEARING EARLIER REVISION DATES →
REVISION DATES (PRELIMINARY STAGE ONLY) 08-14-09 10-15-09 12-17-09 02-18-10 04-15-10 10-25-10 11-19-10 01-03-12 08-09-13
SHEET OF

PRINTED ON: 18-SEP-2013 13:12
w_02.dgn

DIST.	COUNTY	ROUTE	POST MILES TOTAL PROJECT	SHEET NO.	TOTAL SHEETS
03, 08	Sac, SBd	5, 15	23.3, R107.3	306	330

Jerome R. Marcotte 08/09/2013
REGISTERED CIVIL ENGINEER DATE

REGISTERED PROFESSIONAL ENGINEER J. MARCOTTE No. C 36844 Exp. 6-30-14 CIVIL STATE OF CALIFORNIA

9-16-13
PLANS APPROVAL DATE

The State of California or its officers or agents shall not be responsible for the accuracy or completeness of electronic copies of this plan sheet.

ACCESSIBILITY DESIGN APPROVAL STAMP DOT / DES / OTA
PROJECT ID **0800000229**
Reviewed by:
Date: 10-25-11

CALIFORNIA STATE FIRE MARSHAL APPROVED
Approval of this plan does not authorize or approve any omission or deviation from applicable regulations. Final approval is subject to field inspection. One set of approved plans shall be available on the project site at all times.
Reviewed by: FRANCIS SOLICH
Approval date: 09-11-13

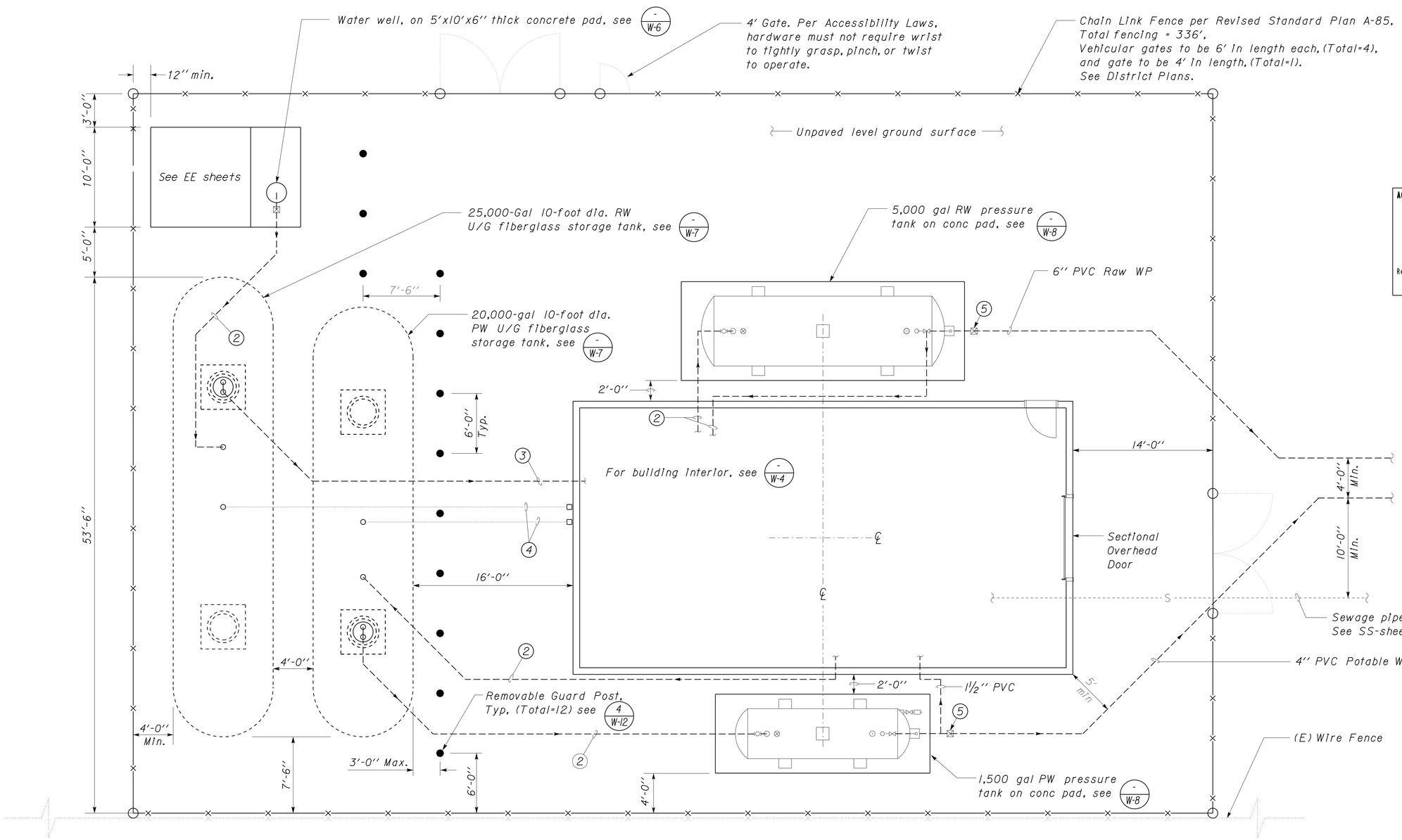

LAYOUT
3/16'' = 1'-0''

Accessibility Note:

Pressure tanks may be accessed from either longitudinal sides for maintenance purpose. The 2'-0'' narrow passageways between the bldg and tanks are not to be considered as the access side, thus exempted from accessibility requirement.

Notes:

1. See W-11 for pipe trench details
2. 2'' PVC WP
3. 3'' PVC WP
4. Vent Pipe 2/W-12
5. Flow meter 1/W-12

THIS DRAWING ACCURATE FOR WATER WORK ONLY

	BY	CHECKED
DESIGN	Andy Quan	Don Hansen
DETAILS	Kerry Geoffroy	Don Hansen
QUANTITIES	Andy Quan	Don Hansen

STATE OF CALIFORNIA
DEPARTMENT OF TRANSPORTATION

DIVISION OF ENGINEERING SERVICES
ELECTRICAL-MECHANICAL-WATER AND WASTEWATER DESIGN

BRIDGE NO. 540004R/L
POST MILE R107.3

C. V. KANE
SAFETY ROADSIDE REST AREA REHABILITATION
WATER TREATMENT BUILDING LAYOUT

SHEET **W-3**

TAEMWW Imperial Rev. 7/10

ORIGINAL SCALE IN INCHES FOR REDUCED PLANS 0 1 2 3

UNIT 3616
PROJECT NUMBER & PHASE 08000002291
EA 0G840

DISREGARD PRINTS BEARING EARLIER REVISION DATES
REVISION DATES (PRELIMINARY STAGE ONLY) 08-14-09 10-15-09 12-17-09 02-18-10 04-15-10 06-17-10 11-19-10 01-03-12 08-09-13
SHEET OF

PRINTED ON: 18-SEP-2013 13:12
w_03.dgn

DIST.	COUNTY	ROUTE	POST MILES TOTAL PROJECT	SHEET NO.	TOTAL SHEETS
03, 08	Sac, SBd	5, 15	23.3, R107.3	307	330

REGISTERED CIVIL ENGINEER — DATE 08/09/2013

REGISTERED PROFESSIONAL ENGINEER — J. MARCOTTE — No. C 36844 — Exp. 6-30-14 — CIVIL — STATE OF CALIFORNIA

9-16-13
PLANS APPROVAL DATE

The State of California or its officers or agents shall not be responsible for the accuracy or completeness of electronic copies of this plan sheet.

CALIFORNIA STATE FIRE MARSHAL APPROVED
Approval of this plan does not authorize or approve any omission or deviation from applicable regulations. Final approval is subject to field inspection. One set of approved plans shall be available on the project site at all times.
Reviewed by: FRANCIS SOLICH
Approval date: 09-11-13

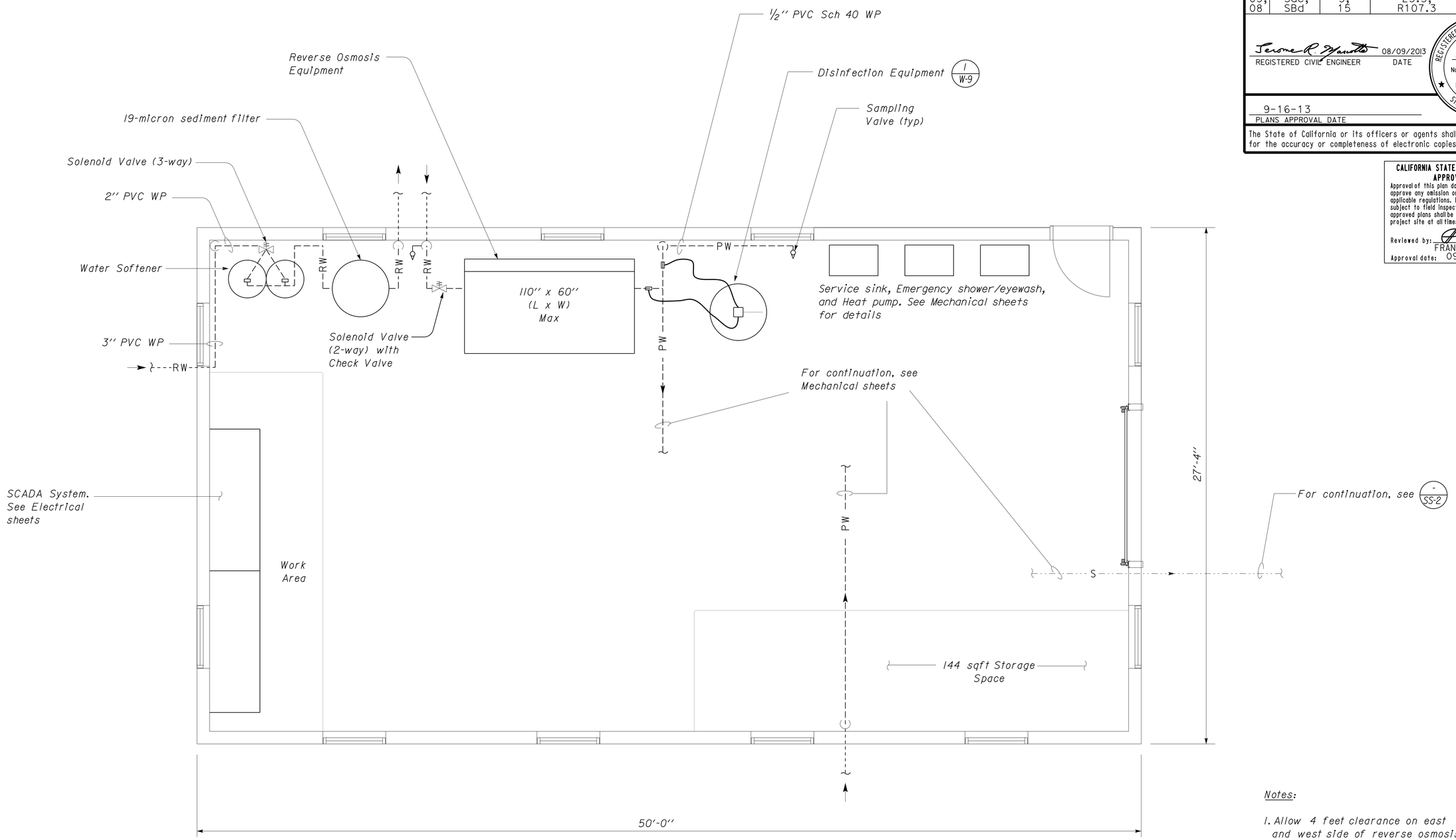

LAYOUT
3/8" = 1'-0"

Notes:

1. Allow 4 feet clearance on east and west side of reverse osmosis unit.
2. Allow all equipment to have 2 feet min. clearance from wall. Pipes are exempted from this requirement.
3. For service sink, shower, and eyewash, see Mechanical sheets.

THIS DRAWING ACCURATE FOR WATER WORK ONLY

	BY	CHECKED
DESIGN	Andy Quan	Don Hansen
DETAILS	Kerry Geoffroy	Don Hansen
QUANTITIES	Andy Quan	Don Hansen

STATE OF CALIFORNIA
DEPARTMENT OF TRANSPORTATION

DIVISION OF ENGINEERING SERVICES
ELECTRICAL-MECHANICAL-WATER AND WASTEWATER DESIGN

BRIDGE NO. 540004R/L
POST MILE R107.3

C. V. KANE
SAFETY ROADSIDE REST AREA REHABILITATION
WATER TREATMENT BUILDING INTERIOR LAYOUT

SHEET W-4

TAEMWW Imperial Rev. 7/10

ORIGINAL SCALE IN INCHES FOR REDUCED PLANS 0 1 2 3

UNIT 3616
PROJECT NUMBER & PHASE 08000002291
EA 0G840

DISREGARD PRINTS BEARING EARLIER REVISION DATES

REVISION DATES (PRELIMINARY STAGE ONLY) 08-14-09 10-15-09 12-17-09 02-18-10 04-15-10 10-25-10 11-19-10 01-03-12 08-09-13

SHEET OF

w_04.dgn

PRINTED ON: 18-SEP-2013 13:12

DIST.	COUNTY	ROUTE	POST MILES TOTAL PROJECT	SHEET NO.	TOTAL SHEETS
03, 08	Sac, SBd	5, 15	23.3, R107.3	308	330

Jerome R. Marcotte 08/09/2013
REGISTERED CIVIL ENGINEER DATE

REGISTERED PROFESSIONAL ENGINEER
J. MARCOTTE
No. C 36844
Exp. 6-30-14
CIVIL
STATE OF CALIFORNIA

9-16-13
PLANS APPROVAL DATE

The State of California or its officers or agents shall not be responsible for the accuracy or completeness of electronic copies of this plan sheet.

CALIFORNIA STATE FIRE MARSHAL APPROVED
Approval of this plan does not authorize or approve any omission or deviation from applicable regulations. Final approval is subject to field inspection. One set of approved plans shall be available on the project site at all times.
Reviewed by: FRANCIS SOLICH
Approval date: 09-11-13

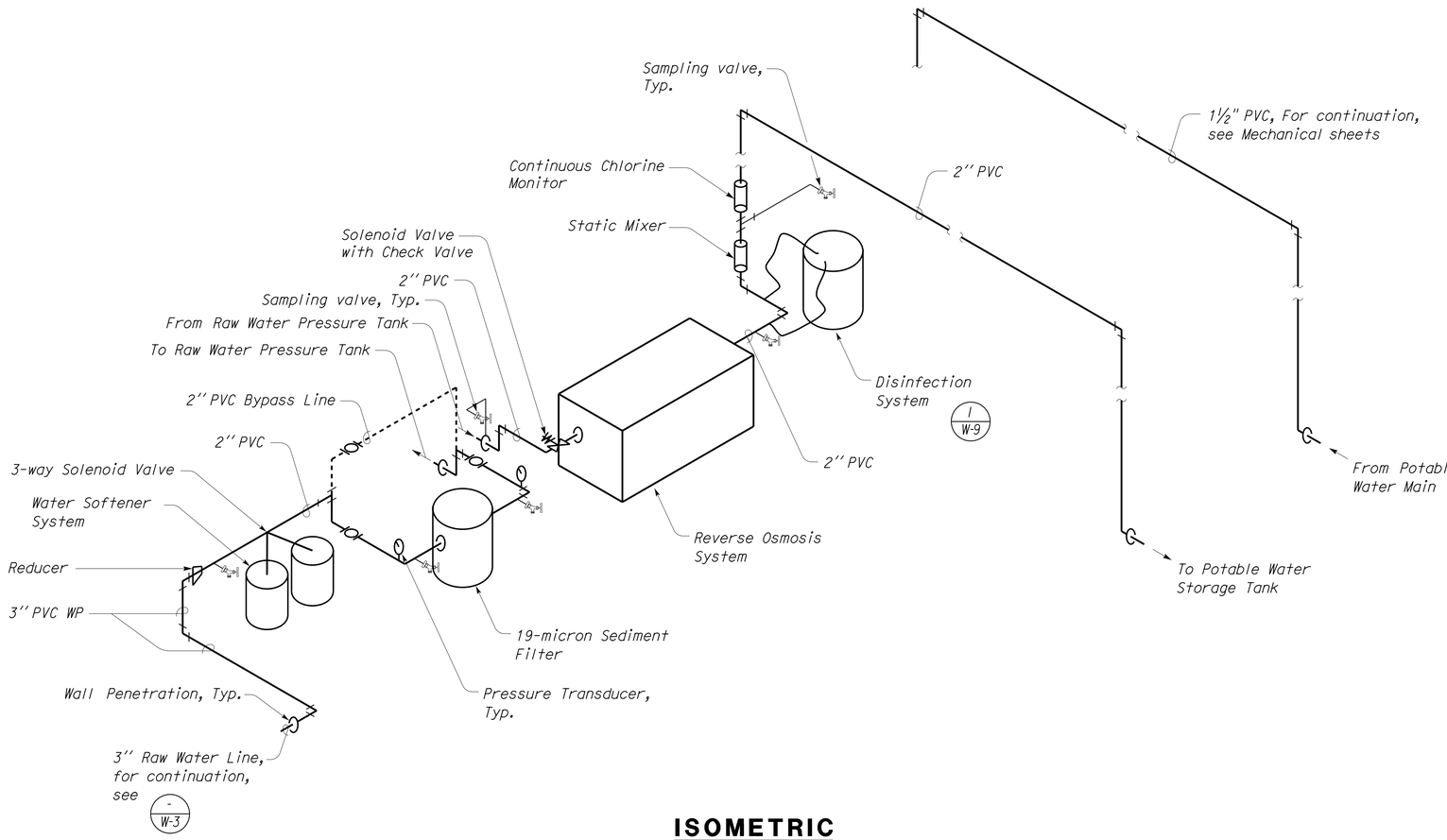

ISOMETRIC

No Scale

Note:

All component connections to pipes must have unions on inlet and outlet sides.

THIS DRAWING ACCURATE FOR WATER WORK ONLY

	BY	CHECKED
DESIGN	Andy Quan	Don Hansen
DETAILS	Kerry Geoffroy	Don Hansen
QUANTITIES	Andy Quan	Don Hansen

STATE OF CALIFORNIA
DEPARTMENT OF TRANSPORTATION

DIVISION OF ENGINEERING SERVICES
ELECTRICAL-MECHANICAL-WATER AND WASTEWATER DESIGN

BRIDGE NO. 540004R/L
POST MILE R107.3

C. V. KANE
SAFETY ROADSIDE REST AREA REHABILITATION
WATER TREATMENT PIPE SCHEMATICS

SHEET **W-5**

TAEMWW Imperial Rev. 7/10

ORIGINAL SCALE IN INCHES FOR REDUCED PLANS 0 1 2 3

UNIT 3616
PROJECT NUMBER & PHASE 08000002291
EA 0G840

DISREGARD PRINTS BEARING EARLIER REVISION DATES →
REVISION DATES (PRELIMINARY STAGE ONLY) SHEET OF
02-16-10 04-15-10 05-25-10 01-19-10 01-03-12 08-09-13

w_05.dgn

PRINTED ON: 18-SEP-2013 13:12

DIST.	COUNTY	ROUTE	POST MILES TOTAL PROJECT	SHEET NO.	TOTAL SHEETS
03, 08	Sac, SBd	5, 15	23.3, R107.3	309	330

REGISTERED CIVIL ENGINEER — 08/09/2013 DATE

REGISTERED PROFESSIONAL ENGINEER — J. MARCOTTE — No. C 36844 — Exp. 6-30-14 — CIVIL — STATE OF CALIFORNIA

9-16-13
PLANS APPROVAL DATE

The State of California or its officers or agents shall not be responsible for the accuracy or completeness of electronic copies of this plan sheet.

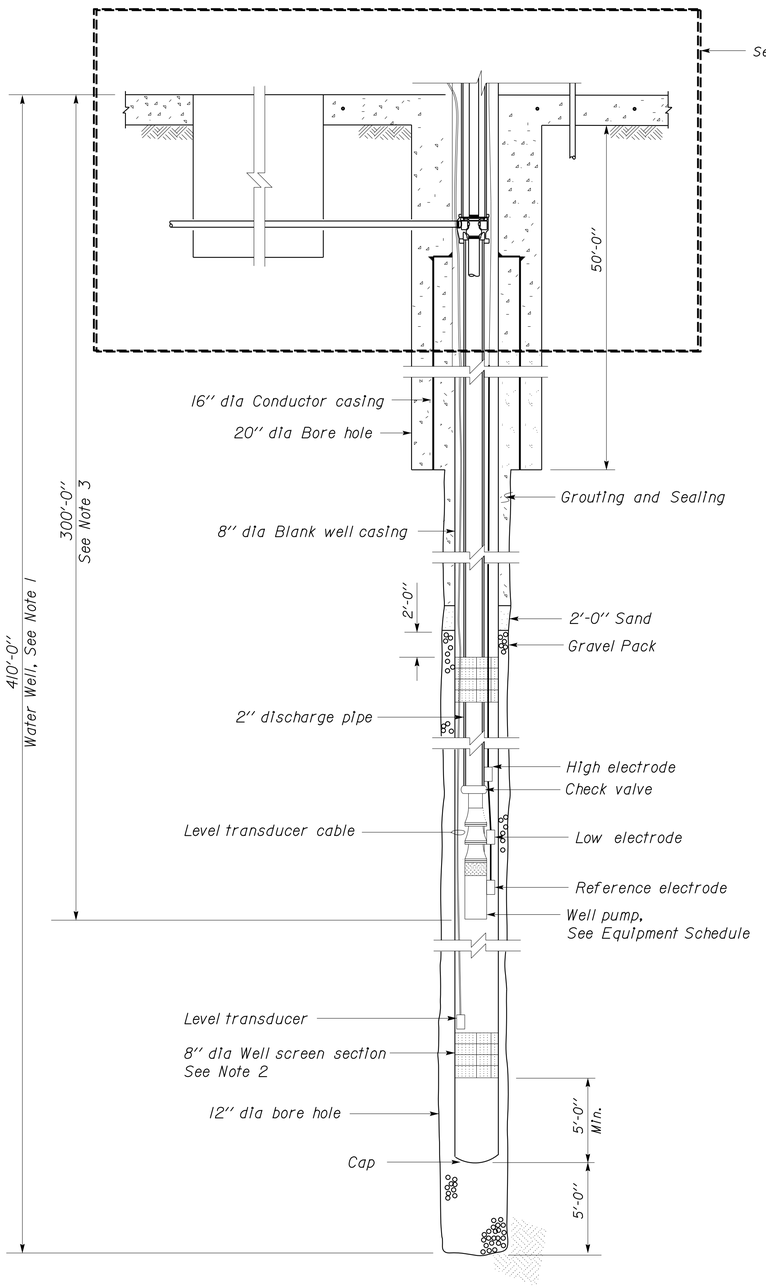

A WATER WELL - SECTION

THIS DRAWING ACCURATE FOR WATER WORK ONLY

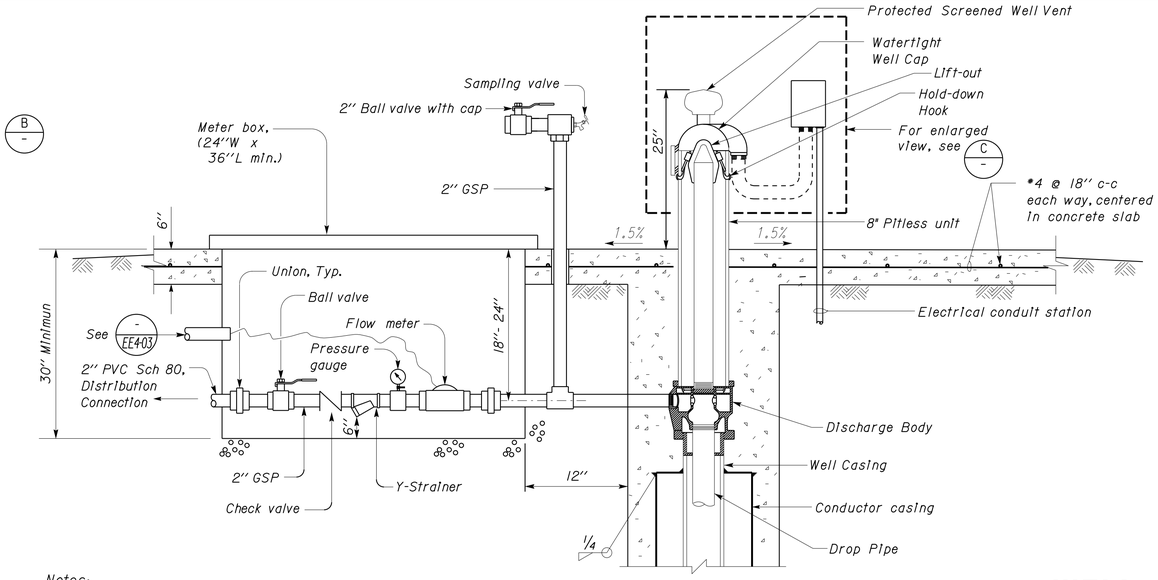

B WELL HEAD

SCALE 1" : 1'-0"

Notes:

1. Actual depth of well may vary. For bidding purposes, use depth shown.
2. Exact locations and lengths of well screen sections must be field determined. For bidding purposes use 100' ft.
3. Actual depth of well pump must be determined from well testing data. For bidding purposes, use depth shown.
4. Electrodes & level transducer locations shown are arbitrary only. Exact locations to be determined by well pump installer and the Engineer.

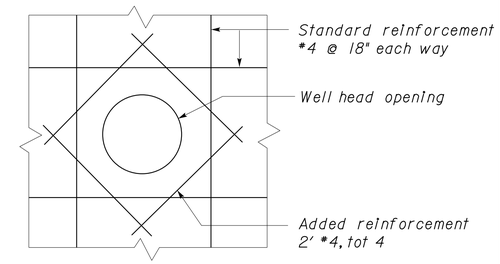

WELL OPENING REINFORCEMENT

NO SCALE

EQUIPMENT SCHEDULE

EQUIPMENT	SPEED (RPM)	HP	VOLTS	PHASE	PUMPING RATE (GPM)	TOTAL DYNAMIC HEAD (Ft.)
SUBMERSIBLE WELL PUMP	3450	10	460	3	50	480
					70	400
					90	290

CALIFORNIA STATE FIRE MARSHAL APPROVED

Approval of this plan does not authorize or approve any omission or deviation from applicable regulations. Final approval is subject to field inspection. One set of approved plans shall be available on the project site at all times.

Reviewed by: FRANCIS SOLICH
Approval date: 09-11-13

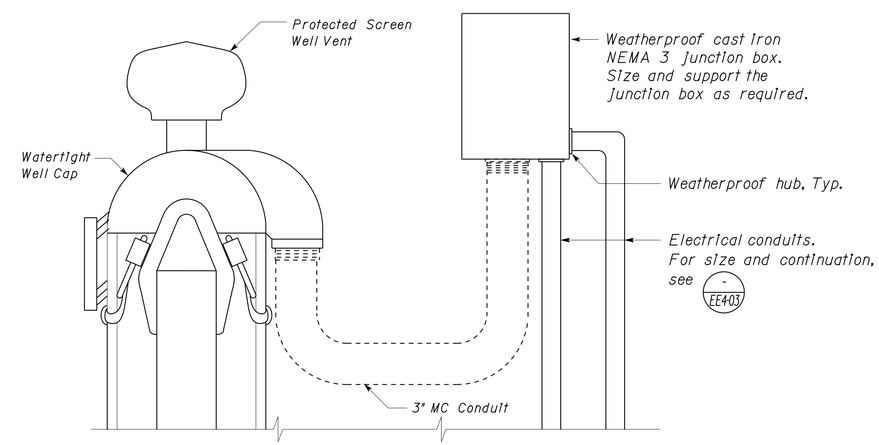

C ENLARGED VIEW

NO SCALE

	BY	CHECKED
DESIGN	Don Hansen	Don Hansen
DETAILS	Kerry Geoffroy/J.R. Stangl	Don Hansen
QUANTITIES	Andy Quan	Don Hansen

STATE OF CALIFORNIA
DEPARTMENT OF TRANSPORTATION

DIVISION OF ENGINEERING SERVICES
ELECTRICAL-MECHANICAL-WATER AND WASTEWATER DESIGN

BRIDGE NO. 540004R/L
POST MILE R107.3

C. V. KANE
SAFETY ROADSIDE REST AREA REHABILITATION
WATER WELL DETAILS

SHEET W-6

TAEMWW Imperial Rev. 7/10

ORIGINAL SCALE IN INCHES FOR REDUCED PLANS 0 1 2 3

UNIT 3616
PROJECT NUMBER & PHASE 08000002291
EA 0G840

DISREGARD PRINTS BEARING EARLIER REVISION DATES

REVISION DATES (PRELIMINARY STAGE ONLY) 08-14-09 10-15-09 12-17-09 02-18-10 04-15-10 06-17-10 06-21-10 08-25-10 10-29-10 08-09-13 SHEET OF

PRINTED ON: 18-SEP-2013 13:12

w_06.dgn

DIST.	COUNTY	ROUTE	POST MILES TOTAL PROJECT	SHEET NO.	TOTAL SHEETS
03, 08	Sac, SBd	5, 15	23.3, R107.3	310	330

CALIFORNIA STATE FIRE MARSHAL APPROVED
Approval of this plan does not authorize or approve any omission or deviation from applicable regulations. Final approval is subject to field inspection. One set of approved plans shall be available on the project site at all times.
Reviewed by: FRANCIS SOLICH
Approval date: 09-11-13

REGISTERED CIVIL ENGINEER — 08/09/2013 DATE

REGISTERED PROFESSIONAL ENGINEER — J. MARCOTTE — No. C 36844 — Exp. 6-30-14 — CIVIL — STATE OF CALIFORNIA

9-16-13
PLANS APPROVAL DATE

The State of California or its officers or agents shall not be responsible for the accuracy or completeness of electronic copies of this plan sheet.

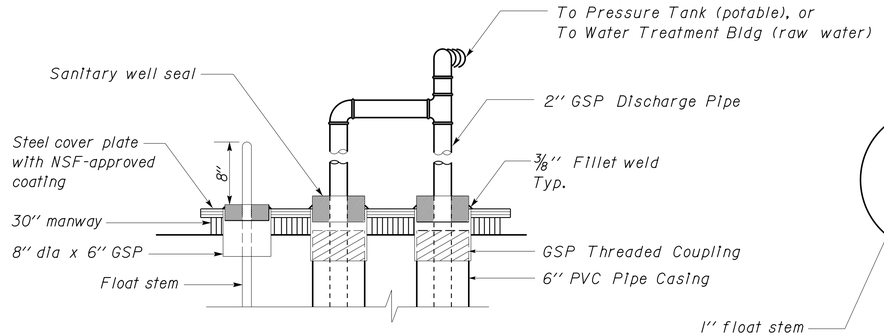

B PIPING DETAIL
NO SCALE

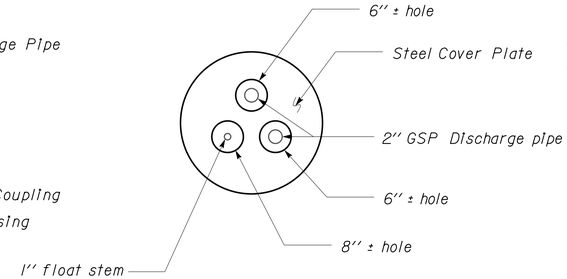

PIPING TOP VIEW
NO SCALE

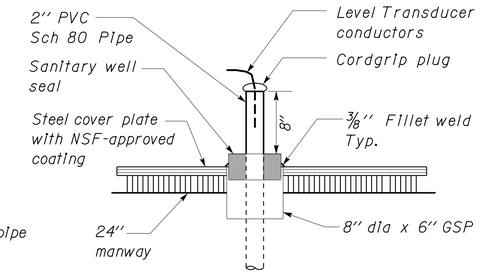

C LEVEL TRANSDUCER HANGER DETAIL
NO SCALE

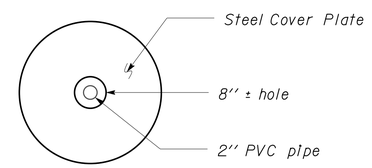

LEVEL TRANSDUCER TOP VIEW
NO SCALE

	TANK DIAMETER	NOMINAL CAPACITY (GALLONS)	NOMINAL LENGTH	NOMINAL WEIGHT (Lbs)
Potable Tank	10'	20,000	38'	5,900
Non-potable Tank	10'	25,000	46'	7,550

EQUIPMENT SCHEDULE

	EQUIPMENT	SPEED (RPM)	HP	VOLTS	PHASE	PUMPING RATE (GPM)	TOTAL DYNAMIC HEAD (FT)
Potable Tank	SUBMERSIBLE PUMPS 1 & 2	3450	5	460	3	40 50 60	200 190 160
Non-potable Tank	SUBMERSIBLE PUMPS 1 & 2	3450	5	460	3	40 50 60	300 240 160

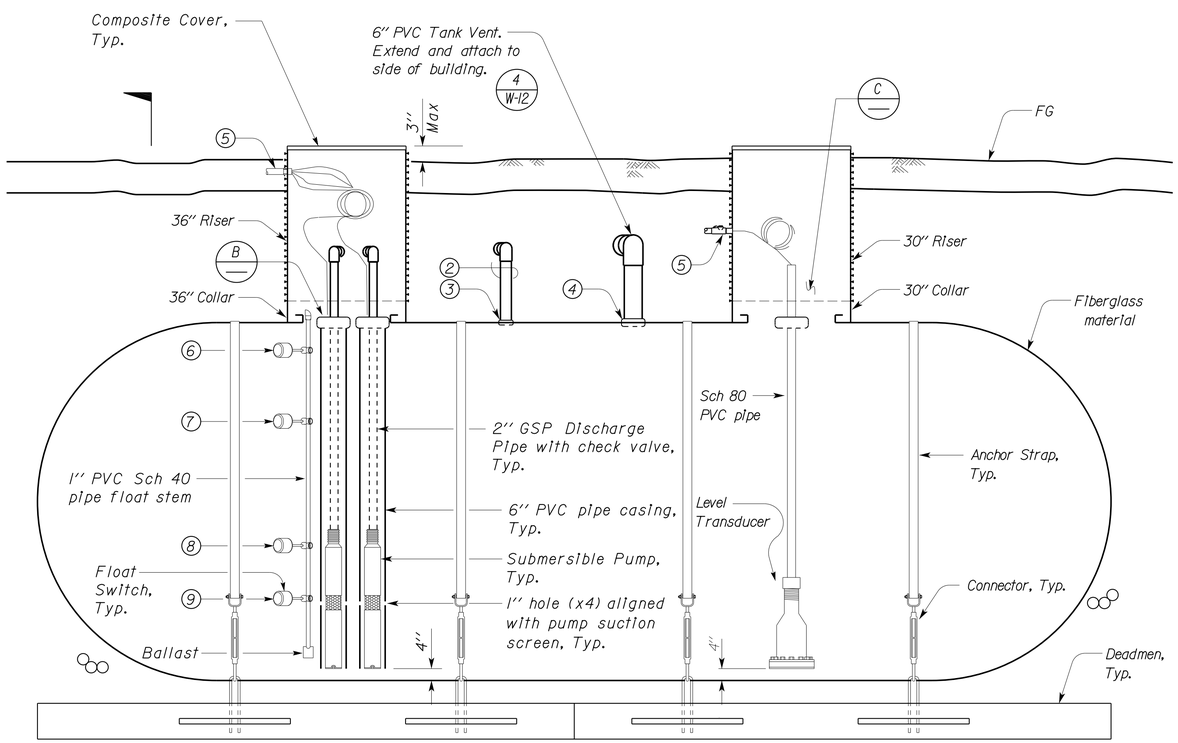

ELEVATION
NO SCALE

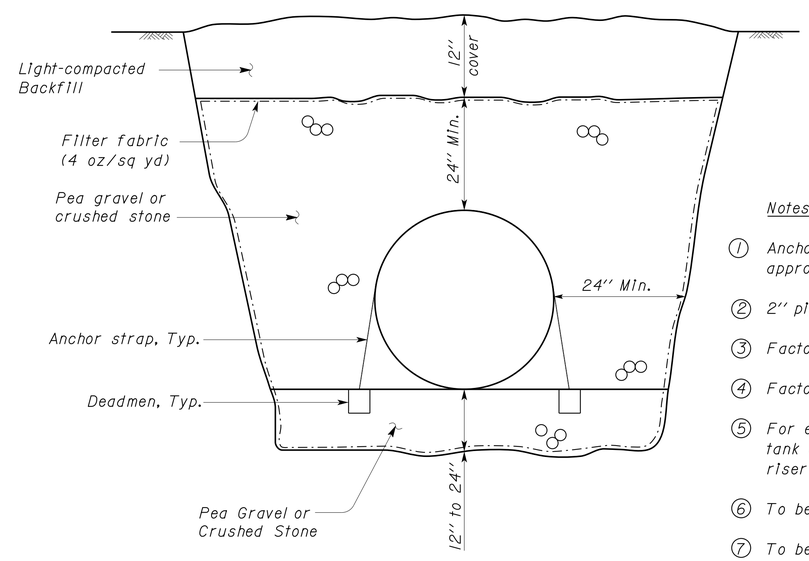

A SECTION
NO SCALE

Notes:

1. Anchor straps, connectors, and deadmen to be approved by tank manufacturer for use with tank.
2. 2" pipe delivering water to the storage tank.
3. Factory-installed 2" half coupling
4. Factory-installed 6" half coupling
5. For electrical, see EE-sheets. Follow tank manufacturer's instructions for riser wall openings.
6. To be located 12" below tank ceiling
7. To be located 36" below tank ceiling
8. To be located 12" above top of pump housing
9. To be located 13" above pump suction screen

THIS DRAWING ACCURATE FOR WATER WORK ONLY

	BY	CHECKED
DESIGN	Andy Quan	Don Hansen
DETAILS	Andy Quan	Don Hansen
QUANTITIES	Andy Quan	Don Hansen

STATE OF CALIFORNIA
DEPARTMENT OF TRANSPORTATION

DIVISION OF ENGINEERING SERVICES
ELECTRICAL-MECHANICAL-WATER AND WASTEWATER DESIGN

BRIDGE NO. 540004R/L
POST MILE R107.3

C. V. KANE SAFETY ROADSIDE REST AREA REHABILITATION
WATER STORAGE TANK DETAILS

SHEET W-7

TAEMWW Imperial Rev. 7/10

ORIGINAL SCALE IN INCHES FOR REDUCED PLANS 0 1 2 3

UNIT 3616
PROJECT NUMBER & PHASE 08000002291
EA 0G840

DISREGARD PRINTS BEARING EARLIER REVISION DATES
REVISION DATES (PRELIMINARY STAGE ONLY) 08-14-09 10-15-09 12-17-09 02-18-10 04-15-10 06-17-10 11-19-10 01-03-12 08-09-13
SHEET OF

PRINTED ON: 08-OCT-2013 11:59
w_07.dgn

DIST.	COUNTY	ROUTE	POST MILES TOTAL PROJECT	SHEET NO.	TOTAL SHEETS
03, 08	Sac, SBd	5, 15	23.3, R107.3	311	330

CALIFORNIA STATE FIRE MARSHAL APPROVED
Approval of this plan does not authorize or approve any omission or deviation from applicable regulations. Final approval is subject to field inspection. One set of approved plans shall be available on the project site at all times.
Reviewed by: FRANCIS SOLICH
Approval date: 09-11-13

Jerome R. Marcotte 08/09/2013
REGISTERED CIVIL ENGINEER DATE

REGISTERED PROFESSIONAL ENGINEER J. MARCOTTE No. C 36844 Exp. 6-30-14 CIVIL STATE OF CALIFORNIA

9-16-13
PLANS APPROVAL DATE

The State of California or its officers or agents shall not be responsible for the accuracy or completeness of electronic copies of this plan sheet.

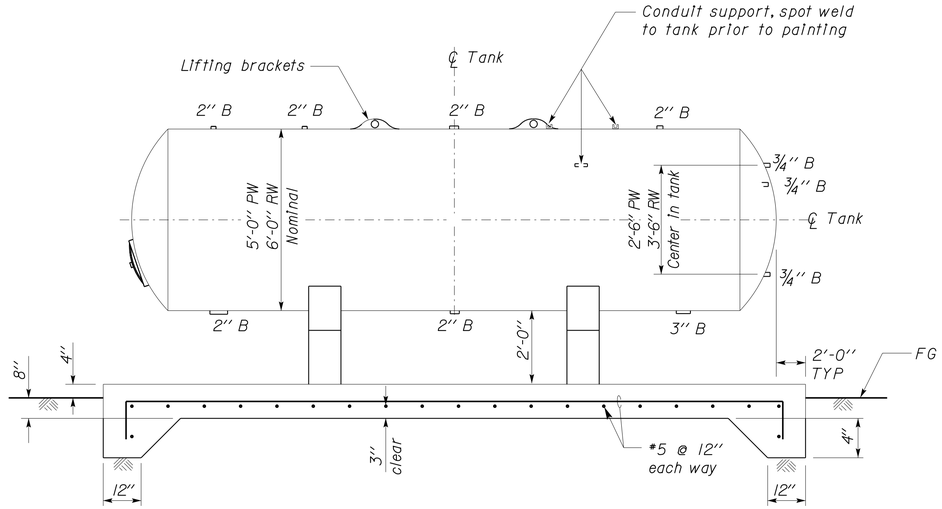

LONGITUDINAL SECTION

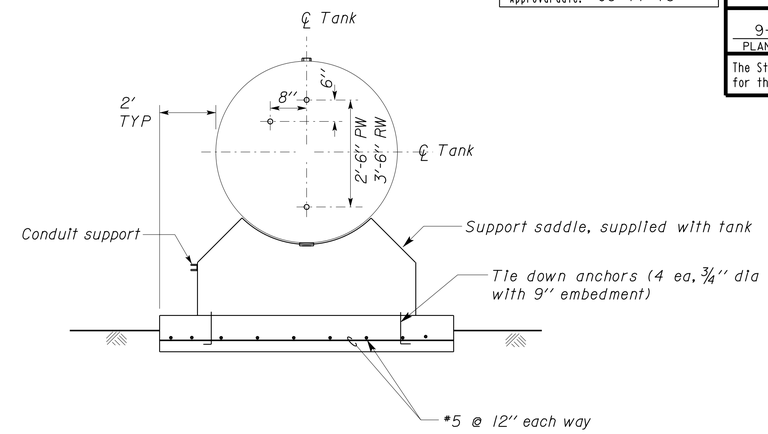

TRANSVERSE SECTION

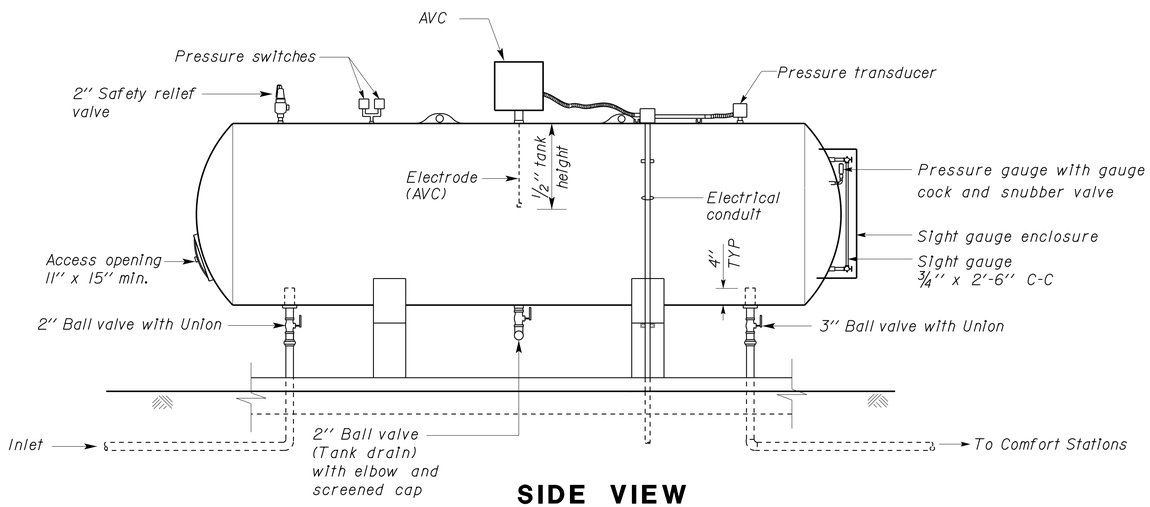

SIDE VIEW

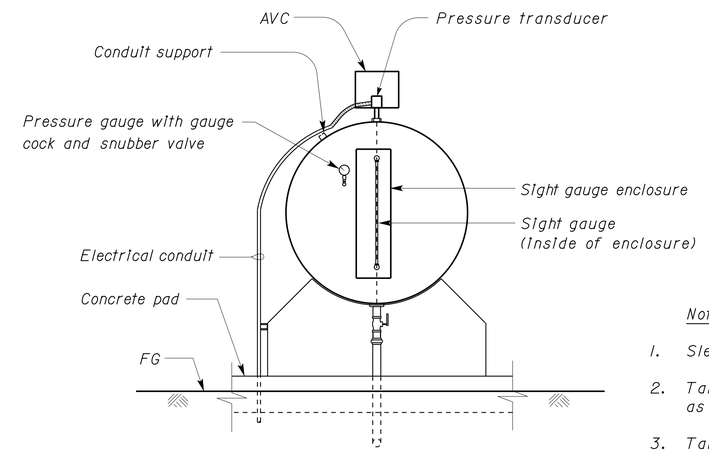

END VIEW

Notes:

1. Sleeve all penetrations in concrete.
2. Tanks shall be painted the same color as the building exterior walls.
3. Tank saddle, tie down and foundation size may vary depending on manufacturer.
4. Reinforced concrete f'c = 3000 psi, fy = 60,000 psi.

1,500 GALLON (PW) (NOMINAL)
5,000 GALLON (RW) (NOMINAL)
PRESSURE TANKS

THIS DRAWING ACCURATE FOR WATER WORK ONLY

NO SCALE

	BY	CHECKED
DESIGN	Andy Quan	Don Hansen
DETAILS	Andy Quan	Don Hansen
QUANTITIES	Andy Quan	Don Hansen

STATE OF CALIFORNIA
DEPARTMENT OF TRANSPORTATION

DIVISION OF ENGINEERING SERVICES
ELECTRICAL-MECHANICAL-WATER AND WASTEWATER DESIGN

BRIDGE NO. 540004R/L
POST MILE R107.3

C. V. KANE
SAFETY ROADSIDE REST AREA REHABILITATION
PRESSURE TANK DETAILS

SHEET W-8

TAEMWW Imperial Rev. 7/10

ORIGINAL SCALE IN INCHES FOR REDUCED PLANS 0 1 2 3

UNIT 3616
PROJECT NUMBER & PHASE 08000002291
EA 0G840

DISREGARD PRINTS BEARING EARLIER REVISION DATES → REVISION DATES (PRELIMINARY STAGE ONLY) 08-14-09 10-15-09 12-17-09 02-18-10 04-15-10 06-17-10 11-19-10 01-03-12 08-09-13 SHEET OF

w_08.dgn

PRINTED ON: 08-OCT-2013 11:59

DIST.	COUNTY	ROUTE	POST MILES TOTAL PROJECT	SHEET NO.	TOTAL SHEETS
03, 08	Sac, SBd	5, 15	23.3, R107.3	312	330

CALIFORNIA STATE FIRE MARSHAL APPROVED
Approval of this plan does not authorize or approve any omission or deviation from applicable regulations. Final approval is subject to field inspection. One set of approved plans shall be available on the project site at all times.
Reviewed by: FRANCIS SOLICH
Approval date: 09-11-13

Jerome R. Marcotte 08/09/2013
REGISTERED CIVIL ENGINEER DATE

REGISTERED PROFESSIONAL ENGINEER
J. MARCOTTE
No. C 36844
Exp. 6-30-14
CIVIL
STATE OF CALIFORNIA

9-16-13
PLANS APPROVAL DATE

The State of California or its officers or agents shall not be responsible for the accuracy or completeness of electronic copies of this plan sheet.

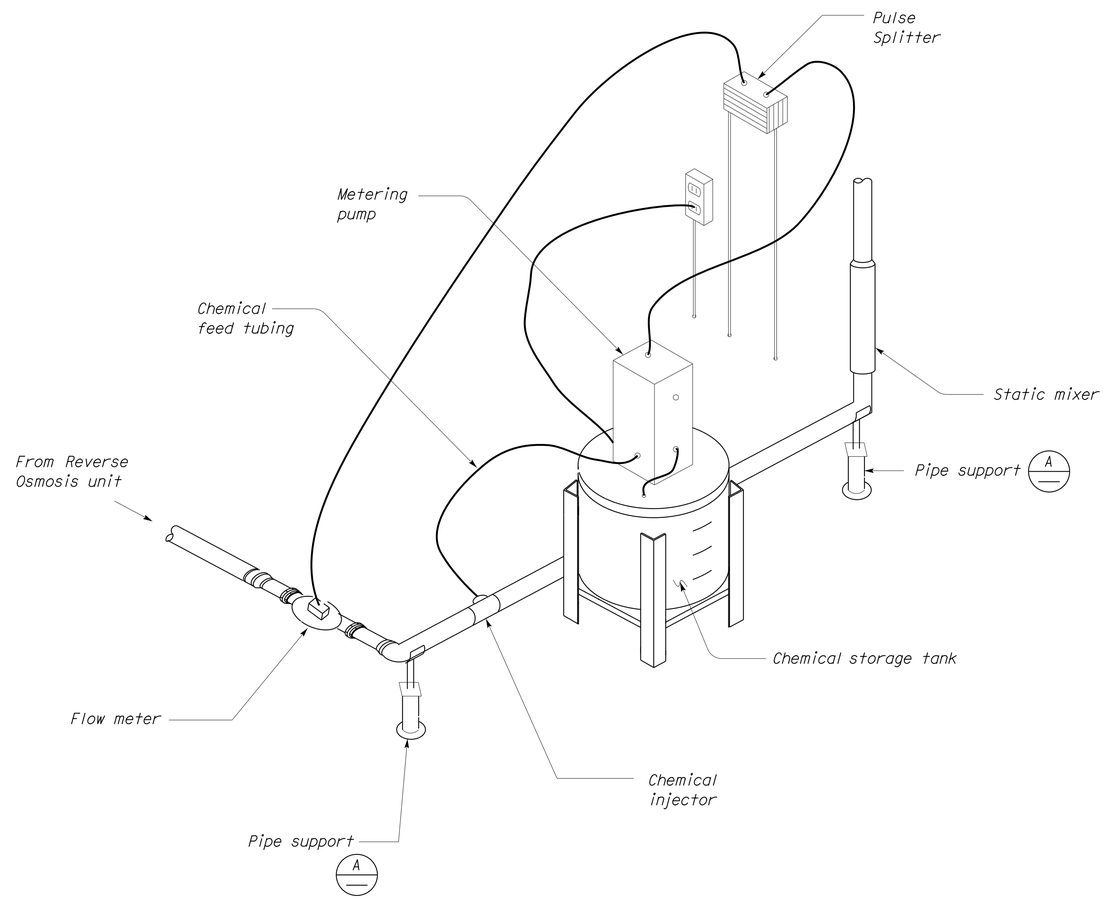

1 **DETAIL**
NO SCALE

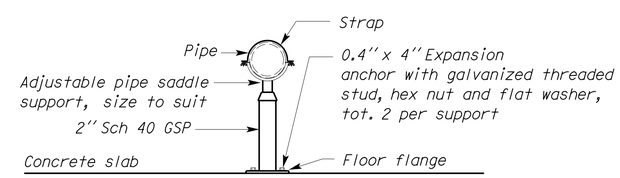

A **PIPE SUPPORT**
NO SCALE

THIS DRAWING ACCURATE FOR WATER WORK ONLY

	BY	CHECKED
DESIGN	Andy Quan	Don Hansen
DETAILS	Andy Quan	Don Hansen
QUANTITIES	Andy Quan	Don Hansen

STATE OF CALIFORNIA
DEPARTMENT OF TRANSPORTATION

DIVISION OF ENGINEERING SERVICES
ELECTRICAL-MECHANICAL-WATER AND WASTEWATER DESIGN

BRIDGE NO. 540004R/L
POST MILE R107.3

C. V. KANE
SAFETY ROADSIDE REST AREA REHABILITATION
DISINFECTION SYSTEM DETAILS

SHEET W-9

TAEMWW Imperial Rev. 7/10

ORIGINAL SCALE IN INCHES FOR REDUCED PLANS 0 1 2 3

UNIT 3616
PROJECT NUMBER & PHASE 08000002291
EA 0G840

DISREGARD PRINTS BEARING EARLIER REVISION DATES → 08-14-09 10-15-09 12-17-09 12-18-10 04-15-10 06-17-10 11-19-10 01-03-12 08-09-13

REVISION DATES (PRELIMINARY STAGE ONLY) SHEET OF

PRINTED ON: 08-OCT-2013 12:00

w_09.dgn

DIST.	COUNTY	ROUTE	POST MILES TOTAL PROJECT	SHEET NO.	TOTAL SHEETS
03, 08	Sac, SBd	5, 15	23.3, R107.3	313	330

CALIFORNIA STATE FIRE MARSHAL APPROVED
Approval of this plan does not authorize or approve any omission or deviation from applicable regulations. Final approval is subject to field inspection. One set of approved plans shall be available on the project site at all times.
Reviewed by: FRANCIS SOLICH
Approval date: 09-11-13

Jerome R. Marcotte 08/09/2013
REGISTERED CIVIL ENGINEER DATE

REGISTERED PROFESSIONAL ENGINEER J. MARCOTTE No. C 36844 Exp. 6-30-14 CIVIL STATE OF CALIFORNIA

9-16-13
PLANS APPROVAL DATE

The State of California or its officers or agents shall not be responsible for the accuracy or completeness of electronic copies of this plan sheet.

Notes:

1. *Use pipe sleeve when pipe passes through concrete pad.*
2. *Anchor straps, connectors, and deadmen to be approved by tank manufacturer for use with tank.*
3. *Fire Protection Water Tank to comply with NFPA 22 (2008 Edition)*

TANK DIAMETER	NOMINAL CAPACITY (GALLONS)	NOMINAL LENGTH	NOMINAL WEIGHT (Lbs)
8′	12,000	37′	3,800

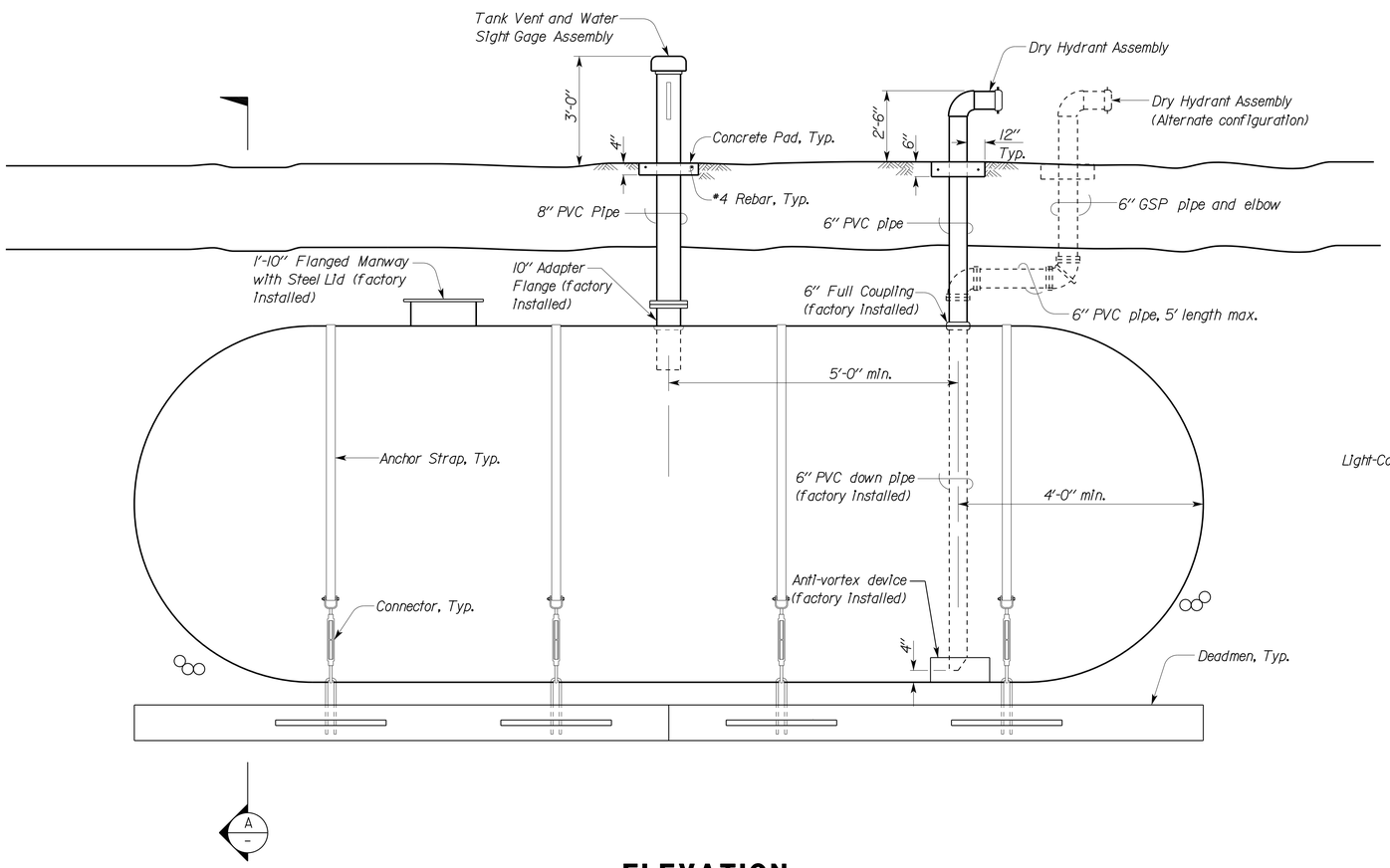

ELEVATION
NO SCALE

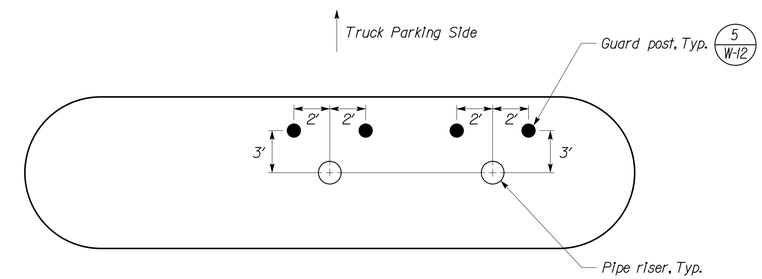

GUARD POST PLACEMENT (TOP VIEW)
NO SCALE

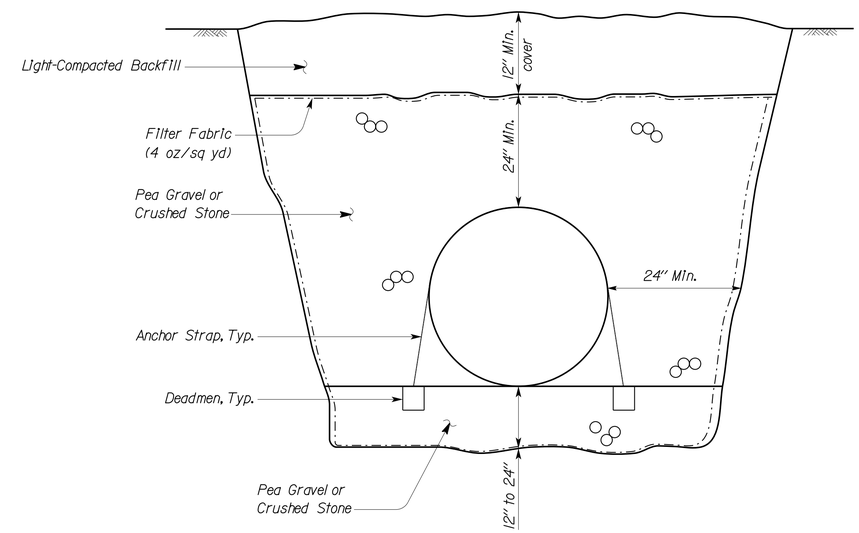

A SECTION
NO SCALE

THIS DRAWING ACCURATE FOR WATER WORK ONLY

	BY	CHECKED
DESIGN	Andy Quan	Don Hansen
DETAILS	Andy Quan	Don Hansen
QUANTITIES	Andy Quan	Don Hansen

STATE OF CALIFORNIA
DEPARTMENT OF TRANSPORTATION

DIVISION OF ENGINEERING SERVICES
ELECTRICAL-MECHANICAL-WATER AND WASTEWATER DESIGN

BRIDGE NO. 540004R/L
POST MILE R107.3

C. V. KANE
SAFETY ROADSIDE REST AREA REHABILITATION
FIRE PROTECTION WATER TANK DETAILS

SHEET W-10

TAEMWW Imperial Rev. 7/10

ORIGINAL SCALE IN INCHES FOR REDUCED PLANS 0 1 2 3

UNIT 3616
PROJECT NUMBER & PHASE 08000002291
EA 0G840

DISREGARD PRINTS BEARING EARLIER REVISION DATES
REVISION DATES (PRELIMINARY STAGE ONLY) 08-14-09 10-15-09 12-17-09 02-18-10 04-15-10 06-17-10 11-19-10 01-03-12 08-09-13
SHEET OF

PRINTED ON: 08-OCT-2013 12:00
w_10.dgn

DIST.	COUNTY	ROUTE	POST MILES TOTAL PROJECT	SHEET NO.	TOTAL SHEETS
03, 08	Sac, SBd	5, 15	23.3, R107.3	314	330

CALIFORNIA STATE FIRE MARSHAL APPROVED
Approval of this plan does not authorize or approve any omission or deviation from applicable regulations. Final approval is subject to field inspection. One set of approved plans shall be available on the project site at all times.
Reviewed by: FRANCIS SOLICH
Approval date: 09-11-13

Jerome R. Marcotte 08/09/2013
REGISTERED CIVIL ENGINEER DATE

REGISTERED PROFESSIONAL ENGINEER J. MARCOTTE No. C 36844 Exp. 6-30-14 CIVIL STATE OF CALIFORNIA

9-16-13
PLANS APPROVAL DATE

The State of California or its officers or agents shall not be responsible for the accuracy or completeness of electronic copies of this plan sheet.

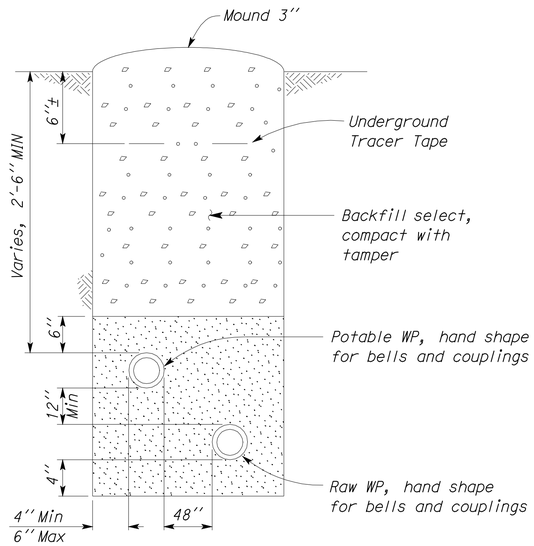

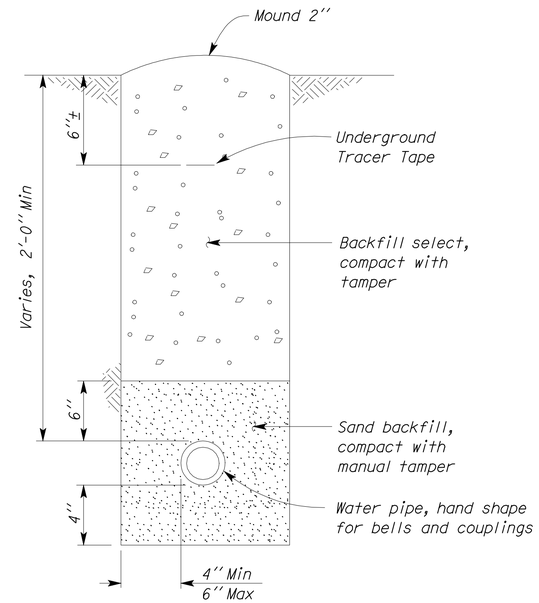

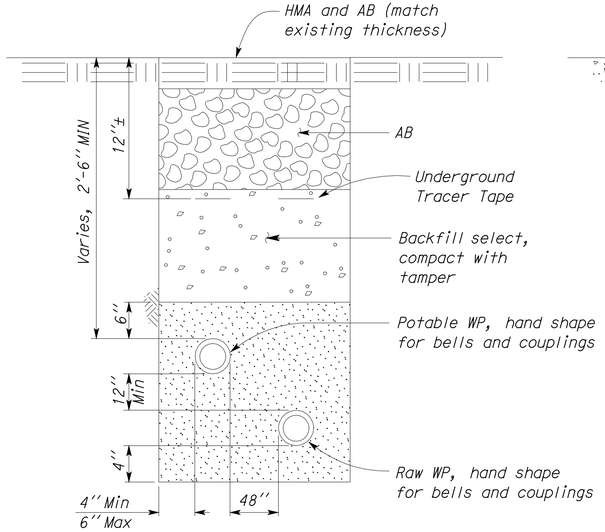

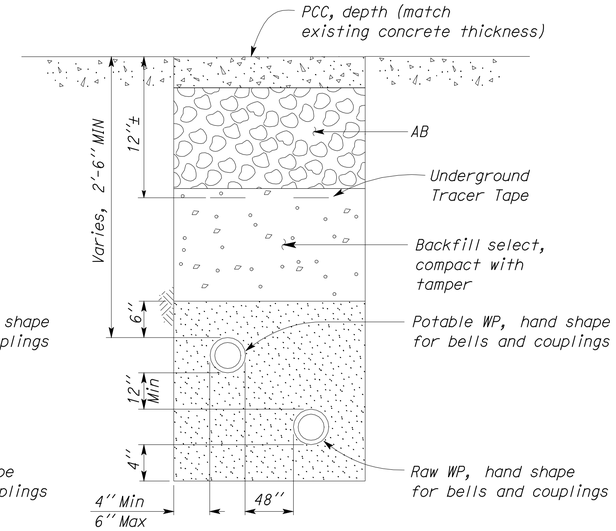

WATER PIPE DETAILS

NO SCALE

THIS DRAWING ACCURATE FOR WATER WORK ONLY

	BY	CHECKED
DESIGN	Andy Quan	Don Hansen
DETAILS	Andy Quan	Don Hansen
QUANTITIES	Andy Quan	Don Hansen

STATE OF CALIFORNIA
DEPARTMENT OF TRANSPORTATION

DIVISION OF ENGINEERING SERVICES
ELECTRICAL-MECHANICAL-WATER AND WASTEWATER DESIGN

BRIDGE NO. 540004R/L
POST MILE R107.3

C. V. KANE
SAFETY ROADSIDE REST AREA REHABILITATION
WATER PIPE DETAILS

SHEET W-11

TAEMWW Imperial Rev. 7/10

ORIGINAL SCALE IN INCHES FOR REDUCED PLANS 0 1 2 3

UNIT 3616
PROJECT NUMBER & PHASE 08000002291
EA 0G840

DISREGARD PRINTS BEARING EARLIER REVISION DATES →
REVISION DATES (PRELIMINARY STAGE ONLY) 08-14-09 10-15-09 12-17-09 02-18-10 04-15-10 06-17-10 11-19-10 01-03-12 08-09-13
SHEET OF

PRINTED ON: 18-SEP-2013 13:03
w_11.dgn

DIST.	COUNTY	ROUTE	POST MILES TOTAL PROJECT	SHEET NO.	TOTAL SHEETS
03, 08	Sac, SBd	5, 15	23.3, R107.3	315	330

CALIFORNIA STATE FIRE MARSHAL APPROVED
Approval of this plan does not authorize or approve any omission or deviation from applicable regulations. Final approval is subject to field inspection. One set of approved plans shall be available on the project site at all times.
Reviewed by: FRANCIS SOLICH
Approval date: 09-11-13

Jerome R. Marcotte 08/09/2013
REGISTERED CIVIL ENGINEER DATE

REGISTERED PROFESSIONAL ENGINEER J. MARCOTTE No. C 36844 Exp. 6-30-14 CIVIL STATE OF CALIFORNIA

9-16-13
PLANS APPROVAL DATE

The State of California or its officers or agents shall not be responsible for the accuracy or completeness of electronic copies of this plan sheet.

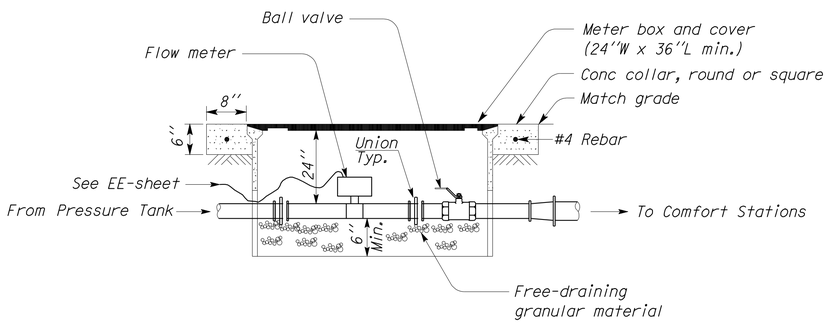

1 METER BOX DETAIL
NO SCALE

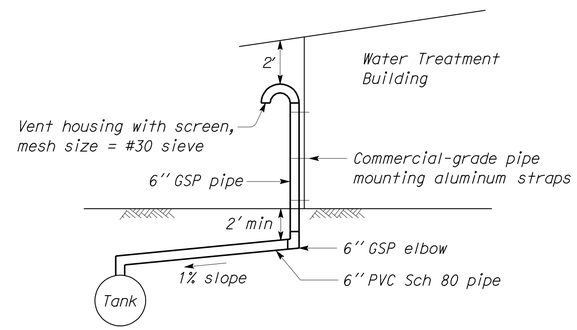

2 VENT PIPE DETAIL
NO SCALE

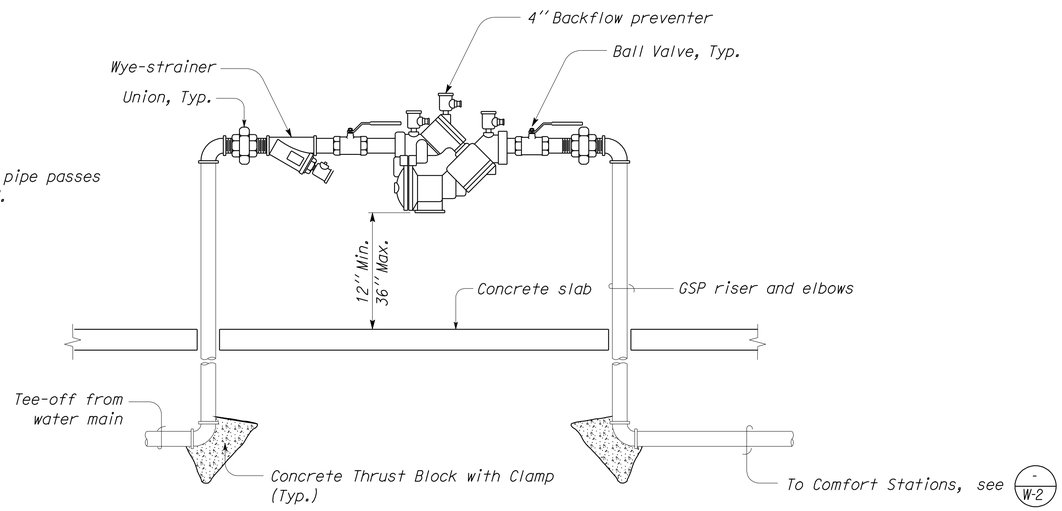

Note
Use pipe sleeve when pipe passes through concrete pad.

3 REDUCED PRESSURE BACKFLOW PREVENTER ASSEMBLY
NO SCALE

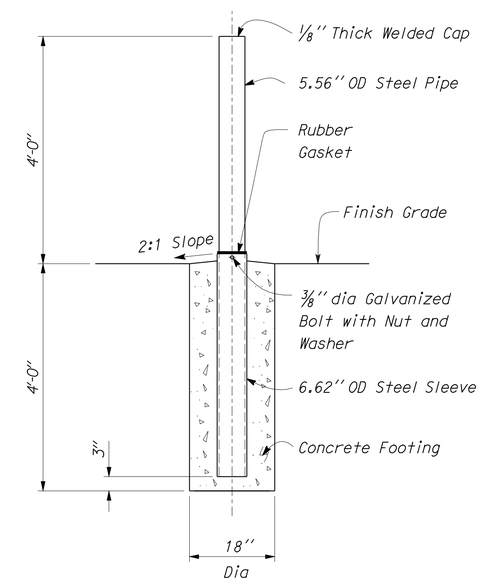

4 GUARD POST (REMOVABLE) DETAIL
NO SCALE

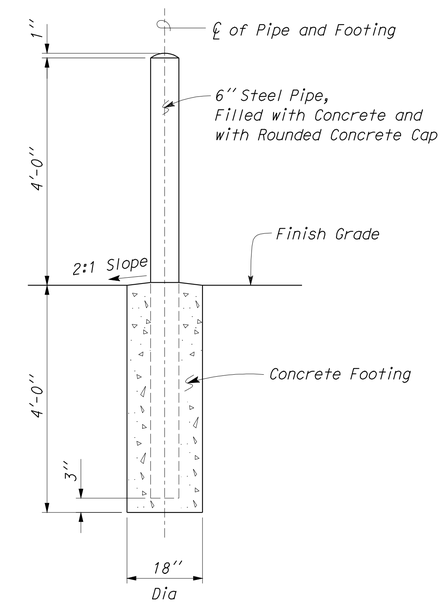

5 GUARD POST DETAIL
NO SCALE

THIS DRAWING ACCURATE FOR WATER WORK ONLY

	BY	CHECKED
DESIGN	Andy Quan	Don Hansen
DETAILS	Kerry Geoffroy	Don Hansen
QUANTITIES	Andy Quan	Don Hansen

STATE OF CALIFORNIA
DEPARTMENT OF TRANSPORTATION

DIVISION OF ENGINEERING SERVICES
ELECTRICAL-MECHANICAL-WATER AND WASTEWATER DESIGN

BRIDGE NO. 540004R/L
POST MILE R107.3

C. V. KANE
SAFETY ROADSIDE REST AREA REHABILITATION
DETAILS

SHEET W-12

TAEMWW Imperial Rev. 7/10

ORIGINAL SCALE IN INCHES FOR REDUCED PLANS 0 1 2 3

UNIT 3616
PROJECT NUMBER & PHASE 08000002291
EA 0G840

DISREGARD PRINTS BEARING EARLIER REVISION DATES
REVISION DATES (PRELIMINARY STAGE ONLY) 08-14-09 10-15-09 12-17-09 02-18-10 04-15-10 10-25-10 01-03-12 08-09-13
SHEET OF

PRINTED ON: 18-SEP-2013 13:03
w_12.dgn

DIST.	COUNTY	ROUTE	POST MILES TOTAL PROJECT	SHEET NO.	TOTAL SHEETS
03, 08	Sac, SBd	5, 15	23.3, R107.3	316	330

REGISTERED CIVIL ENGINEER — 08/09/2013 DATE

REGISTERED PROFESSIONAL ENGINEER — J. MARCOTTE — No. C 36844 — Exp. 6-30-14 — CIVIL — STATE OF CALIFORNIA

9-16-13
PLANS APPROVAL DATE

The State of California or its officers or agents shall not be responsible for the accuracy or completeness of electronic copies of this plan sheet.

CALIFORNIA STATE FIRE MARSHAL APPROVED
Approval of this plan does not authorize or approve any omission or deviation from applicable regulations. Final approval is subject to field inspection. One set of approved plans shall be available on the project site at all times.
Reviewed by: FRANCIS SOLICH
Approval date: 09-11-13

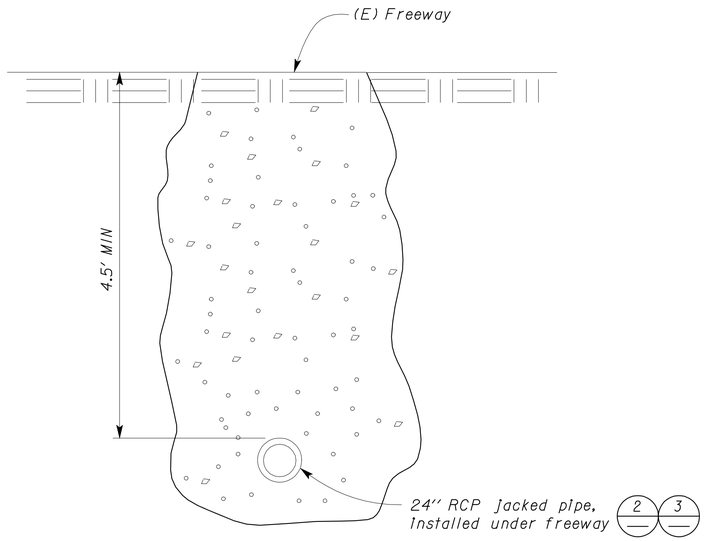

1 WATER PIPE CROSSING

NO SCALE

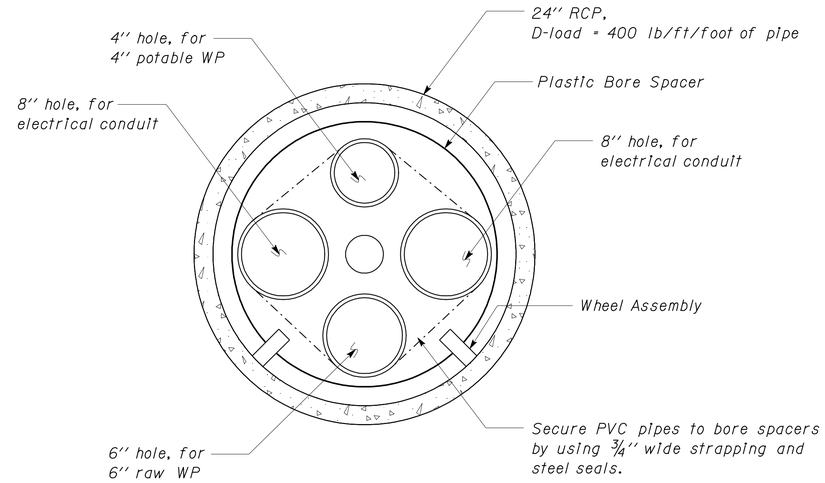

2 JACKED PIPE DETAIL

NO SCALE

Note:

1. Inside jacked pipe, potable water pipe material must be PVC C900 Class 200.
2. Use 45° pipe elbows to transition water pipe from trench to jacked pipe. Bending of pipe not allowed.

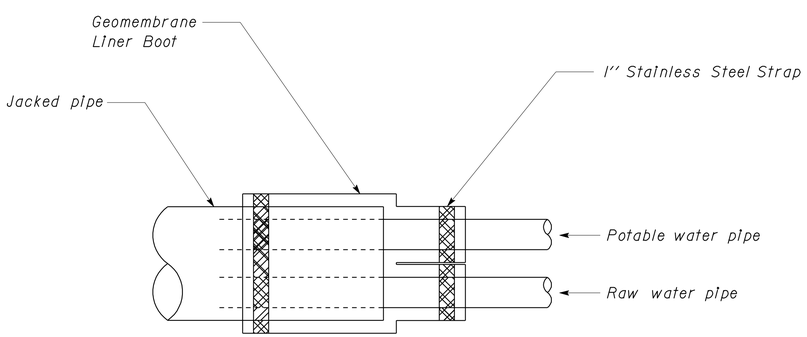

3 END SEALS

NO SCALE

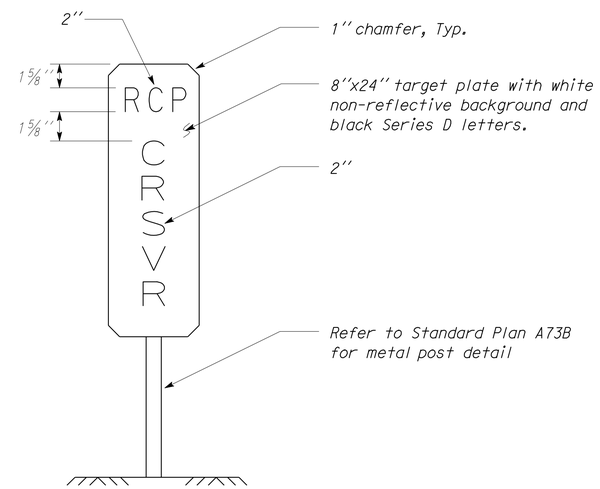

4 PADDLE MARKER

NO SCALE

THIS DRAWING ACCURATE FOR WATER WORK ONLY

	BY	CHECKED
DESIGN	Andy Quan	Don Hansen
DETAILS	Andy Quan	Don Hansen
QUANTITIES	Andy Quan	Don Hansen

STATE OF CALIFORNIA DEPARTMENT OF TRANSPORTATION

DIVISION OF ENGINEERING SERVICES
ELECTRICAL-MECHANICAL-WATER AND WASTEWATER DESIGN

BRIDGE NO. 540004R/L
POST MILE R107.3

C. V. KANE
SAFETY ROADSIDE REST AREA REHABILITATION
JACKED PIPE DETAILS

SHEET W-13

TAEMWW Imperial Rev. 7/10

ORIGINAL SCALE IN INCHES FOR REDUCED PLANS 0 1 2 3

UNIT 3616
PROJECT NUMBER & PHASE 08000002291
EA 0G840

DISREGARD PRINTS BEARING EARLIER REVISION DATES →

REVISION DATES (PRELIMINARY STAGE ONLY) 08-14-09 10-15-09 12-17-09 02-18-10 04-15-10 06-17-10 11-19-10 01-03-12 08-09-13

SHEET OF

PRINTED ON: 18-SEP-2013 13:03

w_13.dgn

DIST.	COUNTY	ROUTE	POST MILES TOTAL PROJECT	SHEET NO.	TOTAL SHEETS
03, 08	Sac, SBd	5, 15	23.3, R107.3	317	330

Jerome R. Marcotte 08/09/2013
REGISTERED CIVIL ENGINEER DATE

REGISTERED PROFESSIONAL ENGINEER
J. MARCOTTE
No. C 36844
Exp. 6-30-14
CIVIL
STATE OF CALIFORNIA

9-16-13
PLANS APPROVAL DATE

The State of California or its officers or agents shall not be responsible for the accuracy or completeness of electronic copies of this plan sheet.

CALIFORNIA STATE FIRE MARSHAL APPROVED
Approval of this plan does not authorize or approve any omission or deviation from applicable regulations. Final approval is subject to field inspection. One set of approved plans shall be available on the project site at all times.
Reviewed by: FRANCIS SOLICH
Approval date: 09-11-13

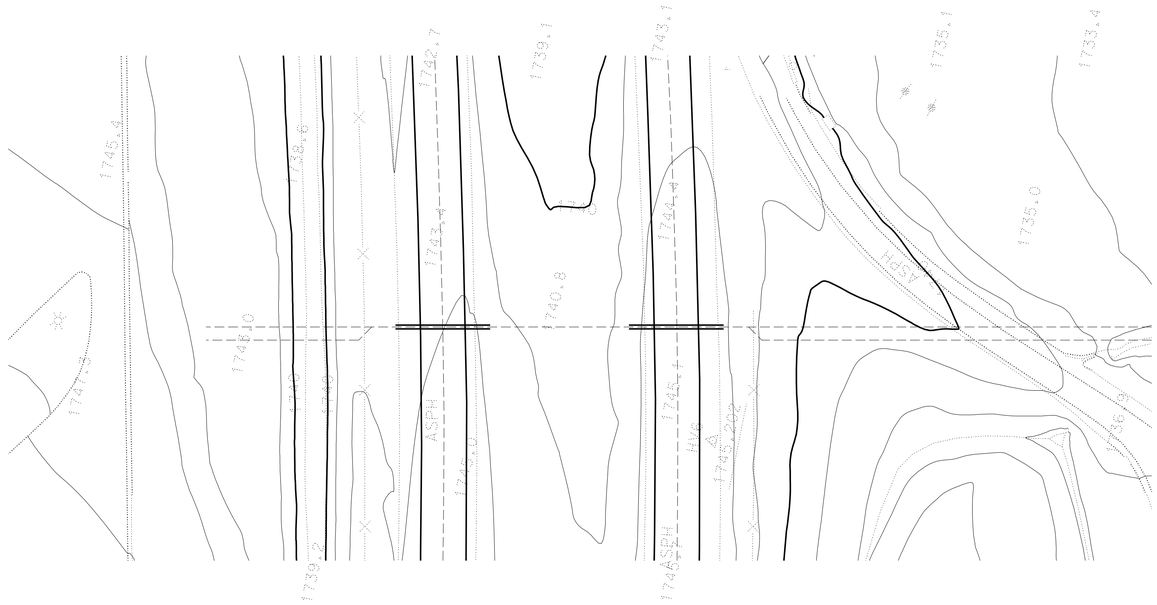

Scale 1" = 40' - 0"

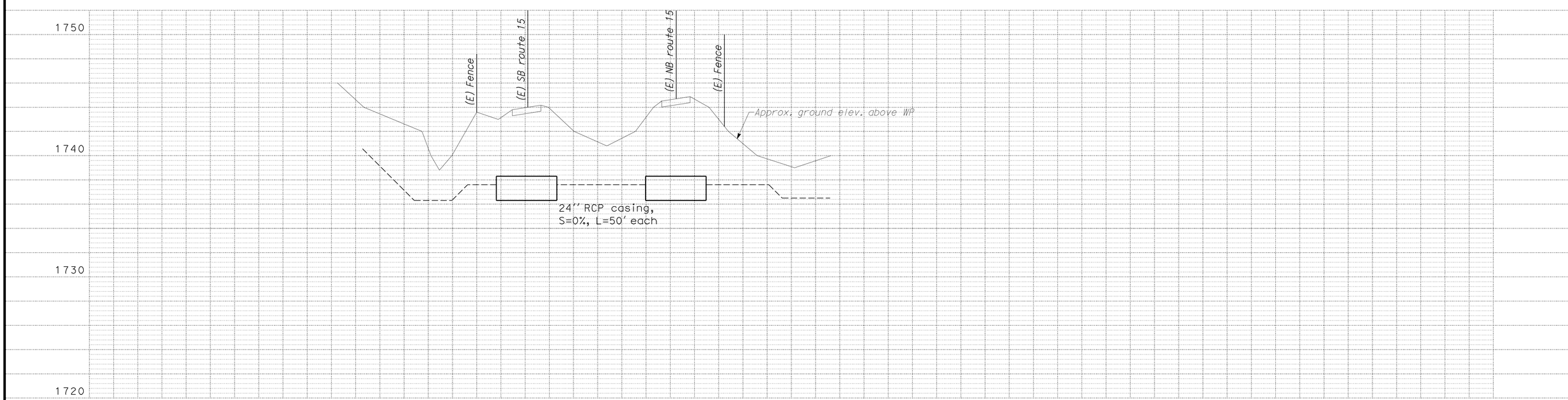

THIS DRAWING ACCURATE FOR WATER WORK ONLY

Horizontal Scale : 1" = 40' Vertical Scale : 1" = 4'

	BY	CHECKED
DESIGN	Andy Quan	Don Hansen
DETAILS	Andy Quan	Don Hansen
QUANTITIES	Andy Quan	Don Hansen

STATE OF CALIFORNIA
DEPARTMENT OF TRANSPORTATION

DIVISION OF ENGINEERING SERVICES
ELECTRICAL-MECHANICAL-WATER AND WASTEWATER DESIGN

BRIDGE NO. 540004R/L
POST MILE R107.3

C. V. KANE
SAFETY ROADSIDE REST AREA REHABILITATION
JACKED PIPE PROFILE

SHEET **W-14**

TAEMWW Imperial Rev. 7/10

ORIGINAL SCALE IN INCHES FOR REDUCED PLANS 0 1 2 3

UNIT 3616
PROJECT NUMBER & PHASE 08000002291
EA 0G840

DISREGARD PRINTS BEARING EARLIER REVISION DATES → REVISION DATES (PRELIMINARY STAGE ONLY) 10-25-10 01-03-12 08-09-13 SHEET OF

PRINTED ON: 18-SEP-2013 13:03

w_14.dgn

DIST.	COUNTY	ROUTE	POST MILES TOTAL PROJECT	SHEET NO.	TOTAL SHEETS
03, 08	Sac, SBd	5, 15	23.3, R107.3	318	330

REGISTERED CIVIL ENGINEER — DATE 08/09/2013

REGISTERED PROFESSIONAL ENGINEER J. MARCOTTE No. C 36844 Exp. 6-30-14 CIVIL STATE OF CALIFORNIA

9-16-13
PLANS APPROVAL DATE

The State of California or its officers or agents shall not be responsible for the accuracy or completeness of electronic copies of this plan sheet.

CALIFORNIA STATE FIRE MARSHAL APPROVED

Approval of this plan does not authorize or approve any omission or deviation from applicable regulations. Final approval is subject to field inspection. One set of approved plans shall be available on the project site at all times.

Reviewed by: FRANCIS SOLICH
Approval date: 09-11-13

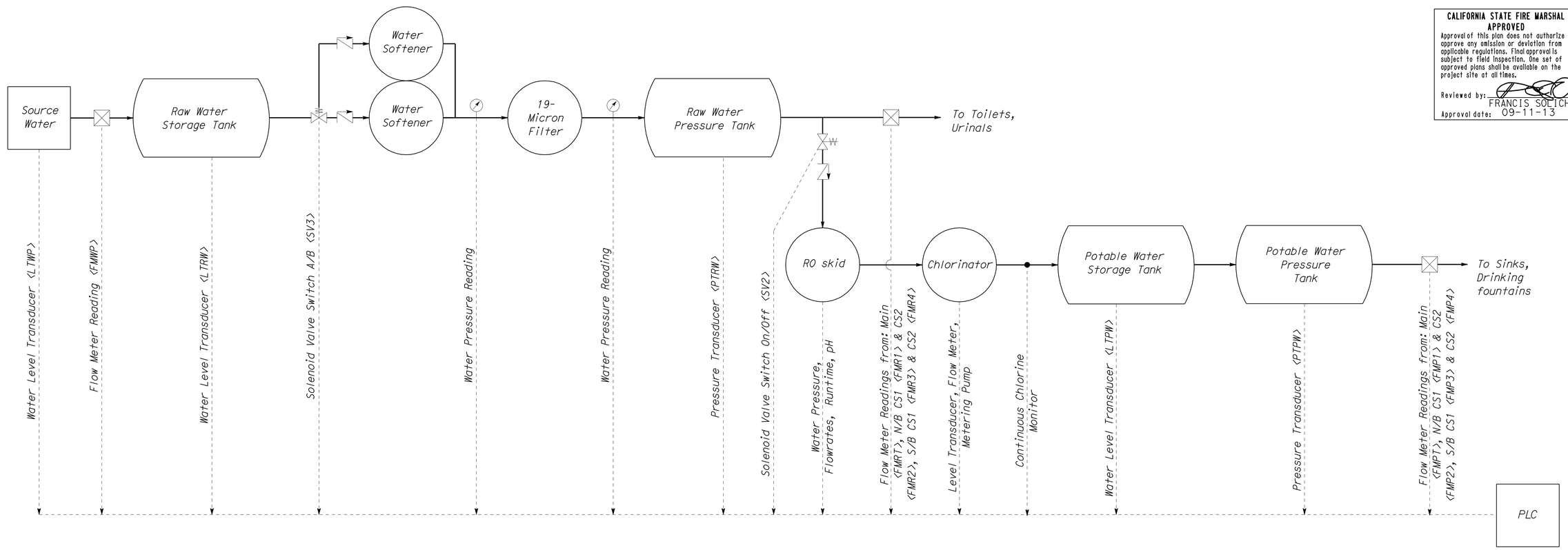

NOTE:

<XXXX> - see EE4-6.10

THIS DRAWING ACCURATE FOR WATER WORK ONLY

DESIGN	BY Andy Quan	CHECKED Don Hansen	
DETAILS	BY Andy Quan	CHECKED Don Hansen	
QUANTITIES	BY Andy Quan	CHECKED Don Hansen	

REVIEWED BY ELECTRICAL ENGINEER

STATE OF CALIFORNIA DEPARTMENT OF TRANSPORTATION

DIVISION OF ENGINEERING SERVICES
ELECTRICAL-MECHANICAL-WATER AND WASTEWATER DESIGN

BRIDGE NO. 540004R/L
POST MILE R107.3

C. V. KANE SAFETY ROADSIDE REST AREA REHABILITATION

LOW VOLTAGE ELECTRICAL LAYOUT

SHEET **W-15**

TAEMWW Imperial Rev. 7/10

ORIGINAL SCALE IN INCHES FOR REDUCED PLANS 0 1 2 3

UNIT 3616
PROJECT NUMBER & PHASE 08000002291
EA 0G840

DISREGARD PRINTS BEARING EARLIER REVISION DATES → REVISION DATES (PRELIMINARY STAGE ONLY) 08-14-09 10-15-09 12-17-09 02-18-10 04-15-10 10-25-10 01-03-12 08-09-13 SHEET OF

PRINTED ON: 18-SEP-2013 13:03

w_15.dgn

DIST.	COUNTY	ROUTE	POST MILES TOTAL PROJECT	SHEET NO.	TOTAL SHEETS
03, 08	Sac, SBd	5, 15	23.3, R107.3	319	330

REGISTERED CIVIL ENGINEER — 08/09/2013 DATE

REGISTERED PROFESSIONAL ENGINEER — Manjunath S. Akkipeddi — No. C 78898 — Exp. 03/31/14 — CIVIL — STATE OF CALIFORNIA

9-16-13
PLANS APPROVAL DATE

The State of California or its officers or agents shall not be responsible for the accuracy or completeness of electronic copies of this plan sheet.

CALIFORNIA STATE FIRE MARSHAL APPROVED
Approval of this plan does not authorize or approve any omission or deviation from applicable regulations. Final approval is subject to field inspection. One set of approved plans shall be available on the project site at all times.
Reviewed by: FRANCIS SOLICH
Approval date: 09-11-13

ABBREVIATIONS

AB	AGGREGATE BASE
AC	ASPHALT CONCRETE
B	BUNG
BLDG	BUILDING
C	CONDUIT
C-C	CENTER TO CENTER
CFS	CUBIC FEET PER SECOND
CI	CAST IRON
CL	CHAIN LINK
CMP	CORRUGATED METAL PIPE
CONC	CONCRETE
COTF	CLEANOUT TO FLOOR
COTG	CLEANOUT TO GRADE
CPLG	COUPLING
CW	COLD WATER PIPE
D	DRAIN
DBH	DIAMETER AT BREAST HEIGHT
DI	DRAIN INLET
DIA	DIAMETER
DP	DRAIN PIPE
E	ELECTRICAL
(E)	EXISTING
EA	EACH
EL	ELEVATION
EP	EDGE OF PAVEMENT
EQ	EQUAL
FOB	FACE OF BUILDING
FF	FINISH FLOOR
FG	FINISH GRADE
FL	FLOW LINE
FM	FORCE MAIN
FOC	FACE OF CONCRETE
FS	FLOW SWITCH
FT	FEET
FTR	FLUE THROUGH ROOF
GA	GAUGE
GAC	GRANULAR ACTIVATED CARBON
GAL	GALLON
GPM	GALLONS PER MINUTE
GALV	GALVANIZED
GSP	GALVANIZED STEEL PIPE
GV	GATE VALVE
GS	GOVERNMENT SERVICE LINE
H	HEIGHT
HF	HOSE FAUCET
HMA	HOT MIX ASPHALT
HP	HORSEPOWER
HZ	HERTZ
ID	INSIDE DIAMETER
IE	INVERT ELEVATION (IN FEET)
IN	INCH
JB	JUNCTION BOX
kW	KILOWATT
LB	POUND
LS	LANDSCAPE IRRIGATION
LT	LEFT
MAX	MAXIMUM
MBV	MOTORIZED BALL VALVE
MH	MANHOLE
MIN	MINIMUM
N	NORTH
NB	NORTHBOUND
NIC	NOT IN CONTRACT
NO	NUMBER
OC	ON CENTER
OD	OUTSIDE DIAMETER
OG	ORIGINAL GROUND
P	PITCH
PCC	PORTLAND CEMENT CONCRETE
PH	PHASE
PRV	PRESSURE REDUCING VALVE
PVC	POLYVINYL CHLORIDE
R	RADIUS
RCP	REINFORCED CONCRETE PIPE
REQ	REQUIRED
RPM	REVOLUTIONS PER MINUTE
RPBP	REDUCED PRESSURE BACKFLOW PREVENTER
RPU	RECYCLE PROCESS UNIT
RT	RIGHT
R/W	RIGHT-OF-WAY
S	SLOPE
SB	SOUTHBOUND
SCH	SCHEDULE
SD	STORM DRAIN
SP	SEWAGE PIPE
SQ	SQUARE
STA	STATION
STD	STANDARD
TBM	TEMPORARY BENCH MARK
TOC	TOP OF CONCRETE
TOT	TOTAL
TYP	TYPICAL
VAC	VOLTS AC
VCP	VITRIFIED CLAY PIPE
W	WATER
W/O	WITHOUT
WP	WATER PIPE
WSP	WELDED STEEL PIPE

LEGEND

X	FENCE
	SURFACE DRAINAGE
	ABANDON
S	SANITARY SEWER
D	DRAIN
RD	RETURN DRAIN
V	VENT
W	WATER
FM	FORCE MAIN
L	LEACH LINES
7 / SS-5	DETAIL / SHEET NUMBER
99.00	NEW GRADE IN FEET
X (100.00)	EXISTING SPOT GRADE IN FEET
	BENCHMARK ELEVATION
℄	CENTERLINE
ø	DIAMETER
	SECTION / ELEVATION LETTER / SHEET NUMBER
	TREE
	DIRECTION OF TRAFFIC
	MANHOLE
	COTG

GENERAL WORK NOTES

The Contractor shall verify all controlling field dimensions and conditions before ordering or fabricating any materials.

The Contractor shall verify exact location of all underground facilities and utilities prior to start of construction.

No 90 degree bends allowed on drain or sewer pipe. Where 90 degree bends are shown, use two 45 degree bends

Type of Fitting	90° Bend	45° Bend	11 1/4° or 22 1/2° Bend	Tee or Dead end	Cross w/plug	Tee w/plug
Typical Installation	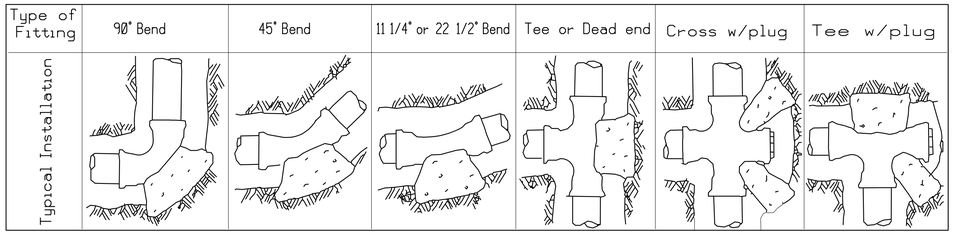					

THRUST BLOCK BEARING AREA (SQ. FT.)

Type of Fitting / Size of Pipe	90° Bend	45° Bend	11 1/4° or 22 1/2° Bend	Tee or Dead End	Tee w/ Plug	Cross w/ Plug
4"	2	1	1	2	2	2
6"	4	4	2	4	4	4
8"	7	4	2	5	7	7
10"	12	6	3	8	12	12
12"	16	10	5	12	16	16
14"	20	12	6	14	20	20
16"	27	15	8	18	27	27
18"	45	25	13	32	45	45
24"	65	35	18	46	65	65

PIPE FITTINGS AND VALVES

- CAP
- ELBOW, TURNED DOWN
- FLEXIBLE CONNECTOR
- REDUCER, CONCENTRIC
- REDUCER, ECCENTRIC
- PRESSURE GAUGE (WITH VALVE AND SNUBBER)
- UNION
- UNION, INSULATING
- VALVE, BALL
- VALVE, CHECK
- VALVE, GATE
- VALVE, SAFETY RELIEF
- VALVE, PRESSURE REDUCING
- HOSE FAUCET

THIS DRAWING ACCURATE FOR SANITARY SEWER WORK ONLY

	BY	CHECKED
DESIGN	Manju Akkipeddi	Don Hansen
DETAILS	Manju Akkipeddi / KG	Don Hansen
QUANTITIES	Manju Akkipeddi	Don Hansen

STATE OF CALIFORNIA DEPARTMENT OF TRANSPORTATION

DIVISION OF ENGINEERING SERVICES
ELECTRICAL-MECHANICAL-WATER AND WASTEWATER DESIGN

BRIDGE NO. 540004R/L
POST MILE R107.3

C. V. KANE
SAFETY ROADSIDE REST AREA REHABILITATION
NOTES, LEGEND AND ABBREVIATIONS

SHEET SS-0

TAEMWW Imperial Rev. 7/10

ORIGINAL SCALE IN INCHES FOR REDUCED PLANS 0 1 2 3

UNIT 3616
PROJECT NUMBER & PHASE 08000002291
EA 0G8401

DISREGARD PRINTS BEARING EARLIER REVISION DATES →
REVISION DATES (PRELIMINARY STAGE ONLY) 08-14-09 10-15-09 12-11-09 12-18-09 06-17-10 08-25-10 11-19-10 11-04-11 01-03-12 08-09-13
SHEET OF

PRINTED ON: 18-SEP-2013 13:03
ss_0.dgn

DIST.	COUNTY	ROUTE	POST MILES TOTAL PROJECT	SHEET NO.	TOTAL SHEETS
03, 08	Sac, SBd	5, 15	23.3, R107.3	320	330

REGISTERED CIVIL ENGINEER — 08/09/2013 DATE

REGISTERED PROFESSIONAL ENGINEER — Manjunath S. Akkipeddi — No. C 78898 — Exp. 03/31/14 — CIVIL — STATE OF CALIFORNIA

9-16-13
PLANS APPROVAL DATE

The State of California or its officers or agents shall not be responsible for the accuracy or completeness of electronic copies of this plan sheet.

CALIFORNIA STATE FIRE MARSHAL APPROVED
Approval of this plan does not authorize or approve any omission or deviation from applicable regulations. Final approval is subject to field inspection. One set of approved plans shall be available on the project site at all times.
Reviewed by: FRANCIS SOLICH
Approval date: 09-11-13

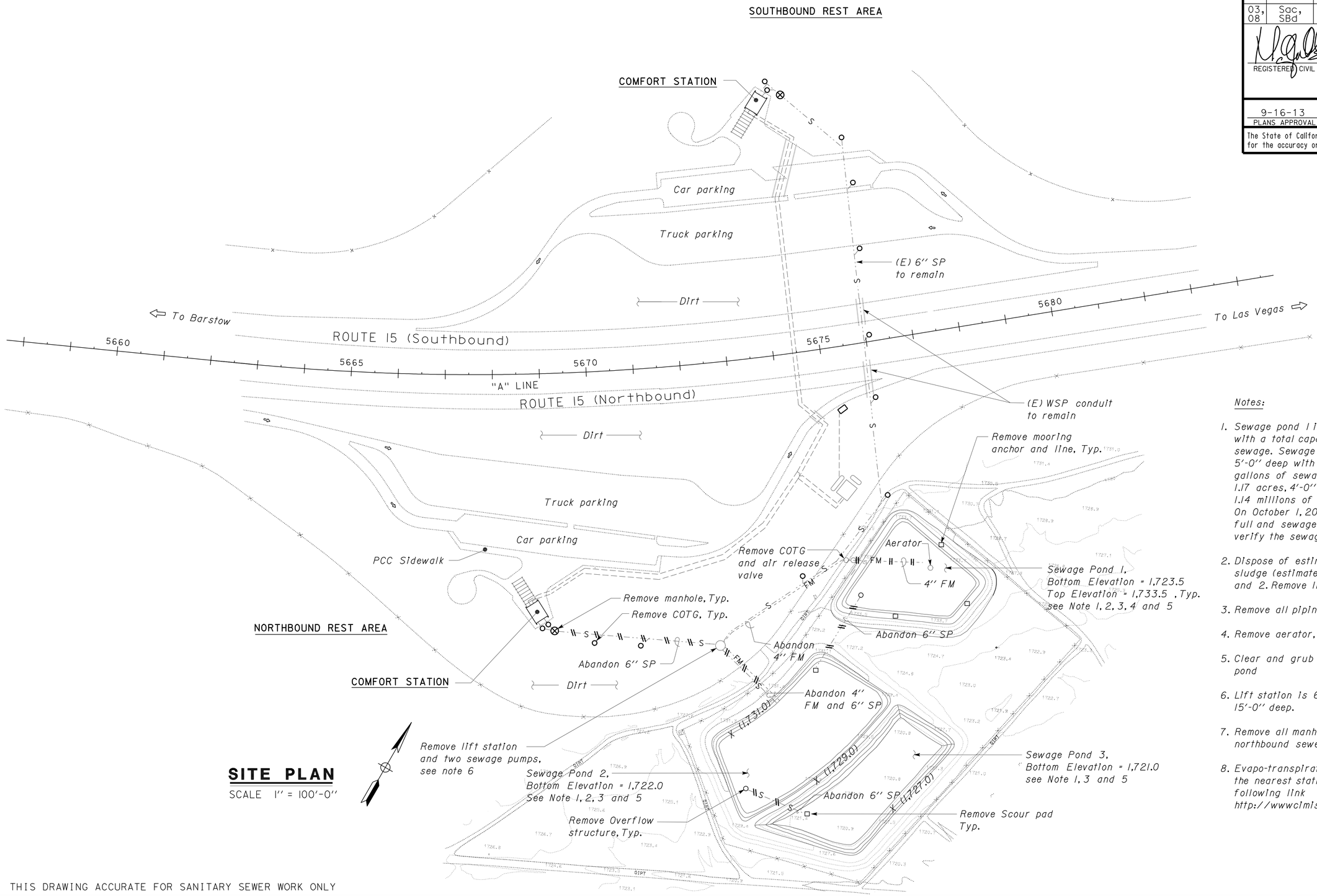

SITE PLAN
SCALE 1" = 100'-0"

Notes:

1. Sewage pond 1 is lined, 0.75 acres, 8'-0" deep with a total capacity of 1.5 million gallons of sewage. Sewage pond 2 is unlined, 1.39 acres 5'-0" deep with a total capacity of 1.9 million gallons of sewage. Sewage pond 3 is unlined, 1.17 acres, 4'-0" deep with a total capacity of 1.14 millions of sewage.
   On October 1, 2010 the sewage pond 1 and 2 were full and sewage pond 3 was dry. Contractor must verify the sewage levels in all the sewage ponds.
2. Dispose of estimated 870 cubic yards of sludge (estimated 3% solids) from sewage pond 1 and 2. Remove liner from sewage pond 1.
3. Remove all piping in all the ponds.
4. Remove aerator, mooring anchor and line.
5. Clear and grub the berm and bottom of the pond
6. Lift station is 6'-0" in diameter and 15'-0" deep.
7. Remove all manholes and COTGs associated with northbound sewer pipe and sewage ponds.
8. Evapo-transpiration and precipitation data for the nearest station (No: 134) is available at the following link http://wwwcimis.water.ca.gov/cimis/welcome.jsp

THIS DRAWING ACCURATE FOR SANITARY SEWER WORK ONLY

DESIGN SUPERVISOR
DESIGN ENGINEER

	BY	CHECKED
DESIGN	Manju Akkipeddi	Don Hansen
DETAILS	Manju Akkipeddi / KG	Don Hansen
QUANTITIES	Manju Akkipeddi	Don Hansen

STATE OF CALIFORNIA
DEPARTMENT OF TRANSPORTATION

DIVISION OF ENGINEERING SERVICES
ELECTRICAL-MECHANICAL-WATER AND WASTEWATER DESIGN

BRIDGE NO. 540004R/L
POST MILE R107.3

C. V. KANE
SAFETY ROADSIDE REST AREA REHABILITATION
EXISTING SITE PLAN

SHEET **SS-1**

TAEMWW Imperial Rev. 7/10

ORIGINAL SCALE IN INCHES FOR REDUCED PLANS 0 1 2 3

UNIT 3616
PROJECT NUMBER & PHASE 08000002291
EA 0G8401

DISREGARD PRINTS BEARING EARLIER REVISION DATES
REVISION DATES (PRELIMINARY STAGE ONLY) 08-14-09 10-15-09 12-17-09 01-11-10 04-15-10 06-17-10 11-19-10 11-04-11 01-03-12 08-09-13
SHEET OF

ss_1.dgn

PRINTED ON: 18-SEP-2013 13:03

DIST.	COUNTY	ROUTE	POST MILES TOTAL PROJECT	SHEET NO.	TOTAL SHEETS
03, 08	Sac, SBd	5, 15	23.3, R107.3	321	330

REGISTERED CIVIL ENGINEER — 08/09/2013 DATE

REGISTERED PROFESSIONAL ENGINEER — Manjunath S. Akkipeddi — No. C 78898 — Exp. 03/31/14 — CIVIL — STATE OF CALIFORNIA

9-16-13
PLANS APPROVAL DATE

The State of California or its officers or agents shall not be responsible for the accuracy or completeness of electronic copies of this plan sheet.

CALIFORNIA STATE FIRE MARSHAL APPROVED

Approval of this plan does not authorize or approve any omission or deviation from applicable regulations. Final approval is subject to field inspection. One set of approved plans shall be available on the project site at all times.

Reviewed by: FRANCIS SOLICH
Approval date: 09-11-13

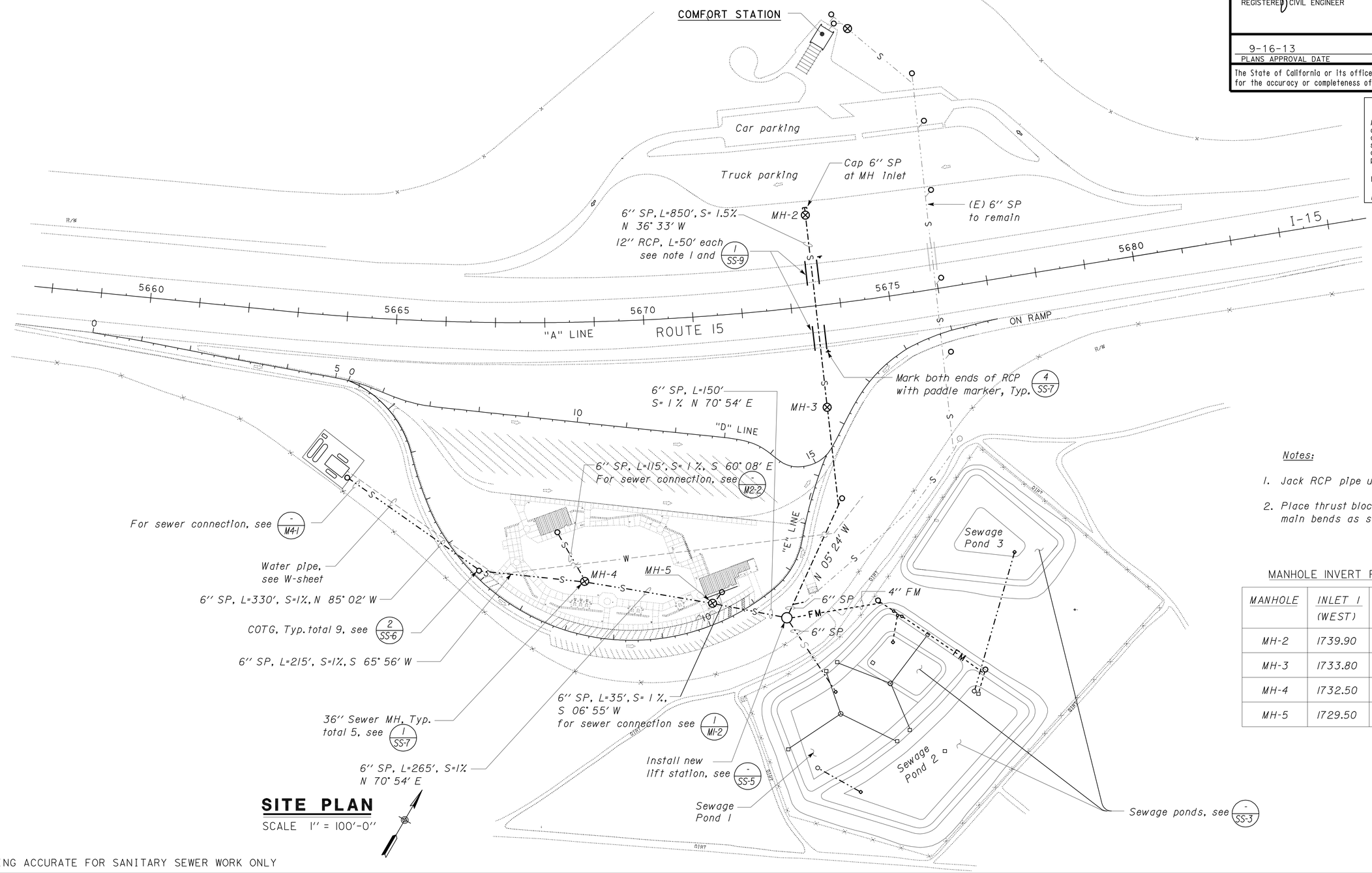

SITE PLAN

SCALE 1" = 100'-0"

THIS DRAWING ACCURATE FOR SANITARY SEWER WORK ONLY

Notes:

1. Jack RCP pipe under freeway.
2. Place thrust blocks at all force main bends as shown in SS-0.

MANHOLE INVERT FLOW ELEVATION

MANHOLE	INLET 1 (WEST)	INLET 2 (EAST)	OUTLET
MH-2	1739.90	-	1739.65
MH-3	1733.80	-	1733.55
MH-4	1732.50	1736.30	1732.25
MH-5	1729.50	1734.40	1729.27

	BY	CHECKED
DESIGN	Manju Akkipeddi	Don Hansen
DETAILS	Manju Akkipeddi / KG	Don Hansen
QUANTITIES	Manju Akkipeddi	Don Hansen

STATE OF CALIFORNIA DEPARTMENT OF TRANSPORTATION

DIVISION OF ENGINEERING SERVICES
ELECTRICAL-MECHANICAL-WATER AND WASTEWATER DESIGN

BRIDGE NO. 540004R/L
POST MILE R107.3

C. V. KANE SAFETY ROADSIDE REST AREA REHABILITATION

MODIFIED SITE PLAN

SHEET **SS-2**

TAEMWW Imperial Rev. 7/10

ORIGINAL SCALE IN INCHES FOR REDUCED PLANS 0 1 2 3

UNIT 3616
PROJECT NUMBER & PHASE 08000002291
EA 0G8401

DISREGARD PRINTS BEARING EARLIER REVISION DATES → REVISION DATES (PRELIMINARY STAGE ONLY) 08-14-09 10-15-09 12-17-09 01-13-10 04-15-10 06-17-10 08-31-10 11-04-11 01-03-12 08-09-13 SHEET OF

ss_2.dgn

PRINTED ON: 18-SEP-2013 13:03

DIST.	COUNTY	ROUTE	POST MILES TOTAL PROJECT	SHEET NO.	TOTAL SHEETS
03, 08	Sac, SBd	5, 15	23.3, R107.3	322	330

REGISTERED CIVIL ENGINEER — 08/09/2013 DATE

REGISTERED PROFESSIONAL ENGINEER — Manjunath S. Akkipeddi — No. C 78898 — Exp. 03/31/14 — CIVIL — STATE OF CALIFORNIA

9-16-13
PLANS APPROVAL DATE

The State of California or its officers or agents shall not be responsible for the accuracy or completeness of electronic copies of this plan sheet.

CALIFORNIA STATE FIRE MARSHAL APPROVED
Approval of this plan does not authorize or approve any omission or deviation from applicable regulations. Final approval is subject to field inspection. One set of approved plans shall be available on the project site at all times.
Reviewed by: FRANCIS SOLICH
Approval date: 09-11-13

ACCESSIBILITY DESIGN APPROVAL STAMP DOT / DES / OTA
PROJECT ID **08000000229**
* EXEMPT
Reviewed by:
Date: 10-25-11

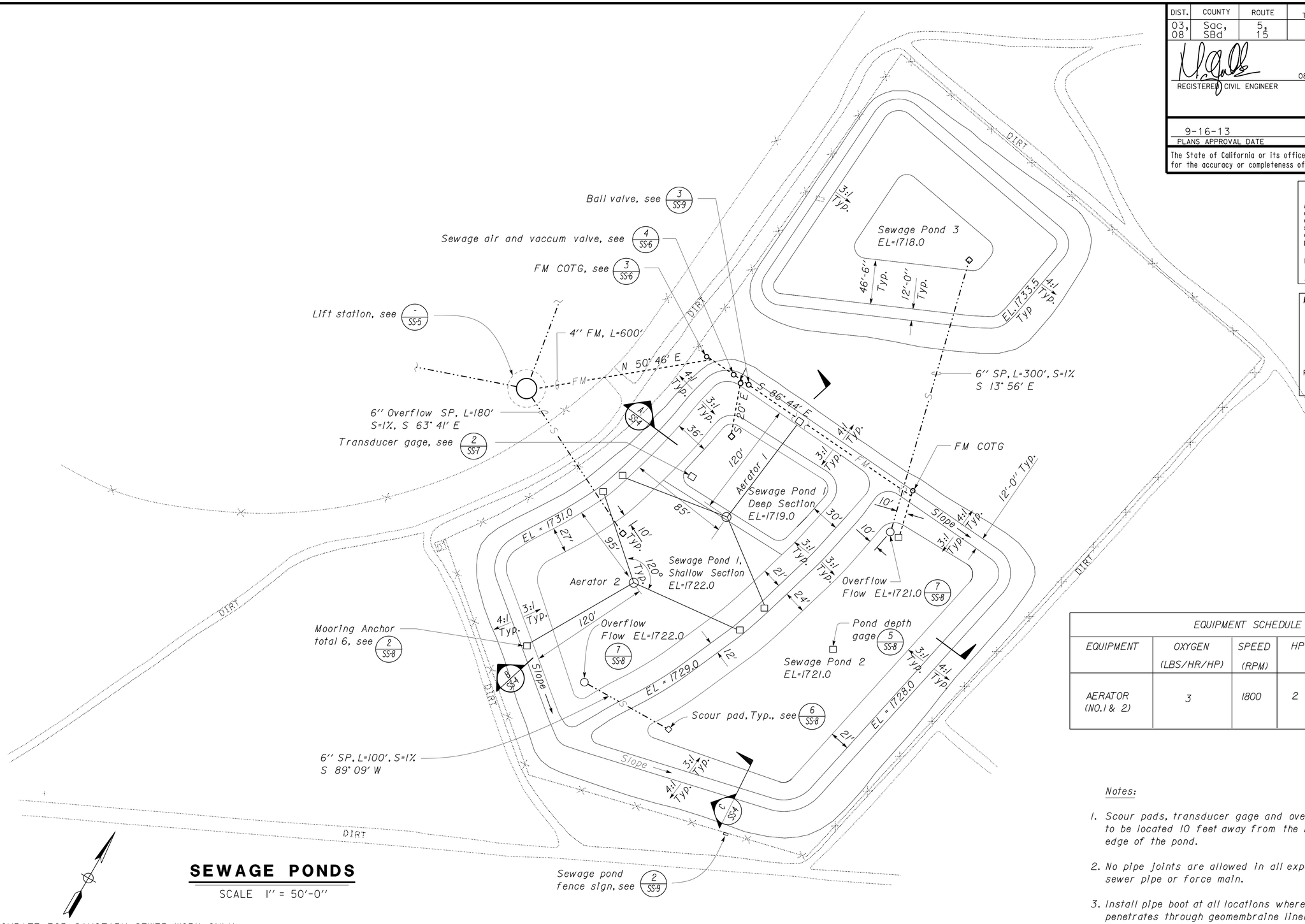

SEWAGE PONDS

SCALE 1" = 50'-0"

THIS DRAWING ACCURATE FOR SANITARY SEWER WORK ONLY

EQUIPMENT SCHEDULE					
EQUIPMENT	OXYGEN (LBS/HR/HP)	SPEED (RPM)	HP	VOLTS	PHASE
AERATOR (NO.1 & 2)	3	1800	2	460	3

Notes:

1. Scour pads, transducer gage and overflow to be located 10 feet away from the bottom edge of the pond.
2. No pipe joints are allowed in all exposed sewer pipe or force main.
3. Install pipe boot at all locations where pipe penetrates through geomembraine liner.

	BY	CHECKED
DESIGN	Manju Akkipeddi	Don Hansen
DETAILS	Manju Akkipeddi / KG	Don Hansen
QUANTITIES	Manju Akkipeddi	Don Hansen

STATE OF CALIFORNIA
DEPARTMENT OF TRANSPORTATION

DIVISION OF ENGINEERING SERVICES
ELECTRICAL-MECHANICAL-WATER AND WASTEWATER DESIGN

BRIDGE NO. 540004R/L
POST MILE R107.3

C. V. KANE
SAFETY ROADSIDE REST AREA REHABILITATION
SEWAGE PONDS

SHEET **SS-3**

TAEMWW Imperial Rev. 7/10

ORIGINAL SCALE IN INCHES FOR REDUCED PLANS 0 1 2 3

UNIT 3616
PROJECT NUMBER & PHASE 08000002291
EA 0G8401

DISREGARD PRINTS BEARING EARLIER REVISION DATES
REVISION DATES (PRELIMINARY STAGE ONLY) 08-14-09 10-15-09 12-17-09 04-15-10 06-17-10 08-25-10 11-19-10 11-04-11 01-03-12 08-09-13
SHEET OF

PRINTED ON: 14-OCT-2013 09:27
ss_3.dgn

DIST.	COUNTY	ROUTE	POST MILES TOTAL PROJECT	SHEET NO.	TOTAL SHEETS
03, 08	Sac, SBd	5, 15	23.3, R107.3	323	330

REGISTERED CIVIL ENGINEER — 08/09/2013 DATE

REGISTERED PROFESSIONAL ENGINEER — Manjunath S. Akkipeddi — No. C 78898 — Exp. 03/31/14 — CIVIL — STATE OF CALIFORNIA

9-16-13
PLANS APPROVAL DATE

The State of California or its officers or agents shall not be responsible for the accuracy or completeness of electronic copies of this plan sheet.

CALIFORNIA STATE FIRE MARSHAL APPROVED

Approval of this plan does not authorize or approve any omission or deviation from applicable regulations. Final approval is subject to field inspection. One set of approved plans shall be available on the project site at all times.

Reviewed by: FRANCIS SOLICH
Approval date: 09-11-13

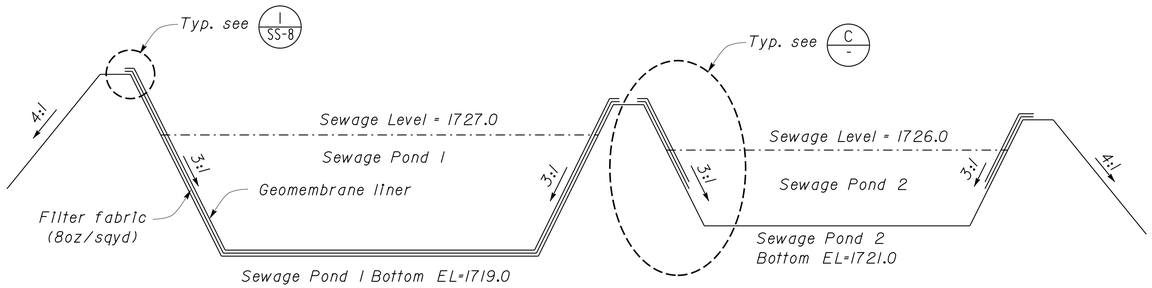

A SECTION

Vertical 1" = 5'
Horizantal 1" = 30'

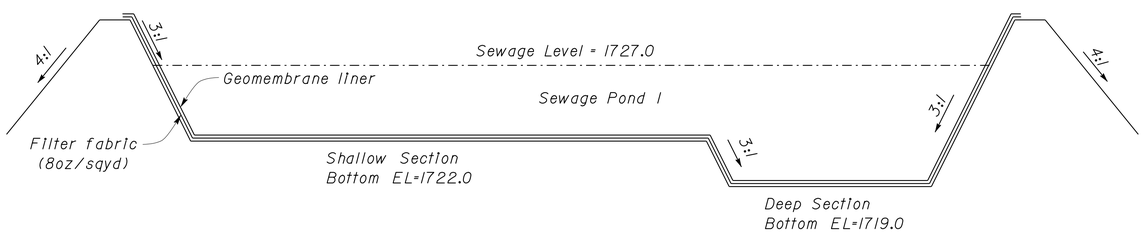

B SECTION

Vertical 1" = 5'
Horizantal 1" = 30'

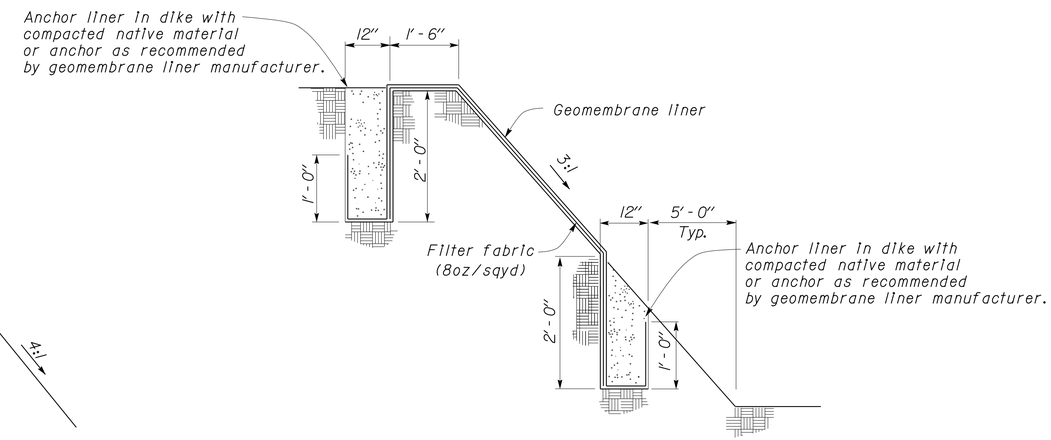

C SEWAGE POND 2 BERM SECTION

NO SCALE

THIS DRAWING ACCURATE FOR SANITARY SEWER WORK ONLY

	BY	CHECKED
DESIGN	Manju Akkipeddi	Don Hansen
DETAILS	Manju Akkipeddi / KG	Don Hansen
QUANTITIES	Manju Akkipeddi	Don Hansen

STATE OF CALIFORNIA DEPARTMENT OF TRANSPORTATION

DIVISION OF ENGINEERING SERVICES
ELECTRICAL-MECHANICAL-WATER AND WASTEWATER DESIGN

BRIDGE NO. 540004R/L
POST MILE R107.3

C. V. KANE SAFETY ROADSIDE REST AREA REHABILITATION

SECTIONS

SHEET **SS-4**

TAEMWW Imperial Rev. 7/10

ORIGINAL SCALE IN INCHES FOR REDUCED PLANS 0 1 2 3

UNIT 3616
PROJECT NUMBER & PHASE 08000002291
EA 0G8401

DISREGARD PRINTS BEARING EARLIER REVISION DATES →

REVISION DATES (PRELIMINARY STAGE ONLY) 08-14-09 10-15-09 12-17-09 02-18-10 04-15-10 06-17-10 11-19-10 11-04-11 01-03-12 08-09-13 SHEET OF

PRINTED ON: 18-SEP-2013 12:57

ss_4.dgn

DIST.	COUNTY	ROUTE	POST MILES TOTAL PROJECT	SHEET NO.	TOTAL SHEETS
03, 08	Sac, SBd	5, 15	23.3, R107.3	324	330

REGISTERED CIVIL ENGINEER 08/09/2013 DATE

REGISTERED PROFESSIONAL ENGINEER Manjunath S. Akkipeddi No. C 78898 Exp. 03/31/14 CIVIL STATE OF CALIFORNIA

9-16-13
PLANS APPROVAL DATE

The State of California or its officers or agents shall not be responsible for the accuracy or completeness of electronic copies of this plan sheet.

CALIFORNIA STATE FIRE MARSHAL APPROVED
Approval of this plan does not authorize or approve any omission or deviation from applicable regulations. Final approval is subject to field inspection. One set of approved plans shall be available on the project site at all times.
Reviewed by: FRANCIS SOLICH
Approval date: 09-11-13

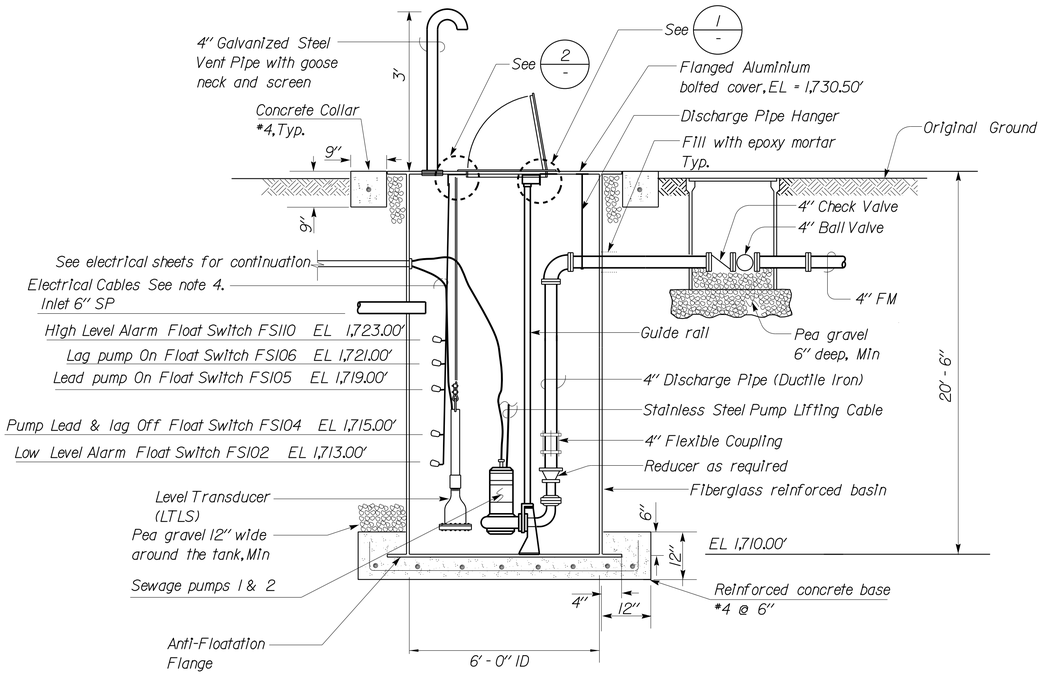

A SECTION
NO SCALE

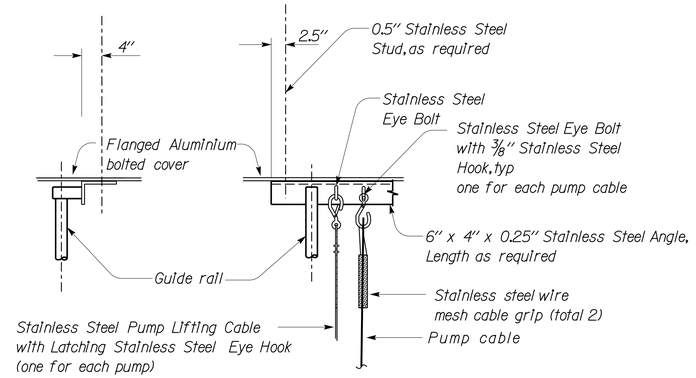

1 DETAIL
NO SCALE

EQUIPMENT SCHEDULE						
EQUIPMENT	PUMPING RATE (GPM)	TOTAL DYNAMIC HEAD (FT)	SPEED (RPM)	HP	VOLTS	PHASE
SEWAGE PUMP (NO.1 & 2)	35	35'	3450 (Max)	2	460	3
	40	35'				
	45	35'				

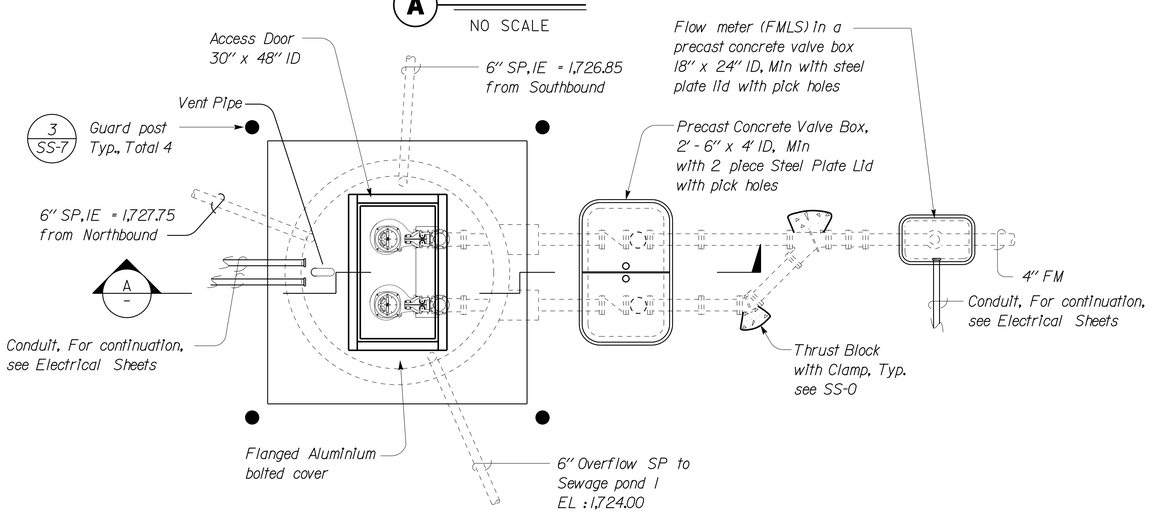

SEWAGE LIFT STATION PLAN
NO SCALE

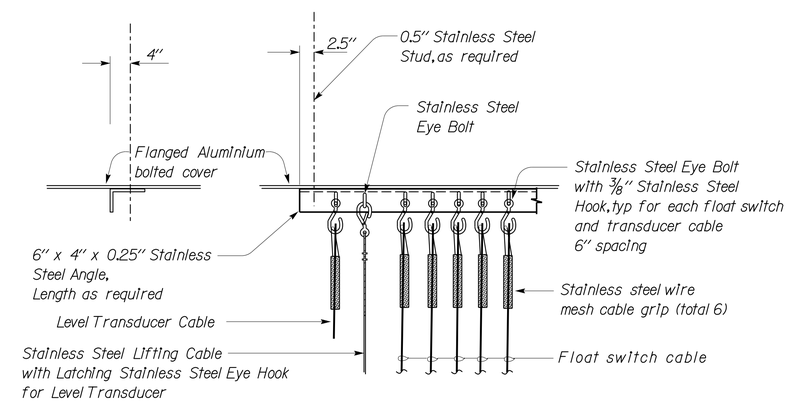

2 DETAIL
NO SCALE

Notes:

1. For inlet, outlet and vent orientation and installation location, see Sanitary Sheet SS-2.
2. Discharge pipe hanger must be stainless steel and attached as per manufacturers recommendation.
3. All fastener to aluminium and fiberglass must be devices with stainless steel threaded stud, hex nut and flat washer. Size as required.
4. Cable length must be continuous from motor, level transducer and floats to controls without splices.

THIS DRAWING ACCURATE FOR SANITARY SEWER WORK ONLY

	BY	CHECKED
DESIGN	Manju Akkipeddi	Don Hansen
DETAILS	Manju Akkipeddi / KG	Don Hansen
QUANTITIES	Manju Akkipeddi	Don Hansen

STATE OF CALIFORNIA DEPARTMENT OF TRANSPORTATION

DIVISION OF ENGINEERING SERVICES ELECTRICAL-MECHANICAL-WATER AND WASTEWATER DESIGN

BRIDGE NO. 540004R/L
POST MILE R107.3

C. V. KANE SAFETY ROADSIDE REST AREA REHABILITATION
SEWAGE LIFT STATION

SHEET SS-5

TAEMWW Imperial Rev. 7/10

ORIGINAL SCALE IN INCHES FOR REDUCED PLANS 0 1 2 3

UNIT 3616
PROJECT NUMBER & PHASE 08000002291
EA 0G8401

DISREGARD PRINTS BEARING EARLIER REVISION DATES

REVISION DATES (PRELIMINARY STAGE ONLY) 08-14-09 10-15-09 12-17-09 12-18-09 04-15-10 06-11-10 11-19-10 11-04-11 01-03-12 08-09-13

SHEET OF

PRINTED ON: 18-SEP-2013 12:57

ss_5.dgn

DIST.	COUNTY	ROUTE	POST MILES TOTAL PROJECT	SHEET NO.	TOTAL SHEETS
03, 08	Sac, SBd	5, 15	23.3, R107.3	325	330

REGISTERED CIVIL ENGINEER — 08/09/2013 DATE

REGISTERED PROFESSIONAL ENGINEER Manjunath S. Akkipeddi No. C 78898 Exp. 03/31/14 CIVIL STATE OF CALIFORNIA

9-16-13
PLANS APPROVAL DATE

The State of California or its officers or agents shall not be responsible for the accuracy or completeness of electronic copies of this plan sheet.

CALIFORNIA STATE FIRE MARSHAL APPROVED
Approval of this plan does not authorize or approve any omission or deviation from applicable regulations. Final approval is subject to field inspection. One set of approved plans shall be available on the project site at all times.
Reviewed by: FRANCIS SOLICH
Approval date: 09-11-13

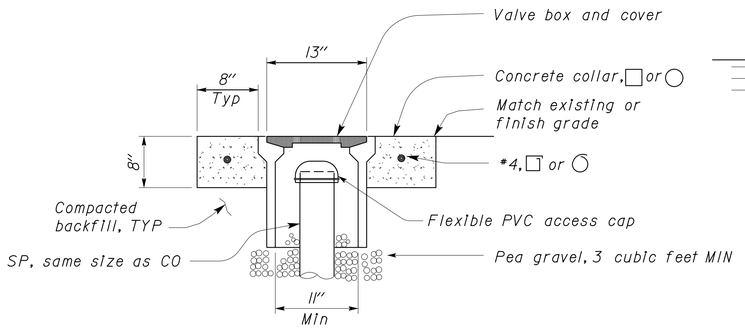

A COTG ACCESS BOX

NO SCALE

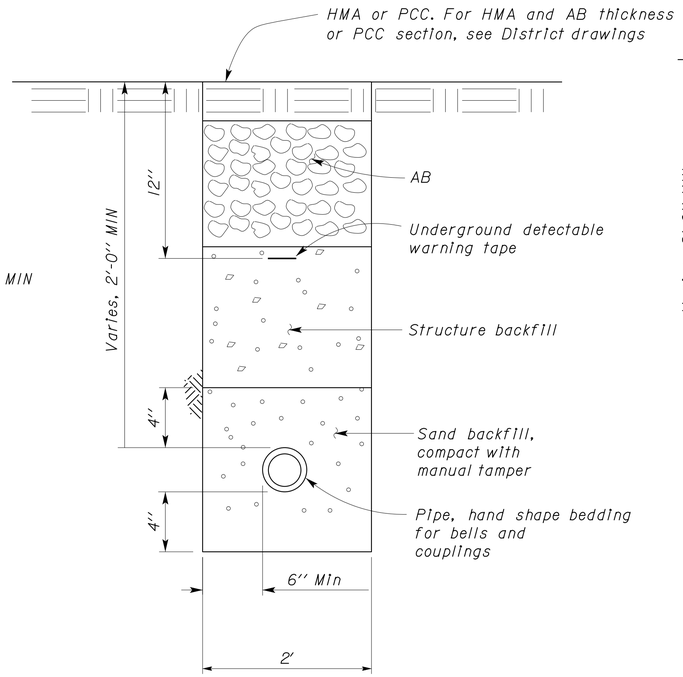

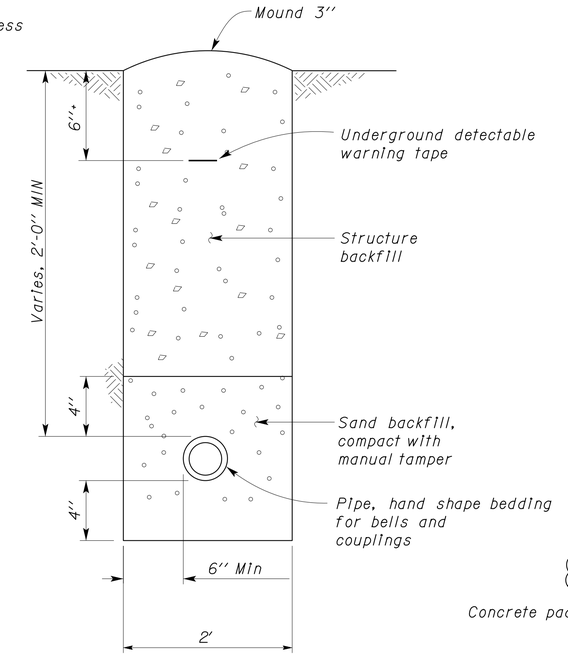

1 SEWER PIPE / FORCE MAIN

NO SCALE

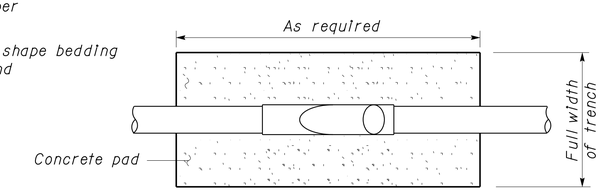

VIEW A-A

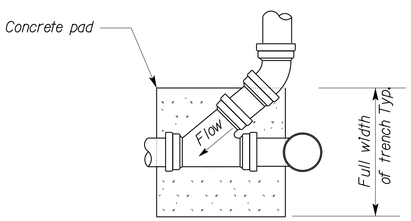

PLAN

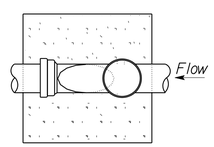

PLAN

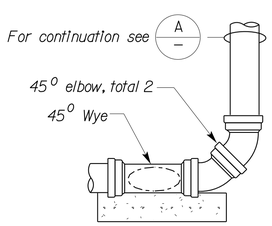

ELEVATION

CLEANOUT (AT BEND)

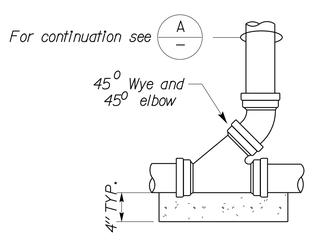

ELEVATION

CLEANOUT (STANDARD)

2 CLEANOUT TO GRADE

NO SCALE

THIS DRAWING ACCURATE FOR SANITARY SEWER WORK ONLY

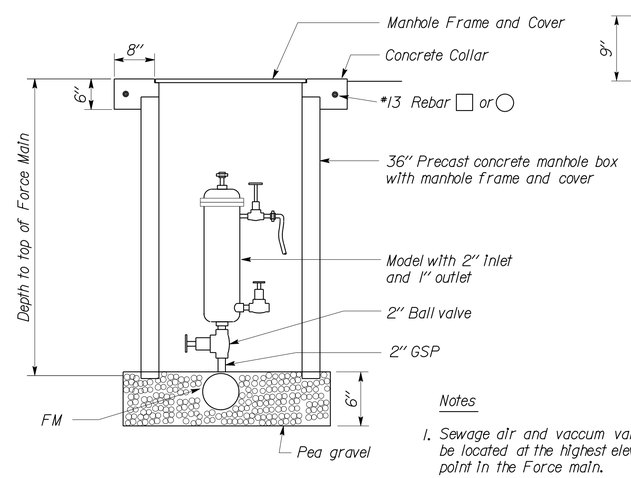

Notes

1. Sewage air and vaccum valve must be located at the highest elevation point in the Force main.

4 SEWAGE AIR AND VACUUM VALVE

NO SCALE

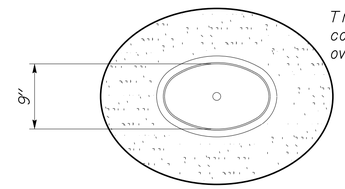

VIEW B-B

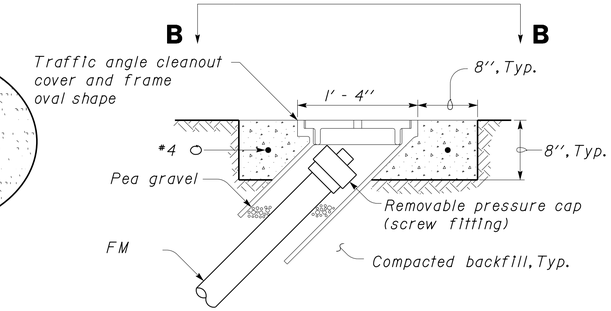

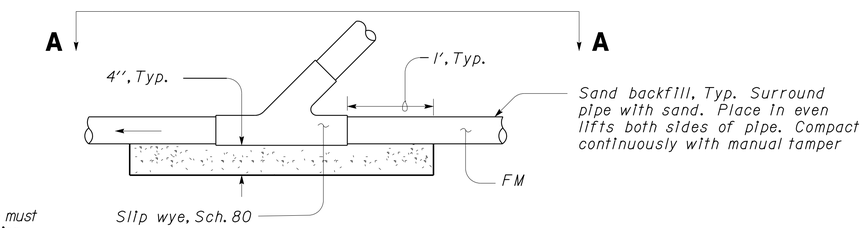

ELEVATION

3 FORCE MAIN CLEANOUT

NO SCALE

	BY	CHECKED
DESIGN	Manju Akkipeddi	Don Hansen
DETAILS	Manju Akkipeddi / KG	Don Hansen
QUANTITIES	Manju Akkipeddi	Don Hansen

STATE OF CALIFORNIA DEPARTMENT OF TRANSPORTATION

DIVISION OF ENGINEERING SERVICES
ELECTRICAL-MECHANICAL-WATER AND WASTEWATER DESIGN

BRIDGE NO. 540004R/L
POST MILE R107.3

C. V. KANE
SAFETY ROADSIDE REST AREA REHABILITATION
DETAILS I

SHEET SS-6

TAEMWW Imperial Rev. 7/10

ORIGINAL SCALE IN INCHES FOR REDUCED PLANS 0 1 2 3

UNIT 3616
PROJECT NUMBER & PHASE 08000002291
EA 0G8401

DISREGARD PRINTS BEARING EARLIER REVISION DATES →
REVISION DATES (PRELIMINARY STAGE ONLY) 08-14-09 10-15-09 12-17-09 02-18-10 04-15-10 06-17-10 11-19-10 11-04-11 01-03-12 08-09-13
SHEET OF

ss_6.dgn

PRINTED ON: 18-SEP-2013 13:01

DIST.	COUNTY	ROUTE	POST MILES TOTAL PROJECT	SHEET NO.	TOTAL SHEETS
03, 08	Sac, SBd	5, 15	23.3, R107.3	326	330

REGISTERED CIVIL ENGINEER — 08/09/2013 DATE

REGISTERED PROFESSIONAL ENGINEER — Manjunath S. Akkipeddi — No. C 78898 — Exp. 03/31/14 — CIVIL — STATE OF CALIFORNIA

9-16-13
PLANS APPROVAL DATE

The State of California or its officers or agents shall not be responsible for the accuracy or completeness of electronic copies of this plan sheet.

CALIFORNIA STATE FIRE MARSHAL APPROVED
Approval of this plan does not authorize or approve any omission or deviation from applicable regulations. Final approval is subject to field inspection. One set of approved plans shall be available on the project site at all times.
Reviewed by: FRANCIS SOLICH
Approval date: 09-11-13

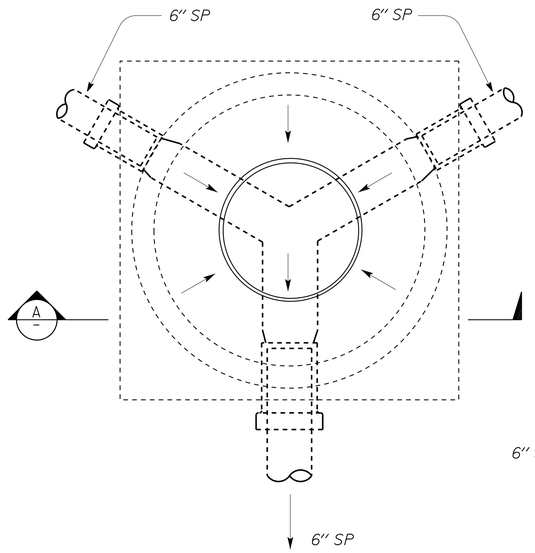

1 MANHOLE PLAN
NO SCALE

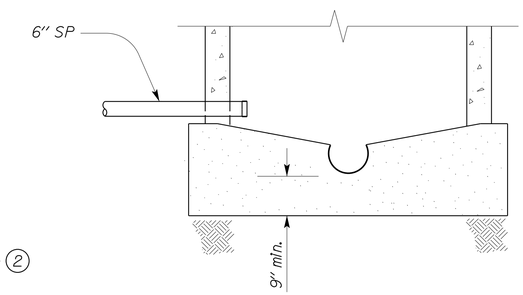

A SECTION
NO SCALE

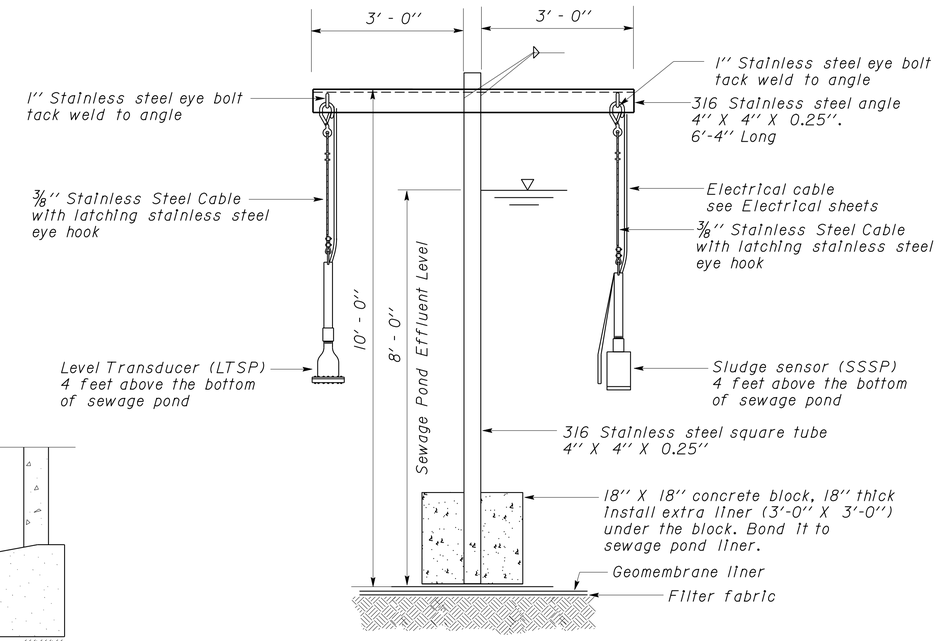

2 TRANSDUCER GAGE
NO SCALE

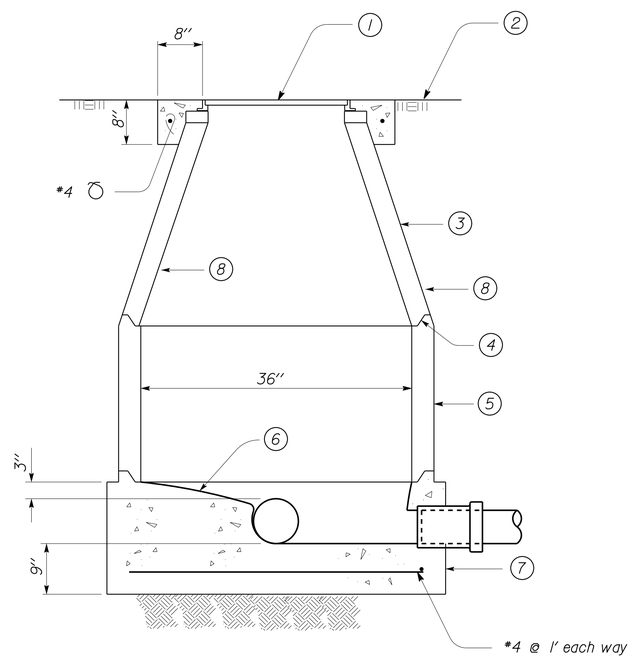

ELEVATION
NO SCALE

Notes:

1. Manhole frame and cover, 2', match existing grade.
2. Slope finish grade away from manhole.
3. Concentric Cone section, height as required.
4. All pipe joints shall be sealed watertight per manhole manufacturer's recommendation, or if none, with epoxy mortar or joint sealant.
5. Concrete barrel, height as required.
6. Slope concrete as required to form flow line.
7. Precast concrete base with cast in pipe sections or couplings. Flow line elevations to match plan elevations and slope.
8. All interior and exterior surfaces of manhole shall be coated with bituminous coating.

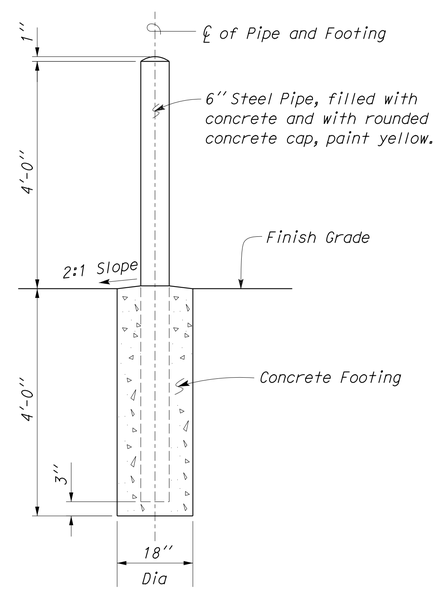

3 GUARD POST DETAIL
NO SCALE

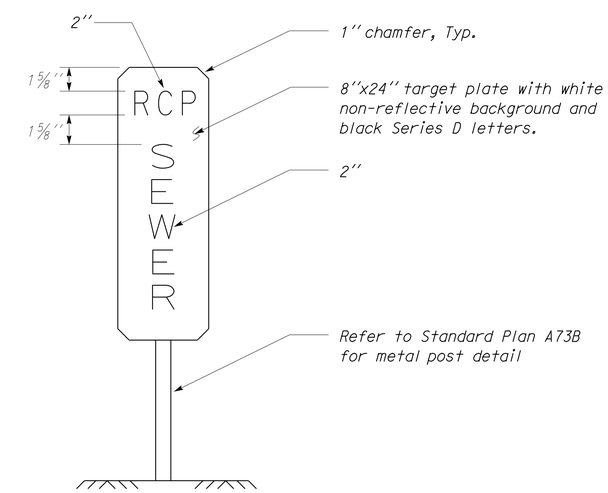

4 PADDLE MARKER
NO SCALE

THIS DRAWING ACCURATE FOR SANITARY SEWER WORK ONLY

	BY	CHECKED
DESIGN	Manju Akkipeddi	Don Hansen
DETAILS	Manju Akkipeddi / KG	Don Hansen
QUANTITIES	Manju Akkipeddi	Don Hansen

STATE OF CALIFORNIA DEPARTMENT OF TRANSPORTATION

DIVISION OF ENGINEERING SERVICES
ELECTRICAL-MECHANICAL-WATER AND WASTEWATER DESIGN

BRIDGE NO. 540004R/L
POST MILE R107.3

C. V. KANE
SAFETY ROADSIDE REST AREA REHABILITATION
DETAILS 2

SHEET SS-7

TAEMWW Imperial Rev. 7/10

ORIGINAL SCALE IN INCHES FOR REDUCED PLANS 0 1 2 3

UNIT 3616
PROJECT NUMBER & PHASE 08000002291
EA 0G8401

DISREGARD PRINTS BEARING EARLIER REVISION DATES →
REVISION DATES (PRELIMINARY STAGE ONLY) 08-14-09 10-15-09 12-17-09 04-15-10 06-17-10 09-01-10 11-19-10 11-04-11 01-03-12 08-09-13
SHEET OF

PRINTED ON: 18-SEP-2013 13:01

ss_7.dgn

DIST.	COUNTY	ROUTE	POST MILES TOTAL PROJECT	SHEET NO.	TOTAL SHEETS
03, 08	Sac, SBd	5, 15	23.3, R107.3	327	330

REGISTERED CIVIL ENGINEER — 08/09/2013 DATE

REGISTERED PROFESSIONAL ENGINEER — Manjunath S. Akkipeddi — No. C 78898 — Exp. 03/31/14 — CIVIL — STATE OF CALIFORNIA

9-16-13
PLANS APPROVAL DATE

The State of California or its officers or agents shall not be responsible for the accuracy or completeness of electronic copies of this plan sheet.

CALIFORNIA STATE FIRE MARSHAL APPROVED
Approval of this plan does not authorize or approve any omission or deviation from applicable regulations. Final approval is subject to field inspection. One set of approved plans shall be available on the project site at all times.
Reviewed by: FRANCIS SOLICH
Approval date: 09-11-13

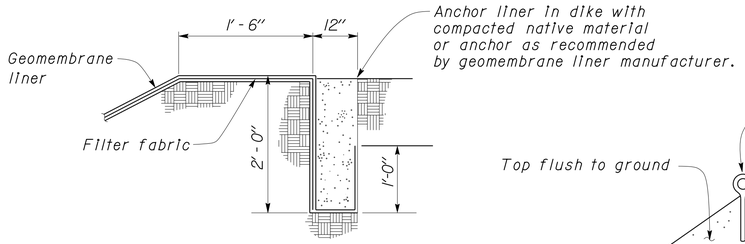

1 DETAIL
NO SCALE

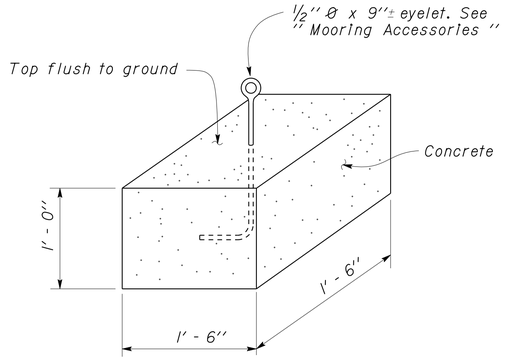

CONCRETE MOORING ANCHOR

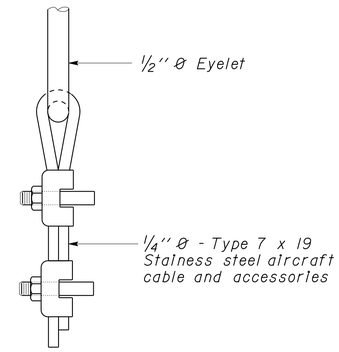

MOORING ACCESSORIES

2 MOORING ANCHOR DETAILS
NO SCALE

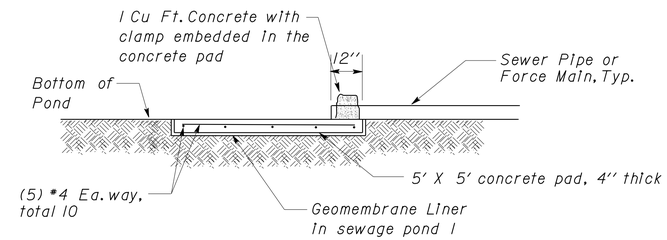

6 CONCRETE SCOUR PAD
NO SCALE

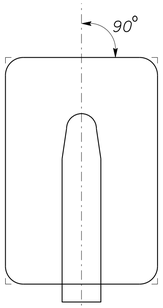

TOP

Notes:

1. Boot to be fabricated from same material as geomembrane liner.

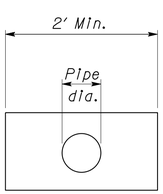

FRONT

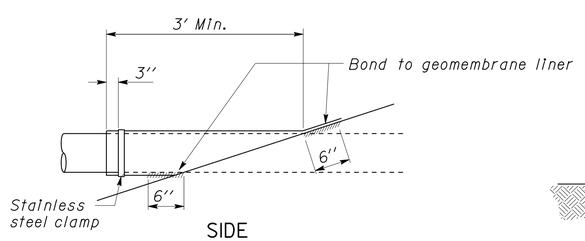

SIDE

4 PIPE BOOT ASSEMBLY
NO SCALE

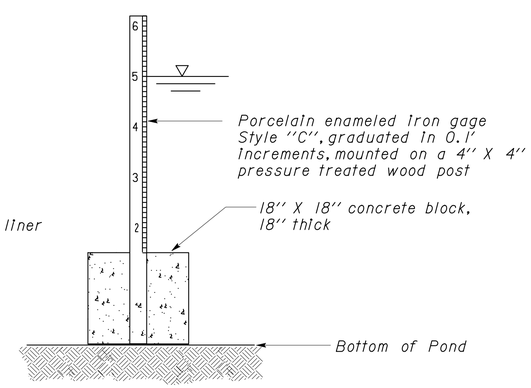

5 POND DEPTH GAGE
NO SCALE

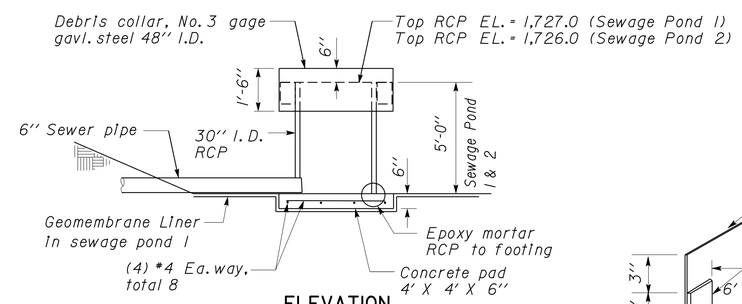

ELEVATION

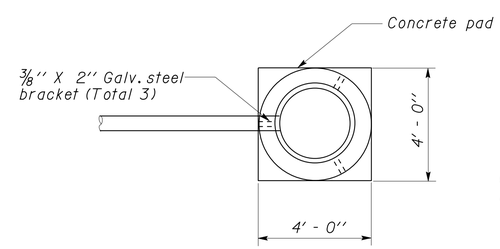

PLAN

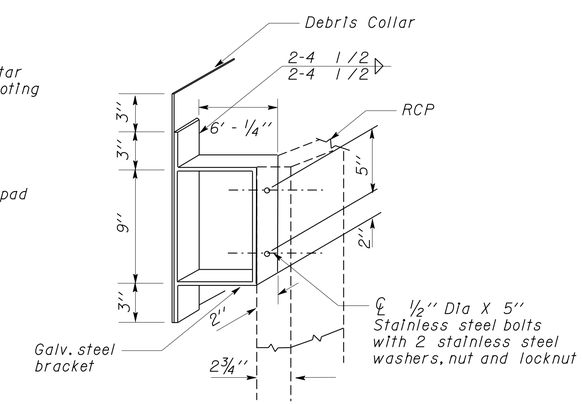

DEBRIS COLLAR BRACKET DETAIL

7 OVERFLOW DETAIL
NO SCALE

THIS DRAWING ACCURATE FOR SANITARY SEWER WORK ONLY

	BY	CHECKED
DESIGN	Manju Akkipeddi	Don Hansen
DETAILS	Manju Akkipeddi / KG	Don Hansen
QUANTITIES	Manju Akkipeddi	Don Hansen

STATE OF CALIFORNIA DEPARTMENT OF TRANSPORTATION

DIVISION OF ENGINEERING SERVICES
ELECTRICAL-MECHANICAL-WATER AND WASTEWATER DESIGN

BRIDGE NO. 540004R/L
POST MILE R107.3

C. V. KANE
SAFETY ROADSIDE REST AREA REHABILITATION
DETAILS 3

SHEET SS-8

TAEMWW Imperial Rev. 7/10

ORIGINAL SCALE IN INCHES FOR REDUCED PLANS 0 1 2 3

UNIT 3616
PROJECT NUMBER & PHASE 08000002291
EA 0G8401

DISREGARD PRINTS BEARING EARLIER REVISION DATES
REVISION DATES (PRELIMINARY STAGE ONLY) 04-15-10 06-17-10 11-19-10 11-04-11 01-03-12 08-09-13
SHEET OF

PRINTED ON: 18-SEP-2013 13:01

ss_8.dgn

DIST.	COUNTY	ROUTE	POST MILES TOTAL PROJECT	SHEET NO.	TOTAL SHEETS
03, 08	Sac, SBd	5, 15	23.3, R107.3	328	330

REGISTERED CIVIL ENGINEER — 08/09/2013 DATE

REGISTERED PROFESSIONAL ENGINEER Manjunath S. Akkipeddi No. C 78898 Exp. 03/31/14 CIVIL STATE OF CALIFORNIA

9-16-13
PLANS APPROVAL DATE

The State of California or its officers or agents shall not be responsible for the accuracy or completeness of electronic copies of this plan sheet.

ACCESSIBILITY DESIGN APPROVAL STAMP DOT / DES / OTA
PROJECT ID **0800000229**
Reviewed by:
Date: 10-25-11

CALIFORNIA STATE FIRE MARSHAL APPROVED
Approval of this plan does not authorize or approve any omission or deviation from applicable regulations. Final approval is subject to field inspection. One set of approved plans shall be available on the project site at all times.
Reviewed by: FRANCIS SOLICH
Approval date: 09-11-13

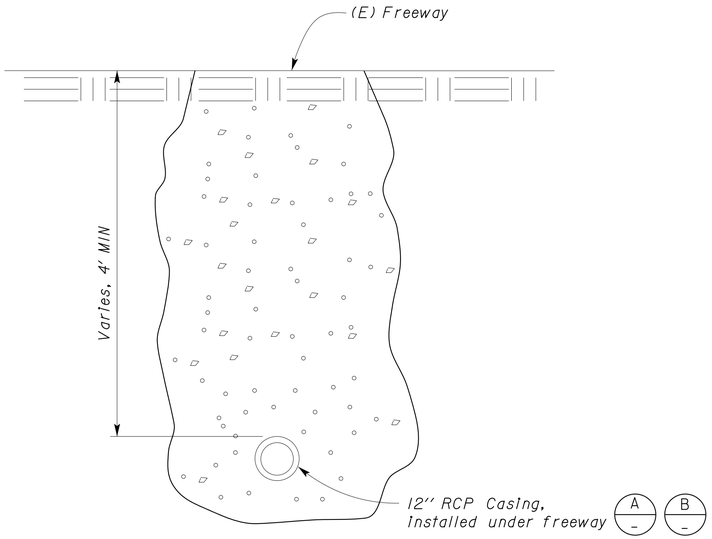

1 SEWER PIPE CROSSING
NO SCALE

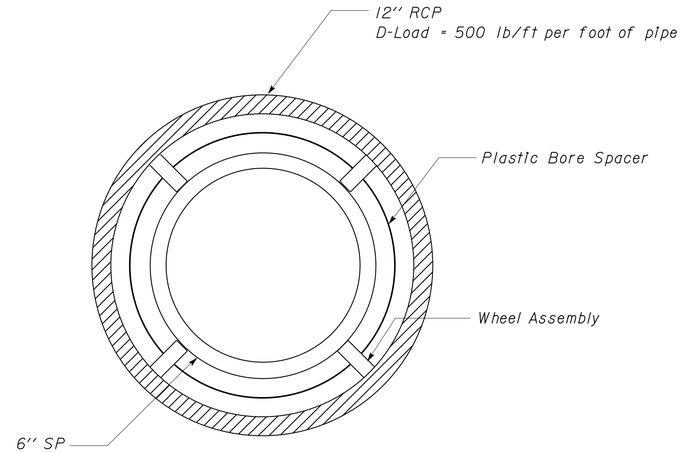

A PIPE CASING DETAIL
NO SCALE

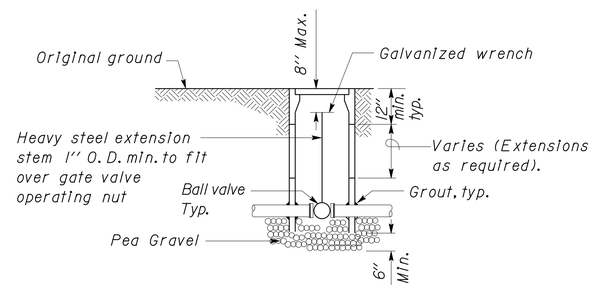

C SECTION

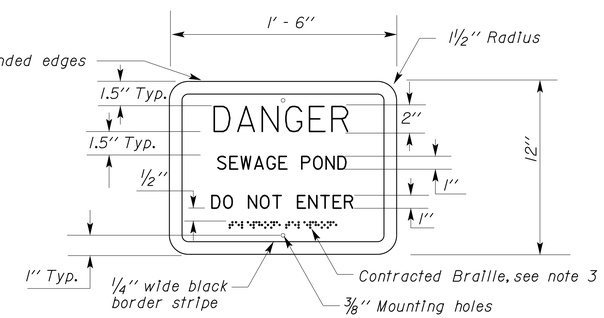

2 SEWAGE POND FENCE SIGN

Notes:

1. All tactile characters shall be black on white background except the word ''DANGER'' shall be red. All tactile characters shall be uppercase sans serif raised 1/32'' minimum, with a width to height ratio between 3:5 and 1:1 and a stroke width to height ratio between 1:5 and 1:10.
2. Attach to the fence post at 100' intervals. Install at 3' above finish grade at the existing fence.
3. Contracted Braille: Dots shall be 1/10'' OC in each cell with 2/10'' space between cells measured from the second column of dots in the second cell. Dots shall be raised a minimum of 1/40'' above the background. Dots shall be domed or rounded.

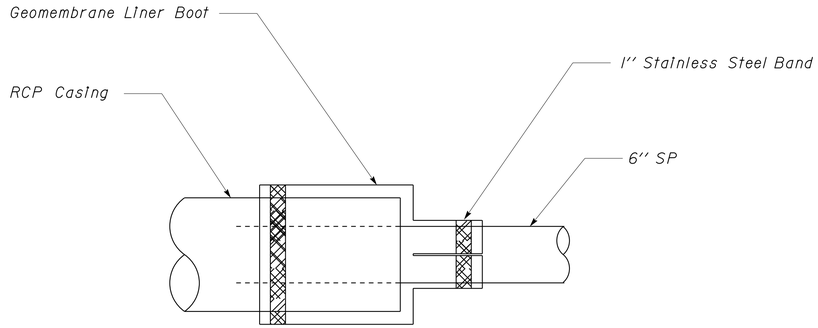

B END SEALS
NO SCALE

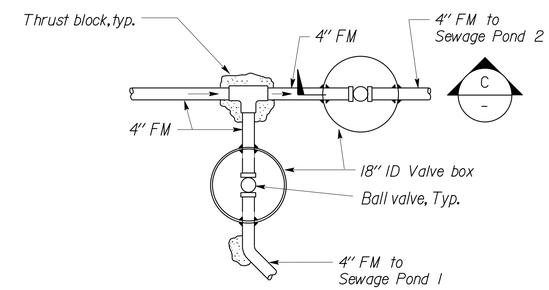

3 BALL VALVE
NO SCALE

THIS DRAWING ACCURATE FOR SANITARY SEWER WORK ONLY

	BY	CHECKED
DESIGN	Manju Akkipeddi	Don Hansen
DETAILS	Manju Akkipeddi / KG	Don Hansen
QUANTITIES	Manju Akkipeddi	Don Hansen

STATE OF CALIFORNIA DEPARTMENT OF TRANSPORTATION

DIVISION OF ENGINEERING SERVICES ELECTRICAL-MECHANICAL-WATER AND WASTEWATER DESIGN

BRIDGE NO. 540004R/L
POST MILE R107.3

C. V. KANE SAFETY ROADSIDE REST AREA REHABILITATION
DETAILS 4

SHEET SS-9

TAEMWW Imperial Rev. 7/10

ORIGINAL SCALE IN INCHES FOR REDUCED PLANS 0 1 2 3

UNIT 3616
PROJECT NUMBER & PHASE 08000002291
EA 0G8401

DISREGARD PRINTS BEARING EARLIER REVISION DATES → REVISION DATES (PRELIMINARY STAGE ONLY) 04-15-10 06-17-10 09-01-10 11-19-10 11-04-11 01-03-12 08-09-13 SHEET OF

PRINTED ON: 18-SEP-2013 13:01

ss_9.dgn

DIST.	COUNTY	ROUTE	POST MILES TOTAL PROJECT	SHEET NO.	TOTAL SHEETS
03, 08	Sac, SBd	5, 15	23.3, R107.3	329	330

REGISTERED CIVIL ENGINEER — 08/09/2013 DATE

REGISTERED PROFESSIONAL ENGINEER — Manjunath S. Akkipeddi — No. C 78898 — Exp. 03/31/14 — CIVIL — STATE OF CALIFORNIA

9-16-13
PLANS APPROVAL DATE

The State of California or its officers or agents shall not be responsible for the accuracy or completeness of electronic copies of this plan sheet.

CALIFORNIA STATE FIRE MARSHAL APPROVED

Approval of this plan does not authorize or approve any omission or deviation from applicable regulations. Final approval is subject to field inspection. One set of approved plans shall be available on the project site at all times.

Reviewed by: FRANCIS SOLICH
Approval date: 09-11-13

General Notes:

1. *Each dash line indicates low voltage overhead or underground conduit and conductors system.*
2. *All conduit and conductors system shall be provided and installed per " Basic Material and Methods" of Division 16 of the Special Provisions.*
3. *All underground conduits in direct contact with soil shall be PVC conduit except as follow:*
   All conduits system to and from sanitary access openings shall be PVC coated galvanized rigid steel conduit. All conduits shall be protected in a fashion as recommended by the PVC coated conduit manufacturer
4. *Provide and install underground pull boxes as required.*
5. *Conduit home run may be combined per the approval of the Engineer.*
6. *The entire installation shall comply with Class I Division I requirements of CEC.*

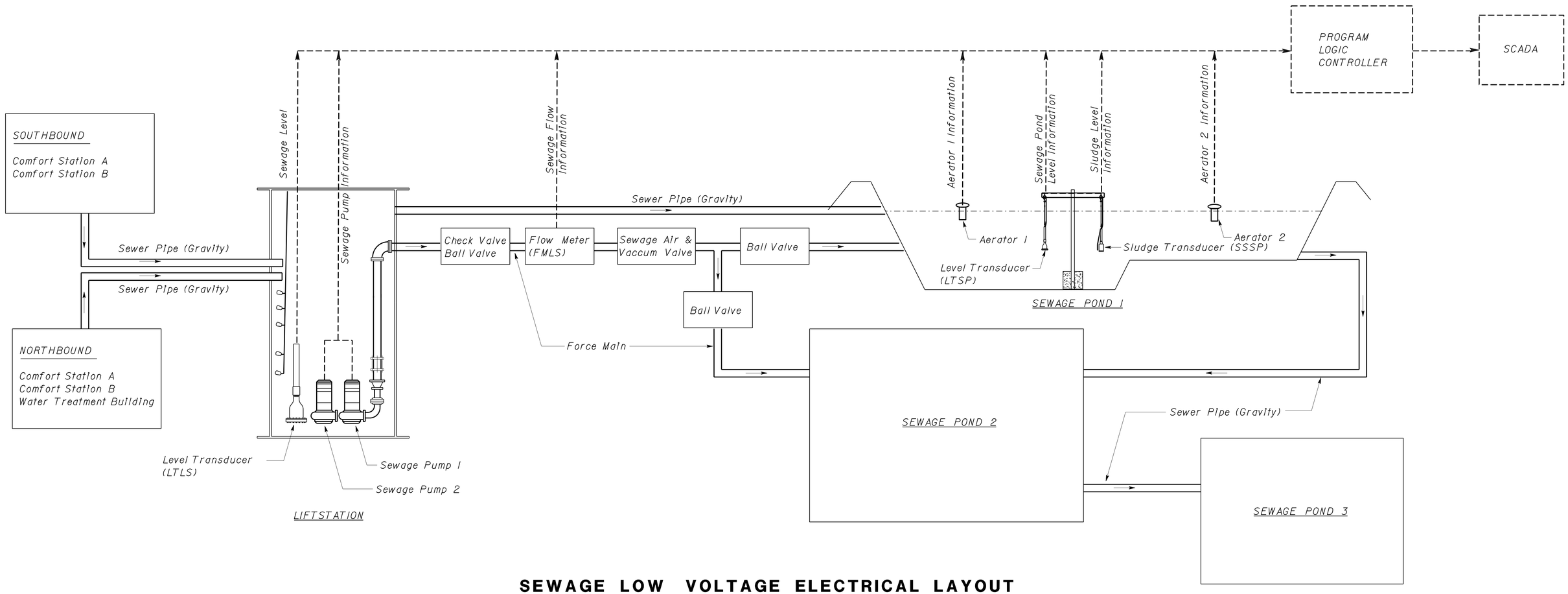

SEWAGE LOW VOLTAGE ELECTRICAL LAYOUT

THIS DRAWING ACCURATE FOR SANITARY SEWER WORK ONLY

	BY	CHECKED
DESIGN	Manju Akkipeddi	Don Hansen
DETAILS	Manju Akkipeddi / KG	Don Hansen
QUANTITIES	Manju Akkipeddi	Don Hansen

STATE OF CALIFORNIA
DEPARTMENT OF TRANSPORTATION

DIVISION OF ENGINEERING SERVICES
ELECTRICAL-MECHANICAL-WATER AND WASTEWATER DESIGN

BRIDGE NO. 540004R/L
POST MILE R107.3

C. V. KANE
SAFETY ROADSIDE REST AREA REHABILITATION
SEWAGE LOW VOLTAGE ELECTRICAL LAYOUT

SHEET SS-10

TAEMWW Imperial Rev. 7/10

ORIGINAL SCALE IN INCHES FOR REDUCED PLANS 0 1 2 3

UNIT 3616
PROJECT NUMBER & PHASE 08000002291
EA 0G8401

DISREGARD PRINTS BEARING EARLIER REVISION DATES → 09-13-10 11-19-10 11-04-11 07-03-12 08-09-13

REVISION DATES (PRELIMINARY STAGE ONLY) SHEET OF

ss_10.dgn

PRINTED ON: 18-SEP-2013 13:01

DIST.	COUNTY	ROUTE	POST MILES TOTAL PROJECT	SHEET NO.	TOTAL SHEETS
03, 08	Sac, SBd	5, 15	23.3, R107.3	330	330

REGISTERED CIVIL ENGINEER — 08/09/2013 DATE

REGISTERED PROFESSIONAL ENGINEER — Manjunath S. Akkipeddi — No. C 78898 — Exp. 03/31/14 — CIVIL — STATE OF CALIFORNIA

9-16-13
PLANS APPROVAL DATE

The State of California or its officers or agents shall not be responsible for the accuracy or completeness of electronic copies of this plan sheet.

CALIFORNIA STATE FIRE MARSHAL APPROVED
Approval of this plan does not authorize or approve any omission or deviation from applicable regulations. Final approval is subject to field inspection. One set of approved plans shall be available on the project site at all times.
Reviewed by: FRANCIS SOLICH
Approval date: 09-11-13

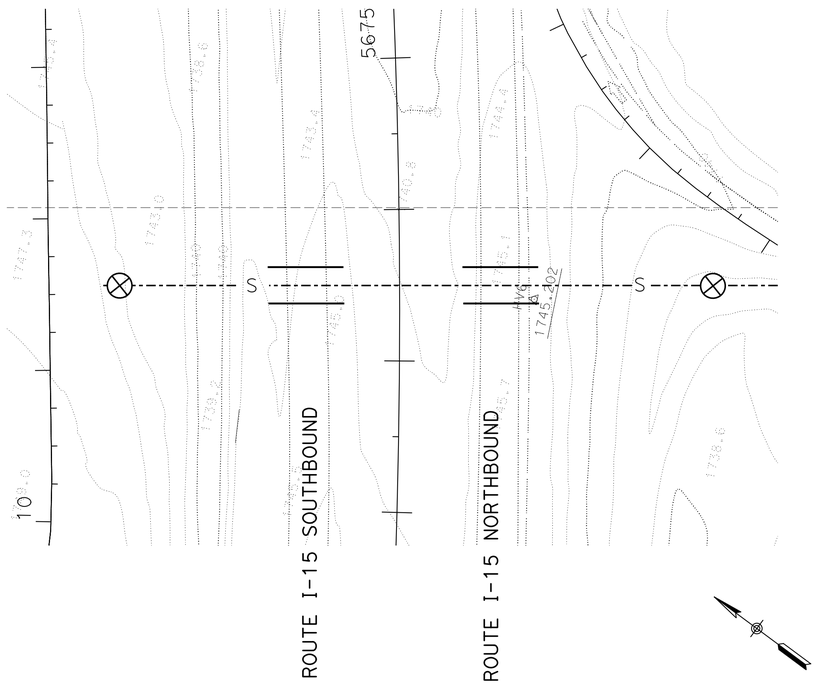

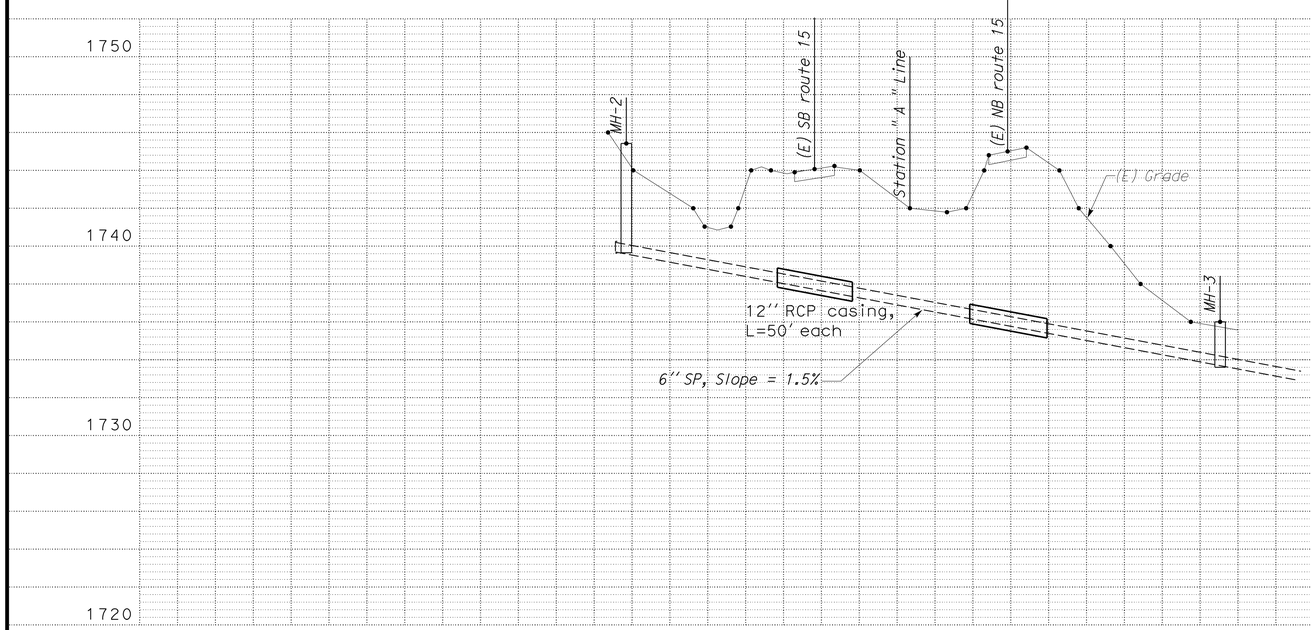

THIS DRAWING ACCURATE FOR SANITARY SEWER WORK ONLY

Horizontal Scale : 1" = 50' *Vertical Scale : 1" = 4'*

	BY	CHECKED
DESIGN	Manju Akkipeddi	Don Hansen
DETAILS	Manju Akkipeddi / KG	Don Hansen
QUANTITIES	Manju Akkipeddi	Don Hansen

STATE OF CALIFORNIA DEPARTMENT OF TRANSPORTATION

DIVISION OF ENGINEERING SERVICES
ELECTRICAL-MECHANICAL-WATER AND WASTEWATER DESIGN

BRIDGE NO. 540004R/L
POST MILE R107.3

C. V. KANE
SAFETY ROADSIDE REST AREA REHABILITATION
SEWER JACKED PIPE PROFILE

SHEET **SS-11**

TAEMWW Imperial Rev. 7/10

ORIGINAL SCALE IN INCHES FOR REDUCED PLANS 0 1 2 3

UNIT 3616
PROJECT NUMBER & PHASE 08000002291
EA 0G8401

DISREGARD PRINTS BEARING EARLIER REVISION DATES → REVISION DATES (PRELIMINARY STAGE ONLY) 08-25-10 11-19-10 11-04-11 01-03-12 08-09-13 SHEET OF

PRINTED ON: 18-SEP-2013 13:01

ss_11.dgn