Dist	COUNTY	ROUTE	POST MILES TOTAL PROJECT	SHEET No.	TOTAL SHEETS
08	SBd	62	29.7/30.2	1	32

STATE OF CALIFORNIA

DEPARTMENT OF TRANSPORTATION

PROJECT PLANS FOR CONSTRUCTION ON

STATE HIGHWAY

IN SAN BERNARDINO COUNTY
IN TWENTYNINE PALMS
FROM EASY STREET TO SUNRISE ROAD

TO BE SUPPLEMENTED BY STANDARD PLANS DATED MAY 2006

INDEX OF PLANS

Sheet no.	
1	Title and Location Map
2-3	Typical Cross Section
4-5	Layouts
6-7	Profiles
8	Construction Details
9-10	Landscape Erosion Control Plan
11-12	Drainage Plans
13	Drainage Details
14	Drainage Quantity
15-16	Utility Plans
17	Construction Area Signs
18	Stage Construction
19-22	Traffic Handling plan
23	Traffic Handling Quantities
24-25	Pavement Delineation Plans
26	Pavement Delineation Quantities
27	Sign Quantities
28	Summary of Quantities
29-32	Revised Standard Plans

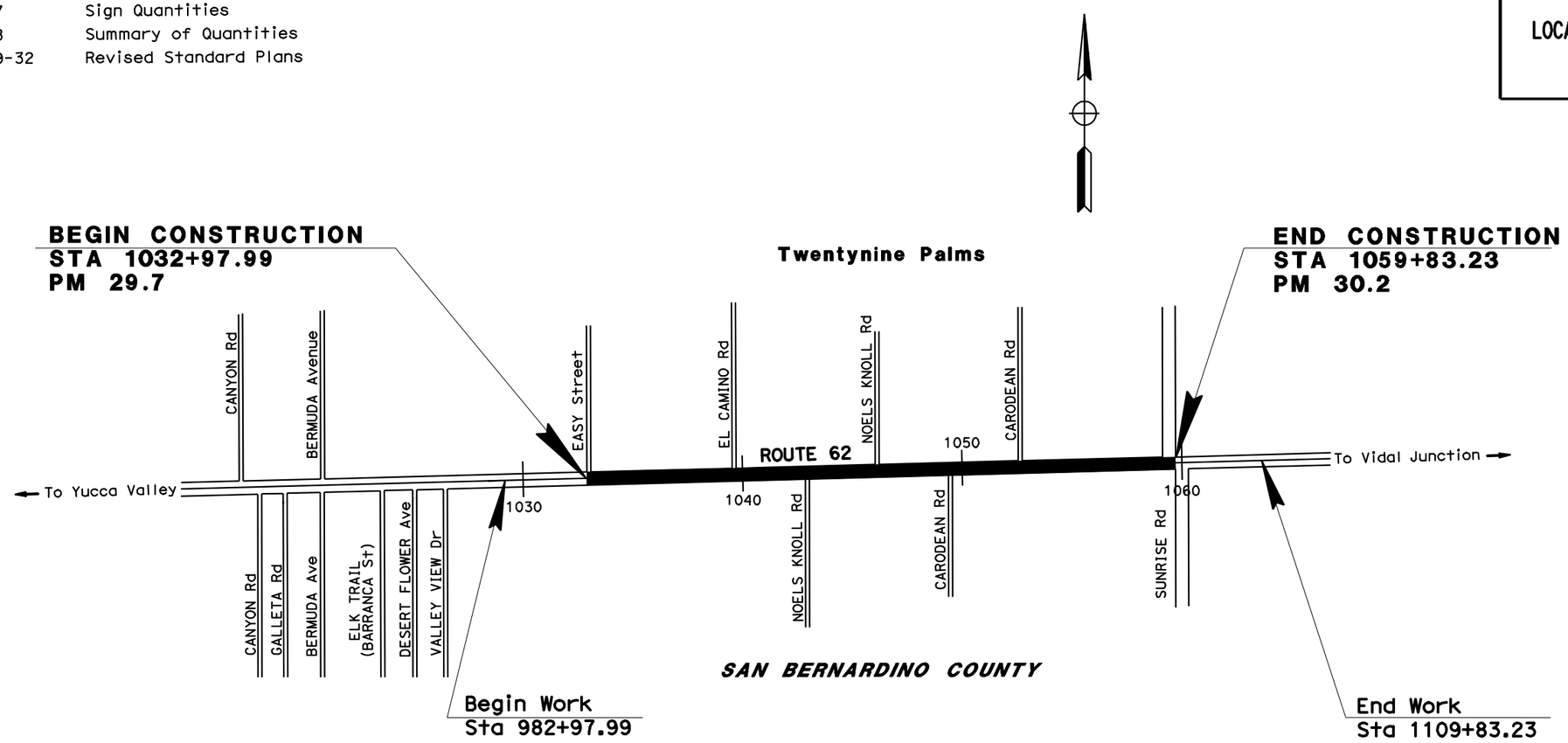

NO SCALE

PROJECT MANAGER BRYCE JOHNSTON

DESIGN ENGINEER HARIVADAN DESAI

THE CONTRACTOR SHALL POSSESS THE CLASS (OR CLASSES) OF LICENSE AS SPECIFIED IN THE "NOTICE TO BIDDERS."

PROJECT ENGINEER REGISTERED CIVIL ENGINEER — DATE 1-31-11

January 31, 2011
PLANS APPROVAL DATE

REGISTERED PROFESSIONAL ENGINEER DU LU No. 60886 Exp. 12/31/12 CIVIL STATE OF CALIFORNIA

THE STATE OF CALIFORNIA OR ITS OFFICERS OR AGENTS SHALL NOT BE RESPONSIBLE FOR THE ACCURACY OR COMPLETENESS OF SCANNED COPIES OF THIS PLAN SHEET.

CONTRACT No.	08-0E1114
PROJECT ID	0800000072

LAST REVISION 01-31-11 DATE PLOTTED => 01-FEB-2011 TIME PLOTTED => 10:05

Dist	COUNTY	ROUTE	POST MILES TOTAL PROJECT	SHEET No.	TOTAL SHEETS
08	SBd	62	29.7/30.2	2	32

REGISTERED CIVIL ENGINEER 1-31-11 DATE

01-31-11
PLANS APPROVAL DATE

REGISTERED PROFESSIONAL ENGINEER DU LU No. 60886 Exp. 12/31/12 CIVIL STATE OF CALIFORNIA

THE STATE OF CALIFORNIA OR ITS OFFICERS OR AGENTS SHALL NOT BE RESPONSIBLE FOR THE ACCURACY OR COMPLETENESS OF SCANNED COPIES OF THIS PLAN SHEET.

NOTES:

1. DIMENSIONS OF THE STRUCTURAL SECTIONS ARE SUBJECT TO TOLERANCES SPECIFIED IN THE STANDARD SPECIFICATIONS.
2. SEE DRAINAGE PLAN AND DRAINAGE QUANTITY SHEET FOR LIMITS OF HMA DIKE, AND CURB AND GUTTER.
3. SEE LAYOUT PLANS FOR LOCATION OF PAVEMENT TRANSITIONS, SAWCUT LINES, AND COLD PLANE LOCATIONS.
4. SEE CONSTRUCTION DETAILS SHEET, C-1 FOR TRANSVERSE HMA TAPER TO EXISTING HMA PAVEMENT.
5. REMOVE EXISTING TAPER STRIPING AND RESTRIPE TO MATCH IMPROVEMENT

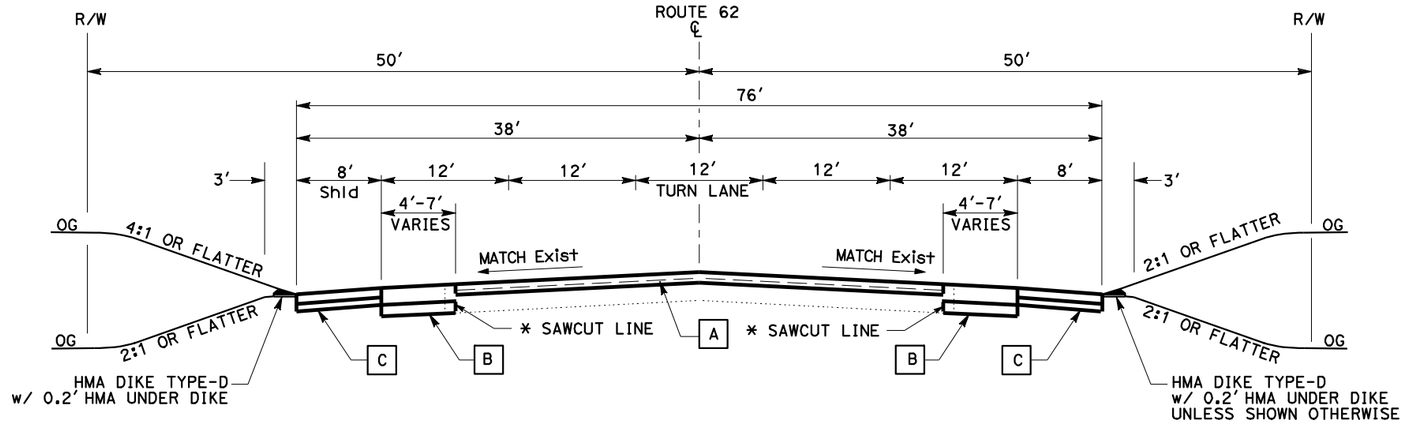

WESTBOUND **EASTBOUND**

ROUTE 62

STA 1040+40.38 TO STA 1054+94.99

* SEE NOTE 3 FOR SAWCUT LINE

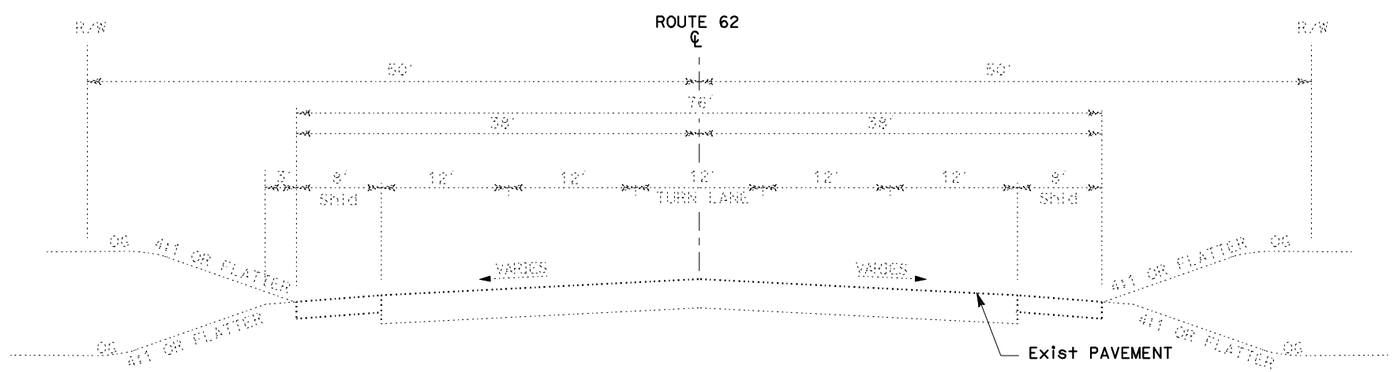

WESTBOUND **EASTBOUND**

ROUTE 62

STA 1032+97.99 TO STA 1040+40.38

(SEE NOTE 5)

TYPICAL STRUCTURAL SECTION:

A — 0.45′ MIN HMA TYPE A OVERLAY
THICKNESS VARIES
0.10′ COLD PLANE

B — 0.65′ HMA TYPE A OVERLAY
0.60′ AB CLASS 2 FOR
TRAVELWAY

C — 0.45′ MIN HMA TYPE A OVERLAY
0.35′ AB CLASS 2 FOR
SHOULDER

DESIGN DESIGNATION:

2008 ADT = 14,300 D = 60%
2030 ADT = 28,000 T = 4.6%
DHV = 1,400

DESIGN SPEED: 65 MPH

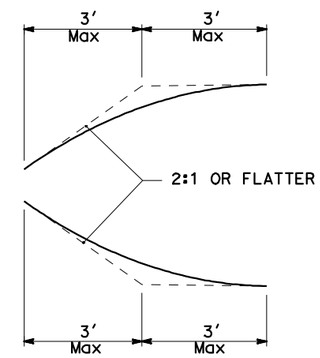

SLOPE ROUNDING DETAIL (TYPICAL)

TYPICAL CROSS SECTIONS

NO SCALE

X-1

STATE OF CALIFORNIA - DEPARTMENT OF TRANSPORTATION
Caltrans
DESIGN
FUNCTIONAL SUPERVISOR: DU LU
CALCULATED-DESIGNED BY: RICK LAM
CHECKED BY: HARIVADAN DESAI
REVISED BY
DATE REVISED

LAST REVISION 01-31-11
DATE PLOTTED => 01-FEB-2011
TIME PLOTTED => 10:06

Dist	COUNTY	ROUTE	POST MILES TOTAL PROJECT	SHEET No.	TOTAL SHEETS
08	SBd	62	29.7/30.2	3	32

REGISTERED CIVIL ENGINEER 1-31-11 DATE

01-31-11
PLANS APPROVAL DATE

REGISTERED PROFESSIONAL ENGINEER DU LU No. 60886 Exp. 12/31/12 CIVIL STATE OF CALIFORNIA

THE STATE OF CALIFORNIA OR ITS OFFICERS OR AGENTS SHALL NOT BE RESPONSIBLE FOR THE ACCURACY OR COMPLETENESS OF SCANNED COPIES OF THIS PLAN SHEET.

NOTES:

1. DIMENSIONS OF THE STRUCTURAL SECTIONS ARE SUBJECT TO TOLERANCES SPECIFIED IN THE STANDARD SPECIFICATIONS.
2. SEE DRAINAGE PLAN AND DRAINAGE QUANTITY SHEET FOR LIMITS OF HMA DIKE, AND CURB AND GUTTER.
3. SEE LAYOUT PLANS FOR LOCATION OF PAVEMENT TRANSITIONS, SAWCUT LINES, AND COLD PLANE LOCATIONS.
4. SEE CONSTRUCTION DETAILS SHEET, C-1 FOR TRANSVERSE HMA TAPER TO EXISTING HMA PAVEMENT.

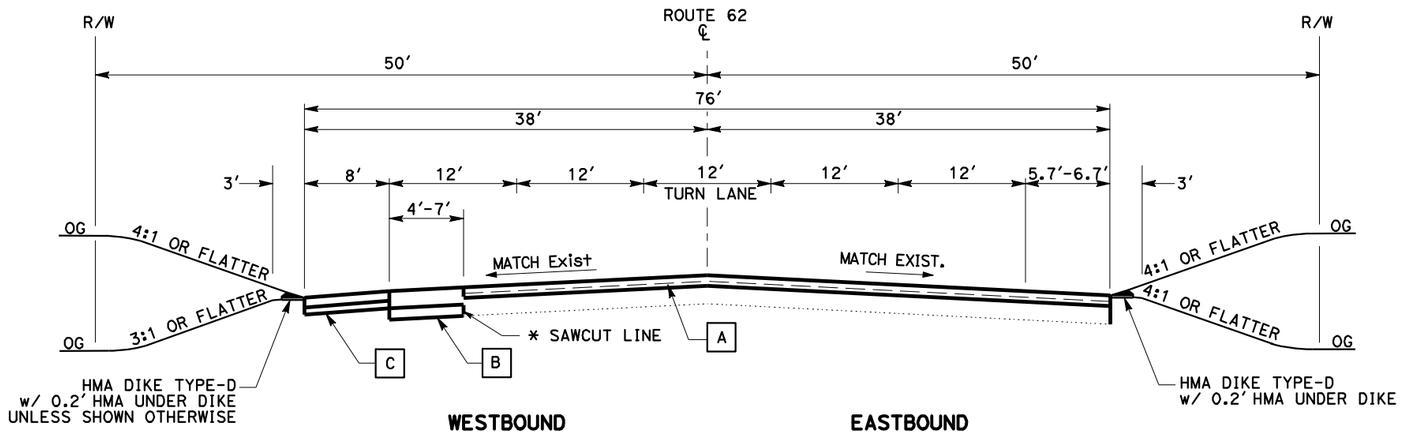

ROUTE 62

STA 1058+92.70 TO STA 1059+83.23

* SEE NOTE 3 FOR SAWCUT LINE

** SHOULDER WIDTH TAPERS FROM 6.7′ AT STA. 1058+92.70 TO 5.7′ AT STA 1059+83.23

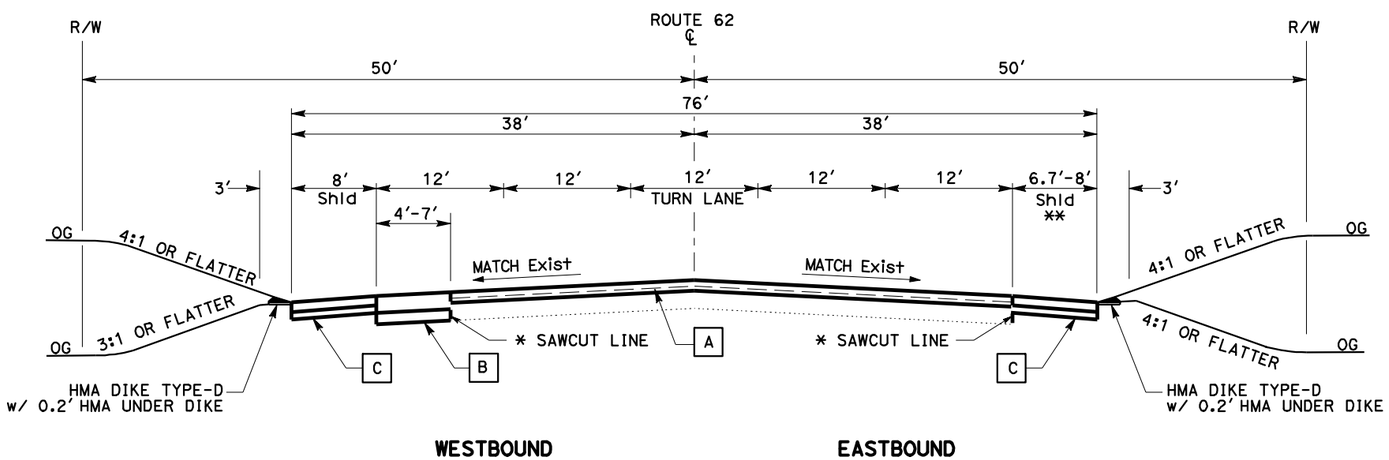

ROUTE 62

STA 1054+94.99 TO STA 1058+92.70

* SEE NOTE 3 FOR SAWCUT LINE

** SHOULDER WIDTH TAPERS FROM 8′ AT STA 1057+83.44 TO 6.7′ AT STA 1058+92.70

TYPICAL STRUCTURAL SECTION:

A — 0.45′ MIN HMA TYPE A OVERLAY
THICKNESS VARIES
0.10′ COLD PLANE

B — 0.65′ HMA TYPE A OVERLAY
0.60′ AB CLASS 2 FOR
TRAVELWAY

C — 0.45′ MIN HMA TYPE A OVERLAY
0.35′ AB CLASS 2 FOR
SHOULDER

DESIGN DESIGNATION:

2008 ADT = 14,300 D = 60%
2030 ADT = 28,000 T = 4.6%
DHV = 1,400

DESIGN SPEED: 65 MPH

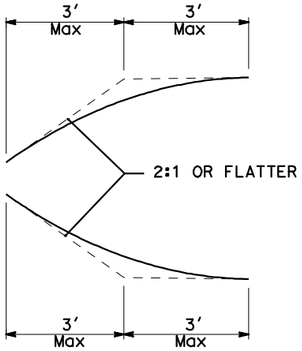

SLOPE ROUNDING DETAIL (TYPICAL)

TYPICAL CROSS SECTIONS

NO SCALE

X-2

STATE OF CALIFORNIA - DEPARTMENT OF TRANSPORTATION
DESIGN
FUNCTIONAL SUPERVISOR: DU LU
CALCULATED-DESIGNED BY: RICK LAM
CHECKED BY: HARIVADAN DESAI
REVISED BY
DATE REVISED

LAST REVISION 01-31-11
DATE PLOTTED => 01-FEB-2011
TIME PLOTTED => 10:06

Dist	COUNTY	ROUTE	POST MILES TOTAL PROJECT	SHEET No.	TOTAL SHEETS
08	SBd	62	29.7/30.2	4	32

REGISTERED CIVIL ENGINEER 1-31-11 DATE

01-31-11
PLANS APPROVAL DATE

REGISTERED PROFESSIONAL ENGINEER DU LU No. 60886 Exp. 12/31/12 CIVIL STATE OF CALIFORNIA

THE STATE OF CALIFORNIA OR ITS OFFICERS OR AGENTS SHALL NOT BE RESPONSIBLE FOR THE ACCURACY OR COMPLETENESS OF SCANNED COPIES OF THIS PLAN SHEET.

NOTES:

1. FOR COMPLETE RIGHT OF WAY AND ACCURATE ACCESS DATA, SEE RIGHT OF WAY RECORD MAPS AT DISTRICT OFFICE.
2. FOR COMPLETE UTILITY LOCATIONS, SEE UTILITY PLANS.

LEGEND

- NEW SHOULDER PAVEMENT AREA
- NEW TRAVELWAY PAVEMENT AREA
- PAVEMENT OVERLAY AREA

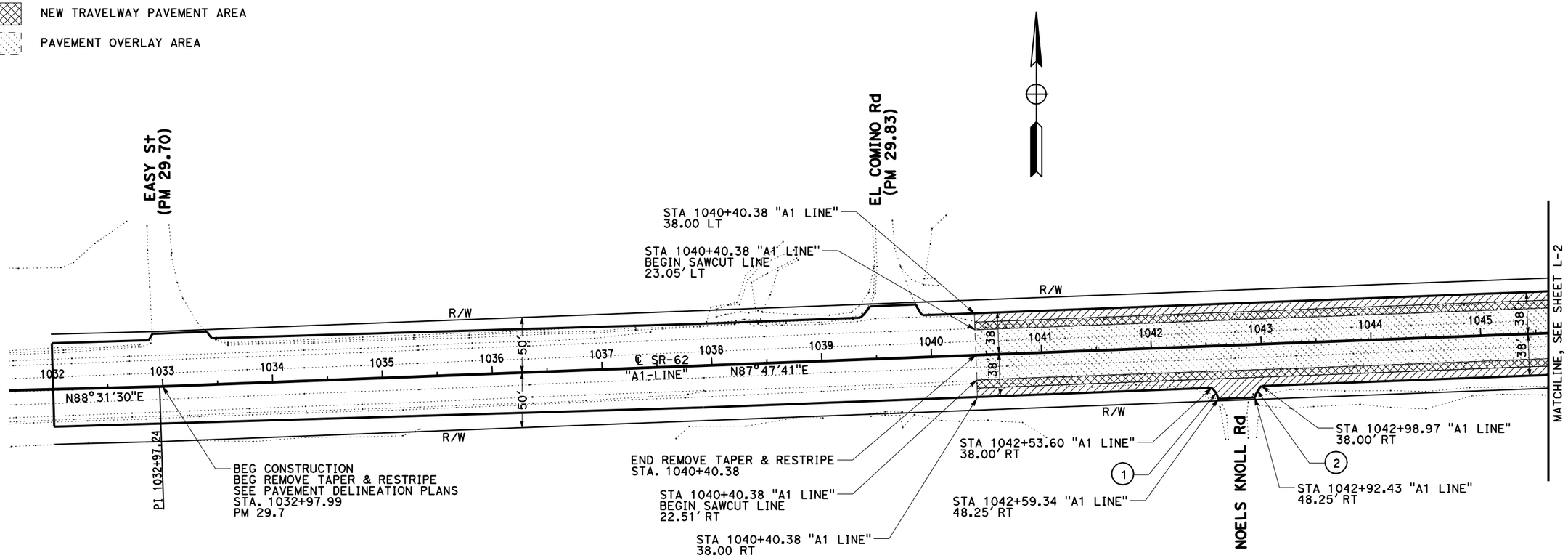

CURVE DATA

No. (X)	R	Δ	T	L
1	25.00'	27°10'30"	6.04'	11.86'
2	25.00'	27°10'30"	6.04'	11.86'

LAYOUT

SCALE: 1"=50'

L-1

STATE OF CALIFORNIA - DEPARTMENT OF TRANSPORTATION
Caltrans
DESIGN
FUNCTIONAL SUPERVISOR: DU LU
CALCULATED-DESIGNED BY: RICK LAM
CHECKED BY: HARIVADAN DESAI
REVISED BY
DATE REVISED

LAST REVISION 01-31-11
DATE PLOTTED => 01-FEB-2011
TIME PLOTTED => 10:06

Dist	COUNTY	ROUTE	POST MILES TOTAL PROJECT	SHEET No.	TOTAL SHEETS
08	SBd	62	29.7/30.2	5	32

REGISTERED CIVIL ENGINEER 1-31-11 DATE

01-31-11
PLANS APPROVAL DATE

REGISTERED PROFESSIONAL ENGINEER DU LU No. 60886 Exp. 12/31/12 CIVIL STATE OF CALIFORNIA

THE STATE OF CALIFORNIA OR ITS OFFICERS OR AGENTS SHALL NOT BE RESPONSIBLE FOR THE ACCURACY OR COMPLETENESS OF SCANNED COPIES OF THIS PLAN SHEET.

NOTES:

1. FOR COMPLETE RIGHT OF WAY AND ACCURATE ACCESS DATA, SEE RIGHT OF WAY RECORD MAPS AT DISTRICT OFFICE.
2. FOR COMPLETE UTILITY LOCATIONS, SEE UTILITY PLANS.

LEGEND

- NEW SHOULDER PAVEMENT AREA
- NEW TRAVELWAY PAVEMENT AREA
- PAVEMENT OVERLAY AREA

CURVE DATA

No. (X)	R	Δ	T	L
3	25.00	28°57′26"	6.46	12.63
4	25.00	28°57′26"	6.46	12.63
5	25.00	21°44′36"	4.80	9.49
6	25.00	21°44′36"	4.80	9.49
7	25.00	26°35′0"	5.91	11.60
8	25.00	26°19′10"	5.85	11.48
9	25.00	70°39′53"	17.72	30.83
10	25.00	40°34′16"	9.24	17.70

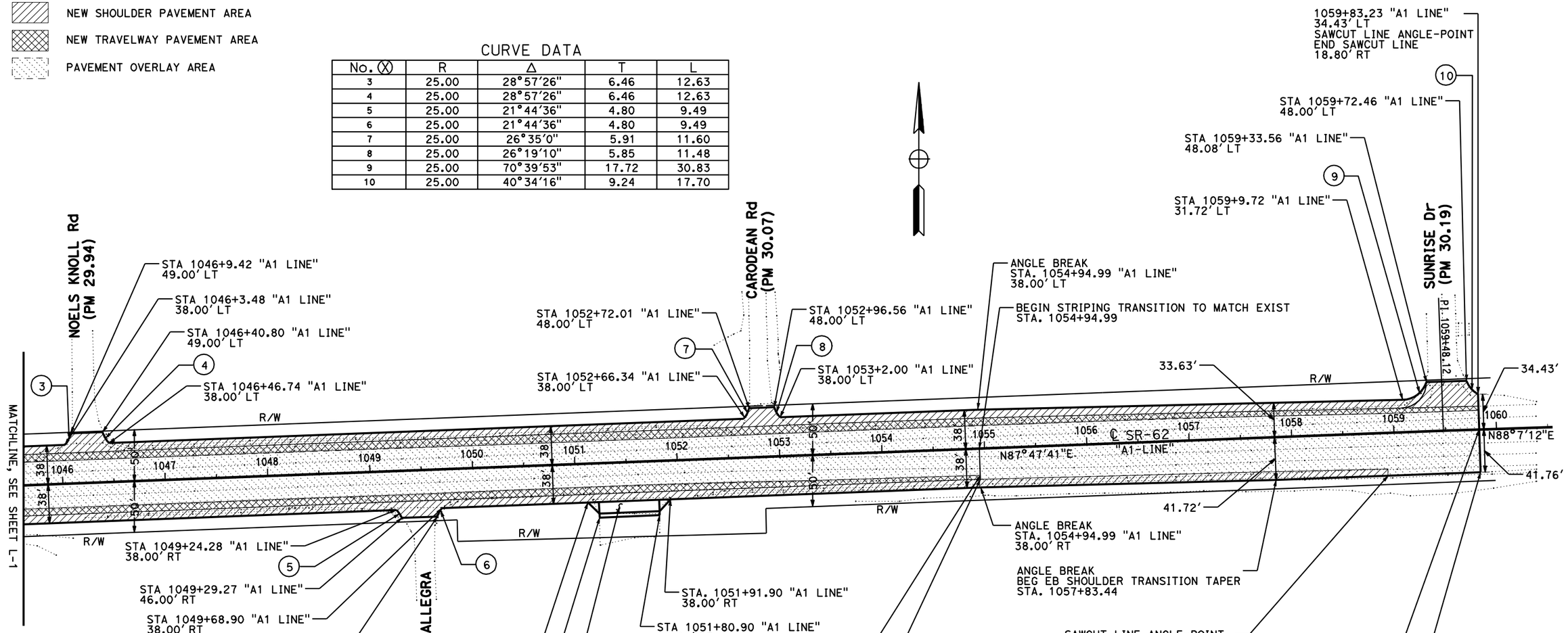

LAYOUT

SCALE: 1"=50′

L-2

STATE OF CALIFORNIA - DEPARTMENT OF TRANSPORTATION
DESIGN
FUNCTIONAL SUPERVISOR: DU LU
CALCULATED-DESIGNED BY: RICK LAM
CHECKED BY: HARIVADAN DESAI
REVISED BY / DATE REVISED

LAST REVISION 01-31-11 | DATE PLOTTED => 01-FEB-2011 | TIME PLOTTED => 10:06

Dist	COUNTY	ROUTE	POST MILES TOTAL PROJECT	SHEET No.	TOTAL SHEETS
08	SBd	62	29.7/30.2	6	32

REGISTERED CIVIL ENGINEER 1-31-11 DATE

01-31-11
PLANS APPROVAL DATE

REGISTERED PROFESSIONAL ENGINEER DU LU No. 60886 Exp. 12/31/12 CIVIL STATE OF CALIFORNIA

THE STATE OF CALIFORNIA OR ITS OFFICERS OR AGENTS SHALL NOT BE RESPONSIBLE FOR THE ACCURACY OR COMPLETENESS OF SCANNED COPIES OF THIS PLAN SHEET.

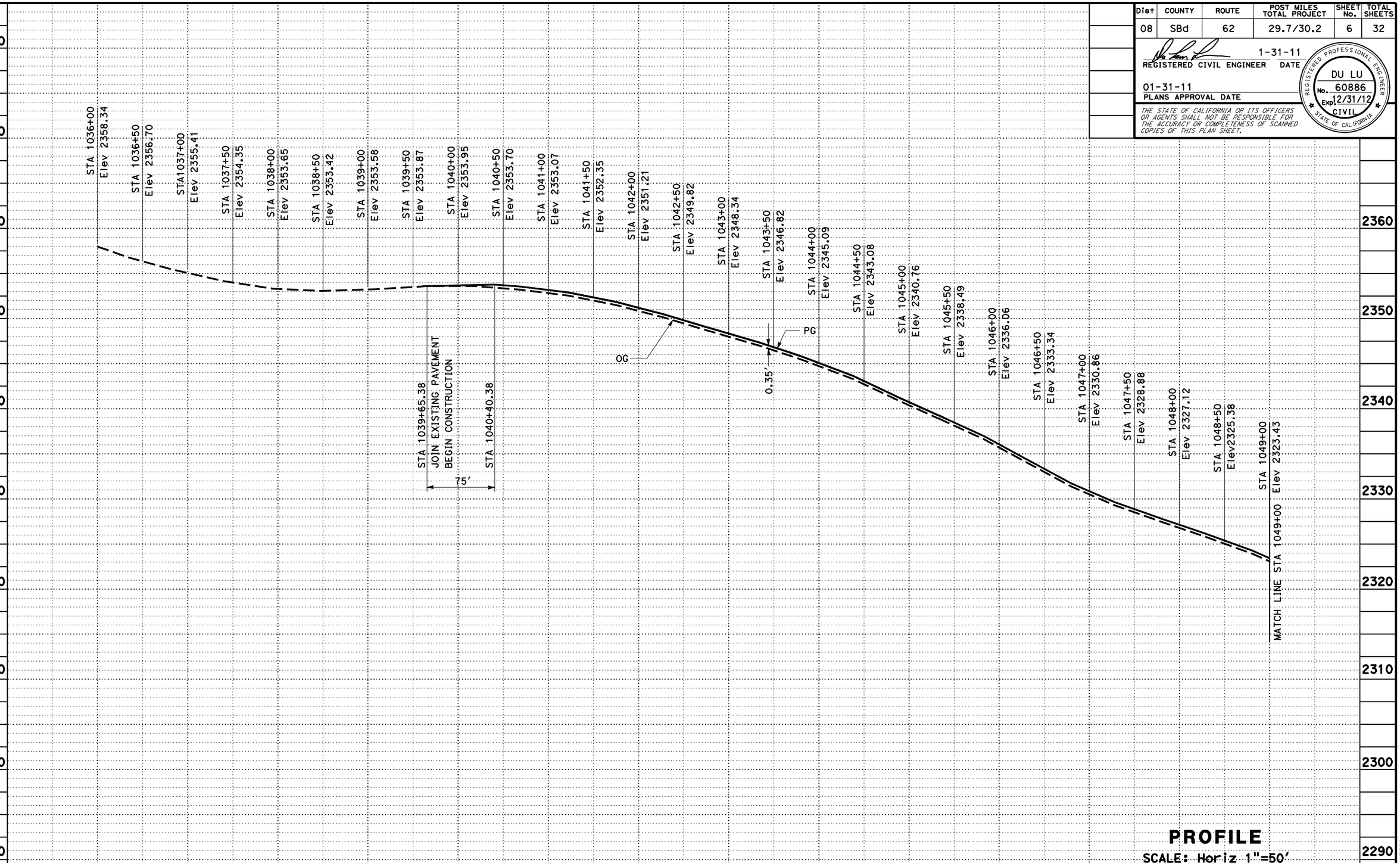

PROFILE

SCALE: Horiz 1"=50'
Vert 1"=5'

P-1

STATION		1036	1037	1038	1039	1040	1041	1042	1043	1044	1045	1046	1047	1048	1049	SHEET TOTAL	TOTAL
CY	Exc					159			179				266			604	
	Emb					208			62				70			340	

STATE OF CALIFORNIA - DEPARTMENT OF TRANSPORTATION
Caltrans DESIGN

FUNCTIONAL SUPERVISOR: DU LU
CALCULATED-DESIGNED BY: RICK LAM
CHECKED BY: HARIVADAN DESAI
REVISED BY
DATE REVISED

LAST REVISION 01-31-11
DATE PLOTTED => 01-FEB-2011
TIME PLOTTED => 10:06

Dist	COUNTY	ROUTE	POST MILES TOTAL PROJECT	SHEET No.	TOTAL SHEETS
08	SBd	62	29.7/30.2	7	32

REGISTERED CIVIL ENGINEER 1-31-11 DATE

01-31-11
PLANS APPROVAL DATE

REGISTERED PROFESSIONAL ENGINEER DU LU No. 60886 Exp. 12/31/12 CIVIL STATE OF CALIFORNIA

THE STATE OF CALIFORNIA OR ITS OFFICERS OR AGENTS SHALL NOT BE RESPONSIBLE FOR THE ACCURACY OR COMPLETENESS OF SCANNED COPIES OF THIS PLAN SHEET.

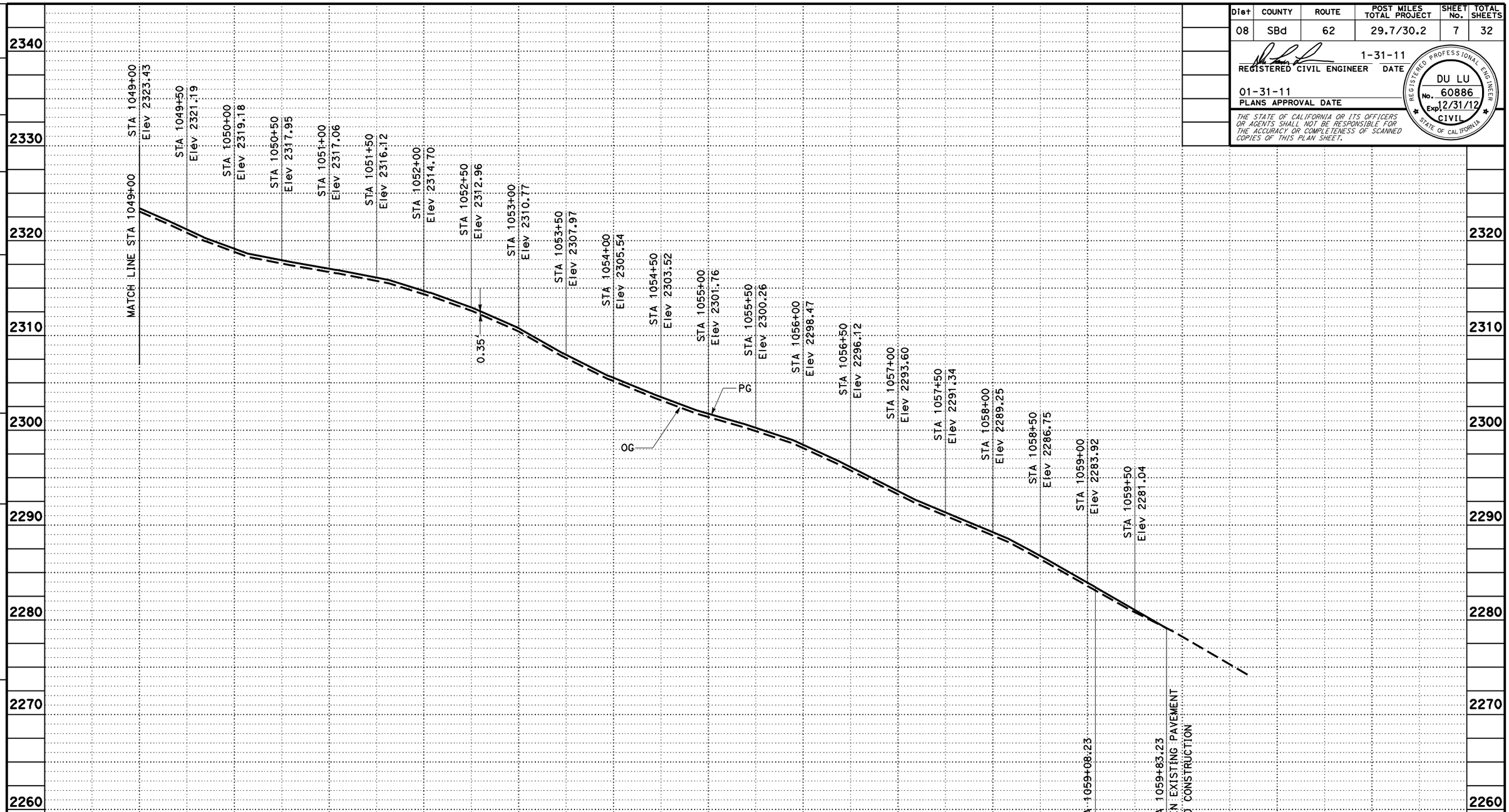

PROFILE

SCALE: Horiz 1"=50'
Vert 1"=5'

P-2

STATION		1049	1050	1051	1052	1053	1054	1055	1056	1057	1058	1059	1060	1061	1062	SHEET TOTAL	TOTAL
CY	Exc		280		226			154			73					733	1337
	Emb		88		91			162			35					376	716

STATE OF CALIFORNIA - DEPARTMENT OF TRANSPORTATION
Caltrans DESIGN

FUNCTIONAL SUPERVISOR: DU LU
CALCULATED-DESIGNED BY: RICK LAM
CHECKED BY: HARIVADAN DESAI
REVISED BY
DATE REVISED

LAST REVISION 01-31-11
DATE PLOTTED => 01-FEB-2011
TIME PLOTTED => 10:06

Dist	COUNTY	ROUTE	POST MILES TOTAL PROJECT	SHEET No.	TOTAL SHEETS
08	SBd	62	29.7/30.2	8	32

REGISTERED CIVIL ENGINEER 1-31-11 DATE

01-31-11
PLANS APPROVAL DATE

REGISTERED PROFESSIONAL ENGINEER DU LU No. 60886 Exp. 12/31/12 CIVIL STATE OF CALIFORNIA

THE STATE OF CALIFORNIA OR ITS OFFICERS OR AGENTS SHALL NOT BE RESPONSIBLE FOR THE ACCURACY OR COMPLETENESS OF SCANNED COPIES OF THIS PLAN SHEET.

LEGEND

COLD PLANE

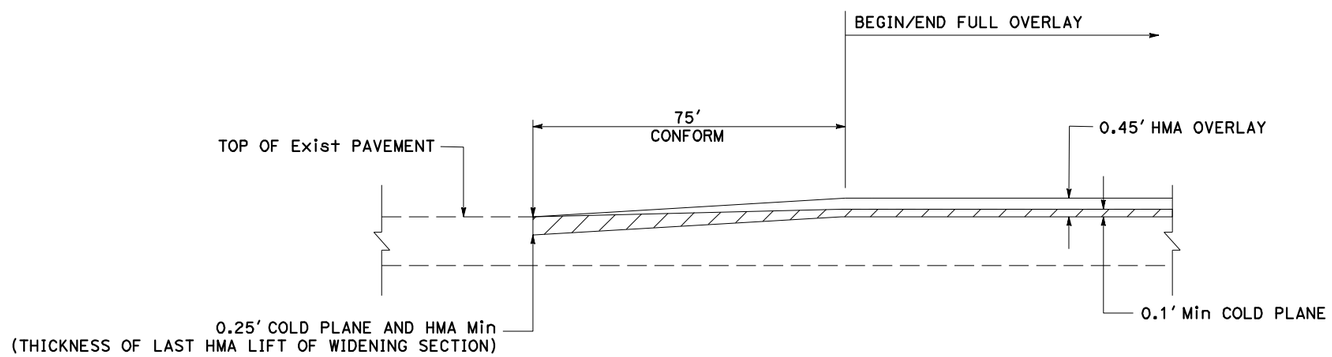

LONGITUDINAL HMA TAPER TO EXISTING HMA PAVEMENT

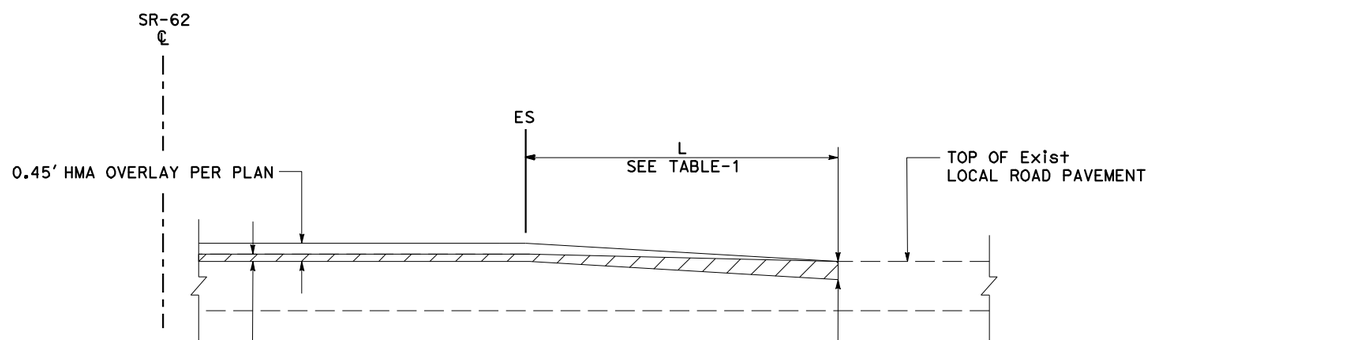

LOCAL ROAD HMA TAPER TO EXISTING AC PAVEMENT

TABLE 1
LOCAL ROAD TAPER LENGTH

LOCAL ROAD NAME	L
NOELS KNOLL ROAD (NORTH)	10.25′
NOELS KNOLL ROAD (SOUTH)	11.00′
VIA ALLEGRA ROAD	8.00′
CARODEAN ROAD	10.00′
SUNRISE ROAD	16.91′

CONSTRUCTION DETAILS

NO SCALE

C-1

STATE OF CALIFORNIA - DEPARTMENT OF TRANSPORTATION
DESIGN

FUNCTIONAL SUPERVISOR: DU LU
CALCULATED-DESIGNED BY: RICK LAM
CHECKED BY: HARIVADAN DESAI
REVISED BY
DATE REVISED

LAST REVISION 01-31-11
DATE PLOTTED => 01-FEB-2011
TIME PLOTTED => 10:06

Dist	COUNTY	ROUTE	POST MILES TOTAL PROJECT	SHEET No.	TOTAL SHEETS
08	SBd	62	29.7/30.2	9	32

1-31-11
LICENSED LANDSCAPE ARCHITECT

01-31-11
PLANS APPROVAL DATE

LICENSED LANDSCAPE ARCHITECT
D. Byron Strout No. 4496
Signature
07-30-11
Renewal Date
Date
STATE OF CALIFORNIA

THE STATE OF CALIFORNIA OR ITS OFFICERS OR AGENTS SHALL NOT BE RESPONSIBLE FOR THE ACCURACY OR COMPLETENESS OF SCANNED COPIES OF THIS PLAN SHEET.

LEGEND

EROSION CONTROL (TYPE-1, HYDROSEED)

EROSION CONTROL - QUANTITY TABLE 1

ITEM	LOCATION	QUANTITY	
		SQFT	ACRE
EROSION CONTROL (TYPE-1, HYDROSEED)	STA 1040+40 TO 1045+61.60, WB Rte 62	4,772	0.11
	STA 1040+40 TO 1045+61.60, EB Rte 62	3,376	0.08
	SUBTOTAL AREA	8,148	0.19

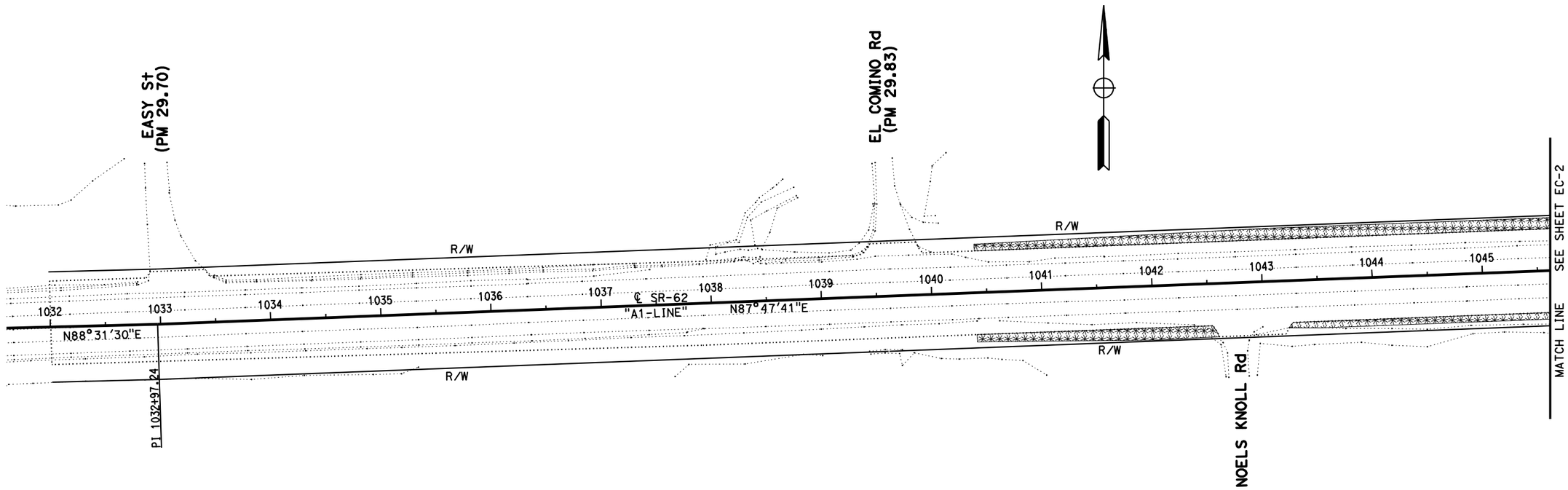

EROSION CONTROL PLAN

SCALE: 1"=50'

EC-1

THIS PLAN IS ACCURATE FOR LANDSCAPE WORK ONLY.

STATE OF CALIFORNIA - DEPARTMENT OF TRANSPORTATION
Caltrans® LANDSCAPE ARCHITECTURE

SENIOR LANDSCAPE ARCHITECT: BYRON STROUT
CALCULATED-DESIGNED BY: ALFREDO CORNEJO
CHECKED BY: BYRON STROUT
REVISED BY
DATE REVISED

LAST REVISION 01-31-11
DATE PLOTTED => 01-FEB-2011
TIME PLOTTED => 10:06

Dist	COUNTY	ROUTE	POST MILES TOTAL PROJECT	SHEET No.	TOTAL SHEETS
08	SBd	62	29.7/30.2	10	32

LICENSED LANDSCAPE ARCHITECT 1-31-11

01-31-11
PLANS APPROVAL DATE

LICENSED LANDSCAPE ARCHITECT Byron Strout No. 478 Signature 07-30-11 Renewal Date Date STATE OF CALIFORNIA

THE STATE OF CALIFORNIA OR ITS OFFICERS OR AGENTS SHALL NOT BE RESPONSIBLE FOR THE ACCURACY OR COMPLETENESS OF SCANNED COPIES OF THIS PLAN SHEET.

LEGEND

EROSION CONTROL (TYPE-1, HYDROSEED)

EROSION CONTROL - QUANTITY TABLE 2

ITEM	LOCATION	QUANTITY	
		SQFT	ACRE
EROSION CONTROL (TYPE-1, HYDROSEED)	STA 1045+61.60 TO 1058+70, WB Rte 62	12,575	0.29
	STA 1045+61.60 TO 1058+93, EB Rte 62	4,174	0.10
	SUBTOTAL AREA	16,749	0.39
	TOTAL AREA	24,897	0.58

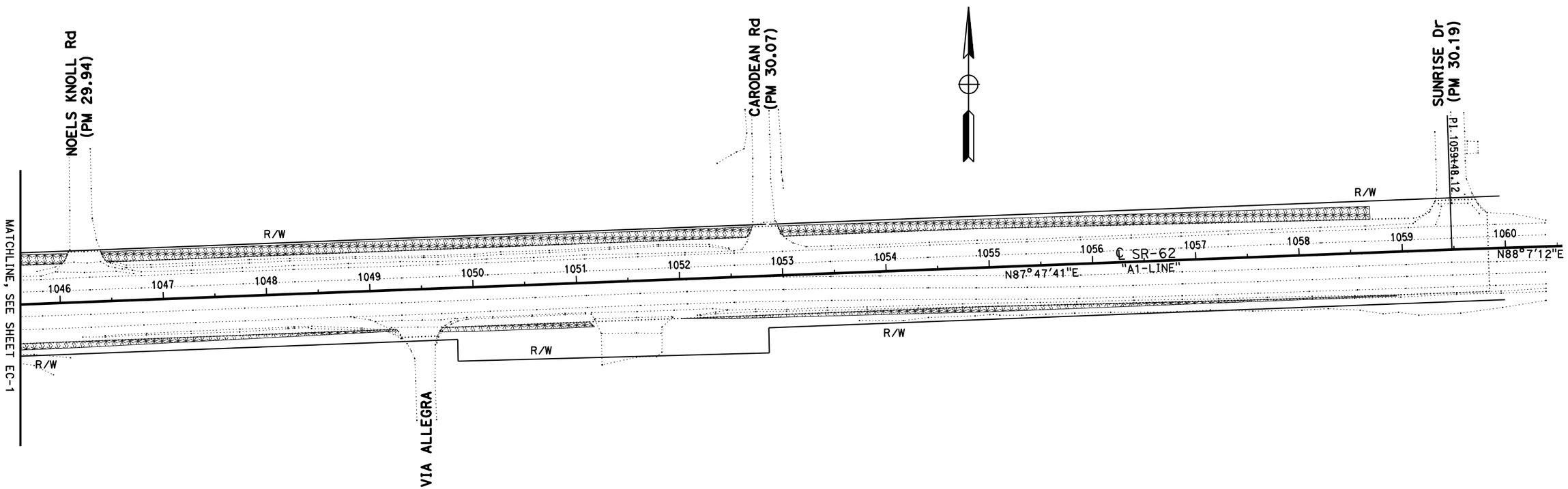

EROSION CONTROL PLAN

SCALE: 1"=50'

THIS PLAN IS ACCURATE FOR LANDSCAPE WORK ONLY.

EC-2

REVISED BY	DATE REVISED

ALFREDO CORNEJO — BYRON STROUT
CALCULATED-DESIGNED BY — CHECKED BY
SENIOR LANDSCAPE ARCHITECT — BYRON STROUT

STATE OF CALIFORNIA - DEPARTMENT OF TRANSPORTATION
Caltrans® LANDSCAPE ARCHITECTURE

LAST REVISION 01-31-11
DATE PLOTTED => 01-FEB-2011
TIME PLOTTED => 10:06

Dist	COUNTY	ROUTE	POST MILES TOTAL PROJECT	SHEET No.	TOTAL SHEETS
08	SBd	62	29.7/30.2	11	32

REGISTERED CIVIL ENGINEER 1-31-11 DATE

01-31-11
PLANS APPROVAL DATE

REGISTERED PROFESSIONAL ENGINEER DU LU No. 60886 Exp. 12/31/12 CIVIL STATE OF CALIFORNIA

THE STATE OF CALIFORNIA OR ITS OFFICERS OR AGENTS SHALL NOT BE RESPONSIBLE FOR THE ACCURACY OR COMPLETENESS OF SCANNED COPIES OF THIS PLAN SHEET.

NOTES:

1. FOR COMPLETE RIGHT OF WAY AND ACCURATE ACCESS DATA, SEE RIGHT OF WAY RECORD MAPS AT DISTRICT OFFICE.
2. FOR COMPLETE UTILITY LOCATIONS, SEE UTILITY PLANS.

LEGEND

⬡ DRAINAGE SYSTEM No.

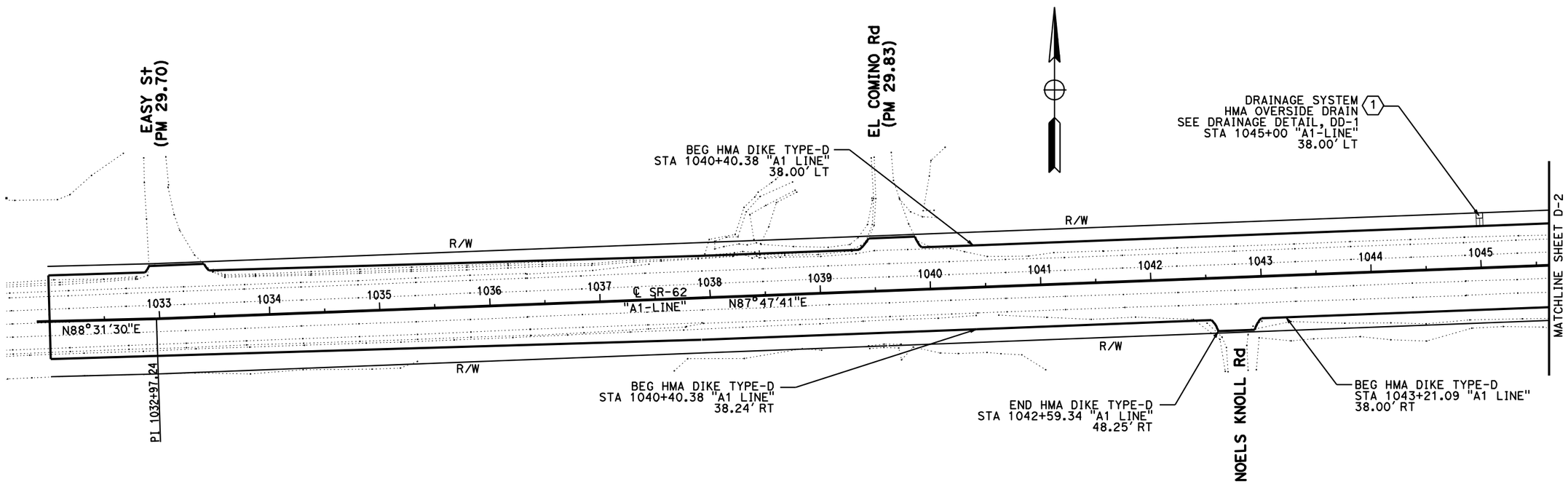

DRAINAGE PLAN

SCALE: 1"=50'

D-1

REVISED BY	DATE REVISED

CALCULATED-DESIGNED BY: RICK LAM
CHECKED BY: HARIVADAN DESAI
FUNCTIONAL SUPERVISOR: DU LU

STATE OF CALIFORNIA - DEPARTMENT OF TRANSPORTATION
Caltrans
DESIGN

LAST REVISION 01-31-11 | DATE PLOTTED => 01-FEB-2011 | TIME PLOTTED => 10:06

Dist	COUNTY	ROUTE	POST MILES TOTAL PROJECT	SHEET No.	TOTAL SHEETS
08	SBd	62	29.7/30.2	12	32

REGISTERED CIVIL ENGINEER — DATE 1-31-11

01-31-11
PLANS APPROVAL DATE

REGISTERED PROFESSIONAL ENGINEER — DU LU — No. 60886 — Exp. 12/31/12 — CIVIL — STATE OF CALIFORNIA

THE STATE OF CALIFORNIA OR ITS OFFICERS OR AGENTS SHALL NOT BE RESPONSIBLE FOR THE ACCURACY OR COMPLETENESS OF SCANNED COPIES OF THIS PLAN SHEET.

NOTES:

1. FOR COMPLETE RIGHT OF WAY AND ACCURATE ACCESS DATA, SEE RIGHT OF WAY RECORD MAPS AT DISTRICT OFFICE.
2. FOR COMPLETE UTILITY LOCATIONS, SEE UTILITY PLANS.

LEGEND

⬡ DRAINAGE SYSTEM No.

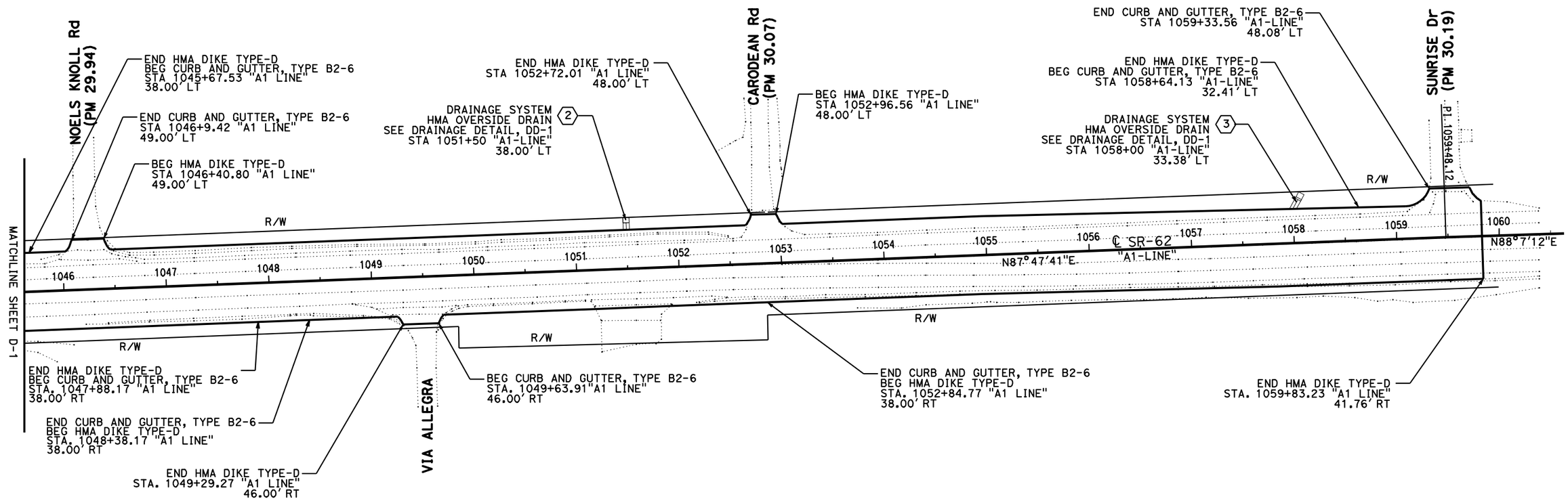

DRAINAGE PLAN

SCALE: 1"=50'

D-2

STATE OF CALIFORNIA - DEPARTMENT OF TRANSPORTATION
Caltrans
DESIGN

FUNCTIONAL SUPERVISOR: DU LU
CALCULATED-DESIGNED BY: RICK LAM
CHECKED BY: HARIVADAN DESAI
REVISED BY
DATE REVISED

LAST REVISION 01-31-11
DATE PLOTTED => 01-FEB-2011
TIME PLOTTED => 10:06

Dist	COUNTY	ROUTE	POST MILES TOTAL PROJECT	SHEET No.	TOTAL SHEETS
08	SBd	62	29.7/30.2	13	32

REGISTERED CIVIL ENGINEER — DATE 1-31-11

01-31-11
PLANS APPROVAL DATE

REGISTERED PROFESSIONAL ENGINEER — DU LU — No. 60886 — Exp. 12/31/12 — CIVIL — STATE OF CALIFORNIA

THE STATE OF CALIFORNIA OR ITS OFFICERS OR AGENTS SHALL NOT BE RESPONSIBLE FOR THE ACCURACY OR COMPLETENESS OF SCANNED COPIES OF THIS PLAN SHEET.

NOTES:

1. STATION OFFSET ARE REFERRED TO ROUTE 62 UNLESS OTHERWISE SHOWN.
2. ELEVATIONS SHOWN HERE ARE FOR QUANTITY CALCULATION PURPOSE ONLY.
3. ELEVATION A SHOULD BE BASED ON ROADWAY PROFILE.
4. ELEVATION B AND C COULD BE ADJUSTED ACCORDING TO THE FIELD CONDITION.

SUMMARY TABLE

DRAINAGE SYSTEM	POINT A			POINT B			POINT C		
	STATION	OFFSET	ELEVATION	STATION	OFFSET	ELEVATION	STATION	OFFSET	ELEVATION
1	1045+00	38.0′ LT	2339.74	1045+00	41.0′ LT	2338.99	1045+00	42.3′ LT	2338.34
2	1051+50	38.0′ LT	2315.11	1051+50	41.0′ LT	2314.36	1051+50	42.6′ LT	2313.55
3 (*)	1058+00	33.4′ LT	2288.45	1058+00	36.4′ LT	2287.71	1058+00	38.4′ LT	2285.84

* MODIFIED FOR 60° INLET ANGLE, SEE DRAINAGE SYSTEM 3 DETAIL.
** FOR ADDITIONAL INFORMATION, SEE STD PLAN D87D

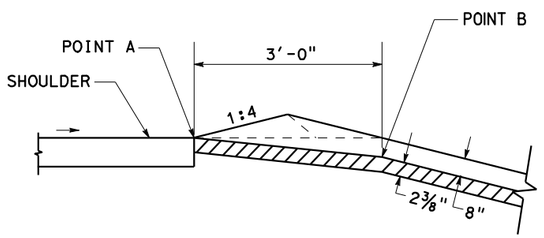

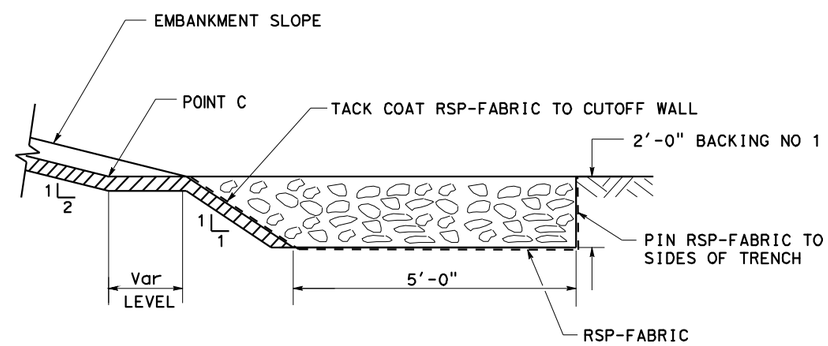

SECTION C-C

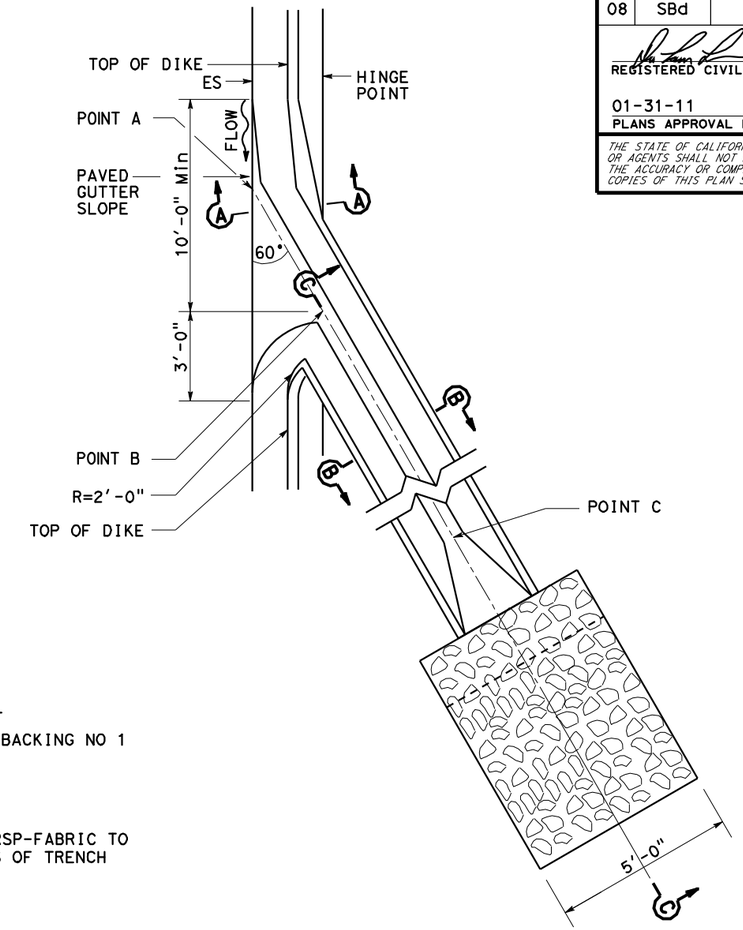

DRAINAGE SYSTEM No. 3

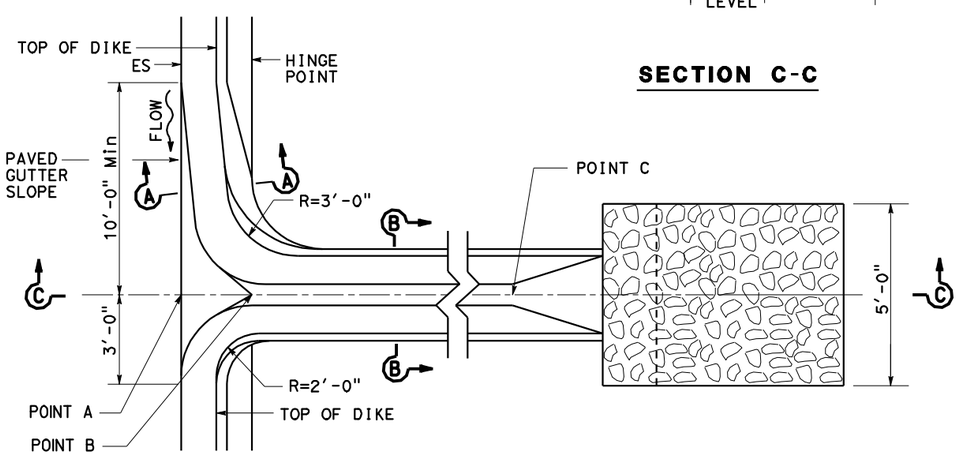

DRAINAGE SYSTEM No. 1 & 2

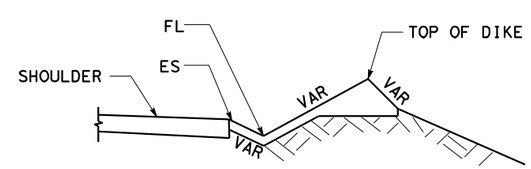

SECTION A-A

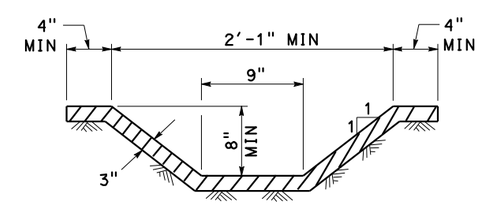

SECTION B-B

DRAINAGE DETAILS

NO SCALE

DD-1

HMA OVERSIDE DRAIN

STATE OF CALIFORNIA - DEPARTMENT OF TRANSPORTATION — DESIGN

FUNCTIONAL SUPERVISOR: DU LU

CALCULATED-DESIGNED BY: RICK LAM — CHECKED BY: HARIVADAN DESAI

REVISED BY — DATE REVISED

LAST REVISION 01-31-11 — DATE PLOTTED => 01-FEB-2011 — TIME PLOTTED => 10:06

Dist	COUNTY	ROUTE	POST MILES TOTAL PROJECT	SHEET No.	TOTAL SHEETS
08	SBd	62	29.7/30.2	14	32

REGISTERED CIVIL ENGINEER 1-31-11 DATE

01-31-11
PLANS APPROVAL DATE

REGISTERED PROFESSIONAL ENGINEER DU LU No. 60886 Exp. 12/31/12 CIVIL STATE OF CALIFORNIA

THE STATE OF CALIFORNIA OR ITS OFFICERS OR AGENTS SHALL NOT BE RESPONSIBLE FOR THE ACCURACY OR COMPLETENESS OF SCANNED COPIES OF THIS PLAN SHEET.

DRAINAGE QUANTITIES

DRAINAGE SYSTEM No.	PLACE HMA (MISC AREA) OVERSIDE DRAIN	HOT MIX ASPHALT	ROCK SLOPE PROTECTION (1/4 T, METHOD B)	RSP FABRIC TYPE A	LOCATION SR-62	DESCRIPTION
	SQYD	TON	CY	SQFT		
1	2.0	0.5	2.3	70	STA 1045+00	HOT MIX ASPHALT CONCRETE OVERSIDE DRAIN PER CALTRANS STANDARD PLAN D87D AND DRAINAGE DETAIL, DD-1
2	2.4	0.5	2.3	70	STA 1051+50	" "
3	2.6	1.0	2.3	70	STA 1058+00	" "
TOTAL	7.0	2.0*	6.9	210		

(N) - NOT A SEPARATE PAY ITEM; FOR INFORMATION ONLY
* SEE HMA SUMMARY TABLE.

HMA DIKE

LOCATION SR-62	HMA DIKE (TYPE D)		HMA (UNDER DIKE)		NOTES
	LF	TON	LF	TON	
STA 1040+40.38 TO STA 1059+83.23	3,202	188	3,202	103	SHEET D-1, D-2
TOTAL	3,202	188*	(N) 3,202	103*	

(N) - NOT A SEPARATE PAY ITEM; FOR INFORMATION ONLY
* SEE HMA SUMMARY TABLE.

HMA SUMMARY

No.	LOCATION	HMA
		TON
1	HMA DIKE (TYPE D)	188
2	HMA (UNDER DIKE)	103
3	HMA (3-OVERSIDE DRAINS)	2
	TOTAL	293*

* SEE ADDITIONAL HMA QUANTITIES ON SHEET Q-1

MINOR CONCRETE (CURB & GUTTER, TYPE B2-6)

LOCATION SR-62		NOTES
	CY	
STA 1045+67.53 TO STA 1046+9.42	3	SHEET D-1, D-2
STA 1047+88.17 TO STA 1048+38.17	3	" "
STA 1049+63.91 TO STA 1052+84.77	20	" "
STA 1058+64.13 TO STA 1059+33.56	5	" "
TOTAL	31	

DRAINAGE QUANTITIES

DQ-1

REVISED BY | DATE REVISED
RICK LAM | HARIVADAN DESAI
CALCULATED-DESIGNED BY | CHECKED BY
FUNCTIONAL SUPERVISOR: DU LU
STATE OF CALIFORNIA - DEPARTMENT OF TRANSPORTATION
DESIGN

LAST REVISION 01-31-11 | DATE PLOTTED => 01-FEB-2011 | TIME PLOTTED => 10:07

Dist	COUNTY	ROUTE	POST MILES TOTAL PROJECT	SHEET No.	TOTAL SHEETS
08	SBd	62	29.7/30.2	15	32

REGISTERED CIVIL ENGINEER — DATE 1-31-11

01-31-11
PLANS APPROVAL DATE

REGISTERED PROFESSIONAL ENGINEER — DU LU — No. 60886 — Exp. 12/31/12 — CIVIL — STATE OF CALIFORNIA

THE STATE OF CALIFORNIA OR ITS OFFICERS OR AGENTS SHALL NOT BE RESPONSIBLE FOR THE ACCURACY OR COMPLETENESS OF SCANNED COPIES OF THIS PLAN SHEET.

IMPORTANT NOTICE:
CALL BEFORE YOU DIG. SECTION 4216 OF THE GOVERNMENT CODE REQUIRES AN INQUIRY IDENTIFICATION NUMBER BE ISSUED BEFORE A PERMIT TO EXCAVATE WILL BE VALID. FOR YOUR PRE-EXCAVATION I.D. NUMBER, CALL UNDERGROUND SERVICE ALERT TOLL FREE AT 1-800-227-2600 FIVE WORKING DAYS BEFORE YOU DIG.

ALL UTILITY LOCATIONS AND ELEVATIONS ARE APPROXIMATE BASED ON AS BUILTS AND SHALL BE VERIFIED BY THE CONTRACTOR PRIOR TO CONSTRUCTION.

UTILITY LEGEND:

—w— —w—	INDICATES EXISTING UNDERGROUND WATER LINE (TWENTYNINE PALMS WATER DISTRICT, TPWD)
—g— —g—	INDICATES EXISTING UNDERGROUND NATURAL GAS LINE (THE GAS CO)
—e— —e—	INDICATES EXISTING UNDERGROUND ELECTRICAL LINE (SOUTHERN CALIFORNIA EDISON, SCE)
—tv— —tv—	INDICATES EXISTING UNDERGROUND CABLE TELEVISION LINE (ADELPHIA)
—t— —(oh)—	INDICATES EXISTING OVERHEAD TELEPHONE LINES (VERIZON)
—t— —t—	INDICATES EXISTING UNDERGROUND TELEPHONE LINES (VERIZON)

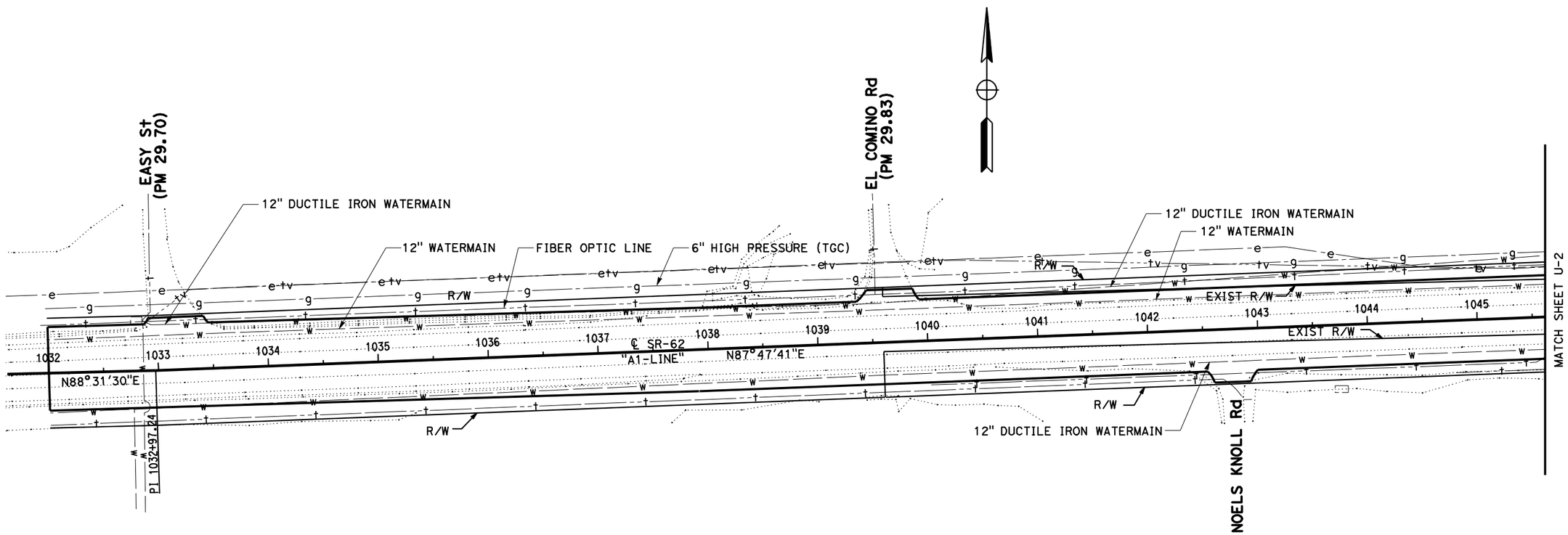

UTILITY PLAN

SCALE: 1"=50'

U-1

THIS PLAN ACCURATE FOR UTILITY INFORMATION ONLY

STATE OF CALIFORNIA - DEPARTMENT OF TRANSPORTATION
DESIGN
FUNCTIONAL SUPERVISOR: DU LU
CALCULATED-DESIGNED BY: RICK LAM
CHECKED BY: HARIVADAN DESAI
REVISED BY
DATE REVISED

LAST REVISION 01-31-11
DATE PLOTTED => 01-FEB-2011
TIME PLOTTED => 10:07

Dist	COUNTY	ROUTE	POST MILES TOTAL PROJECT	SHEET No.	TOTAL SHEETS
08	SBd	62	29.7/30.2	16	32

REGISTERED CIVIL ENGINEER 1-31-11 DATE

01-31-11
PLANS APPROVAL DATE

REGISTERED PROFESSIONAL ENGINEER DU LU No. 60886 Exp. 12/31/12 CIVIL STATE OF CALIFORNIA

THE STATE OF CALIFORNIA OR ITS OFFICERS OR AGENTS SHALL NOT BE RESPONSIBLE FOR THE ACCURACY OR COMPLETENESS OF SCANNED COPIES OF THIS PLAN SHEET.

IMPORTANT NOTICE:
CALL BEFORE YOU DIG. SECTION 4216 OF THE GOVERNMENT CODE REQUIRES AN INQUIRY IDENTIFICATION NUMBER BE ISSUED BEFORE A PERMIT TO EXCAVATE WILL BE VALID. FOR YOUR PRE-EXCAVATION I.D. NUMBER, CALL UNDERGROUND SERVICE ALERT TOLL FREE AT 1-800-227-2600 FIVE WORKING DAYS BEFORE YOU DIG.

ALL UTILITY LOCATIONS AND ELEVATIONS ARE APPROXIMATE BASED ON AS BUILTS AND SHALL BE VERIFIED BY THE CONTRACTOR PRIOR TO CONSTRUCTION.

UTILITY LEGEND:

—w— —w—	INDICATES EXISTING UNDERGROUND WATER LINE (TWENTYNINE PALMS WATER DISTRICT, TPWD)
—g— —g—	INDICATES EXISTING UNDERGROUND NATURAL GAS LINE (THE GAS CO)
—e— —e—	INDICATES EXISTING UNDERGROUND ELECTRICAL LINE (SOUTHERN CALIFORNIA EDISON, SCE)
—tv— —tv—	INDICATES EXISTING UNDERGROUND CABLE TELEVISION LINE (ADELPHIA)
—t— —(oh)—	INDICATES EXISTING OVERHEAD TELEPHONE LINES (VERIZON)
—t— —t—	INDICATES EXISTING UNDERGROUND TELEPHONE LINES (VERIZON)

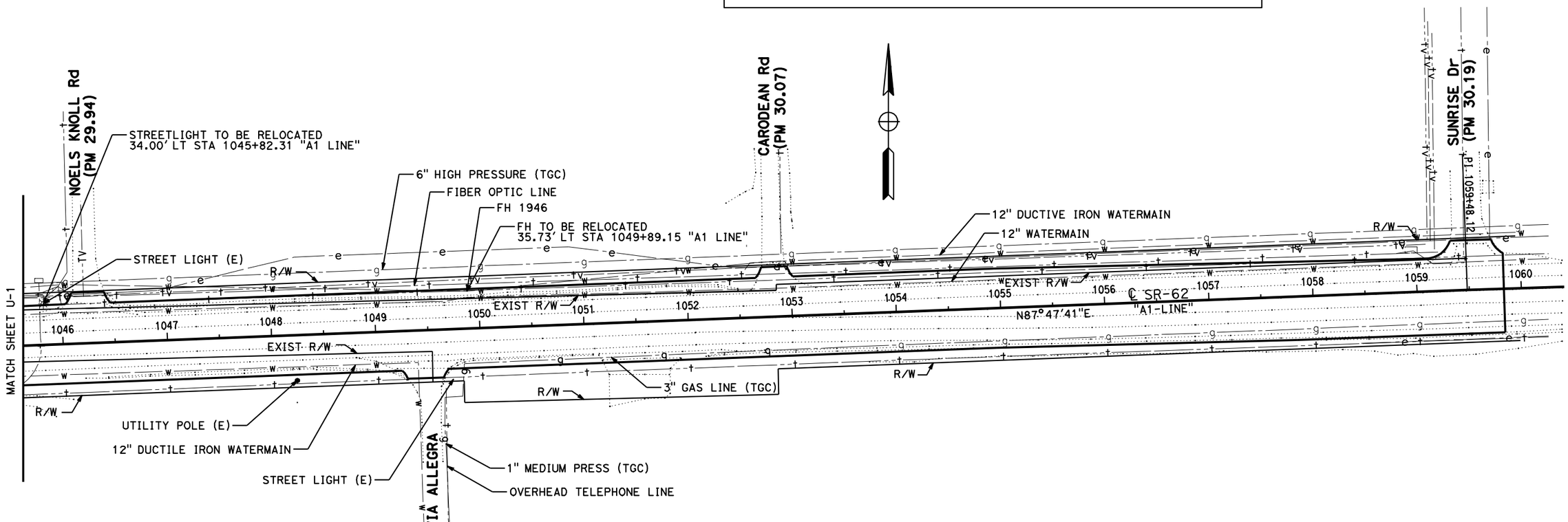

THIS PLAN ACCURATE FOR UTILITY INFORMATION ONLY

UTILITY PLAN

SCALE: 1"=50'

U-2

STATE OF CALIFORNIA - DEPARTMENT OF TRANSPORTATION
DESIGN
FUNCTIONAL SUPERVISOR: DU LU
CALCULATED-DESIGNED BY: RICK LAM
CHECKED BY: HARIVADAN DESAI
REVISED BY
DATE REVISED

LAST REVISION 01-31-11
DATE PLOTTED => 01-FEB-2011
TIME PLOTTED => 10:07

Dist	COUNTY	ROUTE	POST MILES TOTAL PROJECT	SHEET No.	TOTAL SHEETS
08	SBd	62	29.7/30.2	17	32

REGISTERED CIVIL ENGINEER 1-31-11 DATE

01-31-11
PLANS APPROVAL DATE

REGISTERED PROFESSIONAL ENGINEER CHRIS HARDIMON No. C66092 Exp. 6/30/12 CIVIL STATE OF CALIFORNIA

THE STATE OF CALIFORNIA OR ITS OFFICERS OR AGENTS SHALL NOT BE RESPONSIBLE FOR THE ACCURACY OR COMPLETENESS OF SCANNED COPIES OF THIS PLAN SHEET.

NOTES:

1. LOCATIONS OF PORTABLE CHANGEABLE MESSAGE SIGN SHALL BE DETERMINED BY THE ENGINEER.
2. EXACT SIGN LOCATION TO BE DETERMINED BY THE ENGINEER.

LEGEND

LOCATION OF WORK

ONE POST SIGN

(X) CONSTRUCTION AREA SIGN NO.

STATIONARY MOUNTED CONSTRUCTION AREA SIGNS

SIGN No.	SIGN CODE FED	SIGN CODE CA	PANEL SIZE	SIGN MESSAGE	No. OF POST(S) AND SIZE	No. OF SIGNS (EA)
A	W20-1		36" X 36"	ROAD WORK AHEAD	1 - 4" X 6"	6
B		C14	48" X 24"	END ROAD WORK	2 - 4" X 6"	2
				TOTAL		8

TEMPORARY TRAFFIC CONTROL SIGN COLORS: BACKGROUND - ORANGE (RETROREFLECTIVE)
LEGEND - BLACK

SIGN PANELS ARE SINGLE FACED 0.08 in ALUMINUM

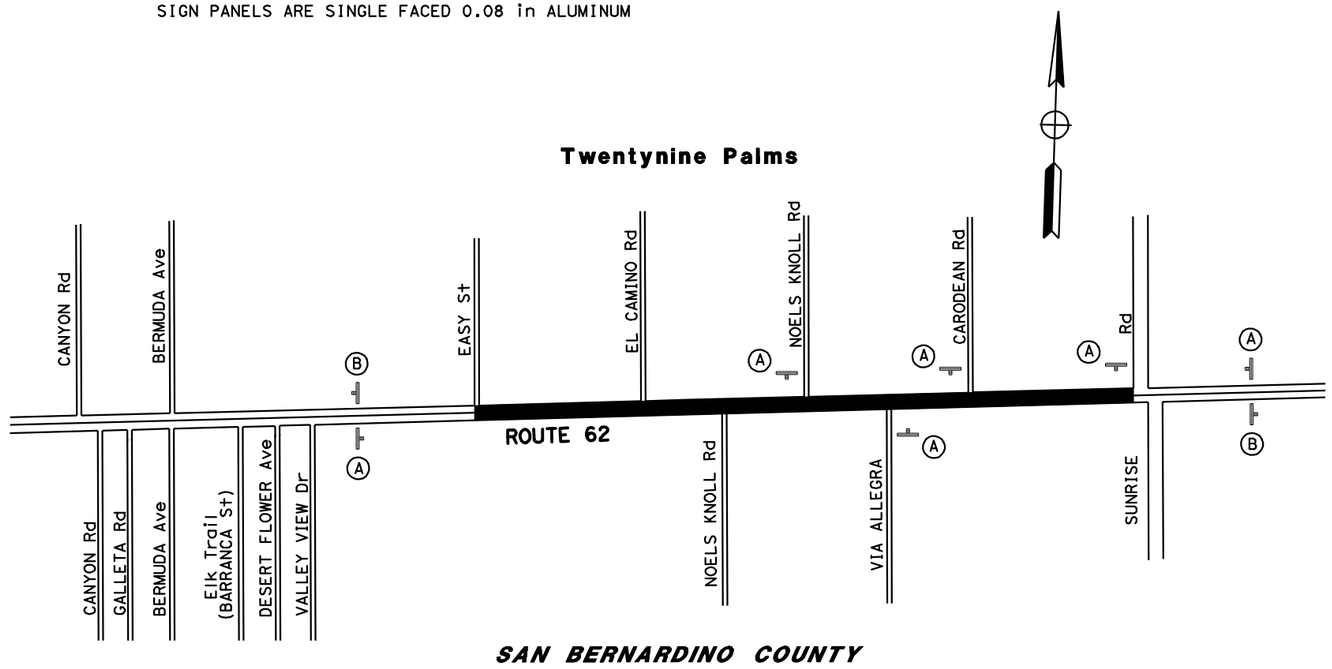

PORTABLE CHANGEABLE MESSAGE SIGN (PCMS)
(EA)
2

THIS PLAN ACCURATE FOR CONSTRUCTION AREA SIGN WORK ONLY

CONSTRUCTION AREA SIGNS

NO SCALE

CS-1

STATE OF CALIFORNIA - DEPARTMENT OF TRANSPORTATION
Caltrans TRAFFIC DESIGN B

FUNCTIONAL SUPERVISOR: LARRY SARTORI
CALCULATED-DESIGNED BY: CHRIS HARDIMON
CHECKED BY: LARRY SARTORI
REVISED BY
DATE REVISED

LAST REVISION 01-31-11 DATE PLOTTED => 01-FEB-2011 TIME PLOTTED => 10:07

Dist	COUNTY	ROUTE	POST MILES TOTAL PROJECT	SHEET No.	TOTAL SHEETS
08	SBd	62	29.7/30.2	18	32

REGISTERED CIVIL ENGINEER 1-31-11 DATE

01-31-11
PLANS APPROVAL DATE

REGISTERED PROFESSIONAL ENGINEER DU LU No. 60886 Exp. 12/31/12 CIVIL STATE OF CALIFORNIA

THE STATE OF CALIFORNIA OR ITS OFFICERS OR AGENTS SHALL NOT BE RESPONSIBLE FOR THE ACCURACY OR COMPLETENESS OF SCANNED COPIES OF THIS PLAN SHEET.

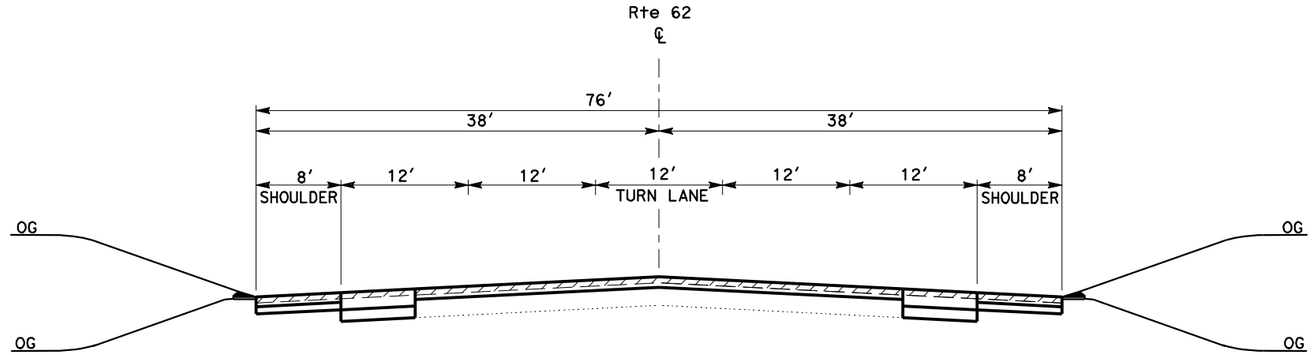

ROUTE 62
STAGE 3

NOTES:

1. FINAL HMA OVERLAY LIFT SHALL BE COMPLETED ON THE SAME DAY AS COLD PLANE.
2. FINAL HMA OVERLAY JOINTS SHALL BE AT THE LANE LINES.

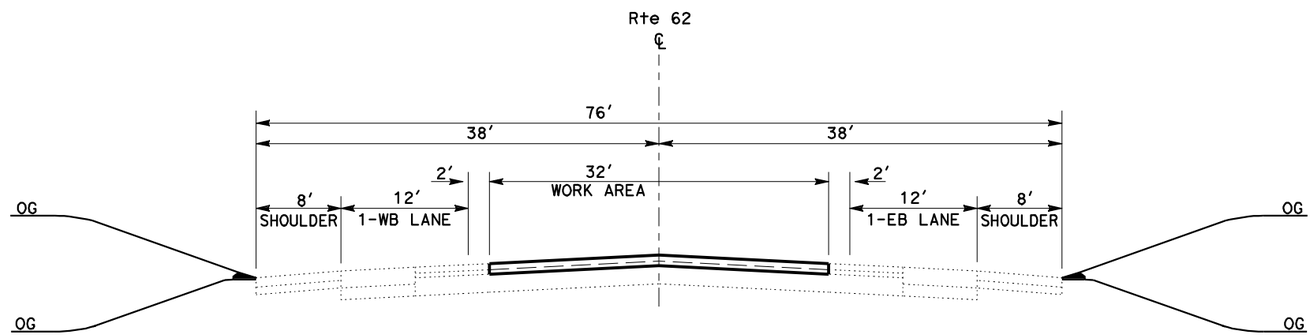

ROUTE 62
STAGE 2

NOTES:

1. PROVIDE TEMPORARY 1-LANE FOR EACH DIRECTION OF TRAVEL ON THE OUTSIDE OF WORK AREA.
2. 24-HOUR CLOSURE FOR INSIDE LANES FOR COLD PLANE AND OVERLAY WORK.
3. FINAL HMA OVERLAY LIFT SHALL BE COMPLETED PER STAGE 3.

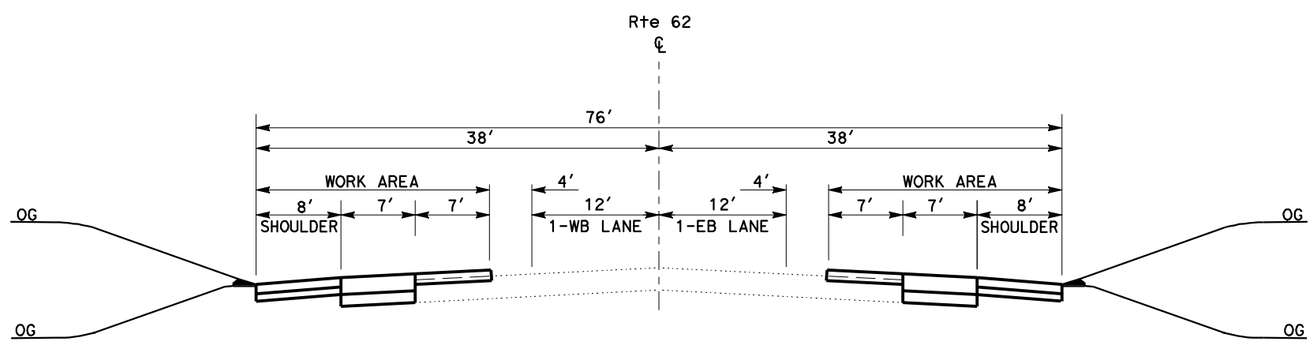

ROUTE 62
STAGE 1

NOTES:

1. PROVIDE TEMPORARY 1-LANE FOR EACH DIRECTION OF TRAVEL WITH 3′ SEPARATION OUTSIDE OF WORK AREA.
2. 24-HOUR CLOSURE FOR OUTSIDE LANES FOR WIDENING AND OVERLAY WORK.
3. FINAL HMA OVERLAY LIFT SHALL BE COMPLETED PER STAGE 3.

THIS PLAN ACCURATE FOR STAGE CONSTRUCTION WORK ONLY

STAGE 1, 2, & 3
STAGE CONSTRUCTION
NO SCALE

SC-1

STATE OF CALIFORNIA - DEPARTMENT OF TRANSPORTATION
Caltrans
DESIGN

FUNCTIONAL SUPERVISOR: DU LU
CALCULATED-DESIGNED BY: RICK LAM
CHECKED BY: HARIVADAN DESAI
REVISED BY
DATE REVISED

LAST REVISION 01-31-11
DATE PLOTTED => 01-FEB-2011
TIME PLOTTED => 10:07

Dist	COUNTY	ROUTE	POST MILES TOTAL PROJECT	SHEET No.	TOTAL SHEETS
08	SBd	62	29.7/30.2	19	32

REGISTERED CIVIL ENGINEER 1-31-11 DATE

01-31-11
PLANS APPROVAL DATE

REGISTERED PROFESSIONAL ENGINEER CHRIS HARDIMON No. C66092 Exp. 6/30/12 CIVIL STATE OF CALIFORNIA

THE STATE OF CALIFORNIA OR ITS OFFICERS OR AGENTS SHALL NOT BE RESPONSIBLE FOR THE ACCURACY OR COMPLETENESS OF SCANNED COPIES OF THIS PLAN SHEET.

LEGEND

- (XX) TEMPORARY TRAFFIC STRIPE DETAIL (2-COAT PAINT)
- DIRECTION OF TRAFFIC
- WORK AREA
- FLASHING ARROW SIGN
- CONSTRUCTION AREA SIGN (1-POST)
- TEMPORARY CHANNELIZER AT 50 FT SPACING
- (X) CONSTRUCTION AREA SIGN NUMBER
- LANE REDUCTION ARROW

NOTES:

1. SHEETS TH-1, TH-2, TH-3 AND TH-4 ARE TYPICAL FOR EASTBOUND AND WESTBOUND DIRECTION.
2. REMOVE ALL CONFLICTING PAVEMENT DELINEATION.
3. LANE REDUCTION ARROWS SHALL BE PLACED AT 200′ SPACING.
4. LOCATIONS OF CONSTRUCTION AREA SIGNS SHOWN ARE APPROXIMATE. EXACT LOCATIONS WILL BE DETERMINED BY THE ENGINEER.
5. ALL CONSTRUCTION AREA SIGNS ARE BLACK ON ORANGE.
7. CHANNELIZERS(SURFACE MOUNTED) SHALL BE ORANGE POST WITH WHITE RETROREFLECTIVE SHEETING PER STANDARD PLAN A73C NOTE 6.
8. FLASHING ARROW SIGNS SHOWN ON THE PLANS SHALL BE INCLUDED IN THE COST FOR TRAFFIC CONTROL SYSTEM.

STATIONARY MOUNTED CONSTRUCTION AREA SIGNS

SIGN No.	SIGN CODE FED	SIGN CODE CA	PANEL SIZE	SIGN MESSAGE	No. OF POST(S) AND SIZE	No. OF SIGNS (EA)
A		C20(RT)	36" X 36"	RIGHT LANE CLOSED AHEAD	1 - 4" X 6"	2
B	W4-2(RT)		36" X 36"	MERGE LEFT	1 - 4" X 6"	2
C		C20(LT)	36" X 36"	LEFT LANE CLOSED AHEAD	1 - 4" X 6"	2
D	W4-2(RT)		36" X 36"	MERGE RIGHT	1 - 4" X 6"	2
					TOTAL	8

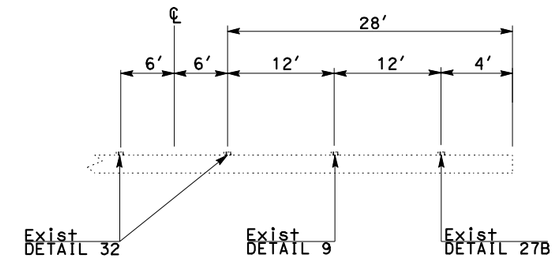

SECTION A-A

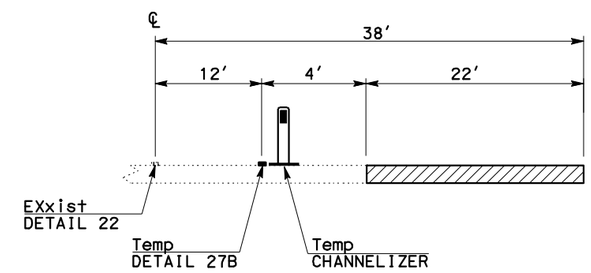

SECTION B-B

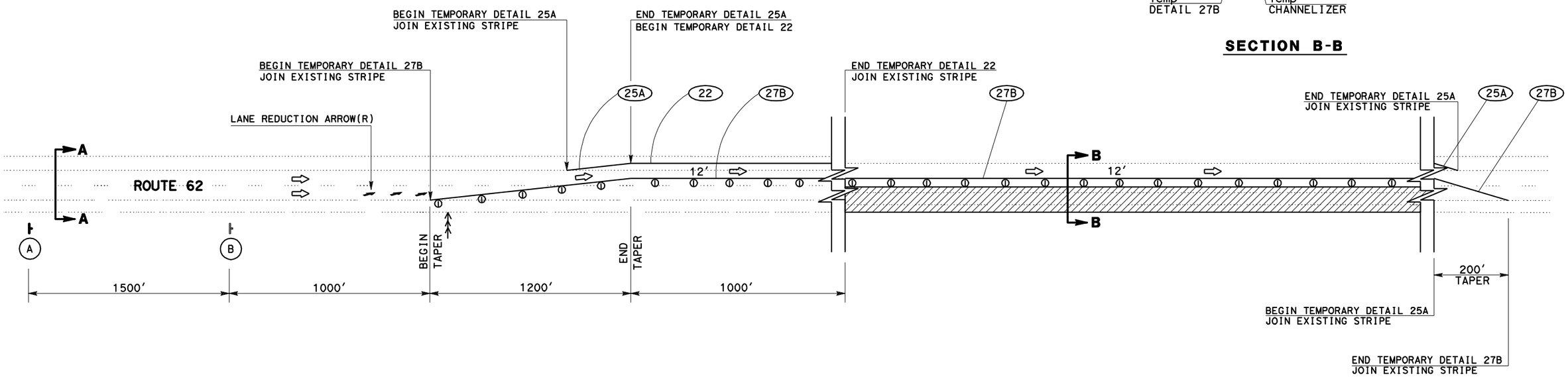

STAGE 1
TRAFFIC HANDLING PLAN

NO SCALE

THIS PLAN ACCURATE FOR TRAFFIC HANDLING WORK ONLY

TH-1

STATE OF CALIFORNIA - DEPARTMENT OF TRANSPORTATION
Caltrans TRAFFIC DESIGN B

FUNCTIONAL SUPERVISOR: LARRY SARTORI
CALCULATED-DESIGNED BY: CHRIS HARDIMON
CHECKED BY: LARRY SARTORI
REVISED BY / DATE REVISED

LAST REVISION 01-31-11
DATE PLOTTED => 01-FEB-2011
TIME PLOTTED => 10:07

Dist	COUNTY	ROUTE	POST MILES TOTAL PROJECT	SHEET No.	TOTAL SHEETS
08	SBd	62	29.7/30.2	20	32

REGISTERED CIVIL ENGINEER 1-31-11 DATE

01-31-11
PLANS APPROVAL DATE

REGISTERED PROFESSIONAL ENGINEER CHRIS HARDIMON No. C66092 Exp. 6/30/12 CIVIL STATE OF CALIFORNIA

THE STATE OF CALIFORNIA OR ITS OFFICERS OR AGENTS SHALL NOT BE RESPONSIBLE FOR THE ACCURACY OR COMPLETENESS OF SCANNED COPIES OF THIS PLAN SHEET.

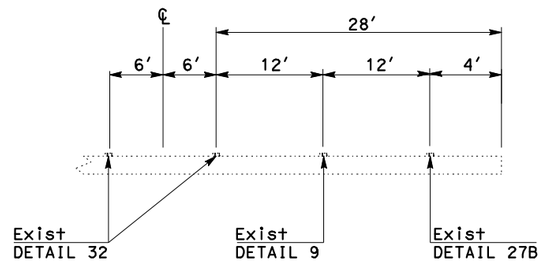

SECTION A-A

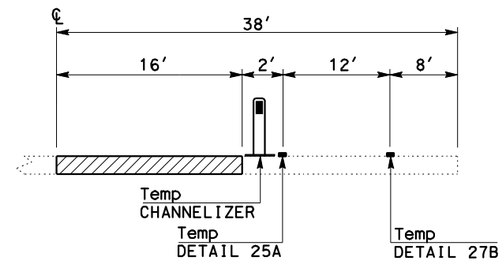

SECTION B-B

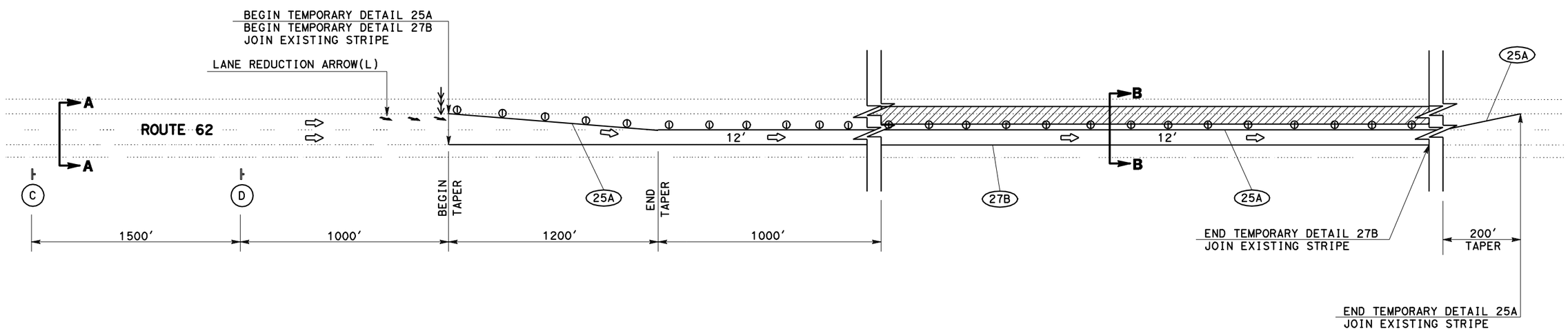

STAGE 2
TRAFFIC HANDLING PLAN
NO SCALE

THIS PLAN ACCURATE FOR TRAFFIC HANDLING WORK ONLY

TH-2

STATE OF CALIFORNIA - DEPARTMENT OF TRANSPORTATION
Caltrans® TRAFFIC DESIGN B

FUNCTIONAL SUPERVISOR: LARRY SARTORI
CALCULATED-DESIGNED BY: CHRIS HARDIMON
CHECKED BY: LARRY SARTORI
REVISED BY
DATE REVISED

LAST REVISION 01-31-11
DATE PLOTTED => 01-FEB-2011
TIME PLOTTED => 10:07

Dist	COUNTY	ROUTE	POST MILES TOTAL PROJECT	SHEET No.	TOTAL SHEETS
08	SBd	62	29.7/30.2	21	32

REGISTERED CIVIL ENGINEER 1-31-11 DATE

01-31-11
PLANS APPROVAL DATE

REGISTERED PROFESSIONAL ENGINEER CHRIS HARDIMON No. C66092 Exp. 6/30/12 CIVIL STATE OF CALIFORNIA

THE STATE OF CALIFORNIA OR ITS OFFICERS OR AGENTS SHALL NOT BE RESPONSIBLE FOR THE ACCURACY OR COMPLETENESS OF SCANNED COPIES OF THIS PLAN SHEET.

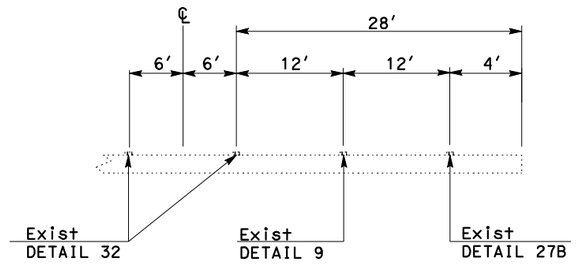

SECTION A-A

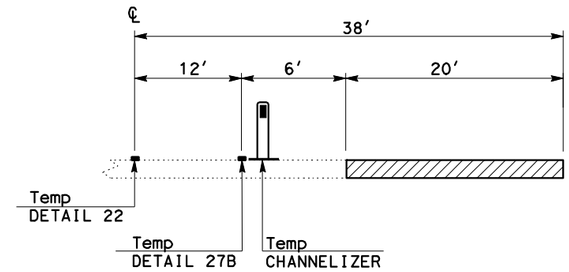

SECTION B-B

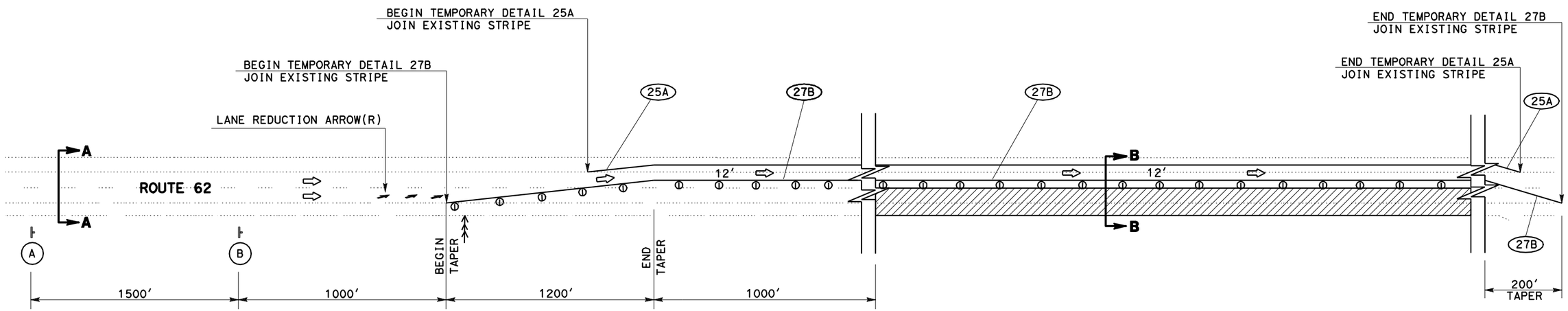

STAGE 3
TRAFFIC HANDLING PLAN

NO SCALE

THIS PLAN ACCURATE FOR TRAFFIC HANDLING WORK ONLY

TH-3

STATE OF CALIFORNIA - DEPARTMENT OF TRANSPORTATION
Caltrans TRAFFIC DESIGN B

FUNCTIONAL SUPERVISOR: LARRY SARTORI
CALCULATED-DESIGNED BY: CHRIS HARDIMON
CHECKED BY: LARRY SARTORI
REVISED BY
DATE REVISED

LAST REVISION 01-31-11
DATE PLOTTED => 01-FEB-2011
TIME PLOTTED => 10:07

Dist	COUNTY	ROUTE	POST MILES TOTAL PROJECT	SHEET No.	TOTAL SHEETS
08	SBd	62	29.7/30.2	22	32

REGISTERED CIVIL ENGINEER 1-31-11 DATE

01-31-11
PLANS APPROVAL DATE

REGISTERED PROFESSIONAL ENGINEER CHRIS HARDIMON No. C66092 Exp. 6/30/12 CIVIL STATE OF CALIFORNIA

THE STATE OF CALIFORNIA OR ITS OFFICERS OR AGENTS SHALL NOT BE RESPONSIBLE FOR THE ACCURACY OR COMPLETENESS OF SCANNED COPIES OF THIS PLAN SHEET.

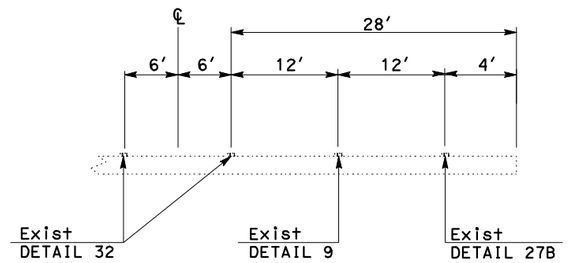

SECTION A-A

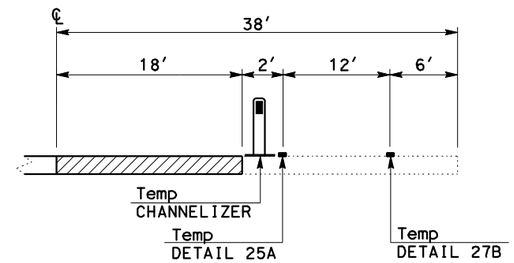

SECTION B-B

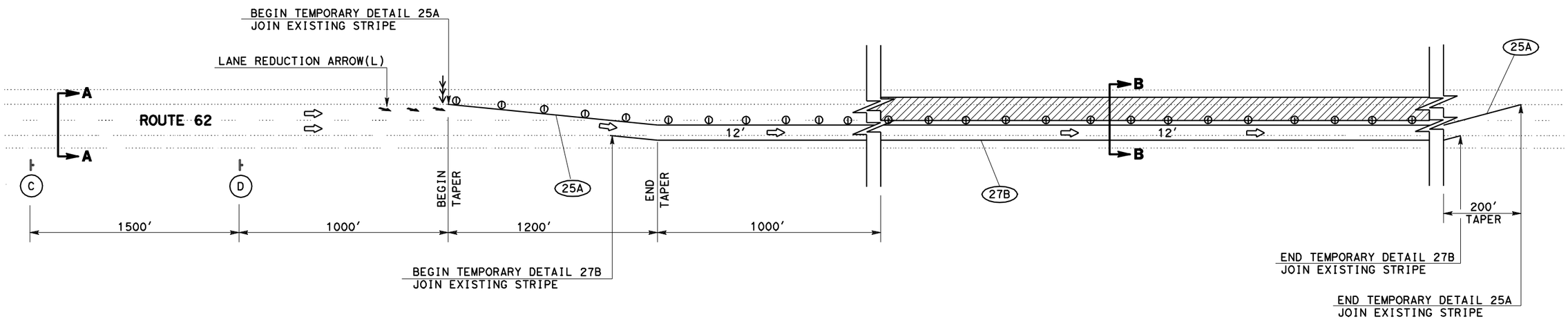

STAGE 3B
TRAFFIC HANDLING PLAN
NO SCALE

THIS PLAN ACCURATE FOR TRAFFIC HANDLING WORK ONLY

TH-4

STATE OF CALIFORNIA - DEPARTMENT OF TRANSPORTATION
Caltrans TRAFFIC DESIGN B

FUNCTIONAL SUPERVISOR: LARRY SARTORI
CALCULATED-DESIGNED BY: CHRIS HARDIMON
CHECKED BY: LARRY SARTORI
REVISED BY
DATE REVISED

LAST REVISION 01-31-11
DATE PLOTTED => 01-FEB-2011
TIME PLOTTED => 10:07

Dist	COUNTY	ROUTE	POST MILES TOTAL PROJECT	SHEET No.	TOTAL SHEETS
08	SBd	62	29.7/30.2	23	32

REGISTERED CIVIL ENGINEER 1-31-11 DATE

01-31-11
PLANS APPROVAL DATE

REGISTERED PROFESSIONAL ENGINEER CHRIS HARDIMON No. C66092 Exp. 6/30/12 CIVIL STATE OF CALIFORNIA

THE STATE OF CALIFORNIA OR ITS OFFICERS OR AGENTS SHALL NOT BE RESPONSIBLE FOR THE ACCURACY OR COMPLETENESS OF SCANNED COPIES OF THIS PLAN SHEET.

TEMPORARY PAVEMENT DELINEATION QUANTITIES

SHEET No.	LOCATION	DETAIL No. OR PAVEMENT MARKING	TEMPORARY PAVEMENT MARKER RETROREFLECTIVE TYPE		TEMPORARY TRAFFIC STRIP (PAINT)		TEMPORARY PAVEMENT MARKING PAINT (2-COAT)	CHANNELIZER (SURFACE MOUNTED)
			TYPE D	TYPE H	4 INCH YELLOW	4 INCH WHITE		
			EA		LF		SQ FT	EA
TH-1	STAGE 1	22	170	-	2,000	-	-	-
TH-1	STAGE 1	25A	-	44	1,000	-	-	-
TH-1	STAGE 1	27B	-	-	-	8,720	-	-
TH-1	STAGE 1	CHANNELIZERS	-	-	-	-	-	168
TH-1	STAGE 1	TYPE VI ARROW (R)	-	-	-	-	252	-
TH-2	STAGE 2	25A	-	366	8,720	-	-	-
TH-2	STAGE 2	27B	-	-	-	8,320	-	-
TH-2	STAGE 2	CHANNELIZERS	-	-	-	-	-	168
TH-2	STAGE 2	TYPE VI ARROW (L)	-	-	-	-	252	-
TH-3	STAGE 3A	25A	-	146	6,920	-	-	-
TH-3	STAGE 3A	27B	-	-	-	8,720	-	-
TH-3	STAGE 3A	CHANNELIZERS	-	-	-	-	-	168
TH-3	STAGE 3A	TYPE VI ARROW (R)	-	-	-	-	252	-
TH-4	STAGE 3B	25A	-	366	8,720	-	-	-
TH-4	STAGE 3B	27B	-	-	-	6,920	-	-
TH-4	STAGE 3B	CHANNELIZERS	-	-	-	-	-	168
TH-4	STAGE 3B	TYPE VI ARROW (L)	-	-	-	-	252	-
SUBTOTAL			170	922	27,360	32,680	-	-
TOTAL			1,092		60,040		1,008	672

TRAFFIC HANDLING QUANTITIES

THQ-1

STATE OF CALIFORNIA - DEPARTMENT OF TRANSPORTATION
Caltrans TRAFFIC DESIGN B

FUNCTIONAL SUPERVISOR: LARRY SARTORI
CALCULATED-DESIGNED BY: CHRIS HARDIMON
CHECKED BY: LARRY SARTORI
REVISED BY
DATE REVISED

LAST REVISION 01-31-11
DATE PLOTTED => 01-FEB-2011
TIME PLOTTED => 10:07

Dist	COUNTY	ROUTE	POST MILES TOTAL PROJECT	SHEET No.	TOTAL SHEETS
08	SBd	62	29.7/30.2	24	32

REGISTERED CIVIL ENGINEER 1-31-11 DATE

01-31-11
PLANS APPROVAL DATE

REGISTERED PROFESSIONAL ENGINEER CHRIS HARDIMON No. C66092 Exp. 6/30/12 CIVIL STATE OF CALIFORNIA

THE STATE OF CALIFORNIA OR ITS OFFICERS OR AGENTS SHALL NOT BE RESPONSIBLE FOR THE ACCURACY OR COMPLETENESS OF SCANNED COPIES OF THIS PLAN SHEET.

NOTES:

1. ALL PAVEMENT MARKINGS SHALL BE THERMOPLASTIC.
2. EXISTING SIGN LOCATIONS SHOWN ARE APPROXIMATE.
3. NEW SIGN LOCATIONS SHOWN ARE APPROXIMATE. THE EXACT SIGN LOCATIONS WILL BE DETERMINED BY THE ENGINEER.
4. LIMIT LINES ARE 12" WHITE THERMOPLASTIC.
5. FOR ROADSIDE SIGN DESCRIPTIONS, SEE SHEET SQ-1.

LEGEND

- ROADSIDE SIGN - ONE POST
- (X-X) ROADSIDE SIGN (SHEET NO - SIGN NUMBER)
- TYPE IV (L) ARROW
- STOP PAVEMENT MARKING

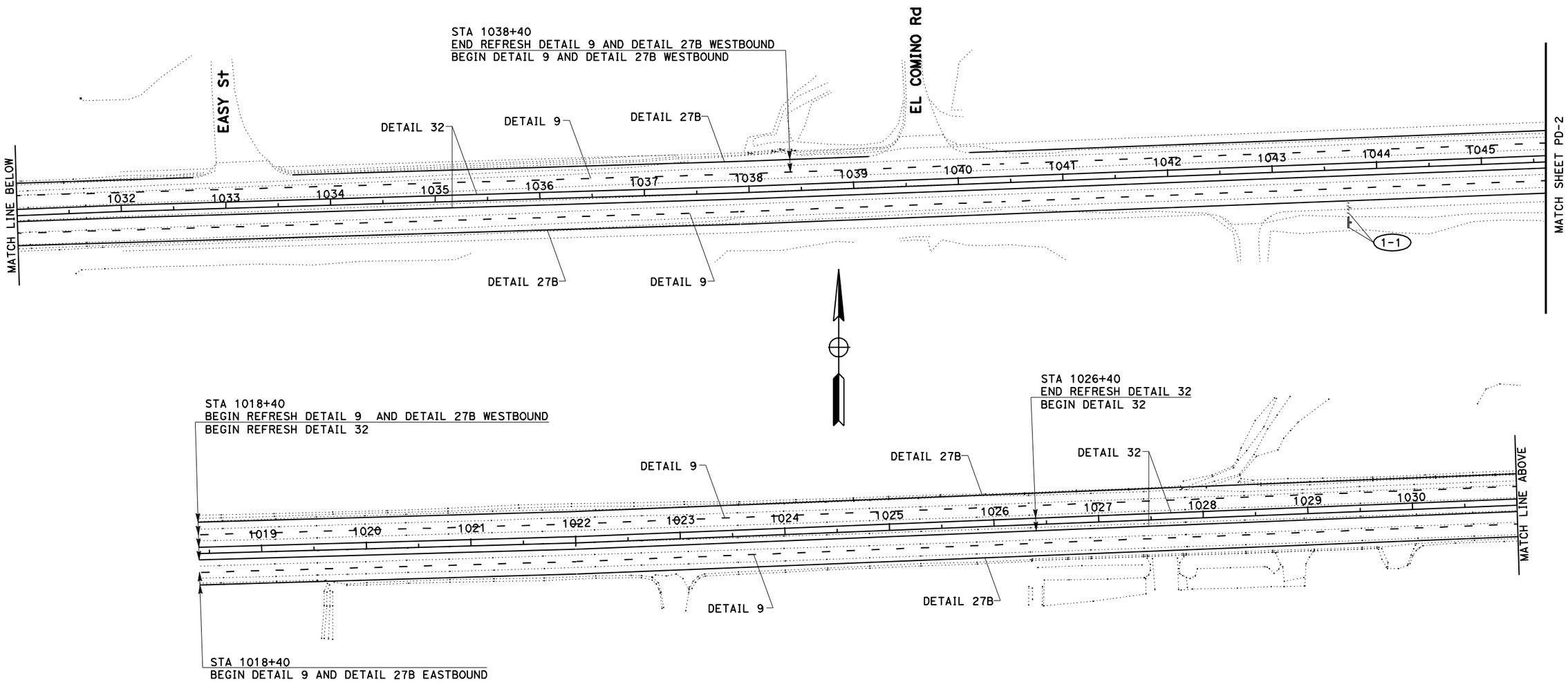

PAVEMENT DELINEATION AND SIGN PLAN

NO SCALE

THIS PLAN ACCURATE FOR PAVEMENT DELINEATION AND SIGN WORK ONLY

PD-1

REVISED BY	DATE REVISED

CHRIS HARDIMON — CALCULATED-DESIGNED BY
LARRY SARTORI — CHECKED BY
LARRY SARTORI — FUNCTIONAL SUPERVISOR

STATE OF CALIFORNIA - DEPARTMENT OF TRANSPORTATION
Caltrans TRAFFIC DESIGN B

LAST REVISION 01-31-11
DATE PLOTTED => 01-FEB-2011
TIME PLOTTED => 10:08

Dist	COUNTY	ROUTE	POST MILES TOTAL PROJECT	SHEET No.	TOTAL SHEETS
08	SBd	62	29.7/30.2	25	32

REGISTERED CIVIL ENGINEER 1-31-11 DATE

01-31-11
PLANS APPROVAL DATE

REGISTERED PROFESSIONAL ENGINEER CHRIS HARDIMON No. C66092 Exp. 6/30/12 CIVIL STATE OF CALIFORNIA

THE STATE OF CALIFORNIA OR ITS OFFICERS OR AGENTS SHALL NOT BE RESPONSIBLE FOR THE ACCURACY OR COMPLETENESS OF SCANNED COPIES OF THIS PLAN SHEET.

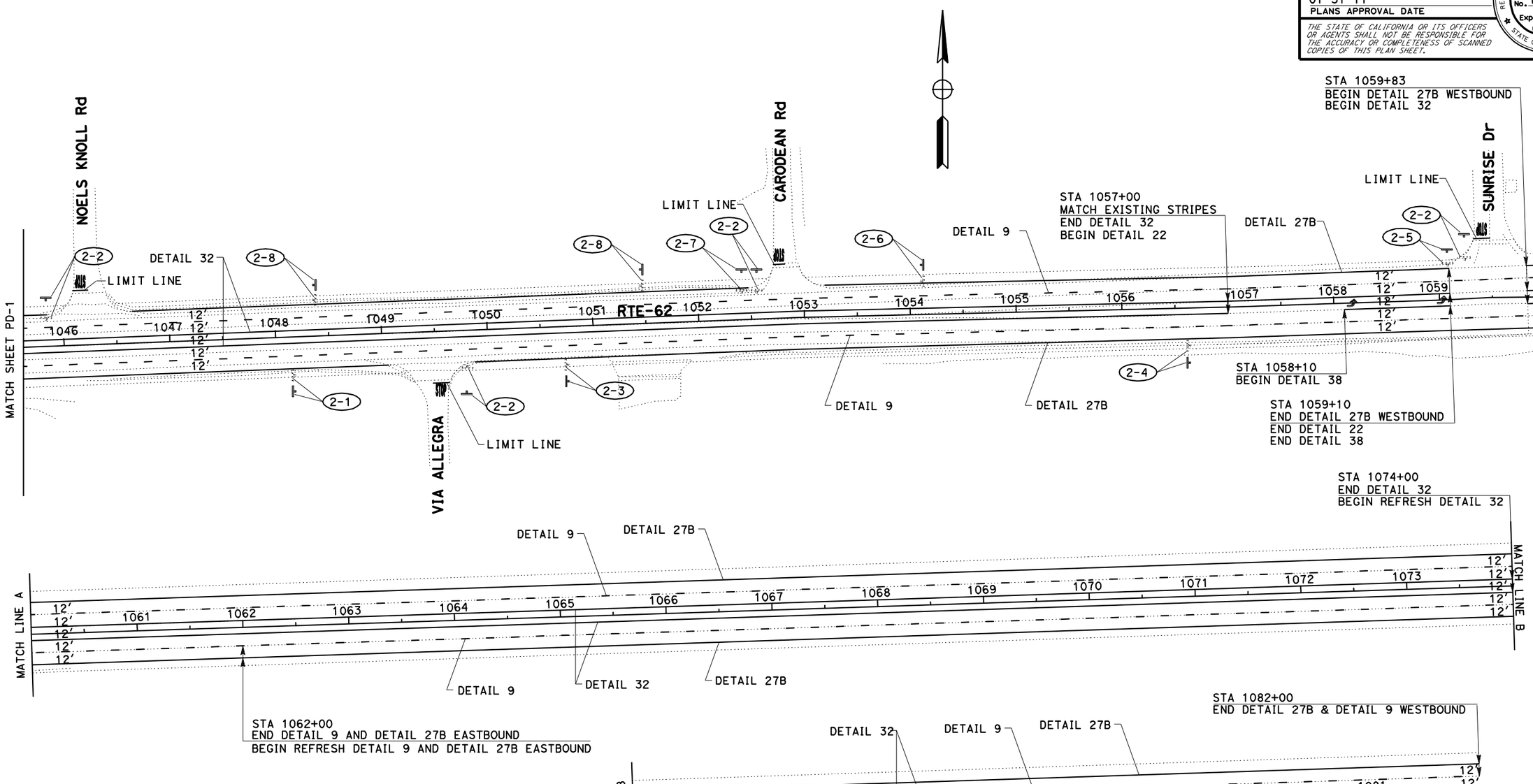

PAVEMENT DELINEATION AND SIGN PLAN

NO SCALE

THIS PLAN ACCURATE FOR PAVEMENT DELINEATION AND SIGN WORK ONLY

PD-2

REVISED BY	DATE REVISED
CHRIS HARDIMON	LARRY SARTORI
CALCULATED-DESIGNED BY	CHECKED BY
FUNCTIONAL SUPERVISOR	LARRY SARTORI

STATE OF CALIFORNIA - DEPARTMENT OF TRANSPORTATION
Caltrans TRAFFIC DESIGN B

LAST REVISION 01-31-11 DATE PLOTTED => 01-FEB-2011 TIME PLOTTED => 10:08

Dist	COUNTY	ROUTE	POST MILES TOTAL PROJECT	SHEET No.	TOTAL SHEETS
08	SBd	62	29.7/30.2	26	32

REGISTERED CIVIL ENGINEER 1-31-11 DATE

01-31-11
PLANS APPROVAL DATE

REGISTERED PROFESSIONAL ENGINEER CHRIS HARDIMON No. C66092 Exp. 6/30/12 CIVIL STATE OF CALIFORNIA

THE STATE OF CALIFORNIA OR ITS OFFICERS OR AGENTS SHALL NOT BE RESPONSIBLE FOR THE ACCURACY OR COMPLETENESS OF SCANNED COPIES OF THIS PLAN SHEET.

PAVEMENT DELINEATION QUANTITIES

SHEET No.	LOCATION	DETAIL No. OR PAVEMENT MARKING	REMOVE PAVEMENT MARKERS	REMOVE TRAFFIC STRIP		PAVEMENT MARKER RETROREFLECTIVE TYPE		THERMOPLASTIC TRAFFIC STRIP (SPRAYABLE)			THERMOPLASTIC PAVEMENT MARKERS
				4 INCH YELLOW	4 INCH WHITE	TYPE D	TYPE H	4 INCH YELLOW	4 INCH WHITE	8 INCH WHITE	
			EA	LF	LF	EA		LF			SQ FT
-	FROM PM 29.7 TO 30.2	9	102	-	4,800	-	184	-	12,720	-	-
-	FROM PM 29.7 TO 30.1	22	-	-	-	12	-	210	-	-	-
-	FROM PM 29.7 TO 30.2	27B	-	-	4,800	-	-	-	12,720	-	-
-	FROM PM 29.7 TO 30.2	32	296	7,000	-	498	-	12,720	-	-	-
-	FROM PM 29.7 TO 30.2	38	-	-	-	-	6	-	-	100	-
-	FROM PM 29.7 TO 30.2	TYPE IV (L) ARROW	-	-	-	-	-	-	-	-	30
-	FROM PM 29.7 TO 30.2	LIMIT LINE	-	-	-	-	-	-	-	-	48
-	FROM PM 29.7 TO 30.2	STOP	-	-	-	-	-	-	-	-	88
SUBTOTAL			-	7,000	9,600	510	190	12,930	25,440	100	166
TOTAL			398	7,000	9,600	700		38,470			166

PAVEMENT DELINEATION QUANTITIES

PDQ-1

REVISED BY | DATE REVISED

CHRIS HARDIMON | LARRY SARTORI

CALCULATED-DESIGNED BY | CHECKED BY

FUNCTIONAL SUPERVISOR: LARRY SARTORI

STATE OF CALIFORNIA - DEPARTMENT OF TRANSPORTATION
Caltrans TRAFFIC DESIGN B

LAST REVISION 01-31-11 | DATE PLOTTED => 01-FEB-2011 | TIME PLOTTED => 10:08

Dist	COUNTY	ROUTE	POST MILES TOTAL PROJECT	SHEET No.	TOTAL SHEETS
08	SBd	62	29.7/30.2	27	32

REGISTERED CIVIL ENGINEER 1-31-11 DATE

01-31-11
PLANS APPROVAL DATE

REGISTERED PROFESSIONAL ENGINEER CHRIS HARDIMON No. C66092 Exp. 6/30/12 CIVIL STATE OF CALIFORNIA

THE STATE OF CALIFORNIA OR ITS OFFICERS OR AGENTS SHALL NOT BE RESPONSIBLE FOR THE ACCURACY OR COMPLETENESS OF SCANNED COPIES OF THIS PLAN SHEET.

ROADSIDE SIGN QUANTITIES

SIGN No.	SIGN CODE	RELOCATE ROADSIDE SIGN	REMARKS
		EA	
1-1	W2-2L AND W16-8	1	SIDE ROAD SYMBOL/NOELS KNOLL ROAD
2-1	W2-2R AND G7-1(CA)	1	SIDE ROAD SYMBOL/VIA ALLEGRA
2-2	(4) R1-1	4	STOP
2-3	W2-2L AND G7-1(CA)	1	SIDE ROAD SYMBOL/CARODEAN ROAD
2-4	W2-2L AND W16-8	1	SIDE ROAD SYMBOL/SUNRISE ROAD
2-5	G7-1(CA)	1	ROUTE 62/SUNRISE ROAD
2-6	W2-2R AND G7-1(CA)	1	SIDE ROAD SYMBOL/CARODEAN ROAD
2-7	G7-1(CA)	1	ROUTE 62/CARODEAN ROAD
2-8	W2-2L AND G7-1(CA)	1	SIDE ROAD SYMBOL/VIA ALLEGRA
2-9	W2-2R AND W16-8	1	SIDE ROAD SYMBOL/NOELS KNOLL ROAD
TOTAL		13	-

NOTE:

1. EXACT LOCATION & POSITION OF ROADSIDE SIGNS TO BE DETERMINED BY THE ENGINEER.
   CALIFORNIA SIGN CODES ARE DESIGNATED BY (CA); OTHERWISE, FEDERAL SIGN CODES ARE SHOWN.

SIGN QUANTITIES

SQ-1

REVISED BY | DATE REVISED
CHRIS HARDIMON | LARRY SARTORI
CALCULATED-DESIGNED BY | CHECKED BY
FUNCTIONAL SUPERVISOR: LARRY SARTORI
STATE OF CALIFORNIA - DEPARTMENT OF TRANSPORTATION
Caltrans TRAFFIC DESIGN B

LAST REVISION 01-31-11 | DATE PLOTTED => 01-FEB-2011 | TIME PLOTTED => 10:08

Dist	COUNTY	ROUTE	POST MILES TOTAL PROJECT	SHEET No.	TOTAL SHEETS
08	SBd	62	29.7/30.2	28	32

REGISTERED CIVIL ENGINEER 1-31-11 DATE

01-31-11
PLANS APPROVAL DATE

REGISTERED PROFESSIONAL ENGINEER DU LU No. 60886 Exp. 12/31/12 CIVIL STATE OF CALIFORNIA

THE STATE OF CALIFORNIA OR ITS OFFICERS OR AGENTS SHALL NOT BE RESPONSIBLE FOR THE ACCURACY OR COMPLETENESS OF SCANNED COPIES OF THIS PLAN SHEET.

EARTHWORK AND CLEARING & GRUBBING

LOCATION	ROADWAY EXCAVATION	CLEARING & GRUBBING
	CY	LS
ROUTE 62	1384	1
TOTAL	1384	1

ROADWAY STRUCTURAL SECTION

LOCATION ROUTE 62	AB CLASS 2	HMA (TYPE A)	PRIME COAT (LIQUID ASPHALT)	TACK COAT (ASPHALTIC EMULSION)			COLD PLANE 0.10' Max
STA 1040+40.4 TO STA 1059+83.2	CY	TON	TON	LIFTS	AREA SF	TON	SQYD
TRAVEL WAY SECTION	514	1,113	4	2	30,000	3	—
SHOULDER SECTION	422	1,085	—	—	—	—	—
OVERLAY		3,123	—	2	93,800	8	10,409
TOTAL	936	5,321	4	—		11	10,409

* - SEE SHEET DQ-1 FOR ADDITIONAL HMA QUANTITIES

MINOR CONCRETE (DRIVEWAY)

LOCATION ROUTE 62		NOTES
	CY	
STA 1051+00 TO STA 1052+00	19	SEE SHEET L-2
TOTAL	19	

SUMMARY OF QUANTITIES

Q-1

STATE OF CALIFORNIA - DEPARTMENT OF TRANSPORTATION
DESIGN
FUNCTIONAL SUPERVISOR: DU LU
CALCULATED-DESIGNED BY: RICK LAM
CHECKED BY: HARIVADAN DESAI
REVISED BY
DATE REVISED

LAST REVISION 01-31-11
DATE PLOTTED => 01-FEB-2011
TIME PLOTTED => 10:08

DIST	COUNTY	ROUTE	POST MILES TOTAL PROJECT	SHEET NO.	TOTAL SHEETS
08	SBd	62	29.7/30.2	29	32

REGISTERED CIVIL ENGINEER

November 17, 2006
PLANS APPROVAL DATE

REGISTERED PROFESSIONAL ENGINEER Michael Janzen No. 44788 Exp. 03-31-08 CIVIL STATE OF CALIFORNIA

The State of California or its officers or agents shall not be responsible for the accuracy or completeness of electronic copies of this plan sheet.

To accompany plans dated January 31, 2011

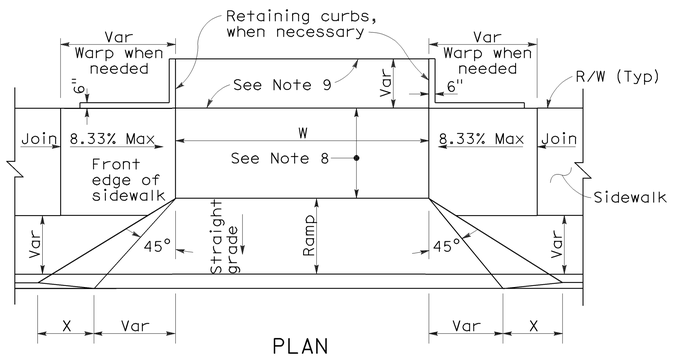

PLAN

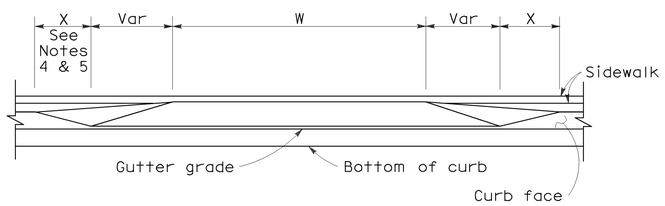

ELEVATION

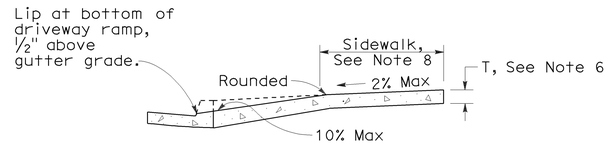

CASE A

Typical driveway, sidewalk not depressed

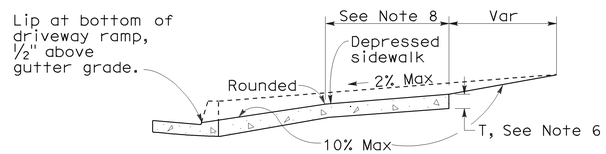

CASE B

Driveway with depressed sidewalk

SECTIONS

CURB QUANTITIES

TYPE	CUBIC YARDS PER LINEAR FOOT
A1-6	0.02585
A1-8	0.03084
A2-6	0.05903
A2-8	0.06379
A3-6	0.01036
A3-8	0.01435
B1-4	0.02185
B1-6	0.02930
B2-4	0.05515
B2-6	0.06171
B3-4	0.00641
B3-6	0.01074
B4	0.05709
D-4	0.04083
D-6	0.06804
E	0.06661

TABLE A

CURB TYPE	DIMENSIONS "H1"	"H2"	"W1"	"W2"
A1-6	1'-2"	6"	7½"	1½"
A1-8	1'-4"	8"	8"	2"
A2-6	1'-0"	6"	2'-7½"	1½"
A2-8	1'-2"	8"	2'-8"	2"
A3-6	6"	5"	7¼"	1¼"
A3-8	8"	7"	7¾"	1¾"
B1-4	1'-0"	4"	7½"	2½"
B1-6	1'-2"	6"	9"	4"
B2-4	10"	4"	2'-7½"	2½"
B2-6	1'-0"	6"	2'-9"	4"
B3-4	4"	3"	7"	2"
B3-6	6"	5"	8½"	3½"
D-4	10"	4"	1'-6"	1'-1"
D-6	1'-0"	6"	2'-2"	1'-8"

DRIVEWAYS

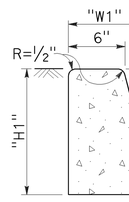

TYPE A1 CURBS

See Table A

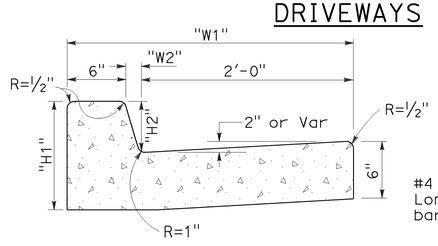

TYPE A2 CURBS

See Table A

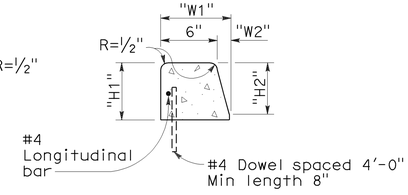

TYPE A3 CURBS

Superimposed on existing pavement
See Table A

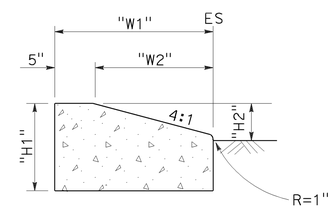

TYPE D CURBS

See Table A

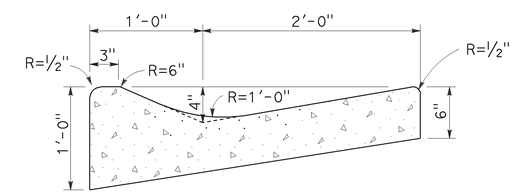

TYPE E CURB

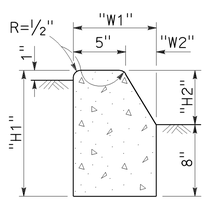

TYPE B1 CURBS

See Table A

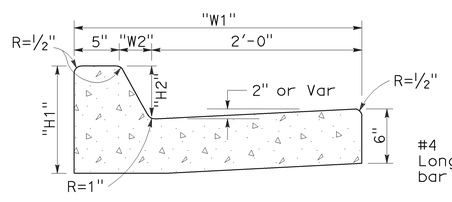

TYPE B2 CURBS

See Table A

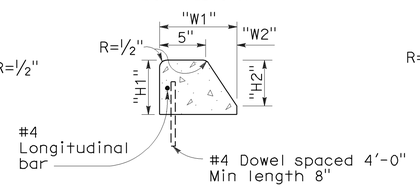

TYPE B3 CURBS

Superimposed on existing pavement
See Table A

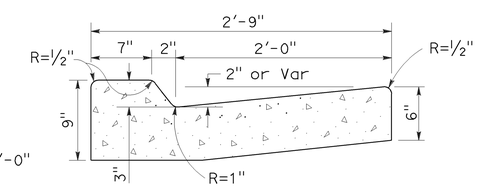

TYPE B4 CURBS

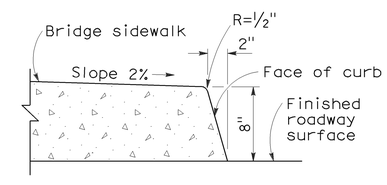

TYPE H CURB

On Bridges

CURBS

NOTES:

1. Case A driveway section typically applies.
2. Use Case B driveway section when ramp slopes would exceed 10% in Case A.
3. Use Case B driveway section when sidewalk cross slope would exceed 2% in Case A.
4. X=3'-0" except for curb heights over 10" where 4:1 slopes shall be used on curb slope.
5. X is a variable when sidewalk is located where wheelchairs may traverse the surface. Slopes shall not exceed 8.33%.
6. Sidewalk and ramp thickness "T" at driveway shall be 4" for residental and 6" for commercial.
7. Difference in slope of the driveway ramp and the slope of a line between the gutter and a point on the roadway 5'-0" from gutter line shall not exceed 15%. Reduce driveway ramp slope, not gutter slope, where required.
8. Minimum width of clear passageway for sidewalk shall be 4'-0".
9. Retaining curbs and acquisition of construction easement may be necessary for narrow sidewalks or curb heights in excess of 6".
10. Across the pedestrian route at curb ramp locations, the gutter pan slope shall not exceed 1" of depth for each 2'-0" of width.

STATE OF CALIFORNIA
DEPARTMENT OF TRANSPORTATION

CURBS AND DRIVEWAYS

NO SCALE

RSP A87A DATED NOVEMBER 17, 2006 SUPERSEDES STANDARD PLAN A87A DATED MAY 1, 2006 - PAGE 113 OF THE STANDARD PLANS BOOK DATED MAY 2006.

REVISED STANDARD PLAN RSP A87A

2006 REVISED STANDARD PLAN RSP A87A

10-25-06

DIST	COUNTY	ROUTE	POST MILES TOTAL PROJECT	SHEET NO.	TOTAL SHEETS
08	SBd	62	29.7/30.2	30	32

Randell D. Hiatt
REGISTERED CIVIL ENGINEER

June 6, 2008
PLANS APPROVAL DATE

REGISTERED PROFESSIONAL ENGINEER
Randell D. Hiatt
No. C50200
Exp. 6-30-09
CIVIL
STATE OF CALIFORNIA

The State of California or its officers or agents shall not be responsible for the accuracy or completeness of electronic copies of this plan sheet.

To accompany plans dated January 31, 2011

2006 REVISED STANDARD PLAN RSP T1A

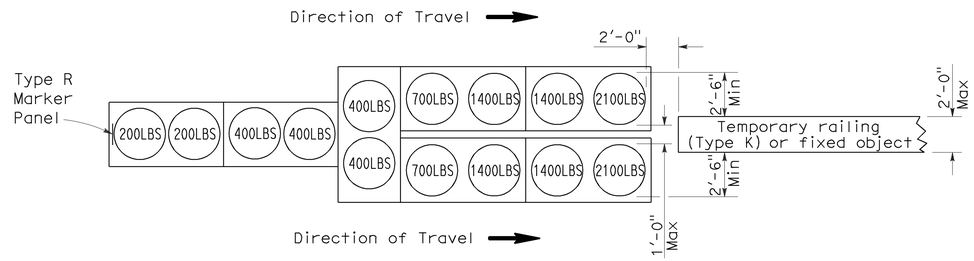

ARRAY 'TU14'

Approach speed 45 mph or more

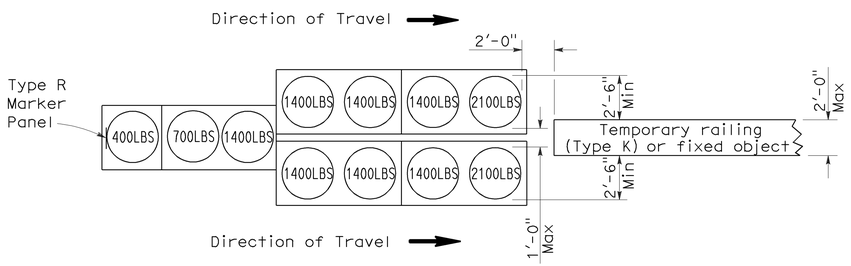

ARRAY 'TU11'

Approach speed less than 45 mph

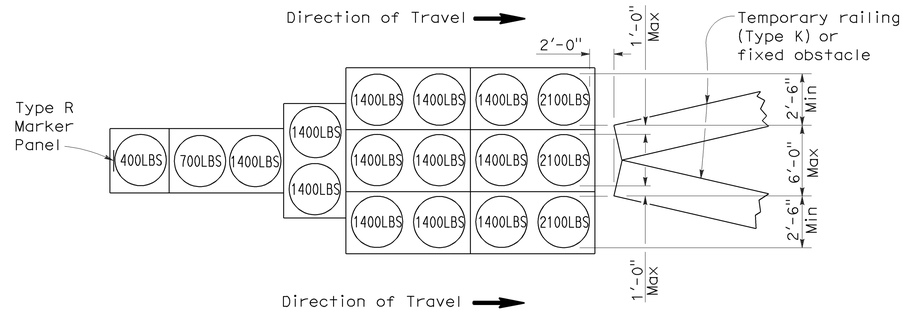

ARRAY 'TU17'

Approach speed less than 45 mph

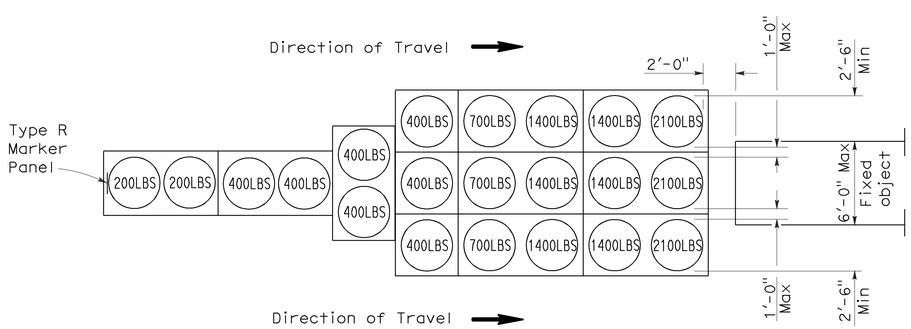

ARRAY 'TU21'

Approach speed 45 mph or more

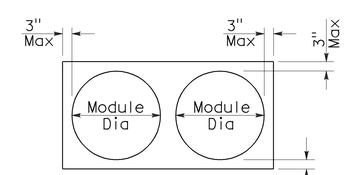

PLAN

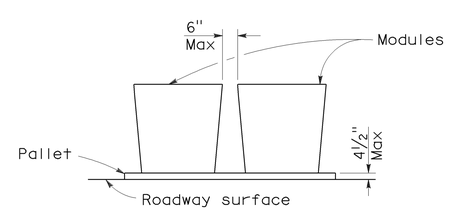

ELEVATION

CRASH CUSHION PALLET DETAIL

See Note 7

NOTES:

1. (XXX) Indicates sand filled module location and weight of sand in pounds for each module. Module spacing is based on the greater diameter of the module.
2. All sand weights are nominal.
3. Temporary crash cushion arrays shall not encroach on the traveled way.
4. Place the top of Type R marker panel 1" below the module lid.
5. Refer to Standard Plan A73B for marker details.
6. Approach speeds indicated conform to NCHRP 350 Report criteria.
7. Use of pallets is optional.

STATE OF CALIFORNIA
DEPARTMENT OF TRANSPORTATION

TEMPORARY CRASH CUSHION, SAND FILLED (UNIDIRECTIONAL)

NO SCALE

RSP T1A DATED JUNE 6, 2008 SUPERSEDES STANDARD PLAN T1A
DATED MAY 1, 2006 - PAGE 211 OF THE STANDARD PLANS BOOK DATED MAY 2006.

REVISED STANDARD PLAN RSP T1A

5-15-08

DIST	COUNTY	ROUTE	POST MILES TOTAL PROJECT	SHEET NO.	TOTAL SHEETS
08	SBd	62	29.7/30.2	31	32

Randell D. Hiatt
REGISTERED CIVIL ENGINEER

June 6, 2008
PLANS APPROVAL DATE

REGISTERED PROFESSIONAL ENGINEER
Randell D. Hiatt
No. C50200
Exp. 6-30-09
CIVIL
STATE OF CALIFORNIA

The State of California or its officers or agents shall not be responsible for the accuracy or completeness of electronic copies of this plan sheet.

To accompany plans dated January 31, 2011

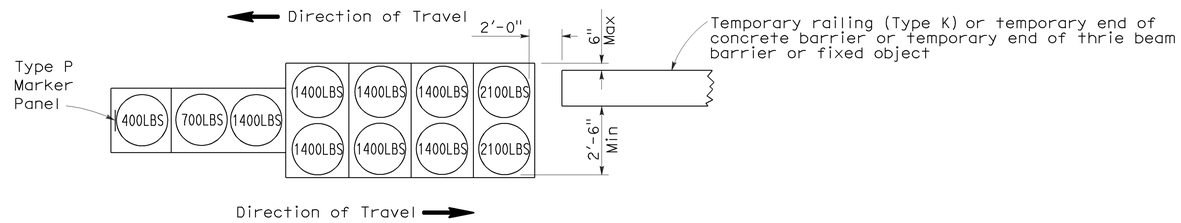

ARRAY 'TB11'

Approach speed less than 45 mph

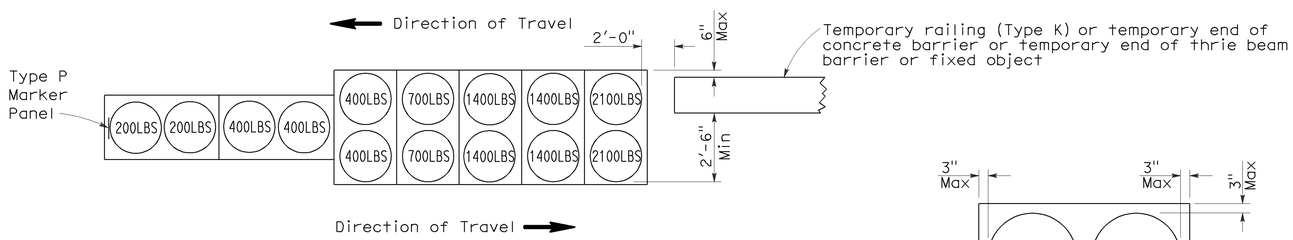

ARRAY 'TB14'

Approach speed 45 mph or more

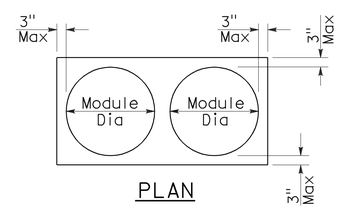

PLAN

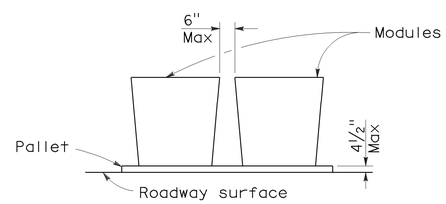

ELEVATION

CRASH CUSHION PALLET DETAIL

See Note 7

NOTES:

1. (XXX) Indicates sand filled module location and weight of sand in pounds for each module. Module spacing is based on the greater diameter of the module.
2. All sand weights are nominal.
3. Temporary crash cushion arrays shall not encroach on the traveled way.
4. Place the Type P marker panel so that the bottom of the panel rests upon the pallet.
5. Refer to Standard Plan A73B for marker details.
6. Approach speeds indicated conform to NCHRP 350 Report criteria.
7. Use of pallets is optional.

STATE OF CALIFORNIA
DEPARTMENT OF TRANSPORTATION

TEMPORARY CRASH CUSHION, SAND FILLED (BIDIRECTIONAL)

NO SCALE

RSP T1B DATED JUNE 6, 2008 SUPERSEDES STANDARD PLAN T1B
DATED MAY 1, 2006 - PAGE 212 OF THE STANDARD PLANS BOOK DATED MAY 2006.

REVISED STANDARD PLAN RSP T1B

2006 REVISED STANDARD PLAN RSP T1B

5-15-08

DIST	COUNTY	ROUTE	POST MILES TOTAL PROJECT	SHEET NO.	TOTAL SHEETS
08	SBd	62	29.7/30.2	32	32

Randell D. Hiatt
REGISTERED CIVIL ENGINEER

June 6, 2008
PLANS APPROVAL DATE

REGISTERED PROFESSIONAL ENGINEER
Randell D. Hiatt
No. C50200
Exp. 6-30-09
CIVIL
STATE OF CALIFORNIA

The State of California or its officers or agents shall not be responsible for the accuracy or completeness of electronic copies of this plan sheet.

To accompany plans dated January 31, 2011

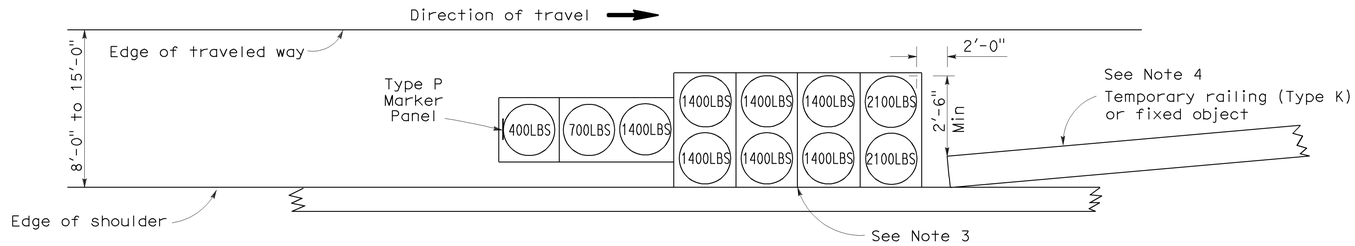

ARRAY 'TS11'

Approach speed less than 45 mph
See Note 9

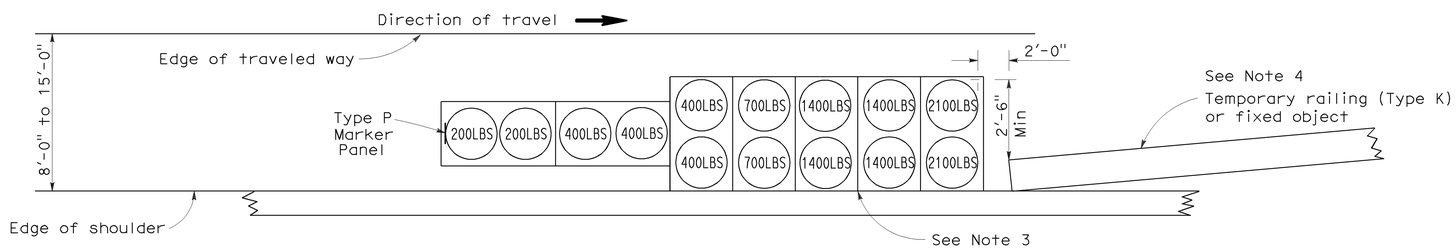

ARRAY 'TS14'

Approach speed 45 mph or more
See Note 9

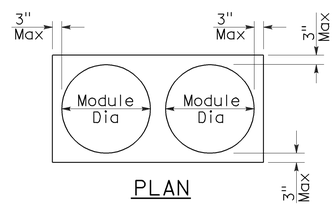

PLAN

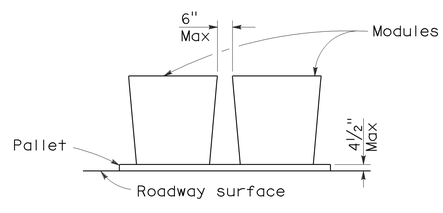

ELEVATION

CRASH CUSHION PALLET DETAIL

See Note 11

NOTES:

1. (XXX) Indicates sand filled module location and weight of sand in pounds for each module. Module spacing is based on the greater diameter of the module.
2. All sand weights are nominal.
3. The temporary crash cushion arrays shown on this plan shall be used only in locations where there will be traffic on one side of the temporary crash cushion array.
4. If the fixed object or approach end of the temporary railing is less than 15'-0" from the edge of traveled way, a temporary crash cushion is required in a construction or work zone.
5. Temporary crash cushion arrays shall not encroach on the traveled way.
6. Arrays for median shoulders shall conform to details shown on this plan for outside shoulders.
7. Place the Type P marker panel so that the bottom of the panel rests upon the pallet and faces traffic.
8. Refer to Standard Plan A73B for marker details.
9. For shoulder widths less than 8'-0", appropriate approved crash cushion protection, other than sand filled modules, shall be provided at fixed objects and at approach ends of temporary railing. The specific type of crash cushion shall be as shown on the project plans or as specified in the Special Provisions, or if not shown on the project plans or specified in the Special Provisions, shall be as approved by the Engineer.
10. Approach speeds indicated conform to NCHRP 350 Report criteria.
11. Use of pallets is optional.

STATE OF CALIFORNIA
DEPARTMENT OF TRANSPORTATION

TEMPORARY CRASH CUSHION, SAND FILLED (SHOULDER INSTALLATIONS)

NO SCALE

RSP T2 DATED JUNE 6, 2008 SUPERSEDES STANDARD PLAN T2
DATED MAY 1, 2006 - PAGE 213 OF THE STANDARD PLANS BOOK DATED MAY 2006.

REVISED STANDARD PLAN RSP T2

2006 REVISED STANDARD PLAN RSP T2

5-15-08