| Dist | COUNTY | ROUTE | POST MILES TOTAL PROJECT | SHEET No. | TOTAL SHEETS |
|---|---|---|---|---|---|
| 07 | LA | 5, 57, 110, 405, 605 | Var | 1 | 63 |

ACSTP-X037(155)E

STATE OF CALIFORNIA
# DEPARTMENT OF TRANSPORTATION

# PROJECT PLANS FOR CONSTRUCTION ON
# STATE HIGHWAY

## IN LOS ANGELES COUNTY
## AT VARIOUS LOCATIONS

INDEX OF PLANS


| SHEET No. | DESCRIPTION |
|---|---|
| 1 | TITLE AND LOCATION MAP |
| 2 | LOCATION OF CONSTRUCTIONS |
| 3-8 | LAYOUTS |
| 9-15 | CONSTRUCTION DETAILS |
| 16-21 | UTILITY PLANS |
| 22 | CONSTRUCTION AREA SIGNS |
| 23-28 | TRAFFIC HANDLING PLANS |
| 29-32 | TRAFFIC HANDLING DETAILS |
| 33-40 | PAVEMENT DELINEATION AND SIGN PLANS AND QUANTITIES |
| 41 | SUMMARY OF QUANTITIES |
| 42-46 | ELECTRICAL PLANS |
| 47-63 | REVISED AND NEW STANDARD PLANS |


THE STANDARD PLANS LIST APPLICABLE TO THIS CONTRACT IS INCLUDED IN THE NOTICE TO BIDDERS AND SPECIAL PROVISIONS BOOK.

TO BE SUPPLEMENTED BY STANDARD PLANS DATED MAY 2006

LOCATION MAP

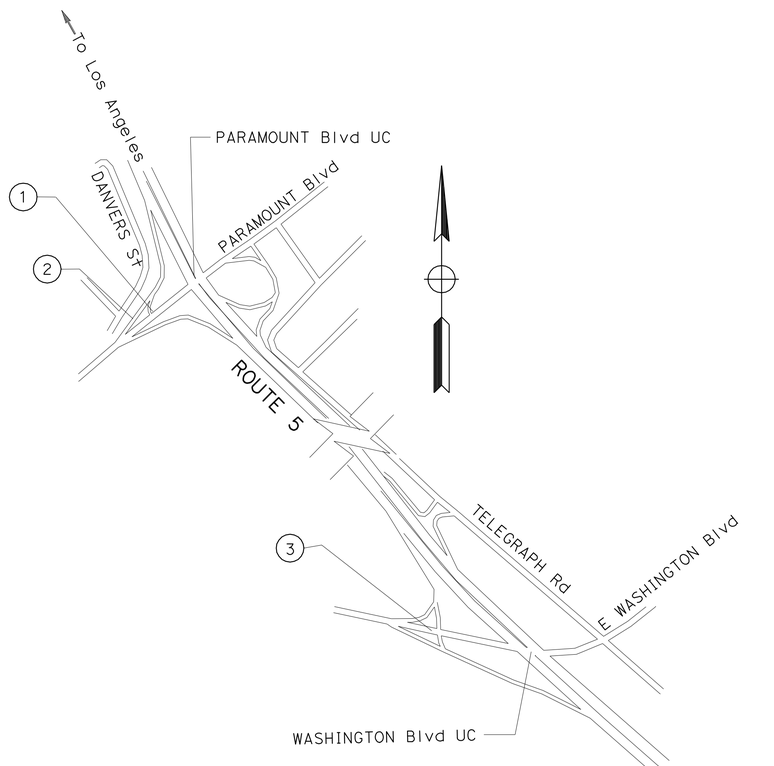


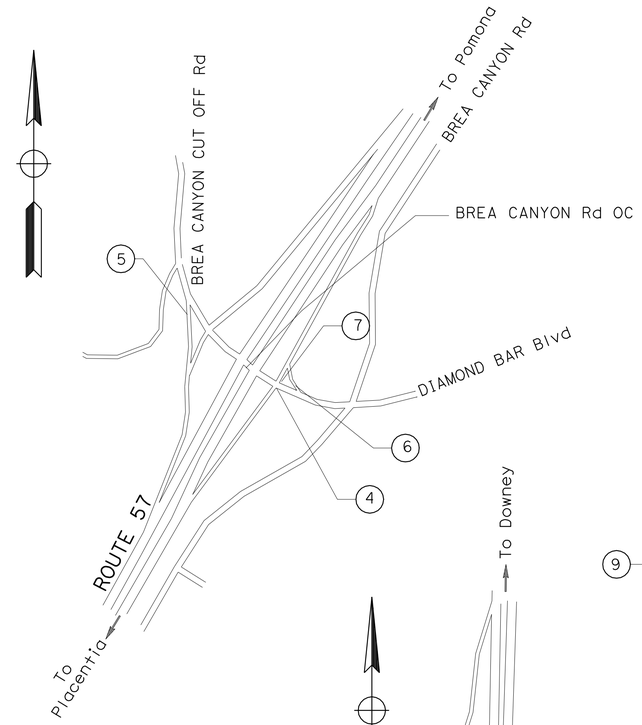


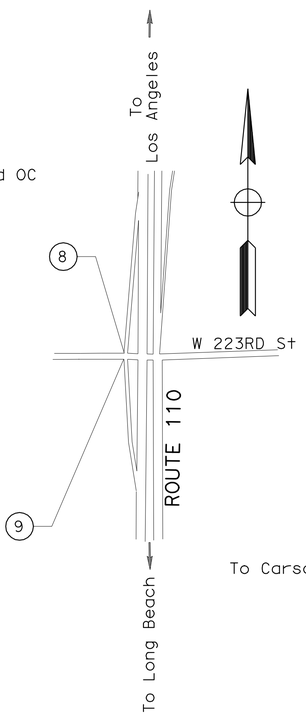


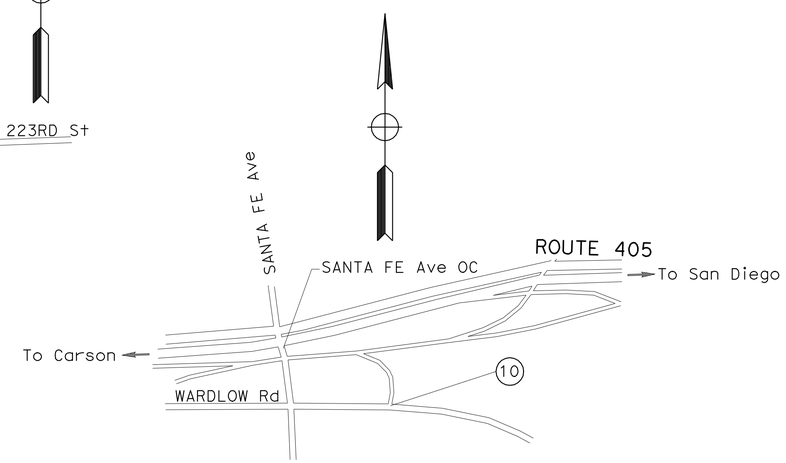


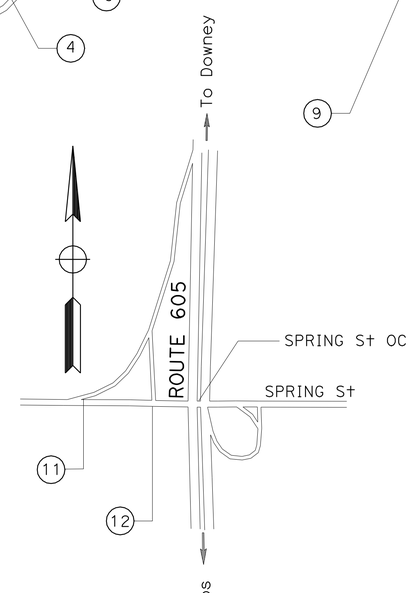


NOTE:

THE TABLE OF LOCATIONS OF CONSTRUCTION IS SHOWN ON THE LOCATIONS OF CONSTRUCTION SHEET.

THE CONTRACTOR SHALL POSSESS THE CLASS (OR CLASSES) OF LICENSE AS SPECIFIED IN THE "NOTICE TO BIDDERS."

NO SCALE

PROJECT ENGINEER REGISTERED CIVIL ENGINEER — DATE 2/7/12

February 27,2012
PLANS APPROVAL DATE

REGISTERED PROFESSIONAL ENGINEER — MOHAMMED HAIDER — No. 61335 — Exp. 06/30/13 — CIVIL — STATE OF CALIFORNIA

*THE STATE OF CALIFORNIA OR ITS OFFICERS OR AGENTS SHALL NOT BE RESPONSIBLE FOR THE ACCURACY OR COMPLETENESS OF SCANNED COPIES OF THIS PLAN SHEET.*

| CONTRACT No. | 07-4T4404 |
|---|---|
| PROJECT ID | 0700021046 |

PROJECT MANAGER: MIRNA DAGHER
DESIGN ENGINEER: M. CHOWDHURY

LAST REVISION 00-00-00 — DATE PLOTTED => 29-FEB-2012 — TIME PLOTTED => 11:59

| Dist | COUNTY | ROUTE | POST MILES TOTAL PROJECT | SHEET No. | TOTAL SHEETS |
|---|---|---|---|---|---|
| 07 | LA | 5, 57, 110, 405, 605 | Var | 2 | 63 |

REGISTERED CIVIL ENGINEER 02/02/12 DATE

2-27-12
PLANS APPROVAL DATE

REGISTERED PROFESSIONAL ENGINEER MOHAMMED HAIDER No. 61335 Exp. 06/30/13 CIVIL STATE OF CALIFORNIA

*THE STATE OF CALIFORNIA OR ITS OFFICERS OR AGENTS SHALL NOT BE RESPONSIBLE FOR THE ACCURACY OR COMPLETENESS OF SCANNED COPIES OF THIS PLAN SHEET.*

# LOCATIONS OF CONSTRUCTION

| Loc | Rte | PM | LOCATION DESCRIPTION |
|---|---|---|---|
| 1 | 5 | 9.03 | SB OFF-RAMP TO EB PARAMOUNT Blvd |
| 2 | 5 | 9.03 | SB OFF-RAMP TO WB PARAMOUNT Blvd |
| 3 | 5 | 11.5 | SB ON-RAMP FROM WB WASHINGTON Blvd |
| 4 | 57 | R1.78 | NB OFF-RAMP TO DIAMOND BAR/BREA CANYON CUT-OFF Rd |
| 5 | 57 | R1.82 | SB ON-RAMP FROM EB DIAMOND BAR/BREA CANYON CUT-OFF Rd |
| 6 | 57 | R2.20 | NB ON-RAMP FROM WB DIAMOND BAR/BREA CANYON CUT-OFF Rd |
| 7 | 57 | R2.20 | NB ON-RAMP FROM EB DIAMOND BAR/BREA CANYON CUT-OFF Rd |
| 8 | 110 | 6.36 | SB ON-RAMP FROM 223RD STREET |
| 9 | 110 | 6.66 | SB OFF-RAMP TO 223RD STREET |
| 10 | 405 | 7.99 | SEG SB OFF-RAMP TO WARDLOW Rd/SANTA FE Ave |
| 11 | 605 | R0.48 | SB OFF-RAMP TO WB SPRING STREET |
| 12 | 605 | R0.48 | SB OFF-RAMP TO EB SPRING STREET |

REVISED BY | DATE REVISED

FRANCISCO MARTINEZ | MOHAMMED HAIDER

CALCULATED-DESIGNED BY | CHECKED BY

FUNCTIONAL SUPERVISOR

MOHAMMED CHOWDHURY

STATE OF CALIFORNIA - DEPARTMENT OF TRANSPORTATION

Caltrans® TRAFFIC DESIGN

LOCATIONS OF CONSTRUCTION

LC-1

LAST REVISION 00-00-00 | DATE PLOTTED => 29-FEB-2012 TIME PLOTTED => 11:59

| Dist | COUNTY | ROUTE | POST MILES TOTAL PROJECT | SHEET No. | TOTAL SHEETS |
|---|---|---|---|---|---|
| 07 | LA | 5, 57, 110, 405, 605 | Var | 3 | 63 |

REGISTERED CIVIL ENGINEER 2/2/12 DATE

2-27-12
PLANS APPROVAL DATE

REGISTERED PROFESSIONAL ENGINEER MOHAMMED HAIDER No. 61335 Exp. 06/30/13 CIVIL STATE OF CALIFORNIA

*THE STATE OF CALIFORNIA OR ITS OFFICERS OR AGENTS SHALL NOT BE RESPONSIBLE FOR THE ACCURACY OR COMPLETENESS OF SCANNED COPIES OF THIS PLAN SHEET.*

**NOTE:**

FOR ACCURATE RIGHT OF WAY DATA, CONTACT RIGHT OF WAY ENGINEERING AT THE DISTRICT OFFICE.

**LEGEND:**

⇨ DIRECTION OF TRAVEL

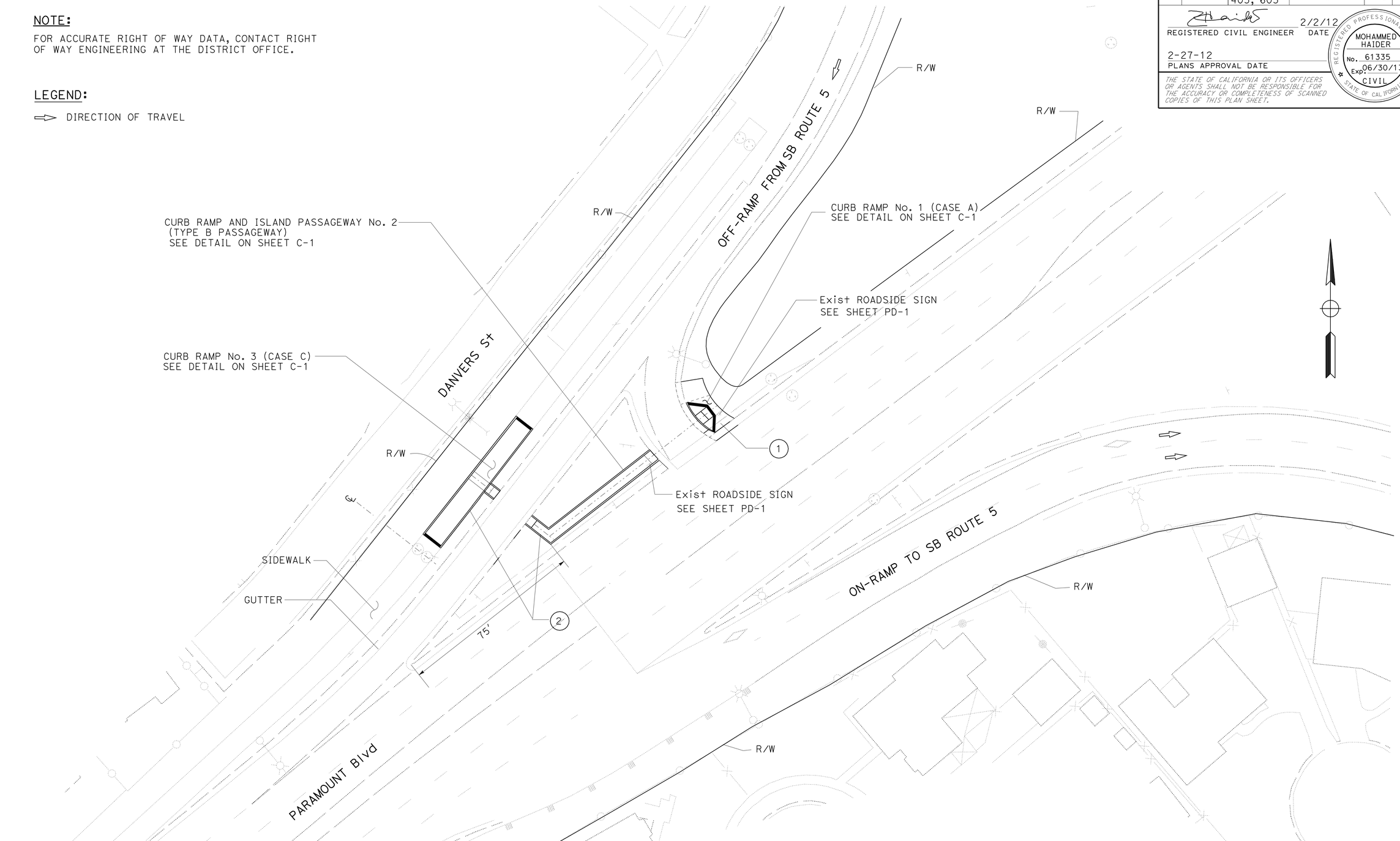


LOCATION No. 1 & 2

ROUTE 5
SB OFF-RAMP TO WB PARAMOUNT Blvd

**LAYOUT**
SCALE: 1"= 20'

**L-1**

STATE OF CALIFORNIA - DEPARTMENT OF TRANSPORTATION
Caltrans
**TRAFFIC DESIGN**

FUNCTIONAL SUPERVISOR: MOHAMMED CHOWDHURY
CALCULATED-DESIGNED BY: FRANCISCO MARTINEZ
CHECKED BY: MOHAMMED HAIDER
REVISED BY
DATE REVISED

LAST REVISION 00-00-00
DATE PLOTTED => 29-FEB-2012
TIME PLOTTED => 11:59

| Dist | COUNTY | ROUTE | POST MILES TOTAL PROJECT | SHEET No. | TOTAL SHEETS |
|---|---|---|---|---|---|
| 07 | LA | 5, 57, 110, 405, 605 | Var | 4 | 63 |

REGISTERED CIVIL ENGINEER 2/2/12 DATE

2-27-12
PLANS APPROVAL DATE

REGISTERED PROFESSIONAL ENGINEER MOHAMMED HAIDER No. 61335 Exp. 06/30/13 CIVIL STATE OF CALIFORNIA

*THE STATE OF CALIFORNIA OR ITS OFFICERS OR AGENTS SHALL NOT BE RESPONSIBLE FOR THE ACCURACY OR COMPLETENESS OF SCANNED COPIES OF THIS PLAN SHEET.*

NOTE:

FOR ACCURATE RIGHT OF WAY AND ACCESS DATA,
CONTACT RIGHT OF WAY ENGINEERING AT THE DISTRICT OFFICE.

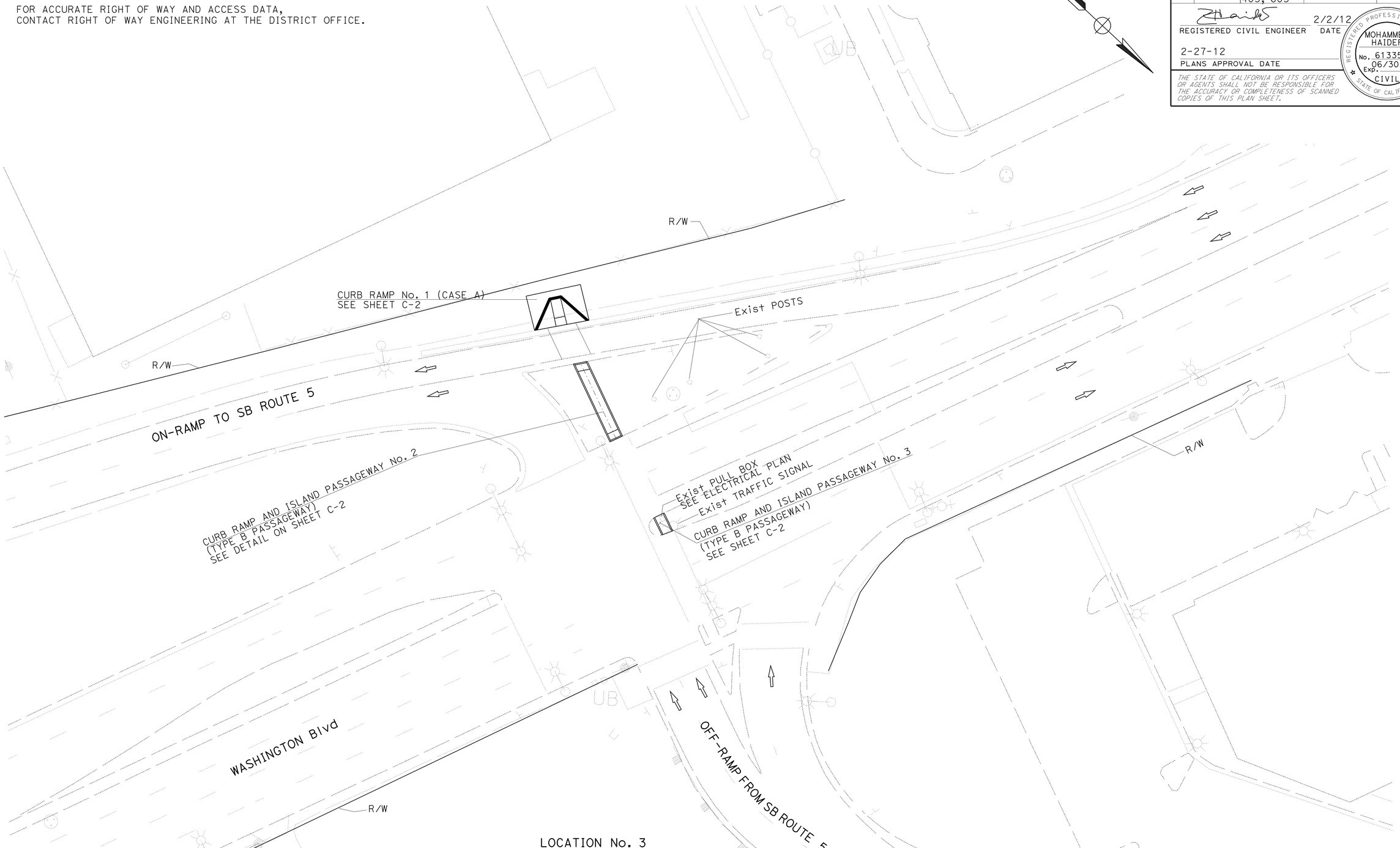


LOCATION No. 3

ROUTE 5
SB ON-RAMP FROM EB WASHINGTON Blvd

# LAYOUT

SCALE: 1" = 20'

L-2

STATE OF CALIFORNIA - DEPARTMENT OF TRANSPORTATION
Caltrans® TRAFFIC DESIGN

FUNCTIONAL SUPERVISOR: MOHAMMED CHOWDHURY
CALCULATED-DESIGNED BY: FRANCISCO MARTINEZ
CHECKED BY: MOHAMMED HAIDER
REVISED BY
DATE REVISED

LAST REVISION 00-00-00
DATE PLOTTED => 29-FEB-2012
TIME PLOTTED => 12:00

| Dist | COUNTY | ROUTE | POST MILES TOTAL PROJECT | SHEET No. | TOTAL SHEETS |
|---|---|---|---|---|---|
| 07 | LA | 5, 57, 110, 405, 605 | Var | 5 | 63 |

REGISTERED CIVIL ENGINEER 2/2/12 DATE

2-27-12
PLANS APPROVAL DATE

REGISTERED PROFESSIONAL ENGINEER MOHAMMED HAIDER No. 61335 Exp 06/30/13 CIVIL STATE OF CALIFORNIA

*THE STATE OF CALIFORNIA OR ITS OFFICERS OR AGENTS SHALL NOT BE RESPONSIBLE FOR THE ACCURACY OR COMPLETENESS OF SCANNED COPIES OF THIS PLAN SHEET.*

NOTE:

RIGHT OF WAY LIMITS ARE INDETERMINATE, AND ARE NOT SHOWN.
THE CONTRACTOR MUST CONTACT RIGHT OF WAY ENGINEERING AT THE DISTRICT OFFICE FOR CONDITIONS OF USE PRIOR TO COMMENCING WORK.

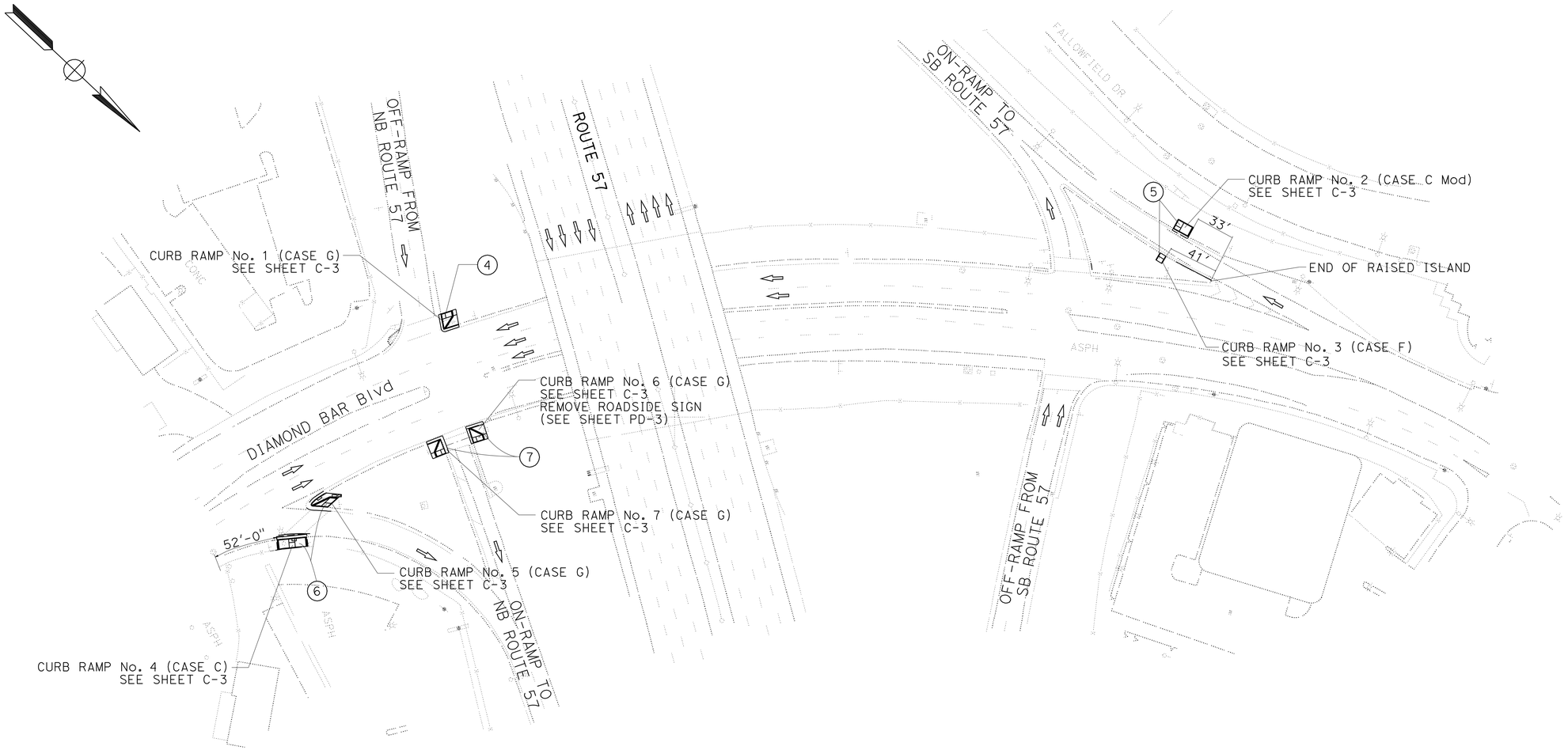


LOCATION No. 4, 5, 6, & 7

ROUTE 57
SB & NB OFF AND ON-RAMPS
DIAMOND BAR Blvd

**LAYOUT**
SCALE: 1" = 50'

**L-3**

STATE OF CALIFORNIA - DEPARTMENT OF TRANSPORTATION
Caltrans® **TRAFFIC DESIGN**

FUNCTIONAL SUPERVISOR: MOHAMMED CHOWDHURY
CALCULATED-DESIGNED BY: FRANCISCO MARTINEZ
CHECKED BY: MOHAMMED HAIDER
REVISED BY
DATE REVISED

LAST REVISION 00-00-00
DATE PLOTTED => 29-FEB-2012
TIME PLOTTED => 12:00

| Dist | COUNTY | ROUTE | POST MILES TOTAL PROJECT | SHEET No. | TOTAL SHEETS |
|---|---|---|---|---|---|
| 07 | LA | 5, 57, 110, 405, 605 | Var | 6 | 63 |

REGISTERED CIVIL ENGINEER 2/2/12 DATE

2-27-12
PLANS APPROVAL DATE

REGISTERED PROFESSIONAL ENGINEER MOHAMMED HAIDER No. 61335 Exp. 06/30/13 CIVIL STATE OF CALIFORNIA

*THE STATE OF CALIFORNIA OR ITS OFFICERS OR AGENTS SHALL NOT BE RESPONSIBLE FOR THE ACCURACY OR COMPLETENESS OF SCANNED COPIES OF THIS PLAN SHEET.*

**NOTE:**

FOR ACCURATE RIGHT OF WAY AND ACCESS DATA,
CONTACT RIGHT OF WAY ENGINEERING AT THE DISTRICT OFFICE.

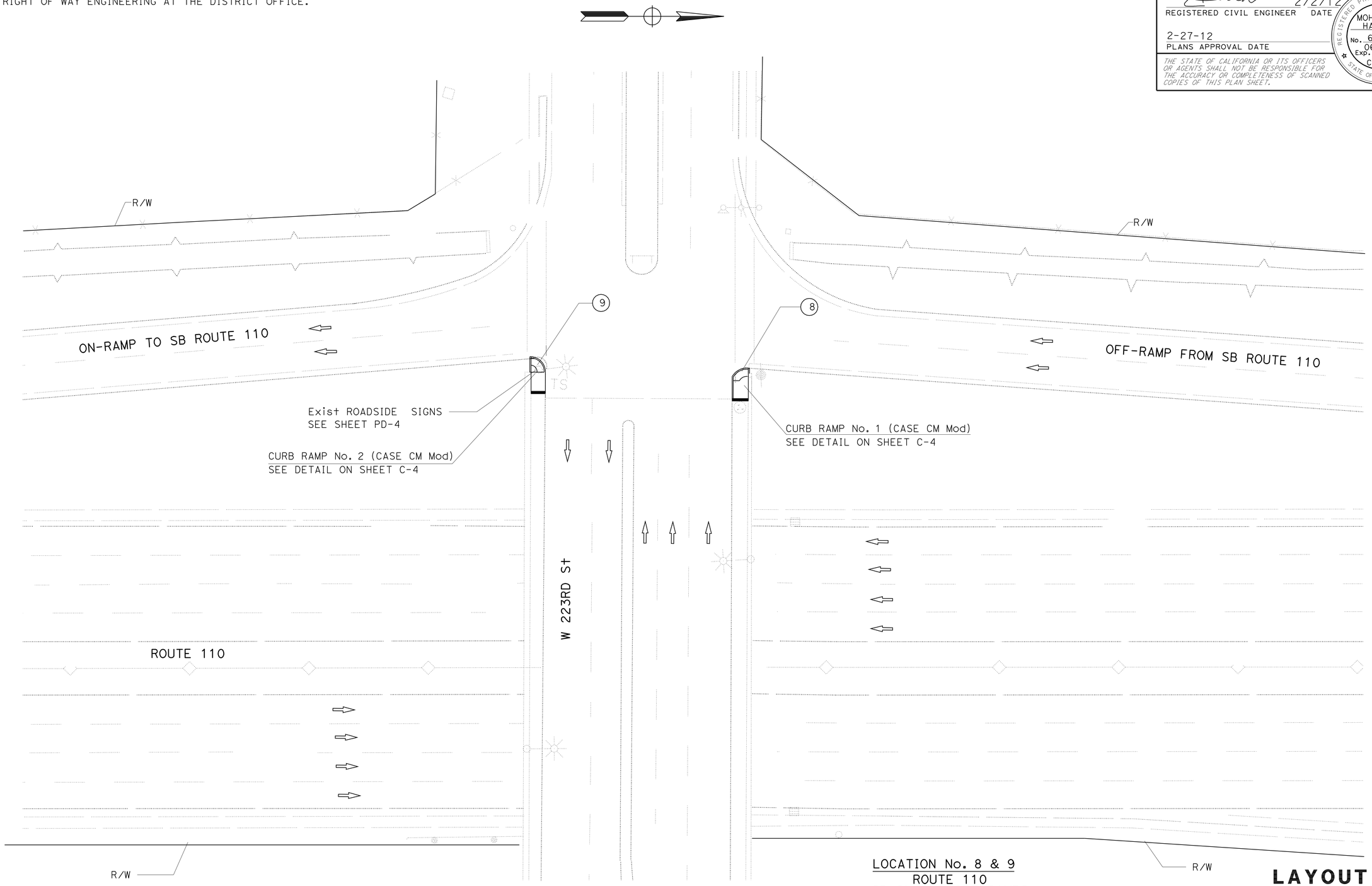


LOCATION No. 8 & 9
ROUTE 110
SB ON AND OFF-RAMPS
AT 223RD St

**LAYOUT**
SCALE: 1" = 20'

**L-4**

STATE OF CALIFORNIA - DEPARTMENT OF TRANSPORTATION
Caltrans® **TRAFFIC DESIGN**

FUNCTIONAL SUPERVISOR: MOHAMMED CHOWDHURY
CALCULATED-DESIGNED BY: FRANCISCO MARTINEZ
CHECKED BY: MOHAMMED HAIDER
REVISED BY
DATE REVISED

LAST REVISION 00-00-00
DATE PLOTTED => 29-FEB-2012
TIME PLOTTED => 12:00

| Dist | COUNTY | ROUTE | POST MILES TOTAL PROJECT | SHEET No. | TOTAL SHEETS |
|---|---|---|---|---|---|
| 07 | LA | 5, 57, 110, 405, 605 | Var | 7 | 63 |

REGISTERED CIVIL ENGINEER 2/2/12 DATE

2-27-12
PLANS APPROVAL DATE

REGISTERED PROFESSIONAL ENGINEER MOHAMMED HAIDER No. 61335 Exp. 06/30/13 CIVIL STATE OF CALIFORNIA

*THE STATE OF CALIFORNIA OR ITS OFFICERS OR AGENTS SHALL NOT BE RESPONSIBLE FOR THE ACCURACY OR COMPLETENESS OF SCANNED COPIES OF THIS PLAN SHEET.*

NOTE:

RIGHT OF WAY LIMITS ARE INDETERMINATE, AND ARE NOT SHOWN.
THE CONTRACTOR MUST CONTACT RIGHT OF WAY ENGINEERING AT THE DISTRICT OFFICE FOR CONDITIONS OF USE PRIOR TO COMMENCING WORK.

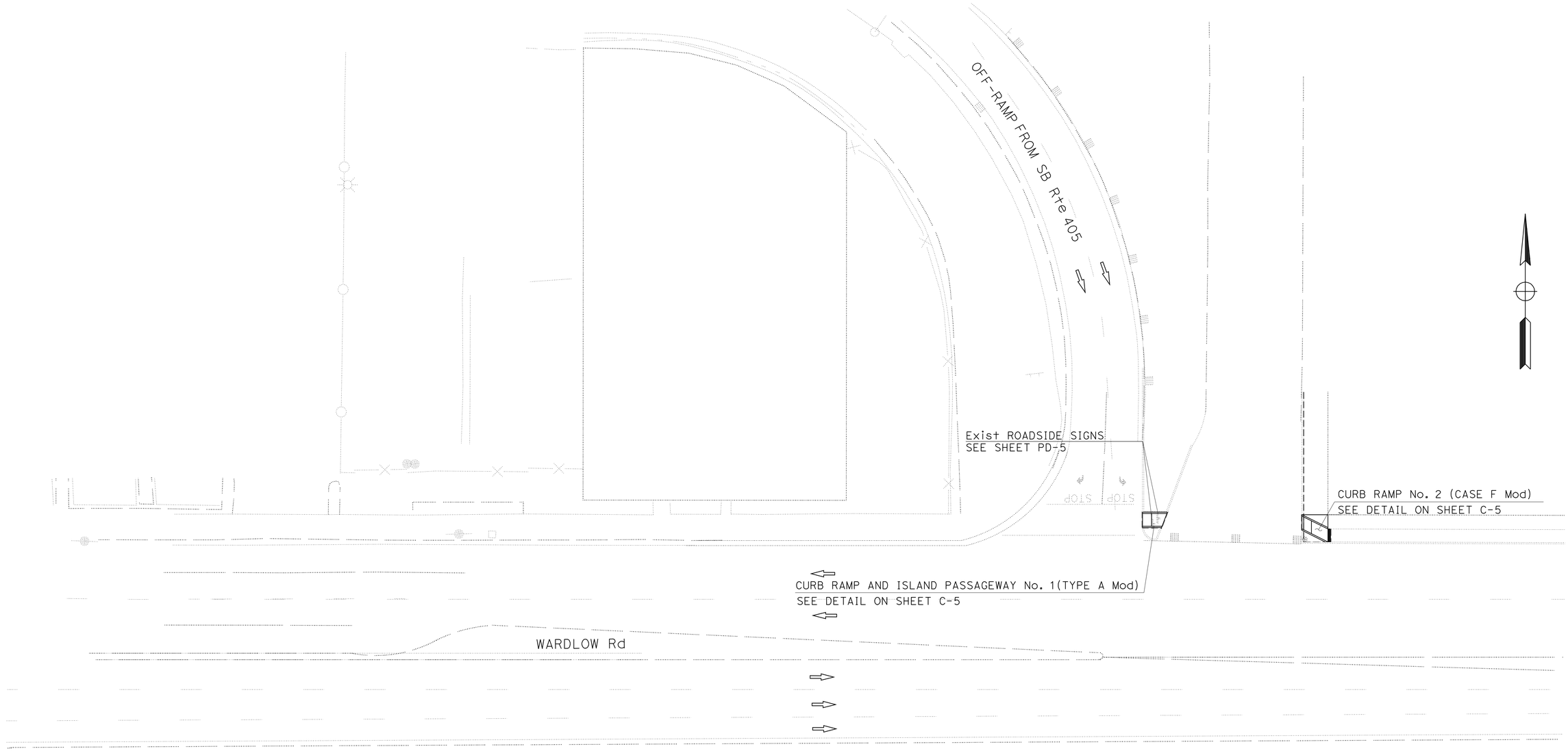


LOCATION No. 10

ROUTE 405
SB OFF-RAMP TO WARDLOW Rd / SANTA FE Ave

**LAYOUT**
SCALE: 1" = 20'

**L-5**

REVISED BY | DATE REVISED
FRANCISCO MARTINEZ | MOHAMMED HAIDER
CALCULATED-DESIGNED BY | CHECKED BY
FUNCTIONAL SUPERVISOR: MOHAMMED CHOWDHURY

STATE OF CALIFORNIA - DEPARTMENT OF TRANSPORTATION
Caltrans® TRAFFIC DESIGN

LAST REVISION 00-00-00 | DATE PLOTTED => 29-FEB-2012 | TIME PLOTTED => 12:00

| Dist | COUNTY | ROUTE | POST MILES TOTAL PROJECT | SHEET No. | TOTAL SHEETS |
|---|---|---|---|---|---|
| 07 | LA | 5, 57, 110, 405, 605 | Var | 8 | 63 |

REGISTERED CIVIL ENGINEER 2/2/12 DATE

2-27-12
PLANS APPROVAL DATE

REGISTERED PROFESSIONAL ENGINEER MOHAMMED HAIDER No. 61335 Exp. 06/30/13 CIVIL STATE OF CALIFORNIA

*THE STATE OF CALIFORNIA OR ITS OFFICERS OR AGENTS SHALL NOT BE RESPONSIBLE FOR THE ACCURACY OR COMPLETENESS OF SCANNED COPIES OF THIS PLAN SHEET.*

**NOTE:**

FOR ACCURATE RIGHT OF WAY DATA, CONTACT RIGHT OF WAY ENGINEERING AT THE DISTRICT OFFICE.

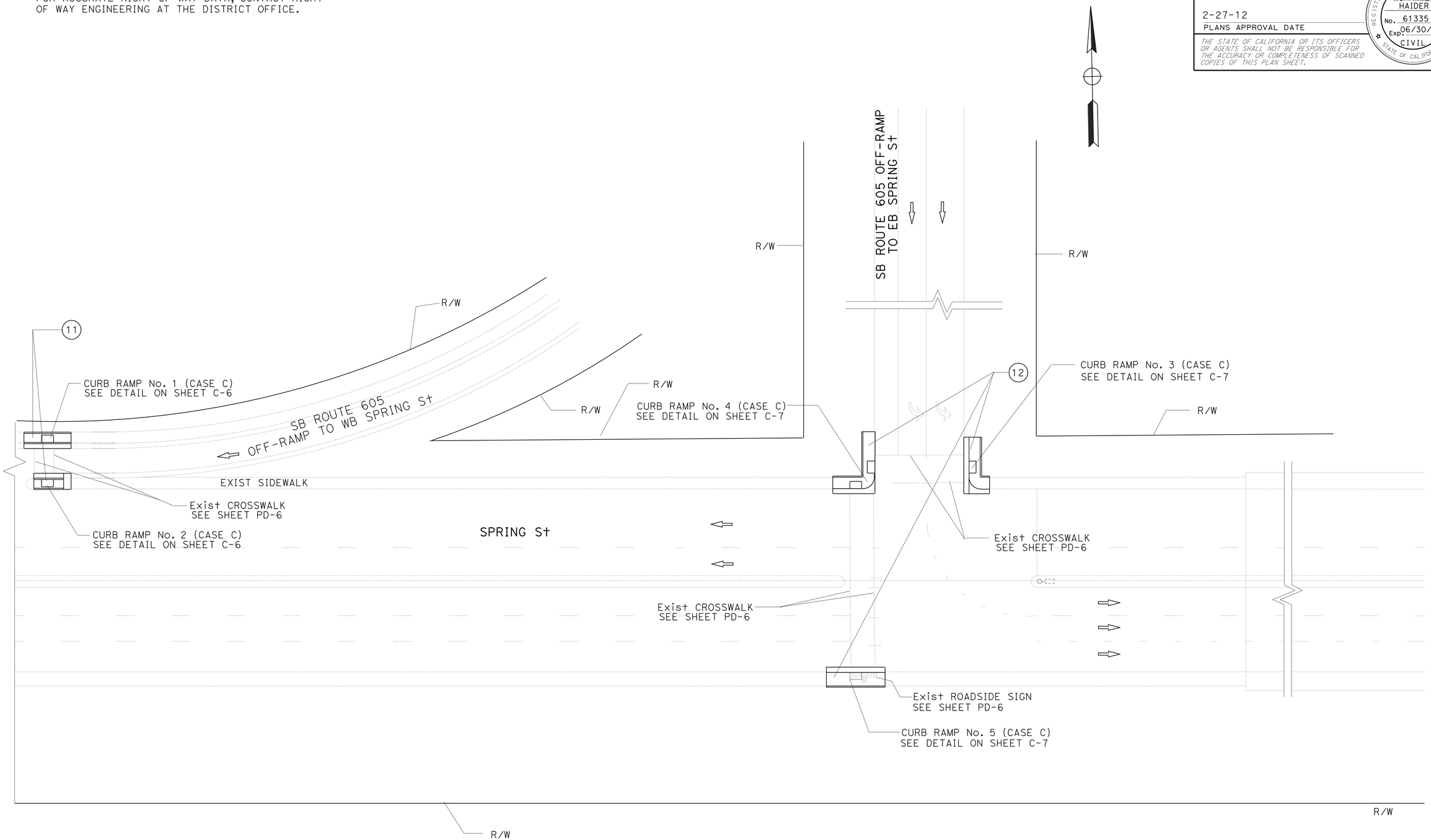


LOCATION No. 11 & 12
ROUTE 605
SB OFF-RAMPS TO SPRING St

**LAYOUT**
SCALE: 1" = 20'

**L-6**

STATE OF CALIFORNIA - DEPARTMENT OF TRANSPORTATION
Caltrans
**TRAFFIC DESIGN**

FUNCTIONAL SUPERVISOR: MOHAMMED CHOWDHURY
CALCULATED-DESIGNED BY: FRANCISCO MARTINEZ
CHECKED BY: MOHAMMED HAIDER
REVISED BY
DATE REVISED

LAST REVISION 00-00-00
DATE PLOTTED => 29-FEB-2012
TIME PLOTTED => 12:00

| Dist | COUNTY | ROUTE | POST MILES TOTAL PROJECT | SHEET No. | TOTAL SHEETS |
|---|---|---|---|---|---|
| 07 | LA | 5, 57, 110, 405, 605 | Var | 9 | 63 |

REGISTERED CIVIL ENGINEER DATE 2/2/12

2-27-12
PLANS APPROVAL DATE

REGISTERED PROFESSIONAL ENGINEER MOHAMMED HAIDER No. 61335 Exp. 6/30/13 CIVIL STATE OF CALIFORNIA

*THE STATE OF CALIFORNIA OR ITS OFFICERS OR AGENTS SHALL NOT BE RESPONSIBLE FOR THE ACCURACY OR COMPLETENESS OF SCANNED COPIES OF THIS PLAN SHEET.*

## LEGEND:

RAISED TRUNCATED DOME

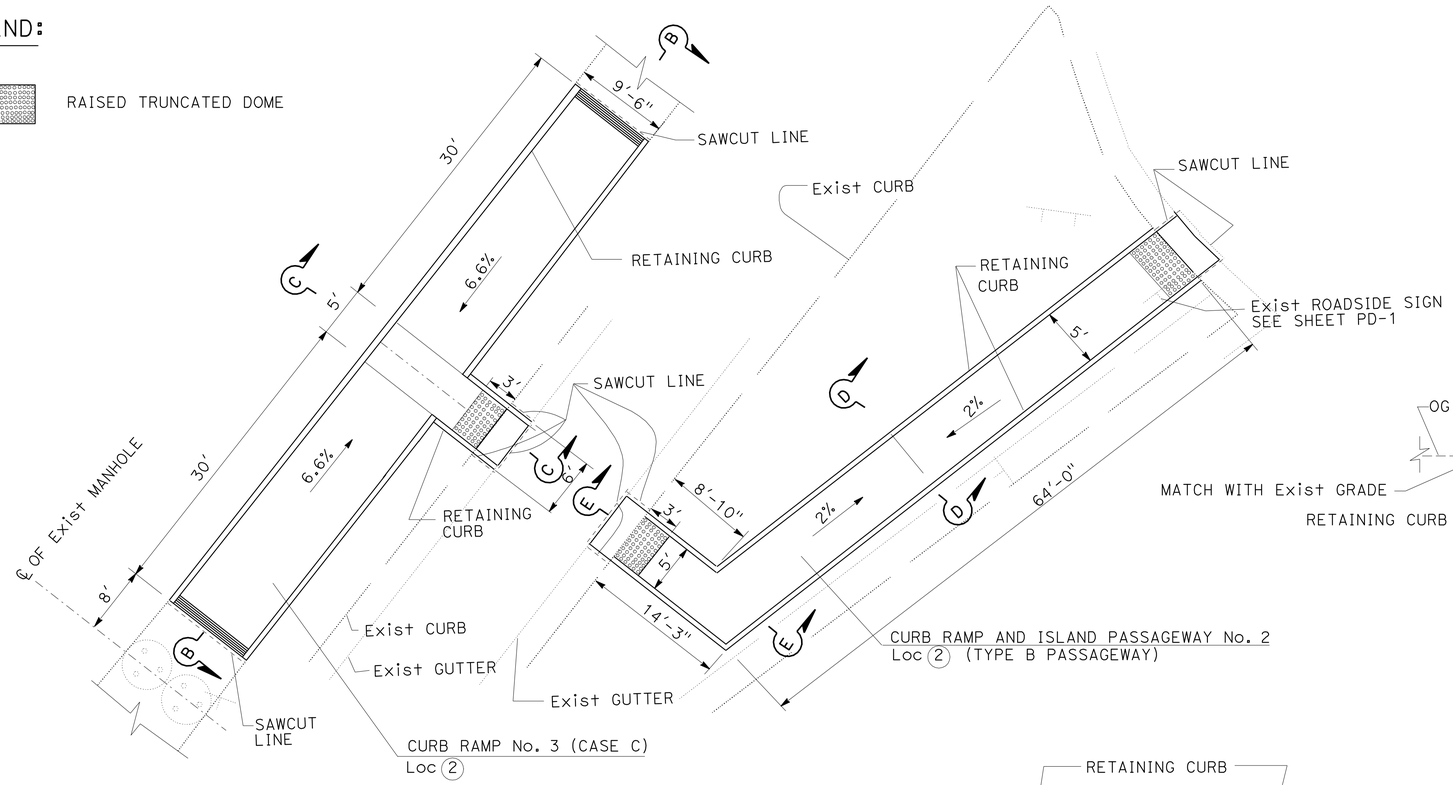


Exist STRUCTURAL SECTION

[A] 0.67' PCC
0.67' CLASS 2 AB

TYPICAL STRUCTURAL SECTION

[1] 0.85' MINOR CONCRETE
0.40' LEAN CONCRETE BASE
0.60' CLASS 3 AB

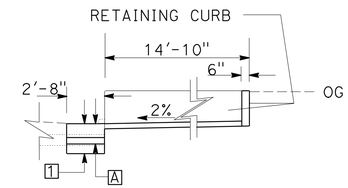


SECTION E-E

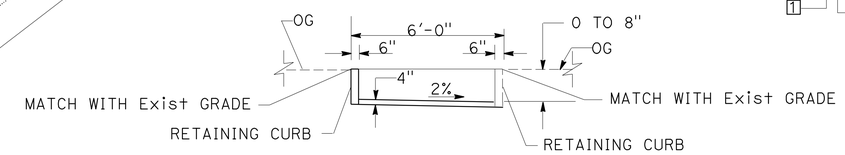


SECTION D-D

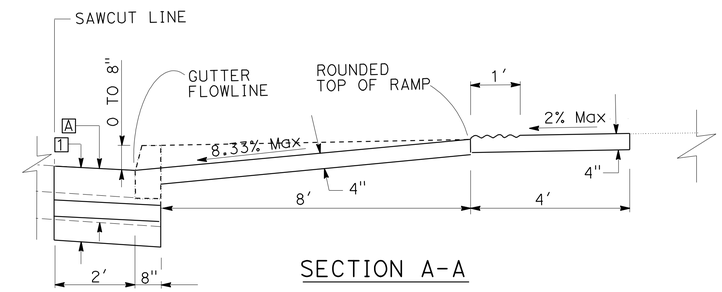


SECTION A-A

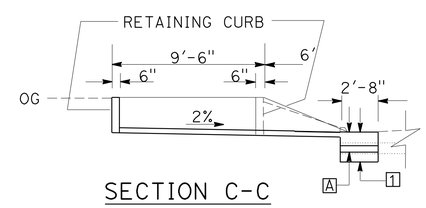


SECTION C-C

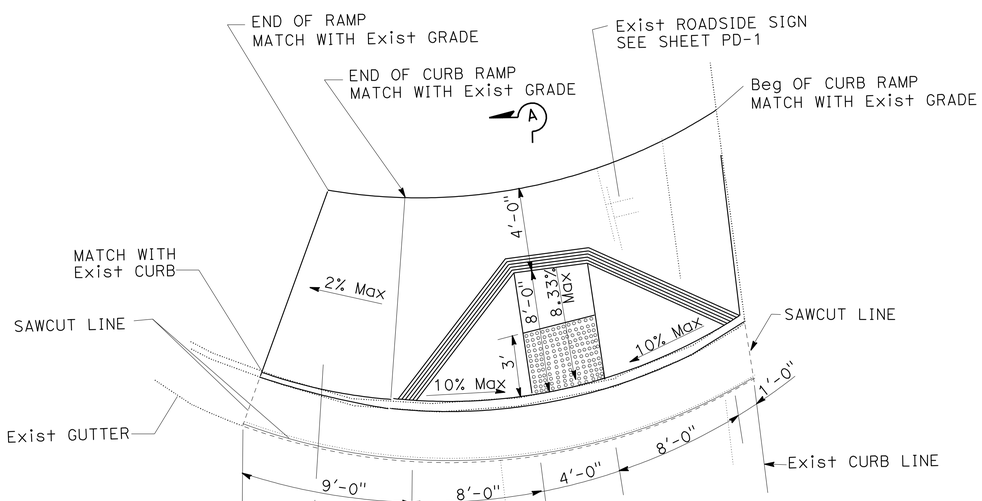


LOCATION No. 1 & 2

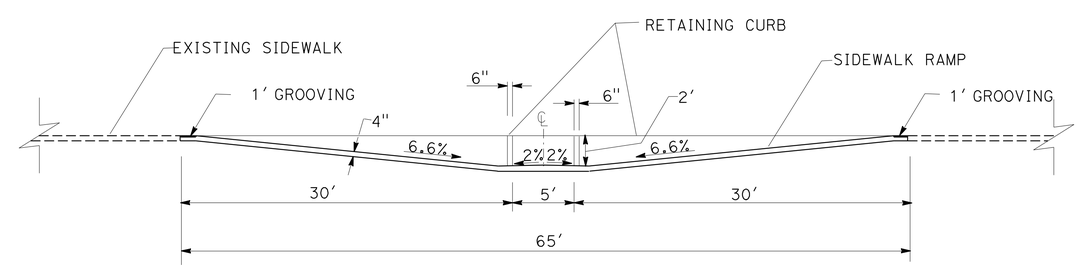


SECTION B-B

# CONSTRUCTION DETAILS

NO SCALE

C-1

STATE OF CALIFORNIA - DEPARTMENT OF TRANSPORTATION
Caltrans TRAFFIC DESIGN

FUNCTIONAL SUPERVISOR: MOHAMMED CHOWDHURY
CALCULATED-DESIGNED BY: MOHAMMED HAIDER
CHECKED BY: MOHAMMED CHOWDHURY
REVISED BY
DATE REVISED

LAST REVISION 00-00-00 | DATE PLOTTED => 29-FEB-2012 | TIME PLOTTED => 12:00

| Dist | COUNTY | ROUTE | POST MILES TOTAL PROJECT | SHEET No. | TOTAL SHEETS |
|---|---|---|---|---|---|
| 07 | LA | 5, 57, 110, 405, 605 | Var | 10 | 63 |

REGISTERED CIVIL ENGINEER 2/2/12 DATE

2-27-12
PLANS APPROVAL DATE

REGISTERED PROFESSIONAL ENGINEER MOHAMMED HAIDER No. 61335 Exp. 6/30/13 CIVIL STATE OF CALIFORNIA

*THE STATE OF CALIFORNIA OR ITS OFFICERS OR AGENTS SHALL NOT BE RESPONSIBLE FOR THE ACCURACY OR COMPLETENESS OF SCANNED COPIES OF THIS PLAN SHEET.*

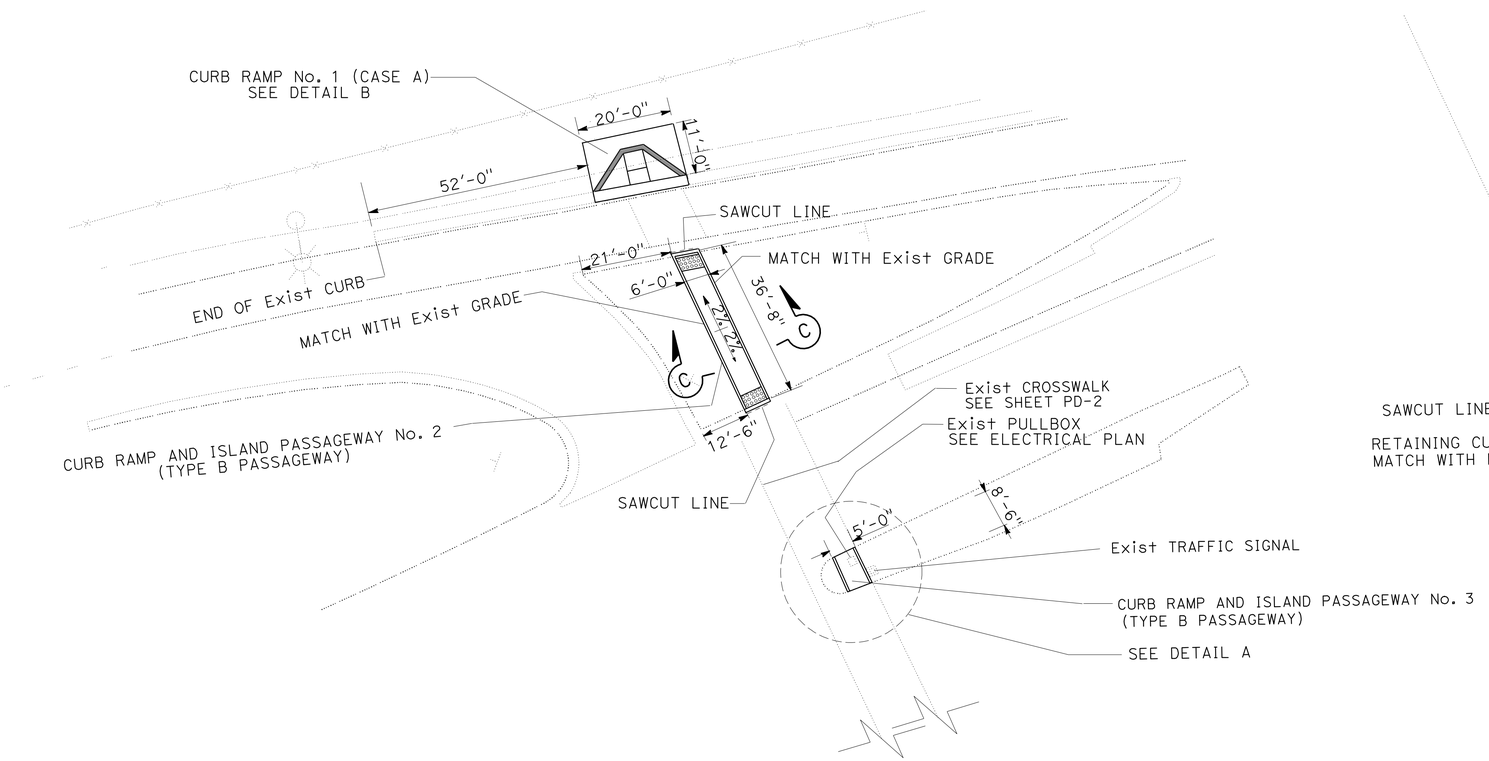


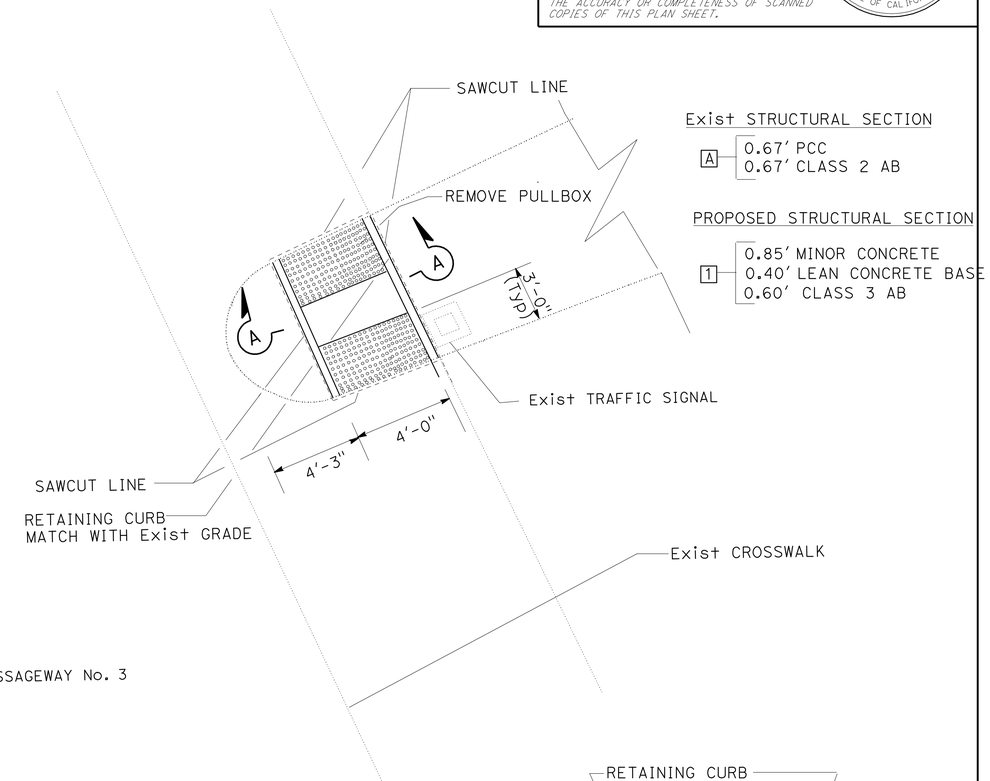


DETAIL A

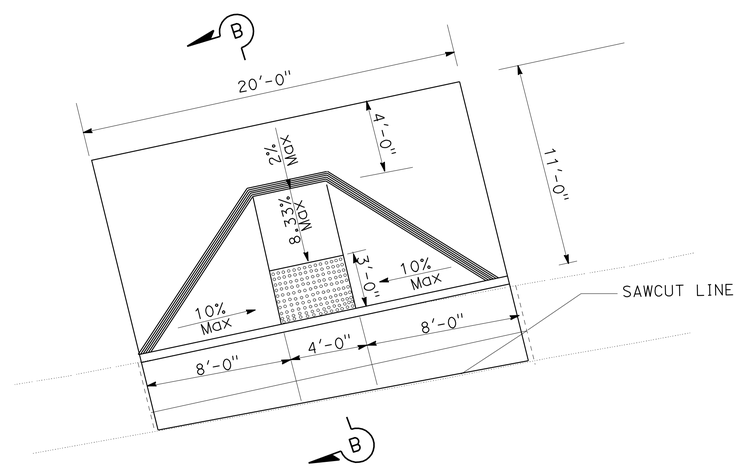


DETAIL B

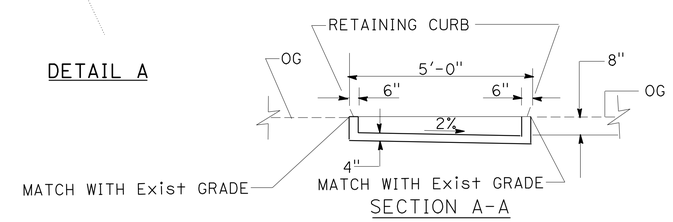


SECTION A-A

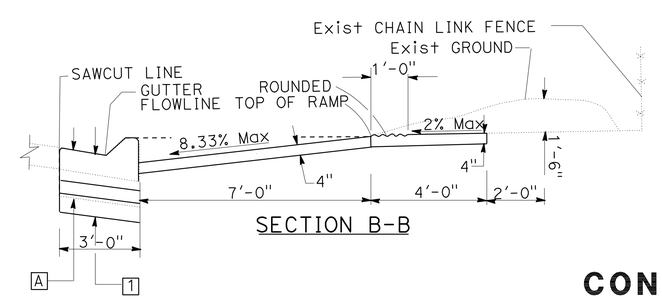


SECTION B-B

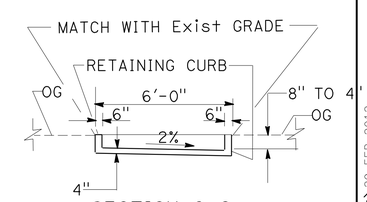


SECTION C-C

# CONSTRUCTION DETAILS

NO SCALE

C-2

LOCATION No. 3

STATE OF CALIFORNIA - DEPARTMENT OF TRANSPORTATION
Caltrans® TRAFFIC DESIGN

FUNCTIONAL SUPERVISOR: MOHAMMED CHOWDHURY
CALCULATED-DESIGNED BY: MOHAMMED HAIDER
CHECKED BY: MOHAMMED CHOWDHURY
REVISED BY
DATE REVISED

LAST REVISION | DATE PLOTTED => 29-FEB-2012

| Dist | COUNTY | ROUTE | POST MILES TOTAL PROJECT | SHEET No. | TOTAL SHEETS |
|---|---|---|---|---|---|
| 07 | LA | 5, 57, 110, 405, 605 | Var | 11 | 63 |

REGISTERED CIVIL ENGINEER 2/6/12 DATE

2-27-12
PLANS APPROVAL DATE

REGISTERED PROFESSIONAL ENGINEER MOHAMMED HAIDER No. 61335 Exp. 06/30/13 CIVIL STATE OF CALIFORNIA

*THE STATE OF CALIFORNIA OR ITS OFFICERS OR AGENTS SHALL NOT BE RESPONSIBLE FOR THE ACCURACY OR COMPLETENESS OF SCANNED COPIES OF THIS PLAN SHEET.*

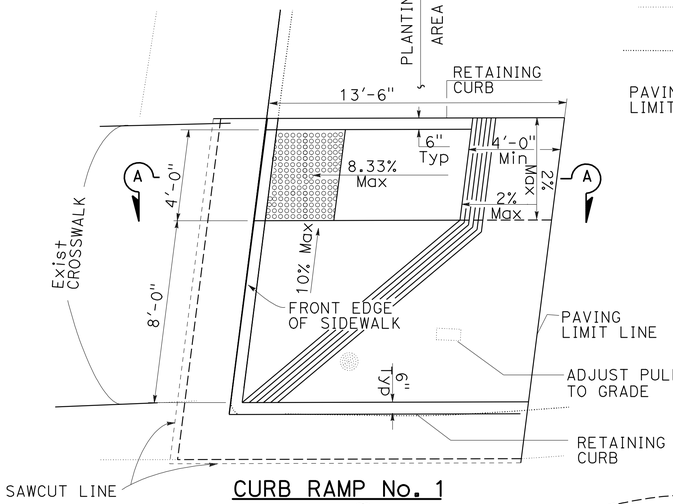


CURB RAMP No. 1
Loc (4)

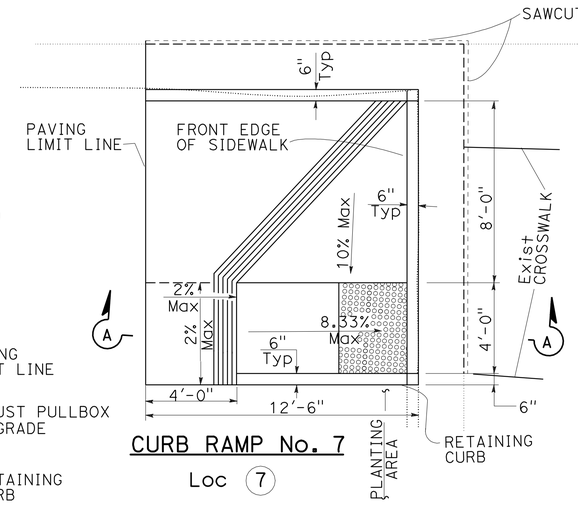


CURB RAMP No. 7
Loc (7)

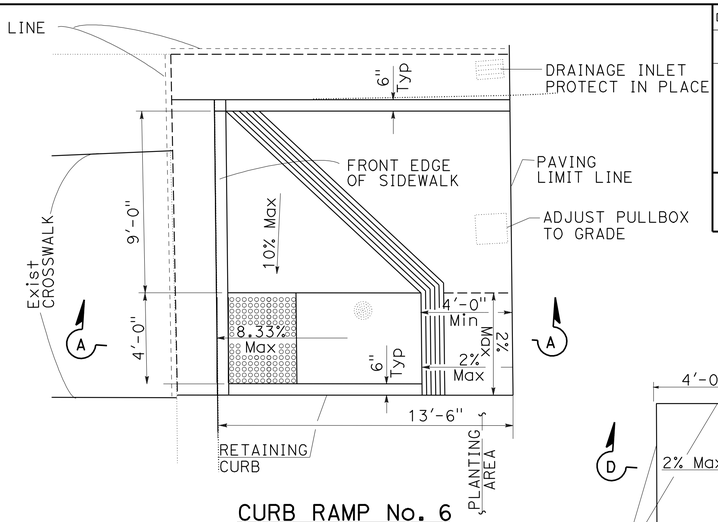


CURB RAMP No. 6
Loc (7)

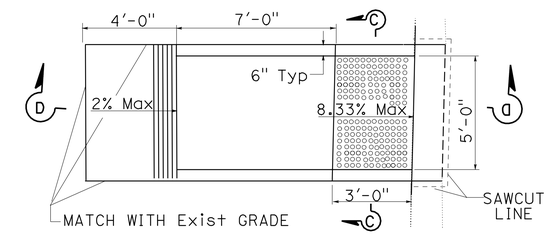


CURB RAMP AND PASSAGEWAY No. 3
Loc (5)

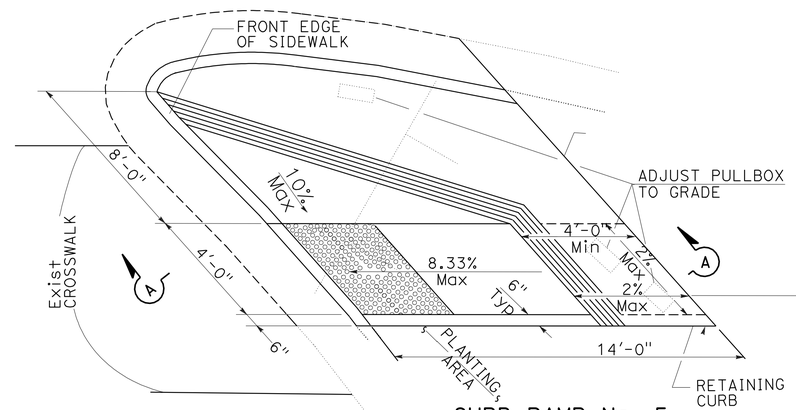


CURB RAMP No. 5
Loc (6)

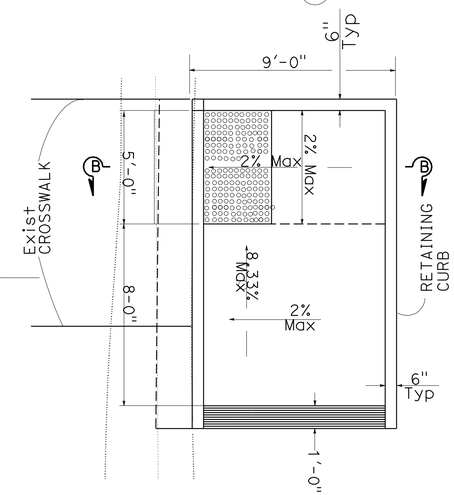


CURB RAMP No. 2
Loc (5)

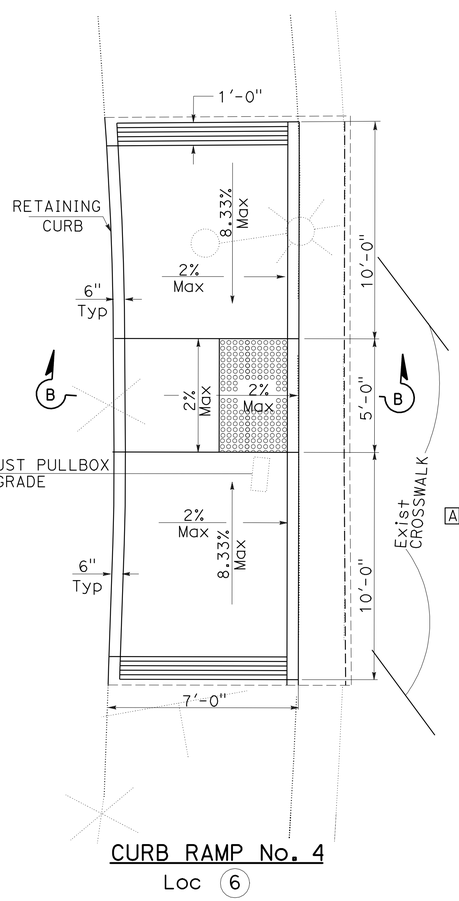


CURB RAMP No. 4
Loc (6)

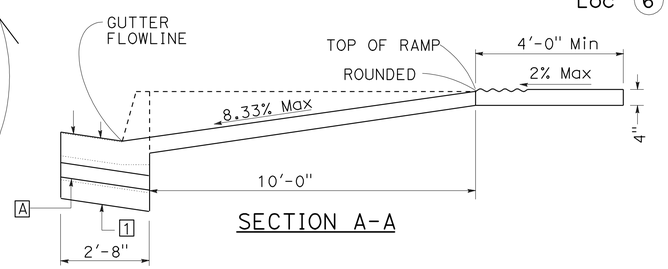


SECTION A-A

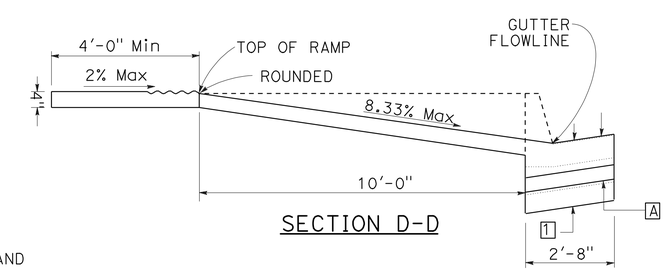


SECTION D-D

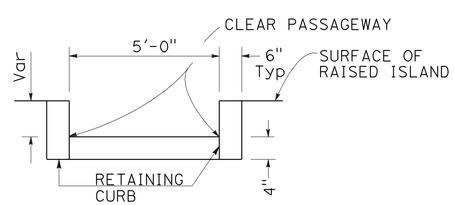


SECTION C-C

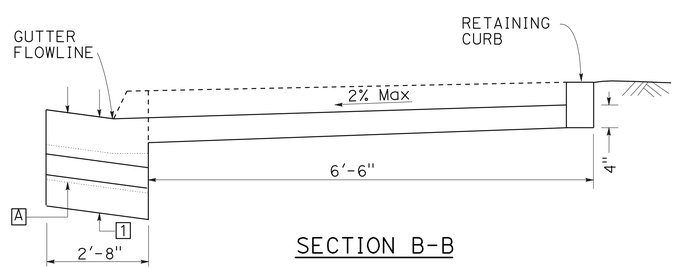


SECTION B-B

Exist STRUCTURAL SECTION

A — 0.67' PCC
0.67' CLASS 2 AB

TYPICAL STRUCTURAL SECTION

1 — 0.85' MINOR CONCRETE
0.40' LEAN CONCRETE BASE
0.60' CLASS 3 AB

# CONSTRUCTION DETAIL

NO SCALE

C-3

REVISED BY | DATE REVISED
FRANCISCO MARTINEZ | MOHAMED HAIDER
CALCULATED-DESIGNED BY | CHECKED BY
FUNCTIONAL SUPERVISOR | MOHAMMED CHOWDHURY

STATE OF CALIFORNIA - DEPARTMENT OF TRANSPORTATION
Caltrans® TRAFFIC DESIGN

LAST REVISION 00-00-00 | DATE PLOTTED => 29-FEB-2012 | TIME PLOTTED => 12:01

| Dist | COUNTY | ROUTE | POST MILES TOTAL PROJECT | SHEET No. | TOTAL SHEETS |
|---|---|---|---|---|---|
| 07 | LA | 5, 57, 110, 405, 605 | Var | 12 | 63 |

REGISTERED CIVIL ENGINEER 2/2/12 DATE

2-27-12
PLANS APPROVAL DATE

REGISTERED PROFESSIONAL ENGINEER MOHAMMED HAIDER No. 61335 Exp. 6/30/13 CIVIL STATE OF CALIFORNIA

*THE STATE OF CALIFORNIA OR ITS OFFICERS OR AGENTS SHALL NOT BE RESPONSIBLE FOR THE ACCURACY OR COMPLETENESS OF SCANNED COPIES OF THIS PLAN SHEET.*

LEGEND:

ROADWAY EXCAVATION (TYPE Z-2)
(AERIALLY DEPOSITED LEAD)

ROADWAY EXCAVATION

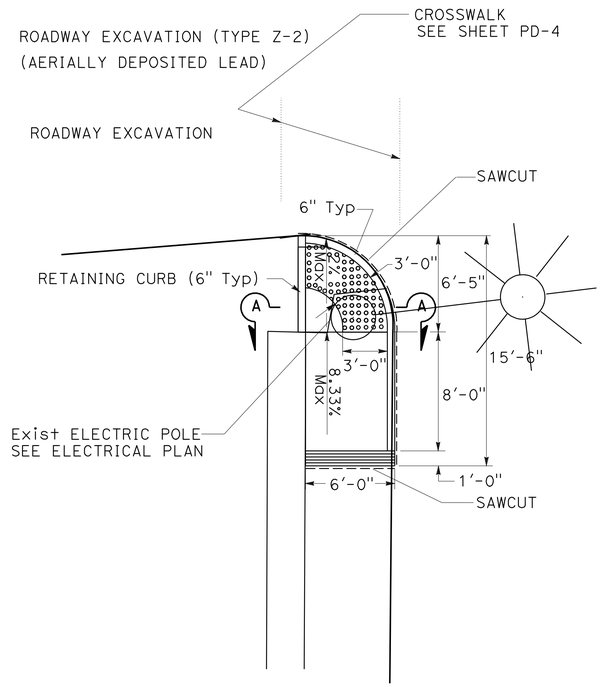


CURB RAMP No. 1 (CASE CM Mod)
Loc (9)

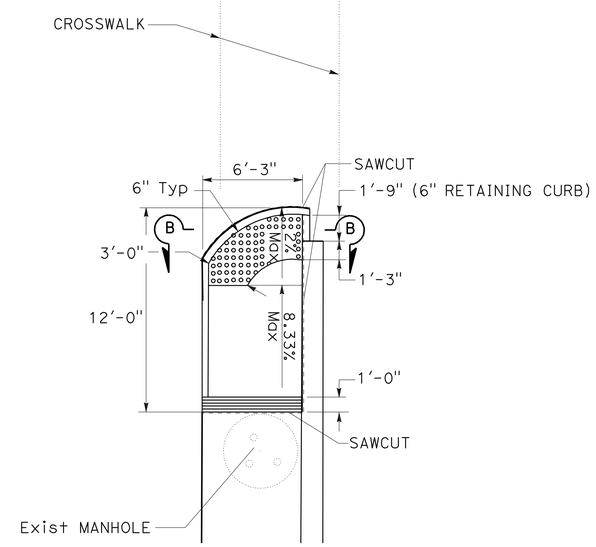


CURB RAMP No. 1 (CASE CM Mod)
Loc (8)

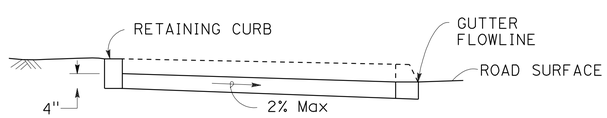


SECTION A-A

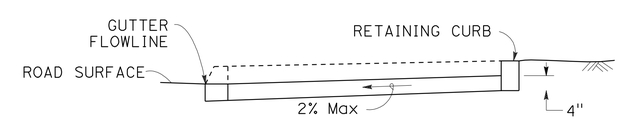


SECTION B-B

# CONSTRUCTION DETAILS

NO SCALE

C-4

STATE OF CALIFORNIA - DEPARTMENT OF TRANSPORTATION
Caltrans® TRAFFIC DESIGN

FUNCTIONAL SUPERVISOR: MOHAMMED CHOWDHURY
CALCULATED-DESIGNED BY: MOHAMMED HAIDER
CHECKED BY: MOHAMMED CHOWDHURY
REVISED BY
DATE REVISED

LAST REVISION 00-00-00
DATE PLOTTED => 29-FEB-2012
TIME PLOTTED => 12:01

| Dist | COUNTY | ROUTE | POST MILES TOTAL PROJECT | SHEET No. | TOTAL SHEETS |
|---|---|---|---|---|---|
| 07 | LA | 5, 57, 110, 405, 605 | Var | 13 | 63 |

REGISTERED CIVIL ENGINEER 2/3/12 DATE

2-27-12
PLANS APPROVAL DATE

REGISTERED PROFESSIONAL ENGINEER MOHAMMED HAIDER No. 61335 Exp. 06/30/13 CIVIL STATE OF CALIFORNIA

*THE STATE OF CALIFORNIA OR ITS OFFICERS OR AGENTS SHALL NOT BE RESPONSIBLE FOR THE ACCURACY OR COMPLETENESS OF SCANNED COPIES OF THIS PLAN SHEET.*

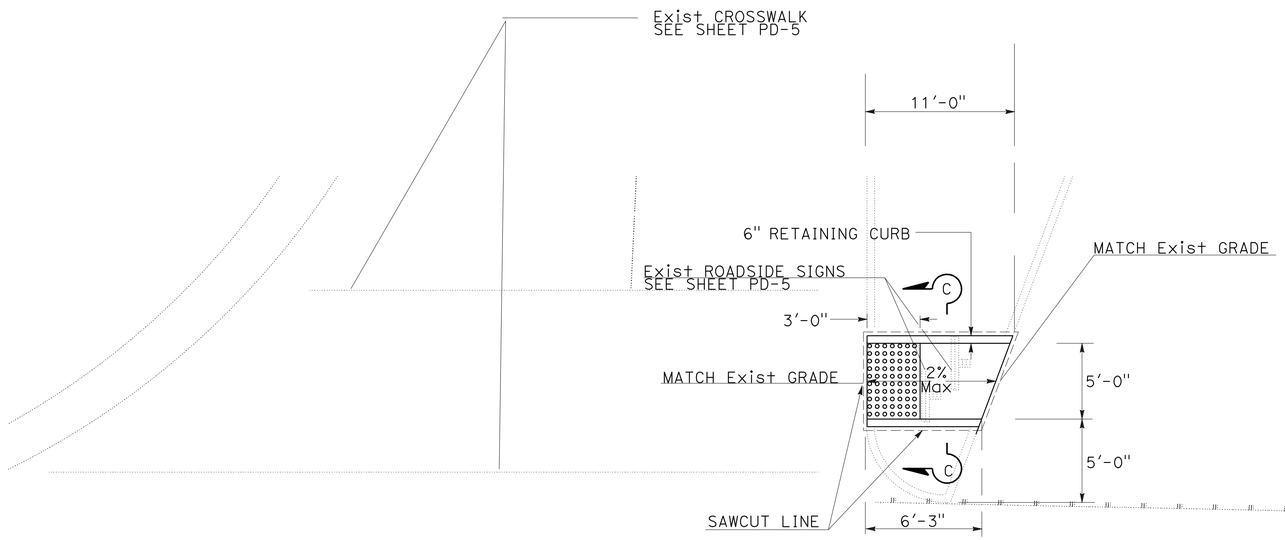


CURB RAMP AND ISLAND PASSAGEWAY No. 1 (TYPE A Mod)
LOCATION No. 10

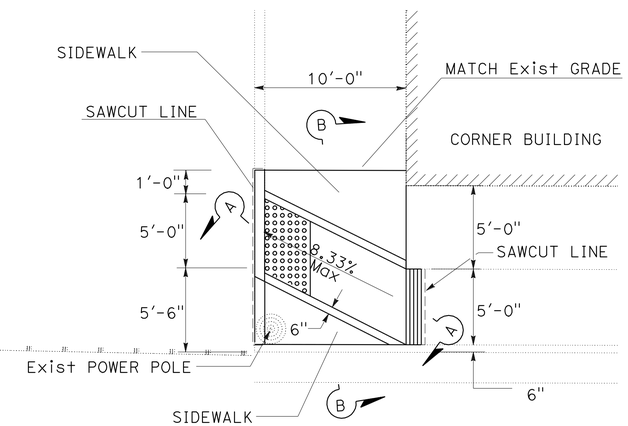


CURB RAMP No. 2 (CASE F Mod)
LOCATION No. 10

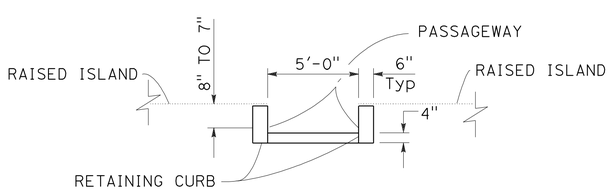


SECTION C-C

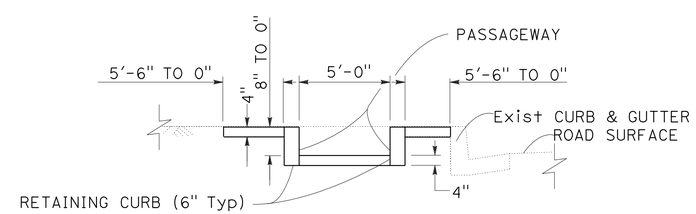


SECTION B-B

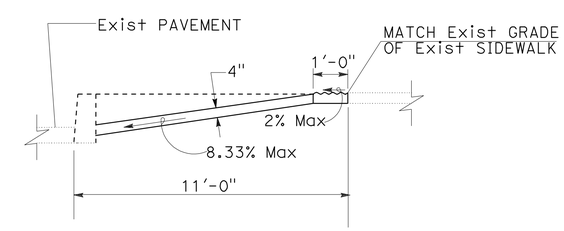


SECTION A-A

# CONSTRUCTION DETAILS

NO SCALE

C-5

STATE OF CALIFORNIA - DEPARTMENT OF TRANSPORTATION
Caltrans TRAFFIC DESIGN

FUNCTIONAL SUPERVISOR: MOHAMMED CHOWDHURY
CALCULATED-DESIGNED BY: FRANCISCO MARTINEZ
CHECKED BY: MOHAMMED HAIDER
REVISED BY
DATE REVISED

LAST REVISION 00-00-00
DATE PLOTTED => 29-FEB-2012
TIME PLOTTED => 12:01

| Dist | COUNTY | ROUTE | POST MILES TOTAL PROJECT | SHEET No. | TOTAL SHEETS |
|---|---|---|---|---|---|
| 07 | LA | 5, 57, 110, 405, 605 | Var | 14 | 63 |

REGISTERED CIVIL ENGINEER 2/3/12 DATE

2-27-12
PLANS APPROVAL DATE

REGISTERED PROFESSIONAL ENGINEER MOHAMMED HAIDER No. 61335 Exp. 06/30/13 CIVIL STATE OF CALIFORNIA

*THE STATE OF CALIFORNIA OR ITS OFFICERS OR AGENTS SHALL NOT BE RESPONSIBLE FOR THE ACCURACY OR COMPLETENESS OF SCANNED COPIES OF THIS PLAN SHEET.*

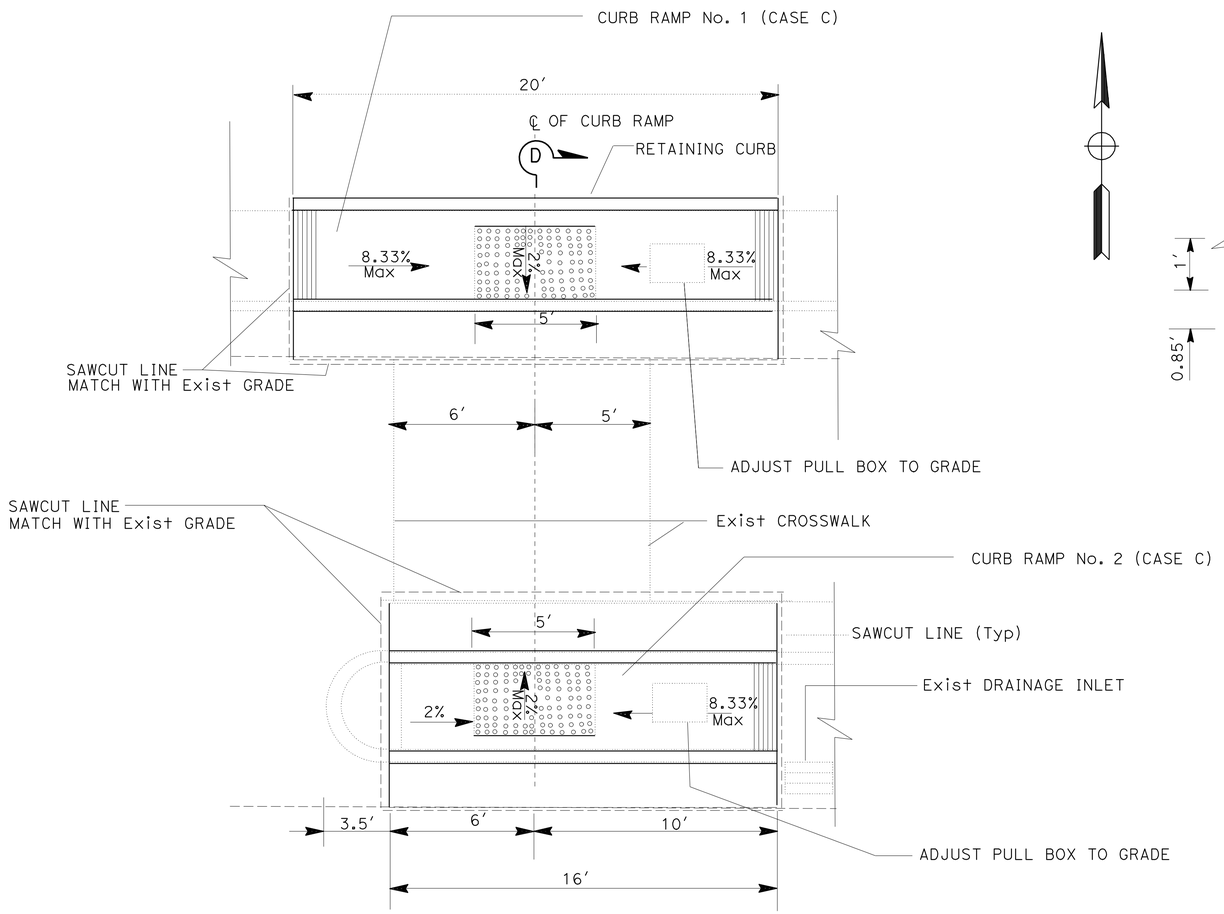


CURB RAMP (CASE C)

Loc (11)

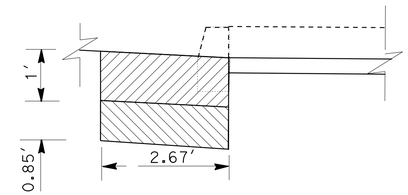


SECTION D-D

Exist STRUCTURAL SECTION

A — 0.67′ PCC
0.67′ CLASS 2 AB

TYPICAL STRUCTURAL SECTION

1 — 0.85′ MINOR CONCRETE
0.40′ LEAN CONCRETE BASE
0.60′ CLASS 3 AB

LEGEND:

ROADWAY EXCAVATION (TYPE Z-2) (AERIALLY DEPOSITED LEAD)

ROADWAY EXCAVATION

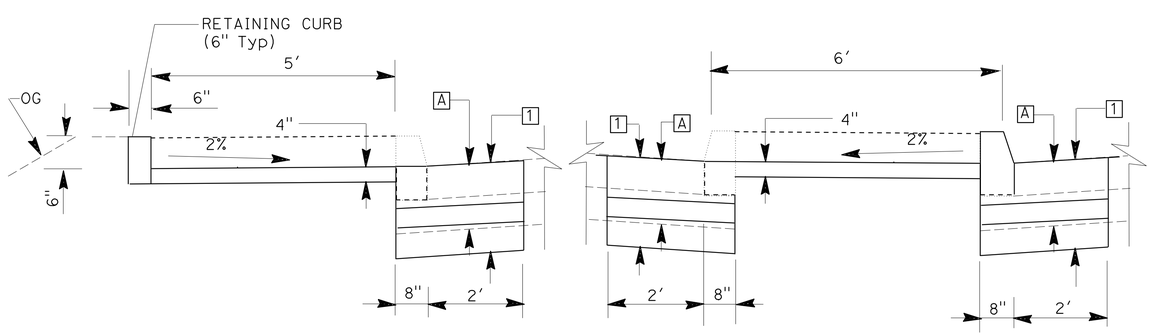


SECTION D-D

# CONSTRUCTION DETAILS

NO SCALE

C-6

STATE OF CALIFORNIA - DEPARTMENT OF TRANSPORTATION
TRAFFIC DESIGN

FUNCTIONAL SUPERVISOR: MOHAMMED CHOWDURY
CALCULATED-DESIGNED BY: FRANCISCO MARTINEZ
CHECKED BY: MOHAMMED HAIDER
REVISED BY
DATE REVISED

LAST REVISION 00-00-00
DATE PLOTTED => 29-FEB-2012
TIME PLOTTED => 12:01

| Dist | COUNTY | ROUTE | POST MILES TOTAL PROJECT | SHEET No. | TOTAL SHEETS |
|---|---|---|---|---|---|
| 07 | LA | 5, 57, 110, 405, 605 | Var | 15 | 63 |

REGISTERED CIVIL ENGINEER — DATE 2/6/12

2-27-12
PLANS APPROVAL DATE

REGISTERED PROFESSIONAL ENGINEER — MOHAMMED HAIDER No. 61335 Exp. 06/30/13 CIVIL — STATE OF CALIFORNIA

*THE STATE OF CALIFORNIA OR ITS OFFICERS OR AGENTS SHALL NOT BE RESPONSIBLE FOR THE ACCURACY OR COMPLETENESS OF SCANNED COPIES OF THIS PLAN SHEET.*

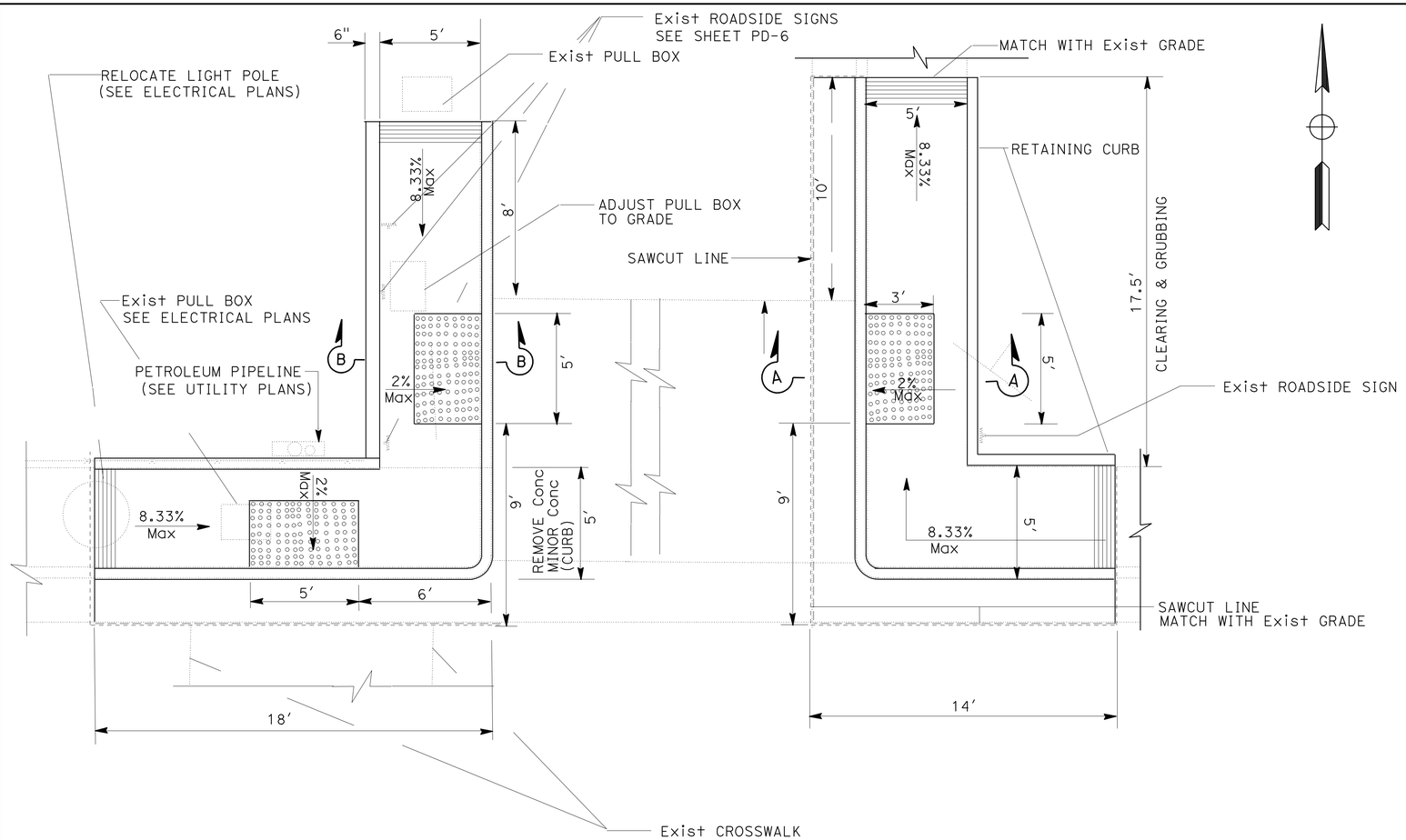


CURB RAMP No. 4 (CASE C)
Loc (12)

CURB RAMP No. 3 (CASE C)
Loc (12)

Exist STRUCTURAL SECTION

[A] 0.67' PCC
0.67' CLASS 2 AB

TYPICAL STRUCTURAL SECTION

[1] 0.85' MINOR CONCRETE
0.40' LEAN CONCRETE BASE
0.60' CLASS 3 AB

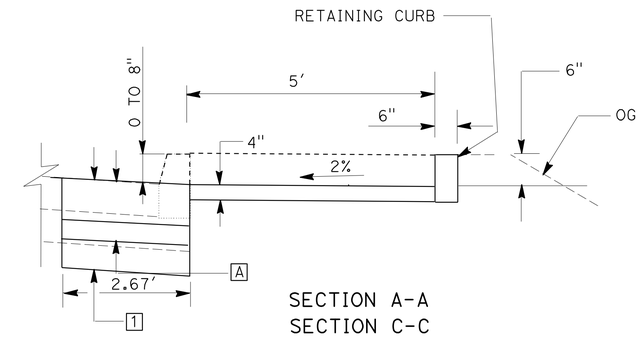


SECTION A-A
SECTION C-C

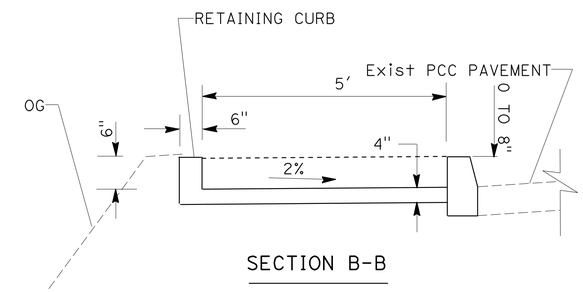


SECTION B-B

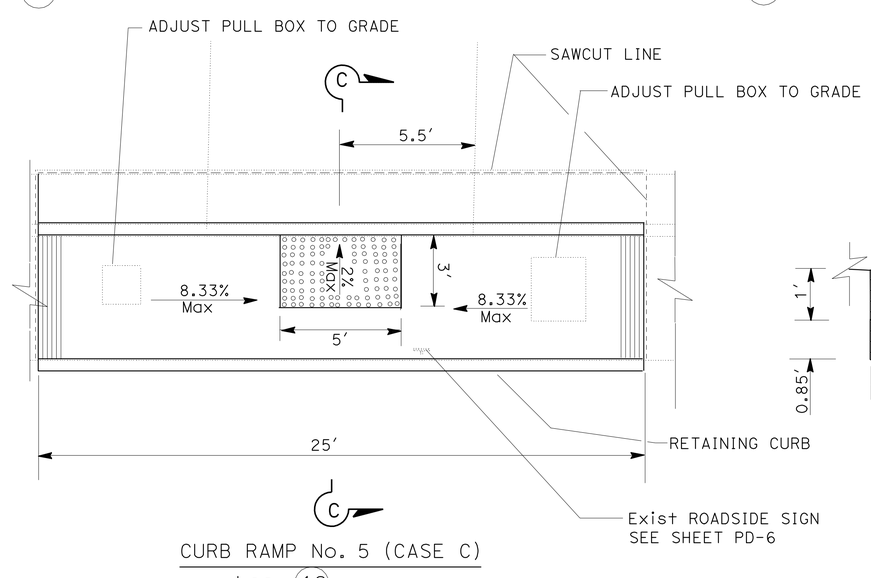


CURB RAMP No. 5 (CASE C)
Loc (12)

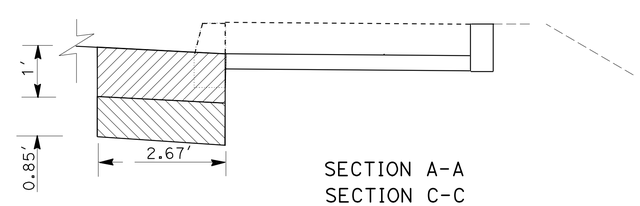


SECTION A-A
SECTION C-C

LEGEND

ROADWAY EXCAVATION (TYPE Z-2)
(AERIALLY DEPOSITED LEAD)

ROADWAY EXCAVATION

# CONSTRUCTION DETAILS

NO SCALE

C-7

STATE OF CALIFORNIA - DEPARTMENT OF TRANSPORTATION
Caltrans® TRAFFIC DESIGN

FUNCTIONAL SUPERVISOR: MOHAMMED CHOWDURY
CALCULATED-DESIGNED BY: FRANCISCO MARTINEZ
CHECKED BY: MOHAMMED HAIDER
REVISED BY
DATE REVISED

LAST REVISION 00-00-00 | DATE PLOTTED => 29-FEB-2012 | TIME PLOTTED => 12:01

| Dist | COUNTY | ROUTE | POST MILES TOTAL PROJECT | SHEET No. | TOTAL SHEETS |
|---|---|---|---|---|---|
| 07 | LA | 5, 57, 110 405, 605 | Var | 16 | 63 |

REGISTERED CIVIL ENGINEER — DATE 2/7/12

2-27-12
PLANS APPROVAL DATE

REGISTERED PROFESSIONAL ENGINEER — PARVIZ YEGANEH — No. 53797 — Exp. 06/30/13 — CIVIL — STATE OF CALIFORNIA

*THE STATE OF CALIFORNIA OR ITS OFFICERS OR AGENTS SHALL NOT BE RESPONSIBLE FOR THE ACCURACY OR COMPLETENESS OF SCANNED COPIES OF THIS PLAN SHEET.*

## NOTES:

1. FOR ACCURATE RIGHT OF WAY DATA, CONTACT RIGHT OF WAY ENGINEERING AT THE DISTRICT OFFICE.
2. LOCATIONS OF UTILITIES SHOWN ON THESE PLANS ARE APPROXIMATE AND SHALL BE VERIFIED BY THE CONTRACTOR PRIOR TO CONSTRUCTION
3. UTILITY OWNERSHIP ON THIS PROJECT OR AS SHOWN:

WATER - DOWNEY MUNICIPAL WATER
CALIFORNIA WATER SERVICE
WALNUT VALLEY WATER DISTRICT
METROPOLITAN WATER DISTRICT
DOMINGUEZ WATER COMPANY

TELEPHONE - VERIZON
AT&T

GAS - SOUTHERN CALIFORNIA GAS COMPANY

ELECTRIC - SOUTHERN CALIFORNIA EDISON

OIL - MOBIL OIL
UNION OIL
STANDARD OIL
CUNSET OIL
PLAIN ALL AMERICAN PIPE LINE
CHEVRON OIL
SHELL OIL
POWELIN OIL

### UTILITY ABBREVIATIONS

| | |
|---|---|
| CSG | CASING |
| CO | COMPANY |
| Dny | DOWNEY |
| INC | INCORPORATED |
| MWD | METROPOLITAN WATER DISTRICT |
| Mun | MUNICIPAL |
| SO CAL EDISON CO OR | |
| SCE | SOUTHERN CALIFORNIA EDISON COMPANY |
| SO CAL GAS CO | SOUTHERN CALIFORNIA GAS COMPANY |
| STL | STEEL |
| SD | STORM DRAIN |
| Wtr | WATER |
| WE | WEST OF EAST P/L |
| EW | EAST OF WEST P/L |
| NS | NORTH OF SOUTH P/L |
| NN | NORTH OF NORTH P/L |
| Du | DUCT |
| N ℄ | NORTH OF C/L |
| S ℄ | SOUTH OF C/L |

### LEGEND

⬡ POTHOLE
⇨ DIRECTION OF TRAVEL

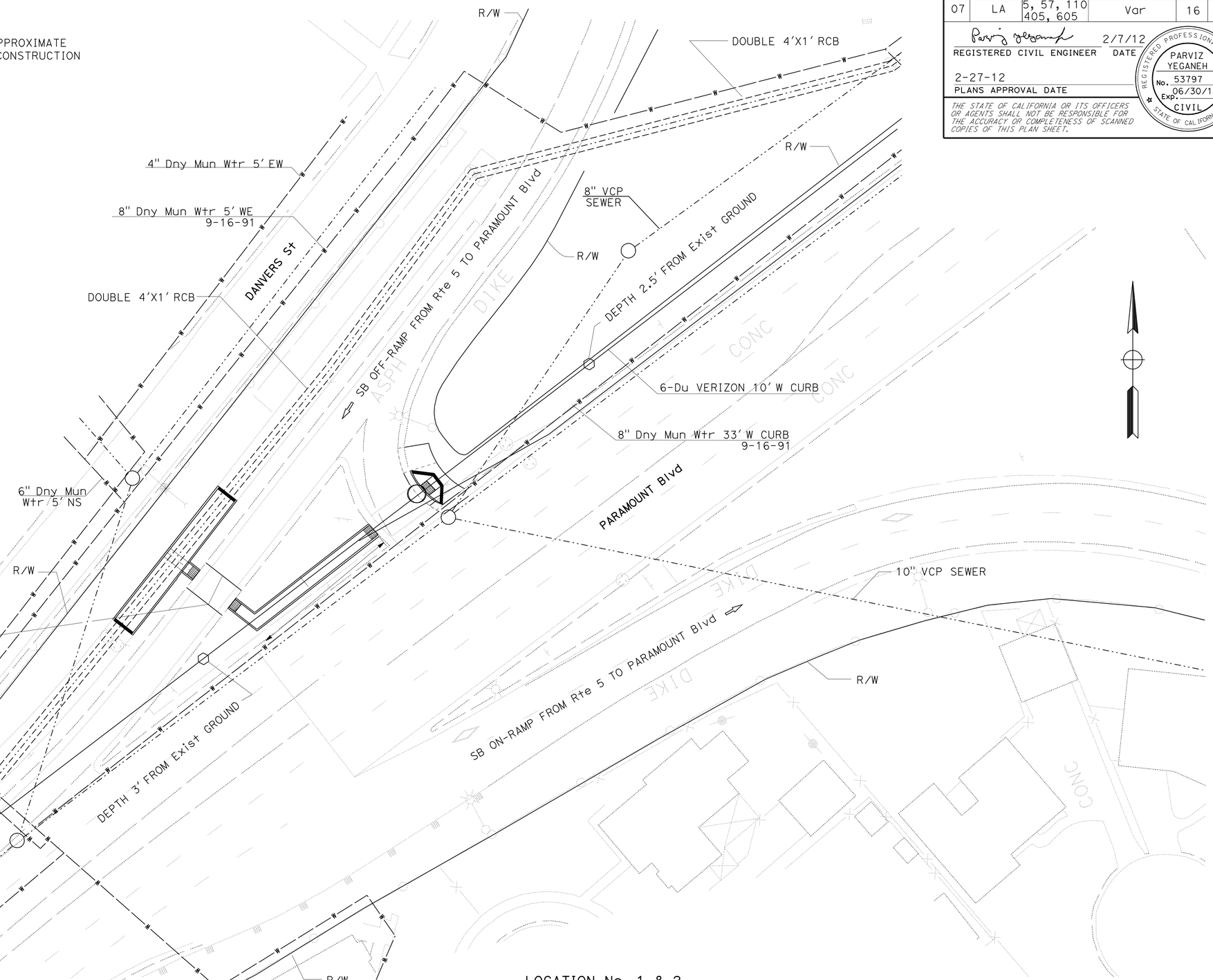


LOCATION No. 1 & 2

ROUTE 5 SB OFF-RAMP TO WB PARAMOUNT Blvd

# UTILITY PLAN

SCALE: 1"= 20'

U-1

*APPROVED FOR UTILITY INFORMATION ONLY*

STATE OF CALIFORNIA - DEPARTMENT OF TRANSPORTATION
Caltrans® TRAFFIC DESIGN

FUNCTIONAL SUPERVISOR: MOHAMMED CHOWDHURY
CALCULATED-DESIGNED BY: FRANCISCO MARTINEZ
CHECKED BY: MOHAMMED HAIDER
REVISED BY
DATE REVISED

LAST REVISION 00-00-00
DATE PLOTTED => 29-FEB-2012
TIME PLOTTED => 12:02

| Dist | COUNTY | ROUTE | POST MILES TOTAL PROJECT | SHEET No. | TOTAL SHEETS |
|---|---|---|---|---|---|
| 07 | LA | 5, 57, 110, 405, 605 | Var | 17 | 63 |

REGISTERED CIVIL ENGINEER 2/7/12 DATE

2-27-12
PLANS APPROVAL DATE

REGISTERED PROFESSIONAL ENGINEER PARVIZ YEGANEH No. 53797 Exp. 06/30/13 CIVIL STATE OF CALIFORNIA

*THE STATE OF CALIFORNIA OR ITS OFFICERS OR AGENTS SHALL NOT BE RESPONSIBLE FOR THE ACCURACY OR COMPLETENESS OF SCANNED COPIES OF THIS PLAN SHEET.*

NOTE:
FOR ACCURATE RIGHT OF WAY DATA, CONTACT
RIGHT OF WAY ENGINEERING AT THE DISTRICT OFFICE.

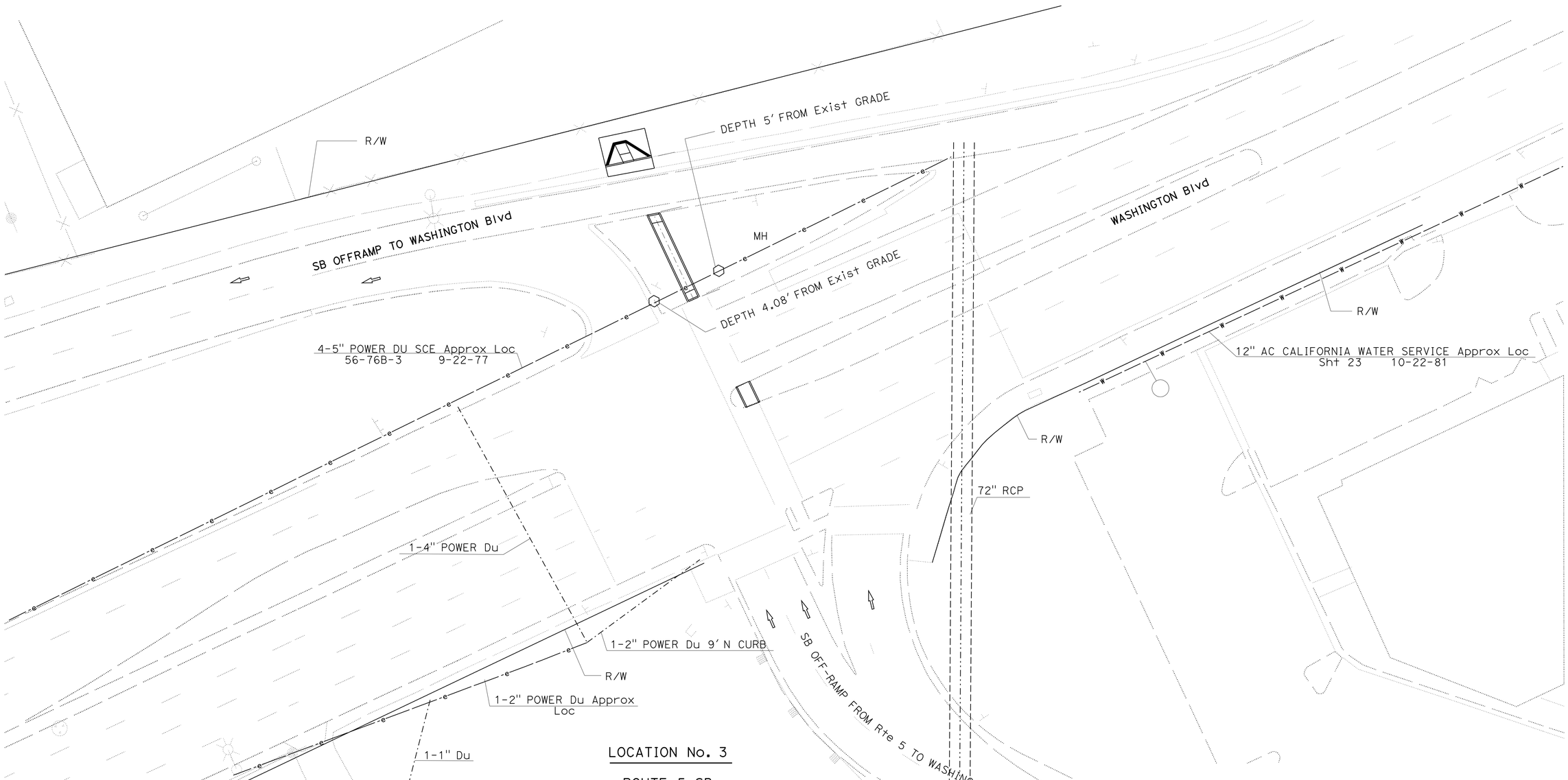


LOCATION No. 3

ROUTE 5 SB
ON-RAMP FROM WB WASHINGTON Blvd

# UTILITY PLAN

SCALE: 1" = 20'

U-2

*APPROVED FOR UTILITY INFORMATION ONLY*

STATE OF CALIFORNIA - DEPARTMENT OF TRANSPORTATION
Caltrans® TRAFFIC DESGIN

FUNCTIONAL SUPERVISOR: MOHAMMED CHOWDHURY

CALCULATED-DESIGNED BY: FRANCISCO MARTINEZ
CHECKED BY: MOHAMMED HAIDER

REVISED BY
DATE REVISED

LAST REVISION 00-00-00
DATE PLOTTED => 29-FEB-2012
TIME PLOTTED => 12:02

| Dist | COUNTY | ROUTE | POST MILES TOTAL PROJECT | SHEET No. | TOTAL SHEETS |
|---|---|---|---|---|---|
| 07 | LA | 5, 57, 110, 405, 605 | Var | 18 | 63 |

REGISTERED CIVIL ENGINEER 2/7/12 DATE

2-27-12
PLANS APPROVAL DATE

REGISTERED PROFESSIONAL ENGINEER PARVIZ YEGANEH No. 53797 Exp 06/30/13 CIVIL STATE OF CALIFORNIA

*THE STATE OF CALIFORNIA OR ITS OFFICERS OR AGENTS SHALL NOT BE RESPONSIBLE FOR THE ACCURACY OR COMPLETENESS OF SCANNED COPIES OF THIS PLAN SHEET.*

NOTE:

RIGHT OF WAY LIMITS ARE INDETERMINATE, AND ARE NOT SHOWN.
THE CONTRACTOR MUST CONTACT RIGHT OF WAY ENGINEERING AT THE DISTRICT OFFICE FOR CONDITIONS OF USE PRIOR TO COMMENCING WORK.

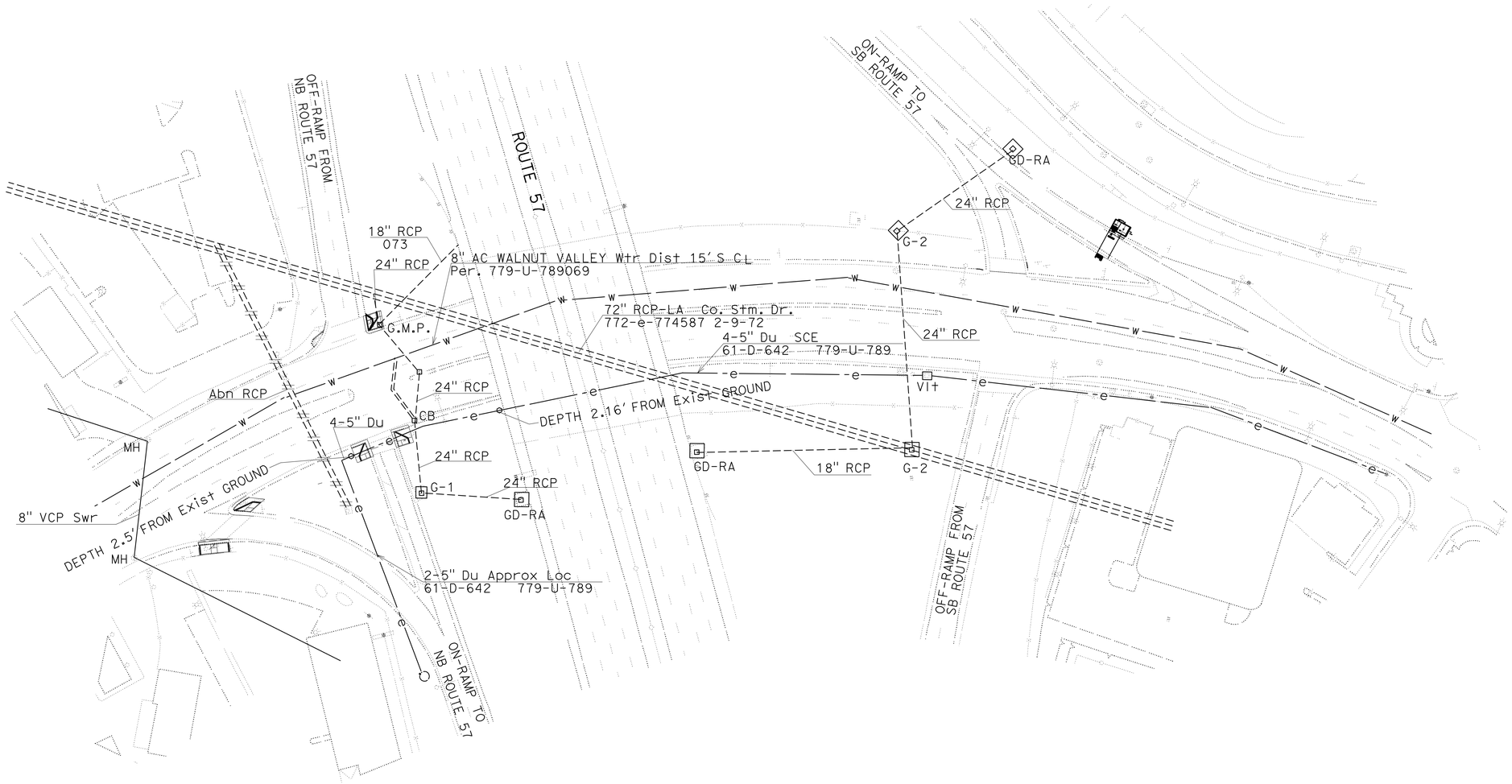


LOCATION No. 4, 5, 6, & 7

ROUTE 57
SB & NB OFF AND ON-RAMP
AT DIAMOND BAR Blvd

# UTILITY PLAN

SCALE: 1" = 50'

U-3

*APPROVED FOR UTILITY INFORMATION ONLY*

STATE OF CALIFORNIA - DEPARTMENT OF TRANSPORTATION
Caltrans TRAFFIC DESIGN

FUNCTIONAL SUPERVISOR: MOHAMMED CHOWDHURY
CALCULATED-DESIGNED BY: FRANCISCO MARTINEZ
CHECKED BY: MOHAMMED HAIDER
REVISED BY
DATE REVISED

LAST REVISION 00-00-00
DATE PLOTTED => 29-FEB-2012
TIME PLOTTED => 12:02

| Dist | COUNTY | ROUTE | POST MILES TOTAL PROJECT | SHEET No. | TOTAL SHEETS |
|---|---|---|---|---|---|
| 07 | LA | 5, 57, 110, 405, 605 | Var | 19 | 63 |

REGISTERED CIVIL ENGINEER 2/7/12 DATE

2-27-12
PLANS APPROVAL DATE

REGISTERED PROFESSIONAL ENGINEER PARVIZ YEGANEH No. 53797 Exp. 06/30/13 CIVIL STATE OF CALIFORNIA

*THE STATE OF CALIFORNIA OR ITS OFFICERS OR AGENTS SHALL NOT BE RESPONSIBLE FOR THE ACCURACY OR COMPLETENESS OF SCANNED COPIES OF THIS PLAN SHEET.*

**NOTE:**

FOR ACCURATE RIGHT OF WAY DATA, CONTACT RIGHT OF WAY ENGINEERING AT THE DISTRICT OFFICE.

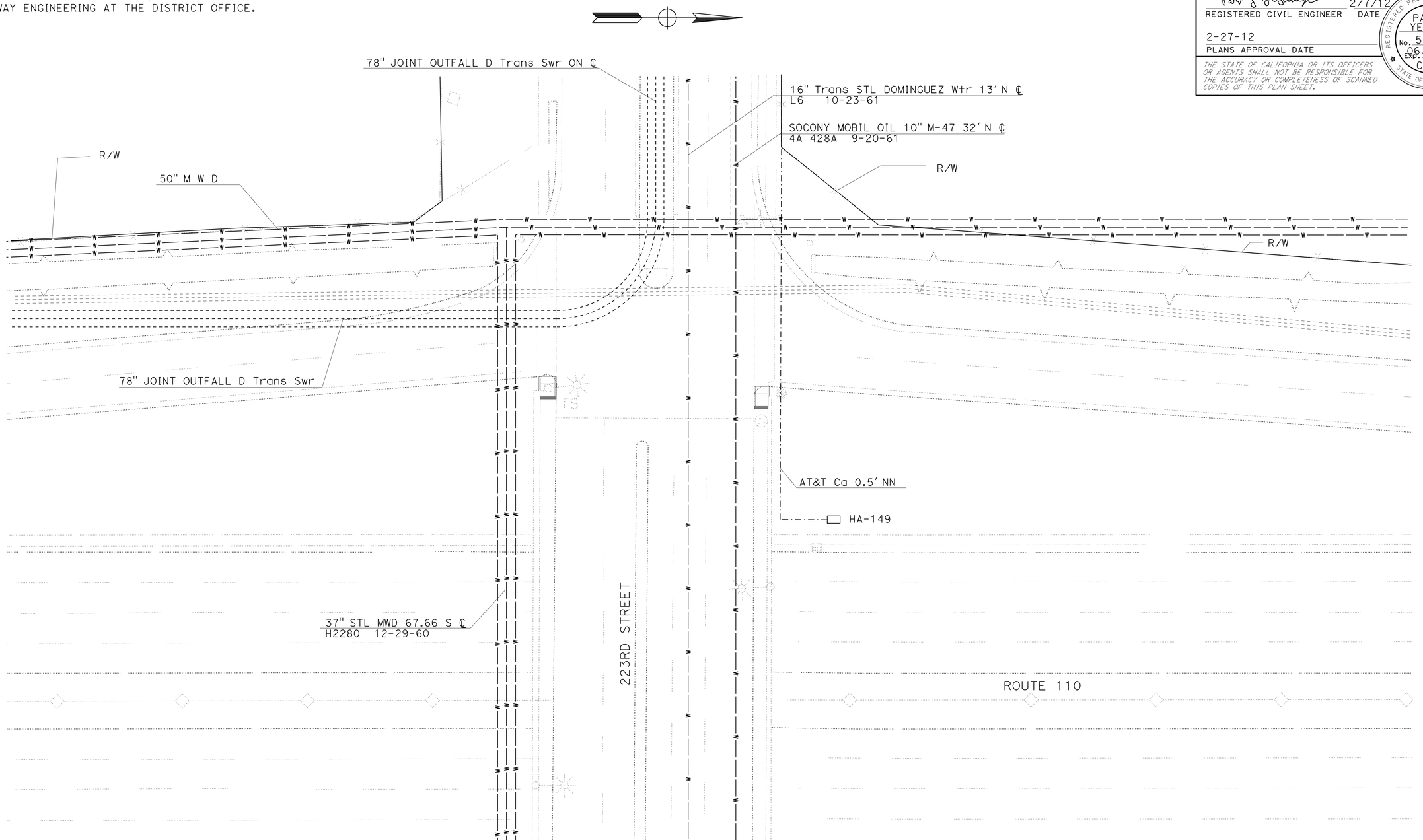


LOCATION No. 8 & 9
ROUTE 110
SB ON-RAMP FROM 223RD St
SB OFF-RAMP TO 223RD St

*APPROVED FOR UTILITY INFORMATION ONLY*

# UTILITY PLAN

SCALE: 1" = 20'

**U-4**

STATE OF CALIFORNIA - DEPARTMENT OF TRANSPORTATION
Caltrans® **TRAFFIC DESIGN**

FUNCTIONAL SUPERVISOR: MOHAMMED CHOWDHURY
CALCULATED-DESIGNED BY: FRANCISCO MARTINEZ
CHECKED BY: MOHAMMED HAIDER
REVISED BY
DATE REVISED

LAST REVISION 00-00-00
DATE PLOTTED => 29-FEB-2012
TIME PLOTTED => 12:02

| Dist | COUNTY | ROUTE | POST MILES TOTAL PROJECT | SHEET No. | TOTAL SHEETS |
|---|---|---|---|---|---|
| 07 | LA | 5,57,110, 405, 605 | Var | 20 | 63 |

REGISTERED CIVIL ENGINEER 2/7/12 DATE

2-27-12
PLANS APPROVAL DATE

REGISTERED PROFESSIONAL ENGINEER PARVIZ YEGANEH No. 53797 Exp. 06/30/13 CIVIL STATE OF CALIFORNIA

*THE STATE OF CALIFORNIA OR ITS OFFICERS OR AGENTS SHALL NOT BE RESPONSIBLE FOR THE ACCURACY OR COMPLETENESS OF SCANNED COPIES OF THIS PLAN SHEET.*

NOTE:

RIGHT OF WAY LIMITS ARE INDETERMINATE, AND ARE NOT SHOWN.
THE CONTRACTOR MUST CONTACT RIGHT OF WAY ENGINEERING AT THE DISTRICT OFFICE FOR CONDITIONS OF USE PRIOR TO COMMENCING WORK.

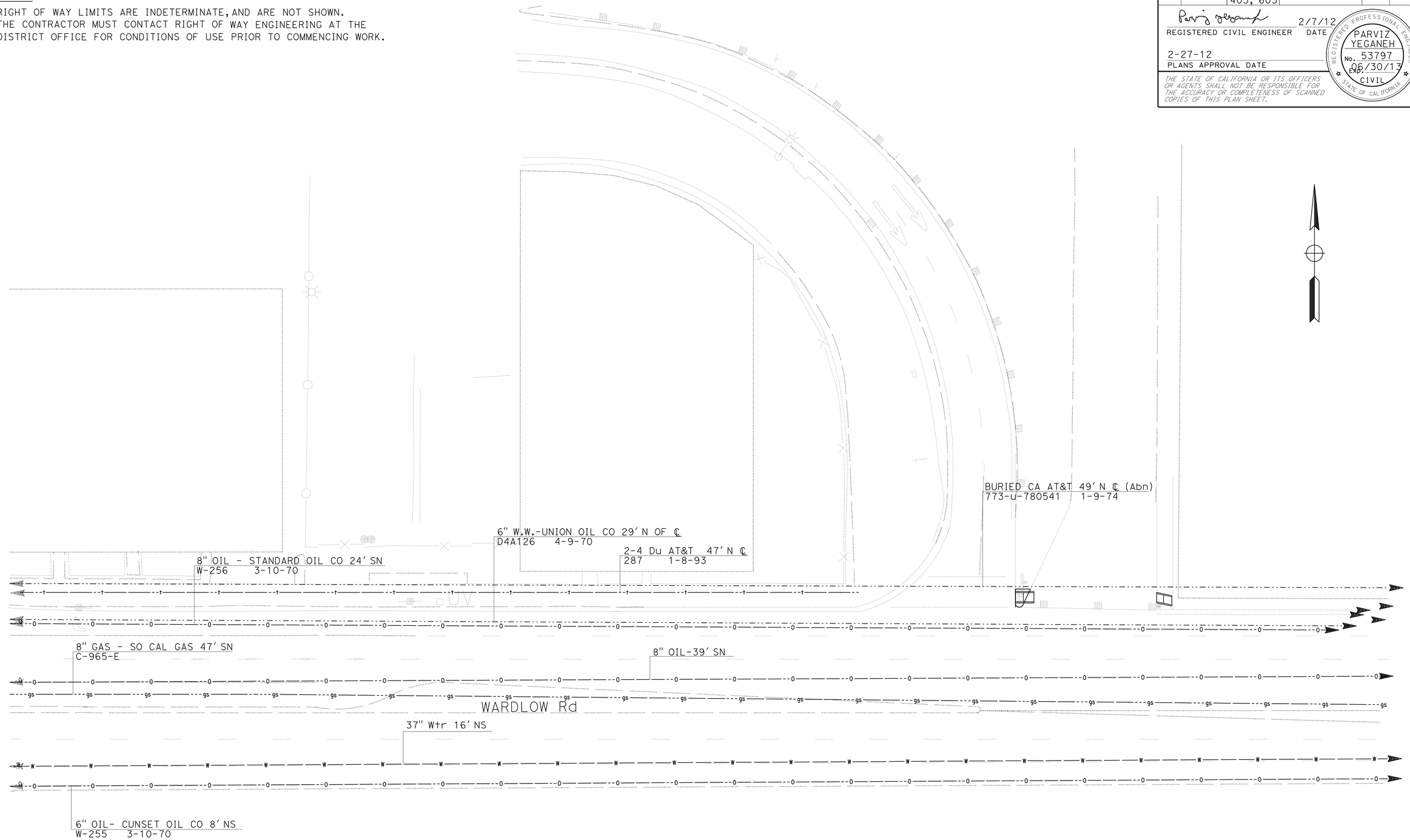


LOCATION No. 10

ROUTE 405 SB OFF-RAMP TO WARDLOW Rd

# UTILITY PLAN

SCALE: 1" = 20'

U-5

*APPROVED FOR UTILITY INFORMATION ONLY*

STATE OF CALIFORNIA - DEPARTMENT OF TRANSPORTATION
Caltrans® TRAFFIC DESIGN

FUNCTIONAL SUPERVISOR: MOHAMMED CHOWDHURY
CALCULATED-DESIGNED BY: FRANCISCO MARTINEZ
CHECKED BY: MOHAMMED HAIDER
REVISED BY
DATE REVISED

LAST REVISION 00-00-00
DATE PLOTTED => 29-FEB-2012
TIME PLOTTED => 12:02

| Dist | COUNTY | ROUTE | POST MILES TOTAL PROJECT | SHEET No. | TOTAL SHEETS |
|---|---|---|---|---|---|
| 07 | LA | 5, 57, 110, 405, 605 | Var | 21 | 63 |

REGISTERED CIVIL ENGINEER 2/7/12 DATE

2-27-12
PLANS APPROVAL DATE

REGISTERED PROFESSIONAL ENGINEER PARVIZ YEGANEH No. 53797 Exp. 6/30/13 CIVIL STATE OF CALIFORNIA

*THE STATE OF CALIFORNIA OR ITS OFFICERS OR AGENTS SHALL NOT BE RESPONSIBLE FOR THE ACCURACY OR COMPLETENESS OF SCANNED COPIES OF THIS PLAN SHEET.*

NOTE:
FOR ACCURATE RIGHT OF WAY DATA, CONTACT RIGHT OF WAY ENGINEERING AT THE DISTRICT OFFICE.

## POSITIVE LOCATION INFORMATION

| No. ⬠ | NORTHING | EASTING | Elev | DEPTH |
|---|---|---|---|---|
| 1 | 1753431.351 | 6536734.843 | 49.98 | 6'-4" |
| | | | 6.33 | |
| TOP OF PIPE Elev | | | 43.65 | |
| 2 | 1753433.406 | 6536542.193 | 43.60 | |
| 3 | 1753444.446 | 6536415.149 | 37.77 | 6'-2" |
| | | | 6.16 | |
| TOP OF PIPE Elev | | | 31.61 | |
| 4 | 1753461.368 | 6536269.958 | 31.11 | 7'-7" |
| | | | | |
| TOP OF PIPE Elev | | | 23.53 | |

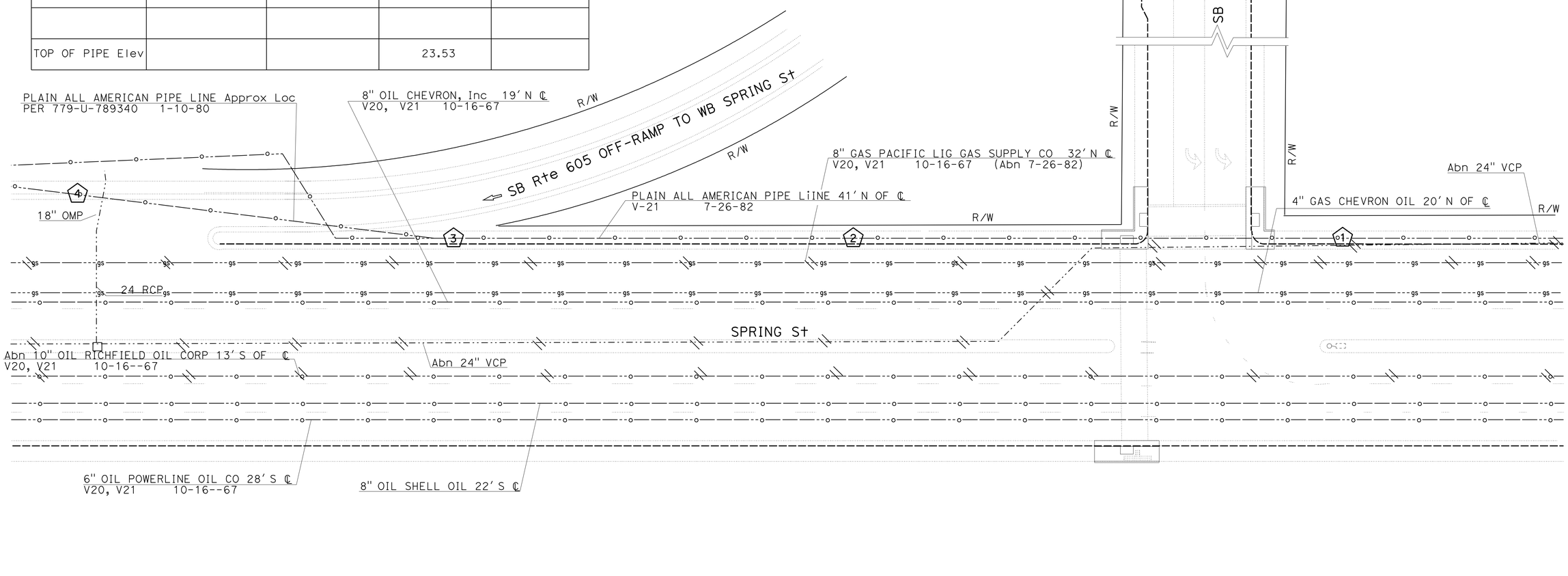


LOCATION No. 11 & 12

ROUTE 605
SB OFF RAMP TO SPRING ST

# UTILITY PLAN
SCALE: 1" = 20'

*APPROVED FOR UTILITY INFORMATION ONLY*

U-6

STATE OF CALIFORNIA - DEPARTMENT OF TRANSPORTATION
Caltrans® TRAFFIC DESIGN

FUNCTIONAL SUPERVISOR: MOHAMMED CHOUDHURY
CALCULATED-DESIGNED BY: MOHAMMED HAIDER
CHECKED BY
REVISED BY
DATE REVISED

LAST REVISION 00-00-00 | DATE PLOTTED => 29-FEB-2012 | TIME PLOTTED => 12:02

| Dist | COUNTY | ROUTE | POST MILES TOTAL PROJECT | SHEET No. | TOTAL SHEETS |
|---|---|---|---|---|---|
| 07 | LA | 5, 57, 110, 405, 605 | Var | 22 | 63 |

REGISTERED CIVIL ENGINEER 2/7/12 DATE

2-27-12
PLANS APPROVAL DATE

REGISTERED PROFESSIONAL ENGINEER MOHAMMED HADIER No. 61335 Exp. 6-30-13 CIVIL STATE OF CALIFORNIA

*THE STATE OF CALIFORNIA OR ITS OFFICERS OR AGENTS SHALL NOT BE RESPONSIBLE FOR THE ACCURACY OR COMPLETENESS OF SCANNED COPIES OF THIS PLAN SHEET.*

NOTE:

LOCATIONS OF THE CONSTRUCTION AREA SIGNS SHOWN ARE APPROXIMATE. EXACT LOCATIONS WILL BE DETERMINED BY THE ENGINEER.

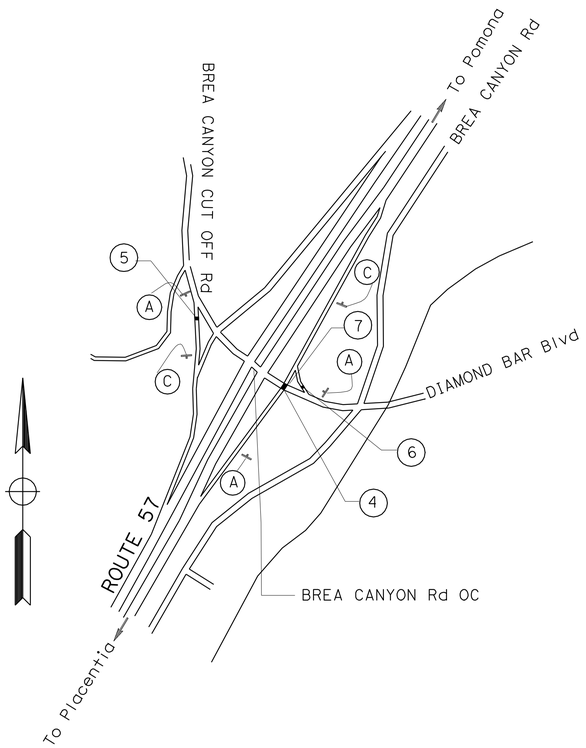


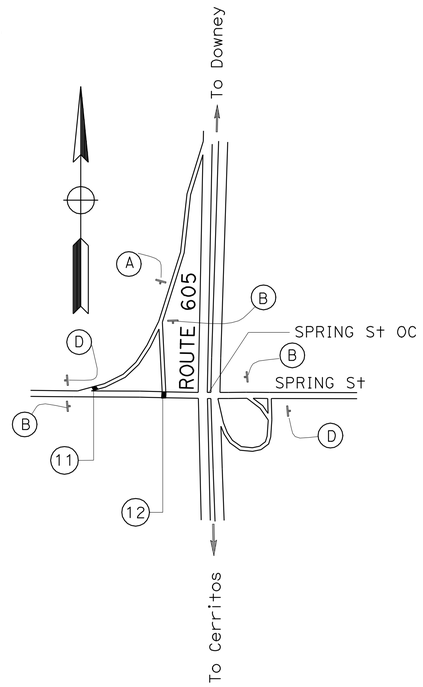


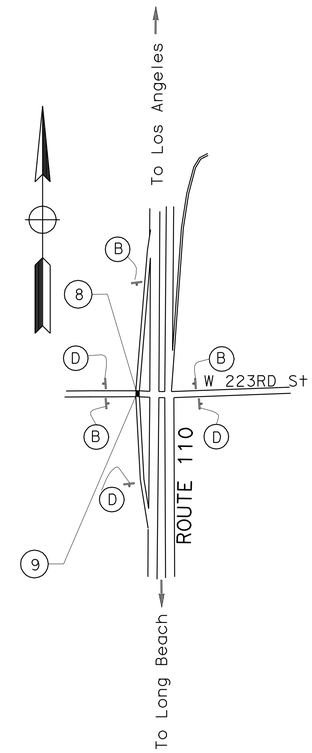


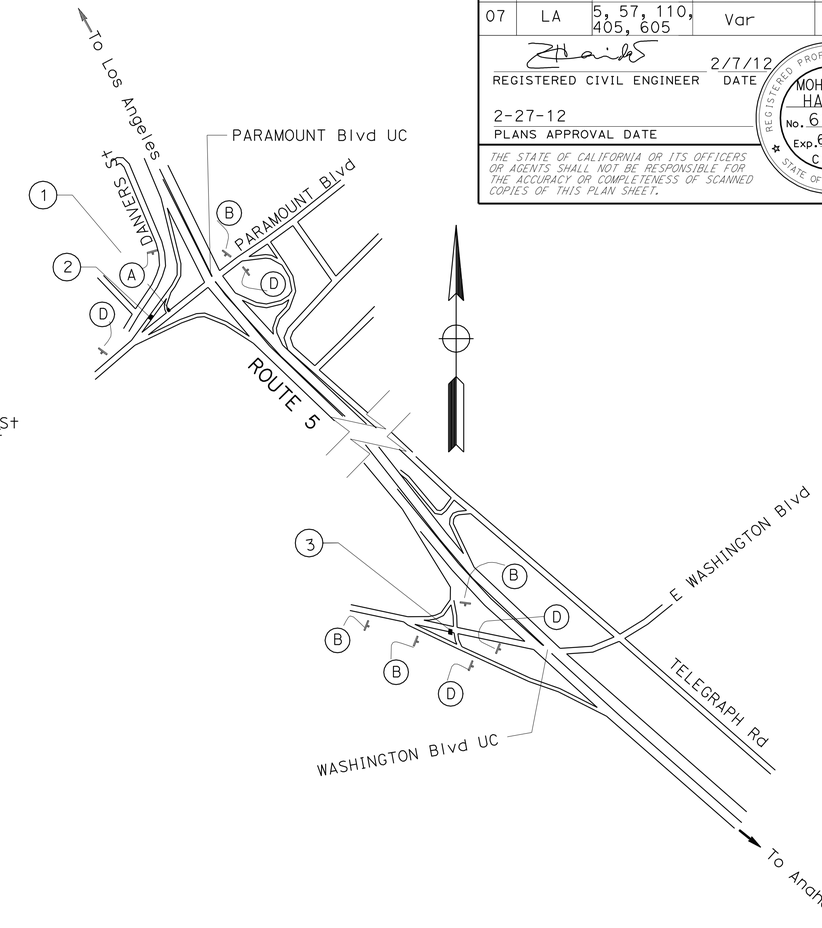


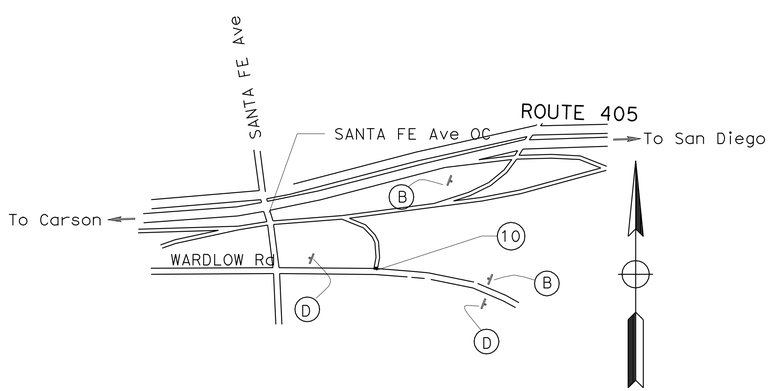


## STATIONARY MOUNTED CONSTRUCTION AREA SIGNS

| SIGN No. | SIGN CODE | DESCRIPTION | PANEL SIZE | No. OF POSTS AND SIZE | No. OF SIGNS |
|---|---|---|---|---|---|
| A | W20-1 | ROAD WORK AHEAD | 48" X 48" | 1- 4" X 6" | 5 |
| B | W20-1 | ROAD WORK AHEAD | 36" X 36" | 1- 4" X 4" | 12 |
| C | G20-2 | END ROAD WORK | 48" X 24" | 1- 4" X 6" | 2 |
| D | G20-2 | END ROAD WORK | 36" X 18" | 1- 4" X 4" | 11 |

*APPROVED FOR CONSTRUCTION AREA SIGN WORK ONLY*

# CONSTRUCTION AREA SIGNS

NO SCALE

**CS-1**

STATE OF CALIFORNIA - DEPARTMENT OF TRANSPORTATION
Caltrans® TRAFFIC DESIGN

FUNCTIONAL SUPERVISOR: MOHAMMED CHOWDHURY
CALCULATED-DESIGNED BY: FRANCISCO MARTINEZ
CHECKED BY: MOHAMMED HAIDER
REVISED BY
DATE REVISED

LAST REVISION 00-00-00
DATE PLOTTED => 29-FEB-2012
TIME PLOTTED => 12:03

| Dist | COUNTY | ROUTE | POST MILES TOTAL PROJECT | SHEET No. | TOTAL SHEETS |
|---|---|---|---|---|---|
| 07 | LA | 5, 57, 110, 405, 605 | Var | 23 | 63 |

REGISTERED CIVIL ENGINEER 2/6/12 DATE

2-27-12
PLANS APPROVAL DATE

REGISTERED PROFESSIONAL ENGINEER MOHAMMED HAIDER No. 61335 Exp. 06/30/13 CIVIL STATE OF CALIFORNIA

*THE STATE OF CALIFORNIA OR ITS OFFICERS OR AGENTS SHALL NOT BE RESPONSIBLE FOR THE ACCURACY OR COMPLETENESS OF SCANNED COPIES OF THIS PLAN SHEET.*

## NOTES:

1. LOCATIONS OF SIGNS SHOWN ARE APPROXIMATE, EXACT LOCATIONS WILL BE DETERMINED BY THE ENGINEER.
2. PEDESTRIAN ACCESS MUST BE MAINTAINED AT ALL TIMES.

## LEGEND:

⇨ DIRECTION OF TRAVEL

BARRICADE (TYPE II)

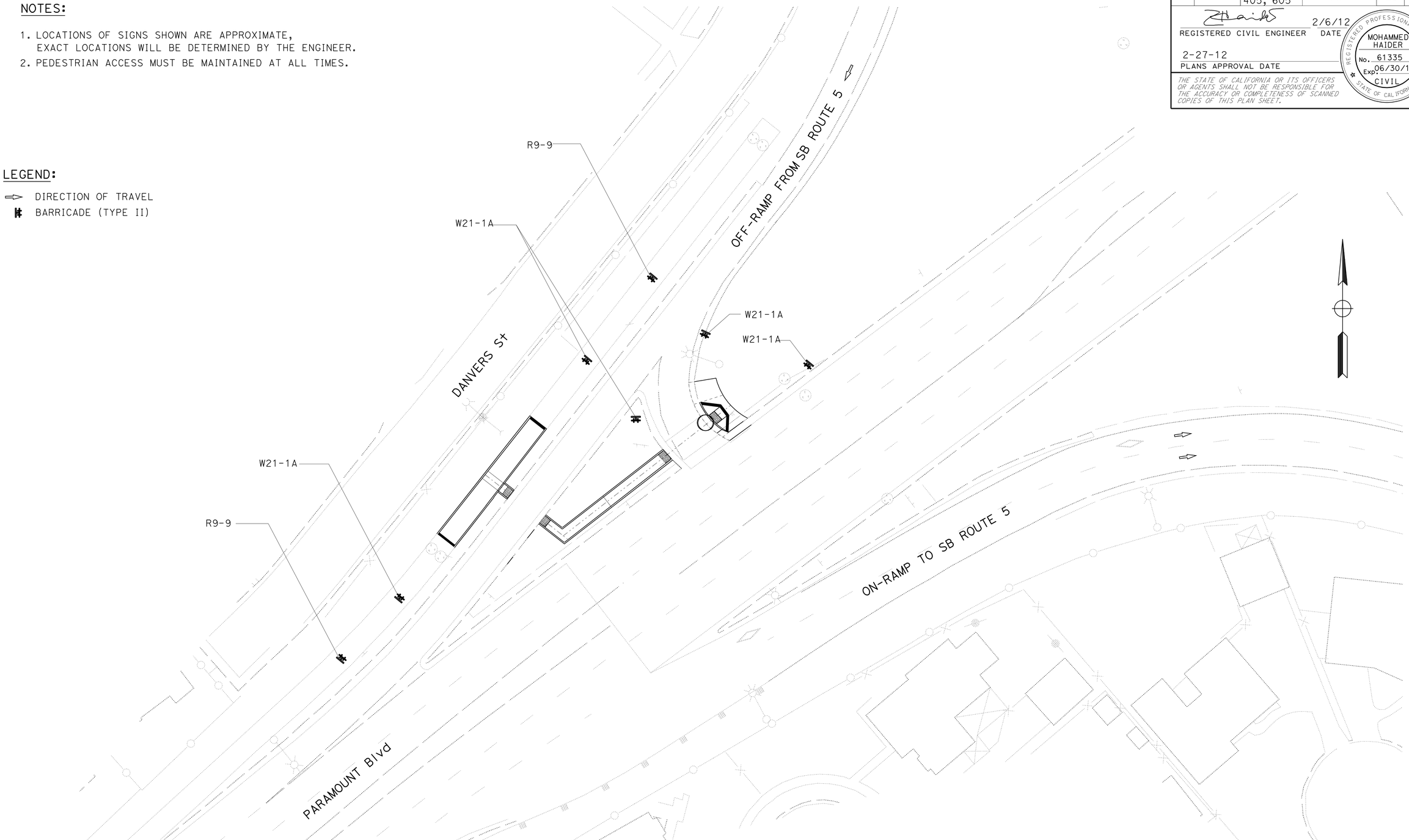


LOCATION No. 1 & 2

ROUTE 5
SB OFF-RAMP TO WB PARAMOUNT Blvd

*APPROVED FOR TRAFFIC HANDLING WORK ONLY*

# PEDESTRIAN HANDLING DETAILS
# TRAFFIC HANDLING PLAN

SCALE: 1"= 20'

**TH-1**

STATE OF CALIFORNIA - DEPARTMENT OF TRANSPORTATION
Caltrans
TRAFFIC DESIGN

FUNCTIONAL SUPERVISOR: MOHAMMED CHOWDHURY
CALCULATED-DESIGNED BY: FRANCISCO MARTINEZ
CHECKED BY: MOHAMMED HAIDER
REVISED BY
DATE REVISED

LAST REVISION 00-00-00
DATE PLOTTED => 29-FEB-2012
TIME PLOTTED => 12:03

| Dist | COUNTY | ROUTE | POST MILES TOTAL PROJECT | SHEET No. | TOTAL SHEETS |
|---|---|---|---|---|---|
| 07 | LA | 5, 57, 110, 405, 605 | Var | 24 | 63 |

REGISTERED CIVIL ENGINEER 2/6/12 DATE

2-27-12
PLANS APPROVAL DATE

REGISTERED PROFESSIONAL ENGINEER
MOHAMMED HAIDER
No. 61335
Exp. 06/30/13
CIVIL
STATE OF CALIFORNIA

*THE STATE OF CALIFORNIA OR ITS OFFICERS OR AGENTS SHALL NOT BE RESPONSIBLE FOR THE ACCURACY OR COMPLETENESS OF SCANNED COPIES OF THIS PLAN SHEET.*

NOTES:

1. LOCATIONS OF SIGNS SHOWN ARE APPROXIMATE, EXACT LOCATIONS WILL BE DETERMINED BY THE ENGINEER.
2. PEDESTRIAN ACCESS MUST BE MAINTAINED AT ALL TIMES.

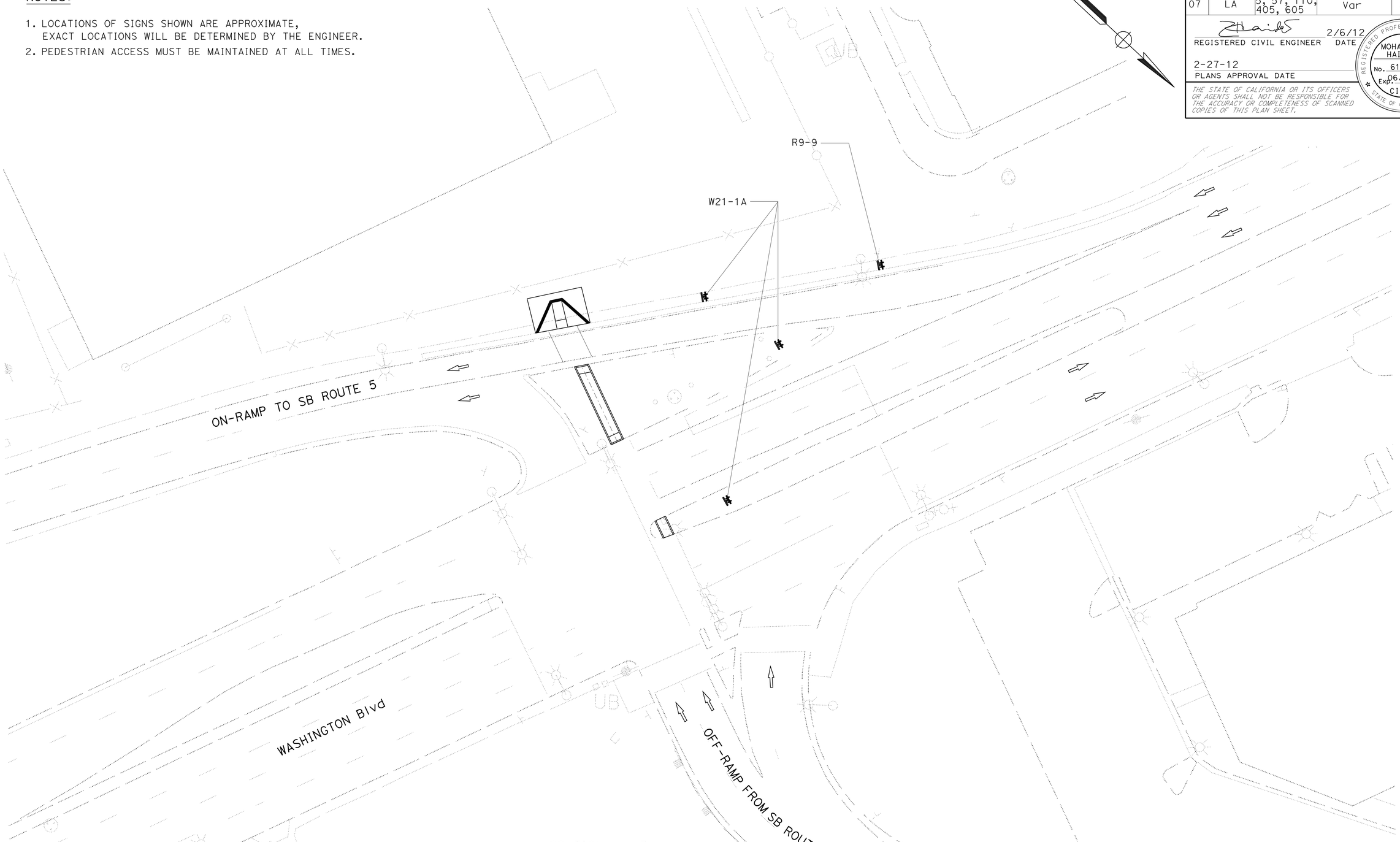


LOCATION No. 3

ROUTE 5
SB ON-RAMP FROM EB WASHINGTON Blvd

*APPROVED FOR TRAFFIC HANDLING WORK ONLY*

# PEDESTRIAN HANDLING DETAILS
# TRAFFIC HANDLING PLAN

SCALE: 1"= 20'

**TH-2**

STATE OF CALIFORNIA - DEPARTMENT OF TRANSPORTATION
Caltrans
TRAFFIC DESIGN

FUNCTIONAL SUPERVISOR: MOHAMMED CHOWDHURY

CALCULATED-DESIGNED BY: FRANCISCO MARTINEZ
CHECKED BY: MOHAMMED HAIDER

REVISED BY
DATE REVISED

LAST REVISION 00-00-00
DATE PLOTTED => 29-FEB-2012
TIME PLOTTED => 12:03

| Dist | COUNTY | ROUTE | POST MILES TOTAL PROJECT | SHEET No. | TOTAL SHEETS |
|---|---|---|---|---|---|
| 07 | LA | 5, 57, 110, 405, 605 | Var | 25 | 63 |

REGISTERED CIVIL ENGINEER 2/6/12 DATE

2-27-12
PLANS APPROVAL DATE

REGISTERED PROFESSIONAL ENGINEER MOHAMMED HAIDER No. 61335 Exp 06/30/13 CIVIL STATE OF CALIFORNIA

*THE STATE OF CALIFORNIA OR ITS OFFICERS OR AGENTS SHALL NOT BE RESPONSIBLE FOR THE ACCURACY OR COMPLETENESS OF SCANNED COPIES OF THIS PLAN SHEET.*

## NOTES:

1. LOCATIONS OF SIGNS SHOWN ARE APPROXIMATE, EXACT LOCATIONS WILL BE DETERMINED BY THE ENGINEER.
2. PEDESTRIAN ACCESS MUST BE MAINTAINED AT ALL TIMES.

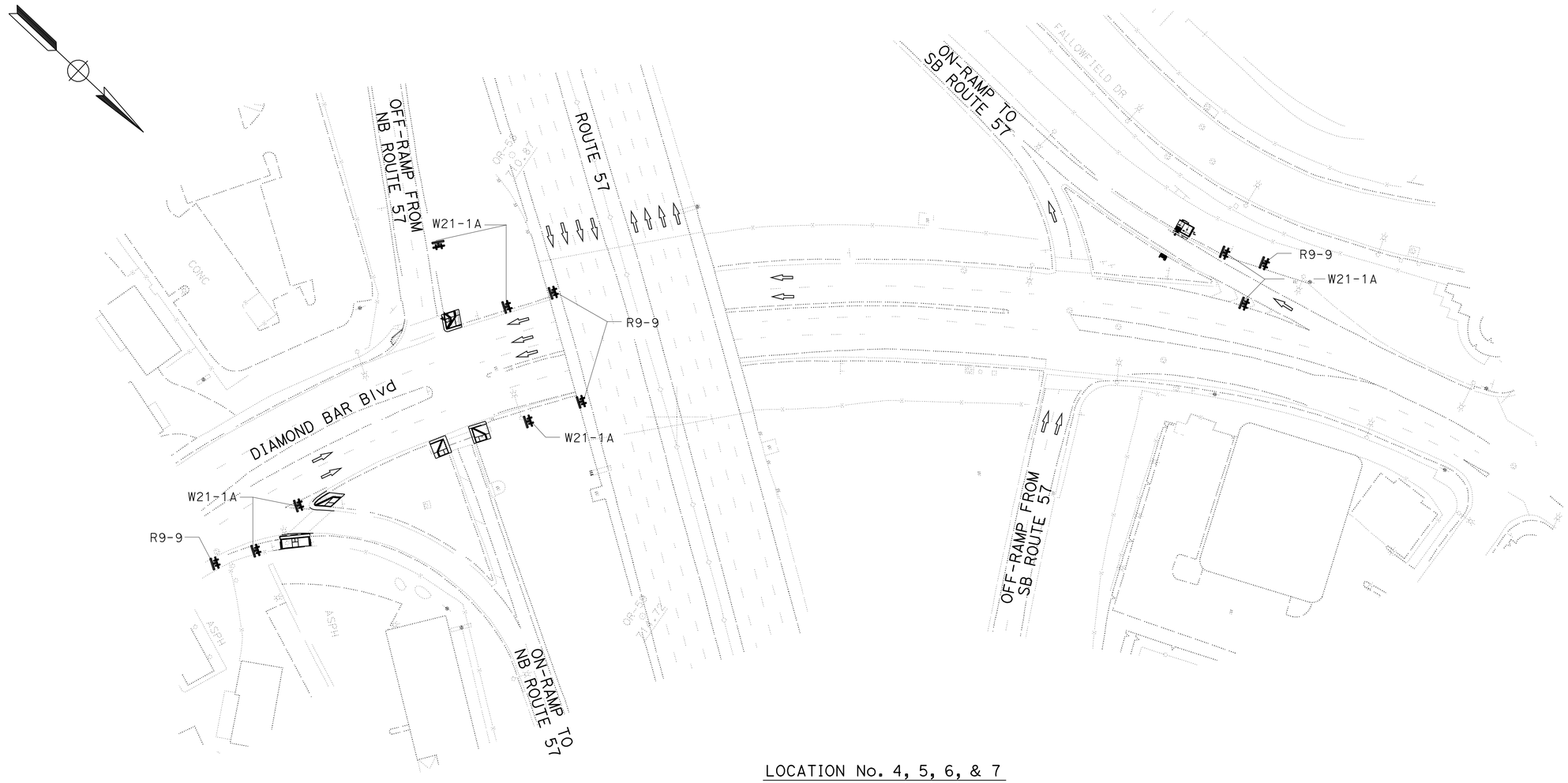


LOCATION No. 4, 5, 6, & 7

ROUTE 57
SB & NB OFF AND ON-RAMPS
DIAMOND BAR Blvd

*APPROVED FOR TRAFFIC HANDLING WORK ONLY*

# PEDESTRIAN HANDLING DETAILS
# TRAFFIC HANDLING PLAN

SCALE: 1"= 50'

**TH-3**

STATE OF CALIFORNIA - DEPARTMENT OF TRANSPORTATION
Caltrans® **TRAFFIC DESIGN**

FUNCTIONAL SUPERVISOR: MOHAMMED CHOWDHURY
CALCULATED-DESIGNED BY: FRANCISCO MARTINEZ
CHECKED BY: MOHAMMED HAIDER
REVISED BY
DATE REVISED

LAST REVISION 00-00-00
DATE PLOTTED => 29-FEB-2012
TIME PLOTTED => 12:03

| Dist | COUNTY | ROUTE | POST MILES TOTAL PROJECT | SHEET No. | TOTAL SHEETS |
|---|---|---|---|---|---|
| 07 | LA | 5, 57, 110, 405, 605 | Var | 26 | 63 |

REGISTERED CIVIL ENGINEER 2/6/12 DATE

2-27-12
PLANS APPROVAL DATE

REGISTERED PROFESSIONAL ENGINEER MOHAMMED HAIDER No. 61335 Exp. 06/30/13 CIVIL STATE OF CALIFORNIA

*THE STATE OF CALIFORNIA OR ITS OFFICERS OR AGENTS SHALL NOT BE RESPONSIBLE FOR THE ACCURACY OR COMPLETENESS OF SCANNED COPIES OF THIS PLAN SHEET.*

NOTES:

1. LOCATIONS OF SIGNS SHOWN ARE APPROXIMATE, EXACT LOCATIONS WILL BE DETERMINED BY THE ENGINEER.
2. PEDESTRIAN ACCESS MUST BE MAINTAINED AT ALL TIMES.

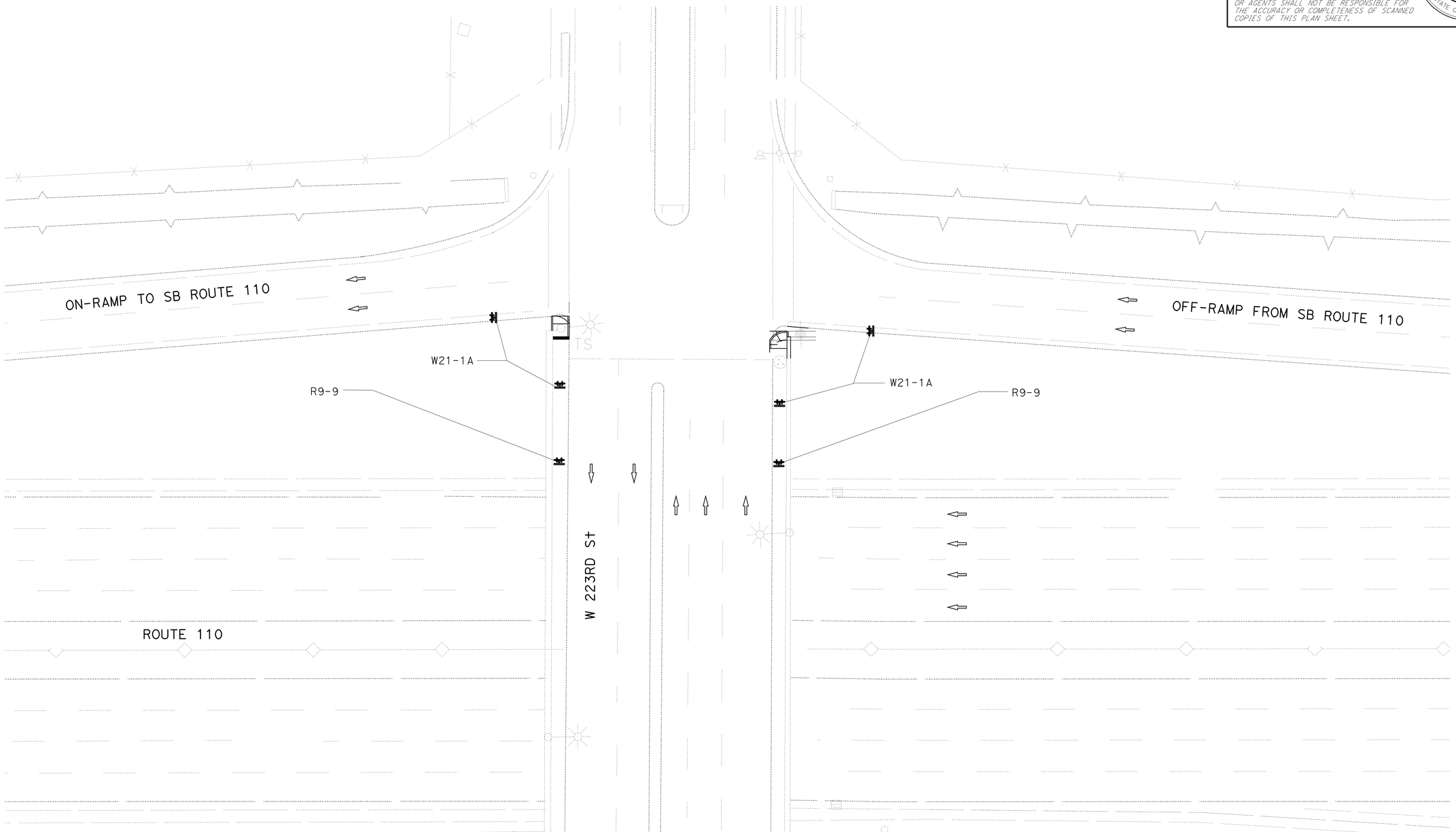


LOCATION No. 8 & 9
ROUTE 110
SB ON AND OFF-RAMPS
AT W 223RD St
SB OFF AND ON-RAMP 223 ST.

LOCATION NO: 10 & 11
ROUTE 110

*APPROVED FOR TRAFFIC HANDLING WORK ONLY*

# PEDESTRIAN HANDLING DETAILS
# TRAFFIC HANDLING PLAN

SCALE: 1"= 20'

**TH-4**

STATE OF CALIFORNIA - DEPARTMENT OF TRANSPORTATION
Caltrans® TRAFFIC DESIGN

FUNCTIONAL SUPERVISOR: MOHAMMED CHOWDHURY

CALCULATED-DESIGNED BY: FRANCISCO MARTINEZ
CHECKED BY: MOHAMMED HAIDER

REVISED BY | DATE REVISED

LAST REVISION 00-00-00 | DATE PLOTTED => 29-FEB-2012 | TIME PLOTTED => 12:03

| Dist | COUNTY | ROUTE | POST MILES TOTAL PROJECT | SHEET No. | TOTAL SHEETS |
|---|---|---|---|---|---|
| 07 | LA | 5, 57, 110, 405, 605 | Var | 27 | 63 |

REGISTERED CIVIL ENGINEER 2/6/12 DATE

2-27-12
PLANS APPROVAL DATE

REGISTERED PROFESSIONAL ENGINEER MOHAMMED HAIDER No. 61335 Exp. 06/30/13 CIVIL STATE OF CALIFORNIA

*THE STATE OF CALIFORNIA OR ITS OFFICERS OR AGENTS SHALL NOT BE RESPONSIBLE FOR THE ACCURACY OR COMPLETENESS OF SCANNED COPIES OF THIS PLAN SHEET.*

## NOTES:

1. LOCATIONS OF SIGNS SHOWN ARE APPROXIMATE, EXACT LOCATIONS WILL BE DETERMINED BY THE ENGINEER.
2. PEDESTRIAN ACCESS MUST BE MAINTAINED AT ALL TIMES.

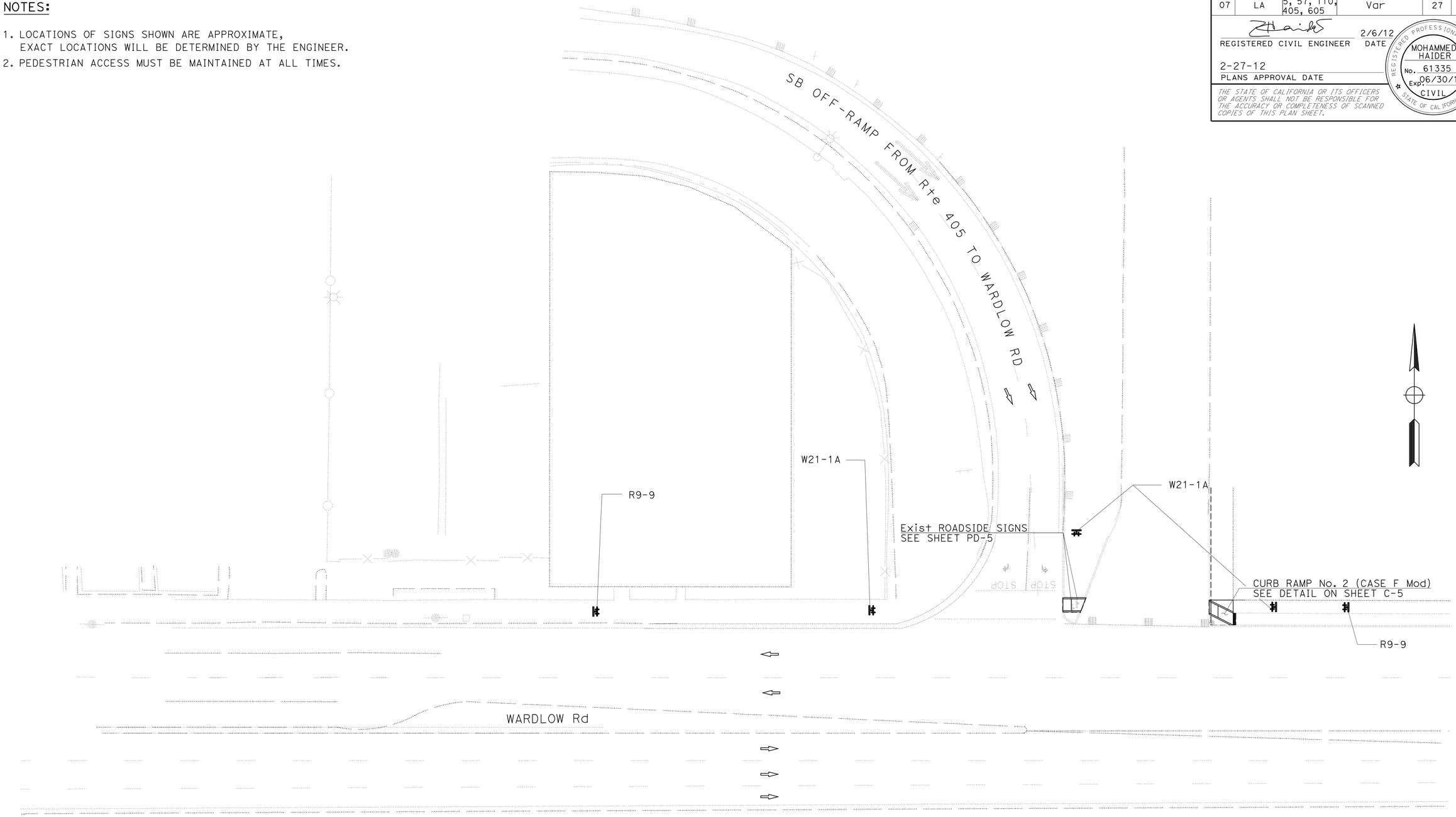


LOCATION No. 10

ROUTE 405
SB OFF-RAMP TO SANTA FE Ave/WARDLOW Rd

*APPROVED FOR TRAFFIC HANDLING WORK ONLY*

# PEDESTRIAN HANDLING DETAILS
# TRAFFIC HANDLING PLAN

SCALE: 1"= 20'

**TH-5**

STATE OF CALIFORNIA - DEPARTMENT OF TRANSPORTATION
Caltrans® **TRAFFIC DESIGN**

FUNCTIONAL SUPERVISOR: MOHAMMED CHOWDHURY

CALCULATED-DESIGNED BY: FRANCISCO MARTINEZ
CHECKED BY: MOHAMMED HAIDER

REVISED BY
DATE REVISED

LAST REVISION 00-00-00
DATE PLOTTED => 29-FEB-2012
TIME PLOTTED => 12:04

| Dist | COUNTY | ROUTE | POST MILES TOTAL PROJECT | SHEET No. | TOTAL SHEETS |
|---|---|---|---|---|---|
| 07 | LA | 5, 57, 110, 405, 605 | Var | 28 | 63 |

REGISTERED CIVIL ENGINEER 2/6/12 DATE

2-27-12
PLANS APPROVAL DATE

REGISTERED PROFESSIONAL ENGINEER MOHAMMED HAIDER No. 61335 Exp. 06/30/13 CIVIL STATE OF CALIFORNIA

*THE STATE OF CALIFORNIA OR ITS OFFICERS OR AGENTS SHALL NOT BE RESPONSIBLE FOR THE ACCURACY OR COMPLETENESS OF SCANNED COPIES OF THIS PLAN SHEET.*

## NOTES:

1. LOCATIONS OF SIGNS SHOWN ARE APPROXIMATE, EXACT LOCATIONS WILL BE DETERMINED BY THE ENGINEER.
2. PEDESTRIAN ACCESS MUST BE MAINTAINED AT ALL TIMES.

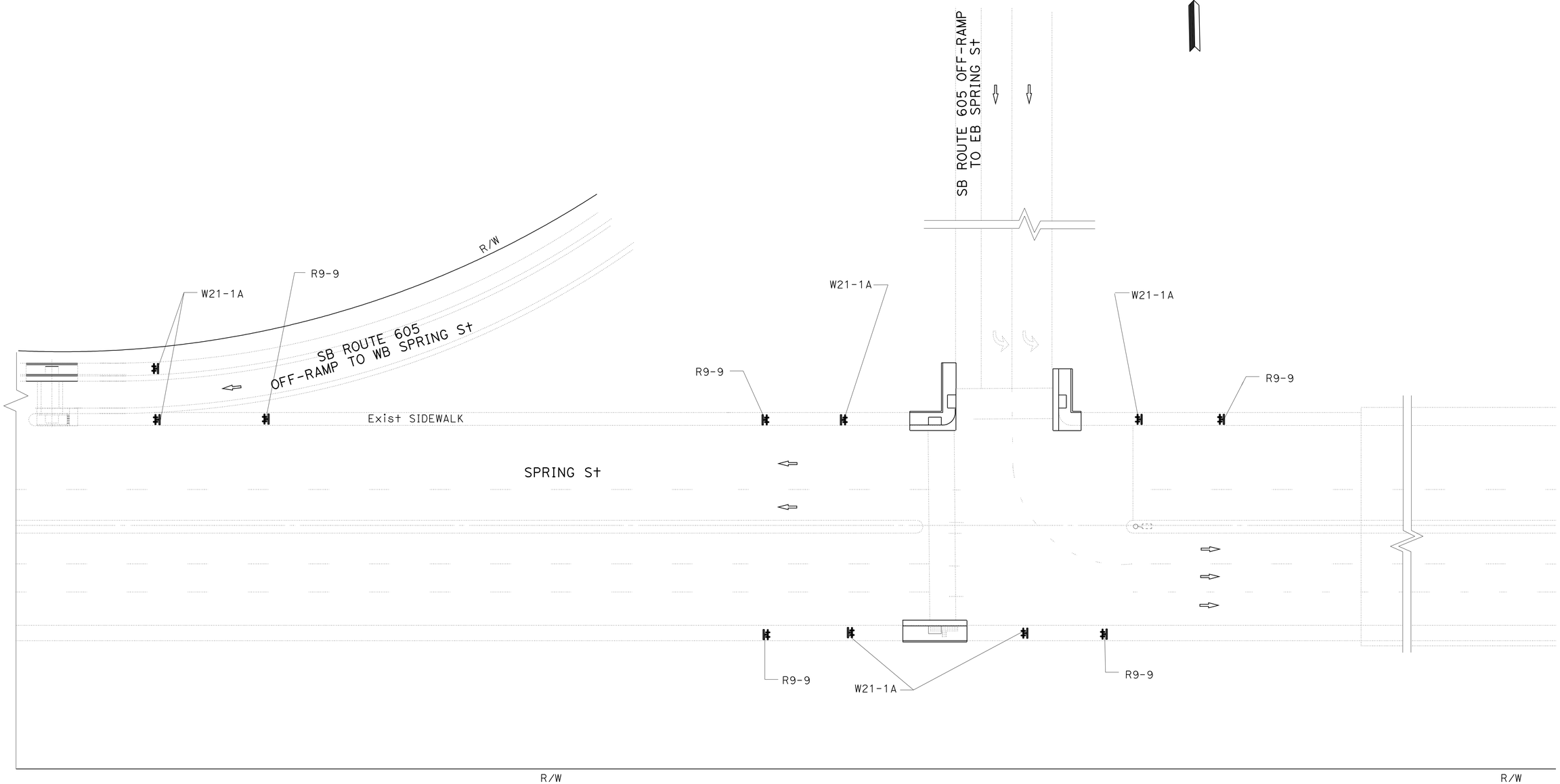


LOCATION No. 11 & 12
ROUTE 605
SB OFF-RAMPS TO SPRING St

*APPROVED FOR TRAFFIC HANDLING WORK ONLY*

# PEDESTRIAN HANDLING DETAILS
# TRAFFIC HANDLING PLAN

SCALE: 1"= 20'

**TH-6**

STATE OF CALIFORNIA - DEPARTMENT OF TRANSPORTATION
Caltrans
TRAFFIC DESIGN

FUNCTIONAL SUPERVISOR: MOHAMMED CHOWDHURY
CALCULATED-DESIGNED BY: FRANCISCO MARTINEZ
CHECKED BY: MOHAMMED HAIDER
REVISED BY
DATE REVISED

LAST REVISION 00-00-00 | DATE PLOTTED => 29-FEB-2012 | TIME PLOTTED => 12:04

| Dist | COUNTY | ROUTE | POST MILES TOTAL PROJECT | SHEET No. | TOTAL SHEETS |
|---|---|---|---|---|---|
| 07 | LA | 5, 57, 110, 405, 605 | Var | 29 | 63 |

R.M. Mishreki 10-7-11
REGISTERED CIVIL ENGINEER DATE

2-27-12
PLANS APPROVAL DATE

REGISTERED PROFESSIONAL ENGINEER R.M. MISHREKI No. C68484 Exp. 9-30-13 CIVIL STATE OF CALIFORNIA

*THE STATE OF CALIFORNIA OR ITS OFFICERS OR AGENTS SHALL NOT BE RESPONSIBLE FOR THE ACCURACY OR COMPLETENESS OF SCANNED COPIES OF THIS PLAN SHEET.*

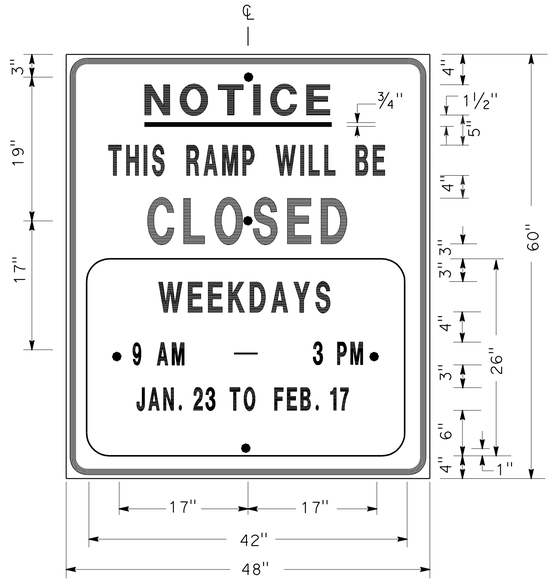


SIGN SP-1

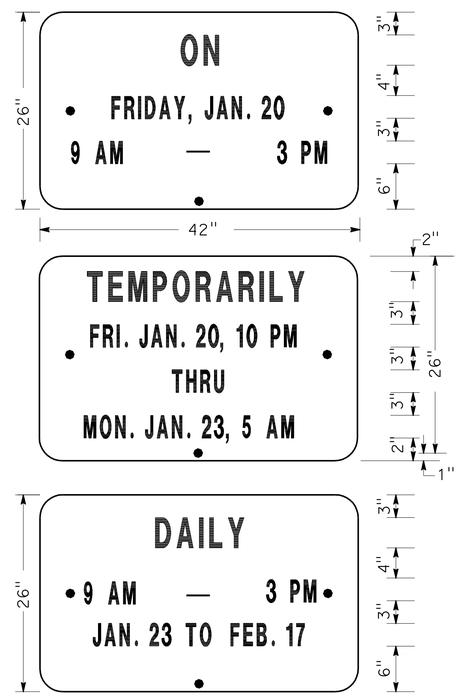


ALTERNATE OVERLAY PANELS (TYPICAL)

## SPECIAL ADVANCE NOTICE PUBLICITY SIGN

NOTES: (SIGN SP-1)

1. SIGNS SHALL HAVE ORANGE RETROREFLECTORIZED BACKGROUND WITH BLACK BORDER AND LETTERS.
2. BOLT HOLES SHALL BE 3/8" DIAMETER.
3. BASE MATERIAL SHALL BE ALUMINUM (MINIMUM 0.06").
4. SIGNS SHALL BE MOUNTED WITH BOTTOMS OF SIGNS A MINIMUM OF 6' ABOVE GROUND.

| SIZE | BORDER WIDTH | MARGIN WIDTH | LETTER SIZE | | | | | CORNER RADIUS |
|---|---|---|---|---|---|---|---|---|
| | | | LINE 1 | LINE 2* | LINE 3 | LINE 4 | LINE 5,6 & 7* | |
| 48"x60" | 1 1/4" | 3/4" | 4E | 4D | 6E | 4D | | 3" |
| 42"x26" | OVERLAY | | | | | | 3D | 1 1/2" |
| * CONDENSED SPACING IF NECESSARY | | | | | | | | |

SIGN SP-4

NOTES: (SIGN SP-4)

1. LETTERS - 6" SERIES C.
2. LETTERS AND BORDERS - BLACK ON RETROREFLECTORIZED WHITE BACKGROUND.
3. BASE MATERIAL SHALL BE ALUMINUM (MINIMUM 0.06").
4. SIGNS SHALL BE PLACED AT RAMP ENTRANCES IN ADDITION TO SIGNS POSTED IN ACCORDANCE WITH STANDARD PLAN T14.

## SPECIAL SIGN FOR ENTRANCE RAMP CLOSURES

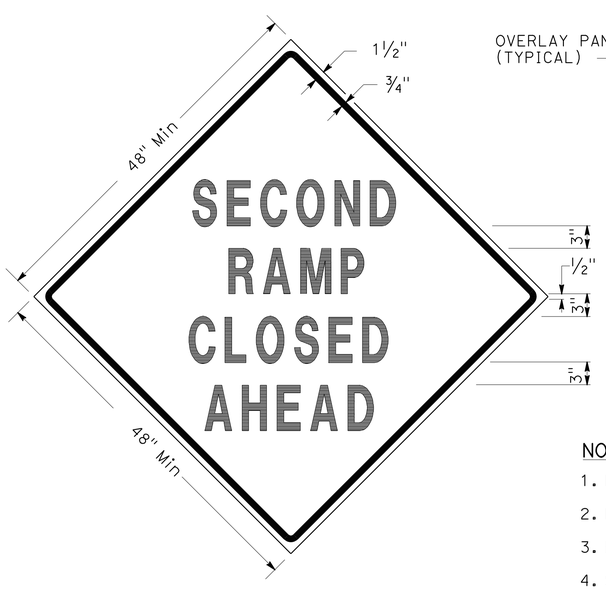


SIGN SP-3

SIGN SP-5

NOTES: (SIGNS SP-3 & SP-5)

1. LETTERS - 6" SERIES D.
2. LETTERS AND BORDERS - BLACK ON RETROREFLECTORIZED ORANGE BACKGROUND.
3. BASE MATERIAL SHALL BE ALUMINUM (MINIMUM 0.06").
4. SIGNS SHALL BE MOUNTED WITH BOTTOMS OF SIGNS A MINIMUM OF 6' ABOVE GROUND.

## SPECIAL SIGN FOR EXIT RAMP CLOSURES

# TRAFFIC HANDLING DETAILS
## TRAFFIC CONTROL SYSTEM FOR RAMP CLOSURES, DETOUR SIGNS AND MISCELLANEOUS DETAILS
## SHEET 1 OF 2

NO SCALE

**THD-1**

STATE OF CALIFORNIA - DEPARTMENT OF TRANSPORTATION
Caltrans® DTM

FUNCTIONAL SUPERVISOR: D. KATAYAMA
CALCULATED-DESIGNED BY: ALBERT K YU
CHECKED BY: JOCELYN C CHIANG
REVISED BY: JC
DATE REVISED: 7/10

LAST REVISION 00-00-00
DATE PLOTTED => 29-FEB-2012
TIME PLOTTED => 12:04

| Dist | COUNTY | ROUTE | POST MILES TOTAL PROJECT | SHEET No. | TOTAL SHEETS |
|---|---|---|---|---|---|
| 07 | LA | 5, 57, 110, 405, 605 | Var | 30 | 63 |

R.M. Mishreki 10-7-11
REGISTERED CIVIL ENGINEER DATE

2-27-12
PLANS APPROVAL DATE

REGISTERED PROFESSIONAL ENGINEER R.M. MISHREKI No. C68484 Exp. 9-30-13 CIVIL STATE OF CALIFORNIA

*THE STATE OF CALIFORNIA OR ITS OFFICERS OR AGENTS SHALL NOT BE RESPONSIBLE FOR THE ACCURACY OR COMPLETENESS OF SCANNED COPIES OF THIS PLAN SHEET.*

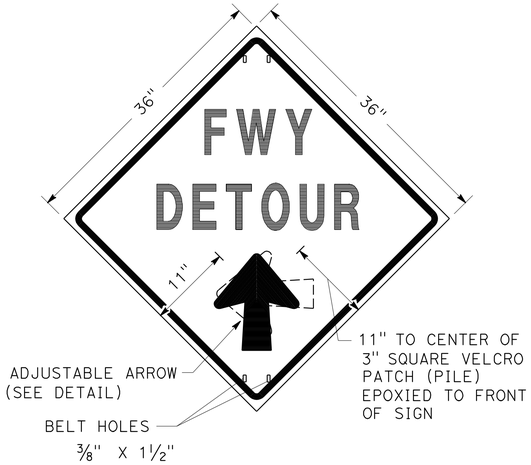


SIGN SP-2

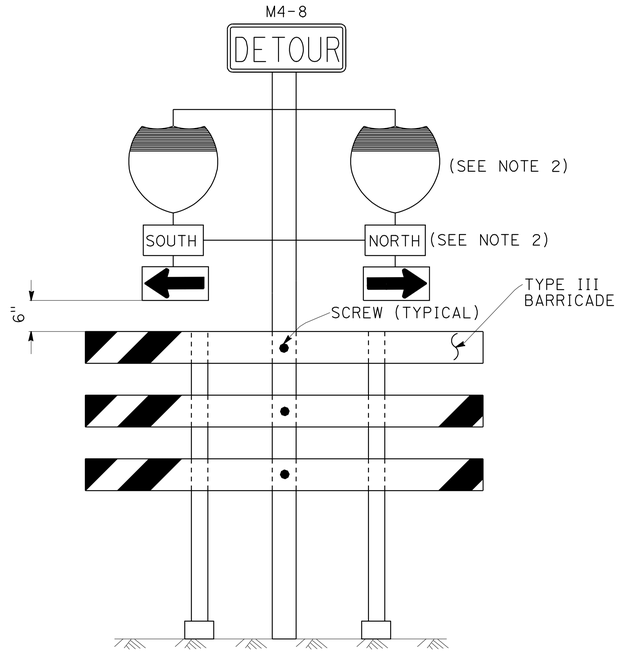


SIGN SP-6 (SEE NOTE 1)

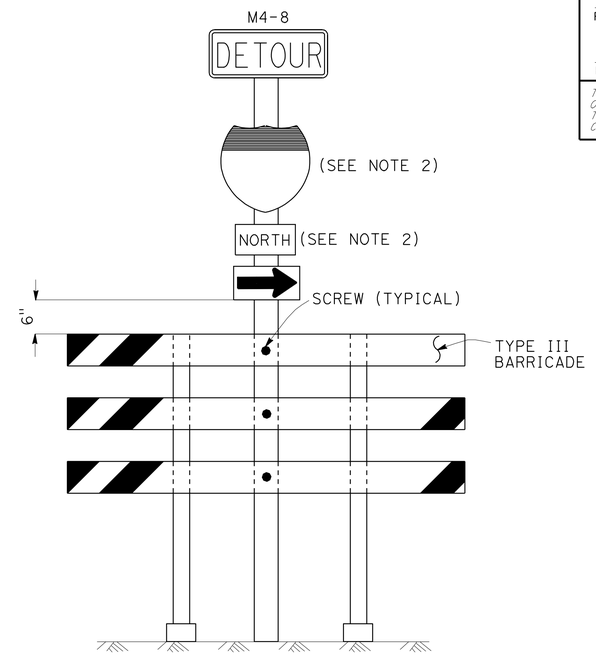


SIGN SP-7 (SEE NOTE 1)

NOTES: (SIGN SP-2)

1. LETTERS -6" SERIES E.
2. LETTERS, BORDER AND ARROW - BLACK ON RETROREFLECTORIZED ORANGE BACKGROUND.
3. BASE MATERIAL FOR SIGNS AND ARROWS SHALL BE ALUMINUM (MINIMUM 0.06").
4. BELTS (LUGGAGE STRAPS) SHALL BE 1" WIDE BY 48" LONG, MADE OF COTTON OR POLYPROPYLENE WEB MATERIAL.
5. SIGNS SHALL BE MOUNTED WITH BOTTOMS OF SIGNS A MINIMUM OF 6' ABOVE GROUND EXCEPT AS OTHERWISE SHOWN ON OTHER TRAFFIC HANDLING DETAILS PLANS.

ABBREVIATION

(CA) CALIFORNIA CODE

NOTES: (SIGNS SP-6 & SP-7)

1. IN LIEU OF PLACING SIGNS ON TYPE III BARRICADES, SIGNS, INCLUDING POSTS, MAY BE PLACED INTO THE GROUND OR FASTENED ONTO ELECTROLIERS.
2. USE APPROPRIATE ROUTE SHIELD [G26-2(CA), G27-2(CA), G28-2(CA)] AND CARDINAL DIRECTION [NORTH (M3-1), SOUTH (M3-3), EAST (M3-2), WEST (M3-4)]

## SPECIAL PORTABLE FREEWAY DETOUR SIGNS

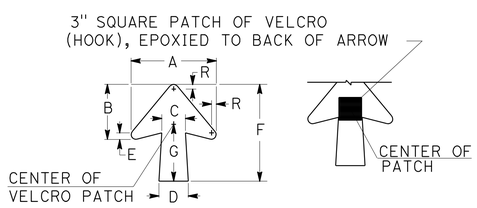


| DIMENSIONS | | | | | | | |
|---|---|---|---|---|---|---|---|
| A | B | C | D | E | F | G | R |
| 11 1/4" | 7 1/4" | 3 1/8" | 4" | 7/8" | 13" | 7 1/2" | 5/8" |

SPECIAL PORTABLE FREEWAY DETOUR SIGN

## ADJUSTABLE ARROW DETAIL

# TRAFFIC HANDLING DETAILS

## TRAFFIC CONTROL SYSTEM FOR RAMP CLOSURES, DETOUR SIGNS AND MISCELLANEOUS DETAILS

## SHEET 2 OF 2

NO SCALE

THD-2

STATE OF CALIFORNIA - DEPARTMENT OF TRANSPORTATION
Caltrans DTM

FUNCTIONAL SUPERVISOR: D. KATAYAMA
CALCULATED-DESIGNED BY: ALBERT K YU
CHECKED BY: JOCELYN C CHIANG
REVISED BY: JC
DATE REVISED: 7/10

LAST REVISION 00-00-00 | DATE PLOTTED => 29-FEB-2012 | TIME PLOTTED => 12:04

| Dist | COUNTY | ROUTE | POST MILES TOTAL PROJECT | SHEET No. | TOTAL SHEETS |
|---|---|---|---|---|---|
| 07 | LA | 5, 57, 110, 405, 605 | Var | 31 | 63 |

R.M. Mishreki 10-7-11
REGISTERED CIVIL ENGINEER DATE

2-27-12
PLANS APPROVAL DATE

REGISTERED PROFESSIONAL ENGINEER R.M. MISHREKI No. C68484 Exp. 9-30-13 CIVIL STATE OF CALIFORNIA

*THE STATE OF CALIFORNIA OR ITS OFFICERS OR AGENTS SHALL NOT BE RESPONSIBLE FOR THE ACCURACY OR COMPLETENESS OF SCANNED COPIES OF THIS PLAN SHEET.*

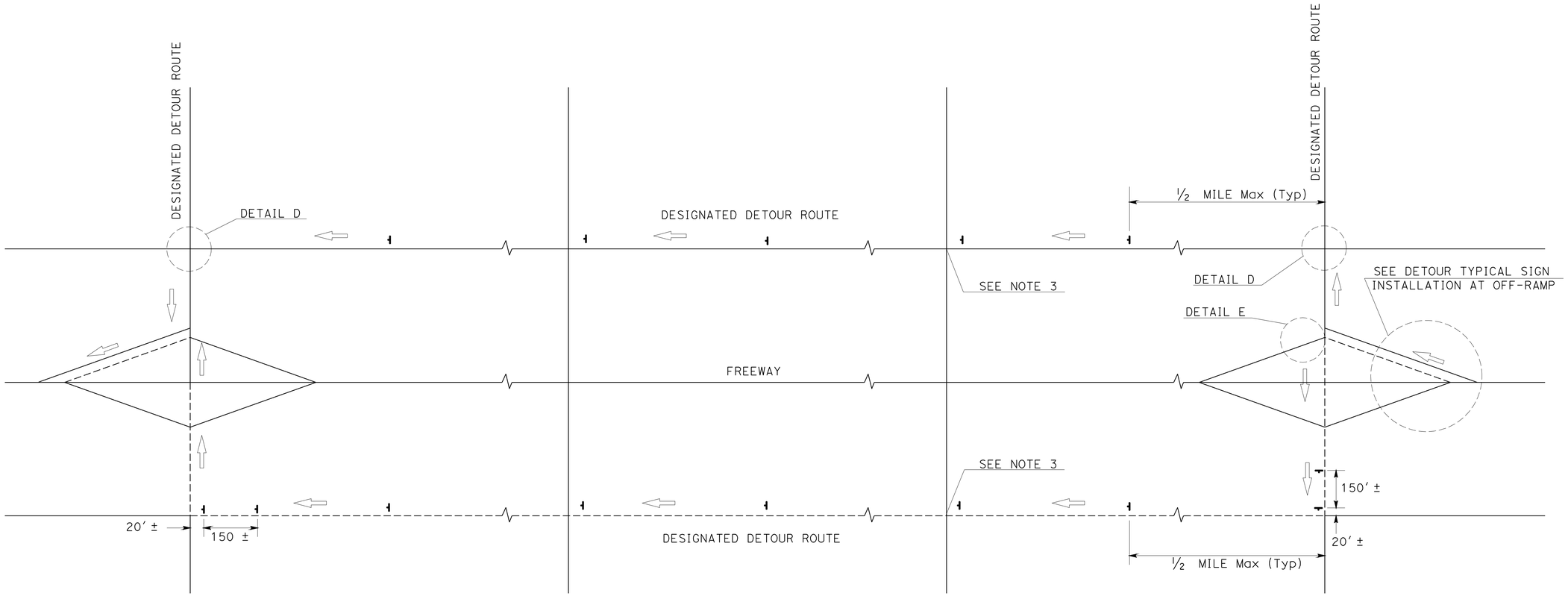


## TYPICAL DETOUR SIGN INSTALLATION ALONG DESIGNATED DETOUR ROUTE

LEGEND

- TEMPORARY SIGN (SP-2)
- AND/OR DESIGNATED DETOUR ROUTE
- DIRECTION OF TRAVEL

NOTES:

1. SP-2 SIGNS SHALL NOT BE INSTALLED ON BARRICADES EXCEPT AS OTHERWISE SHOWN.
2. SIGN LOCATIONS ARE APPROXIMATE. EXACT LOCATIONS WILL BE DETERMINED BY THE ENGINEER.
3. SP-2 SIGNS SHALL BE POSTED AT SIGNALIZED INTERSECTIONS ALONG THE DESIGNATED DETOUR ROUTE OR ½ MILE MAXIMUM APART.

# TRAFFIC HANDLING DETAILS

## TRAFFIC CONTROL SYSTEM FOR DETOUR SIGN INSTALLATION ALONG DESIGNATED DETOUR ROUTE

SHEET 1 OF 2

NO SCALE

THD-3

STATE OF CALIFORNIA - DEPARTMENT OF TRANSPORTATION
Caltrans DTM

FUNCTIONAL SUPERVISOR: D. KATAYAMA
CALCULATED-DESIGNED BY: ALBERT K YU
CHECKED BY: JOCELYN C CHIANG
REVISED BY: JC
DATE REVISED: 7/10

LAST REVISION 00-00-00 | DATE PLOTTED => 29-FEB-2012 | TIME PLOTTED => 12:05

| Dist | COUNTY | ROUTE | POST MILES TOTAL PROJECT | SHEET No. | TOTAL SHEETS |
|---|---|---|---|---|---|
| 07 | LA | 5, 57, 110, 405, 605 | Var | 32 | 63 |

R.M. Mishreki 10-7-11
REGISTERED CIVIL ENGINEER DATE

2-27-12
PLANS APPROVAL DATE

REGISTERED PROFESSIONAL ENGINEER R.M. MISHREKI No. C68484 Exp. 9-30-13 CIVIL STATE OF CALIFORNIA

*THE STATE OF CALIFORNIA OR ITS OFFICERS OR AGENTS SHALL NOT BE RESPONSIBLE FOR THE ACCURACY OR COMPLETENESS OF SCANNED COPIES OF THIS PLAN SHEET.*

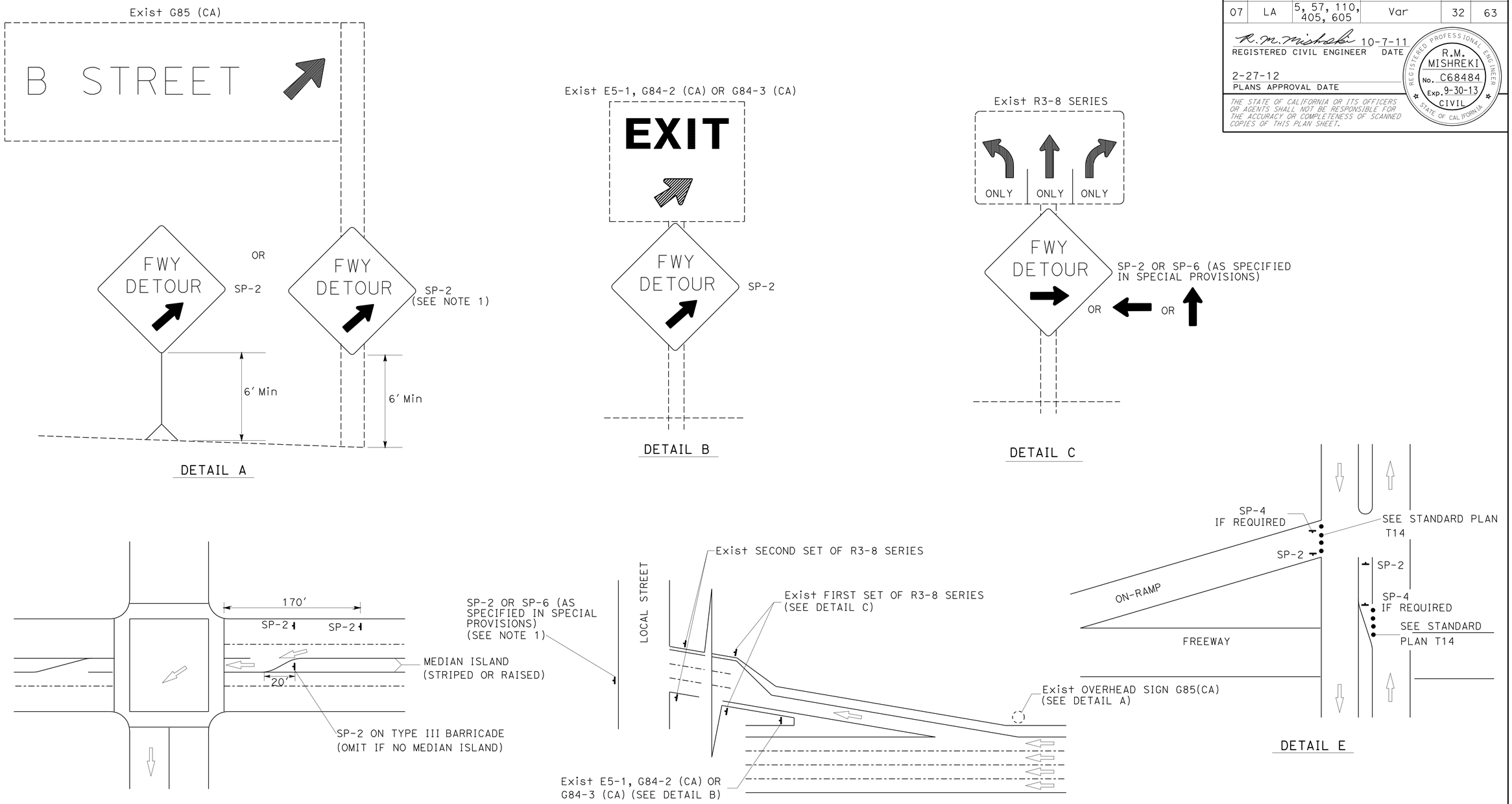


## TYPICAL DETOUR SIGN INSTALLATION AT OFF-RAMP

NOTES:

1. TEMPORARY SIGNS MAY BE STRAPPED ON EXISTING ELECTROLIER, SIGNAL POSTS, OR SIGN POSTS.
2. OMIT DETAIL A AND DETAIL B FOR FULL FREEWAY CLOSURES.
3. SEE TRAFFIC HANDLING DETAILS PLAN-TRAFFIC CONTROL SYSTEM FOR RAMP CLOSURES, DETOUR SIGNS AND MISCELLANEOUS DETAILS SHEET 2 OF 2 FOR SP-6.

ABBREVIATIONS

(CA) CALIFORNIA CODE

LEGENDS

- TRAFFIC CONE
- TEMPORARY SIGN
- DIRECTION OF TRAVEL
- EXISTING OVERHEAD SIGN

# TRAFFIC HANDLING DETAILS
## TRAFFIC CONTROL SYSTEM FOR DETOUR SIGN INSTALLATION ALONG DESIGNATED DETOUR ROUTE
## SHEET 2 OF 2
NO SCALE

THD-4

STATE OF CALIFORNIA - DEPARTMENT OF TRANSPORTATION
Caltrans DTM

FUNCTIONAL SUPERVISOR: XXXXXX

CALCULATED-DESIGNED BY: ALBERT K YU
CHECKED BY: JOCELYN C CHIANG
REVISED BY: JC
DATE REVISED: 8/10

LAST REVISION: 00-00-00
DATE PLOTTED => 29-FEB-2012
TIME PLOTTED => 12:05

| Dist | COUNTY | ROUTE | POST MILES TOTAL PROJECT | SHEET No. | TOTAL SHEETS |
|---|---|---|---|---|---|
| 07 | LA | 5, 57, 110, 405, 605 | Var | 33 | 63 |

REGISTERED CIVIL ENGINEER 2/7/12 DATE

2-27-12
PLANS APPROVAL DATE

REGISTERED PROFESSIONAL ENGINEER MOHAMMED HAIDER No. 61335 Exp. 06/30/13 CIVIL STATE OF CALIFORNIA

*THE STATE OF CALIFORNIA OR ITS OFFICERS OR AGENTS SHALL NOT BE RESPONSIBLE FOR THE ACCURACY OR COMPLETENESS OF SCANNED COPIES OF THIS PLAN SHEET.*

LEGEND:

(I) INSTALL ROADSIDE SIGN (ONE POST)

(R) REMOVE ROADSIDE SIGN

1'-0" WHITE LINE PAVEMENT MARKING

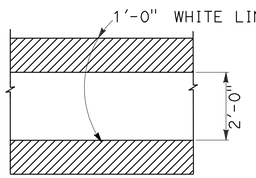


CROSSWALK DETAIL
NO SCALE

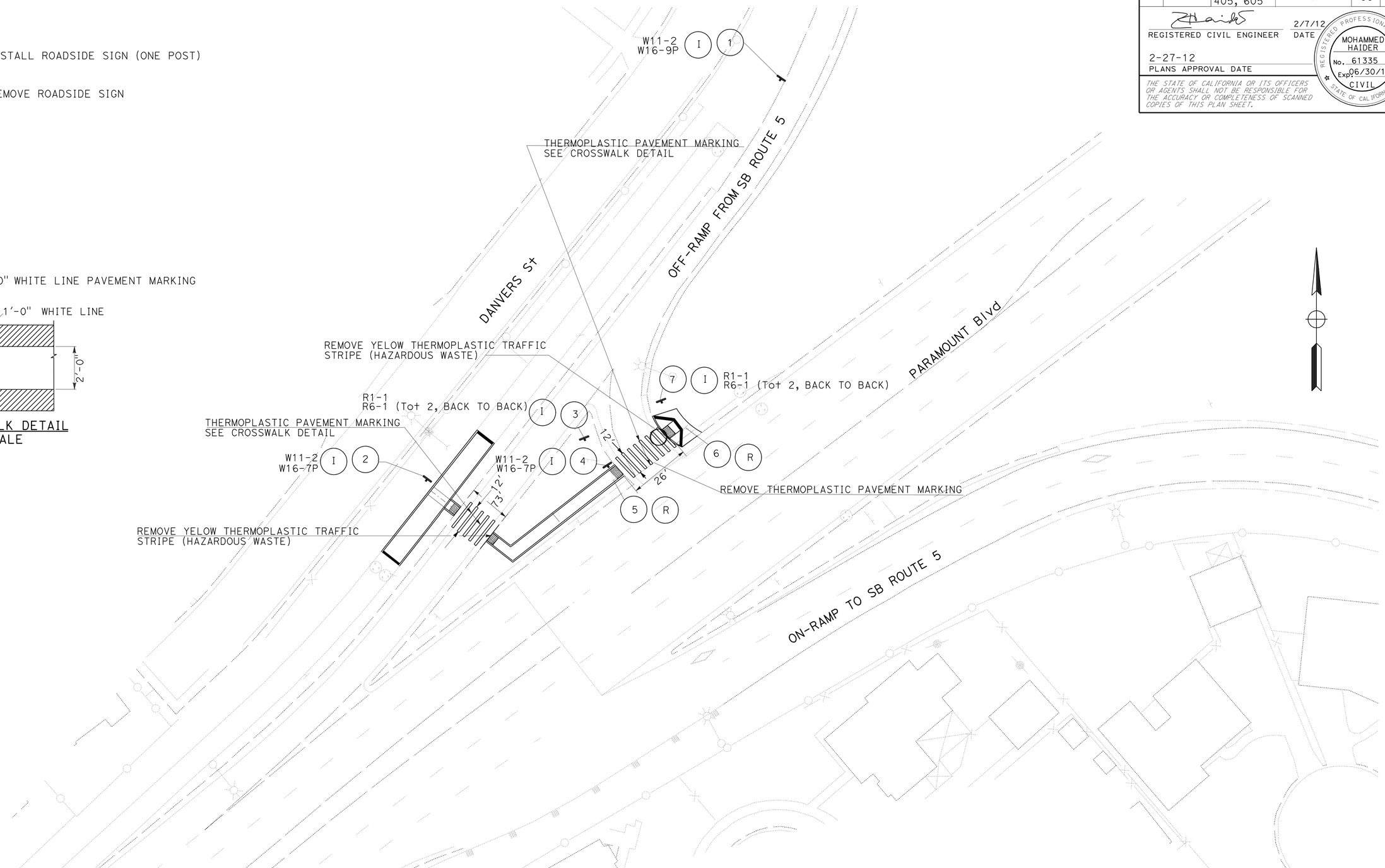


LOCATION No. 1 & 2

ROUTE 5
SB OFF-RAMP TO WB PARAMOUNT Blvd

# PAVEMENT DELINEATION AND SIGN PLAN

SCALE: 1"= 20'

**PD-1**

*APPROVED FOR PAVEMENT DELINEATION AND SIGN WORK ONLY*

STATE OF CALIFORNIA - DEPARTMENT OF TRANSPORTATION
Caltrans®
TRAFFIC DESIGN

FUNCTIONAL SUPERVISOR: MOHAMMED CHOWDHURY

CALCULATED-DESIGNED BY: FRANCISCO MARTINEZ
CHECKED BY: MOHAMMED HAIDER

REVISED BY
DATE REVISED

LAST REVISION 00-00-00
DATE PLOTTED => 29-FEB-2012
TIME PLOTTED => 12:05

| Dist | COUNTY | ROUTE | POST MILES TOTAL PROJECT | SHEET No. | TOTAL SHEETS |
|---|---|---|---|---|---|
| 07 | LA | 5, 57, 110, 405, 605 | Var | 34 | 63 |

REGISTERED CIVIL ENGINEER 2/7/12 DATE

2-27-12
PLANS APPROVAL DATE

REGISTERED PROFESSIONAL ENGINEER MOHAMMED HAIDER No. 61335 Exp 06/30/13 CIVIL STATE OF CALIFORNIA

*THE STATE OF CALIFORNIA OR ITS OFFICERS OR AGENTS SHALL NOT BE RESPONSIBLE FOR THE ACCURACY OR COMPLETENESS OF SCANNED COPIES OF THIS PLAN SHEET.*

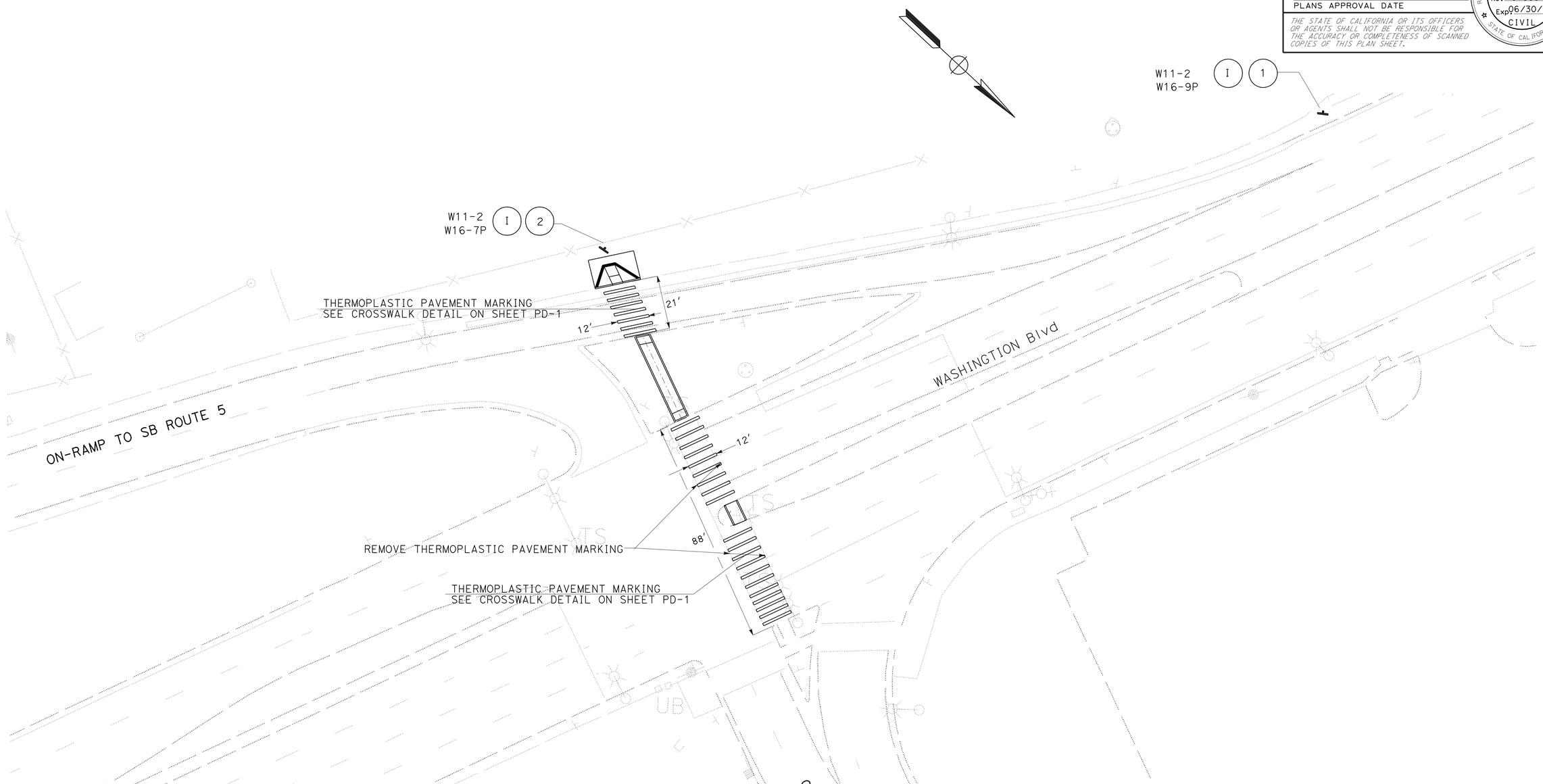


LOCATION No. 3

ROUTE 5
SB ON-RAMP FROM EB WASHINGTON Blvd

# PAVEMENT DELINEATION AND SIGN PLAN

SCALE: 1" = 20'

*APPROVED FOR PAVEMENT DELINEATION AND SIGN WORK ONLY*

**PD-2**

STATE OF CALIFORNIA - DEPARTMENT OF TRANSPORTATION
Caltrans® **TRAFFIC DESGIN**

FUNCTIONAL SUPERVISOR: MOHAMMED CHOWDHURY
CALCULATED-DESIGNED BY: FRANCISCO MARTINEZ
CHECKED BY: MOHAMMED HAIDER
REVISED BY
DATE REVISED

LAST REVISION 00-00-00 | DATE PLOTTED => 29-FEB-2012 | TIME PLOTTED => 12:05

| Dist | COUNTY | ROUTE | POST MILES TOTAL PROJECT | SHEET No. | TOTAL SHEETS |
|---|---|---|---|---|---|
| 07 | LA | 5, 57, 110, 405, 605 | Var | 35 | 63 |

REGISTERED CIVIL ENGINEER 2/7/12 DATE

2-27-12
PLANS APPROVAL DATE

REGISTERED PROFESSIONAL ENGINEER MOHAMMED HAIDER No. 61335 Exp 06/30/13 CIVIL STATE OF CALIFORNIA

*THE STATE OF CALIFORNIA OR ITS OFFICERS OR AGENTS SHALL NOT BE RESPONSIBLE FOR THE ACCURACY OR COMPLETENESS OF SCANNED COPIES OF THIS PLAN SHEET.*

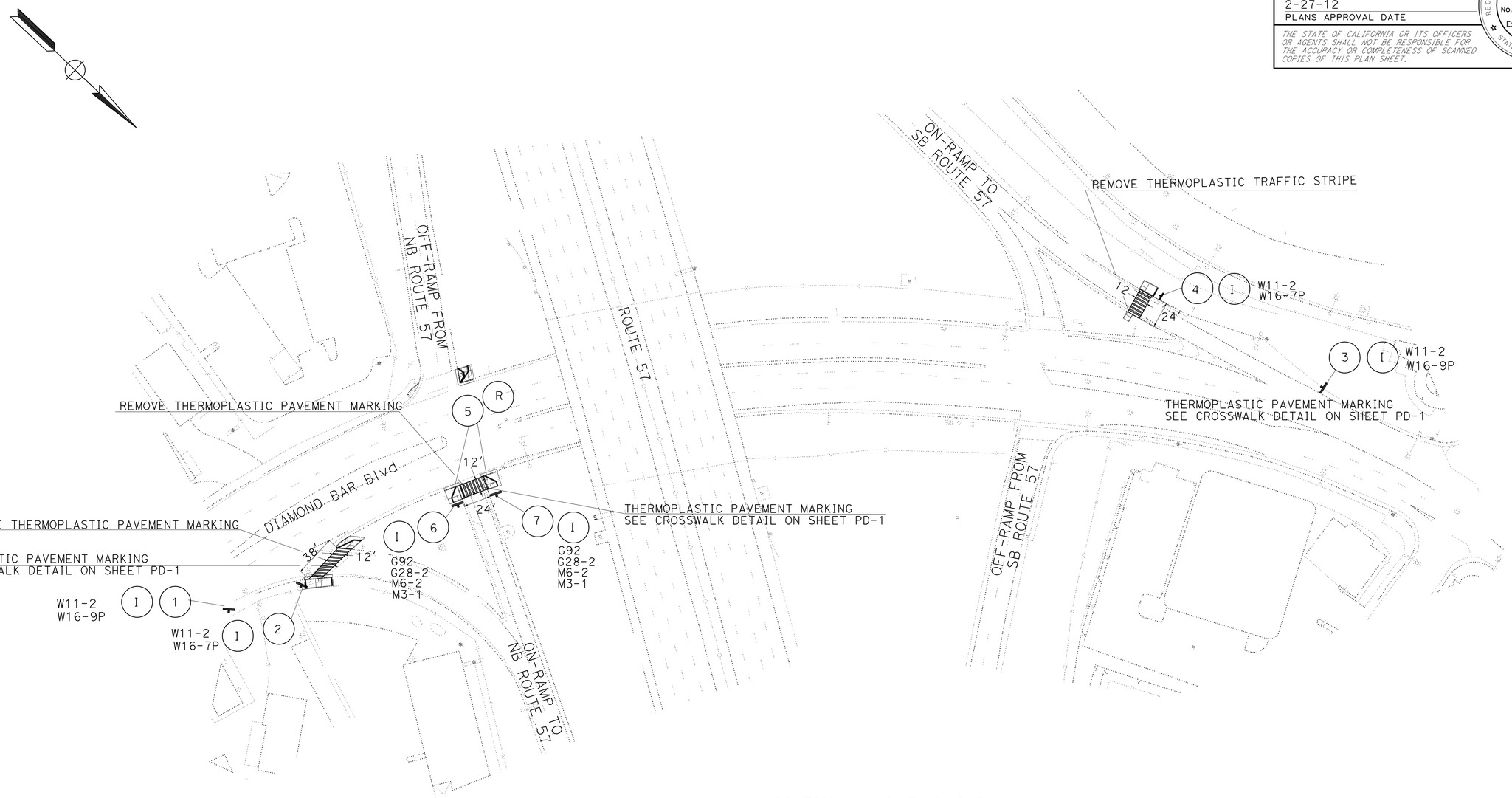


LOCATION No. 4, 5, 6, & 7

ROUTE 57
SB & NB OFF AND ON-RAMPS AT
DIAMOND BAR Blvd

# PAVEMENT DELINEATION AND SIGN PLAN

SCALE: 1" = 50'

**PD-3**

*APPROVED FOR PAVEMENT DELINEATION AND SIGN WORK ONLY*

| REVISED BY | DATE REVISED |
|---|---|
| | |

CALCULATED-DESIGNED BY: FRANCISCO MARTINEZ
CHECKED BY: MOHAMMED HAIDER
FUNCTIONAL SUPERVISOR: MOHAMMED CHOWDHURY

STATE OF CALIFORNIA - DEPARTMENT OF TRANSPORTATION
Caltrans® TRAFFIC DESIGN

LAST REVISION | DATE PLOTTED => 29-FEB-2012

| Dist | COUNTY | ROUTE | POST MILES TOTAL PROJECT | SHEET No. | TOTAL SHEETS |
|---|---|---|---|---|---|
| 07 | LA | 5, 57, 110, 405, 605 | Var | 36 | 63 |

REGISTERED CIVIL ENGINEER 2/7/12 DATE

2-27-12
PLANS APPROVAL DATE

REGISTERED PROFESSIONAL ENGINEER MOHAMMED HAIDER No. 61335 Exp. 06/30/13 CIVIL STATE OF CALIFORNIA

*THE STATE OF CALIFORNIA OR ITS OFFICERS OR AGENTS SHALL NOT BE RESPONSIBLE FOR THE ACCURACY OR COMPLETENESS OF SCANNED COPIES OF THIS PLAN SHEET.*

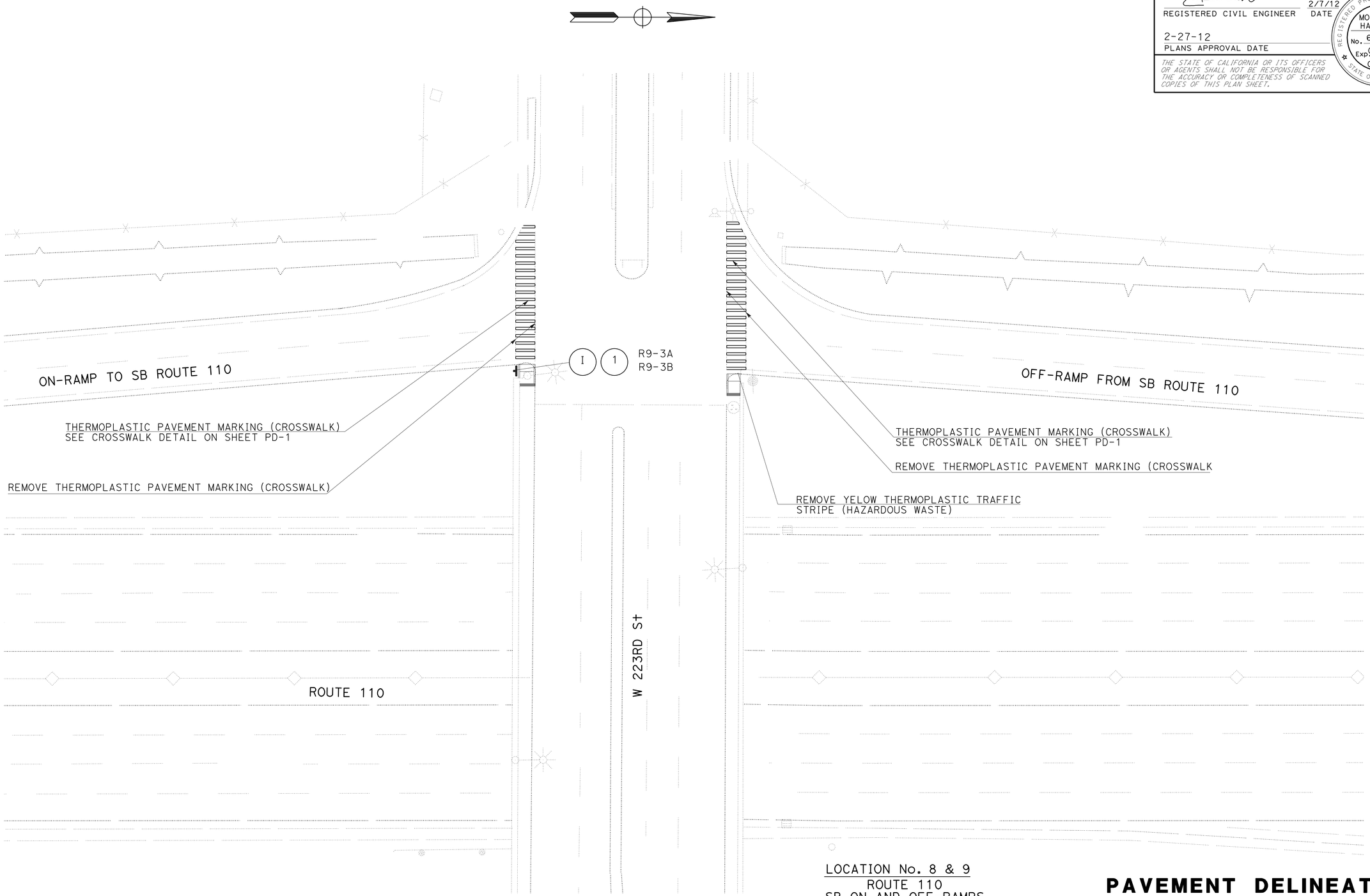


LOCATION No. 8 & 9
ROUTE 110
SB ON AND OFF-RAMPS
AT W 223RD St

# PAVEMENT DELINEATION AND SIGN PLAN

SCALE: 1" = 20'

**PD-4**

*APPROVED FOR PAVEMENT DELINEATION AND SIGN WORK ONLY*

STATE OF CALIFORNIA - DEPARTMENT OF TRANSPORTATION
Caltrans TRAFFIC DESIGN

FUNCTIONAL SUPERVISOR: MOHAMMED CHOWDHURY
CALCULATED-DESIGNED BY: FRANCISCO MARTINEZ
CHECKED BY: MOHAMMED HAIDER
REVISED BY
DATE REVISED

LAST REVISION 00-00-00 DATE PLOTTED => 29-FEB-2012 TIME PLOTTED => 12:05

| Dist | COUNTY | ROUTE | POST MILES TOTAL PROJECT | SHEET No. | TOTAL SHEETS |
|---|---|---|---|---|---|
| 07 | LA | 5, 57, 110, 405, 605 | Var | 37 | 63 |

REGISTERED CIVIL ENGINEER 2/7/12 DATE

2-27-12
PLANS APPROVAL DATE

REGISTERED PROFESSIONAL ENGINEER
MOHAMMED HAIDER
No. 61335
Exp 06/30/13
CIVIL
STATE OF CALIFORNIA

*THE STATE OF CALIFORNIA OR ITS OFFICERS OR AGENTS SHALL NOT BE RESPONSIBLE FOR THE ACCURACY OR COMPLETENESS OF SCANNED COPIES OF THIS PLAN SHEET.*

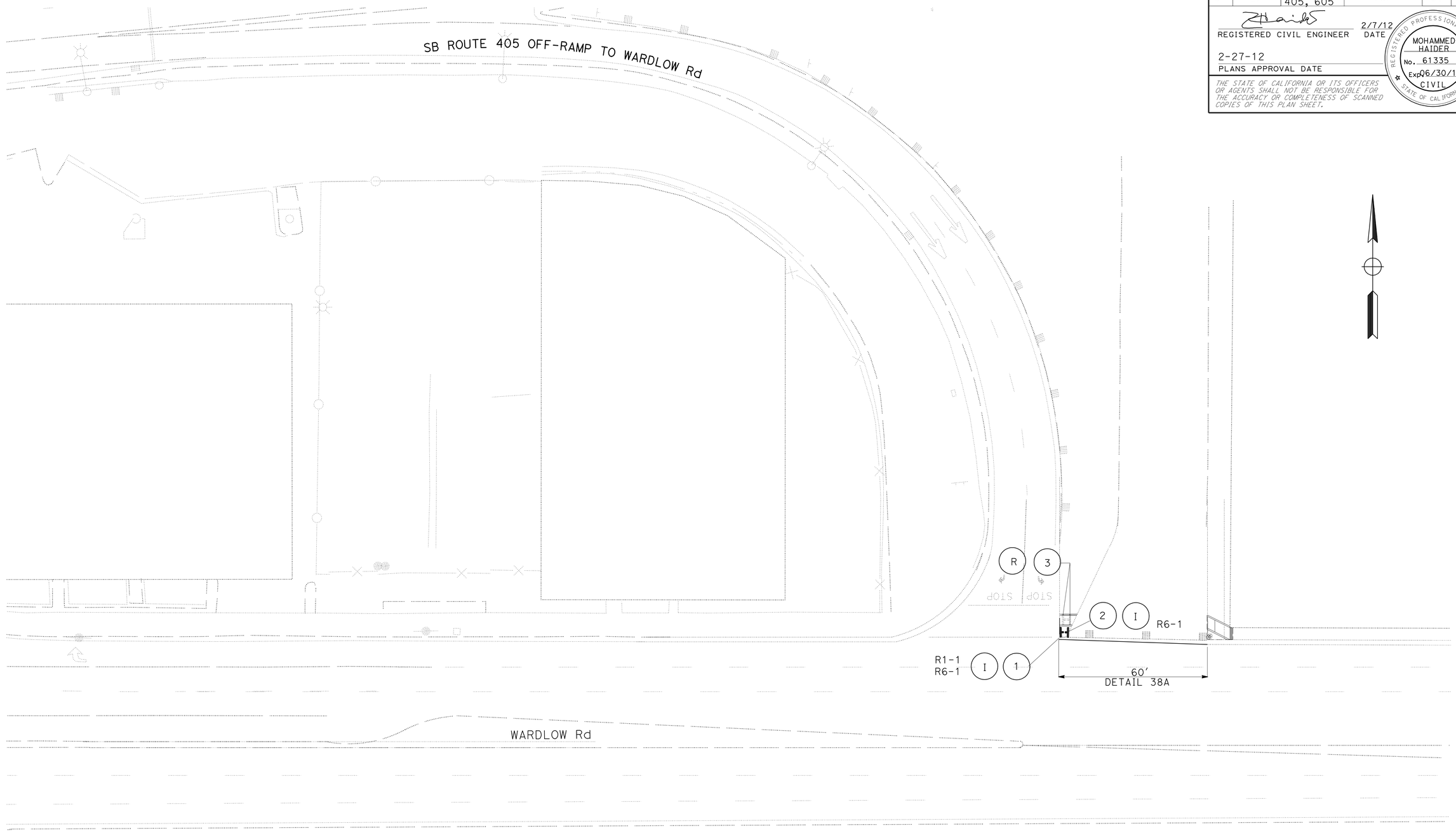


LOCATION No. 10
ROUTE 405
SB OFF-RAMP TO WARDLOW Rd

# PAVEMENT DELINEATION AND SIGN PLAN

SCALE: 1" = 20'

*APPROVED FOR PAVEMENT DELINEATION AND SIGN WORK ONLY*

**PD-5**

STATE OF CALIFORNIA - DEPARTMENT OF TRANSPORTATION
Caltrans
TRAFFIC DESIGN

FUNCTIONAL SUPERVISOR: MOHAMMED CHOWDHURY

CALCULATED-DESIGNED BY: FRANCISCO MARTINEZ
CHECKED BY: MOHAMMED HAIDER

REVISED BY
DATE REVISED

LAST REVISION 00-00-00
DATE PLOTTED => 29-FEB-2012
TIME PLOTTED => 12:06

| Dist | COUNTY | ROUTE | POST MILES TOTAL PROJECT | SHEET No. | TOTAL SHEETS |
|---|---|---|---|---|---|
| 07 | LA | 5, 57, 110, 405, 605 | Var | 38 | 63 |

REGISTERED CIVIL ENGINEER 2/7/12 DATE

2-27-12
PLANS APPROVAL DATE

REGISTERED PROFESSIONAL ENGINEER MOHAMMED HAIDER No. 61335 Exp 6/30/13 CIVIL STATE OF CALIFORNIA

*THE STATE OF CALIFORNIA OR ITS OFFICERS OR AGENTS SHALL NOT BE RESPONSIBLE FOR THE ACCURACY OR COMPLETENESS OF SCANNED COPIES OF THIS PLAN SHEET.*

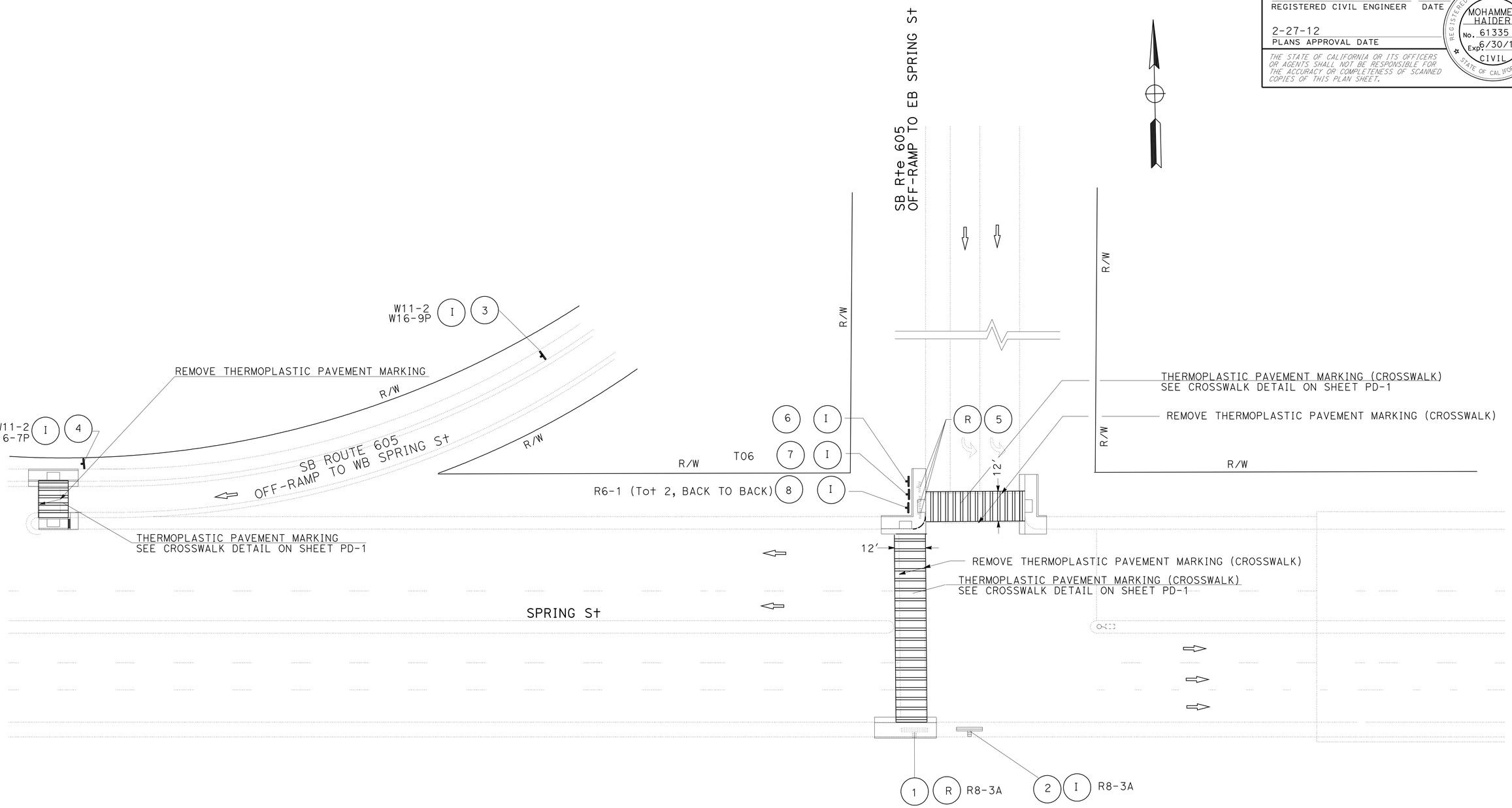


LOCATION No. 11 & 12

ROUTE 605
SB OFF RAMP TO SPRING ST

*APPROVED FOR PAVEMENT DELINEATION AND SIGN WORK ONLY*

# PAVEMENT DELINEATION AND SIGN PLAN

SCALE: 1" = 20'

**PD-6**

STATE OF CALIFORNIA - DEPARTMENT OF TRANSPORTATION
Caltrans® TRAFFIC DESIGN

FUNCTIONAL SUPERVISOR: MOHAMMED CHOUDHURY
CALCULATED-DESIGNED BY: MOHAMMED HAIDER
CHECKED BY: MOHAMMED HAIDER
REVISED BY
DATE REVISED

LAST REVISION 00-00-00
DATE PLOTTED => 29-FEB-2012
TIME PLOTTED => 12:06

| Dist | COUNTY | ROUTE | POST MILES TOTAL PROJECT | SHEET No. | TOTAL SHEETS |
|---|---|---|---|---|---|
| 07 | LA | 5, 57, 110, 405, 605 | Var | 39 | 63 |

REGISTERED CIVIL ENGINEER 2/7/12 DATE

2-27-12
PLANS APPROVAL DATE

REGISTERED PROFESSIONAL ENGINEER MOHAMMED HAIDER No. C 61335 Exp. 6/30/13 CIVIL STATE OF CALIFORNIA

*THE STATE OF CALIFORNIA OR ITS OFFICERS OR AGENTS SHALL NOT BE RESPONSIBLE FOR THE ACCURACY OR COMPLETENESS OF SCANNED COPIES OF THIS PLAN SHEET.*

LEGEND:

B - BLACK W - WHITE B/W - BLACK & WHITE Y - YELLOW
G - GREEN B/R - BLACK & RED
● - APPLICABLE TREATMENT

# ROADSIDE SIGN QUANTITIES

| SHEET No. | SIGN ID | SIGN CODE | PANEL SIZE (INCH) | SIGN AREA (SQFT) | SINGLE FACED | BACKGROUND: SHEETING COLOR | BACKGROUND: RETROREFLECTIVE ASTM TYPE | LEGEND: SHEETING COLOR | LEGEND: RETROREFLECTIVE ASTM TYPE | GRAFFITI FILM: PREMIUM | SINGLE SHEET UNFRAMED ALUMINUM 0.063 inch | ROADSIDE SIGN: REMOVE (EA) | ROADSIDE SIGN: INSTALL ONE POST (EA) | FURNISH SINGLE SHEET ALUMINUM SIGN (0.063" UNFRAMED) (SQFT) |
|---|---|---|---|---|---|---|---|---|---|---|---|---|---|---|
| PD-1 | 1 | W11-2 | 36 x 36 | 9.00 | ● | Y | III | B | III | ● | ● | | 1 | 12.75 |
| | | W16-9P | 30 x 18 | 3.75 | ● | Y | III | B | III | ● | ● | | | |
| | 2 | W11-2 | 36 x 36 | 9.00 | ● | Y | III | B | III | ● | ● | | 1 | 12.75 |
| | | W16-7P | 30 x 18 | 3.75 | ● | Y | III | B | III | ● | ● | | | |
| | 3 | R1-1 | 24 x 24 | 4.00 | ● | R | III | W | III | ● | ● | | 1 | 4.00 |
| | | R6-1 | 36 x 12 | 3.00 | ● | B | III | B | III | ● | ● | | 1 | 6.00 |
| | 4 | W11-2 | 36 x 36 | 9.00 | ● | Y | III | B | III | ● | ● | | 1 | 12.75 |
| | | W16-7P | 30 x 18 | 3.75 | ● | Y | III | B | III | ● | ● | | | |
| | 5 | R1-1, R6-1 | | | | | | | | | | 1 | | |
| | 6 | R1-1, R6-1 | | | | | | | | | | 1 | | |
| | 7 | R1-1 | 24 x 24 | 4.00 | ● | R | III | W | III | ● | ● | | 1 | 10.00 |
| | | R6-1 | 36 x 12 | 3.00 | ● | W | III | B | III | ● | ● | | | |
| PD-2 | 1 | W11-2 | 36 x 36 | 9.00 | ● | Y | III | B | III | ● | ● | | 1 | 12.75 |
| | | W16-9P | 30 x 18 | 3.75 | ● | Y | III | B | III | ● | ● | | | |
| | 2 | W11-2 | 36 x 36 | 9.00 | ● | Y | III | B | III | ● | ● | | 1 | 12.75 |
| | | W16-7P | 30 x 18 | 3.75 | ● | Y | III | B | III | ● | ● | | | |
| PD-3 | 1 | W11-2 | 36 x 36 | 9.00 | ● | Y | III | B | III | ● | ● | | 1 | 12.75 |
| | | W16-9P | 30 x 18 | 3.75 | ● | Y | III | B | III | ● | ● | | | |
| | 2 | W11-2 | 36 x 36 | 9.00 | ● | Y | III | B | III | ● | ● | | 1 | 12.75 |
| | | W16-7P | 30 x 18 | 3.75 | ● | Y | III | B | III | ● | ● | | | |
| | 3 | W11-2 | 36 x 36 | 9.00 | ● | Y | III | B | III | ● | ● | | 1 | 12.75 |
| | | W16-9P | 30 x 18 | 3.75 | ● | Y | III | B | III | ● | ● | | | |
| | 4 | W11-2 | 36 x 36 | 9.00 | ● | Y | III | B | III | ● | ● | | 1 | 12.75 |
| | | W16-7P | 30 x 18 | 3.75 | ● | Y | III | B | III | ● | ● | | | |
| | 5 | G92, G28-2, M3-1, M6-2 | | | | | | | | | | 2 | | |
| | 6 | G92 | 48 x 30 | 10.00 | ● | G | III | W | III | ● | ● | | 1 | 18.37 |
| | | G28-2 | 24 x 25 | 4.17 | ● | G | III | W | III | ● | ● | | | |
| | | M6-2 | 21 x 15 | 2.20 | ● | G | III | W | III | ● | ● | | | |
| | | M3-1 | 24 x 12 | 2.00 | ● | G | III | W | III | ● | ● | | | |
| | 7 | G92 | 48 x 30 | 10.00 | ● | G | III | W | III | ● | ● | | 1 | 18.37 |
| | | G28-2 | 24 x 25 | 4.17 | ● | G | III | W | III | ● | ● | | | |
| | | M6-2 | 21 x 15 | 2.20 | ● | G | III | W | III | ● | ● | | | |
| | | M3-1 | 24 x 12 | 2.00 | ● | G | III | W | III | ● | ● | | | |
| PD-4 | 1 | R9-3A | 24 x 24 | 4.00 | ● | W | III | B/R | III | ● | ● | | 1 | 4.00 |
| | | R9-3B | 36 x 12 | 3.00 | ● | W | III | B | III | ● | ● | | 1 | 3.00 |
| PD-5 | 1 | R6-1 | 36 x 12 | 3.00 | ● | W | III | B | III | ● | ● | | 1 | 7.00 |
| | | R1-1 | 24 x 24 | 4.00 | ● | R | III | W | III | ● | ● | | | |
| | 2 | R6-1 | 36 x 12 | 3.00 | ● | W | III | B | III | ● | ● | | 1 | 3.00 |
| | 3 | | | | | | | | | | | 2 | | |
| | | | | | | | | | | | SUBTOTAL | 6 | 18 | 182.49 |

# PAVEMENT DELINEATION AND SIGN QUANTITIES

PDQ-1

STATE OF CALIFORNIA - DEPARTMENT OF TRANSPORTATION
Caltrans TRAFFIC DESIGN

FUNCTIONAL SUPERVISOR: MOHAMMED CHOWDHURY
CALCULATED-DESIGNED BY: FRANCISCO MARTINEZ
CHECKED BY: MOHAMMED HAIDER
REVISED BY / DATE REVISED

LAST REVISION 00-00-00
DATE PLOTTED => 29-FEB-2012
TIME PLOTTED => 12:06

| Dist | COUNTY | ROUTE | POST MILES TOTAL PROJECT | SHEET No. | TOTAL SHEETS |
|---|---|---|---|---|---|
| 07 | LA | 5, 57, 110, 405, 605 | Var | 40 | 63 |

REGISTERED CIVIL ENGINEER 2/2/12 DATE

2-27-12
PLANS APPROVAL DATE

REGISTERED PROFESSIONAL ENGINEER MOHAMMED HAIDER No. C 61335 Exp. 6/30/13 CIVIL STATE OF CALIFORNIA

*THE STATE OF CALIFORNIA OR ITS OFFICERS OR AGENTS SHALL NOT BE RESPONSIBLE FOR THE ACCURACY OR COMPLETENESS OF SCANNED COPIES OF THIS PLAN SHEET.*

LEGEND:

B - BLACK W - WHITE B/W - BLACK & WHITE Y - YELLOW
G - GREEN B/R - BLACK & RED
● - APPLICABLE TREATMENT

## ROADSIDE SIGN QUANTITIES

| SHEET No. | SIGN ID | SIGN CODE | PANEL SIZE (INCH) | SIGN AREA (SQFT) | SINGLE FACED | BACKGROUND SHEETING COLOR | BACKGROUND RETROREFLECTIVE ASTM TYPE | LEGEND SHEETING COLOR | LEGEND RETROREFLECTIVE ASTM TYPE | GRAFFITI FILM PREMIUM | SINGLE SHEET UNFRAMED ALUMINUM 0.063 inch | ROADSIDE SIGN REMOVE (EA) | ROADSIDE SIGN INSTALL ONE POST (EA) | FURNISH SINGLE SHEET ALUMINUM SIGN (0.063"- UNFRAMED) (SQFT) |
|---|---|---|---|---|---|---|---|---|---|---|---|---|---|---|
| PD-6 | 1 | R8-3A | | | | | | | | | | 1 | | |
| | 2 | R8-3A | 24 x 24 | 4.00 | ● | W | III | B/R | III | ● | ● | | 1 | 4.00 |
| | 3 | W11-2 | 36 x 36 | 9.00 | ● | Y | III | B | III | ● | ● | | 1 | 12.75 |
| | | W16-9P | 30 x 18 | 3.75 | ● | Y | III | B | III | ● | ● | | | |
| | 4 | W11-2 | 36 x 36 | 9.00 | ● | Y | III | B | III | ● | ● | | 1 | 12.75 |
| | | W16-7P | 30 x 18 | 3.75 | ● | Y | III | B | III | ● | ● | | | |
| | 5 | R3-1,R5-1,R6-1 | | | | | | | | | | 3 | | |
| | 6 | R3-1 | 24 x 24 | 4.00 | ● | W | III | B/R | III | ● | ● | | 1 | 4.00 |
| | 7 | R5-1 | 36 x 36 | 9.00 | ● | R | III | W | III | ● | ● | | 1 | 9.00 |
| | | R5-1A | 36 x 24 | 6.00 | ● | R | III | W | III | ● | ● | | | 6.00 |
| | 8 | R6-1 | 36 x 12 | 3.00 | ● | W | III | B | III | ● | ● | | 1 | 6.00 |
| PDQ-2 | | | | | | | | | | SUBTOTAL | | 4 | 6 | 54.50 |
| PDQ-1 | | | | | | | | | | SUBTOTAL | | 6 | 18 | 188.49 |
| | | | | | | | | | | TOTAL | | 10 | 24 | 243.00 |

## PAVEMENT DELINEATION

| SHEET No. | LOCATION DESCRIPTION | REMOVE THERMOPLASTIC PAVEMENT MARKING 12" WHITE (CROSSWALK) (SQFT) | REMOVE YELLOW THERMOPLASTIC TRAFFIC STRIPE (HAZARDOUS WASTE) (LF) | THERMOPLASTIC PAVEMENT MARKING 12" WHITE (CROSSWALK) (SQFT) | THERMOPLASTIC PAVEMENT MARKING DETAIL 38A (SQFT) | REMOVE THERMOPLASTIC TRAFFIC STRIPE (LF) |
|---|---|---|---|---|---|---|
| PD-1 | ROUTE 5 (AT PARAMOUNT Blvd) | 31 | 24 | 252 | | |
| PD-2 | ROUTE 5 (AT WASHINGTON Blvd) | 167 | | 580 | | |
| PD-3 | ROUTE 57 (AT DIAMOND BAR Blvd) | 120 | | 441 | | 12 |
| PD-4 | ROUTE 110 (AT 223rd St) | 218 | 8 | 320 | | |
| PD-5 | ROUTE 405 (AT WARLDLOW ROAD) | | | | 40 | |
| PD-6 | ROUTE 605 (AT SPRING St) | 280 | | 706 | | |
| SUBTOTAL | | 748 | 32 | 2299 | 40 | 12 |
| TOTAL | | 748 | 32 | 2339 | | 12 |

# PAVEMENT DELINEATION AND SIGN QUANTITIES

PDQ-2

STATE OF CALIFORNIA - DEPARTMENT OF TRANSPORTATION
Caltrans TRAFFIC DESIGN

FUNCTIONAL SUPERVISOR: MOHAMMED CHOWDHURY
CALCULATED-DESIGNED BY: FRANCISCO MARTINEZ
CHECKED BY: MOHAMMED HAIDER
REVISED BY
DATE REVISED

LAST REVISION 00-00-00 DATE PLOTTED => 29-FEB-2012 TIME PLOTTED => 12:06

| Dist | COUNTY | ROUTE | POST MILES TOTAL PROJECT | SHEET No. | TOTAL SHEETS |
|---|---|---|---|---|---|
| 07 | LA | 5, 57, 110, 405, 605 | Var | 41 | 63 |

REGISTERED CIVIL ENGINEER 2/7/12 DATE

2-27-12
PLANS APPROVAL DATE

REGISTERED PROFESSIONAL ENGINEER MOHAMMED HADIER No. 61335 Exp. 6-30-13 CIVIL STATE OF CALIFORNIA

*THE STATE OF CALIFORNIA OR ITS OFFICERS OR AGENTS SHALL NOT BE RESPONSIBLE FOR THE ACCURACY OR COMPLETENESS OF SCANNED COPIES OF THIS PLAN SHEET.*

# ROADWAY QUANTITIES

| LOCATION | | REMOVE CONCRETE (CURB, SIDEWALK & CURB RAMP) | ROADWAY EXCAVATION (TYPE Z-2) (AERIALLY DEPOSITED LEAD) | MINOR CONCRETE (MISCELLANEOUS CONSTRUCTION) CURB | SIDEWALK | CURB & GUTTER | CURB RAMP * | PASSAGEWAY | DETECTABLE WARNING SURFACES (N) | TEMPORARY DRAINAGE INLET PROTECTION | ADJUST PULL BOX TO GRADE | LEAN CONCRETE BASE | CLASS 3 AGGREGATE BASE | ROADWAY EXCAVATION |
|---|---|---|---|---|---|---|---|---|---|---|---|---|---|---|
| | | CY | CY | CY | CY | CY | CY | CY | SQFT | EA | EA | CY | CY | CY |
| Loc 1 & 2 ROUTE 5 (AT PARAMOUNT Blvd) | CURB RAMP No. 1 | 1.28 | | | | 2.43 | 4.40 | | 12 | 1 | | 1.20 | 1.78 | 11.80 |
| | CURB RAMP No. 2 | 6.11 | | | | 0.49 | | 6.26 | 30 | 1 | | 0.47 | 0.71 | 13.80 |
| | CURB RAMP No. 3 | 7.55 | | | | 0.97 | 11.18 | | 15 | | | 0.24 | 0.36 | 45.95 |
| Loc 3 ROUTE 5 (AT WASHINGTON Blvd) | CURB RAMP No. 1 | 1.28 | | | | 1.62 | 2.93 | | 12 | 1 | | 0.79 | 1.19 | 10.59 |
| | CURB RAMP No. 2 | 0.77 | | | | 0.97 | | 3.18 | 30 | | | 0.47 | 0.71 | 7.70 |
| | CURB RAMP No. 3 | 1.12 | | | | | | 0.69 | 24 | | | | | 1.67 |
| Loc 4, 5, 6 & 7 ROUTE 57 (AT DIAMOND BAR) | CURB RAMP No. 1 | 1.85 | | | | 2.23 | 2.10 | | 12 | 1 | 1 | 1.08 | 1.63 | 7.01 |
| | CURB RAMP No. 2 | 0.89 | | | | 1.13 | 1.83 | | 15 | 1 | | 0.55 | 0.83 | 4.10 |
| | CURB RAMP No. 3 | 0.89 | | | | 0.49 | 1.20 | | 15 | | | 0.24 | 0.36 | 2.12 |
| | CURB RAMP No. 4 | 1.91 | | | | 2.02 | 2.45 | | 15 | | 1 | 1.00 | 1.50 | 8.92 |
| | CURB RAMP No. 5 | 1.91 | | | | 2.43 | 2.23 | | 12 | | 3 | 1.20 | 1.80 | 7.54 |
| | CURB RAMP No. 6 | 1.82 | | | | 2.18 | 2.34 | | 12 | | 1 | 1.07 | 1.60 | 7.16 |
| | CURB RAMP No. 7 | 1.72 | | | | 2.18 | 4.00 | | 12 | | | 1.07 | 1.60 | 6.85 |
| Loc 8, 9 ROUTE 110 (AT 223Rd St) | CURB RAMP No. 1 | 1.66 | 2.86 | 0.56 | | | 1.14 | | 18 | 1 | | | | |
| | CURB RAMP No. 2 | 1.44 | 2.32 | 0.56 | | | 0.92 | | 18 | 1 | | | | |
| Loc 10 ROUTE 405 (AT WARDLOW Rd) | CURB RAMP No. 1 | 1.74 | | 0.37 | 0.73 | | 1.09 | | 15 | 1 | | | | 3.13 |
| | CURB RAMP No. 2 | 1.03 | | 0.37 | | | | 0.85 | 15 | 1 | | | | 1.71 |
| Loc 11 & 12 ROUTE 605 (AT SPRING St) | CURB RAMP No. 1 | 2.74 | 4.96 | | | 1.62 | 1.71 | | 15 | | 1 | 0.80 | 1.20 | 1.68 |
| | CURB RAMP No. 2 | 3.21 | 5.55 | | | 2.59 | 1.17 | | 15 | | 1 | 1.27 | 1.90 | 2.69 |
| | CURB RAMP No. 3 | 3.17 | 5.93 | | | 2.99 | 2.48 | | 15 | 1 | | 1.46 | 2.20 | 3.11 |
| | CURB RAMP No. 4 | 2.47 | 4.20 | 0.71 | | 1.46 | 2.61 | | 30 | 1 | 2 | 0.71 | 1.07 | 1.51 |
| | CURB RAMP No. 5 | 3.12 | 4.31 | | | 2.02 | 1.84 | | 15 | | 2 | 1.00 | 1.50 | 2.10 |
| SUB TOTAL | | 49.68 | 30.13 | 2.57 | 0.73 | 29.82 | 47.62 | 10.98 | | 11 | 12 | 14.62 | 21.94 | 151.14 |
| TOTAL | | 49.68 | 30.13 | 91.72 | | | | | | 11 | 12 | 14.62 | 21.94 | 151.14 |

* INCLUDES RETAINING CURB
(N) NOT A SEPARATE PAY ITEM, FOR INFORMATION ONLY.

## SUMMARY OF QUANTITIES
## Q-1

STATE OF CALIFORNIA - DEPARTMENT OF TRANSPORTATION
Caltrans TRAFFIC DESIGN

FUNCTIONAL SUPERVISOR: MOHAMMED CHOWDHURY
CALCULATED-DESIGNED BY: FRANCISCO MARTINEZ
CHECKED BY: MOHAMMED HAIDER
REVISED BY
DATE REVISED

LAST REVISION 00-00-00
DATE PLOTTED => 29-FEB-2012
TIME PLOTTED => 12:06

| Dist | COUNTY | ROUTE | POST MILES TOTAL PROJECT | SHEET No. | TOTAL SHEETS |
|---|---|---|---|---|---|
| 07 | LA | 5.57,110, 405,605 | Var | 42 | 63 |

REGISTERED ELECTRICAL ENGINEER 1/25/12 DATE

2-27-12
PLANS APPROVAL DATE

REGISTERED PROFESSIONAL ENGINEER JESSE RUELAS No. E015604 Exp. 12-31-13 ELECTRICAL STATE OF CALIFORNIA

*THE STATE OF CALIFORNIA OR ITS OFFICERS OR AGENTS SHALL NOT BE RESPONSIBLE FOR THE ACCURACY OR COMPLETENESS OF SCANNED COPIES OF THIS PLAN SHEET.*

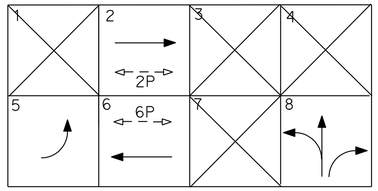


PHASE DIAGRAM

## EXISTING POLE AND EQUIPMENT SCHEDULE

| STANDARD | | | | veh sig mtg | | ped SIGNAL | ppb | | hps | SPECIAL REQUIREMENTS |
|---|---|---|---|---|---|---|---|---|---|---|
| No. | Type | sma | lma | Mast Arm | Pole | mtg | Ø | ARROW | LUMINAIRE | |
| A | 19-3-70 | 30′ | 12′ | 1-MAS | SV-1-T | — | — | — | 200 W | |
| B | 1-A | — | — | — | — | TP-1-T | 6 | → | | |
| C | 17-2-70 | 20′ | 12′ | 1-MAS | SV-1-T | — | 6 | ← | 200 W | |
| D | 1-A | — | — | — | TV-2-T | SP-1-T | — | — | | |
| E | 24-3-70 | 35′ | 12′ | 1-MAS 1-MAT | SV-1-T | SP-1-T | — | — | 200 W | |
| F | 1-A | — | — | — | TV-1-T | — | 2 | → | | |
| G | 1-A | — | — | — | TV-1-T | SP-1-T | 2 | → | | |

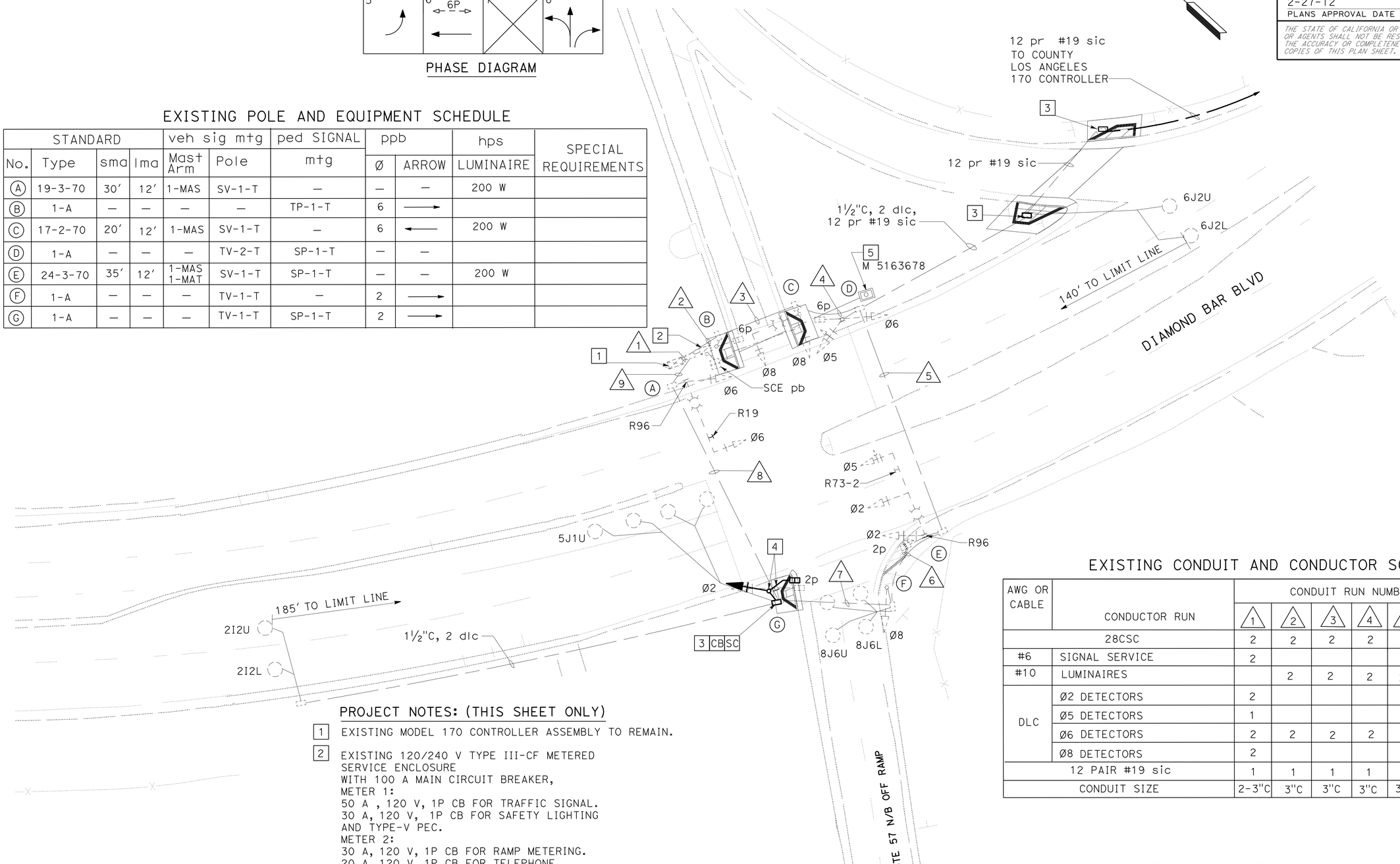


## EXISTING CONDUIT AND CONDUCTOR SCHEDULE

| AWG OR CABLE | CONDUCTOR RUN | CONDUIT RUN NUMBER AND SIZE | | | | | | | | |
|---|---|---|---|---|---|---|---|---|---|---|
| | | 1 | 2 | 3 | 4 | 5 | 6 | 7 | 8 | 9 |
| | 28CSC | 2 | 2 | 2 | 2 | 2 | 2 | 2 | 2 | 2 |
| #6 | SIGNAL SERVICE | 2 | | | | | | | | |
| #10 | LUMINAIRES | | 2 | 2 | 2 | 2 | | | | 2 |
| DLC | Ø2 DETECTORS | 2 | | | | | | | 2 | 2 |
| | Ø5 DETECTORS | 1 | | | | | | | 1 | 1 |
| | Ø6 DETECTORS | 2 | 2 | 2 | 2 | | | | | |
| | Ø8 DETECTORS | 2 | | | | | | 2 | 2 | 2 |
| | 12 PAIR #19 sic | 1 | 1 | 1 | 1 | | | | | |
| | CONDUIT SIZE | 2-3"C | 3"C | 3"C | 3"C | 3"C | 3"C | 3"C | 3"C | 3"C |

## PROJECT NOTES: (THIS SHEET ONLY)

1. EXISTING MODEL 170 CONTROLLER ASSEMBLY TO REMAIN.
2. EXISTING 120/240 V TYPE III-CF METERED SERVICE ENCLOSURE WITH 100 A MAIN CIRCUIT BREAKER,
   METER 1:
   50 A , 120 V, 1P CB FOR TRAFFIC SIGNAL.
   30 A, 120 V, 1P CB FOR SAFETY LIGHTING AND TYPE-V PEC.
   METER 2:
   30 A, 120 V, 1P CB FOR RAMP METERING.
   20 A, 120 V, 1P CB FOR TELEPHONE DEMARCATION.
3. RC EXISTING PULL BOX. INSTALL NEW AT SAME LOCATION.
4. RL EXISTING TYPE 1 STANDARD COMPLETE TO NEW LOCATION.
5. EXISTING SOUTHERN CALIFORNIA EDISON MANHOLE.

APPROVED FOR ELECTRICAL WORK ONLY.

# MODIFY SIGNAL AND LIGHTING
## AT DIAMOND BAR RD
SCALE: 1"=20′

E-1

STATE OF CALIFORNIA - DEPARTMENT OF TRANSPORTATION
Caltrans TRAFFIC DESIGN
FUNCTIONAL SUPERVISOR: YI TSAU
CALCULATED-DESIGNED BY: LIEN VO
CHECKED BY: JESSE RUELAS
REVISED BY
DATE REVISED

LAST REVISION DATE PLOTTED => 29-FEB-2012
01-20-12 TIME PLOTTED => 12:07

| Dist | COUNTY | ROUTE | POST MILES TOTAL PROJECT | SHEET No. | TOTAL SHEETS |
|---|---|---|---|---|---|
| 07 | LA | 5,57,110, 405,605 | Var | 43 | 63 |

REGISTERED ELECTRICAL ENGINEER — DATE: 1/25/12

2-27-12
PLANS APPROVAL DATE

REGISTERED PROFESSIONAL ENGINEER — JESSE RUELAS No. E015604 Exp. 12-31-13 ELECTRICAL — STATE OF CALIFORNIA

*THE STATE OF CALIFORNIA OR ITS OFFICERS OR AGENTS SHALL NOT BE RESPONSIBLE FOR THE ACCURACY OR COMPLETENESS OF SCANNED COPIES OF THIS PLAN SHEET.*

## LEGEND: (THIS SHEET ONLY)

- EXISTING LUMINAIRE TO REMAIN.
- EXISTING SIGN LIGHTING FIXTURE TO REMAIN.
- EXISTING LUMINAIRE TO BE RELOCATED.
- SPLICE CONDUCTORS.
- EXISTING CONDUCTORS TO REMAIN.

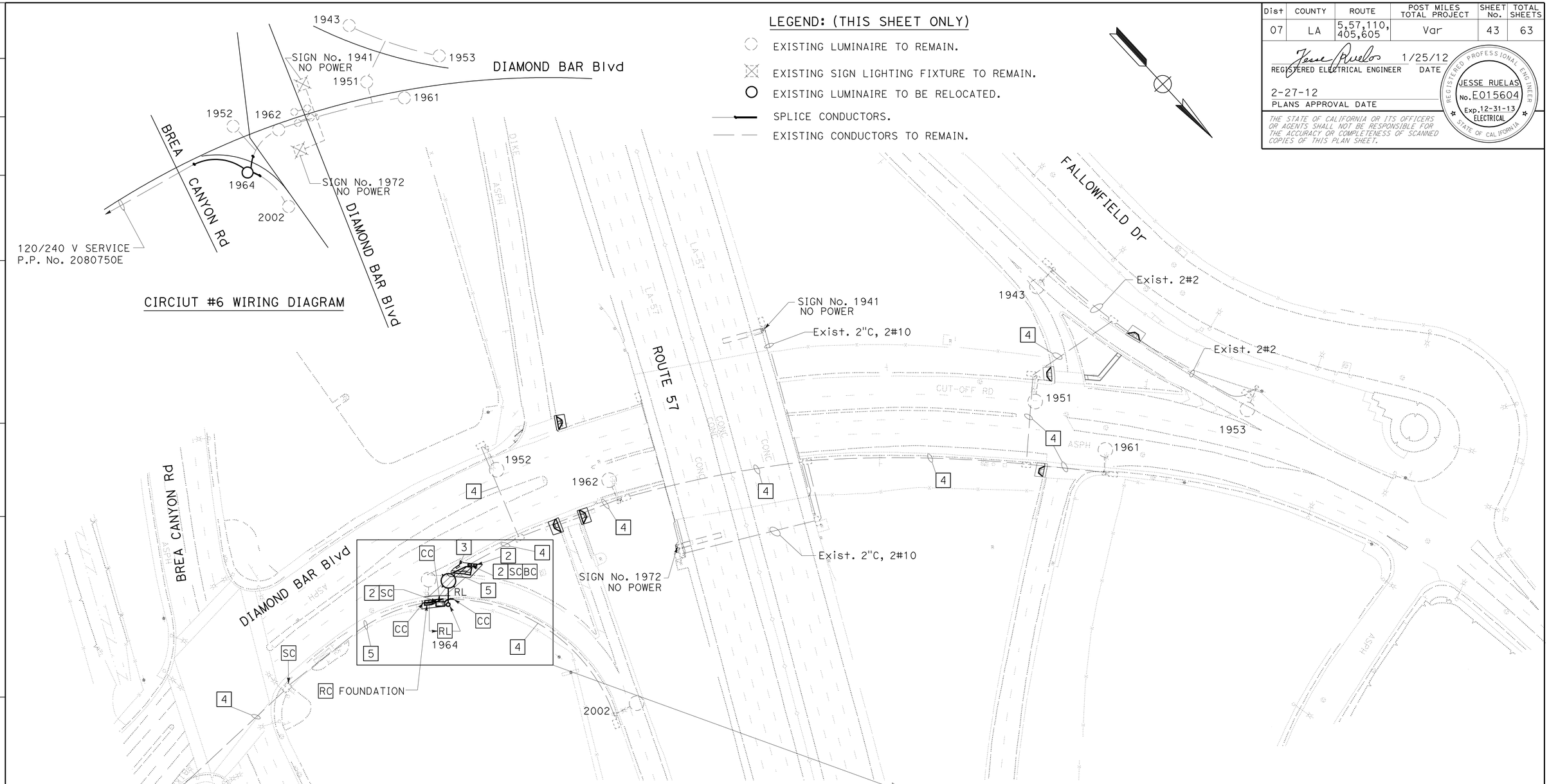


## PROJECT NOTES: (THIS SHEET ONLY)

1. EXISTING LIGHTING CIRCUIT #6 EXISTING 120/240 V TYPE III-BF SERVICE ENCLOSURE. PP No. 2080750E
2. RC EXISTING PULL BOX. INSTALL NEW PULL BOX.
3. INFORMATION ONLY, IRRIGATION PULL BOX.
4. Exist. 2"C AND 3#2 CONDUCTORS TO REMAIN.
5. Exist. 2"C, RC EXISTING 3#2. INSTALL 3#2, 1#4G.

# MODIFY LIGHTING

SCALE: 1" = 50'

APPROVED FOR ELECTRICAL WORK ONLY.

E-2

STATE OF CALIFORNIA - DEPARTMENT OF TRANSPORTATION
Caltrans® TRAFFIC DESIGN

FUNCTIONAL SUPERVISOR: YI TSAU
CALCULATED-DESIGNED BY: LIEN VO
CHECKED BY: JESSE RUELAS
REVISED BY / DATE REVISED

LAST REVISION 01-20-12 — DATE PLOTTED => 29-FEB-2012 — TIME PLOTTED => 12:07

| Dist | COUNTY | ROUTE | POST MILES TOTAL PROJECT | SHEET No. | TOTAL SHEETS |
|---|---|---|---|---|---|
| 07 | LA | 5.57,110, 405,605 | Var | 44 | 63 |

FATEMEH ANSARI 1/25/12
REGISTERED ELECTRICAL ENGINEER DATE

2-27-12
PLANS APPROVAL DATE

REGISTERED PROFESSIONAL ENGINEER FATEMEH ANSARI No. E17009 Exp. 9/30/13 ELECTRICAL STATE OF CALIFORNIA

*THE STATE OF CALIFORNIA OR ITS OFFICERS OR AGENTS SHALL NOT BE RESPONSIBLE FOR THE ACCURACY OR COMPLETENESS OF SCANNED COPIES OF THIS PLAN SHEET.*

## CONDUCTOR SCHEDULE

| AWG CIRCUIT | | 1 | 2 | 3 | 4 | 5 | 6 | 7 | 8 | 9 | 10 | 11 | 12 | 13 | 14 |
|---|---|---|---|---|---|---|---|---|---|---|---|---|---|---|---|
| 28 CONDUCTOR CABLE | | - | - | - | 1 | 1 | 2 | 2 | 2 | 1 | 1 | 2 | - | - | 2 |
| #8 | LUMINAIRE | - | - | - | 2N | 2N | 2 | 2 | 2 | - | 2 | 2 | - | - | - |
| | TOTAL | - | - | - | 2N | 2N | 2 | 2 | 2 | - | 2 | 2 | - | - | - |
| #6 | SIGNAL SERVICE | - | - | - | - | - | - | - | - | - | - | - | - | - | 2 |
| | TOTAL | - | - | - | - | - | - | - | - | - | - | - | - | - | 2 |
| DLC | Ø2 DETECTOR * | - | - | - | - | - | - | - | - | - | - | - | 3 | 3 | 3 |
| | Ø4 DETECTOR * | 2 | 4 | - | - | 4 | 4 | 4 | 4 | - | - | - | - | - | 4 |
| | Ø6 DETECTOR * | - | - | 2 | 2 | 2 | 2 | 2 | 2 | - | - | - | - | - | 2 |
| | TOTAL | 2 | 4 | 2 | 2 | 6 | 6 | 6 | 6 | - | - | - | 3 | 3 | 9 |
| #12 | VIDEO DETECTION SERVICE | - | - | - | - | - | - | - | - | - | - | - | - | - | 2 |
| VIDEO DET. CAMERA CABLE | | - | - | - | - | - | 1 | 1 | 1 | - | 2 | 2 | - | - | 3 |
| 12 PR #19 INTERCONNECT | | - | - | 1 | 1 | 1 | 1 | 1 | 1 | - | - | - | - | 1 | 2 |
| CONDUIT SIZE | | 2" | 2" | 2" | 3" | 2" | 3" | 3" | 3" | 2" | 3" | 3" | 2" | 1½" | 1-2" 2-3" |

- ALL EQUIPMENT IS EXISTING UNLESS OTHERWISE NOTED
- * SYSTEM LOOP DETECTOR
- N NEW

## POLE AND EQUIPMENT SCHEDULE

| No. | STANDARD Type | HEIGHT | SMA | LMA | VEH SIG MTG Mast Arm | Pole | PED SIGNAL MTG | PPB Ø | QUAD | ARROW | HPSV LUMINAIRE | I.I.S.N.S. |
|---|---|---|---|---|---|---|---|---|---|---|---|---|
| 1 | 17A-2-100 | 35' | 25' | 15' | MAS | SV-2-TA | - | - | - | - | 250W | - |
| 2 | 19A-2-100 | 35' | 30' | 15' | MAS | SV-2-TA | SP-1-T | 4 | - | → | 250W | SPRING ST. |
| 3 | 17A-2-100 | 35' | 25' | 15' | MAS | SV-1-T | SP-2-T | 4 | - | ← | 250W | - |
| 4 | 15TS | 30' | - | - | - | - | - | | - | | - | - |
| 5 | 1-A * | 10' | - | - | - | TV-1-T | - | - | - | - | - | - |
| 6 | PPB POST | | | | | | | 6 | | ← | | |
| 7 | PPB POST | | | | | | | 6 | | → | | |

ALL EQUIPMENT IS NEW UNLESS OTHERWISE NOTED
* EXISTING

## LEGEND:

- EXISTING RADIO INTERCONNECT EQUIPMENT TO BE RELOCATED
- EXISTING VIDEO DETECTION CAMERA TO BE RELOCATED
- RELOCATED VIDEO DETECTION CAMERA
- D RELOCATED RADIO INTERCONNECT EQUIPMENT




EXISTING SIGNAL PHASE DIAGRAM

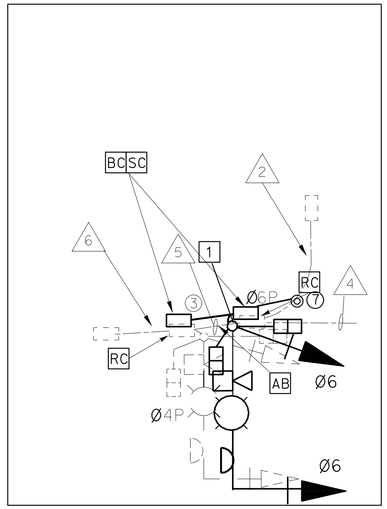


DETAIL 'D'

## GENERAL NOTES:(THIS SHEET)

1. THE WIDTH OF SIDEWALK IS 5'.
2. POLE ② ③ ⑥ AND ⑦ SHALL BE INSTALLED NOT MORE THAN 5' FROM THE CROSSWALK.
3. FOR APPROXIMATE POLE LOCATIONS SEE DETAIL 'B' THIS SHEET.
4. TRAFFIC SIGNAL POLE LOCATION IS APPROXIMATE. THE EXACT LOCATION SHALL BE DETERMINED BY ENGINEER.

## PROJECT NOTE:(THIS SHEET)

1 NEW SIGNAL POLE SHALL NOT BE LESS THAN 4' AWAY FROM THE EDGE OF THE CURVE. THE EXACT LOCATION SHALL BE DETERMINED BY ENGINEER.

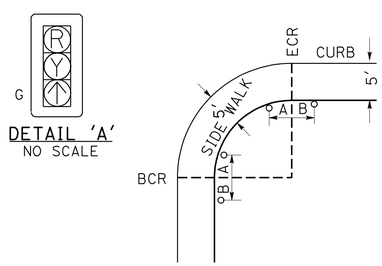


DETAIL 'A'
NO SCALE

Pole Location DETAIL 'B'
NOT TO SCALE

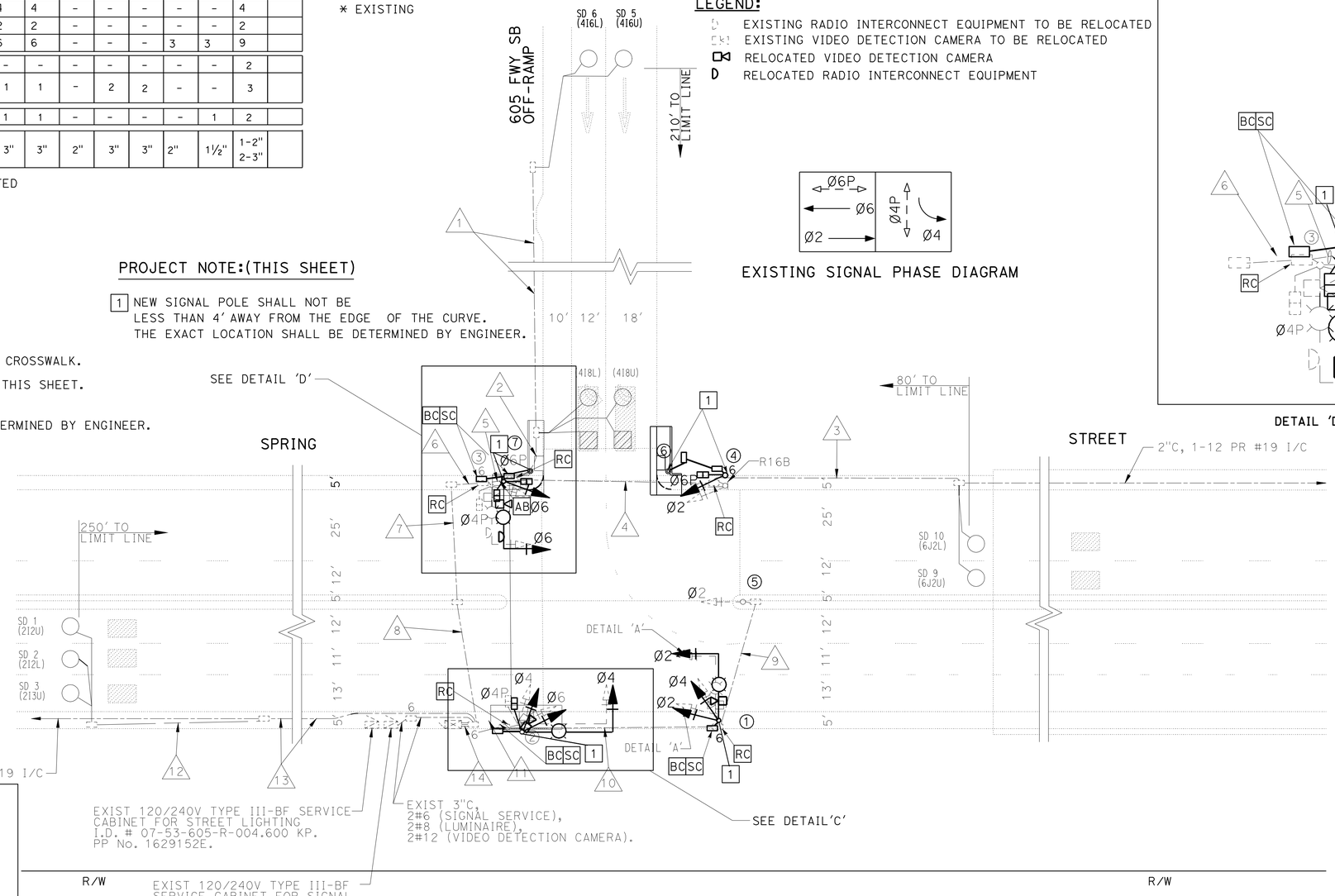


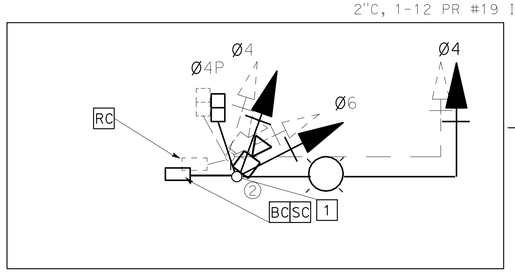


DETAIL 'C'

# MODIFY SIGNAL AND LIGHTING

SCALE: 1" = 20'

E-3

APPROVED FOR ELECTRICAL WORK ONLY.

STATE OF CALIFORNIA - DEPARTMENT OF TRANSPORTATION
Caltrans TRAFFIC DESIGN
FUNCTIONAL SUPERVISOR HASSAN MANNA
CALCULATED-DESIGNED BY FATEMEH ANSARI
CHECKED BY HASSAN MANNA
REVISED BY
DATE REVISED

LAST REVISION 00-00-00
DATE PLOTTED => 29-FEB-2012
TIME PLOTTED => 12:07

| Dist | COUNTY | ROUTE | POST MILES TOTAL PROJECT | SHEET No. | TOTAL SHEETS |
|---|---|---|---|---|---|
| 07 | LA | 5.57,110, 405,605 | Var | 45 | 63 |

FATEMEH ANSARI 1/25/12
REGISTERED ELECTRICAL ENGINEER DATE

2-27-12
PLANS APPROVAL DATE

REGISTERED PROFESSIONAL ENGINEER FATEMEH ANSARI No. E17009 Exp. 9/30/13 ELECTRICAL STATE OF CALIFORNIA

*THE STATE OF CALIFORNIA OR ITS OFFICERS OR AGENTS SHALL NOT BE RESPONSIBLE FOR THE ACCURACY OR COMPLETENESS OF SCANNED COPIES OF THIS PLAN SHEET.*

## EXISTING CONDUCTOR SCHEDULE

| AWG | CONDUCTOR RUN | 1 | 2 | 3 |
|---|---|---|---|---|
| #14 | ØA | 3 | 3 | 3 |
| | Ø B | 3 | 3 | 3 |
| | Ø AP | 2 | 2 | 2 |
| | PPB ØA | 2 | 2 | 2 |
| | SPARE | 3 | 3 | 3 |
| | | | | |
| | TOTAL | 13 | 13 | 13 |
| 2#12 | Ø A LOOP DETECTOR | 1 | 1 | 1 |
| | Ø B LOOP DETECTOR | | | |
| #10 | SIGNAL COMMUN | 1 | 1 | 1 |
| #10 | LUMINAIRE | | 2 | 2 |
| #18 | SERVICE | | | 4 |
| #14 | INTERCONNECT | 7 | 7 | 7 |

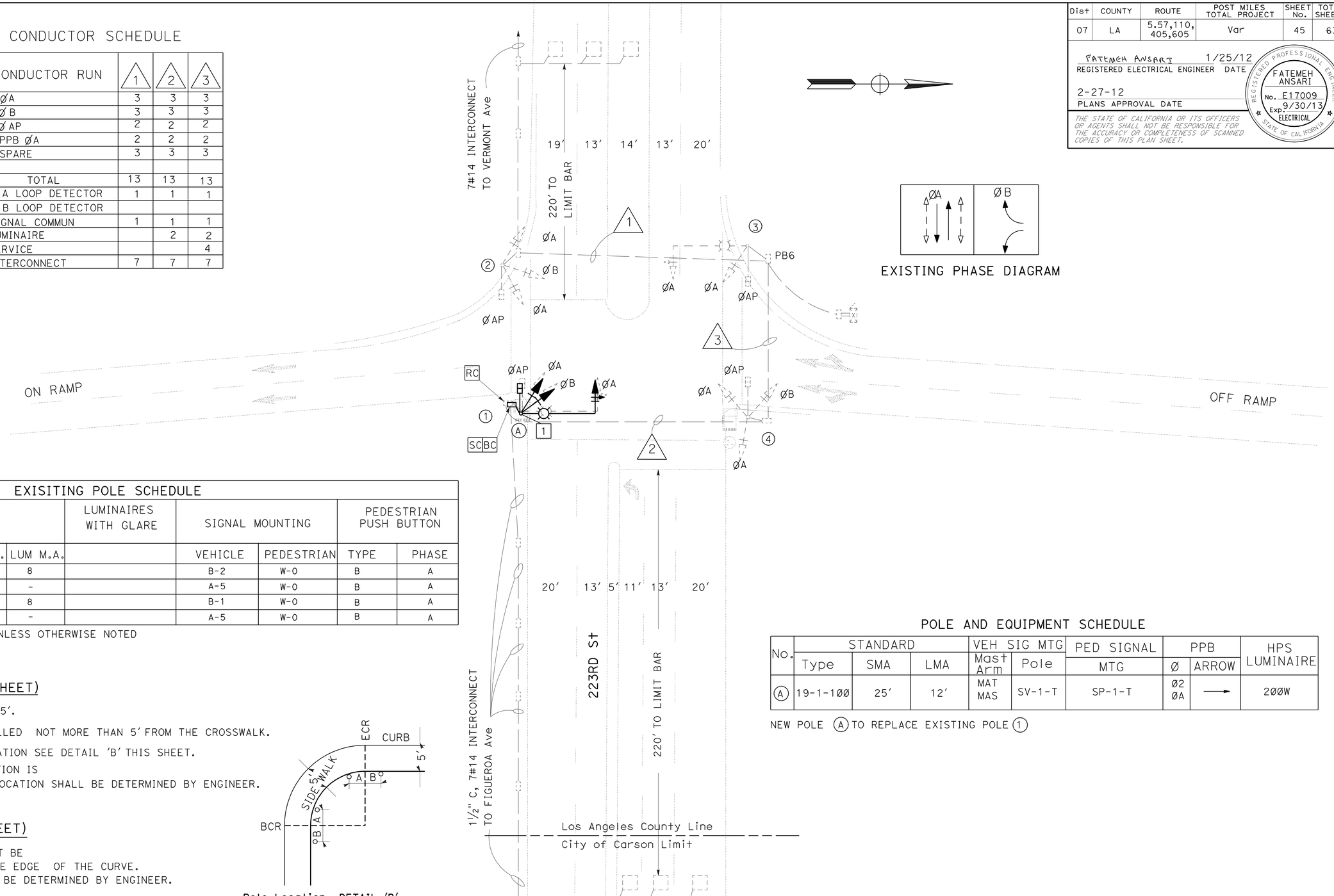





EXISTING PHASE DIAGRAM

## EXISITING POLE SCHEDULE

| STANDARD | | | | LUMINAIRES WITH GLARE | SIGNAL MOUNTING | | PEDESTRIAN PUSH BUTTON | |
|---|---|---|---|---|---|---|---|---|
| No. | DESCRIPTION | SIG M.A. | LUM M.A. | | VEHICLE | PEDESTRIAN | TYPE | PHASE |
| 1 | Type IVII 28′6″* | 20′ | 8 | | B-2 | W-0 | B | A |
| 2 | I-A 10′ | - | - | | A-5 | W-0 | B | A |
| 3 | Type IVII 28′6″ | 20′ | 8 | | B-1 | W-0 | B | A |
| 4 | I-A 10′ | - | - | | A-5 | W-0 | B | A |

ALL EQUIPMENT IS EXISTING UNLESS OTHERWISE NOTED

* REMOVE

## POLE AND EQUIPMENT SCHEDULE

| No. | STANDARD | | | VEH SIG MTG | | PED SIGNAL | PPB | | HPS LUMINAIRE |
|---|---|---|---|---|---|---|---|---|---|
| | Type | SMA | LMA | Mast Arm | Pole | MTG | Ø | ARROW | |
| A | 19-1-1ØØ | 25′ | 12′ | MAT MAS | SV-1-T | SP-1-T | Ø2 ØA | → | 2ØØW |

NEW POLE A TO REPLACE EXISTING POLE 1

## GENERAL NOTES:(THIS SHEET)

1. THE WIDTH OF SIDEWALK IS 5′.
2. NEW POLE SHALL BE INSTALLED NOT MORE THAN 5′ FROM THE CROSSWALK.
3. FOR APPROXIMATE POLE LOCATION SEE DETAIL 'B' THIS SHEET.
4. TRAFFIC SIGNAL POLE LOCATION IS APPROXIMATE. THE EXACT LOCATION SHALL BE DETERMINED BY ENGINEER.

## PROJECT NOTE:(THIS SHEET)

1 NEW SIGNAL POLE SHALL NOT BE LESS THAN 4′ AWAY FROM THE EDGE OF THE CURVE. THE EXACT LOCATION SHALL BE DETERMINED BY ENGINEER.




Pole Location DETAIL 'B'
NOT TO SCALE

APPROVED FOR ELECTRICAL WORK ONLY.

# MODIFY SIGNAL AND LIGHTING

SCALE: 1" = 20′

E-4

STATE OF CALIFORNIA - DEPARTMENT OF TRANSPORTATION
Caltrans TRAFFIC DESIGN

FUNCTIONAL SUPERVISOR: HASSAN MANNA
CALCULATED-DESIGNED BY: FATEMEH ANSARI
CHECKED BY: HASSAN MANNA
REVISED BY
DATE REVISED

LAST REVISION 00-00-00 DATE PLOTTED => 29-FEB-2012 TIME PLOTTED => 12:07

| Dist | COUNTY | ROUTE | POST MILES TOTAL PROJECT | SHEET No. | TOTAL SHEETS |
|---|---|---|---|---|---|
| 07 | LA | 5,57,110, 405,605 | Var | 46 | 63 |

FATEMEH ANSARI 1/25/12
REGISTERED ELECTRICAL ENGINEER DATE

2-27-12
PLANS APPROVAL DATE

REGISTERED PROFESSIONAL ENGINEER FATEMEH ANSARI No. E17009 Exp. 9/30/13 ELECTRICAL STATE OF CALIFORNIA

*THE STATE OF CALIFORNIA OR ITS OFFICERS OR AGENTS SHALL NOT BE RESPONSIBLE FOR THE ACCURACY OR COMPLETENESS OF SCANNED COPIES OF THIS PLAN SHEET.*

**NOTE:**

FOR ACCURATE RIGHT OF WAY AND ACCESS DATA,
CONTACT RIGHT OF WAY ENGINEERING AT THE DISTRICT OFFICE.

## EXISTING PHASE DIAGRAM

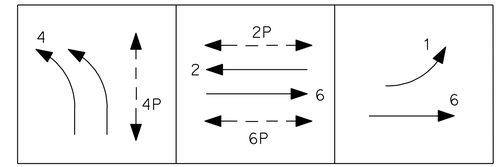


## EXISTING POLE AND SCHEDULE

| STANDARD | | | | LUMINAIRE | SIGNAL MOUNTING | | | P.P.B. | REMARKS |
|---|---|---|---|---|---|---|---|---|---|
| No. | DESCRIPTION | SIG. M.A. | LUM. M.A. | INTEGRAL BALLAST | VEHICLE POLE | VEHICLE MAST ARM | PED. | PHASE | |
| 1 | Type 1 | — | — | — | TV-2 | — | — | — | |
| 2 | Type 3 | 18′ | 8′ | 250W HPS | SV-1 | MAS | SP-1 | 2 | |
| 3 | Type 15 | — | 8′ | 250W HPS | SV-3 | — | SP-2 | 2 & 4 | |
| 4 | Type 1-7′ | — | — | — | TV-1-T | — | — | 4 | |
| 5 | Type 3 | 18′ | 8′ | 250W HPS | SV-1 | MAS | SP-2 | 4 & 6 | STREET NAME SIGN |
| 6 | Type 1A | — | — | — | — | — | TP-1 | 6 | |
| 7 | Type 15 | — | 8′ | 250W HPS | SV-2 | — | — | — | |

SIG. M.A.- SIGNAL MAST ARM.
LUM. M.A.- LUMINAIRE MAST ARM.
PED.- PEDESTRIAN.
P.P.B.- PEDESTRIAN PUSH BUTTON.

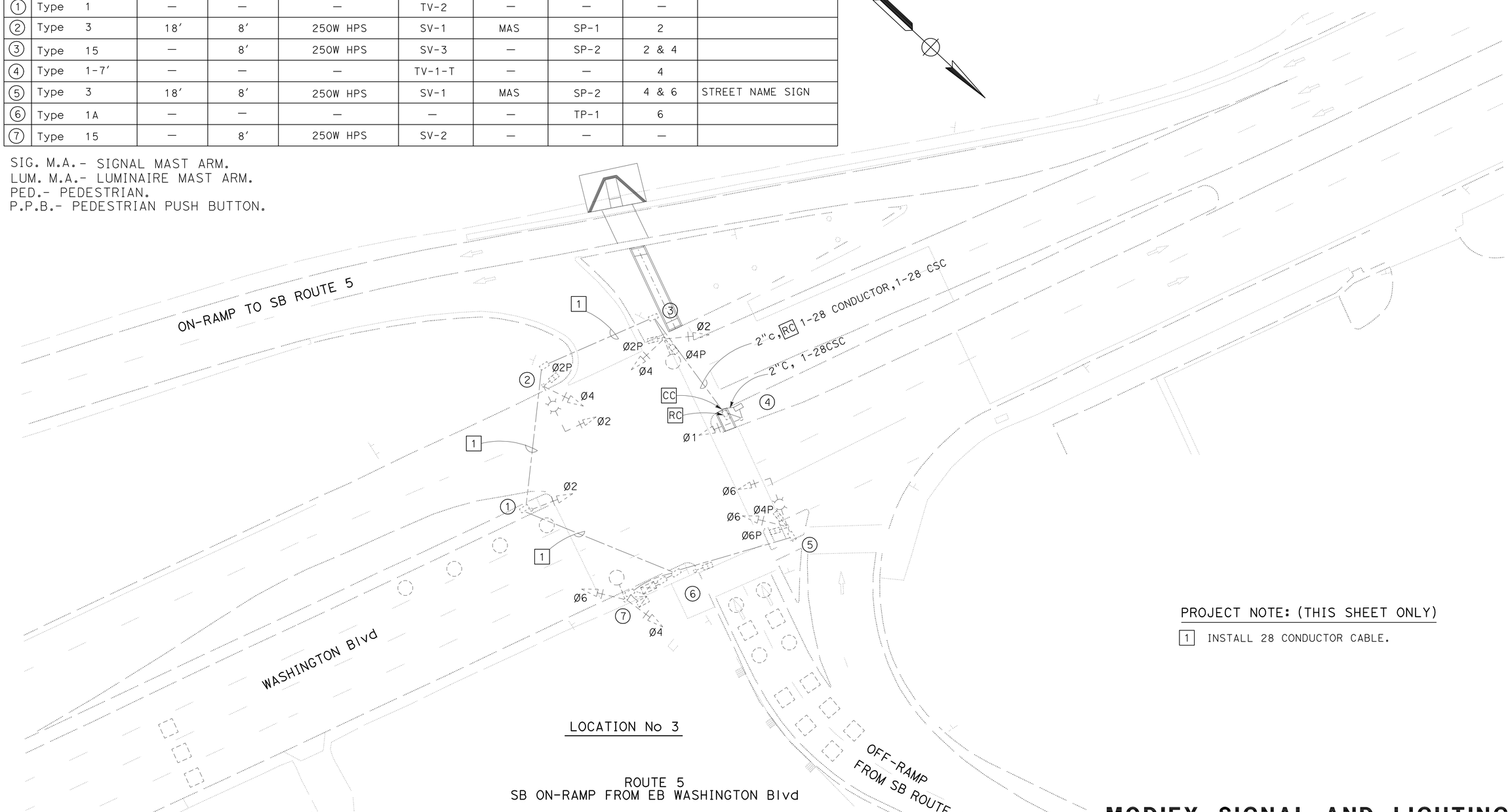


PROJECT NOTE: (THIS SHEET ONLY)

1 INSTALL 28 CONDUCTOR CABLE.

LOCATION No 3

ROUTE 5
SB ON-RAMP FROM EB WASHINGTON Blvd

APPROVED FOR ELECTRICAL WORK ONLY.

# MODIFY SIGNAL AND LIGHTING

SCALE: 1" = 20′

E-5

STATE OF CALIFORNIA - DEPARTMENT OF TRANSPORTATION
Caltrans TRAFFIC DESGIN

FUNCTIONAL SUPERVISOR: HASSAN MANNA
CALCULATED-DESIGNED BY: FATEMEH ANSARI
CHECKED BY: HASSAN MANNA
REVISED BY
DATE REVISED

LAST REVISION 00-00-00
DATE PLOTTED => 29-FEB-2012
TIME PLOTTED => 12:07

| DIST | COUNTY | ROUTE | POST MILES TOTAL PROJECT | SHEET NO. | TOTAL SHEETS |
|---|---|---|---|---|---|
| 07 | LA | 5,57,110 405,605 | Var | 47 | 63 |

REGISTERED CIVIL ENGINEER

November 17, 2006
PLANS APPROVAL DATE

REGISTERED PROFESSIONAL ENGINEER Michael Janzen No. 44788 Exp. 03-31-08 CIVIL STATE OF CALIFORNIA

*The State of California or its officers or agents shall not be responsible for the accuracy or completeness of electronic copies of this plan sheet.*

*To accompany plans dated* 2-27-12

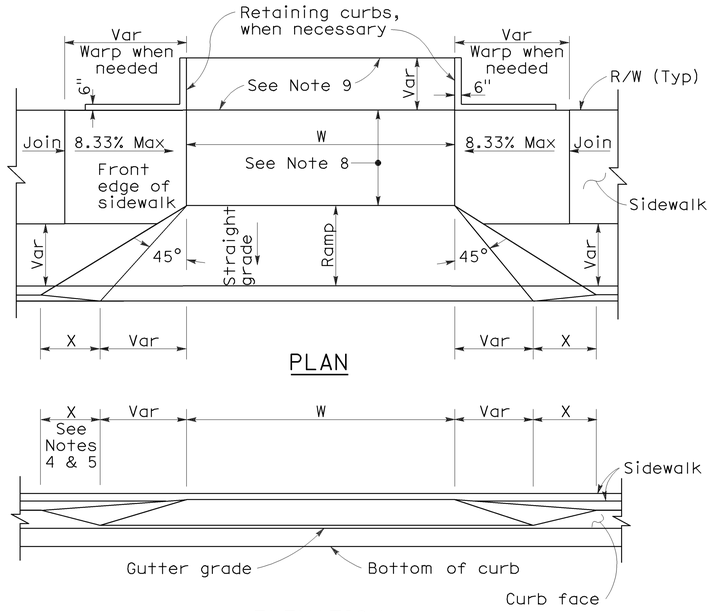


PLAN

ELEVATION

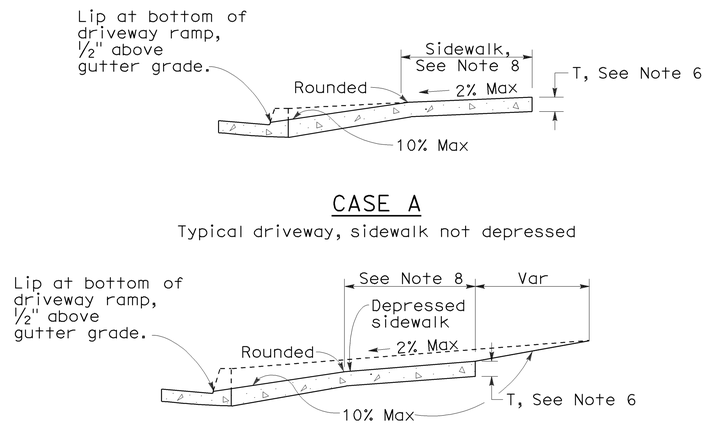


CASE A

Typical driveway, sidewalk not depressed

CASE B

Driveway with depressed sidewalk

SECTIONS

## CURB QUANTITIES

| TYPE | CUBIC YARDS PER LINEAR FOOT |
|---|---|
| A1-6 | 0.02585 |
| A1-8 | 0.03084 |
| A2-6 | 0.05903 |
| A2-8 | 0.06379 |
| A3-6 | 0.01036 |
| A3-8 | 0.01435 |
| B1-4 | 0.02185 |
| B1-6 | 0.02930 |
| B2-4 | 0.05515 |
| B2-6 | 0.06171 |
| B3-4 | 0.00641 |
| B3-6 | 0.01074 |
| B4 | 0.05709 |
| D-4 | 0.04083 |
| D-6 | 0.06804 |
| E | 0.06661 |

## TABLE A

| CURB TYPE | DIMENSIONS "H1" | "H2" | "W1" | "W2" |
|---|---|---|---|---|
| A1-6 | 1'-2" | 6" | 7½" | 1½" |
| A1-8 | 1'-4" | 8" | 8" | 2" |
| A2-6 | 1'-0" | 6" | 2'-7½" | 1½" |
| A2-8 | 1'-2" | 8" | 2'-8" | 2" |
| A3-6 | 6" | 5" | 7¼" | 1¼" |
| A3-8 | 8" | 7" | 7¾" | 1¾" |
| B1-4 | 1'-0" | 4" | 7½" | 2½" |
| B1-6 | 1'-2" | 6" | 9" | 4" |
| B2-4 | 10" | 4" | 2'-7½" | 2½" |
| B2-6 | 1'-0" | 6" | 2'-9" | 4" |
| B3-4 | 4" | 3" | 7" | 2" |
| B3-6 | 6" | 5" | 8½" | 3½" |
| D-4 | 10" | 4" | 1'-6" | 1'-1" |
| D-6 | 1'-0" | 6" | 2'-2" | 1'-8" |

## DRIVEWAYS

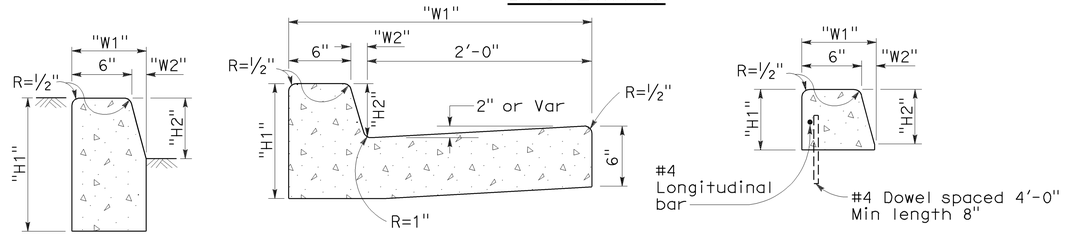


TYPE A1 CURBS
See Table A

TYPE A2 CURBS
See Table A

TYPE A3 CURBS
Superimposed on existing pavement
See Table A

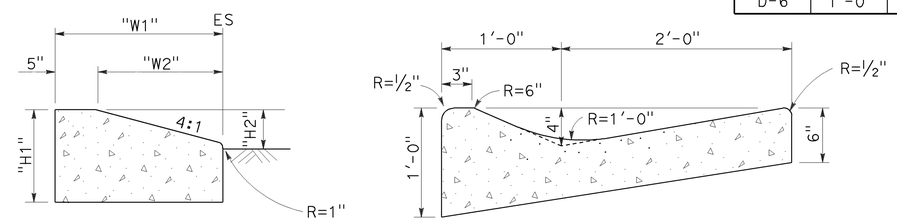


TYPE D CURBS
See Table A

TYPE E CURB

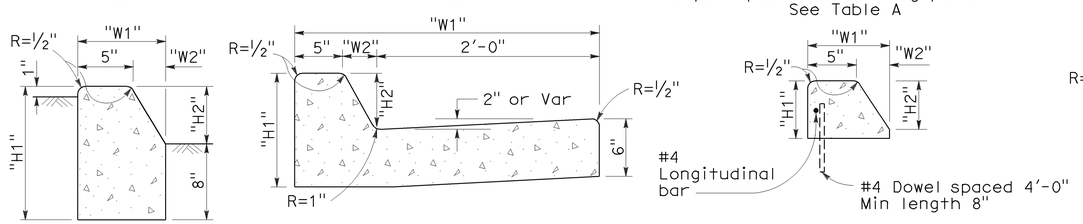


TYPE B1 CURBS
See Table A

TYPE B2 CURBS
See Table A

TYPE B3 CURBS
Superimposed on existing pavement
See Table A

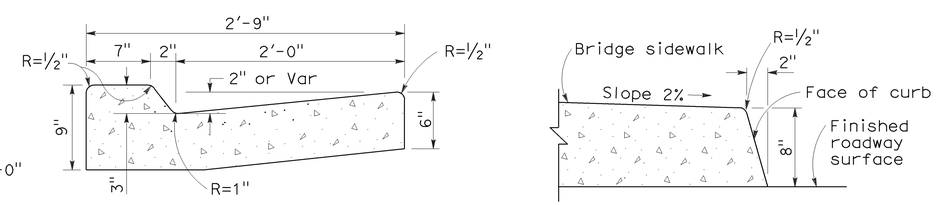


TYPE B4 CURBS

TYPE H CURB
On Bridges

## CURBS

## NOTES:

1. Case A driveway section typically applies.
2. Use Case B driveway section when ramp slopes would exceed 10% in Case A.
3. Use Case B driveway section when sidewalk cross slope would exceed 2% in Case A.
4. X=3'-0" except for curb heights over 10" where 4:1 slopes shall be used on curb slope.
5. X is a variable when sidewalk is located where wheelchairs may traverse the surface. Slopes shall not exceed 8.33%.
6. Sidewalk and ramp thickness "T" at driveway shall be 4" for residental and 6" for commercial.
7. Difference in slope of the driveway ramp and the slope of a line between the gutter and a point on the roadway 5'-0" from gutter line shall not exceed 15%. Reduce driveway ramp slope, not gutter slope, where required.
8. Minimum width of clear passageway for sidewalk shall be 4'-0".
9. Retaining curbs and acquisition of construction easement may be necessary for narrow sidewalks or curb heights in excess of 6".
10. Across the pedestrian route at curb ramp locations, the gutter pan slope shall not exceed 1" of depth for each 2'-0" of width.

STATE OF CALIFORNIA
DEPARTMENT OF TRANSPORTATION

# CURBS AND DRIVEWAYS

NO SCALE

RSP A87A DATED NOVEMBER 17, 2006 SUPERSEDES STANDARD PLAN A87A
DATED MAY 1, 2006 - PAGE 113 OF THE STANDARD PLANS BOOK DATED MAY 2006.

**REVISED STANDARD PLAN RSP A87A**

**2006 REVISED STANDARD PLAN RSP A87A**

10-25-06

| DIST | COUNTY | ROUTE | POST MILES TOTAL PROJECT | SHEET NO. | TOTAL SHEETS |
|---|---|---|---|---|---|
| 07 | LA | 5,57,110 405,605 | Var | 48 | 63 |

REGISTERED CIVIL ENGINEER

September 1, 2006
PLANS APPROVAL DATE

Hector David Cordova No. C41957 Exp. 3-31-08 CIVIL — REGISTERED PROFESSIONAL ENGINEER — STATE OF CALIFORNIA

*The State of California or its officers or agents shall not be responsible for the accuracy or completeness of electronic copies of this plan sheet.*

*To accompany plans dated* 2-27-12

# 2006 REVISED STANDARD PLAN RSP A88A

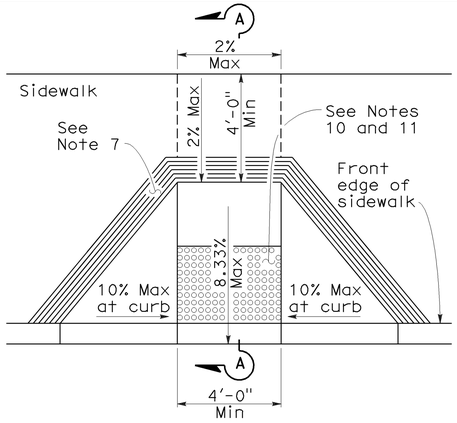


CASE A

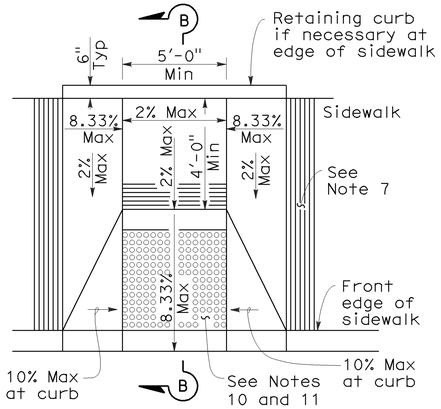


CASE B

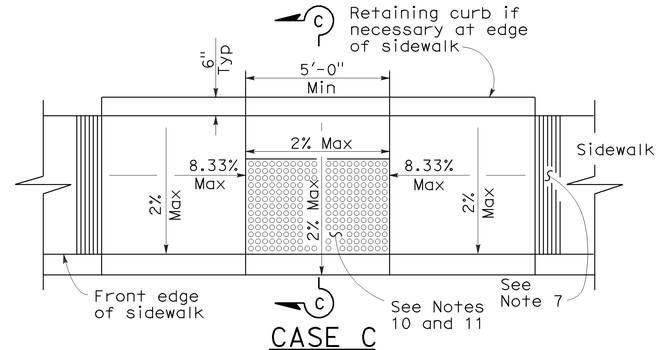


CASE C

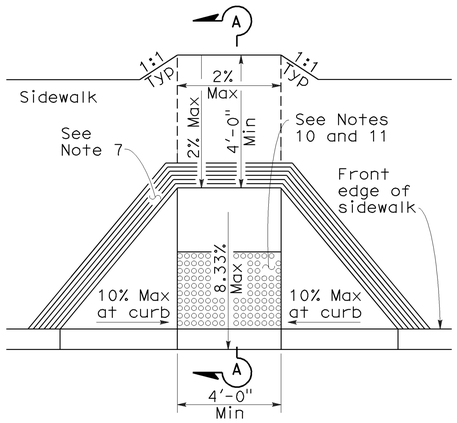


CASE D

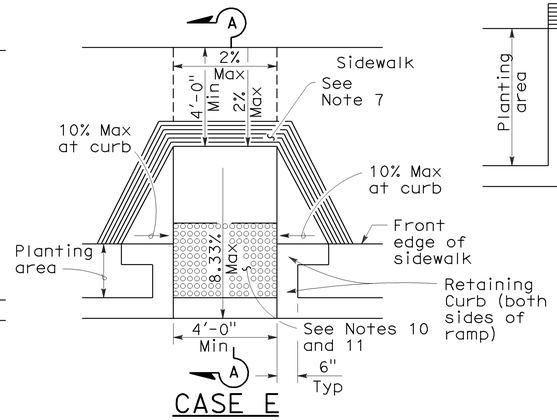


CASE E

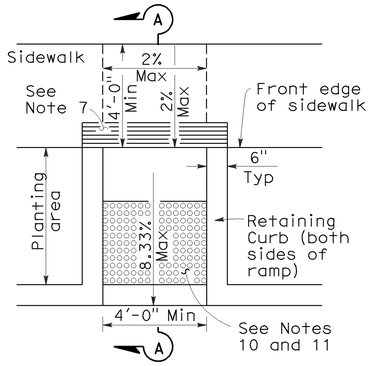


CASE F

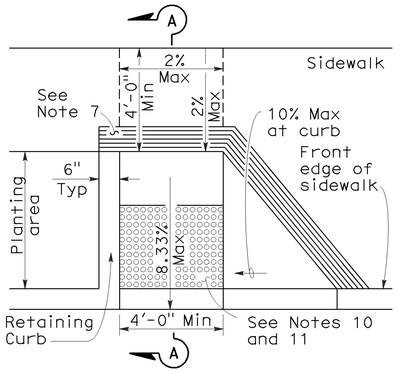


CASE G
See Note 4

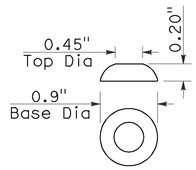


RAISED TRUNCATED DOME

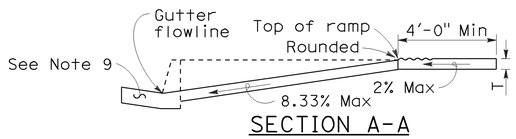


SECTION A-A

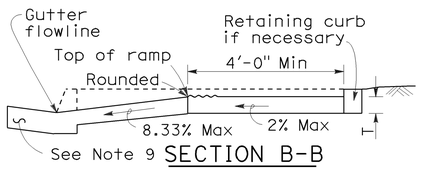


SECTION B-B

Depress entire sidewalk as required

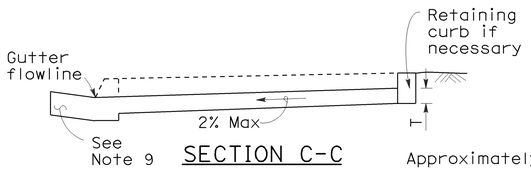


SECTION C-C

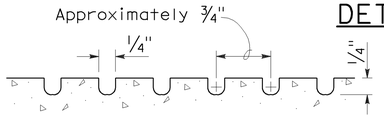


GROOVING DETAIL

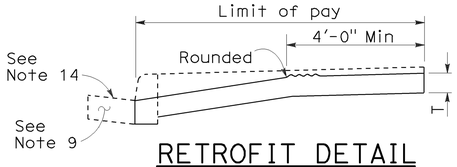


RETROFIT DETAIL
Existing curb and sidewalk

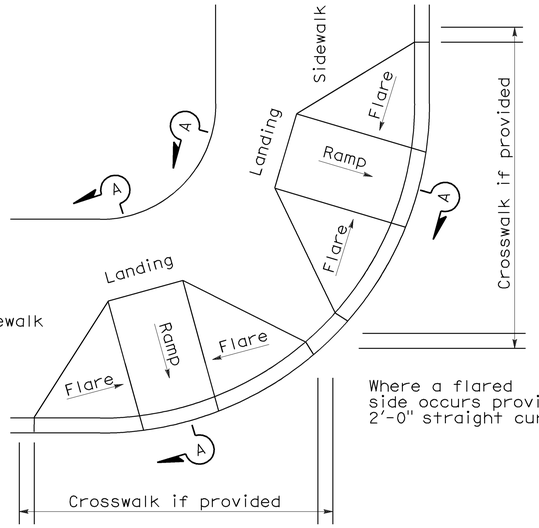


DETAIL A

TYPICAL TWO-RAMP CORNER INSTALLATION

See Note 1

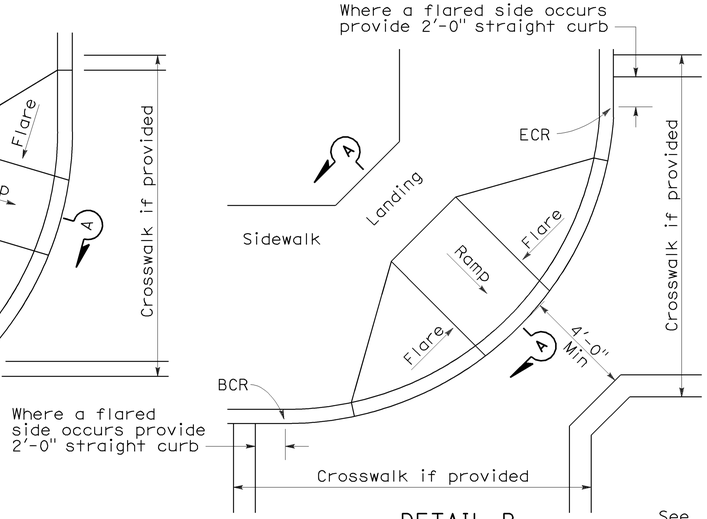


DETAIL B

TYPICAL ONE-RAMP CORNER INSTALLATION

See Notes 1 and 3

## NOTES:

1. As site conditions dictate, Case A through Case G curb ramps may be used for corner installations similar to those shown in Detail A and Detail B. The case of curb ramps used in Detail A do not have to be the same. Case A through Case G curb ramps also may be used at mid block locations, as site conditions dictate.
2. If distance from curb to back of sidewalk is too short to accommodate ramp and 4'-0" platform (landing) as shown in Case A, the sidewalk may be depressed longitudinally as in Case B, or C or may be widened as in Case D.
3. When ramp is located in center of curb return, crosswalk configuration must be similar to that shown for Detail B.
4. As site conditions dictate, the retaining curb side and the flared side of the Case G ramp shall be constructed in reversed position.
5. If located on a curve, the sides of the ramp need not be parallel, but the minimum width of the ramp shall be 4'-0".
6. Side slope of ramp flares vary uniformly from a maximum of 10% at curb to conform with longitudinal sidewalk slope adjacent to top of the ramp, except in Case C and Case F.
7. The curb ramp shall be outlined, as shown, with a 1'-0" wide border with 1/4" grooves approximately 3/4" on center. See grooving detail.
8. Transitions from ramps and landing to walks, gutters or streets shall be flush and free of abrupt changes.
9. Maximum slopes of adjoining gutters, the road surface immediately adjacent to the curb ramp or accessible route shall not exceed 5 percent within 4'-0" of the top and bottom of the curb ramp.
10. Curb ramps shall have a detectable warning surface that extends the full width and 3'-0" depth of the ramp. Detectable Warning Surfaces shall conform to the details on this plan and the requirements in the Special Provisions.
11. The edge of the detectable warning surface nearest the street shall be between 6" and 8" from the gutter flowline.
12. Sidewalk and ramp thickness, "T", shall be 3½" minimum.
13. Utility pull boxes, manholes, vaults and all other utility facilities within the boundaries of the curb ramp will be relocated or adjusted to grade by the owner prior to, or in conjunction with, curb ramp construction.
14. For retrofit conditions, removal and replacement of curb apron will be at the Contractor's option, unless otherwise shown on project plans.

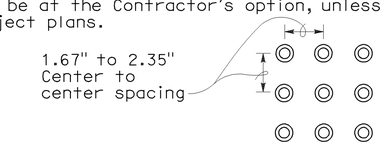


RAISED TRUNCATED DOME PATTERN (IN-LINE)

DETECTABLE WARNING SURFACE

See Note 10

STATE OF CALIFORNIA
DEPARTMENT OF TRANSPORTATION

# CURB RAMP DETAILS

NO SCALE

RSP A88A DATED SEPTEMBER 1, 2006 SUPERSEDES STANDARD PLAN A88A DATED MAY 1, 2006 - PAGE 115 OF THE STANDARD PLANS BOOK DATED MAY 2006.

**REVISED STANDARD PLAN RSP A88A**

8-3-06

| DIST | COUNTY | ROUTE | POST MILES TOTAL PROJECT | SHEET NO. | TOTAL SHEETS |
|---|---|---|---|---|---|
| 07 | LA | 5,57,110 405,605 | Var | 49 | 63 |

Randell D. Hiatt
REGISTERED CIVIL ENGINEER

June 6, 2008
PLANS APPROVAL DATE

REGISTERED PROFESSIONAL ENGINEER
Randell D. Hiatt
No. C50200
Exp. 6-30-09
CIVIL
STATE OF CALIFORNIA

*The State of California or its officers or agents shall not be responsible for the accuracy or completeness of electronic copies of this plan sheet.*

*To accompany plans dated* 2-27-12

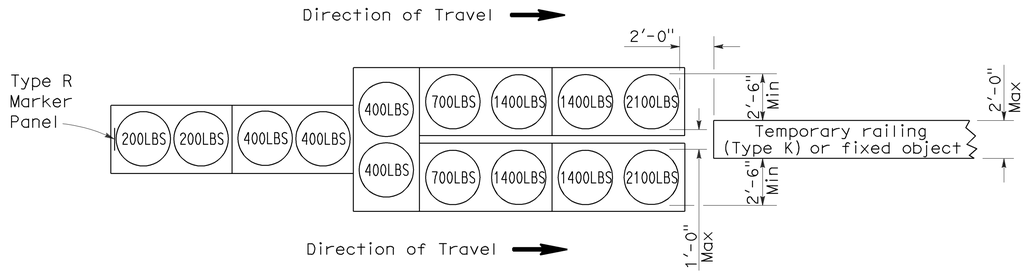


## ARRAY 'TU14'

Approach speed 45 mph or more

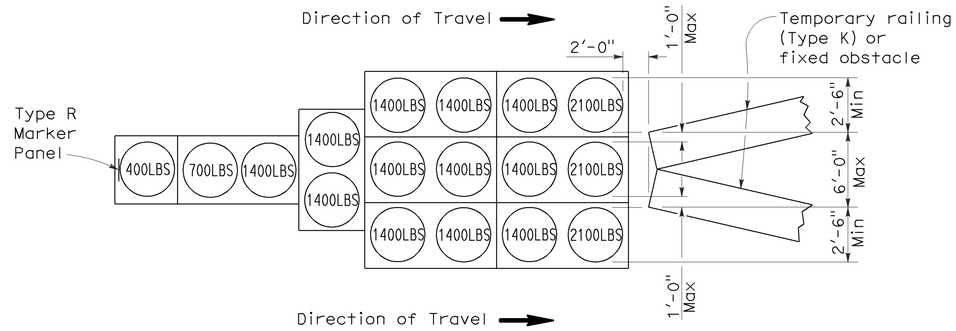


## ARRAY 'TU17'

Approach speed less than 45 mph

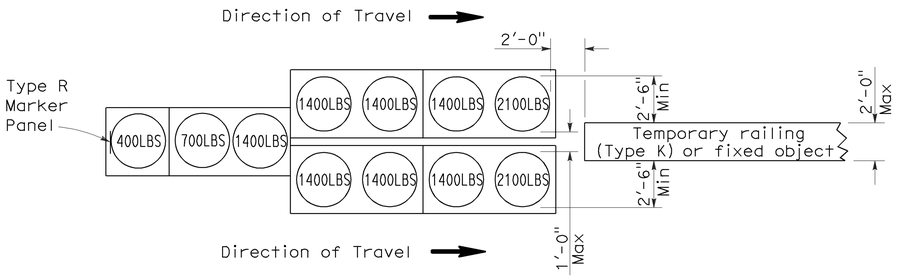


## ARRAY 'TU11'

Approach speed less than 45 mph

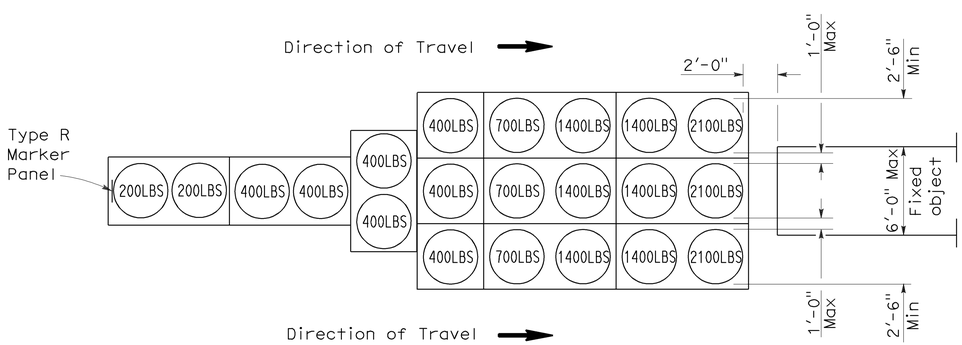


## ARRAY 'TU21'

Approach speed 45 mph or more

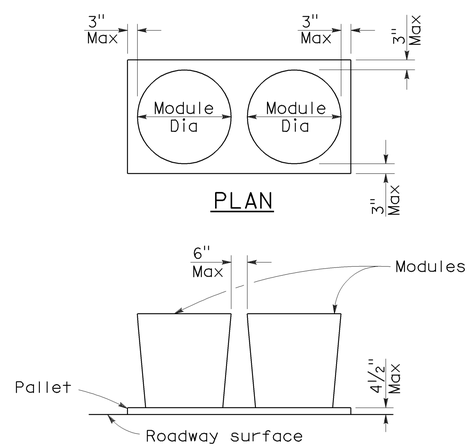


## ELEVATION

## CRASH CUSHION PALLET DETAIL

See Note 7

## NOTES:

1. (XXX) Indicates sand filled module location and weight of sand in pounds for each module. Module spacing is based on the greater diameter of the module.
2. All sand weights are nominal.
3. Temporary crash cushion arrays shall not encroach on the traveled way.
4. Place the top of Type R marker panel 1" below the module lid.
5. Refer to Standard Plan A73B for marker details.
6. Approach speeds indicated conform to NCHRP 350 Report criteria.
7. Use of pallets is optional.

STATE OF CALIFORNIA
DEPARTMENT OF TRANSPORTATION

# TEMPORARY CRASH CUSHION, SAND FILLED (UNIDIRECTIONAL)

NO SCALE

RSP T1A DATED JUNE 6, 2008 SUPERSEDES STANDARD PLAN T1A
DATED MAY 1, 2006 - PAGE 211 OF THE STANDARD PLANS BOOK DATED MAY 2006.

**REVISED STANDARD PLAN RSP T1A**

**2006 REVISED STANDARD PLAN RSP T1A**

| DIST | COUNTY | ROUTE | POST MILES TOTAL PROJECT | SHEET NO. | TOTAL SHEETS |
|---|---|---|---|---|---|
| 07 | LA | 5,57,110 405,605 | Var | 50 | 63 |

Randell D. Hiatt
REGISTERED CIVIL ENGINEER

June 6, 2008
PLANS APPROVAL DATE

REGISTERED PROFESSIONAL ENGINEER
Randell D. Hiatt
No. C50200
Exp. 6-30-09
CIVIL
STATE OF CALIFORNIA

*The State of California or its officers or agents shall not be responsible for the accuracy or completeness of electronic copies of this plan sheet.*

*To accompany plans dated* 2-27-12

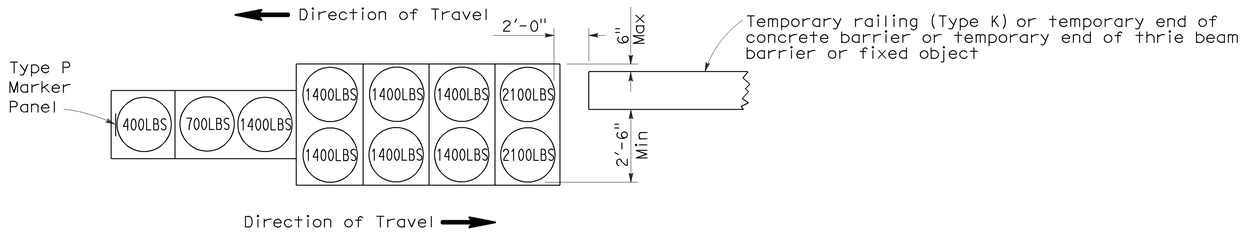


ARRAY 'TB11'

Approach speed less than 45 mph

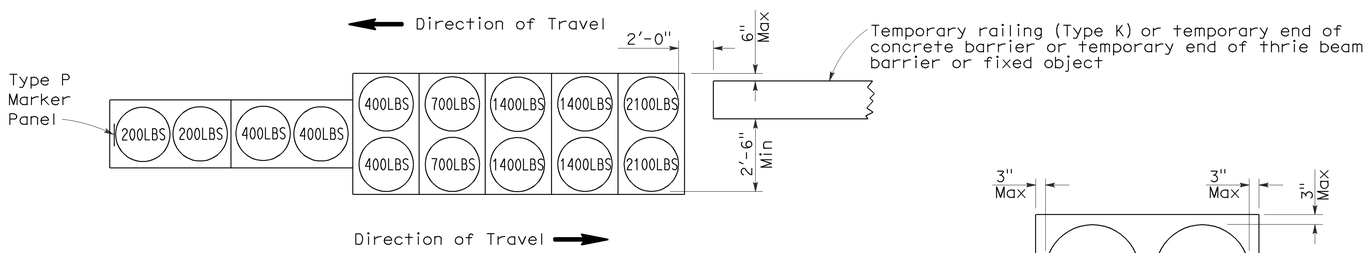


ARRAY 'TB14'

Approach speed 45 mph or more

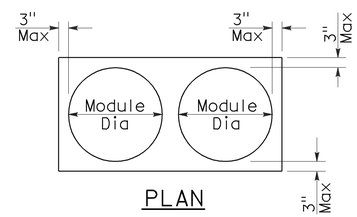


PLAN

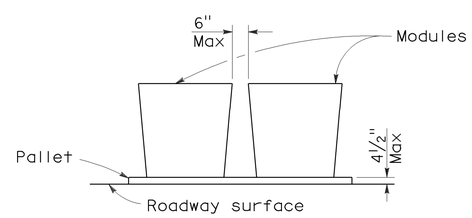


ELEVATION

CRASH CUSHION PALLET DETAIL

See Note 7

NOTES:

1. (XXX) Indicates sand filled module location and weight of sand in pounds for each module. Module spacing is based on the greater diameter of the module.
2. All sand weights are nominal.
3. Temporary crash cushion arrays shall not encroach on the traveled way.
4. Place the Type P marker panel so that the bottom of the panel rests upon the pallet.
5. Refer to Standard Plan A73B for marker details.
6. Approach speeds indicated conform to NCHRP 350 Report criteria.
7. Use of pallets is optional.

STATE OF CALIFORNIA
DEPARTMENT OF TRANSPORTATION

# TEMPORARY CRASH CUSHION, SAND FILLED (BIDIRECTIONAL)

NO SCALE

RSP T1B DATED JUNE 6, 2008 SUPERSEDES STANDARD PLAN T1B
DATED MAY 1, 2006 - PAGE 212 OF THE STANDARD PLANS BOOK DATED MAY 2006.

**REVISED STANDARD PLAN RSP T1B**

**2006 REVISED STANDARD PLAN RSP T1B**

5-15-08

| DIST | COUNTY | ROUTE | POST MILES TOTAL PROJECT | SHEET NO. | TOTAL SHEETS |
|---|---|---|---|---|---|
| 07 | LA | 5,57,110 405,605 | Var | 51 | 63 |

Randell D. Hiatt
REGISTERED CIVIL ENGINEER

June 6, 2008
PLANS APPROVAL DATE

REGISTERED PROFESSIONAL ENGINEER
Randell D. Hiatt
No. C50200
Exp. 6-30-09
CIVIL
STATE OF CALIFORNIA

*The State of California or its officers or agents shall not be responsible for the accuracy or completeness of electronic copies of this plan sheet.*

*To accompany plans dated* 2-27-12

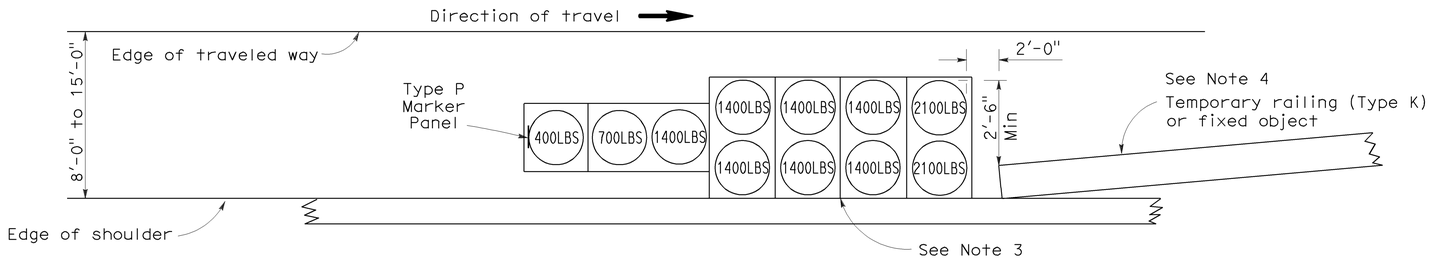


## ARRAY 'TS11'

Approach speed less than 45 mph
See Note 9

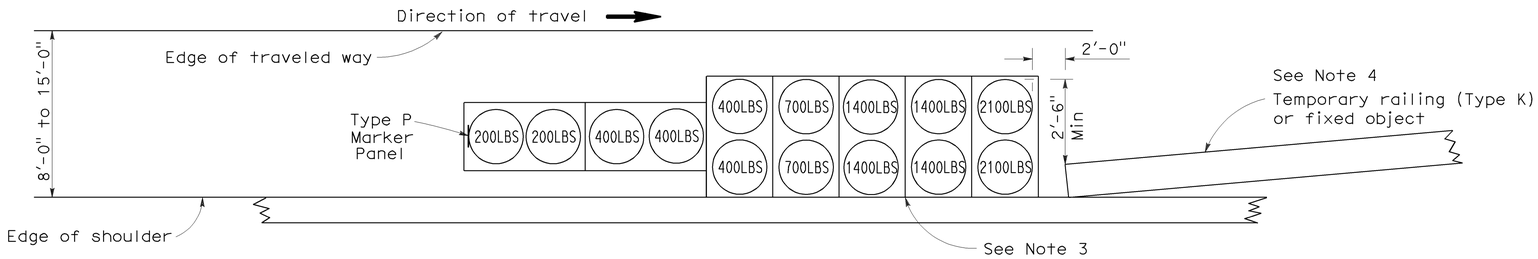


## ARRAY 'TS14'

Approach speed 45 mph or more
See Note 9

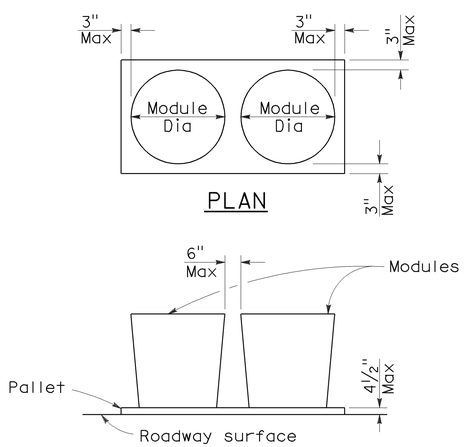


## CRASH CUSHION PALLET DETAIL

See Note 11

## NOTES:

1. (XXX) Indicates sand filled module location and weight of sand in pounds for each module. Module spacing is based on the greater diameter of the module.
2. All sand weights are nominal.
3. The temporary crash cushion arrays shown on this plan shall be used only in locations where there will be traffic on one side of the temporary crash cushion array.
4. If the fixed object or approach end of the temporary railing is less than 15'-0" from the edge of traveled way, a temporary crash cushion is required in a construction or work zone.
5. Temporary crash cushion arrays shall not encroach on the traveled way.
6. Arrays for median shoulders shall conform to details shown on this plan for outside shoulders.
7. Place the Type P marker panel so that the bottom of the panel rests upon the pallet and faces traffic.
8. Refer to Standard Plan A73B for marker details.
9. For shoulder widths less than 8'-0", appropriate approved crash cushion protection, other than sand filled modules, shall be provided at fixed objects and at approach ends of temporary railing. The specific type of crash cushion shall be as shown on the project plans or as specified in the Special Provisions, or if not shown on the project plans or specified in the Special Provisions, shall be as approved by the Engineer.
10. Approach speeds indicated conform to NCHRP 350 Report criteria.
11. Use of pallets is optional.

STATE OF CALIFORNIA
DEPARTMENT OF TRANSPORTATION

# TEMPORARY CRASH CUSHION, SAND FILLED (SHOULDER INSTALLATIONS)

NO SCALE

RSP T2 DATED JUNE 6, 2008 SUPERSEDES STANDARD PLAN T2
DATED MAY 1, 2006 - PAGE 213 OF THE STANDARD PLANS BOOK DATED MAY 2006.

**REVISED STANDARD PLAN RSP T2**

**2006 REVISED STANDARD PLAN RSP T2**

5-15-08

| Dist | COUNTY | ROUTE | POST MILES TOTAL PROJECT | SHEET No. | TOTAL SHEETS |
|---|---|---|---|---|---|
| 07 | LA | 5,57,110 405,605 | Var | 52 | 63 |

Randell D. Hiatt
REGISTERED CIVIL ENGINEER

May 20, 2011
PLANS APPROVAL DATE

REGISTERED PROFESSIONAL ENGINEER
Randell D. Hiatt
No. C50200
Exp. 6-30-11
CIVIL
STATE OF CALIFORNIA

*The State of California or its officers or agents shall not be responsible for the accuracy or completeness of electronic copies of this plan sheet.*

*To accompany plans dated* 2-27-12

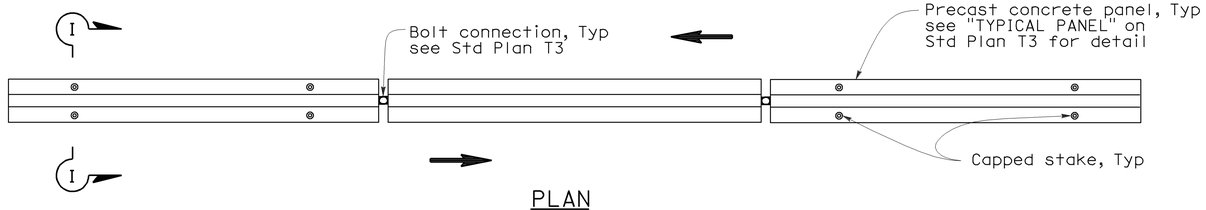


PLAN

RAILING STAKING CONFIGURATION FOR TWO-WAY TRAFFIC

See Note 1

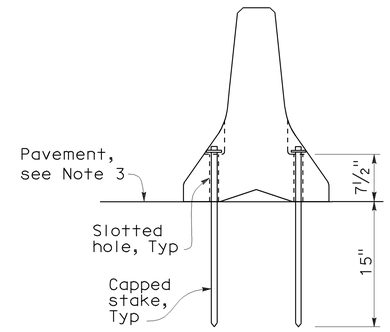


SECTION I-I

NOTES:

1. Where Type K Temporary Railing is placed as a temporary or long term barrier in two-way traffic on highways with less than 24" from the edge of traveled way, use four capped stakes per every other panel with end panels staked.
2. Where Type K Temporary Railing is placed 3" to 24" from the edge of an excavation on highways, use two capped stakes per panel along the traffic side.
3. Staked Type K Temporary Railing must be supported by at least 4" thick concrete, hot mix asphalt or existing asphalt concrete pavement.
4. The minimum yield strength for the washer must be 60,000 psi.
5. Direction of adjacent traffic indicated by ⟹.

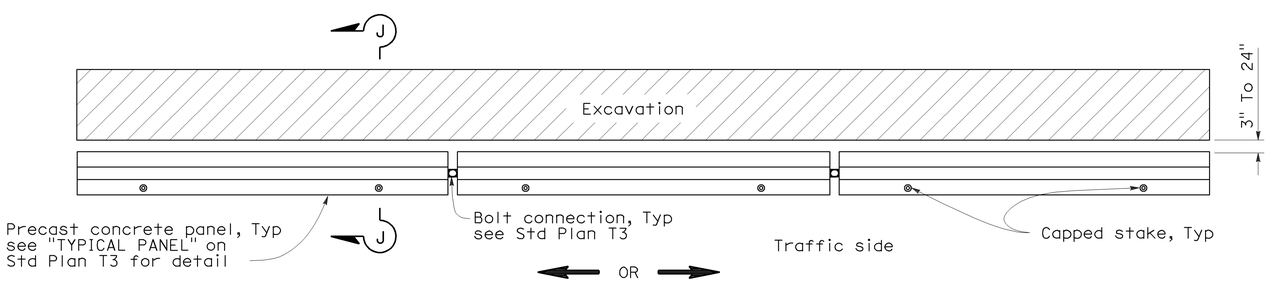


PLAN

RAILING STAKING CONFIGURATION ADJACENT TO AN EXCAVATION

See Note 2

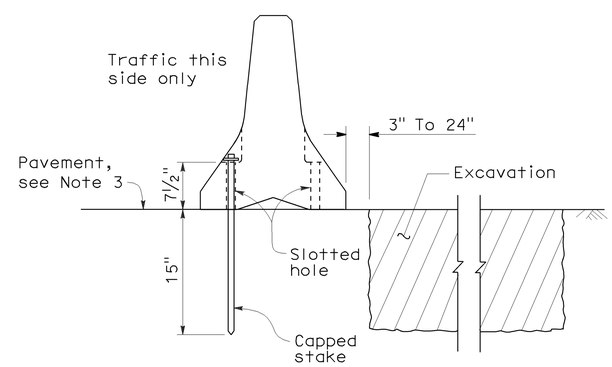


SECTION J-J

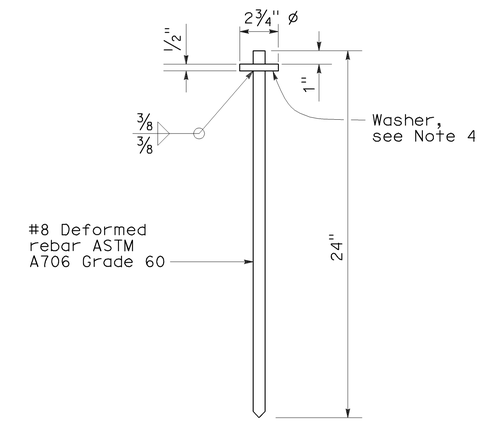


CAPPED STAKE DETAIL

STATE OF CALIFORNIA
DEPARTMENT OF TRANSPORTATION

# TEMPORARY RAILING (TYPE K)

NO SCALE

NSP T3A DATED MAY 20, 2011 SUPPLEMENTS
THE STANDARD PLANS BOOK DATED MAY 2006.

**NEW STANDARD PLAN NSP T3A**

2006 NEW STANDARD PLAN NSP T3A

| DIST | COUNTY | ROUTE | POST MILES TOTAL PROJECT | SHEET NO. | TOTAL SHEETS |
|---|---|---|---|---|---|
| 07 | LA | 5,57,110 405,605 | Var | 53 | 63 |

LICENSED LANDSCAPE ARCHITECT

August 15, 2008
PLANS Approval DATE

*The State of California or its officers or agents shall not be responsible for the accuracy or completeness of electronic copies of this plan sheet.*

LICENSED LANDSCAPE ARCHITECT Robert B. Schott 3635 Signature 11-04-08 Renewal Date 08-11-08 Date STATE OF CALIFORNIA

*To accompany plans dated* 2-27-12

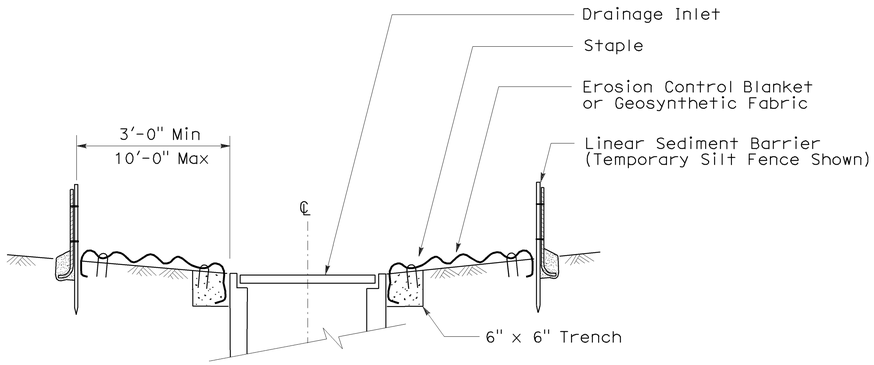


SECTION A-A

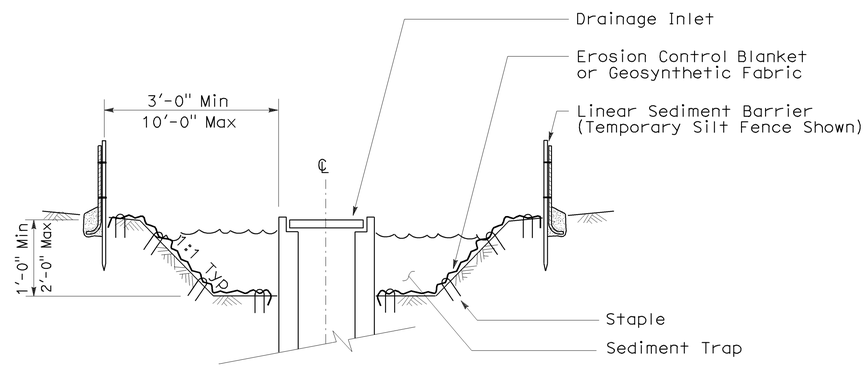


SECTION B-B

## NOTES:

1. See Standard Plan T51 for Temporary Silt Fence.
2. Dimensions may vary to fit field conditions.

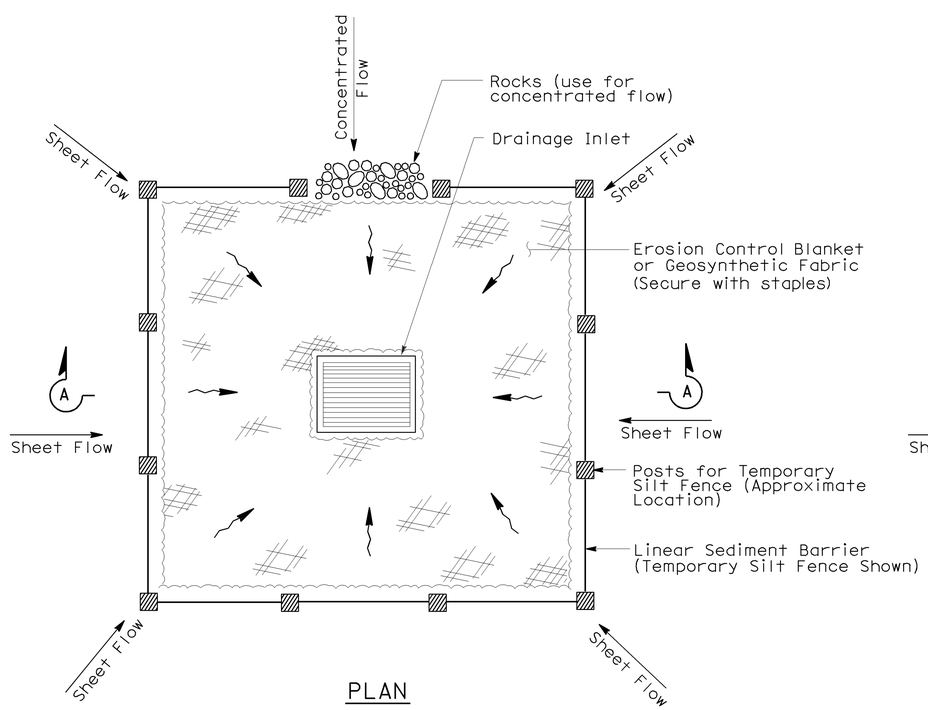


PLAN

TEMPORARY DRAINAGE INLET PROTECTION (TYPE 1)

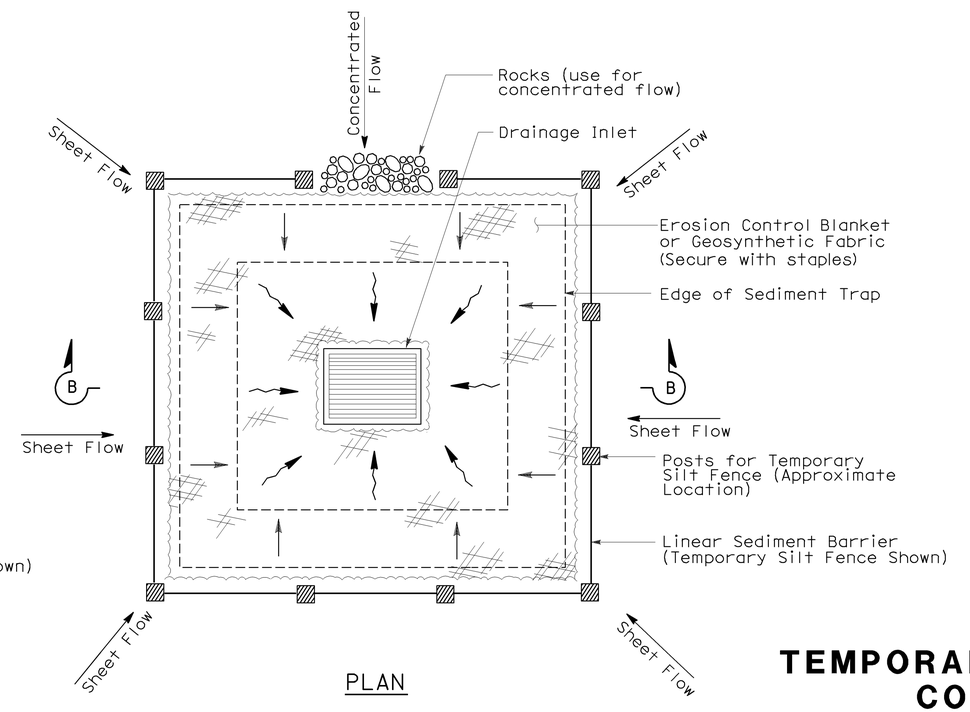


PLAN

TEMPORARY DRAINAGE INLET PROTECTION (TYPE 2) (EXCAVATED SEDIMENT TRAP)

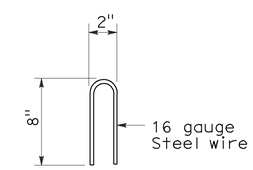


STAPLE DETAIL

STATE OF CALIFORNIA
DEPARTMENT OF TRANSPORTATION

# TEMPORARY WATER POLLUTION CONTROL DETAILS (TEMPORARY DRAINAGE INLET PROTECTION)

NO SCALE

Nsp t61 dated august 15, 2008 supplements the standard plans book dated may 2006.

**NEW STANDARD PLAN NSP T61**

**2006 NEW STANDARD PLAN NSP T61**

7-11-08

| DIST | COUNTY | ROUTE | POST MILES TOTAL PROJECT | SHEET NO. | TOTAL SHEETS |
|---|---|---|---|---|---|
| 07 | LA | 5,57,110 405,605 | Var | 54 | 63 |

LICENSED LANDSCAPE ARCHITECT

August 15, 2008
PLANS APPROVAL DATE

*The State of California or its officers or agents shall not be responsible for the accuracy or completeness of electronic copies of this plan sheet.*

LICENSED LANDSCAPE ARCHITECT — Robert B. Schott — 3695 — Signature — 11-04-08 Renewal Date — 08-11-08 Date — STATE OF CALIFORNIA

*To accompany plans dated* 2-27-12

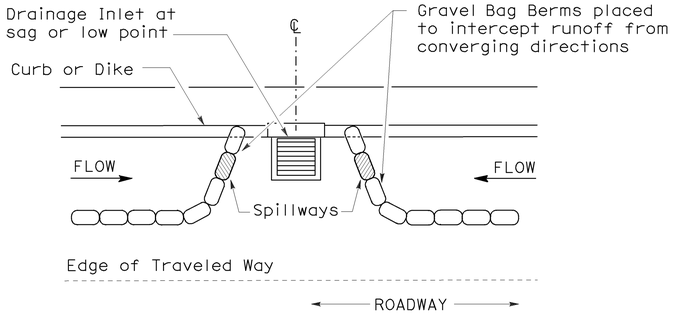


PLAN

## CONFIGURATION FOR SAG POINT INLET (GRAVEL BAG BERM)

## GRAVEL BAG BERM (TYPE 3A) SPACING TABLE

| SLOPE OF ROADWAY (PERCENT) | 1 to 3.9 | 4 to 5.9 | 6 to 7.9 | 8 to 10 | 10+ |
|---|---|---|---|---|---|
| INTERVAL BETWEEN BERM | 100′ | 75′ | 50′ | 25′ | 12′ |

For slope of less than 1%, install barriers only if erosion/sediment is prevalent

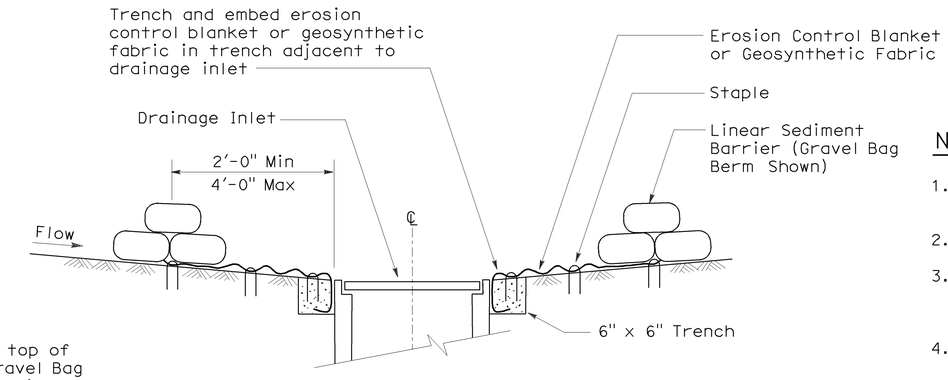


SECTION A-A

## NOTES:

1. Place safety cones adjacent to drainage inlet protection.
2. Dimensions may vary to fit field conditions.
3. Install a minimum of 3 gravel bag berms upstream of each drainage inlet to be protected.
4. Position erosion control blanket or geosynthetic fabric at edge of concrete apron and secure in trench.
5. Erosion control blanket or geosynthetic fabric is not required if the area adjacent to the drainage inlet is vegetated or paved.

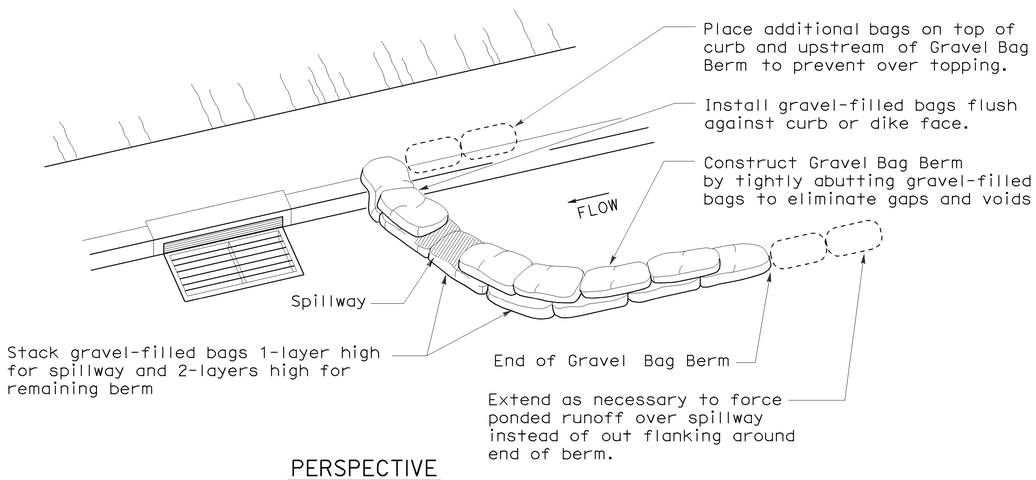


PERSPECTIVE

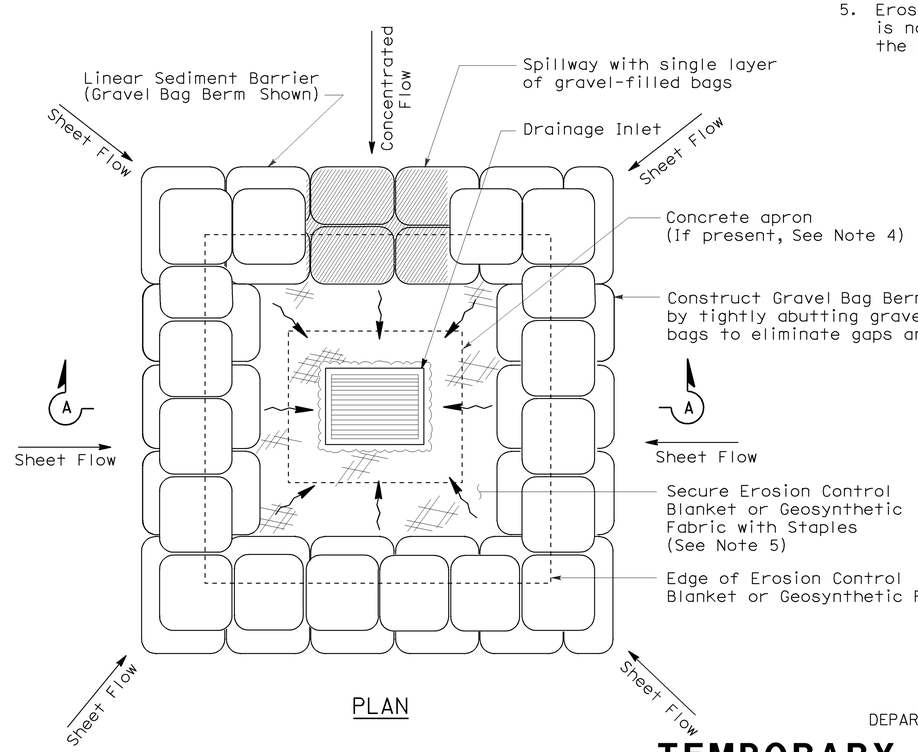


PLAN

## TEMPORARY DRAINAGE INLET PROTECTION (TYPE 3B)

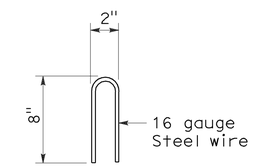


STAPLE DETAIL

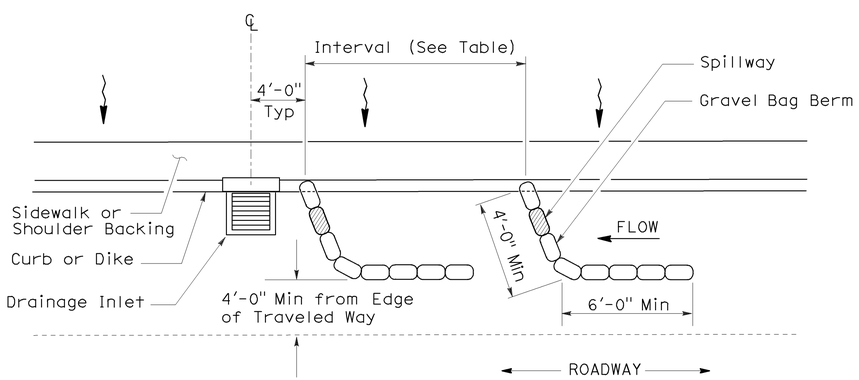


PLAN

## TEMPORARY DRAINAGE INLET PROTECTION (TYPE 3A) (GRAVEL BAG BERM)

STATE OF CALIFORNIA
DEPARTMENT OF TRANSPORTATION

# TEMPORARY WATER POLLUTION CONTROL DETAILS (TEMPORARY DRAINAGE INLET PROTECTION)

NO SCALE

NSP T62 DATED AUGUST 15, 2008 SUPPLEMENTS THE STANDARD PLANS BOOK DATED MAY 2006.

**NEW STANDARD PLAN NSP T62**

**2006 NEW STANDARD PLAN NSP T62**

7-11-08

| DIST | COUNTY | ROUTE | POST MILES TOTAL PROJECT | SHEET NO. | TOTAL SHEETS |
|---|---|---|---|---|---|
| 07 | LA | 5,57,110 405,605 | Var | 55 | 63 |

LICENSED LANDSCAPE ARCHITECT

August 15, 2008
PLANS APPROVAL DATE

*The State of California or its officers or agents shall not be responsible for the accuracy or completeness of electronic copies of this plan sheet.*

LICENSED LANDSCAPE ARCHITECT Robert B. Schott 3895 Signature 11-04-08 Renewal Date 08-11-08 Date STATE OF CALIFORNIA

*To accompany plans dated* 2-27-12

## FLEXIBLE SEDIMENT BARRIER SPACING TABLE

| SLOPE OF ROADWAY (PERCENT) | 0 to 0.9 | 1 to 1.9 | 2 to 2.9 | 3 to 4 | 5+ |
|---|---|---|---|---|---|
| INTERVAL BETWEEN BARRIERS | 50′ | 35′ | 30′ | 25′ | 20′ |
| ANGLE FROM FACE OF CURB | 70° | 70° | 70° | 45° | 45° |
| SUGGESTED BARRIER LENGTH | 6′ | 6′ | 6′ | 6′ | 6′ |

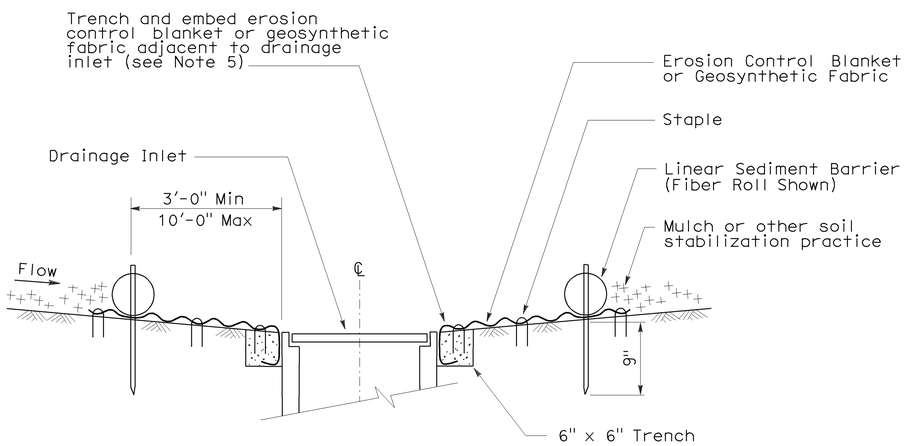


SECTION A-A

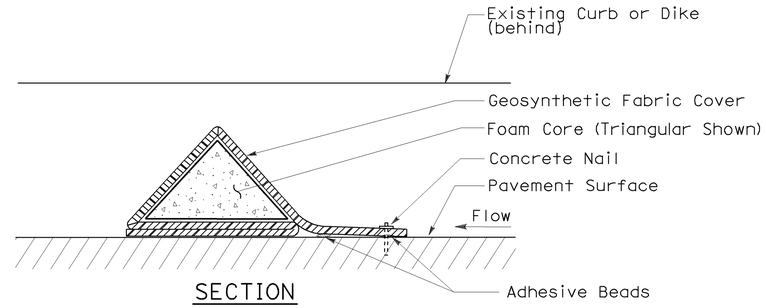


SECTION

## FLEXIBLE SEDIMENT BARRIER DETAIL (FOAM BARRIER SHOWN)

## NOTES:

1. See Standard Plan T51 for Temporary Silt Fence.
2. Dimensions may vary to fit field conditions.
3. Install a minimum of 3 flexible sediment barriers upstream of each drainage inlet to be protected.
4. Position erosion control blanket or geosynthetic fabric at edge of concrete apron and secure in trench.
5. Erosion control blanket or geosynthetic fabric is not required if the area adjacent to the drainage inlet is vegetated.

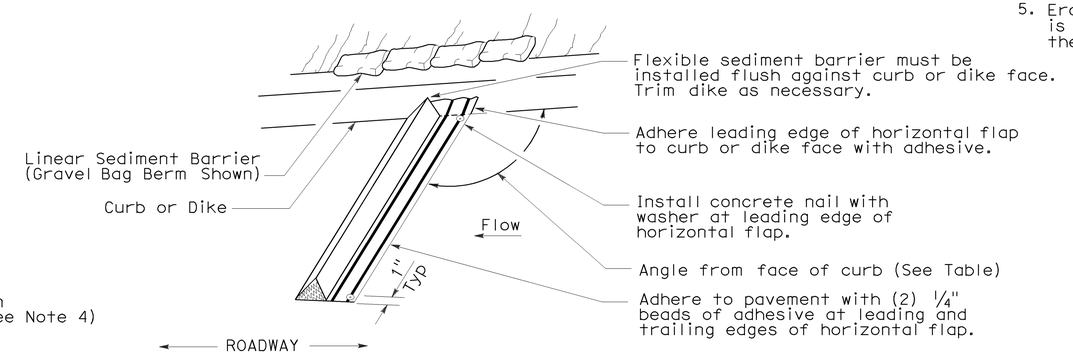


PERSPECTIVE

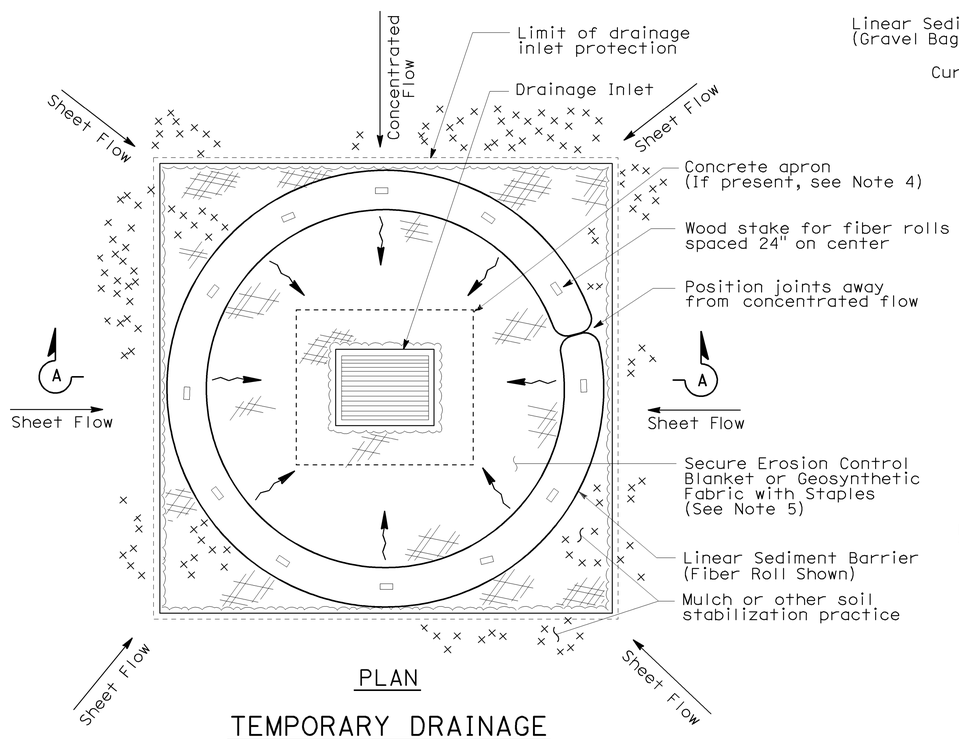


PLAN

## TEMPORARY DRAINAGE INLET PROTECTION (TYPE 4A)

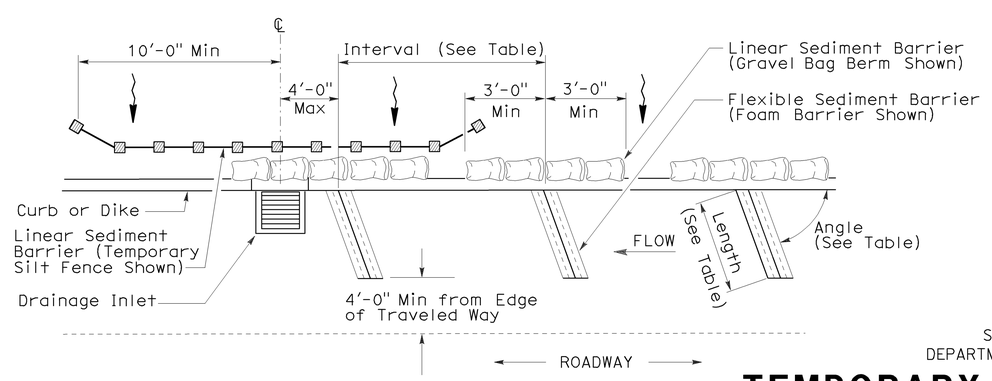


PLAN

## TEMPORARY DRAINAGE INLET PROTECTION (TYPE 4B) FLEXIBLE SEDIMENT BARRIER

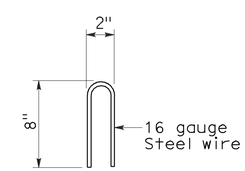


STAPLE DETAIL

STATE OF CALIFORNIA
DEPARTMENT OF TRANSPORTATION

# TEMPORARY WATER POLLUTION CONTROL DETAILS (TEMPORARY DRAINAGE INLET PROTECTION)

NO SCALE

NSP T63 DATED AUGUST 15, 2008 SUPPLEMENTS THE STANDARD PLANS BOOK DATED MAY 2006.

**NEW STANDARD PLAN NSP T63**

**2006 NEW STANDARD PLAN NSP T63**

7-11-08

| DIST | COUNTY | ROUTE | POST MILES TOTAL PROJECT | SHEET NO. | TOTAL SHEETS |
|---|---|---|---|---|---|
| 07 | LA | 5,57,110 405,605 | Var | 56 | 63 |

LICENSED LANDSCAPE ARCHITECT

August 15, 2008
PLANS APPROVAL DATE

LICENSED LANDSCAPE ARCHITECT Robert B. Schott 3635 Signature 11-04-08 Renewal Date 08-11-08 Date STATE OF CALIFORNIA

*The State of California or its officers or agents shall not be responsible for the accuracy or completeness of electronic copies of this plan sheet.*

*To accompany plans dated* 2-27-12

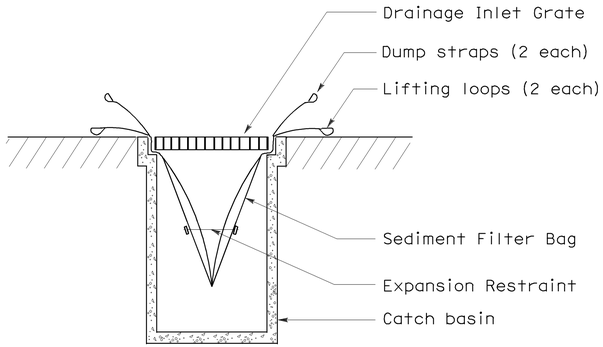


SECTION B-B

## SEDIMENT FILTER BAG DETAIL

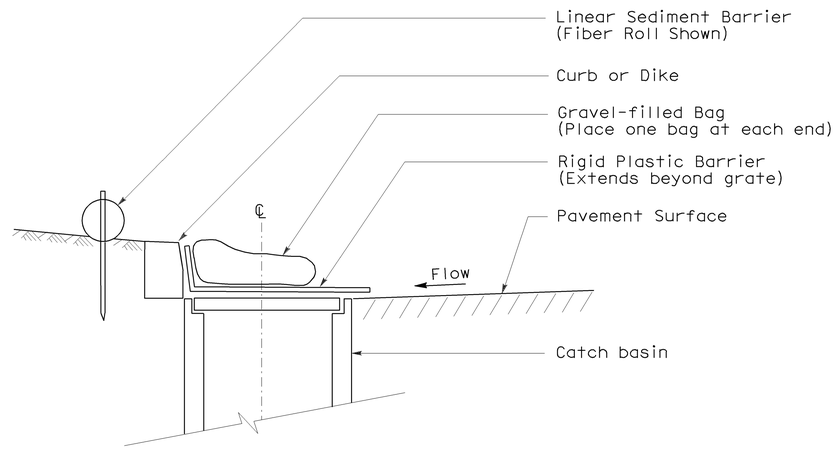


SECTION

## TEMPORARY DRAINAGE INLET PROTECTION (TYPE 6A) (CATCH BASIN WITH GRATE)

NOTES:

1. See Standard Plan T51 for Temporary Silt Fence.
2. Dimensions may vary to fit field conditions.

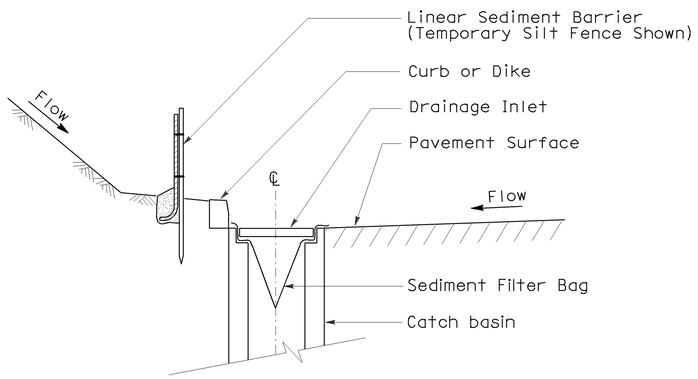


SECTION A-A

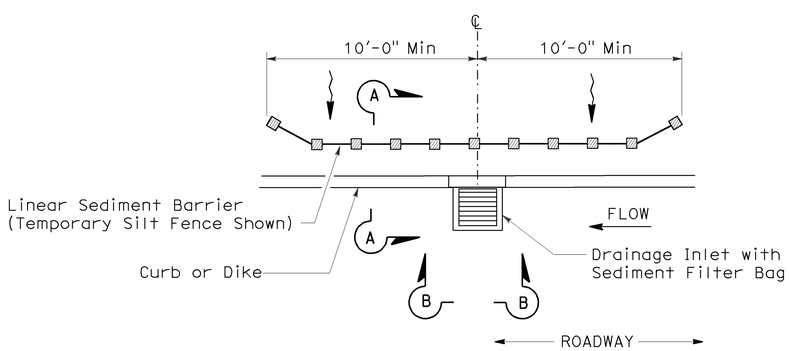


PLAN

## TEMPORARY DRAINAGE INLET PROTECTION (TYPE 5) (SEDIMENT FILTER BAG)

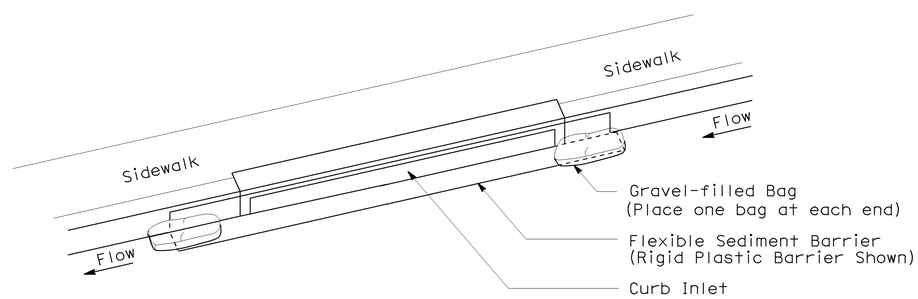


PERSPECTIVE

## TEMPORARY DRAINAGE INLET PROTECTION (TYPE 6B) (CURB INLET WITHOUT GRATE)

STATE OF CALIFORNIA
DEPARTMENT OF TRANSPORTATION

# TEMPORARY WATER POLLUTION CONTROL DETAILS (TEMPORARY DRAINAGE INLET PROTECTION)

NO SCALE

NSP T64 DATED AUGUST 15, 2008 SUPPLEMENTS THE STANDARD PLANS BOOK DATED MAY 2006.

**NEW STANDARD PLAN NSP T64**

**2006 NEW STANDARD PLAN NSP T64**

7-11-08

| DIST | COUNTY | ROUTE | POST MILES TOTAL PROJECT | SHEET NO. | TOTAL SHEETS |
|---|---|---|---|---|---|
| 07 | LA | 5,57,110 405,605 | Var | 57 | 63 |

REGISTERED ELECTRICAL ENGINEER

October 5, 2007
PLANS APPROVAL DATE

REGISTERED PROFESSIONAL ENGINEER Jeffery G. McRae No. E14512 Exp. 6-30-08 ELECTRICAL STATE OF CALIFORNIA

*The State of California or its officers or agents shall not be responsible for the accuracy or completeness of electronic copies of this plan sheet.*

*To accompany plans dated* 2-27-12

# ELECTROLIERS

| STANDARD TYPES |
|---|
| 15, 15D |
| 15 STRUCTURE |
| 21, 21D STRUCTURE |
| 30 |
| 31 |
| 32 |
| 35 |
| 36-20A |

High mast light pole

Double Arm lighting standard

Existing electrolier

Electrolier foundation (Future installation)

## NOTES:

1. Luminaires shall be 310 W HPS when installed on Type 21, 21D, 30, 31, 32, 35 and 36-20A Standards, unless otherwise specified. Luminaires shall be 200 W HPS when installed on other type standards or poles, unless otherwise specified.
2. Luminaires shall be the cutoff type, ANSI Type Ⅲ medium cutoff lighting distribution, unless otherwise specified.
3. Variations noted adjacent to symbol on project plans.

Electrolier (see project notes or project plans)

Luminaire on wood pole

# STANDARD NOTES:

- AB — Abandon. If applied to conduit, remove conductors.
- BC — Install pull box in existing conduit run.
- BP — Pedestrian barricade, type as indicated on plan.
- CB — Install conduit into existing pull box.
- CC — Connect new and existing conduit. Remove existing conductors and install conductors as indicated.
- CF — Conduit to remain for future use. Remove conductors. Install pull wire or rope.
- DH — Detector handhole.
- FA — Foundation to be abandoned.
- IS — Install sign on signal mast arm.
- NS — No slip base on standard.
- PEC — Photoelectric control.
- PEU — Photoelectric unit.
- RC — Equipment or material to be removed and become the property of the Contractor.
- RE — Remove electrolier, fuses and ballast. Tape ends of conductors.
- RL — Relocate equipment.
- RR — Remove and reuse equipment.
- RS — Remove and salvage equipment.
- SC — Splice new to existing conductors.
- SD — Service disconnect.
- SF — Standard to remain for future use. Remove luminaire, pole conductors, fuses and ballast.
- TSP — Telephone service point.

# ABBREVIATIONS AND EQUIPMENT DESIGNATIONS

| PROPOSED | EXISTING | |
|---|---|---|
| BBS | bbs | Battery backup system |
| BC | bc | Bolt circle |
| C | C | Conduit |
| CCTV | cctv | Closed circuit television |
| CKT | ckt | Circuit |
| CMS | cms | Changeable message sign |
| DLC | dlc | Loop detector lead-in cable |
| EMS | ems | Extinguishable message sign |
| EVC | evc | Emergency vehicle cable |
| EVD | evd | Emergency vehicle detector |
| FB | fb | Flashing beacon |
| FBCA | fbca | Flashing beacon control assembly |
| FBS | fbs | Flashing beacon with slip base |
| FO | fo | Fiber optic |
| G | G | Ground (Equipment Grounding Conductor) |
| GFCI | GFCI | Ground fault circuit interrupt |
| HAR | har | Highway advisory radio |
| HEX | hex | Hexagonal |
| HPS | hps | High pressure sodium |
| IISNS | iisns | Internally illuminated street name sign |
| ISL | isl | Induction sign lighting |
| LED | led | Light emitting diode |
| LMA | lma | Luminaire mast arm |
| LPS | lps | Low pressure sodium |
| LTG | ltg | Lighting |
| LUM | lum | Luminaire |
| MAT | mat | Mast arm mounting vehicle signal faces, top attachment |
| MAS | mas | Mast arm mounting vehicle signal faces, side attachment |
| MAS-4A | mas-4A | Mast arm mounting vehicle signal faces, side attachment - 4 signal section |
| MAS-4B | mas-4B | |
| MAS-4C | mas-4C | |
| MAS-5A | mas-5A | Mast arm mounting vehicle signal faces, side attachment - 5 signal section |
| MAS-5B | mas-5B | |
| MC | mc | Mercury contactor |
| M/M | m/m | Multiple to multiple transformer |
| MT | mt | Conduit with pull wire or rope only |
| MTG | mtg | Mounting |
| | mv | Mercury vapor lighting fixture |
| N | N | Neutral (Grounded Conductor) |
| NC | NC | Normally closed |
| NO | NO | Normally open |
| PB | pb | Pull box |
| PEC | pec | Photoelectric control (Type Ⅰ, Ⅱ, Ⅲ, Ⅳ or Ⅴ as shown) |
| PED | ped | Pedestrian |
| PEU | peu | Photoelectric unit |
| PPB | ppb | Pedestrian push button |
| RL | | Relocated equipment |
| RM | rm | Ramp metering |
| SB | sb | Slip base |
| SIC | sic | Signal interconnect cable |
| SIG | sig | Signal |
| SMA | sma | Signal mast arm |
| SNS | sns | Street name sign |
| SP | sp | Service point |
| TDC | tdc | Telephone demarcation cabinet |
| TMS | tms | Traffic monitoring station |
| TOS | tos | Traffic Operations System |
| VEH | veh | Vehicle |
| XFMR | xfmr | Transformer |
| COMM | comm | Communication |
| RWIS | rwis | Roadway weather information system |

# SOFFIT AND WALL MOUNTED LUMINAIRES

Pendant, 70 W HPS unless otherwise specified.

Flush, 70 W HPS unless otherwise specified.

Wall surface, 70 W HPS unless otherwise specified.

Existing soffit or wall luminaire to remain unmodified.

Existing soffit or wall luminaire to be modified as specified.

## NOTE:

Arrow indicates "street side" of luminaire.

STATE OF CALIFORNIA
DEPARTMENT OF TRANSPORTATION

# ELECTRICAL SYSTEMS (SYMBOLS AND ABBREVIATIONS)

NO SCALE

RSP ES-1A DATED OCTOBER 5, 2007 SUPERSEDES STANDARD PLAN ES-1A DATED MAY 1, 2006 - PAGE 400 OF THE STANDARD PLANS BOOK DATED MAY 2006.

**REVISED STANDARD PLAN RSP ES-1A**

**2006 REVISED STANDARD PLAN RSP ES-1A**

| DIST | COUNTY | ROUTE | POST MILES TOTAL PROJECT | SHEET NO. | TOTAL SHEETS |
|---|---|---|---|---|---|
| 07 | LA | 5,57,110 405,605 | Var | 58 | 63 |

REGISTERED ELECTRICAL ENGINEER

October 5, 2007
PLANS APPROVAL DATE

REGISTERED PROFESSIONAL ENGINEER Jeffery G. McRae No. E14512 Exp. 6-30-08 ELECTRICAL STATE OF CALIFORNIA

*The State of California or its officers or agents shall not be responsible for the accuracy or completeness of electronic copies of this plan sheet.*

*To accompany plans dated* 2-27-12

2006 REVISED STANDARD PLAN RSP ES-1B

## CONDUIT

| PROPOSED | EXISTING | |
|---|---|---|
| | | Lighting Conduit, unless otherwise indicated or noted |
| | | Traffic signal conduit |
| C | c | Communication conduit |
| T | t | Telephone conduit |
| F | f | Fire alarm conduit |
| FO | fo | Fiber optic conduit |
| | | Conduit termination (RSP ES-9A C) |
| R | r | Conduit riser in/on structure or service pole |

## SERVICE EQUIPMENT

| PROPOSED | EXISTING | |
|---|---|---|
| OH | oh | Overhead lines |
| U | U | Wood pole "U" indicates utility owned |
| | | Pole guy with anchor |
| | | Utility transformer - ground mounted |
| III | | Service equipment enclosure type |
| | | Service equipment enclosure door indicates front of enclosure |
| T | t | Telephone demarcation cabinet |

## POLE-MOUNTED SERVICE DESIGNATION

Type of installation

TYPE H SERVICE - 28'-10" ← Pole height above grade

## ILLUMINATED OVERHEAD SIGN

| PROPOSED | EXISTING | |
|---|---|---|
| | | Overhead sign - Single post |
| | | Overhead sign - Two post |
| | | Overhead sign - Mounted on structure |
| | | Overhead sign with electrolier |

## SIGNAL EQUIPMENT

| PROPOSED | EXISTING | |
|---|---|---|
| | | Pedestrian signal face |
| | | Pedestrian push button post |
| | | Pedestrian barricade |
| | | Vehicle signal face (with backplate, 3-Section: red, yellow and green) |
| | | Vehicle signal face with angle visors |
| PV | PV | Modifications of basic symbols: "L" indicates all non-arrow sections louvered "LG" indicates louvered green section only "PV" indicates 12" programmed visibility sections "8" indicates all 8" sections (only when specified) |
| | | Type 15TS and Vehicle signal face |
| | | Vehicle signal face with red, yellow and green left arrow sections |
| | | Vehicle signal face with red and yellow sections and up green arrow |
| | | Vehicle signal face (5 Section) with red, yellow and green sections and yellow and green right arrows |
| | | Type 1 Standard and attached vehicle signal faces |
| | | Standard with signal mast arm only and attached vehicle signal faces and internally illuminated street name sign |
| | | Type 33 Standard, Left-turn vehicle signal face and sign |
| | | Standard with luminaire and signal mast arms and attached vehicle signal faces |
| | | Cantilever flashing beacon Type 9 Frame, with a sign unless otherwise specified or indicated |
| | | Type 15-FBS Standard with two vehicle signal face sections with lens, backplate and visor with a sign |
| R | Y | Flashing beacon. One vehicle signal face section with lens, backplate and visor. "R" indicates red indication, "Y" indicates yellow indication |
| | | Controller assembly. Door indicates front of cabinet |

## SIGNAL EQUIPMENT Cont

| PROPOSED | EXISTING | |
|---|---|---|
| | | Guard post |
| | | Type 1 Standard with "Meter On" sign |
| | | Emergency Vehicle detector |

## NOTES:

1. All signal sections shall be 12" unless shown otherwise.
2. Signal heads shall be provided with backplates unless shown otherwise.
3. Signal indication shall be LED.

STATE OF CALIFORNIA
DEPARTMENT OF TRANSPORTATION

# ELECTRICAL SYSTEMS (SYMBOLS AND ABBREVIATIONS)

NO SCALE

RSP ES-1B DATED OCTOBER 5, 2007 SUPERCEDES STANDARD PLAN ES-1B DATED MAY 1, 2006 - PAGE 401 OF THE STANDARD PLANS BOOK DATED MAY 2006.

**REVISED STANDARD PLAN RSP ES-1B**

7-10-07

| DIST | COUNTY | ROUTE | POST MILES TOTAL PROJECT | SHEET NO. | TOTAL SHEETS |
|---|---|---|---|---|---|
| 07 | LA | 5,57,110 405,605 | Var | 59 | 63 |

REGISTERED ELECTRICAL ENGINEER

October 5, 2007
PLANS APPROVAL DATE

REGISTERED PROFESSIONAL ENGINEER Jeffery G. McRae No. E14512 Exp. 6-30-08 ELECTRICAL STATE OF CALIFORNIA

*The State of California or its officers or agents shall not be responsible for the accuracy or completeness of electronic copies of this plan sheet.*

*To accompany plans dated* 2-27-12

# EQUIPMENT IDENTIFICATION

## ILLUMINATED SIGN IDENTIFICATION NUMBER:

Sign No. 12345

10 ISL SCI 1.0

- Sign number - Place on post or structure
- Transformer rating (kVA)
- Lighting control type
- Number and type of fixtures

Do NOT place on standard or structure

## ELECTROLIER OR EQUIPMENT IDENTIFICATION NUMBER:

12345 - 15'-0"

- Mast arm length, if shown. Do not place on standard or structure.
- Equipment number - Place on standard or structure. Existing equipment numbers are shown in parenthesis

## CONDUIT AND CONDUCTOR IDENTIFICATION:

1½"C, 2#10, 15#14, 2 DLC

- Number and size of conductors and cables
- Size of conduit in inches

| | |
|---|---|
| Ø1, Ø2, Ø2P, etc. | Traffic phase identification for signal faces, detectors and phase diagrams |
| 1 2 3 | Project note numbers |
| A B C | Equipment description, installation or item numbers |
| 1 2 3 | Conduit run numbers |

## SIGNAL AND LIGHTING STANDARD (TYPICAL DESIGNATION):

19A - 3 - 100

- Wind velocity = 100 mph
- Case 3 arm loading
- Standard type
- Standard Plan sheet number
- Detail number or letter

## MISCELLANEOUS EQUIPMENT

| PROPOSED | EXISTING | |
|---|---|---|
| CMS | cms | Changeable message sign |
| | | Closed circuit television camera |
| | | Highway advisory radio pole and antenna |
| EMS | ems | Extinguishable message sign |
| M V | m v | Detection device<br>M = Microwave sensor<br>V = Video image sensor |

## WIRING DIAGRAM LEGEND

| | |
|---|---|
| P | Pole |
| CB | Circuit breaker |
| A | Ampere |
| V | Volt |
| M | Metered |
| UM | Unmetered |
| NB | Neutral bus |
| GB | Ground bus |
| G | Equipment grounding conductor |
| N | Grounded conductor (Neutral) |

- External conductor
- Conductor or bus
- Tie point
- Contactor coil
- Contactor, Contact NO
- Terminal blocks
- Contactor, Contact NC
- Enclosure bond
- Grounding electrode
- Circuit breaker
- Receptacle

## PULL BOXES

PROPOSED EXISTING

Pull box-No. 5 unless otherwise indicated or noted.

3 9A(21)

Pull box-Additional designations or descriptions

| | |
|---|---|
| 3 | = No. 3½ pull box |
| 5 | = No. 5 pull box |
| 6 | = No. 6 pull box |
| 7 | = No. 7 (Ceiling pull box) |
| 8 | = No. 8 (Pendant soffit pull box) |
| 9 | = No. 9 pull box |
| 9A | = No. 9A pull box |

(C) = Communications pull box
(E) = Pull box with extension
(S) = Sprinkler control pull box
(21) = Anchor bolts and conduit for future installation of Type 21 Standard
(T) = Traffic pull box

## VEHICLE DETECTORS

5 J 9 U

- U = Upper
- L = Lower
- Slot number in input file
- Input file (I or J)
- Phase

| PROPOSED | EXISTING | |
|---|---|---|
| | | Type A detector loop. Outline of sawcut shown. |
| | | Type B detector loop. Outline of sawcut shown. |
| | | Type C detector loop. Outline of sawcut shown. |
| | | Type D detector loop. Outline of sawcut shown. |
| | | Type E detector loop. Outline of sawcut shown. |
| | | Type Q detector loop. Outline of sawcut shown. |
| | | Magnetic detector |
| DH | dh | Detector handhole |
| | | Microwave or video detection zone |

STATE OF CALIFORNIA
DEPARTMENT OF TRANSPORTATION

# ELECTRICAL SYSTEMS (SYMBOLS AND ABBREVIATIONS)

NO SCALE

RSP ES-1C DATED OCTOBER 5, 2007 SUPERCEDES STANDARD PLAN ES-1C DATED MAY 1, 2006 - PAGE 402 OF THE STANDARD PLANS BOOK DATED MAY 2006.

**REVISED STANDARD PLAN RSP ES-1C**

**2006 REVISED STANDARD PLAN RSP ES-1C**

| DIST | COUNTY | ROUTE | POST MILES TOTAL PROJECT | SHEET NO. | TOTAL SHEETS |
|---|---|---|---|---|---|
| 07 | LA | 5,57,110 405,605 | Var | 60 | 63 |

REGISTERED ELECTRICAL ENGINEER

June 6, 2008
PLANS APPROVAL DATE

REGISTERED PROFESSIONAL ENGINEER Jeffery G. McRae No. E14512 Exp. 6-30-10 ELECTRICAL STATE OF CALIFORNIA

*The State of California or its officers or agents shall not be responsible for the accuracy or completeness of electronic copies of this plan sheet.*

*To accompany plans dated* 2-27-12

## VISORS

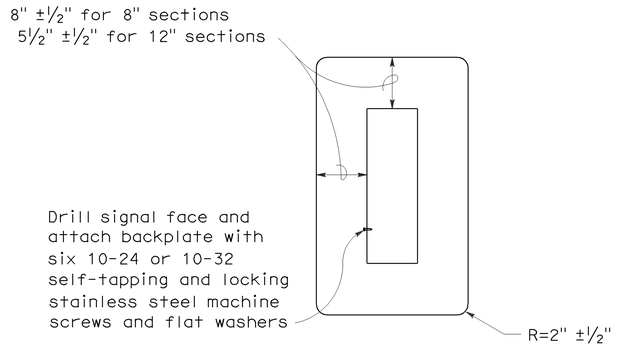


## 8" AND 12" SECTIONS

## BACKPLATE

1/16" minimum thickness
3001-14 aluminum, or plastic when specified

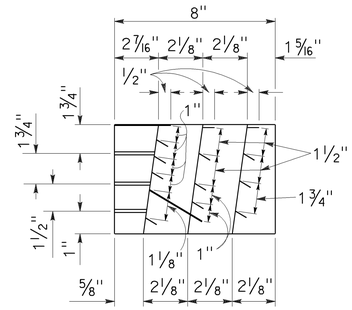


## SECTION A-A

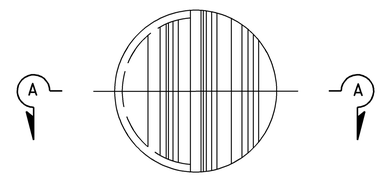


## FRONT VIEW

## DIRECTIONAL LOUVER

Directional louvers shall be oriented as directed by the Engineer and secured in place with one plated brass machine screw and nut.

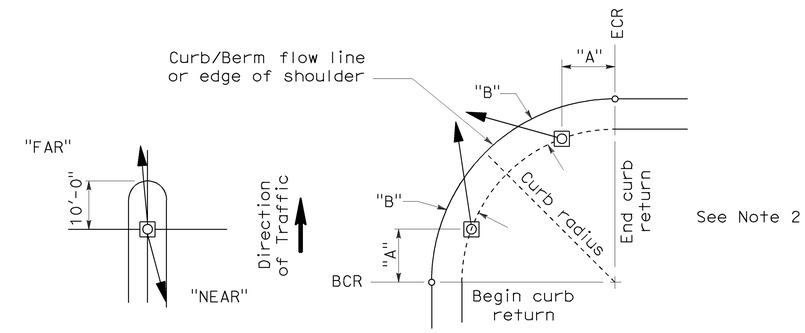


## NOTES:

1. Typical signal pole placement unless dimensioned on plans.
2. For "A" and "B" dimensions, see Pole Schedule, or as directed by the Engineer.

## SIGNAL STANDARD PLACEMENT DIMENSIONS AND EQUIPMENT LOCATIONS

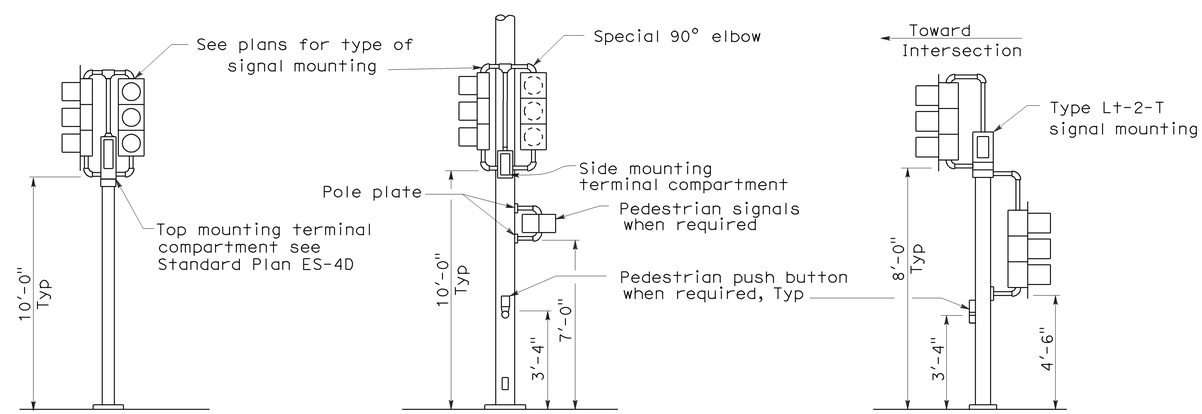


## TOP MOUNTED SIGNALS (TV)

Type 1-A, 1-B, 1-C and 1-D standard as indicated on the plans

## SIDE MOUNTED SIGNALS (SV AND SP)

Normally used on standards with luminaire or signal mast arm

## LEFT TURN LANE SIGNAL

Type 1-A, 1-B, 1-C and 1-D standard as indicated on plans

## TYPICAL SIGNAL INSTALLATIONS

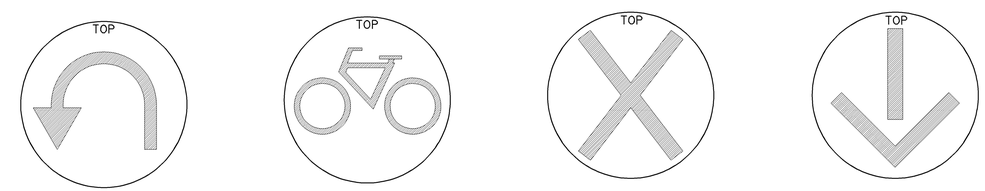


U-TURN SIGNAL FACE | BICYCLE SIGNAL FACE | LANE CONTROL SIGNAL FACE | LANE CONTROL SIGNAL FACE

STATE OF CALIFORNIA
DEPARTMENT OF TRANSPORTATION

# ELECTRICAL SYSTEMS (SIGNAL HEADS AND MOUNTINGS)

NO SCALE

RSP ES-4C DATED JUNE 6, 2008 SUPERSEDES STANDARD PLAN ES-4C DATED MAY 1, 2006 - PAGE 420 OF THE STANDARD PLANS BOOK DATED MAY 2006.

**REVISED STANDARD PLAN RSP ES-4C**

**2006 REVISED STANDARD PLAN RSP ES-4C**

5-19-08

| DIST | COUNTY | ROUTE | POST MILES TOTAL PROJECT | SHEET NO. | TOTAL SHEETS |
|---|---|---|---|---|---|
| 07 | LA | 5,57,110 405,605 | Var | 61 | 63 |

REGISTERED CIVIL ENGINEER

October 5, 2007
PLANS APPROVAL DATE

REGISTERED PROFESSIONAL ENGINEER
Stanley P. Johnson
No. C57793
Exp. 3-31-08
CIVIL
STATE OF CALIFORNIA

*The State of California or its officers or agents shall not be responsible for the accuracy or completeness of electronic copies of this plan sheet.*

*To accompany plans dated* 2-27-12

**2006 REVISED STANDARD PLAN RSP ES-6A**

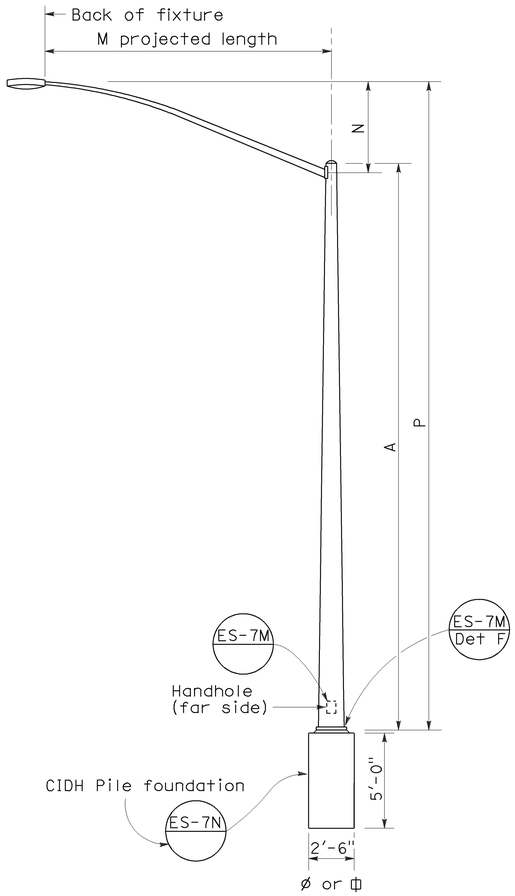


ELEVATION
## TYPE 15 AND TYPE 21

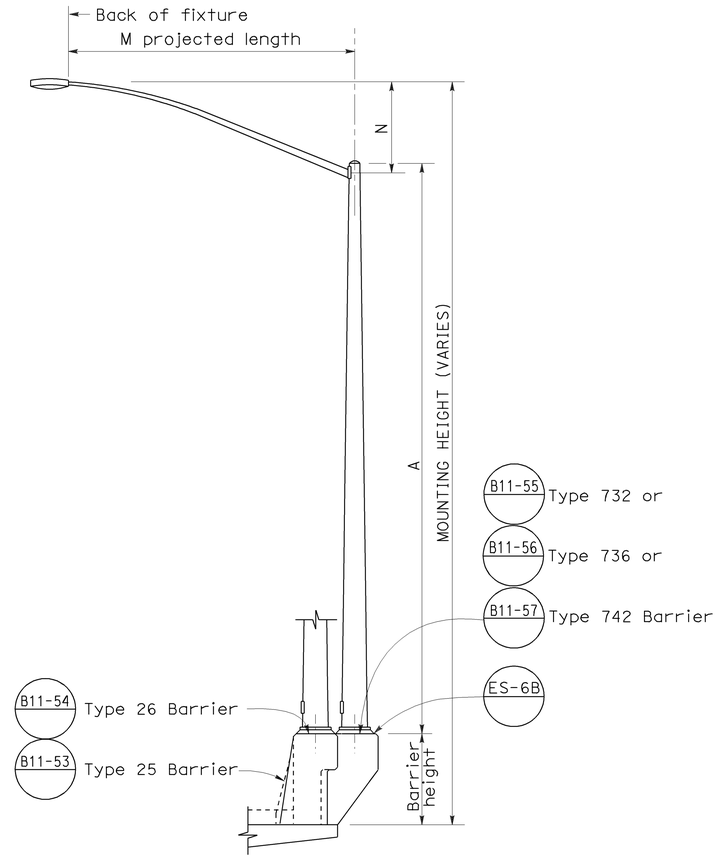


ELEVATION
## TYPE 15 AND TYPE 21 BARRIER RAIL MOUNTED

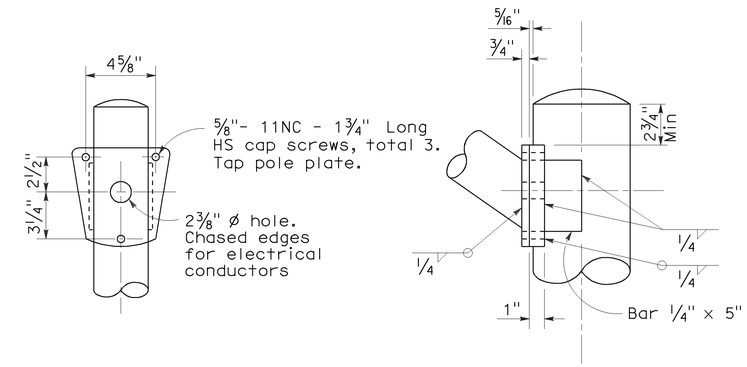


## DETAIL R
## LUMINAIRE ARM CONNECTION

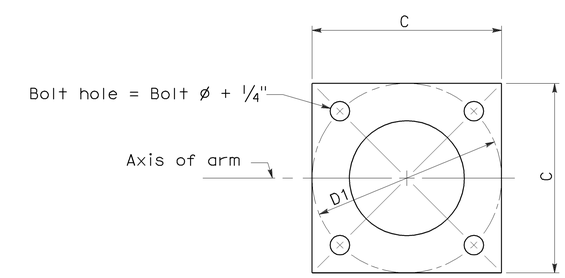


## BASE PLATE

| POLE TYPE | POLE DATA | | | | BASE PLATE DATA | | | | LUMINAIRE ARM |
|---|---|---|---|---|---|---|---|---|---|
| | A Height | Min OD Base | Min OD Top | Wall Thickness | C | D1 Bolt Circle | Thick-ness | Anchor Bolts Size | |
| 15 | 30′ | 8" | 3 7/8" | 0.1196" | 1′-0" | 1′-0" | 1" | 1" ø x 3′-0" x 4"* | 6′ - 15′ [12′] |
| 21 | 35′ | 8 5/8" | 3 7/8" | 0.1196" | 1′-0" | 1′-0" | 1" | 1 1/4"ø x 3′-0" x 4"* | 6′ - 15′ [12′] |

* For barrier rail bolts, see Standard Plan ES-6B.

| LUMINAIRE ARM DATA | | | | | |
|---|---|---|---|---|---|
| M Projected Length | N Rise | Min OD At Pole | Nominal Thickness | P Type 15 | P Type 21 |
| 6′-0" | 2′-0"± | 3 1/4" | 0.1196" | 31′-6"± | 36′-6"± |
| 8′-0" | 2′-6"± | 3 1/2" | 0.1196" | 32′-0"± | 37′-0"± |
| 10′-0" | 3′-3"± | 3 7/8" | 0.1196" | 32′-9"± | 37′-9"± |
| 12′-0" | 4′-3"± | 3 7/8" | 0.1196" | 33′-9"± | 38′-9"± |
| 15′-0" | 4′-9"± | 4 1/4" | 0.1196" | 34′-3"± | 39′-3"± |

## NOTES:

1. ☐ Indicates arm length to be used unless otherwise noted on the plans.
2. For Type 15-SB, use Type 15 standard with Type 30 slip base plate details, see Standard Plan ES-6F.
3. For additional notes, see Standard Plan ES-7M and ES-7N.

STATE OF CALIFORNIA
DEPARTMENT OF TRANSPORTATION

# ELECTRICAL SYSTEMS (LIGHTING STANDARD TYPES 15 AND 21)

NO SCALE

RSP ES-6A DATED OCTOBER 5, 2007 SUPERCEDES STANDARD PLAN ES-6A
DATED MAY 1, 2006 - PAGE 427 OF THE STANDARD PLANS BOOK DATED MAY 2006.

**REVISED STANDARD PLAN RSP ES-6A**

| DIST | COUNTY | ROUTE | POST MILES TOTAL PROJECT | SHEET NO. | TOTAL SHEETS |
|---|---|---|---|---|---|
| 07 | LA | 5,57,110 405,605 | Var | 62 | 63 |

REGISTERED CIVIL ENGINEER

October 5, 2007
PLANS APPROVAL DATE

REGISTERED PROFESSIONAL ENGINEER Stanley P. Johnson No. C57793 Exp. 3-31-08 CIVIL STATE OF CALIFORNIA

*The State of California or its officers or agents shall not be responsible for the accuracy or completeness of electronic copies of this plan sheet.*

*To accompany plans dated* 2-27-12

**2006 REVISED STANDARD PLAN RSP ES-7B**

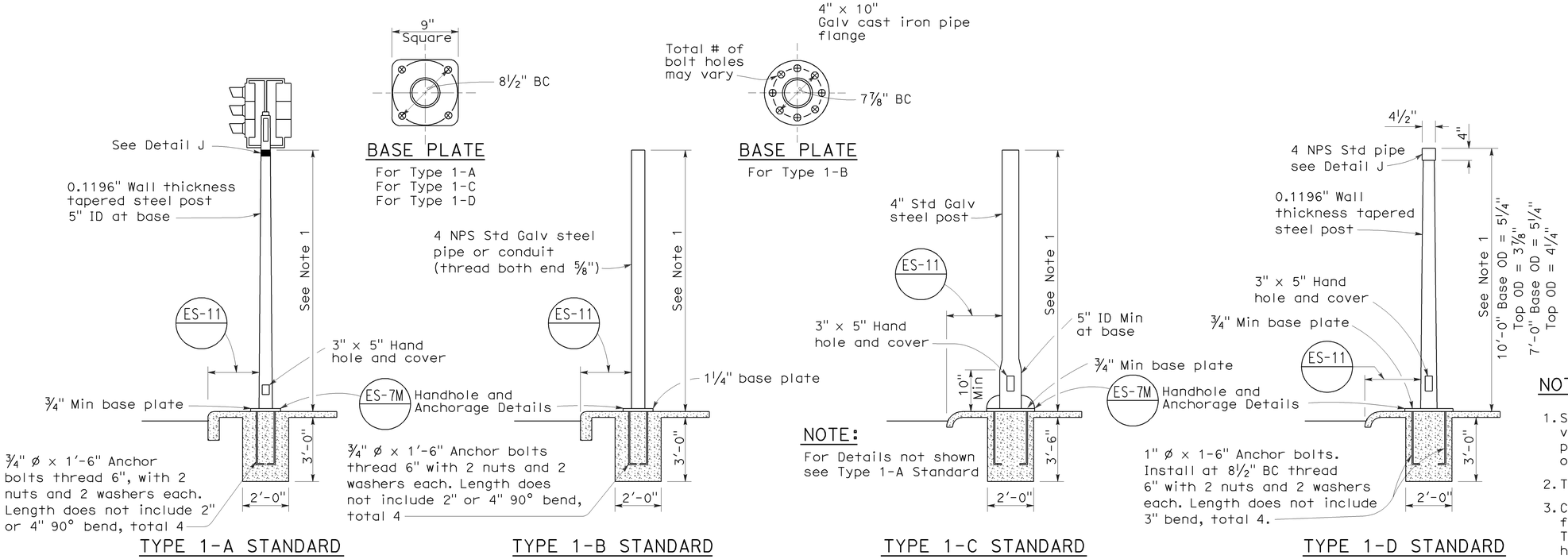


## TYPE 1 SIGNAL STANDARDS

## NOTES:

1. Standards shall be 10'-0" ± 2" for vehicle signals and 7'-0" ± 2" for pedestrian signals unless otherwise noted on plans.
2. Top of standards shall be 4½" OD.
3. Conduits shall extend 2" maximum above finished surface of foundation and for Types 1-A, 1-C and 1-D shall be sloped toward handhole.
4. Anchor bolts shall be bonded to conduit or grounding conductor.
5. Conduit between standard and adjacent pull box shall be 2" minimum.
6. Paint numbers on roadway side facing traffic when electrolier or post is left of direction of traffic.

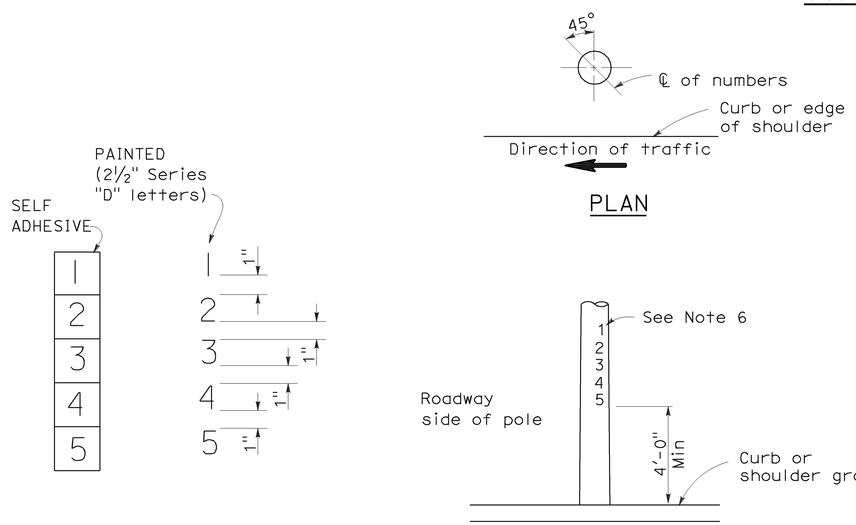


## LOCATION OF EQUIPMENT NUMBERS ON STANDARDS AND POSTS

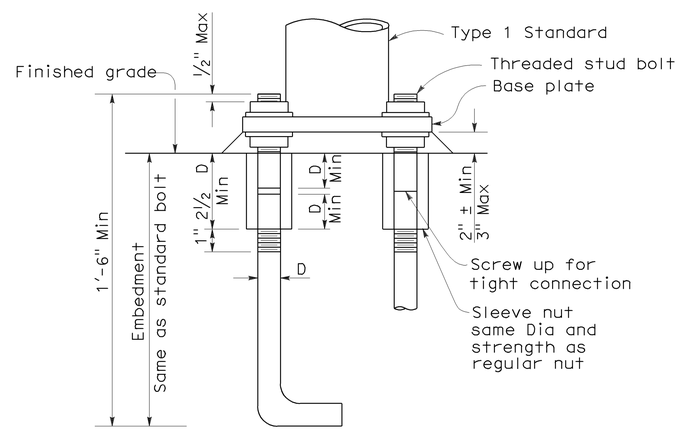


## ANCHOR BOLTS WITH SLEEVE NUTS

Sleeve nuts to be used only when shown or specified on Project Plans

D = Diameter of anchor bolt

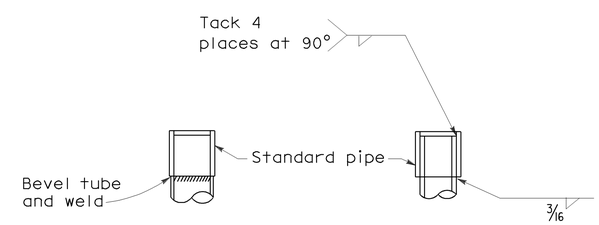


## DETAIL J

Tube may be inserted into pipe or butted as required

STATE OF CALIFORNIA
DEPARTMENT OF TRANSPORTATION

# ELECTRICAL SYSTEMS (SIGNAL AND LIGHTING STANDARD TYPE 1 STANDARD AND EQUIPMENT NUMBERING)

NO SCALE

RSP ES-7B DATED OCTOBER 5, 2007 SUPERCEDES STANDARD PLAN ES-7B DATED MAY 1, 2006 - PAGE 438 OF THE STANDARD PLANS BOOK DATED MAY 2006.

**REVISED STANDARD PLAN RSP ES-7B**

| DIST | COUNTY | ROUTE | POST MILES TOTAL PROJECT | SHEET NO. | TOTAL SHEETS |
|---|---|---|---|---|---|
| 07 | LA | 5,57,110 405,605 | Var | 63 | 63 |

REGISTERED ELECTRICAL ENGINEER

January 20, 2012
PLANS APPROVAL DATE

REGISTERED PROFESSIONAL ENGINEER Jeffery G. McRae No. E14512 Exp. 6-30-12 ELECTRICAL STATE OF CALIFORNIA

*The State of California or its officers or agents shall not be responsible for the accuracy or completeness of electronic copies of this plan sheet.*

*To accompany plans dated* 2-27-12

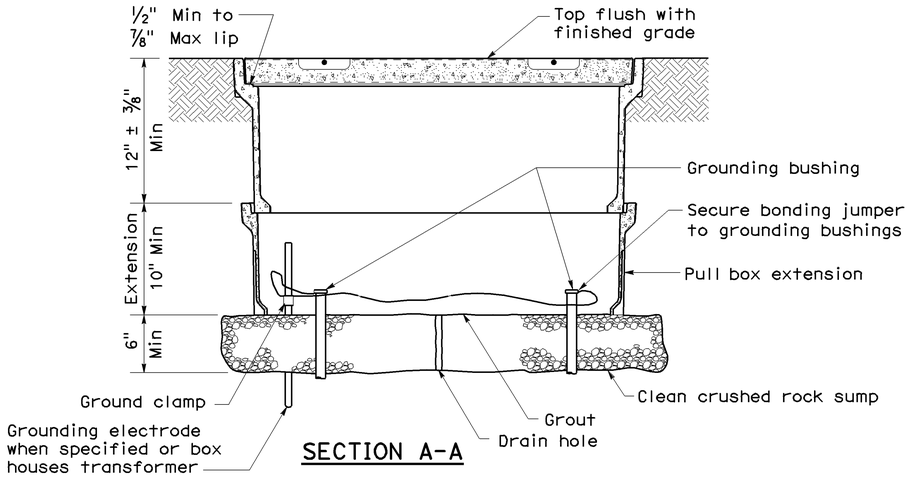


SECTION A-A

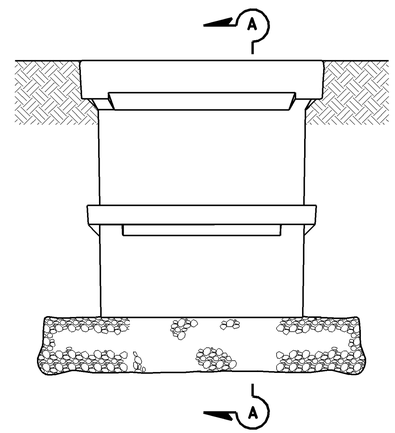


SIDE VIEW

## INSTALLATION DETAILS

### DETAIL A

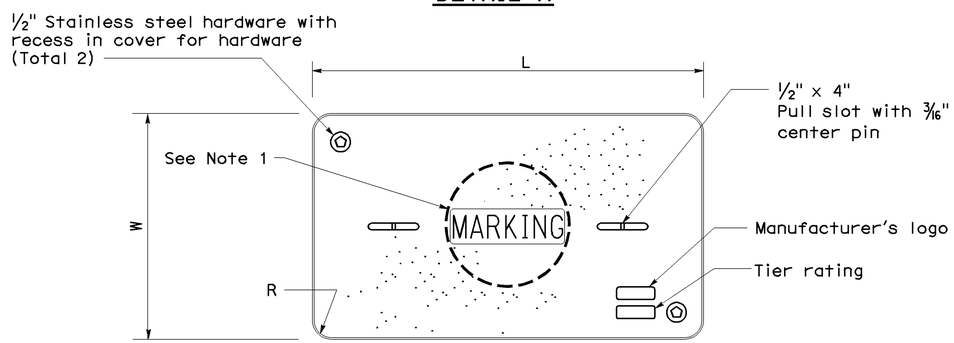


COVER TOP VIEW

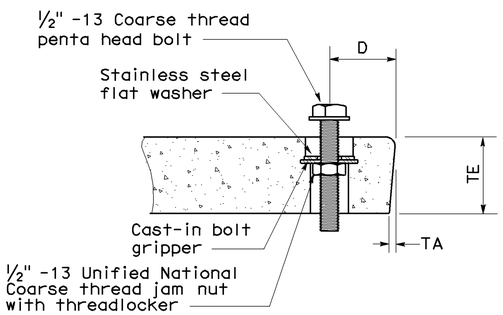


TYPICAL COVER CAPTIVE BOLT
(Or similar)

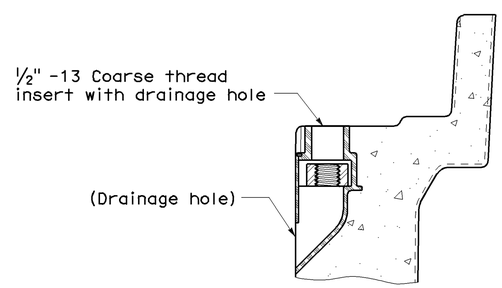


TYPICAL THREADED INSERT
(Or similar)

**DIMENSION TABLE**

| PULL BOX | PULL BOX | | | COVER | | | | | | |
|---|---|---|---|---|---|---|---|---|---|---|
| | Minimum Depth Box | Minimum Depth Extension | Maximum Weight | L | W | R | TE | TA | D | Maximum Weight |
| No. 3½ | 12" | N/A | 40 lb | 1' - 3⅜" | 10⅛" | 1⅜" | 2" | ⅛" | 1¾" | 30 lb |
| No. 5 | 12" | 10" | 55 lb | 1' - 11¼" | 1' - 1¾" | 1⅜" | 2" | ⅛" | 1¾" | 60 lb |
| No. 6 | 12" | 10" | 70 lb | 2' - 6½" | 1' - 5½" | 1⅜" | 2" | ⅛" | 2" | 85 lb |

## NOTES ON PULL BOXES:

1. Pull box covers must be marked as follows: "SERVICE" Service circuits between service point and service disconnect; "SPRINKLER-CONTROL" sprinkler control circuits, 50 V or less; "CALTRANS" on all pull boxes, except pull boxes marked "SPRINKLER-CONTROL"; and "TELEPHONE" Telephone service;

   A) No. 3½ pull box.
      1) "SIGNAL" - Traffic signal circuits with or without street or sign lighting circuits.
      2) "ST LIGHTING" - Street or sign lighting circuits where voltage is under 600 V.

   B) No. 5, 6, 9 or 9A pull box.
      1) "TRAFFIC SIGNAL" - Traffic signal circuits with or without street or sign lighting circuits.
      2) "STREET LIGHTING" - Street or sign lighting circuits where voltage is under 600 V.
      3) "STREET LIGHTING-HIGH VOLTAGE" - Street or sign lighting circuits where voltage is above 600 V.
      4) "IRRIGATION" - Circuits to irrigation controller 120 V or more.
      5) "RAMP METER" - Ramp meter circuits.
      6) "COUNT STATION" - Count or speed monitor circuits.
      7) "COMMUNICATIONS" - Communication circuits.
      8) "TOS COMMUNICATIONS" - TOS communication line.
      9) "TOS POWER" -TOS power.
      10) "TDC POWER" - Telephone demarcation cabinet power.
      11) "CCTV" - Closed circuit television circuits.
      12) "TMS" - Traffic monitoring station circuits.
      13) "CMS" - Changeable message sign circuits.
      14) "HAR" - Highway advisory radio circuits.

2. The nominal dimensions of the opening in which the cover sets must be the same as the cover dimensions (L and W) plus ⅛" or greater.

3. Covers and boxes must be interchangeable with California Standard. When interchanged with a standard, the top surfaces must be flush within ⅛". Top outside radius of covers and pull boxes must have a ⅛" radius.

4. Pull box extension may be another pull box as long as the bottom edge of the pull box can fit into the cover opening.

STATE OF CALIFORNIA
DEPARTMENT OF TRANSPORTATION

# ELECTRICAL SYSTEMS (PULL BOX)

NO SCALE

NSP ES-8A DATED JANUARY 20, 2012 SUPPLEMENTS THE STANDARD PLANS BOOK DATED MAY 2006.

**NEW STANDARD PLAN NSP ES-8A**

2006 NEW STANDARD PLAN NSP ES-8A

9-28-11