Dist	COUNTY	ROUTE	POST MILES TOTAL PROJECT	SHEET No.	TOTAL SHEETS
07	LA	105,110	R7.4,13.8	1	28

INDEX OF PLANS

SHEET No.	DESCRIPTION
1	TITLE AND LOCATION MAP
2	TYPICAL CROSS SECTIONS
3	LAYOUT
4-6	CONSTRUCTION DETAILS
7-9	DRAINAGE PLANS, PROFILES, AND QUANTITIES
10	CONSTRUCTION AREA SIGNS
11-18	TRAFFIC HANDLING DETAILS
19-20	PAVEMENT DELINEATION DETAILS AND QUANTITIES
21	SUMMARY OF QUANTITIES
22-28	REVISED AND NEW STANDARD PLANS

THE STANDARD PLANS LIST APPLICABLE TO THIS CONTRACT IS INCLUDED IN THE NOTICE TO BIDDERS AND SPECIAL PROVISIONS BOOK.

STATE OF CALIFORNIA

DEPARTMENT OF TRANSPORTATION

PROJECT PLANS FOR CONSTRUCTION ON

STATE HIGHWAY

IN LOS ANGELES COUNTY
IN LOS ANGELES
AT ROUTE 105/110 SEPARATION

TO BE SUPPLEMENTED BY STANDARD PLANS DATED MAY 2006

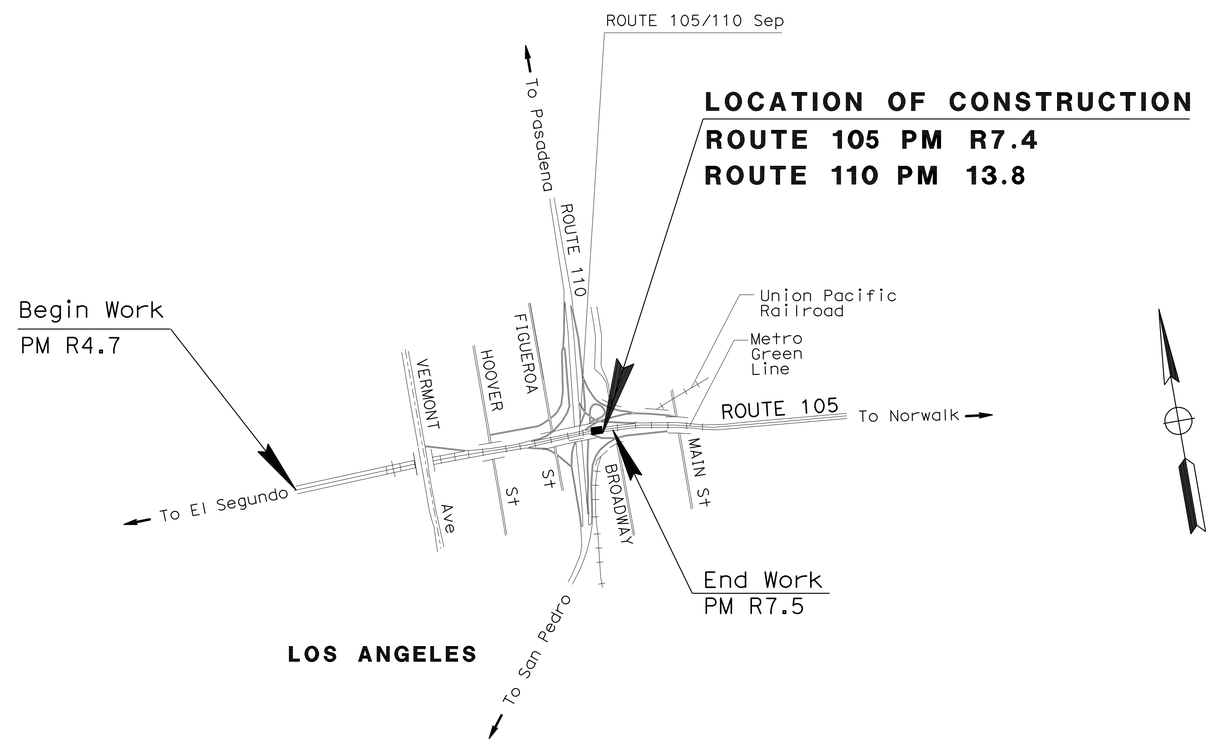

NO SCALE

THE CONTRACTOR SHALL POSSESS THE CLASS (OR CLASSES) OF LICENSE AS SPECIFIED IN THE "NOTICE TO BIDDERS."

Hamidreza Saadatnejadi 2-9-11
PROJECT ENGINEER DATE
REGISTERED CIVIL ENGINEER

February 22, 2011
PLANS APPROVAL DATE

REGISTERED PROFESSIONAL ENGINEER
HAMID SAADATNEJADI
No. C50440
Exp. 6/30/11
CIVIL
STATE OF CALIFORNIA

THE STATE OF CALIFORNIA OR ITS OFFICERS OR AGENTS SHALL NOT BE RESPONSIBLE FOR THE ACCURACY OR COMPLETENESS OF SCANNED COPIES OF THIS PLAN SHEET.

CONTRACT No.	07-4T2204
PROJECT ID	0700001864

PROJECT MANAGER: ERIC WANG
DESIGN ENGINEER: HECTOR OBESO

LAST REVISION 00-00-00
DATE PLOTTED => 03-MAR-2011
TIME PLOTTED => 14:04

Dist	COUNTY	ROUTE	POST MILES TOTAL PROJECT	SHEET No.	TOTAL SHEETS
07	LA	105,110	R7.4,13.8	2	28

REGISTERED CIVIL ENGINEER 2-9-11 DATE

2-22-11
PLANS APPROVAL DATE

REGISTERED PROFESSIONAL ENGINEER HAMID SAADATNEJADI No. C50440 Exp. 6/30/11 CIVIL STATE OF CALIFORNIA

THE STATE OF CALIFORNIA OR ITS OFFICERS OR AGENTS SHALL NOT BE RESPONSIBLE FOR THE ACCURACY OR COMPLETENESS OF SCANNED COPIES OF THIS PLAN SHEET.

NOTES:

1. DIMENSIONS OF THE PAVEMENT STRUCTURES (STRUCTURAL SECTIONS) ARE SUBJECT TO TOLERANCES SPECIFIED IN THE STANDARD SPECIFICATIONS.
2. SUPERELEVATIONS AS SHOWN OR AS DIRECTED BY THE ENGINEER.
3. CONTRACTOR SHALL VERIFY LOCATIONS, DIMENSIONS, AND ELEVATIONS OF EXISTING STORM DRAIN SYSTEM BEFORE COMMENCEMENT OF WORK.
4. LOCATION OF EMBANKMENT VOID IS APPROXIMATE. EXACT LOCATION WILL BE DETERMINED BY THE ENGINEER.
5. EXISTING UTILITY FACILITIES HAVE NOT BEEN PLOTTED ON THESE PLANS.
6. FOR ACCURATE RIGHT OF WAY DATA AND ACCESS, CONTACT RIGHT OF WAY ENGINEERING AT THE DISTRICT OFFICE.

TYPICAL STRUCTURAL SECTIONS

1
- 0.85′ REPLACE CONCRETE PAVEMENT (RSC)
- BOND BREAKER
- 0.30′ CTPBRS
- BOND BREAKER
- 0.40′ LCBRS
- BOND BREAKER
- 1.50′ ABCS

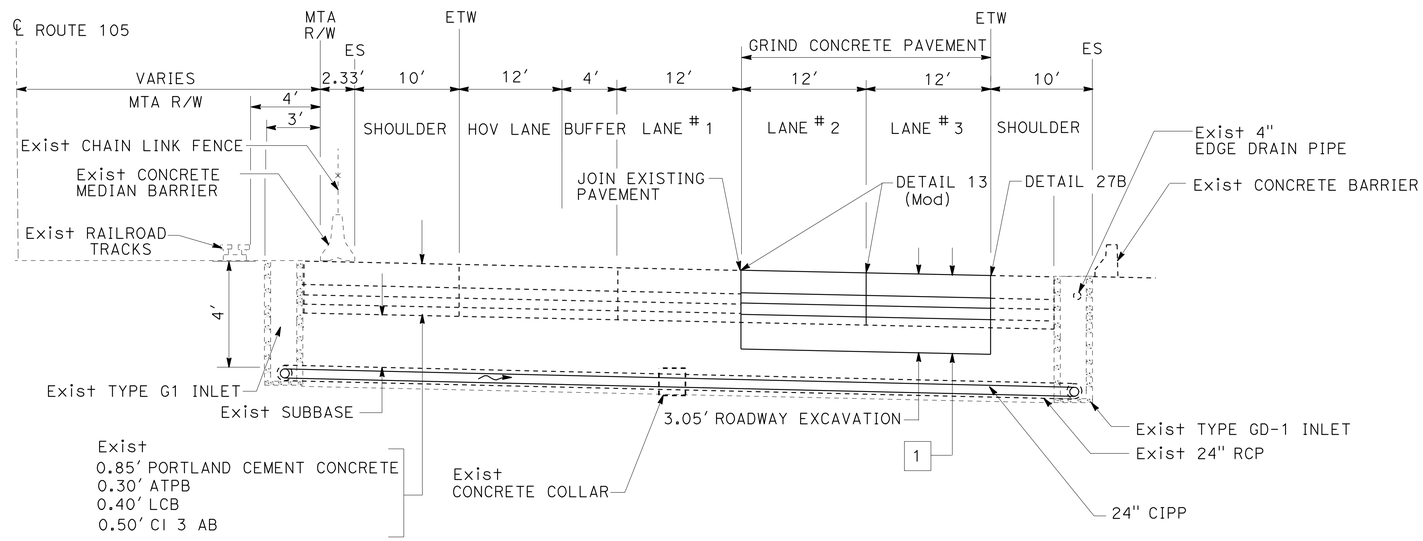

TYPICAL MAINLINE CROSS SECTION

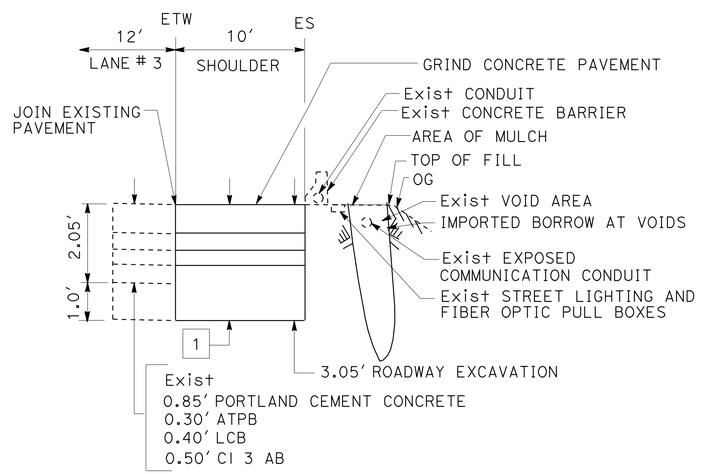

TYPICAL SHOULDER CROSS SECTION

TYPICAL CROSS SECTIONS

NO SCALE

X-1

REVISED BY	DATE REVISED
AVO BOYNERIAN	HAMID SAADATNEJADI
CALCULATED-DESIGNED BY	CHECKED BY
FUNCTIONAL SUPERVISOR	HECTOR OBESO

STATE OF CALIFORNIA - DEPARTMENT OF TRANSPORTATION
Caltrans MAINTENANCE ENGINEERING

LAST REVISION 00-00-00 | DATE PLOTTED => 03-MAR-2011 | TIME PLOTTED => 14:04

Dist	COUNTY	ROUTE	POST MILES TOTAL PROJECT	SHEET No.	TOTAL SHEETS
07	LA	105,110	R7.4,13.8	3	28

Hamidreza Saadatnejadi 2-9-11
REGISTERED CIVIL ENGINEER DATE

2-22-11
PLANS APPROVAL DATE

REGISTERED PROFESSIONAL ENGINEER HAMID SAADATNEJADI No. C50440 Exp. 6/30/11 CIVIL STATE OF CALIFORNIA

THE STATE OF CALIFORNIA OR ITS OFFICERS OR AGENTS SHALL NOT BE RESPONSIBLE FOR THE ACCURACY OR COMPLETENESS OF SCANNED COPIES OF THIS PLAN SHEET.

NOTES:

1. FOR SECTIONS A-A AND B-B DETAILS, SEE PLAN SHEET C-3.
2. FOR ACCURATE RIGHT OF WAY DATA AND ACCESS, CONTACT RIGHT OF WAY ENGINEERING AT THE DISTRICT OFFICE.
3. EXISTING UTILITY FACILITIES HAVE NOT BEEN PLOTTED ON THESE PLANS.
4. EXISTING IRRIGATION SYSTEMS NOT SHOWN FOR CLARITY.

LEGEND:

- REMOVE EXISTING CONCRETE PAVEMENT AND PLACE RSC PAVEMENT
- IMPORTED BORROW (SLOPE EROSION REPAIR AREA)
- DIRECTION OF TRAVEL
- DIRECTION OF WATER FLOW

ABBREVIATIONS:

CIPP:	CURED-IN-PLACE PIPELINER
RSC:	RAPID STRENGTH CONCRETE
CTPBRS:	CEMENT TREATED PERMEABLE BASE RAPID SETTING
LCBRS:	LEAN CONCRETE BASE RAPID SETTING
ABCS:	AGGREGATE BASE CEMENT SLURRY

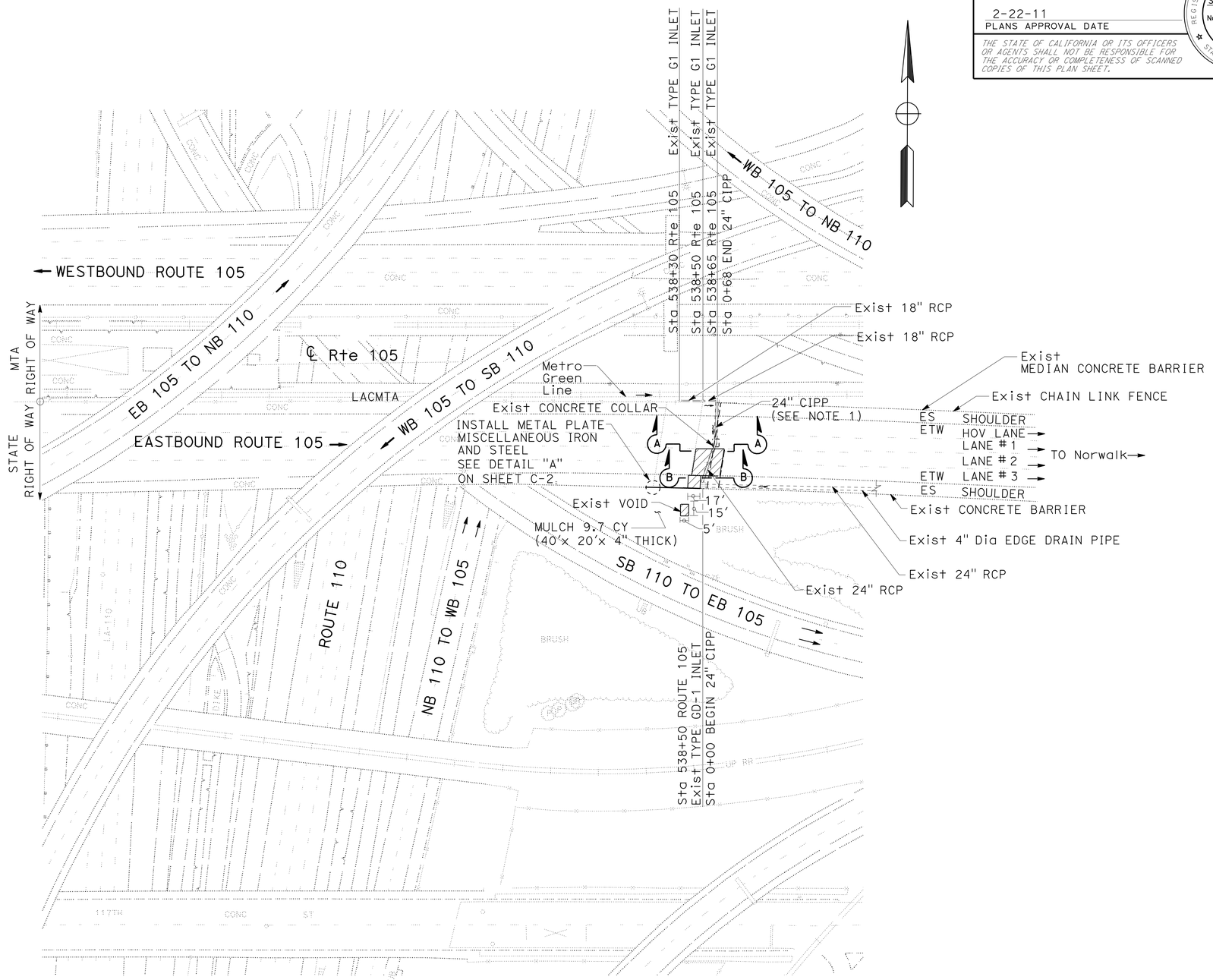

LAYOUT

SCALE: 1"=50'

L-1

STATE OF CALIFORNIA - DEPARTMENT OF TRANSPORTATION
Caltrans MAINTENANCE ENGINEERING

FUNCTIONAL SUPERVISOR: HECTOR OBESO
CALCULATED-DESIGNED BY: AVO BOYNERIAN
CHECKED BY: HAMID SAADATNEJADI
REVISED BY
DATE REVISED

LAST REVISION 00-00-00
DATE PLOTTED => 03-MAR-2011
TIME PLOTTED => 14:05

Dist	COUNTY	ROUTE	POST MILES TOTAL PROJECT	SHEET No.	TOTAL SHEETS
07	LA	105,110	R7.4,13.8	4	28

REGISTERED CIVIL ENGINEER 2-9-11 DATE

2-22-11
PLANS APPROVAL DATE

REGISTERED PROFESSIONAL ENGINEER HAMID SAADATNEJADI No. C50440 Exp. 6/30/11 CIVIL STATE OF CALIFORNIA

THE STATE OF CALIFORNIA OR ITS OFFICERS OR AGENTS SHALL NOT BE RESPONSIBLE FOR THE ACCURACY OR COMPLETENESS OF SCANNED COPIES OF THIS PLAN SHEET.

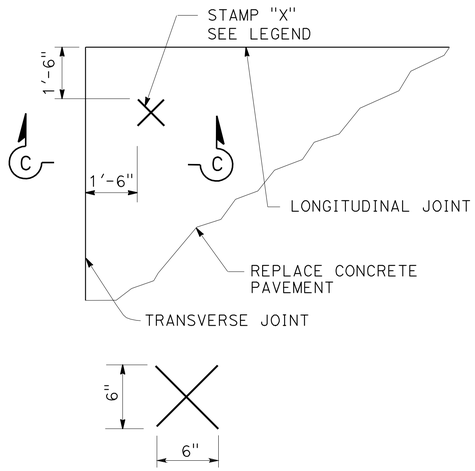

COMPANY NAME STAMP DETAIL

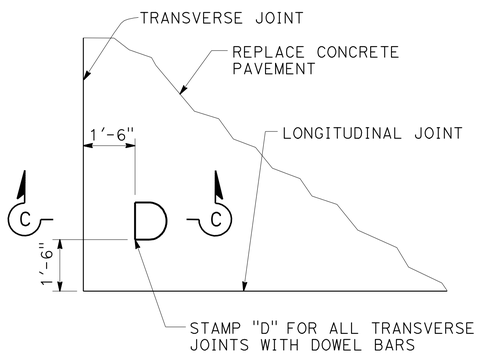

DOWEL STAMP DETAIL

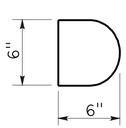

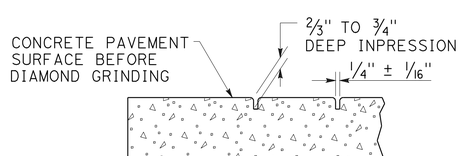

SECTION C-C

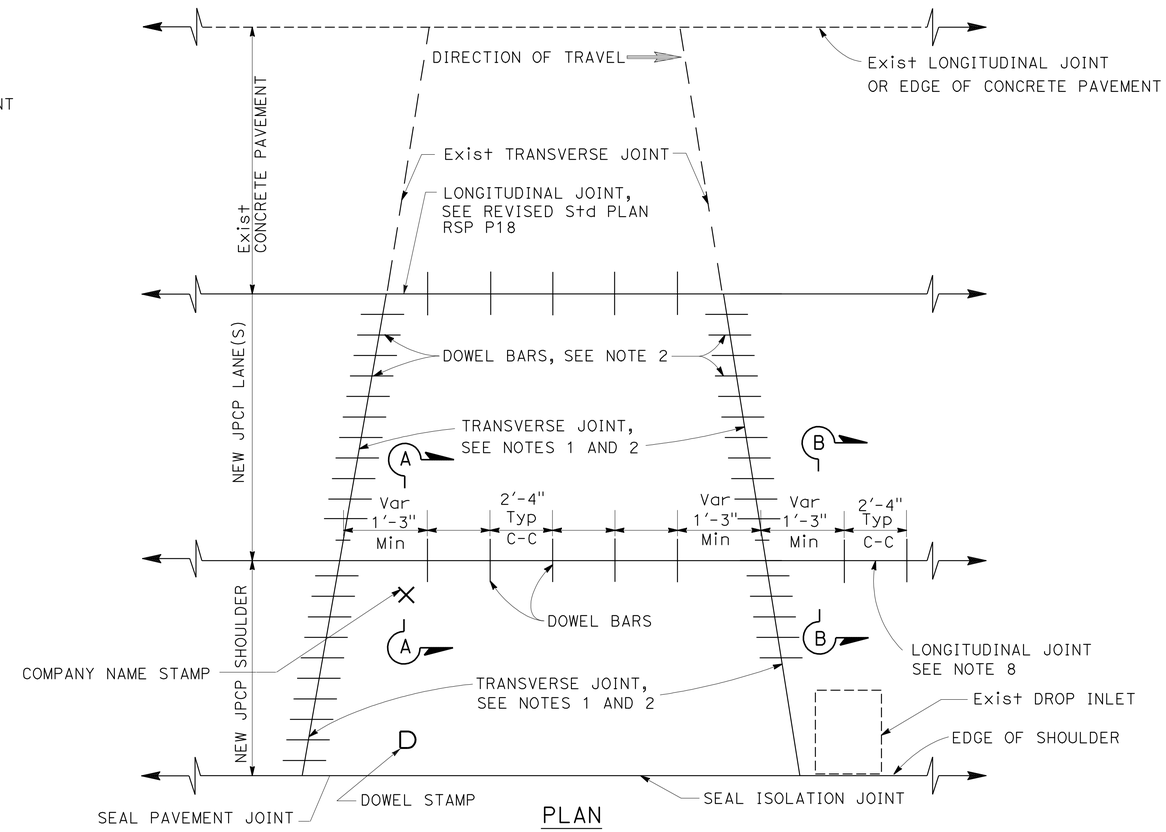

PLAN

LANE/SHOULDER RECONSTRUCTION

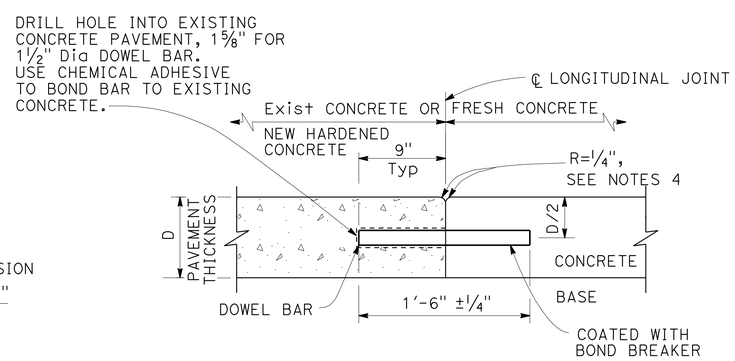

CONSTRUCTION JOINT WITH DOWEL BARS

(SEE REVISED Std PLAN RSP P18)

SECTION B-B

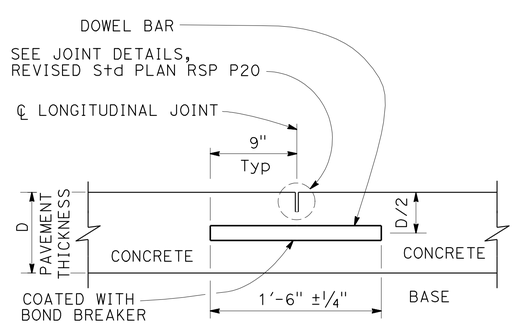

CONTRACTION JOINT WITH DOWEL BARS

(SEE REVISED Std PLAN RSP P18)

SECTION A-A

LEGEND:

X: STAMP COMPANY NAME, DATE SLAB PLACED AND THE CONTRACT NUMBER ON THE REPLACED SLAB.

NOTES:

1. TRANSVERSE JOINT TO MATCH SPACING AND SKEW OF EXISTING JOINT.
2. FOR JOINT AND DOWEL BAR DETAILS NOT SHOWN, SEE REVISED STANDARD PLAN RSP P10.
3. USE 1 1/2" Dia SMOOTH DOWEL BARS WITH A PAVEMENT THICKNESS, D, EQUAL TO OR GREATER THAN 0.70 FEET.
4. CONSTRUCT CONTRACTION JOINTS AS SHOWN IN SECTIONS A-A WHEN MORE THAN ONE LANE WIDTHS ARE PLACED AT ONE TIME. IF CONSTRUCTING ONE LANE AT A TIME, USE CONSTRUCTION JOINT, AS SHOWN IN SECTION B-B.
5. IF FRESH CONCRETE PAVEMENT IS PLACED ADJACENT TO EXISTING CONCRETE PAVEMENT, THE TOP CORNER OF THE EXISTING CONCRETE OR NEW HARDENED CONCRETE DO NOT NEED TO BE ROUNDED TO THE 1/4" RADIUS AS SHOWN.
6. FOR ADDITIONAL JOINT DETAILS, SEE REVISED STANDARD PLAN RSP P18.

CONSTRUCTION DETAILS

NO SCALE

C-1

STATE OF CALIFORNIA - DEPARTMENT OF TRANSPORTATION
Caltrans MAINTENANCE ENGINEERING

FUNCTIONAL SUPERVISOR: HECTOR OBESO
CALCULATED-DESIGNED BY: AVO BOYNERIAN
CHECKED BY: HAMID SAADATNEJADI
REVISED BY
DATE REVISED

LAST REVISION 00-00-00
DATE PLOTTED => 03-MAR-2011
TIME PLOTTED => 14:05

Dist	COUNTY	ROUTE	POST MILES TOTAL PROJECT	SHEET No.	TOTAL SHEETS
07	LA	105,110	R7.4,13.8	5	28

Hamidreza Saadatnejadi 2-9-11
REGISTERED CIVIL ENGINEER DATE

2-22-11
PLANS APPROVAL DATE

REGISTERED PROFESSIONAL ENGINEER HAMID SAADATNEJADI No. C50440 Exp. 6/30/11 CIVIL STATE OF CALIFORNIA

THE STATE OF CALIFORNIA OR ITS OFFICERS OR AGENTS SHALL NOT BE RESPONSIBLE FOR THE ACCURACY OR COMPLETENESS OF SCANNED COPIES OF THIS PLAN SHEET.

NOTES:

1. ALTERNATE TYPES OF ANCHOR STUDS MAY BE PERMITTED SUBJECT TO THE APPROVAL BY THE ENGINEER.
2. METAL PARTS SHALL BE GALVANIZED AFTER FABRICATION.
3. SHEET NEOPRENE SHALL BE FABRICATED IN ONE CONTINUOUS PIECE OR JOINTS SHALL BE VULCANIZED.
4. NEOPRENE SHALL BE FABRICATED TO BEND AROUND CORNERS; 1" HOLES IN NEOPRENE SHEETS SHALL BE DRILLED OR PUNCHED SO THE NEOPRENE IS NOT DISTORTED DURING INSTALLATION.

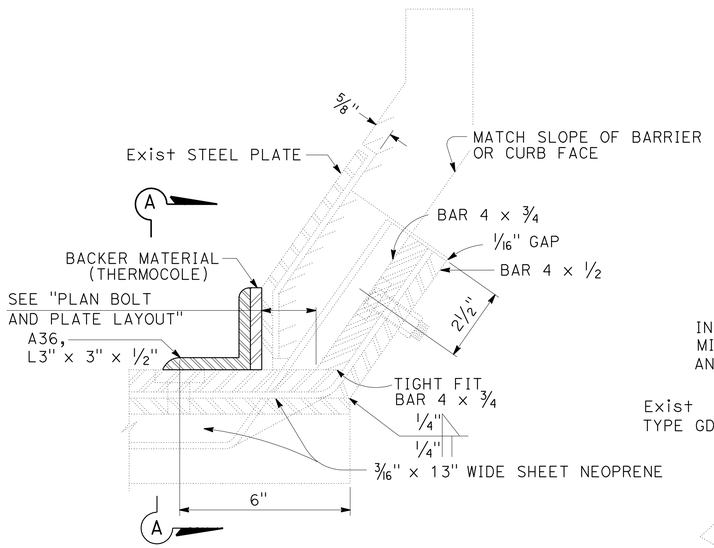

LOW SIDE BARRIER DETAIL

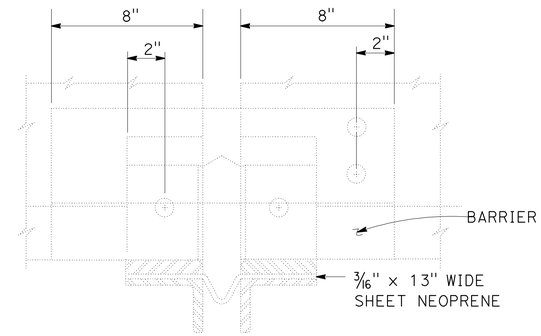

VIEW A-A

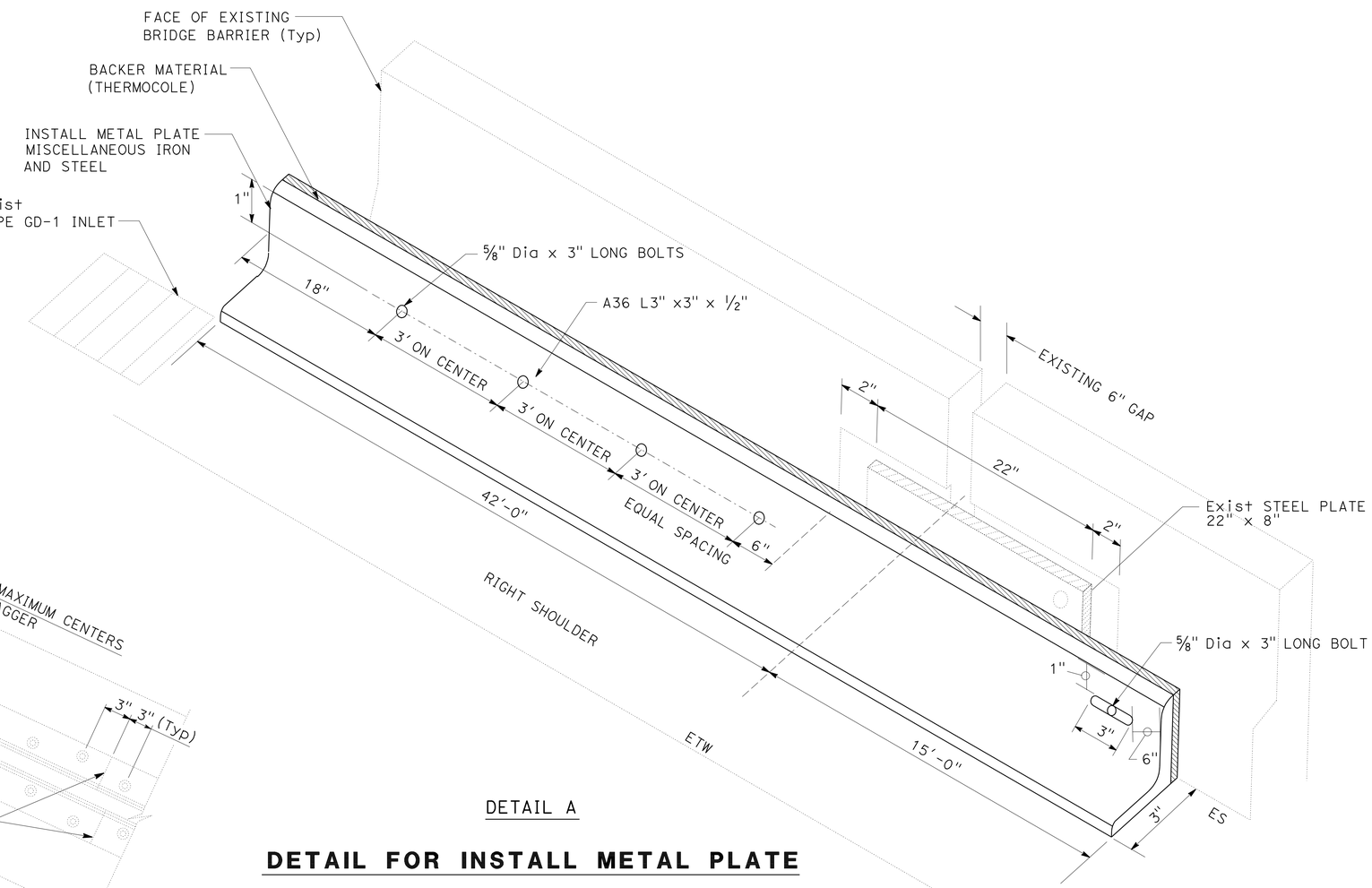

DETAIL A

DETAIL FOR INSTALL METAL PLATE

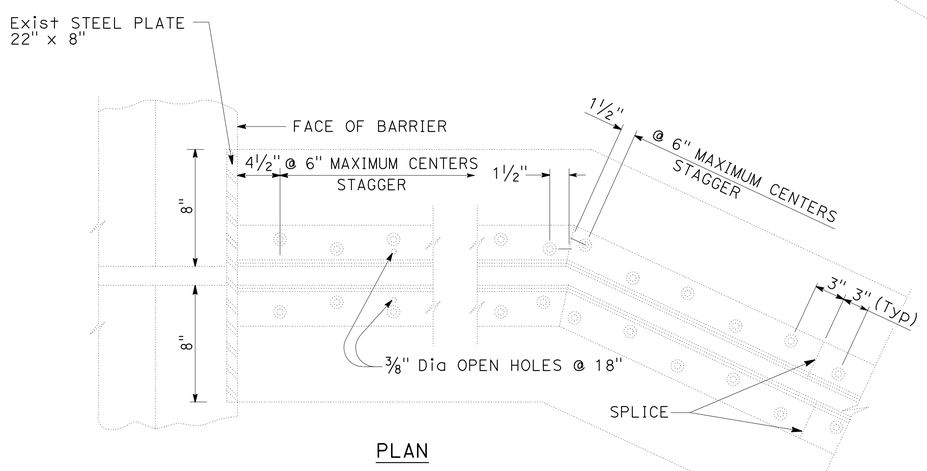

PLAN

EXISTING BOLT AND PLATE LAYOUT

CONSTRUCTION DETAILS

NO SCALE

C-2

STATE OF CALIFORNIA - DEPARTMENT OF TRANSPORTATION
Caltrans MAINTENANCE ENGINEERING

FUNCTIONAL SUPERVISOR: HECTOR OBESO
CALCULATED-DESIGNED BY: AVO BOYNERIAN
CHECKED BY: HAMID SAADATNEJADI
REVISED BY
DATE REVISED

LAST REVISION 00-00-00
DATE PLOTTED => 03-MAR-2011
TIME PLOTTED => 14:05

Dist	COUNTY	ROUTE	POST MILES TOTAL PROJECT	SHEET No.	TOTAL SHEETS
07	LA	105,110	R7.4,13.8	6	28

Hamidreza Saadatnejadi 2-9-11
REGISTERED CIVIL ENGINEER DATE

2-22-11
PLANS APPROVAL DATE

REGISTERED PROFESSIONAL ENGINEER
HAMID SAADATNEJADI
No. C50440
Exp. 6/30/11
CIVIL
STATE OF CALIFORNIA

THE STATE OF CALIFORNIA OR ITS OFFICERS OR AGENTS SHALL NOT BE RESPONSIBLE FOR THE ACCURACY OR COMPLETENESS OF SCANNED COPIES OF THIS PLAN SHEET.

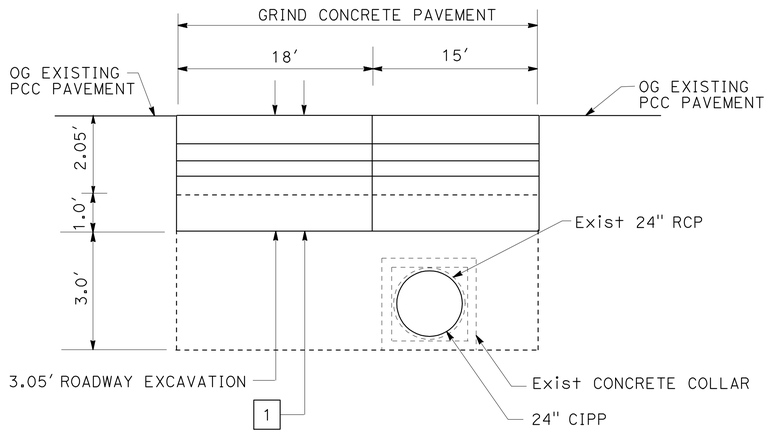

SECTION A-A

MAINLINE LONGITUDINAL SECTION

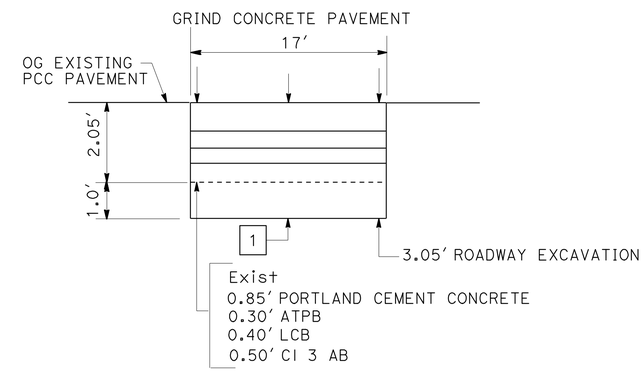

SECTION B-B

SHOULDER LONGITUDINAL SECTION

CONSTRUCTION DETAILS

NO SCALE

C-3

REVISED BY | DATE REVISED
AVO BOYNERIAN | HAMID SAADATNEJADI
CALCULATED-DESIGNED BY | CHECKED BY
FUNCTIONAL SUPERVISOR | HECTOR OBESO
STATE OF CALIFORNIA - DEPARTMENT OF TRANSPORTATION
Caltrans MAINTENANCE ENGINEERING

LAST REVISION 00-00-00 | DATE PLOTTED => 03-MAR-2011 | TIME PLOTTED => 14:05

Dist	COUNTY	ROUTE	POST MILES TOTAL PROJECT	SHEET No.	TOTAL SHEETS
07	LA	105,110	R7.4,13.8	7	28

REGISTERED CIVIL ENGINEER 2-9-11 DATE

2-22-11
PLANS APPROVAL DATE

REGISTERED PROFESSIONAL ENGINEER HAMID SAADATNEJADI No. C50440 Exp. 6/30/11 CIVIL STATE OF CALIFORNIA

THE STATE OF CALIFORNIA OR ITS OFFICERS OR AGENTS SHALL NOT BE RESPONSIBLE FOR THE ACCURACY OR COMPLETENESS OF SCANNED COPIES OF THIS PLAN SHEET.

NOTES:

1. THE CONTRACTOR SHALL VERIFY LOCATIONS AND ELEVATIONS OF EXISTING DRAINAGE SYSTEMS BEFORE COMMENCEMENT OF WORK.
2. EXISTING UTILITY FACILITIES HAVE NOT BEEN PLOTTED ON THESE PLANS.
3. FOR ACCURATE RIGHT OF WAY DATA AND ACCESS, CONTACT RIGHT OF WAY ENGINEERING AT THE DISTRICT OFFICE.

LEGEND:

(x) DRAINAGE SYSTEM NUMBER

(x) DRAINAGE UNIT

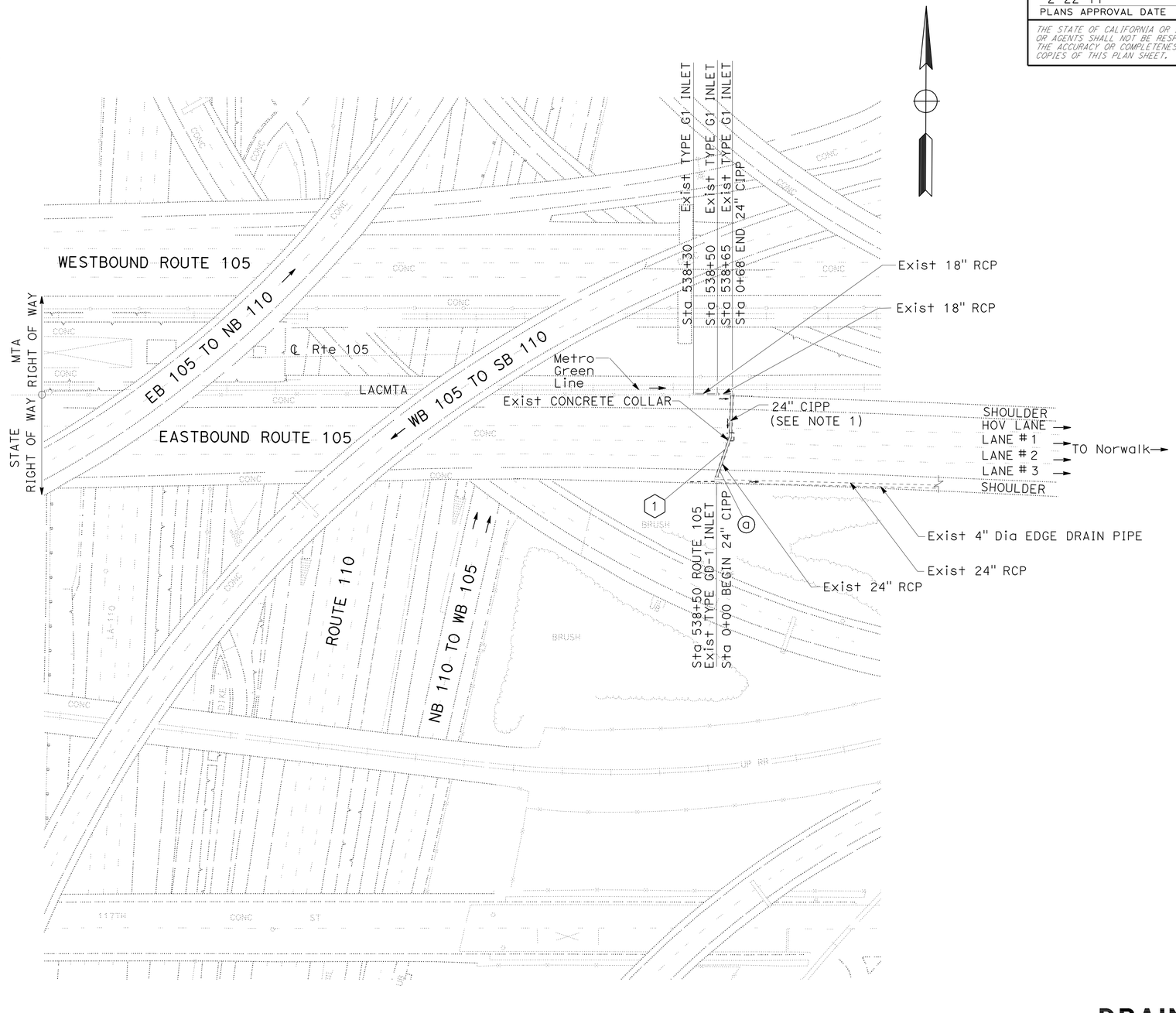

DRAINAGE PLAN

SCALE: 1"=50'

D-1

THIS PLAN IS ACCURATE FOR DRAINAGE WORK ONLY

REVISED BY	DATE REVISED

CALCULATED-DESIGNED BY	CHECKED BY
AVO BOYNERIAN	HAMID SAADATNEJADI

FUNCTIONAL SUPERVISOR
HECTOR OBESO

STATE OF CALIFORNIA - DEPARTMENT OF TRANSPORTATION
Caltrans MAINTENANCE ENGINEERING

LAST REVISION 00-00-00 | DATE PLOTTED => 03-MAR-2011 | TIME PLOTTED => 14:05

Dist	COUNTY	ROUTE	POST MILES TOTAL PROJECT	SHEET No.	TOTAL SHEETS
07	LA	105,110	R7.4,13.8	8	28

REGISTERED CIVIL ENGINEER 2-9-11 DATE

2-22-11
PLANS APPROVAL DATE

REGISTERED PROFESSIONAL ENGINEER HAMID SAADATNEJADI No. C50440 Exp. 6/30/11 CIVIL STATE OF CALIFORNIA

THE STATE OF CALIFORNIA OR ITS OFFICERS OR AGENTS SHALL NOT BE RESPONSIBLE FOR THE ACCURACY OR COMPLETENESS OF SCANNED COPIES OF THIS PLAN SHEET.

NOTES:

1. CONTRACTOR SHALL VERIFY LOCATIONS AND ELEVATIONS OF EXISTING DRAINAGE SYSTEM BEFORE COMMENCEMENT OF WORK.
2. PIPE STATIONING AND CONCRETE COLLAR LOCATIONS SHOWN ARE APPROXIMATE.

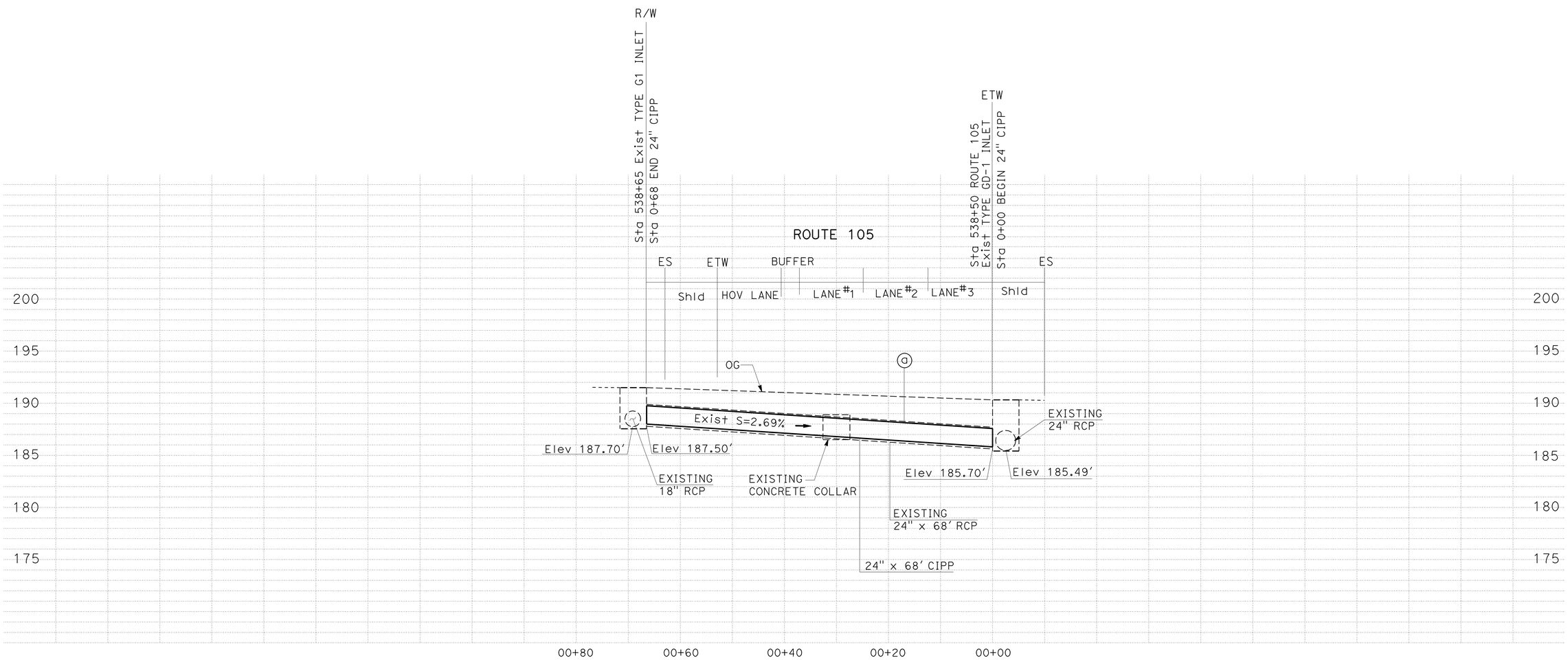

DRAINAGE SYSTEM No. 1

SCALE: 1"= 10' Horiz
1"= 5' Vert

DRAINAGE PROFILES

SCALE AS SHOWN

DP-1

STATE OF CALIFORNIA - DEPARTMENT OF TRANSPORTATION
Caltrans MAINTENANCE ENGINEERING

FUNCTIONAL SUPERVISOR: HECTOR OBESO
CALCULATED-DESIGNED BY: AVO BOYNERIAN
CHECKED BY: HAMID SAADATNEJADI
REVISED BY
DATE REVISED

LAST REVISION 00-00-00 | DATE PLOTTED => 03-MAR-2011 | TIME PLOTTED => 14:05

Dist	COUNTY	ROUTE	POST MILES TOTAL PROJECT	SHEET No.	TOTAL SHEETS
07	LA	105,110	R7.4,13.8	9	28

REGISTERED CIVIL ENGINEER 2-9-11 DATE

2-22-11
PLANS APPROVAL DATE

REGISTERED PROFESSIONAL ENGINEER HAMID SAADATNEJADI No. C50440 Exp. 6/30/11 CIVIL STATE OF CALIFORNIA

THE STATE OF CALIFORNIA OR ITS OFFICERS OR AGENTS SHALL NOT BE RESPONSIBLE FOR THE ACCURACY OR COMPLETENESS OF SCANNED COPIES OF THIS PLAN SHEET.

SUMMARY OF DRAINAGE QUANTITIES

DRAINAGE PLAN	DRAINAGE SYSTEM No. ⬡	DRAINAGE UNIT ○	CLEANING, INSPECTING AND PREPARING HOST PIPE (N)	24" CURED-IN-PLACE PIPELINER	STATION
			LF	LF	
D-1	1	a	68	68	Sta 538+50 TO Sta 538+65
TOTAL			68	68	

(N) NOT A SEPARATE PAY ITEM, FOR INFORMATION ONLY.

DRAINAGE QUANTITIES

DQ-1

STATE OF CALIFORNIA - DEPARTMENT OF TRANSPORTATION
Caltrans MAINTENANCE ENGINEERING

FUNCTIONAL SUPERVISOR: HECTOR OBESO
CALCULATED-DESIGNED BY: AVO BOYNERIAN
CHECKED BY: HAMID SAADATNEJADI
REVISED BY
DATE REVISED

LAST REVISION 00-00-00
DATE PLOTTED => 03-MAR-2011
TIME PLOTTED => 14:05

Dist	COUNTY	ROUTE	POST MILES TOTAL PROJECT	SHEET No.	TOTAL SHEETS
07	LA	105,110	R7.4,13.8	10	28

REGISTERED CIVIL ENGINEER 2-9-11 DATE

2-22-11
PLANS APPROVAL DATE

REGISTERED PROFESSIONAL ENGINEER HAMID SAADATNEJADI No. C50440 Exp. 6/30/11 CIVIL STATE OF CALIFORNIA

THE STATE OF CALIFORNIA OR ITS OFFICERS OR AGENTS SHALL NOT BE RESPONSIBLE FOR THE ACCURACY OR COMPLETENESS OF SCANNED COPIES OF THIS PLAN SHEET.

NOTES:

1. LOCATIONS OF CONSTRUCTION AREA SIGNS SHOWN ARE APPROXIMATE. EXACT LOCATIONS WILL BE DETERMINED BY THE ENGINEER.
2. SIGN CODE PER CALIFORNIA MANUAL ON UNIFORM TRAFFIC CONTROL DEVICES.
3. RAMP CLOSED AHEAD SIGN SHALL BE COVERED AFTER WORK.

CONSTRUCTION AREA SIGNS (STATIONARY MOUNTED)

SIGN NUMBER (X)	SIGN CODE	PANEL SIZE	SIGN MESSAGE	NUMBER OF POSTS AND SIZE	NUMBER OF SIGNS
A	C40 (CA)	108" x 42"	TRAFFIC FINES DOUBLED IN CONSTRUCTION ZONES	2-6" x 6"	1
B	W20-1	48" x 48"	ROAD WORK AHEAD	1-6" x 6"	1
C	W20-3	36" x 36"	RAMP CLOSED AHEAD	1-4" x 6"	1
D	G20-2	48" x 24"	END ROAD WORK	1-4" x 6"	1

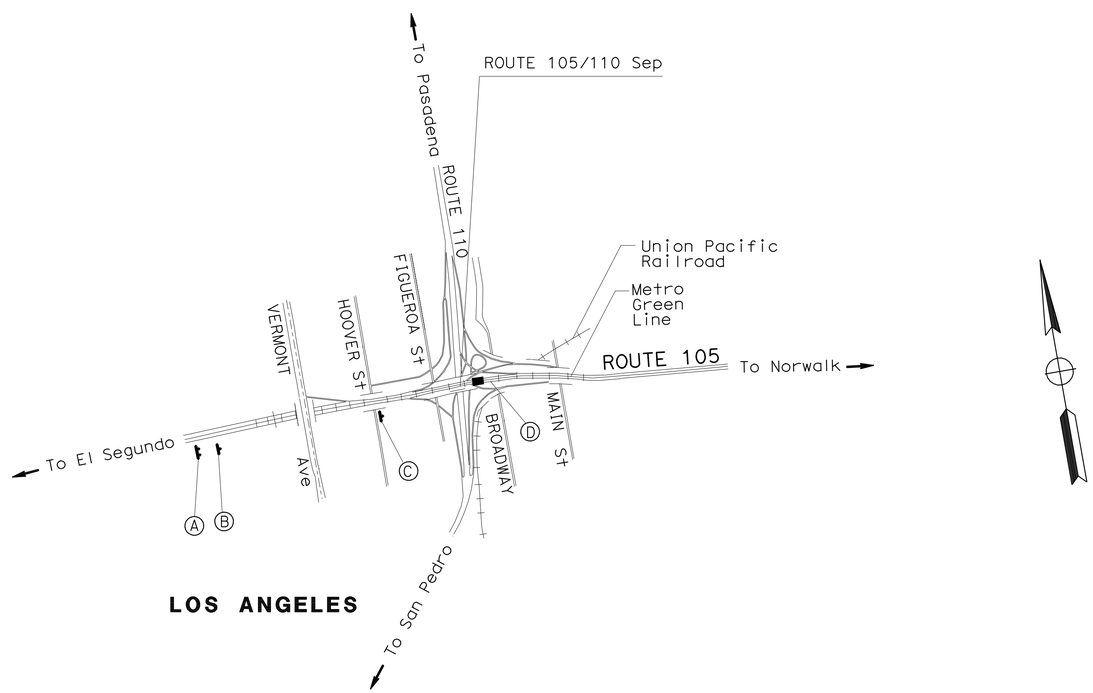

THIS PLAN ACCURATE FOR CONSTRUCTION AREA SIGNS WORK ONLY

CONSTRUCTION AREA SIGNS

NO SCALE

CS-1

STATE OF CALIFORNIA - DEPARTMENT OF TRANSPORTATION
Caltrans MAINTENANCE ENGINEERING

FUNCTIONAL SUPERVISOR: HECTOR OBESO
CALCULATED-DESIGNED BY: AVO BOYNERIAN
CHECKED BY: HAMID SAADATNEJADI
REVISED BY
DATE REVISED

LAST REVISION 00-00-00 | DATE PLOTTED => 03-MAR-2011 | TIME PLOTTED => 14:05

Dist	COUNTY	ROUTE	POST MILES TOTAL PROJECT	SHEET No.	TOTAL SHEETS
07	LA	105,110	R7.4,13.8	11	28

Duke M Huynh 11-15-10
REGISTERED CIVIL ENGINEER DATE

2-22-11
PLANS APPROVAL DATE

REGISTERED PROFESSIONAL ENGINEER DUKE HUYNH No. 65591 Exp. 9-30-11 CIVIL STATE OF CALIFORNIA

THE STATE OF CALIFORNIA OR ITS OFFICERS OR AGENTS SHALL NOT BE RESPONSIBLE FOR THE ACCURACY OR COMPLETENESS OF SCANNED COPIES OF THIS PLAN SHEET.

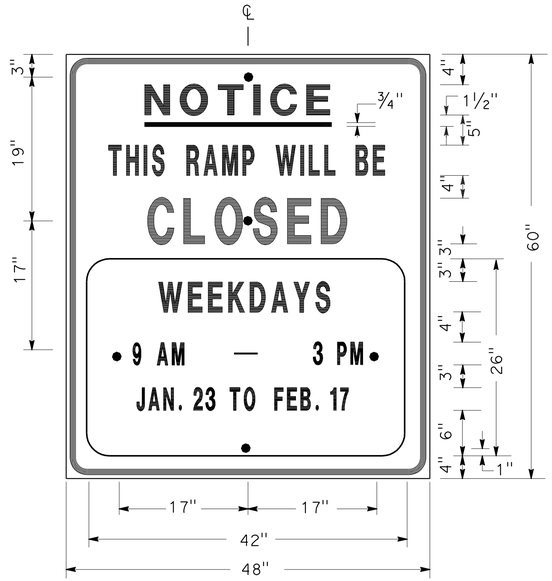

SIGN SP-1

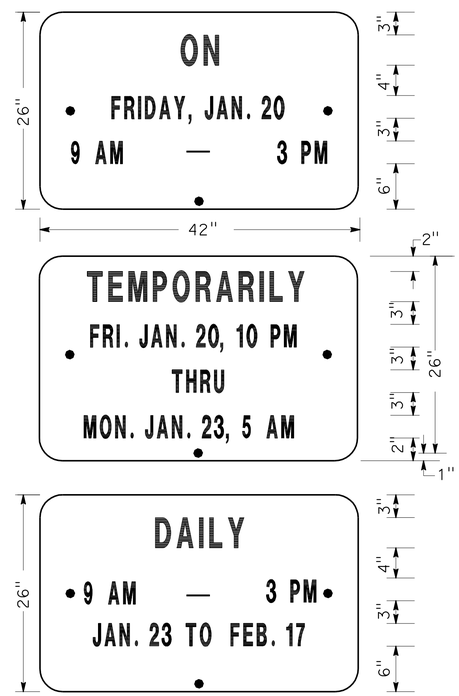

ALTERNATE OVERLAY PANELS (TYPICAL)

SPECIAL ADVANCE NOTICE PUBLICITY SIGN

NOTES: (SIGN SP-1)

1. SIGNS SHALL HAVE ORANGE RETROREFLECTORIZED BACKGROUND WITH BLACK BORDER AND LETTERS.
2. BOLT HOLES SHALL BE 3/8" DIAMETER.
3. BASE MATERIAL SHALL BE ALUMINUM (MINIMUM 0.06").
4. SIGNS SHALL BE MOUNTED WITH BOTTOMS OF SIGNS A MINIMUM OF 6' ABOVE GROUND.

SIZE	BORDER WIDTH	MARGIN WIDTH	LETTER SIZE					CORNER RADIUS
			LINE 1	LINE 2*	LINE 3	LINE 4	LINE 5,6 & 7*	
48"x60"	1 1/4"	3/4"	4E	4D	6E	4D		3"
42"x26"	OVERLAY						3D	1 1/2"
* CONDENSED SPACING IF NECESSARY								

SIGN SP-4

NOTES: (SIGN SP-4)

1. LETTERS - 6" SERIES C.
2. LETTERS AND BORDERS - BLACK ON RETROREFLECTORIZED WHITE BACKGROUND.
3. BASE MATERIAL SHALL BE ALUMINUM (MINIMUM 0.06").
4. SIGNS SHALL BE PLACED AT RAMP ENTRANCES IN ADDITION TO SIGNS POSTED IN ACCORDANCE WITH STANDARD PLAN T14.

SPECIAL SIGN FOR ENTRANCE RAMP CLOSURES

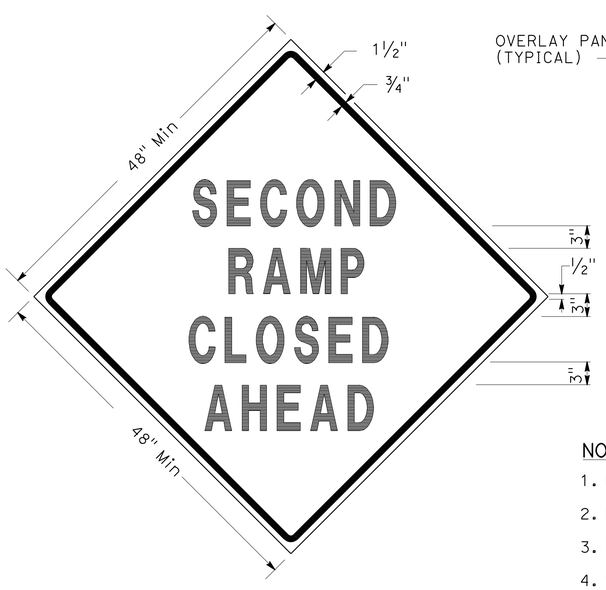

SIGN SP-3

SIGN SP-5

NOTES: (SIGNS SP-3 & SP-5)

1. LETTERS - 6" SERIES D.
2. LETTERS AND BORDERS - BLACK ON RETROREFLECTORIZED ORANGE BACKGROUND.
3. BASE MATERIAL SHALL BE ALUMINUM (MINIMUM 0.06").
4. SIGNS SHALL BE MOUNTED WITH BOTTOMS OF SIGNS A MINIMUM OF 6' ABOVE GROUND.

SPECIAL SIGN FOR EXIT RAMP CLOSURES

TRAFFIC HANDLING DETAILS
TRAFFIC CONTROL SYSTEM FOR RAMP CLOSURES, DETOUR SIGNS AND MISCELLANEOUS DETAILS
SHEET 1 OF 2

NO SCALE

THD-1

STATE OF CALIFORNIA - DEPARTMENT OF TRANSPORTATION
Caltrans® DTM

FUNCTIONAL SUPERVISOR: DENIS S KATAYAMA
CALCULATED-DESIGNED BY: ALBERT K YU
CHECKED BY: JOCELYN C CHIANG
REVISED BY: JC
DATE REVISED: 7/10

LAST REVISION DATE PLOTTED => 03-MAR-2011
00-00-00 TIME PLOTTED => 14:05

Dist	COUNTY	ROUTE	POST MILES TOTAL PROJECT	SHEET No.	TOTAL SHEETS
07	LA	105,110	R7.4,13.8	12	28

Duke M Huynh 11-15-10
REGISTERED CIVIL ENGINEER DATE

2-22-11
PLANS APPROVAL DATE

REGISTERED PROFESSIONAL ENGINEER
DUKE HUYNH
No. 65591
Exp. 9-30-11
CIVIL
STATE OF CALIFORNIA

THE STATE OF CALIFORNIA OR ITS OFFICERS OR AGENTS SHALL NOT BE RESPONSIBLE FOR THE ACCURACY OR COMPLETENESS OF SCANNED COPIES OF THIS PLAN SHEET.

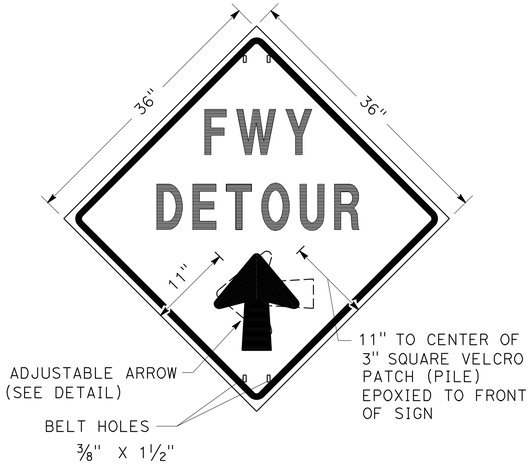

SIGN SP-2

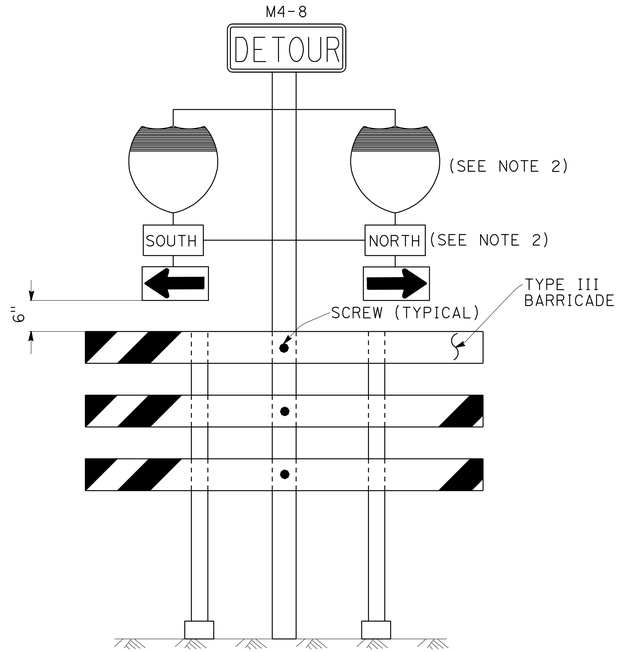

SIGN SP-6 (SEE NOTE 1)

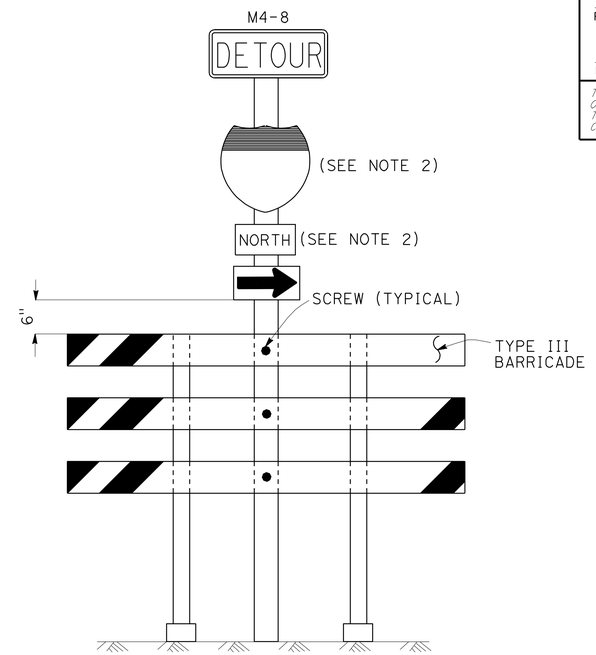

SIGN SP-7 (SEE NOTE 1)

NOTES: (SIGN SP-2)

1. LETTERS -6" SERIES E.
2. LETTERS, BORDER AND ARROW - BLACK ON RETROREFLECTORIZED ORANGE BACKGROUND.
3. BASE MATERIAL FOR SIGNS AND ARROWS SHALL BE ALUMINUM (MINIMUM 0.06").
4. BELTS (LUGGAGE STRAPS) SHALL BE 1" WIDE BY 48" LONG, MADE OF COTTON OR POLYPROPYLENE WEB MATERIAL.
5. SIGNS SHALL BE MOUNTED WITH BOTTOMS OF SIGNS A MINIMUM OF 6' ABOVE GROUND EXCEPT AS OTHERWISE SHOWN ON OTHER TRAFFIC HANDLING DETAILS PLANS.

ABBREVIATION

(CA) CALIFORNIA CODE

NOTES: (SIGNS SP-6 & SP-7)

1. IN LIEU OF PLACING SIGNS ON TYPE III BARRICADES, SIGNS, INCLUDING POSTS, MAY BE PLACED INTO THE GROUND OR FASTENED ONTO ELECTROLIERS.
2. USE APPROPRIATE ROUTE SHIELD [G26-2(CA), G27-2(CA), G28-2(CA)] AND CARDINAL DIRECTION [NORTH (M3-1), SOUTH (M3-3), EAST (M3-2), WEST (M3-4)]

SPECIAL PORTABLE FREEWAY DETOUR SIGNS

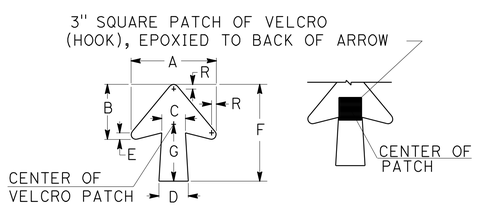

DIMENSIONS							
A	B	C	D	E	F	G	R
11 1/4"	7 1/4"	3 1/8"	4"	7/8"	13"	7 1/2"	5/8"

SPECIAL PORTABLE FREEWAY DETOUR SIGN

ADJUSTABLE ARROW DETAIL

TRAFFIC HANDLING DETAILS

TRAFFIC CONTROL SYSTEM FOR RAMP CLOSURES, DETOUR SIGNS AND MISCELLANEOUS DETAILS

SHEET 2 OF 2

NO SCALE

THD-2

STATE OF CALIFORNIA - DEPARTMENT OF TRANSPORTATION
Caltrans DTM

FUNCTIONAL SUPERVISOR: DENIS S KATAYAMA
CALCULATED-DESIGNED BY: ALBERT K YU
CHECKED BY: JOCELYN C CHIANG
REVISED BY: JC
DATE REVISED: 7/10

LAST REVISION 00-00-00
DATE PLOTTED => 03-MAR-2011
TIME PLOTTED => 14:05

Dist	COUNTY	ROUTE	POST MILES TOTAL PROJECT	SHEET No.	TOTAL SHEETS
07	LA	105,110	R7.4,13.8	13	28

Duke M Huynh 11-15-10
REGISTERED CIVIL ENGINEER DATE

2-22-11
PLANS APPROVAL DATE

REGISTERED PROFESSIONAL ENGINEER
DUKE HUYNH
No. 65591
Exp. 9-30-11
CIVIL
STATE OF CALIFORNIA

THE STATE OF CALIFORNIA OR ITS OFFICERS OR AGENTS SHALL NOT BE RESPONSIBLE FOR THE ACCURACY OR COMPLETENESS OF SCANNED COPIES OF THIS PLAN SHEET.

LEGEND

- CONE
- TRAFFIC PLASTIC DRUM
- FLASHING ARROW SIGN
- PORTABLE SIGN
- DIRECTION OF TRAVEL
- PORTABLE CHANGEABLE MESSAGE SIGN (PCMS)

ABBREVIATIONS

(CA) CALIFORNIA CODE

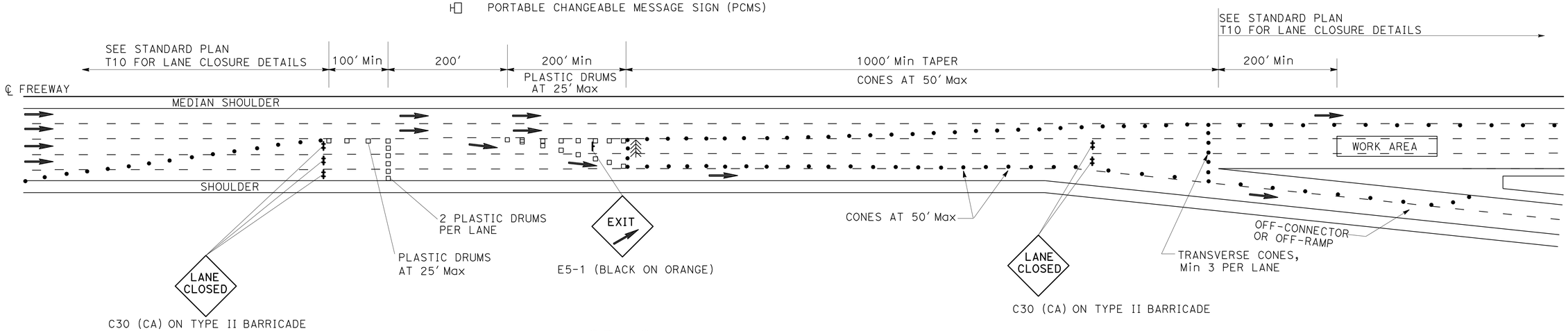

OPTION 1

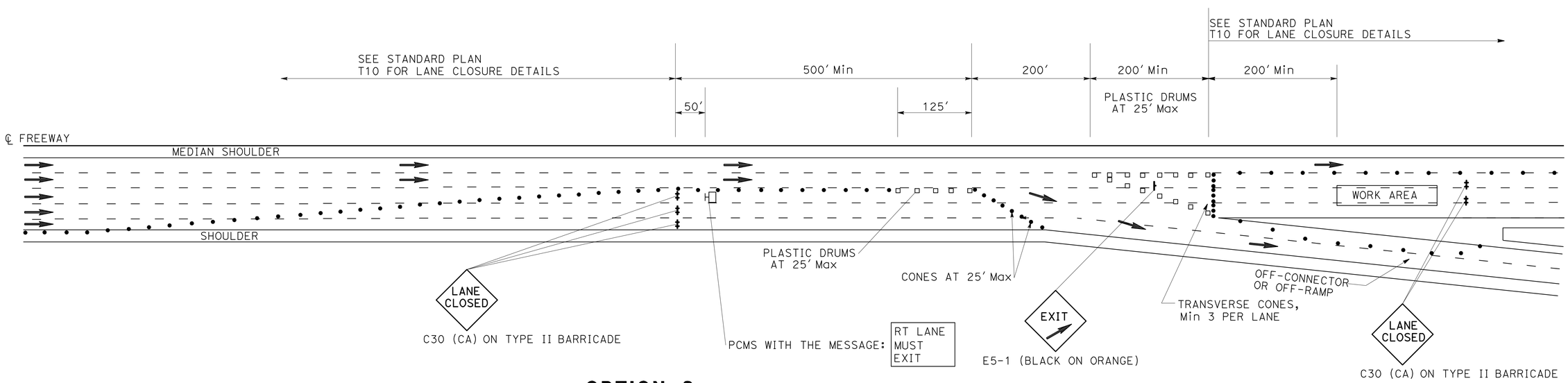

OPTION 2

TRAFFIC HANDLING DETAILS

TRAFFIC CONTROL SYSTEM FOR SLIP-RAMP AT OFF-CONNECTOR OR OFF-RAMP

NO SCALE

THD-3

REVISED BY	DATE REVISED
JC	7/10

ALBERT K YU
JOCELYN C CHIANG
CALCULATED-DESIGNED BY
CHECKED BY
FUNCTIONAL SUPERVISOR
DENIS S KATAYAMA

STATE OF CALIFORNIA - DEPARTMENT OF TRANSPORTATION
Caltrans®
DTM

LAST REVISION 00-00-00
DATE PLOTTED => 03-MAR-2011
TIME PLOTTED => 14:05

Dist	COUNTY	ROUTE	POST MILES TOTAL PROJECT	SHEET No.	TOTAL SHEETS
07	LA	105,110	R7.4,13.8	14	28

Duke M Huynh 11-15-10
REGISTERED CIVIL ENGINEER DATE

2-22-11
PLANS APPROVAL DATE

REGISTERED PROFESSIONAL ENGINEER
DUKE HUYNH
No. 65591
Exp. 9-30-11
CIVIL
STATE OF CALIFORNIA

THE STATE OF CALIFORNIA OR ITS OFFICERS OR AGENTS SHALL NOT BE RESPONSIBLE FOR THE ACCURACY OR COMPLETENESS OF SCANNED COPIES OF THIS PLAN SHEET.

NOTES:

1. LANE CLOSURES SHALL NOT BE PLACED ON CREST VERTICAL CURVES OR ON HORIZONTAL CURVES.
2. PCMS SHALL BE ACTIVATED PRIOR TO TRAFFIC CONTROL ACTIVITIES ON THE HOV LANE.
3. A MINIMUM SIGHT DISTANCE OF 1500′ SHALL BE PROVIDED IN ADVANCE OF PCMS.
4. VEHICLE-MOUNTED SIGN PANELS SHALL BE TYPE III OR IV RETROREFLECTORIZED SHEETING, BLACK ON WHITE OR BLACK ON ORANGE WITH 8" MINIMUM SERIES D LETTERS PER CALTRANS SIGN SPECIFICATIONS.
5. PLACE PCMS ON THE MEDIAN SHOULDER WHERE SUFFICIENT ROOM (SUCH AS CHP ENFORCEMENT AREAS) EXISTS.

LEGEND

V1, V2	SHADOW VEHICLE
V3	WORK/APPLICATION VEHICLE
	PORTABLE CHANGEABLE MESSAGE SIGN (PCMS)
	DIRECTION OF TRAVEL
	HOV LANE

ABBREVIATIONS

FAS	FLASHING ARROW SIGN
IAV	IMPACT ATTENUATOR VEHICLE
CMS	CHANGEABLE MESSAGE SIGN
(CA)	CALIFORNIA CODE
PCMS	PORTABLE CHANGEABLE MESSAGE SIGN
HOV	HIGH OCCUPANCY VEHICLE

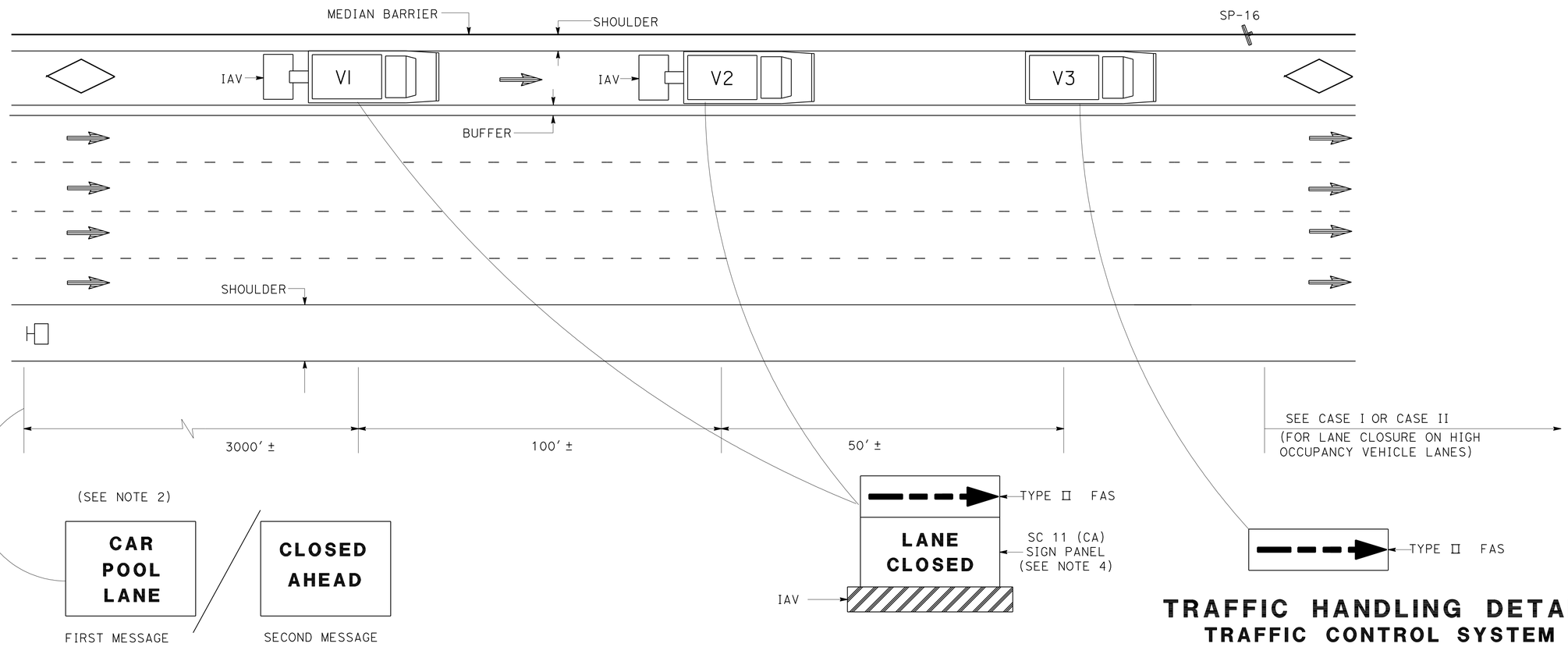

PCMS/TRUCK MOUNTED CMS
(SEE NOTE 5)

TRAFFIC HANDLING DETAILS
TRAFFIC CONTROL SYSTEM FOR HIGH OCCUPANCY VEHICLE LANES WITH MEDIAN SHOULDERS LESS THAN 8 FEET

NO SCALE

THD-4

STATE OF CALIFORNIA - DEPARTMENT OF TRANSPORTATION
Caltrans
DTM

FUNCTIONAL SUPERVISOR: DENIS S KATAYAMA
CALCULATED-DESIGNED BY: ALBERT K YU
CHECKED BY: JOCELYN C CHIANG
REVISED BY: JC
DATE REVISED: 7/10

LAST REVISION 00-00-00
DATE PLOTTED => 03-MAR-2011
TIME PLOTTED => 14:05

Dist	COUNTY	ROUTE	POST MILES TOTAL PROJECT	SHEET No.	TOTAL SHEETS
07	LA	105,110	R7.4,13.8	15	28

Duke M Huynh 11-15-10
REGISTERED CIVIL ENGINEER DATE

2-22-11
PLANS APPROVAL DATE

REGISTERED PROFESSIONAL ENGINEER DUKE HUYNH No. 65591 Exp. 9-30-11 CIVIL STATE OF CALIFORNIA

THE STATE OF CALIFORNIA OR ITS OFFICERS OR AGENTS SHALL NOT BE RESPONSIBLE FOR THE ACCURACY OR COMPLETENESS OF SCANNED COPIES OF THIS PLAN SHEET.

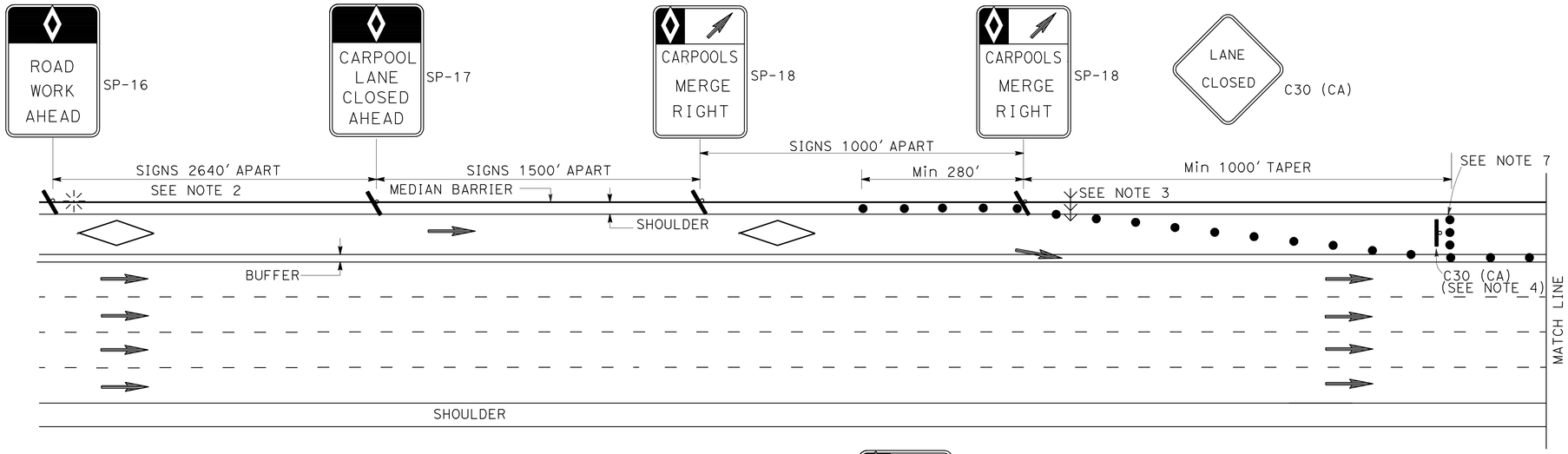

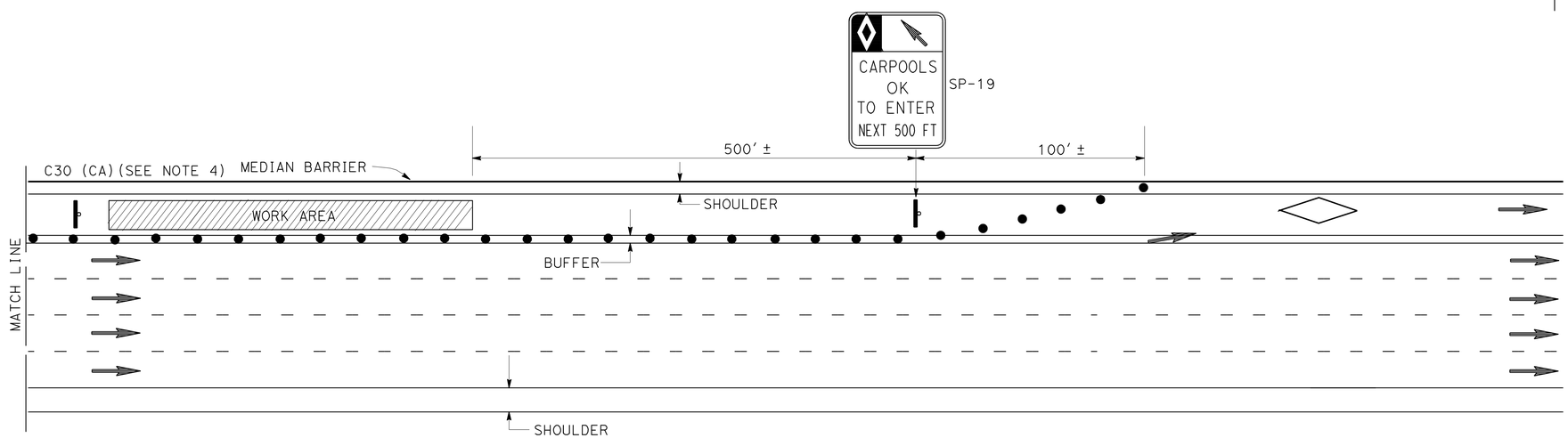

ABBREVIATIONS

(CA) CALIFORNIA CODE

HOV HIGH OCCUPANCY VEHICLE

NOTES: FOR CASE I AND CASE II

1. AT LEAST ONE PERSON SHALL BE ASSIGNED TO FULL TIME MAINTENANCE OF TRAFFIC CONTROL DEVICES ON NIGHT LANE CLOSURES OR DAY-TIME CLOSURES EXCEEDING 1 MILE LENGTH, INCLUDING TAPERS.
2. ADVANCE WARNING SIGN INSTALLATIONS SHALL BE EQUIPPED WITH FLAGS FOR DAYTIME CLOSURES. TYPE B HIGH INTENSITY FLASHING WARNING LIGHTS SHALL BE USED ON SP-16 SIGNS DURING NIGHT LANE CLOSURES. FLAGS AND WARNING LIGHTS SHALL BE ATTACHED TO SIGNS AS APPROVED BY THE ENGINEER.
3. THE FLASHING ARROW SIGN SHALL BE TYPE I.
4. PLACE C30 (CA) SIGNS EVERY 2000' THROUGHOUT THE LENGTH OF LANE CLOSURE.
5. A MINIMUM 1500' OF SIGHT DISTANCE SHALL BE PROVIDED WHERE POSSIBLE FOR VEHICLES APPROACHING THE FLASHING ARROW SIGN. LANE CLOSURES SHALL NOT BE PLACED ON CREST VERTICAL CURVES OR ON HORIZONTAL CURVES.
6. PORTABLE DELINEATORS PLACED AT ONE-HALF THE SPACING INDICATED FOR TRAFFIC CONES MAY BE USED INSTEAD OF CONES FOR DAYTIME CLOSURES.
7. A MINIMUM OF 3 CONES SHALL BE PLACED TRANSVERSELY ACROSS CLOSED LANES WHERE TAPERS END AND EVERY 2000'. TWO TYPE II BARRICADES MAY BE USED INSTEAD OF 3 CONES. THE ALIGNMENT OF CONES OR BARRICADES MAY BE SHIFTED FROM THE TRANSVERSE ALIGNMENT TO PROVIDE ACCESS TO WORK.
8. IF AN INGRESS/EGRESS AREA IS WITHIN 5250' UPSTREAM OR DOWNSTREAM OF THE WORK AREA, LANE CLOSURES SHALL BE EXTENDED TO THAT AREA AS SHOWN IN CASE II.
9. SIGNS SP-16, 17, 18, AND 19 MAY BE OVERLAID ON EXISTING CARPOOL SIGNS IN MEDIANS AS APPROVED BY THE ENGINEER.
10. SIGNS SP-16, 17, 18, AND C30 (CA) SHALL BE BLACK ON ORANGE BACKGROUND. SIGN SP-19 SHALL BE BLACK ON WHITE BACKGROUND. DIAMONDS ON SIGNS SHALL BE WHITE.
11. FOR CLOSURE OF LANE(S) ADJACENT TO HOV LANES, SEE CASE II.
12. THE MAXIMUM SPACING BETWEEN CONES SHALL BE APPROXIMATELY 50' IN TAPERS AND 100' ON TANGENTS.

LEGEND

- CONE
- FLASHING BEACON
- HOV LANE
- FLASHING ARROW SIGN
- PORTABLE SIGN
- DIRECTION OF TRAVEL

SIGN PANEL

SIZE (MIN)

SP-16 36" X 54"
SP-17 36" X 54"
SP-18 36" X 48"
SP-19 36" X 60"
C30 (CA) 30" X 30"
G20-2 48" X 24"

TRAFFIC HANDLING DETAILS
TRAFFIC CONTROL SYSTEM FOR HIGH OCCUPANCY VEHICLE LANES AT NON-INGRESS/EGRESS AREAS
CASE I
NO SCALE

THD-5

FUNCTIONAL SUPERVISOR	DENIS S KATAYAMA
CALCULATED-DESIGNED BY	ALBERT K YU
CHECKED BY	JOCELYN C CHIANG
REVISED BY	JC
DATE REVISED	7/10

STATE OF CALIFORNIA - DEPARTMENT OF TRANSPORTATION
Caltrans DTM

LAST REVISION 00-00-00 | DATE PLOTTED => 03-MAR-2011 | TIME PLOTTED => 14:05

Dist	COUNTY	ROUTE	POST MILES TOTAL PROJECT	SHEET No.	TOTAL SHEETS
07	LA	105,110	R7.4,13.8	16	28

Duke M Huynh 11-15-10
REGISTERED CIVIL ENGINEER DATE

2-22-11
PLANS APPROVAL DATE

REGISTERED PROFESSIONAL ENGINEER
DUKE HUYNH
No. 65591
Exp. 9-30-11
CIVIL
STATE OF CALIFORNIA

THE STATE OF CALIFORNIA OR ITS OFFICERS OR AGENTS SHALL NOT BE RESPONSIBLE FOR THE ACCURACY OR COMPLETENESS OF SCANNED COPIES OF THIS PLAN SHEET.

NOTES:

1. WORDING DISPLAYED ON PCMS WILL BE APPROVED BY THE ENGINEER.
2. EXACT LOCATIONS OF PCMS WILL BE DETERMINED BY THE ENGINEER.
3. CHANGE PCMS MESSAGE AT THE BEGINNING OF CURE PERIOD TO REFLECT NUMBER OF CLOSED LANES.

ABBREVIATIONS

PCMS PORTABLE CHANGEABLE MESSAGE SIGN

(CA) CALIFORNIA CODE

LEGEND

- CONE
- PORTABLE SIGN
- DIRECTION OF TRAVEL
- PORTABLE CHANGEABLE MESSAGE SIGN (PCMS)
- (CA) CALIFORNIA CODE

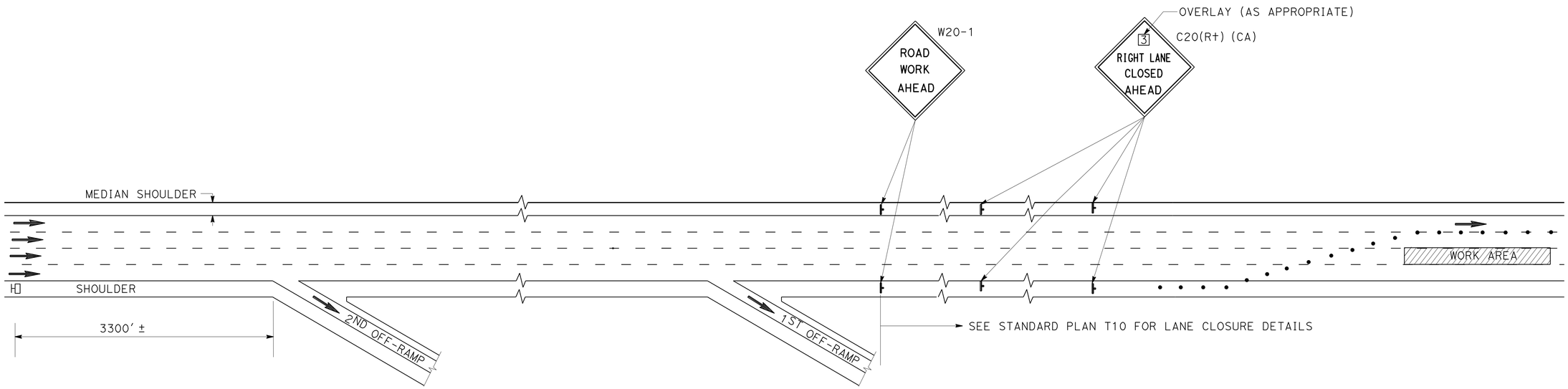

FIRST FLASH MESSAGE	**X (NO OF LANES)RIGHT/LEFT**	1ST LINE (TYPICAL)
	LANES	2ND LINE (TYPICAL)
	CLOSED	3RD LINE (TYPICAL)
SECOND FLASH MESSAGE	**A ST**	LIMIT OF CLOSURE (TYPICAL)
	TO	
	B DR	LIMIT OF CLOSURE (TYPICAL)

WORDING FOR PORTABLE CHANGEABLE MESSAGE SIGN

TRAFFIC HANDLING DETAILS
TRAFFIC CONTROL SYSTEM FOR CONCRETE PAVEMENT AND APPROACH SLAB REPLACEMENT
NO SCALE

THD-6

REVISED BY	DATE REVISED
JC	7/10

CALCULATED-DESIGNED BY: ALBERT K YU
CHECKED BY: JOCELYN C CHIANG
FUNCTIONAL SUPERVISOR: DENIS S KATAYAMA

STATE OF CALIFORNIA - DEPARTMENT OF TRANSPORTATION
Caltrans® DTM

LAST REVISION 00-00-00
DATE PLOTTED => 03-MAR-2011
TIME PLOTTED => 14:05

Dist	COUNTY	ROUTE	POST MILES TOTAL PROJECT	SHEET No.	TOTAL SHEETS
07	LA	105,110	R7.4,13.8	17	28

Duke M Huynh 11-15-10
REGISTERED CIVIL ENGINEER DATE

2-22-11
PLANS APPROVAL DATE

REGISTERED PROFESSIONAL ENGINEER
DUKE HUYNH
No. 65591
Exp. 9-30-11
CIVIL
STATE OF CALIFORNIA

THE STATE OF CALIFORNIA OR ITS OFFICERS OR AGENTS SHALL NOT BE RESPONSIBLE FOR THE ACCURACY OR COMPLETENESS OF SCANNED COPIES OF THIS PLAN SHEET.

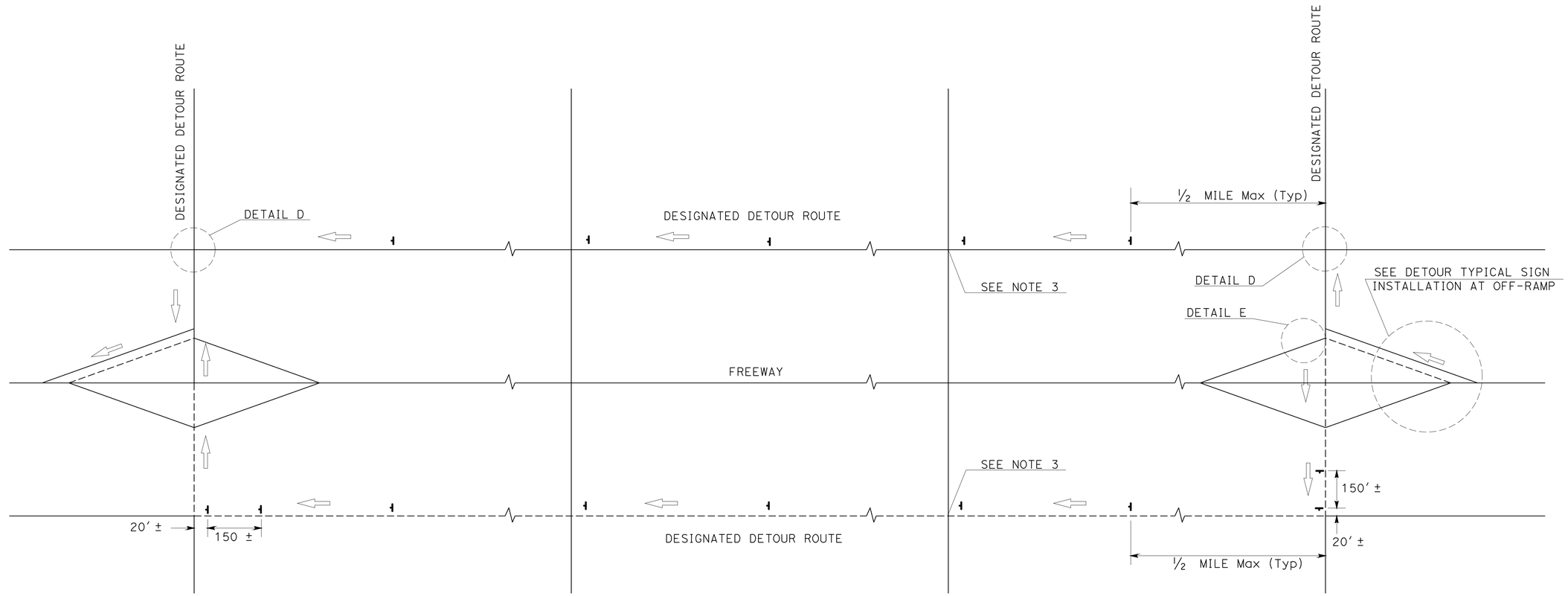

TYPICAL DETOUR SIGN INSTALLATION ALONG DESIGNATED DETOUR ROUTE

LEGEND

- TEMPORARY SIGN (SP-2)
- AND/OR DESIGNATED DETOUR ROUTE
- DIRECTION OF TRAVEL

NOTES:

1. SP-2 SIGNS SHALL NOT BE INSTALLED ON BARRICADES EXCEPT AS OTHERWISE SHOWN.
2. SIGN LOCATIONS ARE APPROXIMATE. EXACT LOCATIONS WILL BE DETERMINED BY THE ENGINEER.
3. SP-2 SIGNS SHALL BE POSTED AT SIGNALIZED INTERSECTIONS ALONG THE DESIGNATED DETOUR ROUTE OR ½ MILE MAXIMUM APART.

TRAFFIC HANDLING DETAILS

TRAFFIC CONTROL SYSTEM FOR DETOUR SIGN INSTALLATION ALONG DESIGNATED DETOUR ROUTE

SHEET 1 OF 2

NO SCALE

THD-7

STATE OF CALIFORNIA - DEPARTMENT OF TRANSPORTATION
Caltrans
DTM

FUNCTIONAL SUPERVISOR: DENIS S KATAYAMA
CALCULATED-DESIGNED BY: ALBERT K YU
CHECKED BY: JOCELYN C CHIANG
REVISED BY: JC
DATE REVISED: 7/10

LAST REVISION 00-00-00 | DATE PLOTTED => 03-MAR-2011 | TIME PLOTTED => 14:05

Dist	COUNTY	ROUTE	POST MILES TOTAL PROJECT	SHEET No.	TOTAL SHEETS
07	LA	105,110	R7.4,13.8	18	28

Duke M Huynh 11-15-10
REGISTERED CIVIL ENGINEER DATE

2-22-11
PLANS APPROVAL DATE

REGISTERED PROFESSIONAL ENGINEER
DUKE HUYNH
No. 65591
Exp. 9-30-11
CIVIL
STATE OF CALIFORNIA

THE STATE OF CALIFORNIA OR ITS OFFICERS OR AGENTS SHALL NOT BE RESPONSIBLE FOR THE ACCURACY OR COMPLETENESS OF SCANNED COPIES OF THIS PLAN SHEET.

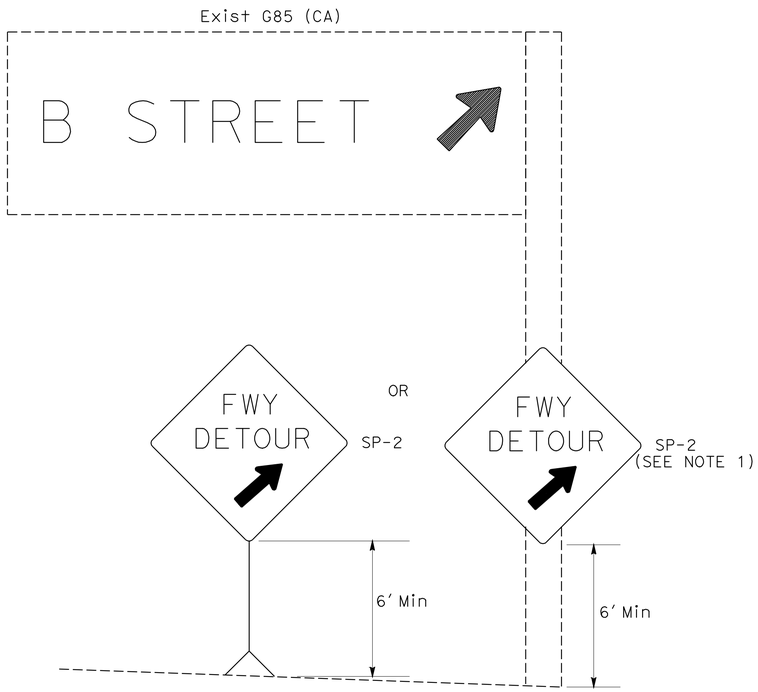

DETAIL A

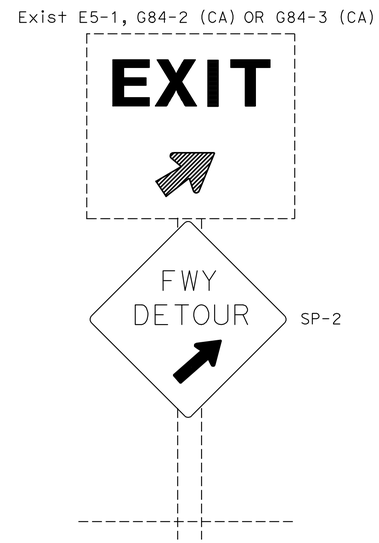

DETAIL B

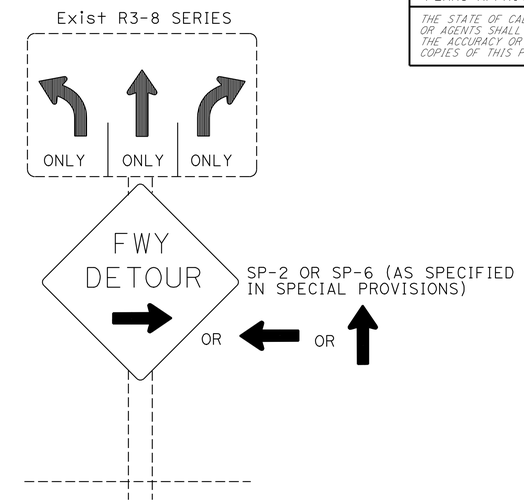

DETAIL C

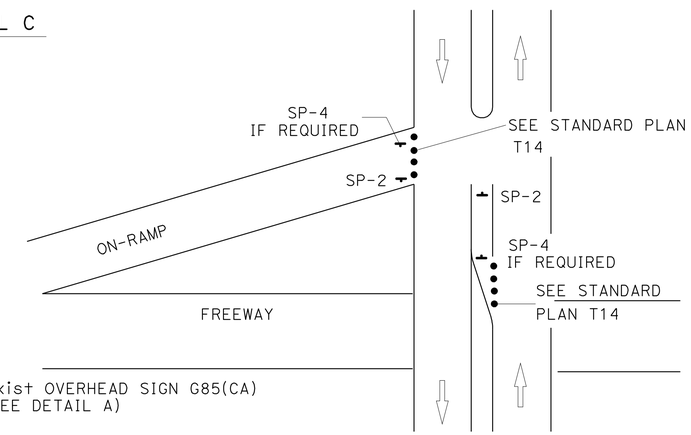

DETAIL E

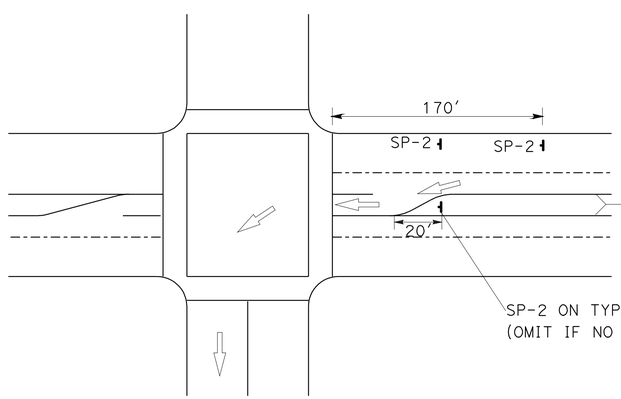

DETAIL D

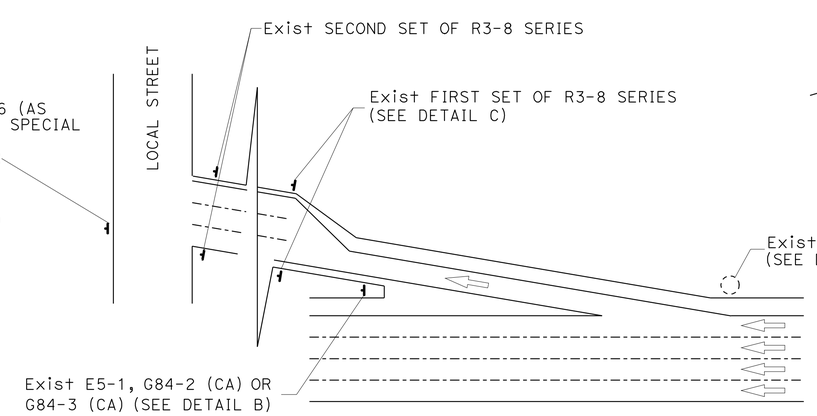

TYPICAL DETOUR SIGN INSTALLATION AT OFF-RAMP

NOTES:

1. TEMPORARY SIGNS MAY BE STRAPPED ON EXISTING ELECTROLIER, SIGNAL POSTS, OR SIGN POSTS.
2. OMIT DETAIL A AND DETAIL B FOR FULL FREEWAY CLOSURES.
3. SEE TRAFFIC HANDLING DETAILS PLAN-TRAFFIC CONTROL SYSTEM FOR RAMP CLOSURES, DETOUR SIGNS AND MISCELLANEOUS DETAILS SHEET 2 OF 2 FOR SP-6.

ABBREVIATIONS

(CA) CALIFORNIA CODE

LEGENDS

- TRAFFIC CONE
- TEMPORARY SIGN
- DIRECTION OF TRAVEL
- EXISTING OVERHEAD SIGN

TRAFFIC HANDLING DETAILS
TRAFFIC CONTROL SYSTEM FOR DETOUR SIGN INSTALLATION ALONG DESIGNATED DETOUR ROUTE
SHEET 2 OF 2

NO SCALE

THD-8

STATE OF CALIFORNIA - DEPARTMENT OF TRANSPORTATION
Caltrans DTM

FUNCTIONAL SUPERVISOR: DENIS S KATAYAMA

CALCULATED-DESIGNED BY: ALBERT K YU
CHECKED BY: JOCELYN C CHIANG
REVISED BY: JC
DATE REVISED: 8/10

LAST REVISION: 00-00-00
DATE PLOTTED => 03-MAR-2011
TIME PLOTTED => 14:05

Dist	COUNTY	ROUTE	POST MILES TOTAL PROJECT	SHEET No.	TOTAL SHEETS
07	LA	105,110	R7.4,13.8	19	28

REGISTERED CIVIL ENGINEER 2-9-11 DATE

2-22-11
PLANS APPROVAL DATE

REGISTERED PROFESSIONAL ENGINEER HAMID SAADATNEJADI No. C50440 Exp. 6/30/11 CIVIL STATE OF CALIFORNIA

THE STATE OF CALIFORNIA OR ITS OFFICERS OR AGENTS SHALL NOT BE RESPONSIBLE FOR THE ACCURACY OR COMPLETENESS OF SCANNED COPIES OF THIS PLAN SHEET.

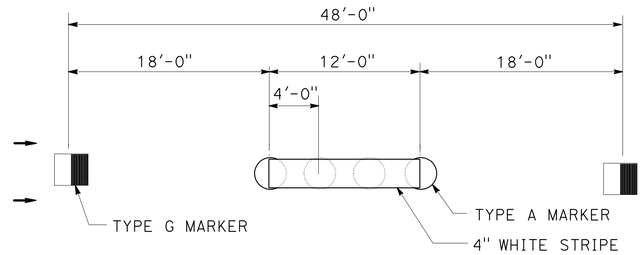

DETAIL 13 (Mod)

NO SCALE

NOTE:

STRIPING CONSISTS OF DETAIL 13 WITH THE ADDITION OF A 4" WIDE THERMOPLASTIC WHITE STRIPE 12'-0" LONG ON TOP OF TYPE A NON REFLECTIVE MARKERS.

THIS PLAN ACCURATE FOR PAVEMENT DELINEATION ONLY

PAVEMENT DELINEATION DETAILS

PDD-1

STATE OF CALIFORNIA - DEPARTMENT OF TRANSPORTATION
Caltrans MAINTENANCE ENGINEERING

FUNCTIONAL SUPERVISOR: HECTOR OBESO

CALCULATED-DESIGNED BY: AVO BOYNERIAN
CHECKED BY: HAMID SAADATNEJADI

REVISED BY
DATE REVISED

LAST REVISION 00-00-00
DATE PLOTTED => 03-MAR-2011
TIME PLOTTED => 14:05

Dist	COUNTY	ROUTE	POST MILES TOTAL PROJECT	SHEET No.	TOTAL SHEETS
07	LA	105,110	R7.4,13.8	20	28

REGISTERED CIVIL ENGINEER 2-9-11 DATE

2-22-11
PLANS APPROVAL DATE

REGISTERED PROFESSIONAL ENGINEER HAMID SAADATNEJADI No. C50440 Exp. 6/30/11 CIVIL STATE OF CALIFORNIA

THE STATE OF CALIFORNIA OR ITS OFFICERS OR AGENTS SHALL NOT BE RESPONSIBLE FOR THE ACCURACY OR COMPLETENESS OF SCANNED COPIES OF THIS PLAN SHEET.

PAVEMENT DELINEATION QUANTITIES

DIRECTION	LOCATION	THERMOPLASTIC TRAFFIC STRIPE		PAVEMENT MARKER	
		DETAIL 27B 4" SOLID WHITE	DETAIL 13 (Mod) 4" WHITE (BROKEN 36-12)	TYPE G (RETROREFLECTIVE)	TYPE A (NON-RETROREFLECTIVE)
	PM	LF	LF	EA	EA
EB	R7.46	20	48	2	8
TOTAL		20	48	2	8

PAVEMENT DELINEATION QUANTITIES

PDQ-1

STATE OF CALIFORNIA - DEPARTMENT OF TRANSPORTATION
Caltrans MAINTENANCE ENGINEERING

FUNCTIONAL SUPERVISOR: HECTOR OBESO

CALCULATED-DESIGNED BY: AVO BOYNERIAN
CHECKED BY: HAMID SAADATNEJADI

REVISED BY
DATE REVISED

LAST REVISION 00-00-00 | DATE PLOTTED => 03-MAR-2011 | TIME PLOTTED => 14:06

Dist	COUNTY	ROUTE	POST MILES TOTAL PROJECT	SHEET No.	TOTAL SHEETS
07	LA	105,110	R7.4,13.8	21	28

REGISTERED CIVIL ENGINEER 2-9-11 DATE

2-22-11
PLANS APPROVAL DATE

REGISTERED PROFESSIONAL ENGINEER HAMID SAADATNEJADI No. C50440 Exp. 6/30/11 CIVIL STATE OF CALIFORNIA

THE STATE OF CALIFORNIA OR ITS OFFICERS OR AGENTS SHALL NOT BE RESPONSIBLE FOR THE ACCURACY OR COMPLETENESS OF SCANNED COPIES OF THIS PLAN SHEET.

SUMMARY OF QUANTITIES

DIRECTION	LOCATION	REMOVE ASPHALT TREATED PERMEABLE BASE (N)	REMOVE CEMENT TREATED BASE (N)	REMOVE CLASS 3 AGGREGATE BASE (N)	MISCELLANEOUS IRON AND STEEL	ROADWAY EXCAVATION	IMPORTED BORROW	AGGREGATE BASE CEMENT SLURRY	LEAN CONCRETE BASE RAPID SETTING	CEMENT TREATED PERMEABLE BASE RAPID SETTING	REPLACE CONCRETE PAVEMENT (RAPID STRENGTH CONCRETE)	DOWEL BAR	GRIND CONCRETE PAVEMENT	SEAL ISOLATION JOINT	SEAL PAVEMENT JOINT	MULCH
	PM	CY	CY	CY	LB	CY	CY	CY	CY	CY	CY	EA	SQYD	LF	LF	CY
EB	R7.46	10.7	14.3	17.8	564	109.8	8.3	54	14.4	10.8	30.6	120	108	107	92	9.7
TOTAL		10.7	14.3	17.8	564	109.8	8.3	54	14.4	10.8	30.6	120	108	107	92	9.7

(N) NOT A SEPARATE PAY ITEM, FOR INFORMATION ONLY.

STATE OF CALIFORNIA - DEPARTMENT OF TRANSPORTATION
Caltrans MAINTENANCE ENGINEERING

FUNCTIONAL SUPERVISOR: HECTOR OBESO
CALCULATED-DESIGNED BY: AVO BOYNERIAN
CHECKED BY: HAMID SAADATNEJADI
REVISED BY
DATE REVISED

SUMMARY OF QUANTITIES
Q-1

LAST REVISION 00-00-00 | DATE PLOTTED => 03-MAR-2011 | TIME PLOTTED => 14:06

DIST	COUNTY	ROUTE	POST MILES TOTAL PROJECT	SHEET NO.	TOTAL SHEETS
07	LA	105,110	R7.4,13.8	22	28

William K. Farnbach
REGISTERED CIVIL ENGINEER

May 15, 2009
PLANS APPROVAL DATE

REGISTERED PROFESSIONAL ENGINEER William K. Farnbach No. C49042 Exp. 9-30-10 CIVIL STATE OF CALIFORNIA

The State of California or its officers or agents shall not be responsible for the accuracy or completeness of electronic copies of this plan sheet.

To accompany plans dated 2-22-11

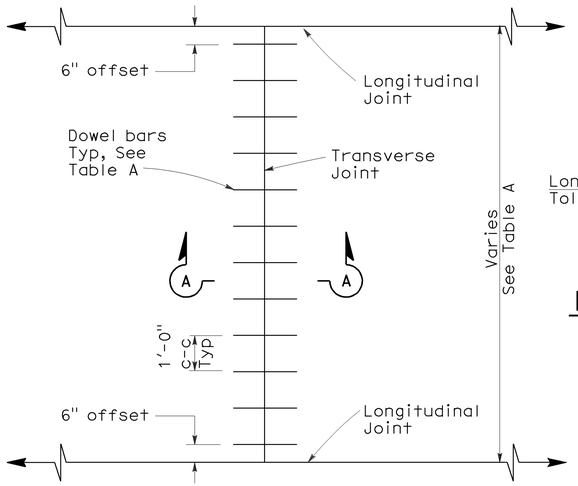

TRANSVERSE JOINT DOWEL BAR LAYOUT

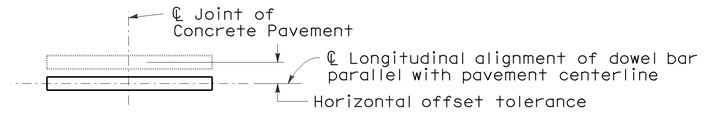

PLAN

HORIZONTAL OFFSET TOLERANCE

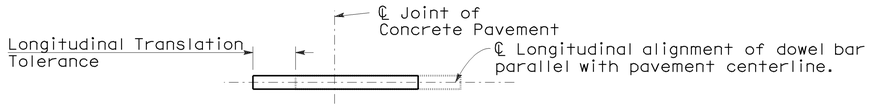

PLAN

LONGITUDINAL TRANSLATION TOLERANCE

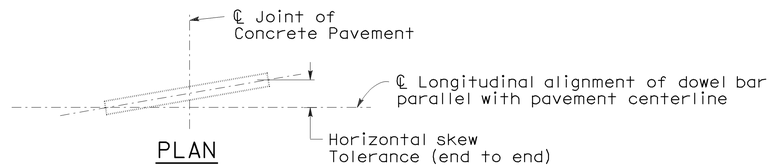

PLAN

HORIZONTAL SKEW TOLERANCE

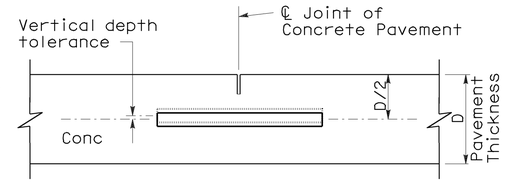

ELEVATION

VERTICAL DEPTH TOLERANCE

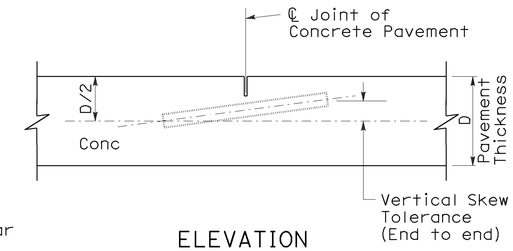

ELEVATION

VERTICAL SKEW TOLERANCE

NOTES:

1. See Revised Standard Plan RSP P1 for typical dowel bar placement and locations.
2. 1½" Dia smooth dowel bars are to be used with a pavement thickness, D, equal to or greater than 0.70 feet. For pavement thickness, D, less than 0.70 feet, use 1¼" Dia smooth dowel bars.
3. For widths not shown, see Project Plans.
4. If fresh concrete pavement is placed adjacent to existing concrete pavement, the top corner of the existing concrete pavement does not need to be rounded to the ¼" radius, as shown.

TABLE A (See Note 3)

Dowel Bar Transverse Spacing Table	
Width between Longitudinal Joints	Number of Dowels between Longitudinal Joints
14'-0"	14
13'-0"	13
12'-0"	12
11'-0"	11
10'-0"	10
8'-0"	8
5'-0"	5
4'-0"	4

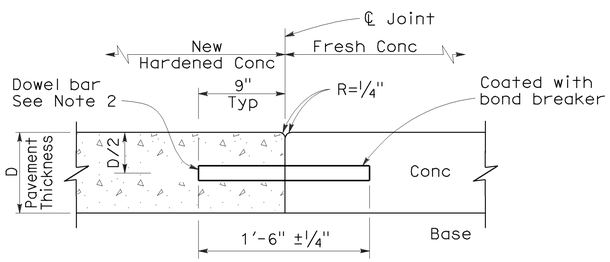

SECTION A-A

TRANSVERSE CONSTRUCTION JOINT DETAIL

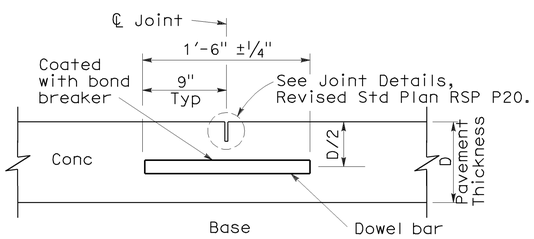

TRANSVERSE CONTRACTION JOINT

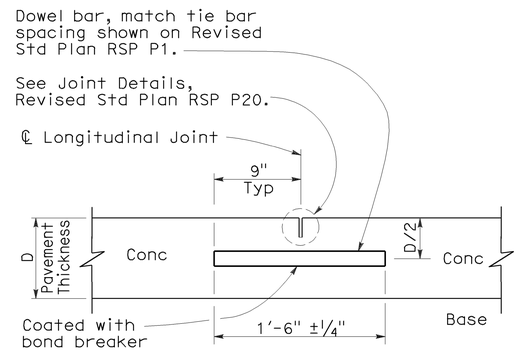

LONGITUDINAL CONTRACTION JOINT WITH DOWEL BARS

(See Revised Std Plan RSP P18)

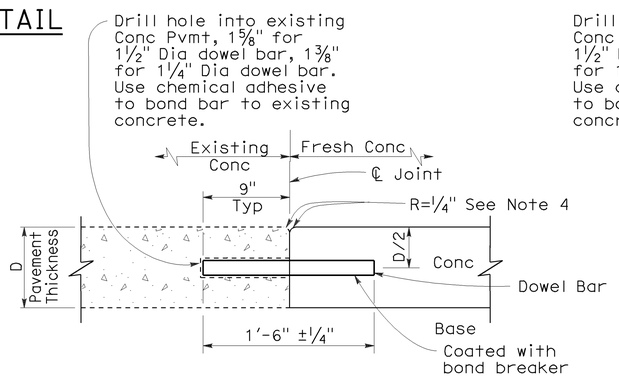

TRANSVERSE CONSTRUCTION JOINT FOR EXISTING CONCRETE PAVEMENT

(Drill and bond locations)

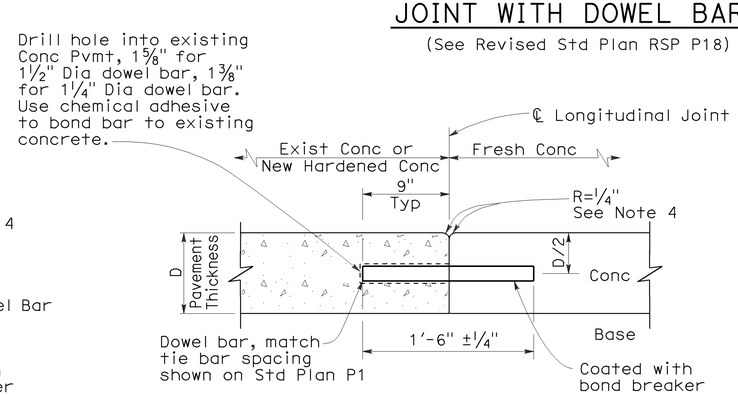

LONGITUDINAL CONSTRUCTION JOINT WITH DOWEL BARS

(See Revised Std Plan RSP P18)

STATE OF CALIFORNIA
DEPARTMENT OF TRANSPORTATION

CONCRETE PAVEMENT-DOWEL BAR DETAILS

NO SCALE

RSP P10 DATED MAY 15, 2009 SUPERSEDES STANDARD PLAN P10 DATED MAY 1, 2006 - PAGE 124 OF THE STANDARD PLANS BOOK DATED MAY 2006.

REVISED STANDARD PLAN RSP P10

2006 REVISED STANDARD PLAN RSP P10

5-8-09

DIST	COUNTY	ROUTE	POST MILES TOTAL PROJECT	SHEET NO.	TOTAL SHEETS
07	LA	105,110	R7.4,13.8	23	28

William K. Farnbach
REGISTERED CIVIL ENGINEER

June 5, 2009
PLANS APPROVAL DATE

REGISTERED PROFESSIONAL ENGINEER William K. Farnbach No. C49042 Exp. 9-30-10 CIVIL STATE OF CALIFORNIA

The State of California or its officers or agents shall not be responsible for the accuracy or completeness of electronic copies of this plan sheet.

To accompany plans dated 2-22-11

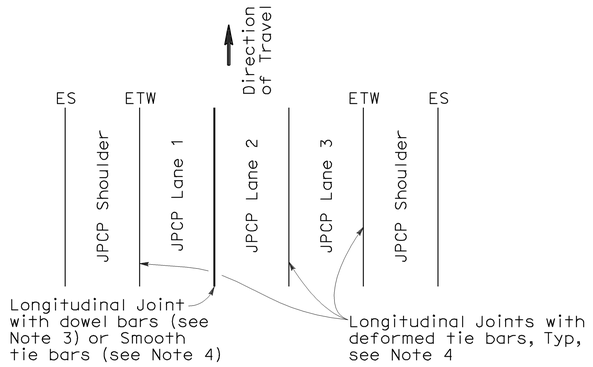

3 LANES WITH TIED CONCRETE SHOULDERS
PLAN

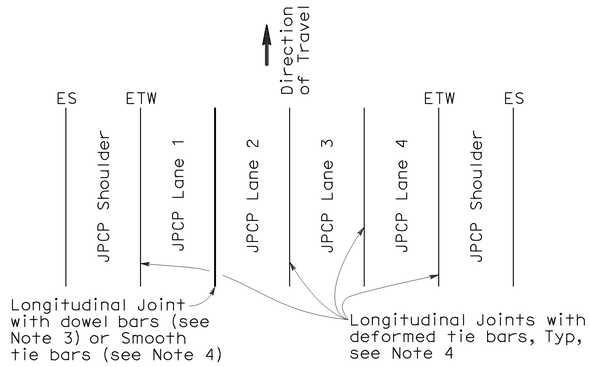

4 LANES WITH TIED CONCRETE SHOULDERS
PLAN

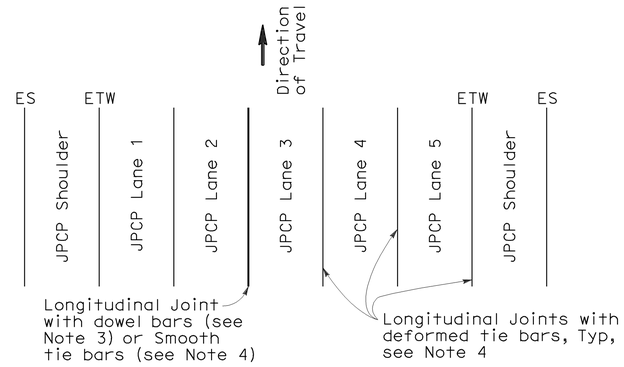

5 LANES WITH TIED CONCRETE SHOULDERS
PLAN

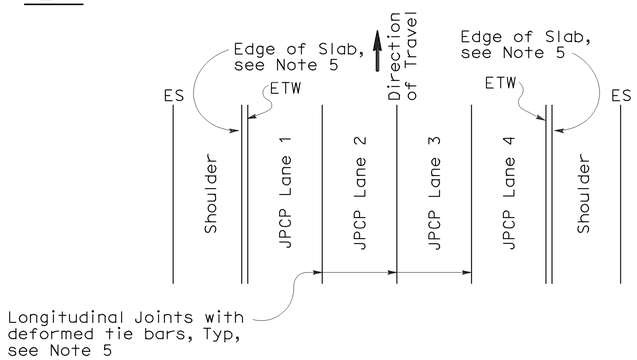

4 LANES OR LESS WITH WIDENED SLAB
PLAN

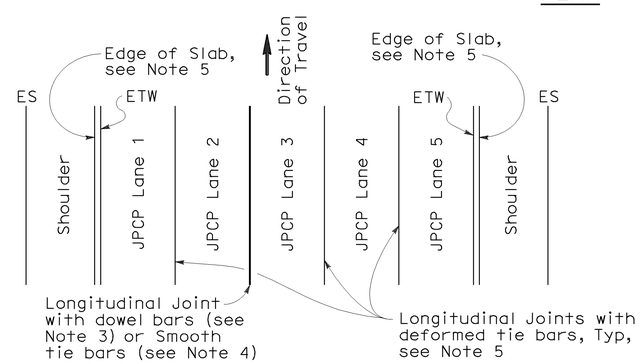

5 LANES WITH WIDENED SLAB
PLAN

NEW CONSTRUCTION

Location of Longitudinal Joints
(For JPCP)

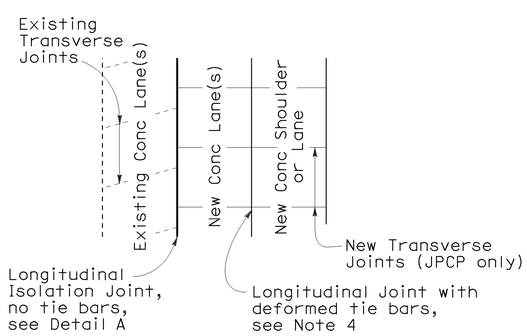

CASE 1
PLAN

Transverse Joints do not align between new and existing

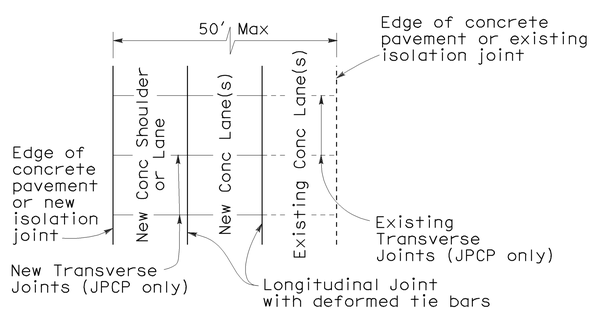

CASE 2
PLAN

Transverse Joints align between new and existing

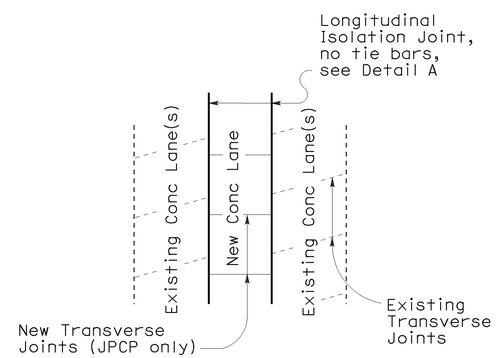

CASE 3 (INTERIOR LANE REPLACEMENT)
PLAN

Transverse Joints do not align between new and existing

LANE/SHOULDER ADDITION OR RECONSTRUCTION

(For JPCP and CRCP)

NOTES:

1. Where Lean Concrete Base is not used as base material, the joint filler material used for the longitudinal isolation joint shall only extend to the bottom of the new concrete slab. See Detail A.
2. Use 5/8" ±1/16" dimension for silicone sealant.
3. See Revised Standard Plan RSP P10 for longitudinal joint with dowel bars.
4. See Revised Standard Plan RSP P1.
5. See Revised Standard Plan RSP P2.

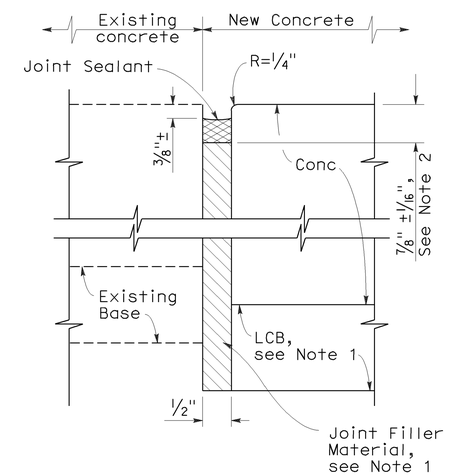

DETAIL A

ISOLATION JOINT

STATE OF CALIFORNIA
DEPARTMENT OF TRANSPORTATION

CONCRETE PAVEMENT-LANE SCHEMATICS AND ISOLATION JOINT DETAIL

NO SCALE

RSP P18 DATED JUNE 5, 2009 SUPERSEDES RSP P18 DATED MAY 15, 2009, RSP P18 DATED NOVEMBER 17, 2006 AND STANDARD PLAN P18 DATED MAY 1, 2006 - PAGE 127 OF THE STANDARD PLANS BOOK DATED MAY 2006.

REVISED STANDARD PLAN RSP P18

2006 REVISED STANDARD PLAN RSP P18

5-14-09

DIST	COUNTY	ROUTE	POST MILES TOTAL PROJECT	SHEET NO.	TOTAL SHEETS
07	LA	105,110	R7.4,13.8	24	28

William K. Farnbach
REGISTERED CIVIL ENGINEER

May 15, 2009
PLANS APPROVAL DATE

REGISTERED PROFESSIONAL ENGINEER William K. Farnbach No. C49042 Exp. 9-30-10 CIVIL STATE OF CALIFORNIA

The State of California or its officers or agents shall not be responsible for the accuracy or completeness of electronic copies of this plan sheet.

To accompany plans dated 2-22-11

2006 REVISED STANDARD PLAN RSP P20

NOTE:

1. Tie bars, dowel bars, and reinforcement are not shown in joint seal details, see Revised Standard Plans RSP P1, RSP P3, RSP P10, RSP P35, RSP P45, or RSP P46 as applicable.

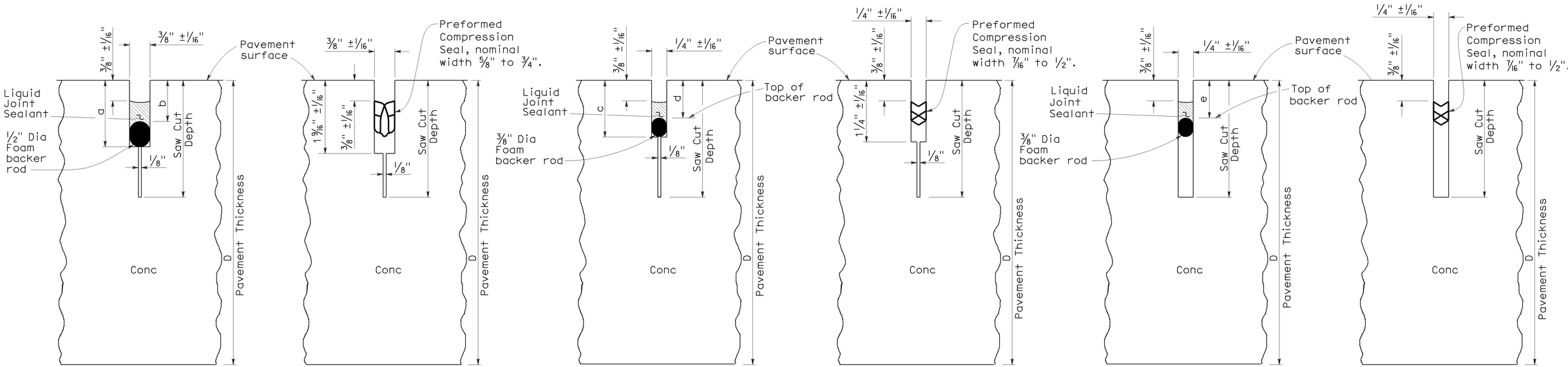

LIQUID SEALANT — COMPRESSION SEAL

TYPE A1

Transverse Contraction Joints

LIQUID SEALANT — COMPRESSION SEAL

TYPE A2

Longitudinal Contraction Joints

LIQUID SEALANT — COMPRESSION SEAL

TYPE B

Longitudinal or Transverse Contraction Joint

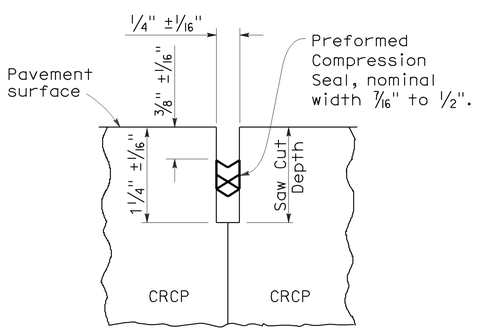

COMPRESSION SEAL

TYPE C

Transverse and Longitudinal Construction Joints (For CRCP)

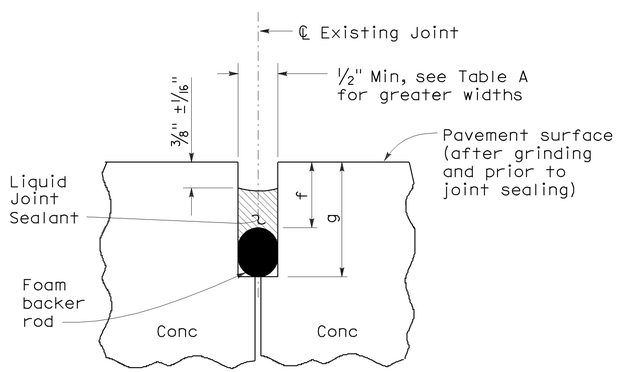

LIQUID SEALANT

TYPE R

Retrofit Transverse and Longitudinal Joints

LIQUID SEALANT RESERVOIR DEPTH

LIQUID SEALANT MATERIAL	3/8" Joint Width Type A1		1/4" Joint Width Type A2		1/4" Joint Width Type B
	DIMENSION		DIMENSION		DIMENSION
	a	b	c	d	e
SILCONE	1" ±1/16"	5/8" ±1/16"	15/16" ±1/16"	9/16" ±1/16"	9/16" ±1/16"
ASPHALT RUBBER	1 3/16" ±1/16"	3/4" ±1/16"	1 1/16" ±1/16"	11/16" ±1/16"	11/16" ±1/16"

TABLE A (TYPE R JOINT)

Sawn Joint Width	Backer Rod Diameter ± 1/16"	DIMENSION "f"	DIMENSION "g"
1"	1 5/16"	7/8"	2 1/4"
7/8"	1 3/16"	13/16"	2"
3/4"	1"	3/4"	1 3/4"
5/8"	7/8"	11/16"	1 1/2"
1/2"	11/16"	5/8"	1 1/4"

STATE OF CALIFORNIA
DEPARTMENT OF TRANSPORTATION

CONCRETE PAVEMENT-JOINT DETAILS

NO SCALE

RSP P20 DATED MAY 15, 2009 SUPERSEDES STANDARD PLAN P20
DATED MAY 1, 2006 - PAGE 128 OF THE STANDARD PLANS BOOK DATED MAY 2006.

REVISED STANDARD PLAN RSP P20

5-8-09

DIST	COUNTY	ROUTE	POST MILES TOTAL PROJECT	SHEET NO.	TOTAL SHEETS
07	LA	105,110	R7.4,13.8	25	28

Randell D. Hiatt
REGISTERED CIVIL ENGINEER

June 6, 2008
PLANS APPROVAL DATE

REGISTERED PROFESSIONAL ENGINEER
Randell D. Hiatt
No. C50200
Exp. 6-30-09
CIVIL
STATE OF CALIFORNIA

The State of California or its officers or agents shall not be responsible for the accuracy or completeness of electronic copies of this plan sheet.

To accompany plans dated 2-22-11

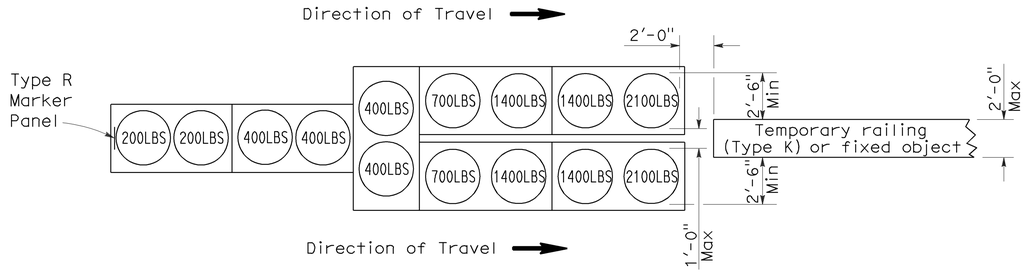

ARRAY 'TU14'

Approach speed 45 mph or more

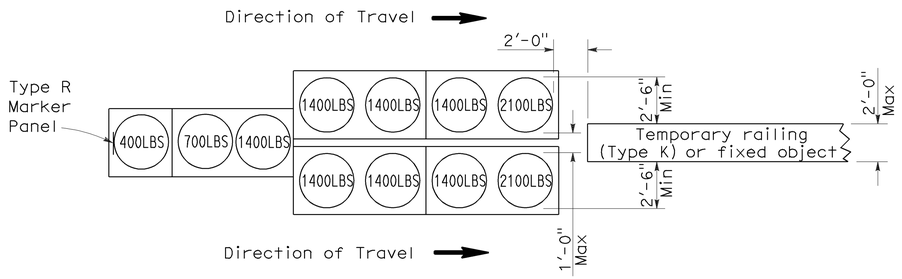

ARRAY 'TU11'

Approach speed less than 45 mph

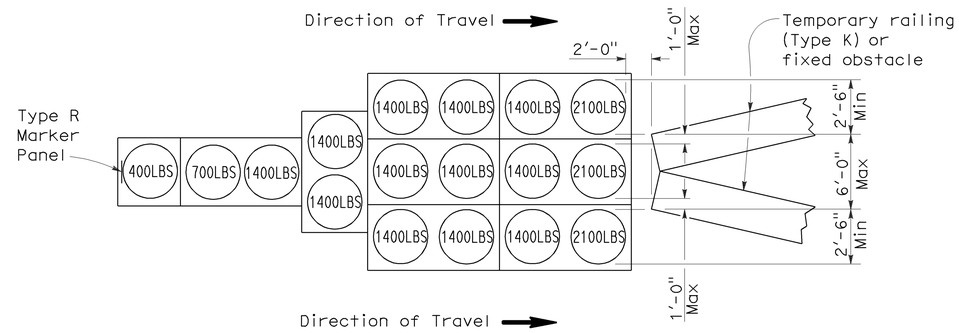

ARRAY 'TU17'

Approach speed less than 45 mph

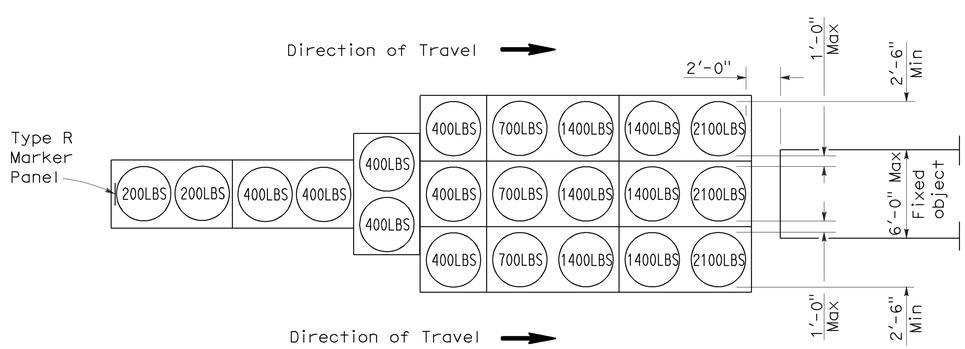

ARRAY 'TU21'

Approach speed 45 mph or more

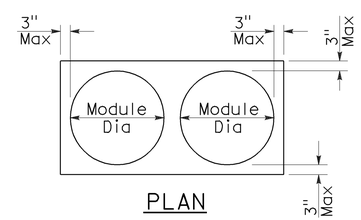

PLAN

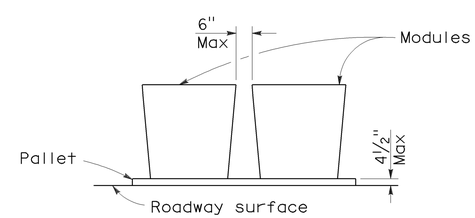

ELEVATION

CRASH CUSHION PALLET DETAIL

See Note 7

NOTES:

1. (XXX) Indicates sand filled module location and weight of sand in pounds for each module. Module spacing is based on the greater diameter of the module.
2. All sand weights are nominal.
3. Temporary crash cushion arrays shall not encroach on the traveled way.
4. Place the top of Type R marker panel 1" below the module lid.
5. Refer to Standard Plan A73B for marker details.
6. Approach speeds indicated conform to NCHRP 350 Report criteria.
7. Use of pallets is optional.

STATE OF CALIFORNIA
DEPARTMENT OF TRANSPORTATION

TEMPORARY CRASH CUSHION, SAND FILLED (UNIDIRECTIONAL)

NO SCALE

RSP T1A DATED JUNE 6, 2008 SUPERSEDES STANDARD PLAN T1A
DATED MAY 1, 2006 - PAGE 211 OF THE STANDARD PLANS BOOK DATED MAY 2006.

REVISED STANDARD PLAN RSP T1A

2006 REVISED STANDARD PLAN RSP T1A

DIST	COUNTY	ROUTE	POST MILES TOTAL PROJECT	SHEET NO.	TOTAL SHEETS
07	LA	105,110	R7.4,13.8	26	28

Randell D. Hiatt
REGISTERED CIVIL ENGINEER

June 6, 2008
PLANS APPROVAL DATE

REGISTERED PROFESSIONAL ENGINEER
Randell D. Hiatt
No. C50200
Exp. 6-30-09
CIVIL
STATE OF CALIFORNIA

The State of California or its officers or agents shall not be responsible for the accuracy or completeness of electronic copies of this plan sheet.

To accompany plans dated 2-22-11

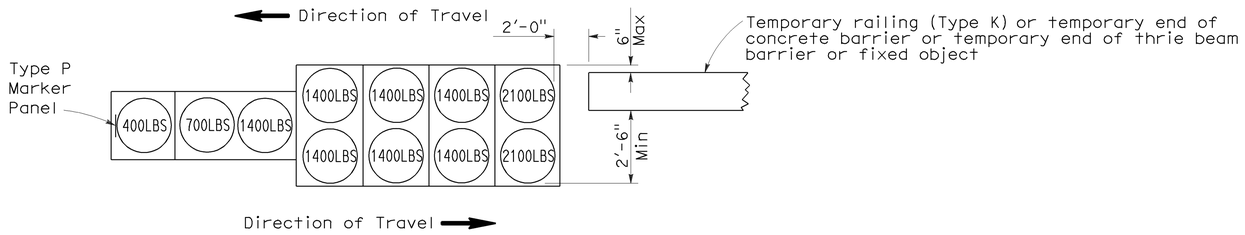

ARRAY 'TB11'

Approach speed less than 45 mph

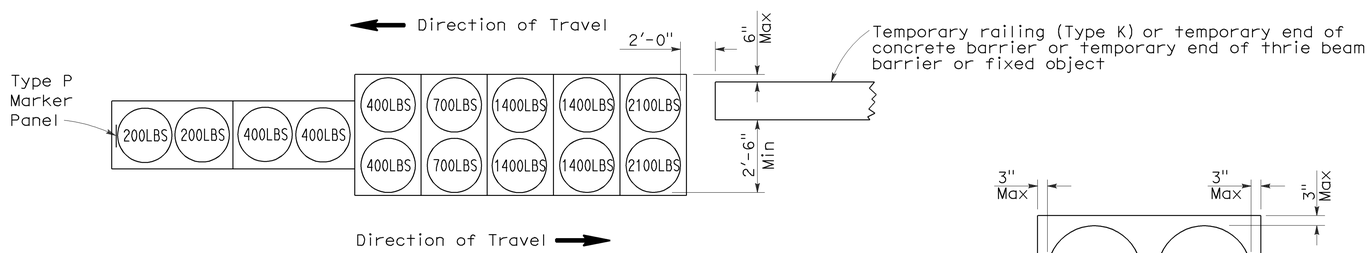

ARRAY 'TB14'

Approach speed 45 mph or more

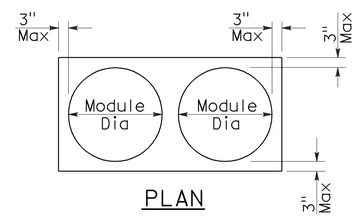

PLAN

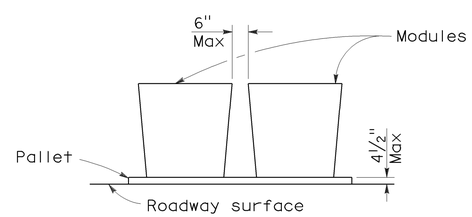

ELEVATION

CRASH CUSHION PALLET DETAIL

See Note 7

NOTES:

1. (XXX) Indicates sand filled module location and weight of sand in pounds for each module. Module spacing is based on the greater diameter of the module.
2. All sand weights are nominal.
3. Temporary crash cushion arrays shall not encroach on the traveled way.
4. Place the Type P marker panel so that the bottom of the panel rests upon the pallet.
5. Refer to Standard Plan A73B for marker details.
6. Approach speeds indicated conform to NCHRP 350 Report criteria.
7. Use of pallets is optional.

STATE OF CALIFORNIA
DEPARTMENT OF TRANSPORTATION

TEMPORARY CRASH CUSHION, SAND FILLED (BIDIRECTIONAL)

NO SCALE

RSP T1B DATED JUNE 6, 2008 SUPERSEDES STANDARD PLAN T1B
DATED MAY 1, 2006 - PAGE 212 OF THE STANDARD PLANS BOOK DATED MAY 2006.

REVISED STANDARD PLAN RSP T1B

2006 REVISED STANDARD PLAN RSP T1B

5-15-08

DIST	COUNTY	ROUTE	POST MILES TOTAL PROJECT	SHEET NO.	TOTAL SHEETS
07	LA	105,110	R7.4,13.8	27	28

Randell D. Hiatt
REGISTERED CIVIL ENGINEER

June 6, 2008
PLANS APPROVAL DATE

REGISTERED PROFESSIONAL ENGINEER
Randell D. Hiatt
No. C50200
Exp. 6-30-09
CIVIL
STATE OF CALIFORNIA

The State of California or its officers or agents shall not be responsible for the accuracy or completeness of electronic copies of this plan sheet.

To accompany plans dated 2-22-11

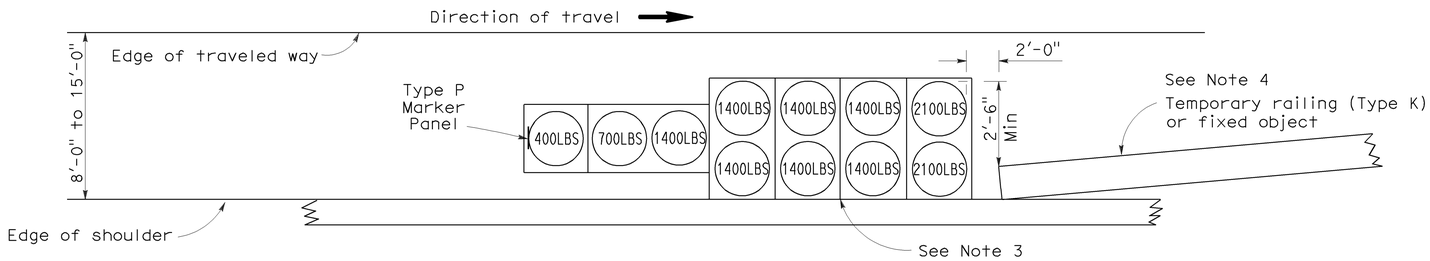

ARRAY 'TS11'

Approach speed less than 45 mph
See Note 9

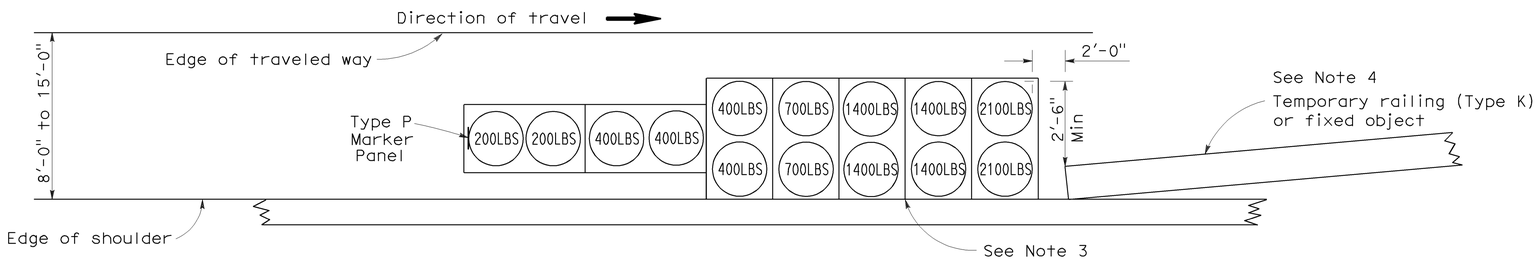

ARRAY 'TS14'

Approach speed 45 mph or more
See Note 9

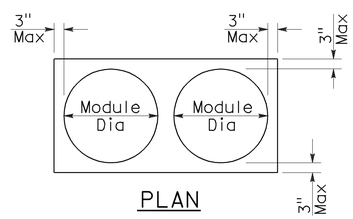

PLAN

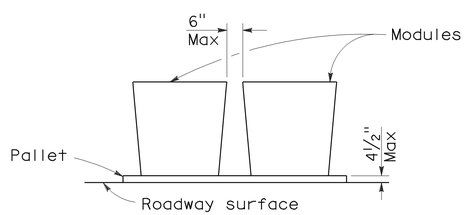

ELEVATION

CRASH CUSHION PALLET DETAIL

See Note 11

NOTES:

1. (XXX) Indicates sand filled module location and weight of sand in pounds for each module. Module spacing is based on the greater diameter of the module.
2. All sand weights are nominal.
3. The temporary crash cushion arrays shown on this plan shall be used only in locations where there will be traffic on one side of the temporary crash cushion array.
4. If the fixed object or approach end of the temporary railing is less than 15'-0" from the edge of traveled way, a temporary crash cushion is required in a construction or work zone.
5. Temporary crash cushion arrays shall not encroach on the traveled way.
6. Arrays for median shoulders shall conform to details shown on this plan for outside shoulders.
7. Place the Type P marker panel so that the bottom of the panel rests upon the pallet and faces traffic.
8. Refer to Standard Plan A73B for marker details.
9. For shoulder widths less than 8'-0", appropriate approved crash cushion protection, other than sand filled modules, shall be provided at fixed objects and at approach ends of temporary railing. The specific type of crash cushion shall be as shown on the project plans or as specified in the Special Provisions, or if not shown on the project plans or specified in the Special Provisions, shall be as approved by the Engineer.
10. Approach speeds indicated conform to NCHRP 350 Report criteria.
11. Use of pallets is optional.

STATE OF CALIFORNIA
DEPARTMENT OF TRANSPORTATION

TEMPORARY CRASH CUSHION, SAND FILLED (SHOULDER INSTALLATIONS)

NO SCALE

RSP T2 DATED JUNE 6, 2008 SUPERSEDES STANDARD PLAN T2
DATED MAY 1, 2006 - PAGE 213 OF THE STANDARD PLANS BOOK DATED MAY 2006.

REVISED STANDARD PLAN RSP T2

2006 REVISED STANDARD PLAN RSP T2

5-15-08

DIST	COUNTY	ROUTE	POST MILES TOTAL PROJECT	SHEET NO.	TOTAL SHEETS
07	LA	105,110	R7.4,13.8	28	28

LICENSED LANDSCAPE ARCHITECT

August 15, 2008
PLANS APPROVAL DATE

The State of California or its officers or agents shall not be responsible for the accuracy or completeness of electronic copies of this plan sheet.

LICENSED LANDSCAPE ARCHITECT — Robert B. Schott 3635 — Signature — 11-04-08 Renewal Date — 08-11-08 Date — STATE OF CALIFORNIA

To accompany plans dated 2-22-11

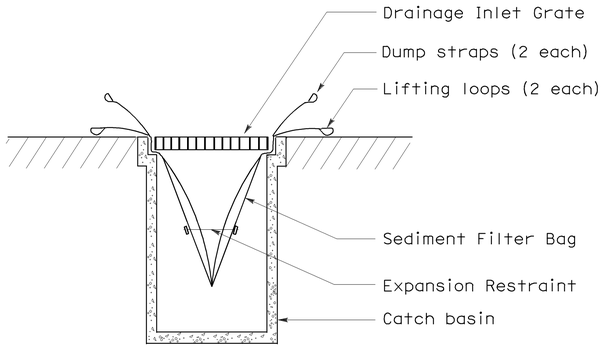

SECTION B-B

SEDIMENT FILTER BAG DETAIL

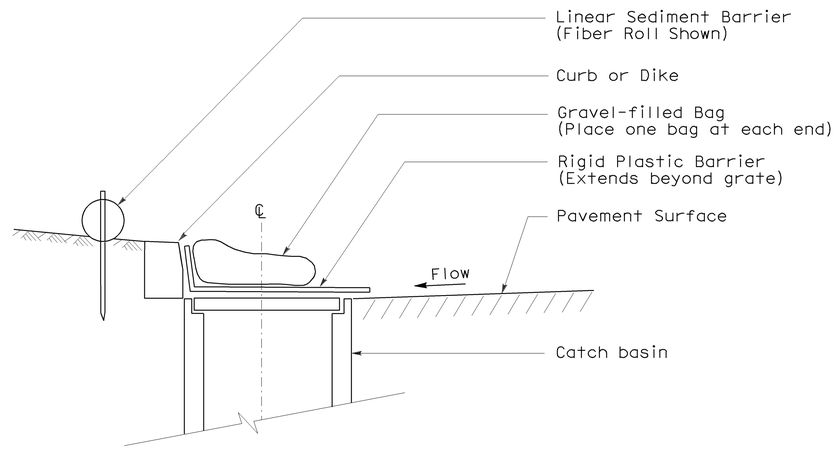

SECTION

TEMPORARY DRAINAGE INLET PROTECTION (TYPE 6A) (CATCH BASIN WITH GRATE)

NOTES:

1. See Standard Plan T51 for Temporary Silt Fence.
2. Dimensions may vary to fit field conditions.

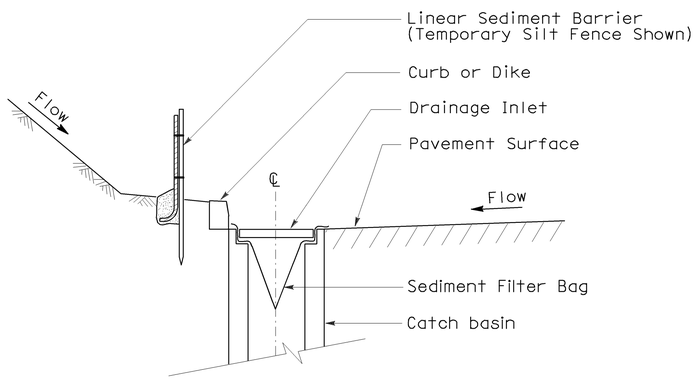

SECTION A-A

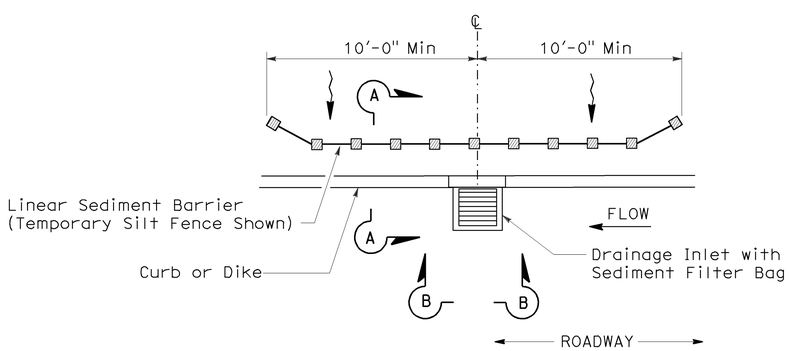

PLAN

TEMPORARY DRAINAGE INLET PROTECTION (TYPE 5) (SEDIMENT FILTER BAG)

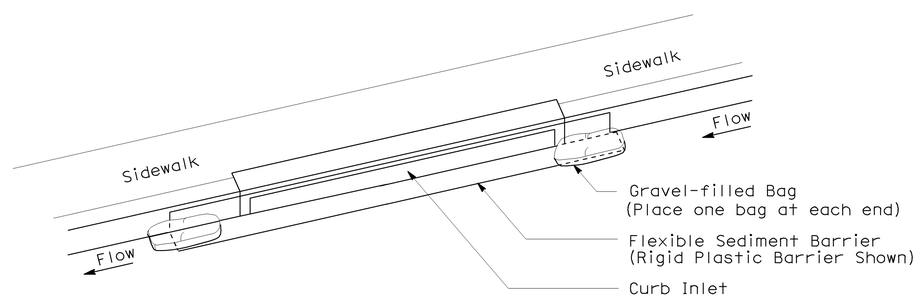

PERSPECTIVE

TEMPORARY DRAINAGE INLET PROTECTION (TYPE 6B) (CURB INLET WITHOUT GRATE)

STATE OF CALIFORNIA
DEPARTMENT OF TRANSPORTATION

TEMPORARY WATER POLLUTION CONTROL DETAILS (TEMPORARY DRAINAGE INLET PROTECTION)

NO SCALE

NSP T64 DATED AUGUST 15, 2008 SUPPLEMENTS THE STANDARD PLANS BOOK DATED MAY 2006.

NEW STANDARD PLAN NSP T64

2006 NEW STANDARD PLAN NSP T64