Dist	COUNTY	ROUTE	POST MILES TOTAL PROJECT	SHEET No.	TOTAL SHEETS
07	LA	105,405	R2.5, 20.5/R21.1	101	265

Medardo de la Cruz 6-15-16
REGISTERED CIVIL ENGINEER DATE

7-1-16
PLANS APPROVAL DATE

REGISTERED PROFESSIONAL ENGINEER MEDARDO DE LA CRUZ No. C61848 Exp. 6-30-17 CIVIL STATE OF CALIFORNIA

THE STATE OF CALIFORNIA OR ITS OFFICERS OR AGENTS SHALL NOT BE RESPONSIBLE FOR THE ACCURACY OR COMPLETENESS OF SCANNED COPIES OF THIS PLAN SHEET.

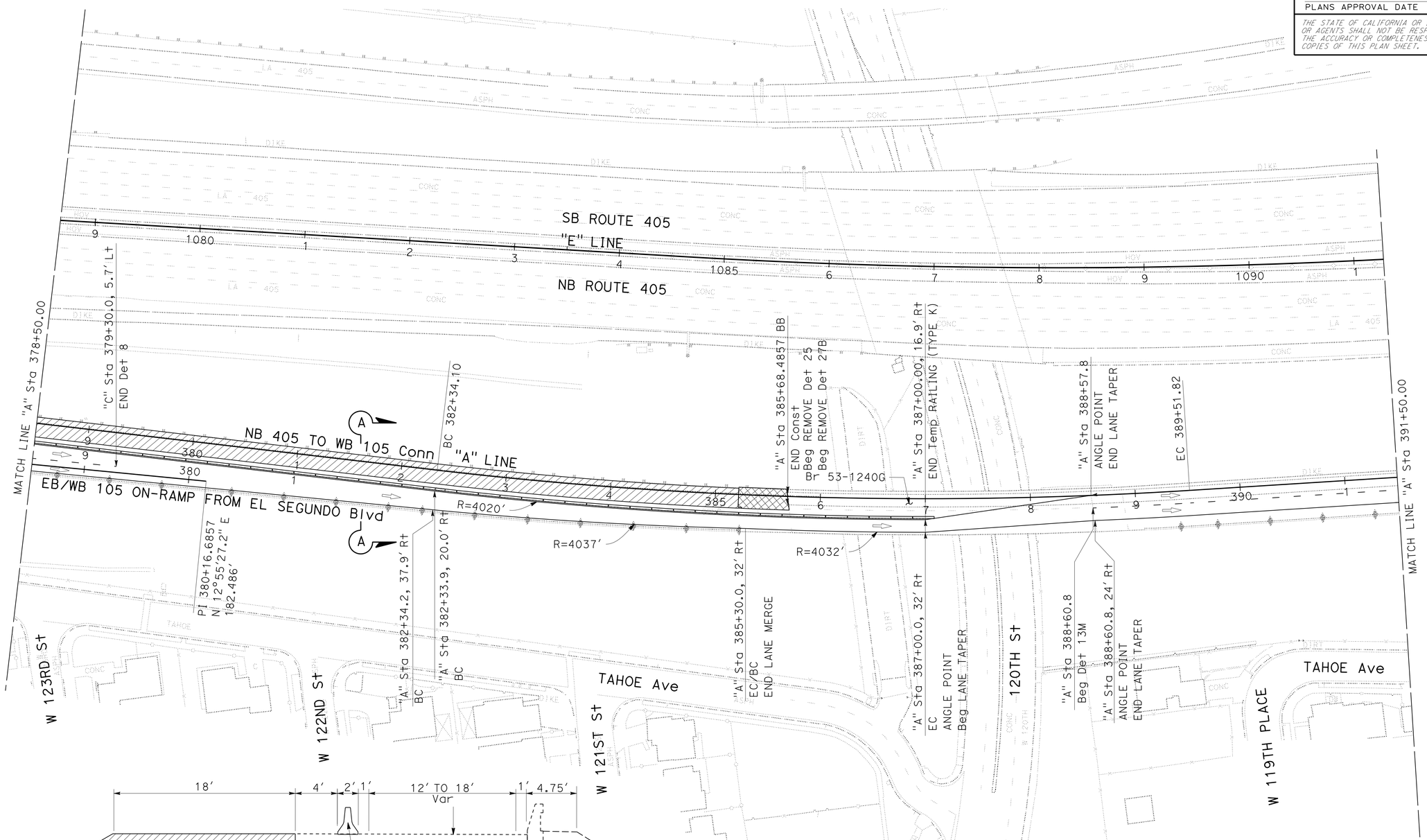

SECTION A-A

STAGE CONSTRUCTION AND TRAFFIC HANDLING PLAN

STAGE 3

SCALE: 1" = 50'

SC-20

APPROVED FOR STAGE CONSTRUCTION AND TRAFFIC HANDLING WORK ONLY

STATE OF CALIFORNIA - DEPARTMENT OF TRANSPORTATION
Caltrans®
DESIGN

FUNCTIONAL SUPERVISOR: ASADOUR TERTERIAN
CALCULATED-DESIGNED BY: MARCELO DE LA FUENTE
CHECKED BY: MEDARDO DE LA CRUZ
REVISED BY
DATE REVISED

LAST REVISION 09-24-15
DATE PLOTTED => 27-JUL-2016
TIME PLOTTED => 12:52

Dist	COUNTY	ROUTE	POST MILES TOTAL PROJECT	SHEET No.	TOTAL SHEETS
07	LA	105,405	R2.5, 20.5/R21.1	102	265

Medardo de la Cruz 6-15-16
REGISTERED CIVIL ENGINEER DATE

7-1-16
PLANS APPROVAL DATE

REGISTERED PROFESSIONAL ENGINEER
MEDARDO DE LA CRUZ
No. C61848
Exp. 6-30-17
CIVIL
STATE OF CALIFORNIA

THE STATE OF CALIFORNIA OR ITS OFFICERS OR AGENTS SHALL NOT BE RESPONSIBLE FOR THE ACCURACY OR COMPLETENESS OF SCANNED COPIES OF THIS PLAN SHEET.

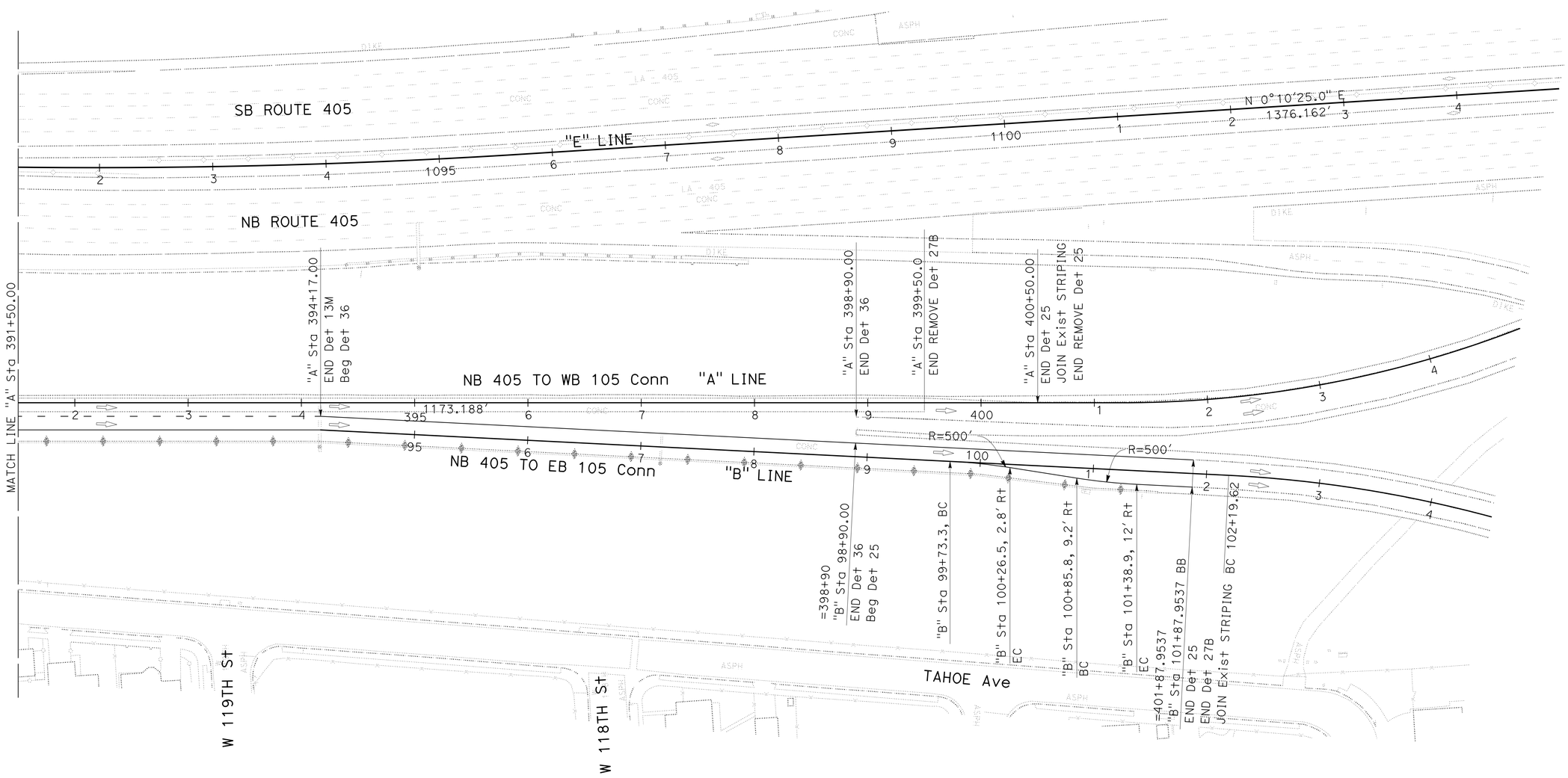

APPROVED FOR STAGE CONSTRUCTION AND TRAFFIC HANDLING WORK ONLY

STAGE CONSTRUCTION AND TRAFFIC HANDLING PLAN

STAGE 3

SCALE: 1" = 50'

SC-21

STATE OF CALIFORNIA - DEPARTMENT OF TRANSPORTATION
Caltrans
DESIGN

FUNCTIONAL SUPERVISOR: ASADOUR TERTERIAN
CALCULATED-DESIGNED BY: MARCELO DE LA FUENTE
CHECKED BY: MEDARDO DE LA CRUZ
REVISED BY
DATE REVISED

LAST REVISION 09-24-15
DATE PLOTTED => 27-JUL-2016
TIME PLOTTED => 12:52

Dist	COUNTY	ROUTE	POST MILES TOTAL PROJECT	SHEET No.	TOTAL SHEETS
07	LA	105,405	R2.5, 20.5/R21.1	103	265

Medardo de la Cruz 6-15-16
REGISTERED CIVIL ENGINEER DATE

7-1-16
PLANS APPROVAL DATE

REGISTERED PROFESSIONAL ENGINEER
MEDARDO DE LA CRUZ
No. C61848
Exp. 6-30-17
CIVIL
STATE OF CALIFORNIA

THE STATE OF CALIFORNIA OR ITS OFFICERS OR AGENTS SHALL NOT BE RESPONSIBLE FOR THE ACCURACY OR COMPLETENESS OF SCANNED COPIES OF THIS PLAN SHEET.

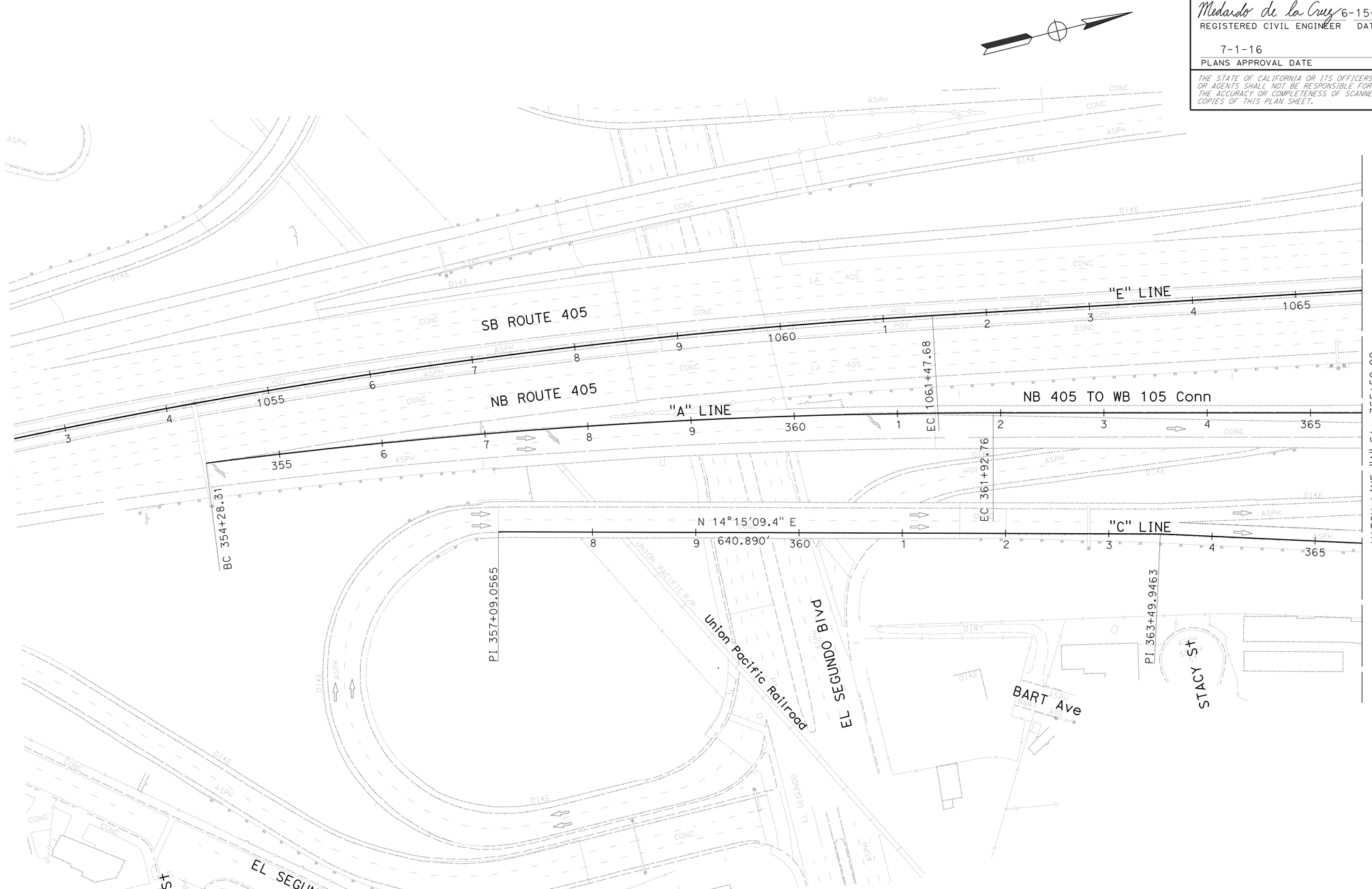

STAGE CONSTRUCTION AND TRAFFIC HANDLING PLAN

STAGE 4

SCALE: 1" = 50'

APPROVED FOR STAGE CONSTRUCTION AND TRAFFIC HANDLING WORK ONLY

SC-22

STATE OF CALIFORNIA - DEPARTMENT OF TRANSPORTATION
Caltrans
DESIGN

FUNCTIONAL SUPERVISOR: ASADOUR TERTERIAN
CALCULATED-DESIGNED BY: MARCELO DE LA FUENTE
CHECKED BY: MEDARDO DE LA CRUZ
REVISED BY
DATE REVISED

LAST REVISION 09-24-15
DATE PLOTTED => 27-JUL-2016
TIME PLOTTED => 12:52

Dist	COUNTY	ROUTE	POST MILES TOTAL PROJECT	SHEET No.	TOTAL SHEETS
07	LA	105,405	R2.5,20.5/R21.1	104	265

Medardo de la Cruz 6-15-16
REGISTERED CIVIL ENGINEER DATE

7-1-16
PLANS APPROVAL DATE

REGISTERED PROFESSIONAL ENGINEER
MEDARDO DE LA CRUZ
No. C61848
Exp. 6-30-17
CIVIL
STATE OF CALIFORNIA

THE STATE OF CALIFORNIA OR ITS OFFICERS OR AGENTS SHALL NOT BE RESPONSIBLE FOR THE ACCURACY OR COMPLETENESS OF SCANNED COPIES OF THIS PLAN SHEET.

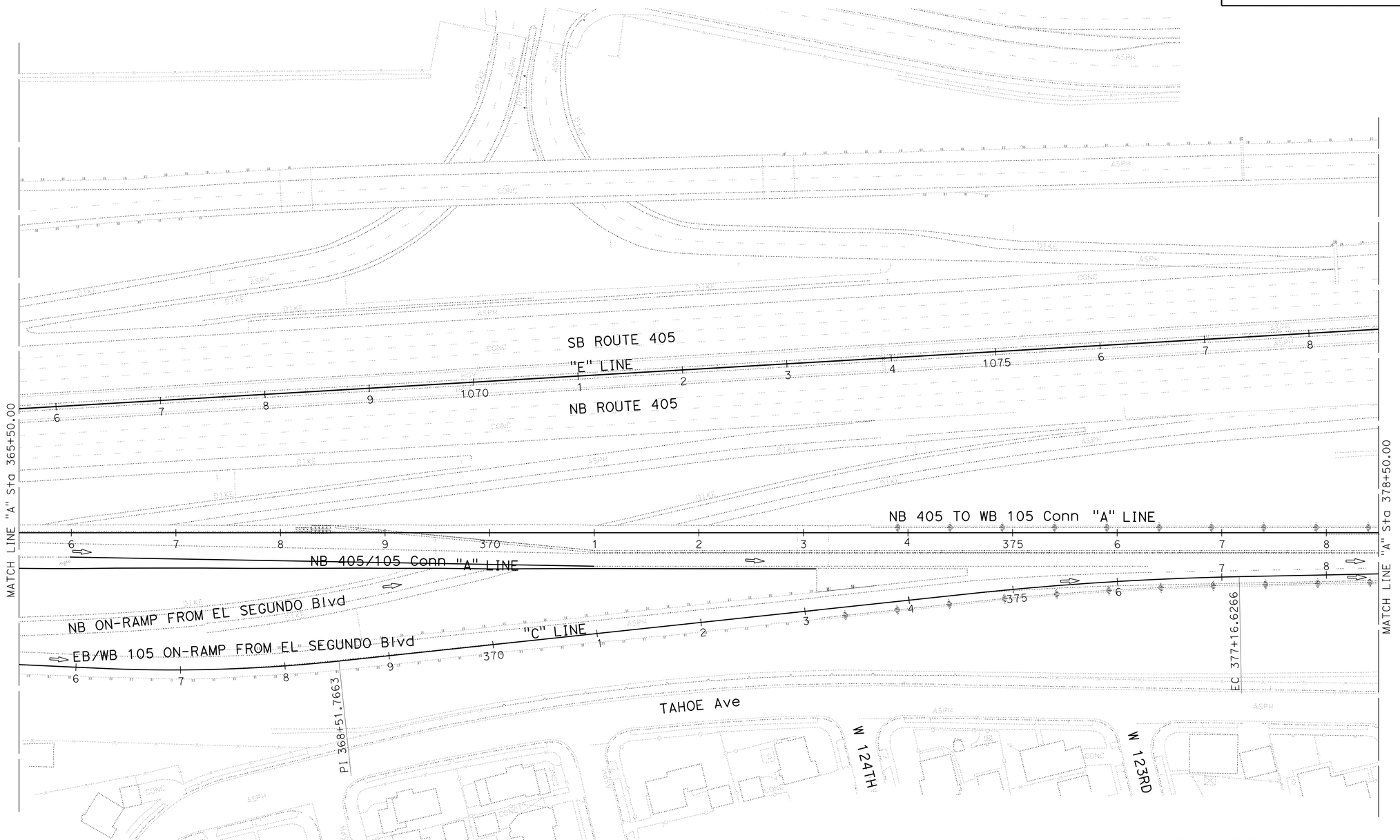

STAGE CONSTRUCTION AND TRAFFIC HANDLING PLAN

STAGE 4

SCALE: 1" = 50'

SC-23

APPROVED FOR STAGE CONSTRUCTION AND TRAFFIC HANDLING WORK ONLY

STATE OF CALIFORNIA - DEPARTMENT OF TRANSPORTATION
Caltrans
DESIGN

FUNCTIONAL SUPERVISOR: ASADOUR TERTERIAN
CALCULATED-DESIGNED BY: MARCELO DE LA FUENTE
CHECKED BY: MEDARDO DE LA CRUZ
REVISED BY
DATE REVISED

LAST REVISION 09-24-15
DATE PLOTTED => 27-JUL-2016
TIME PLOTTED => 12:52

Dist	COUNTY	ROUTE	POST MILES TOTAL PROJECT	SHEET No.	TOTAL SHEETS
07	LA	105,405	R2.5,20.5/R21.1	105	265

Medardo de la Cruz 6-15-16
REGISTERED CIVIL ENGINEER DATE

7-1-16
PLANS APPROVAL DATE

REGISTERED PROFESSIONAL ENGINEER MEDARDO DE LA CRUZ No. C61848 Exp. 6-30-17 CIVIL STATE OF CALIFORNIA

THE STATE OF CALIFORNIA OR ITS OFFICERS OR AGENTS SHALL NOT BE RESPONSIBLE FOR THE ACCURACY OR COMPLETENESS OF SCANNED COPIES OF THIS PLAN SHEET.

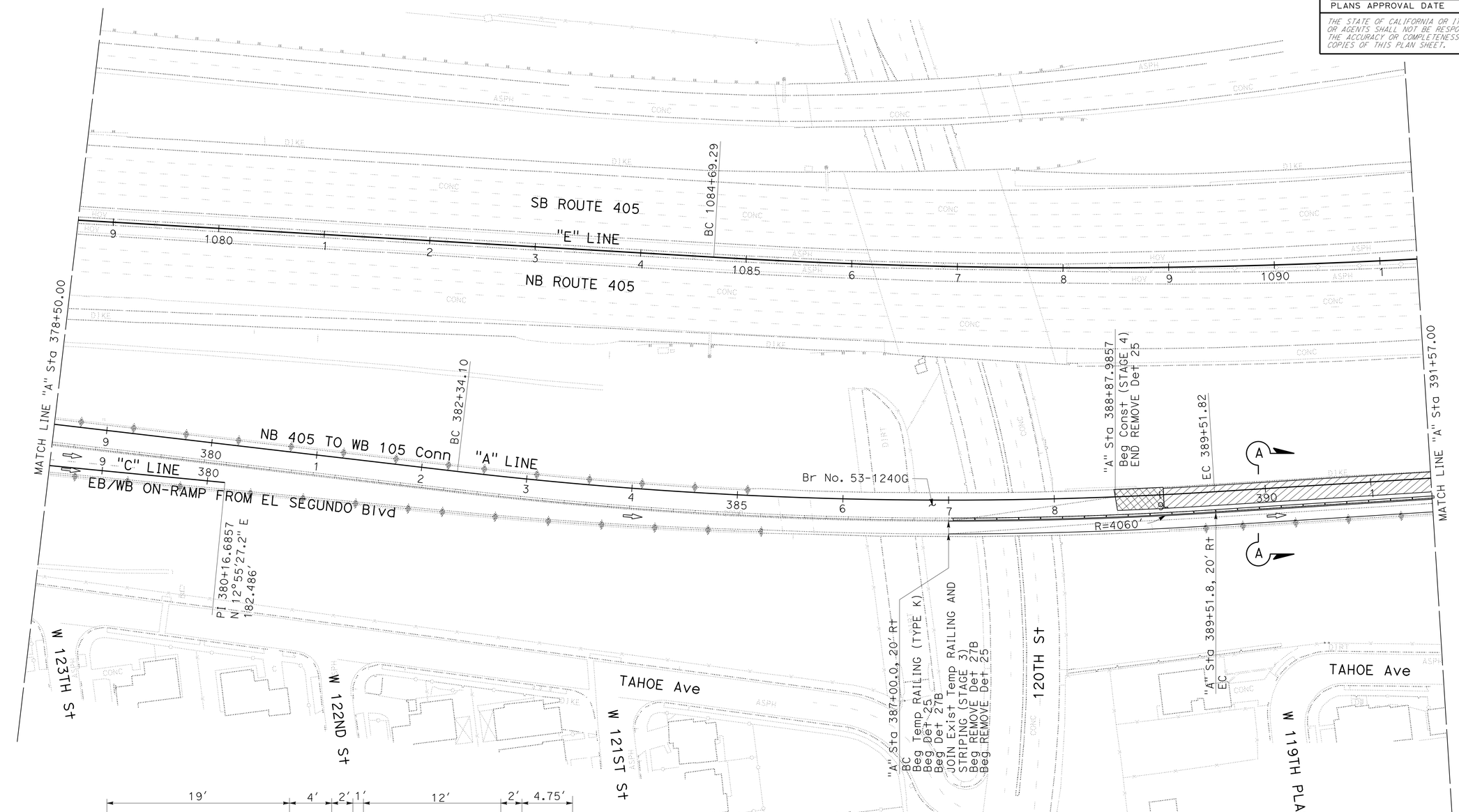

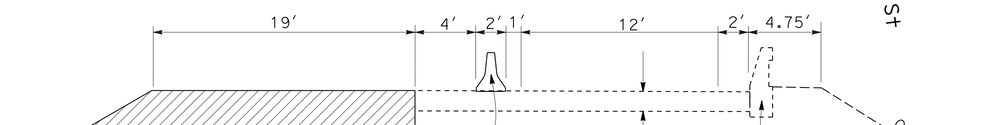

SECTION A-A

APPROVED FOR STAGE CONSTRUCTION AND TRAFFIC HANDLING WORK ONLY

STAGE CONSTRUCTION AND TRAFFIC HANDLING PLAN

STAGE 4

SCALE: 1" = 50'

SC-24

STATE OF CALIFORNIA - DEPARTMENT OF TRANSPORTATION
Caltrans
DESIGN

FUNCTIONAL SUPERVISOR: ASADOUR TERTERIAN
CALCULATED-DESIGNED BY: MARCELO DE LA FUENTE
CHECKED BY: MEDARDO DE LA CRUZ
REVISED BY
DATE REVISED

LAST REVISION 09-24-15
DATE PLOTTED => 27-JUL-2016
TIME PLOTTED => 12:52

Dist	COUNTY	ROUTE	POST MILES TOTAL PROJECT	SHEET No.	TOTAL SHEETS
07	LA	105,405	R2.5,20.5/R21.1	106	265

Medardo de la Cruz 6-15-16
REGISTERED CIVIL ENGINEER DATE

7-1-16
PLANS APPROVAL DATE

REGISTERED PROFESSIONAL ENGINEER MEDARDO DE LA CRUZ No. C61848 Exp. 6-30-17 CIVIL STATE OF CALIFORNIA

THE STATE OF CALIFORNIA OR ITS OFFICERS OR AGENTS SHALL NOT BE RESPONSIBLE FOR THE ACCURACY OR COMPLETENESS OF SCANNED COPIES OF THIS PLAN SHEET.

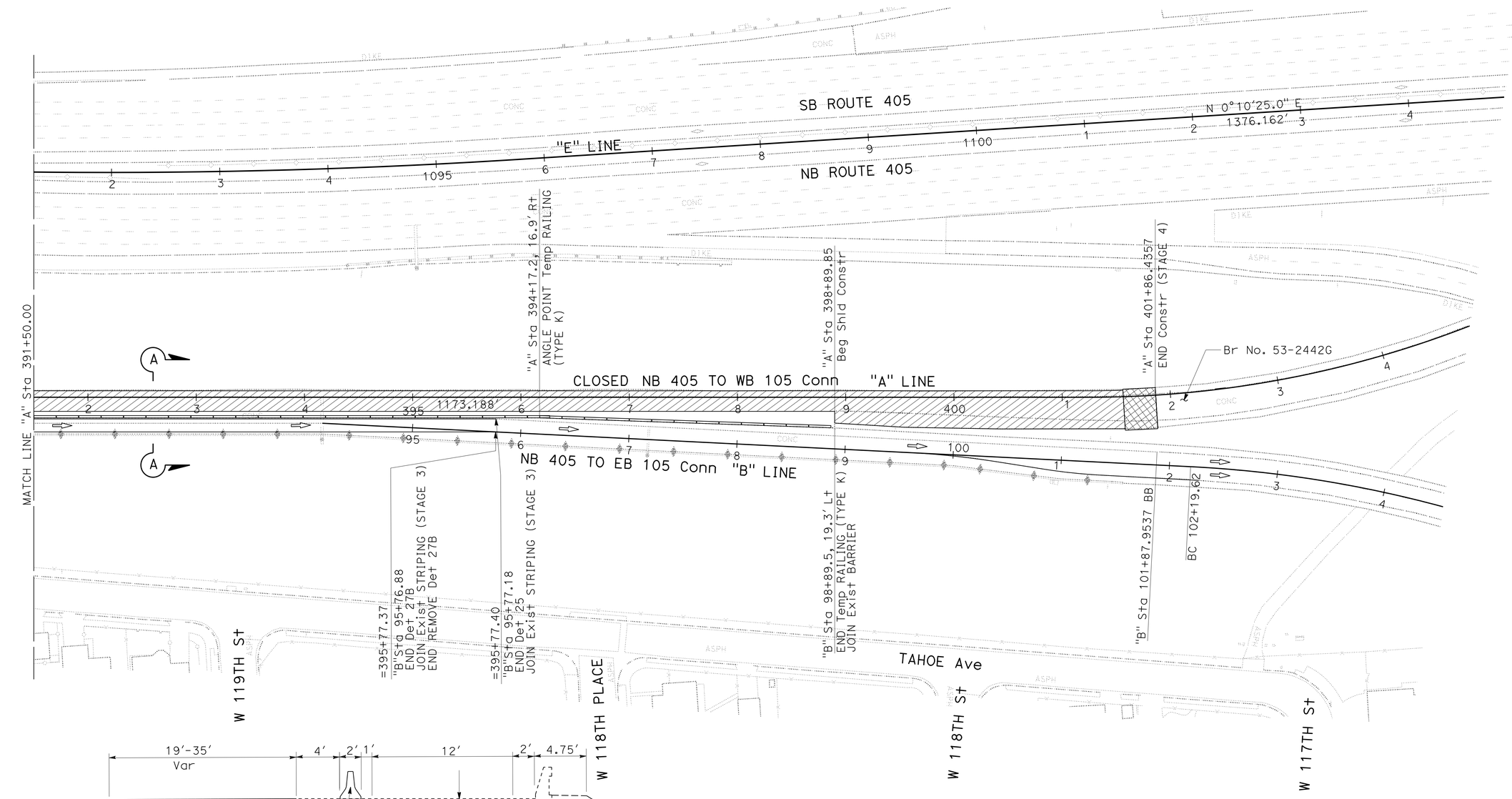

SECTION A-A

APPROVED FOR STAGE CONSTRUCTION AND TRAFFIC HANDLING WORK ONLY

STAGE CONSTRUCTION AND TRAFFIC HANDLING PLAN

STAGE 4

SCALE: 1" = 50'

SC-25

STATE OF CALIFORNIA - DEPARTMENT OF TRANSPORTATION
Caltrans®
DESIGN

FUNCTIONAL SUPERVISOR: ASADOUR TERTERIAN
CALCULATED-DESIGNED BY: MARCELO DE LA FUENTE
CHECKED BY: MEDARDO DE LA CRUZ
REVISED BY
DATE REVISED

LAST REVISION 09-24-15
DATE PLOTTED => 27-JUL-2016
TIME PLOTTED => 12:52

Dist	COUNTY	ROUTE	POST MILES TOTAL PROJECT	SHEET No.	TOTAL SHEETS
07	LA	105,405	R2.5,20.5/R21.1	107	265

Medardo de la Cruz 6-15-16
REGISTERED CIVIL ENGINEER DATE

7-1-16
PLANS APPROVAL DATE

REGISTERED PROFESSIONAL ENGINEER MEDARDO DE LA CRUZ No. C61848 Exp. 6-30-17 CIVIL STATE OF CALIFORNIA

THE STATE OF CALIFORNIA OR ITS OFFICERS OR AGENTS SHALL NOT BE RESPONSIBLE FOR THE ACCURACY OR COMPLETENESS OF SCANNED COPIES OF THIS PLAN SHEET.

STAGE CONSTRUCTION AND TRAFFIC HANDLING PAVEMENT AND REMOVAL QUANTITIES

Const STAGE	SHEET No.	Sta LINE	Beg Sta	END Sta	TEMPORARY PAVEMENT MARKING (PAINT)	TEMPORARY TRAFFIC STRIPE (PAINT)								PAVEMENT MARKER (NON-REFLECTIVE)	PAVEMENT MARKER (RETROREFLECTIVE)		TEMPORARY RAILING (TYPE K)	TEMPORARY CRASH CUSHION MODULE	REMOVE THERMOPLASTIC TRAFFIC STRIPE				REMOVE YELLOW THERMOPLASTIC TRAFFIC STRIPE (HAZARDOUS WASTE)		REMOVE PAVEMENT MARKER		
						4"							8"						4"			8"	4"				
					TYPE VI ARROW	Det 8	Det 9	Det 13M	Det 24	Det 25	Det 27B	Det 36	Det 38	TYPE A	TYPE G	TYPE H			Det 13M	Det 12	Det 27B	Det 42	Det 25	Det 25A	TYPE A (NON-REFLECTIVE)	TYPE G (RETROREFLECTIVE)	TYPE H (RETROREFLECTIVE)
					SQFT	LF	LF	LF	LF	LF	LF	LF	LF	EA	EA	EA	LF	EA	LF	LF	LF	LF	LF	LF	EA	EA	EA
	SC-6	"A"			126																						
		"C"			126												400	14									
		"C"	357+10.06	363+68.05							660								165						60	15	
		"A"	364+00.00	365+50.00							150								38						20	5	
	SC-7	"A"	365+50.00	378+50.00							1,300																
STAGE 1		"C"	365+50.00	367+25.40													180										
		"A"	369+00.00	378+50.00													960	14									
		"A"	370+00.00	378+50.00						850						19							850				19
		"A"	365+50.00	371+00.00															138						52	13	
	SC-8	"A"	378+50.00	387+00.00							850						860										
		"A"	378+50.00	388+20.00						970						22							970				22
	SC-11	"A"	387+00.00	391+50.00						450	450					11	460						450				11
STAGE 2	SC-12	"A"	391+50.00	400+50.00						900						22							900				20
		"A"	391+50.00	400+50.00							900						900										
STAGE 2 PHASE 1	SC-13	"B"	117+95.44	124+72.90													680										
	SC-14	"D"	113+20.00	123+00.00							1,960																
		"D"	113+20.00	118+74.69																	555						
		"D"	118+37.61	118+64.30																	27						
		"D"	113+20.00	123+00.00																245						22	
STAGE 2 PHASE 2		"D"	118+64.30	123+00.00																109						11	
		"D"	122+04.32	123+00.00																	96						
	SC-15	"D"	123+00.00	132+00.00							1,800																
		"D"	123+00.00	123+73.64																19						4	
		"D"	123+00.00	132+00.00																225						20	
		"D"	123+00.00	130+75.39																	776						
	SC-16	"D"	113+20.00	123+00.00					980																		
		"D"	113+20.00	123+00.00							980																
		"D"	113+20.00	123+00.00																			980				
STAGE 2 PHASE 3		"D"	113+20.00	118+95.00																		288				26	
		"D"	118+95.00	123+00.00																	405			1,620			69
	SC-17	"D"	123+00.00	132+00.00					900												900						
		"D"	123+00.00	132+00.00							900																
		"D"	123+00.00	132+00.00																			900				
		"D"	123+00.00	132+00.00																				3,600			152
SUB TOTAL					252				1,880	3,170	9,950					74	4,440	28	341	598	2,759	288	5,050	5,220	132	116	293
TOTAL					SEE SHEET SCQ-2, FOR TOTAL																						

STAGE CONSTRUCTION AND TRAFFIC HANDLING QUANTITIES

SCQ-1

STATE OF CALIFORNIA - DEPARTMENT OF TRANSPORTATION
Caltrans DESIGN

FUNCTIONAL SUPERVISOR: ASADOUR TERTERIAN
CALCULATED-DESIGNED BY: ABDULRAUF SETH
CHECKED BY: MEDARDO DE LA CRUZ
REVISED BY
DATE REVISED

LAST REVISION 09-22-15
DATE PLOTTED => 27-JUL-2016
TIME PLOTTED => 12:52

Dist	COUNTY	ROUTE	POST MILES TOTAL PROJECT	SHEET No.	TOTAL SHEETS
07	LA	105,405	R2.5,20.5/R21.1	108	265

Medardo de la Cruz 6-15-16
REGISTERED CIVIL ENGINEER DATE

7-1-16
PLANS APPROVAL DATE

REGISTERED PROFESSIONAL ENGINEER MEDARDO DE LA CRUZ No. C61848 Exp. 6-30-17 CIVIL STATE OF CALIFORNIA

THE STATE OF CALIFORNIA OR ITS OFFICERS OR AGENTS SHALL NOT BE RESPONSIBLE FOR THE ACCURACY OR COMPLETENESS OF SCANNED COPIES OF THIS PLAN SHEET.

STAGE CONSTRUCTION AND TRAFFIC HANDLING PAVEMENT AND REMOVAL QUANTITIES

Const STAGE	SHEET No.	Sta LINE	Beg Sta	END Sta	TEMPORARY PAVEMENT MARKING (PAINT)	TEMPORARY TRAFFIC STRIPE (PAINT) 4"							8"	PAVEMENT MARKER (NON-REFLECTIVE) *	PAVEMENT MARKER (RETROREFLECTIVE) *		TEMPORARY RAILING (TYPE K)	TEMPORARY CRASH CUSHION MODULE	REMOVE THERMOPLASTIC TRAFFIC STRIPE * 4"			8"	REMOVE YELLOW THERMOPLASTIC TRAFFIC STRIPE (HAZARDOUS WASTE) * 4"		REMOVE PAVEMENT MARKER		
					TYPE VI ARROW	Det 8	Det 9	Det 13M	Det 24	Det 25	Det 27B	Det 36	Det 38	TYPE A	TYPE G	TYPE H			Det 13M	Det 12	Det 27B	Det 42	Det 25	Det 25A	TYPE A (NON-REFLECTIVE)	TYPE G (RETROREFLECTIVE)	TYPE H (RETROREFLECTIVE)
					SQFT	LF	LF	LF	LF	LF	LF	LF	LF	EA	EA	EA	LF	EA	LF	LF	LF	LF	LF	LF	EA	EA	EA
	SC-18	"A"			126																							
		"C"	357+09.10	363+68.40			660								15						660							
		"A"	364+00.00	365+50.00																	150							
		"A"	360+50.00	365+50.00						500						12												
	SC-19	"A"	370+00.00	372+94.19																			295				8	
		"A"	365+50.00	372+94.18																	744							
		"A"	365+50.00	378+50.00						1,300						29												
		"C"	373+13.00	373+77.16						64						3												
		"A"	366+00.00	376+10.00							1,011																	
		"A"	368+50.00	378+50.00													1,000	14										
		"C"	373+77.16	376+11.13									2(233)		11													
		"A"	373+13.00	378+50.00							537																	
STAGE 3		"C"	376+11.13	378+50.00		239																						
	SC-20	"A"	378+50.00	391+50.00						1,300	1,300					29												
		"A"	385+68.49	391+50.00																	581		581				14	
		"A"	388+60.80	391+50.00				289						8	32													
		"A"	378+50.00	387+00.00													860											
		"A"	378+50.00	379+30.00		80																						
	SC-21	"A"	391+50.00	394+17.00				267						7	28													
		"A"	394+17.00	398+90.00								473				11												
		"A"	391+50.00	400+50.00						900						20							900				20	
		"A"	391+50.00	394+17.00							267																	
		"B"	94+17.00	101+87.95							780																	
		"A"	391+50.00	399+50.00																	800							
		"B"	98+90.00	101+87.95						298						8												
	SC-24	"A"	387+00.00	388+87.99																			180				5	
		"A"	387+00.00	391+50.00						450	450					11	460				450							
	SC-25	"A"	391+50.00	394+16.67						267	267						280				267							
STAGE 4		"B"	94+16.67	98+89.50													480											
		"A"	395+77.29	398+90.00																								
		"B"	94+16.67	95+76.88							161										161							
		"B"	94+16.67	95+77.18						161						5												
SUB TOTAL					126	319	660	556		5,240	4,773	473	466	15	86	128	3,080	14			3,813		1,956				47
FROM SCQ-1					252				1,880	3,170	9,950					74	4,440	28	341	598	2,759	288	5,050	5,220	132	116	293
TOTAL					378	27,487								15	288		7,520	42	7,799				12,226		588		

STAGE CONSTRUCTION AND TRAFFIC HANDLING QUANTITIES

SCQ-2

STATE OF CALIFORNIA - DEPARTMENT OF TRANSPORTATION
Caltrans
DESIGN

FUNCTIONAL SUPERVISOR: ASADOUR TERTERIAN
CALCULATED-DESIGNED BY: ABDULRAUF SETH
CHECKED BY: MEDARDO DE LA CRUZ
REVISED BY
DATE REVISED

LAST REVISION 09-22-15
DATE PLOTTED => 27-JUL-2016
TIME PLOTTED => 12:52

Dist	COUNTY	ROUTE	POST MILES TOTAL PROJECT	SHEET No.	TOTAL SHEETS
07	LA	105,405	R2.5,20.5/R21.1	109	265

Medardo de la Cruz 6-15-16
REGISTERED CIVIL ENGINEER DATE

7-1-16
PLANS APPROVAL DATE

REGISTERED PROFESSIONAL ENGINEER
MEDARDO DE LA CRUZ
No. C61848
Exp. 6-30-17
CIVIL
STATE OF CALIFORNIA

THE STATE OF CALIFORNIA OR ITS OFFICERS OR AGENTS SHALL NOT BE RESPONSIBLE FOR THE ACCURACY OR COMPLETENESS OF SCANNED COPIES OF THIS PLAN SHEET.

NOTE:
(N) NOT SEPARATE PAY ITEM, FOR INFORMATION ONLY.

TEMPORARY ROADSIDE SIGN QUANTITIES

STAGE	SHEET No.	TEMPORARY ROADSIDE SIGN (N)				
		C31A (CA) (48" x 48")	W4-2 (R) (48" x 48")	W4-2 (L) (48" x 48")	W20-5 (R) (48" x 48")	W20-5 (L) (48" x 48")
		EA	EA	EA	EA	EA
1	SC-6			2	2	
	SC-7	1				
3	SC-18		1			1
	SC-19	1				
TOTAL		2	1	2	2	1

SUMMARY OF QUANTITIES
TRAFFIC HANDLING QUANTITIES

SCQ-3

REVISED BY | DATE REVISED
ABDULRAUF SETH | MEDARDO DE LA CRUZ
CALCULATED-DESIGNED BY | CHECKED BY
FUNCTIONAL SUPERVISOR
ASADOUR TERTERIAN
STATE OF CALIFORNIA - DEPARTMENT OF TRANSPORTATION
Caltrans®
DESIGN

LAST REVISION 09-22-15 | DATE PLOTTED => 27-JUL-2016 TIME PLOTTED => 12:52

Dist	COUNTY	ROUTE	POST MILES TOTAL PROJECT	SHEET No.	TOTAL SHEETS
07	LA	105,405	R2.5,20.5/R21.1	110	265

REGISTERED CIVIL ENGINEER 6-10-16 DATE

7-1-16
PLANS APPROVAL DATE

REGISTERED PROFESSIONAL ENGINEER SHANGJIA HORN No. 51846 Exp. 6-30-18 CIVIL STATE OF CALIFORNIA

THE STATE OF CALIFORNIA OR ITS OFFICERS OR AGENTS SHALL NOT BE RESPONSIBLE FOR THE ACCURACY OR COMPLETENESS OF SCANNED COPIES OF THIS PLAN SHEET.

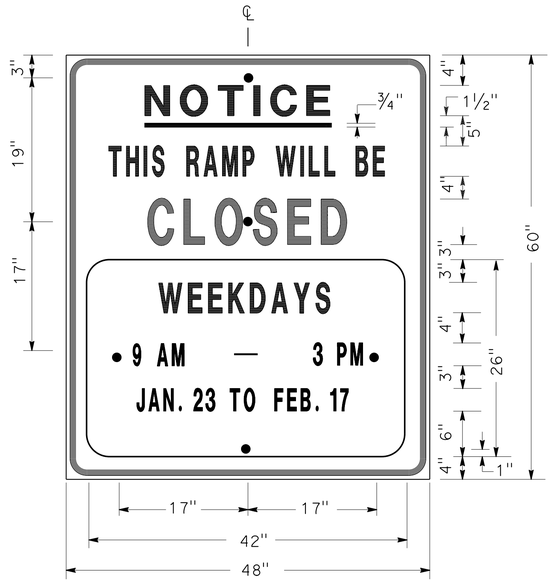

SIGN SP-1

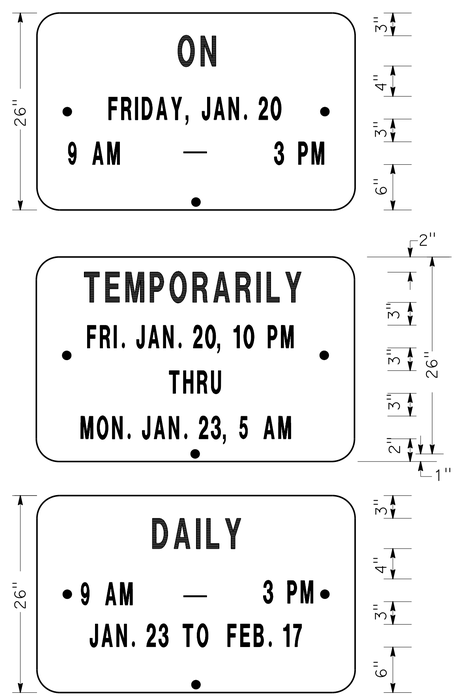

ALTERNATE OVERLAY PANELS (TYPICAL)

SPECIAL ADVANCE NOTICE PUBLICITY SIGN

NOTES: SIGN SP-1

1. LETTERS AND BORDER MUST BE BLACK ON REFLECTORIZED ORANGE BACKGROUND.
2. BOLT HOLES MUST BE 3/8" DIAMETER.
3. BASE MATERIAL MUST BE ALUMINUM (MINIMUM 0.06").
4. SIGNS MUST BE MOUNTED WITH BOTTOMS OF SIGNS A MINIMUM OF 7' ABOVE GROUND.

SIZE	BORDER WIDTH	MARGIN WIDTH	LETTER SIZE					CORNER RADIUS
			LINE 1	LINE 2*	LINE 3	LINE 4	LINE 5, 6, & 7*	
48"x60"	1 1/4"	3/4"	4E	4D	6E	4D		3"
42"x26"	OVERLAY						3D	1 1/2"
* CONDENSED SPACING IF NECESSARY								

SIGN SP-4

NOTES: SIGN SP-4

1. LETTERS - 6" SERIES C.
2. LETTERS AND BORDER MUST BE BLACK ON REFLECTORIZED WHITE BACKGROUND.
3. BOLT HOLES MUST BE 3/8" DIAMETER.
4. BASE MATERIAL MUST BE ALUMINUM (MINIMUM 0.06").
5. SIGNS MUST BE PLACED AT RAMP ENTRANCES IN ADDITION TO SIGNS POSTED IN ACCORDANCE WITH REVISED STANDARD PLAN RSP T14.

SPECIAL SIGN FOR ENTRANCE RAMP CLOSURES

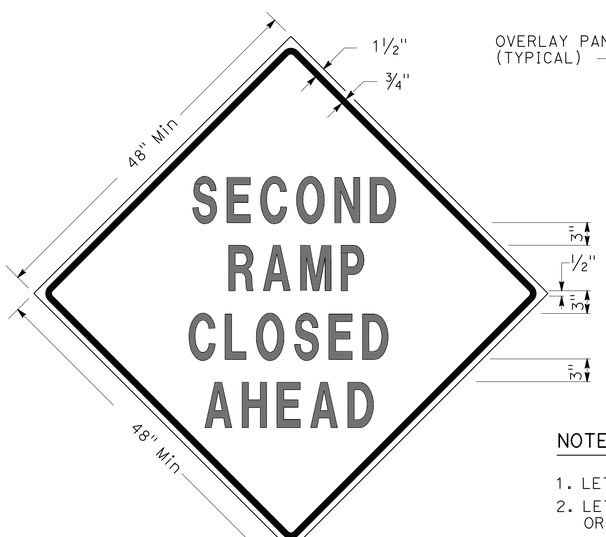

SIGN SP-3

SIGN SP-5

NOTES: SIGNS SP-3 & SP-5

1. LETTERS - 6" SERIES D.
2. LETTERS AND BORDER MUST BE BLACK ON REFLECTORIZED ORANGE BACKGROUND.
3. BOLT HOLES MUST BE 3/8" DIAMETER.
4. BASE MATERIAL MUST BE ALUMINUM (MINIMUM 0.06").
5. SIGNS MUST BE MOUNTED WITH BOTTOMS OF SIGNS A MINIMUM OF 7' ABOVE GROUND.
6. SIGN SP-5 MUST BE USED IF THE OFF-RAMP TO BE CLOSED FOLLOWS A FREEWAY OFF-CONNECTOR.

SPECIAL SIGNS FOR EXIT RAMP CLOSURES

TRAFFIC HANDLING DETAILS
TRAFFIC CONTROL SYSTEM FOR RAMP CLOSURES, DETOUR SIGNS, AND MISCELLANEOUS DETAILS
SHEET 1 OF 2

NO SCALE

THD-1

STATE OF CALIFORNIA - DEPARTMENT OF TRANSPORTATION
Caltrans DTM

FUNCTIONAL SUPERVISOR: ALBERT K YU
CALCULATED-DESIGNED BY: ALBERT K YU
CHECKED BY: JOCELYN C CHIANG
REVISED BY: JC
DATE REVISED: 2/14

LAST REVISION 00-00-00
DATE PLOTTED => 27-JUL-2016
TIME PLOTTED => 12:52

Dist	COUNTY	ROUTE	POST MILES TOTAL PROJECT	SHEET No.	TOTAL SHEETS
07	LA	105,405	R2.5,20.5/R21.1	111	265

REGISTERED CIVIL ENGINEER 6-10-16 DATE

7-1-16
PLANS APPROVAL DATE

REGISTERED PROFESSIONAL ENGINEER SHANGJIA HORN No. 51846 Exp. 6-30-18 CIVIL STATE OF CALIFORNIA

THE STATE OF CALIFORNIA OR ITS OFFICERS OR AGENTS SHALL NOT BE RESPONSIBLE FOR THE ACCURACY OR COMPLETENESS OF SCANNED COPIES OF THIS PLAN SHEET.

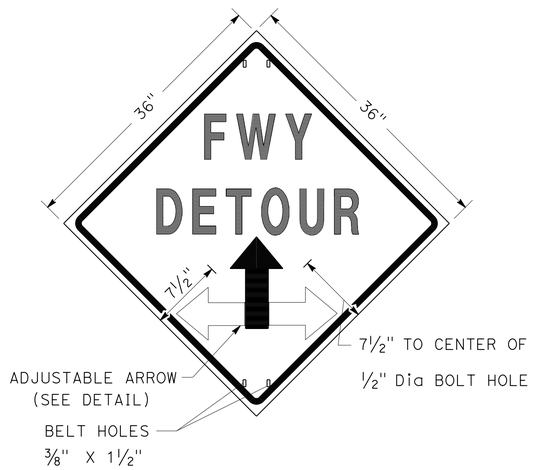

SIGN SP-2

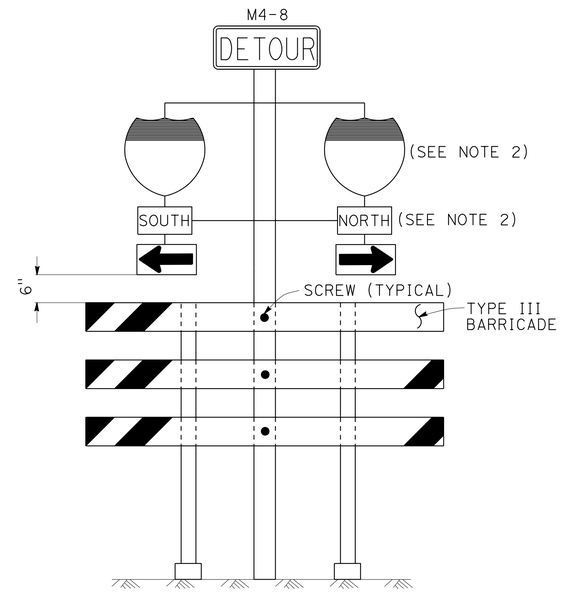

SIGN SP-6 (SEE NOTE 1)

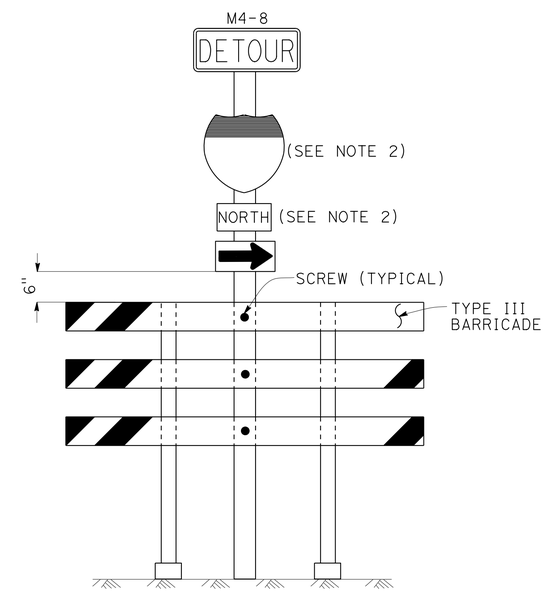

SIGN SP-7 (SEE NOTE 1)

NOTES: SIGN SP-2

1. LETTERS - 6" SERIES E.
2. LETTERS, BORDER AND ARROW - BLACK ON RETROREFLECTORIZED ORANGE BACKGROUND.
3. BASE MATERIAL FOR SIGNS AND ARROWS MUST BE ALUMINUM (MINIMUM 0.06").
4. BELTS (LUGGAGE STRAPS) MUST BE 1" WIDE BY 48" LONG, MADE OF COTTON OR POLYPROPYLENE WEB MATERIAL.
5. SIGNS MUST BE MOUNTED WITH BOTTOMS OF SIGNS A MINIMUM OF 7' ABOVE GROUND EXCEPT AS OTHERWISE SHOWN ON OTHER TRAFFIC HANDLING DETAILS PLANS.

NOTES: SIGNS SP-6 & SP-7

1. IN LIEU OF PLACING SIGNS ON TYPE III BARRICADES, SIGNS, INCLUDING POSTS, MAY BE PLACED INTO THE GROUND OR FASTENED ONTO ELECTROLIERS.
2. USE APPROPRIATE ROUTE MARKER [G26-2(CA), G27-2(CA), G28-2(CA)] AND CARDINAL DIRECTION [NORTH (M3-1), SOUTH (M3-3), EAST (M3-2), WEST (M3-4)].

SPECIAL PORTABLE FREEWAY DETOUR SIGNS

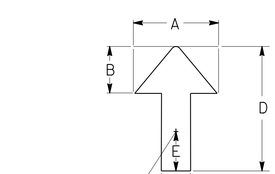

DIMENSIONS				
A	B	C	D	E
6"	3"	2"	8"	1"

ADJUSTABLE ARROW DETAIL

ABBREVIATION:

(CA) CALIFORNIA CODE

TRAFFIC HANDLING DETAILS

TRAFFIC CONTROL SYSTEM FOR RAMP CLOSURES, DETOUR SIGNS, AND MISCELLANEOUS DETAILS

SHEET 2 OF 2

NO SCALE

THD-2

STATE OF CALIFORNIA - DEPARTMENT OF TRANSPORTATION
Caltrans DTM

FUNCTIONAL SUPERVISOR: ALBERT K YU
CALCULATED-DESIGNED BY: JOCELYN C CHIANG
CHECKED BY: ALBERT K YU
REVISED BY: JC
DATE REVISED: 2/14

LAST REVISION: DATE PLOTTED => 27-JUL-2016 TIME PLOTTED => 12:52
00-00-00

Dist	COUNTY	ROUTE	POST MILES TOTAL PROJECT	SHEET No.	TOTAL SHEETS
07	LA	105,405	R2.5,20.5/R21.1	112	265

REGISTERED CIVIL ENGINEER 6-10-16 DATE

7-1-16
PLANS APPROVAL DATE

REGISTERED PROFESSIONAL ENGINEER SHANGJIA HORN No. 51846 Exp. 6-30-18 CIVIL STATE OF CALIFORNIA

THE STATE OF CALIFORNIA OR ITS OFFICERS OR AGENTS SHALL NOT BE RESPONSIBLE FOR THE ACCURACY OR COMPLETENESS OF SCANNED COPIES OF THIS PLAN SHEET.

LEGEND:

- SIGN SP-2
- AND/OR — DESIGNATED DETOUR ROUTE
- DETOUR DIRECTION
- CONTROLLED INTERSECTION

NOTES:

1. SP-2 SIGNS MAY BE STRAPPED ON EXISTING ELECTROLIER, SIGNAL POST OR SIGN POST.
2. SP-2 SIGNS MUST NOT BE INSTALLED ON BARRICADES EXCEPT AS OTHERWISE SHOWN.
3. SIGN LOCATIONS ARE APPROXIMATE. EXACT LOCATIONS WILL BE DETERMINED BY THE ENGINEER.
4. SP-2 SIGNS MUST BE POSTED AT EACH CONTROLLED INTERSECTION (EXCEPT AT COMMERCIAL PROPERTY, RESIDENTIAL COMPLEX OR T-INTERSECTION FROM ONE-WAY STREET) ALONG THE DESIGNATED DETOUR ROUTE.
5. UNLESS OTHERWISE SHOWN ON OTHER THD PLANS, WHEN CONTROLLED INTERSECTIONS ALONG THE DESIGNATED DETOUR ROUTE ARE CLOSELY SPACED, PLACE SP-2 SIGNS AT CONTROLLED INTERSECTIONS AT A DISTANCE NOT TO EXCEED 1/4 MILE FROM THE PRECEDING DETOUR SIGN.
6. EXCEPT AS OTHERWISE SHOWN ON OTHER PLANS OR SPECIFIED IN THE SPECIAL PROVISIONS, SP-2 SIGNS MUST BE PLACED AS SHOWN ON THIS PLAN.

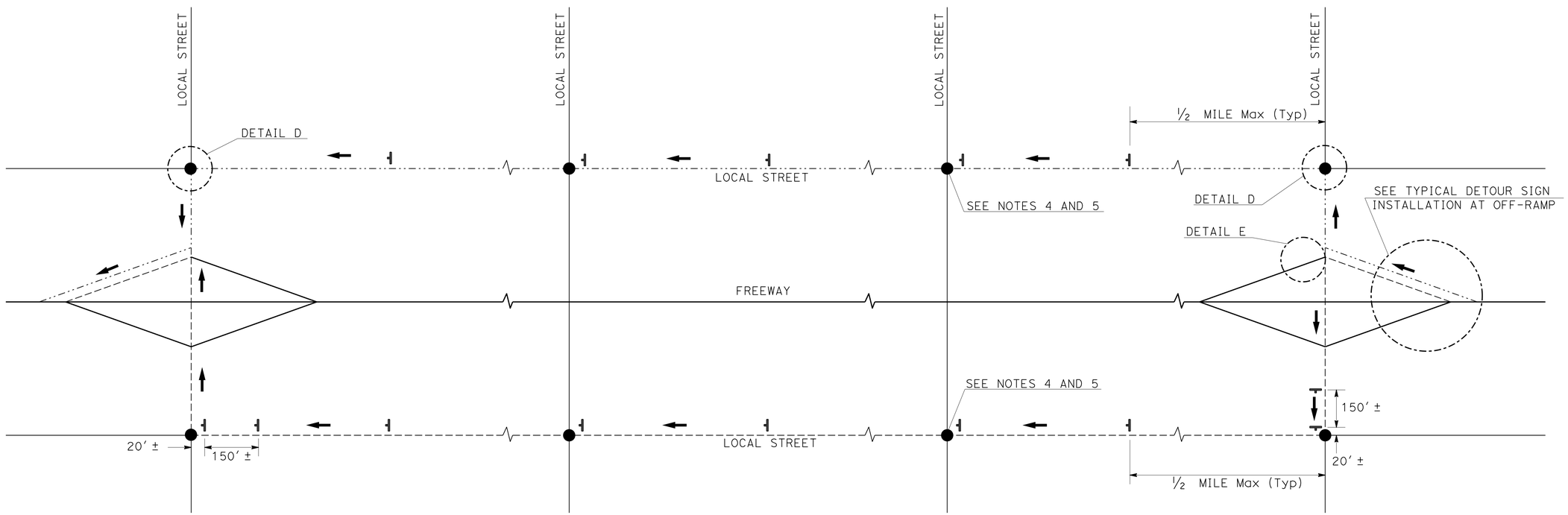

TYPICAL DETOUR SIGN INSTALLATION ALONG DESIGNATED DETOUR ROUTE

TRAFFIC HANDLING DETAILS

TRAFFIC CONTROL SYSTEM FOR DETOUR SIGN INSTALLATION ALONG DESIGNATED DETOUR ROUTE

SHEET 1 OF 3

NO SCALE

THD-3

STATE OF CALIFORNIA - DEPARTMENT OF TRANSPORTATION
Caltrans DTM

FUNCTIONAL SUPERVISOR: ALBERT K YU
CALCULATED-DESIGNED BY: ALBERT K YU
CHECKED BY: JOCELYN C CHIANG
REVISED BY: JC
DATE REVISED: 2/14

LAST REVISION 00-00-00
DATE PLOTTED => 27-JUL-2016
TIME PLOTTED => 12:52

Dist	COUNTY	ROUTE	POST MILES TOTAL PROJECT	SHEET No.	TOTAL SHEETS
07	LA	105,405	R2.5,20.5/R21.1	113	265

REGISTERED CIVIL ENGINEER 6-10-16 DATE

7-1-16
PLANS APPROVAL DATE

REGISTERED PROFESSIONAL ENGINEER SHANGJIA HORN No. 51846 Exp. 6-30-18 CIVIL STATE OF CALIFORNIA

THE STATE OF CALIFORNIA OR ITS OFFICERS OR AGENTS SHALL NOT BE RESPONSIBLE FOR THE ACCURACY OR COMPLETENESS OF SCANNED COPIES OF THIS PLAN SHEET.

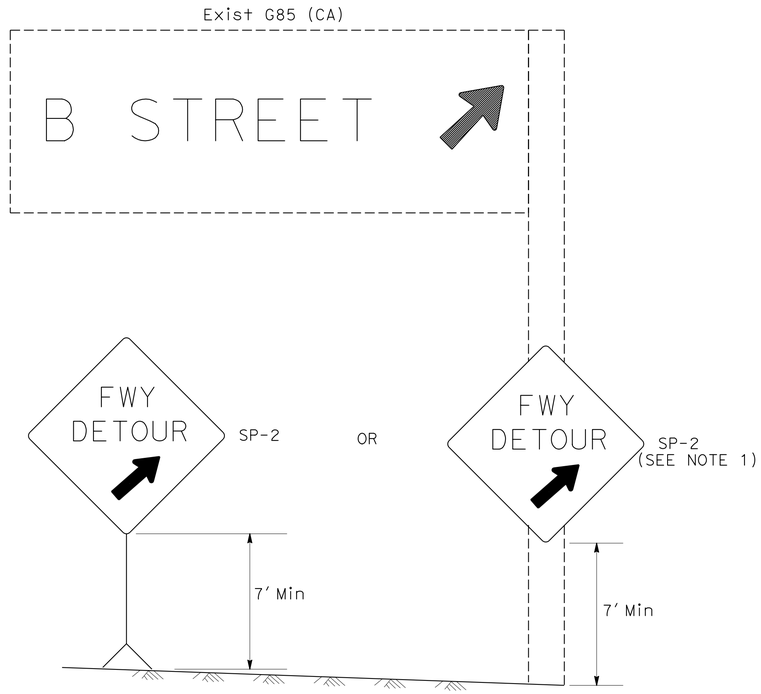

DETAIL A (SEE NOTE 3)

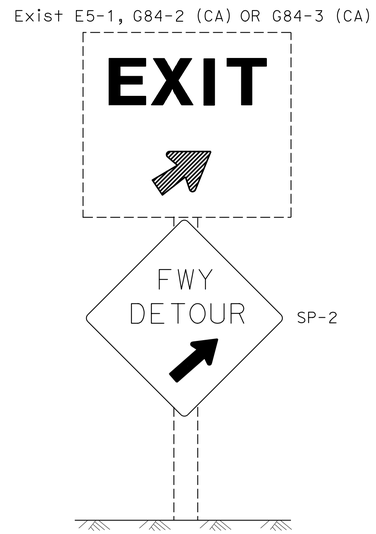

DETAIL B (SEE NOTE 3)

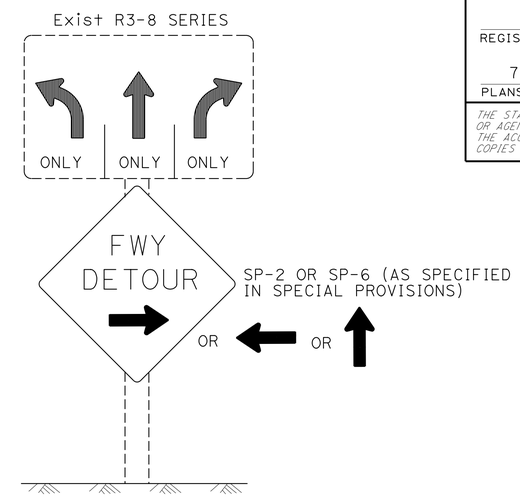

DETAIL C (SEE NOTES 4, 5, AND 6)

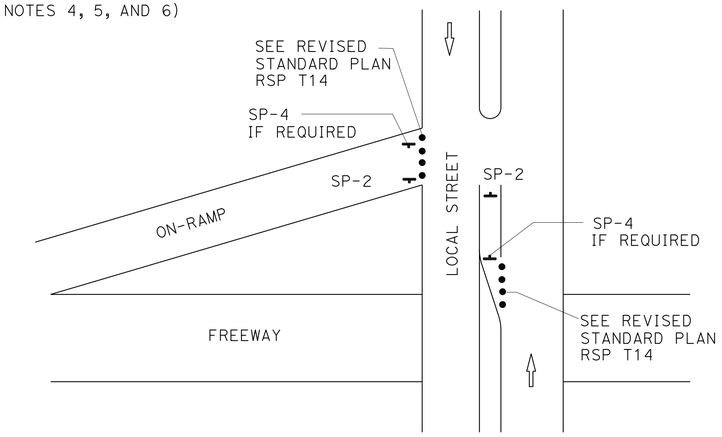

DETAIL E

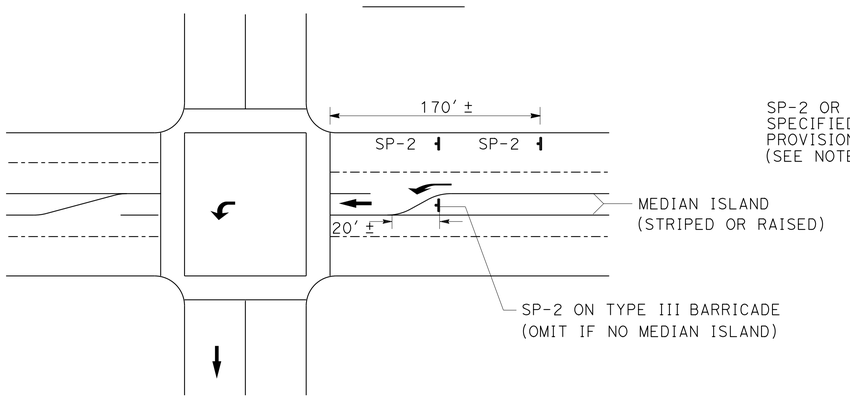

DETAIL D

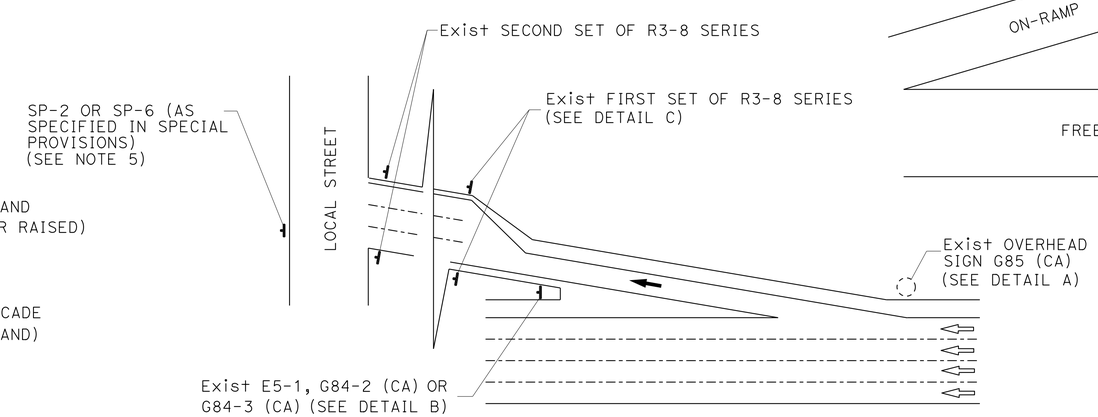

TYPICAL DETOUR SIGN INSTALLATION AT OFF-RAMP

LEGEND:

- • TRAFFIC CONE
- TEMPORARY TRAFFIC CONTROL SIGN
- → DETOUR DIRECTION
- ◌ EXISTING OVERHEAD SIGN

NOTES: SIGN SP-2

1. SP-2 SIGNS MAY BE STRAPPED ON EXISTING ELECTROLIER, SIGNAL POST OR SIGN POST.
2. SP-2 SIGNS MUST NOT BE INSTALLED ON BARRICADES EXCEPT AS OTHERWISE SHOWN.
3. OMIT DETAILS A AND B FOR FULL FREEWAY CLOSURES.
4. SEE TRAFFIC HANDLING DETAILS-TRAFFIC CONTROL SYSTEM FOR RAMP CLOSURES, DETOUR SIGNS, AND MISCELLANEOUS DETAILS PLAN SHEET 2 OF 2 FOR SP-6 SIGN DETAILS.
5. IF R3-8 SERIES SIGNS ARE NOT PRESENT AT THE OFF-RAMP, SP-2 OR SP-6 SIGNS MUST BE FASTENED ONTO EXISTING ELECTROLIER, SIGNAL POST OR SIGN POST.
6. EXCEPT FOR DETAILS A & B, OMIT SP-2 SIGNS IF RAMP HAS MANDATORY SINGLE MOVE.

SIGN CODE LEGEND:

XXYY-Y: FEDERAL SIGN CODE PER MANUAL ON UNIFORM TRAFFIC CONTROL DEVICES (MUTCD)

XXYY-Y (CA): CALIFORNIA SIGN CODE PER CALIFORNIA MUTCD

TRAFFIC HANDLING DETAILS
TRAFFIC CONTROL SYSTEM FOR DETOUR SIGN INSTALLATION ALONG DESIGNATED DETOUR ROUTE
SHEET 2 OF 3

NO SCALE

THD-4

STATE OF CALIFORNIA - DEPARTMENT OF TRANSPORTATION
Caltrans DTM

FUNCTIONAL SUPERVISOR: ALBERT K YU
REVISED BY: JC — DATE REVISED: 2/14
CALCULATED-DESIGNED BY: ALBERT K YU — CHECKED BY: JOCELYN C CHIANG

LAST REVISION 00-00-00 — DATE PLOTTED => 27-JUL-2016 — TIME PLOTTED => 12:52

Dist	COUNTY	ROUTE	POST MILES TOTAL PROJECT	SHEET No.	TOTAL SHEETS
07	LA	105,405	R2.5,20.5/R21.1	114	265

Medardo de la Cruz 6-15-16
REGISTERED CIVIL ENGINEER DATE

7-1-16
PLANS APPROVAL DATE

REGISTERED PROFESSIONAL ENGINEER MEDARDO DE LA CRUZ No. C61848 Exp. 6-30-17 CIVIL STATE OF CALIFORNIA

THE STATE OF CALIFORNIA OR ITS OFFICERS OR AGENTS SHALL NOT BE RESPONSIBLE FOR THE ACCURACY OR COMPLETENESS OF SCANNED COPIES OF THIS PLAN SHEET.

NOTES:

1. LOCATIONS OF CONSTRUCTION AREA SIGNS SHOWN ARE APPROXIMATE. EXACT LOCATIONS WILL BE DETERMINED BY THE ENGINEER.
2. SEE STAGE CONSTRUCTION AND TRAFFIC HANDLING PLANS FOR ADDITIONAL CONSTRUCTION AREA SIGNS.
3. SEE TRAFFIC HANDLING DETAIL SHEETS FOR SIGN DETAILS.

* PCMS LOCATIONS TO BE CONFIRMED BY THE ENGINEER BEFORE THE ACTUAL CLOSURE.

** ACTIVATE PRIMARY MESSAGE, 2 WEEKS PRIOR TO CLOSURE. SECOND FLASH DATES TO BE DETERMINED. ACTIVATE SECONDARY MESSAGE, DURING CLOSURE.

LEGEND:

- ROAD CLOSURE
- TRAFFIC CONE
- PORTABLE SIGN
- DIRECTION OF TRAFFIC

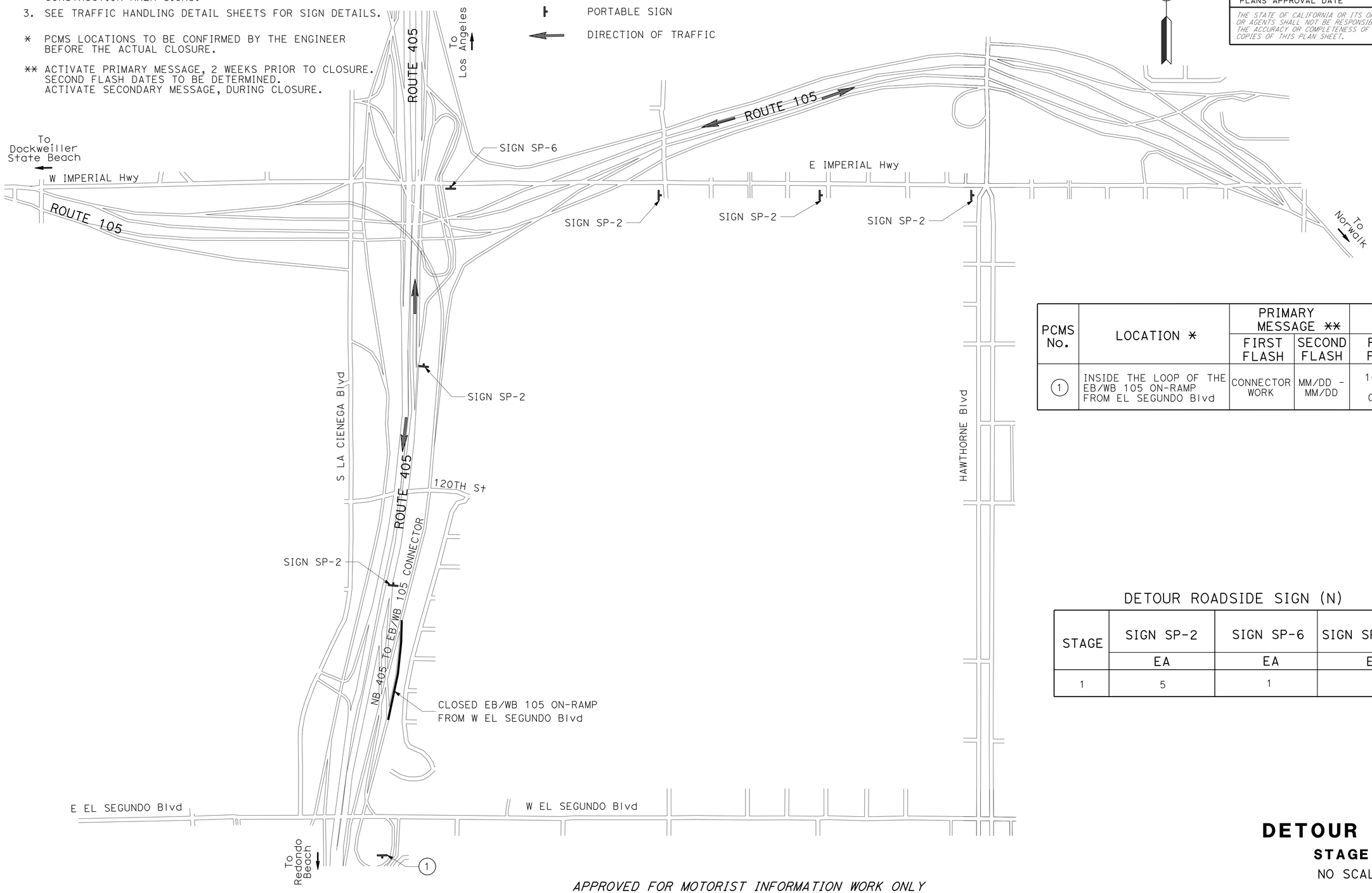

PCMS No.	LOCATION *	PRIMARY MESSAGE **		SECONDARY MESSAGE **	
		FIRST FLASH	SECOND FLASH	FIRST FLASH	SECOND FLASH
1	INSIDE THE LOOP OF THE EB/WB 105 ON-RAMP FROM EL SEGUNDO Blvd	CONNECTOR WORK	MM/DD - MM/DD	105 FWY EXITS CLOSED	DETOUR USE IMPERIAL

DETOUR ROADSIDE SIGN (N)

STAGE	SIGN SP-2	SIGN SP-6	SIGN SP-7 (L)
	EA	EA	EA
1	5	1	

APPROVED FOR MOTORIST INFORMATION WORK ONLY

DETOUR PLAN

STAGE 1

NO SCALE

DE-1

STATE OF CALIFORNIA - DEPARTMENT OF TRANSPORTATION
Caltrans
DESIGN

FUNCTIONAL SUPERVISOR: ASADOUR TERTERIAN
CALCULATED-DESIGNED BY: SUSANNA YANG
CHECKED BY: MEDARDO DE LA CRUZ
REVISED BY
DATE REVISED

LAST REVISION 10-08-15
DATE PLOTTED => 27-JUL-2016
TIME PLOTTED => 12:52

Dist	COUNTY	ROUTE	POST MILES TOTAL PROJECT	SHEET No.	TOTAL SHEETS
07	LA	105,405	R2.5,20.5/R21.1	115	265

Medardo de la Cruz 6-15-16
REGISTERED CIVIL ENGINEER DATE

7-1-16
PLANS APPROVAL DATE

REGISTERED PROFESSIONAL ENGINEER
MEDARDO DE LA CRUZ
No. C61848
Exp. 6-30-17
CIVIL
STATE OF CALIFORNIA

THE STATE OF CALIFORNIA OR ITS OFFICERS OR AGENTS SHALL NOT BE RESPONSIBLE FOR THE ACCURACY OR COMPLETENESS OF SCANNED COPIES OF THIS PLAN SHEET.

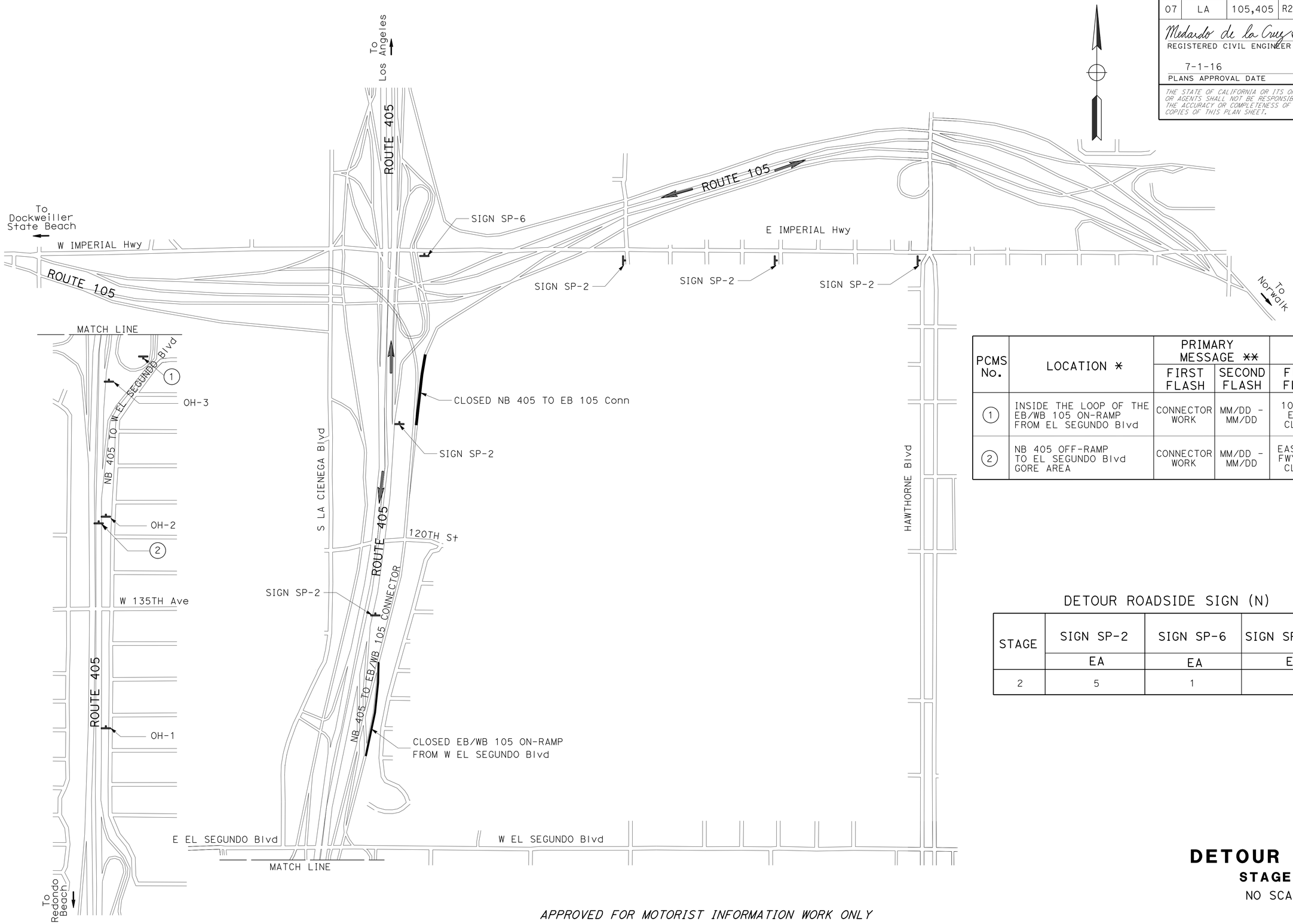

PCMS No.	LOCATION *	PRIMARY MESSAGE **		SECONDARY MESSAGE **	
		FIRST FLASH	SECOND FLASH	FIRST FLASH	SECOND FLASH
1	INSIDE THE LOOP OF THE EB/WB 105 ON-RAMP FROM EL SEGUNDO Blvd	CONNECTOR WORK	MM/DD - MM/DD	105 FWY EXITS CLOSED	DETOUR USE IMPERIAL
2	NB 405 OFF-RAMP TO EL SEGUNDO Blvd GORE AREA	CONNECTOR WORK	MM/DD - MM/DD	EAST 105 FWY EXIT CLOSED	DETOUR USE IMPERIAL

DETOUR ROADSIDE SIGN (N)

STAGE	SIGN SP-2	SIGN SP-6	SIGN SP-7 (L)
	EA	EA	EA
2	5	1	

APPROVED FOR MOTORIST INFORMATION WORK ONLY

DETOUR PLAN
STAGE 2
NO SCALE

DE-2

STATE OF CALIFORNIA - DEPARTMENT OF TRANSPORTATION
Caltrans
DESIGN

FUNCTIONAL SUPERVISOR: ASADOUR TERTERIAN
CALCULATED-DESIGNED BY: SUSANNA YANG
CHECKED BY: MEDARDO DE LA CRUZ
REVISED BY
DATE REVISED

LAST REVISION 10-08-15
DATE PLOTTED => 27-JUL-2016
TIME PLOTTED => 12:52

Dist	COUNTY	ROUTE	POST MILES TOTAL PROJECT	SHEET No.	TOTAL SHEETS
07	LA	105,405	R2.5,20.5/R21.1	116	265

Medardo de la Cruz 6-15-16
REGISTERED CIVIL ENGINEER DATE

7-1-16
PLANS APPROVAL DATE

REGISTERED PROFESSIONAL ENGINEER
MEDARDO DE LA CRUZ
No. C61848
Exp. 6-30-17
CIVIL
STATE OF CALIFORNIA

THE STATE OF CALIFORNIA OR ITS OFFICERS OR AGENTS SHALL NOT BE RESPONSIBLE FOR THE ACCURACY OR COMPLETENESS OF SCANNED COPIES OF THIS PLAN SHEET.

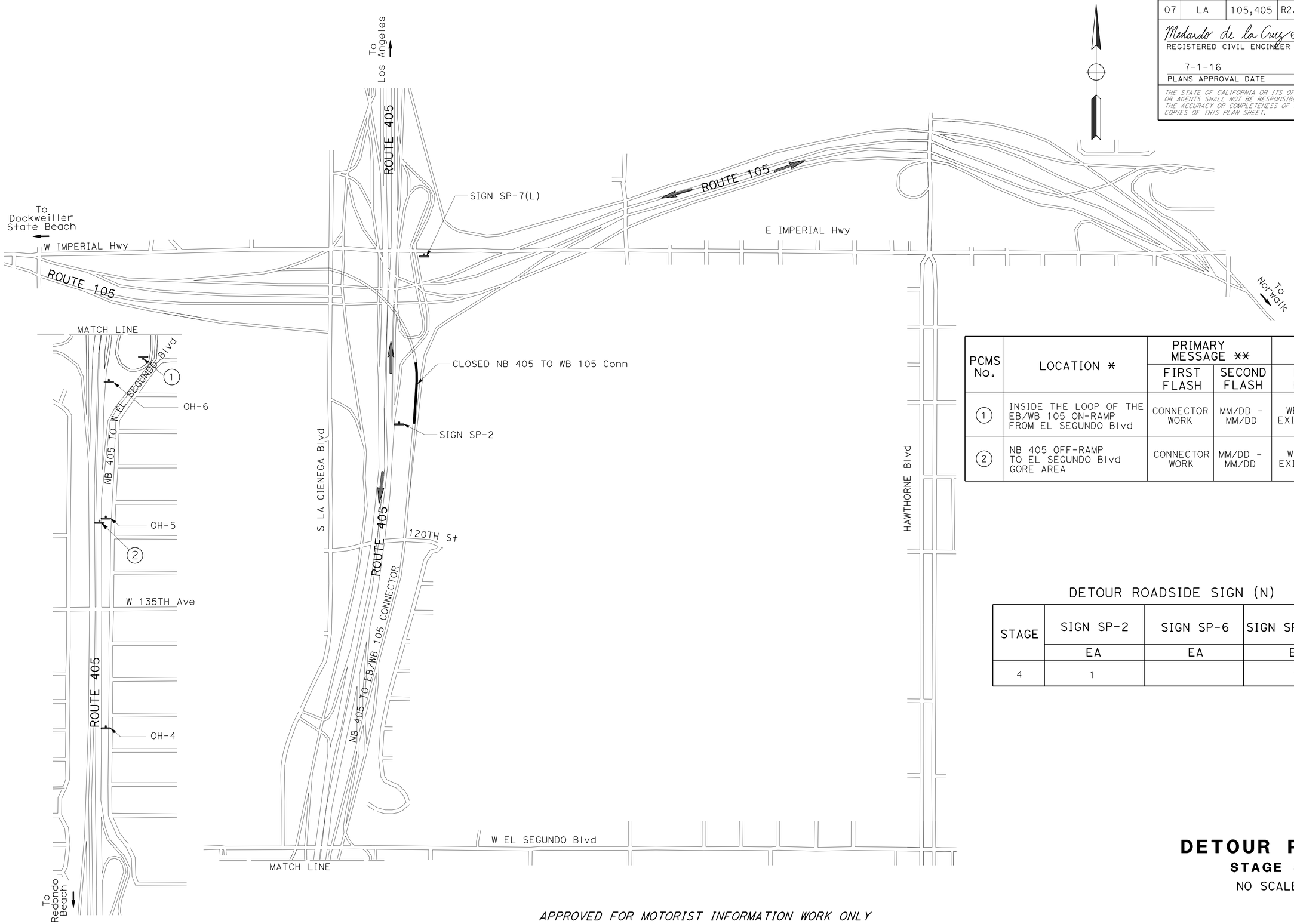

PCMS No.	LOCATION *	PRIMARY MESSAGE **		SECONDARY MESSAGE **	
		FIRST FLASH	SECOND FLASH	FIRST FLASH	SECOND FLASH
1	INSIDE THE LOOP OF THE EB/WB 105 ON-RAMP FROM EL SEGUNDO Blvd	CONNECTOR WORK	MM/DD - MM/DD	WEST 105 EXIT CLOSED	DETOUR USE IMPERIAL
2	NB 405 OFF-RAMP TO EL SEGUNDO Blvd GORE AREA	CONNECTOR WORK	MM/DD - MM/DD	WEST 105 EXIT CLOSED	DETOUR USE IMPERIAL

DETOUR ROADSIDE SIGN (N)

STAGE	SIGN SP-2	SIGN SP-6	SIGN SP-7 (L)
	EA	EA	EA
4	1		1

DETOUR PLAN

STAGE 4

NO SCALE

APPROVED FOR MOTORIST INFORMATION WORK ONLY

DE-3

STATE OF CALIFORNIA - DEPARTMENT OF TRANSPORTATION
Caltrans
DESIGN

FUNCTIONAL SUPERVISOR: ASADOUR TERTERIAN
CALCULATED-DESIGNED BY: SUSANNA YANG
CHECKED BY: MEDARDO DE LA CRUZ
REVISED BY
DATE REVISED

LAST REVISION 10-08-15
DATE PLOTTED => 27-JUL-2016
TIME PLOTTED => 12:52

Dist	COUNTY	ROUTE	POST MILES TOTAL PROJECT	SHEET No.	TOTAL SHEETS
07	LA	105,405	R2.5, 20.5/R21.1	117	265

Medardo de la Cruz 6-15-16
REGISTERED CIVIL ENGINEER DATE

7-1-16
PLANS APPROVAL DATE

REGISTERED PROFESSIONAL ENGINEER
MEDARDO DE LA CRUZ
No. C61848
Exp. 6-30-17
CIVIL
STATE OF CALIFORNIA

THE STATE OF CALIFORNIA OR ITS OFFICERS OR AGENTS SHALL NOT BE RESPONSIBLE FOR THE ACCURACY OR COMPLETENESS OF SCANNED COPIES OF THIS PLAN SHEET.

INSTALL OVERLAY
45" X 20"
BLACK ON ORANGE
10" CAP SERIES D

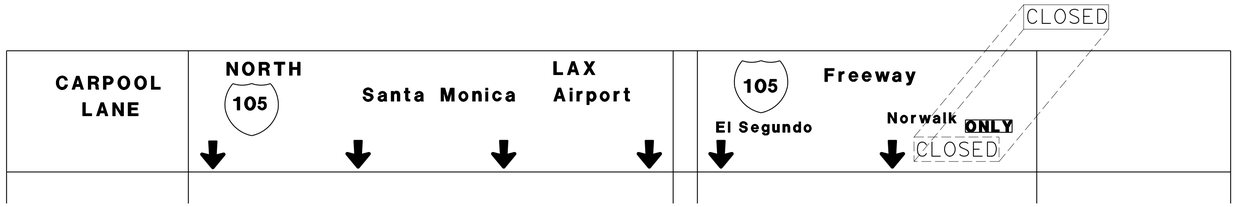

405 N ---138TH STREET AND 137TH PLACE OH-1

INSTALL OVERLAY
45" X 20"
BLACK ON ORANGE
10" CAP SERIES D

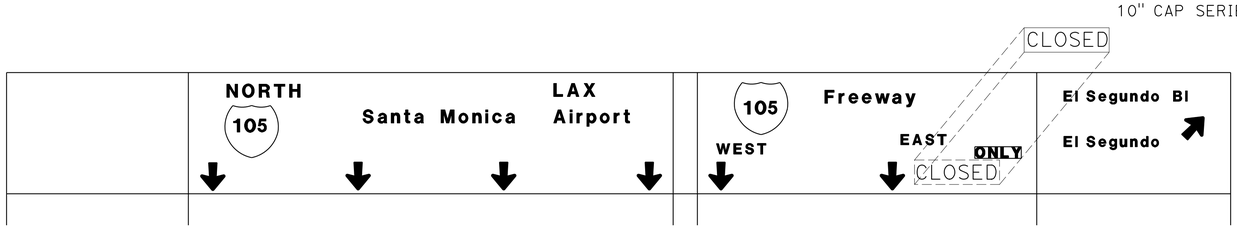

405 N ---134TH STREET AND 133RD STREET OH-2

INSTALL OVERLAY
45" X 20"
BLACK ON ORANGE
10" CAP SERIES D

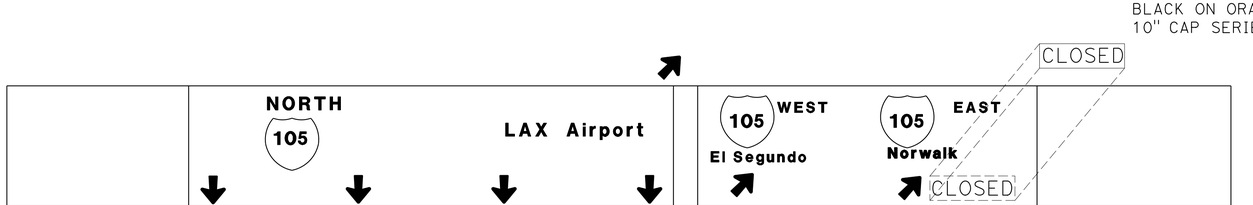

405 N ---130TH STREET AND 129TH STREET OH-3

DETOUR PLAN

STAGE 2

NO SCALE

APPROVED FOR MOTORIST INFORMATION WORK ONLY

DE-4

STATE OF CALIFORNIA - DEPARTMENT OF TRANSPORTATION
Caltrans
DESIGN

FUNCTIONAL SUPERVISOR: ASADOUR TERTERIAN
CALCULATED-DESIGNED BY: ABDULRAUF SETH
CHECKED BY: MEDARDO DE LA CRUZ
REVISED BY
DATE REVISED

LAST REVISION 10-08-15
DATE PLOTTED => 27-JUL-2016
TIME PLOTTED => 12:52

Dist	COUNTY	ROUTE	POST MILES TOTAL PROJECT	SHEET No.	TOTAL SHEETS
07	LA	105, 405	R2.5, 20.5/R21.1	118	265

Medardo de la Cruz 6-15-16
REGISTERED CIVIL ENGINEER DATE

7-1-16
PLANS APPROVAL DATE

REGISTERED PROFESSIONAL ENGINEER
MEDARDO DE LA CRUZ
No. C61848
Exp. 6-30-17
CIVIL
STATE OF CALIFORNIA

THE STATE OF CALIFORNIA OR ITS OFFICERS OR AGENTS SHALL NOT BE RESPONSIBLE FOR THE ACCURACY OR COMPLETENESS OF SCANNED COPIES OF THIS PLAN SHEET.

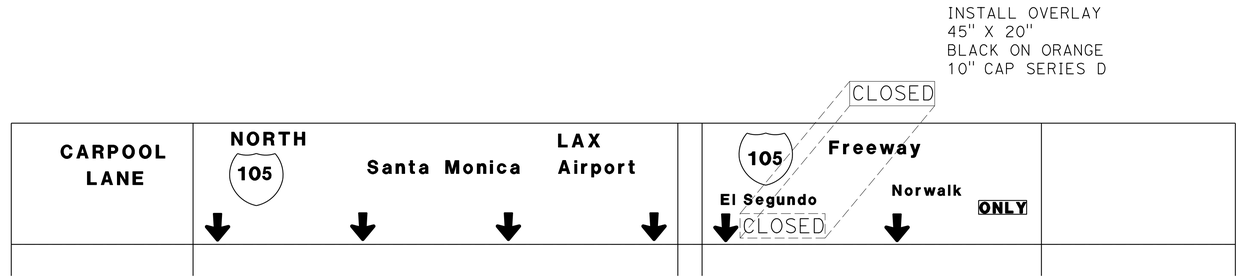

405 N ---138TH STREET AND 137TH PLACE OH-4

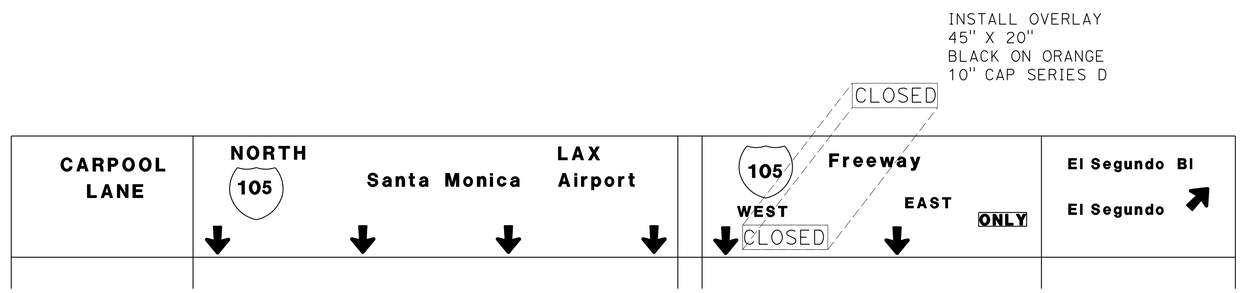

405 N ---134TH STREET AND 133RD STREET OH-5

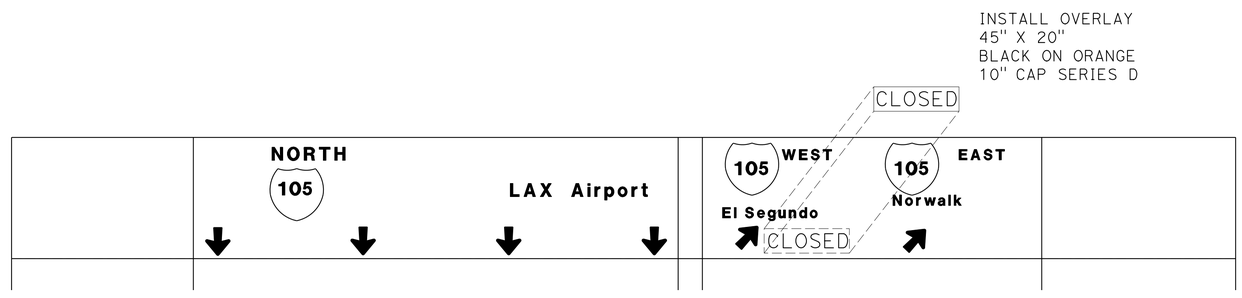

405 N ---130TH STREET AND 129TH STREET OH-6

DETOUR PLAN

STAGE 4

NO SCALE

APPROVED FOR MOTORIST INFORMATION WORK ONLY

DE-5

STATE OF CALIFORNIA - DEPARTMENT OF TRANSPORTATION
Caltrans
DESIGN

FUNCTIONAL SUPERVISOR: ASADOUR TERTERIAN
CALCULATED-DESIGNED BY: ABDULRAUF SETH
CHECKED BY: MEDARDO DE LA CRUZ
REVISED BY
DATE REVISED

LAST REVISION 10-08-15
DATE PLOTTED => 27-JUL-2016
TIME PLOTTED => 12:52

Dist	COUNTY	ROUTE	POST MILES TOTAL PROJECT	SHEET No.	TOTAL SHEETS
07	LA	105, 405	R2.5, 20.5/R21.1	119	265

REGISTERED CIVIL ENGINEER 6/25/16 DATE

7-1-16
PLANS APPROVAL DATE

REGISTERED PROFESSIONAL ENGINEER ANH D. NGUYEN No. 62370 Exp. 9/30/17 CIVIL STATE OF CALIFORNIA

THE STATE OF CALIFORNIA OR ITS OFFICERS OR AGENTS SHALL NOT BE RESPONSIBLE FOR THE ACCURACY OR COMPLETENESS OF SCANNED COPIES OF THIS PLAN SHEET.

LEGEND:

- (1-16A) OVERHEAD SIGN IDENTIFICATION (WITH NUMBER & LETTER)
- (1-21A) ROADSIDE SIGN IDENTIFICATION (WITH NUMBER & LETTER)
- (R) REMOVE ROADSIDE SIGN (WOOD POST)
- (RS) REMOVE SIGN STRUCTURE
- (RSS) REMOVE ROADSIDE SIGN (STRAP AND SADDLE BRACKET METHOD)
- (1) ROADSIDE SIGN - ONE POST
- (IS) INSTALL SIGN STRUCTURE (TRUSS)
- (SS) INSTALL SIGN (STRAP AND SADDLE BRACKET METHOD)
- (16A) TRAFFIC LINE DETAIL (WITH NUMBER & LETTER)
- CHANGE IN PAVEMENT DELINEATION DETAILS

SIGN CODE LEGEND:

XXYY-Y: FEDERAL SIGN CODE PER MANUAL ON UNIFORM TRAFFIC CONTROL DEVICES (MUTCD)

XXYY-Y (CA): CALIFORNIA SIGN CODE PER CALIFORNIA MUTCD

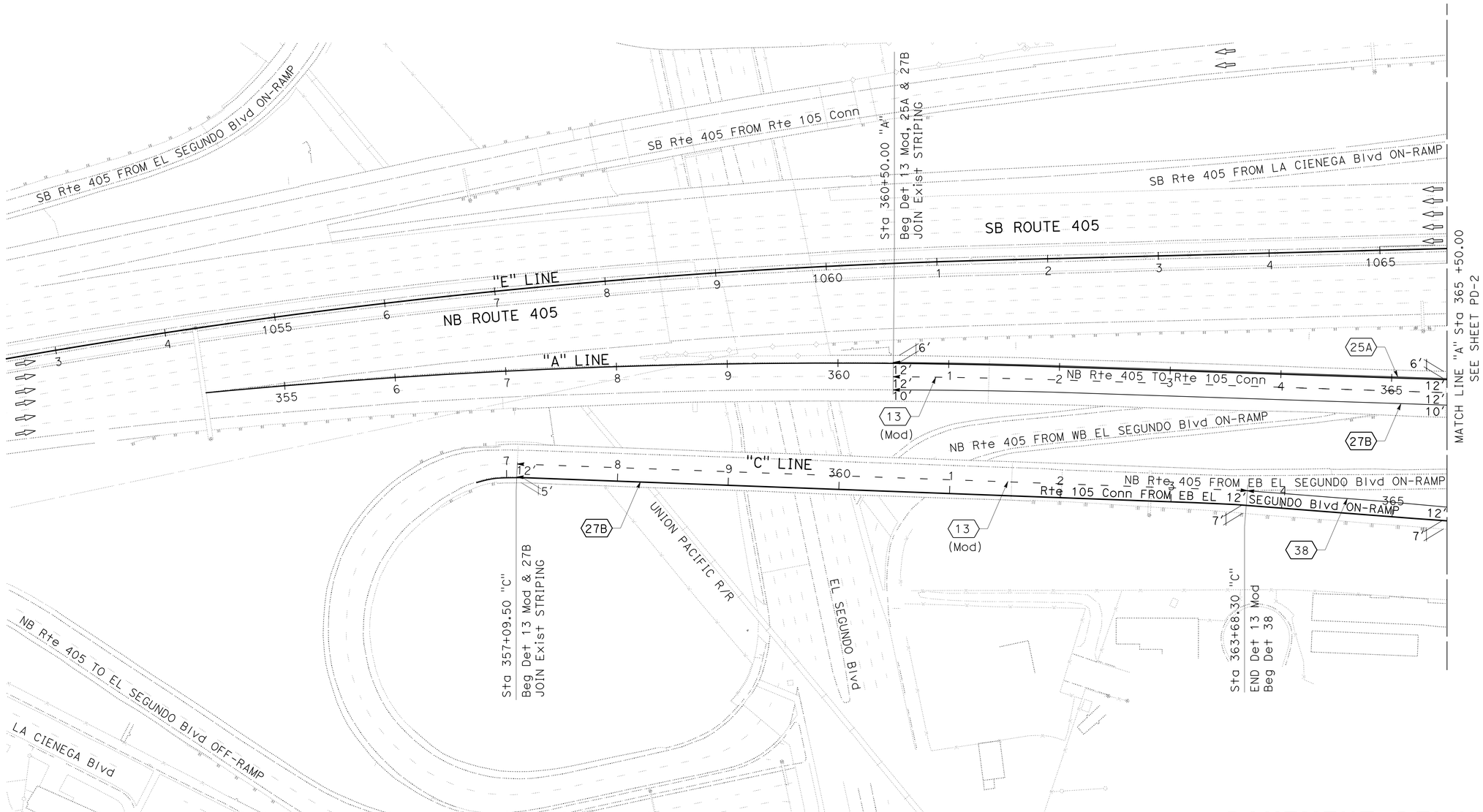

PAVEMENT DELINEATION AND SIGN PLAN

SCALE 1"=50'

PD-1

APPROVED FOR PAVEMENT DELINEATION AND SIGN WORK ONLY

STATE OF CALIFORNIA - DEPARTMENT OF TRANSPORTATION
Caltrans® TRAFFIC DESIGN

FUNCTIONAL SUPERVISOR: MOHAMMED CHOWDHURY
CALCULATED-DESIGNED BY: JAMES M. CANALITA
CHECKED BY: ANH D. NGUYEN
REVISED BY / DATE REVISED

S:\projects\3x8701\District7_Roadway\73x870na001.dgn

LAST REVISION 00-00-00 | DATE PLOTTED => 27-JUL-2016 | TIME PLOTTED => 12:52

BORDER LAST REVISED 7/2/2010 | USERNAME => s125624 | DGN FILE => 73x870na001.dgn | RELATIVE BORDER SCALE IS IN INCHES 0 1 2 3 | UNIT 2124 | PROJECT NUMBER & PHASE 07130002411

Dist	COUNTY	ROUTE	POST MILES TOTAL PROJECT	SHEET No.	TOTAL SHEETS
07	LA	105, 405	R2.5, 20.5/R21.1	120	265

REGISTERED CIVIL ENGINEER 6/25/16 DATE

7-1-16
PLANS APPROVAL DATE

REGISTERED PROFESSIONAL ENGINEER ANH D. NGUYEN No. 62370 Exp. 9/30/17 CIVIL STATE OF CALIFORNIA

THE STATE OF CALIFORNIA OR ITS OFFICERS OR AGENTS SHALL NOT BE RESPONSIBLE FOR THE ACCURACY OR COMPLETENESS OF SCANNED COPIES OF THIS PLAN SHEET.

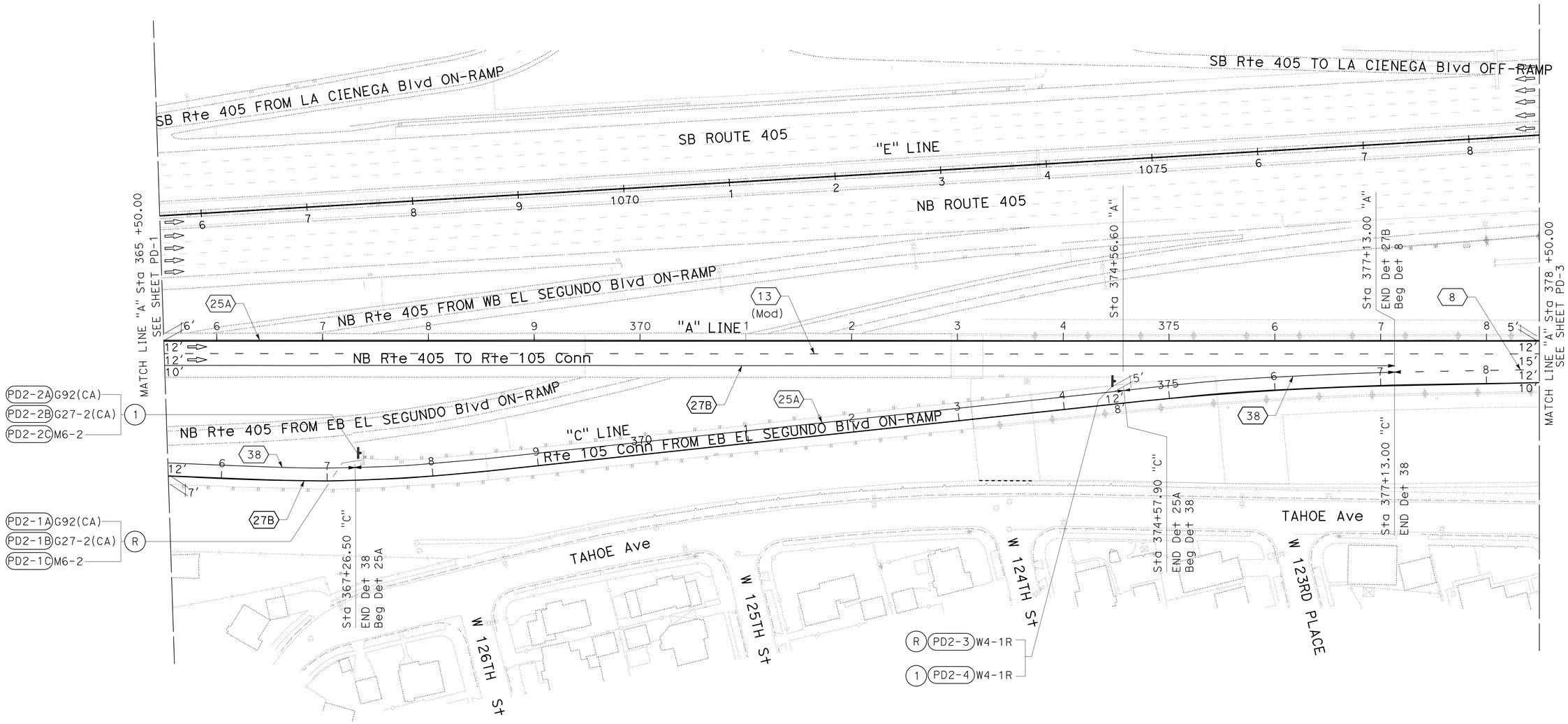

PAVEMENT DELINEATION AND SIGN PLAN

SCALE 1"=50'

PD-2

APPROVED FOR PAVEMENT DELINEATION AND SIGN WORK ONLY

REVISED BY | DATE REVISED
JAMES M. CANALITA | ANH D. NGUYEN
CALCULATED-DESIGNED BY | CHECKED BY
FUNCTIONAL SUPERVISOR: MOHAMMED CHOWDHURY

STATE OF CALIFORNIA - DEPARTMENT OF TRANSPORTATION
Caltrans
TRAFFIC DESIGN

S:\projects\3x870\District7 Roadway\73x870na002.dgn

LAST REVISION 00-00-00 | DATE PLOTTED => 27-JUL-2016 | TIME PLOTTED => 12:52

BORDER LAST REVISED 7/2/2010 | USERNAME => s125624 | DGN FILE => 73x870na002.dgn | RELATIVE BORDER SCALE IS IN INCHES 0 1 2 3 | UNIT 2124 | PROJECT NUMBER & PHASE 07130002411

Dist	COUNTY	ROUTE	POST MILES TOTAL PROJECT	SHEET No.	TOTAL SHEETS
07	LA	105, 405	R2.5, 20.5/R21.1	121	265

REGISTERED CIVIL ENGINEER 6/25/16 DATE

7-1-16
PLANS APPROVAL DATE

REGISTERED PROFESSIONAL ENGINEER ANH D. NGUYEN No. 62370 Exp. 9/30/17 CIVIL STATE OF CALIFORNIA

THE STATE OF CALIFORNIA OR ITS OFFICERS OR AGENTS SHALL NOT BE RESPONSIBLE FOR THE ACCURACY OR COMPLETENESS OF SCANNED COPIES OF THIS PLAN SHEET.

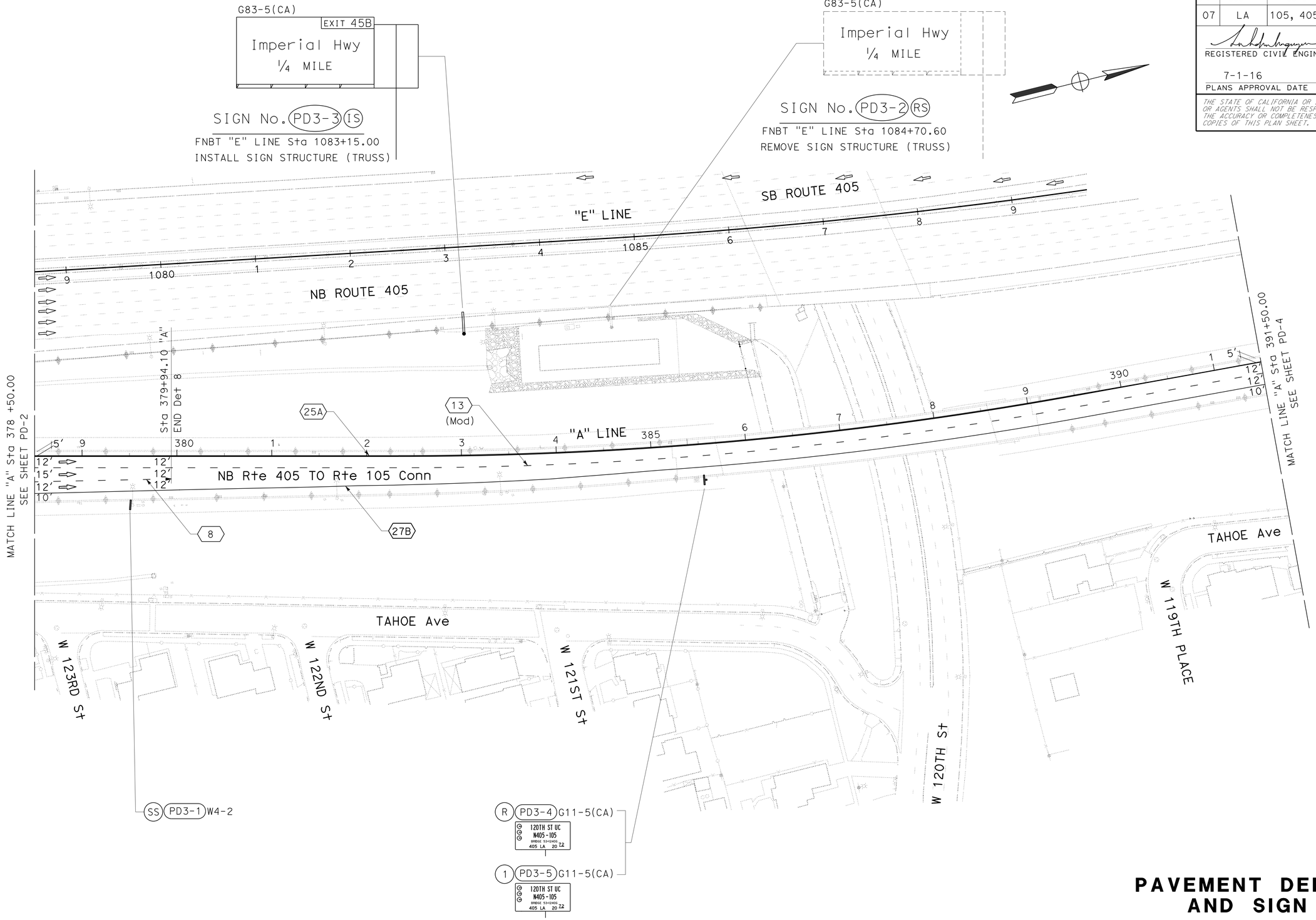

PAVEMENT DELINEATION AND SIGN PLAN

SCALE 1"=50'

PD-3

APPROVED FOR PAVEMENT DELINEATION AND SIGN WORK ONLY

REVISED BY | DATE REVISED
JAMES M. CANALITA | ANH D. NGUYEN
CALCULATED-DESIGNED BY | CHECKED BY
FUNCTIONAL SUPERVISOR
MOHAMMED CHOWDHURY

STATE OF CALIFORNIA - DEPARTMENT OF TRANSPORTATION
Caltrans
TRAFFIC DESIGN

S:\projects\3x8701\District7_Roadway\73x870na003.dgn

LAST REVISION 09-03-14 | DATE PLOTTED => 27-JUL-2016 | TIME PLOTTED => 12:52

Dist	COUNTY	ROUTE	POST MILES TOTAL PROJECT	SHEET No.	TOTAL SHEETS
07	LA	105, 405	R2.5, 20.5/R21.1	122	265

REGISTERED CIVIL ENGINEER 6/25/16 DATE

7-1-16
PLANS APPROVAL DATE

REGISTERED PROFESSIONAL ENGINEER ANH D. NGUYEN No. 62370 Exp. 9/30/17 CIVIL STATE OF CALIFORNIA

THE STATE OF CALIFORNIA OR ITS OFFICERS OR AGENTS SHALL NOT BE RESPONSIBLE FOR THE ACCURACY OR COMPLETENESS OF SCANNED COPIES OF THIS PLAN SHEET.

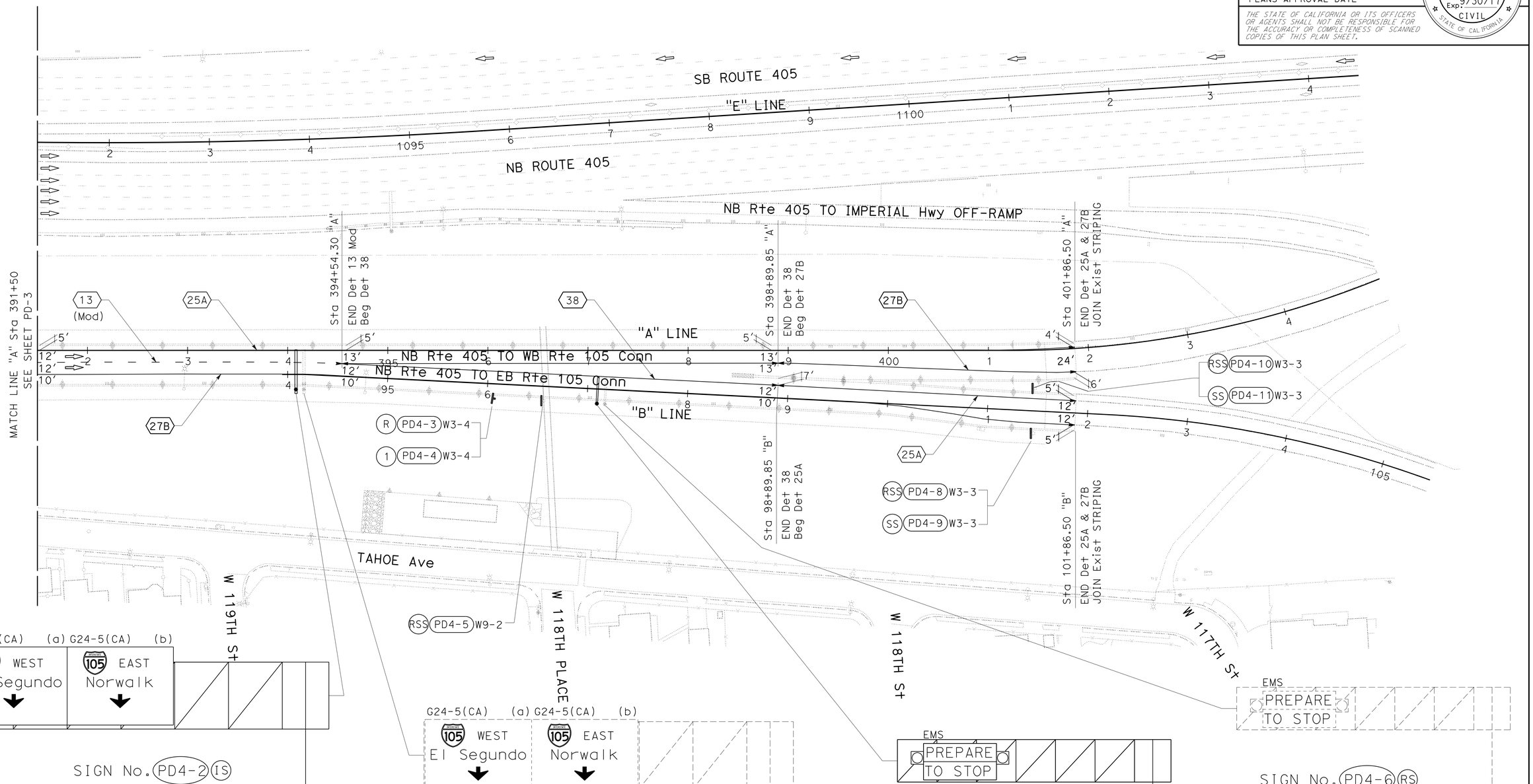

PAVEMENT DELINEATION AND SIGN PLAN

SCALE 1"=50'

PD-4

APPROVED FOR PAVEMENT DELINEATION AND SIGN WORK ONLY

REVISED BY | DATE REVISED
JAMES M. CANALITA | ANH D. NGUYEN
CALCULATED-DESIGNED BY | CHECKED BY
FUNCTIONAL SUPERVISOR: MOHAMMED CHOWDHURY

STATE OF CALIFORNIA - DEPARTMENT OF TRANSPORTATION
Caltrans TRAFFIC DESIGN

s:\projects\3x8701\District7_Roadway\73x870na004.dgn

LAST REVISION 04-24-14 | DATE PLOTTED => 27-JUL-2016 | TIME PLOTTED => 12:52

Dist	COUNTY	ROUTE	POST MILES TOTAL PROJECT	SHEET No.	TOTAL SHEETS
07	LA	105, 405	R2.5, 20.5/R21.1	123	265

REGISTERED CIVIL ENGINEER DATE 6/25/16

7-1-16
PLANS APPROVAL DATE

REGISTERED PROFESSIONAL ENGINEER
ANH D. NGUYEN
No. 62370
Exp. 9/30/17
CIVIL
STATE OF CALIFORNIA

THE STATE OF CALIFORNIA OR ITS OFFICERS OR AGENTS SHALL NOT BE RESPONSIBLE FOR THE ACCURACY OR COMPLETENESS OF SCANNED COPIES OF THIS PLAN SHEET.

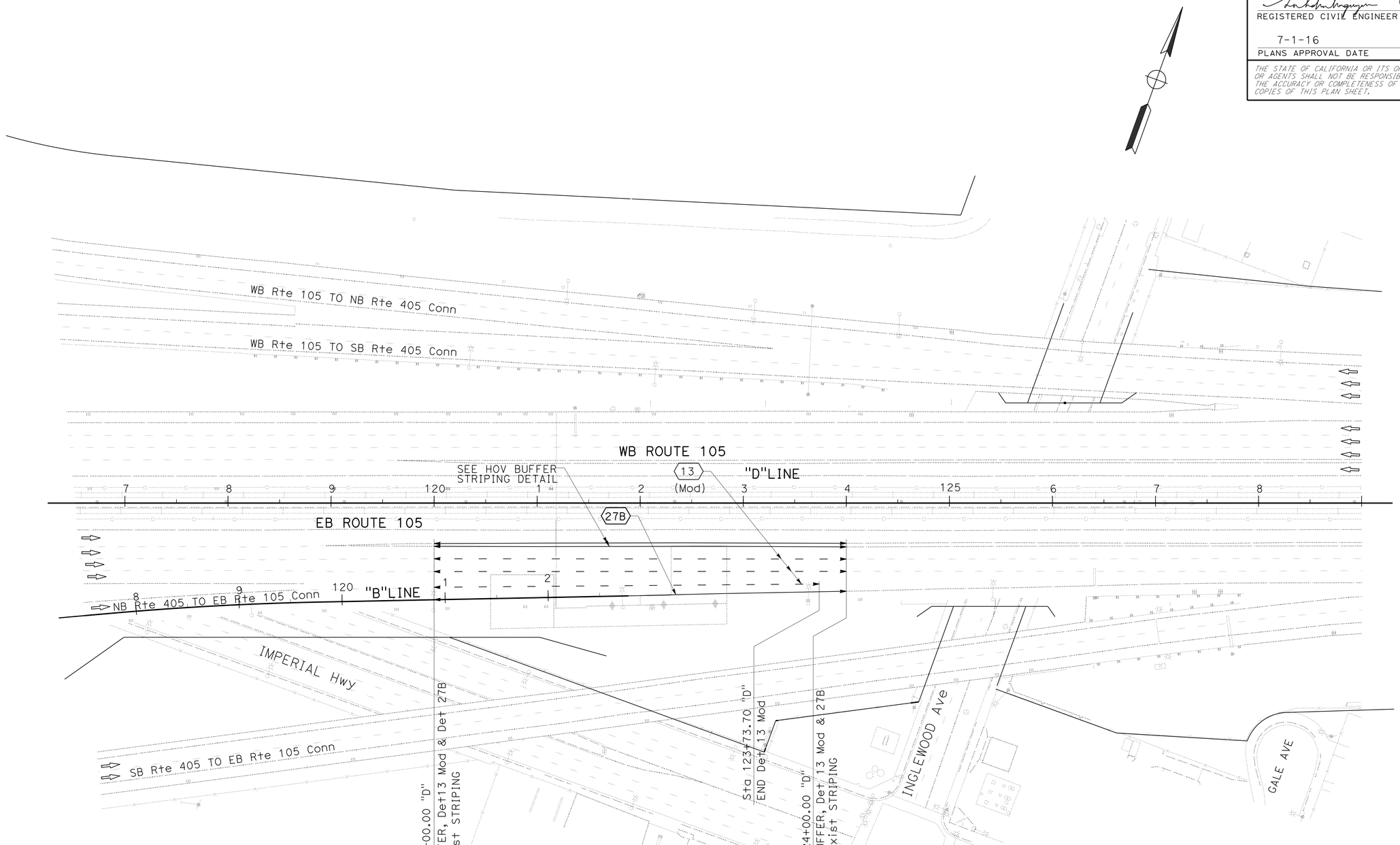

PAVEMENT DELINEATION AND SIGN PLAN

SCALE 1"=50'

PD-5

APPROVED FOR PAVEMENT DELINEATION AND SIGN WORK ONLY

REVISED BY	
DATE REVISED	
CALCULATED-DESIGNED BY	JAMES M. CANALITA
CHECKED BY	ANH D. NGUYEN
FUNCTIONAL SUPERVISOR	MOHAMMED CHOWDHURY

STATE OF CALIFORNIA - DEPARTMENT OF TRANSPORTATION
Caltrans
TRAFFIC DESIGN

S:\projects\3x8701\District7 Roadway\73x870na005.dgn

LAST REVISION 09-03-14
DATE PLOTTED => 27-JUL-2016
TIME PLOTTED => 12:53

Dist	COUNTY	ROUTE	POST MILES TOTAL PROJECT	SHEET No.	TOTAL SHEETS
07	LA	105, 405	R2.5, 20.5/R21.1	124	265

REGISTERED CIVIL ENGINEER 6/25/16 DATE

7-1-16
PLANS APPROVAL DATE

REGISTERED PROFESSIONAL ENGINEER ANH D. NGUYEN No. 62370 Exp. 9/30/17 CIVIL STATE OF CALIFORNIA

THE STATE OF CALIFORNIA OR ITS OFFICERS OR AGENTS SHALL NOT BE RESPONSIBLE FOR THE ACCURACY OR COMPLETENESS OF SCANNED COPIES OF THIS PLAN SHEET.

LEGEND:

4" YELLOW THERMOPLASTIC STRIPE

4" WHITE THERMOPLASTIC STRIPE

PAVEMENT DELINEATION QUANTITIES

SHEET No.	THERMOPLASTIC TRAFFIC STRIPE					PAVEMENT MARKER		
	Det 8	Det 13 (Mod)	Det 25A	Det 27B	Det 38	RETRO-REFLECTIVE		NON-REFLECTIVE
	4" (BROKEN 17-7) (WHITE)	4" (BROKEN 36-12) (WHITE)	4" SOLID YELLOW	4" SOLID WHITE	8" SOLID WHITE	TYPE G	TYPE H	TYPE A
	LF	LF	LF	LF	LF	EA	EA	EA
PD-1		1,159	500	1,341	182	35	100	22
PD-2	137	1,300	2,008	2,464	434	41	85	112
PD-3	145	1,300	1,300	1,300		29	56	112
PD-4		305	1,334	1,334	872	46	57	28
PD-5		1,174	1,600	800		35	68	100
SUB-TOTAL	282	5,238	6,742	7,239	1,488	186	366	374
TOTAL	282	5,238	13,981		1,488	552		374
SCQ-2						288		15
GRAND TOTAL	282	5,238	13,981		1,488	840		389

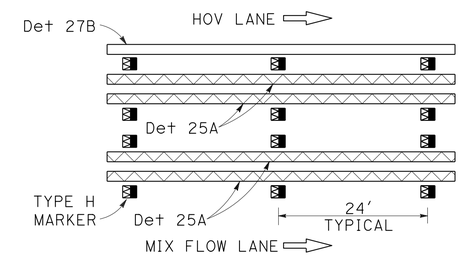

HOV BUFFER STRIPING DETAIL

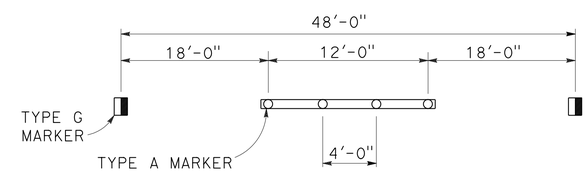

DETAIL 13 (Mod)

PAVEMENT DELINEATION QUANTITIES

PDQ-1

STATE OF CALIFORNIA - DEPARTMENT OF TRANSPORTATION
Caltrans® TRAFFIC DESIGN

FUNCTIONAL SUPERVISOR: MOHAMMED CHOWDHURY
CALCULATED-DESIGNED BY: JAMES M. CANALITA
CHECKED BY: ANH D. NGUYEN
REVISED BY
DATE REVISED

S:\projects\3x8701\District7_Roadway\73x870nc001.dgn

LAST REVISION 00-00-00
DATE PLOTTED => 27-JUL-2016
TIME PLOTTED => 12:53

Dist	COUNTY	ROUTE	POST MILES TOTAL PROJECT	SHEET No.	TOTAL SHEETS
07	LA	105, 405	R2.5, 20.5/R21.1	125	265

REGISTERED CIVIL ENGINEER 6/25/16 DATE

7-1-16
PLANS APPROVAL DATE

REGISTERED PROFESSIONAL ENGINEER ANH D. NGUYEN No. 62370 Exp. 9/30/17 CIVIL STATE OF CALIFORNIA

THE STATE OF CALIFORNIA OR ITS OFFICERS OR AGENTS SHALL NOT BE RESPONSIBLE FOR THE ACCURACY OR COMPLETENESS OF SCANNED COPIES OF THIS PLAN SHEET.

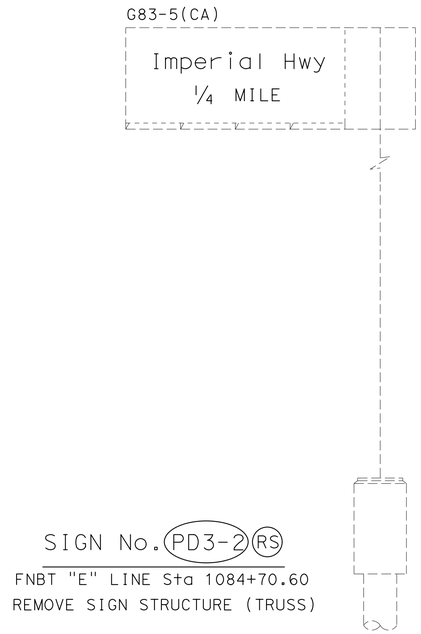

SIGN No. PD3-2 RS
FNBT "E" LINE Sta 1084+70.60
REMOVE SIGN STRUCTURE (TRUSS)

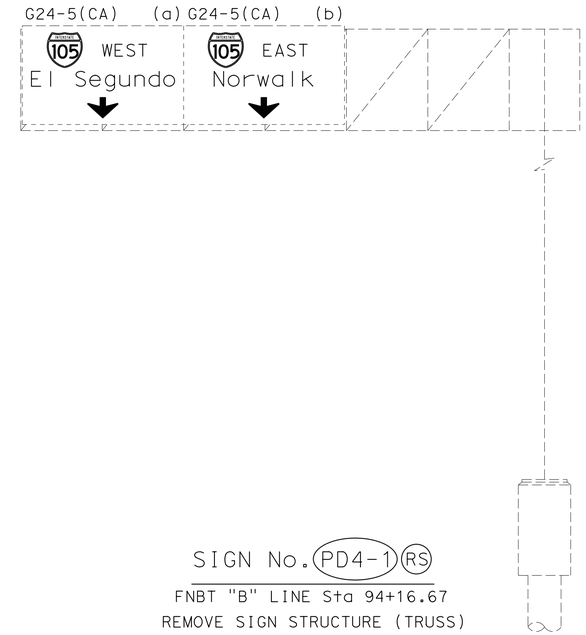

SIGN No. PD4-1 RS
FNBT "B" LINE Sta 94+16.67
REMOVE SIGN STRUCTURE (TRUSS)

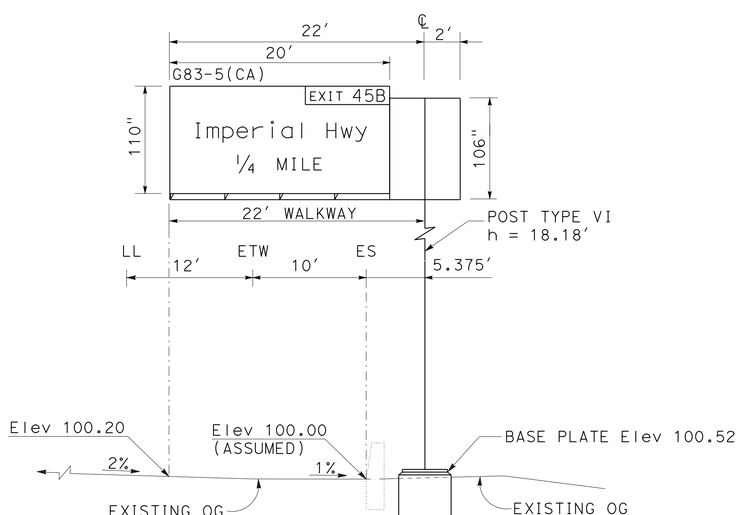

SIGN No. PD3-3 IS
FNBT "E" LINE Sta 1083+15.00
1. FURNISH AND INSTALL SIGN STRUCTURE (TRUSS), INCLUDING REMOVABLE SIGN PANEL FRAME
2. INSTALL FORMED SIGN PANEL
3. WALKWAY AND ILLUMINATION REQUIRED

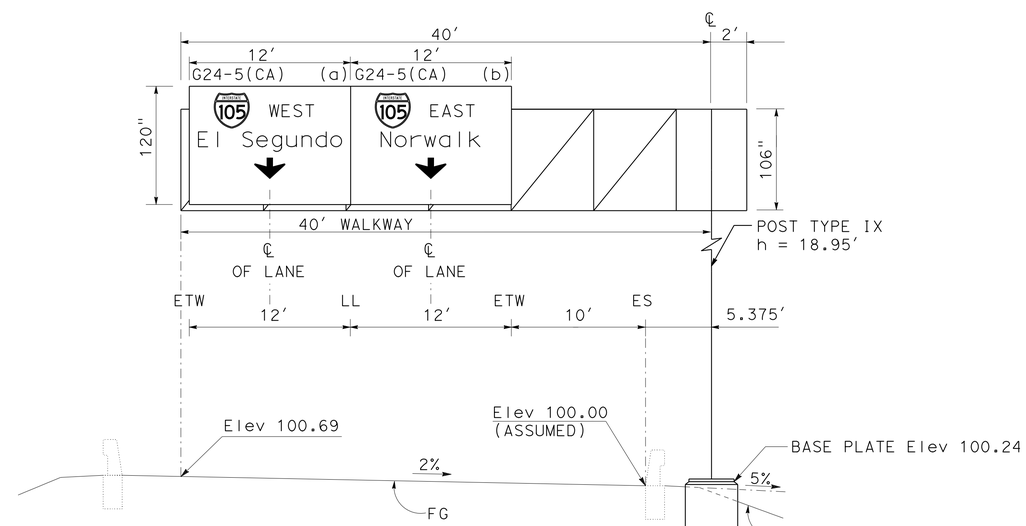

SIGN No. PD4-2 IS
FNBT "B" LINE Sta 94+10.00
1. FURNISH AND INSTALL SIGN STRUCTURE (TRUSS), INCLUDING REMOVABLE SIGN PANEL FRAME
2. INSTALL FORMED SIGN PANELS (a) and (b)
3. WALKWAY AND ILLUMINATION REQUIRED

SIGN DETAILS

NO SCALE

SD-1

APPROVED FOR SIGN WORK ONLY

REVISED BY | DATE REVISED
JAMES M. CANALITA | ANH D. NGUYEN
CALCULATED-DESIGNED BY | CHECKED BY
FUNCTIONAL SUPERVISOR: MOHAMMED CHOWDHURY

STATE OF CALIFORNIA - DEPARTMENT OF TRANSPORTATION
Caltrans® TRAFFIC DESIGN

S:\projects\3x870\District7_Roadway\73x870ob001.dgn

LAST REVISION 00-00-00 | DATE PLOTTED => 27-JUL-2016 | TIME PLOTTED => 12:53

BORDER LAST REVISED 7/2/2010 | USERNAME => s125624 | DGN FILE => 73x870ob001.dgn | RELATIVE BORDER SCALE IS IN INCHES 0 1 2 3 | UNIT 2124 | PROJECT NUMBER & PHASE 07130002411

Dist	COUNTY	ROUTE	POST MILES TOTAL PROJECT	SHEET No.	TOTAL SHEETS
07	LA	105, 405	R2.5, 20.5/R21.1	126	265

REGISTERED CIVIL ENGINEER 6/25/16 DATE

7-1-16
PLANS APPROVAL DATE

REGISTERED PROFESSIONAL ENGINEER ANH D. NGUYEN No. 62370 Exp. 9/30/17 CIVIL STATE OF CALIFORNIA

THE STATE OF CALIFORNIA OR ITS OFFICERS OR AGENTS SHALL NOT BE RESPONSIBLE FOR THE ACCURACY OR COMPLETENESS OF SCANNED COPIES OF THIS PLAN SHEET.

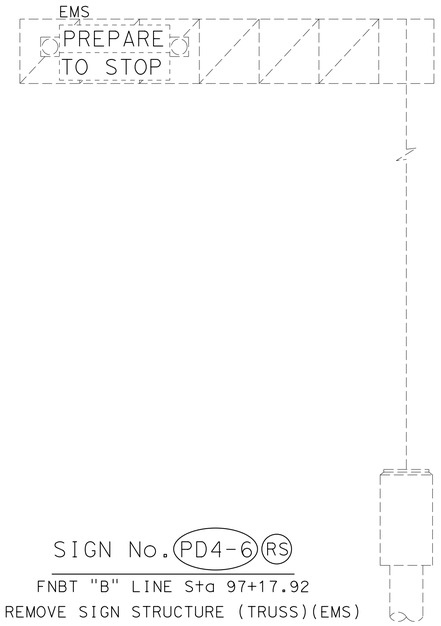

SIGN No. PD4-6 RS

FNBT "B" LINE Sta 97+17.92
REMOVE SIGN STRUCTURE (TRUSS)(EMS)

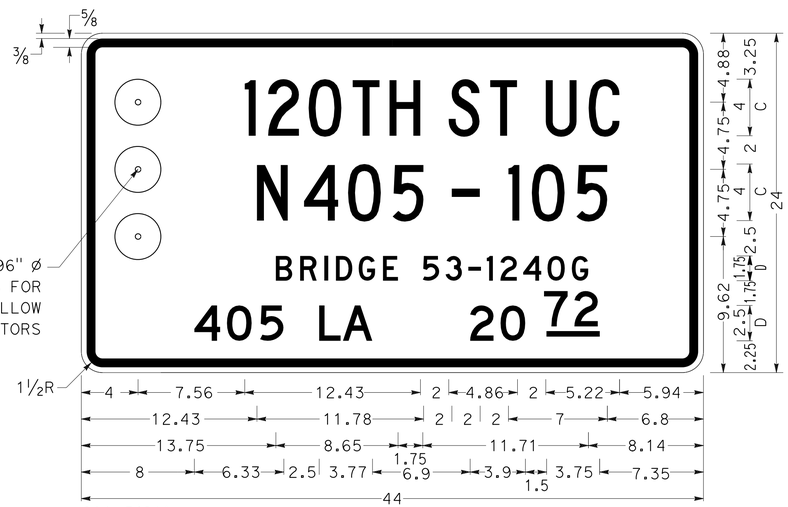

G11-5(CA);
DIMENSION IN INCHES
BLACK LEGEND AND BORDER
ON WHITE BACKGROUND

PD3-5

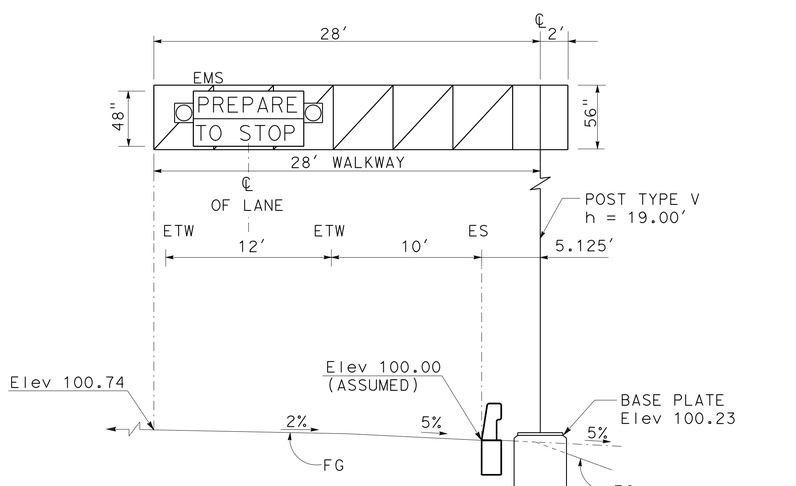

SIGN No. PD4-7 IS

FNBT "B" LINE Sta 97+10.00
1.FURNISH AND INSTALL SIGN STRUCTURE (TRUSS)(EMS)
2.INSTALL EMS (SEE ELECTRICAL PLAN)
3.WALKWAY REQUIRED

SIGN DETAILS
NO SCALE

SD-2

APPROVED FOR SIGN WORK ONLY

REVISED BY | DATE REVISED
JM CANALITA / RB KHAW | ANH D. NGUYEN
CALCULATED-DESIGNED BY | CHECKED BY
FUNCTIONAL SUPERVISOR
MOHAMMED CHOWDHURY

STATE OF CALIFORNIA - DEPARTMENT OF TRANSPORTATION
Caltrans® TRAFFIC DESIGN

S:\projects\3x8701\District7_Roadway\73x870ob002.dgn

LAST REVISION 00-00-00 | DATE PLOTTED => 27-JUL-2016 | TIME PLOTTED => 12:53

Dist	COUNTY	ROUTE	POST MILES TOTAL PROJECT	SHEET No.	TOTAL SHEETS
07	LA	105, 405	R2.5, 20.5/R21.1	127	265

REGISTERED CIVIL ENGINEER 6/25/16 DATE

7-1-16
PLANS APPROVAL DATE

REGISTERED PROFESSIONAL ENGINEER ANH D. NGUYEN No. 62370 Exp. 9/30/17 CIVIL STATE OF CALIFORNIA

THE STATE OF CALIFORNIA OR ITS OFFICERS OR AGENTS SHALL NOT BE RESPONSIBLE FOR THE ACCURACY OR COMPLETENESS OF SCANNED COPIES OF THIS PLAN SHEET.

G24-5(CA);
DIMENSION IN INCHES
WHITE LEGEND, ARROW AND BORDER
ON GREEN BACKGROUND

PD4-2 (a)

G24-5(CA);
DIMENSION IN INCHES
WHITE LEGEND, ARROW AND BORDER
ON GREEN BACKGROUND

PD4-2 (b)

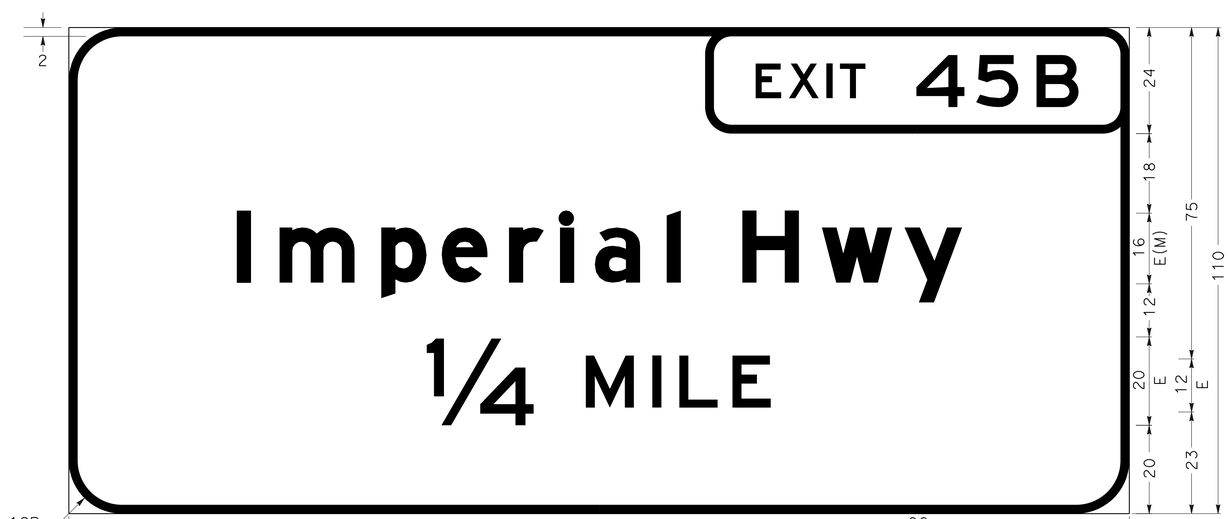

G83-5(CA);
DIMENSION IN INCHES
WHITE LEGEND AND BORDER
ON GREEN BACKGROUND

PD3-3

SIGN DETAILS

NO SCALE

SD-3

APPROVED FOR SIGN WORK ONLY

REVISED BY	
DATE REVISED	
CALCULATED-DESIGNED BY	JM CANALITA / RB KHAW
CHECKED BY	ANH D. NGUYEN
FUNCTIONAL SUPERVISOR	MOHAMMED CHOWDHURY

STATE OF CALIFORNIA - DEPARTMENT OF TRANSPORTATION
Caltrans® TRAFFIC DESIGN

S:\projects\3x8701\District7_Roadway\73x870ob003.dgn

LAST REVISION 00-00-00
DATE PLOTTED => 27-JUL-2016
TIME PLOTTED => 12:53

DIST	COUNTY	ROUTE	POST MILES TOTAL PROJECT	SHEET No	TOTAL SHEETS
07	LA	105,405	R2.5, 20.5/R21.1	128	265

REGISTERED CIVIL ENGINEER 5/4/16 DATE

7-1-16
PLANS APPROVAL DATE

REGISTERED PROFESSIONAL ENGINEER JUAN J. JAUREGUI JR. No. C63939 Exp. 9/30/16 CIVIL STATE OF CALIFORNIA

The State of California or its officers or agents shall not be responsible for the accuracy or completeness of electronic copies of this plan sheet.

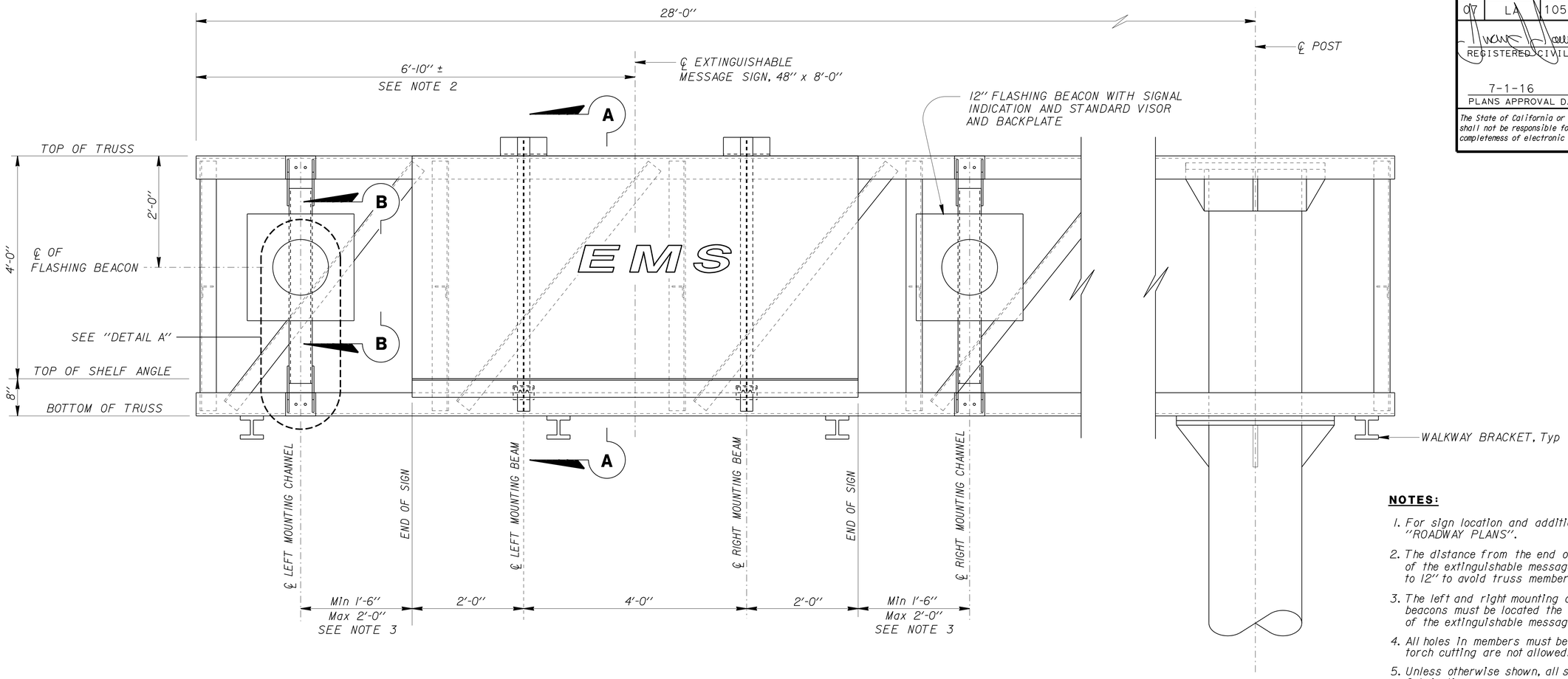

ELEVATION
SIGN No. PD4-7

NOTES:

1. For sign location and additional information, see "ROADWAY PLANS".
2. The distance from the end of the truss to the centerline of the extinguishable message sign may be adjusted up to 12" to avoid truss members and walkway brackets.
3. The left and right mounting channels for the flashing beacons must be located the same distance from the end of the extinguishable message sign.
4. All holes in members must be drilled. Thermal cutting and torch cutting are not allowed.
5. Unless otherwise shown, all steel must be galvanized after fabrication.
6. All high strength (HS) bolts must be snug tighten.
7. For "SECTION A-A", see sheet SES-2. For "DETAIL A" and "SECTION B-B", see sheet SDS-3.
8. For details not shown, see "STANDARD PLANS 2010".

NOTE:
THE CONTRACTOR MUST VERIFY ALL CONTROLLING FIELD DIMENSIONS BEFORE ORDERING OR FABRICATING ANY MATERIAL.

STANDARD PLAN SHEET No.
DETAIL No.

NO SCALE

BRANCH CHIEF JEFF WOODY	DESIGN	BY JUAN JAUREGUI	CHECKED K.C. LIU
	DETAILS	BY R. YEE	CHECKED K.C. LIU
	QUANTITIES	BY	CHECKED

STATE OF CALIFORNIA
DEPARTMENT OF TRANSPORTATION

DIVISION OF ENGINEERING SERVICES
DESIGN AND TECHNICAL SERVICES
SPECIAL DESIGNS BRANCH A

BRIDGE NO. N/A
POST MILE

EXTINGUISHABLE MESSAGE SIGN AND FLASHING BEACONS
ELEVATION

SDS-1

(ENGLISH) SPECIAL DESIGNS BRANCH BORDER SHEET (REV. 7-1-09)

ORIGINAL SCALE IN INCHES FOR REDUCED PLANS 0 1 2 3

UNIT: 3619
PROJECT ID & PHASE: 0713000241-1
CONTRACT No.: 07-3X8704

DISREGARD PRINTS BEARING EARLIER REVISION DATES
REVISION DATES 4/28/16 5/2/16 5/4/16 5/9/16

SHEET 1 OF 3

FILE => /2016sd/07-3X8704/sds-1

USERNAME => s125624 DATE PLOTTED => 27-JUL-2016 TIME PLOTTED => 12:53

DIST	COUNTY	ROUTE	POST MILES TOTAL PROJECT	SHEET No	TOTAL SHEETS
07	LA	105,405	R2.5, 20.5/R21.1	129	265

REGISTERED CIVIL ENGINEER 5/4/16 DATE

7-1-16
PLANS APPROVAL DATE

REGISTERED PROFESSIONAL ENGINEER JUAN J. JAUREGUI JR. No. C63939 Exp. 9/30/16 CIVIL STATE OF CALIFORNIA

The State of California or its officers or agents shall not be responsible for the accuracy or completeness of electronic copies of this plan sheet.

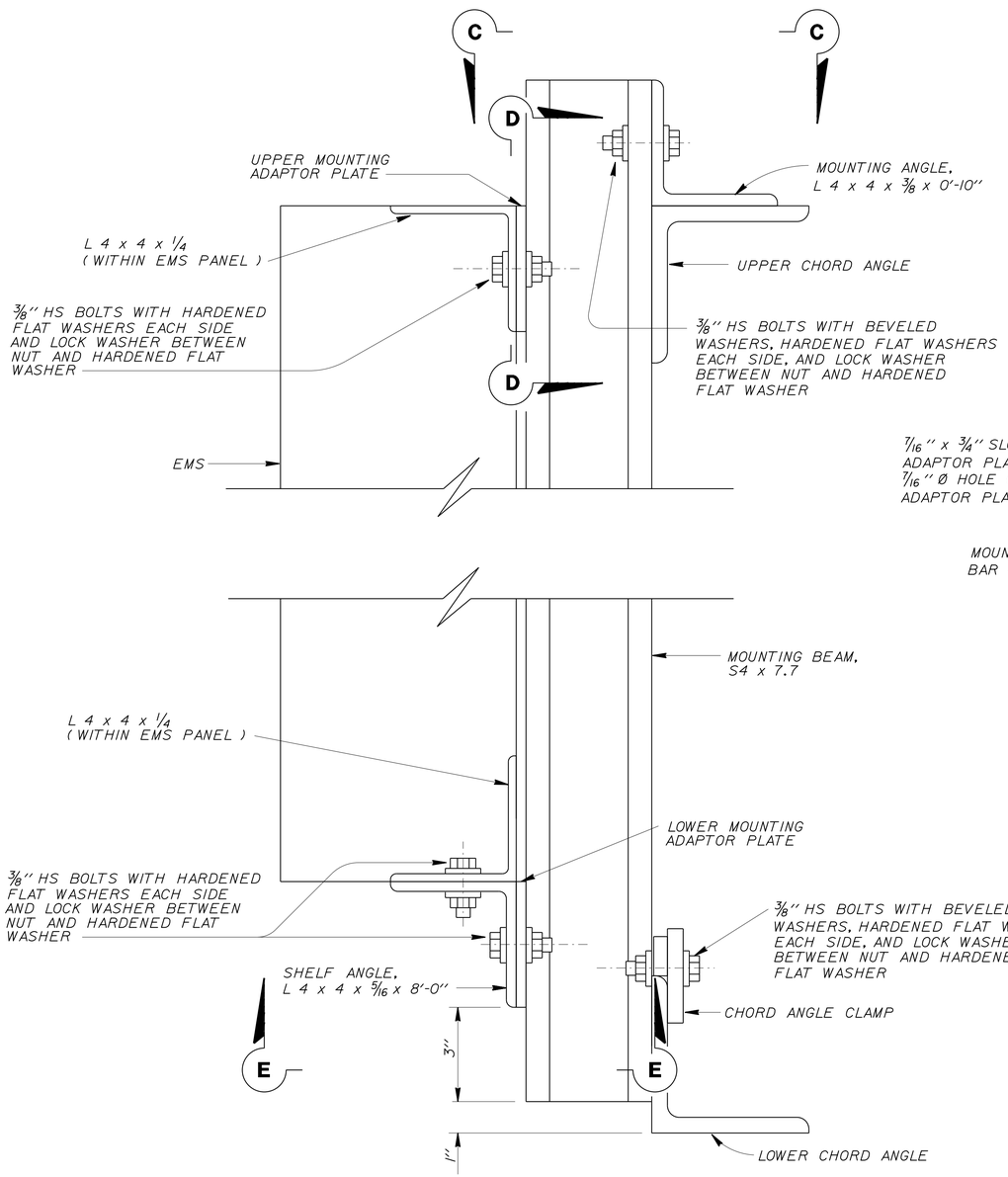

SECTION A-A

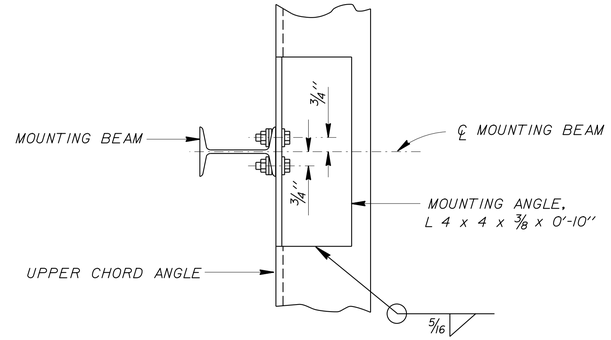

SECTION C-C

NOTE: EMS NOT SHOWN FOR CLARITY.

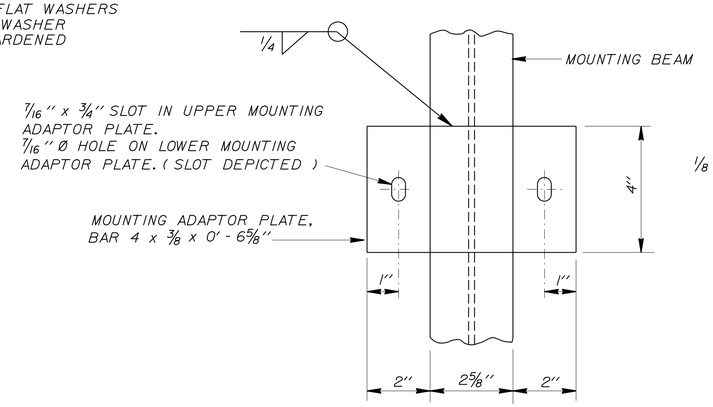

SECTION D-D

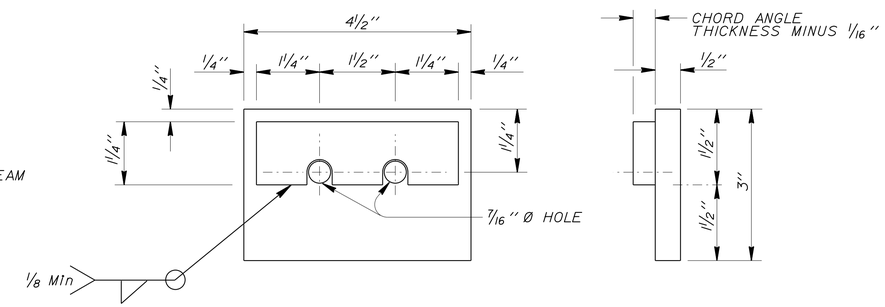

CHORD ANGLE CLAMP

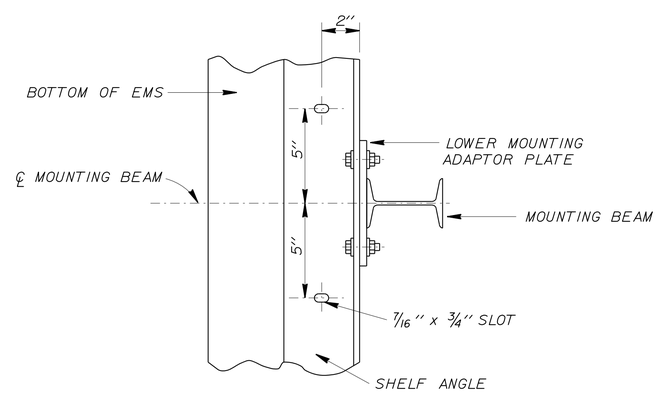

SECTION E-E

NOTE: LOWER CHORD ANGLE NOT SHOWN FOR CLARITY.

NOTE:
THE CONTRACTOR MUST VERIFY ALL CONTROLLING FIELD DIMENSIONS BEFORE ORDERING OR FABRICATING ANY MATERIAL.

STANDARD PLAN SHEET No.
DETAIL No.

NO SCALE

BRANCH CHIEF JEFF WOODY	DESIGN	BY JUAN JAUREGUI	CHECKED K.C. LIU
	DETAILS	BY R. YEE	CHECKED K.C. LIU
	QUANTITIES	BY	CHECKED

STATE OF CALIFORNIA
DEPARTMENT OF TRANSPORTATION

DIVISION OF ENGINEERING SERVICES
DESIGN AND TECHNICAL SERVICES
SPECIAL DESIGNS BRANCH A

BRIDGE NO. N/A
POST MILE

EXTINGUISHABLE MESSAGE SIGN AND FLASHING BEACONS
DETAILS No. 1

SDS-2

(ENGLISH) SPECIAL DESIGNS BRANCH BORDER SHEET (REV. 7-1-09)

ORIGINAL SCALE IN INCHES FOR REDUCED PLANS 0 1 2 3

UNIT: 3619
PROJECT ID & PHASE: 0713000241-1
CONTRACT No.: 07-3X8704

DISREGARD PRINTS BEARING EARLIER REVISION DATES

REVISION DATES 4/28/16 5/4/16 5/4/16

SHEET 2 OF 3

FILE => /2016sd/07-3X8704/sds-2

USERNAME => s125624 DATE PLOTTED => 28-JUL-2016 TIME PLOTTED => 10:28

DIST	COUNTY	ROUTE	POST MILES TOTAL PROJECT	SHEET No	TOTAL SHEETS
07	LA	105,405	R2.5, 20.5/R21.1	130	265

REGISTERED CIVIL ENGINEER 5/4/16 DATE

7-1-16
PLANS APPROVAL DATE

REGISTERED PROFESSIONAL ENGINEER JUAN J. JAUREGUI JR. No. C63939 Exp. 9/30/16 CIVIL STATE OF CALIFORNIA

The State of California or its officers or agents shall not be responsible for the accuracy or completeness of electronic copies of this plan sheet.

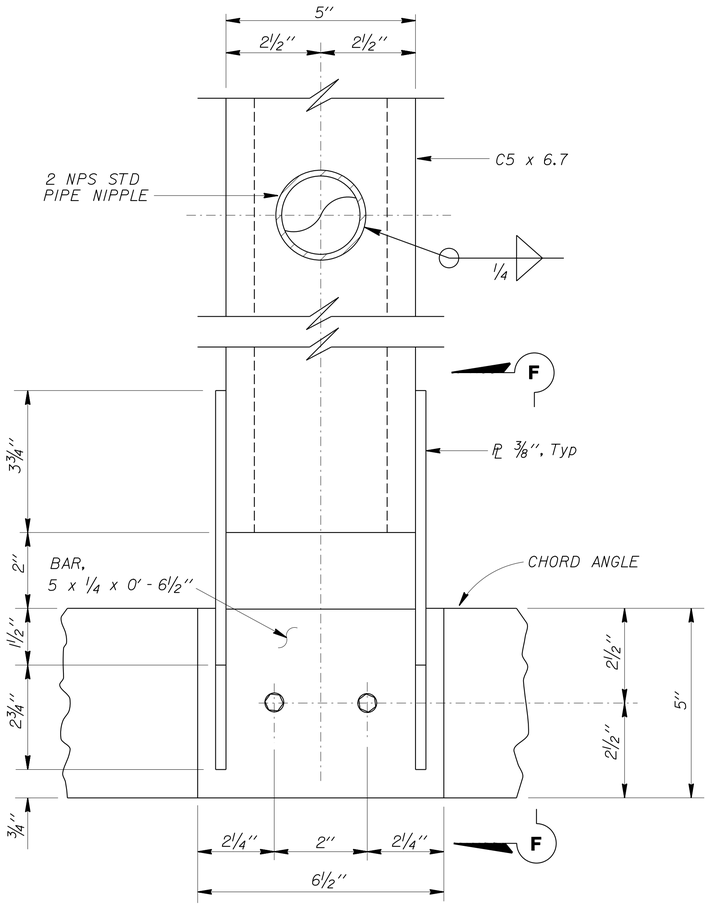

DETAIL A

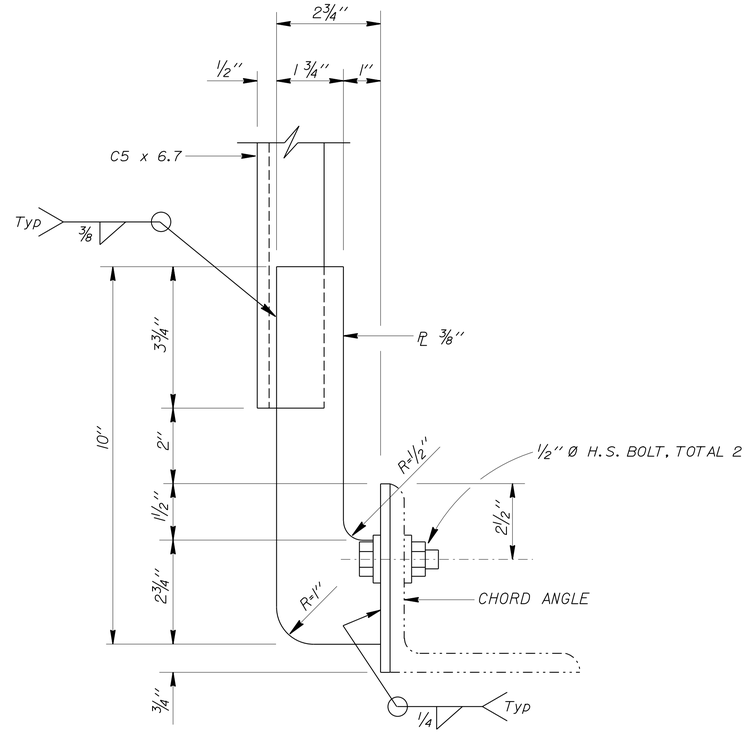

SECTION F-F

NOTES: BOTTOM CHORD CONNECTION SHOWN.
TOP CHORD CONNECTION SIMILAR.
OTHER FRAMING NOT SHOWN FOR CLARITY.

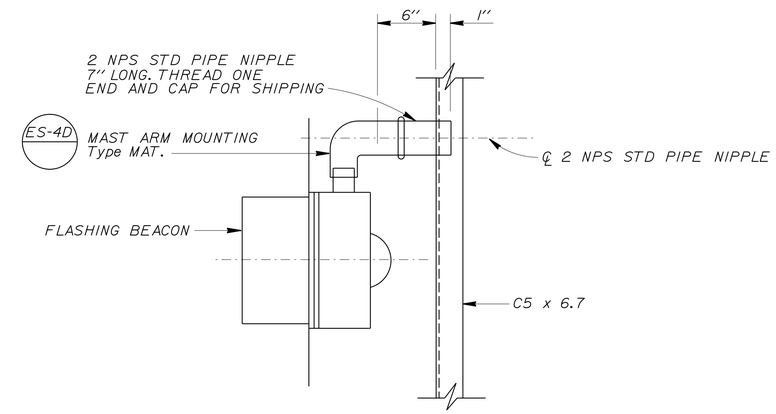

VIEW B-B

NOTE:
THE CONTRACTOR MUST VERIFY ALL CONTROLLING FIELD DIMENSIONS BEFORE ORDERING OR FABRICATING ANY MATERIAL.

STANDARD PLAN SHEET No.
DETAIL No.

NO SCALE

BRANCH CHIEF JEFF WOODY	DESIGN	BY JUAN JAUREGUI	CHECKED K.C. LIU
	DETAILS	BY R. YEE	CHECKED K.C. LIU
	QUANTITIES	BY	CHECKED

STATE OF CALIFORNIA
DEPARTMENT OF TRANSPORTATION

DIVISION OF ENGINEERING SERVICES
DESIGN AND TECHNICAL SERVICES
SPECIAL DESIGNS BRANCH A

BRIDGE NO. N/A
POST MILE

EXTINGUISHABLE MESSAGE SIGN AND FLASHING BEACONS
DETAILS No. 2

SDS-3

(ENGLISH) SPECIAL DESIGNS BRANCH BORDER SHEET (REV. 7-1-09)

ORIGINAL SCALE IN INCHES FOR REDUCED PLANS 0 1 2 3

UNIT: 3619
PROJECT ID & PHASE: 0713000241-1
CONTRACT No.: 07-3X8704

DISREGARD PRINTS BEARING EARLIER REVISION DATES

REVISION DATES 4/28/16 5/4/16 5/4/16

SHEET 3 OF 3

FILE => /2016sd/07-3X8704/sds-3

USERNAME => s125624 DATE PLOTTED => 28-JUL-2016 TIME PLOTTED => 10:38

Dist	COUNTY	ROUTE	POST MILES TOTAL PROJECT	SHEET No.	TOTAL SHEETS
07	LA	105,405	R2.5, 20.5/R21.1	131	265

REGISTERED CIVIL ENGINEER 6/25/16 DATE

7-1-16
PLANS APPROVAL DATE

REGISTERED PROFESSIONAL ENGINEER ANH D. NGUYEN No. 62370 Exp. 9/30/17 CIVIL STATE OF CALIFORNIA

THE STATE OF CALIFORNIA OR ITS OFFICERS OR AGENTS SHALL NOT BE RESPONSIBLE FOR THE ACCURACY OR COMPLETENESS OF SCANNED COPIES OF THIS PLAN SHEET.

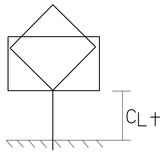

TYPICAL POST HEIGHT DETAIL

SUMMARY OF SIGN QUANTITIES

SHEET No.	SIGN No.	LOCATION STATION	LOCATION DIRECTION	SIGN CODE	PANEL SIZE (L X D) INCH x INCH	SINGLE FACED	SIGN FACING MATERIAL BACKGROUND SHEETING COLOR	SIGN FACING MATERIAL BACKGROUND RETROREFLECTIVE ASTM TYPE	SIGN FACING MATERIAL LEGEND SHEETING COLOR	SIGN FACING MATERIAL LEGEND RETROREFLECTIVE ASTM TYPE	SIGN FACING MATERIAL GRAFFITI FILM PREMIUM	POST DATA CLEARANCE (C) L+ FT	POST DATA SIZE INCH x INCH	POST DATA TOTAL LENGHT FT	FURNISH SINGLE SHEET ALUMINUM SIGN (0.063" - UNFRAMED) SQFT	FURNISH SINGLE SHEET ALUMINUM SIGN(0.063" - UNFRAMED) FOR RETROREFLECTIVE SHEETING (TYPE XI) SQFT	FURNISH SINGLE SHEET ALUMINUM SIGN(0.080" - UNFRAMED) FOR RETROREFLECTIVE SHEETING (TYPE XI) SQFT	FURNISH SINGLE SHEET ALUMINUM SIGN(0.080" - FRAMED) FOR RETROREFLECTIVE SHEETING (TYPE XI) SQFT	FURNISH FORMED PANEL SIGN (OVERHEAD) FOR RETROREFLECTIVE SHEETING (TYPE XI) SQFT	RETROREFLECTIVE SHEETING (TYPE XI) SQFT	ROADSIDE SIGN ONE POST EA	INSTALL SIGN (STRAP AND SADDLE BRACKET METHOD) EA	REMOVE ROADSIDE SIGN (WOOD POST) EA	REMOVE ROADSIDE SIGN (STRAP AND SADDLE BRACKET METHOD) EA	SIGN STRUCTURE TRUSS FURNISH LB	SIGN STRUCTURE TRUSS INSTALL LB	REMOVE SIGN STRUCTURE EA	60" CIDH CONCRETE PILE (SIGN FOUNDATION) FT	TREATED WOOD WASTE LB	REMARKS
PD-2	2-1a	367+35.00 "C" LINE	FNBT	G92(CA)																											
	2-1b			G27-2(CA)																		1							60	105
	2-1c			M6-2																											
	2-1a	367+30.00 "C" LINE	FNBT	G92(CA)	48 X 30	*	GREEN	XI	WHITE	VIII	*	5.0	4 x 6	14.8			10.0			10.0	1										
	2-1b			G27-2(CA)	21 X 18	*	BLUE/ RED	XI	WHITE	VIII	*					2.7				2.7										105
	2-1c			M6-2	21 X 15	*	BLUE	XI	WHITE	VIII	*					2.2				2.2											
	2-3	374+47.40 "A" LINE	FNBT	W4-1R																		1							60		
	2-4	374+47.40 "A" LINE	FNBT	W4-1R	48 X 48	*	YELLOW	XI	BLACK		*	7.0	6 x 6	17.7				16.0		16.0	1										
PD-3	3-1	379+53.00 "C" LINE	FNBT	W4-2	48 X 48	*	YELLOW	XI	BLACK		*	12.0						16.0		16.0		1									
	3-2	1084+70.60 "E" LINE	FNBT	G83-5(CA)																								1			Imperial Hwy 1/4 MILE
	3-3	1083+15.00 "E" LINE	FNBT	G83-5(CA)	240 X 110	*	GREEN	XI	WHITE	VIII	*								183.3	183.3					13,950	13,950		22		Imperial Hwy 1/4 MILE
	3-4	385+53.92 "A" LINE	FNBT	G11-5(CA)																		1							60	120TH ST UC N405 - 105
	3-5	385+53.92 "A" LINE	FNBT	G11-5(CA)	44 X 24	*	WHITE	VIII	BLACK		*	5.0	4 x 4	10.5	7.3						1									120TH ST UC N405 - 105
PD-4	4-1a	94+16.67 "B" LINE	FNBT	G24-5(CA)																								1		105 WEST El Segundo
	4-1b			G24-5(CA)																										105 EAST Norwalk
	4-2a	94+10.00 "B" LINE	FNBT	G24-5(CA)	144 X 120	*	GREEN	XI	WHITE	VIII	*								120.0	120.0					22,600	22,600		25		105 WEST El Segundo
	4-2b			G24-5(CA)	144 X 120	*	GREEN	XI	WHITE	VIII	*								120.0	120.0										105 EAST Norwalk
	4-3	96+06.02 "B" LINE	FNBT	W3-4																		1							60	
	4-4	96+06.02 "B" LINE	FNBT	W3-4	48 X 48	*	YELLOW	XI	BLACK		*	8.0	6 x 6	18.7				16.0		16.0	1									
	4-5	96+56.71 "B" LINE	FNBT	W9-2																				1						
	4-6	97+17.92 "B" LINE	FNBT	EMS																								1		PREPARE TO STOP
	4-7	97+10.00 "B" LINE	FNBT	EMS																					12,550	12,550		22		PREPARE TO STOP
	4-8	101+43.92 "B" LINE	FNBT	W3-3																				1						
	4-9	101+43.92 "B" LINE	FNBT	W3-3	48 X 48	*	YELLOW	XI	BLACK		*	7.0						16.0		16.0		1								
	4-10	101+43.92 "B" LINE	FNBT	W3-3																				1						
	4-11	101+43.92 "B" LINE	FNBT	W3-3	48 X 48	*	YELLOW	XI	BLACK		*	8.0						16.0		16.0		1								
TOTAL															7.3	4.9	10.0	80.0	423.3	518.2	4	3	4	3	49,100	49,100	3	69	240	

SIGN QUANTITIES SQ-1

REVISED BY | DATE REVISED
JAMES M. CANALITA | ANH D. NGUYEN
CALCULATED-DESIGNED BY | CHECKED BY
FUNCTIONAL SUPERVISOR: MOHAMMED CHOWDHURY

STATE OF CALIFORNIA - DEPARTMENT OF TRANSPORTATION
Caltrans® TRAFFIC DESIGN

S:\projects\3x8701\District7_Roadway\73x870oc001.dgn

LAST REVISION 00-00-00 | DATE PLOTTED => 27-JUL-2016 | TIME PLOTTED => 12:53

Dist	COUNTY	ROUTE	POST MILES TOTAL PROJECT	SHEET No.	TOTAL SHEETS
07	LA	105, 405	R2.5, 20.5/R21.1	132	265

Medardo de la Cruz 6-15-16
REGISTERED CIVIL ENGINEER DATE

7-1-16
PLANS APPROVAL DATE

REGISTERED PROFESSIONAL ENGINEER MEDARDO DE LA CRUZ No. C61848 Exp. 6-30-17 CIVIL STATE OF CALIFORNIA

THE STATE OF CALIFORNIA OR ITS OFFICERS OR AGENTS SHALL NOT BE RESPONSIBLE FOR THE ACCURACY OR COMPLETENESS OF SCANNED COPIES OF THIS PLAN SHEET.

NOTE:

(N) NOT SEPARATE PAY ITEM, FOR INFORMATION ONLY.

EARTHWORK QUANTITIES SUMMARY

SHEET No.	LOCATION	STATION	ROADWAY EXCAVATION	EMBANKMENT (N)	IMPORTED BORROW
			CY	CY	CY
L-2, L-3	FROM 129TH St OC TO 120TH St UC	"A" 372+94.243 TO 385+68.988	12,182	7,756	7,756
L-3, L-4	FROM 120TH St UC TO N405-W105 Conn Sep	"A" 388+57.768 TO 401+86.441	13,477	8,668	8,668
L-2	EB/WB 105 ON-RAMP FROM EL SEGUNDO Blvd	"C" 373+12.941 TO 376+05.845	10,911	10,468	10,468
L-5	FROM NB Rte 405 TO EB Rte 105 Conn	"B" 121+44.083 TO 123+68.091	2,348	2,089	2,089
		TOTAL	38,918	28,981	28,981

MISCELLANEOUS ITEMS

SHEET No.	STATION	MINOR CONCRETE (CURB, GUTTER, SIDEWALK AND DRIVEWAY)	TREATED WOOD WASTE
		CY	LB
L-2	"C" 373+13.00 TO 374+57.87	9	
L-2	"A" 373+24.00 TO 374+60.00	7	
L-3	AVSF MAINTENANCE ACCESS	150	
L-4	AVSF MAINTENANCE ACCESS	223	
	TOTAL	389	87,700

SUMMARY OF QUANTITIES

Q-1

REVISED BY | DATE REVISED
HUNG TIEU | MEDARDO DE LA CRUZ
CALCULATED-DESIGNED BY | CHECKED BY
FUNCTIONAL SUPERVISOR
ASADOUR TERTERIAN

STATE OF CALIFORNIA - DEPARTMENT OF TRANSPORTATION
Caltrans
DESIGN

LAST REVISION 09-22-15 | DATE PLOTTED => 27-JUL-2016 | TIME PLOTTED => 12:53

Dist	COUNTY	ROUTE	POST MILES TOTAL PROJECT	SHEET No.	TOTAL SHEETS
07	LA	105,405	R2.5, 20.5/R21.1	133	265

Medardo de la Cruz 6-25-16
REGISTERED CIVIL ENGINEER DATE

7-1-16
PLANS APPROVAL DATE

REGISTERED PROFESSIONAL ENGINEER MEDARDO DE LA CRUZ No. C61848 Exp. 6-30-17 CIVIL STATE OF CALIFORNIA

THE STATE OF CALIFORNIA OR ITS OFFICERS OR AGENTS SHALL NOT BE RESPONSIBLE FOR THE ACCURACY OR COMPLETENESS OF SCANNED COPIES OF THIS PLAN SHEET.

NOTES:

1. PLACE ABOVE SUBGRADE OVER-EXCAVATION
2. PLACE BETWEEN BACKFILL AND PAVEMENT SECTION

PAVEMENT STRUCTURAL SECTION QUANTITIES

STATION	JOINTED PLAIN CONCRETE PAVEMENT	JOINTED PLAIN CONCRETE PAVEMENT (RSC)	LEAN CONCRETE BASE	LEAN CONCRETE BASE RAPID SETTING	CLASS 3 AGGREGATE BASE	CEMENT TREATED PERMEABLE BASE	FILTER FABRIC	SAND BACK FILL	SUBGRADE ENHANCEMENT GEOGRID	SUBGRADE ENHANCEMENT GEOTEXTILE, CLASS B1 MODIFIED (SEE NOTE 1)	SUBGRADE ENHANCEMENT GEOTEXTILE, CLASS B1 MODIFIED (SEE NOTE 2)
	CY	CY	CY	CY	CY	CY	SQYD	CY	SQYD	SQYD	SQYD
373+41.22 TO 385+22.08 "A"	2,081		728		1,457						6,242
389+03.52 TO 398+89.95 "A"	1,438		503		1,007						4,314
398+89.95 TO 401+56.14 "A"	337		118		236						1,011
98+89.95 TO 101+57.95 "A"	325		114		227						974
122+30.00 TO 122+84.00 "D" LANES		79		37.2	46.5	28	279	30.9		279	279
122+30.00 TO 122+84.00 "D" Shld	16		7.6		9.5	5.7	57	6.3		57	57
122+00.00 TO 122+30.00 "D" Shld	9		4.1		5.2	3.1				31	31
AVSF MAINTENANCE ACCESS (L-3)					300						
AVSF MAINTENANCE ACCESS (L-4)					447						
373+70.00 TO 375+45.00 "A"									3,837		
372+94.00 TO 385+74.00 "A"										12,111	
388+57.00 TO 401+86.00 "A"										12,222	
Rte 105 ABUTMENT (L-5)									883		
TOTAL	4,206	79	1,475	37.2	3,735.2	36.8	336	37.2	4,720	37,608	

SUMMARY OF QUANTITIES

Q-2

STATE OF CALIFORNIA - DEPARTMENT OF TRANSPORTATION
Caltrans® DESIGN

FUNCTIONAL SUPERVISOR: ASADOUR TERTERIAN
CALCULATED-DESIGNED BY: HUNG TIEU
CHECKED BY: MEDARDO DE LA CRUZ
REVISED BY
DATE REVISED

LAST REVISION 09-22-15
DATE PLOTTED => 27-JUL-2016
TIME PLOTTED => 12:53

Dist	COUNTY	ROUTE	POST MILES TOTAL PROJECT	SHEET No.	TOTAL SHEETS
07	LA	105,405	R2.5, 20.5/R21.1	134	265

Medardo de la Cruz 6-15-16
REGISTERED CIVIL ENGINEER DATE

7-1-16
PLANS APPROVAL DATE

REGISTERED PROFESSIONAL ENGINEER
MEDARDO DE LA CRUZ
No. C61848
Exp. 6-30-17
CIVIL
STATE OF CALIFORNIA

THE STATE OF CALIFORNIA OR ITS OFFICERS OR AGENTS SHALL NOT BE RESPONSIBLE FOR THE ACCURACY OR COMPLETENESS OF SCANNED COPIES OF THIS PLAN SHEET.

TEMPORARY WATER POLLUTION CONTROL QUANTITIES

DESCRIPTION	MEASUREMENT UNIT	QUANTITY
TEMPORARY CONSTRUCTION ENTRANCE	EA	5
TEMPORARY SILT FENCE	LF	1,000
TEMPORARY FIBER ROLL	LF	6,400
TEMPORARY GRAVEL BAG BERM	LF	400
TEMPORARY DRAINAGE INLET PROTECTION	EA	36
TEMPORARY CONCRETE WASHOUT	LS	LS
TEMPORARY COVER	SQYD	2,000

SUMMARY OF QUANTITIES

Q-3

STATE OF CALIFORNIA - DEPARTMENT OF TRANSPORTATION
Caltrans® DESIGN

FUNCTIONAL SUPERVISOR: ASADOUR TERTERIAN
CALCULATED-DESIGNED BY: HUNG TIEU
CHECKED BY: MEDARDO DE LA CRUZ
REVISED BY
DATE REVISED

LAST REVISION 09-22-15
DATE PLOTTED => 27-JUL-2016
TIME PLOTTED => 12:53

Dist	COUNTY	ROUTE	POST MILES TOTAL PROJECT	SHEET No.	TOTAL SHEETS
07	LA	105,405	R2.5, 20.5/R21.1	135	265

Medardo de la Cruz 6-15-16
REGISTERED CIVIL ENGINEER DATE

7-1-16
PLANS APPROVAL DATE

REGISTERED PROFESSIONAL ENGINEER
MEDARDO DE LA CRUZ
No. C61848
Exp. 6-30-17
CIVIL
STATE OF CALIFORNIA

THE STATE OF CALIFORNIA OR ITS OFFICERS OR AGENTS SHALL NOT BE RESPONSIBLE FOR THE ACCURACY OR COMPLETENESS OF SCANNED COPIES OF THIS PLAN SHEET.

NOTES:

* FOR INFORMATION ONLY, SEE SHEET SQ-1
1. FOR DRAINAGE REMOVAL QUANTITIES, SEE DRAINAGE QUANTITIES, DQ SHEETS

ROADWAY REMOVAL QUANTITIES

SHEET No.	STATION	REMOVE CONCRETE BARRIER	REMOVE GUARDRAIL	REMOVE CONCRETE PAVEMENT (CY)	REMOVE ASPHALT CONCRETE SURFACING	REMOVE CRASH CUSHION	REMOVE SIGN STRUCTURE *	REMOVE CHAIN LINK FENCE	REMOVE CONCRETE CURB
		LF	LF	CY	SQFT	EA	EA	LF	LF
C-1	"A" 374+73.75 TO 378+50.00 L†		376						
	"A" 372+93.80 TO 374+73.75 L†	180							
	"A" 373+24.14 TO 378+50.00			855					
	"C" 361+72 TO 378+50.00 R†		1,678						
	"C" 367+31.50 TO 373+71.72 L†		640		7,993				
C-2	"A" 385+37.36 TO 385+67.36 L†	30							
	"A" 385+44.92 TO 385+74.92 R†	30							
	"A" 378+50.00 TO 385+37.36 L†		687						
	"A" 378+50.00 TO 385+44.92 R†		694						
	"A" 388+56.67 TO 391+50.00 L†	294							
	"A" 388+61.44 TO 391+50.00 R†	289							
	"A" 378+50.00 TO 385+37.36			1,050					
	"A" 388+86.67 TO 391+50.00			343					
	"E" 1084+68.45 R†						1		
	"A" 386+00.00 L†							80	
C-3	"A" 391+50.00 TO 401+86.43 R†	1,037							
	"A" 391+50.00 TO 394+16.67 R†	267							
	"B" 94+16.67 TO 101+88.45 L†	772							
	"A" 391+50.00 TO 401+56.43			1,715					
	"A" 398+90.84 TO 401+56.43 R†	266							
	"B" 98+91.50 TO 101+57.95 R†	267							
	"B" 94+16.67 R†						1		
	"B" 97+18.20 R†						1		
	"A" 398+90.84 R†					1			
	"B" 97+78.00 TO 94+61.10 R†							317	
	"B" 97+08.67 TO 97+57.67 R†				389				49
C-4	"D" 121+47.87 TO 122+84.00 R†	136							
	"D" 122+00.00 TO 122+84.00			104					
	TOTAL	3,568	4,073	4,067	8,382	1	3	397	49

SUMMARY OF QUANTITIES

Q-4

STATE OF CALIFORNIA - DEPARTMENT OF TRANSPORTATION
Caltrans®
DESIGN

FUNCTIONAL SUPERVISOR: ASADOUR TERTERIAN
CALCULATED-DESIGNED BY: ABDULRAUF SETH
CHECKED BY: MEDARDO DE LA CRUZ
REVISED BY
DATE REVISED

LAST REVISION 09-22-15
DATE PLOTTED => 27-JUL-2016
TIME PLOTTED => 12:53

Dist	COUNTY	ROUTE	POST MILES TOTAL PROJECT	SHEET No.	TOTAL SHEETS
07	LA	105,405	R2.5, 20.5/R21.1	136	265

Medardo de la Cruz 6-15-16
REGISTERED CIVIL ENGINEER DATE

7-1-16
PLANS APPROVAL DATE

REGISTERED PROFESSIONAL ENGINEER MEDARDO DE LA CRUZ No. C61848 Exp. 6-30-17 CIVIL STATE OF CALIFORNIA

THE STATE OF CALIFORNIA OR ITS OFFICERS OR AGENTS SHALL NOT BE RESPONSIBLE FOR THE ACCURACY OR COMPLETENESS OF SCANNED COPIES OF THIS PLAN SHEET.

NOTE:

* FOR ADDITIONAL MINOR CONCRETE (MINOR STRUCTURE) QUANTITIES SEE DRAINAGE QUANTITIES, DQ SHEETS

ROADWAY QUANTITIES

SHEET No.	STATION	CONCRETE BARRIER (TYPE 732B)	CONCRETE BARRIER (TYPE 60C)	END ANCHOR ASSEMBLY (TYPE SFT)	MIDWEST GUARDRAIL SYSTEM (WOOD POST)	TRANSITION RAILING (TYPE WB-31)	ALTERNATIVE FLARED TERMINAL SYSTEM	CHAIN LINK FENCE (TYPE CL-6)	12' CHAIN LINK GATE (TYPE CL-6)	16' CHAIN LINK GATE (TYPE CL-6)	ROCK BLANKET	MINOR CONCRETE (STAMPED CONCRETE)	CRASH CUSHION (SCI 100GM)	END CAP (TYPE A)	MINOR CONCRETE (MINOR STRUCTURE)
		LF	LF	EA	LF	EA	EA	LF	EA	EA	SQFT	SQFT	EA	EA	CY
L-1	"C" 361+72 TO 365+50.00 R+				378									1	
L-2	"C" 365+50.00 TO 372+88 R+				738										
	"C" 372+88.00 TO 373+13.00 R+					1									
	"C" 373+13.00 TO 378+50.00 R+	537.0													
	"C" 367+35 TO 367+85 L+						1								
	"C" 367+85 TO 373+45 L+				560										
	"C" 373+45 TO 373+70 L+			1											
	"C" 373+13 TO 373+57.87 L+											2,157			
	"A" 373+24.14 TO 378+50.00 L+	525.9													
L-3	"A" 378+50.00 TO 385+37.56 L+	687.6													
	"A" 389+19.05 TO 391+50.00 L+	231.0													
	"A" 389+01.67 TO 391+50.00 R+	248.3													
	"A" 378+50.00 TO 385+44.34 R+	694.3													
	AVSF MAINTENANCE SYSTEM							56	2		4,425				
L-4	"A" 391+50.00 TO 401+56.14 L+	1,006.1													
	"A" 391+50.00 TO 394+16.67 R+	266.7													
	"B" 94+16.67 TO 101+57.95 R+	741.3													
	"A" 398+65.53 TO 399+57.20 R+		91.7												
	"A" 399+57.20 TO 400+00.00 R+, BARRIER TRANSITION														22.08
	"B" 98+43.5 TO 98+65, 20.75' L+												1		
	"A" 400+00.25 TO 401+58.14 R+	157.9													
	"B" 100+00.00 TO 101+57.95 L+	157.9													
	AVSF MAINTENANCE SYSTEM							285		2	1,188				
L-5	"D" 121+47.88 TO 122+84.00 R+	136													
	TOTAL	5,390	91.7	1	1,676	1	1	341	2	2	5,613	2,157	1	1	22.08*

SUMMARY OF QUANTITIES

Q-5

STATE OF CALIFORNIA - DEPARTMENT OF TRANSPORTATION
Caltrans
DESIGN

FUNCTIONAL SUPERVISOR: ASADOUR TERTERIAN
CALCULATED-DESIGNED BY: ABDULRAUF SETH
CHECKED BY: MEDARDO DE LA CRUZ
REVISED BY
DATE REVISED

LAST REVISION 09-22-15
DATE PLOTTED => 27-JUL-2016
TIME PLOTTED => 12:53

Dist	COUNTY	ROUTE	POST MILES TOTAL PROJECT	SHEET No.	TOTAL SHEETS
07	LA	105,405	R2.5, 20.5/R21.1	137	265

George Olguin 6-20-16
LICENSED LANDSCAPE ARCHITECT

7-1-16
PLANS APPROVAL DATE

LICENSED LANDSCAPE ARCHITECT
GEORGE OLGUIN
NO. 4333
George Olguin
Signature
08-31-16
Renewal date
06-20-16
Date
STATE OF CALIFORNIA

THE STATE OF CALIFORNIA OR ITS OFFICERS OR AGENTS SHALL NOT BE RESPONSIBLE FOR THE ACCURACY OR COMPLETENESS OF SCANNED COPIES OF THIS PLAN SHEET.

IRRIGATION NOTES ALL SHEETS:

1. FOR ACCURATE RIGHT OF WAY DATA, CONTACT RIGHT OF WAY ENGINEERING AT THE DISTRICT OFFICE.
2. EXISTING UTILITY FACILITIES HAVE NOT BEEN INCLUDED ON THESE PLANS.
3. CNC NOT SHOWN ON ALL IRRIGATION PLANS FOR GRAPHIC CLARITY.
4. REMOVE EXISTING REMOTE CONTROL VALVES WHERE SHOWN ON THE PLANS
5. NEW REMOTE CONTROL VALVES MAY RETAIN EXISTING VALVE CODES NAMES WHERE SHOWN ON THE PLANS
6. EXISTING SOLENOIDS MUST BE CHECKED FOR RESISTANCE, SOLENOIDS NOT WITHIN 20 AND 60 OHMS OF RESISTANCE MUST BE REPLACED.

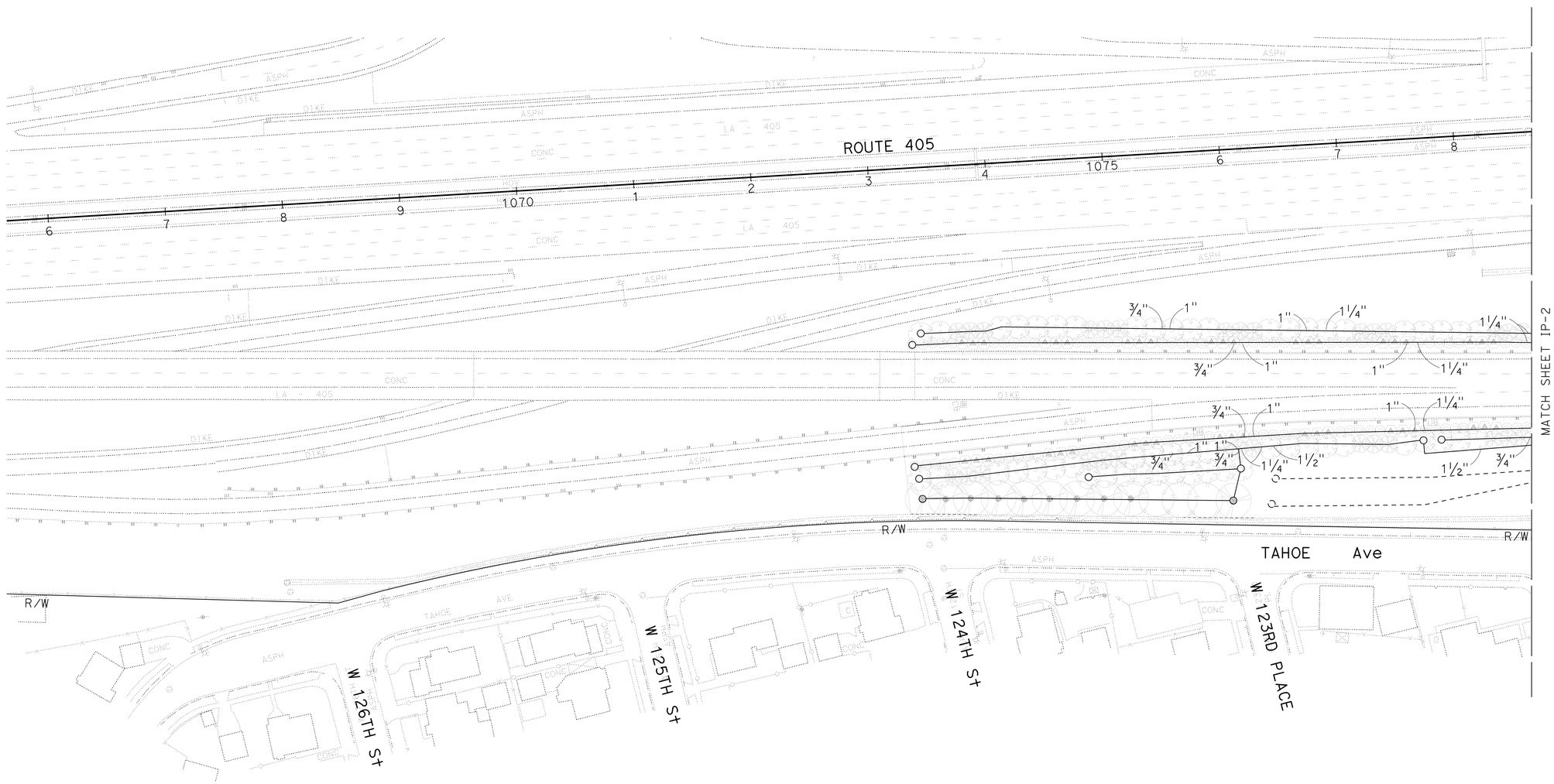

IRRIGATION PLAN

SCALE: 1" = 50'

IP-1

APPROVED FOR IRRIGATION WORK ONLY

STATE OF CALIFORNIA - DEPARTMENT OF TRANSPORTATION
Caltrans® LANDSCAPE ARCHITECTURE

SENIOR LANDSCAPE ARCHITECT: RON RUSSAK
CALCULATED-DESIGNED BY: YI SU
CHECKED BY: GEORGE OLGUIN
REVISED BY
DATE REVISED

LAST REVISION 00-00-00
DATE PLOTTED => 27-JUL-2016
TIME PLOTTED => 12:53

Dist	COUNTY	ROUTE	POST MILES TOTAL PROJECT	SHEET No.	TOTAL SHEETS
07	LA	105,405	R2.5, 20.5/R21.1	138	265

George Olguin 6-20-16
LICENSED LANDSCAPE ARCHITECT

7-1-16
PLANS APPROVAL DATE

LICENSED LANDSCAPE ARCHITECT
GEORGE OLGUIN
NO. 4333
George Olguin
Signature
08-31-16
Renewal date
06-20-16
Date
STATE OF CALIFORNIA

THE STATE OF CALIFORNIA OR ITS OFFICERS OR AGENTS SHALL NOT BE RESPONSIBLE FOR THE ACCURACY OR COMPLETENESS OF SCANNED COPIES OF THIS PLAN SHEET.

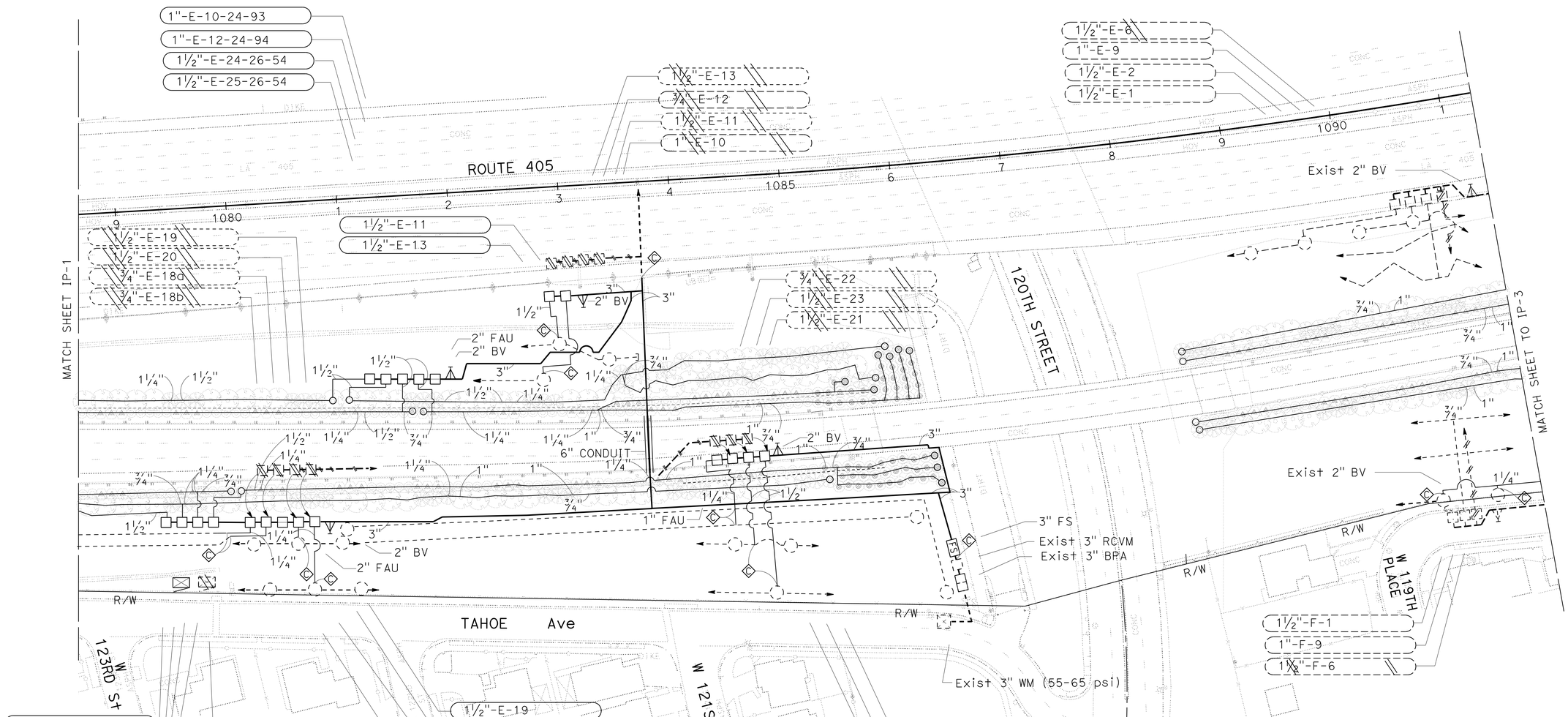

IRRIGATION PLAN

SCALE: 1" = 50'

IP-2

APPROVED FOR IRRIGATION WORK ONLY

STATE OF CALIFORNIA - DEPARTMENT OF TRANSPORTATION
Caltrans® LANDSCAPE ARCHITECTURE

SENIOR LANDSCAPE ARCHITECT: RON RUSSAK

CALCULATED-DESIGNED BY: YI SU
CHECKED BY: GEORGE OLGUIN

REVISED BY
DATE REVISED

LAST REVISION 00-00-00
DATE PLOTTED => 27-JUL-2016
TIME PLOTTED => 12:53

BORDER LAST REVISED 7/2/2010
USERNAME => s125624
DGN FILE => 73x870sp002.dgn
RELATIVE BORDER SCALE IS IN INCHES 0 1 2 3
UNIT 1850
PROJECT NUMBER & PHASE 07130002411

Dist	COUNTY	ROUTE	POST MILES TOTAL PROJECT	SHEET No.	TOTAL SHEETS
07	LA	105,405	R2.5, 20.5/R21.1	139	265

George Olguin 6-20-16
LICENSED LANDSCAPE ARCHITECT

7-1-16
PLANS APPROVAL DATE

LICENSED LANDSCAPE ARCHITECT
GEORGE OLGUIN
No. 4333
George Olguin
Signature
08-31-16
Renewal date
06-20-16
Date
STATE OF CALIFORNIA

THE STATE OF CALIFORNIA OR ITS OFFICERS OR AGENTS SHALL NOT BE RESPONSIBLE FOR THE ACCURACY OR COMPLETENESS OF SCANNED COPIES OF THIS PLAN SHEET.

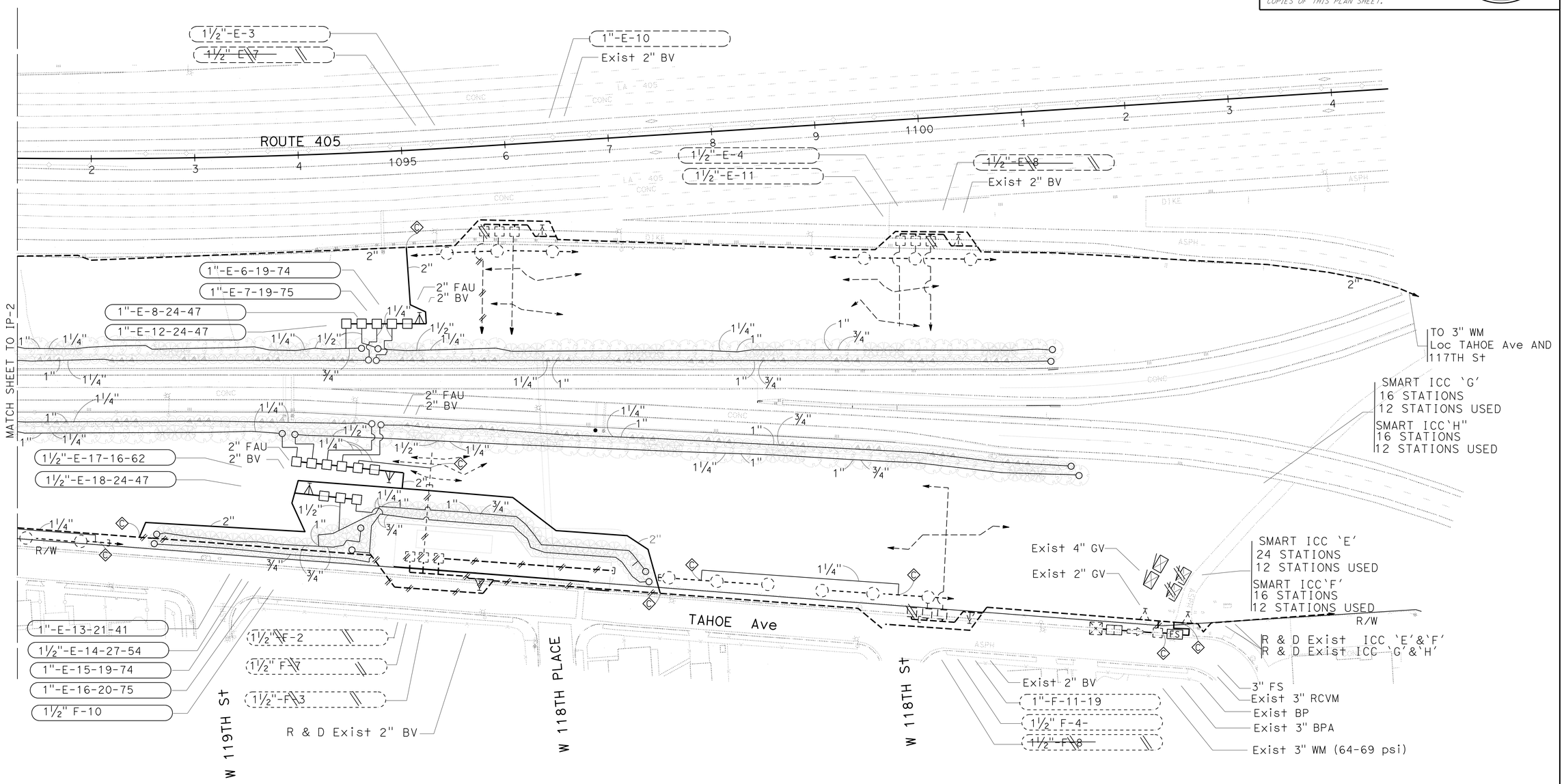

IRRIGATION PLAN

SCALE: 1" = 50'

IP-3

APPROVED FOR IRRIGATION WORK ONLY

STATE OF CALIFORNIA - DEPARTMENT OF TRANSPORTATION
Caltrans® LANDSCAPE ARCHITECTURE

SENIOR LANDSCAPE ARCHITECT: RON RUSSAK

CALCULATED-DESIGNED BY: YI SU
CHECKED BY: GEORGE OLGUIN

REVISED BY
DATE REVISED

LAST REVISION 00-00-00
DATE PLOTTED => 27-JUL-2016
TIME PLOTTED => 12:53

BORDER LAST REVISED 7/2/2010
USERNAME => s125624
DGN FILE => 73x870sp003.dgn
RELATIVE BORDER SCALE IS IN INCHES 0 1 2 3
UNIT 1850
PROJECT NUMBER & PHASE 07130002411

Dist	COUNTY	ROUTE	POST MILES TOTAL PROJECT	SHEET No.	TOTAL SHEETS
07	LA	105,405	R2.5, 20.5/R21.1	140	265

George Olguin 6-20-16
LICENSED LANDSCAPE ARCHITECT

7-1-16
PLANS APPROVAL DATE

LICENSED LANDSCAPE ARCHITECT
GEORGE OLGUIN
NO. 4333
George Olguin
Signature
08-31-16
Renewal Date
06-20-16
Date
STATE OF CALIFORNIA

THE STATE OF CALIFORNIA OR ITS OFFICERS OR AGENTS SHALL NOT BE RESPONSIBLE FOR THE ACCURACY OR COMPLETENESS OF SCANNED COPIES OF THIS PLAN SHEET.

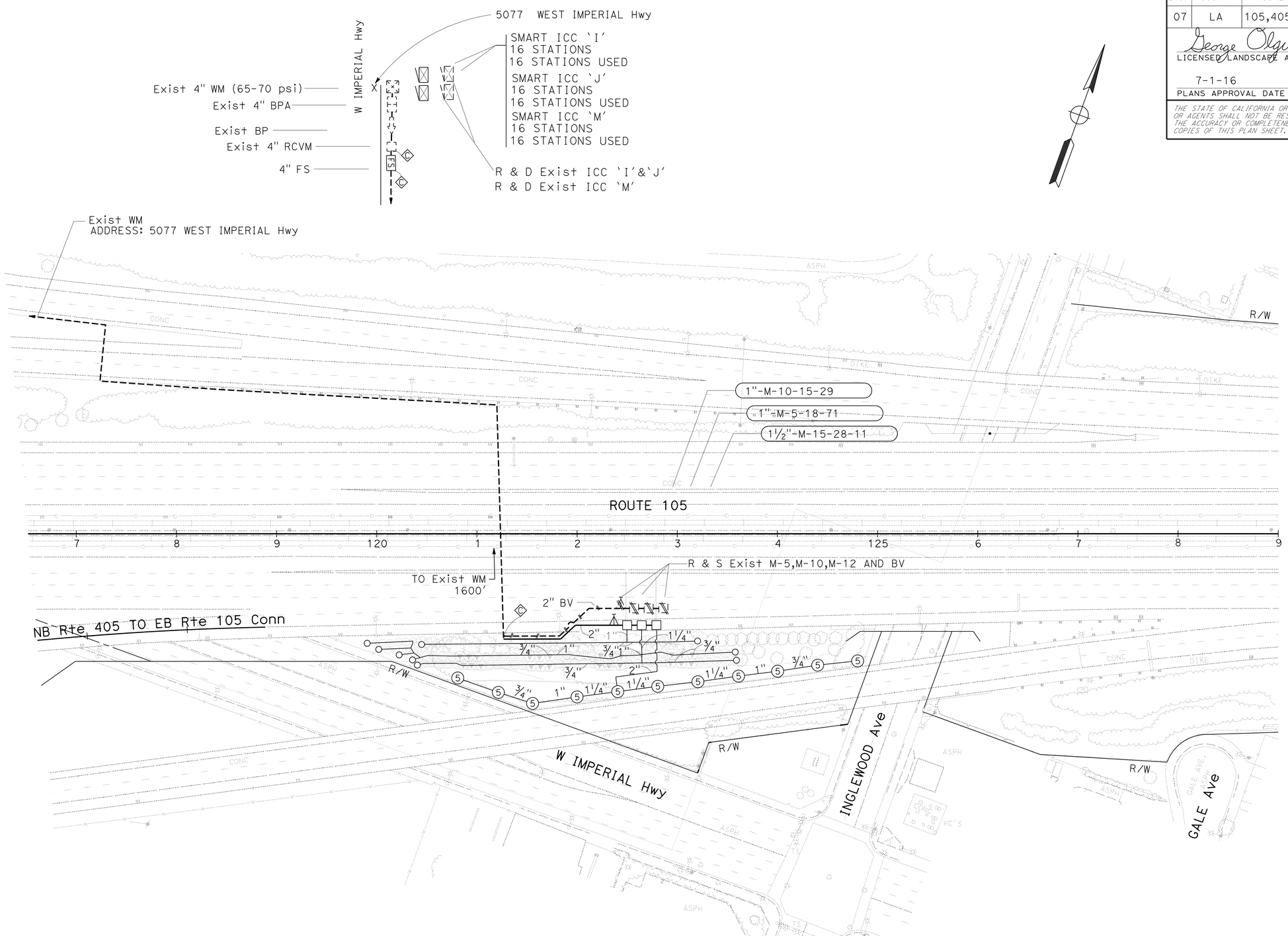

IRRIGATION PLAN

SCALE: 1" = 50'

IP-4

APPROVED FOR IRRIGATION WORK ONLY

STATE OF CALIFORNIA - DEPARTMENT OF TRANSPORTATION
Caltrans® LANDSCAPE ARCHITECTURE

SENIOR LANDSCAPE ARCHITECT: RON RUSSAK

CALCULATED-DESIGNED BY: YI SU
CHECKED BY: GEORGE OLGUIN

REVISED BY | DATE REVISED

LAST REVISION 00-00-00 | DATE PLOTTED => 27-JUL-2016 | TIME PLOTTED => 12:53

Dist	COUNTY	ROUTE	POST MILES TOTAL PROJECT	SHEET No.	TOTAL SHEETS
07	LA	105,405	R2.5, 20.5/R21.1	141	265

George Olguin 6-20-16
LICENSED LANDSCAPE ARCHITECT

7-1-16
PLANS APPROVAL DATE

LICENSED LANDSCAPE ARCHITECT GEORGE OLGUIN NO. 4333 STATE OF CALIFORNIA
George Olguin
Original 08-31-16
Renewal Date
06-20-16
Date

THE STATE OF CALIFORNIA OR ITS OFFICERS OR AGENTS SHALL NOT BE RESPONSIBLE FOR THE ACCURACY OR COMPLETENESS OF SCANNED COPIES OF THIS PLAN SHEET.

IRRIGATION QUANTITIES

	CONTROLLER LETTER	VALVE NUMBER	PLASTIC PIPE (SCHEDULE 40) (SUPPLY LINE) ¾"	1"	1¼"	1½"	2"	SPRINKLER ASSEMBLY RISER GEAR DRIVEN	RISER
			LF	LF	LF	LF	LF	EA	EA
SUBTOTALS PER VALVE ON LATERAL SUPPLY SIDE OF CONTROL VALVE	E	10	535	145	120	70			93
		11	-	-	-	90	-	-	-
		12	285	150	370	70	-	-	94
		13	-	-	-	35	-	-	-
		18a	-	-	40	-	-	-	-
		18b	-	-	30	-	-	-	-
		19	-	-	50	-	-	-	-
		20	-	-	10	-	-	-	-
		21	-	-	45	-	-	-	-
		22	-	-	-	60	-	-	-
		23	-	-	-	120	-	-	-
		24	485	-	130	185	-	-	54
		25	225	120	295	190	-	-	54
		26	680	55	20	330	-	-	54
		27	410	70	260	10	-	-	54
		28	320	150	235	-	-	-	75
		29	305	150	360	65	-	-	90
SUBTOTAL E			3,245	840	1,965	1,225	-		568

IRRIGATION QUANTITIES

	CONTROLLER LETTER	VALVE NUMBER	PLASTIC PIPE (SCHEDULE 40) (SUPPLY LINE) ¾"	1"	1¼"	1½"	2"	SPRINKLER ASSEMBLY RISER GEAR DRIVEN	RISER
			LF	LF	LF	LF	LF	EA	EA
SUBTOTALS PER VALVE ON LATERAL SUPPLY SIDE OF CONTROL VALVE	F	6	285	145	260	-	-		74
		7	273	135	280	-	-		75
		8	215	128	290	70	-		47
		12	200	135	255	50	-		47
		13	215	110	270		-		41
		14	220	120	300	180	-		54
		15	285	140	290	-	-		74
		16	300	160	305	-	-		75
		17	530	-	40	-	-		62
		18	200	140	60	20	-		47
	F	4	-	-	215	-	-		-
		10	-	-	75	-	-		-
SUBTOTAL E			2,723	1,213	2,350	320	-	-	596
SUBTOTAL F			-	-	290	-	-	-	-

IRRIGATION QUANTITIES

	CONTROLLER LETTER	VALVE NUMBER	PLASTIC PIPE (SCHEDULE 40) (SUPPLY LINE) ¾"	1"	1¼"	1½"	2"	SPRINKLER ASSEMBLY RISER GEAR DRIVEN	RISER
			LF	LF	LF	LF	LF	EA	EA
SUBTOTALS PER VALVE ON LATERAL SUPPLY SIDE OF CONTROL VALVE	M	5	530	85	20	-	-		71
		10	280	10	-	-	-		29
		12							-
		13							-
		14							-
		15	160	80	320	-	90	11	-
SUBTOTAL M			970	175	340	-	90	11	100

IRRIGATION QUANTITIES

IQ-1

STATE OF CALIFORNIA - DEPARTMENT OF TRANSPORTATION
Caltrans® LANDSCAPE ARCHITECTURE

SENIOR LANDSCAPE ARCHITECT: RON RUSSAK
CALCULATED-DESIGNED BY: XUAN WU
CHECKED BY: GEORGE OLGUIN
REVISED BY
DATE REVISED

LAST REVISION 00-00-00
DATE PLOTTED => 27-JUL-2016
TIME PLOTTED => 12:53

Dist	COUNTY	ROUTE	POST MILES TOTAL PROJECT	SHEET No.	TOTAL SHEETS
07	LA	105,405	R2.5, 20.5/R21.1	142	265

George Olguin 6-20-16
LICENSED LANDSCAPE ARCHITECT

7-1-16
PLANS APPROVAL DATE

LICENSED LANDSCAPE ARCHITECT GEORGE OLGUIN NO. 4333 George Olguin Signature 08-31-16 Renewal Date 06-20-16 Date STATE OF CALIFORNIA

THE STATE OF CALIFORNIA OR ITS OFFICERS OR AGENTS SHALL NOT BE RESPONSIBLE FOR THE ACCURACY OR COMPLETENESS OF SCANNED COPIES OF THIS PLAN SHEET.

IRRIGATION QUANTITIES

	SHEET NUMBER	IRRIGATION CONTROLLER 12 STATION	IRRIGATION CONTROLLER 16 STATION	IRRIGATION CONTROLLER 24 STATION	IRRIGATION CONTROLLER 30 STATION	IRRIGATION CONTROLLER TWO WIRE	IRRIGATION CONTROLLER CEC SINGLE	IRRIGATION CONTROLLER CEC DOUBLE	COPPER PIPE (SUPPLY LINE) 2"	COPPER PIPE (SUPPLY LINE) 3"	GALVANIZED STEEL PIPE 1½"	GALVANIZED STEEL PIPE 2"	GALVANIZED STEEL PIPE 3"	WM 2"	WM 3"	BPA 2"	BPA 3"	BPA (N) ENCLOSURE	BPA (N) BLANKET	RCV ¾"	RCV 1"	RCV 1½"	FS 2"	FS 3"	FS 4"	FAU 1"	FAU 2"	FAU 3"	GV 1½"	GV 2"	GV 3"	BV 1"	BV 1½"	BV 2"	PLASTIC PIPE (SCHEDULE 40) (SUPPLY LINE) ¾"	PLASTIC PIPE (SCHEDULE 40) (SUPPLY LINE) 1"	PLASTIC PIPE (SCHEDULE 40) (SUPPLY LINE) 1¼"	PLASTIC PIPE (SCHEDULE 40) (SUPPLY LINE) 1½"	PLASTIC PIPE (SCHEDULE 40) (SUPPLY LINE) 2"	PLASTIC PIPE (SCHEDULE 40) (SUPPLY LINE) 3"	SPRINKLER ASSEMBLY RISER GEAR DRIVEN	SPRINKLER ASSEMBLY RISER	SPRINKLER ASSEMBLY POP UP
		EA	EA	EA	EA	EA	EA	EA	LF	LF	LF	LF	LF	EA	EA	EA	EA	EA	EA	EA	EA	EA	EA	EA	EA	EA	EA	EA	EA	EA	EA	EA	EA	EA	LF	LF	LF	LF	LF	LF	EA	EA	EA
SUBTOTALS PER SHEET ON MAIN SUPPLY SIDE OF CONTROL VALVE	IP-1	-	-		-	-		-	-	-	-	-	-	-	-	-	-	-	-		-	-		-						-	-	-			-	-	-	-		-	-	-	-
	IP-2	-	-	-	1	-	-	1	-	-	-	-	-	-	-	-	-	-	-	3	4	10	-	1	-	1	2	-	-	-	-	-	-	3	-	-	-	-	-	1,500	-	-	-
	IP-3	-	3	1	-	-	-	2	-	-	-	-	-	-	-	-	-	-	-	-	7	4	-	1	-	-	2	-	-	-	-	-	-	3	-	-	-	-	935	-	-	-	-
	IP-4	-	3	-	-	-	-	2	-	-	-	-	-	-	-	-	-	-	-	-	2	1	-	-	1	-	-	-	-	-	-	-	-	1	-	-	-	-	140		-	-	-
																																										-	-
																																										-	-
SUBTOTAL E		-	-	-	-	-	-	-	-	-	-	-	-	-	-	-	-	-	-	-	-	-	-	-	-					-	-	-	-	-	-	3,245	840	1,965	1,225	-		-	568
SUBTOTAL E		-	-	-	-	-	-	-	-	-	-	-	-	-	-	-	-	-	-	-	-	-	-	-	-					-	-	-	-	-	-	2,723	1,213	2,350	320	-		-	596
SUBTOTAL F		-	-	-	-	-	-	-	-	-	-	-	-	-	-	-	-	-	-	-	-	-	-	-	-					-	-	-	-	-	-	-	-	290	-	-		-	-
SUBTOTAL M		-	-	-	-	-	-	-	-	-	-	-	-	-	-	-	-	-	-	-	-	-	-	-	-					-	-	-	-	-	-	970	175	340	-	90		11	100
SUBTOTAL		-	-	-	-	-	-	-	-	-	-	-	-	-	-	-	-	-	-	-	-	-	-	-	-					-	-	-	-	-	-	6,938	2,228	4,945	1,545	1,165	1,500	11	1,264
TOTAL		-	6	1	1	-	-	5	-	-	-	-	-	-	-	-	-	-	-	3	13	15	-	2	1	1	4	-	-	-	-	-	-	7	6,938	2,228	4,945	1,545	1,165	1,500	11	1,264

IRRIGATION QUANTITIES
IQ-2

STATE OF CALIFORNIA - DEPARTMENT OF TRANSPORTATION
Caltrans® LANDSCAPE ARCHITECTURE

SENIOR LANDSCAPE ARCHITECT: RON RUSSAK
CALCULATED-DESIGNED BY: XUAN WU
CHECKED BY: GEORGE OLGUIN
REVISED BY
DATE REVISED

LAST REVISION 00-00-00
DATE PLOTTED => 27-JUL-2016
TIME PLOTTED => 12:53

Dist	COUNTY	ROUTE	POST MILES TOTAL PROJECT	SHEET No.	TOTAL SHEETS
07	LA	105,405	R2.5, 20.5/R21.1	143	265

George Olguin 6-20-16
LICENSED LANDSCAPE ARCHITECT

7-1-16
PLANS APPROVAL DATE

LICENSED LANDSCAPE ARCHITECT GEORGE OLGUIN NO. 4333 Signature 08-31-16 Renewal date 06-20-16 Date STATE OF CALIFORNIA

THE STATE OF CALIFORNIA OR ITS OFFICERS OR AGENTS SHALL NOT BE RESPONSIBLE FOR THE ACCURACY OR COMPLETENESS OF SCANNED COPIES OF THIS PLAN SHEET.

NOTE:
UNDERLINED PORTIONS OF BOTANICAL NAME INDICATE ABBREVIATIONS USED ON PLANTING PLANS.

APPLICABLE WHEN CIRCLED:

1 - QUANTITIES SHOWN ARE "PER PLANT" UNLESS SHOWN AS SQFT OR SQYD APPLICATION RATES
2 - BASIN MULCH IS INCLUDED WITH MULCH QUANTITIES SHOWN ON PLANTING PLAN
3 - SUFFICIENT TO RECEIVE ROOT BALL AND AMENDMENTS IF REQUIRED
4 - SEE DETAIL
5 - SEE SPECIAL PROVISIONS
6 - SEE STANDARD SPECIFICATIONS
7 - AS SHOWN ON PLANS
8 - UNLESS OTHERWISE SHOWN ON PLANS
9 - FOLIAGE PROTECTOR REQUIRED
10 - ROOT PROTECTOR REQUIRED
11 - ROOT BARRIER REQUIRED
12 - DEPARTMENT-FURNISHED

PLANTING LEGEND

PLANT GROUP	PLANT No.	SYMBOL	BOTANICAL NAME	COMMON NAME	SIZE	QUANTITY EACH	HOLE SIZE (INCH) Dia	HOLE SIZE (INCH) DEPTH	BASIN TYPE	SOIL AMENDMENT TYPE	SOIL AMENDMENT RATE	COMMERCIAL FERTILIZER (1) PLANTING	COMMERCIAL FERTILIZER (1) PLT ESTB	BASIN MULCH (1) TYPE	BASIN MULCH (1) CY	STAKING	PLANTING LIMITS MINIMUM DISTANCE (ft) FROM ETW	Pvmt	FENCE	WALL	PAVED DITCH	EARTH DITCH	ON CENTER (ft)	REMARKS
A	1		ACACIA REDOLENS	DESERT CARPET ACACIA	No. 1	67	3	3	—	—	—	4 Oz	4 Oz	WC	0.08	—	10	10	10	10	10	10	10	SHRUB
	2		GALVEZIA SPECIOSA	BOGAROSA	No. 1	20	3	3	—	—	—	4 Oz	4 Oz	WC	0.08	—	7	7	7	7	7	7	7	SHRUB
	3		PLUMBAGO AURICULATA 'IMPERIAL BLUE'	NO COMMON NAME	No. 1	405	3	3	—	—	—	4 Oz	4 Oz	WC	0.08	—	8.5	8.5	8.5	8.5	8.5	8.5	8.5	SHRUB
	4		RHUS INTEGRIFOLIA	LEMONADE BERRY	No. 1	196	3	3	—	—	—	4 Oz	4 Oz	WC	0.08	—	10.5	10.5	10.5	10.5	10.5	10.5	10.5	SHRUB
	5		SAMBUCUS MEXICANA	MEXICAN ELDERBERRY	No. 1	182	3	3	—	—	—	4 Oz	4 Oz	WC	0.08	—	15	15	15	15	15	15	15	TREE
H	6		BACCHARIS PILULARIS	PIGEON POINT	CUTTINGS	288	—	—	—	N	1.5 CY/ 1,000 SQFT	6 LBS/ 1,000 SQFT	6 LBS/ 1,000 SQFT	—	—	—	—	—	—	—	—	—	1.5	GROUND COVER
I	7		MUHLENBERGIA RIGENS	DEER GRASS	CUTTINGS	1,096	—	—	—	N	1.5 CY/ 1,000 SQFT	6 LBS/ 1,000 SQFT	6 LBS/ 1,000 SQFT	—	—	—	—	—	—	—	—	—	2.1	NATIVE GRASS
U	8		LYONOTHAMNUS FLORIBUNDUS SSP. ASPLENIFOLIUS	CATALINIA IRONWOOD	No. 15	205	3	3	II	—	—	10 Oz	10 Oz	WC	0.16	4	30	—	20	20	10	12	7	TREE
	9		PLATANUS RACEMOSA	CALIFORNIA SYCAMORE	No. 15	10	3	3	II	—	—	10 Oz	10 Oz	WC	0.16	4	40	—	20	20	10	12	7	TREE
	10		QUERCUS AGRIFOLIA	COAST LIVE OAK	No. 15	3	3	3	II	—	—	10 Oz	10 Oz	WC	0.16	4	40		20	20	10	12	7	TREE

LEGEND:

MULCH

MEPA — MAINTAIN EXISTING PLANTED AREAS

RC/PEW — ROADSIDE CLEARING (REMOVE Exist PLANTS TREES, SHRUBS, GROUNDCOVER AND VINE) & PLANT ESTABLISHMENT WORK

WOOD MULCH

TYPE	LOCATION BASIN	LOCATION SPREAD	QUANTITY (CY)
WOOD CHIP (N)	104	1,959	2,063
		TOTAL	2,063

(N) - NOT A SEPARATE PAY ITEM, FOR INFORMATION ONLY

ABBREVIATIONS:

S - SPHAGNUM PEAT MOSS
N - NITROLIZED FIR BARK
V - VERMICULITE
P - PERLITE
TB - TREE BARK
WC - WOOD CHIP
SB - SHREDDED BARK
TT - TREE TRIMMING
T - TEASPOON

PLANT LEGEND
PL-1

STATE OF CALIFORNIA - DEPARTMENT OF TRANSPORTATION
Caltrans LANDSCAPE ARCHITECTURE
SENIOR LANDSCAPE ARCHITECT RON RUSSAK
CALCULATED-DESIGNED BY YI SU
CHECKED BY GEORGE OLGUIN
REVISED BY
DATE REVISED

LAST REVISION 00-00-00
DATE PLOTTED => 27-JUL-2016
TIME PLOTTED => 12:53

Dist	COUNTY	ROUTE	POST MILES TOTAL PROJECT	SHEET No.	TOTAL SHEETS
07	LA	105,405	R2.5, 20.5/R21.1	144	265

George Olguin 6-20-16
LICENSED LANDSCAPE ARCHITECT

7-1-16
PLANS APPROVAL DATE

THE STATE OF CALIFORNIA OR ITS OFFICERS OR AGENTS SHALL NOT BE RESPONSIBLE FOR THE ACCURACY OR COMPLETENESS OF SCANNED COPIES OF THIS PLAN SHEET.

LICENSED LANDSCAPE ARCHITECT
GEORGE OLGUIN
NO. 4333
George Olguin
Signature
08-31-16
Renewal date
06-20-16
Date
STATE OF CALIFORNIA

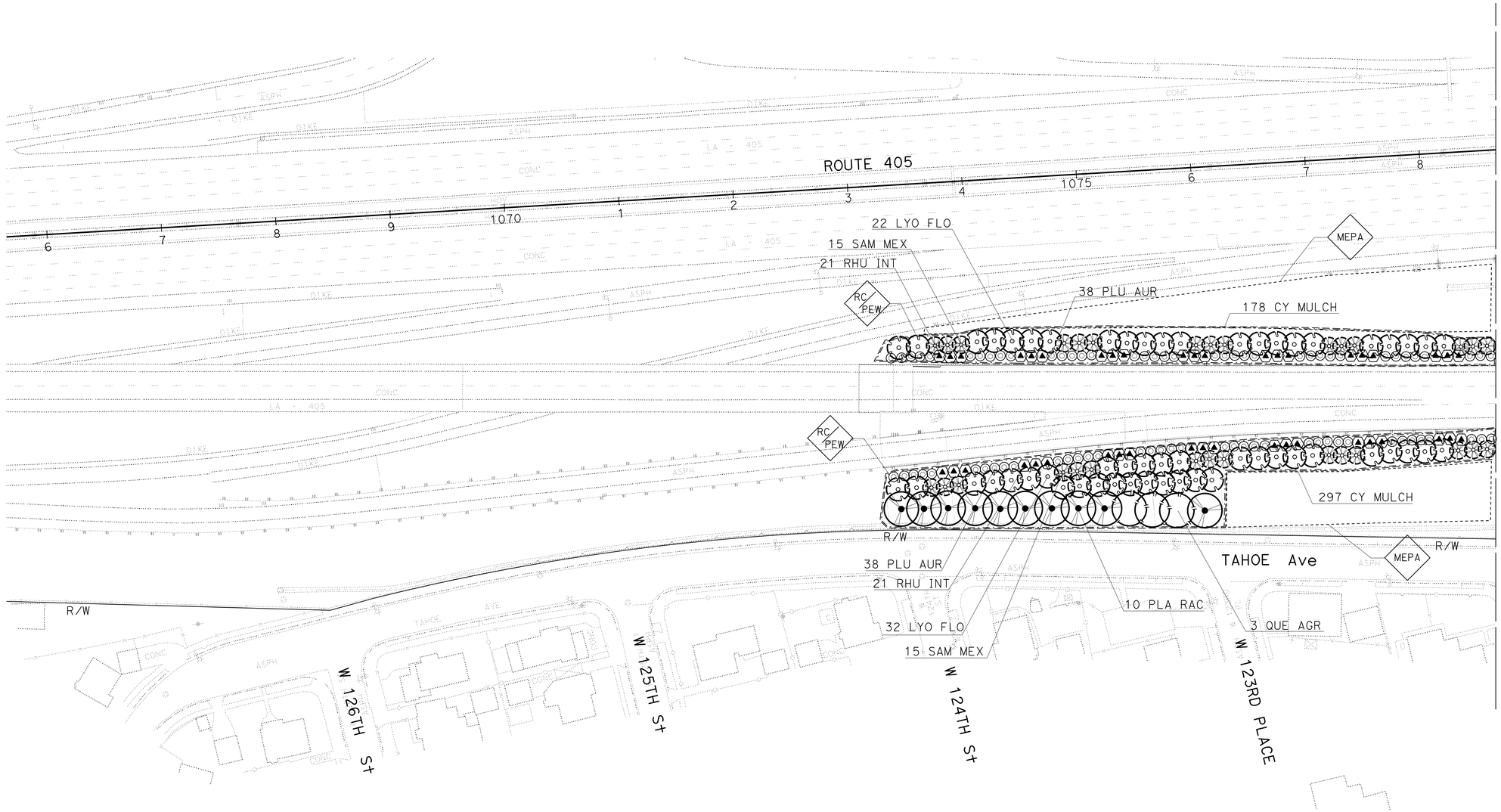

PLANTING PLAN

SCALE: 1" = 50'

PP-1

APPROVED FOR PLANTING WORK ONLY

STATE OF CALIFORNIA - DEPARTMENT OF TRANSPORTATION
Caltrans® LANDSCAPE ARCHITECTURE

SENIOR LANDSCAPE ARCHITECT: RON RUSSAK
CALCULATED-DESIGNED BY: YI SU
CHECKED BY: GEORGE OLGUIN
REVISED BY
DATE REVISED

LAST REVISION 00-00-00
DATE PLOTTED => 27-JUL-2016
TIME PLOTTED => 12:53

Dist	COUNTY	ROUTE	POST MILES TOTAL PROJECT	SHEET No.	TOTAL SHEETS
07	LA	105,405	R2.5, 20.5/R21.1	145	265

George Olguin 6-20-16
LICENSED LANDSCAPE ARCHITECT

7-1-16
PLANS APPROVAL DATE

LICENSED LANDSCAPE ARCHITECT
GEORGE OLGUIN
NO. 4333
George Olguin
Signature
08-31-16
Renewal Date
06-20-16
Date
STATE OF CALIFORNIA

THE STATE OF CALIFORNIA OR ITS OFFICERS OR AGENTS SHALL NOT BE RESPONSIBLE FOR THE ACCURACY OR COMPLETENESS OF SCANNED COPIES OF THIS PLAN SHEET.

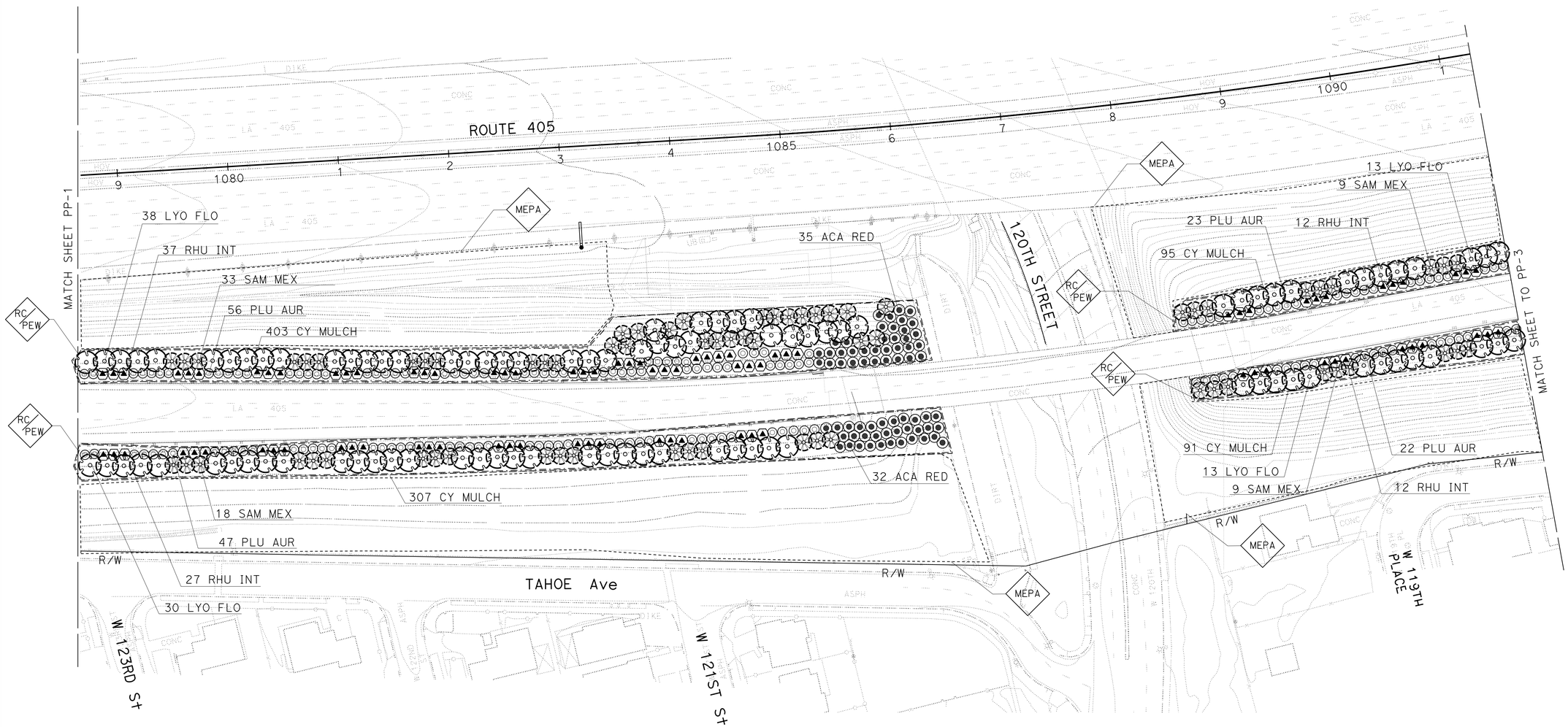

PLANTING PLAN

SCALE: 1" = 50'

PP-2

APPROVED FOR PLANTING WORK ONLY

STATE OF CALIFORNIA - DEPARTMENT OF TRANSPORTATION
Caltrans® LANDSCAPE ARCHITECTURE

SENIOR LANDSCAPE ARCHITECT: RON RUSSAK
CALCULATED-DESIGNED BY: YI SU
CHECKED BY: GEORGE OLGUIN
REVISED BY
DATE REVISED

LAST REVISION 00-00-00
DATE PLOTTED => 27-JUL-2016
TIME PLOTTED => 12:53

Dist	COUNTY	ROUTE	POST MILES TOTAL PROJECT	SHEET No.	TOTAL SHEETS
07	LA	105,405	R2.5, 20.5/R21.1	146	265

George Olguin 6-20-16
LICENSED LANDSCAPE ARCHITECT

7-1-16
PLANS APPROVAL DATE

LICENSED LANDSCAPE ARCHITECT GEORGE OLGUIN No. 4333 STATE OF CALIFORNIA
George Olguin 08-31-16 Renewal date 06-20-16 Date

THE STATE OF CALIFORNIA OR ITS OFFICERS OR AGENTS SHALL NOT BE RESPONSIBLE FOR THE ACCURACY OR COMPLETENESS OF SCANNED COPIES OF THIS PLAN SHEET.

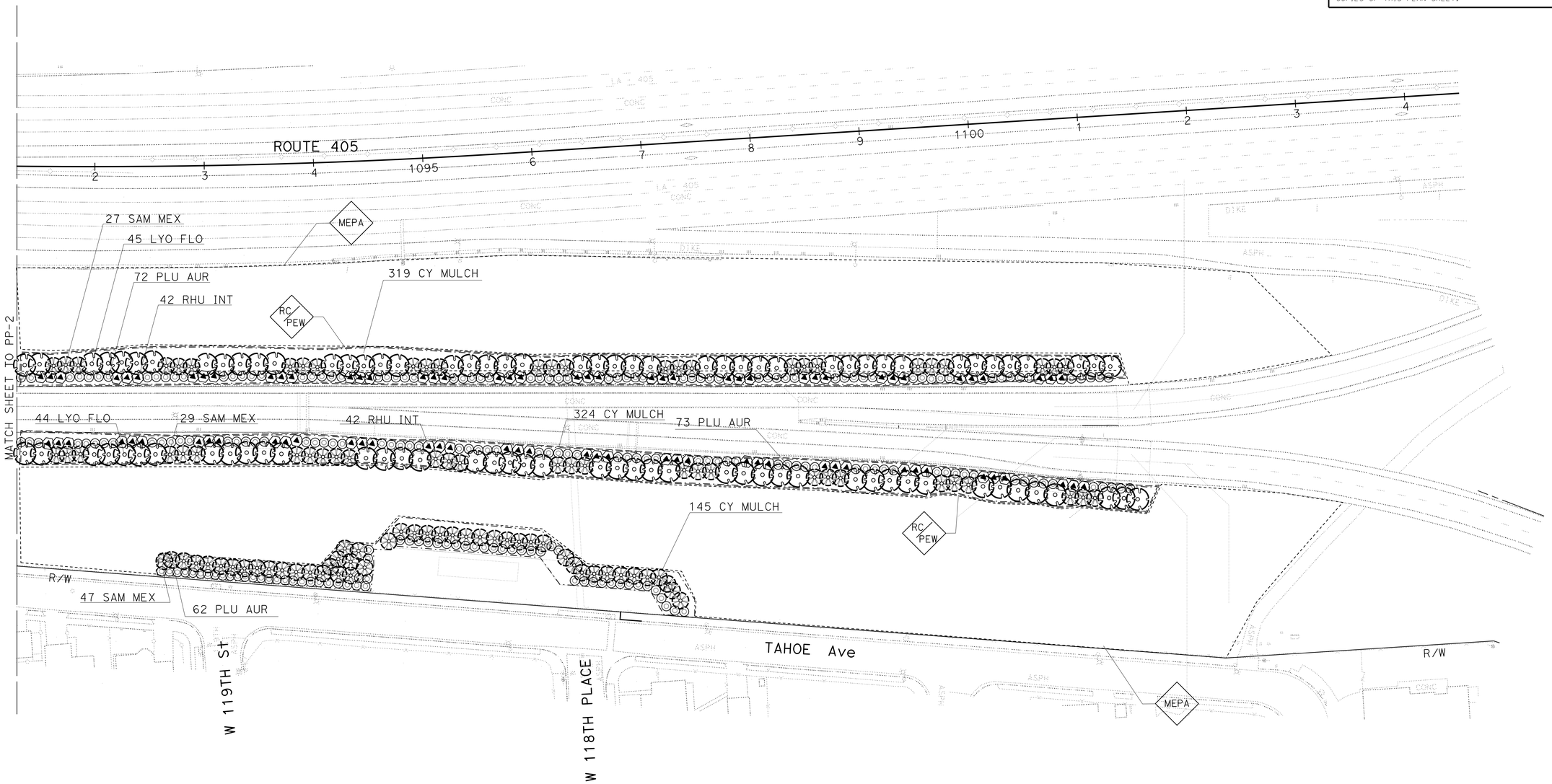

PLANTING PLAN

SCALE: 1" = 50'

PP-3

APPROVED FOR PLANTING WORK ONLY

STATE OF CALIFORNIA - DEPARTMENT OF TRANSPORTATION
Caltrans LANDSCAPE ARCHITECTURE

SENIOR LANDSCAPE ARCHITECT: RON RUSSAK

CALCULATED-DESIGNED BY: YI SU
CHECKED BY: GEORGE OLGUIN

REVISED BY
DATE REVISED

LAST REVISION 00-00-00
DATE PLOTTED => 27-JUL-2016
TIME PLOTTED => 12:53

Dist	COUNTY	ROUTE	POST MILES TOTAL PROJECT	SHEET No.	TOTAL SHEETS
07	LA	105,405	R2.5, 20.5/R21.1	147	265

George Olguin 6-20-16
LICENSED LANDSCAPE ARCHITECT

7-1-16
PLANS APPROVAL DATE

LICENSED LANDSCAPE ARCHITECT
GEORGE OLGUIN
NO. 4333
George Olguin
Signature
08-31-16
Renewal Date
06-20-16
Date
STATE OF CALIFORNIA

THE STATE OF CALIFORNIA OR ITS OFFICERS OR AGENTS SHALL NOT BE RESPONSIBLE FOR THE ACCURACY OR COMPLETENESS OF SCANNED COPIES OF THIS PLAN SHEET.

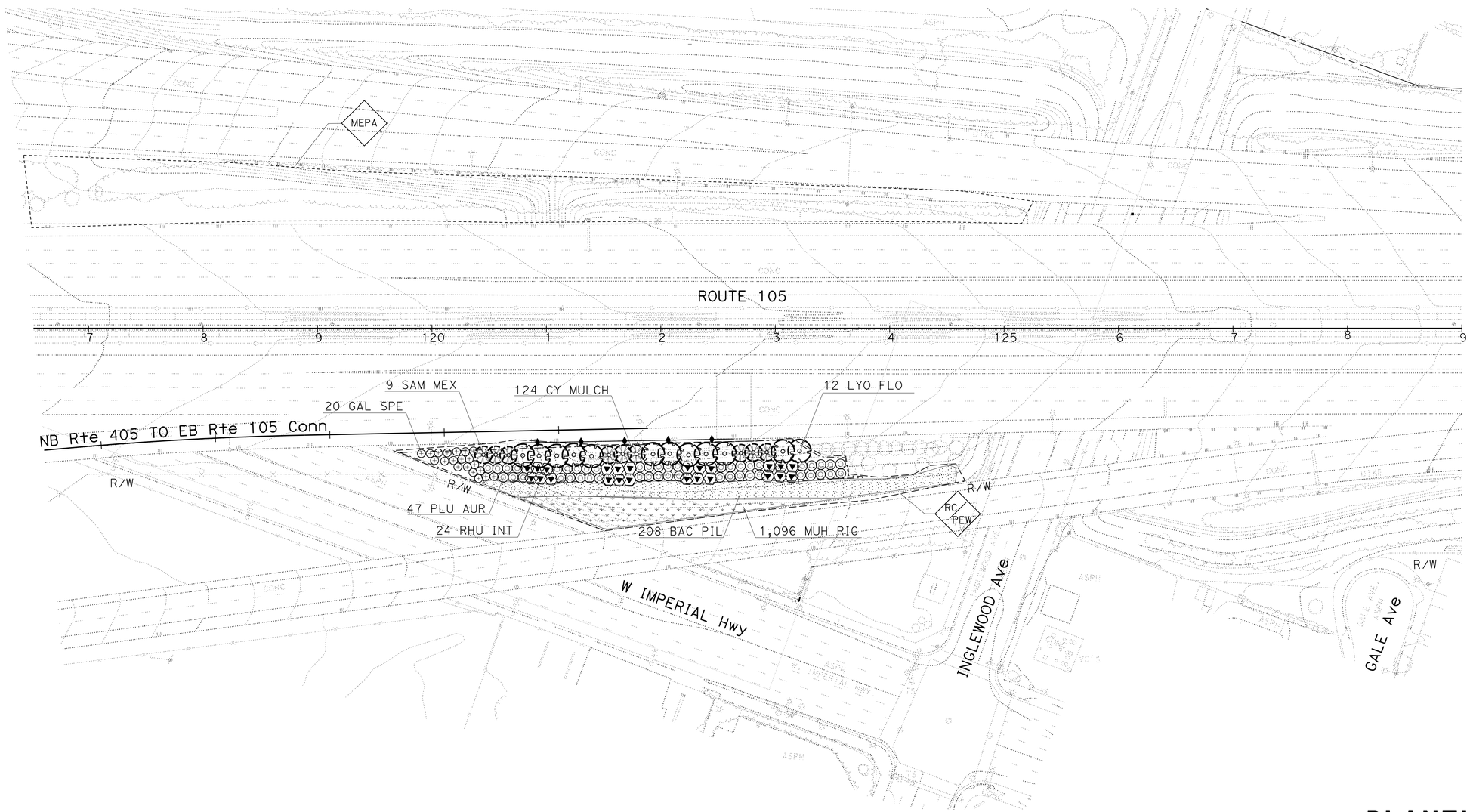

PLANTING PLAN

SCALE: 1" = 50'

PP-4

APPROVED FOR PLANTING WORK ONLY

REVISED BY	Y1 SU
DATE REVISED	
CALCULATED-DESIGNED BY	GEORGE OLGUIN
CHECKED BY	
SENIOR LANDSCAPE ARCHITECT	RON RUSSAK

STATE OF CALIFORNIA - DEPARTMENT OF TRANSPORTATION
Caltrans® LANDSCAPE ARCHITECTURE

LAST REVISION 00-00-00
DATE PLOTTED => 27-JUL-2016
TIME PLOTTED => 12:53

Dist	COUNTY	ROUTE	POST MILES TOTAL PROJECT	SHEET No.	TOTAL SHEETS
07	LA	105,405	R2.5, 20.5/R21.1	148	265

George Olguin 6-20-16
LICENSED LANDSCAPE ARCHITECT

7-1-16
PLANS APPROVAL DATE

LICENSED LANDSCAPE ARCHITECT GEORGE OLGUIN No. 4333 George Olguin 08-31-16 Renewal date 06-20-16 Date STATE OF CALIFORNIA

THE STATE OF CALIFORNIA OR ITS OFFICERS OR AGENTS SHALL NOT BE RESPONSIBLE FOR THE ACCURACY OR COMPLETENESS OF SCANNED COPIES OF THIS PLAN SHEET.

IRRIGATION LEGEND

SYMBOL	DESCRIPTION	SPRINKLER TYPE	SPRAY PATTERN	OPERATING PRESSURE (psi)	② PRESSURE COMPENSATING	PLUS/MINUS 5% ② DISCHARGE: GALLONS PER MINUTE (GPM)	DISCHARGE: GALLONS PER HOUR (GPH)	RADIUS (ft)	WIDTH x LENGTH (ft)	FLOW SHUTOFF DEVICE	SPRINKLER ASSEMBLY RISER: TYPE	RISER MATERIAL: PLASTIC	RISER MATERIAL: GALVANIZED	RISER SIZE (IPS INCH)	RISER HEIGHT (INCH)	POP-UP: TYPE	POP-UP: INLET CONNECTION (NPT INCH)	POP-UP: SPRINLKER PROTECTOR (TYPE)	TREE WELL: HEIGHT (INCH)	REMARKS
⑤	RISER SPRINKLER ASSEMBLY (GEAR DRIVEN)	A-5	P	25	—	3.50	—	35	—	X	IV	—	X	½	18	—	—	—	—	
O	RISER SPRINKLER ASSEMBLY	C-2	—	30	X	0.25/0.5	—	—	—	—	V	X	—	½	—	—	—	—	—	BUBBLER

X IN BOX DENOTES REQUIREMENT

APPLICABLE WHEN CIRCLED BELOW:

1 - SEE SPECIAL PROVISIONS.
② - IF A PRESSURE COMPENSATING DEVICE IS SPECIFIED, THE DISCHARGE AND RADII SHOWN REFLECT ITS USE.
3 - VINYL-COATED CAST IRON HOUSING.
4 - SWING JOINTS REQUIRED ADJACENT TO SHOULDERS, CURBS, SIDEWALKS, AND DIKES.
5 - UNLESS OTHERWISE SHOWN ON PLANS.

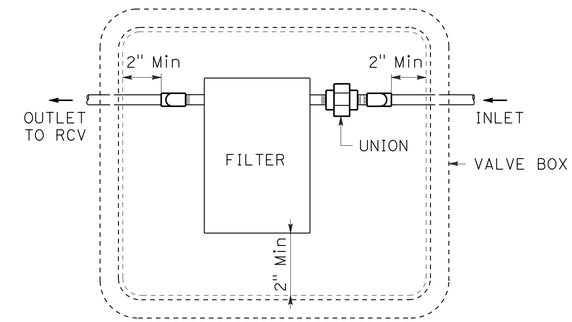

TOP OF FILTER SHALL BE 2" Min BELOW VALVE BOX COVER.

FILTER ASSEMBLY UNIT

IRRIGATION CONDUIT

SHEET No.	IRRIGATION CONDUIT No.	LOCATION: LINE	LOCATION: STATION	SIDE: L†	SIDE: R†	EXTENSION CONNECTION TYPE: CB	EXTENSION CONNECTION TYPE: OL	(N) WATER SUPPLY LINE: SIZE (INCH)	(N) ELECTRICAL CONDUIT: SIZE (INCH)	ABS COMPOSITE PIPE			CORRUGATED STEEL PIPE			CORRUGATED HIGH DENSITY POLYETHYLENE PIPE			WELDED STEEL PIPE			SCHEDULE 40 PVC PIPE		
										CONDUIT SIZE (INCH)														
										—	—	—	—	—	—	6"	—	—	—	—	—	—	—	—
										LENGTH (LF)														
IP-2	1	A	383+75	—	—	—	—	3"	2"	—	—	—	—	—	—	51	—	—	—	—	—	—	—	—
				—	—	—	—	—	—	—	—	—	—	—	—	—	—	—	—	—	—	—	—	—
									SUBTOTAL															
									TOTAL							51								

(N) - NOT A SEPARATE PAY ITEM, FOR INFORMATION ONLY
X - DENOTES REQUIREMENT

SPRINKLERS SIZING CHART (0.5 GPM)
(FOR INFORMATION ONLY)
RISER SPRINKLER ASSEMBLY TREES

NUMBER OF SPRINKLERS	SIZE OF PIPE
1-16	¾"
17-24	1"
25-44	1¼"
45-60	1½"

SPRINKLERS SIZING CHART (0.25 GPM)
(FOR INFORMATION ONLY)
RISER SPRINKLER ASSEMBLY VINES AND SHRUBS

NUMBER OF SPRINKLERS	SIZE OF PIPE
1-32	¾"
33-48	1"
49-88	1¼"

ABBREVIATIONS:
CB - COUPLING BAND
OL - OVERLAP

LANDSCAPE DETAILS

NO SCALE

LD-1

REVISED BY	DATE REVISED
09-04-15	09-04-15

XUAN WU — GEORGE OLGUIN — CALCULATED-DESIGNED BY — CHECKED BY — SENIOR LANDSCAPE ARCHITECT — RON RUSSAK

STATE OF CALIFORNIA - DEPARTMENT OF TRANSPORTATION
Caltrans® LANDSCAPE ARCHITECTURE

LAST REVISION 00-00-00 — DATE PLOTTED => 27-JUL-2016 — TIME PLOTTED => 12:53

Dist	COUNTY	ROUTE	POST MILES TOTAL PROJECT	SHEET No.	TOTAL SHEETS
07	LA	105,405	R2.5, 20.5/R21.1	149	265

FATEMEH ANSARI 6/5/16
REGISTERED ELECTRICAL ENGINEER DATE

7-1-16
PLANS APPROVAL DATE

REGISTERED PROFESSIONAL ENGINEER
FATEMEH ANSARI
No. E17009
Exp. 09/30/17
ELECTRICAL
STATE OF CALIFORNIA

THE STATE OF CALIFORNIA OR ITS OFFICERS OR AGENTS SHALL NOT BE RESPONSIBLE FOR THE ACCURACY OR COMPLETENESS OF SCANNED COPIES OF THIS PLAN SHEET.

NOTES: (SHEETS E-1 TO E-3)

1. FOR ACCURATE RIGHT OF WAY CONTACT RIGHT OF WAY ENGINEERING AT THE DISTRICT OFFICE.
2. INSTALL TAMPER RESISTANT COVER ON ALL NEW PULL BOXES.

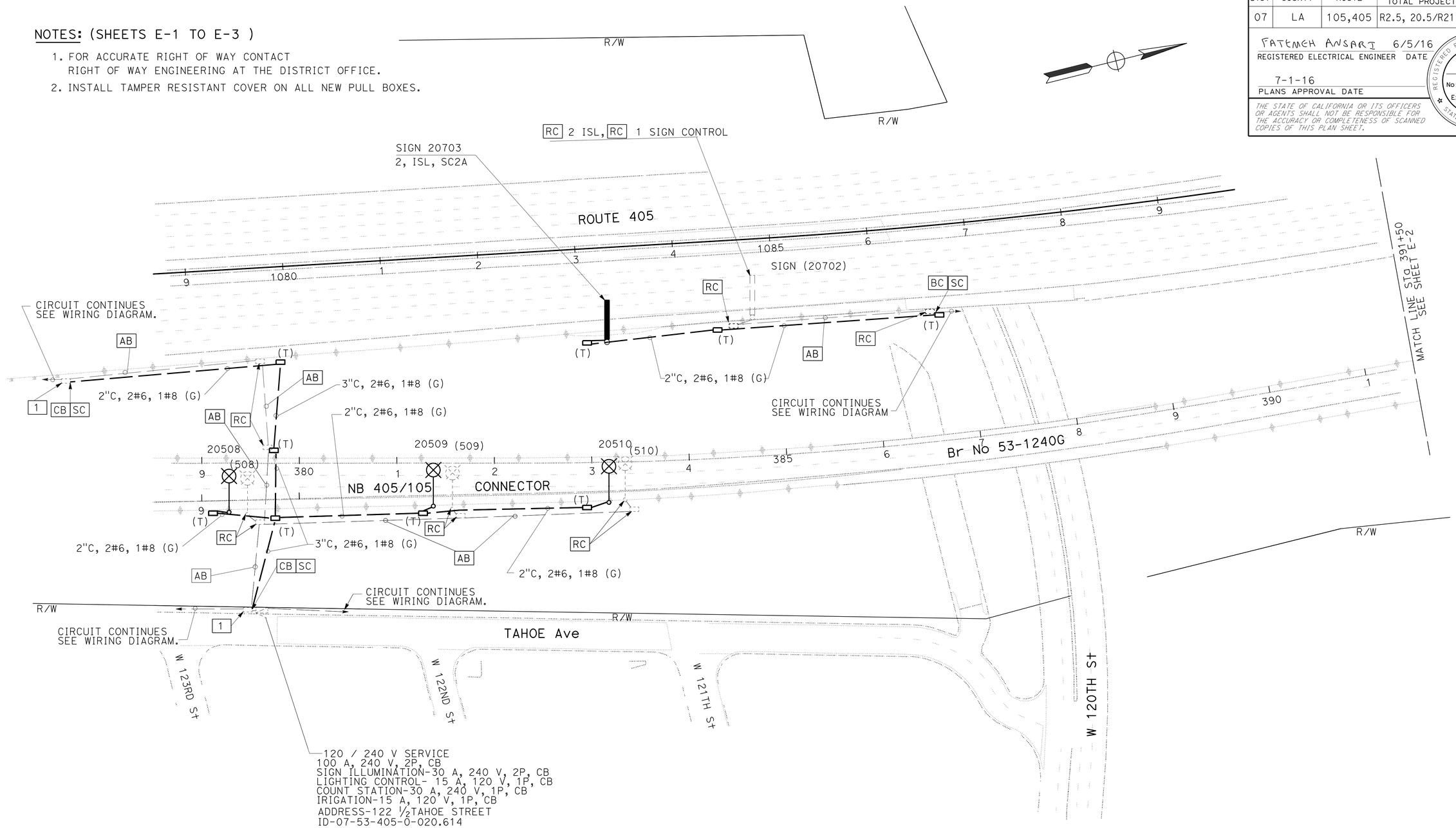

(MODIFY LIGHTING SYSTEM AND SIGN ILLUMINATION SYSTEM)

LEGEND: (SHEETS E-1 TO E-3)

1 INSTALL TAMPER RESISTANT COVER ON PULL BOX.

MODIFY EXISTING ELECTRICAL SYSTEM

SCALE 1" = 50'

E-1

APPROVED FOR ELECTRICAL WORK ONLY

REVISED BY | DATE REVISED
FATEMEH ANSARI | FATEMEH ANSARI
CALCULATED-DESIGNED BY | CHECKED BY
FUNCTIONAL SUPERVISOR: OSWALD ELIZONDO

STATE OF CALIFORNIA - DEPARTMENT OF TRANSPORTATION
Caltrans
TRAFFIC DESIGN

LAST REVISION 00-00-00 | DATE PLOTTED => 27-JUL-2016 | TIME PLOTTED => 12:53

Dist	COUNTY	ROUTE	POST MILES TOTAL PROJECT	SHEET No.	TOTAL SHEETS
07	LA	105,405	R2.5, 20.5/R21.1	150	265

FATEMEH ANSARI 6/5/16
REGISTERED ELECTRICAL ENGINEER DATE

7-1-16
PLANS APPROVAL DATE

REGISTERED PROFESSIONAL ENGINEER
FATEMEH ANSARI
No. E17009
Exp. 09/30/17
ELECTRICAL
STATE OF CALIFORNIA

THE STATE OF CALIFORNIA OR ITS OFFICERS OR AGENTS SHALL NOT BE RESPONSIBLE FOR THE ACCURACY OR COMPLETENESS OF SCANNED COPIES OF THIS PLAN SHEET.

NOTE:

1. FOR ACCURATE RIGHT OF WAY CONTACT RIGHT OF WAY ENGINEERING AT THE DISTRICT OFFICE.

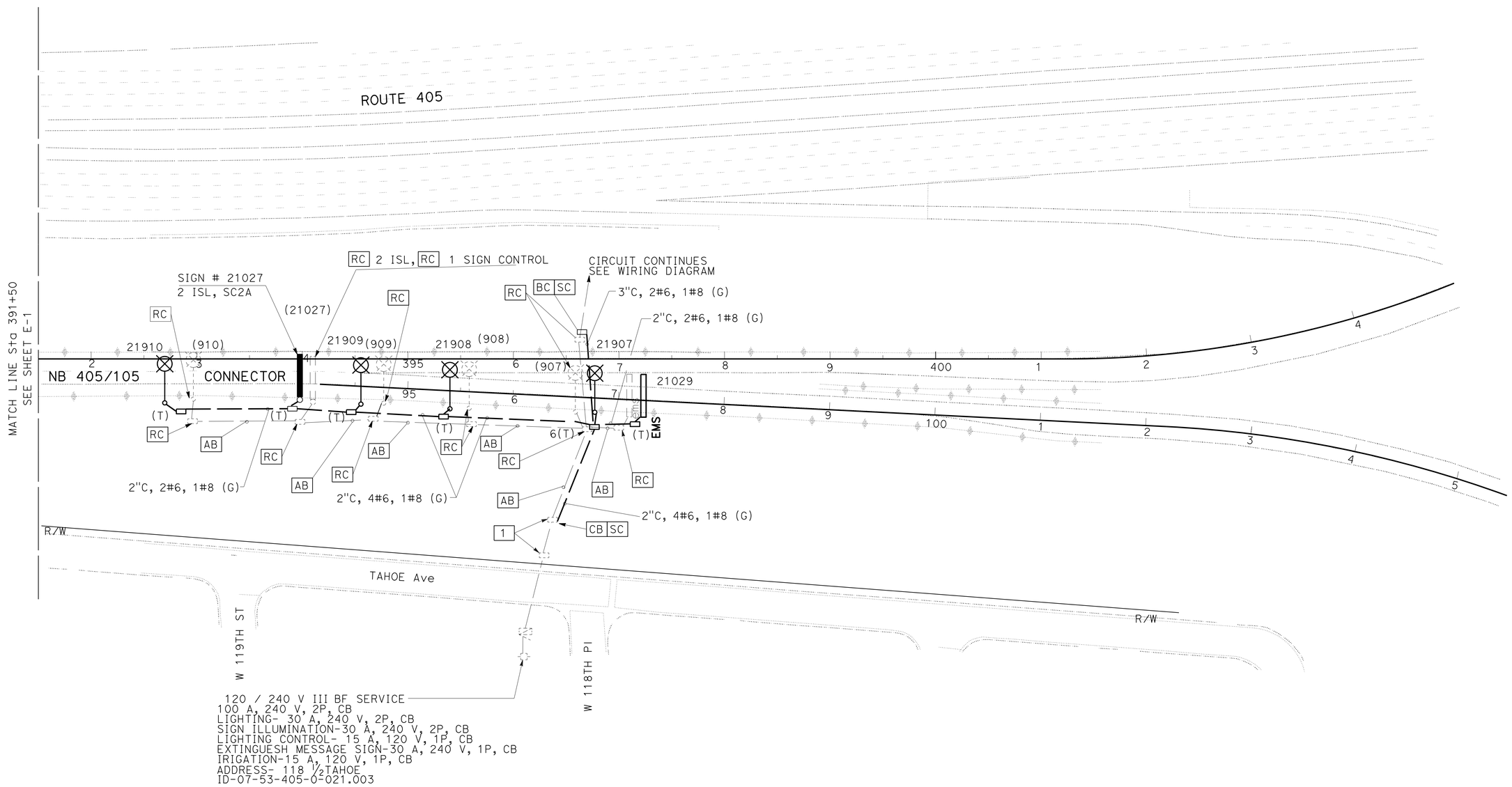

120 / 240 V III BF SERVICE
100 A, 240 V, 2P, CB
LIGHTING- 30 A, 240 V, 2P, CB
SIGN ILLUMINATION-30 A, 240 V, 2P, CB
LIGHTING CONTROL- 15 A, 120 V, 1P, CB
EXTINGUESH MESSAGE SIGN-30 A, 240 V, 1P, CB
IRIGATION-15 A, 120 V, 1P, CB
ADDRESS- 118 1/2 TAHOE
ID-07-53-405-0-021.003

(MODIFY LIGHTING SYSTEM AND SIGN ILLUMINATION SYSTEM)

MODIFY EXISTING ELECTRICAL SYSTEM

SCALE 1" = 50'

APPROVED FOR ELECTRICAL WORK ONLY

E-2

REVISED BY	DATE REVISED
FATEMEH ANSARI	OSWALD ELIZONDO

CALCULATED-DESIGNED BY	CHECKED BY
OSWALD ELIZONDO	

FUNCTIONAL SUPERVISOR

STATE OF CALIFORNIA - DEPARTMENT OF TRANSPORTATION
Caltrans
TRAFFIC DESIGN

LAST REVISION 00-00-00
DATE PLOTTED => 27-JUL-2016
TIME PLOTTED => 12:53

Dist	COUNTY	ROUTE	POST MILES TOTAL PROJECT	SHEET No.	TOTAL SHEETS
07	LA	105,405	R2.5, 20.5/R21.1	151	265

FATEMEH ANSARI 6/5/16
REGISTERED ELECTRICAL ENGINEER DATE

7-1-16
PLANS APPROVAL DATE

REGISTERED PROFESSIONAL ENGINEER FATEMEH ANSARI No. E17009 Exp. 09/30/17 ELECTRICAL STATE OF CALIFORNIA

THE STATE OF CALIFORNIA OR ITS OFFICERS OR AGENTS SHALL NOT BE RESPONSIBLE FOR THE ACCURACY OR COMPLETENESS OF SCANNED COPIES OF THIS PLAN SHEET.

NOTE: (THIS SHEET)

1. FOR ACCURATE RIGHT OF WAY CONTACT RIGHT OF WAY ENGINEERING AT THE DISTRICT OFFICE.

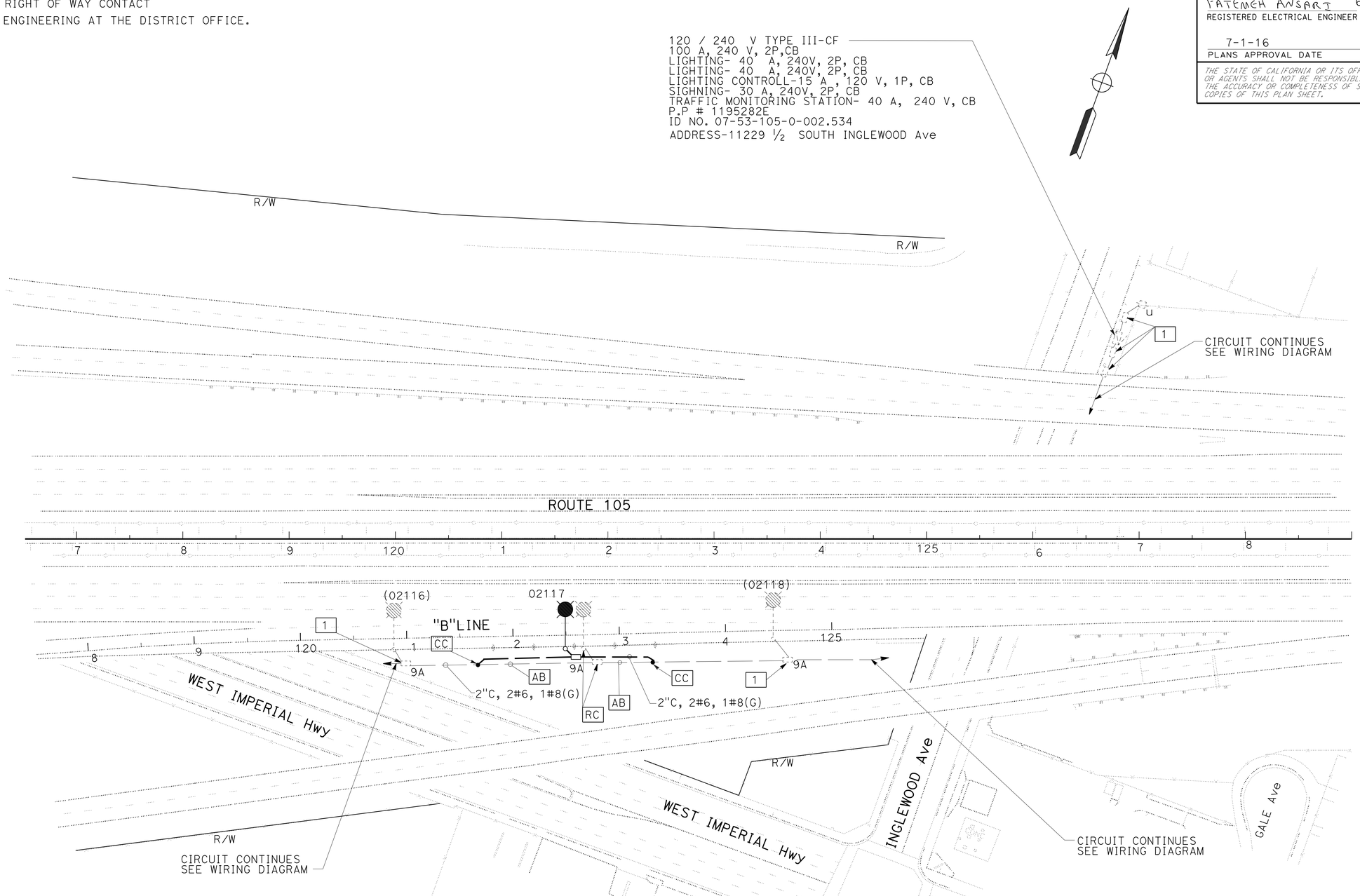

(MODIFY LIGHTING SYSTEM)

APPROVED FOR ELECTRICAL WORK ONLY

MODIFY EXISTING ELECTRICAL SYSTEM

SCALE 1" = 50'

E-3

STATE OF CALIFORNIA - DEPARTMENT OF TRANSPORTATION
Caltrans
TRAFFIC DESIGN

FUNCTIONAL SUPERVISOR: OSWALD ELIZONDO
CALCULATED-DESIGNED BY: FATEMEH ANSARI
CHECKED BY: OSWALD ELIZONDO
REVISED BY
DATE REVISED

LAST REVISION 00-00-00
DATE PLOTTED => 27-JUL-2016
TIME PLOTTED => 12:53

Dist	COUNTY	ROUTE	POST MILES TOTAL PROJECT	SHEET No.	TOTAL SHEETS
07	LA	105,405	R2.5, 20.5/R21.1	152	265

FATEMEH ANSARI 6/5/16
REGISTERED ELECTRICAL ENGINEER DATE

7-1-16
PLANS APPROVAL DATE

REGISTERED PROFESSIONAL ENGINEER FATEMEH ANSARI No. E17009 Exp. 09/30/17 ELECTRICAL STATE OF CALIFORNIA

THE STATE OF CALIFORNIA OR ITS OFFICERS OR AGENTS SHALL NOT BE RESPONSIBLE FOR THE ACCURACY OR COMPLETENESS OF SCANNED COPIES OF THIS PLAN SHEET.

NOTE:(THIS SHEET)

1. FOR ACCURATE RIGHT OF WAY CONTACT RIGHT OF WAY ENGINEERING AT THE DISTRICT OFFICE.

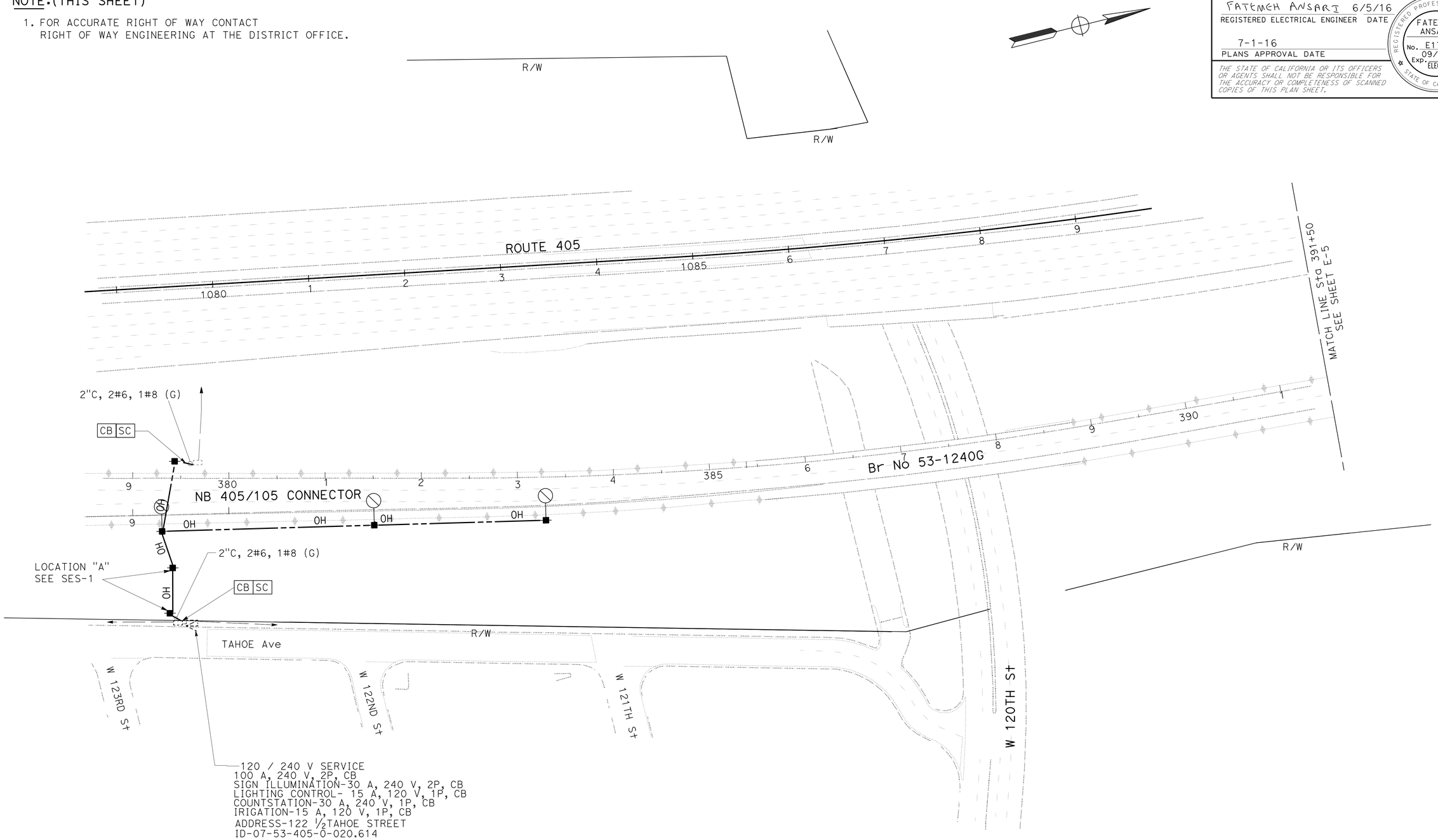

LEGEND: (SHEETS: E-4 AND E-5)

OH - 2#6, 1#8

■- TEMPORARY WOOD POLE, SEE SES SHEETS FOR DETAILS.

APPROVED FOR ELECTRICAL WORK ONLY

TEMPORARY LIGHTING SYSTEM

SCALE 1"= 50'

E-4

REVISED BY | DATE REVISED
FATEMEH ANSARI | OSWALD ELIZONDO
CALCULATED-DESIGNED BY | CHECKED BY
FUNCTIONAL SUPERVISOR
OSWALD ELIZONDO

STATE OF CALIFORNIA - DEPARTMENT OF TRANSPORTATION
Caltrans
TRAFFIC DESIGN

LAST REVISION 00-00-00 | DATE PLOTTED => 27-JUL-2016 | TIME PLOTTED => 12:53

Dist	COUNTY	ROUTE	POST MILES TOTAL PROJECT	SHEET No.	TOTAL SHEETS
07	LA	105,405	R2.5, 20.5/R21.1	153	265

FATEMEH ANSARI 6/5/16
REGISTERED ELECTRICAL ENGINEER DATE

7-1-16
PLANS APPROVAL DATE

REGISTERED PROFESSIONAL ENGINEER
FATEMEH ANSARI
No. E17009
Exp. 09/30/17
ELECTRICAL
STATE OF CALIFORNIA

THE STATE OF CALIFORNIA OR ITS OFFICERS OR AGENTS SHALL NOT BE RESPONSIBLE FOR THE ACCURACY OR COMPLETENESS OF SCANNED COPIES OF THIS PLAN SHEET.

NOTE:(THIS SHEET)

1. FOR ACCURATE RIGHT OF WAY CONTACT RIGHT OF WAY ENGINEERING AT THE DISTRICT OFFICE.

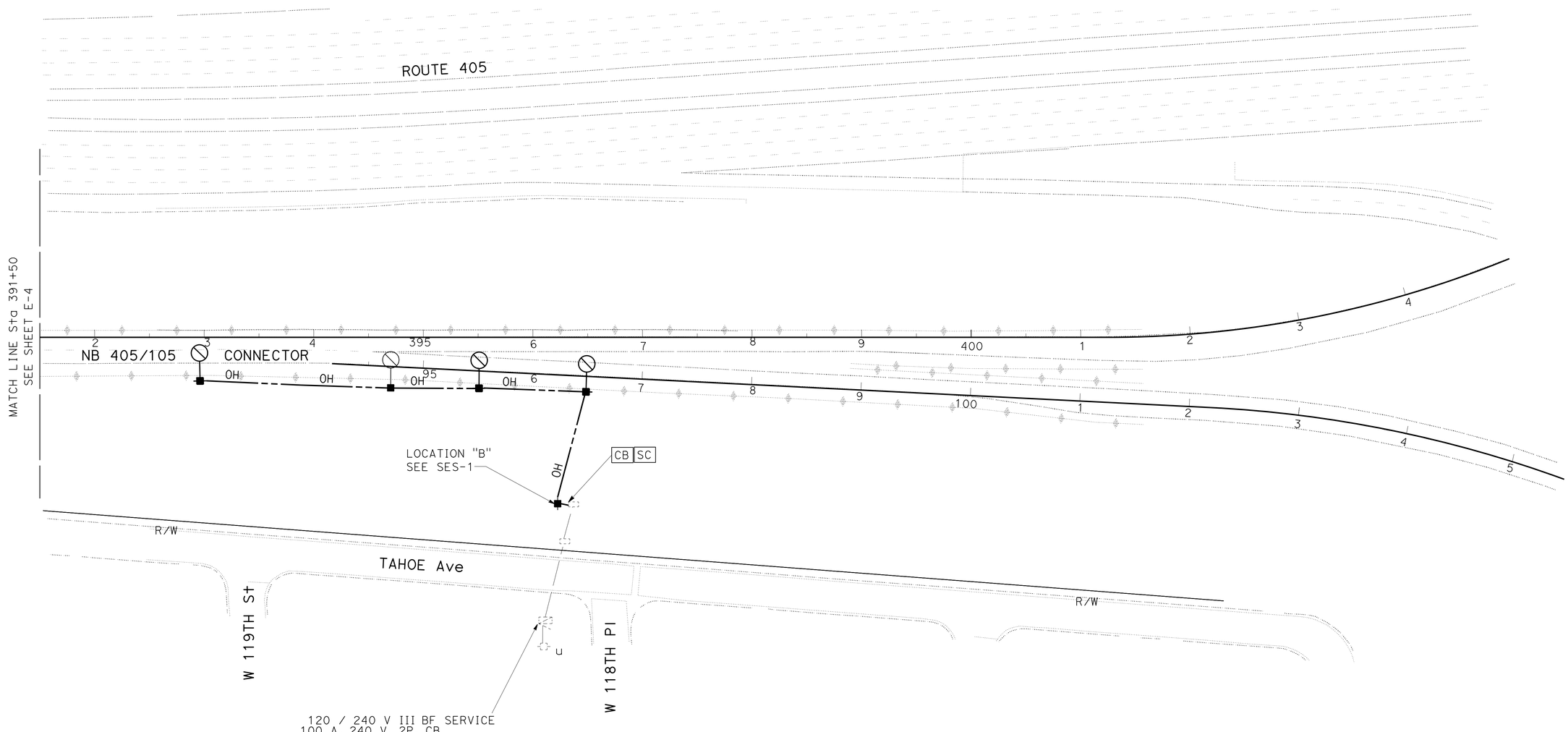

TEMPORARY LIGHTING SYSTEM

SCALE 1"= 50'

APPROVED FOR ELECTRICAL WORK ONLY

E-5

STATE OF CALIFORNIA - DEPARTMENT OF TRANSPORTATION
Caltrans
TRAFFIC DESIGN

FUNCTIONAL SUPERVISOR: OSWALD ELIZONDO
CALCULATED-DESIGNED BY: FATEMEH ANSARI
CHECKED BY: OSWALD ELIZONDO
REVISED BY
DATE REVISED

LAST REVISION 00-00-00
DATE PLOTTED => 27-JUL-2016
TIME PLOTTED => 12:53

Dist	COUNTY	ROUTE	POST MILES TOTAL PROJECT	SHEET No.	TOTAL SHEETS
07	LA	105,405	R2.5, 20.5/R21.1	154	265

FATEMEH ANSARI 6/5/16
REGISTERED ELECTRICAL ENGINEER DATE

7-1-16
PLANS APPROVAL DATE

REGISTERED PROFESSIONAL ENGINEER
FATEMEH ANSARI
No. E17009
Exp. 09/30/17
ELECTRICAL
STATE OF CALIFORNIA

THE STATE OF CALIFORNIA OR ITS OFFICERS OR AGENTS SHALL NOT BE RESPONSIBLE FOR THE ACCURACY OR COMPLETENESS OF SCANNED COPIES OF THIS PLAN SHEET.

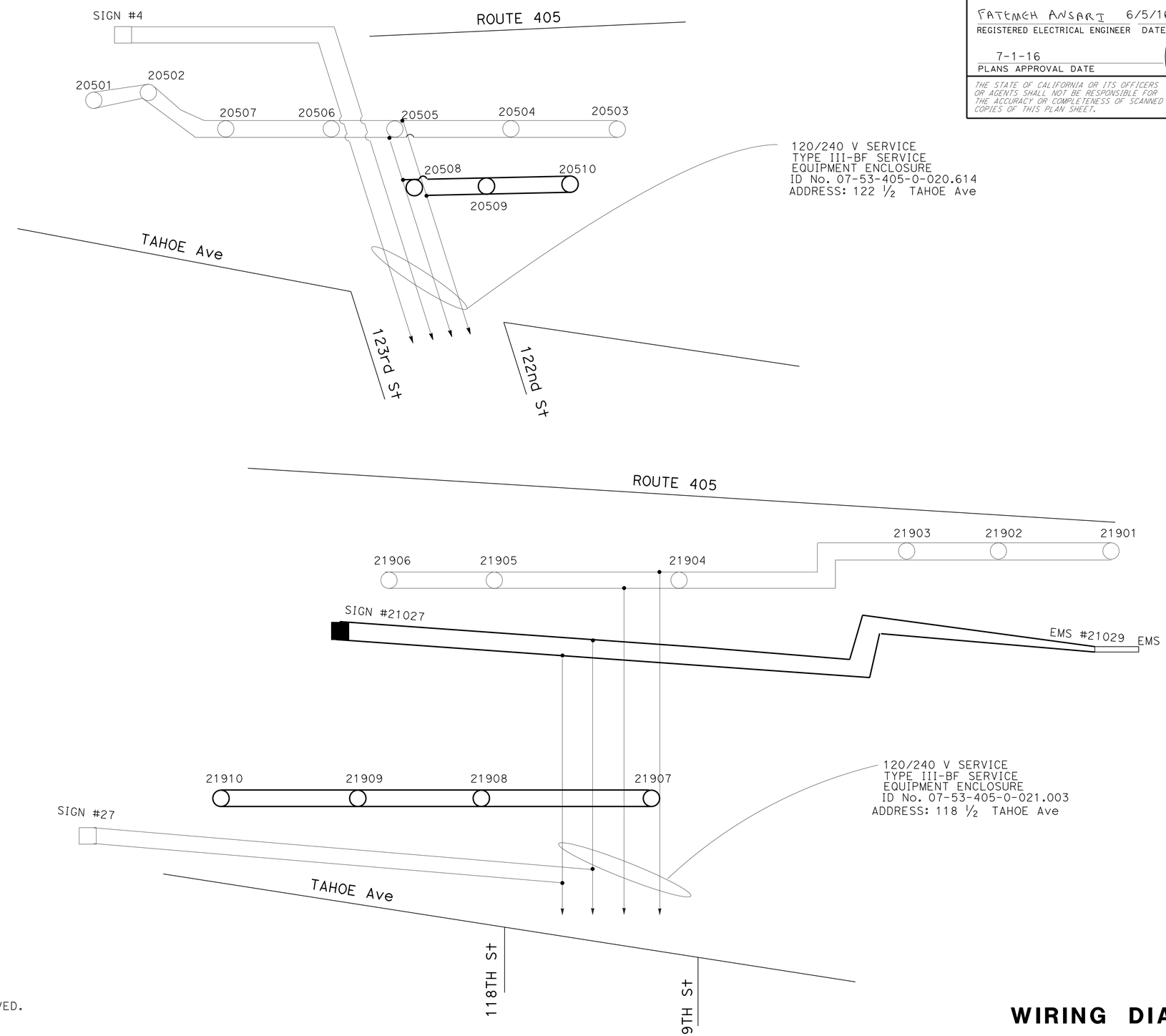

LEGEND:(SHEET-6 AND SHEET-7)

- NEW LUMINAIRE.
- SPLICE CONDUCTOR.
- EXISTING SIGN LIGHTING FIXTURE.
- EXISTING LUMINAIRE.
- EXISTING CONDUCTOR.
- NEW CONDUCTOR.
- NEW SIGN LIGHTING FIXTURE.
- EXISTING SIGN LIGHTING FIXTURE TO BE REMOVED.
- EMS NEW EXTINGUISHABLE MESSAGE SIGN.

WIRING DIAGRAM

E-6

REVISED BY | DATE REVISED
FATEMEH ANSARI | OSWALD ELIZONDO
CALCULATED-DESIGNED BY | CHECKED BY
FUNCTIONAL SUPERVISOR: OSWALD ELIZONDO
STATE OF CALIFORNIA - DEPARTMENT OF TRANSPORTATION
Caltrans® TRAFFIC DESIGN

LAST REVISION 00-00-00 | DATE PLOTTED => 27-JUL-2016 | TIME PLOTTED => 12:53

Dist	COUNTY	ROUTE	POST MILES TOTAL PROJECT	SHEET No.	TOTAL SHEETS
07	LA	105,405	R2.5, 20.5/R21.1	155	265

FATEMEH ANSARI 6/5/16
REGISTERED ELECTRICAL ENGINEER DATE

7-1-16
PLANS APPROVAL DATE

REGISTERED PROFESSIONAL ENGINEER
FATEMEH ANSARI
No. E17009
Exp. 09/30/17
ELECTRICAL
STATE OF CALIFORNIA

THE STATE OF CALIFORNIA OR ITS OFFICERS OR AGENTS SHALL NOT BE RESPONSIBLE FOR THE ACCURACY OR COMPLETENESS OF SCANNED COPIES OF THIS PLAN SHEET.

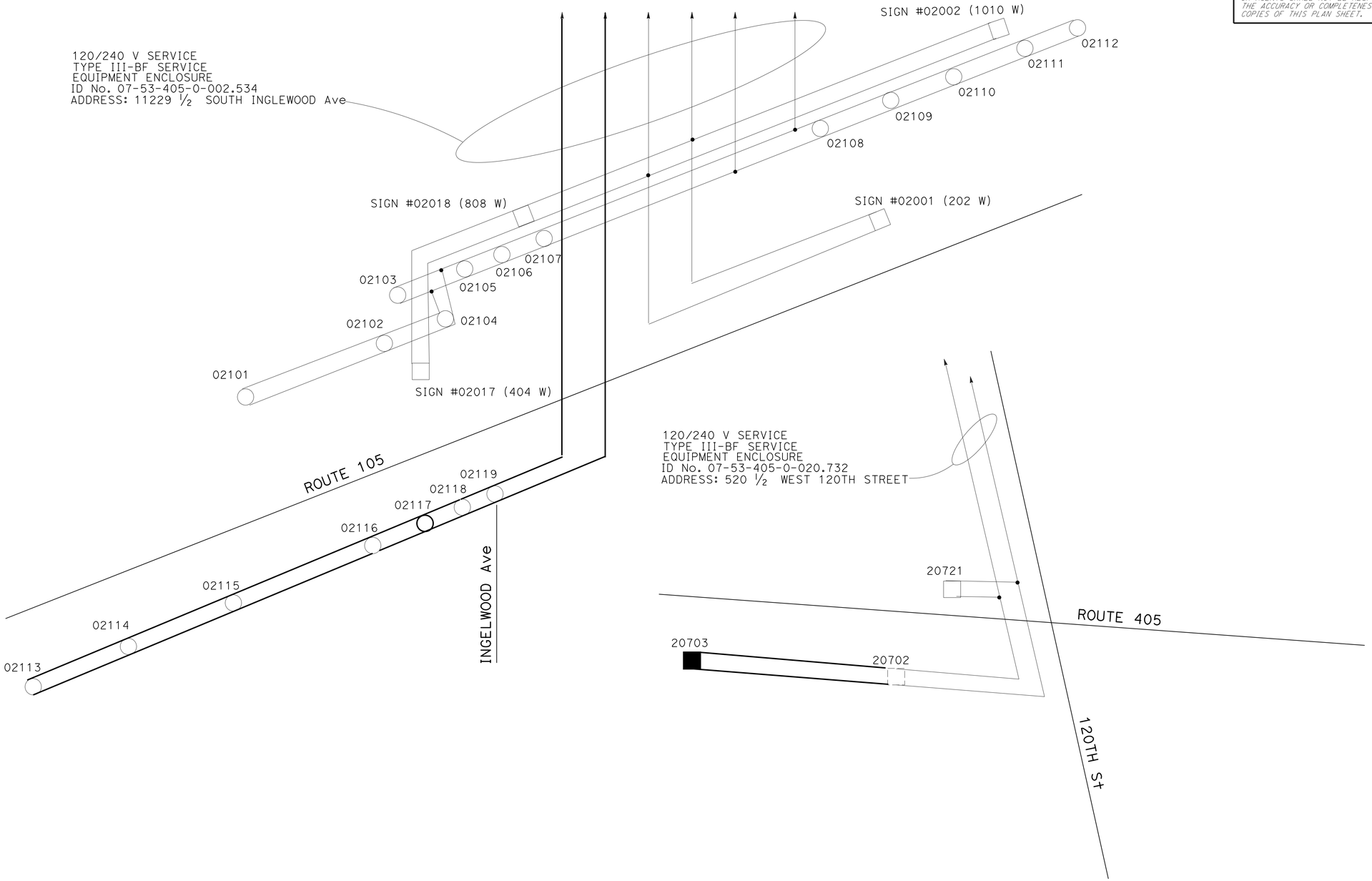

WIRING DIAGRAM

E-7

REVISED BY	DATE REVISED

FATEMEH ANSARI — CALCULATED-DESIGNED BY
OSWALD ELIZONDO — CHECKED BY
OSWALD ELIZONDO — FUNCTIONAL SUPERVISOR

STATE OF CALIFORNIA - DEPARTMENT OF TRANSPORTATION
Caltrans
TRAFFIC DESIGN

LAST REVISION 00-00-00
DATE PLOTTED => 27-JUL-2016
TIME PLOTTED => 12:53

Dist	COUNTY	ROUTE	POST MILES TOTAL PROJECT	SHEET No.	TOTAL SHEETS
07	LA	105,405	R2.5, 20.5/R21.1	156	265

FATEMEH ANSARI 6/5/16
REGISTERED ELECTRICAL ENGINEER DATE

7-1-16
PLANS APPROVAL DATE

REGISTERED PROFESSIONAL ENGINEER
FATEMEH ANSARI
No. E17009
Exp. 09/30/17
ELECTRICAL
STATE OF CALIFORNIA

THE STATE OF CALIFORNIA OR ITS OFFICERS OR AGENTS SHALL NOT BE RESPONSIBLE FOR THE ACCURACY OR COMPLETENESS OF SCANNED COPIES OF THIS PLAN SHEET.

NOTE: (THIS SHEET ONLY)

1. ITEMS SHOWN IN THESE TABLES ARE NOT A SEPARATE PAY ITEM, FOR INFORMATION ONLY.

MODIFY EXISTING LIGHTING SYSTEM

SHEET No.	No. 5(T) PB	No. 6(T) PB	No. 9A PB	2" CONDUIT	3" CONDUIT	TYPE 30 STANDARD	TYPE 21 STANDARD	235 W LED LUM	ISL FIXTURE	No. 6 CONDUCTOR	No. 8 CONDUCTOR	No. 6 CONDUCTOR OVERHEAD	No. 8 CONDUCTOR OVERHEAD	LIGHT ON WOOD POLE	WOOD POLE	TAMPER RESISTANCE COVER	EMS	TYPE No. 9A COVER PB	REMARKS
	EA	EA	EA	LF	LF	EA	EA	EA	EA	LF	LF	LF	LF	EA	EA	EA	EA	EA	
E-1	9	0	0	1000	200	3	0	3	2	2200	1100	0	0	0	0	2	0	0	MODIFY LIGTHING SYSTEM
E-2	6	1	0	500	200	4	0	4	2	1400	700	0	0	0	0	2	1	0	MODIFY LIGTHING SYSTEM
E-3	0	0	1	400	0	0	1	1	0	800	400	0	0	0	0	0	0	2	MODIFY LIGTHING SYSTEM

TEMPORARY LIGHTING SYSTEM

SHEET No.	No. 6 CONDUCTOR OVERHEAD	No. 8 CONDUCTOR OVERHEAD	LIGHT WITH WOOD POLE	WOOD POLE
	LF	LF	EA	EA
E-4	1200	600	3	3
E-5	900	450	4	1

ELECTRICAL QUANTITIES

E-8

REVISED BY | DATE REVISED
FATEMEH ANSARI | OSWALD ELIZONDO
CALCULATED-DESIGNED BY | CHECKED BY
FUNCTIONAL SUPERVISOR: OSWALD ELIZONDO
STATE OF CALIFORNIA - DEPARTMENT OF TRANSPORTATION
Caltrans TRAFFIC DESIGN

LAST REVISION 00-00-00 | DATE PLOTTED => 27-JUL-2016 | TIME PLOTTED => 12:53

DIST	COUNTY	ROUTE	POST MILES TOTAL PROJECT	SHEET No.	TOTAL SHEETS
07	LA	105,405	R2.5,20.5/21.1	157	265

REGISTERED CIVIL ENGINEER 4-6-16 DATE

7-1-16
PLANS APPROVAL DATE

REGISTERED PROFESSIONAL ENGINEER TAMARA S. MARCHENKO No. C76837 Exp. 12/31/16 CIVIL STATE OF CALIFORNIA

The State of California or its officers or agents shall not be responsible for the accuracy or completeness of scanned copies of this plan sheet.

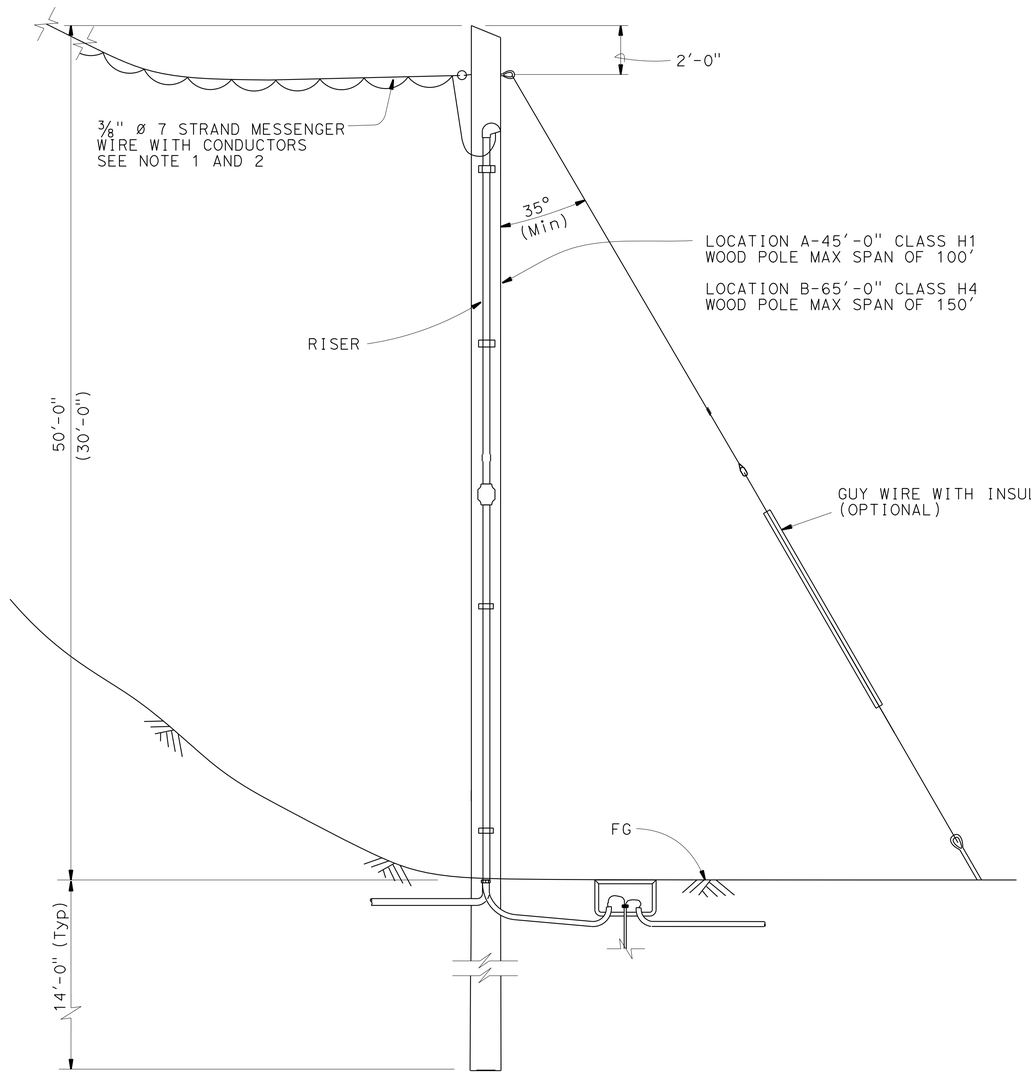

WOOD POLE SUPPORT FOR ELEVATION DROP

NO SCALE

NOTE:
THE CONTRACTOR SHALL VERIFY ALL CONTROLLING FIELD DIMENSIONS BEFORE ORDERING OR FABRICATING ANY MATERIAL.

GENERAL NOTES:

SEE "GENERAL PLANS" sheet "SES-2".

TREATMENT

To conform with Section 86 Standard Specifications 2010

SPECIFICATIONS

Caltrans Standard Specifications 2010
ANSI 05 Wood Poles
ASTM A475 Utility Grade Wires

G1. Overhead line construction not specifically covered here shall conform with the provisions of General Order No. 95 of Public Utilities Commission.

G2. Poles shall be protected from traffic.

NOTES:

1. All overhead cables shall be slack spanned with 20'-0" minimum overhead clearance.

2. Conductors shall be suspended from span-wire as follows: Main run 3/8" span-wire with 10% + 0.5% sag. Minimum breaking strength for wire connections shall be 11500 lbs. No spare conductors allowed except as noted.

3. Wood poles shall be stabilized using guy wires, breast blocks or rakes at each dead end, corner, drop or line deviation more than 15° from straight line. The direction of the guy shall counteract the resultant of unbalanced force applied to pole. Where space or conflict prevent guy installation, a diagonal brace shall be used. The brace shall be wood and shall be connected to the pole by means to satisfy structural and electrical requirements. The direction of the brace shall counteract the resultant of unbalanced horizontal force of 4000 pounds (Min) applied to the pole.

4. Guy wire shall be attached to pole as nearly as practical to the messenger wire connection point, or 3'-0" Max otherwise, See Note 3.

5. This sheet is applicable for Locations A and Locations B where vertical elevation drop exceeds 10% of span as shown on sheets E4 and E5. For the other poles see sheet "SES-2". For details, see sheets "SES-3 and "SES-5".

BRANCH CHIEF DAVID A. NEUMANN

	BY	CHECKED
DESIGN	K K LIN	T MARCHENKO
DETAILS	B EDWARDS	T MARCHENKO
QUANTITIES		

STATE OF CALIFORNIA DEPARTMENT OF TRANSPORTATION

DIVISION OF ENGINEERING SERVICES DESIGN AND TECHNICAL SERVICES SPECIAL DESIGNS BRANCH B

BRIDGE No. N/A
POST MILE 20.5/21.0

TEMPORARY WOOD POLES

WOOD POLE SUPPORT FOR LOCATIONS A & B

SES-1

SPECIAL DESIGNS BRANCH BORDER SHEET (REV. 8-27-14) Bob Edwards

ORIGINAL SCALE IN INCHES FOR REDUCED PLANS 0 1 2 3

UNIT: 3619
PROJECT NUMBER & PHASE: 07-13000241-1 CONTRACT No.: 07-3X8701

DISREGARD PRINTS BEARING EARLIER REVISION DATES

REVISION DATES 2-8-16 3-08-16 3-10-16

SHEET 1 OF 6

FILE => 07-3x8701-uh-misc-ses01.dgn

USERNAME => s125624 DATE PLOTTED => 27-JUL-2016 TIME PLOTTED => 12:53

DIST	COUNTY	ROUTE	POST MILES TOTAL PROJECT	SHEET No.	TOTAL SHEETS
07	LA	105,405	R2.5,20.5/21.1	158	265

REGISTERED CIVIL ENGINEER — DATE 4-6-16

7-1-16
PLANS APPROVAL DATE

REGISTERED PROFESSIONAL ENGINEER — TAMARA S. MARCHENKO — No. C76837 — Exp. 12/31/16 — CIVIL — STATE OF CALIFORNIA

The State of California or its officers or agents shall not be responsible for the accuracy or completeness of scanned copies of this plan sheet.

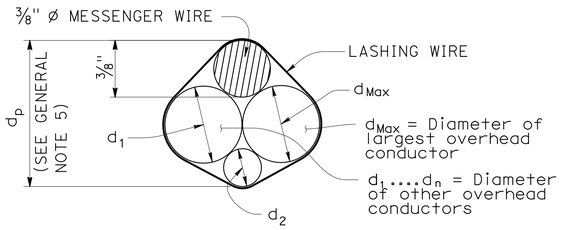

$d_p = 3/8" + d_{Max} + 0.30 * (d_1 + d_2 + \ldots d_n)$

PROJECTED DEPTH OF OVERHEAD BUNDLE, (d_p)

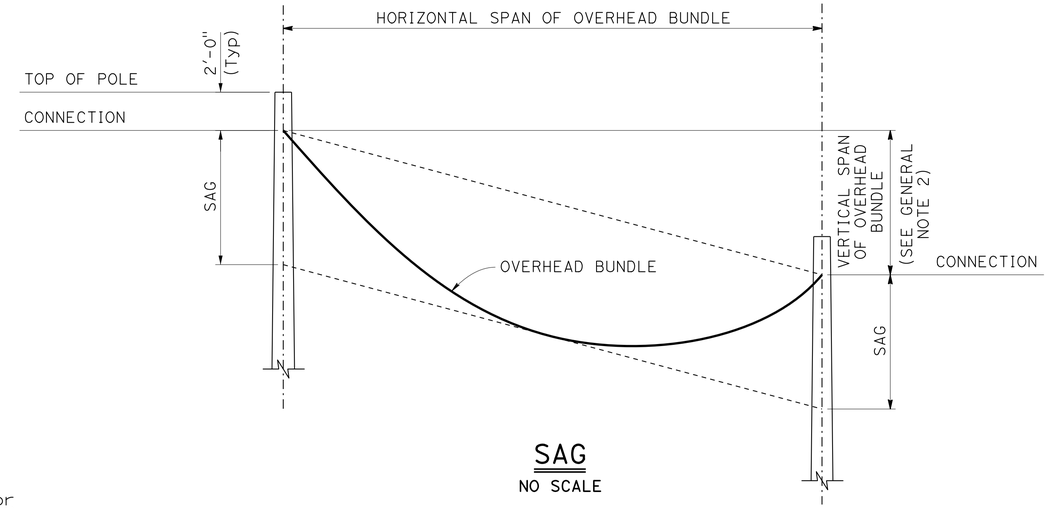

SAG

NO SCALE

Design: AASHTO Standard Specifications for Structural Supports for Highway Signs, Luminaires and Traffic Signals, Fifth Edition (LTS-5).

GROUP LOAD COMBINATIONS:

I Dead Load
II Dead Load + Wind Load
III Dead Load + 0.5 (Wind Load) + Ice Load
IV Fatigue: Not used

LOADING:

Wind Loading: 100 mph (3-second gust)
Wind Recurrence Interval: 10 years
Combined height, exposure, and elevated terrain factor = 1.05
(Exposure C, structure is not located on or over the top half of a ridge, hill, or escarpment)

Ice Loading: 3.0 psf on surfaces, 0.60 in radial thickness of ice at a unit weight of 60 pcf on overhead bundles

BASIC DESIGN VALUES:

Timber Poles: Fb = 1850 psi
Fv = 110 psi
Fcp = 230 psi
Fc = 950 psi
E = 1500 x 10^3 psi

DESIGN WIRE BREAKING STRENGTHS:

ASTM A475, Utilities Grade, 7 strand modified by termination efficiency factor of 0.8

FOUNDATION DESIGN NOTES:

1. Pole embedment depth design is based on Broms' approximate procedure as described in Article 13.6 of AASHTO LTS-5.
2. Embedment depth is calculated based on following soil parameters,
   Cohesive Soil:
   Shear strength of soil c = 1500 psf.
   Cohesionless Soil:
   Ø = 30 deg, γ = 120 pcf.
   Soil assumed to be unsaturated.
3. An overload factor of 2.0 and an undercapacity factor of 0.7 were used for safety factor of 2.86.
4. Allowable vertical bearing pressure at the end bearing of poles is 3000 psf at 6 feet or more embedment.
5. Guy wire anchor minimum allowable tension capacity, "Qa" = 8,900 lbs.

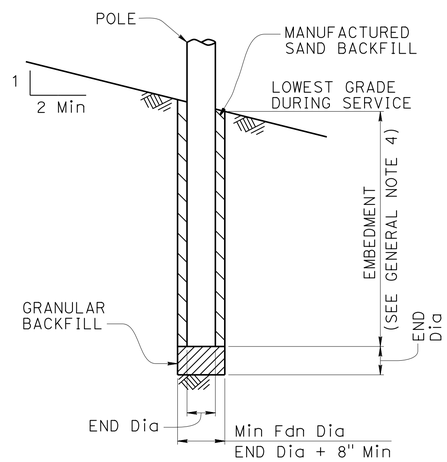

POLE FOUNDATION

GENERAL NOTES:

1. The messenger wire and any combination of overhead conductors must not exceed either a self weight of 3.0 lb/ft or the maximum d in the pole selection tables.
2. The maximum vertical span is 10% of the horizontal span.
3. For poles with adjacent unbalanced horizontal spans, the shortest horizontal span must be at least 50% of the largest horizontal span.
4. Add 2'-0" for slopes above 1V:4H.
5. For a pole supporting multiple spans, calculate d_p for each span and use the largest value.
6. Do not exceed the attachments shown.

DIAMETERS AND SELF WEIGHT OF OVERHEAD CONDUCTORS

CONDUCTOR OR CABLE TYPE	DIAMETER d (in)	WEIGHT w (plf)
3 CONDUCTOR SIGNAL CABLE (3CSC)	0.400	0.0980
5 CONDUCTOR SIGNAL CABLE (5CSC)	0.500	0.1560
9 CONDUCTOR SIGNAL CABLE (9CSC)	0.650	0.2760
12 CONDUCTOR SIGNAL CABLE (12CSC)	0.800	0.3970
28 CONDUCTOR SIGNAL CABLE (28CSC)	0.900	0.6490
1-#14	0.166	0.0235
1-#12	0.185	0.0330
1-#10	0.210	0.0476
1-#8	0.271	0.0774
1-#6	0.310	0.1130
1-#4	0.359	0.1690
1-#3	0.388	0.2080
1-#2	0.420	0.2560
1-#1	0.498	0.3340
6-CONDUCTOR SIGNAL INTERCONNECT CABLE (SIC)	0.350	0.0860
12-CONDUCTOR SIGNAL INTERCONNECT CABLE (SIC)	0.500	0.1440
DETECTOR LEAD-IN CABLE (DLC)	0.310	0.0440
12 to 48-STRAND FIBER OPTIC CABLE (48FOC)	0.424	0.0600
72-STRAND FIBER OPTIC CABLE (72FOC)	0.484	0.0770
96-STRAND FIBER OPTIC CABLE (96FOC)	0.535	0.1050
144-STRAND FIBER OPTIC CABLE (144FOC)	0.670	0.1890
3/8" Ø MESSENGER WIRE	0.375	0.2730

NO SCALE

BRANCH CHIEF DAVID A. NEUMANN

	BY	CHECKED
DESIGN	K K LIN	T MARCHENKO
DETAILS	B EDWARDS	T MARCHENKO
QUANTITIES		

STATE OF CALIFORNIA
DEPARTMENT OF TRANSPORTATION

DIVISION OF ENGINEERING SERVICES
DESIGN AND TECHNICAL SERVICES
SPECIAL DESIGNS BRANCH B

BRIDGE No. N/A
POST MILE 20.5/21.0

TEMPORARY WOOD POLES
GENERAL PLANS

SES-2

SPECIAL DESIGNS BRANCH BORDER SHEET (REV. 8-27-14) Bob Edwards

ORIGINAL SCALE IN INCHES FOR REDUCED PLANS 0 1 2 3

UNIT: 3619
PROJECT NUMBER & PHASE: 0713000241-1
CONTRACT No.: 07-3X8701

DISREGARD PRINTS BEARING EARLIER REVISION DATES
REVISION DATES: 2-8-16 3-08-16 3-10-16

SHEET 2 OF 6

FILE => 07-3x8701-uh-misc-ses02.dgn

USERNAME => s125624 DATE PLOTTED => 27-JUL-2016 TIME PLOTTED => 12:53

DIST	COUNTY	ROUTE	POST MILES TOTAL PROJECT	SHEET No.	TOTAL SHEETS
07	LA	105,405	R2.5,20.5/21.1	159	265

REGISTERED CIVIL ENGINEER — DATE 4-6-16

7-1-16
PLANS APPROVAL DATE

The State of California or its officers or agents shall not be responsible for the accuracy or completeness of scanned copies of this plan sheet.

REGISTERED PROFESSIONAL ENGINEER — TAMARA S. MARCHENKO — No. C76837 — Exp. 12/31/16 — CIVIL — STATE OF CALIFORNIA

LEGEND

- Wood Pole No Attachments
- A — Wood Pole with Attachments
- —OH— Overhead Bundle

POLE SELECTION TABLE

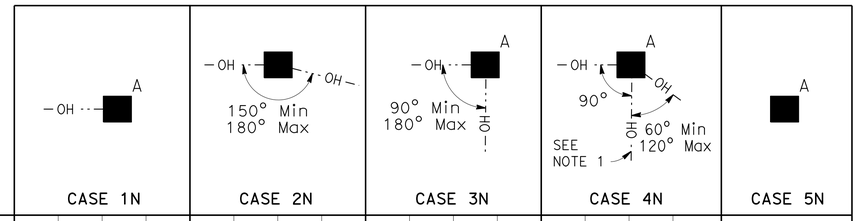

			CASE 1N				CASE 2N				CASE 3N				CASE 4N				CASE 5N
		MAXIMUM d_p	1"	1.5"	2.0"	2.5"	1"	1.5"	2.0"	2.5"	1.0"	1.5"	2.0"	2.5"	1"	1.5"	2.0"	2.5"	N/A
OVERHEAD BUNDLE HORIZONTAL SPAN (Max)	50′	MINIMUM POLE CLASS	H-1	H-2	H-2	H-2	4	3	2	1	H-2	H-2	H-3	H-3	H-4	H-4	H-4	H-5	CLASS 1 E = 10′
		POLE EMBEDMENT (E)	11′				10′				11′				12′				
	100′	MINIMUM POLE CLASS	H-2	H-3	H-4	H-5	1	H-1	H-2	H-3	H-4	H-5	H-5	H-6	H-5	H-5	H-6		
		POLE EMBEDMENT (E)	12′				11′				12′				12′				
	150′	MINIMUM POLE CLASS	H-4	H-5	H-6		H-1	H-2	H-3	H-5	H-6				H-6				
		POLE EMBEDMENT (E)	12′				12′				12′				12′				
	200′	MINIMUM POLE CLASS	H-5	H-6			H-2	H-3	H-5										
		POLE EMBEDMENT (E)	12′				12′												

1. CCTV camera assembly or vehicle detection system
2. Overhead bundle consisting of a 3/8" Ø messenger wire, overhead conductors, and lashing wire
3. Luminaire with mast arm
4. Pedestrian push button assembly or accessible push button assembly
5. Signal face with 3 indications or single sheet sign panel (10 SQFT Max)
6. Riser with weather head as required
7. Pull box as required
8. Grounding as required
9. Single flashing beacon or single sheet sign panel (4 SQFT Max)
10. Single sheet sign panel (4′ x 4′ Max) or signal face with 3 indications
11. Flashing beacon control assembly
12. NEMA 3R enclosure, 26"(W) x 56"(H) x 12"(D) Max dimensions. Max weight including batteries, 450 lbs
13. 25′ SQFT Max total photovoltaic panels mounted as shown as required
14. 2-12" flashing beacons

NOTES:

1. In addition to other restrictions on maximum horizontal span, this horizontal span must not exceed 100′.
2. Cases 1N, 3N and 4N may substitute the attachments shown in Case 5N if the photovoltaic panel is not included.
3. For Case 1N without an overhead bundle (item 2) use minimum pole class H-1 with E=11′.

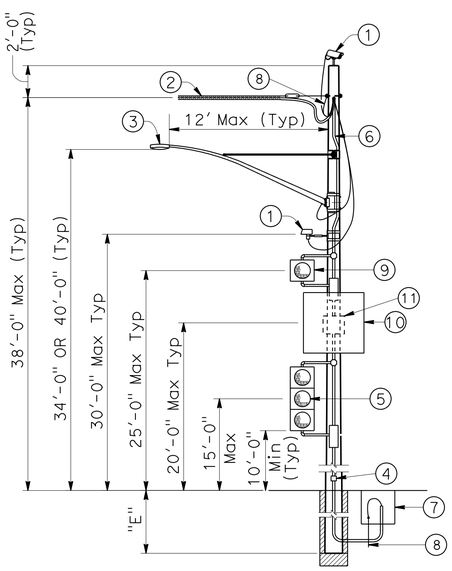

CASE 1N
POLE AT DEAD END WITH ATTACHMENTS
SEE NOTE 2

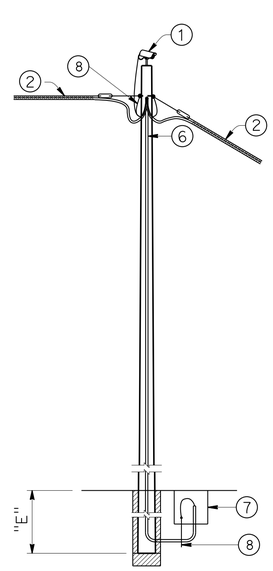

CASE 2N
POLE AT TANGENT WITHOUT ATTACHMENTS

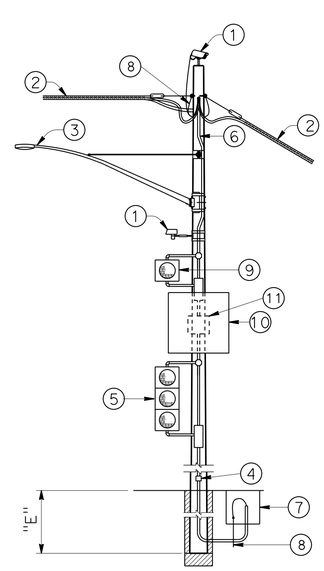

CASE 3N
POLE AT TANGENT OR CORNER WITH ATTACHMENTS
SEE NOTE 2

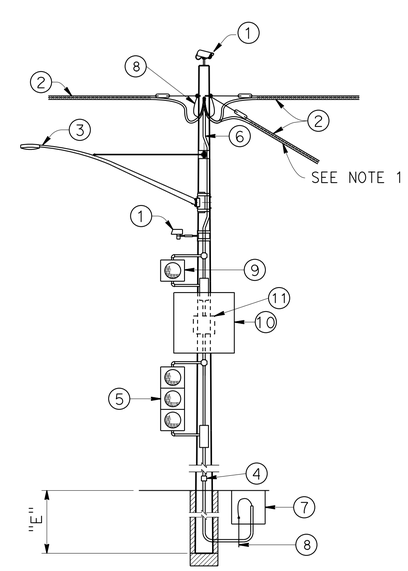

CASE 4N
POLE AT JUNCTION WITH ATTACHMENTS
SEE NOTE 2

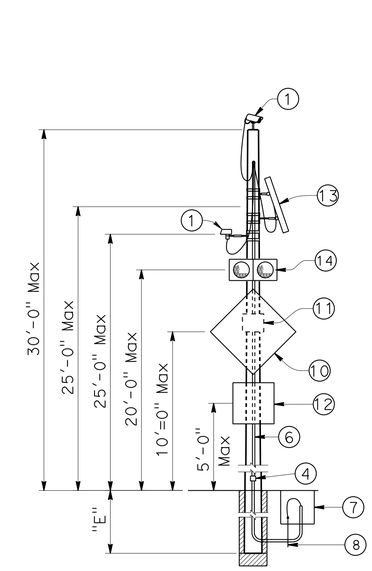

CASE 5N
POLE WITHOUT OVERHEAD BUNDLE WITH ATTACHMENTS

NO SCALE

BRANCH CHIEF	DAVID A. NEUMANN		
DESIGN	BY K K LIN	CHECKED T MARCHENKO	
DETAILS	BY B EDWARDS	CHECKED T MARCHENKO	
QUANTITIES	BY	CHECKED	

STATE OF CALIFORNIA
DEPARTMENT OF TRANSPORTATION

DIVISION OF ENGINEERING SERVICES
DESIGN AND TECHNICAL SERVICES
SPECIAL DESIGNS BRANCH B

BRIDGE No. N/A
POST MILE 20.5/21.0

TEMPORARY WOOD POLES
NON-GUYED - NO SIGNALS ON SPANS

SES-3

SPECIAL DESIGNS BRANCH BORDER SHEET (REV. 8-27-14) Bob Edwards

ORIGINAL SCALE IN INCHES FOR REDUCED PLANS 0 1 2 3

UNIT: 3619
PROJECT NUMBER & PHASE: 0713000241-1
CONTRACT No.: 07-3X8701

DISREGARD PRINTS BEARING EARLIER REVISION DATES

REVISION DATES: 2-4-16 3-09-16 3-10-16

SHEET 3 OF 6

FILE => 07-3x8701-uh-misc-ses03.dgn

USERNAME => s125624 DATE PLOTTED => 27-JUL-2016 TIME PLOTTED => 12:53

DIST	COUNTY	ROUTE	POST MILES TOTAL PROJECT	SHEET No.	TOTAL SHEETS
07	LA	105,405	R2.5,20.5/21.1	160	265

REGISTERED CIVIL ENGINEER — DATE 4-6-16

7-1-16
PLANS APPROVAL DATE

The State of California or its officers or agents shall not be responsible for the accuracy or completeness of scanned copies of this plan sheet.

REGISTERED PROFESSIONAL ENGINEER — TAMARA S. MARCHENKO — No. C76837 — Exp. 12/31/16 — CIVIL — STATE OF CALIFORNIA

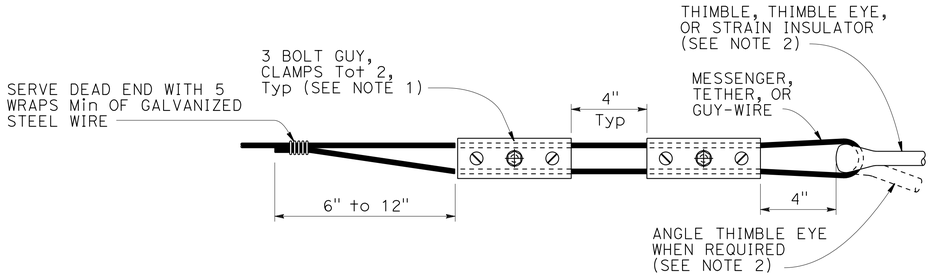

ALTERNATIVE TERMINATION OF MESSENGER WIRES USING GUY CLAMPS

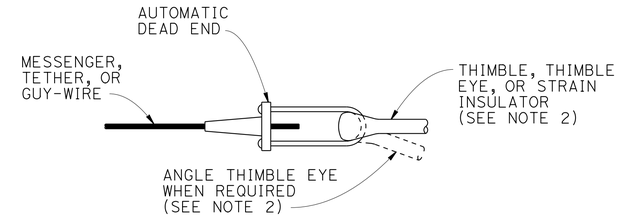

TERMINATION OF WIRES USING AUTOMATIC DEAD END

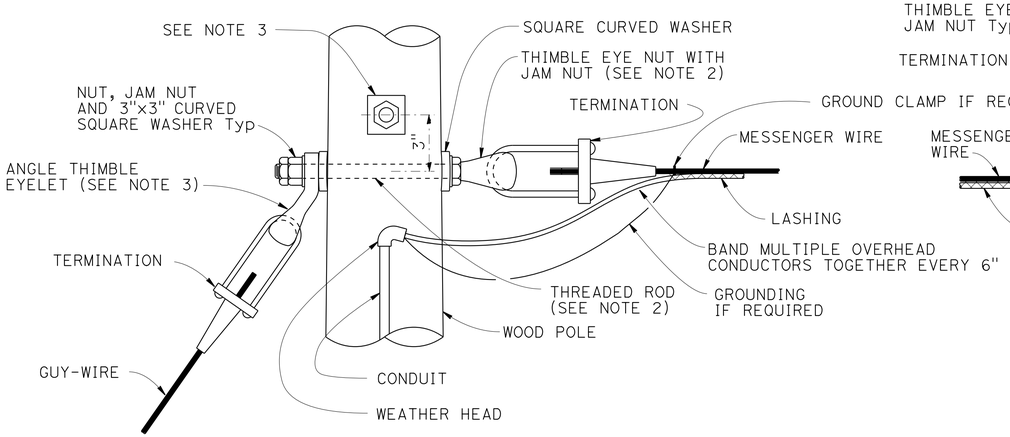

POLE AT DEAD END WITH GUY-WIRE CONNECTION

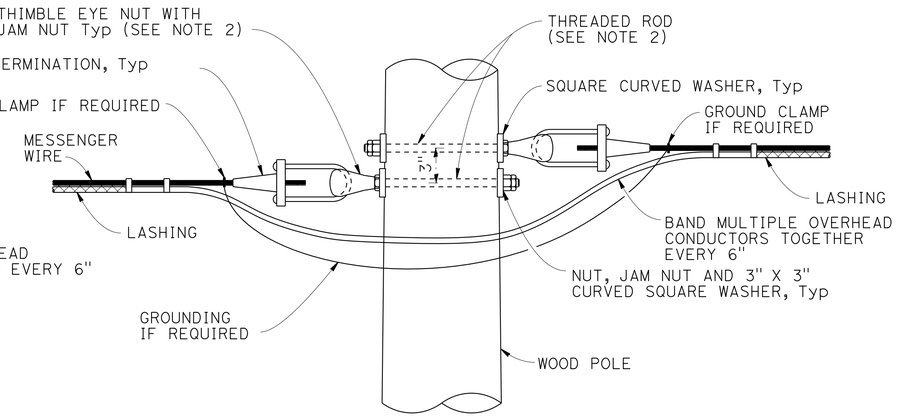

POLE AT TANGENT OR CORNER CONNECTION

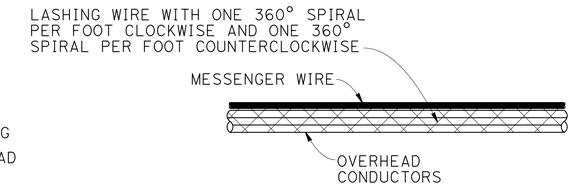

DOUBLE LASHING DETAIL

USE IF d_p IS GREATER THAN 1½"

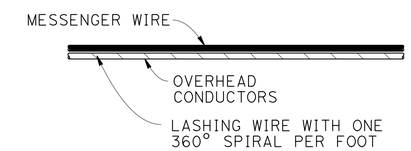

TYPICAL LASHING DETAIL

USE IF d_p IS 1½" OR LESS

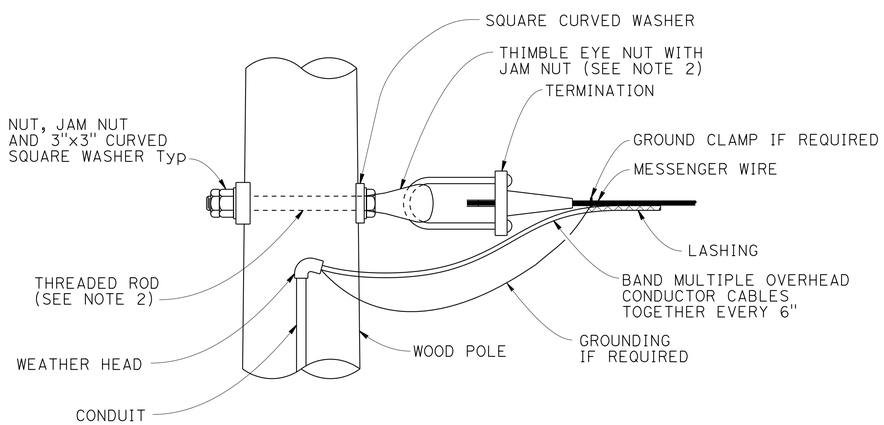

POLE AT DEAD END CONNECTION

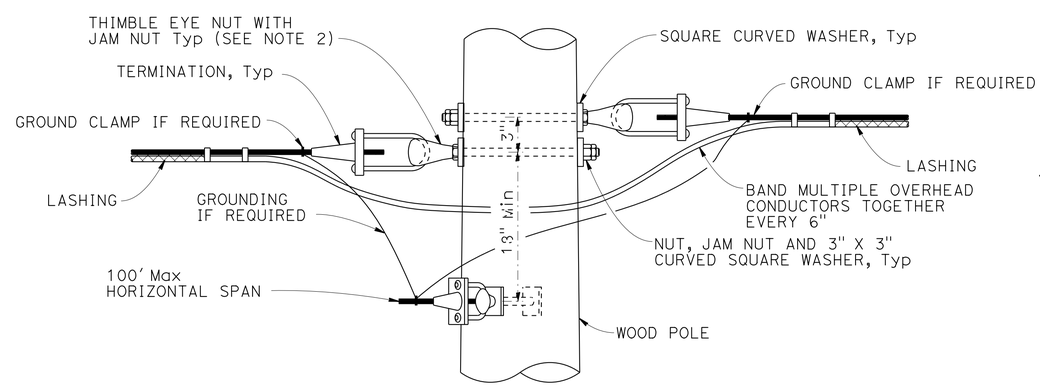

POLE AT JUNCTION CONNECTION

NOTES:

1. For guy wires use 3 clamps.
2. Use ⅝" ø except ¾" ø at guyed wires
3. Install additional angle thimble eyelet at poles with two guy wires.

NO SCALE

BRANCH CHIEF	DAVID A. NEUMANN		
DESIGN	BY K K LIN	CHECKED T MARCHENKO	
DETAILS	BY B EDWARDS	CHECKED T MARCHENKO	
QUANTITIES	BY	CHECKED	

STATE OF CALIFORNIA
DEPARTMENT OF TRANSPORTATION

DIVISION OF ENGINEERING SERVICES
DESIGN AND TECHNICAL SERVICES
SPECIAL DESIGNS BRANCH B

BRIDGE No. N/A
POST MILE 20.5/21.0

TEMPORARY WOOD POLES
DETAILS No. 1

SES-4

SPECIAL DESIGNS BRANCH BORDER SHEET (REV. 8-27-14) Bob Edwards

ORIGINAL SCALE IN INCHES FOR REDUCED PLANS 0 1 2 3

UNIT: 3619
PROJECT NUMBER & PHASE: 0713000241-1
CONTRACT No.: 07-3X8701

DISREGARD PRINTS BEARING EARLIER REVISION DATES

REVISION DATES: ~~2-4-16~~ ~~3-08-16~~ 3-10-16

SHEET 4 OF 6

FILE => 07-3x8701-uh-misc-ses04.dgn

USERNAME => s125624 DATE PLOTTED => 01-AUG-2016 TIME PLOTTED => 15:15

DIST	COUNTY	ROUTE	POST MILES TOTAL PROJECT	SHEET No.	TOTAL SHEETS
07	LA	105,405	R2.5,20.5/21.1	161	265

REGISTERED CIVIL ENGINEER — DATE 4-6-16

7-1-16
PLANS APPROVAL DATE

The State of California or its officers or agents shall not be responsible for the accuracy or completeness of scanned copies of this plan sheet.

REGISTERED PROFESSIONAL ENGINEER — TAMARA S. MARCHENKO — No. C76837 — Exp. 12/31/16 — CIVIL — STATE OF CALIFORNIA

LEGEND

- A — Wood Pole with Attachments
- —OH··— Overhead Bundle
- ⟶ Guy Anchor

POLE SELECTION TABLE

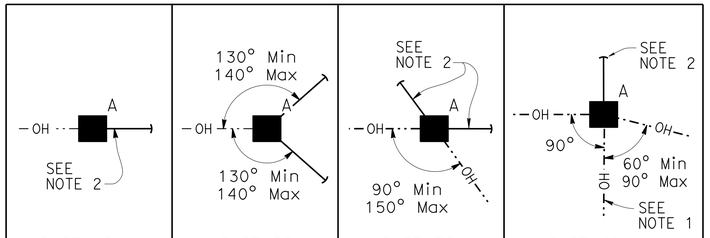

		MAXIMUM d_p	1"	1.5"	2.0"	2.5"	1"	1.5"	2.0"	2.5"	1"	1.5"	2.0"	2.5"	1"	1.5"	2.0"	2.5"
OVERHEAD BUNDLE HORIZONTAL SPAN (Max)	50′	MINIMUM POLE CLASS	H-1	H-1	H-2	H-2	1	1	1	1	1	1	1	H-1	H-2	H-2	H-3	H-3
		POLE EMBEDMENT (E)	10′				9′				9′				11′			
	100′	MINIMUM POLE CLASS	H-2	H-2	H-3	H-4	1	H-1	H-1	H-1	1	H-1	H-2	H-2	H-3	H-3	H-4	H-4
		POLE EMBEDMENT (E)	11′				9′				9′				12′			
	150′	MINIMUM POLE CLASS	H-3	H-3	H-4	H-5	H-1	H-1	H-2	H-2	H-2	H-3	H-3	H-3	H-4	H-5	H-5	H-6
		POLE EMBEDMENT (E)	11′				9′				9′				12′			
	200′	MINIMUM POLE CLASS	H-4	H-4	H-5	H-6	H-1	H-2	H-3	H-3	H-3	H-3	H-4	H-4	H-5	H-6		
		POLE EMBEDMENT (E)	11′				9′				9′				12′			

1. CCTV camera assembly or vehicle detection system
2. Overhead bundle consisting of a 3/8" ø messenger wire, overhead conductors, and lashing wire
3. Luminaire with mast arm
4. Pedestrian push button assembly or accessible push button assembly
5. Signal face with 3 indications or single sheet sign panel (10 SQFT Max)
6. Riser with weather head as required
7. Pull box as required
8. Grounding as required
9. Single flashing beacon or single sheet sign panel (4 SQFT Max)
10. Single sheet sign panel (4′ x 4′ Max) or signal face with 3 indications
11. Flashing beacon control assembly
12. 1/2" ø guy wire with white guy marker and strain insulator (for anchorage see "TEMPORARY WOOD POLES-DETAILS No. 2" sheet)

NOTES:

1. In addition to other restrictions on maximum horizontal span, this horizontal span must not exceed 100′.
2. Guy wire in line with opposing span ± 5°.

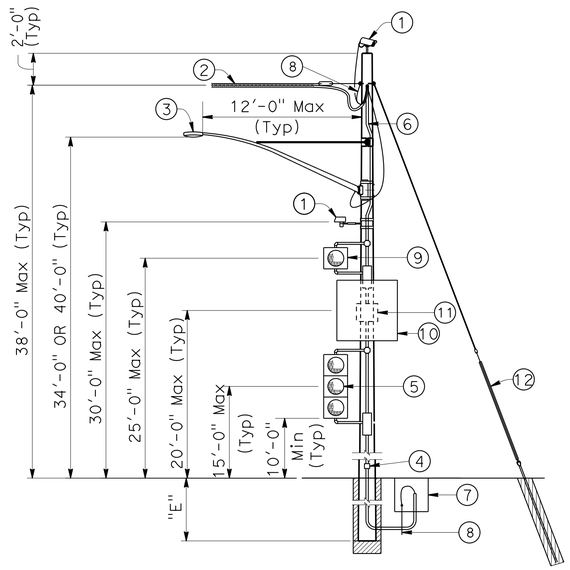

CASE 1G
POLE AT DEAD END
WITH ATTACHMENTS

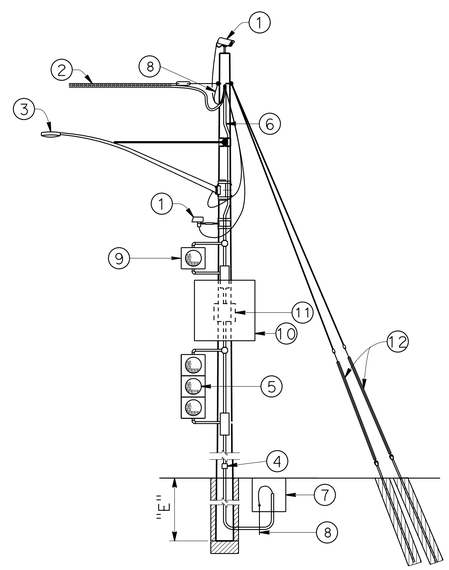

CASE 2G
POLE AT DEAD END
WITH ATTACHMENTS

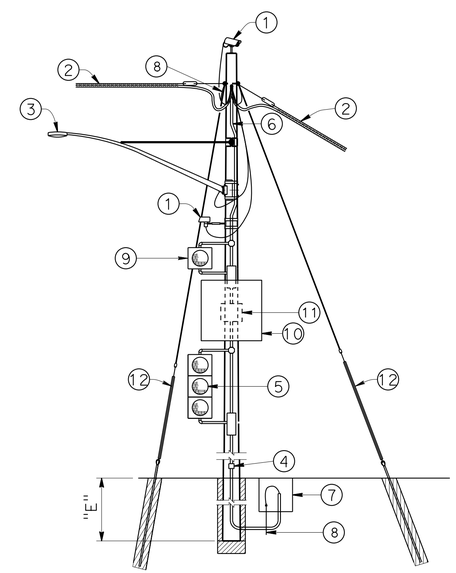

CASE 3G
POLE AT CORNER
WITH ATTACHMENTS

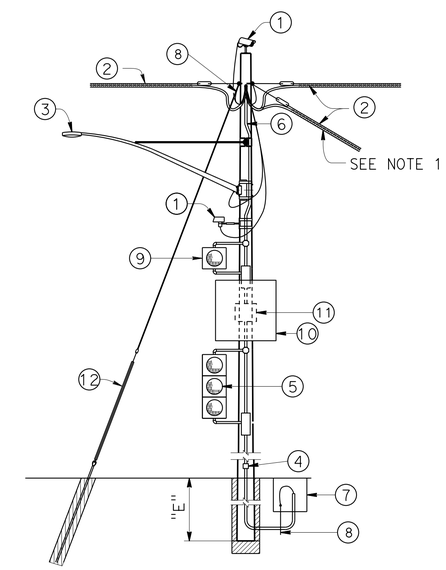

CASE 4G
POLE AT JUNCTION
WITH ATTACHMENTS

NO SCALE

BRANCH CHIEF DAVID A. NEUMANN

	BY	CHECKED
DESIGN	K K LIN	T MARCHENKO
DETAILS	B EDWARDS	T MARCHENKO
QUANTITIES		

STATE OF CALIFORNIA
DEPARTMENT OF TRANSPORTATION

DIVISION OF ENGINEERING SERVICES
DESIGN AND TECHNICAL SERVICES
SPECIAL DESIGNS BRANCH B

BRIDGE No. N/A
POST MILE 20.5/21.0

TEMPORARY WOOD POLES
GUYED - NO SIGNALS ON SPANS

SES-5

SPECIAL DESIGNS BRANCH BORDER SHEET (REV. 8-27-14) Bob Edwards

ORIGINAL SCALE IN INCHES FOR REDUCED PLANS 0 1 2 3

UNIT: 3619
PROJECT NUMBER & PHASE: 0713000241-1
CONTRACT No.: 07-3X8701

DISREGARD PRINTS BEARING EARLIER REVISION DATES

REVISION DATES: 2-4-16, 3-10-16

SHEET 5 OF 6

FILE => 07-3x8701-uh-misc-ses05.dgn

USERNAME => s125624 DATE PLOTTED => 27-JUL-2016 TIME PLOTTED => 12:53

DIST	COUNTY	ROUTE	POST MILES TOTAL PROJECT	SHEET No.	TOTAL SHEETS
07	LA	105,405	R2.5,20.5/21.1	162	265

REGISTERED CIVIL ENGINEER 4-6-16 DATE

7-1-16
PLANS APPROVAL DATE

REGISTERED PROFESSIONAL ENGINEER TAMARA S. MARCHENKO No. C76837 Exp. 12/31/16 CIVIL STATE OF CALIFORNIA

The State of California or its officers or agents shall not be responsible for the accuracy or completeness of scanned copies of this plan sheet.

NOTE:

1. For minimum allowable tension capacity of anchors see "Temporary Wood Poles - General Notes" sheet.

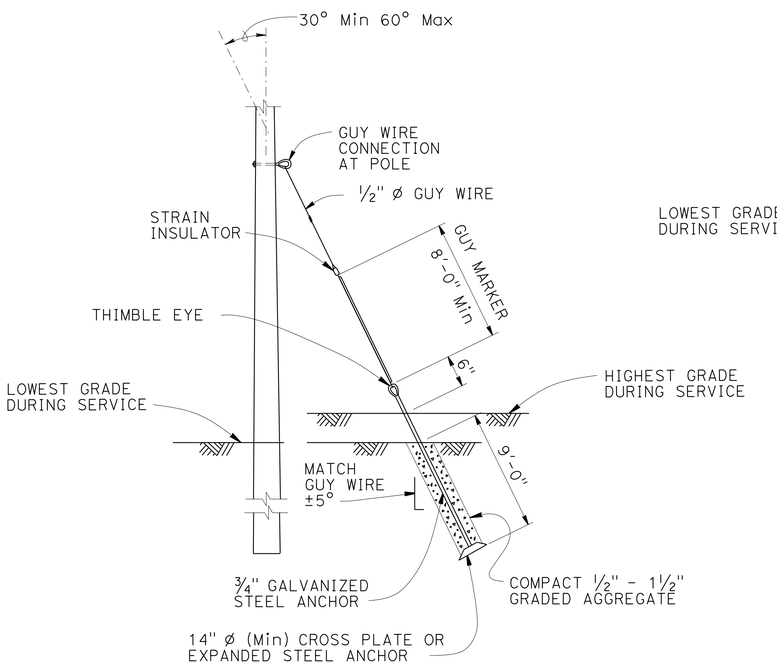

NOTE:

Helical anchor detail may be used in place of expanded steel anchors.

EXPANDED STEEL ANCHOR DETAIL

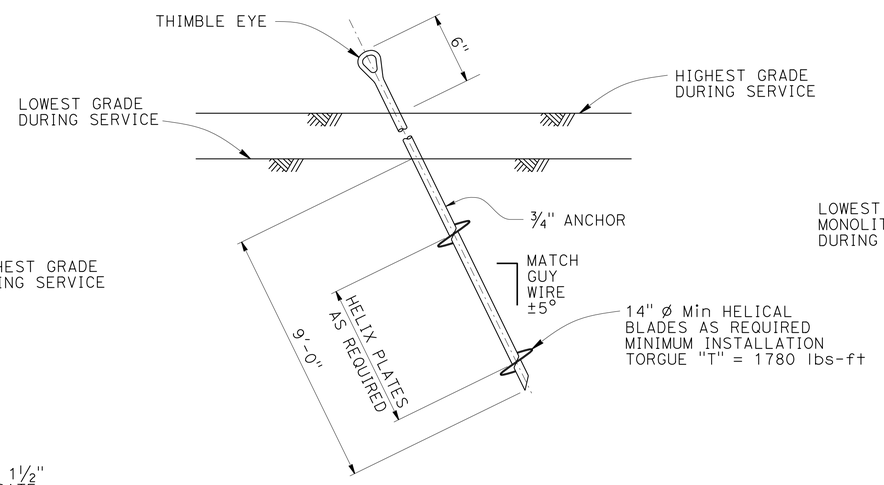

HELICAL ANCHOR DETAIL

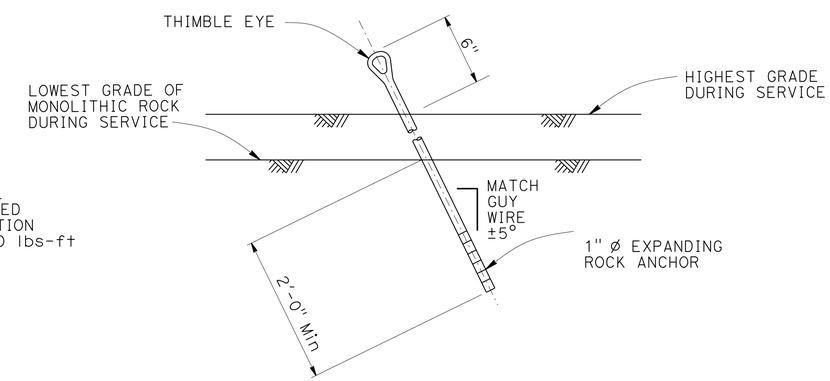

EXPANDING ROCK ANCHOR DETAIL

NO SCALE

BRANCH CHIEF DAVID A. NEUMANN	DESIGN	BY K K LIN	CHECKED T MARCHENKO
	DETAILS	BY B EDWARDS	CHECKED T MARCHENKO
	QUANTITIES	BY	CHECKED

STATE OF CALIFORNIA DEPARTMENT OF TRANSPORTATION

DIVISION OF ENGINEERING SERVICES DESIGN AND TECHNICAL SERVICES SPECIAL DESIGNS BRANCH B

BRIDGE No. N/A
POST MILE 20.5/21.0

TEMPORARY WOOD POLES ANCHOR DETAILS (OPTIONAL)

SES-6

SPECIAL DESIGNS BRANCH BORDER SHEET (REV. 8-27-14) Bob Edwards

ORIGINAL SCALE IN INCHES FOR REDUCED PLANS 0 1 2 3

UNIT: 3619
PROJECT NUMBER & PHASE: 0713000241-1
CONTRACT No.: 07-3X8701

DISREGARD PRINTS BEARING EARLIER REVISION DATES

REVISION DATES 2-8-16 3-08-16 3-10-16

SHEET 6 OF 6

FILE => 07-3x8701-uh-misc-ses06.dgn

USERNAME => s125624 DATE PLOTTED => 27-JUL-2016 TIME PLOTTED => 12:54

M

Maint	MAINTENANCE
Max	MAXIMUM
MB	METAL BEAM
MBB	METAL BEAM BARRIER
MBGR	METAL BEAM GUARD RAILING
Med	MEDIAN
MGS	MIDWEST GUARDRAIL SYSTEM
MH	MANHOLE
Min	MINIMUM
Misc	MISCELLANEOUS
Misc I & S	MISCELLANEOUS IRON AND STEEL
Mkr	MARKER
Mod	MODIFIED,
	MODIFY
Mon	MONUMENT
MP	METAL PLATE
MPGR	METAL PLATE GUARD RAILING
MR	MOVEMENT RATING
MSE	MECHANICALLY STABILIZED EMBANKMENT
Mt	MOUNTAIN, MOUNT
Mtl	MATERIAL
MVP	MAINTENANCE VEHICLE PULLOUT

N

N	NORTH
NB	NORTHBOUND
No.	NUMBER (MUST HAVE PERIOD)
Nos.	NUMBERS (MUST HAVE PERIOD)
NPS	NOMINAL PIPE SIZE
NS	NEAR SIDE
NSP	NEW STANDARD PLAN
NTS	NOT TO SCALE

O

Oblr	OBLITERATE
OC	OVERCROSSING
OD	OUTSIDE DIAMETER
OF	OUTSIDE FACE
OG	ORIGINAL GROUND
OGAC	OPEN GRADED ASPHALT CONCRETE
OGFC	OPEN GRADED FRICTION COURSE
OH	OVERHEAD
OHWM	ORDINARY HIGH WATER MARK
O-O	OUT TO OUT
Opp	OPPOSITE
OSD	OVERSIDE DRAIN

P

P	PAGE
PAP	PERFORATED ALUMINUM PIPE
PB	PULL BOX
PC	POINT OF CURVATURE,
	PRECAST
PCC	POINT OF COMPOUND CURVE,
	PORTLAND CEMENT CONCRETE
PCMS	PORTABLE CHANGEABLE MESSAGE SIGN
PCP	PERFORATED CONCRETE PIPE,
	PRESTRESSED CONCRETE PIPE
PCVC	POINT OF COMPOUND VERTICAL CURVE
PEC	PERMIT TO ENTER AND CONSTRUCT
Ped	PEDESTRIAN
Ped OC	PEDESTRIAN OVERCROSSING
Ped UC	PEDESTRIAN UNDERCROSSING
Perm Mtl	PERMEABLE MATERIAL

P continued

PG	PROFILE GRADE
PI	POINT OF INTERSECTION
PJP	PARTIAL JOINT PENETRATION
Pkwy	PARKWAY
ℙ,PL	PLATE
P/L	PROPERTY LINE
PM	POST MILE,
	TIME FROM NOON TO MIDNIGHT
PN	PAVING NOTCH
POC	POINT OF HORIZONTAL CURVE
POT	POINT OF TANGENT
POVC	POINT OF VERTICAL CURVE
PP	PIPE PILE,
	PLASTIC PIPE,
	POWER POLE
PPL	PREFORMED PERMEABLE LINER
PPP	PERFORATED PLASTIC PIPE
PRC	POINT OF REVERSE CURVE
PRF	PAVEMENT REINFORCING FABRIC
PRVC	POINT OF REVERSE VERTICAL CURVE
PS&E	PLANS, SPECIFICATIONS AND ESTIMATES
PS, P/S	PRESTRESSED
PSP	PERFORATED STEEL PIPE
PT	POINT OF TANGENCY
PVC	POLYVINYL CHLORIDE
Pvmt	PAVEMENT

Q

Qty	QUANTITY

R

R	RADIUS
R & D	REMOVE AND DISPOSE
R & S	REMOVE AND SALVAGE
R/C	RATE OF CHANGE
RCA	REINFORCED CONCRETE ARCH
RCB	REINFORCED CONCRETE BOX
RCP	REINFORCED CONCRETE PIPE
RCPA	REINFORCED CONCRETE PIPE ARCH
Rd	ROAD
Reinf	REINFORCED,
	REINFORCEMENT,
	REINFORCING
Rel	RELOCATE
Repl	REPLACEMENT
Ret	RETAINING
Rev	REVISED, REVISION
Rdwy	ROADWAY
RHMA	RUBBERIZED HOT MIX ASPHALT
Riv	RIVER
RM	ROAD-MIXED
RP	RADIUS POINT,
	REFERENCE POINT
RR	RAILROAD
RSP	ROCK SLOPE PROTECTION,
	REVISED STANDARD PLAN
Rt	RIGHT
Rte	ROUTE
RW	REDWOOD,
	RETAINING WALL
R/W	RIGHT OF WAY
Rwy	RAILWAY

S

S	SOUTH,
	SUPPLEMENT
SAE	STRUCTURE APPROACH EMBANKMENT
Salv	SALVAGE
SAPP	STRUCTURAL ALUMINUM PLATE PIPE
SB	SOUTHBOUND
SC	SAND CUSHION
SCSP	SLOTTED CORRUGATED STEEL PIPE
SD	STORM DRAIN
Sec	SECOND,
	SECTION
Sep	SEPARATION
SG	SUBGRADE
Shld	SHOULDER
Sht	SHEET
Sim	SIMILAR
℄	STATION LINE
SM	SELECTED MATERIAL
Spec	SPECIAL,
	SPECIFICATIONS
SPP	SLOTTED PLASTIC PIPE
SS	SLOPE STAKE
SSBM	STRAP AND SADDLE BRACKET METHOD
SSD	STRUCTURAL SECTION DRAIN
SSPA	STRUCTURAL STEEL PLATE ARCH
SSPP	STRUCTURAL STEEL PLATE PIPE
SSPPA	STRUCTURAL STEEL PLATE PIPE ARCH
SSRP	STEEL SPIRAL RIB PIPE
St	STREET
Sta	STATION
STBB	SINGLE THRIE BEAM BARRIER
Std	STANDARD
Str	STRUCTURE
Surf	SURFACING
SW	SIDEWALK,
	SOUND WALL
Swr	SEWER
Sym	SYMMETRICAL
S4S	SURFACE 4 SIDES

T

T	SEMI-TANGENT
Tan	TANGENT
TBB	THRIE BEAM BARRIER
Tbr	TIMBER
TC	TOP OF CURB
TCB	TRAFFIC CONTROL BOX
TCE	TEMPORARY CONSTRUCTION EASEMENT
Tel	TELEPHONE
Temp	TEMPORARY
TG	TOP OF GRADE
Tot	TOTAL
TP	TELEPHONE POLE
TPB	TREATED PERMEABLE BASE
TPM	TREATED PERMEABLE MATERIAL
Trans	TRANSITION

T continued

TS	TRANSVERSE,
	TRAFFIC SIGNAL,
	TUBULAR STEEL
Typ	TYPICAL

U

UC	UNDERCROSSING
UD	UNDERDRAIN
UG	UNDERGROUND
UON	UNLESS OTHERWISE NOTED
UP	UNDERPASS

V

V	VALVE,
	DESIGN SPEED
Var	VARIABLE,
	VARIES
VC	VERTICAL CURVE
VCP	VITRIFIED CLAY PIPE
Vert	VERTICAL
Via	VIADUCT
Vol	VOLUME

W

W	WEST,
	WIDTH
WB	WESTBOUND
WH	WEEP HOLE
WM	WIRE MESH
WS	WATER SURFACE
WSP	WELDED STEEL PIPE
Wt	WEIGHT
WV	WATER VALVE
WW	WINGWALL
WWLOL	WINGWALL LAYOUT LINE

X

X Sec	CROSS SECTION
Xing	CROSSING

Y

Yr	YEAR
Yrs	YEARS

Dist	COUNTY	ROUTE	POST MILES TOTAL PROJECT	SHEET No.	TOTAL SHEETS
07	LA	105,405	R2.5, 20.5/R21.1	163	265

Grace M. Tsushima
REGISTERED CIVIL ENGINEER

July 19, 2013
PLANS APPROVAL DATE

REGISTERED PROFESSIONAL ENGINEER
Grace M. Tsushima
No. C49814
Exp. 9-30-14
CIVIL
STATE OF CALIFORNIA

THE STATE OF CALIFORNIA OR ITS OFFICERS OR AGENTS SHALL NOT BE RESPONSIBLE FOR THE ACCURACY OR COMPLETENESS OF SCANNED COPIES OF THIS PLAN SHEET.

TO ACCOMPANY PLANS DATED 7-1-16

UNIT OF MEASUREMENT SYMBOLS:

Some of the symbols used in the project plan quantity tables and in the Bid Item List are:

TABLE A

SYMBOL USED	DEFINITIONS
ACRE	ACRE
CF	CUBIC FOOT
CY	CUBIC YARD
EA	EACH
GAL	GALLON
LB	POUND
LF	LINEAR FOOT
SQFT	SQUARE FOOT
SQYD	SQUARE YARD
STA	100 FEET
TAB	TABLET
TON	2,000 POUNDS

Some of the symbols used in the plans other than in the project plan quantity tables are:

TABLE B

SYMBOL USED	DEFINITIONS
ksi	KIPS PER SQUARE INCH
ksf	KIPS PER SQUARE FOOT
psi	POUNDS PER SQUARE INCH
psf	POUNDS PER SQUARE FOOT
lb/ft^3, pcf	POUNDS PER CUBIC FOOT
tsf	TONS PER SQUARE FOOT
mph, MPH *	MILES PER HOUR
ø	NOMINAL DIAMETER
oz	OUNCE
lb	POUND
kip	1,000 POUNDS
cal	CALORIE
ft	FOOT OR FEET
gal	GALLON

* For use on a sign panel only

STATE OF CALIFORNIA
DEPARTMENT OF TRANSPORTATION

ABBREVIATIONS (SHEET 2 OF 2)

NO SCALE

RSP A10B DATED JULY 19, 2013 SUPERSEDES STANDARD PLAN A10B DATED MAY 20, 2011 - PAGE 2 OF THE STANDARD PLANS BOOK DATED 2010.

REVISED STANDARD PLAN RSP A10B

2010 REVISED STANDARD PLAN RSP A10B

6-7-13

REFERENCE: CALTRANS SOIL & ROCK LOGGING, CLASSIFICATION, AND PRESENTATION MANUAL (2010)

Dist	COUNTY	ROUTE	POST MILES TOTAL PROJECT	SHEET No.	TOTAL SHEETS
07	LA	105,405	R2.5, 20.5/R21.1	164	265

CERTIFIED ENGINEERING GEOLOGIST

October 30, 2015
PLANS APPROVAL DATE

REGISTERED GEOLOGIST
CHRIS A. RISDEN
CERTIFIED ENGINEERING GEOLOGIST
No. 2541
Exp. 9-30-17
STATE OF CALIFORNIA

THE STATE OF CALIFORNIA OR ITS OFFICERS OR AGENTS SHALL NOT BE RESPONSIBLE FOR THE ACCURACY OR COMPLETENESS OF SCANNED COPIES OF THIS PLAN SHEET.

TO ACCOMPANY PLANS DATED 7-1-16

ABBREVIATION:

GWS = Ground Water Surface

CEMENTATION

DESCRIPTION	CRITERIA
WEAK	CRUMBLES OR BREAKS WITH HANDLING OR LITTLE FINGER PRESSURE.
MODERATE	CRUMBLES OR BREAKS WITH CONSIDERABLE FINGER PRESSURE.
STRONG	WILL NOT CRUMBLE OR BREAK WITH FINGER PRESSURE.

BOREHOLE IDENTIFICATION

SYMBOL	HOLE TYPE	DESCRIPTION
Size	A	AUGER BORING (HOLLOW OR SOLID STEM BUCKET)
Size	R	ROTARY DRILLED BORING (CONVENTIONAL)
	RW	ROTARY DRILLED WITH SELF-CASING WIRE-LINE
	RC	ROTARY CORE WITH CONTINUOUSLY-SAMPLED, SELF-CASING WIRE-LINE
	P	ROTARY PERCUSSION BORING (AIR)
Size	R	ROTARY DRILLED DIAMOND CORE
	RC	ROTARY DRILLED DIAMOND CORE, CONTINUOUSLY SAMPLED
Size	HD	HAND DRIVEN (1-INCH SOIL TUBE)
	HA	HAND AUGER
●	D	DYNAMIC CONE PENETRATION BORING
▲	CPT	CONE PENETRATION TEST (ASTM D 5778)
⬚	O	OTHER (NOTE ON LOTB)

Note: Size in inches.

CONSISTENCY OF COHESIVE SOILS

DESCRIPTION	SHEAR STRENGTH (tsf)	POCKET PENETROMETER MEASUREMENT, PP, (tsf)	TORVANE MEASUREMENT, TV, (tsf)	VANE SHEAR MEASUREMENT, VS, (tsf)
VERY SOFT	LESS THAN 0.12	LESS THAN 0.25	LESS THAN 0.12	LESS THAN 0.12
SOFT	0.12 - 0.25	0.25 - 0.5	0.12 - 0.25	0.12 - 0.25
MEDIUM STIFF	0.25 - 0.5	0.5 - 1	0.25 - 0.5	0.25 - 0.5
STIFF	0.5 - 1	1 - 2	0.5 - 1	0.5 - 1
VERY STIFF	1 - 2	2 - 4	1 - 2	1 - 2
HARD	GREATER THAN 2	GREATER THAN 4	GREATER THAN 2	GREATER THAN 2

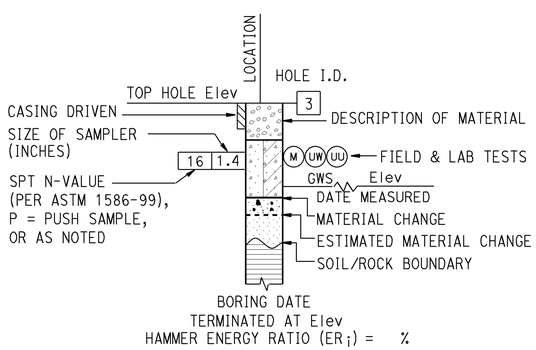

ROTARY BORING

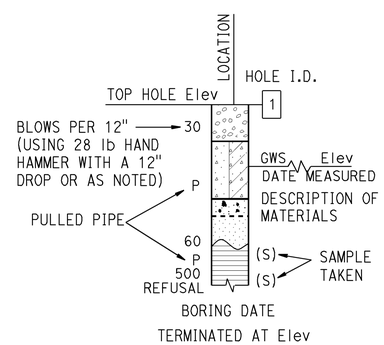

HAND BORING

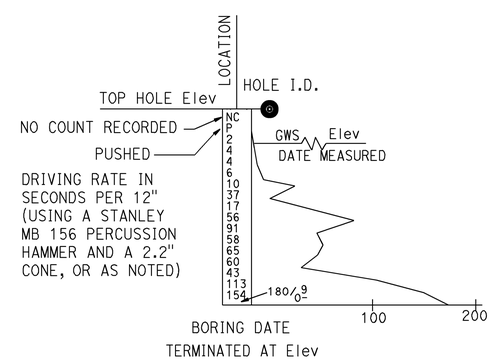

DYNAMIC CONE PENETRATION BORING

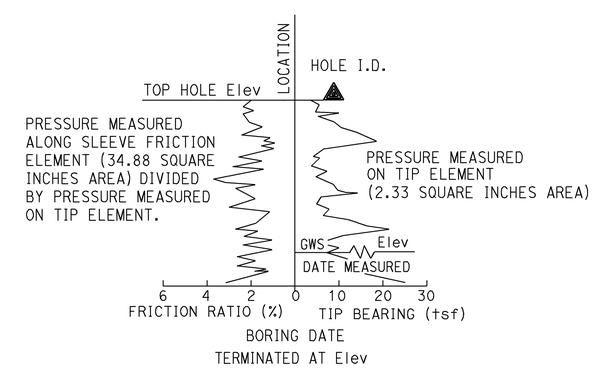

CONE PENETRATION TEST (CPT) BORING

STATE OF CALIFORNIA
DEPARTMENT OF TRANSPORTATION

LEGEND - SOIL (SHEET 1 OF 2)

NO SCALE

RSP A10F DATED OCTOBER 30, 2015 SUPERSEDES STANDARD PLAN A10F DATED MAY 20, 2011 - PAGE 6 OF THE STANDARD PLANS BOOK DATED 2010.

REVISED STANDARD PLAN RSP A10F

2010 REVISED STANDARD PLAN RSP A10F

8-18-15

REFERENCE: CALTRANS SOIL & ROCK LOGGING, CLASSIFICATION, AND PRESENTATION MANUAL (2010)

Dist	COUNTY	ROUTE	POST MILES TOTAL PROJECT	SHEET No.	TOTAL SHEETS
07	LA	105,405	R2.5, 20.5/R21.1	165	265

CERTIFIED ENGINEERING GEOLOGIST

October 30, 2015
PLANS APPROVAL DATE

REGISTERED GEOLOGIST
CHRIS A. RISDEN
CERTIFIED ENGINEERING GEOLOGIST
No. 2541
Exp. 9-30-17
STATE OF CALIFORNIA

THE STATE OF CALIFORNIA OR ITS OFFICERS OR AGENTS SHALL NOT BE RESPONSIBLE FOR THE ACCURACY OR COMPLETENESS OF SCANNED COPIES OF THIS PLAN SHEET.

TO ACCOMPANY PLANS DATED 7-1-16

GROUP SYMBOLS AND NAMES

GRAPHIC/SYMBOL	GROUP NAMES	GRAPHIC/SYMBOL	GROUP NAMES
GW	WELL-GRADED GRAVEL WELL-GRADED GRAVEL WITH SAND	CL	LEAN CLAY LEAN CLAY WITH SAND LEAN CLAY WITH GRAVEL SANDY LEAN CLAY SANDY LEAN CLAY WITH GRAVEL GRAVELLY LEAN CLAY GRAVELLY LEAN CLAY WITH SAND
GP	POORLY-GRADED GRAVEL POORLY-GRADED GRAVEL WITH SAND		
GW-GM	WELL-GRADED GRAVEL WITH SILT WELL-GRADED GRAVEL WITH SILT AND SAND	CL-ML	SILTY CLAY SILTY CLAY WITH SAND SILTY CLAY WITH GRAVEL SANDY SILTY CLAY SANDY SILTY CLAY WITH GRAVEL GRAVELLY SILTY CLAY GRAVELLY SILTY CLAY WITH SAND
GW-GC	WELL-GRADED GRAVEL WITH CLAY (OR SILTY CLAY) WELL-GRADED GRAVEL WITH CLAY AND SAND (OR SILTY CLAY AND SAND)		
GP-GM	POORLY-GRADED GRAVEL WITH SILT POORLY-GRADED GRAVEL WITH SILT AND SAND	ML	SILT SILT WITH SAND SILT WITH GRAVEL SANDY SILT SANDY SILT WITH GRAVEL GRAVELLY SILT GRAVELLY SILT WITH SAND
GP-GC	POORLY-GRADED GRAVEL WITH CLAY (OR SILTY CLAY) POORLY-GRADED GRAVEL WITH CLAY AND SAND (OR SILTY CLAY AND SAND)		
GM	SILTY GRAVEL SILTY GRAVEL WITH SAND	OL	ORGANIC LEAN CLAY ORGANIC LEAN CLAY WITH SAND ORGANIC LEAN CLAY WITH GRAVEL SANDY ORGANIC LEAN CLAY SANDY ORGANIC LEAN CLAY WITH GRAVEL GRAVELLY ORGANIC LEAN CLAY GRAVELLY ORGANIC LEAN CLAY WITH SAND
GC	CLAYEY GRAVEL CLAYEY GRAVEL WITH SAND		
GC-GM	SILTY, CLAYEY GRAVEL SILTY, CLAYEY GRAVEL WITH SAND	OL	ORGANIC SILT ORGANIC SILT WITH SAND ORGANIC SILT WITH GRAVEL SANDY ORGANIC SILT SANDY ORGANIC SILT WITH GRAVEL GRAVELLY ORGANIC SILT GRAVELLY ORGANIC SILT WITH SAND
SW	WELL-GRADED SAND WELL-GRADED SAND WITH GRAVEL		
SP	POORLY-GRADED SAND POORLY-GRADED SAND WITH GRAVEL	CH	FAT CLAY FAT CLAY WITH SAND FAT CLAY WITH GRAVEL SANDY FAT CLAY SANDY FAT CLAY WITH GRAVEL GRAVELLY FAT CLAY GRAVELLY FAT CLAY WITH SAND
SW-SM	WELL-GRADED SAND WITH SILT WELL-GRADED SAND WITH SILT AND GRAVEL		
SW-SC	WELL-GRADED SAND WITH CLAY (OR SILTY CLAY) WELL-GRADED SAND WITH CLAY AND GRAVEL (OR SILTY CLAY AND GRAVEL)	MH	ELASTIC SILT ELASTIC SILT WITH SAND ELASTIC SILT WITH GRAVEL SANDY ELASTIC SILT SANDY ELASTIC SILT WITH GRAVEL GRAVELLY ELASTIC SILT GRAVELLY ELASTIC SILT WITH SAND
SP-SM	POORLY-GRADED SAND WITH SILT POORLY-GRADED SAND WITH SILT AND GRAVEL		
SP-SC	POORLY-GRADED SAND WITH CLAY (OR SILTY CLAY) POORLY-GRADED SAND WITH CLAY AND GRAVEL (OR SILTY CLAY AND GRAVEL)	OH	ORGANIC FAT CLAY ORGANIC FAT CLAY WITH SAND ORGANIC FAT CLAY WITH GRAVEL SANDY ORGANIC FAT CLAY SANDY ORGANIC FAT CLAY WITH GRAVEL GRAVELLY ORGANIC FAT CLAY GRAVELLY ORGANIC FAT CLAY WITH SAND
SM	SILTY SAND SILTY SAND WITH GRAVEL		
SC	CLAYEY SAND CLAYEY SAND WITH GRAVEL	OH	ORGANIC ELASTIC SILT ORGANIC ELASTIC SILT WITH SAND ORGANIC ELASTIC SILT WITH GRAVEL SANDY ORGANIC ELASTIC SILT SANDY ORGANIC ELASTIC SILT WITH GRAVEL GRAVELLY ORGANIC ELASTIC SILT GRAVELLY ORGANIC ELASTIC SILT WITH SAND
SC-SM	SILTY, CLAYEY SAND SILTY, CLAYEY SAND WITH GRAVEL		
PT	PEAT	OL/OH	ORGANIC SOIL ORGANIC SOIL WITH SAND ORGANIC SOIL WITH GRAVEL SANDY ORGANIC SOIL SANDY ORGANIC SOIL WITH GRAVEL GRAVELLY ORGANIC SOIL GRAVELLY ORGANIC SOIL WITH SAND
	COBBLES COBBLES AND BOULDERS BOULDERS		

FIELD AND LABORATORY TESTING

- (C) CONSOLIDATION (ASTM D2435)
- (CL) COLLAPSE POTENTIAL (ASTM D4546)
- (CP) COMPACTION CURVE (CTM 216)
- (CR) CORROSIVITY TESTING (CTM 643, CTM 422, CTM 417)
- (CU) CONSOLIDATED UNDRAINED TRIAXIAL (ASTM D4767)
- (DS) DIRECT SHEAR (ASTM D3080)
- (EI) EXPANSION INDEX (ASTM D4829)
- (M) MOISTURE CONTENT (ASTM D2216)
- (OC) ORGANIC CONTENT-% (ASTM D2974)
- (P) PERMEABILITY (CTM 220)
- (PA) PARTICLE SIZE ANALYSIS (ASTM D422)
- (PI) PLASTICITY INDEX (AASHTO T 90) LIQUID LIMIT (AASHTO T 89)
- (PL) POINT LOAD INDEX (ASTM D5731)
- (PM) PRESSURE METER
- (R) R-VALUE (CTM 301)
- (SE) SAND EQUIVALENT (CTM 217)
- (SG) SPECIFIC GRAVITY (AASHTO T 100)
- (SL) SHRINKAGE LIMIT (ASTM D4943)
- (SW) SWELL POTENTIAL (ASTM D4546)
- (UC) UNCONFINED COMPRESSION-SOIL (ASTM D2166) UNCONFINED COMPRESSION-ROCK (ASTM D7012 - METHOD C)
- (UU) UNCONSOLIDATED UNDRAINED TRIAXIAL (ASTM D2850)
- (UW) UNIT WEIGHT (ASTM D7263 - METHOD B)

APPARENT DENSITY OF COHESIONLESS SOILS

DESCRIPTION	SPT N_{60} (BLOWS / 12 INCHES)
VERY LOOSE	0 - 5
LOOSE	5 - 10
MEDIUM DENSE	10 - 30
DENSE	30 - 50
VERY DENSE	GREATER THAN 50

MOISTURE

DESCRIPTION	CRITERIA
DRY	NO DISCERNABLE MOISTURE
MOIST	MOISTURE PRESENT, BUT NO FREE WATER
WET	VISIBLE FREE WATER

PERCENT OR PROPORTION OF SOILS

DESCRIPTION	CRITERIA
TRACE	PARTICLES ARE PRESENT BUT ESTIMATED TO BE LESS THAN 5%
FEW	5% - 10%
LITTLE	15% - 25%
SOME	30% - 45%
MOSTLY	50% - 100%

PARTICLE SIZE

DESCRIPTION		SIZE
BOULDER		GREATER THAN 12"
COBBLE		3" - 12"
GRAVEL	COARSE	3/4" - 3"
	FINE	1/5" - 3/4"
SAND	COARSE	1/16" - 1/5"
	MEDIUM	1/64" - 1/16"
	FINE	1/300" - 1/64"
SILT AND CLAY		LESS THAN 1/300"

STATE OF CALIFORNIA
DEPARTMENT OF TRANSPORTATION

LEGEND - SOIL (SHEET 2 OF 2)

NO SCALE

RSP A10G DATED OCTOBER 30, 2015 SUPERSEDES STANDARD PLAN A10G DATED MAY 20, 2011 - PAGE 7 OF THE STANDARD PLANS BOOK DATED 2010.

REVISED STANDARD PLAN RSP A10G

2010 REVISED STANDARD PLAN RSP A10G

9-22-16

Dist	COUNTY	ROUTE	POST MILES TOTAL PROJECT	SHEET No.	TOTAL SHEETS
07	LA	105,405	R2.5, 20.5/R21.1	166	265

REGISTERED CIVIL ENGINEER

July 19, 2013
PLANS APPROVAL DATE

REGISTERED PROFESSIONAL ENGINEER Roberta L. McLaughlin No. C40375 Exp. 3-31-15 CIVIL STATE OF CALIFORNIA

THE STATE OF CALIFORNIA OR ITS OFFICERS OR AGENTS SHALL NOT BE RESPONSIBLE FOR THE ACCURACY OR COMPLETENESS OF SCANNED COPIES OF THIS PLAN SHEET.

TO ACCOMPANY PLANS DATED 7-1-16

EXIT RAMP NEUTRAL AREA (GORE) TREATMENT

DETAIL 36

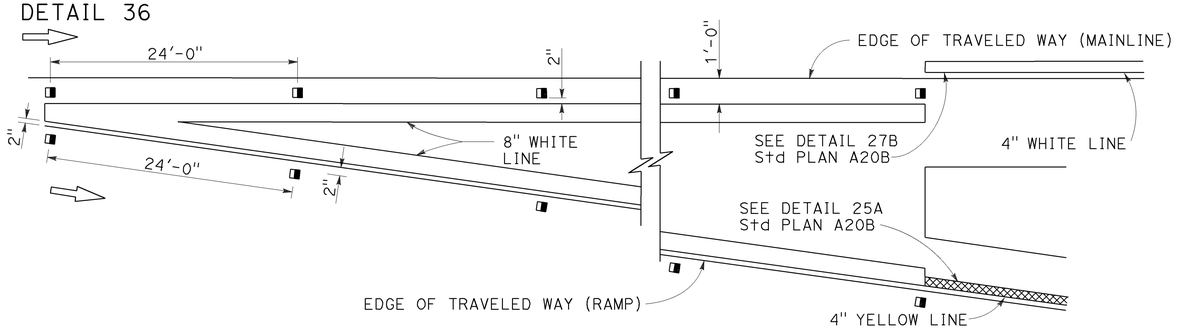

ENTRANCE RAMP NEUTRAL AREA (MERGE) TREATMENT

DETAIL 36A

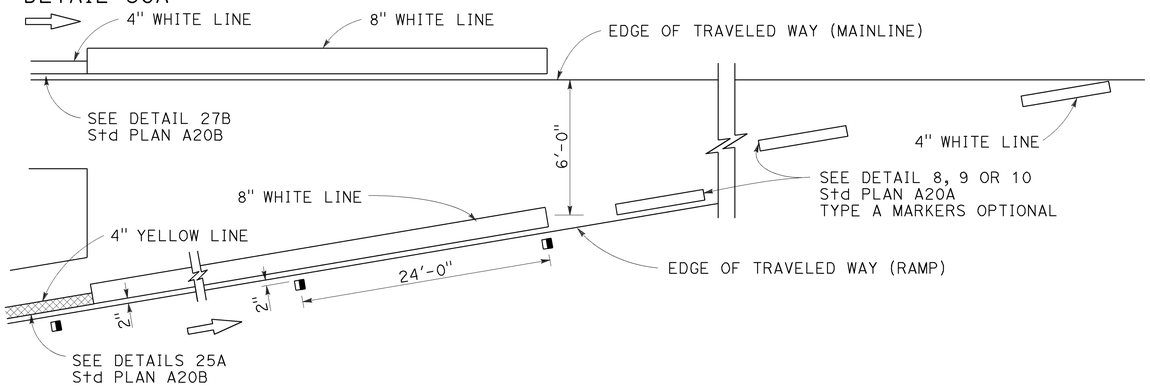

ENTRANCE RAMP NEUTRAL AREA (ACCELERATION LANE) TREATMENT

DETAIL 36B

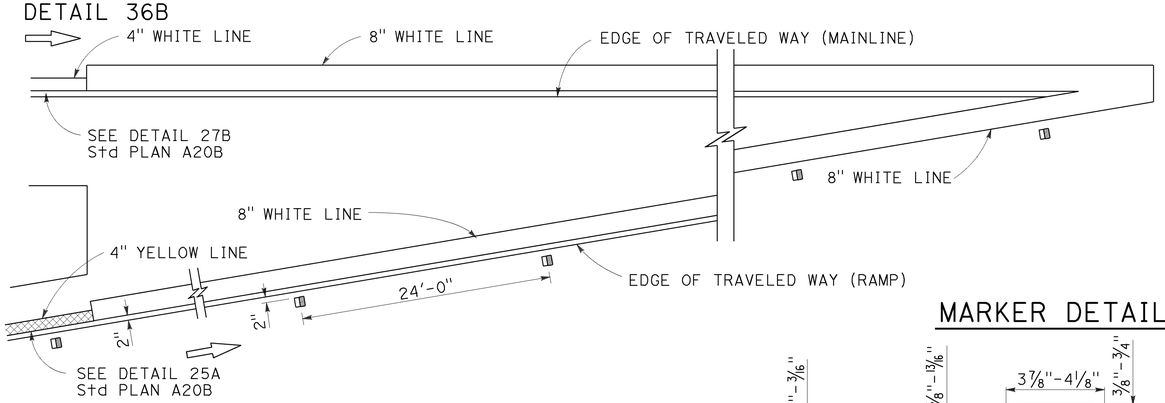

LANE DROP AT EXIT RAMPS

DETAIL 37

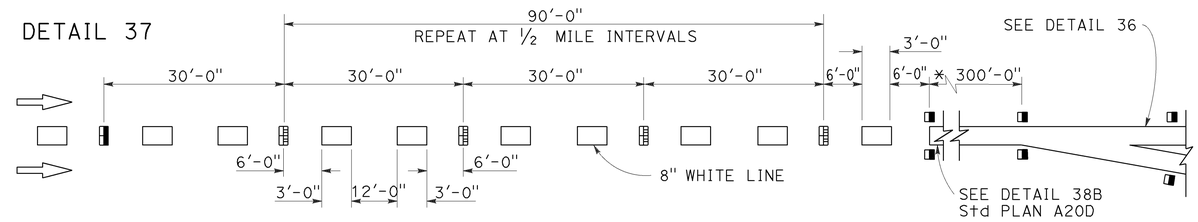

DETAIL 37A

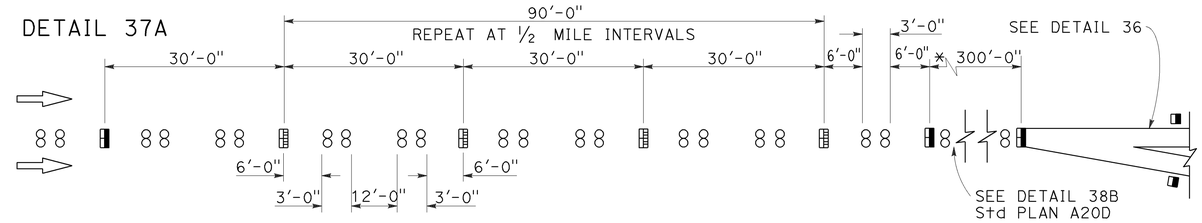

* The solid channelizing line shown may be omitted on short auxiliary lanes where weaving length is critical.

LANE DROP AT INTERSECTIONS

DETAIL 37B

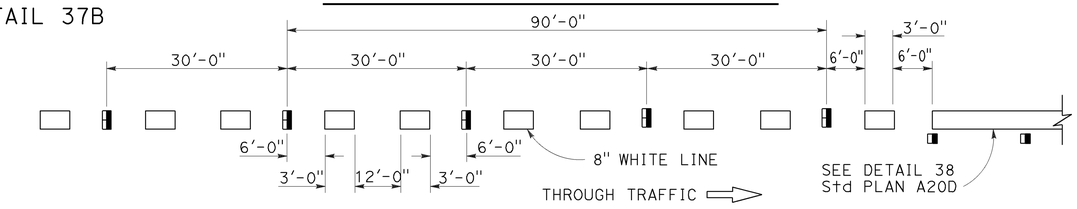

DETAIL 37C

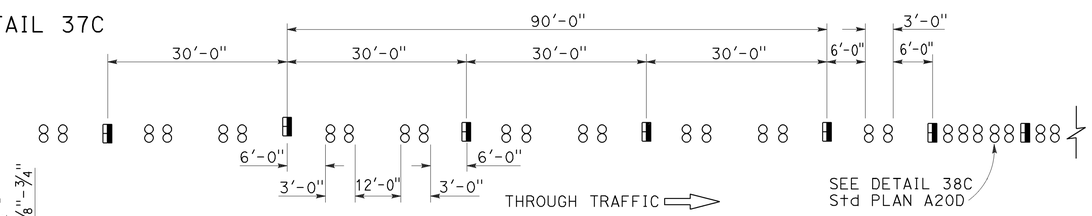

MARKER DETAILS

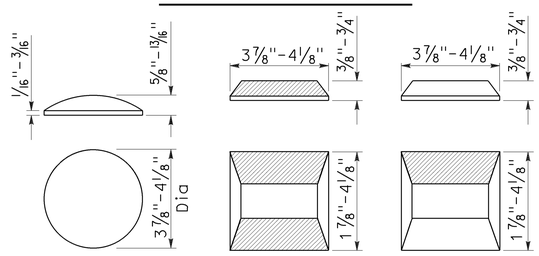

RETROREFLECTIVE FACE

LEGEND:

MARKERS

- ○ TYPE A WHITE NON-REFLECTIVE
- ⊟ TYPE C RED-CLEAR RETROREFLECTIVE
- ◨ TYPE G ONE-WAY CLEAR RETROREFLECTIVE

STATE OF CALIFORNIA
DEPARTMENT OF TRANSPORTATION

PAVEMENT MARKERS AND TRAFFIC LINE TYPICAL DETAILS

NO SCALE

RSP A20C DATED JULY 19, 2013 SUPERSEDES STANDARD PLAN A20C DATED MAY 20, 2011 - PAGE 11 OF THE STANDARD PLANS BOOK DATED 2010.

REVISED STANDARD PLAN RSP A20C

2010 REVISED STANDARD PLAN RSP A20C

4-29-13

Dist	COUNTY	ROUTE	POST MILES TOTAL PROJECT	SHEET No.	TOTAL SHEETS
07	LA	105,405	R2.5, 20.5/R21.1	167	265

REGISTERED CIVIL ENGINEER

April 20, 2012
PLANS APPROVAL DATE

REGISTERED PROFESSIONAL ENGINEER
Roberta L. McLaughlin
No. C40375
Exp. 3-31-13
CIVIL
STATE OF CALIFORNIA

THE STATE OF CALIFORNIA OR ITS OFFICERS OR AGENTS SHALL NOT BE RESPONSIBLE FOR THE ACCURACY OR COMPLETENESS OF SCANNED COPIES OF THIS PLAN SHEET.

TO ACCOMPANY PLANS DATED 7-1-16

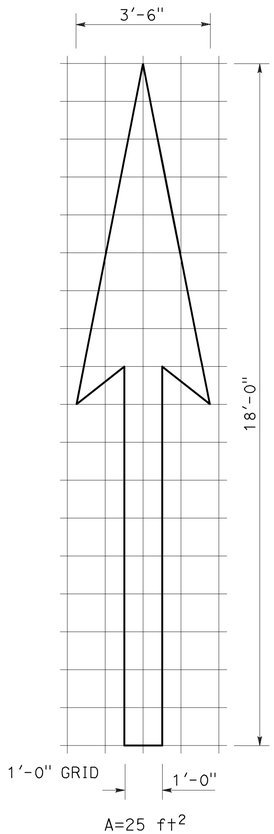

A=25 ft^2

TYPE I 18'-0" ARROW

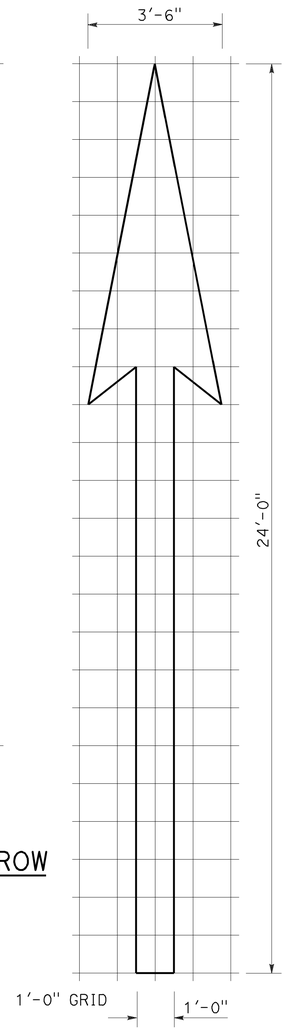

A=31 ft^2

TYPE I 24'-0" ARROW

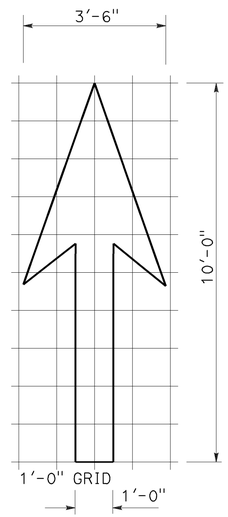

A=14 ft^2

TYPE I 10'-0" ARROW

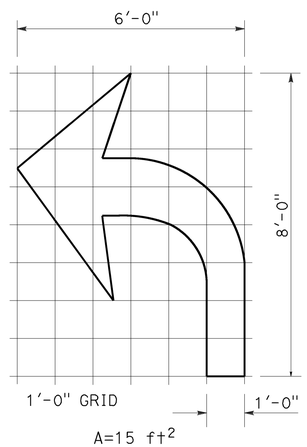

A=15 ft^2

TYPE IV (L) ARROW

(For Type IV (R) arrow, use mirror image)

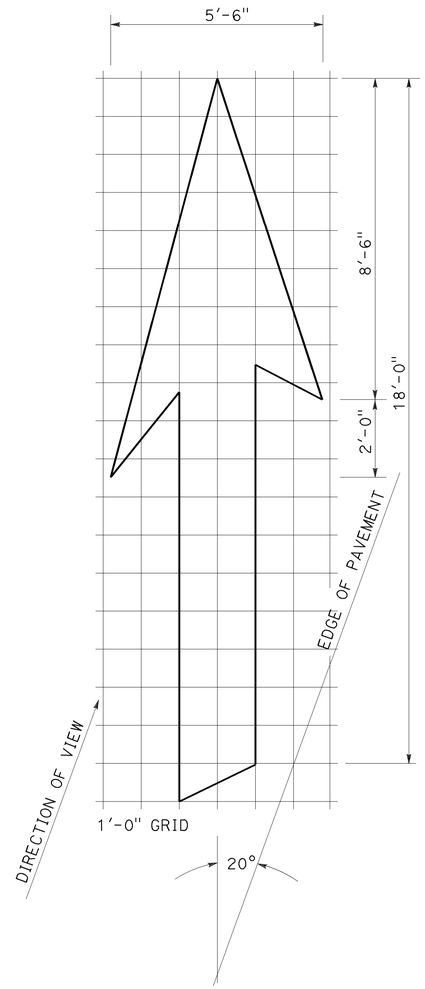

A=42 ft^2

TYPE VI ARROW

Right lane drop arrow
(For left lane, use mirror image)

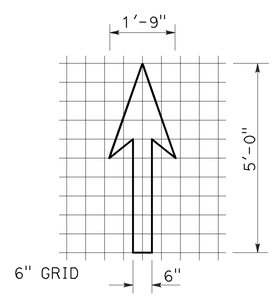

A=3.5 ft^2

BIKE LANE ARROW

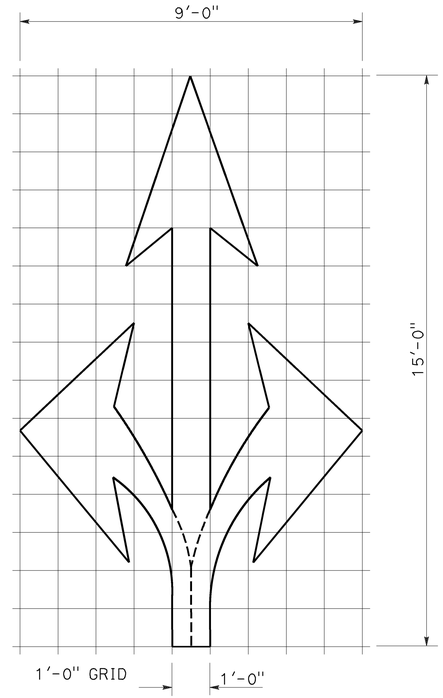

A=36 ft^2

TYPE VIII ARROW

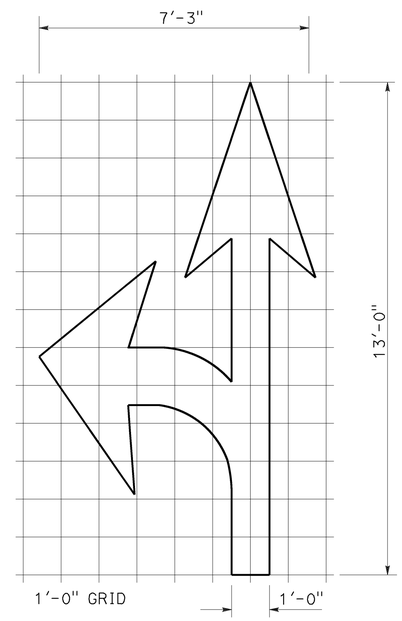

A=27 ft^2

TYPE VII (L) ARROW

(For Type VII (R) arrow, use mirror image)

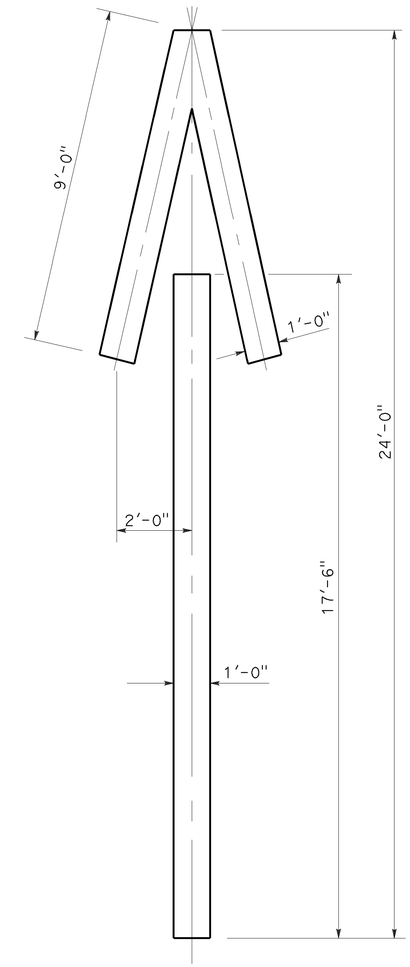

A=33 ft^2

TYPE V ARROW

NOTE:
Minor variations in dimensions may be accepted by the Engineer.

STATE OF CALIFORNIA
DEPARTMENT OF TRANSPORTATION

PAVEMENT MARKINGS ARROWS

NO SCALE

RSP A24A DATED APRIL 20, 2012 SUPERSEDES STANDARD PLAN A24A DATED MAY 20, 2011 - PAGE 13 OF THE STANDARD PLANS BOOK DATED 2010.

REVISED STANDARD PLAN RSP A24A

2010 REVISED STANDARD PLAN RSP A24A

3-14-12

Dist	COUNTY	ROUTE	POST MILES TOTAL PROJECT	SHEET No.	TOTAL SHEETS
07	LA	105,405	R2.5, 20.5/R21.1	168	265

REGISTERED CIVIL ENGINEER

July 18, 2014
PLANS APPROVAL DATE

REGISTERED PROFESSIONAL ENGINEER Carl M. Duan No. C59976 Exp. 6-30-16 CIVIL STATE OF CALIFORNIA

THE STATE OF CALIFORNIA OR ITS OFFICERS OR AGENTS SHALL NOT BE RESPONSIBLE FOR THE ACCURACY OR COMPLETENESS OF SCANNED COPIES OF THIS PLAN SHEET.

TO ACCOMPANY PLANS DATED 7-1-16

2010 REVISED STANDARD PLAN RSP A62DA

DESIGN NOTES:

Design: AASHTO LRFD Bridge Design Specifications, 4th edition with California Amendments. ACPA DESIGN DATA 1, October 2007. INDIRECT DESIGN METHOD

Soil: w Fe = 162 pcf Installation Type 1
w Fe = 168 pcf Installation Types 2 & 3
w = Unit weight of soil (pcf)
Fe = Soil-structure interaction factor

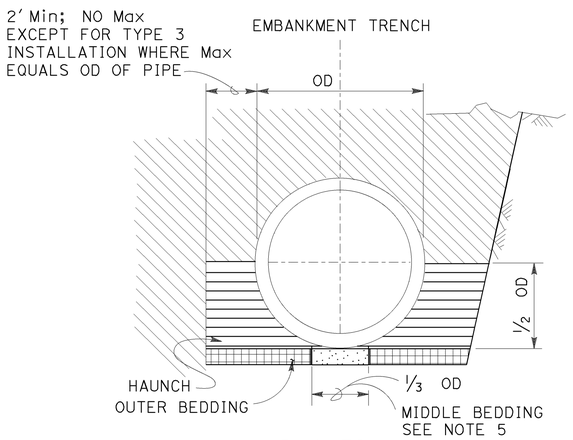

BACKFILL

LEGEND:

- ROADWAY EMBANKMENT
- STRUCTURE BACKFILL (CULVERT) FOR HAUNCH SEE NOTE 6
- STRUCTURE BACKFILL (CULVERT) FOR OUTER BEDDING SEE NOTE 6
- LOOSE BACKFILL
- STRUCTURE EXCAVATION (CULVERT)

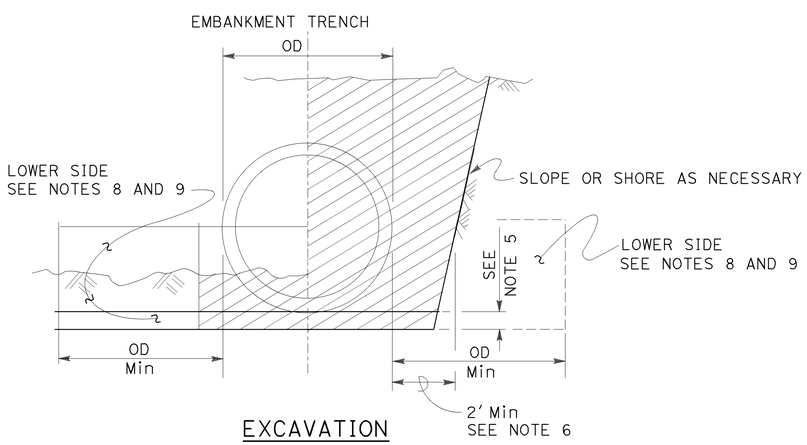

EXCAVATION

INSTALLATION TYPE 1:

The haunch and outer bedding shall be compacted to a minimum 90 percent relative compaction. In addition, the minimum sand equivalent in these areas shall be 30 and the maximum percentage passing the No. 200 sieve size shall be 12.

INSTALLATION TYPE 2:

The haunch and outer bedding shall be compacted to a minimum 90 percent relative compaction. In addition, the minimum sand equivalent in these areas shall be 25.

INSTALLATION TYPE 3:

The haunch and outer bedding shall be compacted to a minimum 85 percent relative compaction. 90 percent relative compaction will be required where the fill over the pipe is less than 4′-0″ or ½ OD. In addition, the minimum sand equivalent in these areas shall be 25 and the material shall not contain rocks, broken concrete, or other solid material exceeding 3″ in greatest dimension.

INSTALLATION TYPE 1

MINIMUM CLASS AND D-LOAD	COVER	
	60″ Dia AND SMALLER	OVER 60″ Dia TO 120″ Dia Max
CLASS II 1000D	14.9′	12.9′
CLASS III 1350D	15.0′ - 21.9′	13.0′ - 18.9′
CLASS III SPECIAL 1700D	22.0′ - 27.9′	19.0′ - 24.9′
CLASS IV 2000D	28.0′ - 32.9′	25.0′ - 29.9′
CLASS IV SPECIAL 2500D	33.0′ - 41.9′	30.0′ - 38.9′
CLASS V 3000D	42.0′ - 49.9′	39.0′ - 46.9′
CLASS V SPECIAL 3600D	50.0′ - 60.0′	47.0′ - 58.0′

INSTALLATION TYPE 2

MINIMUM CLASS AND D-LOAD	COVER	
	60″ Dia AND SMALLER	OVER 60″ Dia TO 120″ Dia Max
CLASS II 1000D	11.9′	9.9′
CLASS III 1350D	12.0′ - 15.9′	10.0′ - 14.9′
CLASS III SPECIAL 1700D	16.0′ - 20.9′	15.0′ - 19.9′
CLASS IV 2000D	21.0′ - 24.9′	20.0′ - 23.9′
CLASS IV SPECIAL 2500D	25.0′ - 31.9′	24.0′ - 30.9′
CLASS V 3000D	32.0′ - 37.9′	31.0′ - 37.9′
CLASS V SPECIAL 3600D	38.0′ - 46.0′	38.0′ - 46.0′

INSTALLATION TYPE 3

MINIMUM CLASS AND D-LOAD	COVER	
	60″ Dia AND SMALLER	OVER 60″ Dia TO 120″ Dia Max
CLASS II 1000D	8.9′	5.9′
CLASS III 1350D	9.0′ - 11.9′	6.0′ - 10.9′
CLASS III SPECIAL 1700D	12.0′ - 15.9′	11.0′ - 13.9′
CLASS IV 2000D	16.0′ - 18.9′	14.0′ - 17.9′
CLASS IV SPECIAL 2500D	19.0′ - 24.9′	18.0′ - 22.9′
CLASS V 3000D	25.0′ - 29.9′	23.0′ - 28.9′
CLASS V SPECIAL 3600D	30.0′ - 36.0′	29.0′ - 35.0′

NOTES:

1. Unless otherwise shown on the plans or specified in the special provision, the Contractor shall have the option of selecting the class of RCP and the type of installation to be used, provided the height of cover does not exceed the value shown for the RCP selected.
   Example: 24″ RCP culvert with maximum cover of 24′-0″ the options are:
   a) Class III Special or stronger with Installation Type 1.
   b) Class IV or stronger with Installation Type 2.
   c) Class IV Special or stronger with Installation Type 3.
   Cover is defined as the maximum vertical distance from top of the pipe to finished grade within the length of any given culvert.
2. The class of RCP and Installation Type selected shall be the same throughout the length of any given culvert.
3. The "length of any culvert" is defined as the culvert between:
   a) Successive drainage structure (inlets, junction boxes, headwalls, etc.).
   b) A drainage structure and the inlet or outlet end of the culvert.
   c) The inlet and outlet end of the culvert when there are no intervening drainage structures.
4. Oval and arch shaped RCP shall not be used.
5. Bedding depth: 1/25 OD Min, not less than 3″.
6. Slurry cement backfill may be substituted for backfill in the outer bedding and haunch areas. If slurry is used, the outer and middle beddings shall be omitted. Prior to installation, the soil under the middle ⅓ of the outside diameter of the pipe shall be softened by scarifying or other means to a minimum depth of 1/25 OD, but not less than 3″. Where slurry cement backfill is used, clear distance to trench wall may be reduced as set forth in the Standard Specifications.
7. Backfill shall be placed full width of excavation except where dimensions are shown for backfill width or thickness. Dimensions shown are minimum.
8. Lower side shall be suitable material as determined by the Engineer. Otherwise it shall be considered unsuitable as set forth in of the Standard Specifications. See Note 9.
9. Where the pipe is placed in a trench, if the trench walls are sloped at 5 vertical to 1 horizontal or steeper for at least 90 percent of the trench height or up to not less than 12″ from the grading plane, the firmness of the soil in the lower side need not be considered.
10. Non-reinforced precast concrete pipe sizes 3′-0″ or smaller may be placed under installation Types 1, 2 or 3.

STATE OF CALIFORNIA
DEPARTMENT OF TRANSPORTATION

EXCAVATION AND BACKFILL CONCRETE PIPE CULVERTS INDIRECT DESIGN METHOD

NO SCALE

RSP A62DA DATED JULY 18, 2014 SUPERSEDES STANDARD PLAN A62DA DATED MAY 20, 2011 - PAGE 24 OF THE STANDARD PLANS BOOK DATED 2010.

REVISED STANDARD PLAN RSP A62DA

Dist	COUNTY	ROUTE	POST MILES TOTAL PROJECT	SHEET No.	TOTAL SHEETS
07	LA	105,405	R2.5, 20.5/R21.1	169	265

REGISTERED CIVIL ENGINEER

October 30, 2015
PLANS APPROVAL DATE

REGISTERED PROFESSIONAL ENGINEER
Carl M. Duan
No. C59976
Exp. 6-30-16
CIVIL
STATE OF CALIFORNIA

THE STATE OF CALIFORNIA OR ITS OFFICERS OR AGENTS SHALL NOT BE RESPONSIBLE FOR THE ACCURACY OR COMPLETENESS OF SCANNED COPIES OF THIS PLAN SHEET.

TO ACCOMPANY PLANS DATED 7-1-16

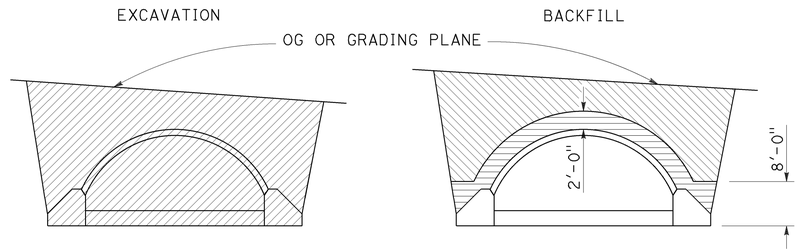

IN TRENCH

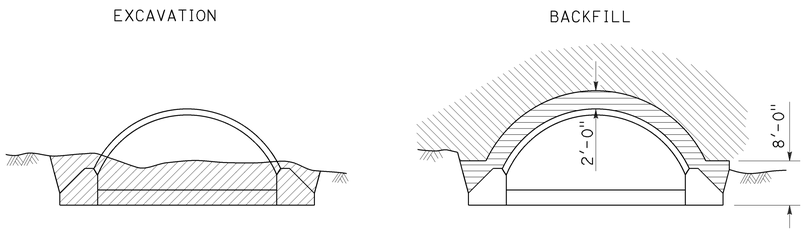

IN EMBANKMENT

STRUCTURAL STEEL PLATE ARCHES

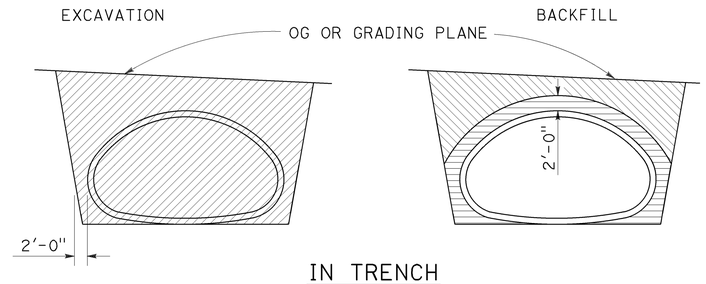

IN TRENCH

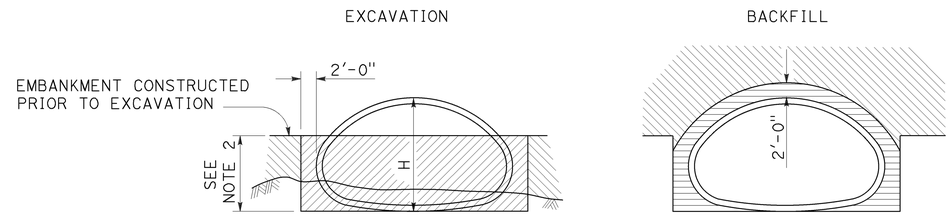

IN EMBANKMENT

STRUCTURAL STEEL PLATE PIPE ARCHES AND VEHICULAR UNDERCROSSING

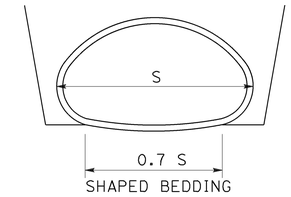

SHAPED BEDDING

S = Larger than 84"

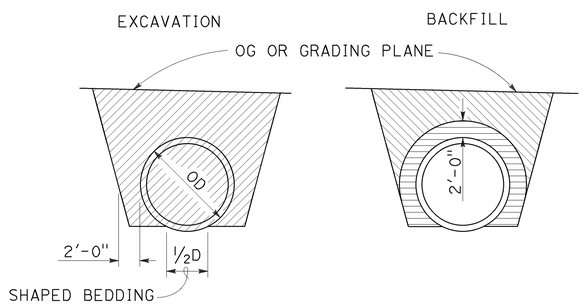

IN TRENCH

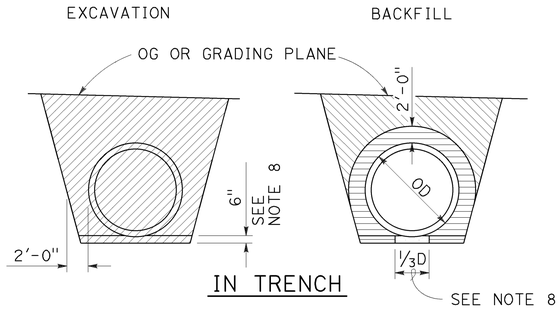

IN TRENCH

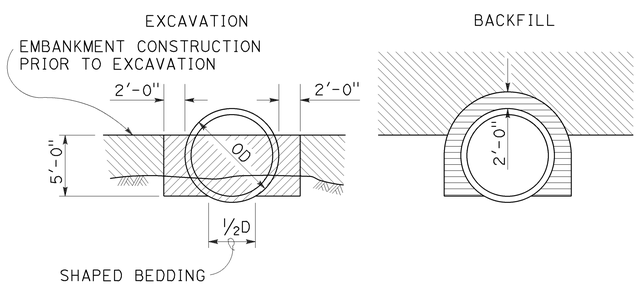

IN EMBANKMENT

PIPES

Larger than 84"

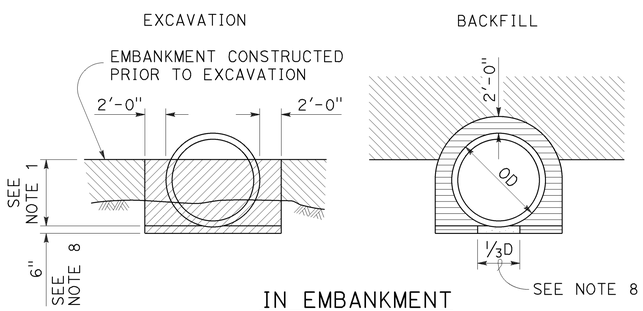

IN EMBANKMENT

METAL AND PLASTIC PIPES AND CORRUGATED METAL PIPE ARCHES

84" or Smaller

NOTES:

1. PIPES: 30" minimum for diameters up to and including 42" then ⅔ diameter but no more than 60" required. CORRUGATED METAL PIPE ARCHES: 30" maximum.
2. ⅔ H up to 60" maximum.
3. Slope or shore excavation sides as necessary.
4. Backfill shall be placed full width of excavation except as noted.
5. Diagrams do not apply to overside drains.
6. Dimensions shown are minimum.
7. Construction strutting of structural steel plate pipe, arches and vehicular undercrossing to be used when shown on the project plans. When shown, see Standard Plan D88A for strutting requirements.
8. Excavation below pipe and 80% relative compaction requirements for plastic pipes only.
9. D is the inside diameter (ID) of the pipe.

LEGEND

- STRUCTURE EXCAVATION (CULVERT)
- ROADWAY EMBANKMENT
- STRUCTURE BACKFILL (CULVERT) 95% RELATIVE COMPACTION
- STRUCTURE BACKFILL (CULVERT) 80% RELATIVE COMPACTION

STATE OF CALIFORNIA
DEPARTMENT OF TRANSPORTATION

EXCAVATION AND BACKFILL METAL AND PLASTIC CULVERTS

NO SCALE

RSP A62F DATED OCTOBER 30, 2015 SUPERSEDES STANDARD PLAN A62F DATED MAY 20, 2011 - PAGE 26 OF THE STANDARD PLANS BOOK DATED 2010.

REVISED STANDARD PLAN RSP A62F

2010 REVISED STANDARD PLAN RSP A62F

10-13-15

Dist	COUNTY	ROUTE	POST MILES TOTAL PROJECT	SHEET No.	TOTAL SHEETS
07	LA	105,405	R2.5, 20.5/R21.1	170	265

Randell D. Hiatt
REGISTERED CIVIL ENGINEER

October 30, 2015
PLANS APPROVAL DATE

REGISTERED PROFESSIONAL ENGINEER
Randell D. Hiatt
No. C50200
Exp. 6-30-17
CIVIL
STATE OF CALIFORNIA

THE STATE OF CALIFORNIA OR ITS OFFICERS OR AGENTS SHALL NOT BE RESPONSIBLE FOR THE ACCURACY OR COMPLETENESS OF SCANNED COPIES OF THIS PLAN SHEET.

TO ACCOMPANY PLANS DATED 7-1-16

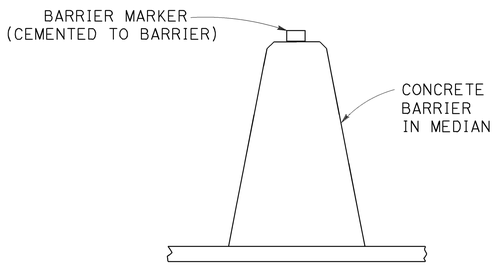

CONCRETE BARRIER TYPE 60 DELINEATION

See Note 5

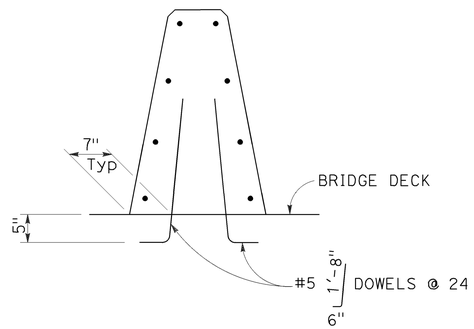

CONCRETE BARRIER TYPE 60A

Details similar to Type 60 except as noted.

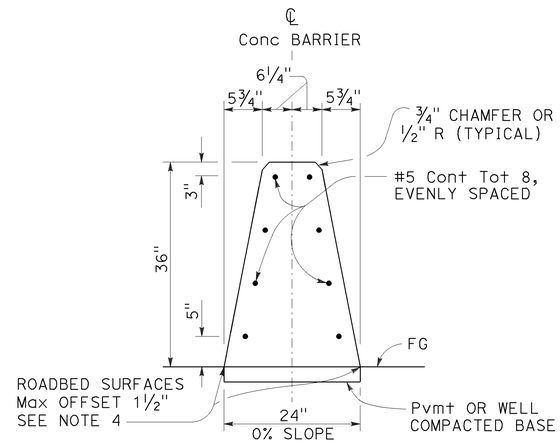

CONCRETE BARRIER TYPE 60

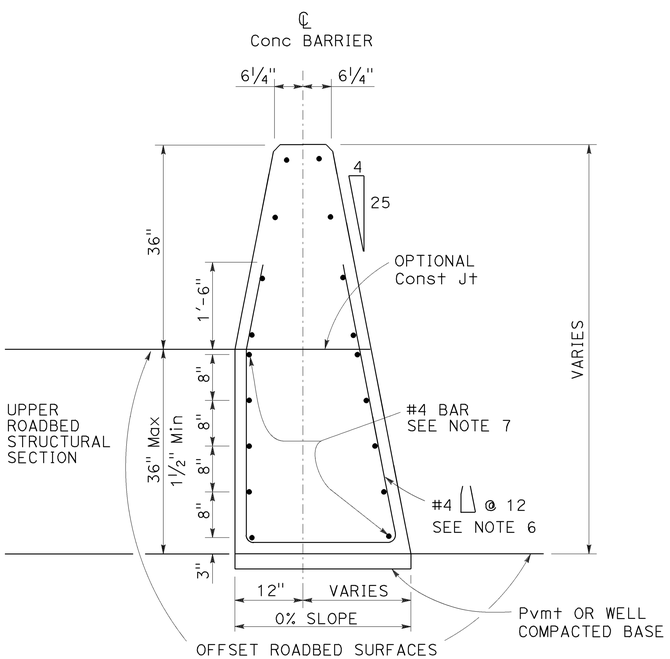

CONCRETE BARRIER TYPE 60C

Details similar to Type 60 except as noted.
Use concrete barrier end anchor when necessary.
36" roadbed surfaces offset shown.

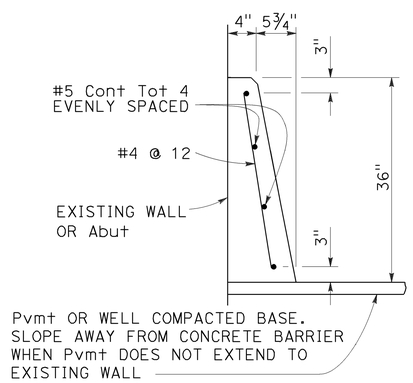

CONCRETE BARRIER TYPE 60D

NOTES:

1. See Standard Plan A76B for details of Concrete Barrier Type 60 end anchors, connection to structures and transitions to Concrete Barrier Type 50 and Concrete Barrier Type 60S.
2. See Revised Standard Plan RSP A76C for Concrete Barrier Type 60 transitions at bridge column and sign pedestals.
3. Where glare screen is required on Concrete Barrier Type 60, use Concrete Barrier Type 60G.
4. Where roadbed offset is greater than 1½", see Concrete Barrier Type 60C.
5. See Project Plans for barrier delineation locations.
6. Reinforcing stirrup not required for roadbed offsets less than 1'-0".
7. For roadbed surfaces offset greater than 1½" and less than or equal to 3", no reinforcement required. For roadbed surfaces offset greater than 3" and less than or equal to 8", use two #4 Reinf at 3" above the lower roadbed surface. For roadbed surfaces offset greater than 8" and less than or equal to 12", use two #4 Reinf at 3" above the lower roadbed surface and two #4 Reinf at 8" above the lower roadbed surface. For roadbed surfaces offset greater than 12" and less than or equal to 36", use two #4 Reinf at 3" above the lower roadbed surface and two #4 Reinf at every 8" increment vertical spacing above the first two #4 Reinf.

STATE OF CALIFORNIA
DEPARTMENT OF TRANSPORTATION

CONCRETE BARRIER TYPE 60

NO SCALE

RSP A76A DATED OCTOBER 30, 2015 SUPERSEDES STANDARD PLAN A76A DATED MAY 20, 2011 - PAGE 34 OF THE STANDARD PLANS BOOK DATED 2010.

REVISED STANDARD PLAN RSP A76A

2010 REVISED STANDARD PLAN RSP A76A

10-7-15

Dist	COUNTY	ROUTE	POST MILES TOTAL PROJECT	SHEET No.	TOTAL SHEETS
07	LA	105,405	R2.5, 20.5/R21.1	171	265

Randell D. Hiatt
REGISTERED CIVIL ENGINEER

July 19, 2013
PLANS APPROVAL DATE

REGISTERED PROFESSIONAL ENGINEER Randell D. Hiatt No. C50200 Exp. 6-30-15 CIVIL STATE OF CALIFORNIA

THE STATE OF CALIFORNIA OR ITS OFFICERS OR AGENTS SHALL NOT BE RESPONSIBLE FOR THE ACCURACY OR COMPLETENESS OF SCANNED COPIES OF THIS PLAN SHEET.

TO ACCOMPANY PLANS DATED 7-1-16

2010 REVISED STANDARD PLAN RSP A77L1

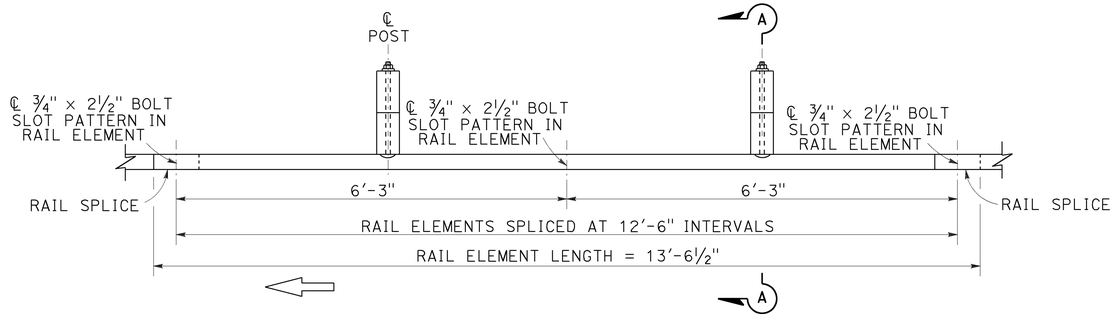

PLAN

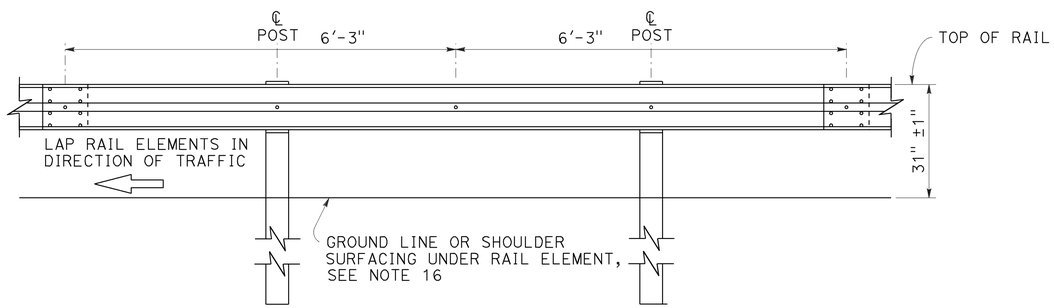

ELEVATION

MIDWEST GUARDRAIL SYSTEM WITH WOOD POST AND BLOCKS

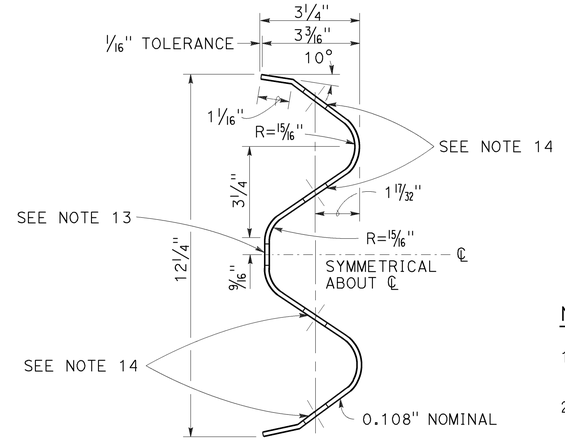

SECTION THRU RAIL ELEMENT

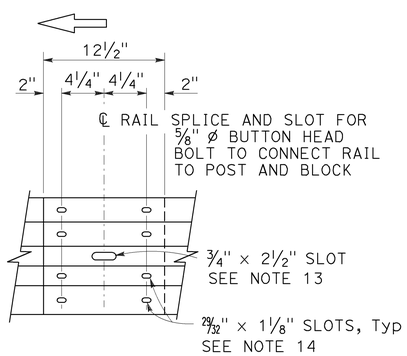

ELEVATION

RAIL ELEMENT SPLICE DETAIL

a) Connect the over lapped end of the rail elements with ⅝" ø × 1⅜" button head oval shoulder splice bolts inserted into the 29⁄32" × 1⅛" slots and bolted together with ⅝" ø recessed hex nuts. Recess of hex nut points toward rail element. A total of 8 bolts and nuts are to be used at each rail splice connection.

b) The ends of the rail elements are to be overlapped in the direction of traffic (see details).

c) Where end cap is to be attached to the end of a rail element, a total of 4 of the above described splice bolts and nuts are to be used.

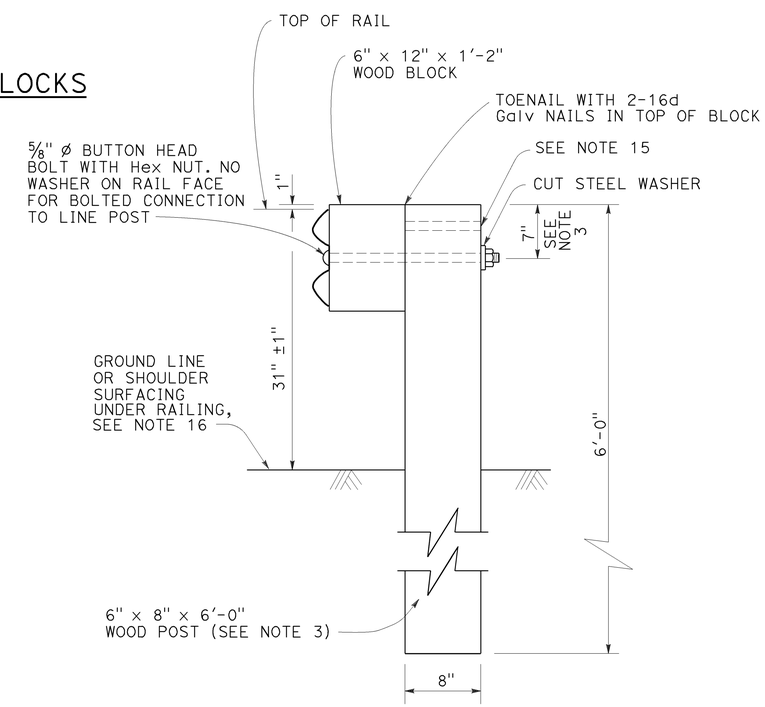

SECTION A-A

TYPICAL WOOD LINE POST INSTALLATION

See Note 4

NOTES:

1. For details of steel post installations, see Revised Standard Plan RSP A77L2.
2. For details of standard hardware used to construct MGS, see Revised Standard Plan RSP A77M1.
3. For details of wood posts and wood blocks used to construct MGS, see Revised Standard Plan RSP A77N1.
4. For additional installation details, see Revised Standard Plan RSP A77N3.
5. MGS post spacing to be 6'-3" center to center, except as otherwise noted.
6. For MGS typical layouts, see the A77P, A77Q and A77R Series of Standard Plans.
7. If railing is connected to terminal system end treatment, use 31" height terminal system end treatment.
8. For MGS end anchor details, see Revised Standard Plans RSP A77S1 and RSP A77T2.
9. For details of MGS transition to bridge railing, see Revised Standard Plan RSP A77U4.
10. For additional details of MSG connection to bridge railing, see Revised Standard Plans RSP A77U1, RSP A77U2 and RSP A77V1.
11. For MGS connection details to abutments and walls, see Revised Standard Plan RSP A77U3.
12. For typical MGS delineation and dike positioning details, see Revised Standard Plan RSP A77N4.
13. Slotted hole for bolted connection of rail element to block and post. See "Section Thru Rail Element".
14. Slotted holes for splice bolts to overlap ends of rail element. See "Section Thru Rail Element".
15. Additional hole in uppermost portion of line post is for potential future adjustments of railing height. See Revised Standard Plan RSP A77N1.
16. Install posts in soil.

STATE OF CALIFORNIA
DEPARTMENT OF TRANSPORTATION

MIDWEST GUARDRAIL SYSTEM STANDARD RAILING SECTION (WOOD POST WITH WOOD BLOCK)

NO SCALE

RSP A77L1 DATED JULY 19, 2013 SUPPLEMENTS STANDARD PLANS BOOK DATED 2010.

REVISED STANDARD PLAN RSP A77L1

Dist	COUNTY	ROUTE	POST MILES TOTAL PROJECT	SHEET No.	TOTAL SHEETS
07	LA	105,405	R2.5, 20.5/R21.1	172	265

Randell D. Hiatt
REGISTERED CIVIL ENGINEER

July 19, 2013
PLANS APPROVAL DATE

REGISTERED PROFESSIONAL ENGINEER
Randell D. Hiatt
No. C50200
Exp. 6-30-15
CIVIL
STATE OF CALIFORNIA

THE STATE OF CALIFORNIA OR ITS OFFICERS OR AGENTS SHALL NOT BE RESPONSIBLE FOR THE ACCURACY OR COMPLETENESS OF SCANNED COPIES OF THIS PLAN SHEET.

TO ACCOMPANY PLANS DATED 7-1-16

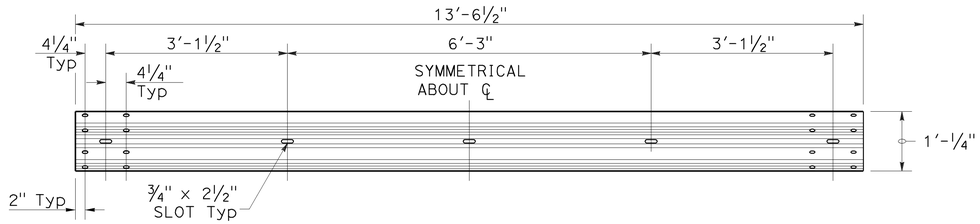

TYPICAL RAIL ELEMENT

NOTE:

1. Slotted holes for splice bolts to overlap ends of rail element.

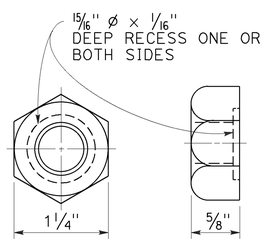

⅝" ø RECESS NUT

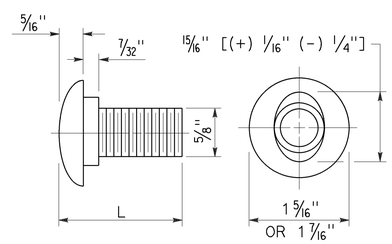

⅝" ø BUTTON HEAD BOLT

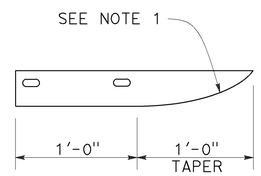

PLAN

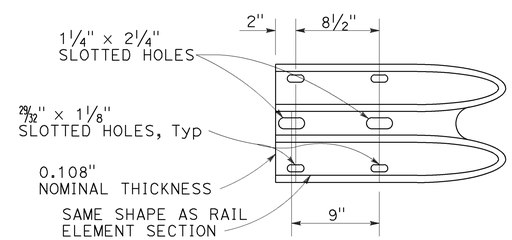

ELEVATION

END CAP
(TYPE A)

BUTTON HEAD BOLT

L	THREAD LENGTH
1⅜"	FULL THREAD LENGTH
2"	FULL THREAD LENGTH
10"	4" Min THREAD LENGTH
18"	4" Min THREAD LENGTH
20"	4" Min THREAD LENGTH
22"	4" Min THREAD LENGTH
26"	4" Min THREAD LENGTH
36"	4" Min THREAD LENGTH
** 2¾"	2" Min THREAD LENGTH
** 19"	4" Min THREAD LENGTH

** For nested rail applications.

STATE OF CALIFORNIA
DEPARTMENT OF TRANSPORTATION

MIDWEST GUARDRAIL SYSTEM STANDARD HARDWARE

NO SCALE

RSP A77M1 DATED JULY 19, 2013 SUPPLEMENTS THE STANDARD PLANS BOOK DATED 2010.

REVISED STANDARD PLAN RSP A77M1

2010 REVISED STANDARD PLAN RSP A77M1

7-3-13

Dist	COUNTY	ROUTE	POST MILES TOTAL PROJECT	SHEET No.	TOTAL SHEETS
07	LA	105,405	R2.5, 20.5/R21.1	173	265

Randell D. Hiatt
REGISTERED CIVIL ENGINEER

July 19, 2013
PLANS APPROVAL DATE

REGISTERED PROFESSIONAL ENGINEER
Randell D. Hiatt
No. C50200
Exp. 6-30-15
CIVIL
STATE OF CALIFORNIA

THE STATE OF CALIFORNIA OR ITS OFFICERS OR AGENTS SHALL NOT BE RESPONSIBLE FOR THE ACCURACY OR COMPLETENESS OF SCANNED COPIES OF THIS PLAN SHEET.

TO ACCOMPANY PLANS DATED 7-1-16

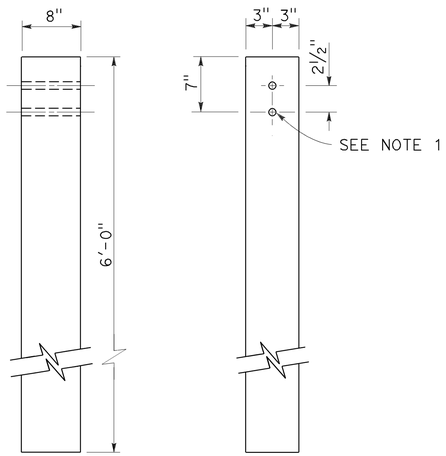

SIDE FRONT

6" x 8" WOOD POST
See Note 3

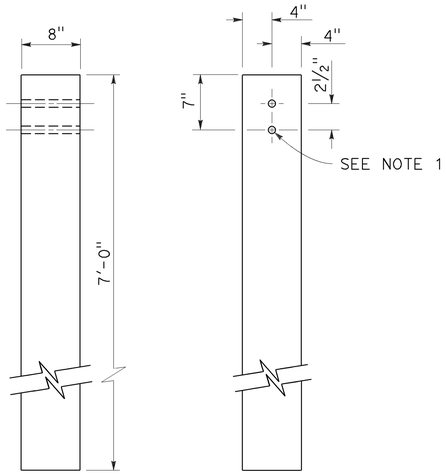

SIDE FRONT

8" x 8" WOOD POST
See Note 4

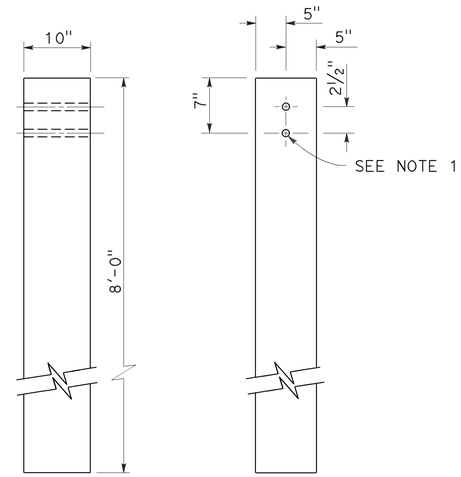

SIDE FRONT

10" x 10" WOOD POST
See Note 5

NOTES:

1. All holes in wood posts and blocks shall be 3/4" Dia ± 1/16".
2. Dimensions shown for wood post are nominal.
3. This post and block combination used for standard line post sections of MGS.
4. This post and 8" x 12" block combination used for line post sections of MGS on narrow roadways.
5. This post and 8" x 12" block combination is typically used where strengthened line post sections of MGS are warranted to shield fixed objects.
6. See Revised Standard Plan RSP A77L3 for use of 6" x 8" and 8" x 8" wood blocks.

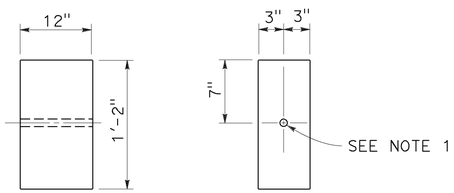

SIDE FRONT

6" x 12" WOOD BLOCK
See Note 3

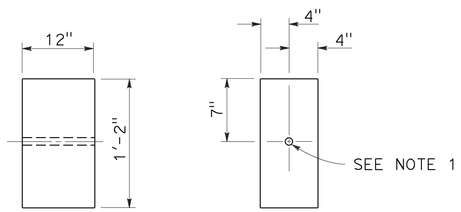

SIDE FRONT

8" x 12" WOOD BLOCK

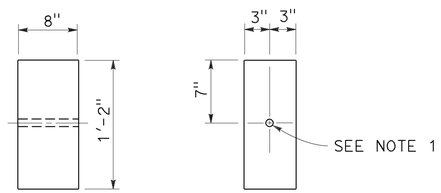

SIDE FRONT

6" x 8" WOOD BLOCK
Only for use with metal beam guard rail see Note 6

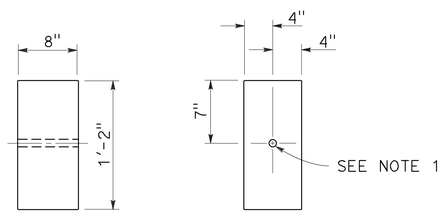

SIDE FRONT

8" x 8" WOOD BLOCK
Only for use with metal beam guard rail see Note 6

STATE OF CALIFORNIA
DEPARTMENT OF TRANSPORTATION

MIDWEST GUARDRAIL SYSTEM WOOD POST AND WOOD BLOCK DETAILS

NO SCALE

RSP A77N1 DATED JULY 19, 2013 SUPPLEMENTS THE STANDARD PLANS BOOK DATED 2010.

REVISED STANDARD PLAN RSP A77N1

2010 REVISED STANDARD PLAN RSP A77N1

7-3-13

Dist	COUNTY	ROUTE	POST MILES TOTAL PROJECT	SHEET No.	TOTAL SHEETS
07	LA	105,405	R2.5, 20.5/R21.1	174	265

Randell D. Hiatt
REGISTERED CIVIL ENGINEER

November 15, 2013
PLANS APPROVAL DATE

REGISTERED PROFESSIONAL ENGINEER
Randell D. Hiatt
No. C50200
Exp. 6-30-15
CIVIL
STATE OF CALIFORNIA

THE STATE OF CALIFORNIA OR ITS OFFICERS OR AGENTS SHALL NOT BE RESPONSIBLE FOR THE ACCURACY OR COMPLETENESS OF SCANNED COPIES OF THIS PLAN SHEET.

TO ACCOMPANY PLANS DATED 7-1-16

2010 REVISED STANDARD PLAN RSP A77N3

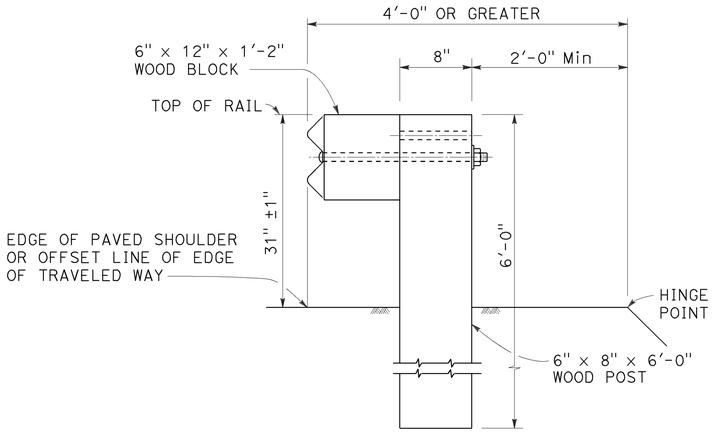

DETAIL A

TYPICAL ROADWAY INSTALLATION

See Note 1

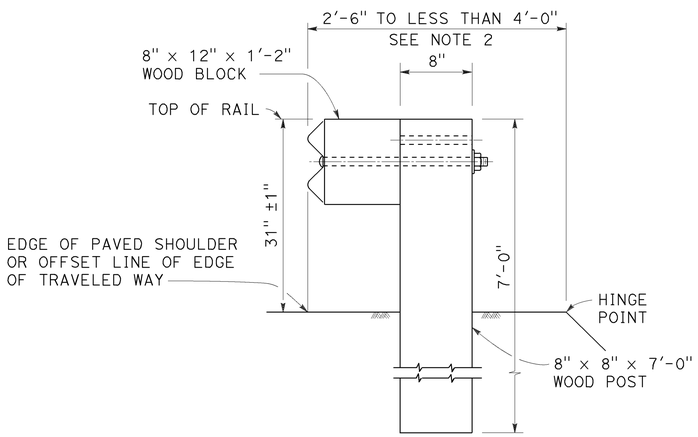

DETAIL B

NARROW ROADWAY INSTALLATION

See Note 1

POST EMBEDMENT

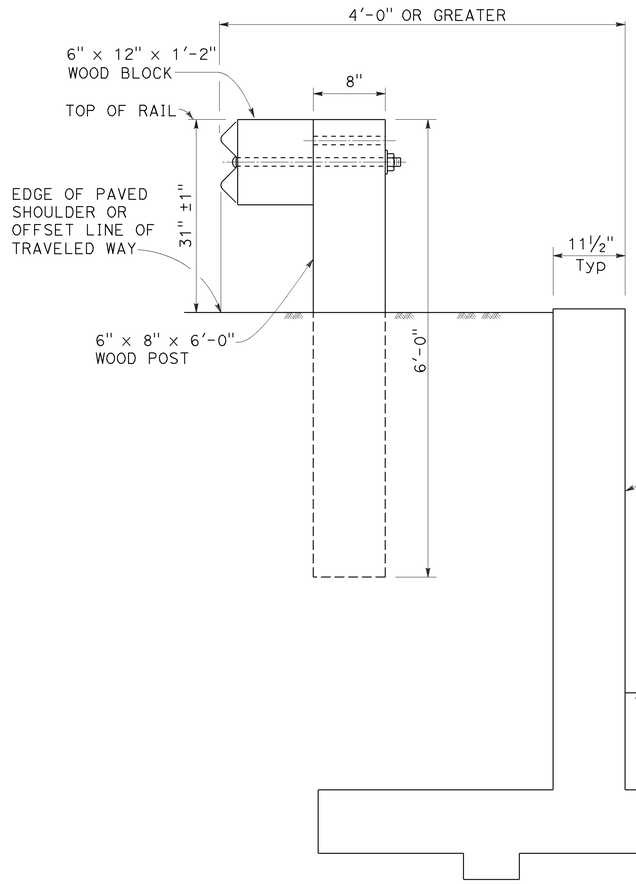

DETAIL C

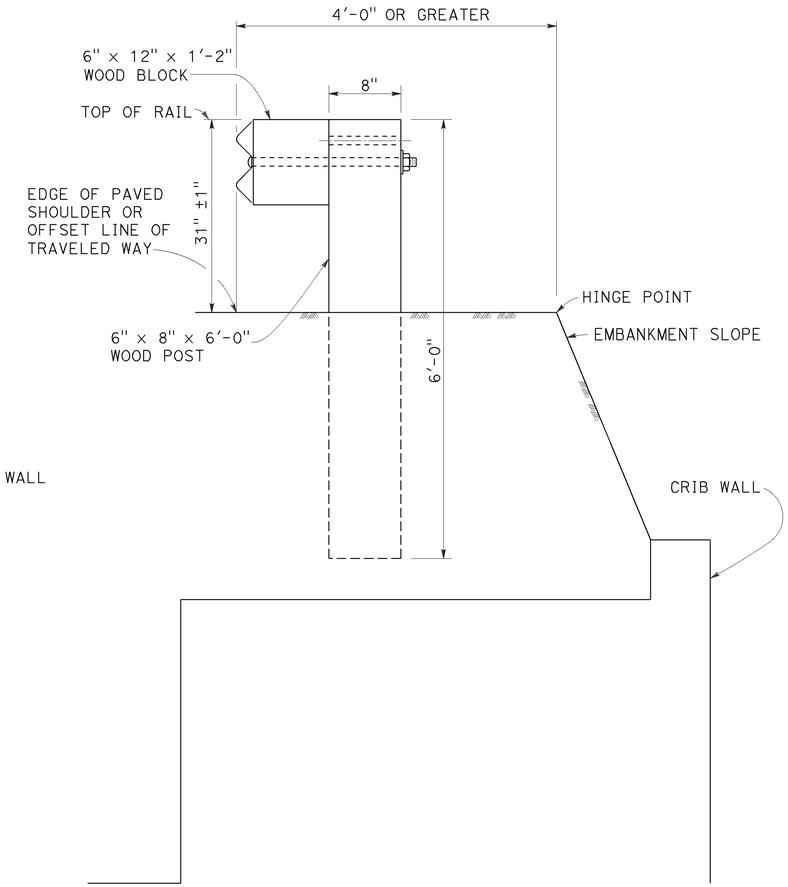

DETAIL D

INSTALLATION AT EARTH RETAINING WALLS

NOTES:

1. These installation details also applicable to steel line post installations. For Detail A, C, and D, where steel line post installations are constructed, W6 x 8.5 or W6 x 9 steel post, 6'-0" in length, with 6" x 12" x 1'-2" notched wood blocks or notched recycled plastic blocks are to be used in place of the size of wood post and wood block shown. For Detail B, where steel line post installations are constructed, W6 x 15 steel post, 8'-0" in length, with 8" x 12" x 1'-2" notched wood blocks or notched recycled plastic blocks are to be used in place of the size of wood post and wood block shown. For additional installation details, see Revised Standard Plan RSP A77L1 and RSP A77L2.
2. Where the distance between the face of the rail and the hinge point is less than 2'-6", see the Project Plans for special details.
3. For dike positioning with MGS installations, see Revised Standard Plan RSP A77N4.

STATE OF CALIFORNIA
DEPARTMENT OF TRANSPORTATION

MIDWEST GUARDRAIL SYSTEM TYPICAL LINE POST EMBEDMENT AND HINGE POINT OFFSET DETAILS

NO SCALE

RSP A77N3 DATED NOVEMBER 15, 2013 SUPERSEDES RSP A77N3
DATED JULY 19, 2013 THAT SUPPLEMENTS THE STANDARD PLANS BOOK DATED 2010.

REVISED STANDARD PLAN RSP A77N3

10-29-13

Dist	COUNTY	ROUTE	POST MILES TOTAL PROJECT	SHEET No.	TOTAL SHEETS
07	LA	105,405	R2.5, 20.5/R21.1	175	265

Randell D. Hiatt
REGISTERED CIVIL ENGINEER

July 19, 2013
PLANS APPROVAL DATE

REGISTERED PROFESSIONAL ENGINEER
Randell D. Hiatt
No. C50200
Exp. 6-30-15
CIVIL
STATE OF CALIFORNIA

THE STATE OF CALIFORNIA OR ITS OFFICERS OR AGENTS SHALL NOT BE RESPONSIBLE FOR THE ACCURACY OR COMPLETENESS OF SCANNED COPIES OF THIS PLAN SHEET.

TO ACCOMPANY PLANS DATED 7-1-16

NOTES:

1. When necessary to place dike more than 7" in front of face of MGS, only Type C dike may be used. For dike details, see Revised Standard Plan RSP A87B.
2. For standard railing post embedment, see Revised Standard Plan RSP A77N3.
3. MGS delineation to be used where shown on the Project Plans.
4. When dike or curb is placed under MGS, the maximum height of the dike or curb shall be 6". Mountable dike should not be used. For dike and curb details, see Revised Standard Plans RSP A87A and RSP A87B.
5. For details of typical distance between the face of rail and hinge point, see Revised Standard Plan RSP A77N3.
6. For steel line posts, use 1/4 - 20 self-tapping screws in 0.22" diameter holes or 1/4" bolts in 9/32" diameter holes.

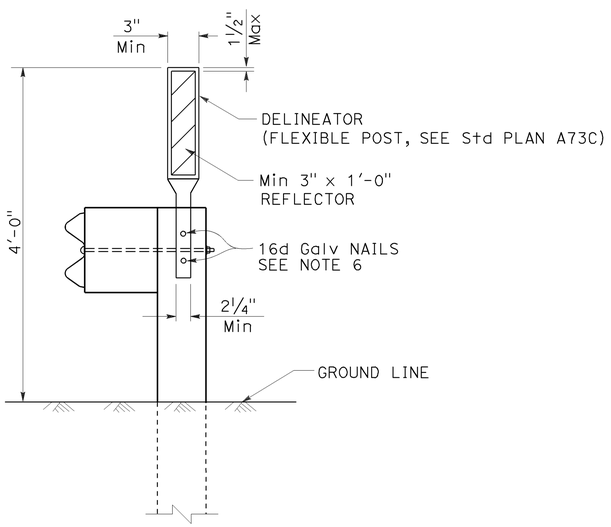

MGS DELINEATION

See Note 3

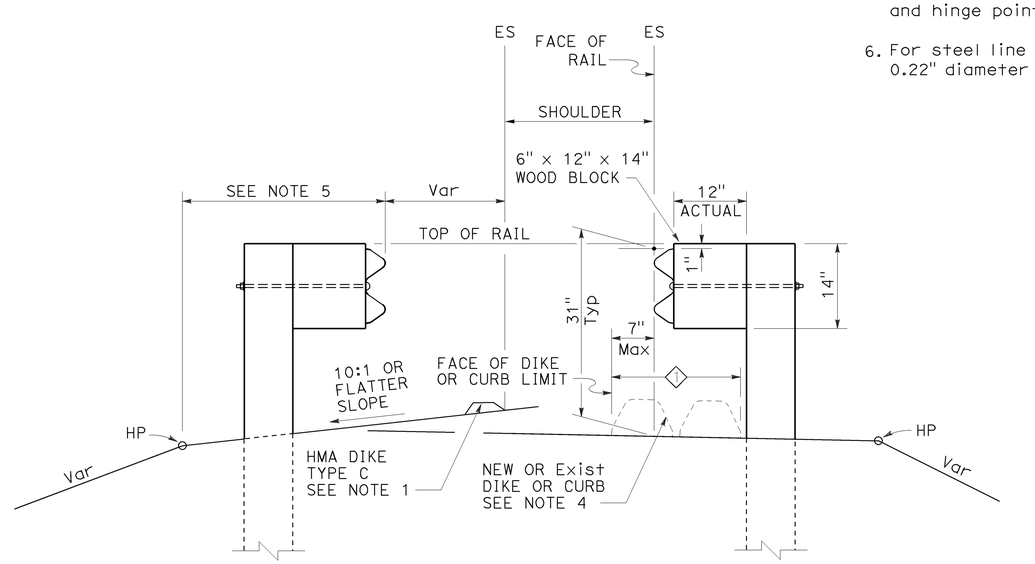

DIKE POSITIONING

See Note 1

1 PERMISSIBLE DIKE OR CURB PLACEMENT AREA

STATE OF CALIFORNIA
DEPARTMENT OF TRANSPORTATION

MIDWEST GUARDRAIL SYSTEM TYPICAL RAILING DELINEATION AND DIKE POSITIONING DETAILS

NO SCALE

RSP A77N4 DATED JULY 19, 2013 SUPPLEMENTS THE STANDARD PLANS BOOK DATED 2010.

REVISED STANDARD PLAN RSP A77N4

2010 REVISED STANDARD PLAN RSP A77N4

7-10-13

Dist	COUNTY	ROUTE	POST MILES TOTAL PROJECT	SHEET No.	TOTAL SHEETS
07	LA	105,405	R2.5, 20.5/R21.1	176	265

Randell D. Hiatt
REGISTERED CIVIL ENGINEER

July 19, 2013
PLANS APPROVAL DATE

REGISTERED PROFESSIONAL ENGINEER
Randell D. Hiatt
No. C50200
Exp. 6-30-15
CIVIL
STATE OF CALIFORNIA

THE STATE OF CALIFORNIA OR ITS OFFICERS OR AGENTS SHALL NOT BE RESPONSIBLE FOR THE ACCURACY OR COMPLETENESS OF SCANNED COPIES OF THIS PLAN SHEET.

TO ACCOMPANY PLANS DATED 7-1-16

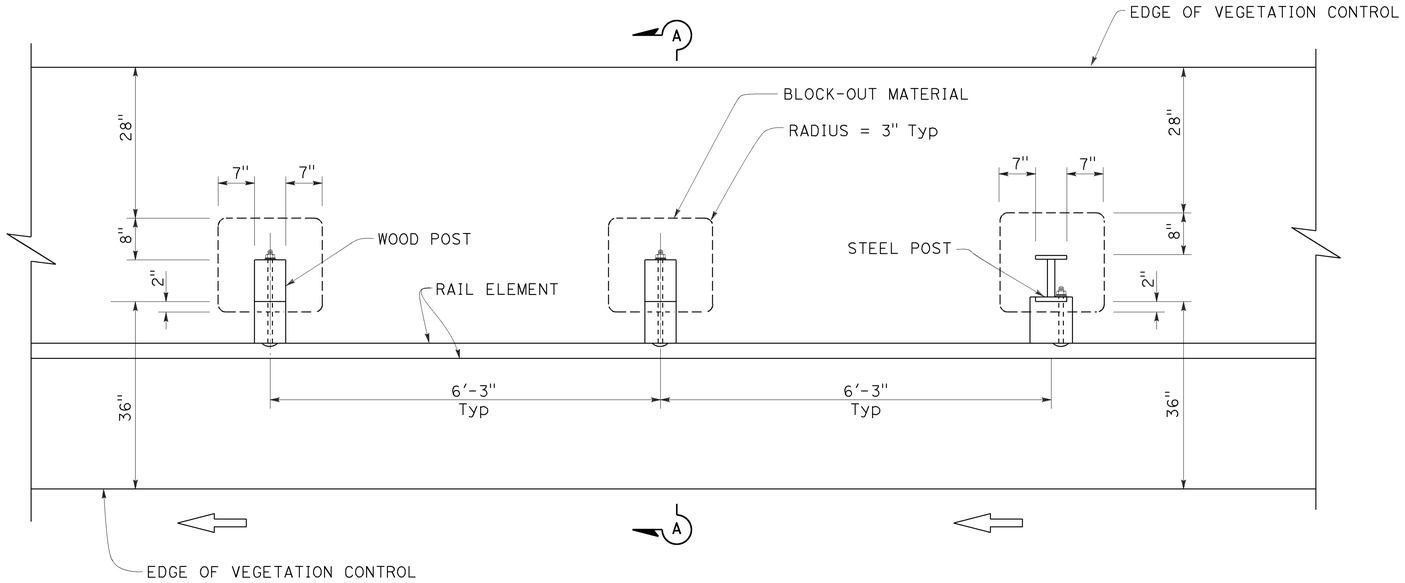

PLAN

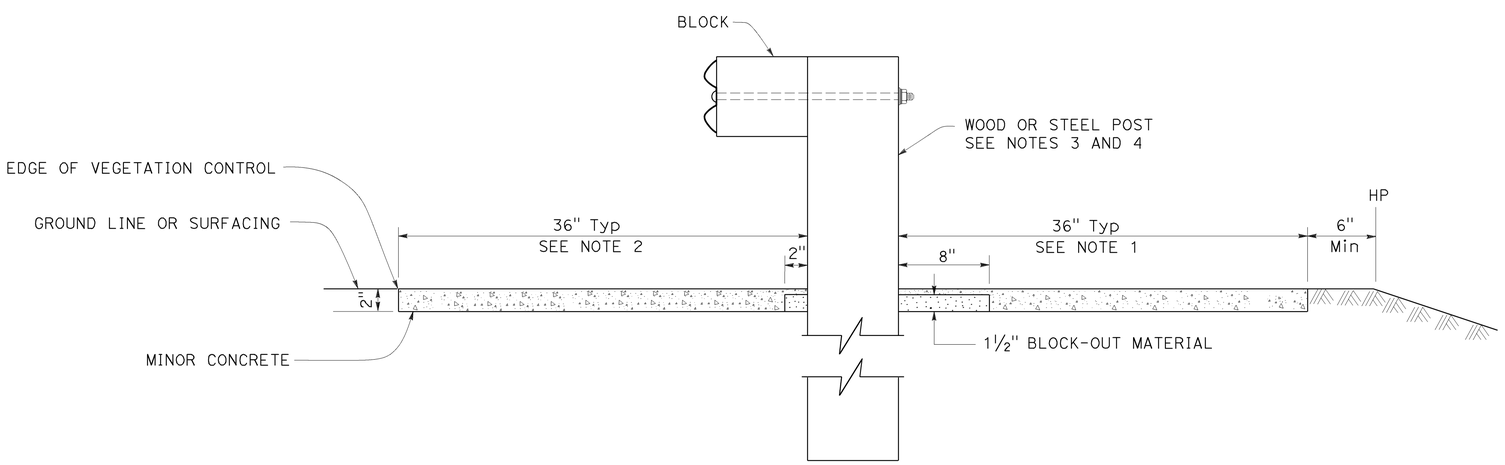

SECTION A-A

NOTES:

1. Where the distance between back of post and hinge point is less than 42", construct vegetation control to 6" from hinge point while maintaining the 8" block-out at back of post. If the 8" block-out at back of post can not be maintained, construct vegetation control flush with the back edge of post.
2. Where dike is constructed under railing, construct vegetation control to back edge of dike. Where paved shoulder is constructed within 36" in front of the post, construct vegetation control to the edge of paved shoulder.
3. For wood post sizes, see Revised Standard Plan RSP A77N1.
4. For steel post sizes, see Revised Standard Plan RSP A77N2.
5. For details not shown, see Revised Standard Plans RSP A77L1 and RSP A77L2.

STATE OF CALIFORNIA
DEPARTMENT OF TRANSPORTATION

MIDWEST GUARDRAIL SYSTEM TYPICAL VEGETATION CONTROL STANDARD RAILING SECTION

NO SCALE

RSP A77N5 DATED JULY 19, 2013 SUPPLEMENTS THE STANDARD PLANS BOOK DATED 2010.

REVISED STANDARD PLAN RSP A77N5

2010 REVISED STANDARD PLAN RSP A77N5

7-3-13

Dist	COUNTY	ROUTE	POST MILES TOTAL PROJECT	SHEET No.	TOTAL SHEETS
07	LA	105,405	R2.5, 20.5/R21.1	177	265

Randell D. Hiatt
REGISTERED CIVIL ENGINEER

July 19, 2013
PLANS APPROVAL DATE

REGISTERED PROFESSIONAL ENGINEER
Randell D. Hiatt
No. C50200
Exp. 6-30-15
CIVIL
STATE OF CALIFORNIA

THE STATE OF CALIFORNIA OR ITS OFFICERS OR AGENTS SHALL NOT BE RESPONSIBLE FOR THE ACCURACY OR COMPLETENESS OF SCANNED COPIES OF THIS PLAN SHEET.

TO ACCOMPANY PLANS DATED 7-1-16

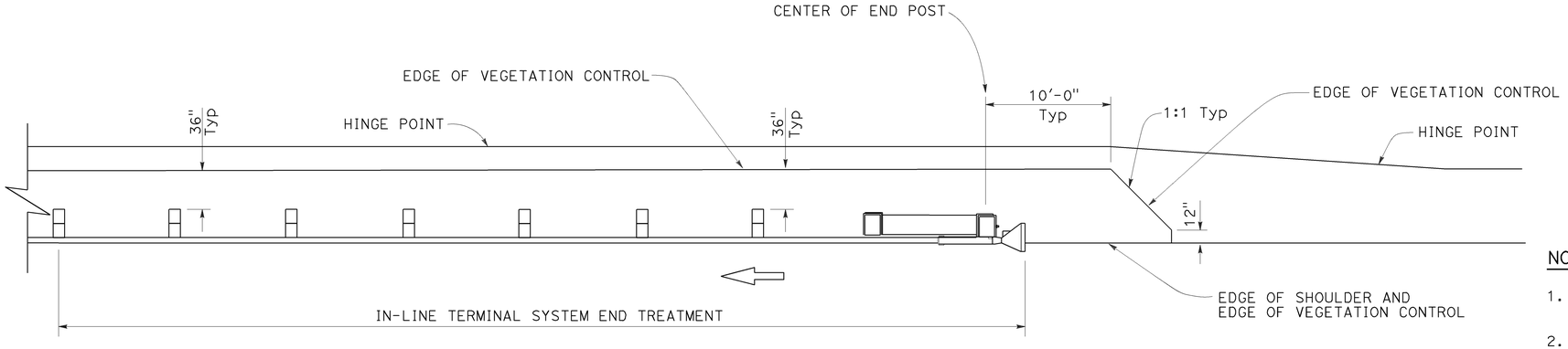

PLAN

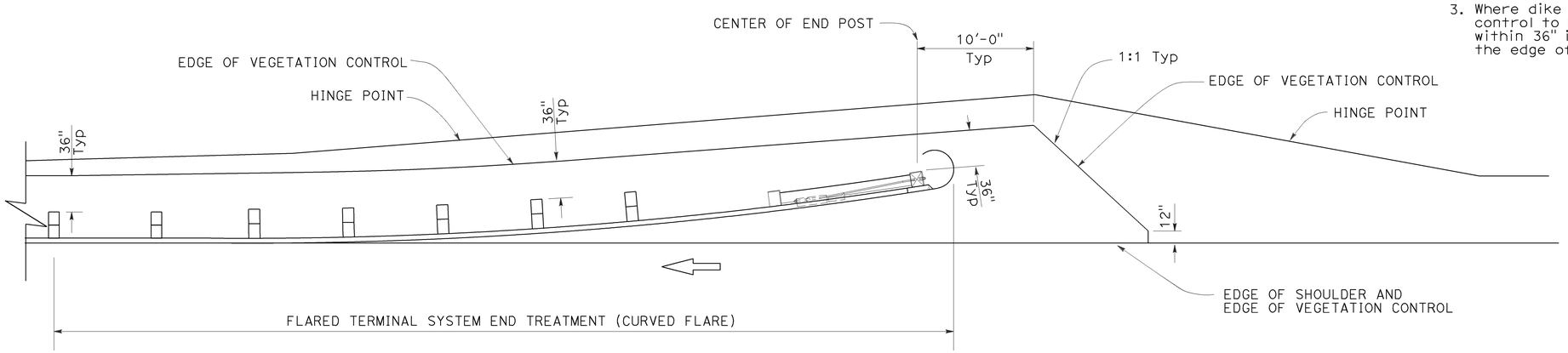

PLAN

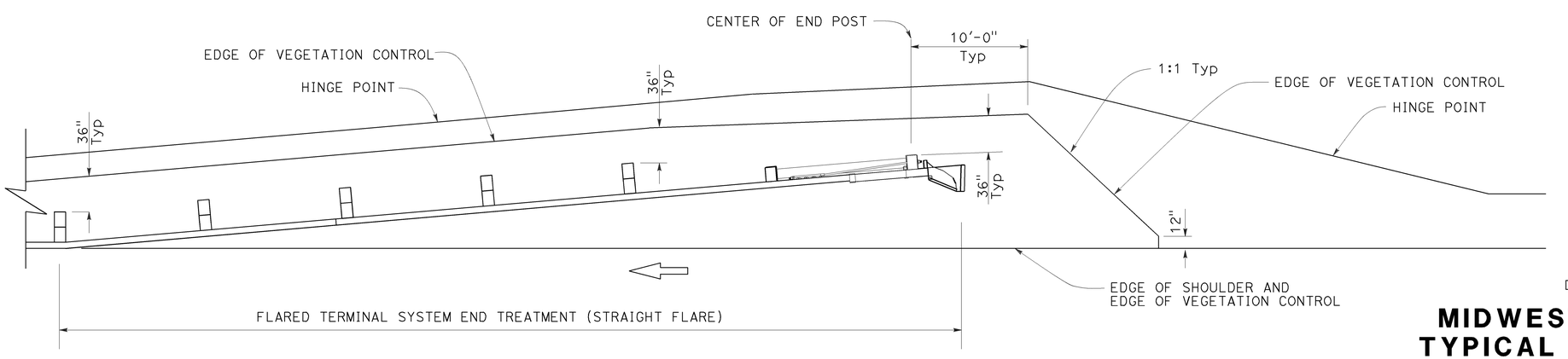

PLAN

NOTES:

1. See Revised Standard Plan RSP A77N5 for additional vegetation control details.
2. Where the distance between back of post and hinge point is less than 42", construct vegetation control to 6" from hinge point while maintaining the 8" block-out at back of post. If the 8" block-out at back of post can not be maintained, construct vegetation control flush with the back edge of post.
3. Where dike is constructed under railing, construct vegetation control to back edge of dike. Where paved shoulder is constructed within 36" in front of the post, construct vegetation control to the edge of paved shoulder.

STATE OF CALIFORNIA
DEPARTMENT OF TRANSPORTATION

MIDWEST GUARDRAIL SYSTEM TYPICAL VEGETATION CONTROL FOR TERMINAL SYSTEM END TREATMENTS

NO SCALE

RSP A77N6 DATED JULY 19, 2013 SUPPLEMENTS THE STANDARD PLANS BOOK DATED 2010.

REVISED STANDARD PLAN RSP A77N6

2010 REVISED STANDARD PLAN RSP A77N6

6-12-13

Dist	COUNTY	ROUTE	POST MILES TOTAL PROJECT	SHEET No.	TOTAL SHEETS
07	LA	105,405	R2.5, 20.5/R21.1	178	265

Randell D. Hiatt
REGISTERED CIVIL ENGINEER

July 19, 2013
PLANS APPROVAL DATE

REGISTERED PROFESSIONAL ENGINEER
Randell D. Hiatt
No. C50200
Exp. 6-30-15
CIVIL
STATE OF CALIFORNIA

THE STATE OF CALIFORNIA OR ITS OFFICERS OR AGENTS SHALL NOT BE RESPONSIBLE FOR THE ACCURACY OR COMPLETENESS OF SCANNED COPIES OF THIS PLAN SHEET.

TO ACCOMPANY PLANS DATED 7-1-16

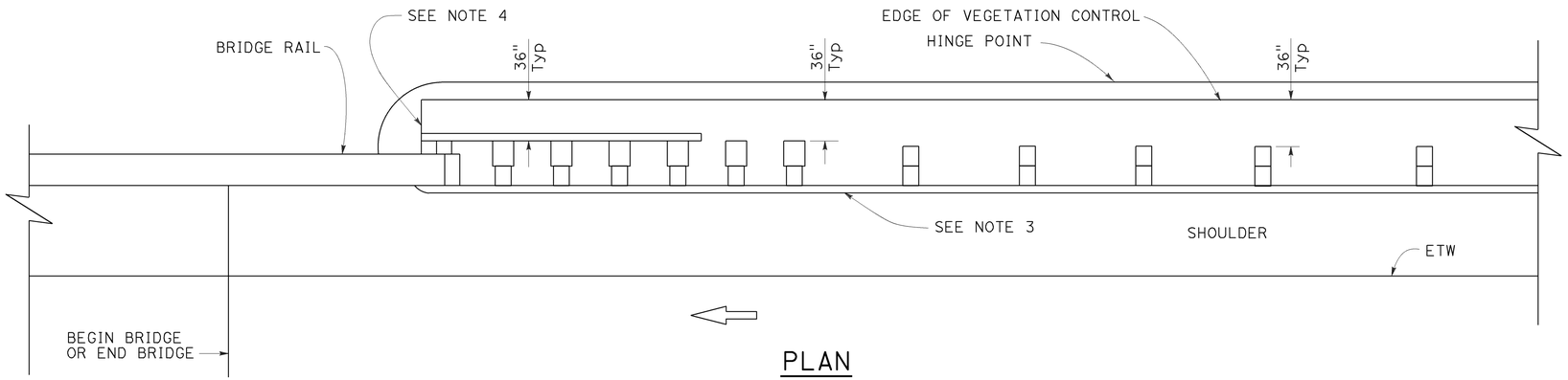

PLAN

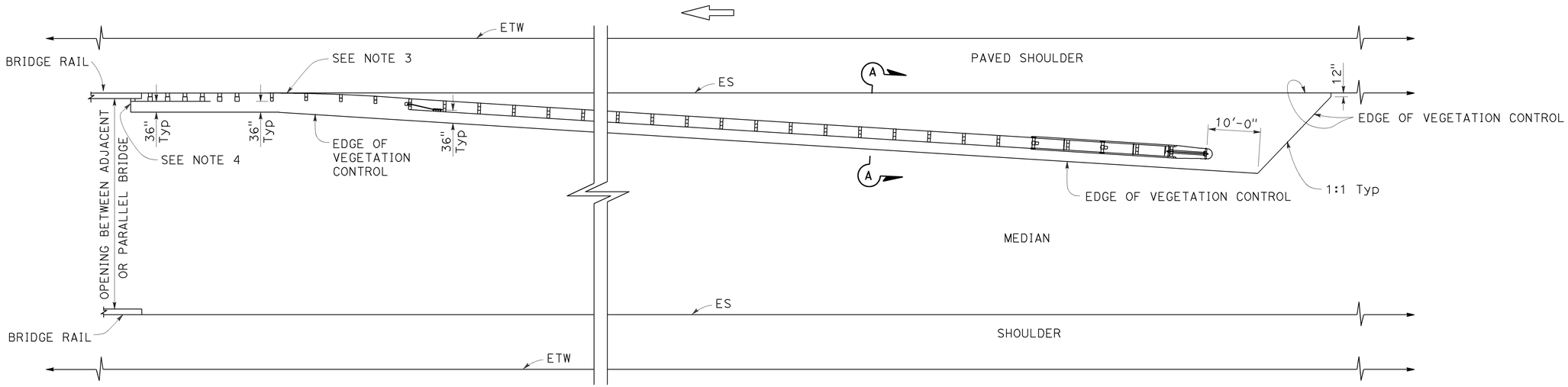

PLAN

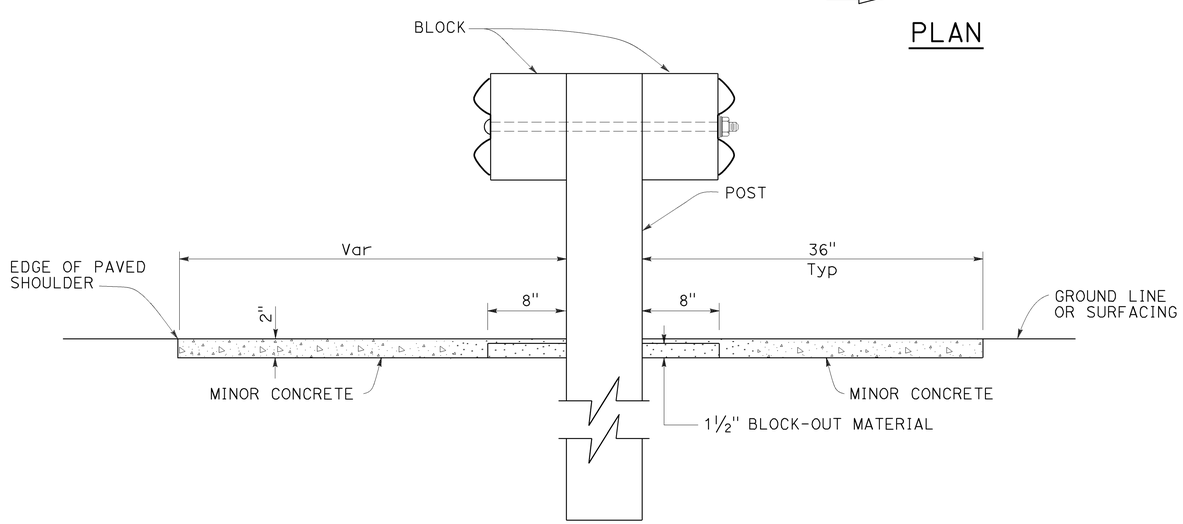

SECTION A-A

NOTES:

1. See Revised Standard Plan RSP A77N5 for additional vegetation control details.
2. Where the distance between back of post and hinge point is less than 42", construct vegetation control to 6" from hinge point while maintaining the 8" block-out at back of post. If the 8" block-out at back of post can not be maintained, construct vegetation control flush with the back edge of post.
3. Where dike is constructed under railing, construct vegetation control to back edge of dike. Where paved shoulder is constructed within 36" in front of the post, construct vegetation control to the edge of paved shoulder.
4. End vegetation control at end of backside rail element.

STATE OF CALIFORNIA
DEPARTMENT OF TRANSPORTATION

MIDWEST GUARDRAIL SYSTEM TYPICAL VEGETATION CONTROL AT STRUCTURE APPROACH

NO SCALE

RSP A77N7 DATED JULY 19, 2013 SUPPLEMENTS THE STANDARD PLANS BOOK DATED 2010.

REVISED STANDARD PLAN RSP A77N7

2010 REVISED STANDARD PLAN RSP A77N7

6-12-13

Dist	COUNTY	ROUTE	POST MILES TOTAL PROJECT	SHEET No.	TOTAL SHEETS
07	LA	105,405	R2.5, 20.5/R21.1	179	265

Randell D. Hiatt
REGISTERED CIVIL ENGINEER

July 19, 2013
PLANS APPROVAL DATE

REGISTERED PROFESSIONAL ENGINEER
Randell D. Hiatt
No. C50200
Exp. 6-30-15
CIVIL
STATE OF CALIFORNIA

THE STATE OF CALIFORNIA OR ITS OFFICERS OR AGENTS SHALL NOT BE RESPONSIBLE FOR THE ACCURACY OR COMPLETENESS OF SCANNED COPIES OF THIS PLAN SHEET.

TO ACCOMPANY PLANS DATED 7-1-16

2010 REVISED STANDARD PLAN RSP A77N8

NOTES:

1. See Revised Standard Plan RSP A77N5 for additional vegetation control details.
2. Where the distance between back of post and hinge point is less than 42", construct vegetation control to 6" from hinge point while maintaining the 8" block-out at back of post. If the 8" block-out at back of post can not be maintained, construct vegetation control flush with the back edge of post.
3. Where dike is constructed under railing, construct vegetation control to back edge of dike. Where paved shoulder is constructed within 36" in front of the post, construct vegetation control to the edge of paved shoulder.

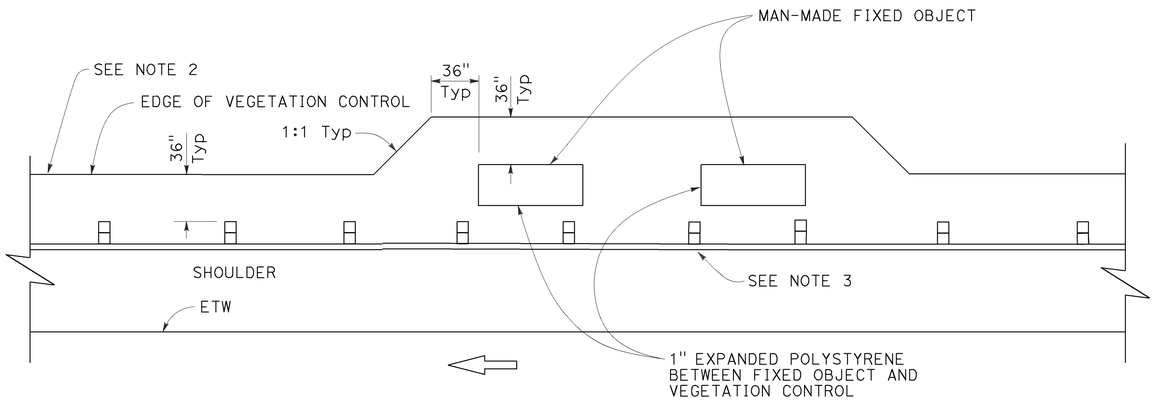

PLAN

Fixed object(s) on shoulder

STATE OF CALIFORNIA
DEPARTMENT OF TRANSPORTATION

MIDWEST GUARDRAIL SYSTEM TYPICAL VEGETATION CONTROL AT FIXED OBJECT

NO SCALE

RSP A77N8 DATED JULY 19, 2013 SUPPLEMENTS THE STANDARD PLANS BOOK DATED 2010.

REVISED STANDARD PLAN RSP A77N8

6-12-13

Dist	COUNTY	ROUTE	POST MILES TOTAL PROJECT	SHEET No.	TOTAL SHEETS
07	LA	105,405	R2.5, 20.5/R21.1	180	265

Randell D. Hiatt
REGISTERED CIVIL ENGINEER

November 15, 2013
PLANS APPROVAL DATE

REGISTERED PROFESSIONAL ENGINEER
Randell D. Hiatt
No. C50200
Exp. 6-30-15
CIVIL
STATE OF CALIFORNIA

THE STATE OF CALIFORNIA OR ITS OFFICERS OR AGENTS SHALL NOT BE RESPONSIBLE FOR THE ACCURACY OR COMPLETENESS OF SCANNED COPIES OF THIS PLAN SHEET.

TO ACCOMPANY PLANS DATED 7-1-16

2010 REVISED STANDARD PLAN RSP A77P1

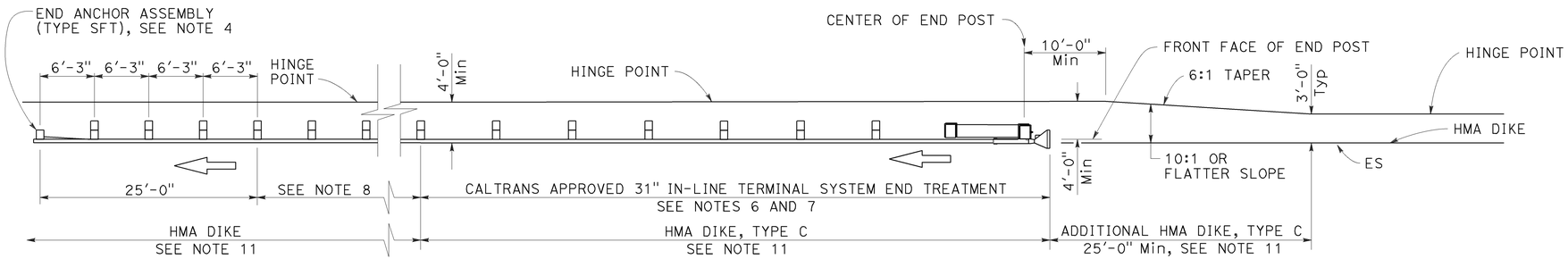

TYPE 11A LAYOUT

(Embankment MGS installation with 31" in-line end treatment at traffic approach end of railing) see Note 5

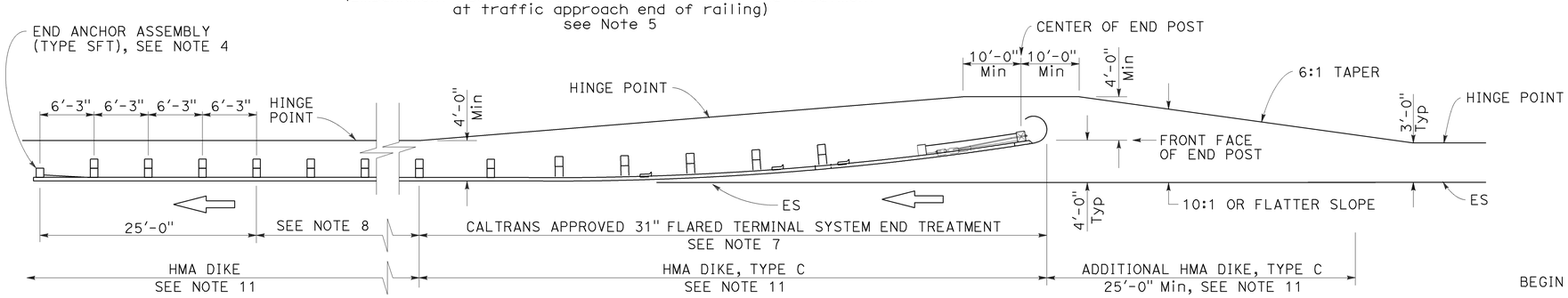

TYPE 11B LAYOUT

(Embankment MGS installation with 31" flared end treatment at traffic approach end of railing) see Note 5

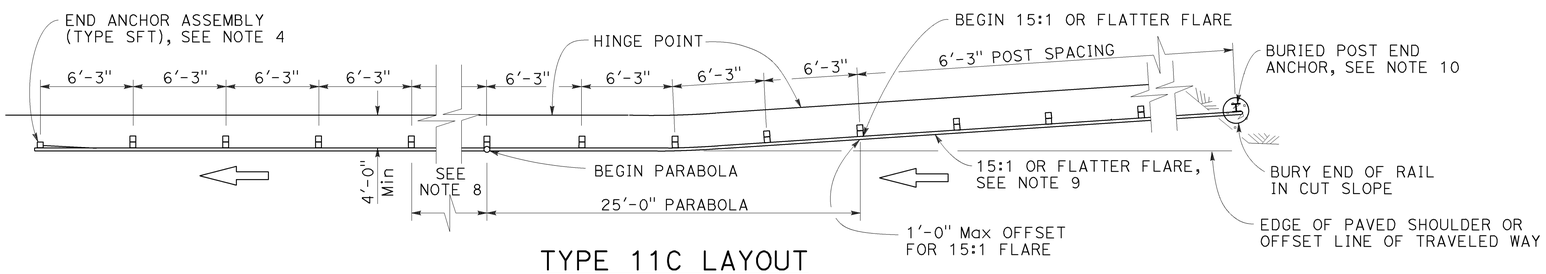

TYPE 11C LAYOUT

(Embankment MGS installation with buried end anchor treatment at traffic approach end of railing) see Notes 5 and 11

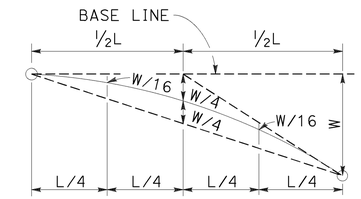

TYPICAL PARABOLIC LAYOUT

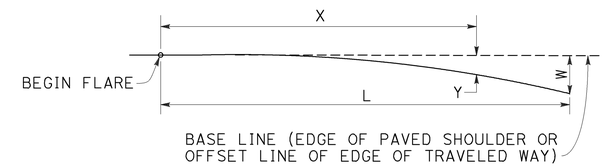

$$Y = \frac{WX^2}{L^2}$$

Y = OFFSET FROM BASE LINE
W = MAXIMUM OFFSET
X = DISTANCE ALONG BASE LINE
L = LENGTH OF FLARE

PARABOLIC FLARE OFFSETS

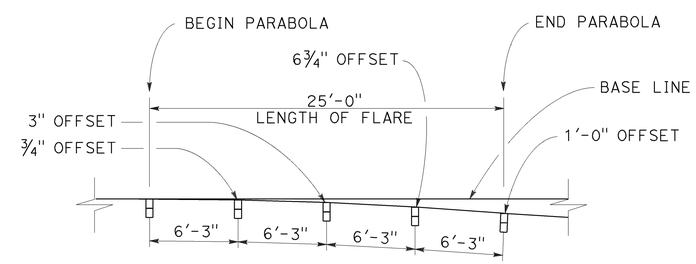

TYPICAL FLARE OFFSETS FOR 1 FOOT Max END OFFSET

NOTES:

1. Line post, blocks and hardware to be used are shown on Revised Standard Plans RSP A77L1, RSP A77L2, RSP A77M1, RSP A77N1 and RSP A77N2.
2. MGS post spacing to be 6'-3" center to center, except as otherwise noted.
3. Except as noted, line posts are 6" x 8" x 6'-0" wood with 6" x 12" x 1'-2" wood blocks. W6 x 8.5 or W6 x 9 steel posts, 6'-0" in length, with 6" x 12" x 1'-2" notched wood blocks or recycled plastic blocks may be used for 6" x 8" x 6'-0" wood post with 6" x 12" x 1'-2" wood blocks where applicable and when specified.
4. For End Anchor Assembly (Type SFT) details, see Revised Standard Plan RSP A77S1.
5. Layout Types 11A, 11B or 11C are typically used where MGS is recommended to shield embankment slopes and a crashworthy end treatment is required for only one direction of traffic.
6. 31" in-line terminal system end treatments are used where site conditions will not accommodate a flared end treatment.
7. The type of 31" terminal system end treatment to be used will be shown on the Project Plans.
8. Dependent on site conditions (embankment height and side slope), construction of additional MGS (length equal to multiples of 12'-6" with 6'-3" post spacing) may be advisable.
9. The 15:1 or flatter flare used with buried end anchors is based on the edge of the paved shoulder or offset line of edge of the traveled way. The length of MGS within the 15:1 or flatter flare is based on site conditions and should be a length equal to multiples of 12'-6".
10. For details of the buried post end anchor used with Type 11C Layout, see Revised Standard Plan RSP A77T2.
11. Where placement of dike is required with MGS installations, see Revised Standard Plan RSP A77N4 for dike positioning details.

STATE OF CALIFORNIA
DEPARTMENT OF TRANSPORTATION

MIDWEST GUARDRAIL SYSTEM TYPICAL LAYOUTS FOR EMBANKMENTS

NO SCALE

RSP A77P1 DATED NOVEMBER 15, 2013 SUPERSEDES RSP A77P1 DATED JULY 19, 2013 THAT SUPPLEMENTS THE STANDARD PLANS BOOK DATED 2010.

REVISED STANDARD PLAN RSP A77P1

10-4-13

Dist	COUNTY	ROUTE	POST MILES TOTAL PROJECT	SHEET No.	TOTAL SHEETS
07	LA	105,405	R2.5, 20.5/R21.1	181	265

Randell D. Hiatt
REGISTERED CIVIL ENGINEER

August 14, 2015
PLANS APPROVAL DATE

REGISTERED PROFESSIONAL ENGINEER
Randell D. Hiatt
No. C50200
Exp. 6-30-17
CIVIL
STATE OF CALIFORNIA

THE STATE OF CALIFORNIA OR ITS OFFICERS OR AGENTS SHALL NOT BE RESPONSIBLE FOR THE ACCURACY OR COMPLETENESS OF SCANNED COPIES OF THIS PLAN SHEET.

TO ACCOMPANY PLANS DATED 7-1-16

2010 REVISED STANDARD PLAN RSP A77Q1

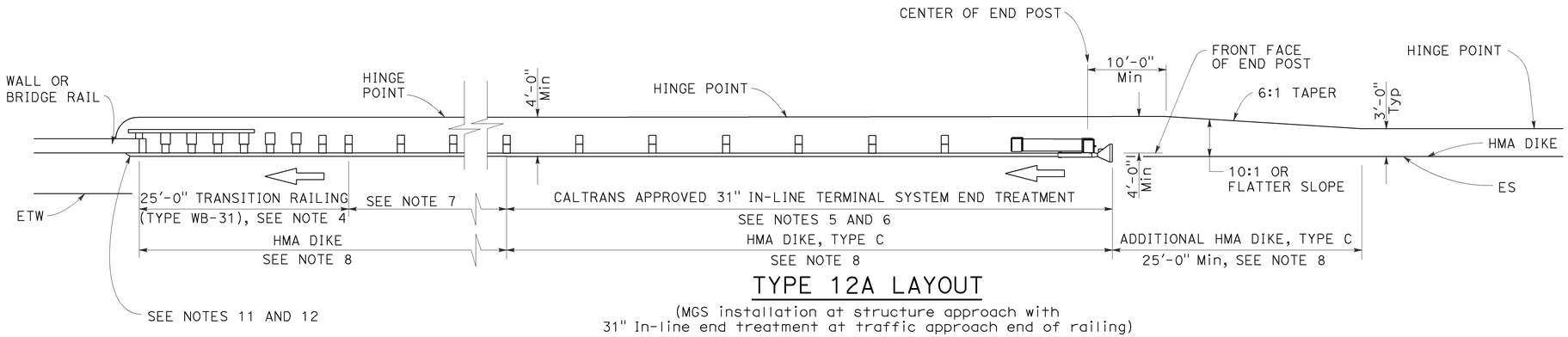

TYPE 12A LAYOUT

(MGS installation at structure approach with
31" In-line end treatment at traffic approach end of railing)
See Note 9

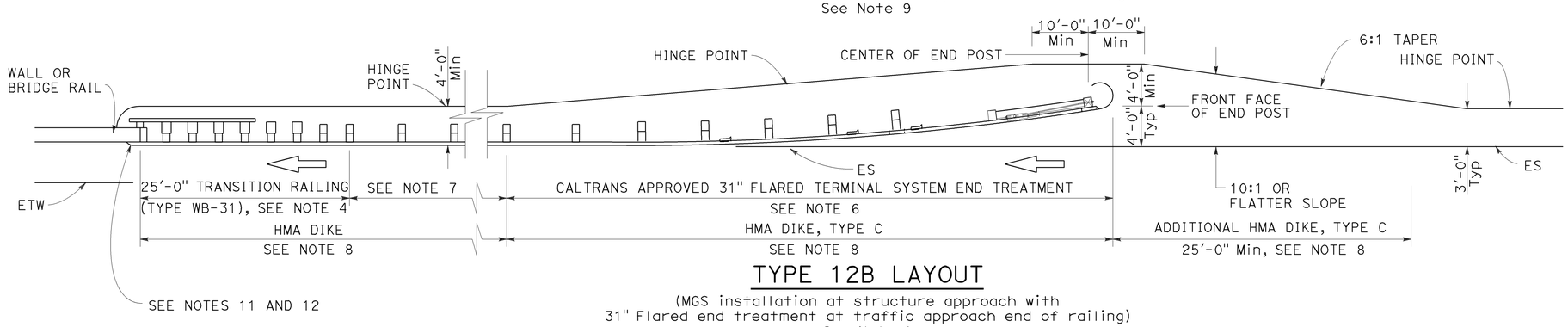

TYPE 12B LAYOUT

(MGS installation at structure approach with
31" Flared end treatment at traffic approach end of railing)
See Note 9

NOTES:

1. Line post, blocks and hardware to be used are shown on Revised Standard Plans RSP A77L1, RSP A77L2, RSP A77M1, RSP A77N1 and RSP A77N2.
2. MGS post spacing to be 6'-3" center to center, except as otherwise noted.
3. Except as noted, line posts are 6" x 8" x 6'-0" wood with 6" x 12" x 1'-2" wood blocks. W6 x 8.5 or W6 x 9 steel posts, 6'-0" in length, with 6" x 12" x 1'-2" notched wood blocks or plastic blocks may be used for 6" x 8" x 6'-0" wood posts with 6" x 12" x 1'-2" wood blocks where applicable and when specified.
4. For Transition Railing (Type WB-31) details for Types 12A and 12B Layouts, see Revised Standard Plan RSP A77U4.
5. 31" in-line terminal system end treatments are used where site conditions will not accommodate a 31" flared end treatment.
6. The type of 31" terminal system end treatment to be used will be shown on the Project Plans.
7. Dependent on site conditions (embankment height, side slopes, or other fixed objects), it may be advisable to construct additional guard railing (a length equal to multiples of 12'-6" with 6'-3" post spacing) between the transition railing and end treatment. A 12.5 degree angle of departure can be drawn on the Project Plans from the edge of traveled way through the outer most point of the fixed object to determine the additional length of railing needed.
8. Where placement of dike is required with guard railing installations, see Revised Standard Plan RSP A77N4 for dike positioning details.
9. Type 12A or Type 12B Layouts are typically used:
   a. To the right of approaching traffic, at the end of a structure, on two-lane conventional highway where the roadbed width across the structure is less than 40 feet.
   b. To the left of approaching traffic, at the end of a structure, on two-lane conventional highway where the roadbed width across the structure is less than 40 feet.
   c. To the right of approaching traffic at the end of each structure on multilane freeways or expressways with separate adjacent or parallel bridges.
   d. To the right of approaching traffic at the end of the structure on multilane freeways or expressways with decked median on the bridge.
10. See Revised Standard Plan RSP A77Q3 for typical layout used left of approaching traffic at the ends of each structure on multilane freeways or expressways with separate adjacent or parallel bridges.
11. For additional details of typical connections to bridge rail, see Connection Detail AA on Revised Standard Plans RSP A77U1 and RSP A77U2 and Connection Detail FF on Revised Standard Plans RSP A77V1 and RSP A77V2.
12. For additional details of a typical connection to walls or abutments, see Revised Standard Plan RSP A77U3.

STATE OF CALIFORNIA
DEPARTMENT OF TRANSPORTATION

MIDWEST GUARDRAIL SYSTEM TYPICAL LAYOUTS FOR STRUCTURE APPROACH

NO SCALE

RSP A77Q1 DATED AUGUST 14, 2015 SUPERSEDES RSP A77Q1 DATED JULY 19, 2013 THAT SUPPLEMENTS THE STANDARD PLANS BOOK DATED 2010.

REVISED STANDARD PLAN RSP A77Q1

Dist	COUNTY	ROUTE	POST MILES TOTAL PROJECT	SHEET No.	TOTAL SHEETS
07	LA	105,405	R2.5, 20.5/R21.1	182	265

Randell D. Hiatt
REGISTERED CIVIL ENGINEER

November 15, 2013
PLANS APPROVAL DATE

REGISTERED PROFESSIONAL ENGINEER
Randell D. Hiatt
No. C50200
Exp. 6-30-15
CIVIL
STATE OF CALIFORNIA

THE STATE OF CALIFORNIA OR ITS OFFICERS OR AGENTS SHALL NOT BE RESPONSIBLE FOR THE ACCURACY OR COMPLETENESS OF SCANNED COPIES OF THIS PLAN SHEET.

TO ACCOMPANY PLANS DATED 7-1-16

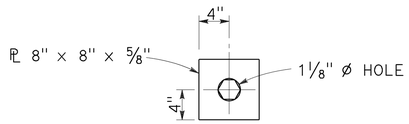

DETAIL "A"
CABLE CONNECTION
END PLATE

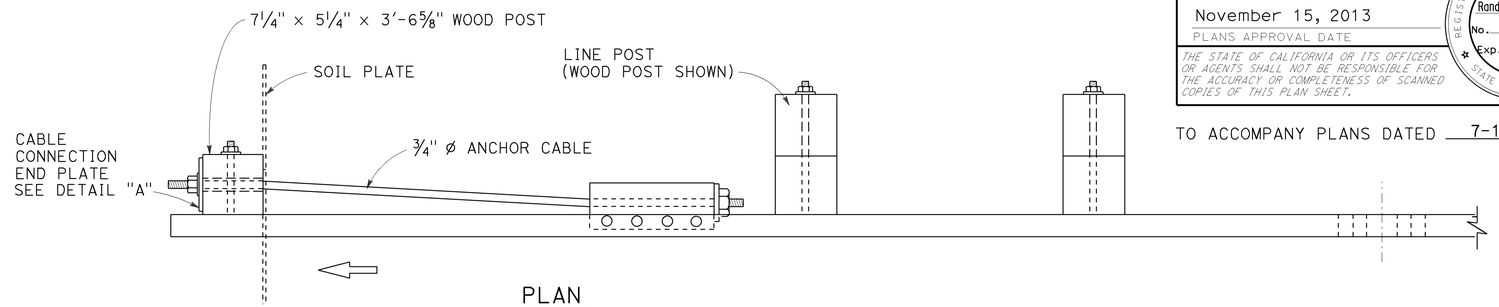

PLAN

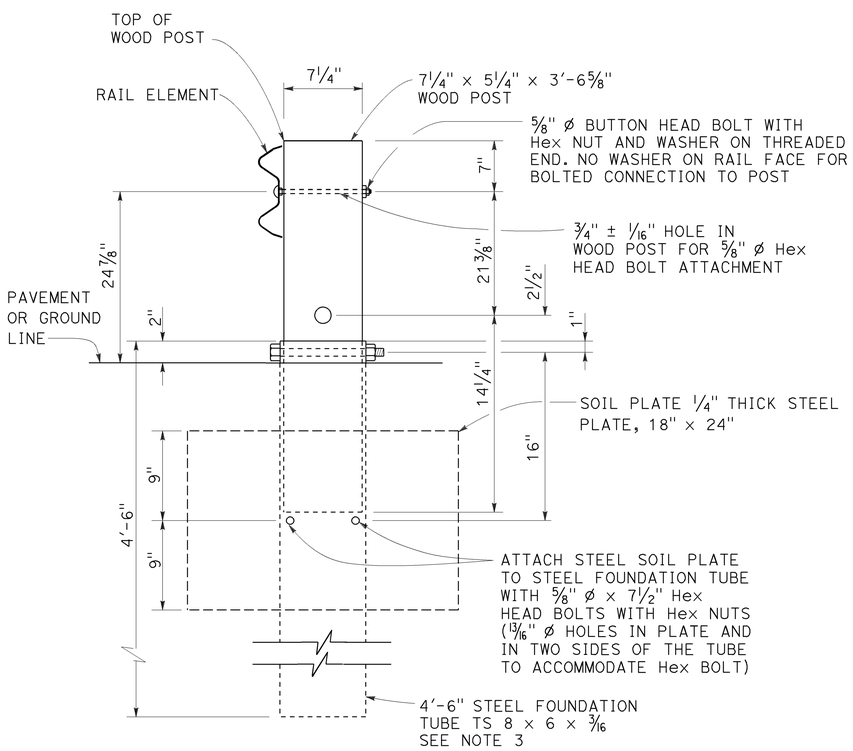

SECTION A-A

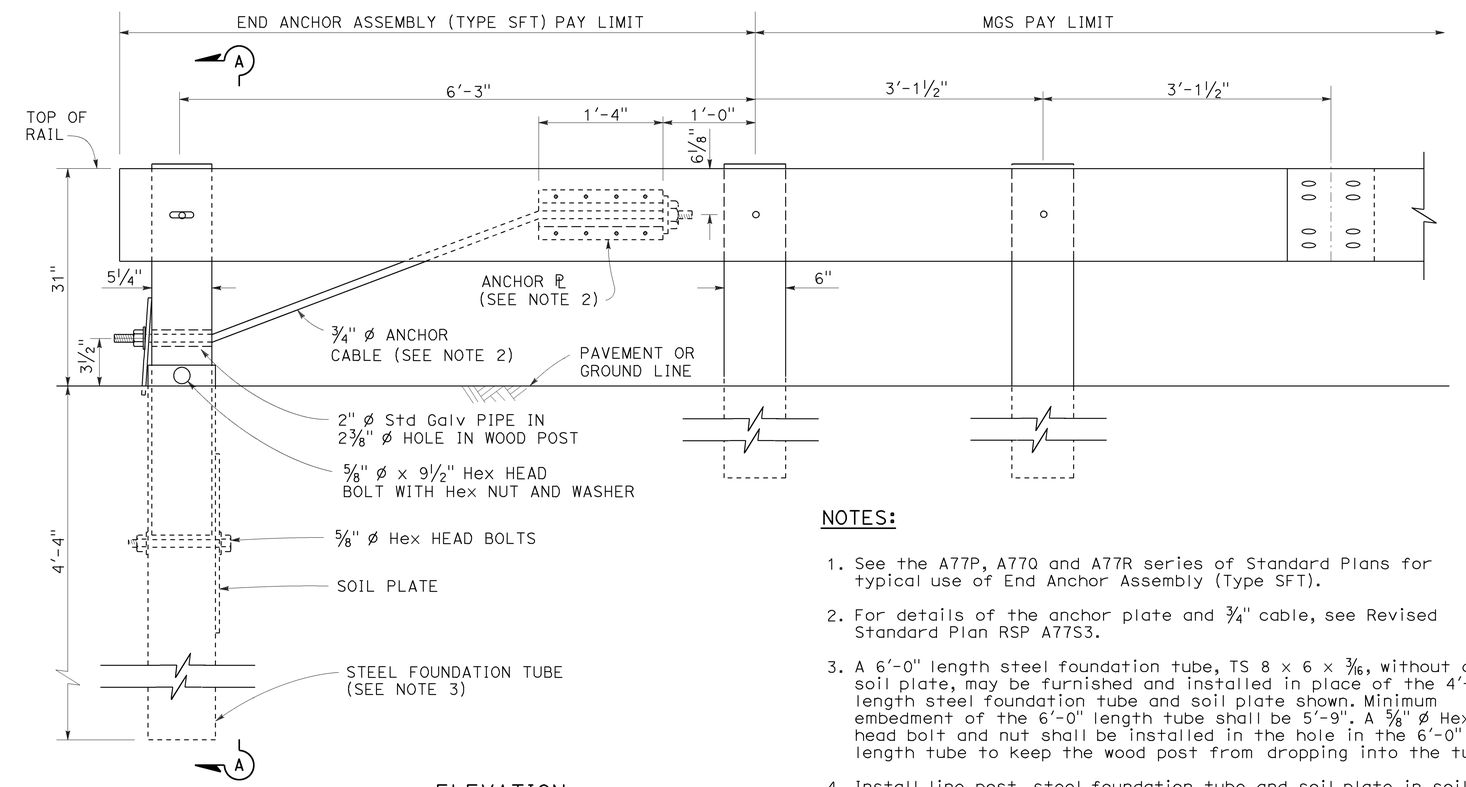

ELEVATION

END ANCHOR
ASSEMBLY (TYPE SFT)
See Note 1

NOTES:

1. See the A77P, A77Q and A77R series of Standard Plans for typical use of End Anchor Assembly (Type SFT).
2. For details of the anchor plate and 3/4" cable, see Revised Standard Plan RSP A77S3.
3. A 6'-0" length steel foundation tube, TS 8 × 6 × 3/16, without a soil plate, may be furnished and installed in place of the 4'-6" length steel foundation tube and soil plate shown. Minimum embedment of the 6'-0" length tube shall be 5'-9". A 5/8" ø Hex head bolt and nut shall be installed in the hole in the 6'-0" length tube to keep the wood post from dropping into the tube.
4. Install line post, steel foundation tube and soil plate in soil.

STATE OF CALIFORNIA
DEPARTMENT OF TRANSPORTATION

MIDWEST GUARDRAIL SYSTEM END ANCHOR ASSEMBLY (TYPE SFT)

NO SCALE

RSP A77S1 DATED NOVEMBER 15, 2013 SUPERSEDES RSP A77S1 DATED JULY 19, 2013 THAT SUPPLEMENTS THE STANDARD PLANS BOOK DATED 2010.

REVISED STANDARD PLAN RSP A77S1

2010 REVISED STANDARD PLAN RSP A77S1

10-4-13

Dist	COUNTY	ROUTE	POST MILES TOTAL PROJECT	SHEET No.	TOTAL SHEETS
07	LA	105,405	R2.5, 20.5/R21.1	183	265

Randell D. Hiatt
REGISTERED CIVIL ENGINEER

November 15, 2013
PLANS APPROVAL DATE

REGISTERED PROFESSIONAL ENGINEER
Randell D. Hiatt
No. C50200
Exp. 6-30-15
CIVIL
STATE OF CALIFORNIA

THE STATE OF CALIFORNIA OR ITS OFFICERS OR AGENTS SHALL NOT BE RESPONSIBLE FOR THE ACCURACY OR COMPLETENESS OF SCANNED COPIES OF THIS PLAN SHEET.

TO ACCOMPANY PLANS DATED 7-1-16

2010 REVISED STANDARD PLAN RSP A77S3

NOTE:

See Revised Standard Plans RSP A77S1, RSP A77S2 and RSP A77T1 for typical use of anchor cable and anchor plate.

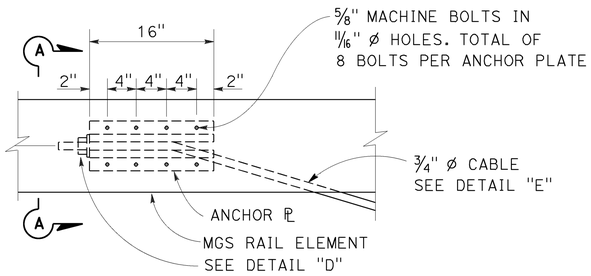

ANCHOR PLATE DETAIL
(MGS shown, TBB similar)

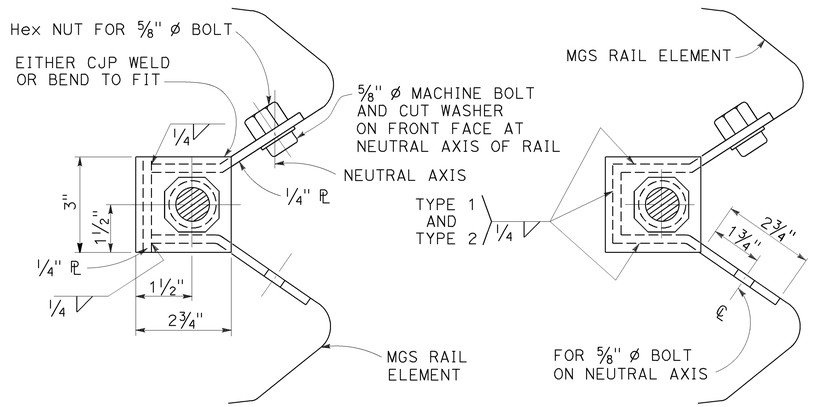

NOTE:
Dimensioning applies to both types.

SECTION A-A
(ALTERNATIVE TYPE 1)

SECTION A-A
(ALTERNATIVE TYPE 2)

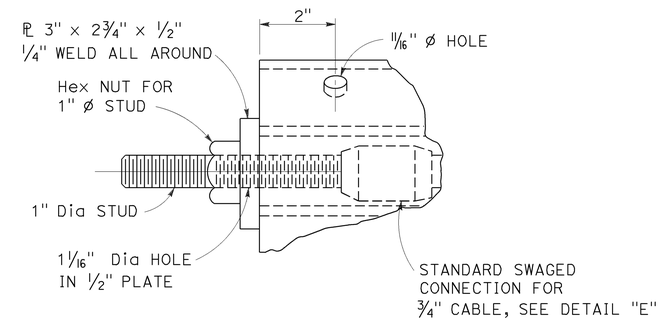

DETAIL "D"

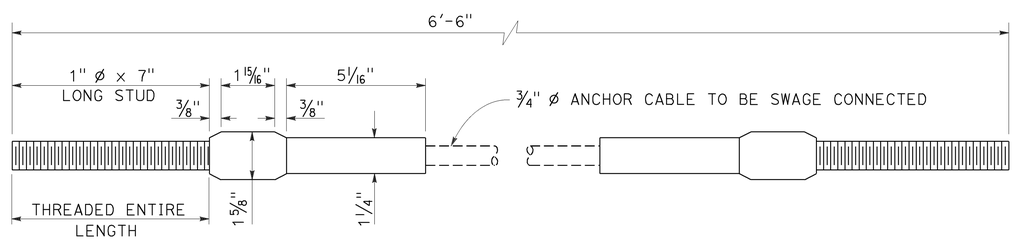

ANCHOR CABLE WITH
SWAGED FITTING AND STUD
DETAIL "E"

STATE OF CALIFORNIA
DEPARTMENT OF TRANSPORTATION

METAL RAILING ANCHOR CABLE AND ANCHOR PLATE DETAILS

NO SCALE

RSP A77S3 DATED NOVEMBER 15, 2013 SUPERSEDES RSP A77S3 DATED JULY 19, 2013 THAT SUPPLEMENTS THE STANDARD PLANS BOOK DATED 2010.

REVISED STANDARD PLAN RSP A77S3

10-4-13

Dist	COUNTY	ROUTE	POST MILES TOTAL PROJECT	SHEET No.	TOTAL SHEETS
07	LA	105,405	R2.5, 20.5/R21.1	184	265

Randell D. Hiatt
REGISTERED CIVIL ENGINEER

July 19, 2013
PLANS APPROVAL DATE

REGISTERED PROFESSIONAL ENGINEER
Randell D. Hiatt
No. C50200
Exp. 6-30-15
CIVIL
STATE OF CALIFORNIA

THE STATE OF CALIFORNIA OR ITS OFFICERS OR AGENTS SHALL NOT BE RESPONSIBLE FOR THE ACCURACY OR COMPLETENESS OF SCANNED COPIES OF THIS PLAN SHEET.

TO ACCOMPANY PLANS DATED 7-1-16

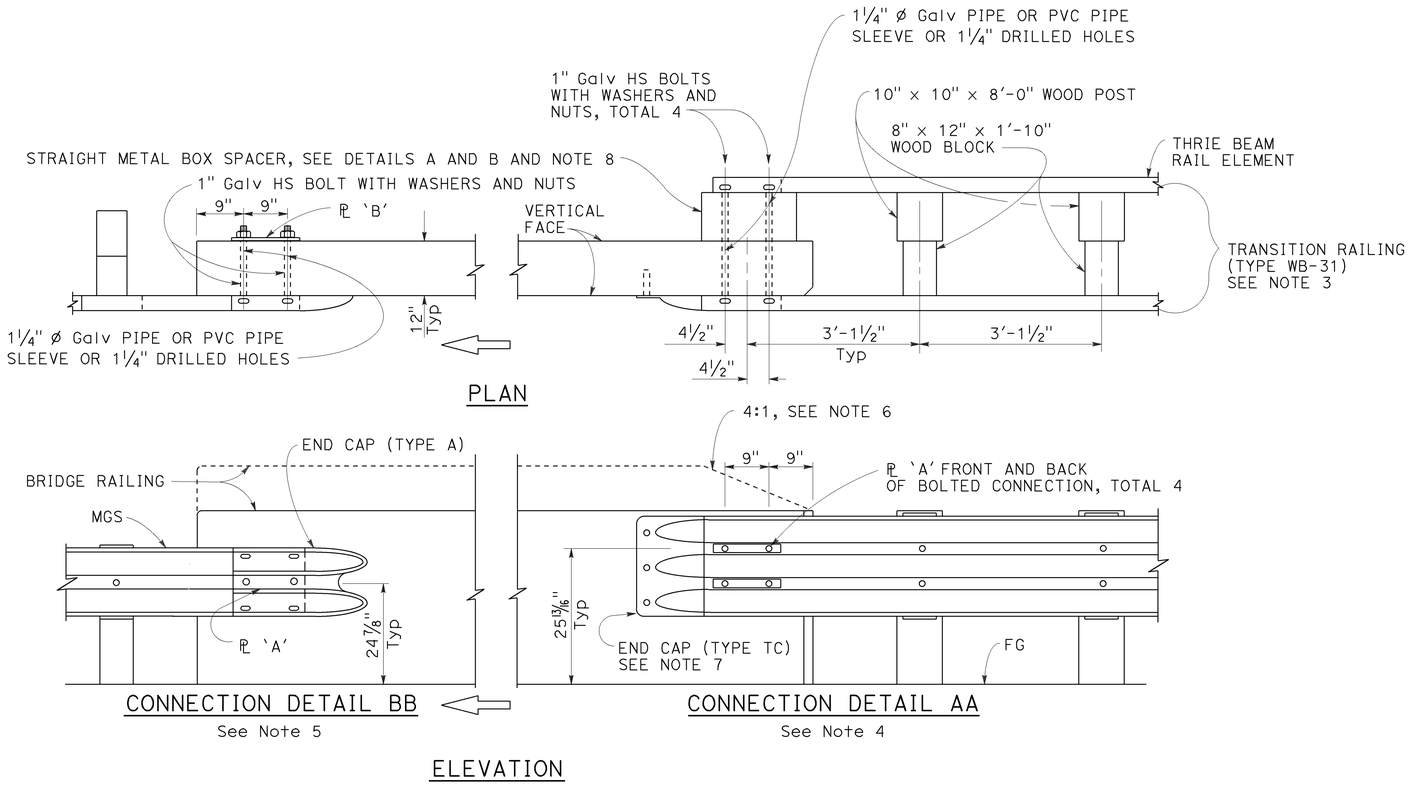

MIDWEST GUARDRAIL SYSTEM CONNECTION TO BRIDGE RAILING WITHOUT SIDEWALK

NOTES:

1. See Revised Standard Plan RSP A77U2 for additional connection details to bridges without sidewalks.
2. Additional details of posts, blocks and hardware are shown on Revised Standard Plans RSP A77M1, RSP A77N1 and RSP A77N2.
3. For additional details of Transition Railing (Type WB-31), see Revised Standard Plan RSP A77U4. Transition Railing (Type WB-31) transitions the 12 gauge MGS railing section to a heavier gage nested thrie beam railing section which is connected to the concrete bridge railing.
4. For typical use of Connection Detail AA, see Layout Types 12A and 12B on Revised Standard Plan RSP A77Q1, Layout Types 12C and 12D on Revised Standard Plan RSP A77Q2, and Layout Type 12E on Revised Standard Plan RSP A77Q3.
5. For typical use of Connection Detail BB, see Layout Type 12D (structure departure railing connection) on Revised Standard Plan RSP A77Q2 and Layout Type 12DD on Revised Standard Plan RSP A77Q5.
6. Where the height of the bridge railing exceeds the height of the thrie beam railing by more than 1" at Connection Detail AA, taper the top of the end of the bridge railing at 4:1 to match the top elevation of the thrie beam rail.
7. For details of End Cap (Type TC), see Revised Standard Plan RSP A77U4.
8. See Revised Standard Plan RSP A77U4 for additional details regarding depth dimension for straight metal box spacer.

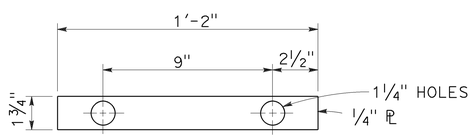

PLATE 'A'

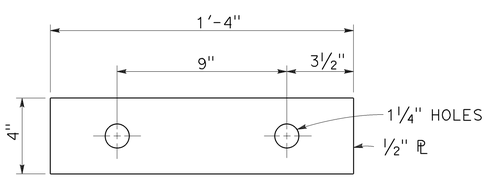

PLATE 'B'
(For backside of connection BB)

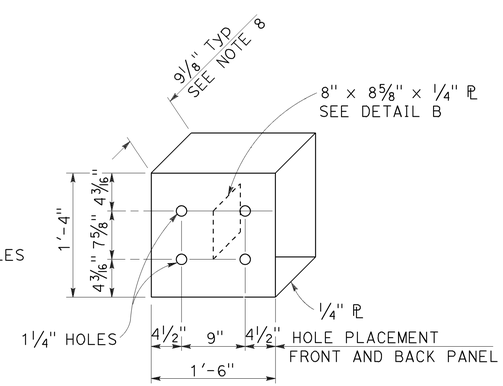

DETAIL A

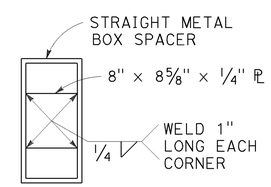

DETAIL B

STRAIGHT METAL BOX SPACER

STATE OF CALIFORNIA
DEPARTMENT OF TRANSPORTATION

MIDWEST GUARDRAIL SYSTEM CONNECTIONS TO BRIDGE RAILINGS WITHOUT SIDEWALKS DETAILS No. 1

NO SCALE

RSP A77U1 DATED JULY 19, 2013 SUPPLEMENTS THE STANDARD PLANS BOOK DATED 2010.

REVISED STANDARD PLAN RSP A77U1

2010 REVISED STANDARD PLAN RSP A77U1

7-8-13

Dist	COUNTY	ROUTE	POST MILES TOTAL PROJECT	SHEET No.	TOTAL SHEETS
07	LA	105,405	R2.5, 20.5/R21.1	185	265

Randell D. Hiatt
REGISTERED CIVIL ENGINEER

January 23, 2015
PLANS APPROVAL DATE

REGISTERED PROFESSIONAL ENGINEER Randell D. Hiatt No. C50200 Exp. 6-30-15 CIVIL STATE OF CALIFORNIA

THE STATE OF CALIFORNIA OR ITS OFFICERS OR AGENTS SHALL NOT BE RESPONSIBLE FOR THE ACCURACY OR COMPLETENESS OF SCANNED COPIES OF THIS PLAN SHEET.

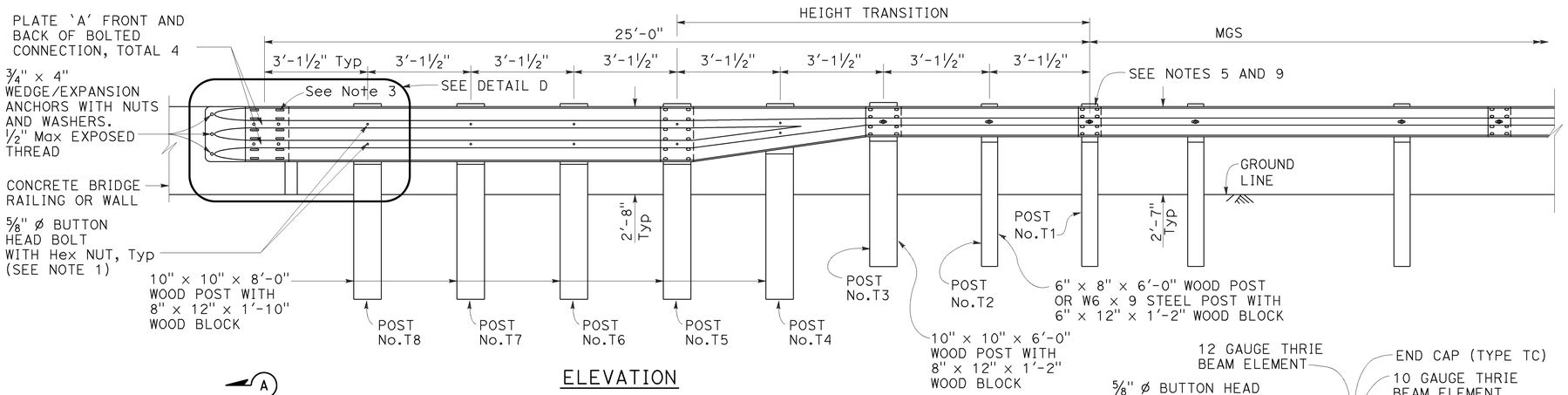

ELEVATION

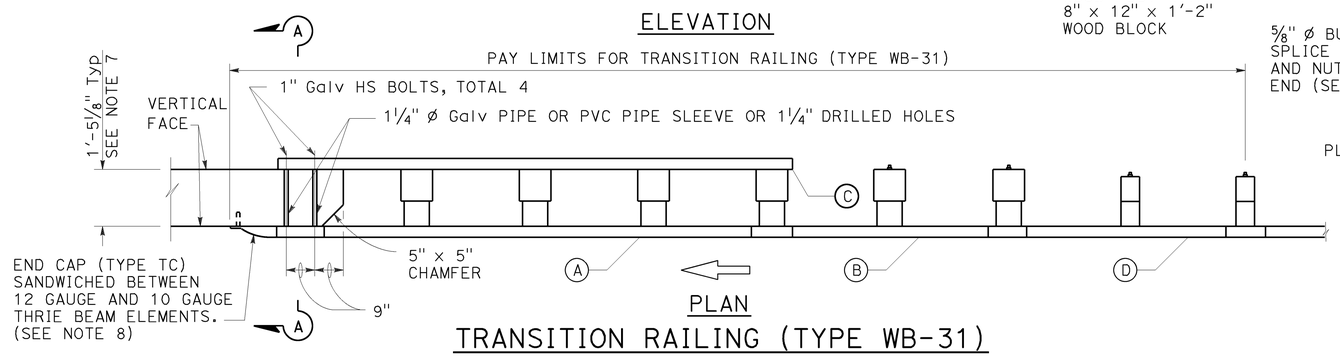

PLAN

TRANSITION RAILING (TYPE WB-31)

(No Blockout Attachment)

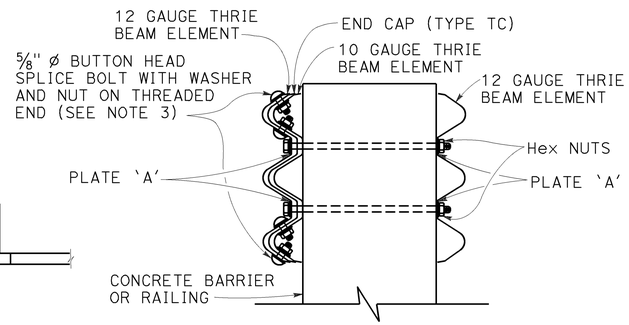

SECTION A-A

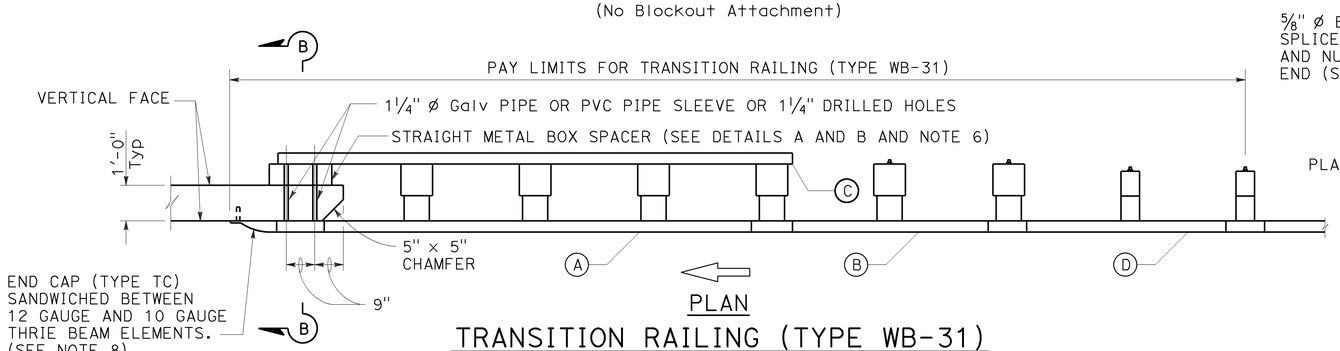

PLAN

TRANSITION RAILING (TYPE WB-31)

(Blockout Attachment)

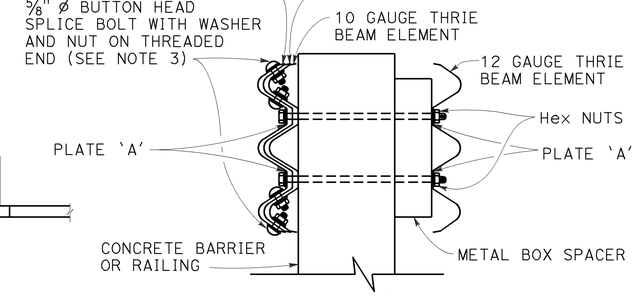

SECTION B-B

LEGEND:

- (A) NESTED THRIE BEAM ELEMENTS (ONE 12 GAUGE ELEMENT NESTED OVER ONE 10 GAUGE ELEMENT).
- (B) ONE ASYMMETRICAL 10 GAUGE "W" BEAM TO THRIE BEAM ELEMENT.
- (C) ONE 12 GAUGE THRIE BEAM ELEMENT.
- (D) ONE 10 GAUGE "W" BEAM RAIL ELEMENT (7'-3 1/2"LENGTH)

10 GAUGE = 0.138" THICK
12 GAUGE = 0.108" THICK

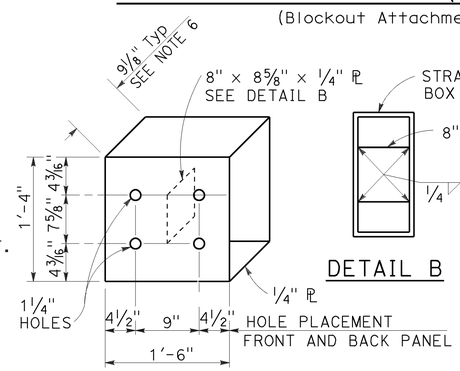

DETAIL A

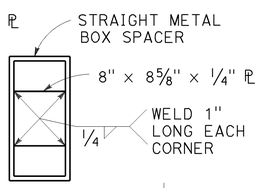

DETAIL B

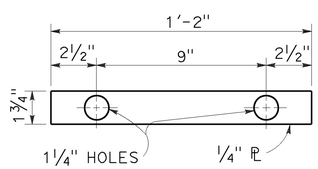

DETAIL C

STRAIGHT METAL BOX SPACER

PLATE 'A'

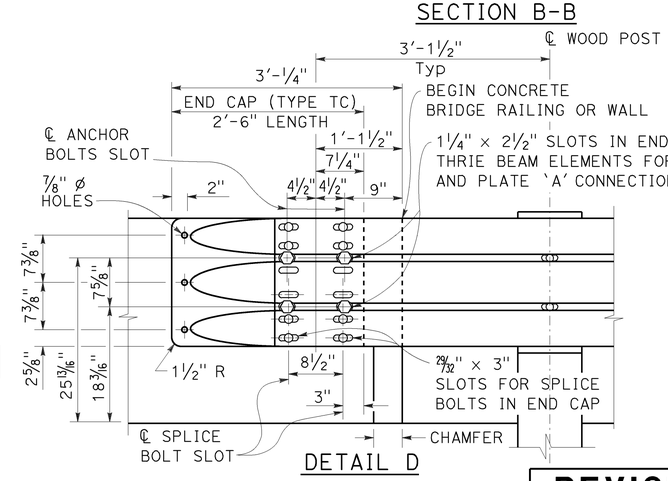

DETAIL D

NOTES:

TO ACCOMPANY PLANS DATED 7-1-16

1. Use 5/8" ø Button head bolts and hex nuts for connections to posts. No washer on rail face for bolted connections to post.
2. The nested rail elements, end cap, and 'W' beam to thrie beam element may be spliced together prior to bolting the elements to the wood post and concrete barrier or railing.
3. Exterior splice bolt holes for rail element splices at Post No. T5 and the connection to the concrete barrier or railing shall be the standard 29/32" x 1 1/8" slot size. Interior splice bolt holes at these locations may be increased up to 1 1/4" ø. Only the top 4 and the bottom 4 splice bolts with washers and nuts are required for rail splices at Post No. T5 and the connection to the concrete barrier or railing.
4. The top elevation of Posts No. T2 through No. T7 shall not project more than 1" above the top elevation of the rail element.
5. Typically, the railing connected to Transition Railing (Type WB-31) will be either standard railing section of MGS with height transition ratio of 150:1 or a Caltrans approved 31" end treatment attached to Post No. T1.
6. The depth of the metal box spacer varies from the 9 1/8" to 1 1/2" and is dependent on the width of the concrete railing or wall. The combined dimension for the depth of the metal box spacer plus the width of railing or wall is typically 21 1/8". Where the space between the backside of the concrete railing or wall and the rear thrie beam element is less than 1 1/2", metal plates similar to Plate 'A' are to be used as spacers.
7. Where the width of the concrete railing or wall is greater than 17 1/8", wood blocks are to be used to fill the space created between the backside of Posts No. T5 through No. T8 and the rear thrie beam element. These wood blocks shall be 8" in width and 1'-2" in length. The dimension between the front thrie beam element and the rear thrie beam element is to match the width of the concrete railing or wall.
8. End cap may be installed over 12 gauge and 10 gauge thrie beam elements where transition railing is installed on the departure end of bridge railing.
9. Conform standard railing section height to 31" at Post No. T1 using height transition ratio of 150:1.

STATE OF CALIFORNIA
DEPARTMENT OF TRANSPORTATION

MIDWEST GUARDRAIL SYSTEM TRANSITION RAILING (TYPE WB-31)

NO SCALE

RSP A77U4 DATED JANUARY 23, 2015 SUPERSEDES RSP A77U4 DATED NOVEMBER 15, 2013 AND RSP A77U4 DATED JULY 19, 2013 THAT SUPPLEMENTS THE STANDARD PLANS BOOK DATED 2010.

REVISED STANDARD PLAN RSP A77U4

2010 REVISED STANDARD PLAN RSP A77U4

1-8-15

Dist	COUNTY	ROUTE	POST MILES TOTAL PROJECT	SHEET No.	TOTAL SHEETS
07	LA	105,405	R2.5, 20.5/R21.1	186	265

REGISTERED CIVIL ENGINEER

July 15, 2016
PLANS APPROVAL DATE

REGISTERED PROFESSIONAL ENGINEER Sukhdeep Singh Sandher No. C74893 Exp. 12-31-17 CIVIL STATE OF CALIFORNIA

THE STATE OF CALIFORNIA OR ITS OFFICERS OR AGENTS SHALL NOT BE RESPONSIBLE FOR THE ACCURACY OR COMPLETENESS OF SCANNED COPIES OF THIS PLAN SHEET.

TO ACCOMPANY PLANS DATED 7-1-16

2010 REVISED STANDARD PLAN RSP A85

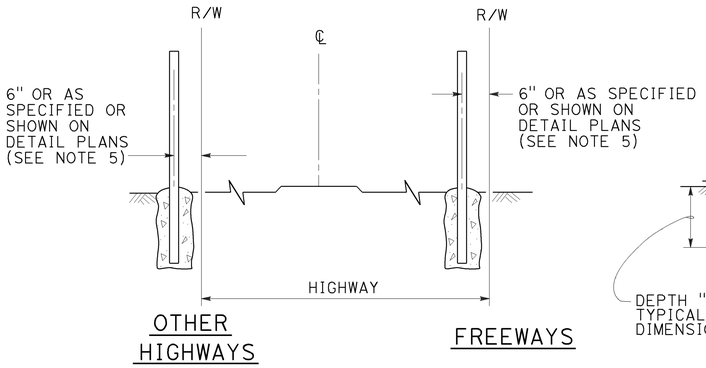

FENCE LOCATION

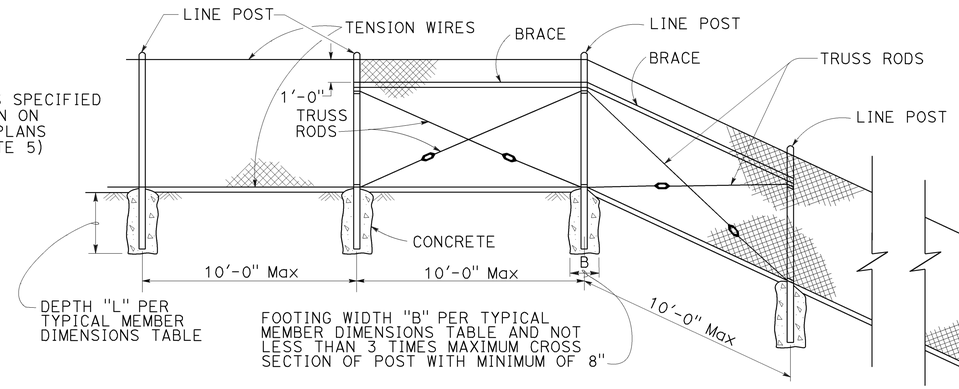

CHAIN LINK FENCE ON SHARP BREAK IN GRADE

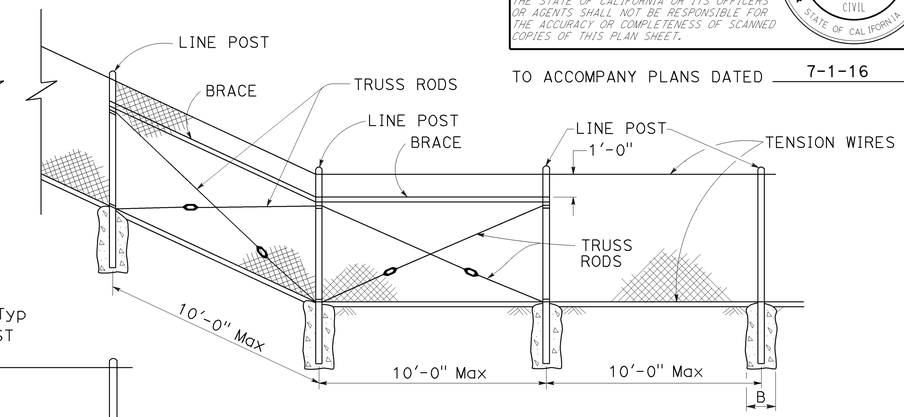

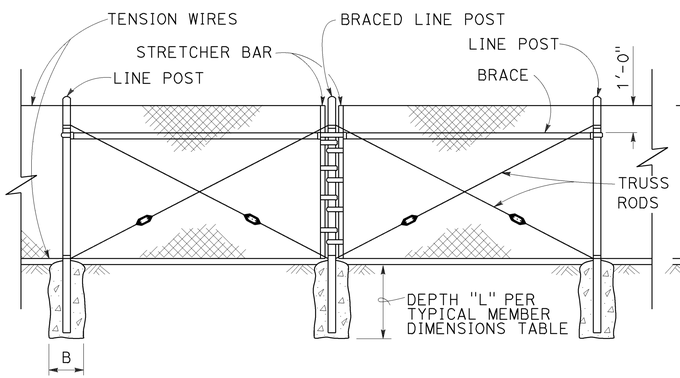

BRACED LINE POST INSTALLATION

Braced line post at intervals not exceeding 1000'

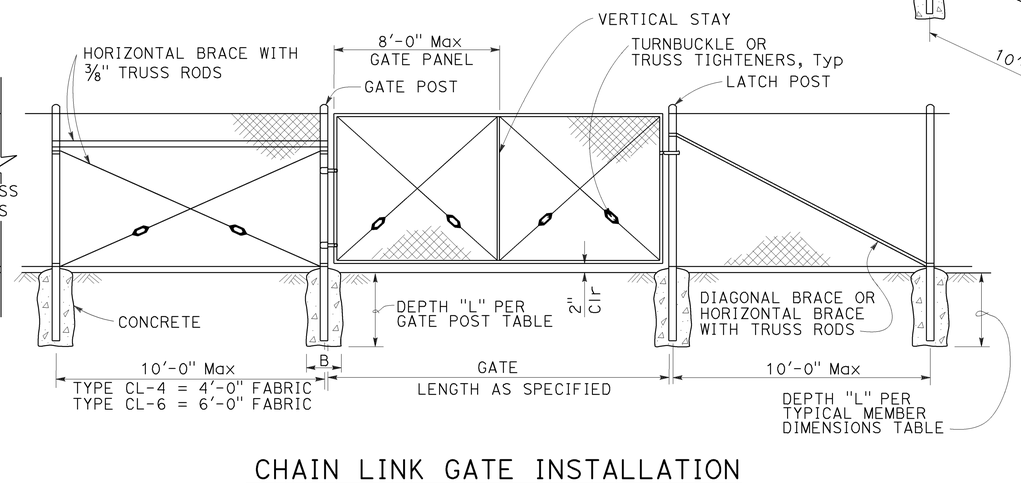

CHAIN LINK GATE INSTALLATION

GATE POST						
FENCE HEIGHT (Max)	SLATTED	B (in)	L (ft)	ROUND PIPE		
				SECTION	ROUND OD PIPE	WEIGHT (lb/ft)
5'-0"	NO	12"	2'-6"	3 Std	3.50"	7.58
6'-0"	NO	12"	2'-6"	3 Std	3.50"	7.58
8'-0"	NO	12"	3'-0"	3 Std	3.50"	7.58
10'-0"	NO	14"	3'-6"	3 Std	3.50"	7.58
5'-0"	YES	12"	3'-0"	3½ Std	4.00"	9.12
6'-0"	YES	14"	3'-6"	4 Std	4.50"	10.80
8'-0"	YES	18"	3'-6"	5 Std	5.56"	14.60
10'-0"	YES	20"	4'-0"	6 Std	6.63"	19.00

Above post dimensions and weights are minimums.
Larger sizes may be used upon approval.
Maximum Gate Width is 24'-0".

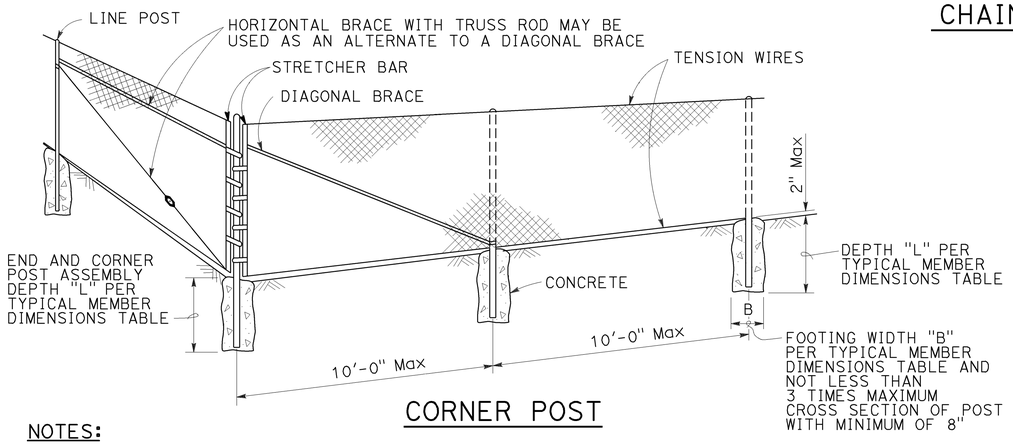

CORNER POST

TYPICAL MEMBER DIMENSIONS (See Notes)													
FENCE HEIGHT (Max)	SLATTED	B (in)	L (ft)	LINE POSTS					BRACES				
				ROUND PIPE			ROLL FORMED		ROUND PIPE			ROLL FORMED	
				SECTION	ROUND OD PIPE	WEIGHT (lb/ft)	SECTION	WEIGHT (lb/ft)	SECTION	ROUND OD PIPE	WEIGHT (lb/ft)	SECTION	WEIGHT (lb/ft)
5'-0"	NO	8"	2'-6"	1½ Std	1.90"	2.72	1.875" x 1.625"	1.85	2 Std	2.38"	3.66	1.625" x 1.250"	1.35
6'-0"	NO	10"	2'-6"	2 Std	2.38"	3.66	1.875" x 1.625"	2.40	2 Std	2.38"	3.66	1.625" x 1.250"	1.35
8'-0"	NO	12"	3'-0"	2½ Std	2.88"	5.80	3.250" x 2.500"	4.50	2 Std	2.38"	3.66	1.625" x 1.250"	1.35
10'-0"	NO	14"	3'-6"	3 Std	3.50"	7.58	3.250" x 2.500"	4.50	2½ Std	2.88"	5.80	1.625" x 1.250"	1.35
5'-0"	YES	12"	3'-0"	3½ Std	4.00"	9.12	N/A	-	2 Std	2.38"	3.66	N/A	-
6'-0"	YES	14"	3'-0"	4 Std	4.50"	10.80	N/A	-	2 Std	2.38"	3.66	N/A	-
8'-0"	YES	18"	3'-6"	5 Std	5.56"	14.60	N/A	-	2 Std	2.38"	3.66	N/A	-
10'-0"	YES	20"	4'-0"	6 Std	6.63"	19.00	N/A	-	2½ Std	2.88"	5.80	N/A	-

NOTES:

1. The table to the right shows minimum sized posts and braces complying with the specifications. Larger or heavier post and brace sizes may be used upon approval.
2. Sections shown in the tables must also comply with the strength requirements and other provisions of the Specifications.
3. Other sections which comply with the strength requirements and other provisions of the Specifications may be used upon approval.
4. Options exercised shall be uniform on any one project.
5. Offset to be 2'-0" at monument locations, measured at right angles to R/W lines. Taper to achieve offset to be at least 20'-0" long.
6. See Revised Standard Plan RSP A85B for Brace, Stretcher Bar, and Truss Tightener Details.

STATE OF CALIFORNIA
DEPARTMENT OF TRANSPORTATION

CHAIN LINK FENCE

NO SCALE

RSP A85 DATED JULY 15, 2016 SUPERSEDES RSP A85 DATED JULY 18, 2014 AND STANDARD PLAN A85 DATED MAY 20, 2011 - PAGE 112 OF THE STANDARD PLANS BOOK DATED 2010.

REVISED STANDARD PLAN RSP A85

6-29-16

Dist	COUNTY	ROUTE	POST MILES TOTAL PROJECT	SHEET No.	TOTAL SHEETS
07	LA	105,405	R2.5, 20.5/R21.1	187	265

REGISTERED CIVIL ENGINEER

July 15, 2016
PLANS APPROVAL DATE

REGISTERED PROFESSIONAL ENGINEER Sukhdeep Singh Sandher No. C74893 Exp. 12-31-17 CIVIL STATE OF CALIFORNIA

THE STATE OF CALIFORNIA OR ITS OFFICERS OR AGENTS SHALL NOT BE RESPONSIBLE FOR THE ACCURACY OR COMPLETENESS OF SCANNED COPIES OF THIS PLAN SHEET.

TO ACCOMPANY PLANS DATED 7-1-16

2010 REVISED STANDARD PLAN RSP A85A

NOTES:

1. B is not less than 3 times maximum cross section of post with minimum of 8".
2. See Revised Standard Plan RSP A85 for Chain Link Fencing dimensions.
3. See Detail A on Standard Plan A86B for connection at headwall.
4. See Detail D on Standard Plan A86B for connection at headwall.

CENTER POST		
FENCE HEIGHT (Max)	SLATTED	P
ALL HEIGHTS	NO	1'-6"
5'-0"	YES	3'-0"
6'-0"	YES	3'-0"
8'-0"	YES	3'-6"
10'-0"	YES	4'-0"

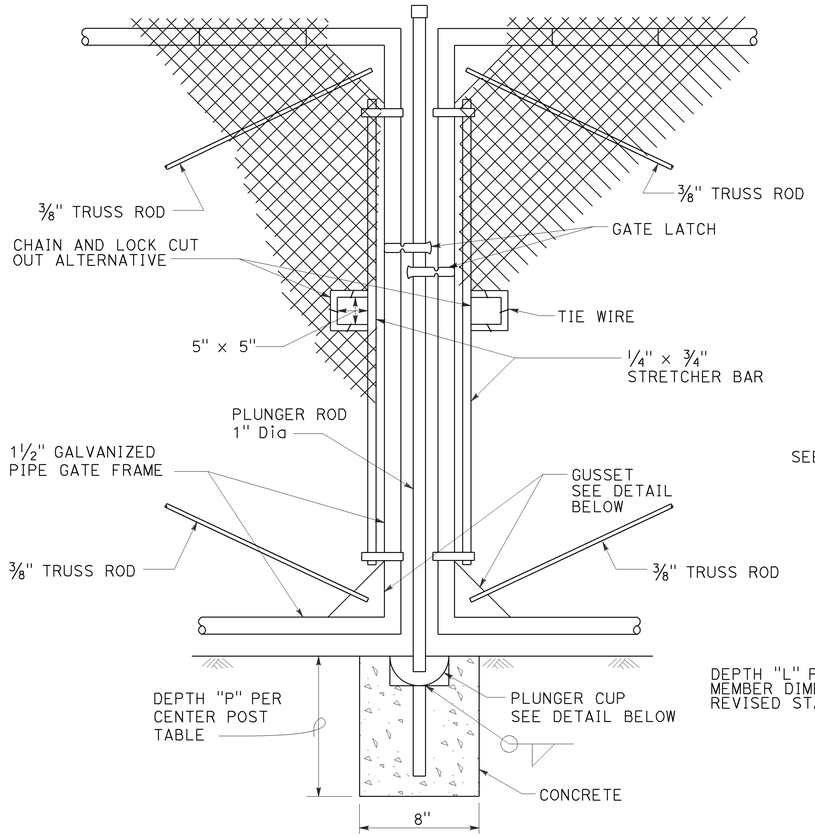

DOUBLE GATE
REMOVABLE CENTER POST

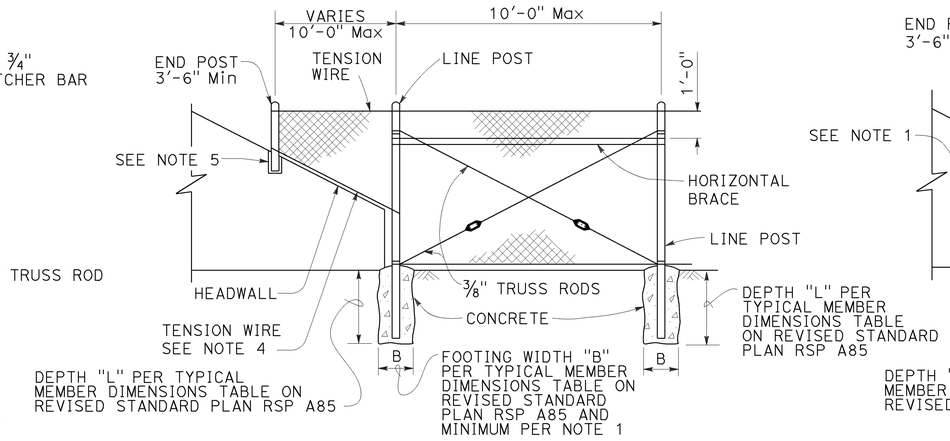

METHOD OF TYING FENCE TO HEADWALL

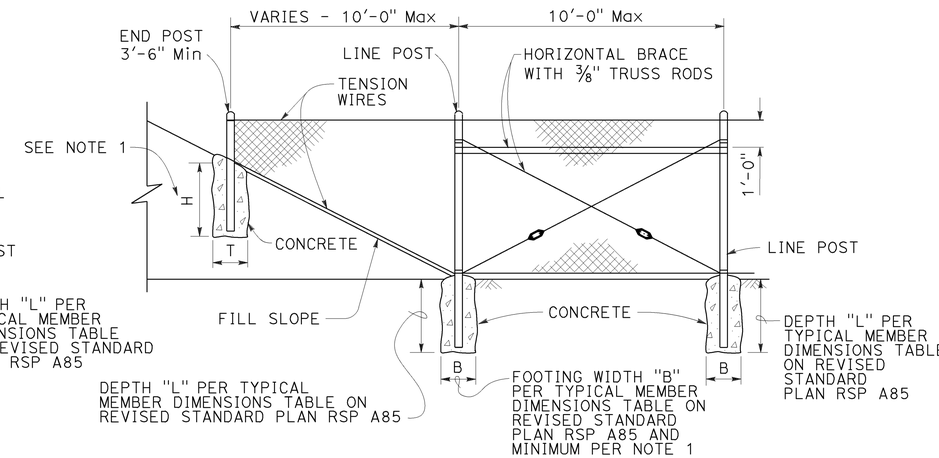

METHOD OF ERECTING FENCE FOR FILL SLOPE

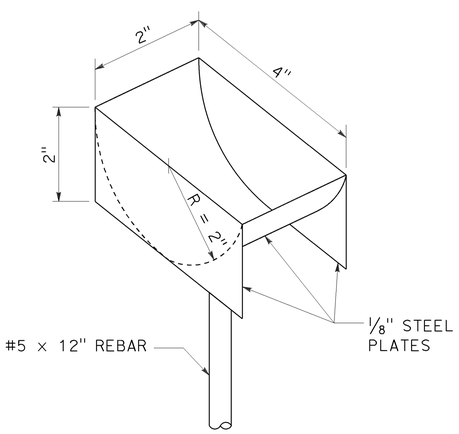

PLUNGER CUP DETAIL

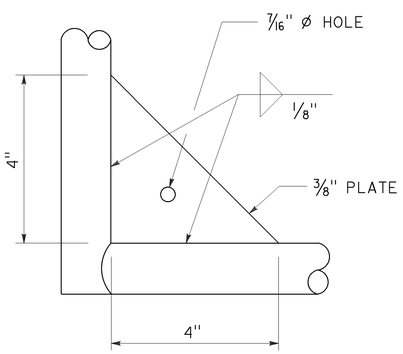

GUSSET DETAIL

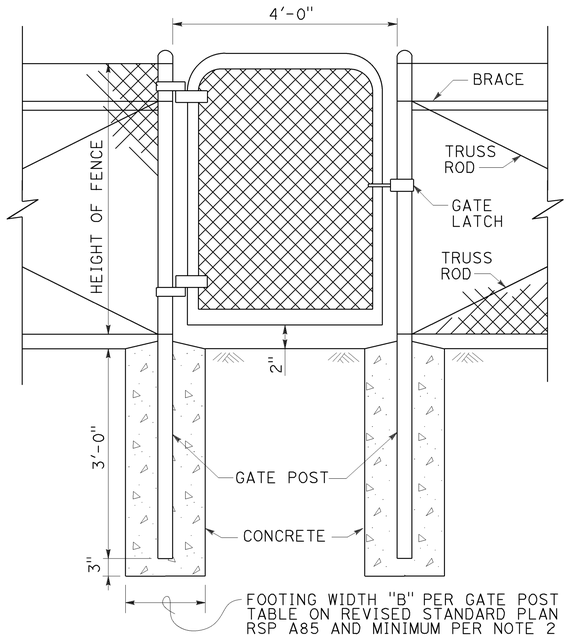

WALK GATE

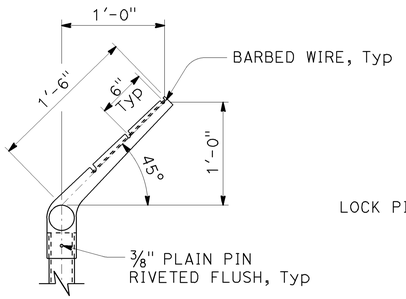

LINE POST

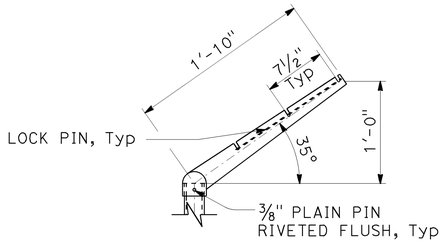

CORNER POST

BARBED WIRE POST TOP

STATE OF CALIFORNIA
DEPARTMENT OF TRANSPORTATION

CHAIN LINK FENCE DETAILS

NO SCALE

RSP A85A DATED JULY 15, 2016 SUPERSEDES STANDARD PLAN A85A
DATED MAY 20, 2011 - PAGE 113 OF THE STANDARD PLANS BOOK DATED 2010.

REVISED STANDARD PLAN RSP A85A

6-16-16

Dist	COUNTY	ROUTE	POST MILES TOTAL PROJECT	SHEET No.	TOTAL SHEETS
07	LA	105,405	R2.5, 20.5/R21.1	188	265

Glenn DeCou
REGISTERED CIVIL ENGINEER

October 19, 2012
PLANS APPROVAL DATE

REGISTERED PROFESSIONAL ENGINEER
Glenn DeCou
No. C34547
Exp. 9-30-13
CIVIL
STATE OF CALIFORNIA

THE STATE OF CALIFORNIA OR ITS OFFICERS OR AGENTS SHALL NOT BE RESPONSIBLE FOR THE ACCURACY OR COMPLETENESS OF SCANNED COPIES OF THIS PLAN SHEET.

TO ACCOMPANY PLANS DATED 7-1-16

2010 REVISED STANDARD PLAN RSP A85B

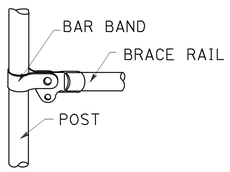

BRACE RAIL

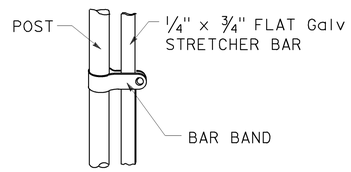

STRETCHER BAR

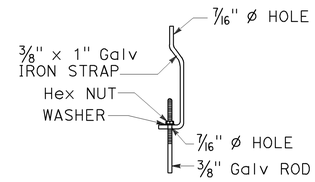

TRUSS TIGHTENER

NOTES:

1. All material for abutment connection to be galvanized.
2. The chain link fabric shall be replaced by barbed wire strands at 12" maximum centers between the double posts.
3. When the width of the culvert makes it necessary to anchor a post to the top of the culvert, a cast iron shoe or other device approved by the Engineer shall be used.
4. Fencing over stream and around headwall may also use Barbed Wire or Wire Mesh fencing with either wood post or steel post installation.
5. See Standard Plan A85 for Chain Link fence dimensions. See Standard Plan A86 for Barbed Wire and Wire Mesh fence dimensions and for wood post and steel post installation.

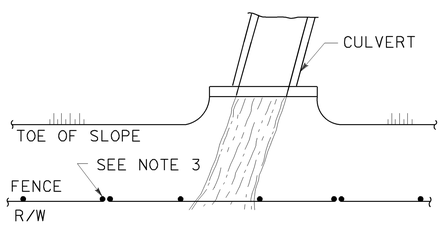

PLAN

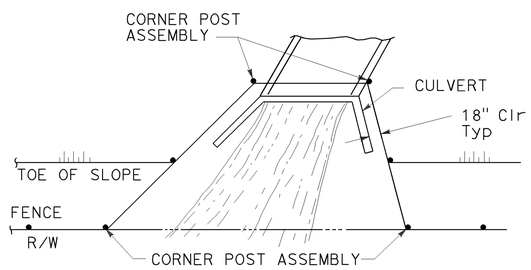

PLAN

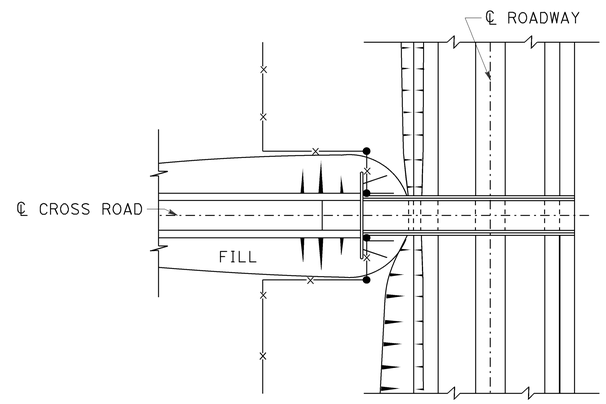

PLAN OF ROADWAY - OVERCROSSING

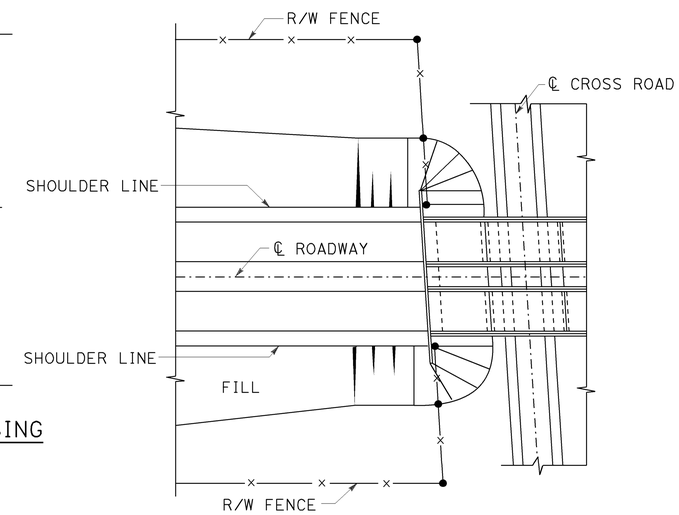

PLAN OF ROADWAY - UNDERCROSSING

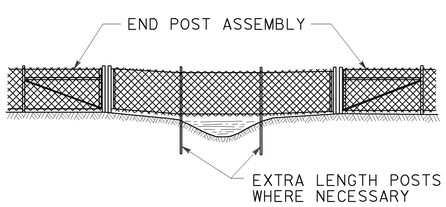

ELEVATION

INSTALLATION OVER STREAM

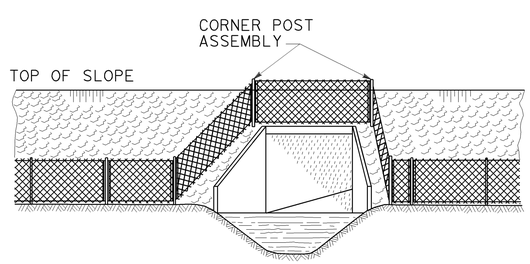

ELEVATION

INSTALLATION AROUND HEADWALL

See Note 4

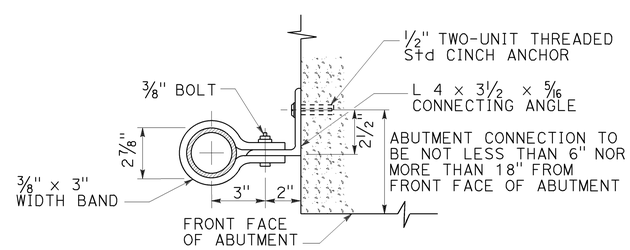

ABUTMENT CONNECTION

TYPICAL INSTALLATION AT BRIDGES

STATE OF CALIFORNIA
DEPARTMENT OF TRANSPORTATION

CHAIN LINK FENCE DETAILS

NO SCALE

RSP A85B DATED OCTOBER 19, 2012 SUPERSEDES STANDARD PLAN A85B
DATED MAY 20, 2011 - PAGE 114 OF THE STANDARD PLANS BOOK DATED 2010.

REVISED STANDARD PLAN RSP A85B

7-19-12

Dist	COUNTY	ROUTE	POST MILES TOTAL PROJECT	SHEET No.	TOTAL SHEETS
07	LA	105,405	R2.5, 20.5/R21.1	189	265

REGISTERED CIVIL ENGINEER

July 19, 2013
PLANS APPROVAL DATE

REGISTERED PROFESSIONAL ENGINEER Michael Janzen No. 44788 Exp. 03-31-14 CIVIL STATE OF CALIFORNIA

THE STATE OF CALIFORNIA OR ITS OFFICERS OR AGENTS SHALL NOT BE RESPONSIBLE FOR THE ACCURACY OR COMPLETENESS OF SCANNED COPIES OF THIS PLAN SHEET.

TO ACCOMPANY PLANS DATED 7-1-16

2010 REVISED STANDARD PLAN RSP A87A

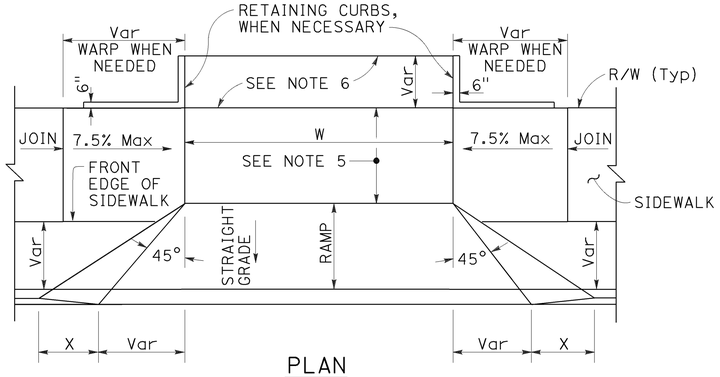

PLAN

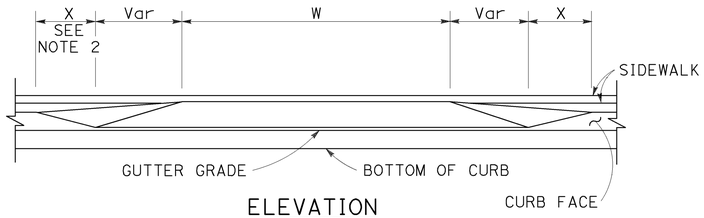

ELEVATION

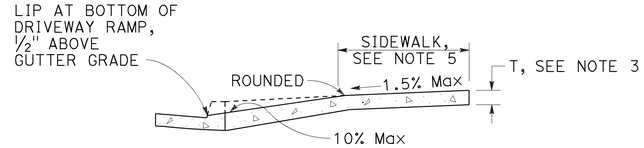

CASE A

Typical driveway, sidewalk not depressed

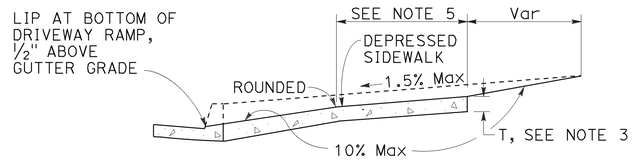

CASE B

Driveway with depressed sidewalk

SECTIONS

DRIVEWAYS

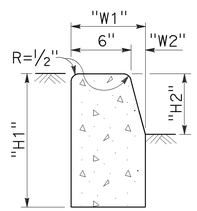

TYPE A1 CURBS

See Table A

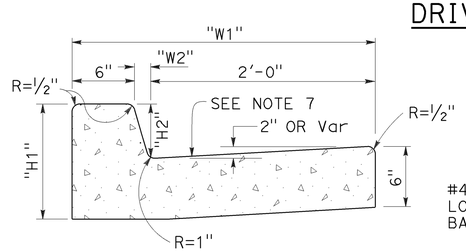

TYPE A2 CURBS

See Table A

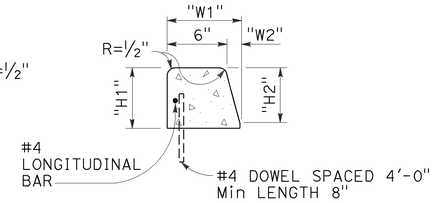

TYPE A3 CURBS

Superimposed on existing pavement
See Table A

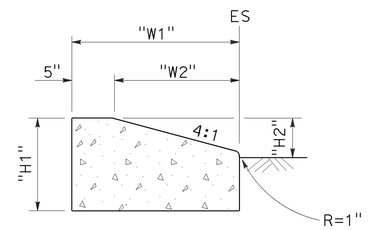

TYPE D CURBS

See Table A

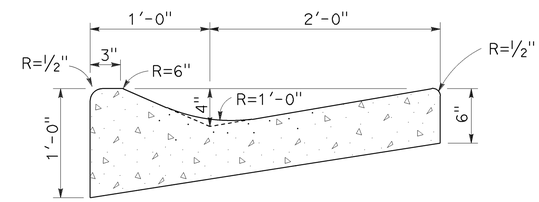

TYPE E CURB

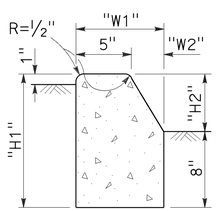

TYPE B1 CURBS

See Table A

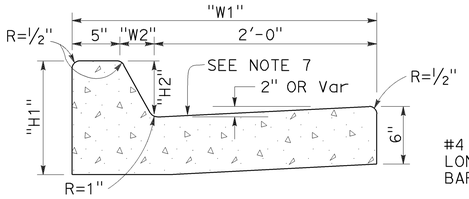

TYPE B2 CURBS

See Table A

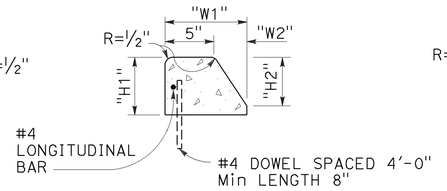

TYPE B3 CURBS

Superimposed on existing pavement
See Table A

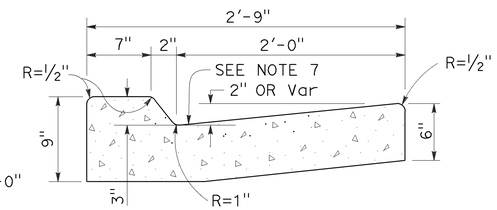

TYPE B4 CURBS

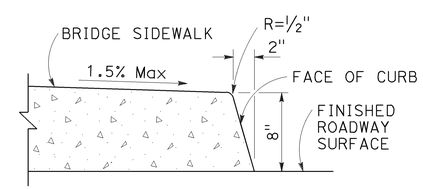

TYPE H CURB

On Bridges

CURBS

TABLE A

CURB TYPE	DIMENSIONS			
	"H1"	"H2"	"W1"	"W2"
A1-6	1'-2"	6"	7½"	1½"
A1-8	1'-4"	8"	8"	2"
A2-6	1'-0"	6"	2'-7½"	1½"
A2-8	1'-2"	8"	2'-8"	2"
A3-6	6"	5"	7¼"	1¼"
A3-8	8"	7"	7¾"	1¾"
B1-4	1'-0"	4"	7½"	2½"
B1-6	1'-2"	6"	9"	4"
B2-4	10"	4"	2'-7½"	2½"
B2-6	1'-0"	6"	2'-9"	4"
B3-4	4"	3"	7"	2"
B3-6	6"	5"	8½"	3½"
D-4	10"	4"	1'-6"	1'-1"
D-6	1'-0"	6"	2'-2"	1'-9"

CURB QUANTITIES

TYPE	CUBIC YARDS PER LINEAR FOOT
A1-6	0.02585
A1-8	0.03084
A2-6	0.05903
A2-8	0.06379
A3-6	0.01036
A3-8	0.01435
B1-4	0.02185
B1-6	0.02930
B2-4	0.05515
B2-6	0.06171
B3-4	0.00641
B3-6	0.01074
B4	0.05709
D-4	0.04083
D-6	0.06804
E	0.06661

NOTES:

1. Case A driveway section typically applies.
2. X=3'-0" except for curb heights over 10" where 4:1 slopes shall be used on curb slope.
3. Sidewalk and ramp thickness "T" at driveway shall be 4" for residental and 6" for commercial.
4. Difference in slope of the driveway ramp and the slope of a line between the gutter and a point on the roadway 5'-0" from gutter line shall not exceed 15%. Reduce driveway ramp slope, not gutter slope, where required.
5. Minimum width of clear passageway for sidewalk shall be 4'-2".
6. Retaining curbs and acquisition of construction easement may be necessary for narrow sidewalks or curb heights in excess of 6".
7. Across the pedestrian route at curb ramp locations, the gutter pan slope shall not exceed 1" of depth for each 2'-0" of width.

STATE OF CALIFORNIA
DEPARTMENT OF TRANSPORTATION

CURBS AND DRIVEWAYS

NO SCALE

RSP A87A DATED JULY 19, 2013 SUPERSEDES STANDARD PLAN A87A
DATED MAY 20, 2011 - PAGE 119 OF THE STANDARD PLANS BOOK DATED 2010.

REVISED STANDARD PLAN RSP A87A

Dist	COUNTY	ROUTE	POST MILES TOTAL PROJECT	SHEET No.	TOTAL SHEETS
07	LA	105,405	R2.5, 20.5/R21.1	190	265

REGISTERED CIVIL ENGINEER

January 15, 2016
PLANS APPROVAL DATE

REGISTERED PROFESSIONAL ENGINEER
Michael Janzen
No. 44788
Exp. 3-31-16
CIVIL
STATE OF CALIFORNIA

THE STATE OF CALIFORNIA OR ITS OFFICERS OR AGENTS SHALL NOT BE RESPONSIBLE FOR THE ACCURACY OR COMPLETENESS OF SCANNED COPIES OF THIS PLAN SHEET.

TO ACCOMPANY PLANS DATED 7-1-16

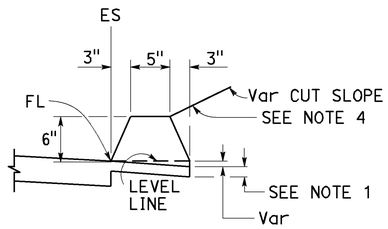

TYPE A
See Notes 3 and 5

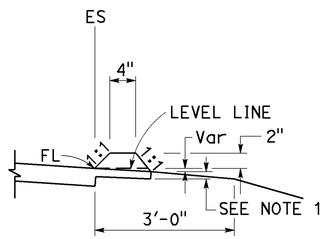

TYPE C

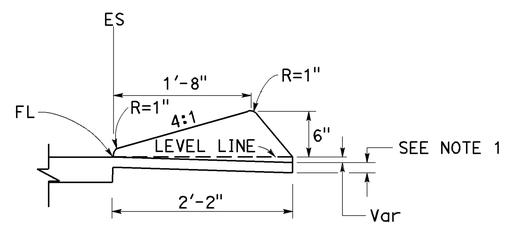

TYPE D

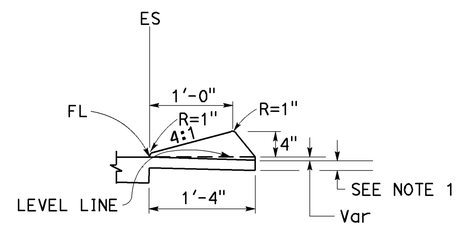

TYPE E

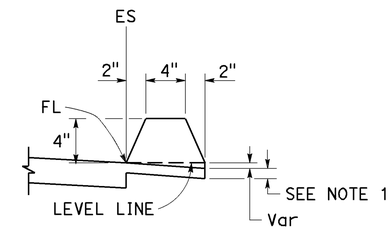

TYPE F
See Note 5

DIKES

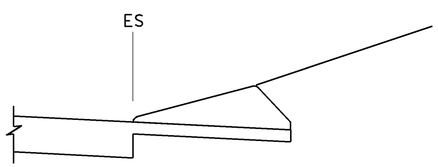

CASE C-1
Cut Slope

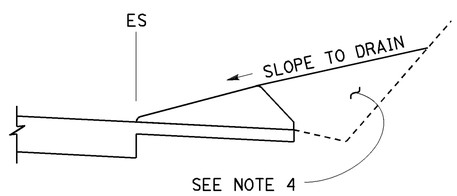

CASE C-2
Cut Slope

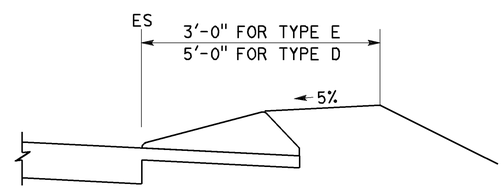

CASE F

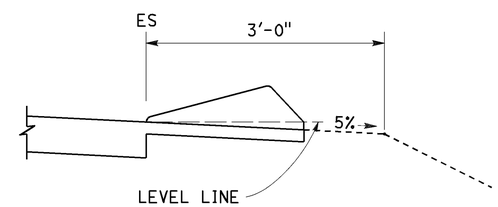

CASE R
See Note 2

TYPE D AND E BACKFILL DETAILS

NOTES:

1. For HMA shoulders only, extend top layer of HMA placed on the shoulder under dike with no joint at the ES. For projects with OGFC shoulders, do not extend OGFC under dike. See project plans for modified dike detail.
2. Case R applies to retrofit only projects where restrictive conditions do not provide enough width for Case F backfill.
3. Type A dike only to be used where restrictive slope conditions do not provide enough width to use Type D or Type E dike.
4. Fill and compact with excavated material to top of dike.
5. Use Type A or F dike, where dike is required with guardrail installations. See Revised Standard Plan RSP A77N4 for dike positioning details. See Revised Standard Plan RSP A77N3 for hinge point offsets with guardrail.

DIKE QUANTITIES

TYPE	CUBIC YARDS PER LINEAR FOOT
A	0.0135
C	0.0038
D	0.0293
E	0.0130
F	0.0066

Quantities based on 5% cross slope.

STATE OF CALIFORNIA
DEPARTMENT OF TRANSPORTATION

HOT MIX ASPHALT DIKES

NO SCALE

RSP A87B DATED JANUARY 15, 2016 SUPERSEDES RSP A87B DATED JULY 19, 2013 AND STANDARD PLAN A87B DATED MAY 20, 2011 - PAGE 120 OF THE STANDARD PLANS BOOK DATED 2010.

REVISED STANDARD PLAN RSP A87B

2010 REVISED STANDARD PLAN RSP A87B

11-17-15

Dist	COUNTY	ROUTE	POST MILES TOTAL PROJECT	SHEET No.	TOTAL SHEETS
07	LA	105,405	R2.5, 20.5/R21.1	191	265

William K. Farnbach
REGISTERED CIVIL ENGINEER

July 19, 2013
PLANS APPROVAL DATE

REGISTERED PROFESSIONAL ENGINEER
William K. Farnbach
No. C49042
Exp. 9-30-14
CIVIL
STATE OF CALIFORNIA

THE STATE OF CALIFORNIA OR ITS OFFICERS OR AGENTS SHALL NOT BE RESPONSIBLE FOR THE ACCURACY OR COMPLETENESS OF SCANNED COPIES OF THIS PLAN SHEET.

TO ACCOMPANY PLANS DATED 7-1-16

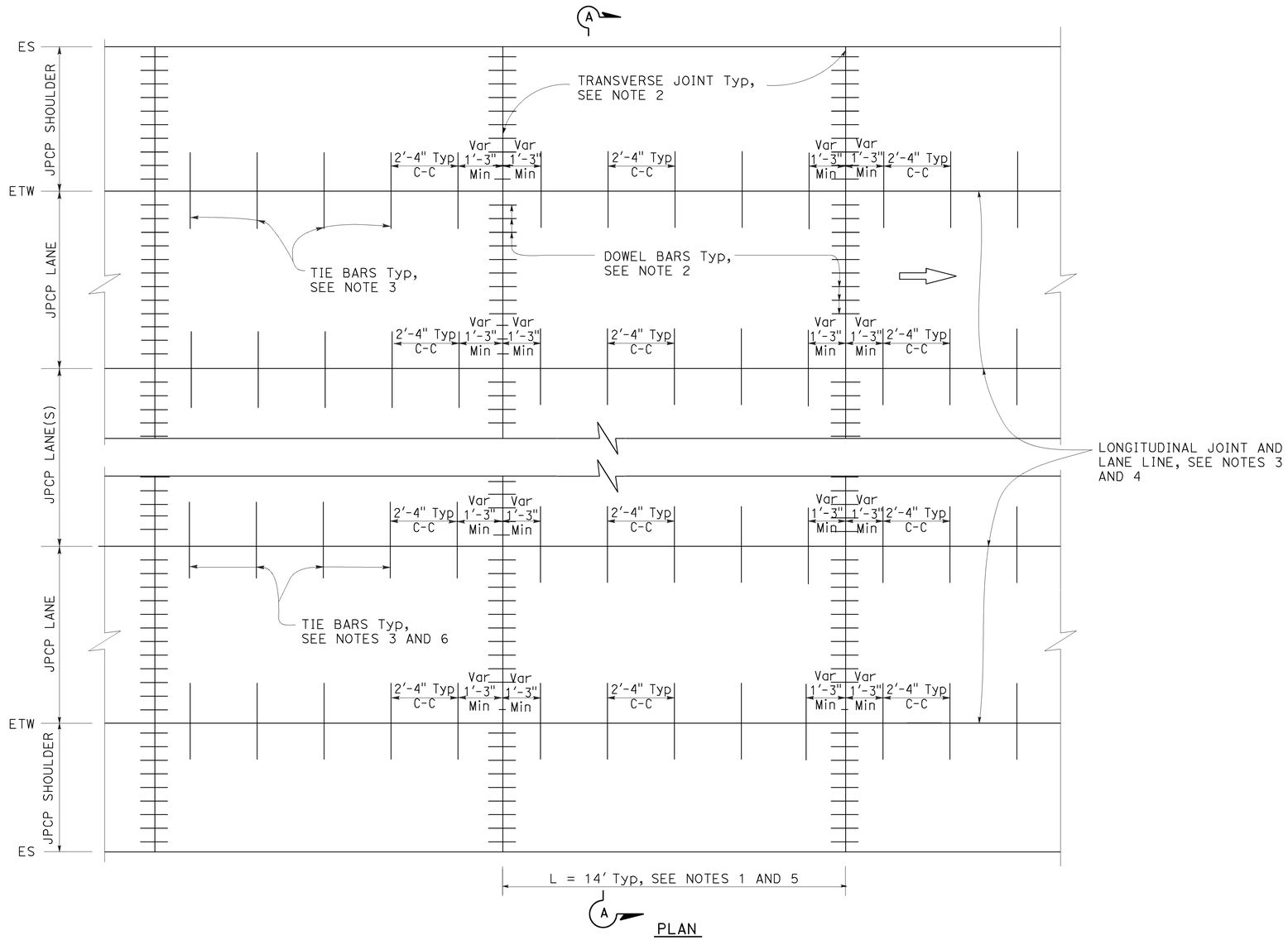

PLAN

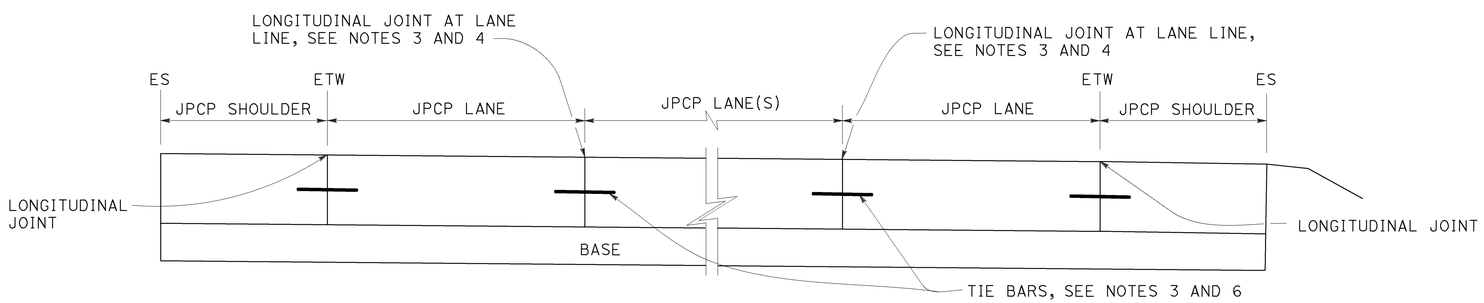

SECTION A-A

NOTES:

1. Transverse joint spacing may be adjusted to no less than 10' and no more than 14' to conform to bridges, change in pavement type, and hardened concrete pavement.
2. For transverse joint and dowel bar details not shown, see Revised Standard Plan RSP P10.
3. For longitudinal joint and tie bar details not shown, see Revised Standard Plan RSP P15.
4. For additional longitudinal joint layout details, see Revised Standard Plan RSP P18.
5. For joint layout at intersections, see Project Plans.
6. For dowel bars at longitudinal joint. see Revised Standard Plan RSP P18.

STATE OF CALIFORNIA
DEPARTMENT OF TRANSPORTATION

JOINTED PLAIN CONCRETE PAVEMENT NEW CONSTRUCTION

NO SCALE

RSP P1 DATED JULY 19, 2013 SUPERSEDES STANDARD PLAN P1
DATED MAY 20, 2011 - PAGE 125 OF THE STANDARD PLANS BOOK DATED 2010.

REVISED STANDARD PLAN RSP P1

2010 REVISED STANDARD PLAN RSP P1

5-31-13

Dist	COUNTY	ROUTE	POST MILES TOTAL PROJECT	SHEET No.	TOTAL SHEETS
07	LA	105,405	R2.5, 20.5/R21.1	192	265

William K. Farnbach
REGISTERED CIVIL ENGINEER

July 19, 2013
PLANS APPROVAL DATE

REGISTERED PROFESSIONAL ENGINEER
William K. Farnbach
No. C49042
Exp. 9-30-14
CIVIL
STATE OF CALIFORNIA

THE STATE OF CALIFORNIA OR ITS OFFICERS OR AGENTS SHALL NOT BE RESPONSIBLE FOR THE ACCURACY OR COMPLETENESS OF SCANNED COPIES OF THIS PLAN SHEET.

TO ACCOMPANY PLANS DATED 7-1-16

2010 REVISED STANDARD PLAN RSP P3A

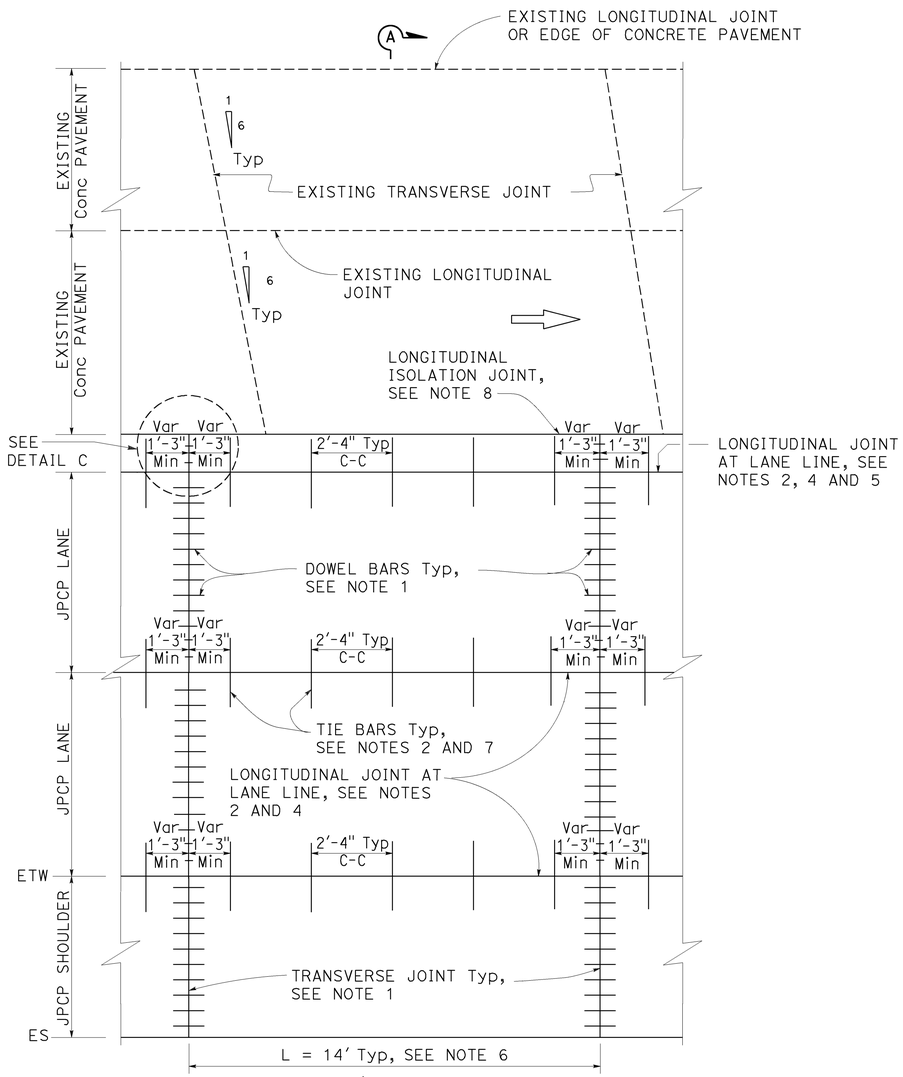

A
PLAN
ISOLATED
See Note 3

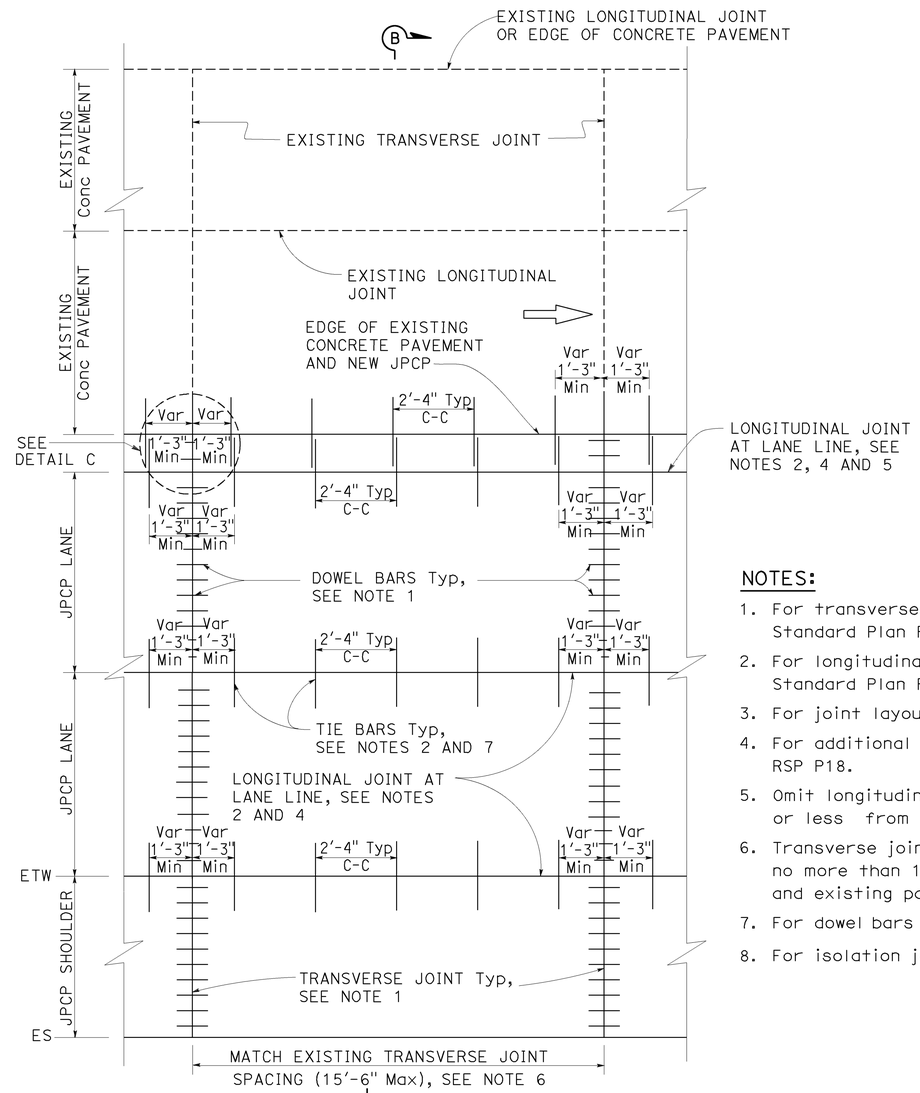

B
PLAN
TIED
See Note 3

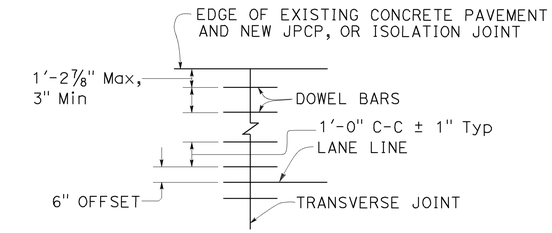

DETAIL C

NOTES:

1. For transverse joint and dowel bar details not shown, see Revised Standard Plan RSP P10.
2. For longitudinal joint and tie bar details not shown, see Revised Standard Plan RSP P15.
3. For joint layout at intersections, see Project Plans.
4. For additional longitudinal joint details, see Revised Standard Plan RSP P18.
5. Omit longitudinal joint when edge of new concrete pavement is 3'-3" or less from JPCP lane line.
6. Transverse joint spacing may be adjusted to no less than 10' and no more than 15'-6" to conform to bridges, change in pavement type and existing pavement.
7. For dowel bars at longitudinal joint. see Revised Standard Plan RSP P18.
8. For isolation joints, see Detail A on Revised Standard Plan RSP P18.

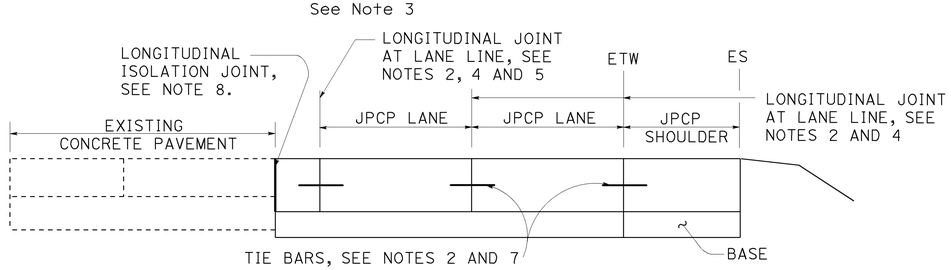

SECTION A-A

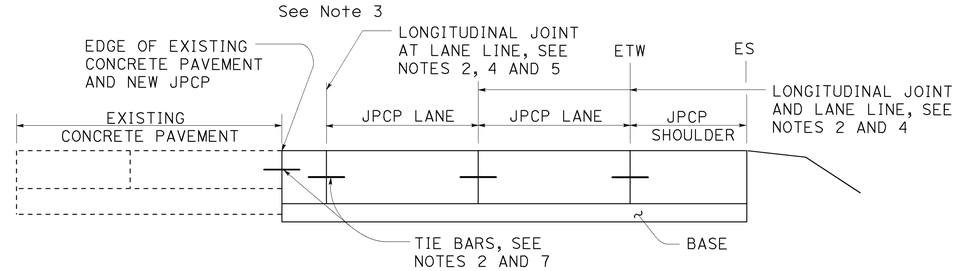

SECTION B-B

STATE OF CALIFORNIA
DEPARTMENT OF TRANSPORTATION

JOINTED PLAIN CONCRETE PAVEMENT LANE & SHOULDER ADDITION OR REPLACEMENT

NO SCALE

RSP P3A DATED JULY 19, 2013 SUPPLEMENTS THE STANDARD PLANS BOOK DATED 2010.

REVISED STANDARD PLAN RSP P3A

5-31-13

Dist	COUNTY	ROUTE	POST MILES TOTAL PROJECT	SHEET No.	TOTAL SHEETS
07	LA	105,405	R2.5, 20.5/R21.1	193	265

William K. Farnbach
REGISTERED CIVIL ENGINEER

July 19, 2013
PLANS APPROVAL DATE

REGISTERED PROFESSIONAL ENGINEER William K. Farnbach No. C49042 Exp. 9-30-14 CIVIL STATE OF CALIFORNIA

THE STATE OF CALIFORNIA OR ITS OFFICERS OR AGENTS SHALL NOT BE RESPONSIBLE FOR THE ACCURACY OR COMPLETENESS OF SCANNED COPIES OF THIS PLAN SHEET.

TO ACCOMPANY PLANS DATED 7-1-16

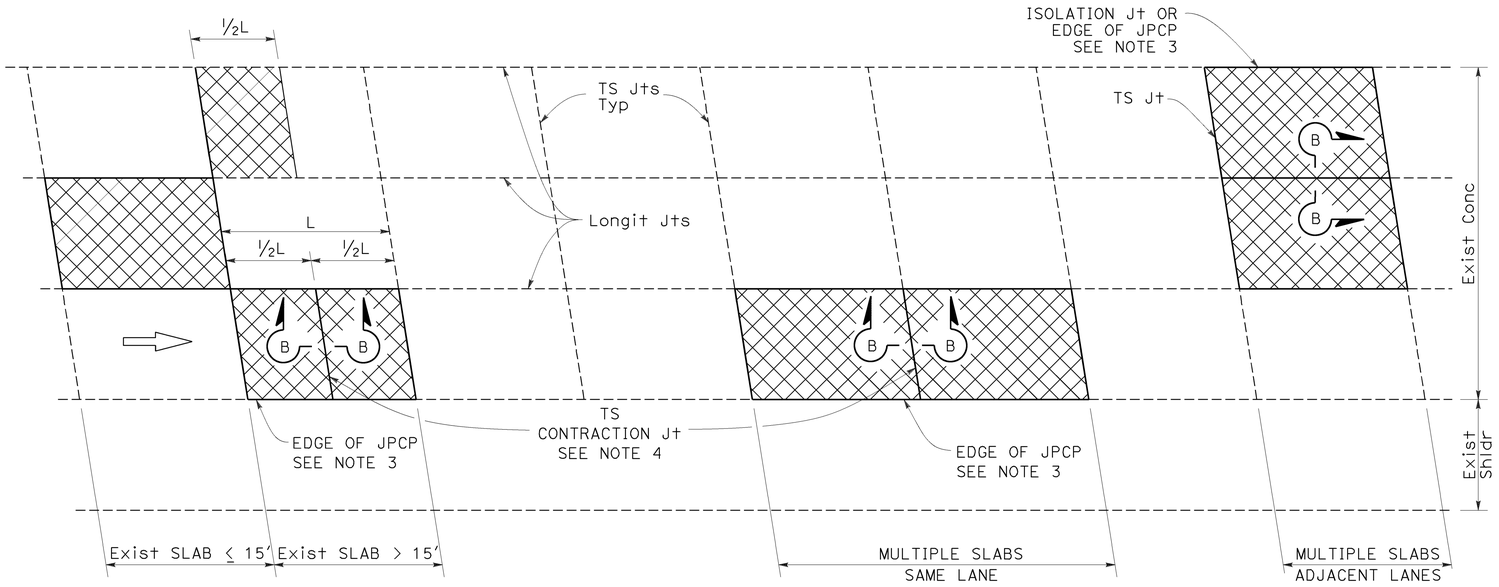

PLAN

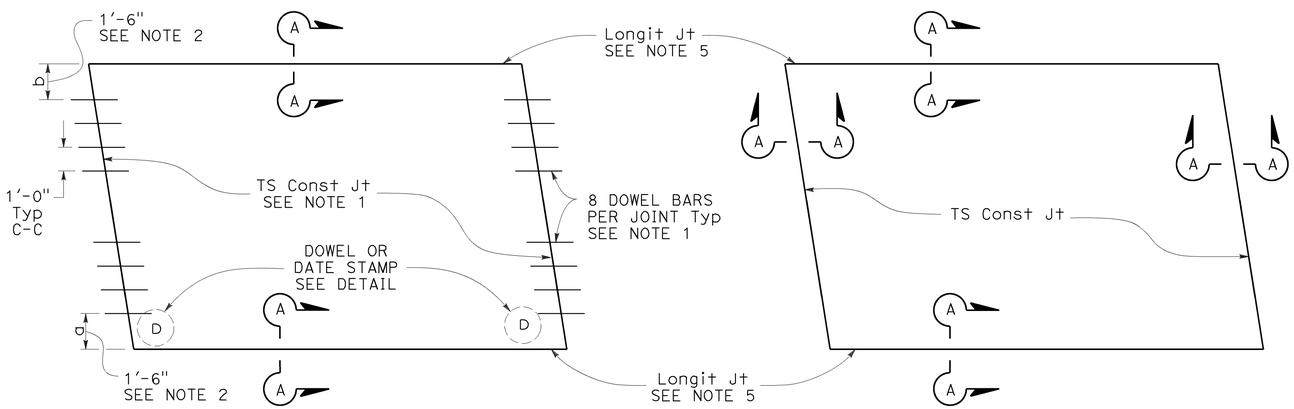

TYPE I
See Design Note 1

TYPE II
See Design Note 2

SLAB LAYOUT

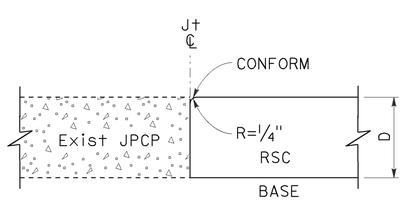

SECTION A-A

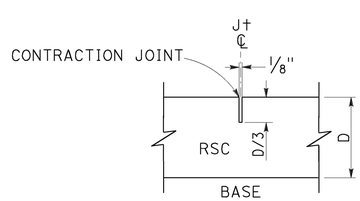

SECTION B-B

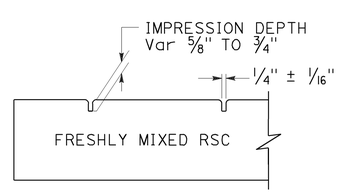

SECTION C-C

LEGEND:

RSC RAPID STRENGTH CONCRETE

INDIVIDUAL SLAB REPLACEMENT WITH RSC

NOTES:

1. For details not shown, see Revised Standard Plan RSP P10.
2. Where the existing outside shoulder is asphalt concrete pavement, "a" = 1'-0" and "b" = 2'-0".
3. Use side forms where edge of RSC pavement is adjacent to asphalt concrete.
4. Transverse contraction joint to match skew of existing joint. Omit dowel bars.
5. Do not place tie bars at longitudinal joints.

DESIGN NOTES:

1. For concrete slab repair with at least 5 years design life.
2. For short term repairs < 5 yrs design life or for slab replacements with cracking and seating.

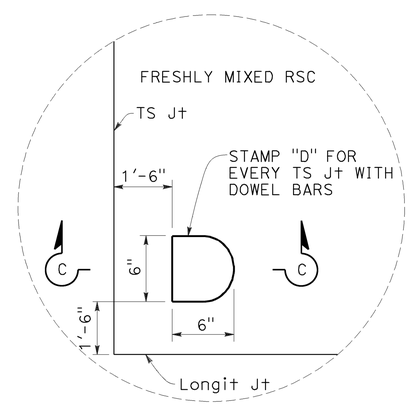

DOWEL STAMP DETAIL

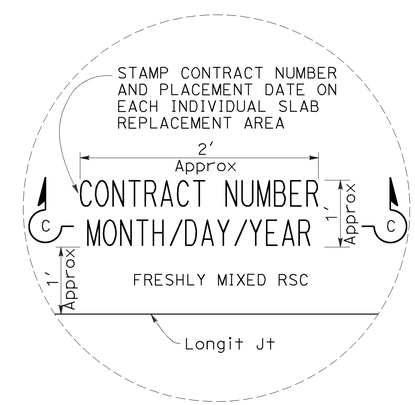

DATE STAMP DETAIL

STATE OF CALIFORNIA
DEPARTMENT OF TRANSPORTATION

INDIVIDUAL SLAB REPLACEMENT WITH RAPID STRENGTH CONCRETE

NO SCALE

RSP P8 DATED JULY 19, 2013 SUPERSEDES RSP P8 DATED APRIL 20, 2012 AND STANDARD PLAN P8 DATED MAY 20, 2011 - PAGE 130 OF THE STANDARD PLANS BOOK DATED 2010.

REVISED STANDARD PLAN RSP P8

2010 REVISED STANDARD PLAN RSP P8

5-31-13

Dist	COUNTY	ROUTE	POST MILES TOTAL PROJECT	SHEET No.	TOTAL SHEETS
07	LA	105,405	R2.5, 20.5/R21.1	194	265

REGISTERED CIVIL ENGINEER

July 19, 2013
PLANS APPROVAL DATE

REGISTERED PROFESSIONAL ENGINEER William K. Farnbach No. C49042 Exp. 9-30-14 CIVIL STATE OF CALIFORNIA

THE STATE OF CALIFORNIA OR ITS OFFICERS OR AGENTS SHALL NOT BE RESPONSIBLE FOR THE ACCURACY OR COMPLETENESS OF SCANNED COPIES OF THIS PLAN SHEET.

TO ACCOMPANY PLANS DATED 7-1-16

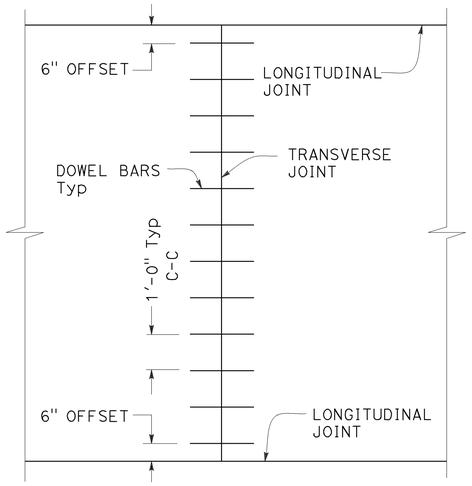

TRANSVERSE JOINT DOWEL BAR LAYOUT

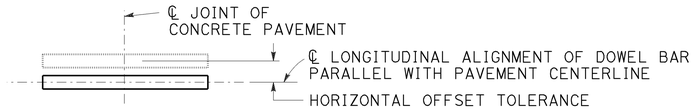

PLAN

HORIZONTAL OFFSET TOLERANCE

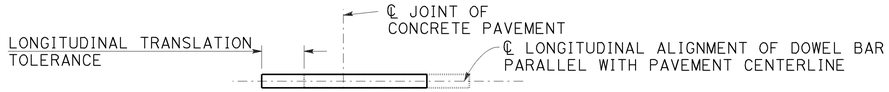

PLAN

LONGITUDINAL TRANSLATION TOLERANCE

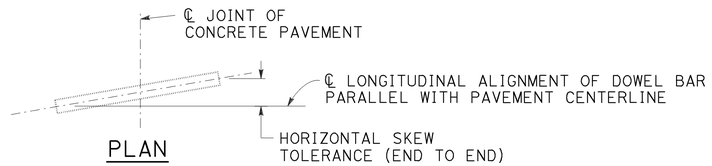

PLAN

HORIZONTAL SKEW TOLERANCE

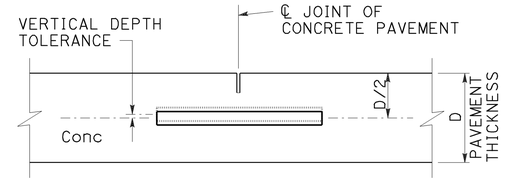

ELEVATION

VERTICAL DEPTH TOLERANCE

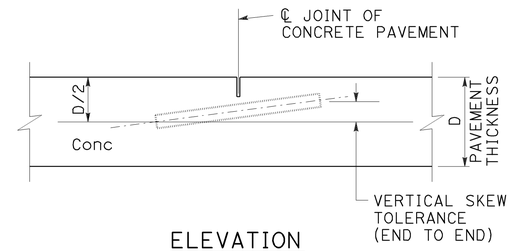

ELEVATION

VERTICAL SKEW TOLERANCE

NOTES:

1. See Revised Standard Plan RSP P1 for typical dowel bar placement and locations.
2. Where fresh concrete pavement is placed against new concrete or existing concrete pavement, rounding the corner of the existing concrete pavement is not required.
3. May also use ¾" Dia dowel bars 2'-4" ± ¼" in length. Center the length of dowel bars at the centerline of longitudinal joint.

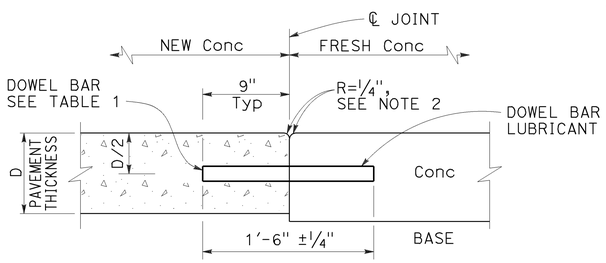

TRANSVERSE CONSTRUCTION JOINT DETAIL

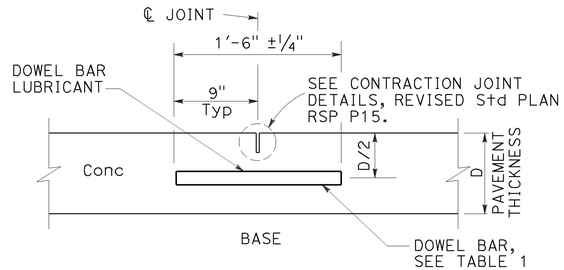

TRANSVERSE CONTRACTION JOINT

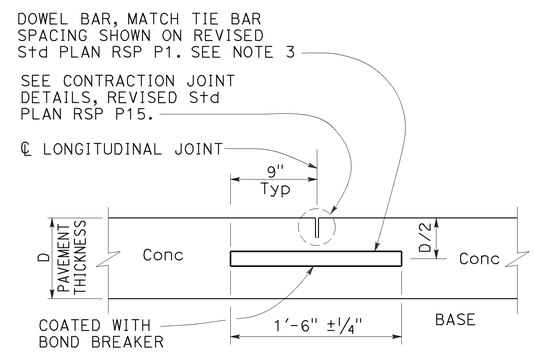

LONGITUDINAL CONTRACTION JOINT WITH DOWEL BARS

See Revised Std Plan RSP P18

TABLE 1

DOWEL BAR DIAMETER TABLE			
PAVEMENT THICKNESS	0.65'	> 0.65' - 0.85'	> 0.85'
MINIMUM DOWEL * BAR DIAMETER	1"	1¼"	1½"

* The drilled hole diameter must be ⅛" to 3/16" larger than the bar diameter.

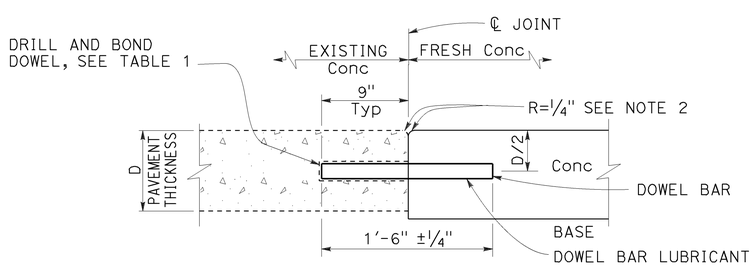

TRANSVERSE CONSTRUCTION JOINT FOR EXISTING CONCRETE PAVEMENT

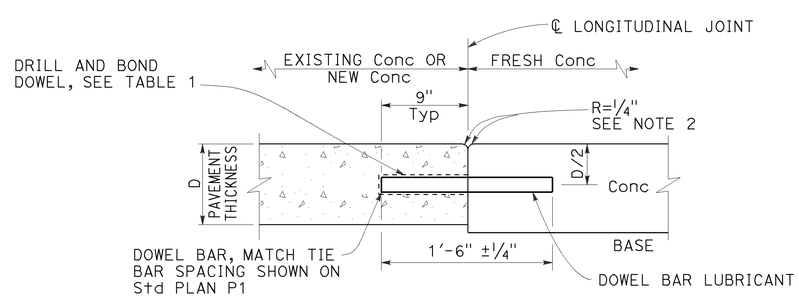

LONGITUDINAL CONSTRUCTION JOINT WITH DOWEL BARS

See Revised Std Plan RSP P18

STATE OF CALIFORNIA
DEPARTMENT OF TRANSPORTATION

CONCRETE PAVEMENT DOWEL BAR DETAILS

NO SCALE

RSP P10 DATED JULY 19, 2013 SUPERSEDES RSP P10 DATED APRIL 20, 2012 AND STANDARD PLAN P10 DATED MAY 20, 2011 - PAGE 131 OF THE STANDARD PLANS BOOK DATED 2010.

REVISED STANDARD PLAN RSP P10

2010 REVISED STANDARD PLAN RSP P10

5-31-13

Dist	COUNTY	ROUTE	POST MILES TOTAL PROJECT	SHEET No.	TOTAL SHEETS
07	LA	105,405	R2.5, 20.5/R21.1	195	265

William K. Farnbach
REGISTERED CIVIL ENGINEER

July 19, 2013
PLANS APPROVAL DATE

REGISTERED PROFESSIONAL ENGINEER
William K. Farnbach
No. C49042
Exp. 9-30-14
CIVIL
STATE OF CALIFORNIA

THE STATE OF CALIFORNIA OR ITS OFFICERS OR AGENTS SHALL NOT BE RESPONSIBLE FOR THE ACCURACY OR COMPLETENESS OF SCANNED COPIES OF THIS PLAN SHEET.

TO ACCOMPANY PLANS DATED 7-1-16

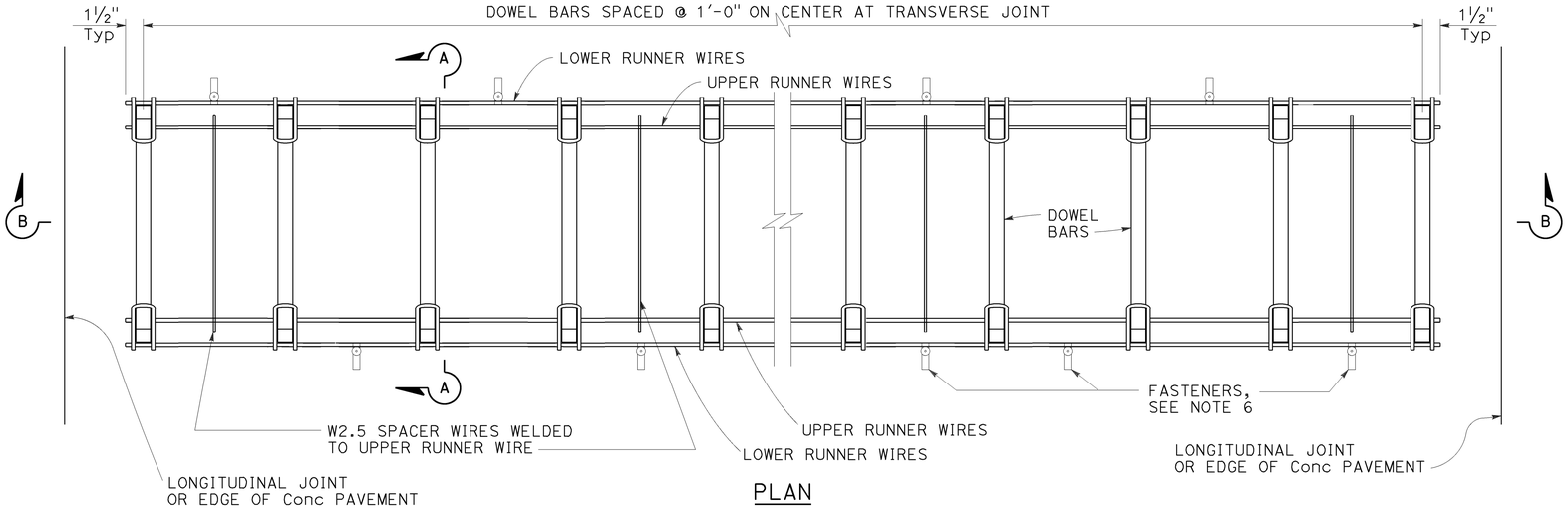

PLAN

DOWEL BAR BASKET (TRANSVERSE JOINT)

See Note 1

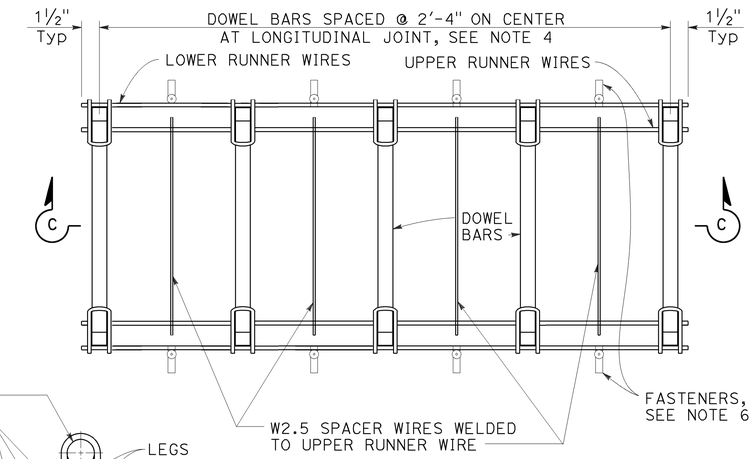

PLAN

DOWEL BAR BASKET (LONGITUDINAL JOINT)

See Note 1

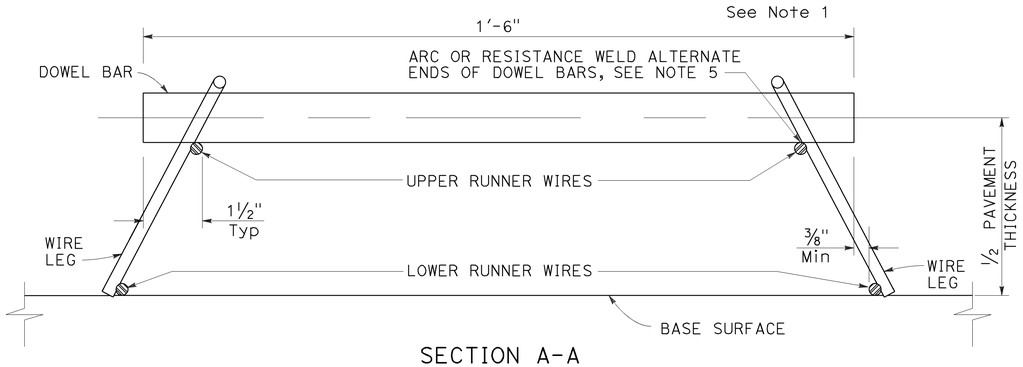

SECTION A-A

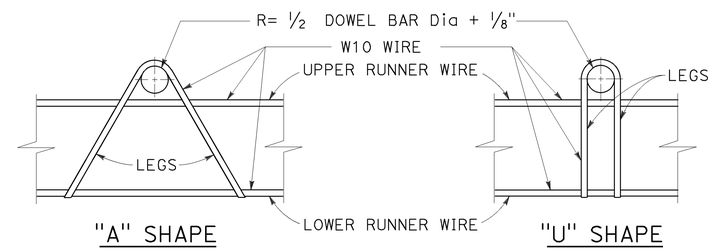

ASSEMBLY FRAME DETAILS

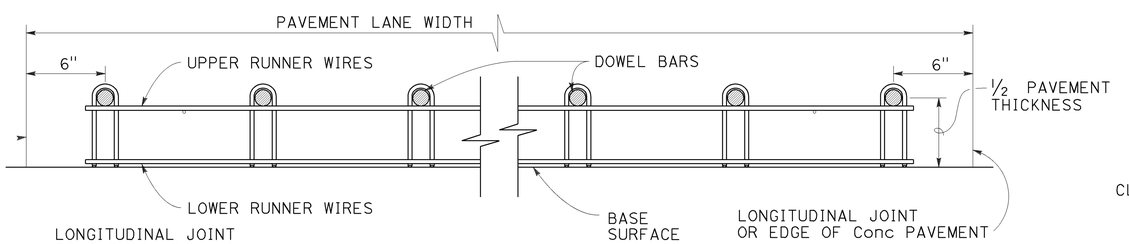

SECTION B-B

See Note 1

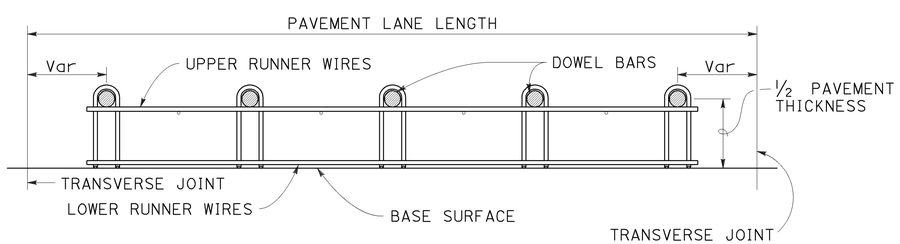

SECTION C-C

See Notes 1 and 4

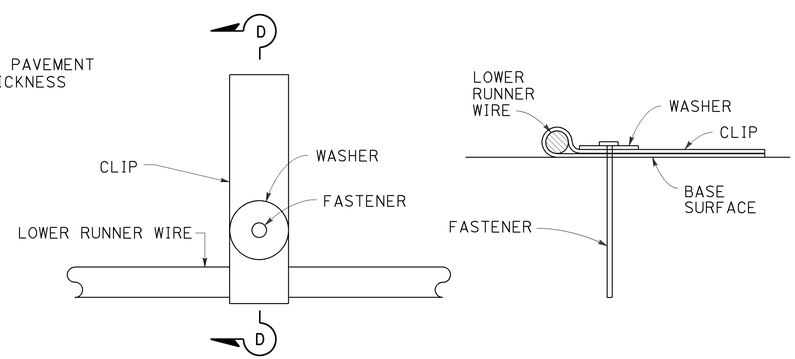

PLAN

SECTION D-D

FASTENER DETAIL

See Note 6

NOTES:

1. "U" frame shape assembly shown. Use either "U" frame shape or "A" frame shape.
2. Wire sizes shown are the minimum required.
3. All wire intersections must be resistance welded.
4. Use tie bar spacing for longitudinal dowel bar locations. See Revised Standard Plans RSP P1, RSP P2, RSP P3A, and RSP P3B for tie bar requirements.
5. Weld may be at the top or bottom of the dowel bar.
6. Use anchor pins where soil or granular base is used. See Revised Standard Plan RSP P17 for Anchor Pin Detail.

STATE OF CALIFORNIA
DEPARTMENT OF TRANSPORTATION

CONCRETE PAVEMENT DOWEL BAR BASKET DETAILS

NO SCALE

RSP P12 DATED JULY 19, 2013 SUPERSEDES STANDARD PLAN P12
DATED MAY 20, 2011 - PAGE 132 OF THE STANDARD PLANS BOOK DATED 2010.

REVISED STANDARD PLAN RSP P12

2010 REVISED STANDARD PLAN RSP P12

5-31-13

Dist	COUNTY	ROUTE	POST MILES TOTAL PROJECT	SHEET No.	TOTAL SHEETS
07	LA	105,405	R2.5, 20.5/R21.1	196	265

William K. Farnbach
REGISTERED CIVIL ENGINEER

July 19, 2013
PLANS APPROVAL DATE

REGISTERED PROFESSIONAL ENGINEER William K. Farnbach No. C49042 Exp. 9-30-14 CIVIL STATE OF CALIFORNIA

THE STATE OF CALIFORNIA OR ITS OFFICERS OR AGENTS SHALL NOT BE RESPONSIBLE FOR THE ACCURACY OR COMPLETENESS OF SCANNED COPIES OF THIS PLAN SHEET.

TO ACCOMPANY PLANS DATED 7-1-16

2010 REVISED STANDARD PLAN RSP P15

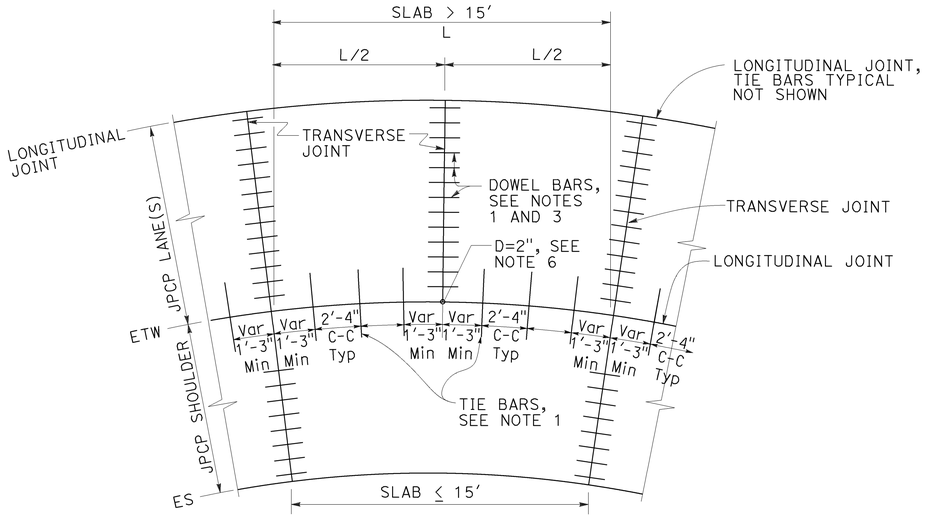

TIE BAR LAYOUT IN CURVED LANES

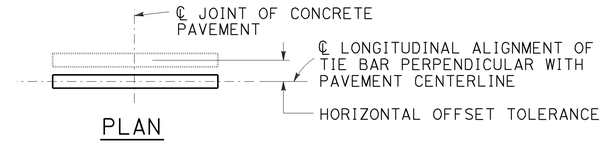

PLAN

HORIZONTAL OFFSET TOLERANCE

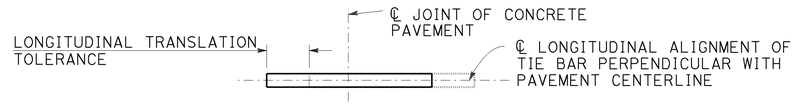

PLAN

LONGITUDINAL TRANSLATION TOLERANCE

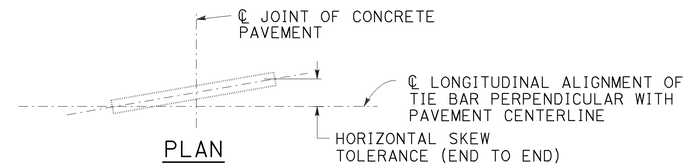

PLAN

HORIZONTAL SKEW TOLERANCE

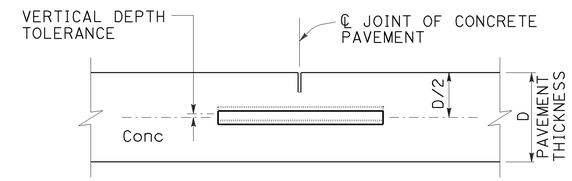

ELEVATION

VERTICAL DEPTH TOLERANCE

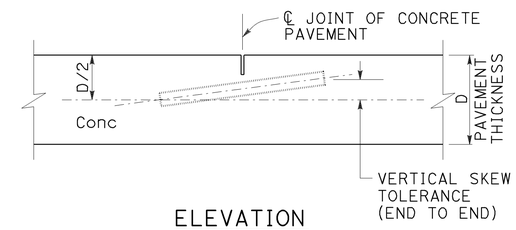

ELEVATION

VERTICAL SKEW TOLERANCE

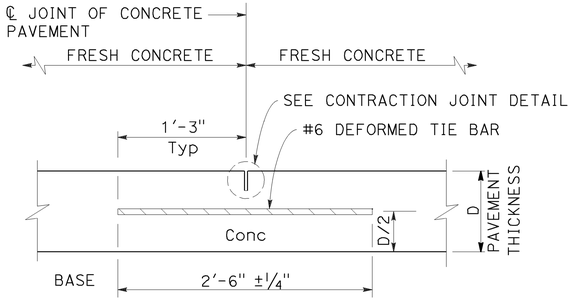

LONGITUDINAL CONTRACTION JOINT

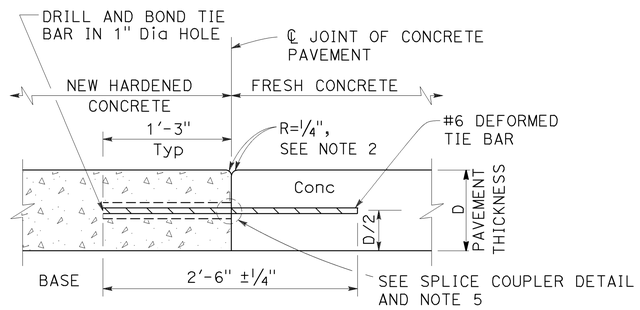

LONGITUDINAL CONSTRUCTION JOINT

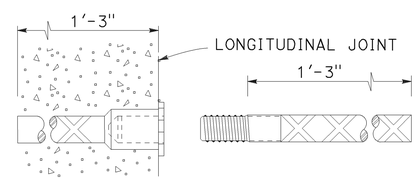

ALTERNATIVE SPLICE COUPLER

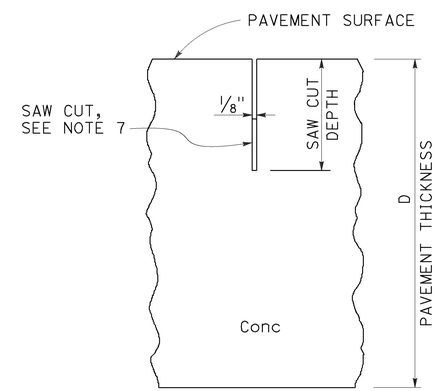

CONTRACTION JOINT DETAIL

NOTES:

1. See Revised Standard Plan RSP P1 for typical dowel bar and tie bar placement and locations.
2. Where new pavement is placed against existing concrete pavement, rounding the corner is not required.
3. For dowel bar sizes, See Revised Standard Plan RSP P10.
4. Tie bar details apply to inside widenings.
5. Use either drill and bond or splice couplers.
6. Full depth drilled hole. Fill hole with filler material.
7. The bottom of the saw cut must be at least 0.5" clear of any dowel bar, tie bar and bar reinforcement.

STATE OF CALIFORNIA
DEPARTMENT OF TRANSPORTATION

CONCRETE PAVEMENT-TIE BAR DETAILS

NO SCALE

RSP P15 DATED JULY 19, 2013 SUPPLEMENTS THE STANDARD PLANS BOOK DATED 2010.

REVISED STANDARD PLAN RSP P15

5-31-13

Dist	COUNTY	ROUTE	POST MILES TOTAL PROJECT	SHEET No.	TOTAL SHEETS
07	LA	105,405	R2.5, 20.5/R21.1	197	265

William K. Farnbach
REGISTERED CIVIL ENGINEER

July 19, 2013
PLANS APPROVAL DATE

REGISTERED PROFESSIONAL ENGINEER
William K. Farnbach
No. C49042
Exp. 9-30-14
CIVIL
STATE OF CALIFORNIA

THE STATE OF CALIFORNIA OR ITS OFFICERS OR AGENTS SHALL NOT BE RESPONSIBLE FOR THE ACCURACY OR COMPLETENESS OF SCANNED COPIES OF THIS PLAN SHEET.

TO ACCOMPANY PLANS DATED 7-1-16

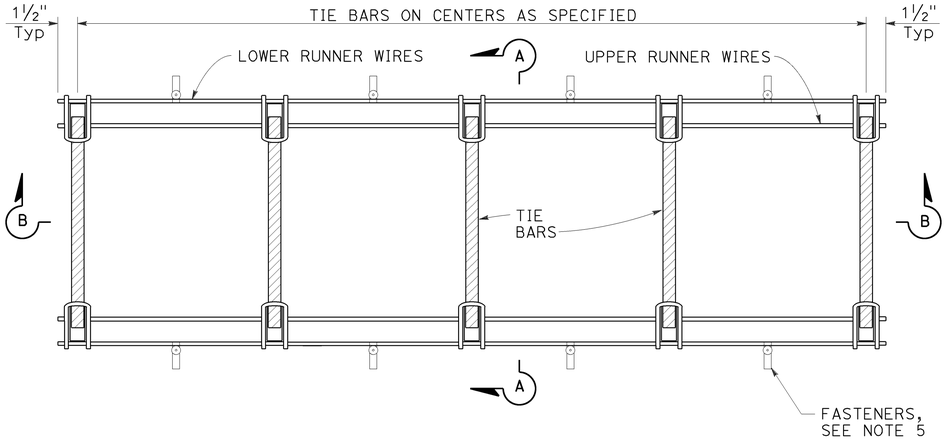

PLAN

TIE BAR BASKET

(Tie bars at longitudinal joint)
See Note 1

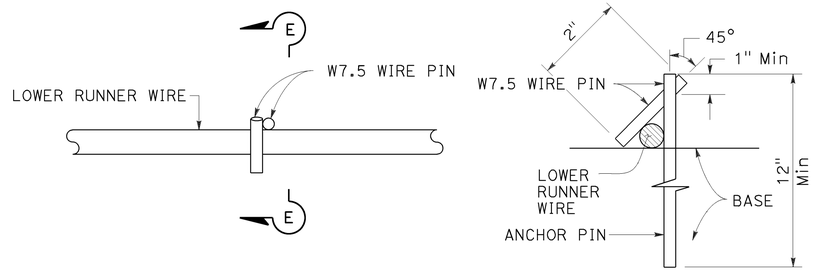

PLAN

SECTION E-E

ANCHOR PIN DETAIL

See Note 5

NOTES:

1. "U" frame shape assembly shown. Use either "U" frame shape or "A" frame shape.
2. Wire sizes shown are the minimum required.
3. All wire intersections must be resistance welded.
4. Weld may be at top or bottom of tie bars.
5. Use anchor pins where soil or granular base is used.

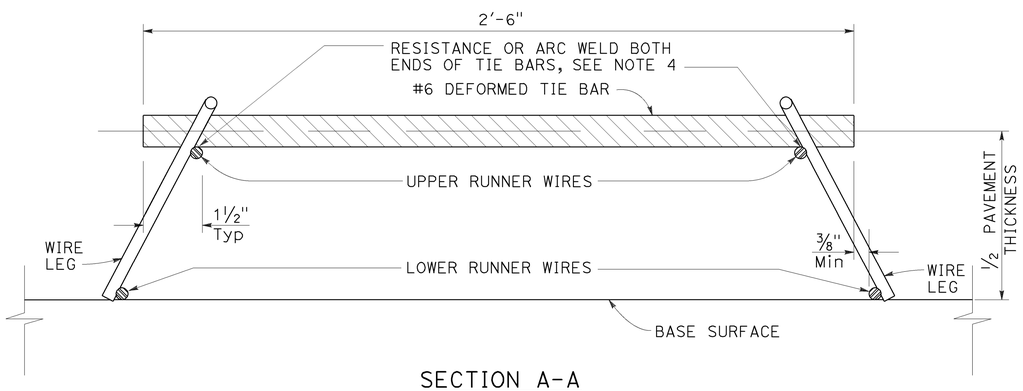

SECTION A-A

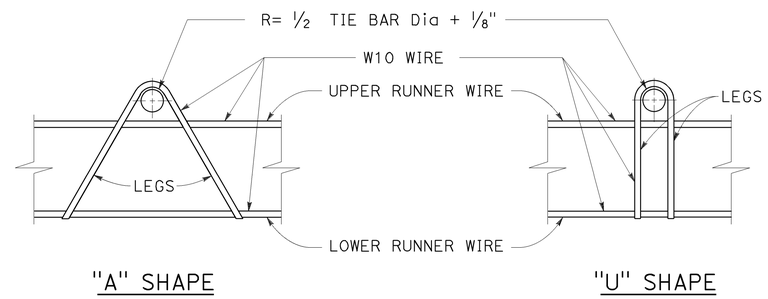

"A" SHAPE

"U" SHAPE

ASSEMBLY FRAME DETAILS

See Note 1

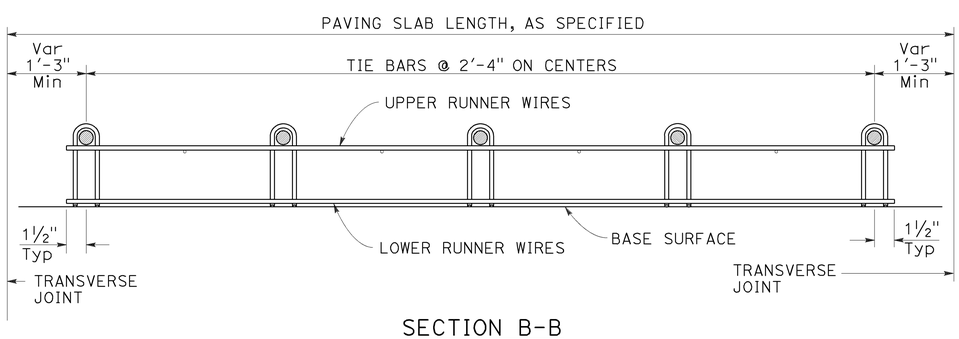

SECTION B-B

See Note 1

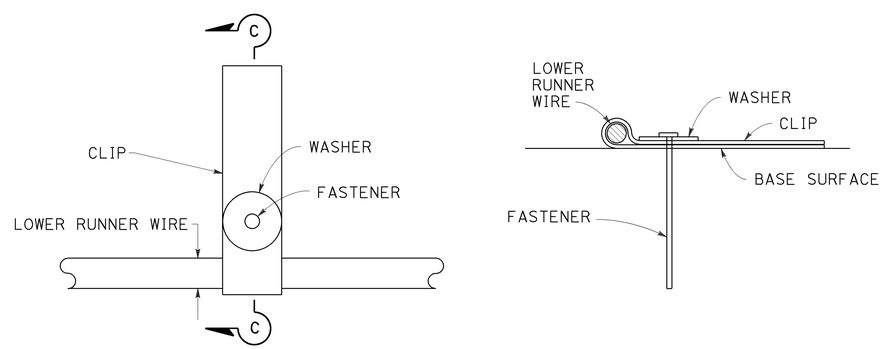

PLAN

SECTION C-C

FASTENER DETAIL

STATE OF CALIFORNIA
DEPARTMENT OF TRANSPORTATION

CONCRETE PAVEMENT TIE BAR BASKET DETAILS

NO SCALE

RSP P17 DATED JULY 19, 2013 SUPERSEDES STANDARD PLAN P17
DATED MAY 20, 2011 - PAGE 134 OF THE STANDARD PLANS BOOK DATED 2010.

REVISED STANDARD PLAN RSP P17

2010 REVISED STANDARD PLAN RSP P17

5-31-13

Dist	COUNTY	ROUTE	POST MILES TOTAL PROJECT	SHEET No.	TOTAL SHEETS
07	LA	105,405	R2.5, 20.5/R21.1	198	265

William K. Farnbach
REGISTERED CIVIL ENGINEER

July 19, 2013
PLANS APPROVAL DATE

REGISTERED PROFESSIONAL ENGINEER William K. Farnbach No. C49042 Exp. 9-30-14 CIVIL STATE OF CALIFORNIA

THE STATE OF CALIFORNIA OR ITS OFFICERS OR AGENTS SHALL NOT BE RESPONSIBLE FOR THE ACCURACY OR COMPLETENESS OF SCANNED COPIES OF THIS PLAN SHEET.

TO ACCOMPANY PLANS DATED 7-1-16

2010 REVISED STANDARD PLAN RSP P18

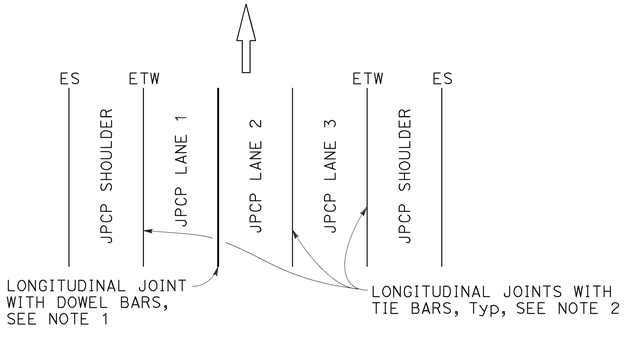

3 LANES WITH CONCRETE SHOULDERS
PLAN

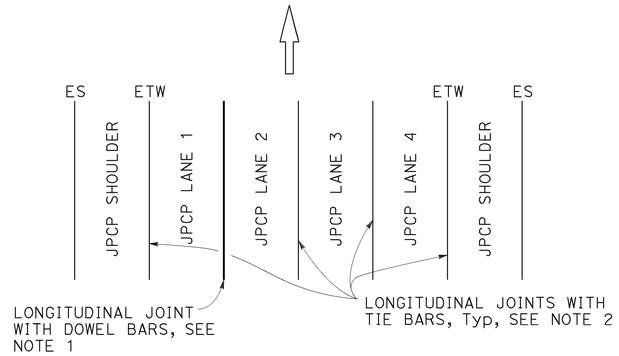

4 LANES WITH CONCRETE SHOULDERS
PLAN

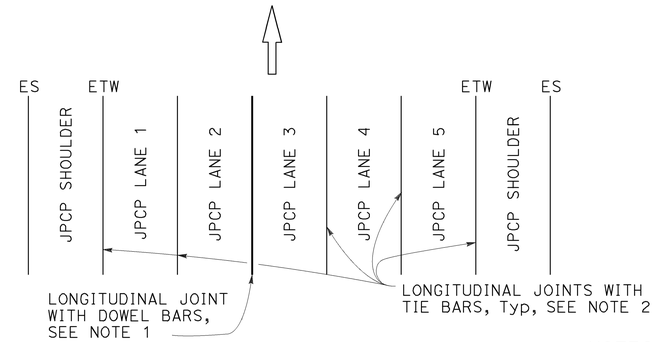

5 LANES WITH CONCRETE SHOULDERS
PLAN

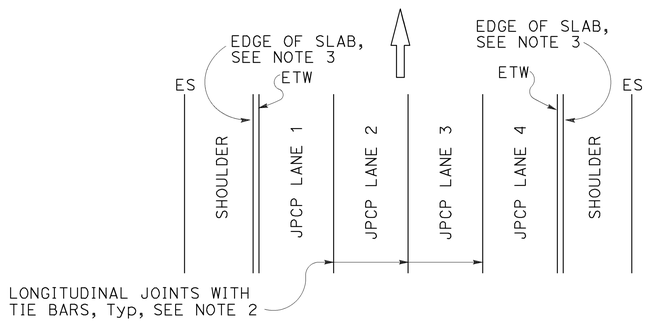

4 LANES OR LESS WITH AC SHOULDERS
PLAN

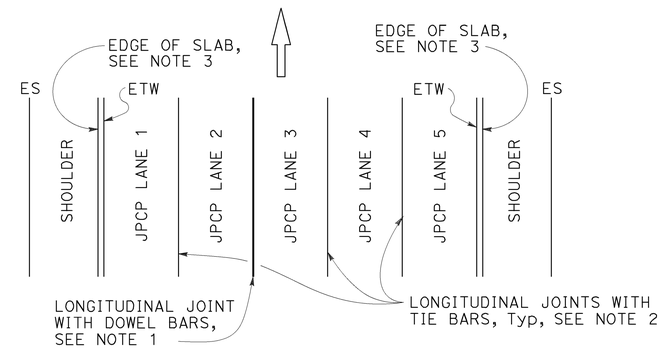

5 LANES WITH AC SHOULDERS
PLAN

NEW CONSTRUCTION

Location of Longitudinal Joints
For JPCP

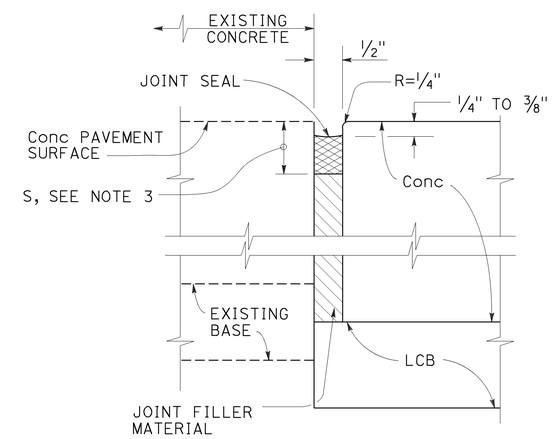

DETAIL "A"

ISOLATION JOINT

NOTES:

1. See Revised Standard Plan RSP P10 for longitudinal joint with dowel bars.
2. See Revised Standard Plan RSP P15 for longitudinal joint with tie bars.
3. S= Reservoir depth.
   S= 7/8" ± 1/16" for asphalt rubber seals
   S= 9/16" ± 1/16" for silicone seals
   Preformed compression seals must be 13/16" wide and S= 1 11/16" ± 1/16"

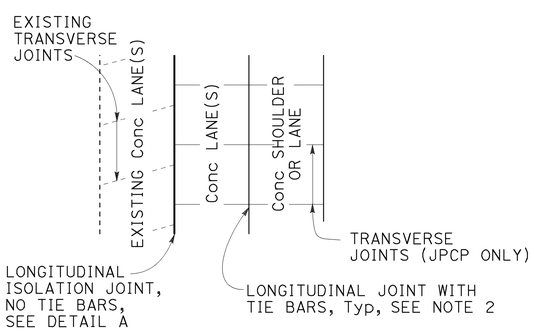

CASE 1
PLAN

Transverse Joints do not align between new and existing.

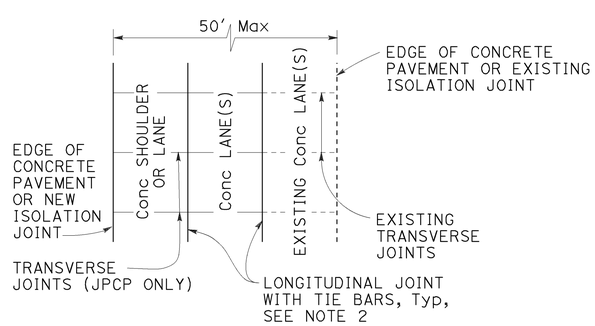

CASE 2
PLAN

Transverse Joints align between new and existing.
(For JPCP only)

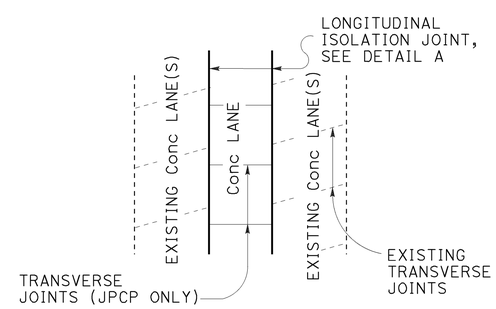

CASE 3 (INTERIOR LANE REPLACEMENT)
PLAN

Transverse Joints do not align between new and existing.

LANE/SHOULDER ADDITION OR RECONSTRUCTION

For JPCP and CRCP

STATE OF CALIFORNIA
DEPARTMENT OF TRANSPORTATION

CONCRETE PAVEMENT LANE SCHEMATICS AND ISOLATION JOINT DETAIL

NO SCALE

RSP P18 DATED JULY 19, 2013 SUPERSEDES RSP P18 DATED APRIL 20, 2012 AND STANDARD PLAN P18 DATED MAY 20, 2011 - PAGE 135 OF THE STANDARD PLANS BOOK DATED 2010.

REVISED STANDARD PLAN RSP P18

5-31-13

Dist	COUNTY	ROUTE	POST MILES TOTAL PROJECT	SHEET No.	TOTAL SHEETS
07	LA	105,405	R2.5, 20.5/R21.1	199	265

William K. Farnbach
REGISTERED CIVIL ENGINEER

July 19, 2013
PLANS APPROVAL DATE

REGISTERED PROFESSIONAL ENGINEER
William K. Farnbach
No. C49042
Exp. 9-30-14
CIVIL
STATE OF CALIFORNIA

THE STATE OF CALIFORNIA OR ITS OFFICERS OR AGENTS SHALL NOT BE RESPONSIBLE FOR THE ACCURACY OR COMPLETENESS OF SCANNED COPIES OF THIS PLAN SHEET.

TO ACCOMPANY PLANS DATED 7-1-16

2010 REVISED STANDARD PLAN RSP P20

NOTES:

1. Details do not apply to isolation joints and longitudinal construction joints.
2. Tie bars, dowel bars, and bar reinforcement are not shown.
3. Depths are measured from the final concrete pavement surface elevation after any grinding.

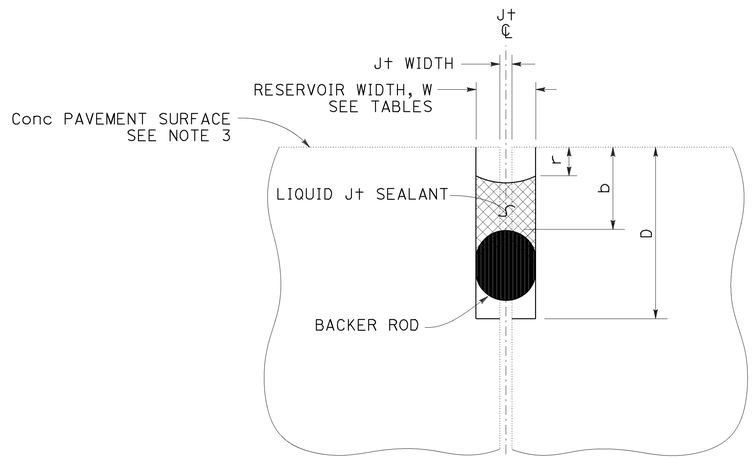

LIQUID JOINT SEALANT

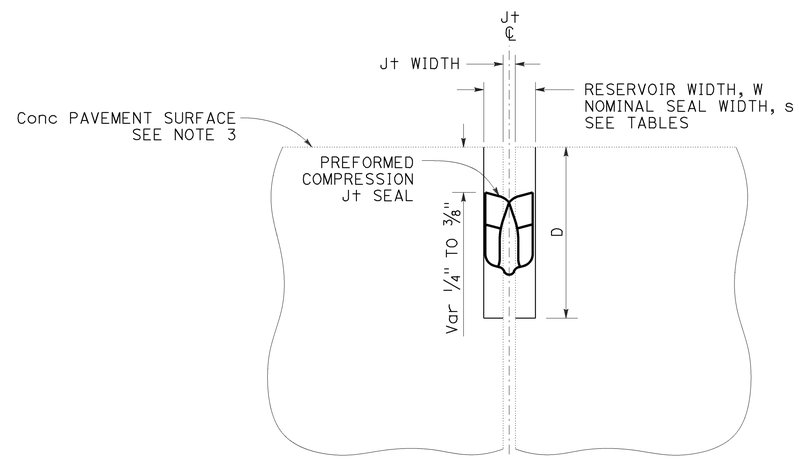

PREFORMED COMPRESSION JOINT SEAL

Const SEASON	Min RESERVOIR WIDTH * W ± 1/16"
WINTER	1/4"
SPRING	3/8"
SUMMER	3/8"
FALL	3/8"

* Minimum reservoir width for replace joint seal = existing joint width + 1/8"

RESERVOIR WIDTH W ±1/16"	LIQUID JOINT SEALANT DIMENSIONS					
	BACKER ROD NOMINAL Dia *	DEPTHS (ASPHALT RUBBER) **		DEPTHS (SILICONE)		
		RESERVOIR D ± 1/4"	BACKER ROD b ± 1/16"	RESERVOIR D ± 1/4"	BACKER ROD b ± 1/16"	RECESS r ± 1/16"
1/4"	3/8"	1 3/4"	7/8"	1 3/8"	1/2"	1/4"
3/8"	1/2"	1 7/8"	7/8"	1 1/2"	1/2"	1/4"
1/2"	3/4"	2"	7/8"	1 3/4"	9/16"	5/16"
5/8"	7/8"	2 1/4"	1"	2"	5/8"	5/16"
3/4"	1"	2 3/4"	1 1/8"	2 1/4"	3/4"	3/8"
7/8"	1 1/4"	3"	1 1/4"	2 1/2"	13/16"	3/8"
1"	1 1/2"	3 1/4"	1 3/8"	2 5/8"	7/8"	3/8"
1 1/8"	1 1/2"	3 1/2"	1 1/2"	2 13/16"	1"	1/2"

* Larger diameter backer rods may be substituted according to manufacturer recommendations if reservoir depth is increased equivalently.

** Asphalt rubber sealant recess depth "r" varies from 1/4" to 3/8"

RESERVOIR WIDTH W ±1/16"	PREFORMED COMPRESSION JOINT SEAL DIMENSIONS	
	NOMINAL SEAL WIDTH s	RESERVOIR DEPTH D ± 1/4"
1/4"	7/16"	1 1/4"
3/8"	11/16"	1 7/16"
1/2"	13/16"	1 11/16"
5/8"	1"	1 7/8"
3/4"	1 1/4"	2 1/8"
7/8"	1 5/8"	2 5/8"
1"	1 5/8"	2 5/8"
1 1/8"	2"	2 7/8"

STATE OF CALIFORNIA
DEPARTMENT OF TRANSPORTATION

JOINT SEALS

NO SCALE

RSP P20 DATED JULY 19, 2013 SUPERSEDES STANDARD PLAN P20
DATED MAY 20, 2011 - PAGE 136 OF THE STANDARD PLANS BOOK DATED 2010.

REVISED STANDARD PLAN RSP P20

6-17-13

Dist	COUNTY	ROUTE	POST MILES TOTAL PROJECT	SHEET No.	TOTAL SHEETS
07	LA	105,405	R2.5, 20.5/R21.1	200	265

William K. Farnbach
REGISTERED CIVIL ENGINEER

July 19, 2013
PLANS APPROVAL DATE

REGISTERED PROFESSIONAL ENGINEER
William K. Farnbach
No. C49042
Exp. 9-30-14
CIVIL
STATE OF CALIFORNIA

THE STATE OF CALIFORNIA OR ITS OFFICERS OR AGENTS SHALL NOT BE RESPONSIBLE FOR THE ACCURACY OR COMPLETENESS OF SCANNED COPIES OF THIS PLAN SHEET.

TO ACCOMPANY PLANS DATED 7-1-16

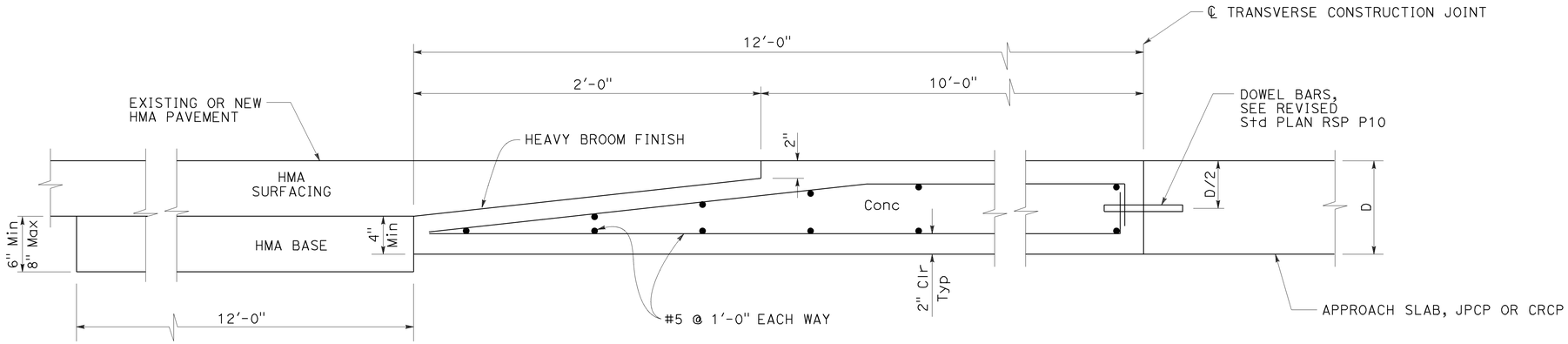

ELEVATION

CONCRETE PAVEMENT TRANSITION PANEL

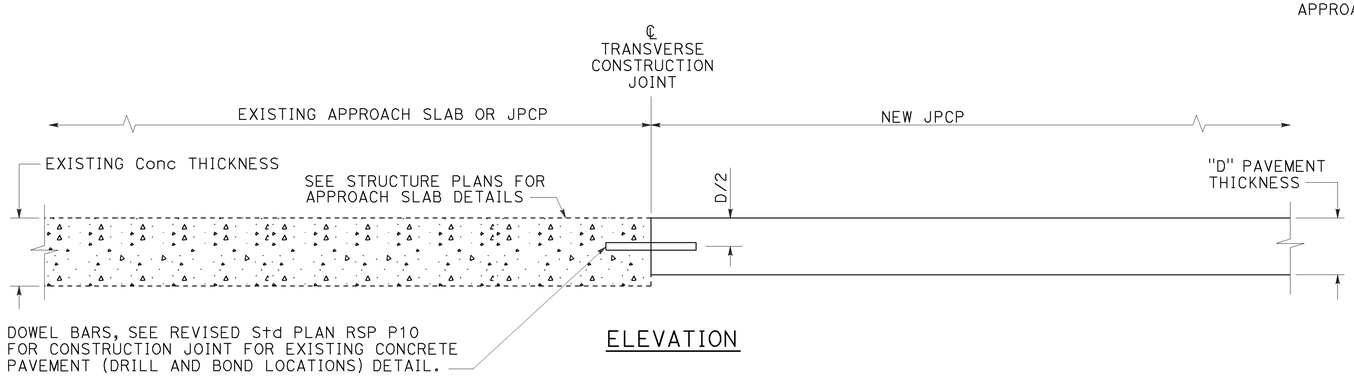

ELEVATION

TERMINAL JOINT TYPE 1

For Exist JPCP or Approach Slab

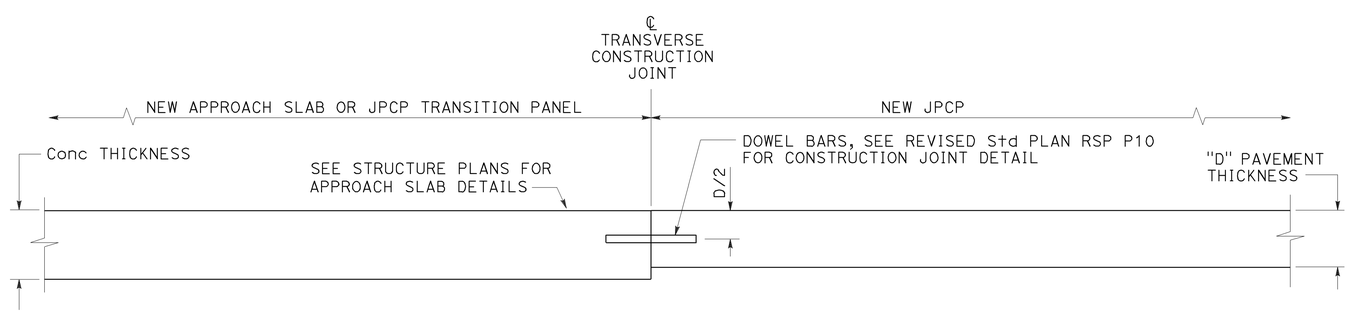

ELEVATION

TERMINAL JOINT TYPE 2

For JPCP Transition Panel or Approach Slab

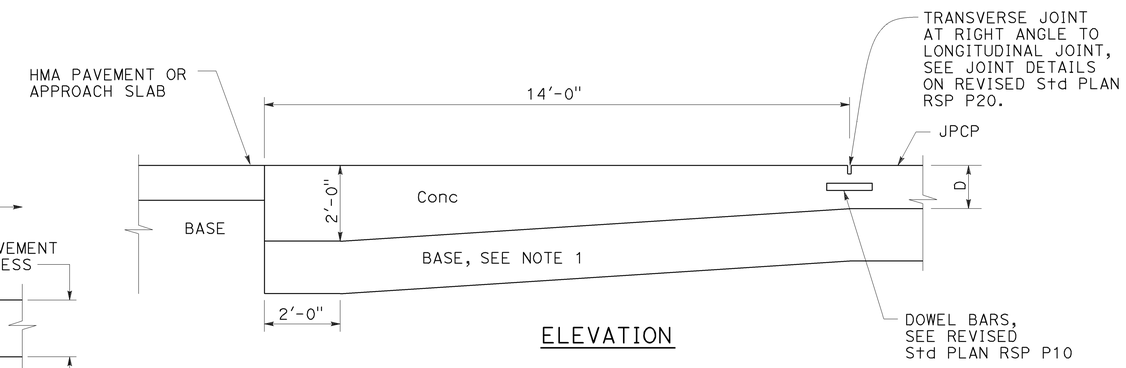

ELEVATION

PAVEMENT END ANCHOR

For HMA Pvmt or Approach Slab

NOTE:

1. Maintain same base thickness as JPCP.

STATE OF CALIFORNIA
DEPARTMENT OF TRANSPORTATION

CONCRETE PAVEMENT-END PANEL PAVEMENT TRANSITIONS

NO SCALE

RSP P30 DATED JULY 19, 2013 SUPERSEDES RSP P30 DATED APRIL 20, 2012 AND STANDARD PLAN P30 DATED MAY 20, 2011 - PAGE 137 OF THE STANDARD PLANS BOOK DATED 2010.

REVISED STANDARD PLAN RSP P30

2010 REVISED STANDARD PLAN RSP P30

3-26-13