Dist	COUNTY	ROUTE	POST MILES TOTAL PROJECT	SHEET No.	TOTAL SHEETS
07	LA	60	R7.4/R8.1	201	238

REGISTERED CIVIL ENGINEER

July 19, 2013
PLANS APPROVAL DATE

REGISTERED PROFESSIONAL ENGINEER Stanley P. Johnson No. C57793 Exp. 3-31-14 CIVIL STATE OF CALIFORNIA

THE STATE OF CALIFORNIA OR ITS OFFICERS OR AGENTS SHALL NOT BE RESPONSIBLE FOR THE ACCURACY OR COMPLETENESS OF SCANNED COPIES OF THIS PLAN SHEET.

TO ACCOMPANY PLANS DATED 6-1-15

NOTE:
Handhole shall be located on the downstream side of traffic.

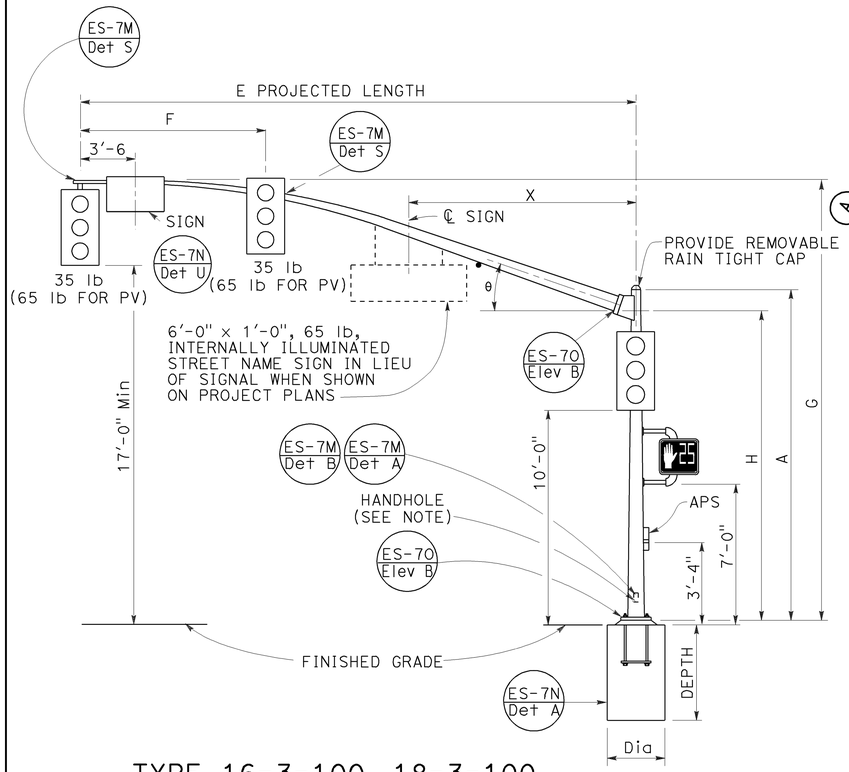

TYPE 16-3-100, 18-3-100, 23-3-100, 27-3-100
ELEVATION A

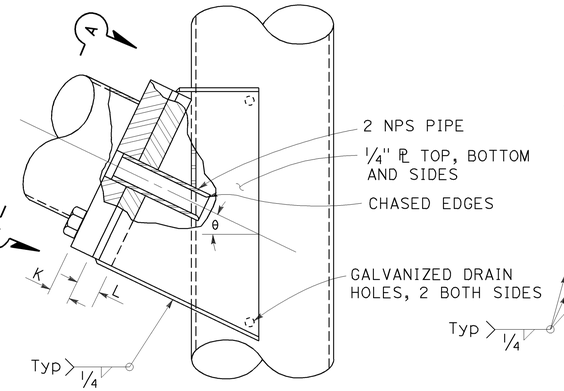

ELEVATION C

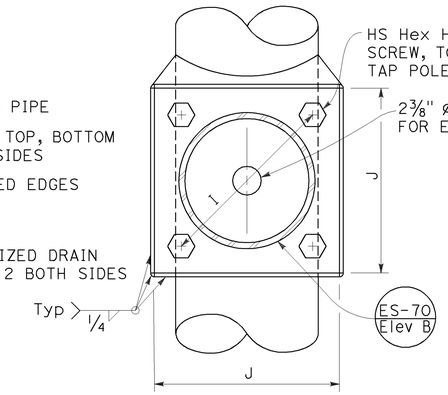

VIEW A-A

SIGNAL MAST ARM CONNECTION
DETAIL A

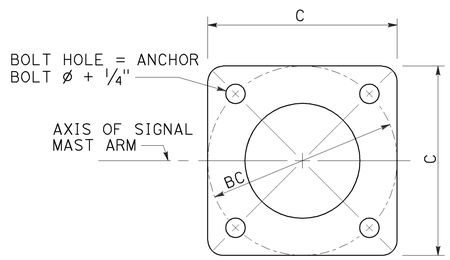

BASE PLATE
DETAIL B

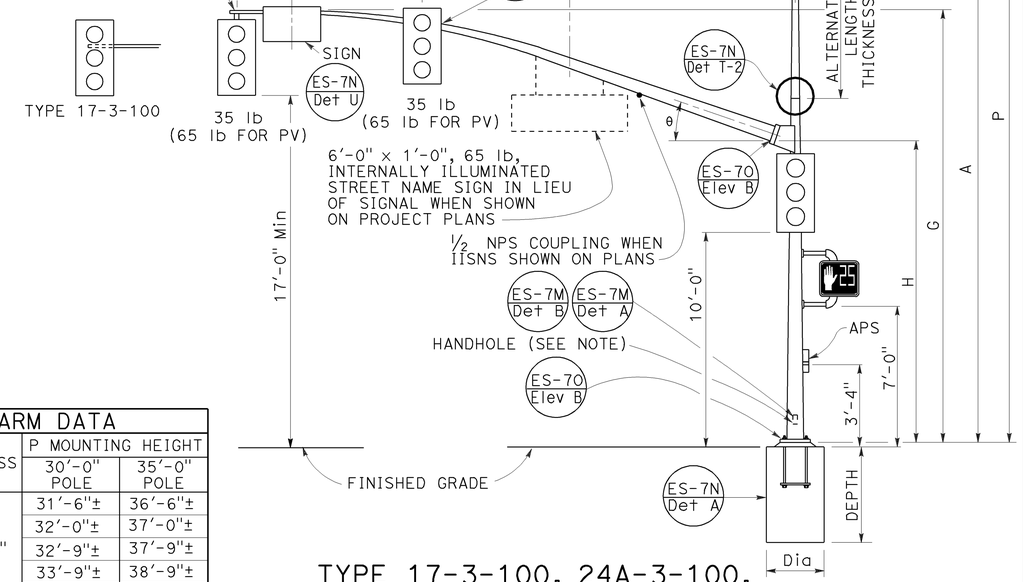

TYPE 17-3-100, 24A-3-100, 19-3-100, 26-3-100, 19A-3-100, 26A-3-100, 24-3-100
ELEVATION B

SIGNAL MAST ARM DATA

E PROJECTED LENGTH	F Min SPACING	G MOUNTING HEIGHT	H	Min OD AT POLE	THICKNESS	I BOLT CIRCLE	HS CAP SCREWS	J PLATE SIZE	K MAST ARM ℙ THICKNESS	L POLE ℙ THICKNESS	θ	X Max
15'-0"	8'-0"	21'-8"±	17'-6"	7 3/8"	0.1793"	12"	1 1/4"-7NC-3"	1'-0"	1 1/4"	1 1/2"	23°	-
20'-0"		21'-8"±		7 3/8"								
25'-0"	12'-0"	22'-8"±	16'-0"	7 3/8"	0.2391"							10'-6"
30'-0"		23'-0"±		8"								
35'-0"	14'-0"			8 3/4"		13"		1'-1"	1 1/2"	1 3/4"	21°	
40'-0"	15'-0"			9 3/8"							15°	13'-0"
45'-0"		23'-8"±		10 1/16"								

LUMINAIRE MAST ARM DATA

M PROJECTED LENGTH	N RISE	Min OD AT POLE	THICKNESS	P MOUNTING HEIGHT 30'-0" POLE	P MOUNTING HEIGHT 35'-0" POLE
6'-0"	2'-0"±	3 1/4"	0.1196"	31'-6"±	36'-6"±
8'-0"	2'-6"±	3 1/2"		32'-0"±	37'-0"±
10'-0"	3'-3"±	3 7/8"		32'-9"±	37'-9"±
12'-0"	4'-3"±			33'-9"±	38'-9"±
15'-0"	4'-9"±	4 1/4"		34'-3"±	39'-3"±

POLE TYPE	LOAD CASE	WIND VELOCITY (mph)	POLE DATA: A HEIGHT	Min OD BASE	Min OD TOP	THICKNESS	ALTERNATIVE SECTION B LENGTH	BOTTOM	TOP	BASE PLATE DATA: C	BC = BOLT CIRCLE	THICKNESS	ANCHOR BOLT SIZE	LUMINAIRE MAST ARM	SIGNAL MAST ARM	CIDH PILE FOUNDATION: DIAMETER	DEPTH	REINFORCED
16-3-100	3	100	18'-6"	10 3/4"	8 1/16"	0.1793"	NONE			1'-5 1/2"	1'-5 1/2"	3"	1 1/2" ø x 42"	NONE	15'-0", 20'-0"	3'-0"	8'-6"	YES
17-3-100			30'-0"		6 7/16"		10'-0"	7 7/8"	6 7/16"					6'-15' 12'-0"				
18-3-100			17'-0"	1'-0"	8 5/16"	0.2391"	NONE			1'-7"			2" ø x 42"	NONE	25'-0", 30'-0"		9'-6"	
19-3-100			30'-0"		7 11/16"		10'-0"	9 1/8"	7 11/16"					6'-15' 12'-0"			11'-0"	
19A-3-100			35'-0"		6 15/16"		15'-0"		6 15/16"					6'-15' 15'-0"				
23-3-100			17'-0"		9 9/16"		NONE							NONE	35'-0"			
24-3-100			30'-0"		7 11/16"		10'-0"	9 1/8"	7 11/16"					6'-15' 12'-0"				
24A-3-100			35'-0"		6 15/16"		15'-0"		6 15/16"					6'-15' 15'-0"				
26-3-100			30'-0"	1'-2"	7 13/16"	0.3125"	10'-0"	9 1/4"	7 13/16"	1'-11"	1'-9"		2 1/2" ø x 42"	6'-15' 12'-0"	40'-0", 45'-0"	3'-6"	12'-0"	
26A-3-100			35'-0"		7 1/16"		15'-0"		7 1/16"					6'-15' 15'-0"				
27-3-100			17'-0"		9 11/16"		NONE							NONE				

[ ] INDICATES MAST ARM LENGTH TO BE USED UNLESS OTHERWISE NOTED ON PLANS.

STATE OF CALIFORNIA
DEPARTMENT OF TRANSPORTATION

ELECTRICAL SYSTEMS (SIGNAL AND LIGHTING STANDARD, CASE 3 SIGNAL MAST ARM LOADING, WIND VELOCITY=100 MPH AND SIGNAL MAST ARM LENGTHS 15' TO 45')

NO SCALE

RSP 7E DATED JULY 19, 2013 SUPERSEDES STANDARD PLAN 7E
DATED MAY 20, 2011 - PAGE 466 OF THE STANDARD PLANS BOOK DATED 2010.

REVISED STANDARD PLAN RSP ES-7E

2010 REVISED STANDARD PLAN RSP ES-7E

6-17-13

Dist	COUNTY	ROUTE	POST MILES TOTAL PROJECT	SHEET No.	TOTAL SHEETS
07	LA	60	R7.4/R8.1	202	238

REGISTERED CIVIL ENGINEER

July 19, 2013
PLANS APPROVAL DATE

REGISTERED PROFESSIONAL ENGINEER Stanley P. Johnson No. C57793 Exp. 3-31-14 CIVIL STATE OF CALIFORNIA

THE STATE OF CALIFORNIA OR ITS OFFICERS OR AGENTS SHALL NOT BE RESPONSIBLE FOR THE ACCURACY OR COMPLETENESS OF SCANNED COPIES OF THIS PLAN SHEET.

NOTE:

TO ACCOMPANY PLANS DATED 6-1-15

1. Handhole shall be located on the downstream side of traffic.

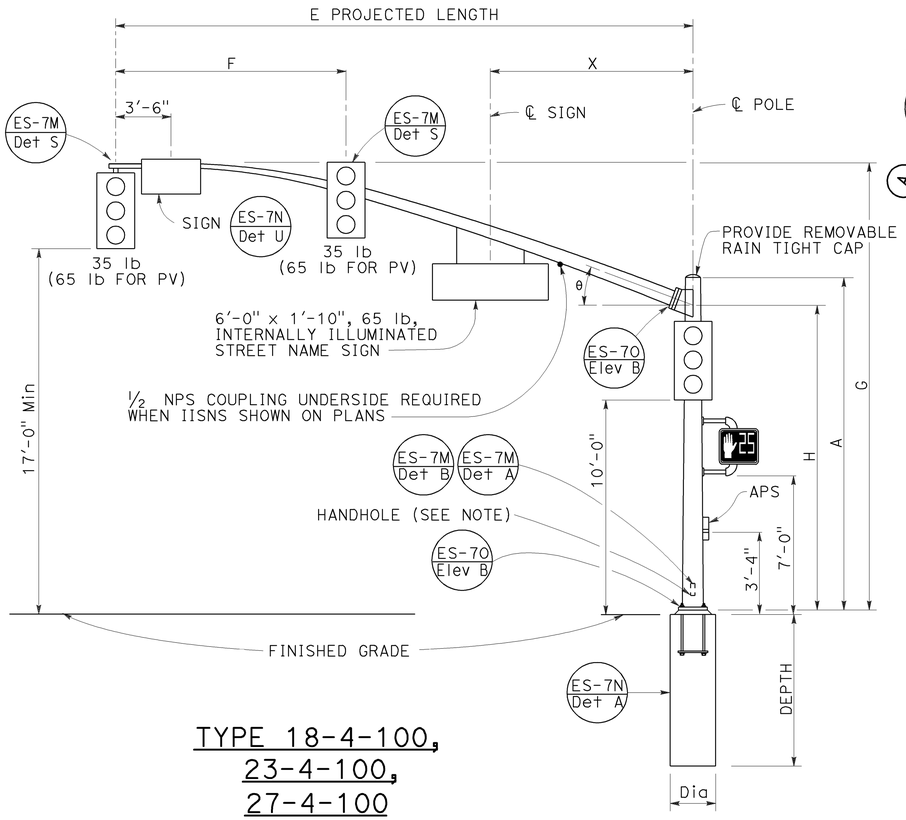

TYPE 18-4-100,
23-4-100,
27-4-100
ELEVATION A

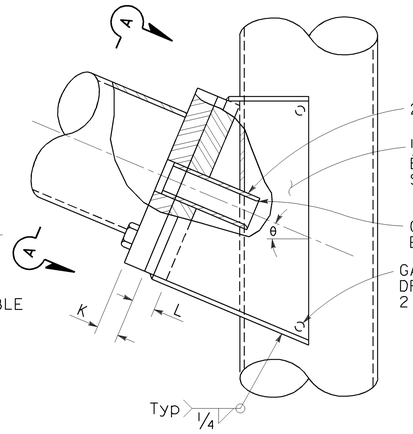

ELEVATION C

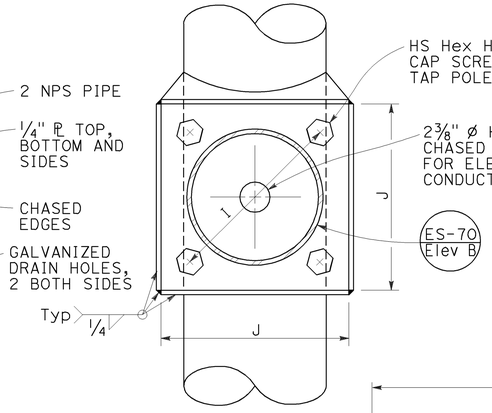

VIEW A-A

SIGNAL MAST ARM CONNECTION
DETAIL A

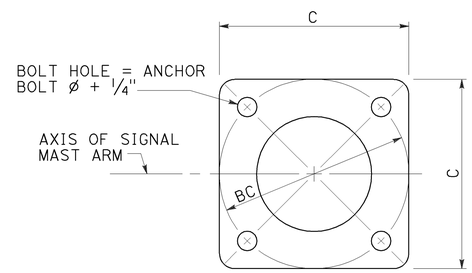

BASE PLATE
DETAIL B

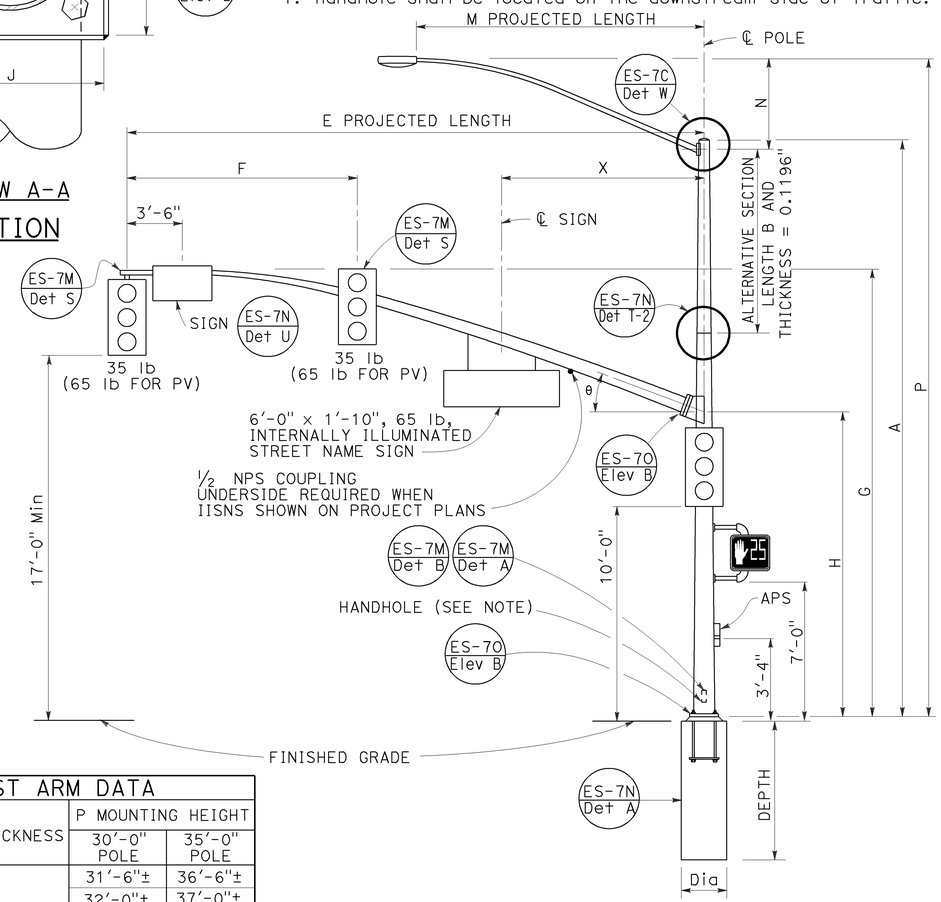

TYPE 19-4-100, 19A-4-100,
24-4-100, 24A-4-100,
26-4-100, 26A-4-100
ELEVATION B

SIGNAL MAST ARM DATA												
E PROJECTED LENGTH	F Min SPACING	G MOUNTING HEIGHT	H	Min OD AT POLE	THICKNESS	I BOLT CIRCLE	HS CAP SCREWS	J PLATE SIZE	K MAST ARM ℄ THICKNESS	L POLE ℄ THICKNESS	θ	X Max
25'-0"	10'-0"	22'-8"±	16'-0"	7⅜"	0.2391"	12"	1¼"-7NC-3"	1'-0"	1¼"	1½"	23°	10'-6"
30'-0"	12'-0"	23'-0"±		8"								
35'-0"	14'-0"			8 11/16"		13½"		1'-1½"	1½"	1¾"	21°	
40'-0"	15'-0"			9⅜"							15°	13'-0"
45'-0"		23'-8"±		10¼"								

LUMINAIRE MAST ARM DATA					
M PROJECTED LENGTH	N RISE	Min OD AT POLE	THICKNESS	P MOUNTING HEIGHT	
				30'-0" POLE	35'-0" POLE
6'-0"	2'-0"±	3¼"	0.1196"	31'-6"±	36'-6"±
8'-0"	2'-6"±	3½"		32'-0"±	37'-0"±
10'-0"	3'-3"±	3⅞"		32'-9"±	37'-9"±
12'-0"	4'-3"±			33'-9"±	38'-9"±
15'-0"	4'-9"±	4¼"		34'-3"±	39'-3"±

POLE TYPE	LOAD CASE	WIND VELOCITY (mph)	POLE DATA							BASE PLATE DATA				LUMINAIRE MAST ARM	SIGNAL MAST ARM	CIDH PILE FOUNDATION		
			A HEIGHT	Min OD BASE	Min OD TOP	THICKNESS	ALTERNATIVE SECTION B LENGTH	ALTERNATIVE SECTION BOTTOM	ALTERNATIVE SECTION TOP	C	BC = BOLT CIRCLE	THICKNESS	ANCHOR BOLT SIZE			Dia	DEPTH	REINFORCED
18-4-100	4	100	17'-0"	12⅛"	9 9/16"	0.3125"	NONE			1'-7"	1'-5½"	3"	2" Ø x 42"	NONE	25'-0", 30'-0"	3'-0"	11'-0"	YES
19-4-100			30'-0"		7 11/16"		10'-0"	9⅛"	7 11/16"					6'-15' 12'-0"				
19A-4-100			35'-0"		6 15/16"		15'-0'		6 15/16"					6'-15' 15'-0"				
23-4-100			17'-0"		9 9/16"		NONE							NONE	35'-0"			
24-4-100			30'-0"		7 11/16"		10'-0"	9⅛"	7 11/16"					6'-15' 12'-0"				
24A-4-100			35'-0"		6 15/16"		15'-0"		6 15/16"					6'-15' 15'-0"				
26-4-100			30'-0"	14"	8 3/16"		10'-0"	9⅝"	8 3/16"	23"	21"		2½" Ø x 42"	6'-15' 12'-0"	40'-0", 45'-0"	3'-6"	12'-0"	
26A-4-100			35'-0"		7 7/16"		15'-0"		7 7/16"					6'-15' 15'-0"				
27-4-100			17'-0"		10 1/16"		NONE							NONE				

INDICATES MAST ARM LENGTH TO BE USED UNLESS OTHERWISE NOTED ON PLANS.

STATE OF CALIFORNIA
DEPARTMENT OF TRANSPORTATION

ELECTRICAL SYSTEMS (SIGNAL AND LIGHTING STANDARD, CASE 4 SIGNAL MAST ARM LOADING, WIND VELOCITY=100 MPH AND SIGNAL MAST ARM LENGTHS 25' TO 45')

NO SCALE

RSP ES-7F DATED JULY 19, 2013 SUPERSEDES STANDARD PLAN ES-7F
DATED MAY 20, 2011 - PAGE 467 OF THE STANDARD PLANS BOOK DATED 2010.

REVISED STANDARD PLAN RSP ES-7F

2010 REVISED STANDARD PLAN RSP ES-7F

6-18-13

Dist	COUNTY	ROUTE	POST MILES TOTAL PROJECT	SHEET No.	TOTAL SHEETS
07	LA	60	R7.4/R8.1	203	238

REGISTERED CIVIL ENGINEER

July 19, 2013
PLANS APPROVAL DATE

REGISTERED PROFESSIONAL ENGINEER Stanley P. Johnson No. C57793 Exp. 3-31-14 CIVIL STATE OF CALIFORNIA

THE STATE OF CALIFORNIA OR ITS OFFICERS OR AGENTS SHALL NOT BE RESPONSIBLE FOR THE ACCURACY OR COMPLETENESS OF SCANNED COPIES OF THIS PLAN SHEET.

TO ACCOMPANY PLANS DATED 6-1-15

NOTE:
Handhole shall be located on the downstream side of traffic.

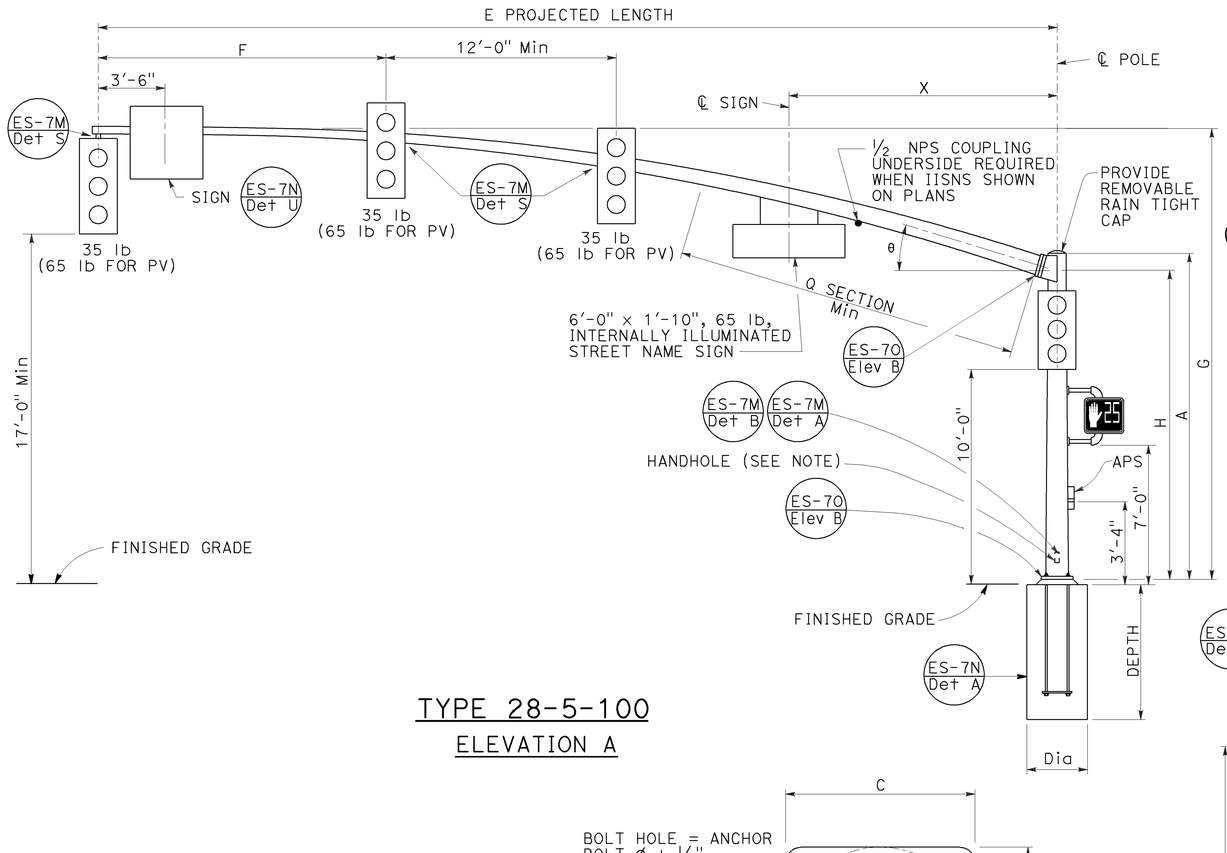

TYPE 28-5-100
ELEVATION A

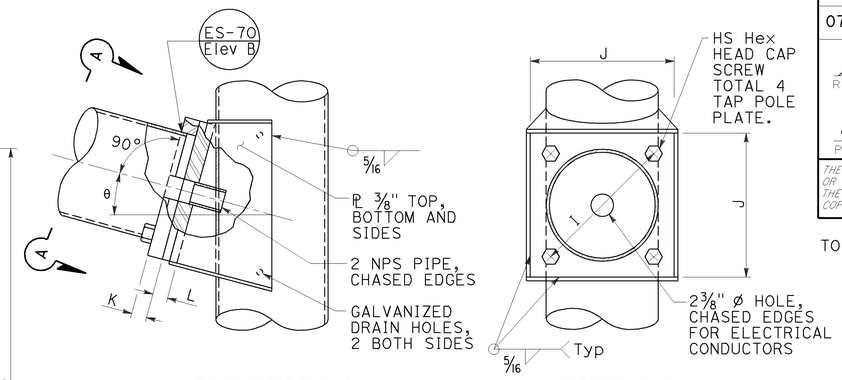

ELEVATION C

VIEW A-A

SIGNAL MAST ARM CONNECTION
DETAIL A

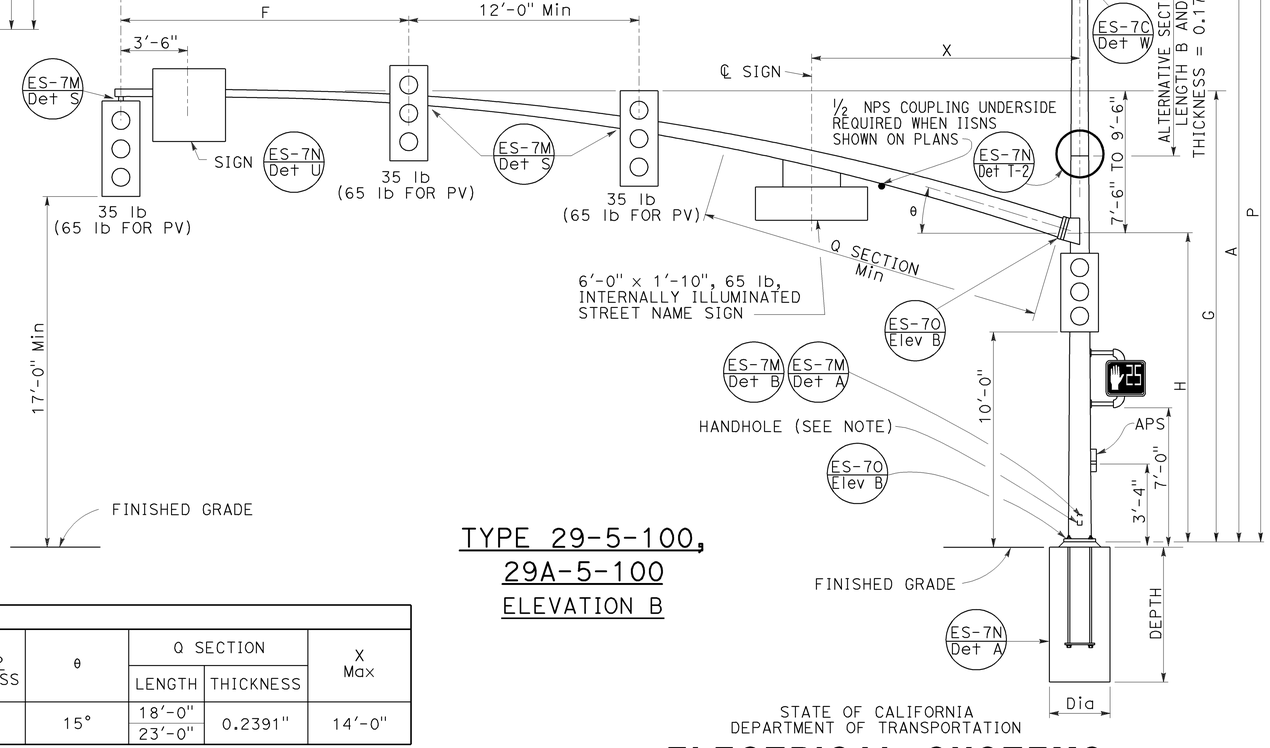

TYPE 29-5-100,
29A-5-100
ELEVATION B

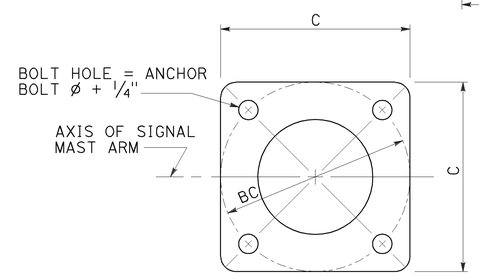

BASE PLATE
DETAIL B

LUMINAIRE MAST ARM DATA					
M PROJECTED LENGTH	N RISE	Min OD AT POLE	THICKNESS	P MOUNTING HEIGHT 30'-0" POLE	P MOUNTING HEIGHT 35'-0" POLE
6'-0"	2'-0"±	3 1/4"	0.1196"	31'-6"±	36'-6"±
8'-0"	2'-6"±	3 1/2"		32'-0"±	37'-0"±
10'-0"	3'-3"±	3 7/8"		32'-9"±	37'-9"±
12'-0"	4'-3"±			33'-9"±	38'-9"±
15'-0"	4'-9"±	4 1/4"		34'-3"±	39'-3"±

SIGNAL MAST ARM DATA														
E PROJECTED LENGTH	F Min SPACING	G MOUNTING HEIGHT	H	Min OD AT POLE	THICKNESS	I BOLT CIRCLE	HS CAP SCREWS	J PLATE SIZE	K MAST ARM PL THICKNESS	L POLE PL THICKNESS	θ	Q SECTION LENGTH	Q SECTION THICKNESS	X Max
50'-0"	15'-0"	23'-7"± TO 25'-7"±	16'-0"	11 7/16"	0.1793"	16"	1 1/2"-6NC-3 1/4"	1'-4"	1 3/4"	1 3/4"	15°	18'-0"	0.2391"	14'-0"
55'-0"				1'-1 1/4"								23'-0"		

POLE TYPE	LOAD CASE	WIND VELOCITY (mph)	POLE DATA A HEIGHT	Min OD BASE	Min OD TOP	THICKNESS	ALTERNATIVE SECTION B LENGTH	ALTERNATIVE SECTION BOTTOM	ALTERNATIVE SECTION TOP	BASE PLATE DATA C	BC = BOLT CIRCLE	THICKNESS	ANCHOR BOLT SIZE	LUMINAIRE MAST ARM	SIGNAL MAST ARM	CIDH PILE FOUNDATION Dia	DEPTH	REINFORCED
28-5-100	5	100	17'-0"	14"	11 9/16"	0.3125"	NONE	11 1/8"	9 11/16"	23"	21"	3"	2 1/2" ø x 42"	NONE	50'-0", 55'-0"	3'-6"	12'-0"	YES
29-5-100			30'-0"		9 11/16"		10'-0"							6'-15' 15'-0"				
29A-5-100			35'-0"		8 15/16"		15'-0"		8 15/16"									

INDICATES MAST ARM LENGTH TO BE USED UNLESS OTHERWISE NOTED ON PLANS.

STATE OF CALIFORNIA
DEPARTMENT OF TRANSPORTATION

ELECTRICAL SYSTEMS (SIGNAL AND LIGHTING STANDARD, CASE 5 SIGNAL MAST ARM LOADING, WIND VELOCITY=100 MPH AND SIGNAL MAST ARM LENGTHS 50' TO 55')

NO SCALE

RSP ES-7G DATED JULY 19, 2013 SUPERSEDES STANDARD PLAN ES-7G DATED MAY 20, 2011 - PAGE 468 OF THE STANDARD PLANS BOOK DATED 2010.

REVISED STANDARD PLAN RSP ES-7G

2010 REVISED STANDARD PLAN RSP ES-7G

6-18-13

Dist	COUNTY	ROUTE	POST MILES TOTAL PROJECT	SHEET No.	TOTAL SHEETS
07	LA	60	R7.4/R8.1	204	238

REGISTERED CIVIL ENGINEER

July 19, 2013
PLANS APPROVAL DATE

REGISTERED PROFESSIONAL ENGINEER Stanley P. Johnson No. C57793 Exp. 3-31-14 CIVIL STATE OF CALIFORNIA

THE STATE OF CALIFORNIA OR ITS OFFICERS OR AGENTS SHALL NOT BE RESPONSIBLE FOR THE ACCURACY OR COMPLETENESS OF SCANNED COPIES OF THIS PLAN SHEET.

TO ACCOMPANY PLANS DATED 6-1-15

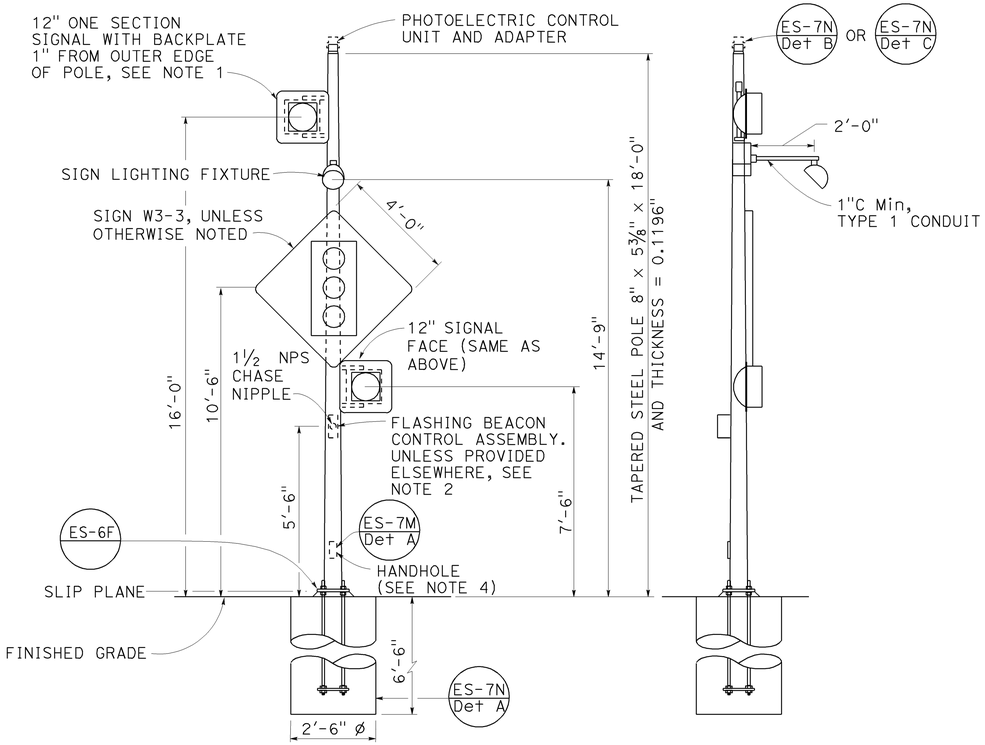

FRONT VIEW

SIDE VIEW

TYPE 15-FBS

ADVANCE FLASHING BEACON WITH SLIP BASE INSTALLATION

DETAIL A

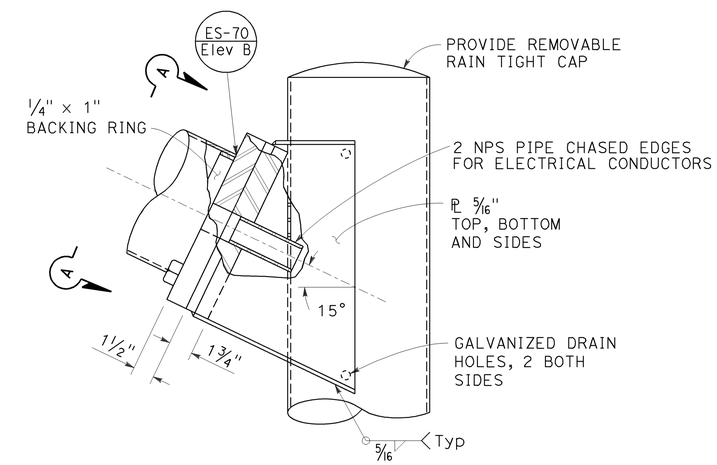

ELEVATION B

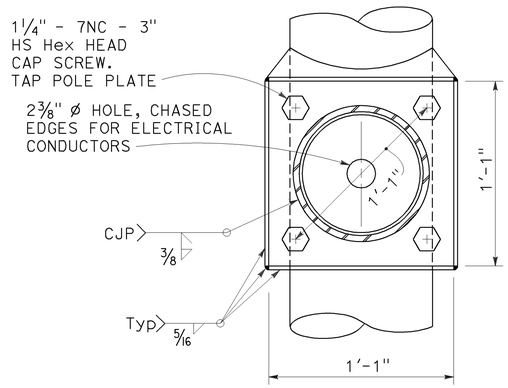

VIEW A-A

FLASHING BEACON MAST ARM CONNECTION DETAIL

DETAIL B

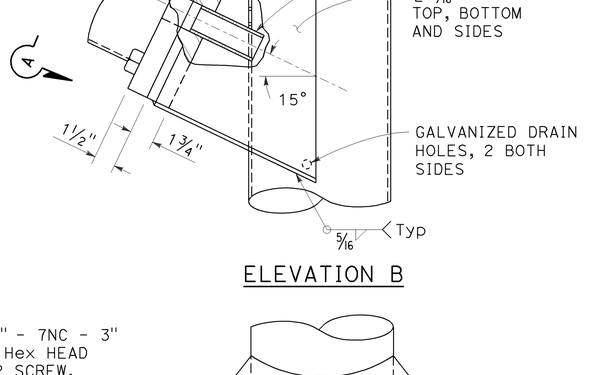

BASE PLATE

DETAIL C

NOTES:

1. See Revised Standard Plan RSP ES-4A and Standard Plan ES-4D for attachment fitting details.
2. For wiring diagram, see Standard Plan ES-14B.
3. For additional notes and details, see Standard Plans ES-7M and ES-7N.
4. Handhole shall be located on the downstream side of traffic.
5. See project plans for type of standard to be installed.

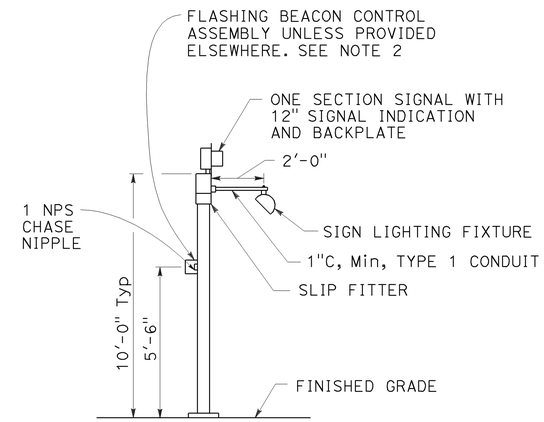

TYPE 1-A, 1-B, 1-C AND 1-D

ADVANCE FLASHING BEACON INSTALLATION

DETAIL D

See Note 5

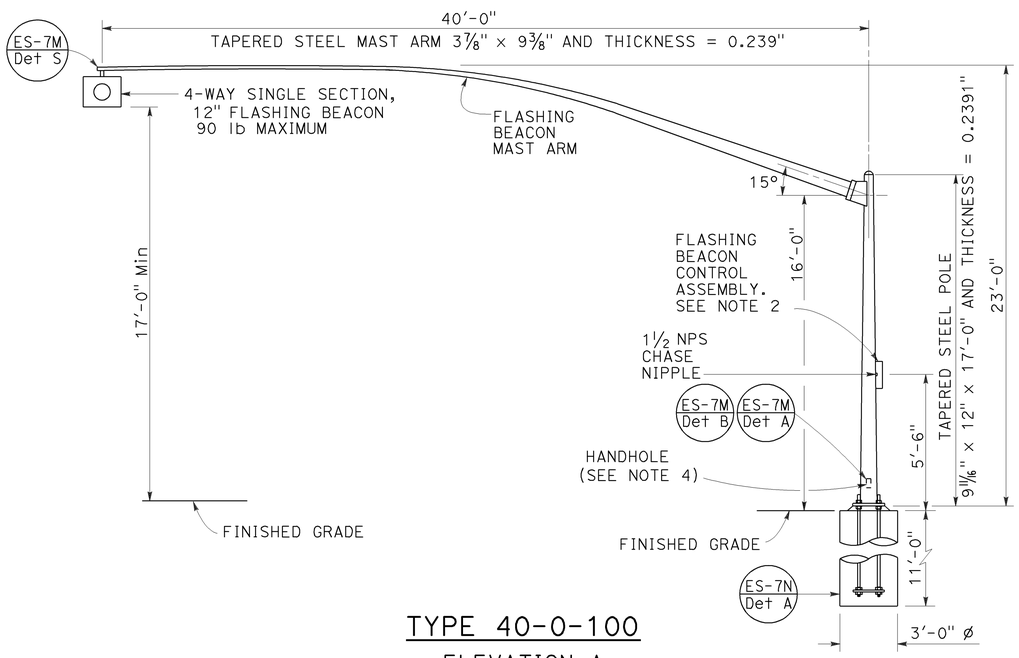

TYPE 40-0-100

ELEVATION A

STATE OF CALIFORNIA
DEPARTMENT OF TRANSPORTATION

ELECTRICAL SYSTEMS (FLASHING BEACON ON A TYPE 1, TYPE 15-FBS AND TYPE 40 STANDARD)

NO SCALE

RSP ES-7J DATED JULY 19, 2013 SUPERSEDES STANDARD PLAN ES-7J DATED MAY 20, 2011 - PAGE 471 OF THE STANDARD PLANS BOOK DATED 2010.

REVISED STANDARD PLAN RSP ES-7J

2010 REVISED STANDARD PLAN RSP ES-7J

6-26-13

Dist	COUNTY	ROUTE	POST MILES TOTAL PROJECT	SHEET No.	TOTAL SHEETS
07	LA	60	R7.4/R8.1	205	238

REGISTERED CIVIL ENGINEER

July 19, 2013
PLANS APPROVAL DATE

REGISTERED PROFESSIONAL ENGINEER
Stanley P. Johnson
No. C57793
Exp. 3-31-14
CIVIL
STATE OF CALIFORNIA

THE STATE OF CALIFORNIA OR ITS OFFICERS OR AGENTS SHALL NOT BE RESPONSIBLE FOR THE ACCURACY OR COMPLETENESS OF SCANNED COPIES OF THIS PLAN SHEET.

TO ACCOMPANY PLANS DATED 6-1-15

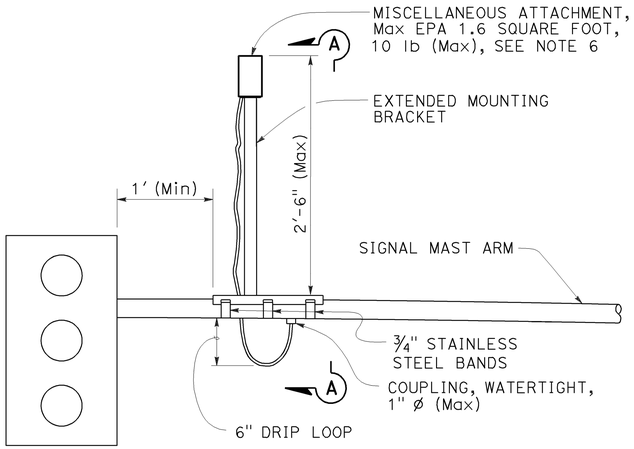

SIGNAL MAST ARM MOUNT

DETAIL A

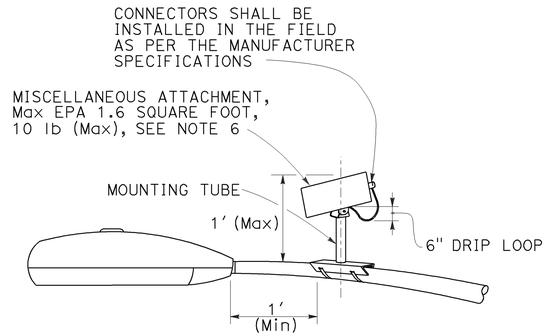

LUMINAIRE MAST ARM MOUNT

DETAIL B

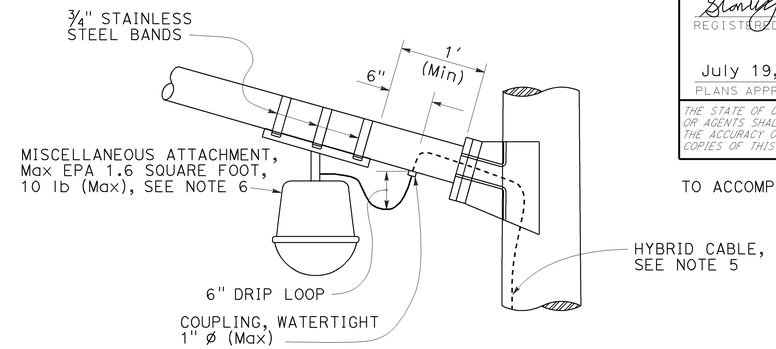

LUMINAIRE MAST ARM MOUNT

DETAIL C

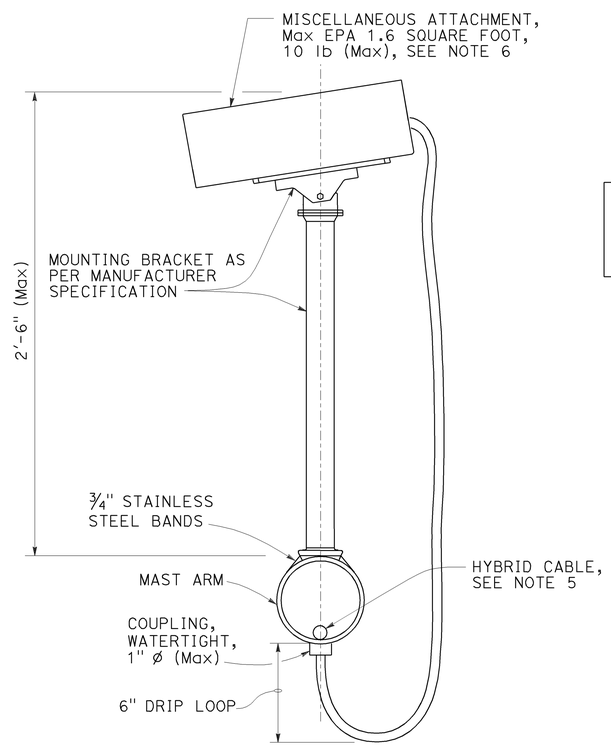

SECTION A-A

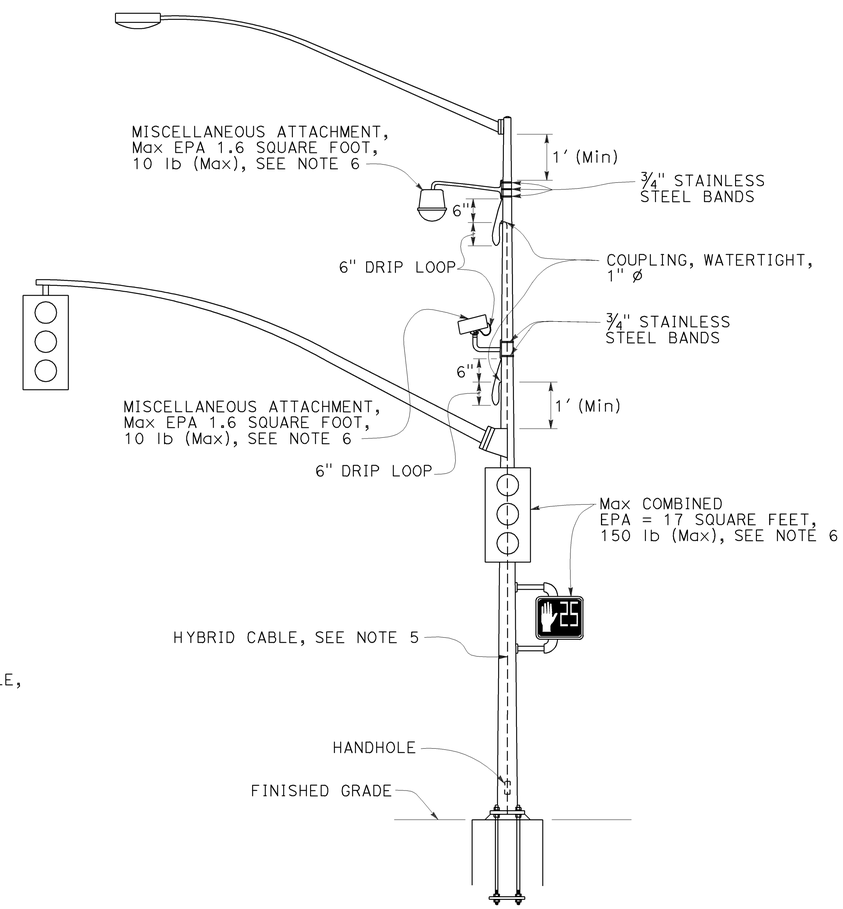

SIGNAL POLE MOUNT

DETAIL D

NOTES:

1. Exact mounting location of miscellaneous attachment and bracket shall be approved by the Engineer per manufacturer's recommendation.
2. Location of cable entrances on signal pole shall be a minimum of 1′ from any flange or base plate.
3. Hybrid cable entrances on signal pole shall be drilled for weathertight coupling as required.
4. Hybrid cable shall have a drip loop at the entrance into signal pole, luminaire mast arm and signal mast arm.
5. A single hybrid cable shall run continuous and shall not be twisted from the miscellaneous attachment to the controller cabinet. No splices shall be allowed.
6. Use the manufacturer's Effective Projected Area (EPA) for miscellaneous attachment. The maximum EPA for each miscellaneous attachment shall be 1.6 square feet.
7. Maximum of two miscellaneous attachments per traffic signal structure.
8. Maximum of one miscellaneous attachment per mast arm.
9. Miscellaneous attachment shall be mounted using clamping devices.

STATE OF CALIFORNIA
DEPARTMENT OF TRANSPORTATION

ELECTRICAL SYSTEMS (SIGNAL AND LIGHTING, MISCELLANEOUS ATTACHMENT)

NO SCALE

RSP ES-7R DATED JULY 19, 2013 SUPERSEDES STANDARD PLAN ES-7R
DATED MAY 20, 2011 - PAGE 479 OF THE STANDARD PLANS BOOK DATED 2010.

REVISED STANDARD PLAN RSP ES-7R

2010 REVISED STANDARD PLAN RSP ES-7R

6-17-13

DIST	COUNTY	ROUTE	POST MILES TOTAL PROJECT	SHEET NO.	TOTAL SHEETS
07	LA	60	R7.4/R8.1	206	238

Theresa Gabriel
REGISTERED ELECTRICAL ENGINEER

July 19, 2013
PLANS APPROVAL DATE

REGISTERED PROFESSIONAL ENGINEER Theresa Aziz Gabriel No. E15129 Exp. 6-30-14 ELECTRICAL STATE OF CALIFORNIA

THE STATE OF CALIFORNIA OR ITS OFFICERS OR AGENTS SHALL NOT BE RESPONSIBLE FOR THE ACCURACY OR COMPLETENESS OF SCANNED COPIES OF THIS PLAN SHEET.

TO ACCOMPANY PLANS DATED 6-1-15

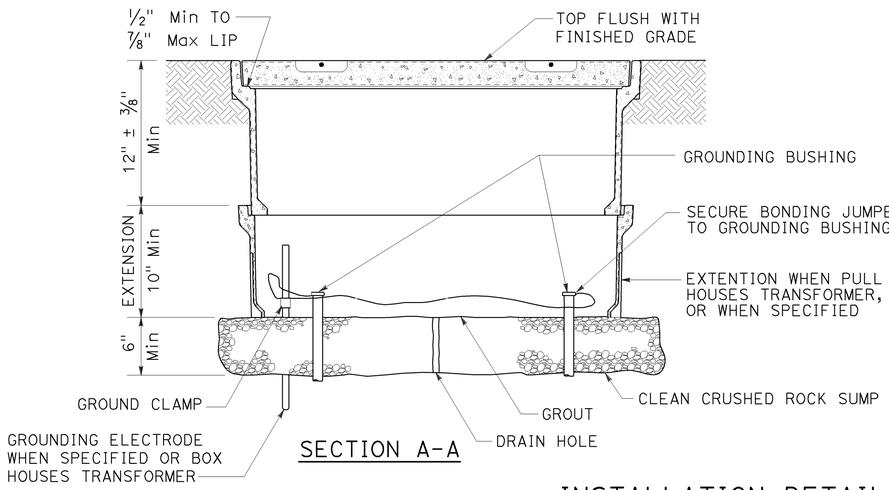

SECTION A-A

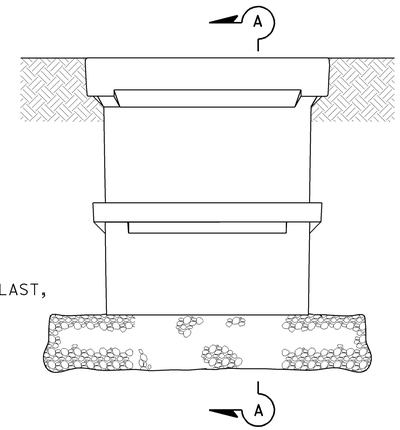

SIDE VIEW

INSTALLATION DETAILS

DETAIL A

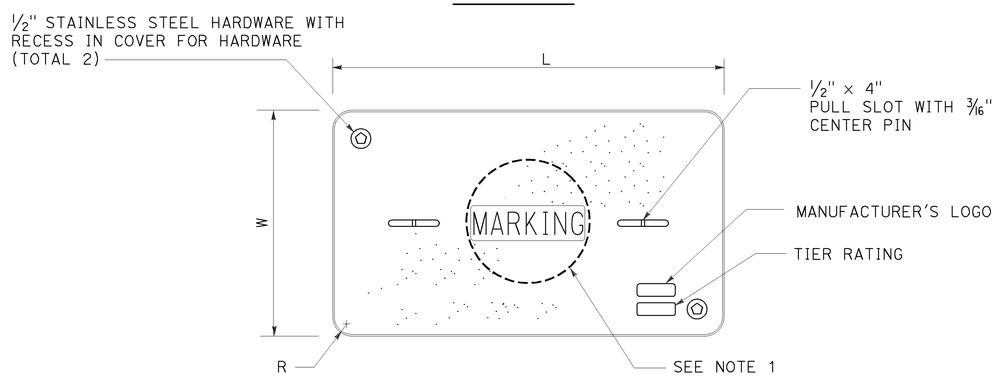

COVER TOP VIEW

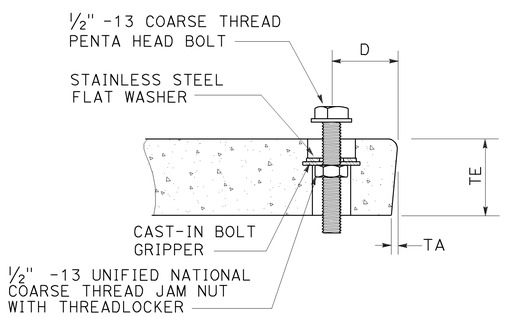

TYPICAL COVER CAPTIVE BOLT

OR SIMILAR

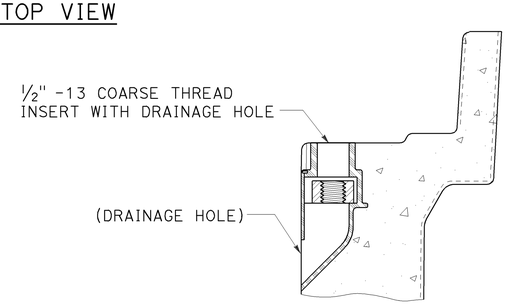

TYPICAL THREADED INSERT

OR SIMILAR

DIMENSION TABLE										
PULL BOX	PULL BOX			COVER						
	MINIMUM DEPTH BOX	MINIMUM DEPTH EXTENSION	MAXIMUM WEIGHT	L	W	R	TE	TA	D	MAXIMUM WEIGHT
No. 3½	12"	N/A	40 lb	1′ - 3⅜"	10⅛"	1⅜"	2"	⅛"	1¾"	30 lb
No. 5	12"	10"	55 lb	1′ - 11¼"	1′ - 1¾"	1⅜"	2"	⅛"	1¾"	60 lb
No. 6	12"	10"	70 lb	2′ - 6½"	1′ - 5½"	1⅜"	2"	⅛"	2"	85 lb

NOTES:

1. Pull box covers shall be marked as follows: "SERVICE" Service circuits between service point and service disconnect; "SPRINKLER-CONTROL" sprinkler control circuits, 50 V or less; "CALTRANS" on all pull boxes, except pull boxes marked "SPRINKLER-CONTROL"; and "TELEPHONE" Telephone service;
   - A) No. 3½ pull box.
     - 1) "SIGNAL" - Traffic signal circuits with or without lighting or sign lighting circuits.
     - 2) "LIGHTING" - Lighting or sign lighting circuits where voltage is under 600 V.
   - B) No. 5, 6, 9 or 9A pull box.
     - 1) "TRAFFIC SIGNAL" - Traffic signal circuits with or without lighting or sign lighting circuits.
     - 2) "LIGHTING" - Lighting or sign lighting circuits where voltage is under 600 V.
     - 3) "LIGHTING-HIGH VOLTAGE" - Lighting or sign lighting circuits where voltage is above 600 V.
     - 4) "IRRIGATION" - Circuits to irrigation controller 120 V or more.
     - 5) "RAMP METER" - Ramp meter circuits.
     - 6) "COUNT STATION" - Count or speed monitor circuits.
     - 7) "COMMUNICATIONS" - Communication circuits.
     - 8) "TOS COMMUNICATIONS" - TOS communication line.
     - 9) "TOS POWER" - TOS power.
     - 10) "TDC POWER" - Telephone demarcation cabinet power.
     - 11) "CCTV" - Closed circuit television circuits.
     - 12) "TMS" - Traffic monitoring station circuits.
     - 13) "CMS" - Changeable message sign circuits.
     - 14) "HAR" - Highway advisory radio circuits.
     - 15) "BOOSTER PUMP" - Booster pump circuit.
2. The nominal dimensions of the opening in which the cover sets shall be the same as the cover dimensions except the length and width dimensions shall be ⅛" greater.
3. Covers and boxes shall be interchangeable with California standard male and female gages. When interchanged with a standard male or female gage, the top surfaces shall be flush within ⅛". Top outside radius of covers and pull boxes shall have a ⅛" radius.
4. Pull box extension may be another pull box as long as the bottom edge of the pull box can fit into the cover opening.
5. All dimensions for the cover for non-traffic pull box are nominal values.

STATE OF CALIFORNIA
DEPARTMENT OF TRANSPORTATION

ELECTRICAL SYSTEMS (NON-TRAFFIC PULL BOX)

NO SCALE

RSP ES-8A DATED JULY 19, 2013 SUPERSEDES RSP ES-8A DATED JANUARY 20, 2012 THAT SUPPLEMENTS THE STANDARD PLANS BOOK DATED 2010.

REVISED STANDARD PLAN RSP ES-8A

2010 REVISED STANDARD PLAN RSP ES-8A

7-15-13

Dist	COUNTY	ROUTE	POST MILES TOTAL PROJECT	SHEET No.	TOTAL SHEETS
07	LA	60	R7.4/R8.1	207	238

Theresa Gabriel
REGISTERED ELECTRICAL ENGINEER

July 19, 2013
PLANS APPROVAL DATE

REGISTERED PROFESSIONAL ENGINEER
Theresa Aziz Gabriel
No. E15129
Exp. 6-30-14
ELECTRICAL
STATE OF CALIFORNIA

THE STATE OF CALIFORNIA OR ITS OFFICERS OR AGENTS SHALL NOT BE RESPONSIBLE FOR THE ACCURACY OR COMPLETENESS OF SCANNED COPIES OF THIS PLAN SHEET.

TO ACCOMPANY PLANS DATED 6-1-15

2010 REVISED STANDARD PLAN RSP ES-10A

ISOFOOTCANDLE CURVE - MINIMUM

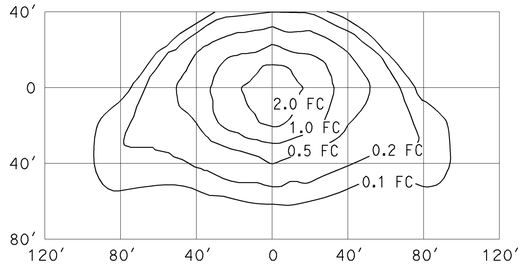

TYPE III MEDIUM CUTOFF

Cutoff Luminaire
34′ Mounting Height
Lamp operated at 22,000 lm
200-W high pressure sodium lamp
ANSI Designation S66

ISOFOOTCANDLE CURVE - MINIMUM

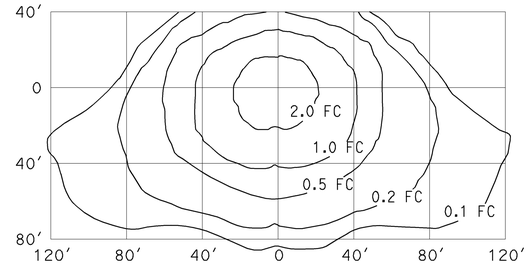

TYPE III MEDIUM CUTOFF

Cutoff Luminaire
40′ Mounting Height
Lamp operated at 37,000 lm
310-W high pressure sodium lamp
ANSI Designation S67

ISOFOOTCANDLE CURVE - MINIMUM

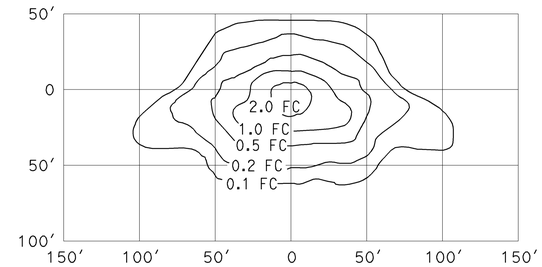

TYPE III MEDIUM CUTOFF

Cutoff Luminaire
30′ Mounting Height
Lamp operated at 16,000 lm
150-W high pressure sodium lamp
ANSI Designation S55

ISOFOOTCANDLE CURVE - MINIMUM

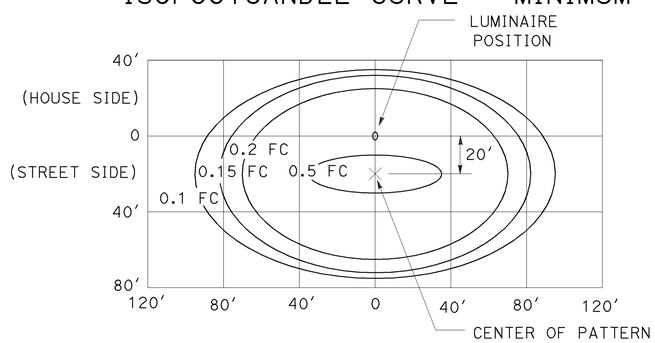

LED LUMINAIRE ROADWAY 1

165-W at 34′ Mounting Height

ISOFOOTCANDLE CURVE - MINIMUM

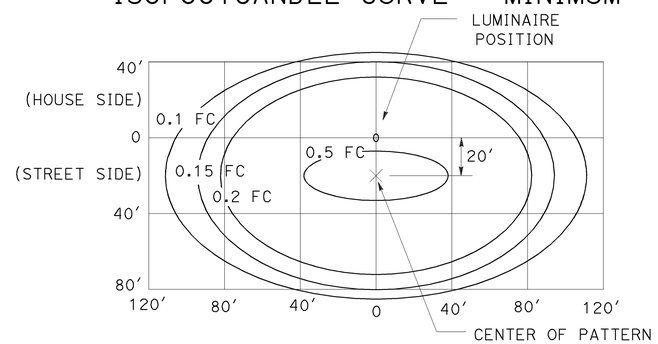

LED LUMINAIRE ROADWAY 2

235-W at 40′ Mounting Height

ISOFOOTCANDLE CURVE - MINIMUM

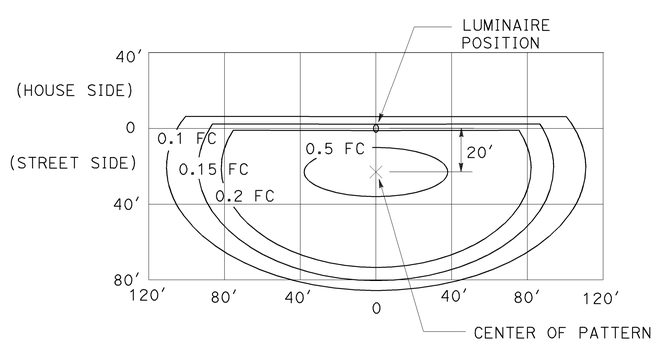

LED LUMINAIRE ROADWAY 3

235-W at 40′ Mounting Height
with back side control

ISOFOOTCANDLE CURVE - MINIMUM

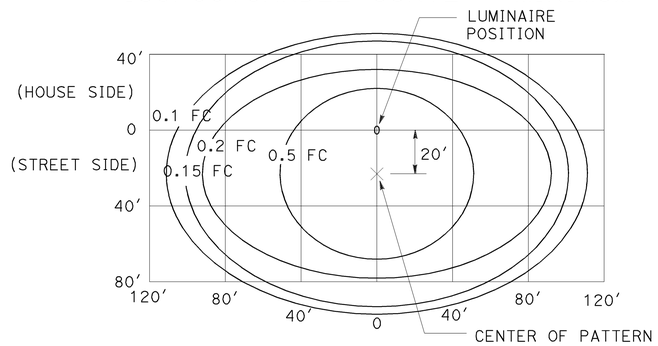

LED LUMINAIRE ROADWAY 4

300-W at 40′ Mounting Height

ISOFOOTCANDLE CURVE - MINIMUM

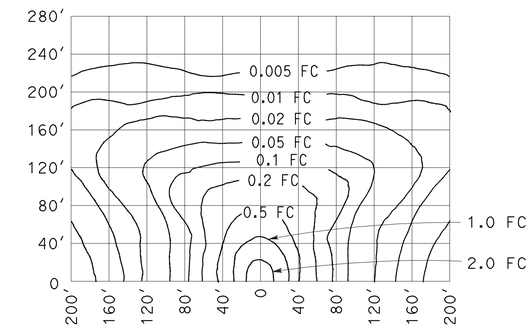

LOW PRESSURE SODIUM LUMINAIRE

40′ Mounting Height
Lamp operated at 33,000 lm
180-W low pressure sodium lamp

STATE OF CALIFORNIA
DEPARTMENT OF TRANSPORTATION

ELECTRICAL SYSTEMS (ISOFOOTCANDLE DIAGRAMS)

NO SCALE

RSP ES-10A DATED JULY 19, 2013 SUPERSEDES RSP ES-10A DATED JULY 20, 2012 THAT SUPPLEMENTS THE STANDARD PLANS BOOK DATED 2010.

REVISED STANDARD PLAN RSP ES-10A

Dist	COUNTY	ROUTE	POST MILES TOTAL PROJECT	SHEET No.	TOTAL SHEETS
07	LA	60	R7.4/R8.1	208	238

REGISTERED ELECTRICAL ENGINEER

July 20, 2012
PLANS APPROVAL DATE

REGISTERED PROFESSIONAL ENGINEER
Jeffery G. McRae
No. E14512
Exp. 6-30-14
ELECTRICAL
STATE OF CALIFORNIA

THE STATE OF CALIFORNIA OR ITS OFFICERS OR AGENTS SHALL NOT BE RESPONSIBLE FOR THE ACCURACY OR COMPLETENESS OF SCANNED COPIES OF THIS PLAN SHEET.

TO ACCOMPANY PLANS DATED 6-1-15

ISOFOOTCANDLE CURVE - MINIMUM

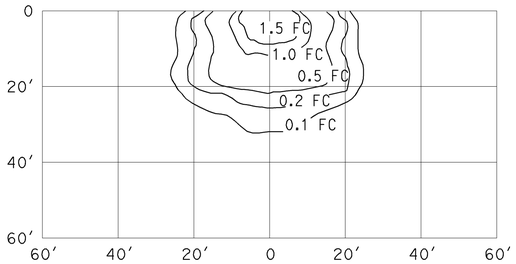

WALL LUMINAIRE
15′ Mounting Height
Lamp operated at 5,800 lm
70-W high pressure sodium lamp
ANSI Designation S62

ISOFOOTCANDLE CURVE - MINIMUM

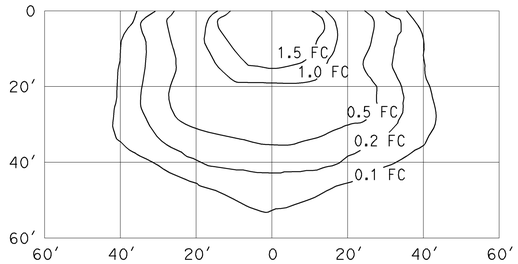

WALL LUMINAIRE
15′ Mounting Height
Lamp operated at 9,500 lm
100-W high pressure sodium lamp
ANSI Designation S54

ISOFOOTCANDLE CURVE - MINIMUM

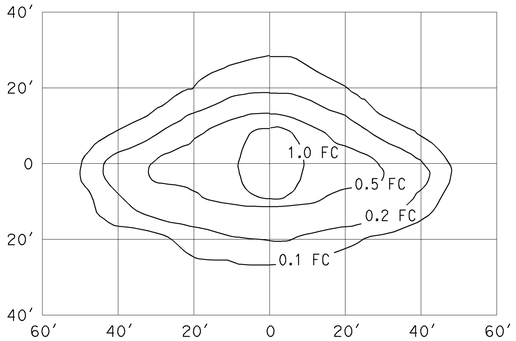

PENDANT SOFFIT LUMINAIRE
TYPE III SHORT
17′ Mounting Height
Lamp operated at 5,800 lm
70-W high pressure sodium lamp
ANSI Designation S62

ISOFOOTCANDLE CURVE - MINIMUM

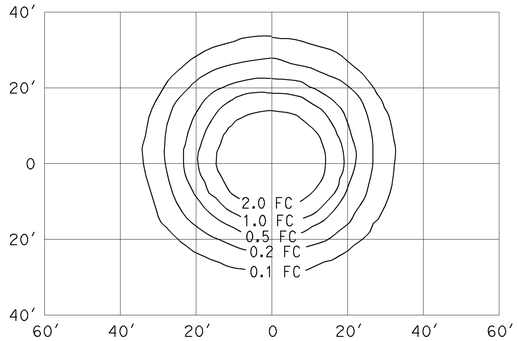

PENDANT SOFFIT LUMINAIRE
17′ Mounting Height
Lamp operated at 5,800 lm
70-W high pressure sodium lamp
ANSI Designation S62

ISOFOOTCANDLE CURVE - MINIMUM

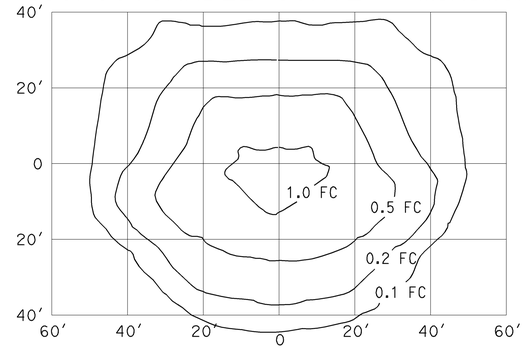

FLUSH SOFFIT LUMINAIRE
17′ Mounting Height
Lamp operated at 5,800 lm
70-W high pressure sodium lamp
ANSI Designation S62

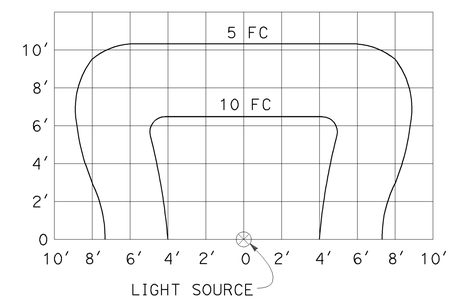

SIGN LIGHTING FIXTURE
ISOFOOTCANDLE DIAGRAM

NOTES:

1. Curves represent the minimum footcandle (FC) of initial illumination on a 10′-0" x 20′-0" panel.
2. The FC shown are with the fixture attached to the light fixture mounting channel which places the center of the source 4′-8" in front of panel and 1′-0" below the bottom edge.
3. Applicable lamp: 85-W fluorescent phosphor coated induction lamp.

STATE OF CALIFORNIA
DEPARTMENT OF TRANSPORTATION

ELECTRICAL SYSTEMS (ISOFOOTCANDLE DIAGRAMS)

NO SCALE

RSP ES-10B DATED JULY 20, 2012 SUPPLEMENTS THE STANDARD PLANS BOOK DATED 2010.

REVISED STANDARD PLAN RSP ES-10B

2010 REVISED STANDARD PLAN RSP ES-10B

Dist	COUNTY	ROUTE	POST MILES TOTAL PROJECT	SHEET No.	TOTAL SHEETS
07	LA	60	R7.4/R8.1	209	238

REGISTERED CIVIL ENGINEER

July 19, 2013
PLANS APPROVAL DATE

REGISTERED PROFESSIONAL ENGINEER
Stanley P. Johnson
No. C57793
Exp. 3-31-14
CIVIL
STATE OF CALIFORNIA

THE STATE OF CALIFORNIA OR ITS OFFICERS OR AGENTS SHALL NOT BE RESPONSIBLE FOR THE ACCURACY OR COMPLETENESS OF SCANNED COPIES OF THIS PLAN SHEET.

TO ACCOMPANY PLANS DATED 6-1-15

STANDARD TYPE	SETBACK (DIMENSION A)
32	30'-0" (Min)
31	20'-0" (Min)
15, 15D, 15-SB, 21, 21D, 30	ARM LENGTH (Min)

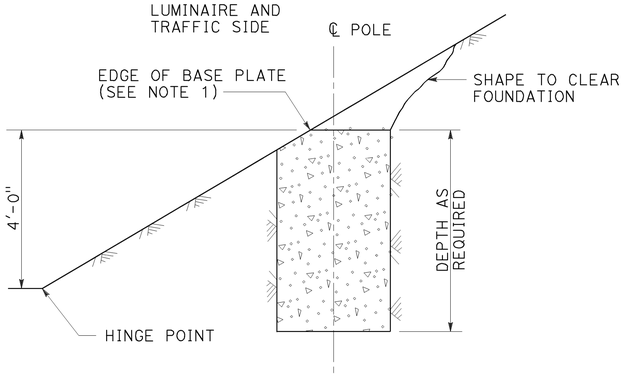

CUT SLOPES
STEEPER THAN 4:1,
LESS THAN 2:1
DETAIL A-1
See Note 2 and 3

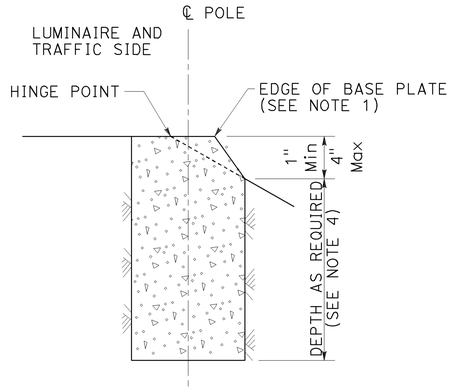

FILL SLOPES
STEEPER THAN 4:1,
LESS THAN 2:1
DETAIL A-2
See Note 2 and 3

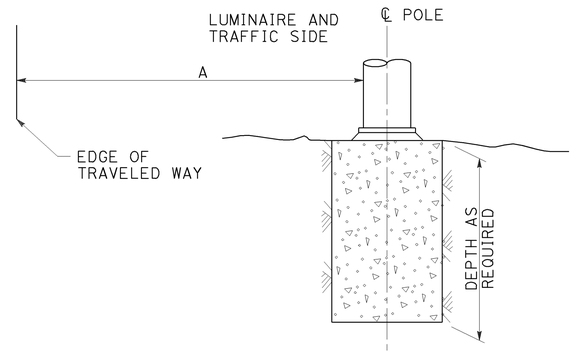

FLAT SECTIONS, CUT OR FILL SLOPES
4:1 OR FLATTER
DETAIL A-3
See Note 2

FOUNDATIONS ADJACENT TO ALL ROADWAYS EXCEPT
IN SIDEWALK, MEDIAN AND ISLAND AREAS
DETAIL A

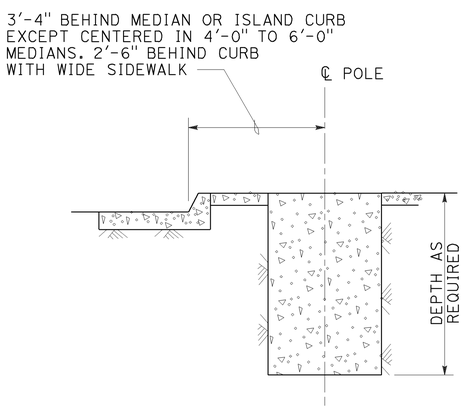

MEDIAN, ISLAND
OR WIDE SIDEWALK
DETAIL B-1
7' Wide and wider

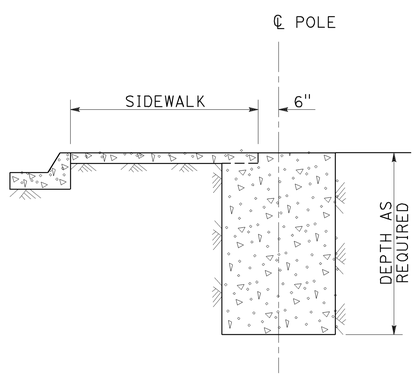

NARROW SIDEWALK
DETAIL B-2
Less than 7' wide

FOUNDATIONS IN SIDEWALK, MEDIAN AND ISLAND AREAS
DETAIL B

NOTES:

1. Where a portion of the foundation is above grade, the top edges shall have a 1" chamfer.
2. Slopes shall be horizontal to vertical ratio (Horizontal : Vertical).
3. Horizontal setbacks on cut and fill slopes steeper than 4:1 shall not exceed the distance shown for flat sections.
4. CIDH embedment depth shall be increased beyond standard depths by the diameter of the CIDH.

STATE OF CALIFORNIA
DEPARTMENT OF TRANSPORTATION

ELECTRICAL SYSTEMS (FOUNDATION INSTALLATIONS)

NO SCALE

RSP ES-11 DATED JULY 19, 2013 SUPERSEDES STANDARD PLAN ES-11
DATED MAY 20, 2011 - PAGE 488 OF THE STANDARD PLANS BOOK DATED 2010.

REVISED STANDARD PLAN RSP ES-11

2010 REVISED STANDARD PLAN RSP ES-11

7-9-13

DIST	COUNTY	ROUTE	POST MILES TOTAL PROJECT	SHEET No.	TOTAL SHEETS
07	LA	60	R7.4/R8.1	210	238

REGISTERED CIVIL ENGINEER 10-29-14 DATE

6-1-15
PLANS APPROVAL DATE

REGISTERED PROFESSIONAL ENGINEER EDWARD B. MU No. C72567 Exp. 06-30-16 CIVIL STATE OF CALIFORNIA

The State of California or its officers or agents shall not be responsible for the accuracy or completeness of electronic copies of this plan sheet.

INDEX TO PLANS

SHEET NO.	TITLE
1	GENERAL PLAN
2	FOUNDATION PLAN
3	LOG OF TEST BORINGS 1 OF 5
4	LOG OF TEST BORINGS 2 OF 5
5	LOG OF TEST BORINGS 3 OF 5
6	LOG OF TEST BORINGS 4 OF 5
7	LOG OF TEST BORINGS 5 OF 5

STANDARD PLANS DATED 2010

	A10A	ABBREVIATIONS (SHEET 1 OF 2)
RSP	A10B	ABBREVIATIONS (SHEET 2 OF 2)
	A10C	LINES AND SYMBOLS (SHEET 1 OF 3)
	A10D	LINES AND SYMBOLS (SHEET 2 OF 3)
	A10E	LINES AND SYMBOLS (SHEET 3 OF 3)
	A62B	LIMITS OF PAYMENT FOR EXCAVATION AND BACKFILL BRIDGE SURCHARGE AND WALL
	B0-3	BRIDGE DETAILS
RSP	B3-1A	RETAINING WALL TYPE 1 (CASE 1)
RSP	B3-5	RETAINING WALL DETAILS NO. 1
RSP	B11-56	CONCRETE BARRIER TYPE 736

STANDARD PLAN SHEET NUMBER

DETAIL NUMBER

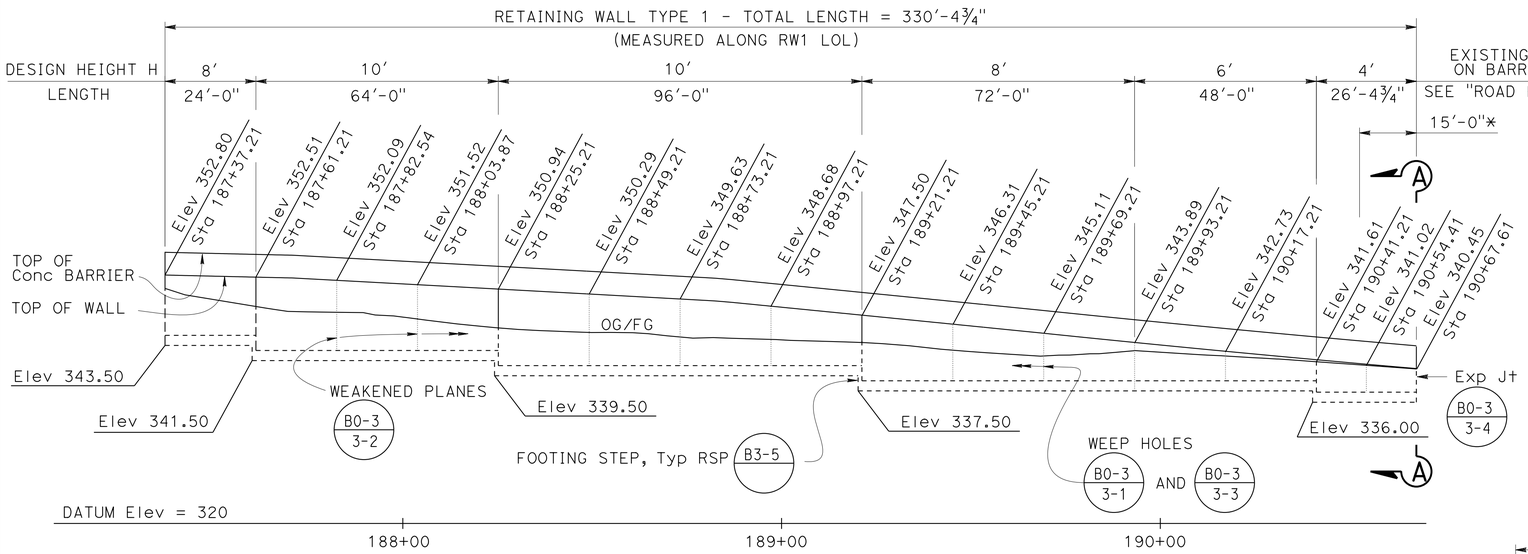

DEVELOPED MIRRORED ELEVATION

Horiz 1" = 20'
Vert 1" = 10'

NOTE:

Min 1 ft high pervious backfill material continuous behind the wall

NOTE:

* Concrete Barrier Transition, Type 736A (MOD) changes linearly from Type 736A to match the existing Type 27 S/SV

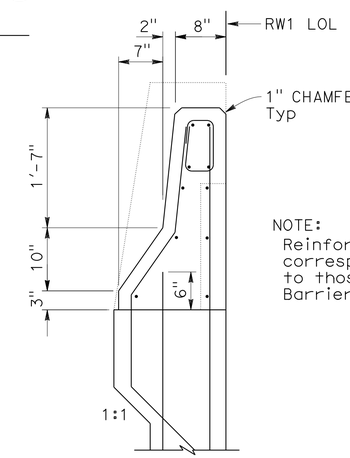

NOTE:
Reinforcements correspond to those inside Barrier Type 736A

SECTION A-A

1" = 1'-0"

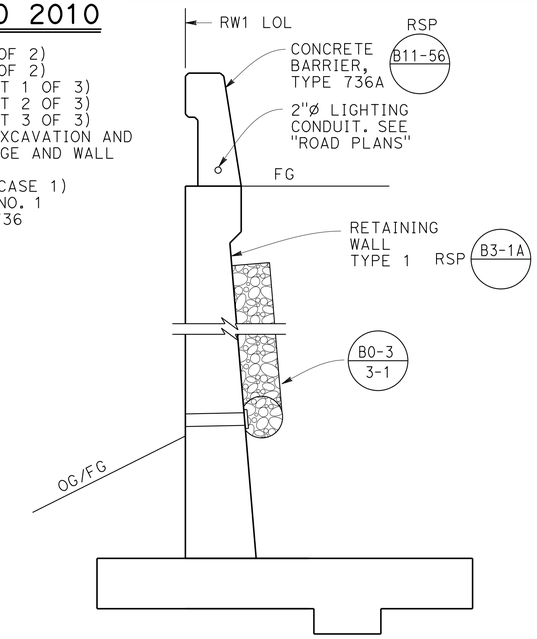

TYPICAL SECTION

½" = 1'-0"

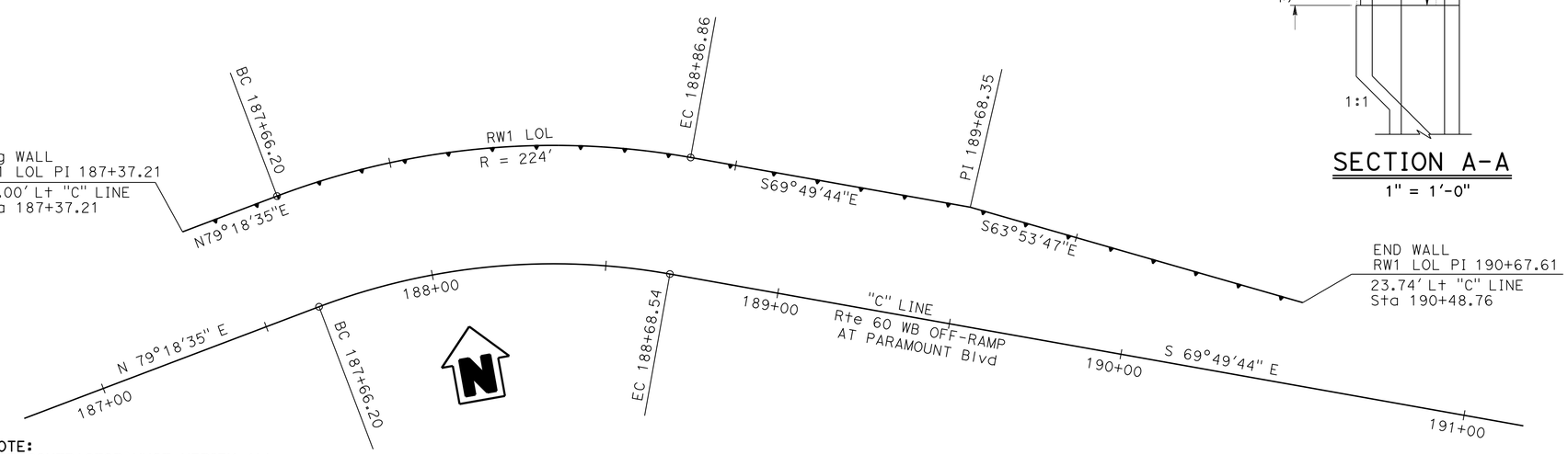

NOTE:
THE CONTRACTOR MUST VERIFY ALL CONTROLLING FIELD DIMENSIONS BEFORE ORDERING OR FABRICATING ANY MATERIAL.

PLAN

1" = 20'

LEGEND:

Structure Excavation (Retaining Wall)

Structure Backfill (Retaining Wall)

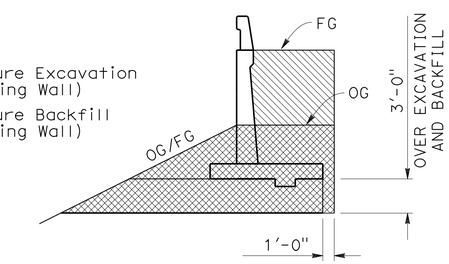

LIMITS OF EXCAVATION AND BACKFILL

NO SCALE

QUANTITIES

STRUCTURE EXCAVATION (RETAINING WALL)	1,515	CY
STRUCTURE BACKFILL (RETAINING WALL)	1,522	CY
STRUCTURAL CONCRETE, RETAINING WALL	238	CY
BAR REINFORCING STEEL (RETAINING WALL)	36,080	LB
CONCRETE BARRIER (TYPE 736A)	331	LF

X HOWARD NG
DESIGN ENGINEER

	BY	CHECKED
DESIGN	Edward B Mu	Mohammad Muqtadir
DETAILS	Lan T Tran	Mohammad Muqtadir
QUANTITIES	Edward B Mu	Mohammad Muqtadir

LOAD & RESISTANCE FACTOR DESIGN — LIVE LOADING: HL93 W/"LOW-BOY": PERMIT DESIGN VEHICLE

	BY	CHECKED
LAYOUT	Edward B Mu	Mohammad Muqtadir
SPECIFICATIONS	Tanya Kershell	PLANS AND SPECS COMPARED: Tanya Kershell

ORIGINAL SCALE IN INCHES FOR REDUCED PLANS 0 1 2 3

STATE OF CALIFORNIA
DEPARTMENT OF TRANSPORTATION

DIVISION OF ENGINEERING SERVICES
STRUCTURE DESIGN
DESIGN BRANCH 20

BRIDGE NO. RW1
POST MILE R7.4/ R8.1

RETAINING WALL NO. 1
GENERAL PLAN

UNIT: 3622
PROJECT NUMBER & PHASE: 0715000132 1
CONTRACT NO.: 07-3X7114

DISREGARD PRINTS BEARING EARLIER REVISION DATES

REVISION DATES: 10-29-14 3-26-14 3-24-14 3-26-14

SHEET 1 OF 7

USERNAME => s125624 DATE PLOTTED => 12-JUN-2015 TIME PLOTTED => 10:34

FILE => 57-RW1-a-gp.dgn

STRUCTURES DESIGN GENERAL PLAN SHEET (ENGLISH) (REV.09-01-10)

DIST	COUNTY	ROUTE	POST MILES TOTAL PROJECT	SHEET No.	TOTAL SHEETS
07	LA	60	R7.4/R8.1	211	238

REGISTERED CIVIL ENGINEER 10-29-14 DATE

6-1-15
PLANS APPROVAL DATE

REGISTERED PROFESSIONAL ENGINEER
EDWARD B. MU
No. C72567
Exp. 06-30-16
CIVIL
STATE OF CALIFORNIA

The State of California or its officers or agents shall not be responsible for the accuracy or completeness of electronic copies of this plan sheet.

(1) Sta 104+17.20, "B" LINE = Sta 185+40.41, "C" LINE
(2) Sta 104+03.18, "B" LINE = Sta 195+31.60, "D" LINE

CURVE DATA				
No.	R	Δ	T	L
(A)	1300.00′	78°25′40"	1060.78′	1779.47′
(B)	224.00′	30°51′41"	61.83′	120.65′
(C)	190.00′	30°51′42"	52.44′	102.34′
(D)	153.00′	169°44′14"	1703.79′	453.26′

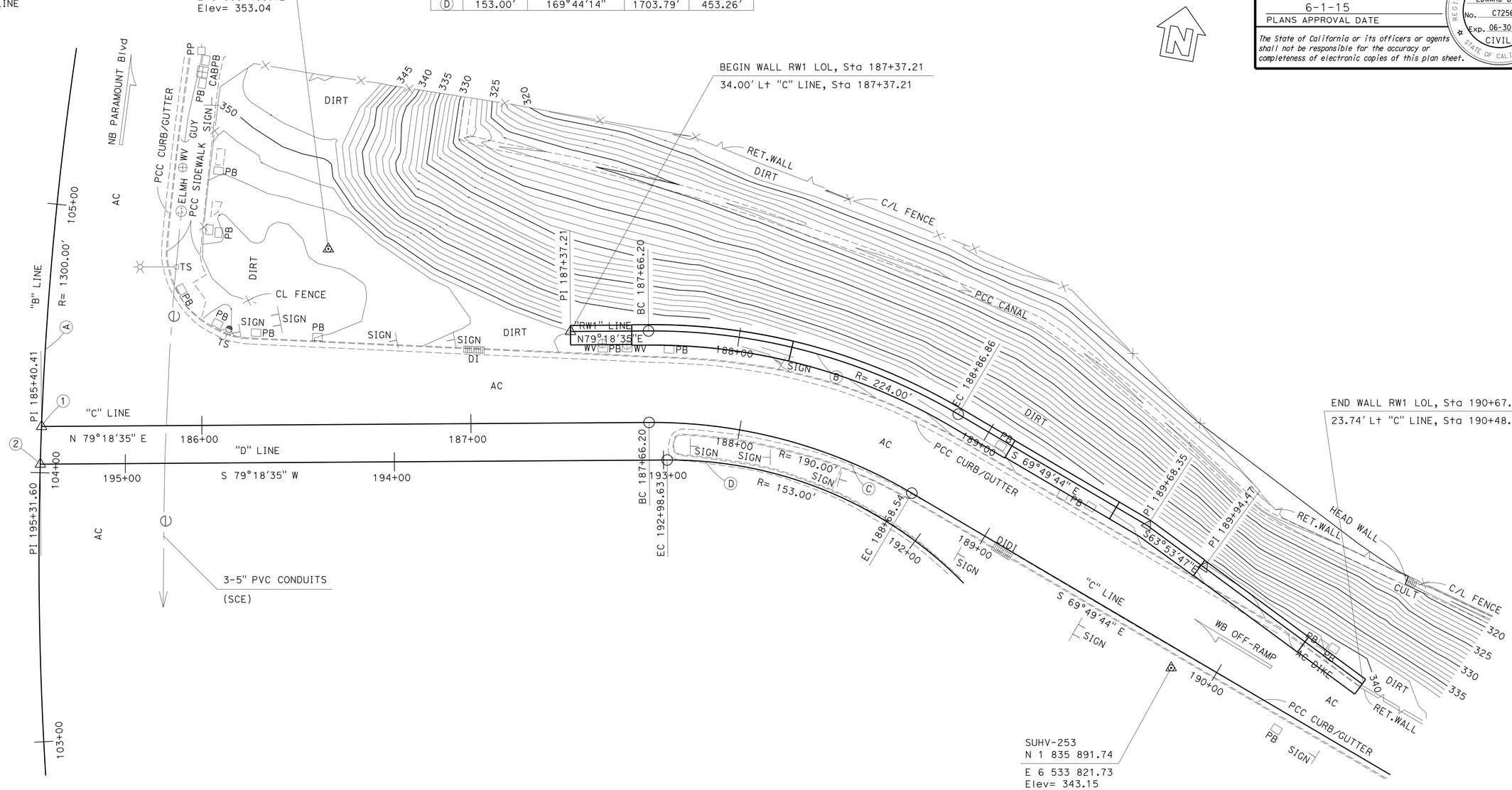

SURVEY CONTROL

SUHV-267

FND 1" IP/Yellow Plug
101.97 Ft Rt "B" LINE
Sta 104+93.15
N 1 835 988.83
E 6 533 485.72
Elev= 353.04

SUHV-253

FND Chzl.X/TOC
419.81 Ft Rt "B" LINE
Sta 103+08.19
N 1 835 891.74
E 6 533 821.73
Elev= 343.15

NOTES:

UNDERGROUND UTILITIES AS SHOWN ARE APPROXIMATE

PRELIMINARY INVESTIGATION SECTION

SCALE	VERT.DATUM NAVD 88	PHOTOGRAMMETRY AS OF: X		
1"=20′	HORZ.DATUM NAD 83 (1991.35)	SURVEYED	BY T.PHUNG 04/2013	CHECKED BY C.STEWART 04/2013
ALIGNMENT TIES Dist. Traverse Sheet		DRAFTED	BY V.PHAM 05/2013	CHECKED BY S.ALIVIO 05/2013

DESIGN	BY Edward B Mu	CHECKED Mohammad Muqtadir
DETAILS	BY Lan T Tran	CHECKED Mohammad Muqtadir
QUANTITIES	BY Edward B Mu	CHECKED Mohammad Muqtadir

STATE OF CALIFORNIA
DEPARTMENT OF TRANSPORTATION

DIVISION OF ENGINEERING SERVICES
STRUCTURE DESIGN
DESIGN BRANCH 20

BRIDGE NO. RW1
POST MILE R7.4/ R8.1

RETAINING WALL NO. 1
FOUNDATION PLAN

STRUCTURES FOUNDATION PLAN SHEET (ENGLISH) (REV. 09-01-10)

ORIGINAL SCALE IN INCHES FOR REDUCED PLANS 0 1 2 3

UNIT: 3622
PROJECT NUMBER & PHASE: 0715000132 1
CONTRACT NO.: 07-3X7114

DISREGARD PRINTS BEARING EARLIER REVISION DATES

REVISION DATES 10-29-13 10-29-13 10-29-14

SHEET 2 OF 7

FILE => 57-RW1-e-fpl.dgn

DIST	COUNTY	ROUTE	POST MILES TOTAL PROJECT	SHEET No.	TOTAL SHEETS
07	LA	60	R7.4/R8.1	212	238

REGISTERED CIVIL ENGINEER 11-5-14 DATE

6-1-15
PLANS APPROVAL DATE

REGISTERED PROFESSIONAL ENGINEER Haitao Liu No. C66398 Exp. 6-30-16 CIVIL STATE OF CALIFORNIA

The State of California or its officers or agents shall not be responsible for the accuracy or completeness of electronic copies of this plan sheet.

This LOTB sheet was prepared in accordance with the Caltrans Soil & Rock Logging, Classification, & Presentation Manual (2010 Edition).

See 2010 Standard Plans A10F and A10G for Soil Legend, and A10H for Rock Legend.

Note: No ground water encountered in Boring A-12-003 during field investigation.

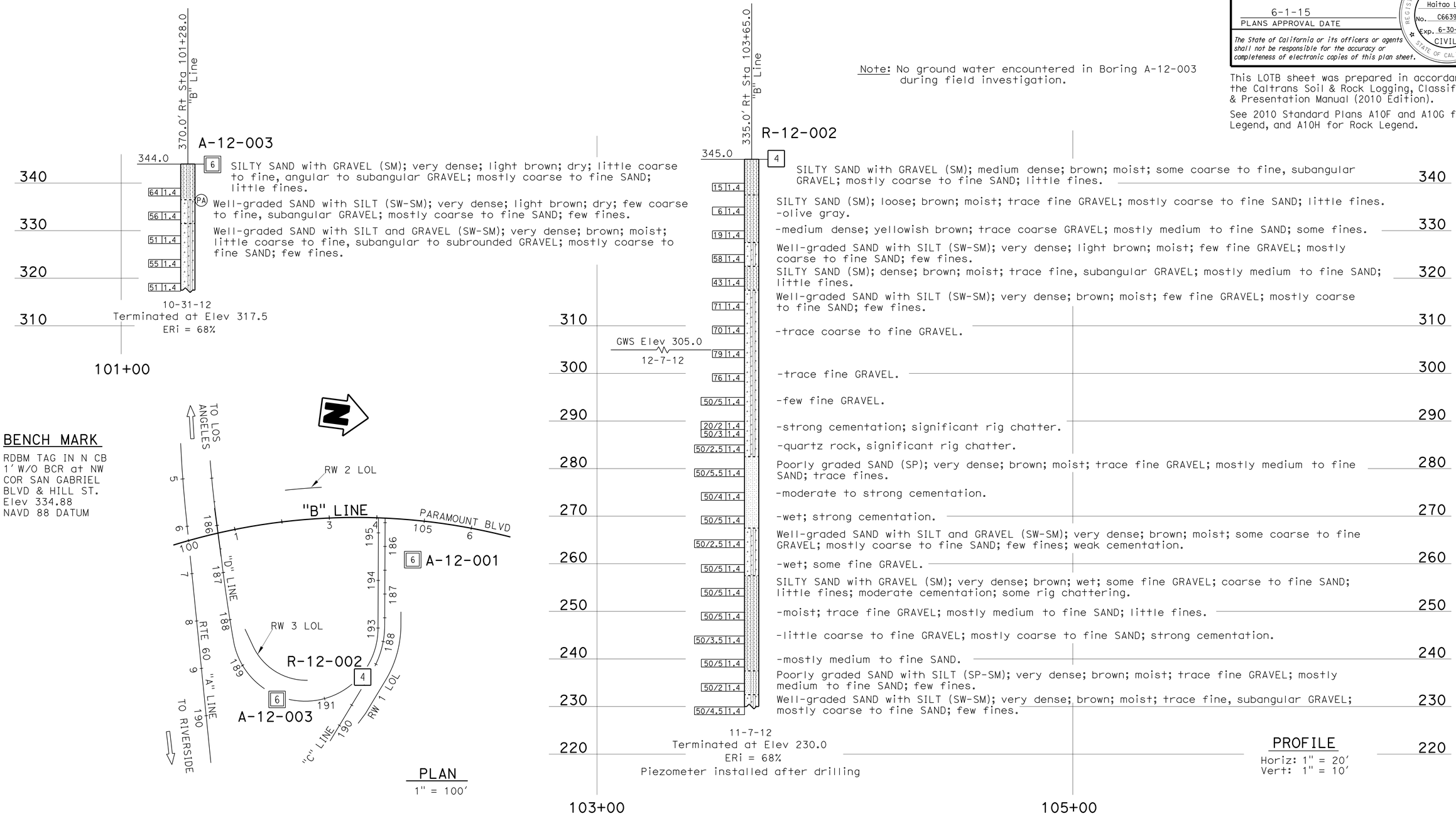

ENGINEERING SERVICES	MATERIALS AND GEOTECHNICAL SERVICES	STATE OF CALIFORNIA DEPARTMENT OF TRANSPORTATION	DIVISION OF ENGINEERING SERVICES STRUCTURE DESIGN DESIGN BRANCH X	BRIDGE NO. RW1 POST MILE 7.4/8.1	RETAINING WALL NO. 1 LOG OF TEST BORINGS 1 OF 5
FUNCTIONAL SUPERVISOR NAME: D. Jang	DRAWN BY: W. Tang 05/13 CHECKED BY: S. Han	FIELD INVESTIGATION BY: J. Wong			

OGS CIVIL LOG OF TEST BORINGS SHEET

ORIGINAL SCALE IN INCHES FOR REDUCED PLANS 0 1 2 3

UNIT: 3643
PROJECT NUMBER & PHASE: 07150001321 CONTRACT NO.: 07-3X7114

DISREGARD PRINTS BEARING EARLIER REVISION DATES

REVISION DATES 06-04-13 10-05-14 12-30-13 SHEET 3 OF 7

FILE => 57-RW1-z-ltb01.dgn

USERNAME => s12562d DATE PLOTTED => 12-JUN-2015 TIME PLOTTED => 10:34

DIST	COUNTY	ROUTE	POST MILES TOTAL PROJECT	SHEET No.	TOTAL SHEETS
07	LA	60	R7.4/R8.1	213	238

REGISTERED CIVIL ENGINEER 11-5-14 DATE

6-1-15
PLANS APPROVAL DATE

REGISTERED PROFESSIONAL ENGINEER Haitao Liu No. C66398 Exp. 6-30-16 CIVIL STATE OF CALIFORNIA

The State of California or its officers or agents shall not be responsible for the accuracy or completeness of electronic copies of this plan sheet.

This LOTB sheet was prepared in accordance with the Caltrans Soil & Rock Logging, Classification, & Presentation Manual (2010 Edition).

See 2010 Standard Plans A10F and A10G for Soil Legend, and A10H for Rock Legend.

FOR PLAN VIEW, SEE
"LOG OF TEST BORINGS 1 OF 5"

85.0' Rt Sta 104+78.0 "B" Line

A-12-001

354.0

6 SILTY SAND (SM); very dense; light brown; dry; few fine GRAVEL; mostly fine SAND; few nonplastic fines.

50/4 | 1.4

10 | 1.4 -medium dense; brown; trace fine GRAVEL; mostly medium to fine SAND; some low plasticity fines.

23 | 1.4 SILTY SAND with GRAVEL (SM); medium dense; brown; dry; some coarse to fine GRAVEL; mostly medium to fine SAND; little low plasticity fines.

43 | 1.4 -dense.

68 | 1.4 -very dense; subangular to subrounded GRAVEL; mostly coarse to fine SAND; little fines; moderate cementation.

59 | 1.4

48 | 1.4 SILTY SAND (SM); very dense; brown; dry; few fine GRAVEL; mostly medium to fine SAND; little fines.

62 | 1.4 -moist; few coarse to fine, subangular to subrounded GRAVEL; mostly coarse to fine SAND; little fines.

82 | 1.4

78 | 1.4 SILTY SAND with GRAVEL (SM); very dense; brown; moist; little fine, subangular to subrounded GRAVEL; mostly coarse to fine SAND; little nonplastic fines.

58 | 1.4 -wet.

GWS Elev 295.0
10-30-12

52 | 1.4 Well-graded SAND with SILT (SW-SM); very dense; brown; wet; trace fine, subrounded GRAVEL; mostly coarse to fine SAND; few fines.

62 | 1.4 -few coarse to fine, subangular to subrounded GRAVEL.

87 | 1.4 -few fine GRAVEL.

50/5.5 | 1.4 SILTY SAND with GRAVEL (SM); very dense; brown; wet; little fine GRAVEL; mostly coarse to fine SAND; little fines.

89 | 1.4

50/5 | 1.4 SILTY SAND (SM); very dense; brown; wet; few fine GRAVEL; mostly coarse to fine SAND; little fines.

50/5 | 1.4 SILTY SAND with GRAVEL (SM); very dense; brown; wet; some coarse to fine GRAVEL; mostly coarse to fine SAND; little fines.

50/5 | 1.4 -moist.

50/5 | 1.4 -little coarse to fine GRAVEL.

10-31-12
Terminated at Elev 239.0
ERi = 68%

360 350 340 330 320 310 300 290 280 270 260 250 240

104+50 105+50 106+50

PROFILE
Horiz: 1" = 10'
Vert: 1" = 10'

ENGINEERING SERVICES	MATERIALS AND GEOTECHNICAL SERVICES	STATE OF CALIFORNIA DEPARTMENT OF TRANSPORTATION	DIVISION OF ENGINEERING SERVICES STRUCTURE DESIGN DESIGN BRANCH X	BRIDGE NO. RW1 POST MILE 7.4/8.1	RETAINING WALL NO. 1 LOG OF TEST BORINGS 2 OF 5
FUNCTIONAL SUPERVISOR NAME: D. Jang	DRAWN BY: W. Tang 05/13 CHECKED BY: S. Han	FIELD INVESTIGATION BY: J. Wong			

OGS CIVIL LOG OF TEST BORINGS SHEET

ORIGINAL SCALE IN INCHES FOR REDUCED PLANS 0 1 2 3

UNIT: 3643
PROJECT NUMBER & PHASE: 07150001321 CONTRACT NO.: 07-3X7114

DISREGARD PRINTS BEARING EARLIER REVISION DATES

REVISION DATES 06-04-13 11-05-14 12-30-13 SHEET 4 OF 7

FILE => 57-RW1-z-ltb02.dgn

USERNAME => s125624 DATE PLOTTED => 12-JUN-2015 TIME PLOTTED => 10:34

NO AS BUILT CORRECTIONS

CORRECTIONS TRANSFERRED BY: LAN T TRAN
FIELD CORRECTIONS BY: ALI EL-ZAYNAB

TRANSFER DATE: 09-18-2012
FIELD CORRECTION DATE: 07-24-2012

CONTRACT NO: 07-293904

DIST	COUNTY	ROUTE	POST MILES TOTAL PROJECT	SHEET No.	TOTAL SHEETS
07	LA	60			

REGISTERED CIVIL ENGINEER — DATE 1-10-12

6-1-15
PLANS APPROVAL DATE

REGISTERED PROFESSIONAL ENGINEER — Sungro Cho — No. C75151 — Exp. 12-31-13 — CIVIL — STATE OF CALIFORNIA

The State of California or its officers or agents shall not be responsible for the accuracy or completeness of electronic copies of this plan sheet.

This LOTB sheet was prepared in accordance with the Caltrans Soil & Rock Logging, Classification, & Presentation Manual (2010 Edition).

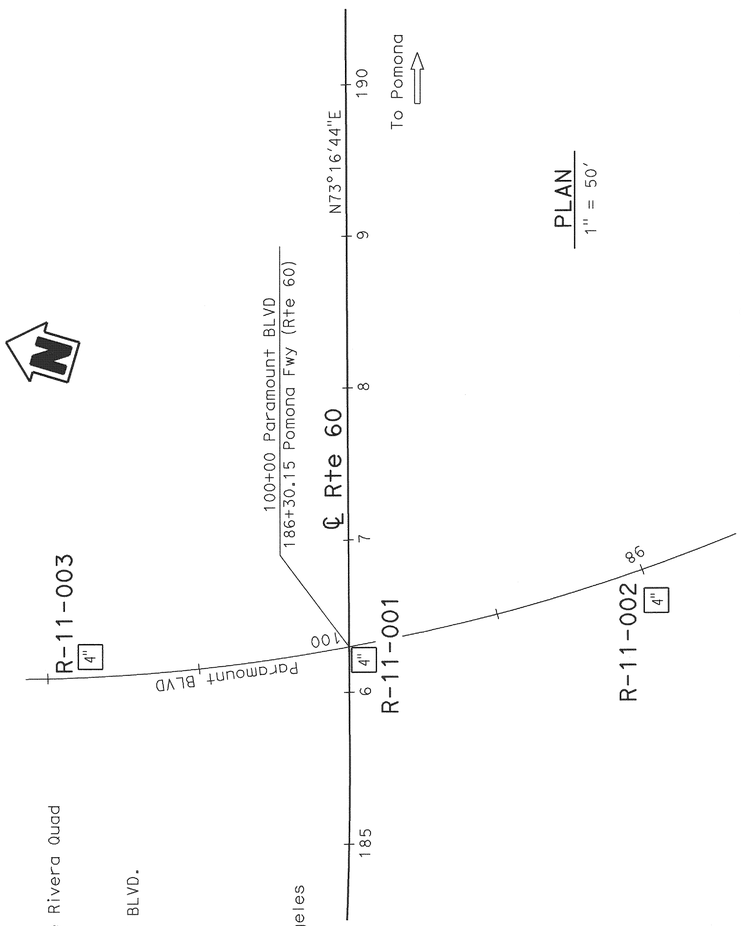

PLAN
1" = 50'

Note: Ground water was not measured during field investigation.

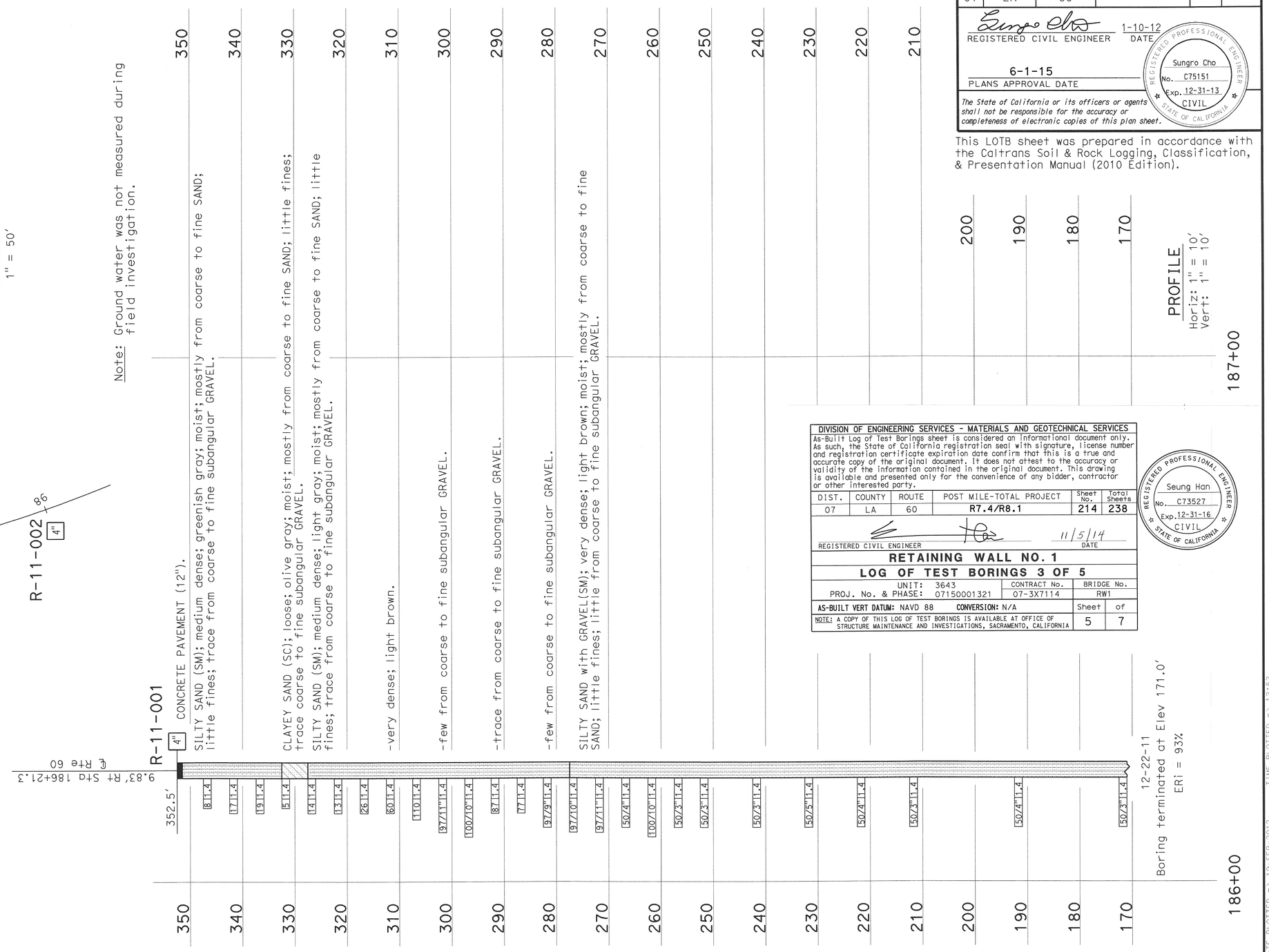

BENCH MARK
L.A. County Bench # 9832 of the Rivera Quad
NAVD88 2005 Adjustment.
Elev.: 304.104',
L&T IN S CB ARRPYO DR
1FT E/O BCR at SW COR PARAMOUNT BLVD.

DIVISION OF ENGINEERING SERVICES - MATERIALS AND GEOTECHNICAL SERVICES

As-Built Log of Test Borings sheet is considered an informational document only. As such, the State of California registration seal with signature, license number and registration certificate expiration date confirm that this is a true and accurate copy of the original document. It does not attest to the accuracy or validity of the information contained in the original document. This drawing is available and presented only for the convenience of any bidder, contractor or other interested party.

DIST.	COUNTY	ROUTE	POST MILE-TOTAL PROJECT	Sheet No.	Total Sheets
07	LA	60	R7.4/R8.1	214	238

REGISTERED CIVIL ENGINEER — DATE 11/5/14

REGISTERED PROFESSIONAL ENGINEER — Seung Han — No. C73527 — Exp. 12-31-16 — CIVIL — STATE OF CALIFORNIA

RETAINING WALL NO. 1

LOG OF TEST BORINGS 3 OF 5

UNIT: 3643 — CONTRACT No. 07-3X7114 — BRIDGE No. RW1
PROJ. No. & PHASE: 07150001321

AS-BUILT VERT DATUM: NAVD 88 CONVERSION: N/A — Sheet 5 of 7

NOTE: A COPY OF THIS LOG OF TEST BORINGS IS AVAILABLE AT OFFICE OF STRUCTURE MAINTENANCE AND INVESTIGATIONS, SACRAMENTO, CALIFORNIA

ENGINEERING SERVICES	MATERIALS AND GEOTECHNICAL SERVICES	STATE OF CALIFORNIA DEPARTMENT OF TRANSPORTATION	DIVISION OF ENGINEERING SERVICES STRUCTURE DESIGN DESIGN BRANCH 20	BRIDGE NO. 53-3076 / POST MILE R 7.8	PARAMOUNT BLVD OC (REPLACE)
FUNCTIONAL SUPERVISOR	DRAWN BY: F. Nguyen	FIELD INVESTIGATION BY: S. Cho			LOG OF TEST BORINGS 1 OF 5
NAME: D. Jang	CHECKED BY: S. Han				

OGS CIVIL LOG OF TEST BORINGS SHEET

ORIGINAL SCALE IN INCHES FOR REDUCED PLANS 0 1 2 3

UNIT: 3643
PROJECT NUMBER & PHASE: 0712000254 1 CONTRACT NO.: 07-293901

DISREGARD PRINTS BEARING EARLIER REVISION DATES — REVISION DATES 01-06-12 01-06-12 01-09-12 — SHEET 23 OF 27

FILE => 53-3076-z-ltb01.avd

USERNAME => s131071 DATE PLOTTED => 19-SEP-2012 TIME PLOTTED => 12:52

DIST	COUNTY	ROUTE	POST MILES TOTAL PROJECT	SHEET No.	TOTAL SHEETS
07	LA	60			

REGISTERED CIVIL ENGINEER — DATE 1-10-12

6-1-15
PLANS APPROVAL DATE

The State of California or its officers or agents shall not be responsible for the accuracy or completeness of electronic copies of this plan sheet.

REGISTERED PROFESSIONAL ENGINEER — Sungro Cho — No. C75151 — Exp. 12-31-13 — CIVIL — STATE OF CALIFORNIA

This LOTB sheet was prepared in accordance with the Caltrans Soil & Rock Logging, Classification, & Presentation Manual (2010 Edition).

DIVISION OF ENGINEERING SERVICES - MATERIALS AND GEOTECHNICAL SERVICES

As-Built Log of Test Borings sheet is considered an informational document only. As such, the State of California registration seal with signature, license number and registration certificate expiration date confirm that this is a true and accurate copy of the original document. It does not attest to the accuracy or validity of the information contained in the original document. This drawing is available and presented only for the convenience of any bidder, contractor or other interested party.

DIST.	COUNTY	ROUTE	POST MILE-TOTAL PROJECT	Sheet No.	Total Sheets
07	LA	60	R7.4/R8.1	215	238

REGISTERED CIVIL ENGINEER — DATE 11/5/14

REGISTERED PROFESSIONAL ENGINEER — Seung Han — No. C73527 — Exp. 12-31-16 — CIVIL — STATE OF CALIFORNIA

RETAINING WALL NO. 1

LOG OF TEST BORINGS 4 OF 5

UNIT: 3643	CONTRACT No.	BRIDGE No.
PROJ. No. & PHASE: 07150001321	07-3X7114	RW1

AS-BUILT VERT DATUM: NAVD 88 CONVERSION: N/A — Sheet 6 of 7

NOTE: A COPY OF THIS LOG OF TEST BORINGS IS AVAILABLE AT OFFICE OF STRUCTURE MAINTENANCE AND INVESTIGATIONS, SACRAMENTO, CALIFORNIA

FOR PLAN VIEW, SEE
"LOG OF TEST BORINGS 1 OF 5"

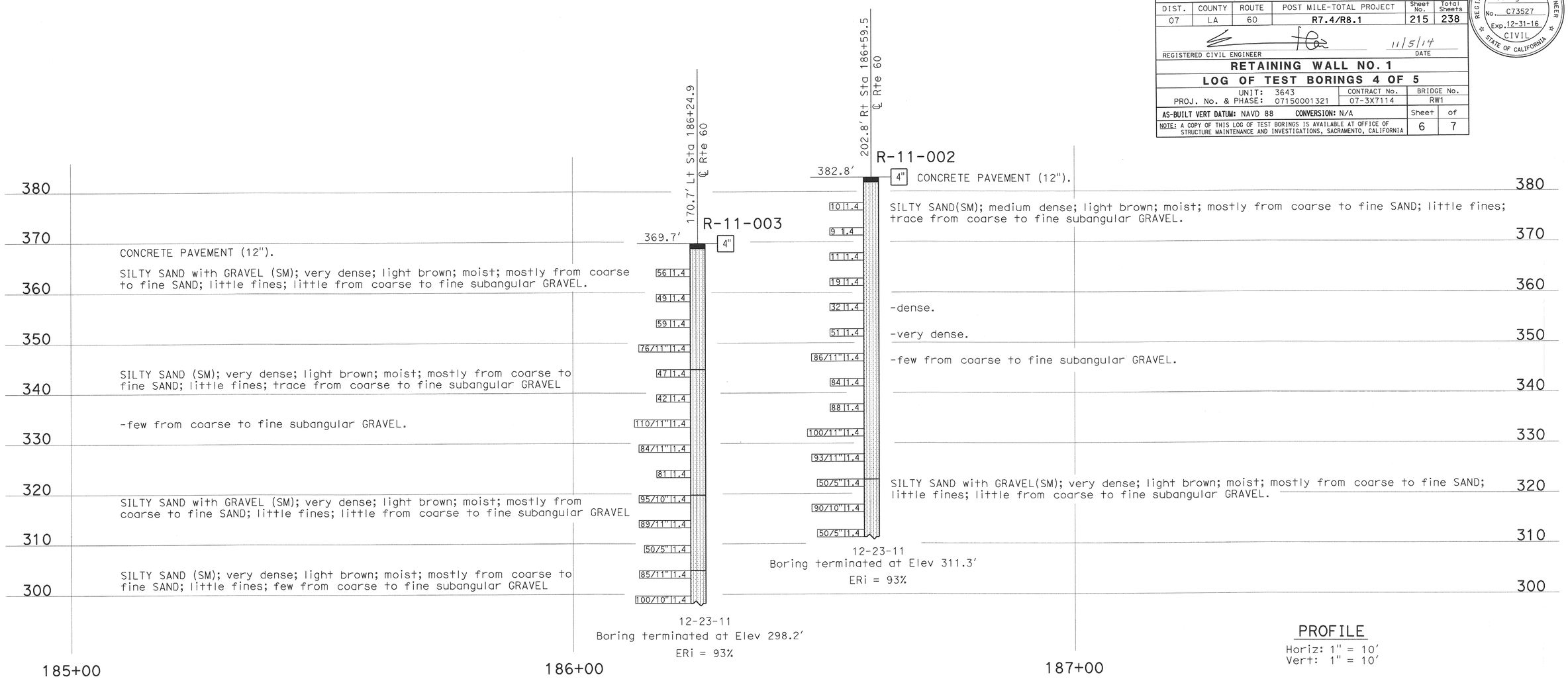

PROFILE
Horiz: 1" = 10'
Vert: 1" = 10'

ENGINEERING SERVICES		MATERIALS AND GEOTECHNICAL SERVICES
FUNCTIONAL SUPERVISOR	DRAWN BY: F. Nguyen	FIELD INVESTIGATION BY:
NAME: D. Jang	CHECKED BY: S. Han	S. Cho

STATE OF CALIFORNIA
DEPARTMENT OF TRANSPORTATION

DIVISION OF ENGINEERING SERVICES
STRUCTURE DESIGN
DESIGN BRANCH 20

BRIDGE NO. 53-3076
POST MILE R 7.8

PARAMOUNT BLVD OC (REPLACE)
LOG OF TEST BORINGS 2 OF 5

OGS CIVIL LOG OF TEST BORINGS SHEET

ORIGINAL SCALE IN INCHES FOR REDUCED PLANS 0 1 2 3

UNIT: 3643
PROJECT NUMBER & PHASE: 0712000254 1 CONTRACT NO.: 07-293901

DISREGARD PRINTS BEARING EARLIER REVISION DATES → REVISION DATES 01-05-12 01-06-12 01-09-12

SHEET 24 OF 27

FILE => 53-3076-z-1tb02.avd

NO AS BUILT CORRECTIONS

CORRECTIONS TRANSFERED BY: LAN T TRAN
FIELD CORRECTIONS BY: ALI EL-ZAYNAB

TRANSFER DATE: 09-18-2012
FIELD CORRECTION DATE: 07-24-2012

CONTRACT NO: 07-293904

USERNAME => s131071 DATE PLOTTED => 19-SEP-2012 TIME PLOTTED => 12:52

FED. ROAD DIV. No.	STATE	F. A. PROJECT No.	SHEET No.	TOTAL SHEETS
7	CALIF.			

DIST.	COUNTY	ROUTE	SECTION	SHEET No.	TOTAL SHEETS
07	LA	60	R7.9	50	50

BRIDGE ENGINEER — CIVIL ENGINEER—LICENSE 5885

DATE APPROVED March 6, 1967

BENCH MARK

BM #22-A-54 Elev. 350.29

Fd. 2" I.P. with spk. cast into proj. 1.3' above surface. 1.3' E. fence cor. post & * in fence 200'± W. barn 10'± N. road 1000'± E along fence line from B.M. #21-A-54

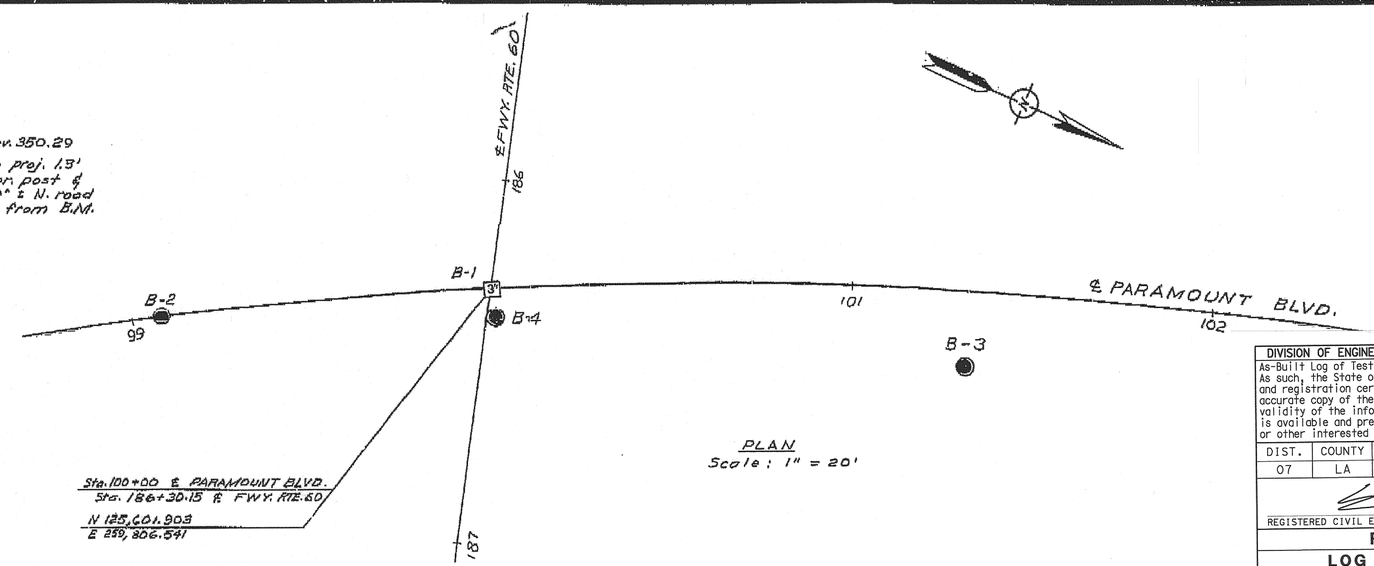

PLAN
Scale: 1" = 20'

DIVISION OF ENGINEERING SERVICES - MATERIALS AND GEOTECHNICAL SERVICES					
As-Built Log of Test Borings sheet is considered an informational document only. As such, the State of California registration seal with signature, license number and registration certificate expiration date confirm that this is a true and accurate copy of the original document. It does not attest to the accuracy or validity of the information contained in the original document. This drawing is available and presented only for the convenience of any bidder, contractor or other interested party.					
DIST.	COUNTY	ROUTE	POST MILE-TOTAL PROJECT	Sheet No.	Total Sheets
07	LA	60	R7.4/R8.1	216	238
REGISTERED CIVIL ENGINEER			DATE 11/5/14		
RETAINING WALL NO. 1					
LOG OF TEST BORINGS 5 OF 5					
UNIT: 3643			CONTRACT No.	BRIDGE No.	
PROJ. No. & PHASE: 07150001321			07-3X7114	RW1	
AS-BUILT VERT DATUM: NAVD 88 CONVERSION: N/A				Sheet	of
NOTE: A COPY OF THIS LOG OF TEST BORINGS IS AVAILABLE AT OFFICE OF STRUCTURE MAINTENANCE AND INVESTIGATIONS, SACRAMENTO, CALIFORNIA				7	7

REGISTERED PROFESSIONAL ENGINEER — Seung Han — No. C73527 — Exp. 12-31-16 — CIVIL — STATE OF CALIFORNIA

AS BUILT
CORRECTION
CONTRACT NO.
DATE

AS BUILT PLANS
Contract No. 07-033154
Date Completed 3-6-68
Document No. 70000128

LEGEND OF BORING OPERATIONS

Penetrometer; 2½" Cone Penetrometer; Sampler Boring (Dry); Sampler Boring (Wet); Rotary Boring (Dry); Rotary Boring; Auger Boring (Dry); Jet Boring; Core Boring; Test Pit

Penetration Boring; Rotary Boring; 1" Soil Tube

LEGEND OF EARTH MATERIALS

Gravel; Sand; Silt; Clay; Sandy Clay or Clayey Sand; Sandy Silt or Silty Sand; Silty Clay or Clayey Silt; Peat and Organic Matter; Fill Material; Igneous Rock; Sedimentary Rock; Metamorphic Rock

CLASSIFICATION OF MATERIAL BASED ON STANDARD GRADE SIZE LIMITS

Diagram showing the basis for estimates of percentages of constituents in determination of class name.

If gravel is present in appreciable amounts, the terms "gravelly" may be used. The terms "clay", "silt", "sand", "gravelly sand", "silty sand", "coarse", "medium" and "fine" when used to describe sand, refer to standard grade size limits.

NOTE: Classification of earth material as shown on this sheet is based upon field inspection and is not to be construed to imply mechanical analysis.

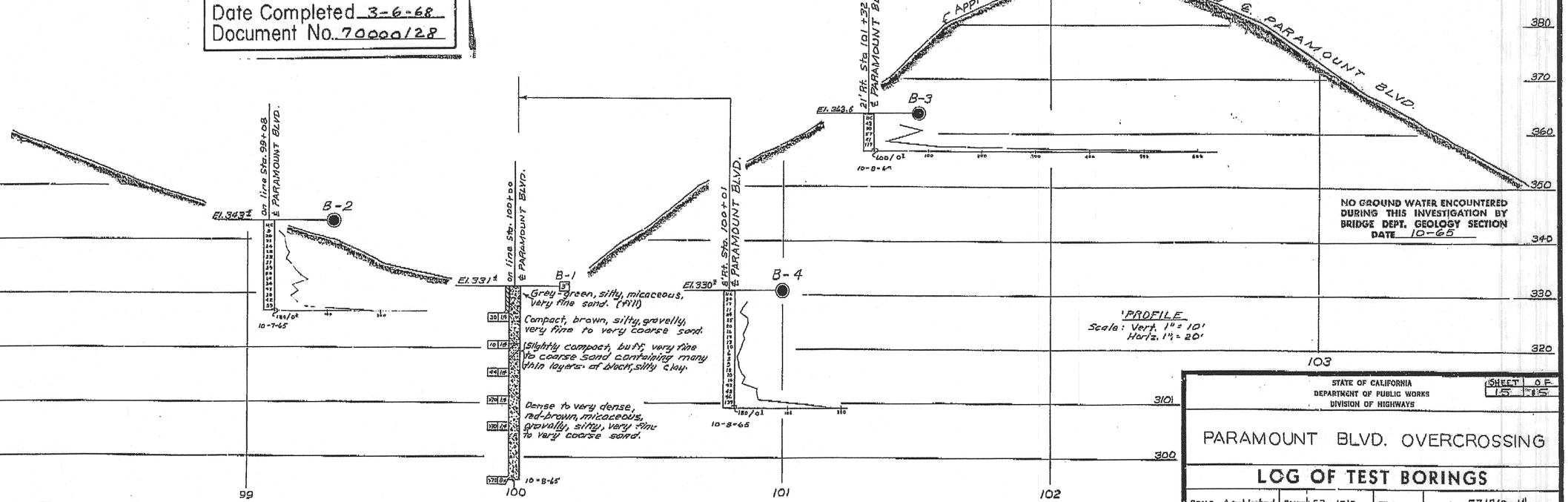

PROFILE
Scale: Vert. 1" = 10'
Horiz. 1" = 20'

NO GROUND WATER ENCOUNTERED DURING THIS INVESTIGATION BY BRIDGE DEPT. GEOLOGY SECTION
DATE 10-66

FIELD WRIGHT	10-8-65
W.C. Boulte	10-8-65
DRAWN	
CHECKED	W.C. Robertson 10-8-65

Approval Recommended: Engineering Geologist

BRIDGE DEPARTMENT
ENGINEERING GEOLOGY SECTION

STATE OF CALIFORNIA
DEPARTMENT OF PUBLIC WORKS
DIVISION OF HIGHWAYS

SHEET 15 OF 15

PARAMOUNT BLVD. OVERCROSSING

LOG OF TEST BORINGS

SCALE - As Noted | BRIDGE 53-1910 | FILE | DRAWING 53 1910-14

Charge: 072/2
W.A.: 033121

Disregard prints bearing earlier numbers

PREL. DRAWING No. PR-

510

DIST	COUNTY	ROUTE	POST MILES TOTAL PROJECT	SHEET No.	TOTAL SHEETS
07	LA	60	R7.4/R8.1	217	238

REGISTERED CIVIL ENGINEER — DATE 10-29-14

6-1-15
PLANS APPROVAL DATE

REGISTERED PROFESSIONAL ENGINEER — EDWARD B. MU — No. C72567 — Exp. 06-30-16 — CIVIL — STATE OF CALIFORNIA

The State of California or its officers or agents shall not be responsible for the accuracy or completeness of electronic copies of this plan sheet.

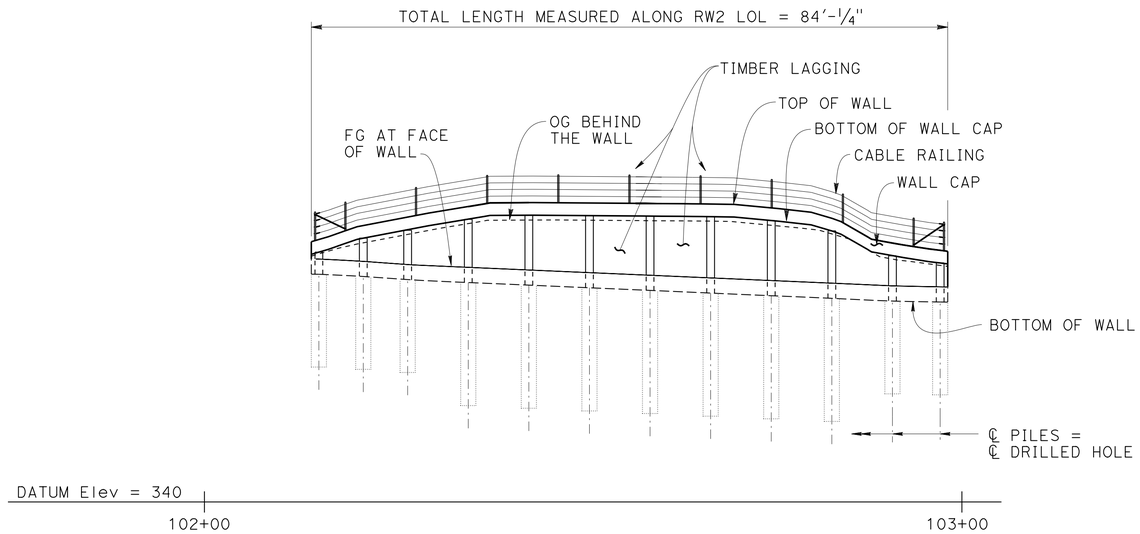

DEVELOPED ELEVATION

1" = 10'

INDEX TO PLANS

SHEET NO.	TITLE
1	GENERAL PLAN
2	STRUCTURE PLAN
3	FOUNDATION PLAN
4	TYPICAL SECTION
5	RETAINING WALL DETAILS
6	SOLDIER PILE WALL LAGGING DETAILS
7	LOG OF TEST BORINGS 1 OF 5
8	LOG OF TEST BORINGS 2 OF 5
9	LOG OF TEST BORINGS 3 OF 5
10	LOG OF TEST BORINGS 4 OF 5
11	LOG OF TEST BORINGS 5 OF 5

STANDARD PLANS DATED 2010

A10A	ABBREVIATIONS (SHEET 1 OF 2)
RSP A10B	ABBREVIATIONS (SHEET 2 OF 2)
A10C	LINES AND SYMBOLS (SHEET 1 OF 3)
A10D	LINES AND SYMBOLS (SHEET 2 OF 3)
A10E	LINES AND SYMBOLS (SHEET 3 OF 3)
A62B	LIMITS OF PAYMENT FOR EXCAVATION AND BACKFILL BRIDGE SURCHARGE AND WALL
B3-6	RETAINING WALL DETAIL NO. 2
RSP B11-47	CABLE RAILING

STANDARD PLAN SHEET NUMBER

DETAIL NUMBER

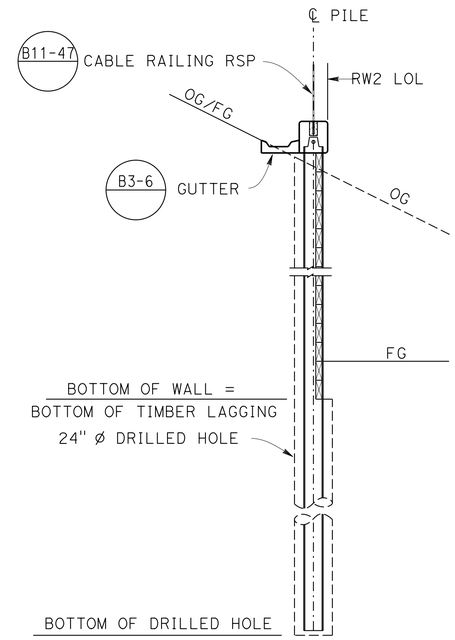

TYPICAL SECTION

1/4" = 1'-0"

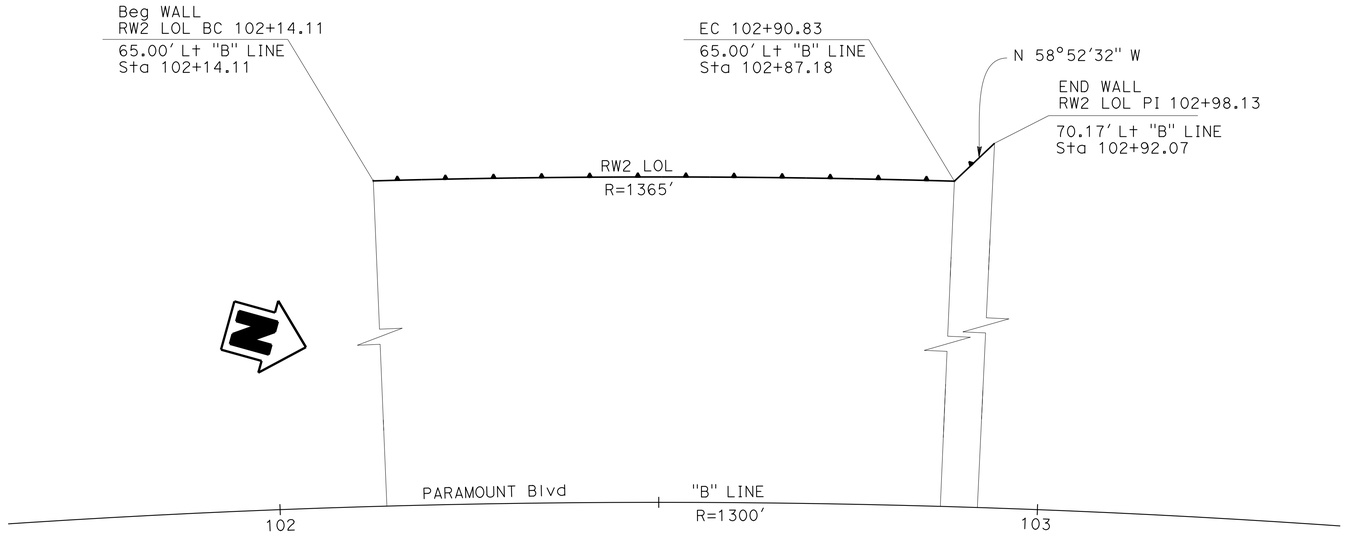

PLAN

1" = 10'

QUANTITIES

STRUCTURE EXCAVATION (SOLDIER PILE WALL)	43	CY
STRUCTURE BACKFILL (SOLDIER PILE WALL)	14	CY
CONCRETE BACKFILL (SOLDIER PILE WALL)	21	CY
LEAN CONCRETE BACKFILL	10	CY
STEEL SOLDIER PILE (HP 12 X 84)	274	LF
24" DRILLED HOLE	261	LF
STRUCTURAL CONCRETE, WALL CAP	8	CY
BAR REINFORCING STEEL, WALL CAP	1,280	LB
TIMBER LAGGING	2.7	MFBM
CLEAN AND PAINT STEEL SOLDIER PILING	LUMP	SUM
MINOR CONCRETE (GUTTER) (LF)	85	LF
CABLE RAILING	85	LF

NOTE:
THE CONTRACTOR MUST VERIFY ALL CONTROLLING FIELD DIMENSIONS BEFORE ORDERING OR FABRICATING ANY MATERIAL.

X HOWARD NG
DESIGN ENGINEER

	BY	CHECKED
DESIGN	Edward B Mu	Mohammad Muqtadir
DETAILS	Lan T Tran	Mohammad Muqtadir
QUANTITIES	Edward B Mu	Mohammad Muqtadir

LOAD & RESISTANCE FACTOR DESIGN — LIVE LOADING: HL93 W/"LOW-BOY"; PERMIT DESIGN VEHICLE

	BY	CHECKED
LAYOUT	Edward B Mu	Mohammad Muqtadir
SPECIFICATIONS	Tanya Kershell	PLANS AND SPECS COMPARED Tanya Kershell

ORIGINAL SCALE IN INCHES FOR REDUCED PLANS 0 1 2 3

STATE OF CALIFORNIA
DEPARTMENT OF TRANSPORTATION

DIVISION OF ENGINEERING SERVICES
STRUCTURE DESIGN
DESIGN BRANCH 20

BRIDGE NO. 53E0294
POST MILE R7.4/ R8.1

RETAINING WALL NO. 2
GENERAL PLAN

UNIT: 3622
PROJECT NUMBER & PHASE: 0715000132 1
CONTRACT NO.: 07-3X7114

DISREGARD PRINTS BEARING EARLIER REVISION DATES

REVISION DATES: 12-14-13 10-29-14 11-13-13

SHEET 1 OF 11

USERNAME => s1256624 DATE PLOTTED => 12-JUN-2015 TIME PLOTTED => 10:34

STRUCTURES DESIGN GENERAL PLAN SHEET (ENGLISH) (REV.09-01-10)

FILE => 57-RW2-a-gp.dgn

DIST	COUNTY	ROUTE	POST MILES TOTAL PROJECT	SHEET No.	TOTAL SHEETS
07	LA	60	R7.4/R8.1	218	238

REGISTERED CIVIL ENGINEER 10-29-14 DATE

6-1-15
PLANS APPROVAL DATE

REGISTERED PROFESSIONAL ENGINEER
EDWARD B. MU
No. C72567
Exp. 06-30-16
CIVIL
STATE OF CALIFORNIA

The State of California or its officers or agents shall not be responsible for the accuracy or completeness of electronic copies of this plan sheet.

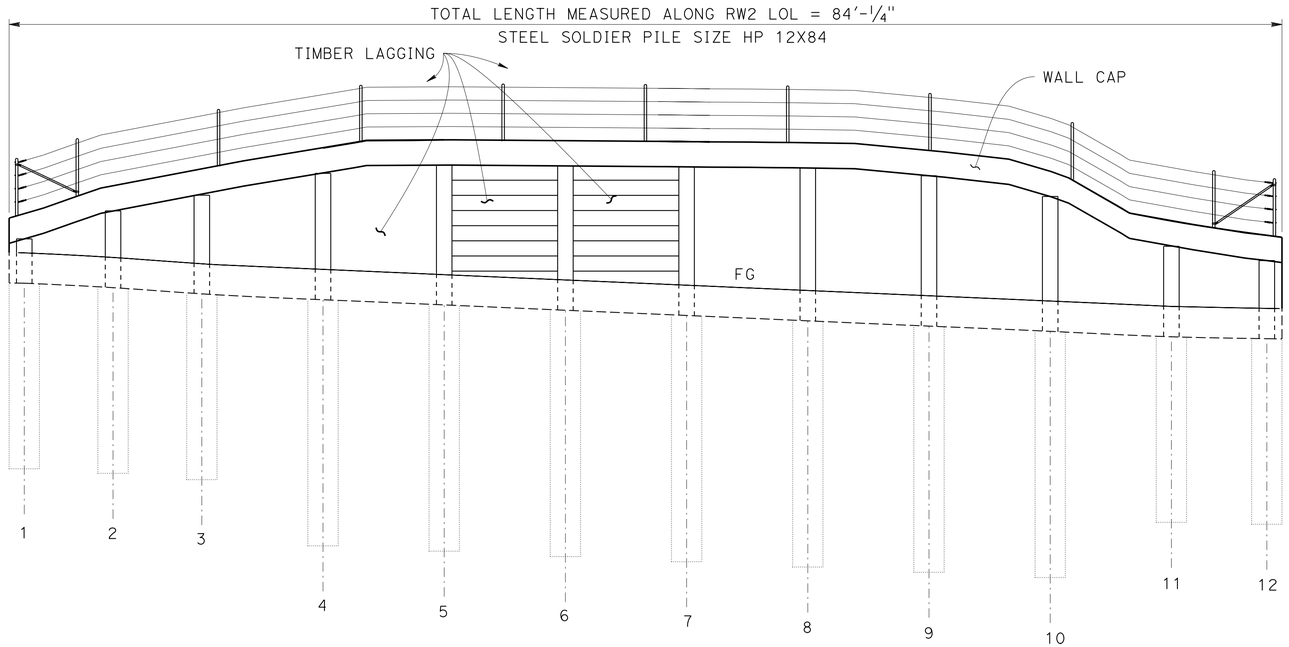

DATUM ELEVATION 340.00

103+00

DEVELOPED ELEVATION

1" = 5'

ELEVATION TABLE						
Sta along RW2 LOL	Pile No.	Top of Wall	FG in Front of Wall	OG Behind Wall	FG Behind Wall	Bottom of Drilled Hole
102+14.11	-	-	-	-	-	-
102+15.11	1	374.65	372.06	372.74	372.98	357.81
102+20.97	2	376.49	371.75	374.20	374.82	357.50
102+26.83	3	377.60	371.34	375.32	375.93	357.09
102+34.83	4	379.00	370.97	376.74	377.33	352.72
102+42.83	5	379.52	370.62	377.21	377.85	352.37
102+50.83	6	379.46	370.27	377.19	377.79	352.02
102+58.83	7	379.40	369.92	377.13	377.73	351.67
102+66.83	8	379.33	369.57	377.07	377.66	351.32
102+74.83	9	378.82	369.23	376.52	377.15	350.98
102+82.83	10	377.44	368.88	375.38	375.77	350.63
102+90.83	11	374.19	368.52	372.06	372.52	354.27
102+97.13	12	373.22	368.39	371.23	371.55	354.14
102+98.13	-	-	-	-	-	-

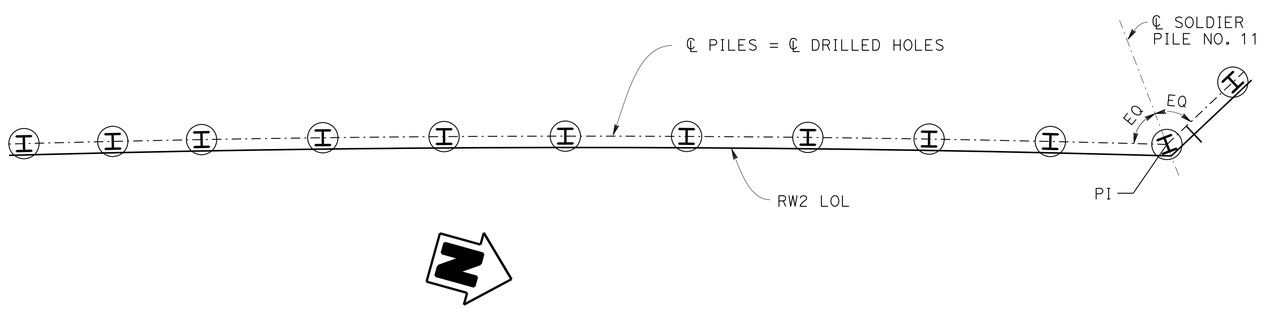

PLAN

1" = 5'

NOTE:
THE CONTRACTOR MUST VERIFY ALL CONTROLLING FIELD DIMENSIONS BEFORE ORDERING OR FABRICATING ANY MATERIAL.

GENERAL NOTES

DESIGN:
AASHTO LRFD Bridge Design Specifications, 4th Edition with California Amendments

LIVE LOADING:
240 psf equivalent to 2 feet soil weight

SOIL PARAMETER:
(for determination of Design Lateral Earth Pressures)
Backfill soil weight = 125 lb/ft^3
Friction Angle = 38°
Active Pressure coefficent, Ka = 0.331
Bedrock Unit Weight = 150 lb/ft^3
Slope Angle = 26.6°

STEEL SOLDIER PILES:
ASTM A572/A, ASTM 572M Grade 50 Min, or ASTM A36/A36M

REINFORCE CONCRETE:
f'c = 4000 psi
fy = 60 ksi

STRUCTURAL TIMBER:
Treated Douglas Fir, Grade No. 1 or better
Timber to be full sawn

	BY	CHECKED
DESIGN	Edward B Mu	Mohammad Muqtadir
DETAILS	Lan T Tran	Mohammad Muqtadir
QUANTITIES	Edward B Mu	Mohammad Muqtadir

STATE OF CALIFORNIA
DEPARTMENT OF TRANSPORTATION

DIVISION OF ENGINEERING SERVICES
STRUCTURE DESIGN
DESIGN BRANCH 20

BRIDGE NO. 53E0294
POST MILE R7.4/ R8.1

RETAINING WALL NO. 2
STRUCTURE PLAN

STRUCTURES DESIGN DETAIL SHEET (ENGLISH) (REV. 09-01-10)

ORIGINAL SCALE IN INCHES FOR REDUCED PLANS 0 1 2 3

UNIT: 3622
PROJECT NUMBER & PHASE: 0715000132 1
CONTRACT NO.: 07-3X7114

DISREGARD PRINTS BEARING EARLIER REVISION DATES

REVISION DATES: 8-05-13 8-21-13 11-13-13 10-29-14

SHEET 2 OF 11

FILE => 57-RW2-b-sp.dgn

USERNAME => s125624 DATE PLOTTED => 12-JUN-2015 TIME PLOTTED => 10:34

DIST	COUNTY	ROUTE	POST MILES TOTAL PROJECT	SHEET No.	TOTAL SHEETS
07	LA	60	R7.4/R8.1	219	238

REGISTERED CIVIL ENGINEER 10-29-14 DATE

6-1-15
PLANS APPROVAL DATE

REGISTERED PROFESSIONAL ENGINEER
EDWARD B. MU
No. C72567
Exp. 06-30-16
CIVIL
STATE OF CALIFORNIA

The State of California or its officers or agents shall not be responsible for the accuracy or completeness of electronic copies of this plan sheet.

CURVE DATA				
No.	R	Δ	T	L
1	1365.00	03°13′14″	38.37	76.72
2	1300.00	78°25′40″	1060.78	1779.47

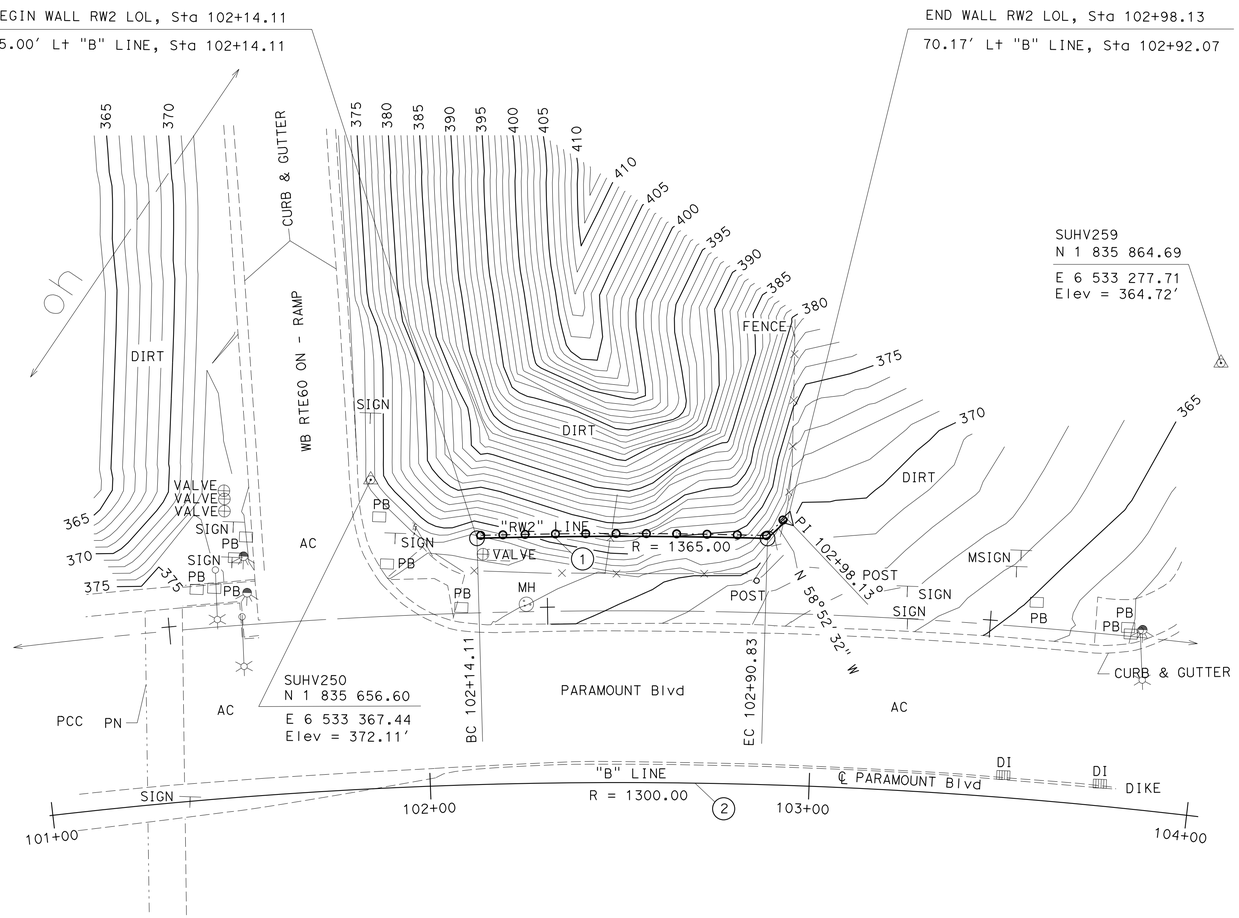

SURVEY CONTROL

SUHV250
IRON PIPE
81.50FT Lt. "B" LINE
Sta. 101+88.12
N 1 835 656.60
E 6 533 367.44
ELEV. = 372.11′

SUHV259
SPIKE IN NG
119.67 FT Lt. "B" LINE
Sta. 103+95.68
N 1 835 864.69
E 6 533 277.71
ELEV. = 364.72′

NOTES:

UNDERGROUND UTILITIES AS SHOWN ARE APPROXIMATE

PRELIMINARY INVESTIGATION SECTION

SCALE	VERT.DATUM NAVD 88	PHOTOGRAMMETRY AS OF: X		
1"=20′	HORZ.DATUM NAD 83 (1991.35)	SURVEYED	BY C.STEWART / T.PHUNG	CHECKED BY C. STEWART 04/2013
ALIGNMENT TIES Dist. Traverse Sheet		DRAFTED	BY S. ABASSY 04/2013	CHECKED BY S. ALIVIO 04/2013

DESIGN	BY Edward B Mu	CHECKED Mohammad Muqtadir
DETAILS	BY Lan T Tran	CHECKED Mohammad Muqtadir
QUANTITIES	BY Edward B Mu	CHECKED Mohammad Muqtadir

STATE OF CALIFORNIA
DEPARTMENT OF TRANSPORTATION

DIVISION OF ENGINEERING SERVICES
STRUCTURE DESIGN
DESIGN BRANCH 20

BRIDGE NO. 53E0294
POST MILE R7.4/ R8.1

RETAINING WALL NO. 2
FOUNDATION PLAN

STRUCTURES FOUNDATION PLAN SHEET (ENGLISH) (REV. 09-01-10)

ORIGINAL SCALE IN INCHES FOR REDUCED PLANS 0 1 2 3

UNIT: 3622
PROJECT NUMBER & PHASE: 0715000132 1 CONTRACT NO.: 07-3X7114

DISREGARD PRINTS BEARING EARLIER REVISION DATES

REVISION DATES 11-13-13 10-29-14 06-24-13

SHEET 3 OF 11

FILE => 57-RW2-c-fpl.dgn

DIST	COUNTY	ROUTE	POST MILES TOTAL PROJECT	SHEET No.	TOTAL SHEETS
07	LA	60	R7.4/R8.1	220	238

REGISTERED CIVIL ENGINEER 10-29-14 DATE

6-1-15
PLANS APPROVAL DATE

REGISTERED PROFESSIONAL ENGINEER
EDWARD B. MU
No. C72567
Exp. 06-30-16
CIVIL
STATE OF CALIFORNIA

The State of California or its officers or agents shall not be responsible for the accuracy or completeness of electronic copies of this plan sheet.

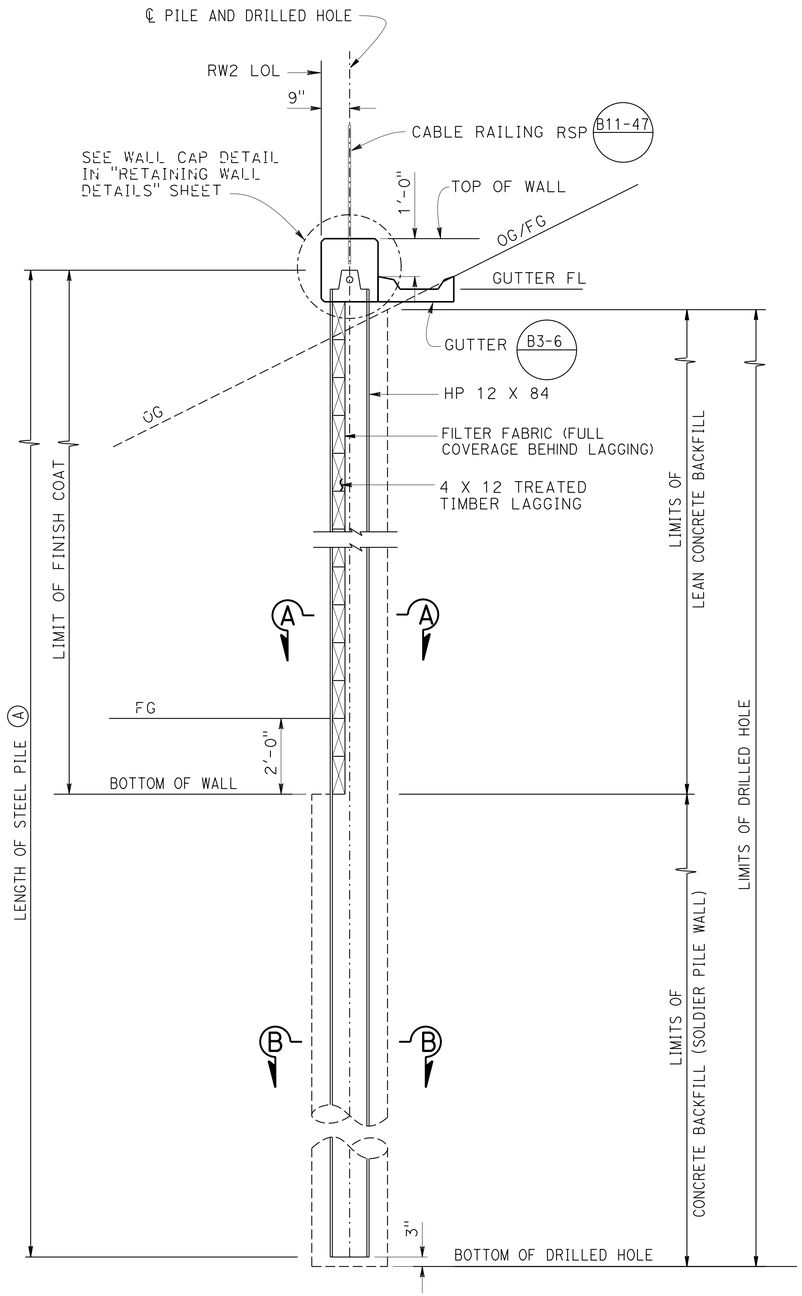

TYPICAL SECTION

½" = 1'-0"

NOTE:
THE CONTRACTOR MUST VERIFY ALL CONTROLLING FIELD DIMENSIONS BEFORE ORDERING OR FABRICATING ANY MATERIAL.

NOTE:

(A) Limits of undercoat

For lagging details see "SOLDIER PILE WALL LAGGING DETAILS"

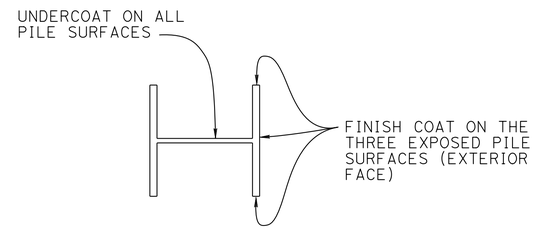

LIMITS OF CLEAN & PAINT STEEL SOLDIER PILING

NO SCALE

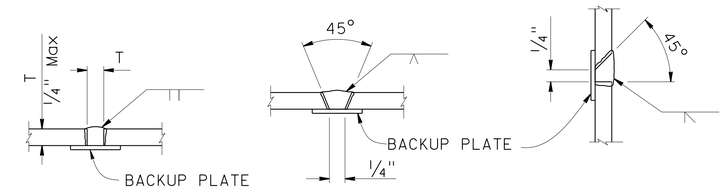

SQUARE GROOVE SINGLE VEE-GROOVE SINGLE BEVEL-GROOVE

PILE WELDING DETAIL-BUTT JOINTS

NO SCALE

NOTES:

1. Single vee-groove and square groove permitted for all positions
2. Single bevel-groove permitted for horizontal joints only

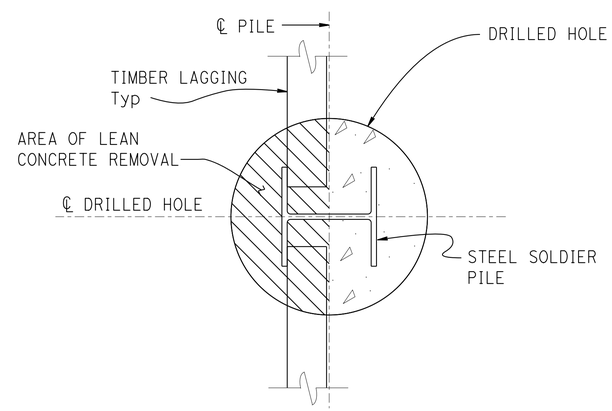

SECTION A-A

NO SCALE

NOTE:
For Lean Concrete removal at Pile-11, see "RETAINING WALL DETAILS" sheet.

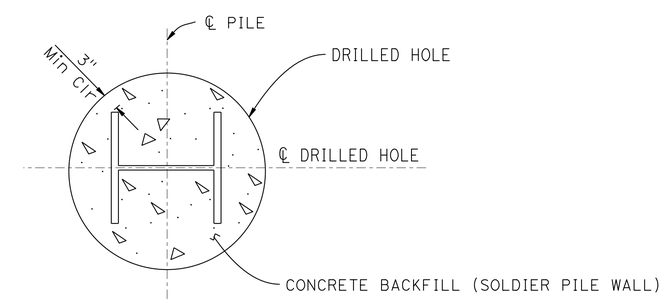

SECTION B-B

NO SCALE

DESIGN	BY Edward B Mu	CHECKED Mohammad Muqtadir	
DETAILS	BY Lan T Tran	CHECKED Mohammad Muqtadir	
QUANTITIES	BY Edward B Mu	CHECKED Mohammad Muqtadir	

STATE OF CALIFORNIA
DEPARTMENT OF TRANSPORTATION

DIVISION OF ENGINEERING SERVICES
STRUCTURE DESIGN
DESIGN BRANCH 20

BRIDGE NO. 53E0294
POST MILE R7.4/ R8.1

RETAINING WALL NO. 2
TYPICAL SECTION

STRUCTURES DESIGN DETAIL SHEET (ENGLISH) (REV. 09-01-10)

ORIGINAL SCALE IN INCHES FOR REDUCED PLANS 0 1 2 3

UNIT: 3622
PROJECT NUMBER & PHASE: 0715000132 1 CONTRACT NO.: 07-3X7111=4

DISREGARD PRINTS BEARING EARLIER REVISION DATES

REVISION DATES 10-29-14 10-16-13 11-14-13

SHEET 4 OF 11

FILE => 57-RW2-f-ts.dgn

USERNAME => s125624 DATE PLOTTED => 12-JUN-2015 TIME PLOTTED => 10:34

DIST	COUNTY	ROUTE	POST MILES TOTAL PROJECT	SHEET No.	TOTAL SHEETS
07	LA	60	R7.4/R8.1	221	238

REGISTERED CIVIL ENGINEER 10-29-14 DATE

6-1-15
PLANS APPROVAL DATE

REGISTERED PROFESSIONAL ENGINEER
EDWARD B. MU
No. C72567
Exp. 06-30-16
CIVIL
STATE OF CALIFORNIA

The State of California or its officers or agents shall not be responsible for the accuracy or completeness of electronic copies of this plan sheet.

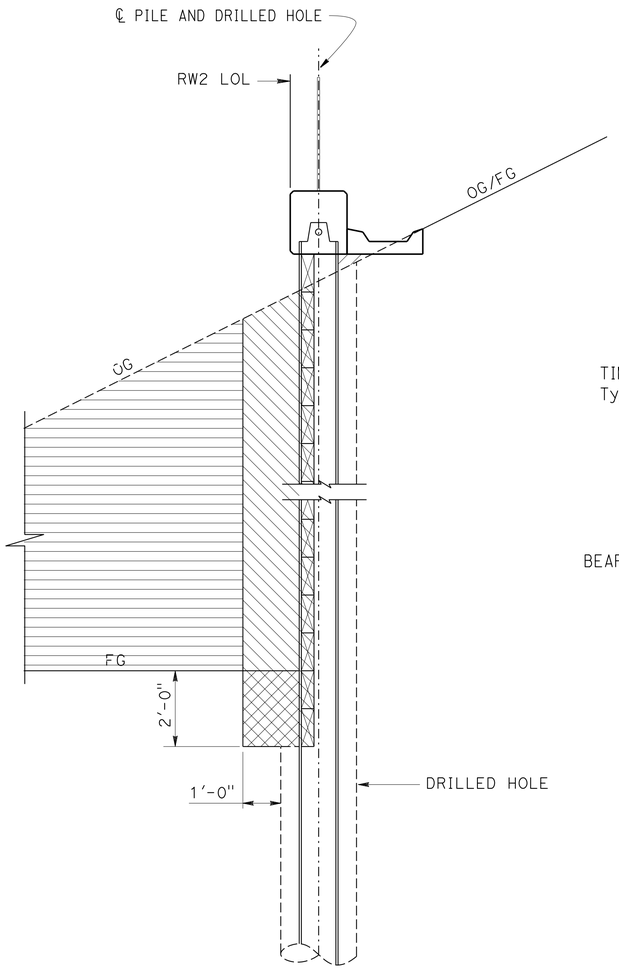

RETAINING WALL EXCAVATION AND BACKFILL LIMITS

½" = 1'-0"

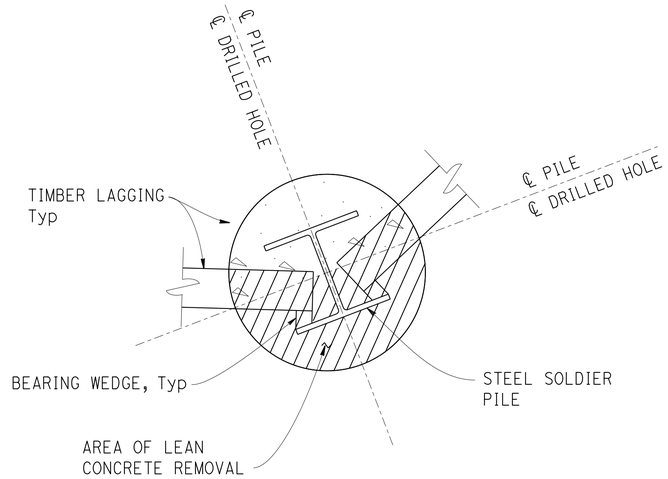

LEAN CONCRETE REMOVAL AT PILE NO. 11

NO SCALE

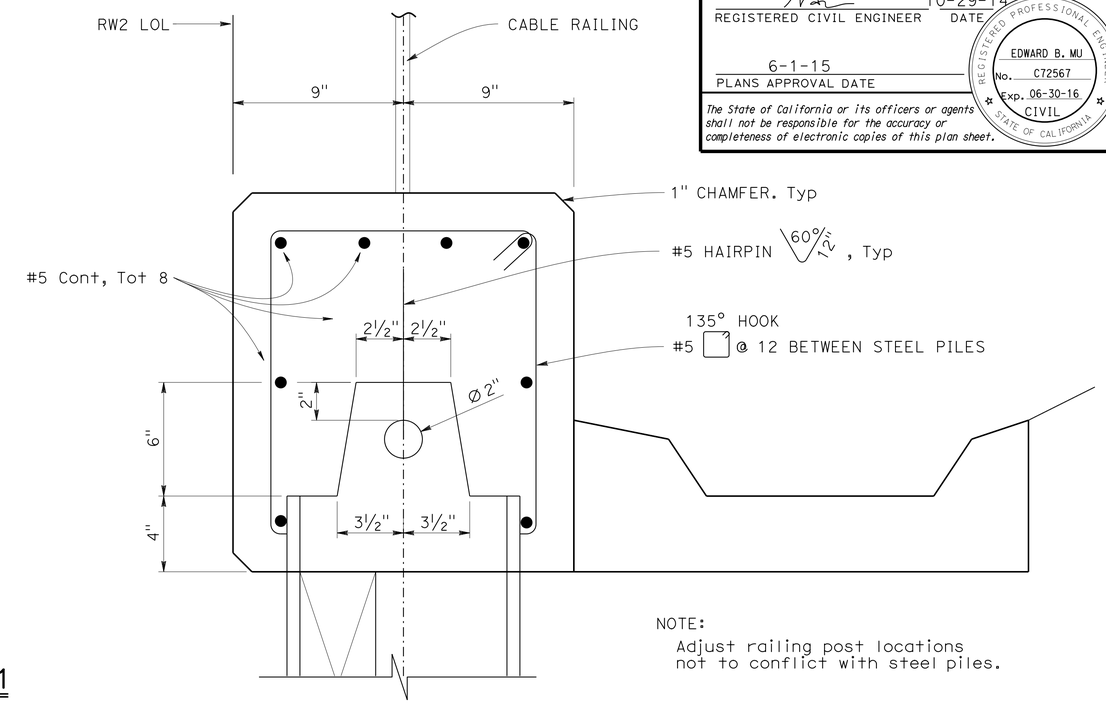

NOTE:
Adjust railing post locations not to conflict with steel piles.

WALL CAP DETAIL

3" = 1'-0"

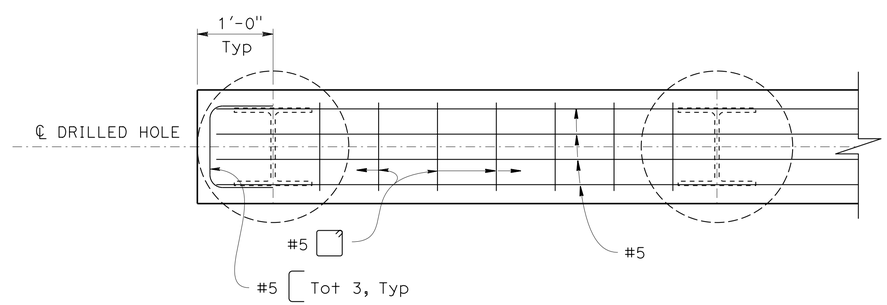

BEGIN/END WALL CAP DETAIL

1" = 1'-0"

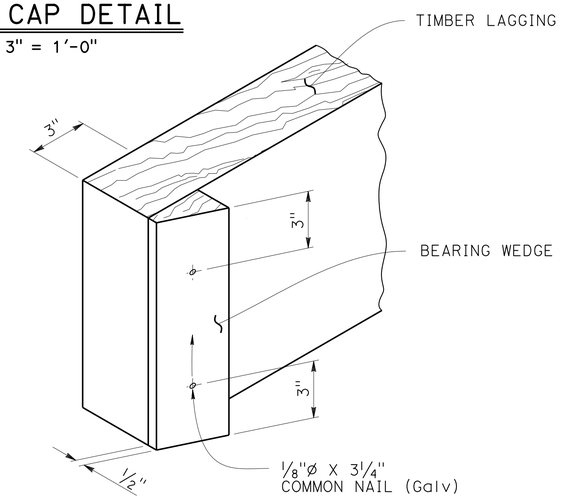

NOTE:
Bearing wedge using the same wood as lagging plate.

BEARING WEDGE DETAIL

3" = 1'-0"

LEGEND:

- Structure Excavation (Soldier Pile Wall)
- Structure Backfill (Soldier Pile Wall)
- Roadway Excavation, see "ROAD PLANS"

NOTE:
THE CONTRACTOR MUST VERIFY ALL CONTROLLING FIELD DIMENSIONS BEFORE ORDERING OR FABRICATING ANY MATERIAL.

	BY	CHECKED
DESIGN	Edward B Mu	Mohammad Muqtadir
DETAILS	Lan T Tran	Mohammad Muqtadir
QUANTITIES	Edward B Mu	Mohammad Muqtadir

STATE OF CALIFORNIA
DEPARTMENT OF TRANSPORTATION

DIVISION OF ENGINEERING SERVICES
STRUCTURE DESIGN
DESIGN BRANCH 20

BRIDGE NO. 53E0294
POST MILE R7.4/ R8.1

RETAINING WALL NO. 2
RETAINING WALL DETAILS

STRUCTURES DESIGN DETAIL SHEET (ENGLISH) (REV. 09-01-10)

ORIGINAL SCALE IN INCHES FOR REDUCED PLANS 0 1 2 3

UNIT: 3622
PROJECT NUMBER & PHASE: 0715000132 1
CONTRACT NO.: 07-3X7114

DISREGARD PRINTS BEARING EARLIER REVISION DATES

REVISION DATES 10-09-13 11-13-13 10-29-14

SHEET 5 OF 11

FILE => 57-RW2-g-wallrt01.dgn

USERNAME => s125624 DATE PLOTTED => 12-JUN-2015 TIME PLOTTED => 10:34

DIST	COUNTY	ROUTE	POST MILES TOTAL PROJECT	SHEET No.	TOTAL SHEETS
07	LA	60	R7.4/R8.1	222	238

REGISTERED CIVIL ENGINEER 10-29-14 DATE

6-1-15
PLANS APPROVAL DATE

REGISTERED PROFESSIONAL ENGINEER EDWARD B. MU No. C72567 Exp. 06-30-16 CIVIL STATE OF CALIFORNIA

The State of California or its officers or agents shall not be responsible for the accuracy or completeness of electronic copies of this plan sheet.

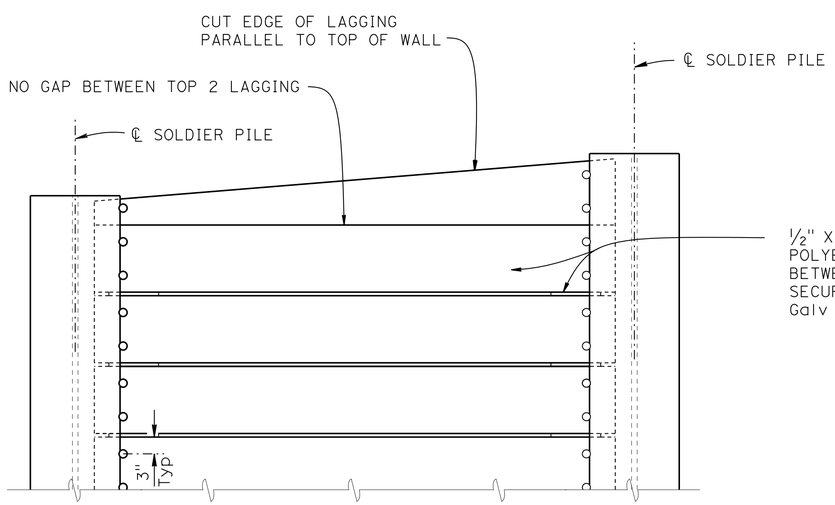

PART ELEVATION

LAGGING DETAILS (ALTERNATIVE 1)

NO SCALE

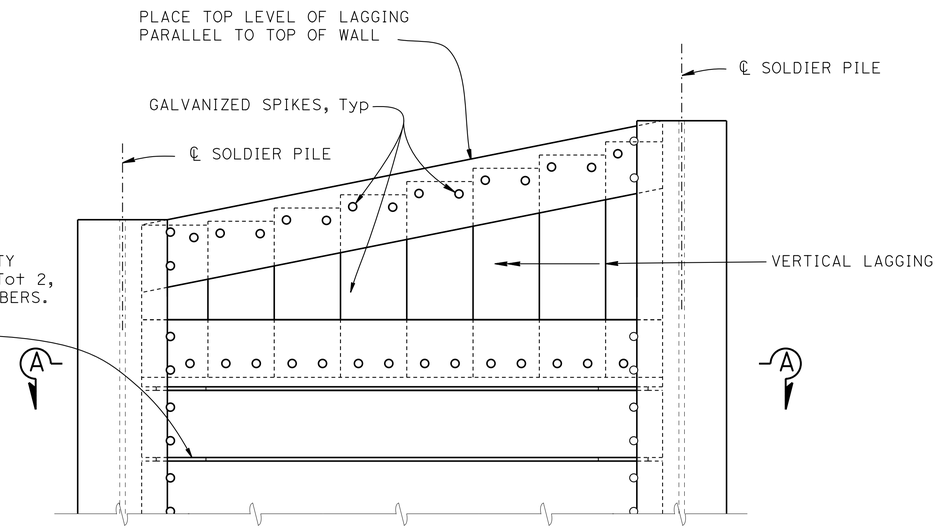

PART ELEVATION

LAGGING DETAILS (ALTERNATIVE 2)

NO SCALE

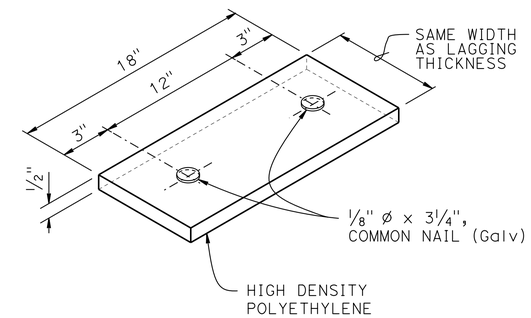

SHIM DETAIL

NO SCALE

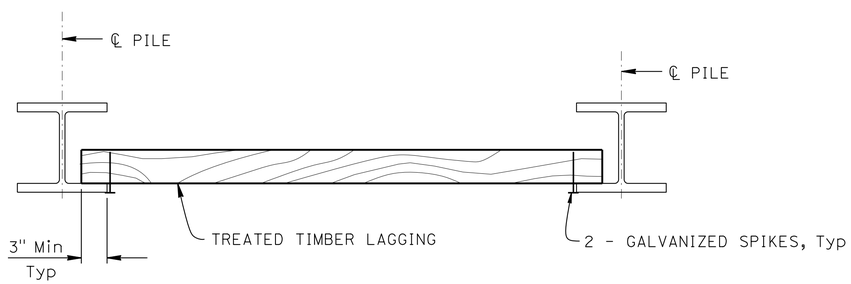

PART PLAN

NO SCALE

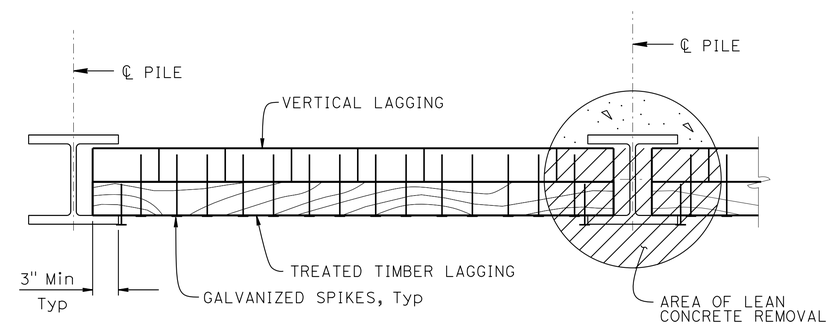

SECTION A-A

NO SCALE

NOTES:

1. No clipping of timber lagging corners allowed
2. Use 16d Galv wire spikes for 4 x 12 lagging. ~~and 40d Galv wire spikes for 6 x 12 lagging~~ (1)
3. Spikes shall not be bent
4. Lagging at soldier pile No. 11 see "RETAINING WALL DETAILS" sheet (2)

STANDARD DRAWING

FILE NO. xs12-080

APPROVAL DATE January 2012

(1) Modified Note
(2) Added Note

STATE OF CALIFORNIA DEPARTMENT OF TRANSPORTATION

DIVISION OF ENGINEERING SERVICES

BRIDGE NO. 53E0294

POST MILE R7.4/ R8.1

RETAINING WALL NO. 2

SOLDIER PILE WALL LAGGING DETAILS

DS OSD 2147A (ENGLISH STANDARD DRAWING "XS" BORDER REV. (02-02-11)

ORIGINAL SCALE IN INCHES FOR REDUCED PLANS 0 1 2 3

UNIT: 3622
PROJECT NUMBER & PHASE: 0715000132 1
CONTRACT NO.: 07-3X7114

DISREGARD PRINTS BEARING EARLIER REVISION DATES

REVISION DATES 6-26-13 6-25-13 11-14-13 10-29-14

SHEET 6 OF 11

FILE => 57-RW2-g-walldt02.dgn

USERNAME => s125624 DATE PLOTTED => 12-JUN-2015 TIME PLOTTED => 10:34

DIST	COUNTY	ROUTE	POST MILES TOTAL PROJECT	SHEET No.	TOTAL SHEETS
07	LA	60	R7.4/R8.1	223	238

REGISTERED CIVIL ENGINEER 11-5-14 DATE

6-1-15
PLANS APPROVAL DATE

REGISTERED PROFESSIONAL ENGINEER Haitao Liu No. C66398 Exp. 6-30-16 CIVIL STATE OF CALIFORNIA

The State of California or its officers or agents shall not be responsible for the accuracy or completeness of electronic copies of this plan sheet.

This LOTB sheet was prepared in accordance with the Caltrans Soil & Rock Logging, Classification, & Presentation Manual (2010 Edition).

See 2010 Standard Plans A10F and A10G for Soil Legend, and A10H for Rock Legend.

Note: No ground water encountered in Boring A-12-003 during field investigation.

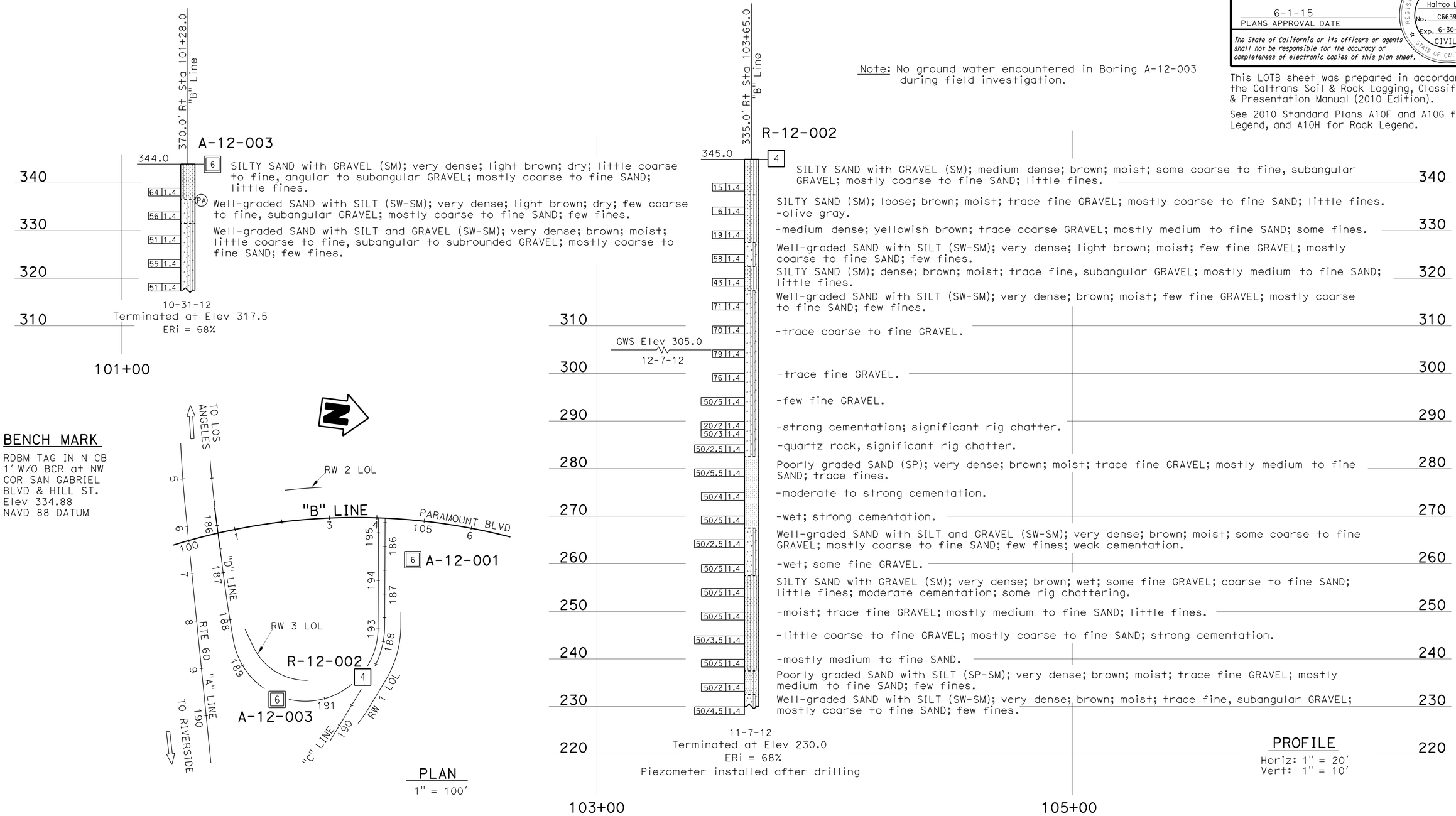

ENGINEERING SERVICES	MATERIALS AND GEOTECHNICAL SERVICES	STATE OF CALIFORNIA DEPARTMENT OF TRANSPORTATION	DIVISION OF ENGINEERING SERVICES STRUCTURE DESIGN DESIGN BRANCH X	BRIDGE NO. 53E0294 POST MILE 7.4/8.1	RETAINING WALL NO. 2 LOG OF TEST BORINGS 1 OF 5
FUNCTIONAL SUPERVISOR NAME: D. Jang	DRAWN BY: W. Tang 05/13 CHECKED BY: S. Han	FIELD INVESTIGATION BY: J. Wong			

OGS CIVIL LOG OF TEST BORINGS SHEET

ORIGINAL SCALE IN INCHES FOR REDUCED PLANS 0 1 2 3

UNIT: 3643
PROJECT NUMBER & PHASE: 07150001321 CONTRACT NO.: 07-3X7114

DISREGARD PRINTS BEARING EARLIER REVISION DATES

REVISION DATES 06-04-13 10-05-14 12-30-13 SHEET 7 OF 11

FILE => 57-RW2-z-ltb01.dgn

USERNAME => s125624 DATE PLOTTED => 12-JUN-2015 TIME PLOTTED => 10:34

DIST	COUNTY	ROUTE	POST MILES TOTAL PROJECT	SHEET No.	TOTAL SHEETS
07	LA	60	R7.4/R8.1	224	238

REGISTERED CIVIL ENGINEER 11-5-14 DATE

6-1-15
PLANS APPROVAL DATE

REGISTERED PROFESSIONAL ENGINEER Haitao Liu No. C66398 Exp. 6-30-16 CIVIL STATE OF CALIFORNIA

The State of California or its officers or agents shall not be responsible for the accuracy or completeness of electronic copies of this plan sheet.

This LOTB sheet was prepared in accordance with the Caltrans Soil & Rock Logging, Classification, & Presentation Manual (2010 Edition).

See 2010 Standard Plans A10F and A10G for Soil Legend, and A10H for Rock Legend.

FOR PLAN VIEW, SEE
"LOG OF TEST BORINGS 1 OF 5"

85.0' Rt Sta 104+78.0 "B" Line

A-12-001

354.0

Elev	Blows	Description
354.0	6	SILTY SAND (SM); very dense; light brown; dry; few fine GRAVEL; mostly fine SAND; few nonplastic fines.
	50/4 | 1.4	
	10 | 1.4	-medium dense; brown; trace fine GRAVEL; mostly medium to fine SAND; some low plasticity fines.
	23 | 1.4	SILTY SAND with GRAVEL (SM); medium dense; brown; dry; some coarse to fine GRAVEL; mostly medium to fine SAND; little low plasticity fines.
	43 | 1.4	-dense.
	68 | 1.4	-very dense; subangular to subrounded GRAVEL; mostly coarse to fine SAND; little fines; moderate cementation.
	59 | 1.4	
	48 | 1.4	SILTY SAND (SM); very dense; brown; dry; few fine GRAVEL; mostly medium to fine SAND; little fines.
	62 | 1.4	-moist; few coarse to fine, subangular to subrounded GRAVEL; mostly coarse to fine SAND; little fines.
	82 | 1.4	
	78 | 1.4	SILTY SAND with GRAVEL (SM); very dense; brown; moist; little fine, subangular to subrounded GRAVEL; mostly coarse to fine SAND; little nonplastic fines.
	58 | 1.4	-wet.
GWS Elev 295.0 10-30-12	52 | 1.4	Well-graded SAND with SILT (SW-SM); very dense; brown; wet; trace fine, subrounded GRAVEL; mostly coarse to fine SAND; few fines.
	62 | 1.4	-few coarse to fine, subangular to subrounded GRAVEL.
	87 | 1.4	-few fine GRAVEL.
	50/5.5 | 1.4	SILTY SAND with GRAVEL (SM); very dense; brown; wet; little fine GRAVEL; mostly coarse to fine SAND; little fines.
	89 | 1.4	
	50/5 | 1.4	SILTY SAND (SM); very dense; brown; wet; few fine GRAVEL; mostly coarse to fine SAND; little fines.
	50/5 | 1.4	SILTY SAND with GRAVEL (SM); very dense; brown; wet; some coarse to fine GRAVEL; mostly coarse to fine SAND; little fines.
	50/5 | 1.4	-moist.
	50/5 | 1.4	-little coarse to fine GRAVEL.

10-31-12
Terminated at Elev 239.0
ERi = 68%

360 350 340 330 320 310 300 290 280 270 260 250 240

104+50 105+50 106+50

PROFILE
Horiz: 1" = 10'
Vert: 1" = 10'

ENGINEERING SERVICES	MATERIALS AND GEOTECHNICAL SERVICES	STATE OF CALIFORNIA DEPARTMENT OF TRANSPORTATION	DIVISION OF ENGINEERING SERVICES STRUCTURE DESIGN DESIGN BRANCH X	BRIDGE NO. 53E0294 POST MILE 7.4/8.1	RETAINING WALL NO. 2 LOG OF TEST BORINGS 2 OF 5
FUNCTIONAL SUPERVISOR NAME: D. Jang	DRAWN BY: W. Tang 05/13 CHECKED BY: S. Han	FIELD INVESTIGATION BY: J. Wong			

OGS CIVIL LOG OF TEST BORINGS SHEET

ORIGINAL SCALE IN INCHES FOR REDUCED PLANS 0 1 2 3

UNIT: 3643
PROJECT NUMBER & PHASE: 07150001321 CONTRACT NO.: 07-3X7114

DISREGARD PRINTS BEARING EARLIER REVISION DATES → REVISION DATES 06-04-13 10-05-14 12-30-13 SHEET 8 OF 11

FILE => 57-RW2-z-ltb02.dgn

USERNAME => s125624 DATE PLOTTED => 12-JUN-2015 TIME PLOTTED => 10:34

NO AS BUILT CORRECTIONS

CORRECTIONS TRANSFERRED BY: LAN T TRAN
FIELD CORRECTIONS BY: ALI EL-ZAYNAB

TRANSFER DATE: 09-18-2012
FIELD CORRECTION DATE: 07-24-2012

CONTRACT NO: 07-293904

DIST	COUNTY	ROUTE	POST MILES TOTAL PROJECT	SHEET No.	TOTAL SHEETS
07	LA	60	R7.8	107	114

REGISTERED CIVIL ENGINEER — DATE 1-10-12

2-6-12
PLANS APPROVAL DATE

The State of California or its officers or agents shall not be responsible for the accuracy or completeness of electronic copies of this plan sheet.

REGISTERED PROFESSIONAL ENGINEER — Sungro Cho — No. C75151 — Exp. 12-31-13 — CIVIL — STATE OF CALIFORNIA

This LOTB sheet was prepared in accordance with the Caltrans Soil & Rock Logging, Classification, & Presentation Manual (2010 Edition).

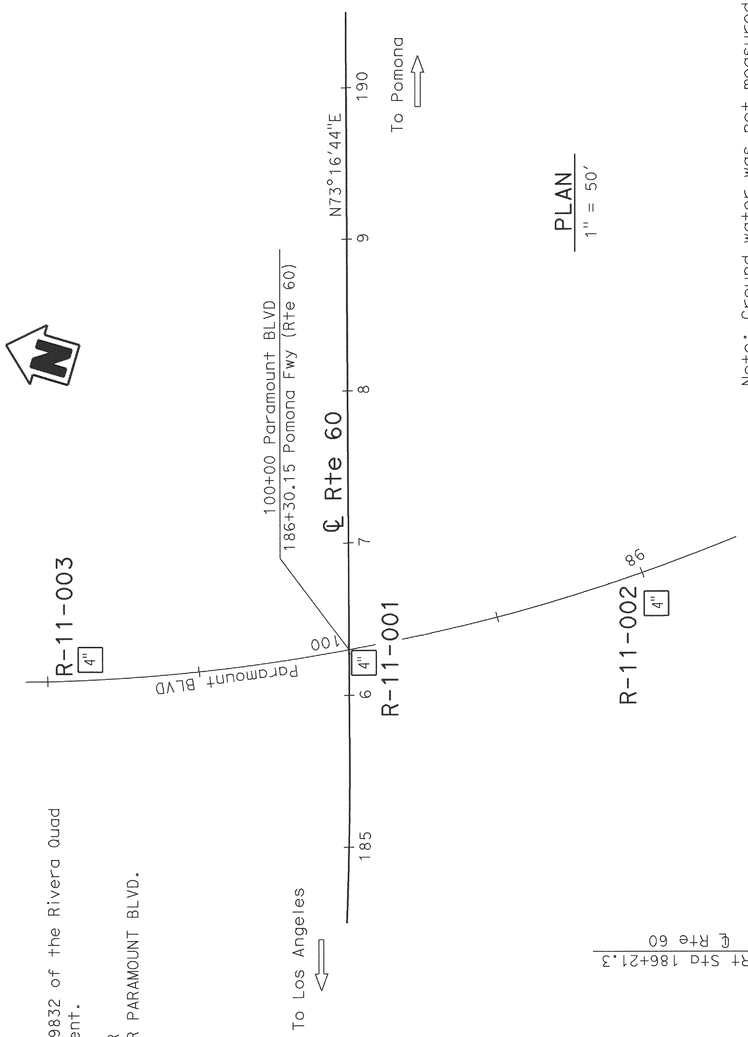

PLAN
1" = 50'

Note: Ground water was not measured during field investigation.

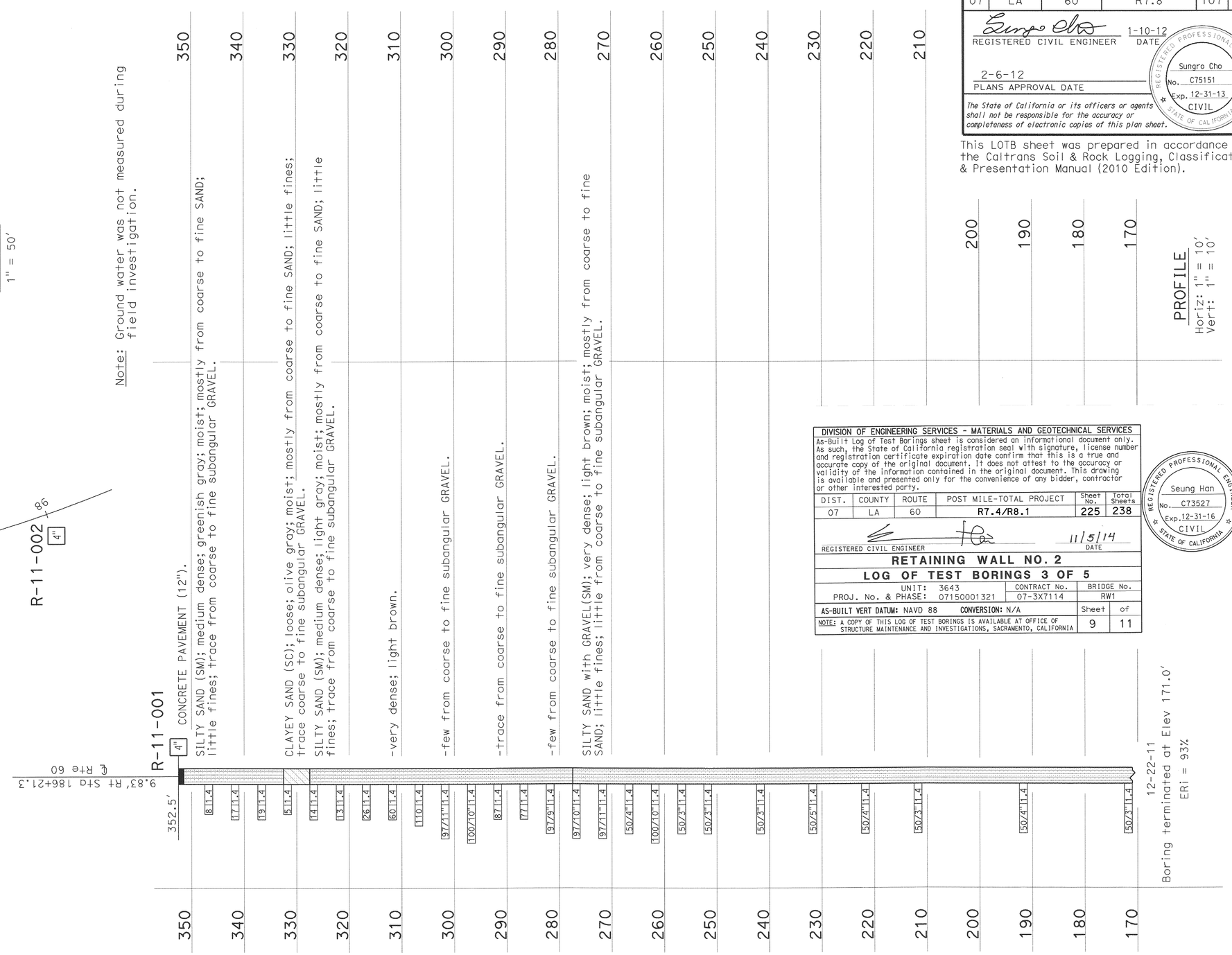

PROFILE
Horiz: 1" = 10'
Vert: 1" = 10'

DIVISION OF ENGINEERING SERVICES - MATERIALS AND GEOTECHNICAL SERVICES					
As-Built Log of Test Borings sheet is considered an informational document only. As such, the State of California registration seal with signature, license number and registration certificate expiration date confirm that this is a true and accurate copy of the original document. It does not attest to the accuracy or validity of the information contained in the original document. This drawing is available and presented only for the convenience of any bidder, contractor or other interested party.					
DIST.	COUNTY	ROUTE	POST MILE-TOTAL PROJECT	Sheet No.	Total Sheets
07	LA	60	R7.4/R8.1	225	238
REGISTERED CIVIL ENGINEER — DATE 11/5/14					
RETAINING WALL NO. 2					
LOG OF TEST BORINGS 3 OF 5					
PROJ. No. & PHASE: UNIT: 3643 07150001321			CONTRACT No. 07-3X7114	BRIDGE No. RW1	
AS-BUILT VERT DATUM: NAVD 88 CONVERSION: N/A				Sheet 9	of 11
NOTE: A COPY OF THIS LOG OF TEST BORINGS IS AVAILABLE AT OFFICE OF STRUCTURE MAINTENANCE AND INVESTIGATIONS, SACRAMENTO, CALIFORNIA					

REGISTERED PROFESSIONAL ENGINEER — Seung Han — No. C73527 — Exp. 12-31-16 — CIVIL — STATE OF CALIFORNIA

BENCH MARK
L.A. County Bench # 9832 of the Rivera Quad
NAVD88 2005 Adjustment.
Elev.: 304.104',
L&T IN S CB ARRPYO DR
1FT E/O BCR at SW COR PARAMOUNT BLVD.

ENGINEERING SERVICES	MATERIALS AND GEOTECHNICAL SERVICES	STATE OF CALIFORNIA DEPARTMENT OF TRANSPORTATION	DIVISION OF ENGINEERING SERVICES STRUCTURE DESIGN DESIGN BRANCH 20	BRIDGE NO. 53-3076 POST MILE R 7.8	PARAMOUNT BLVD OC (REPLACE) LOG OF TEST BORINGS 1 OF 5
FUNCTIONAL SUPERVISOR NAME: D. Jang	DRAWN BY: F. Nguyen CHECKED BY: S. Han	FIELD INVESTIGATION BY: S. Cho			

OGS CIVIL LOG OF TEST BORINGS SHEET — ORIGINAL SCALE IN INCHES FOR REDUCED PLANS 0 1 2 3 — UNIT: 3643 PROJECT NUMBER & PHASE: 0712000254 1 — CONTRACT NO.: 07-293901 — DISREGARD PRINTS BEARING EARLIER REVISION DATES — REVISION DATES 01-05-12 01-06-12 01-09-12 — SHEET 23 OF 27

FILE => 53-3076-z-1tb01.dvd

USERNAME => s131071 DATE PLOTTED => 19-SEP-2012 TIME PLOTTED => 12:52

DIST	COUNTY	ROUTE	POST MILES TOTAL PROJECT	SHEET No.	TOTAL SHEETS
07	LA	60	R7.8	108	114

REGISTERED CIVIL ENGINEER — DATE 1-10-12

2-6-12
PLANS APPROVAL DATE

The State of California or its officers or agents shall not be responsible for the accuracy or completeness of electronic copies of this plan sheet.

REGISTERED PROFESSIONAL ENGINEER — Sungro Cho — No. C75151 — Exp. 12-31-13 — CIVIL — STATE OF CALIFORNIA

This LOTB sheet was prepared in accordance with the Caltrans Soil & Rock Logging, Classification, & Presentation Manual (2010 Edition).

FOR PLAN VIEW, SEE
"LOG OF TEST BORINGS 1 OF 5"

DIVISION OF ENGINEERING SERVICES - MATERIALS AND GEOTECHNICAL SERVICES

As-Built Log of Test Borings sheet is considered an informational document only. As such, the State of California registration seal with signature, license number and registration certificate expiration date confirm that this is a true and accurate copy of the original document. It does not attest to the accuracy or validity of the information contained in the original document. This drawing is available and presented only for the convenience of any bidder, contractor or other interested party.

DIST.	COUNTY	ROUTE	POST MILE-TOTAL PROJECT	Sheet No.	Total Sheets
07	LA	60	R7.4/R8.1	226	238

REGISTERED CIVIL ENGINEER — DATE 11/5/14

REGISTERED PROFESSIONAL ENGINEER — Seung Han — No. C73527 — Exp. 12-31-16 — CIVIL — STATE OF CALIFORNIA

RETAINING WALL NO. 2

LOG OF TEST BORINGS 4 OF 5

UNIT: 3643	CONTRACT No.	BRIDGE No.
PROJ. No. & PHASE: 07150001321	07-3X7114	RW1

AS-BUILT VERT DATUM: NAVD 88 **CONVERSION:** N/A — Sheet 10 of 11

NOTE: A COPY OF THIS LOG OF TEST BORINGS IS AVAILABLE AT OFFICE OF STRUCTURE MAINTENANCE AND INVESTIGATIONS, SACRAMENTO, CALIFORNIA

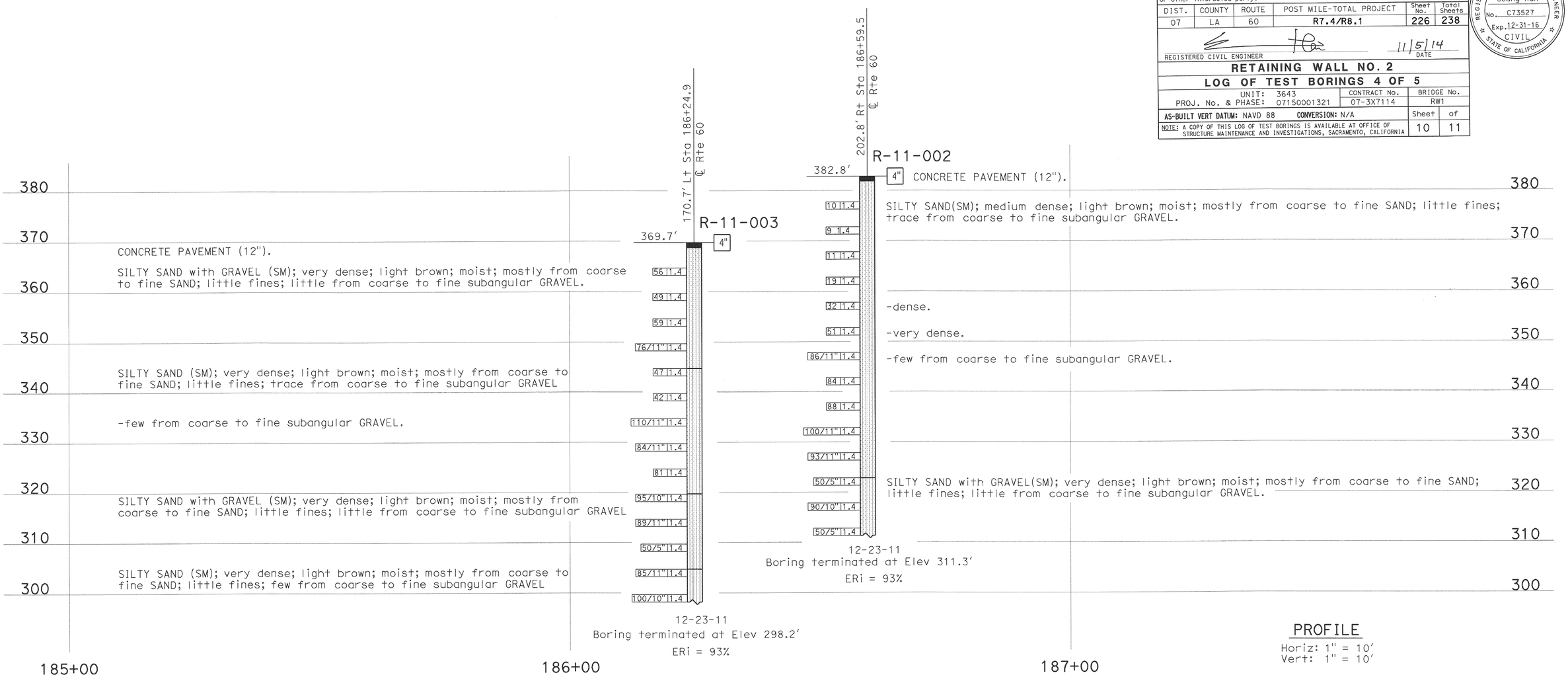

PROFILE
Horiz: 1" = 10'
Vert: 1" = 10'

ENGINEERING SERVICES	MATERIALS AND GEOTECHNICAL SERVICES	STATE OF CALIFORNIA DEPARTMENT OF TRANSPORTATION	DIVISION OF ENGINEERING SERVICES STRUCTURE DESIGN DESIGN BRANCH 20	BRIDGE NO. 53-3076 / POST MILE R 7.8	PARAMOUNT BLVD OC (REPLACE)
FUNCTIONAL SUPERVISOR NAME: D. Jang	DRAWN BY: F. Nguyen / CHECKED BY: S. Han	FIELD INVESTIGATION BY: S. Cho			LOG OF TEST BORINGS 2 OF 5

OGS CIVIL LOG OF TEST BORINGS SHEET — ORIGINAL SCALE IN INCHES FOR REDUCED PLANS 0 1 2 3

UNIT: 3643
PROJECT NUMBER & PHASE: 0712000254 1 — CONTRACT NO.: 07-293901

DISREGARD PRINTS BEARING EARLIER REVISION DATES → REVISION DATES 01-06-12 01-06-12 01-09-12 — SHEET 24 OF 27

FILE => 53-3076-z-ltb02.dvd

NO AS BUILT CORRECTIONS

CORRECTIONS TRANSFERED BY: LAN T TRAN
FIELD CORRECTIONS BY: ALI EL-ZAYNAB

TRANSFER DATE: 09-18-2012
FIELD CORRECTION DATE: 07-24-2012

CONTRACT NO: 07-293904

USERNAME => s131071 DATE PLOTTED => 19-SEP-2012 TIME PLOTTED => 12:52

FED. ROAD DIV. No.	STATE	F. A. PROJECT No.	SHEET No.	TOTAL SHEETS
7	CALIF.			

DIST.	COUNTY	ROUTE	SECTION	SHEET No.	TOTAL SHEETS
07	LA	60	R7.9	50	50

BRIDGE ENGINEER — CIVIL ENGINEER—LICENSE 5685

DATE APPROVED March 6, 1967

LEGEND OF BORING OPERATIONS

- Penetrometer
- 2¼" Cone Penetrometer
- Sampler Boring (Red)
- Rotary Boring (Wet)
- Auger Boring (Dry)
- Jet Boring
- Core Boring
- Test Pit

LEGEND OF EARTH MATERIALS

- Gravel
- Sand
- Silt
- Clay
- Sandy Clay or Clayey Sand
- Sandy Silt or Silty Sand
- Silty Clay or Clayey Silt
- Peat and/or Organic Matter
- Fill Material
- Igneous Rock
- Sedimentary Rock
- Metamorphic Rock

CLASSIFICATION OF MATERIAL BASED ON STANDARD GRADE SIZE LIMITS

Diagram showing the basis for estimates of visual size distribution used in determining the textural classification of soils. If gravel is present in appreciable amounts the terms "gravelly" may be added to the class name, viz., "gravelly clay", "gravelly silt", etc. The terms "coarse", "medium" and "fine" where used to describe sand, silt and gravel, refer to standard grade size limits.

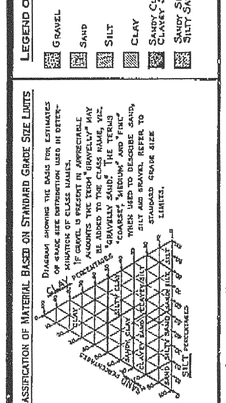

NOTE: Classification of earth material as shown on this sheet is based upon field inspection and is not to be construed to imply mechanical analysis.

FIELD STUDY	W.K. Corin	10-8-65
DRAWN	W.G. Boulle	10-15-65
CHECKED	W.C. Tokizono	10-18-65

Approval Recommended: Engineer Geologist

BRIDGE DEPARTMENT
ENGINEERING GEOLOGY SECTION

BENCH MARK

BM #22-A-54 Elev. 350.29

Fd. 2" I.P. with spk. cast into proj. 1.3' above surface. 1.5' E. fence cor. post & ¾ in fence 200'± W. barn 10'± N. road 1000'± E along fence line from B.M. #21-A-54

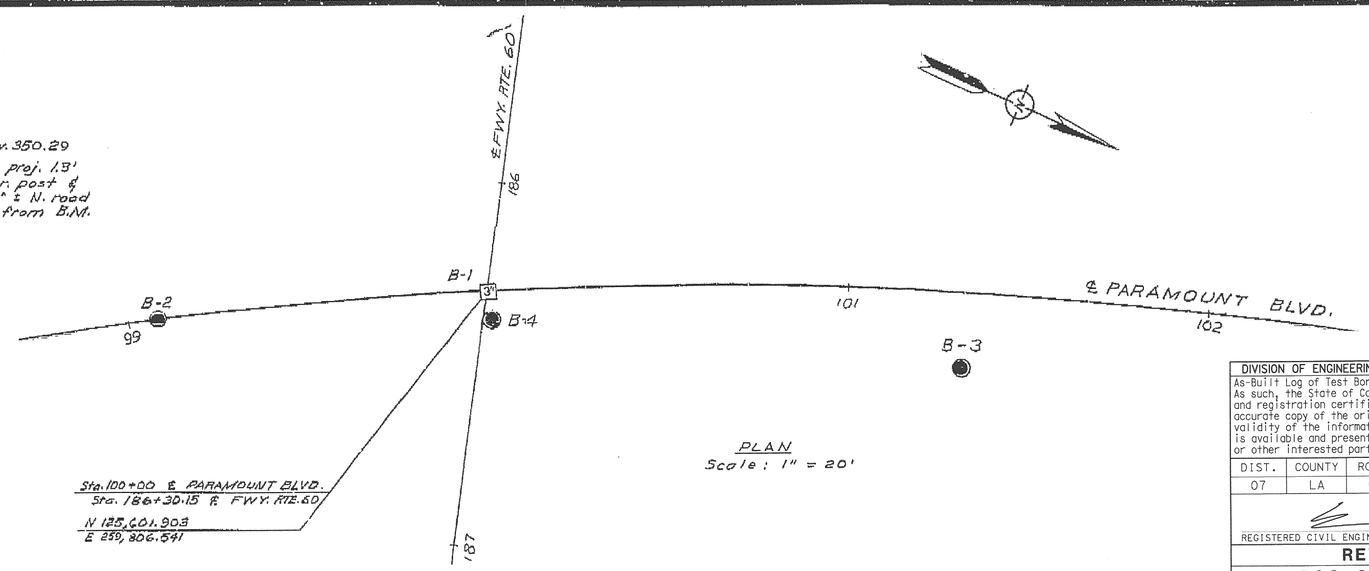

PLAN
Scale: 1" = 20'

AS BUILT PLANS
Contract No. 07-033154
Date Completed 3-6-68
Document No. 70000128

DIVISION OF ENGINEERING SERVICES - MATERIALS AND GEOTECHNICAL SERVICES					
As-Built Log of Test Borings sheet is considered an informational document only. As such, the State of California registration seal with signature, license number and registration certificate expiration date confirm that this is a true and accurate copy of the original document. It does not attest to the accuracy or validity of the information contained in the original document. This drawing is available and presented only for the convenience of any bidder, contractor or other interested party.					
DIST.	COUNTY	ROUTE	POST MILE-TOTAL PROJECT	Sheet No.	Total Sheets
07	LA	60	R7.4/R8.1	227	238
REGISTERED CIVIL ENGINEER			DATE 11/5/14		
RETAINING WALL NO. 2					
LOG OF TEST BORINGS 5 OF 5					
UNIT: 3643			CONTRACT No.	BRIDGE No.	
PROJ. No. & PHASE: 07150001321			07-3X7114	RW1	
AS-BUILT VERT DATUM: NAVD 88 CONVERSION: N/A				Sheet	of
NOTE: A COPY OF THIS LOG OF TEST BORINGS IS AVAILABLE AT OFFICE OF STRUCTURE MAINTENANCE AND INVESTIGATIONS, SACRAMENTO, CALIFORNIA				11	11

REGISTERED PROFESSIONAL ENGINEER — Seung Han — No. C73527 — Exp. 12-31-16 — CIVIL — STATE OF CALIFORNIA

AS BUILT
CORRECTIONS
CONTRACT NO.
DATE

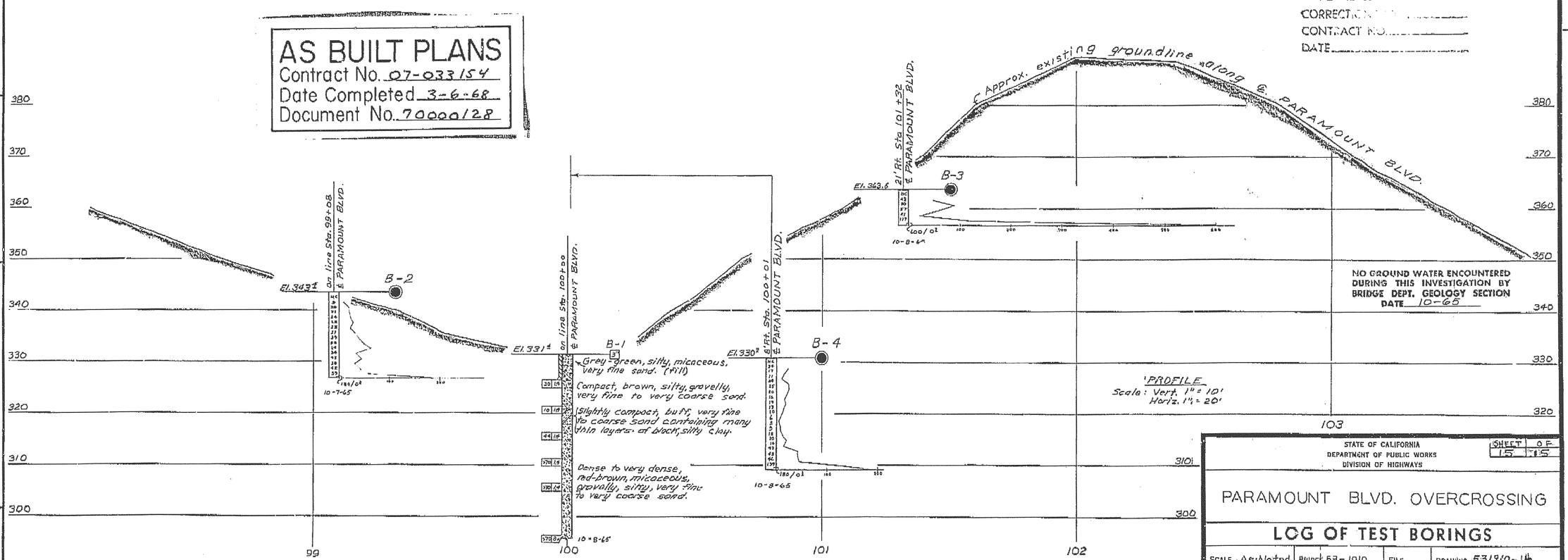

NO GROUND WATER ENCOUNTERED DURING THIS INVESTIGATION BY BRIDGE DEPT. GEOLOGY SECTION
DATE 10-65

PROFILE
Scale: Vert. 1" = 10'
Horiz. 1" = 20'

STATE OF CALIFORNIA
DEPARTMENT OF PUBLIC WORKS
DIVISION OF HIGHWAYS

SHEET 15 OF 15

PARAMOUNT BLVD. OVERCROSSING

LOG OF TEST BORINGS

SCALE - As Noted	BRIDGE 53-1910	FILE	DRAWING 531910-14

510

Charge: 07212
W.A. 033151

Disregard prints bearing earlier numbers → PREL. DRAWING No. PR-

DIST	COUNTY	ROUTE	POST MILES TOTAL PROJECT	SHEET No.	TOTAL SHEETS
07	LA	60	R7.4/R8.1	228	238

REGISTERED CIVIL ENGINEER 10-29-14 DATE

6-1-15
PLANS APPROVAL DATE

REGISTERED PROFESSIONAL ENGINEER EDWARD B. MU No. C72567 Exp. 06-30-16 CIVIL STATE OF CALIFORNIA

The State of California or its officers or agents shall not be responsible for the accuracy or completeness of electronic copies of this plan sheet.

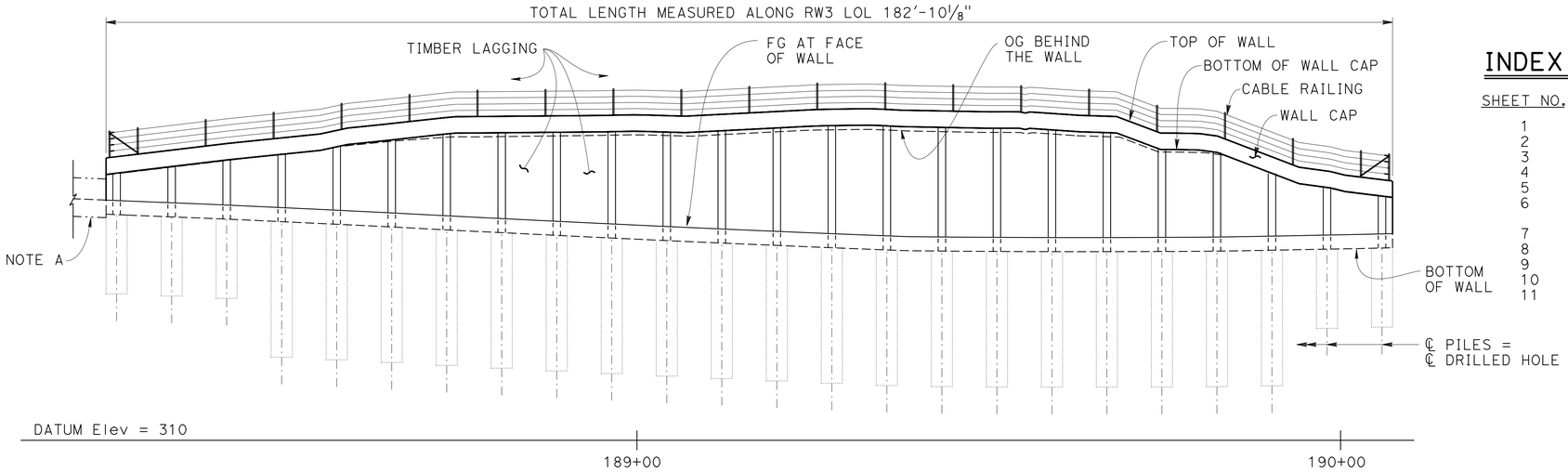

DEVELOPED ELEVATION

1" = 10'

INDEX TO PLANS

SHEET NO.	TITLE
1	GENERAL PLAN
2	STRUCTURE PLAN
3	FOUNDATION PLAN
4	TYPICAL SECTION
5	RETAINING WALL DETAILS
6	SOLDIER PILE WALL LAGGING DETAILS
7	LOG OF TEST BORINGS 1 OF 5
8	LOG OF TEST BORINGS 2 OF 5
9	LOG OF TEST BORINGS 3 OF 5
10	LOG OF TEST BORINGS 4 OF 5
11	LOG OF TEST BORINGS 5 OF 5

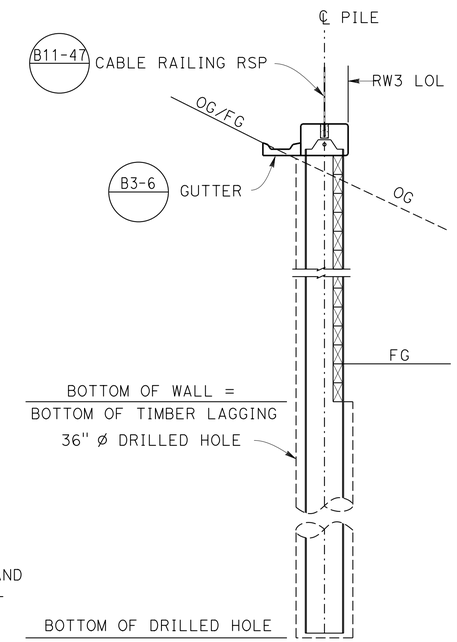

TYPICAL SECTION

¼" = 1'-0"

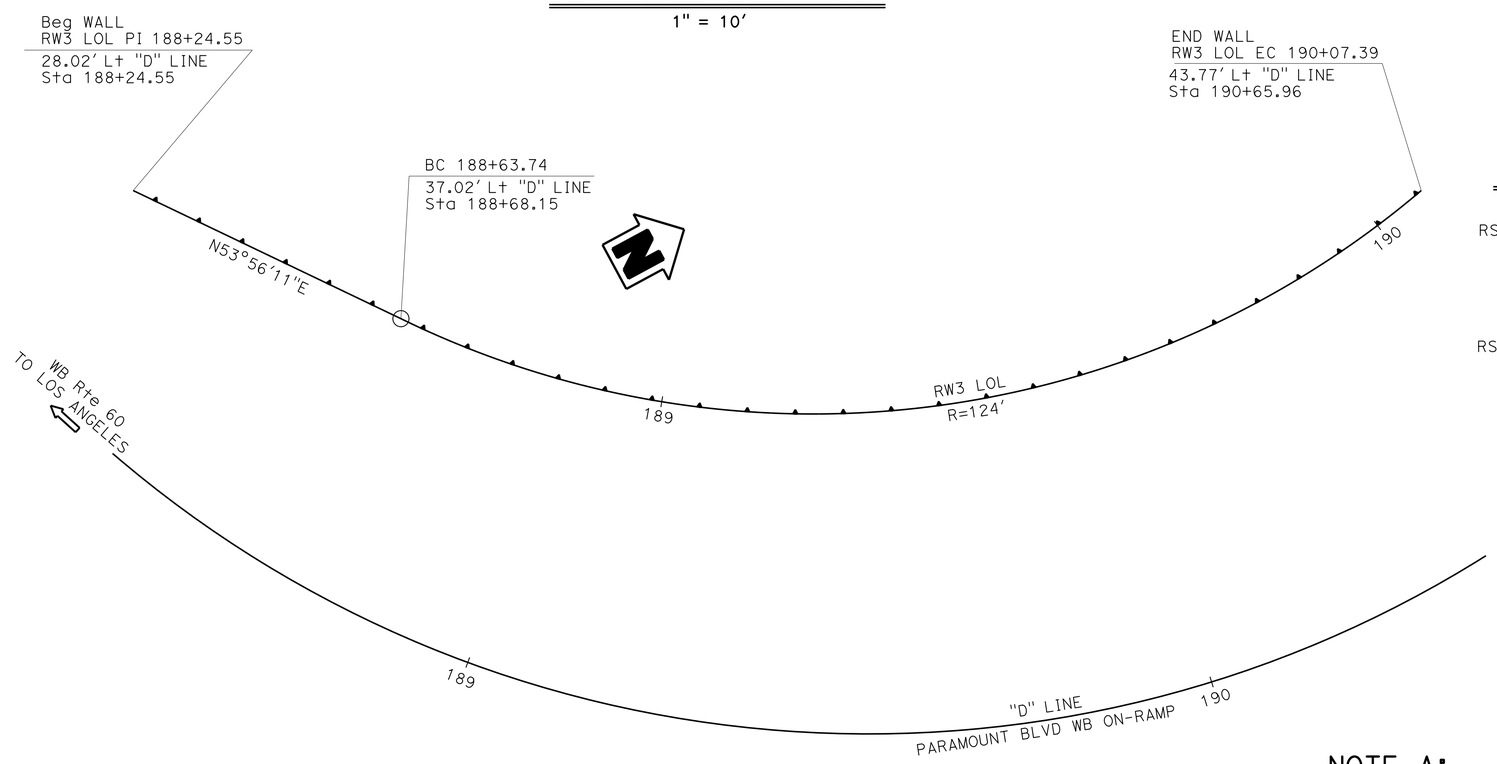

PLAN

1" = 10'

STANDARD PLANS DATED 2010

A10A	ABBREVIATIONS (SHEET 1 OF 2)
RSP A10B	ABBREVIATIONS (SHEET 2 OF 2)
A10C	LINES AND SYMBOLS (SHEET 1 OF 3)
A10D	LINES AND SYMBOLS (SHEET 2 OF 3)
A10E	LINES AND SYMBOLS (SHEET 3 OF 3)
A62B	LIMITS OF PAYMENT FOR EXCAVATION AND BACKFILL BRIDGE SURCHARGE AND WALL
B3-6	RETAINING WALL DETAIL NO. 2
RSP B11-47	CABLE RAILING

STANDARD PLAN SHEET NUMBER

DETAIL NUMBER

QUANTITIES

STRUCTURE EXCAVATION (SOLDIER PILE WALL)	168	CY
STRUCTURE BACKFILL (SOLDIER PILE WALL)	34	CY
CONCRETE BACKFILL (SOLDIER PILE WALL)	111	CY
LEAN CONCRETE BACKFILL	82	CY
STEEL SOLDIER PILE (W 24X117)	772	LF
36" DRILLED HOLE	734	LF
STRUCTURAL CONCRETE, WALL CAP	29	CY
BAR REINFORCING STEEL, WALL CAP	3,370	LB
TIMBER LAGGING	15.5	MFBM
CLEAN AND PAINT STEEL SOLDIER PILING	LUMP	SUM
MINOR CONCRETE (GUTTER) (LF)	183	LF
CABLE RAILING	183	LF

NOTE:
THE CONTRACTOR MUST VERIFY ALL CONTROLLING FIELD DIMENSIONS BEFORE ORDERING OR FABRICATING ANY MATERIAL.

NOTE A:

Existing Concrete Barrier (Type 736B), see "ROAD PLANS", will be removed 5 ft in length during "RW3" construction and reconstructed to join finished "RW3".

x HOWARD NG
DESIGN ENGINEER

	BY	CHECKED			
DESIGN	Edward B Mu	Mohammad Muqtadir	LOAD & RESISTANCE FACTOR DESIGN	LIVE LOADING: HL93 W/"LOW-BOY"; PERMIT DESIGN VEHICLE	
DETAILS	Lan T Tran	Mohammad Muqtadir	LAYOUT	Edward B Mu	Mohammad Muqtadir
QUANTITIES	Edward B Mu	Mohammad Muqtadir	SPECIFICATIONS	Tanya Kershell	PLANS AND SPECS COMPARED Tanya Kershell

ORIGINAL SCALE IN INCHES FOR REDUCED PLANS 0 1 2 3

STATE OF CALIFORNIA
DEPARTMENT OF TRANSPORTATION

DIVISION OF ENGINEERING SERVICES
STRUCTURE DESIGN
DESIGN BRANCH 20

BRIDGE NO. 53E0295
POST MILE R7.4/ R8.1

RETAINING WALL NO. 3
GENERAL PLAN

UNIT: 3622
PROJECT NUMBER & PHASE: 0715000132 1
CONTRACT NO.: 07-3X7114

DISREGARD PRINTS BEARING EARLIER REVISION DATES

REVISION DATES 10-29-13 12-11-13 10-29-14

SHEET 1 OF 11

USERNAME => s125624 DATE PLOTTED => 12-JUN-2015 TIME PLOTTED => 10:35

STRUCTURES DESIGN GENERAL PLAN SHEET (ENGLISH) (REV.09-01-10)

FILE => 57-RW3-a-gp.dgn

DIST	COUNTY	ROUTE	POST MILES TOTAL PROJECT	SHEET No.	TOTAL SHEETS
07	LA	60	R7.4/R8.1	229	238

REGISTERED CIVIL ENGINEER 10-29-14 DATE

6-1-15
PLANS APPROVAL DATE

REGISTERED PROFESSIONAL ENGINEER
EDWARD B. MU
No. C72567
Exp. 06-30-16
CIVIL
STATE OF CALIFORNIA

The State of California or its officers or agents shall not be responsible for the accuracy or completeness of electronic copies of this plan sheet.

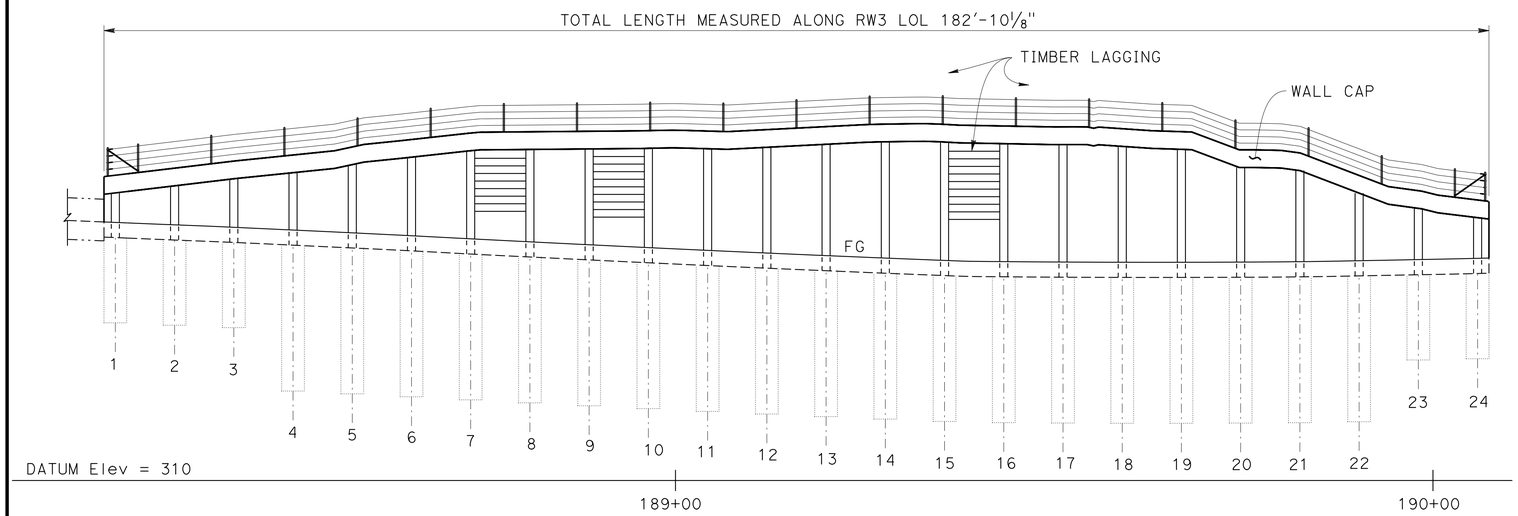

DEVELOPED ELEVATION

1" = 10'

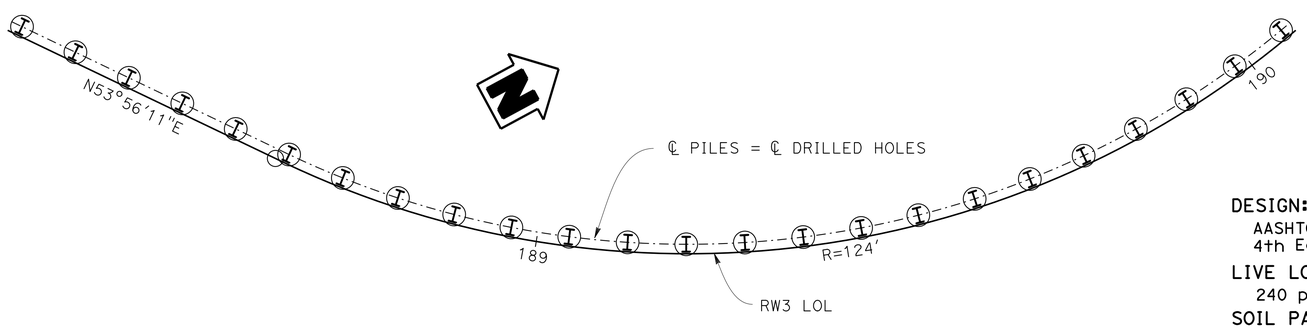

PLAN

1" = 10'

NOTE:
THE CONTRACTOR MUST VERIFY ALL CONTROLLING FIELD DIMENSIONS BEFORE ORDERING OR FABRICATING ANY MATERIAL.

ELEVATION TABLE

Sta along RW3 LOL	Pile No.	Top of Wall	FG in Front of Wall	OG Behind Wall	FG Behind Wall	Bottom of Drilled Hole
188+24.55	-	-	-	-	-	-
188+26.05	1	350.30	344.06	347.88	348.63	330.81
188+33.87	2	351.23	343.78	348.81	349.56	330.53
188+41.69	3	352.17	343.43	349.74	350.50	330.18
188+49.51	4	352.97	343.07	350.64	351.30	321.82
188+57.33	5	354.03	342.70	351.68	352.36	321.45
188+65.15	6	355.00	342.32	352.49	353.33	321.07
188+72.96	7	355.87	341.90	353.07	354.20	320.65
188+80.78	8	356.03	341.50	353.15	354.36	320.25
188+88.60	9	356.10	341.11	353.25	354.43	319.86
188+96.42	10	356.19	340.74	353.36	354.52	319.49
189+04.24	11	356.13	340.37	353.30	354.46	319.12
189+12.06	12	356.40	340.02	353.43	354.73	318.77
189+19.88	13	356.72	339.69	353.83	355.05	318.44
189+27.70	14	357.04	339.36	354.11	355.37	318.11
189+35.52	15	357.02	339.05	354.09	355.35	317.80
189+43.34	16	356.80	338.89	353.86	355.13	317.64
189+51.16	17	356.67	338.83	353.74	355.00	317.58
189+58.98	18	356.44	338.81	353.52	354.77	317.56
189+66.79	19	356.06	338.80	353.13	354.39	317.55
189+74.61	20	353.65	338.83	350.96	351.98	317.58
189+82.43	21	353.25	338.88	350.64	351.58	317.63
189+90.25	22	350.27	339.00	347.91	348.60	317.75
189+98.07	23	348.26	339.16	345.95	346.59	325.91
190+05.89	24	347.03	339.32	344.75	345.36	326.07
190+07.39	-	-	-	-	-	-

GENERAL NOTES

DESIGN:
AASHTO LRFD Bridge Design Specifications, 4th Edition with California Amendments

LIVE LOADING:
240 psf equivalent to 2 feet soil weight

SOIL PARAMETER: (for determination of Design Lateral Earth Pressures)

Layer 1 (Above 336 ft)
- Backfill soil weight = 125 lb/ft^3
- Friction Angle = 38°
- Active Pressure coefficent, Ka = 0.331
- Bedrock Unit Weight = 150 lb/ft^3
- Slope Angle = 26.6°

Layer 2 (Below 336 ft)
- Backfill soil weight = 125 lb/ft^3
- Friction Angle = 37°
- Active Pressure coefficent, Ka = 0.351
- Bedrock Unit Weight = 150 lb/ft^3
- Slope Angle = 26.6°

STEEL SOLDIER PILES:
ASTM A572/A, ASTM 572M Grade 50 Min, or ASTM A36/A36M

REINFORCE CONCRETE:
f'c = 4000 psi
fy = 60 ksi

STRUCTURAL TIMBER:
Treated Douglas Fir, Grade No. 1 or better
Timber to be full sawn

	BY	CHECKED
DESIGN	Edward B Mu	Mohammad Muqtadir
DETAILS	Lan T Tran	Mohammad Muqtadir
QUANTITIES	Edward B Mu	Mohammad Muqtadir

STATE OF CALIFORNIA
DEPARTMENT OF TRANSPORTATION

DIVISION OF ENGINEERING SERVICES
STRUCTURE DESIGN
DESIGN BRANCH 20

BRIDGE NO. 53E0295
POST MILE R7.4/ R8.1

RETAINING WALL NO. 3
STRUCTURE PLAN

STRUCTURES DESIGN DETAIL SHEET (ENGLISH) (REV. 09-01-10)

ORIGINAL SCALE IN INCHES FOR REDUCED PLANS 0 1 2 3

UNIT: 3622
PROJECT NUMBER & PHASE: 0715000132 1
CONTRACT NO.: 07-3X7114

DISREGARD PRINTS BEARING EARLIER REVISION DATES

REVISION DATES: 8-21-13 11-13-13 8-05-13

SHEET 2 OF 11

FILE => 57-RW3-b-sp.dgn

USERNAME => s125624 DATE PLOTTED => 12-JUN-2015 TIME PLOTTED => 10:35

DIST	COUNTY	ROUTE	POST MILES TOTAL PROJECT	SHEET No.	TOTAL SHEETS
07	LA	60	R7.4/R8.1	230	238

REGISTERED CIVIL ENGINEER 10-29-14 DATE

6-1-15
PLANS APPROVAL DATE

REGISTERED PROFESSIONAL ENGINEER
EDWARD B. MU
No. C72567
Exp. 06-30-16
CIVIL
STATE OF CALIFORNIA

The State of California or its officers or agents shall not be responsible for the accuracy or completeness of electronic copies of this plan sheet.

CURVE DATA				
No.	R	Δ	T	L
1	124.00	66°22′41"	81.11	143.66
2	3000.00	03°26′55"	90.31	180.57
3	153.00	169°44′14"	1703.79	453.26

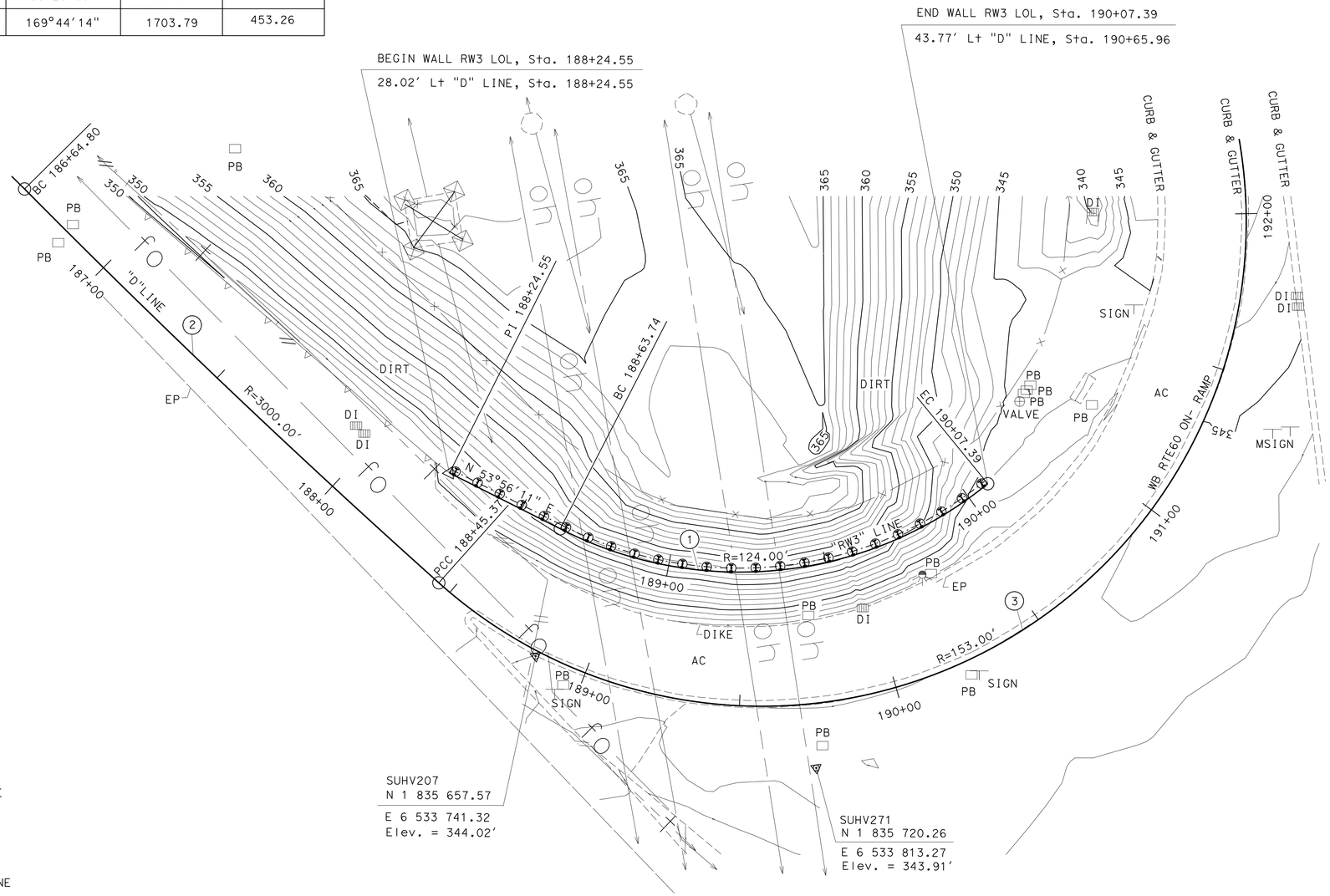

SURVEY CONTROL

SUHV207
"X" ON TC
1.67 FT Rt. "D" LINE
Sta. 188+83.58
N 1 835 657.57
E 6 533 741.32
Elev. = 344.02′

SUHV271
1" IP
20.34 FT Rt. "D" LINE
Sta. 189+72.26
N 1 835 720.26
E 6 533 813.27
Elev. = 343.91′

NOTES:

UNDERGROUND UTILITIES AS SHOWN ARE APPROXIMATE

PRELIMINARY INVESTIGATION SECTION

SCALE 1"=20′	VERT.DATUM NAVD 88	PHOTOGRAMMETRY AS OF: X		
	HORZ.DATUM NAD 83 (1991.35)	SURVEYED	BY C.STEWART / T.PHUNG	CHECKED BY C. STEWART 04/2013
ALIGNMENT TIES Dist. Traverse Sheet		DRAFTED	BY S. ABASSY 04/2013	CHECKED BY S. ALIVIO 04/2013

	BY	CHECKED
DESIGN	Edward B Mu	Mohammad Muqtadir
DETAILS	Lan T Tran	Mohammad Muqtadir
QUANTITIES	Edward B Mu	Mohammad Muqtadir

STATE OF CALIFORNIA
DEPARTMENT OF TRANSPORTATION

DIVISION OF ENGINEERING SERVICES
STRUCTURE DESIGN
DESIGN BRANCH 20

BRIDGE NO. 53E0295
POST MILE R7.4/ R8.1

RETAINING WALL NO. 3
FOUNDATION PLAN

STRUCTURES FOUNDATION PLAN SHEET (ENGLISH) (REV. 09-01-10)

ORIGINAL SCALE IN INCHES FOR REDUCED PLANS 0 1 2 3

UNIT: 3622
PROJECT NUMBER & PHASE: 0715000132 1
CONTRACT NO.: 07-3X7114

DISREGARD PRINTS BEARING EARLIER REVISION DATES

REVISION DATES 06/22/13 08/06/13 11/13/13

SHEET 3 OF 11

FILE => 57-RW3-c-fpl.dgn

DIST	COUNTY	ROUTE	POST MILES TOTAL PROJECT	SHEET No.	TOTAL SHEETS
07	LA	60	R7.4/R8.1	231	238

REGISTERED CIVIL ENGINEER 10-29-14 DATE

6-1-15
PLANS APPROVAL DATE

REGISTERED PROFESSIONAL ENGINEER EDWARD B. MU No. C72567 Exp. 06-30-16 CIVIL STATE OF CALIFORNIA

The State of California or its officers or agents shall not be responsible for the accuracy or completeness of electronic copies of this plan sheet.

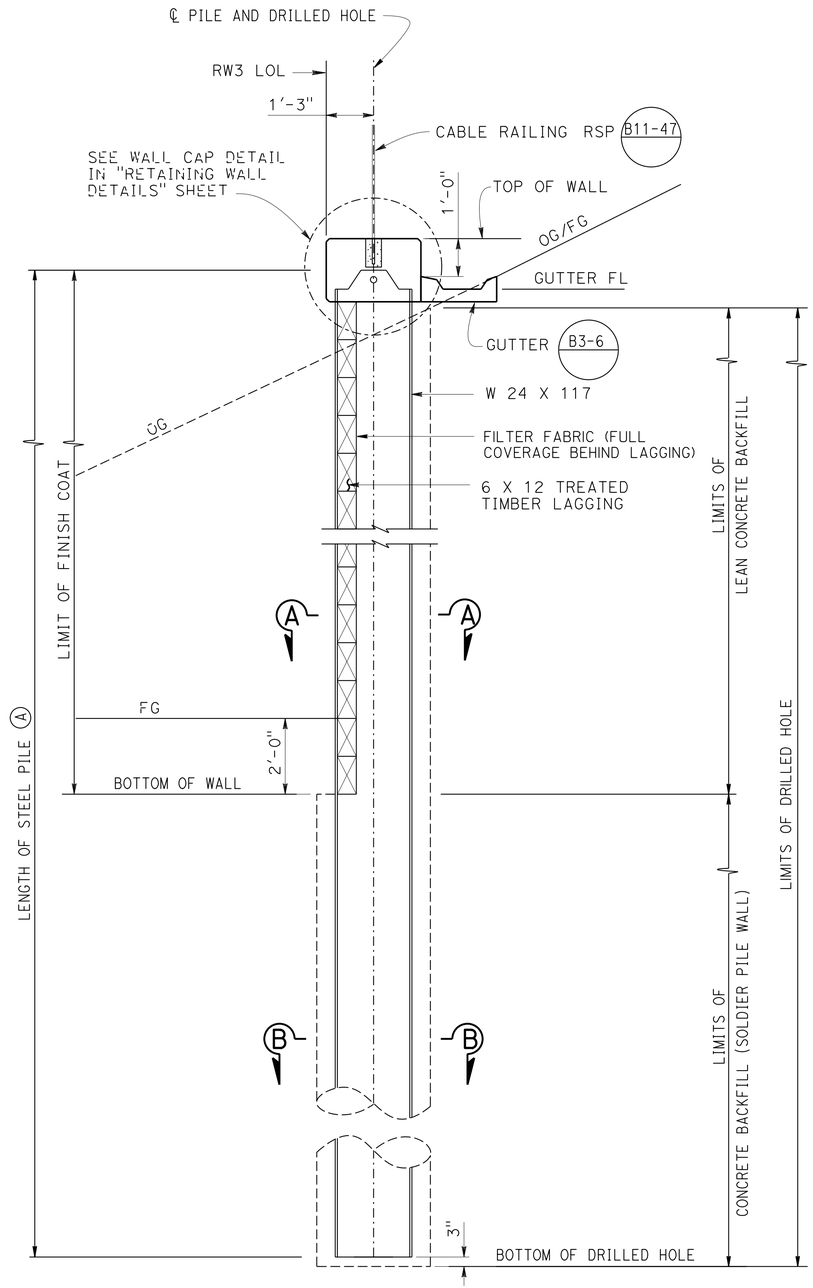

TYPICAL SECTION

½" = 1'-0"

NOTE:
THE CONTRACTOR MUST VERIFY ALL CONTROLLING FIELD DIMENSIONS BEFORE ORDERING OR FABRICATING ANY MATERIAL.

NOTE:

(A) Limits of undercoat

For lagging details see "SOLDIER PILE WALL LAGGING DETAILS"

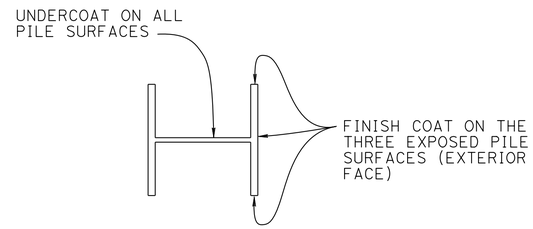

LIMITS OF CLEAN & PAINT STEEL SOLDIER PILING

NO SCALE

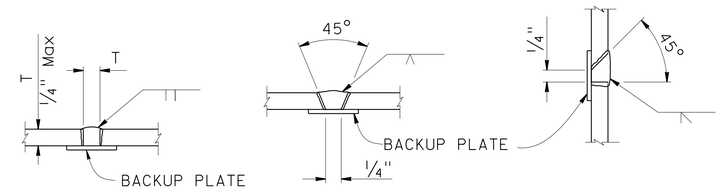

PILE WELDING DETAIL-BUTT JOINTS

NO SCALE

NOTES:

1. Single vee-groove and square groove permitted for all positions
2. Single bevel-groove permitted for horizontal joints only

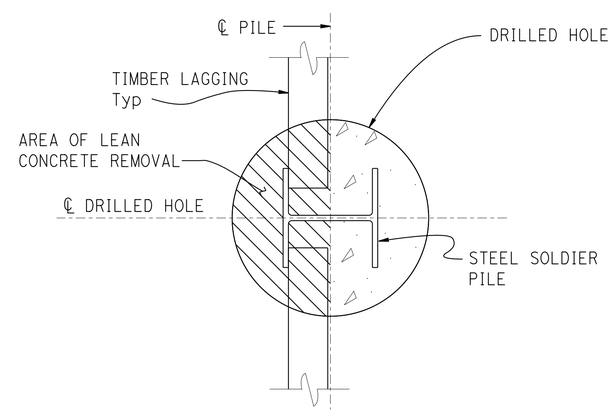

SECTION A-A

NO SCALE

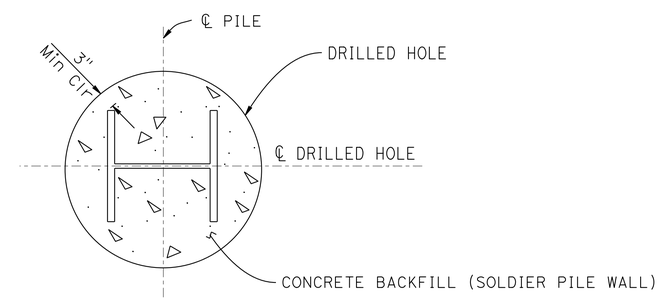

SECTION B-B

NO SCALE

DESIGN	BY Edward B Mu	CHECKED Mohammad Muqtadir	
DETAILS	BY Lan T Tran	CHECKED Mohammad Muqtadir	
QUANTITIES	BY Edward B Mu	CHECKED Mohammad Muqtadir	

STATE OF CALIFORNIA
DEPARTMENT OF TRANSPORTATION

DIVISION OF ENGINEERING SERVICES
STRUCTURE DESIGN
DESIGN BRANCH 20

BRIDGE NO. 53E0295
POST MILE R7.4/ R8.1

RETAINING WALL NO. 3
TYPICAL SECTION

STRUCTURES DESIGN DETAIL SHEET (ENGLISH) (REV. 09-01-10)

ORIGINAL SCALE IN INCHES FOR REDUCED PLANS 0 1 2 3

UNIT: 3622
PROJECT NUMBER & PHASE: 0715000132 1
CONTRACT NO.: 07-3X7114

DISREGARD PRINTS BEARING EARLIER REVISION DATES

REVISION DATES: 10-16-13 11-13-13 10-04-13

SHEET 4 OF 11

FILE => 57-RW3-d-ts.dgn

USERNAME => s125624 DATE PLOTTED => 12-JUN-2015 TIME PLOTTED => 10:35

DIST	COUNTY	ROUTE	POST MILES TOTAL PROJECT	SHEET No.	TOTAL SHEETS
07	LA	60	R7.4/R8.1	232	238

REGISTERED CIVIL ENGINEER 10-29-14 DATE

6-1-15
PLANS APPROVAL DATE

REGISTERED PROFESSIONAL ENGINEER
EDWARD B. MU
No. C72567
Exp. 06-30-16
CIVIL
STATE OF CALIFORNIA

The State of California or its officers or agents shall not be responsible for the accuracy or completeness of electronic copies of this plan sheet.

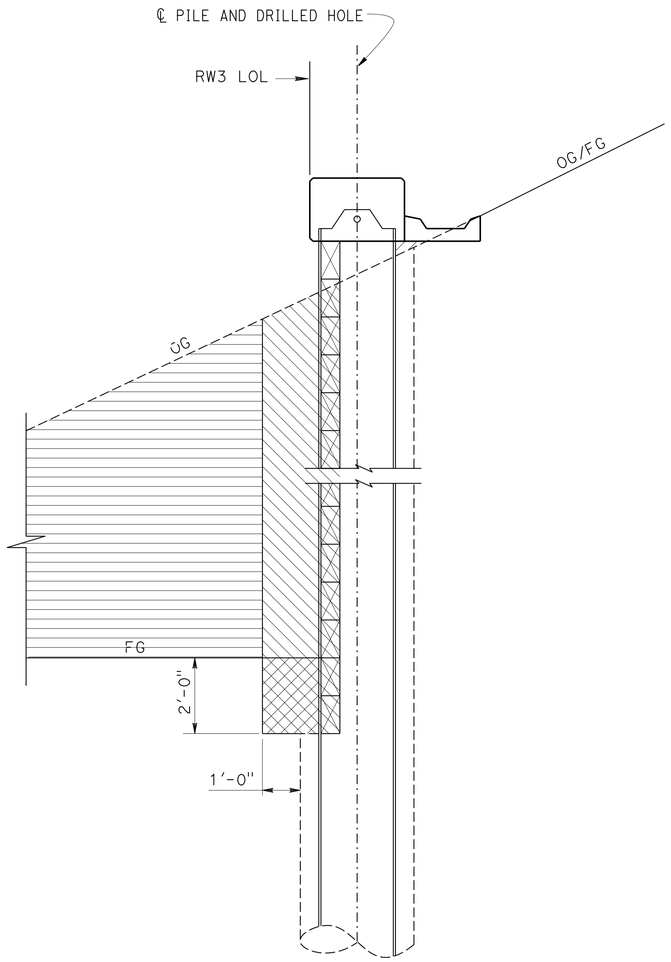

RETAINING WALL EXCAVATION AND BACKFILL LIMITS

½" = 1'-0"

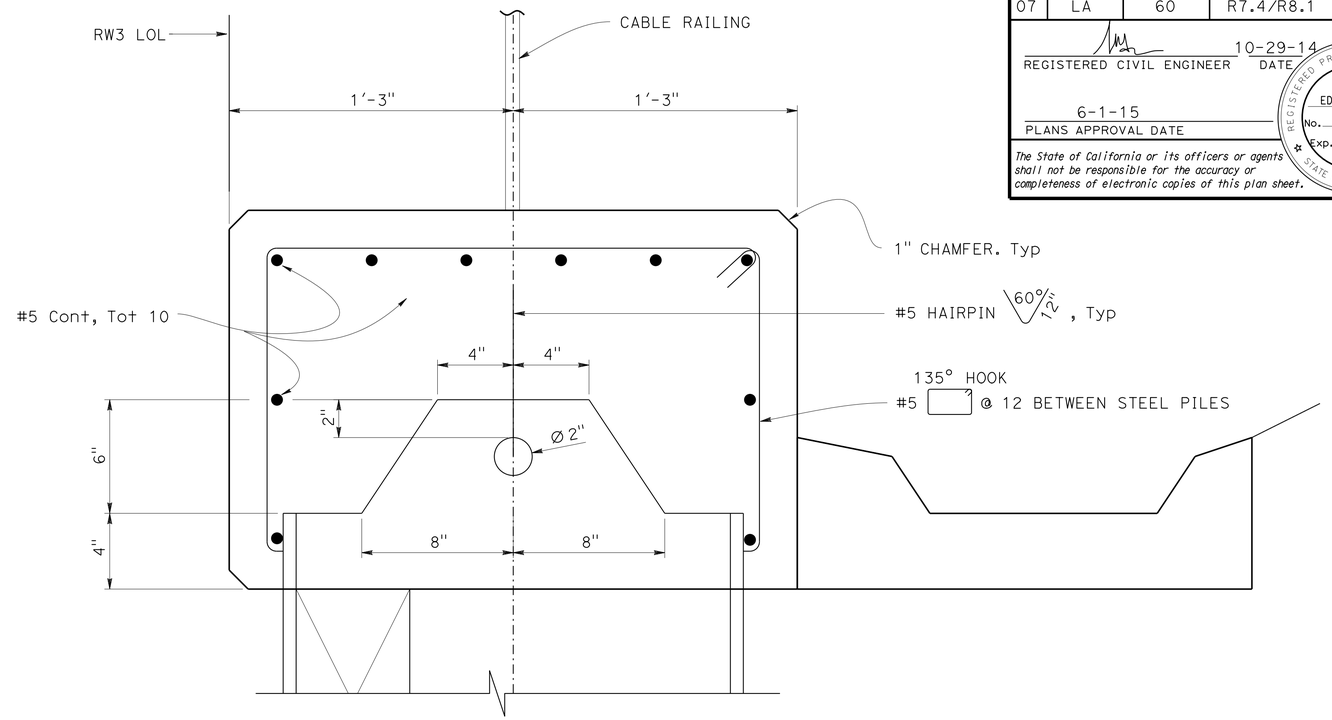

WALL CAP DETAIL

3" = 1'-0"

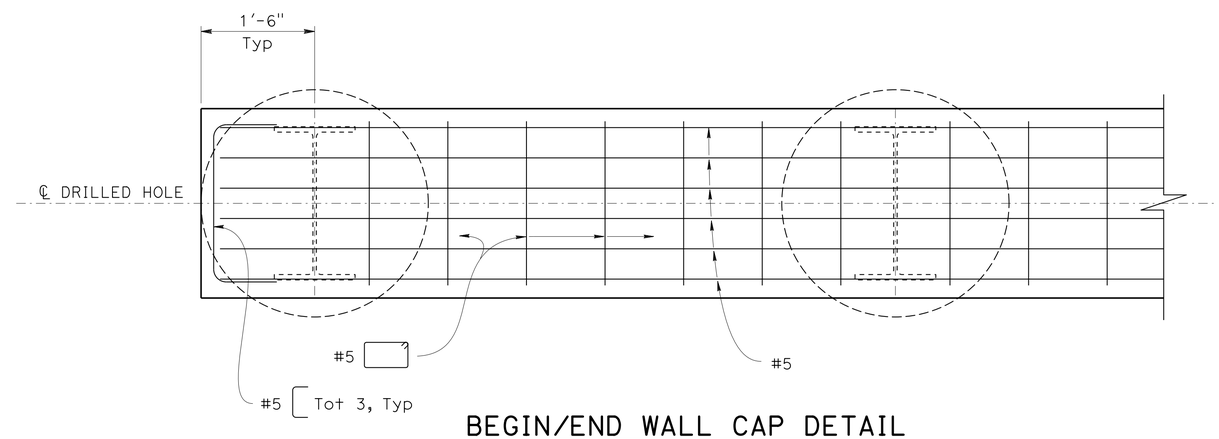

BEGIN/END WALL CAP DETAIL

1" = 1'-0"

LEGEND:

- Structure Excavation (Soldier Pile Wall)
- Structure Backfill (Soldier Pile Wall)
- Roadway Excavation, see "ROAD PLANS"

NOTE:
THE CONTRACTOR MUST VERIFY ALL CONTROLLING FIELD DIMENSIONS BEFORE ORDERING OR FABRICATING ANY MATERIAL.

	BY	CHECKED
DESIGN	Edward B Mu	Mohammad Muqtadir
DETAILS	Lan T Tran	Mohammad Muqtadir
QUANTITIES	Edward B Mu	Mohammad Muqtadir

STATE OF CALIFORNIA
DEPARTMENT OF TRANSPORTATION

DIVISION OF ENGINEERING SERVICES
STRUCTURE DESIGN
DESIGN BRANCH 20

BRIDGE NO. 53E0295
POST MILE R7.4/ R8.1

RETAINING WALL NO. 3
RETAINING WALL DETAILS

STRUCTURES DESIGN DETAIL SHEET (ENGLISH) (REV. 09-01-10)

ORIGINAL SCALE IN INCHES FOR REDUCED PLANS 0 1 2 3

UNIT: 3622
PROJECT NUMBER & PHASE: 0715000132 1
CONTRACT NO.: 07-3X7114

DISREGARD PRINTS BEARING EARLIER REVISION DATES

REVISION DATES: 10-09-13 10-16-13 11-13-13

SHEET 5 OF 11

FILE => 57-RW3-e-walldt01.dgn

USERNAME => s125624 DATE PLOTTED => 12-JUN-2015 TIME PLOTTED => 10:35

DIST	COUNTY	ROUTE	POST MILES TOTAL PROJECT	SHEET No.	TOTAL SHEETS
07	LA	60	R7.4/R8.1	233	238

REGISTERED CIVIL ENGINEER 10-29-14 DATE

6-1-15
PLANS APPROVAL DATE

REGISTERED PROFESSIONAL ENGINEER
EDWARD B. MU
No. C72567
Exp. 06-30-16
CIVIL
STATE OF CALIFORNIA

The State of California or its officers or agents shall not be responsible for the accuracy or completeness of electronic copies of this plan sheet.

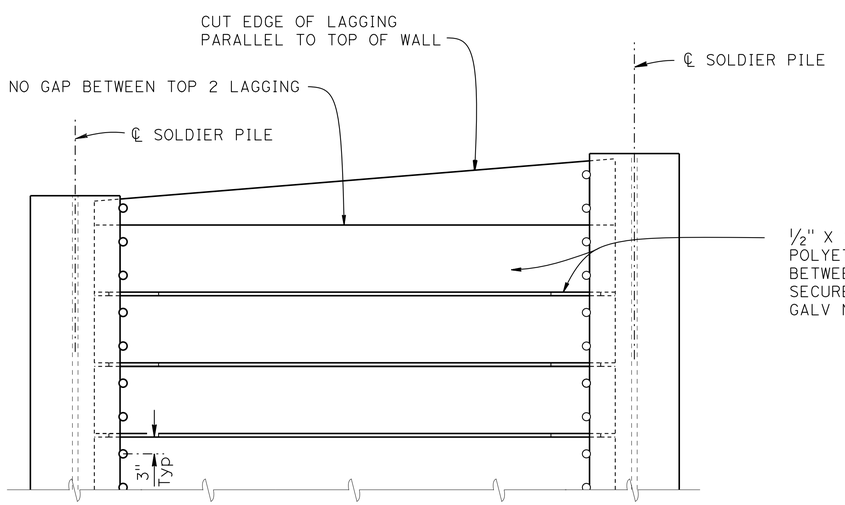

PART ELEVATION

LAGGING DETAILS (ALTERNATIVE 1)

NO SCALE

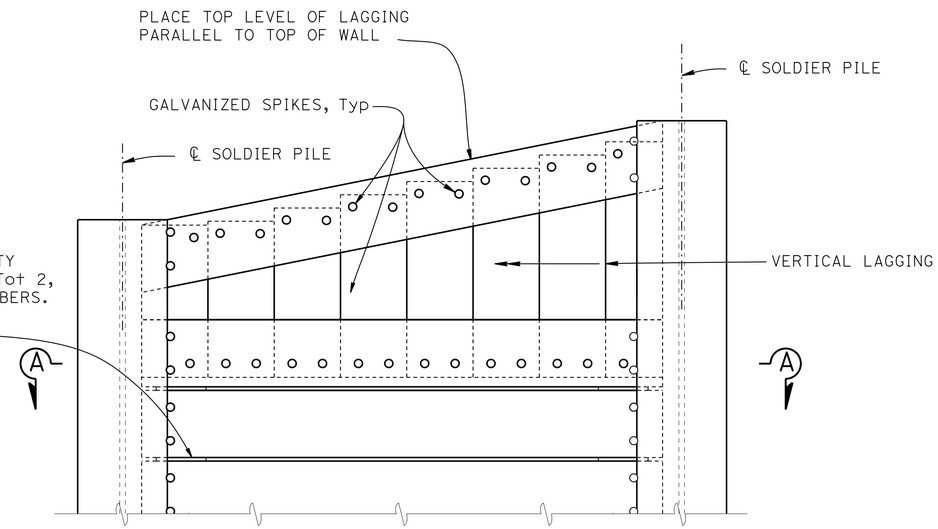

PART ELEVATION

LAGGING DETAILS (ALTERNATIVE 2)

NO SCALE

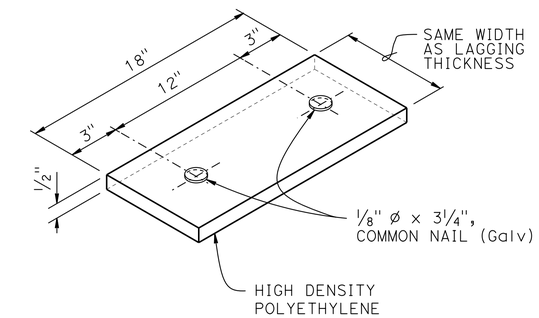

SHIM DETAIL

NO SCALE

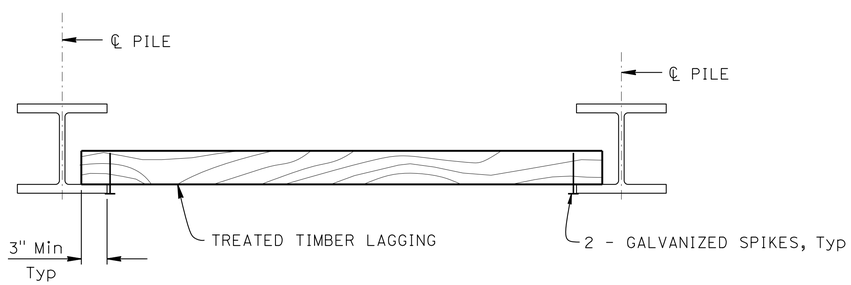

PART PLAN

NO SCALE

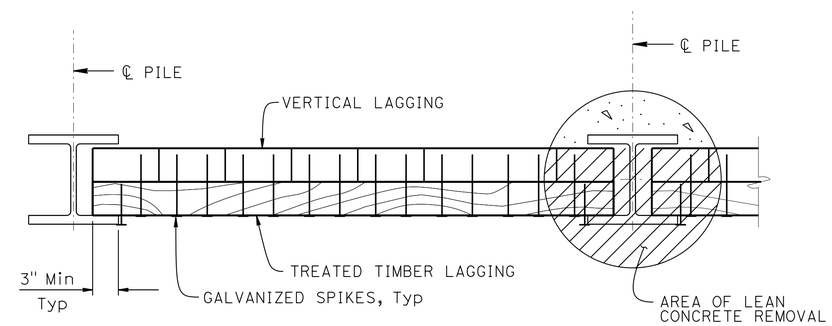

SECTION A-A

NO SCALE

NOTES:

1. No clipping of timber lagging corners allowed
2. ~~Use 16d Galv wire spikes for 4 x 12 lagging, and~~ 40d Galv wire spikes for 6 x 12 lagging. (1)
3. Spikes shall not be bent

REVISED STANDARD DRAWING

FILE NO. xs12-080

APPROVAL DATE January 2012

(1) Modified Note

STATE OF CALIFORNIA
DEPARTMENT OF TRANSPORTATION

DIVISION OF ENGINEERING SERVICES

BRIDGE NO. 53E0295

POST MILE R7.4/ R8.1

RETAINING WALL NO. 3

SOLDIER PILE WALL LAGGING DETAILS

DS OSD 2147A (ENGLISH STANDARD DRAWING "XS" BORDER REV. (02-02-11)

ORIGINAL SCALE IN INCHES FOR REDUCED PLANS 0 1 2 3

UNIT: 3622
PROJECT NUMBER & PHASE: 0715000132 1
CONTRACT NO.: 07-3X7114

DISREGARD PRINTS BEARING EARLIER REVISION DATES

REVISION DATES 6-26-13 6-25-13 6-24-13 8-05-13

SHEET 6 OF 11

FILE => 57-RW3-e-walldt02.dgn

USERNAME => s125624 DATE PLOTTED => 12-JUN-2015 TIME PLOTTED => 10:35

DIST	COUNTY	ROUTE	POST MILES TOTAL PROJECT	SHEET No.	TOTAL SHEETS
07	LA	60	R7.4/R8.1	234	238

REGISTERED CIVIL ENGINEER 11-5-14 DATE

6-1-15
PLANS APPROVAL DATE

REGISTERED PROFESSIONAL ENGINEER Haitao Liu No. C66398 Exp. 6-30-16 CIVIL STATE OF CALIFORNIA

The State of California or its officers or agents shall not be responsible for the accuracy or completeness of electronic copies of this plan sheet.

This LOTB sheet was prepared in accordance with the Caltrans Soil & Rock Logging, Classification, & Presentation Manual (2010 Edition).

See 2010 Standard Plans A10F and A10G for Soil Legend, and A10H for Rock Legend.

Note: No ground water encountered in Boring A-12-003 during field investigation.

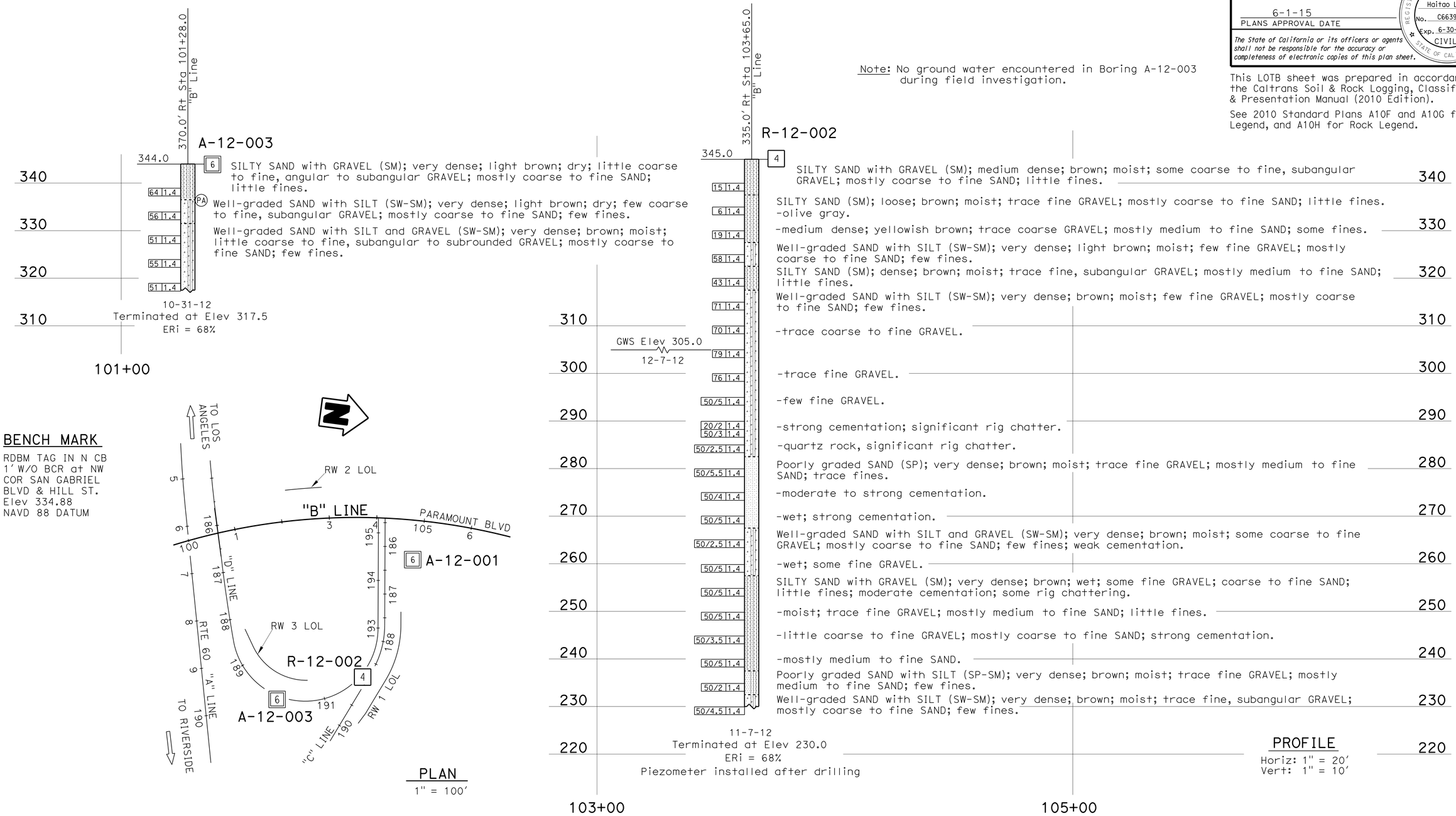

ENGINEERING SERVICES	MATERIALS AND GEOTECHNICAL SERVICES	STATE OF CALIFORNIA DEPARTMENT OF TRANSPORTATION	DIVISION OF ENGINEERING SERVICES STRUCTURE DESIGN DESIGN BRANCH X	BRIDGE NO. 53E0295 POST MILE 7.4/8.1	RETAINING WALL NO. 3 LOG OF TEST BORINGS 1 OF 5
FUNCTIONAL SUPERVISOR NAME: D. Jang	DRAWN BY: W. Tang 05/13 CHECKED BY: S. Han	FIELD INVESTIGATION BY: J. Wong			

OGS CIVIL LOG OF TEST BORINGS SHEET

ORIGINAL SCALE IN INCHES FOR REDUCED PLANS 0 1 2 3

UNIT: 3643
PROJECT NUMBER & PHASE: 07150001321 CONTRACT NO.: 07-3X7114

DISREGARD PRINTS BEARING EARLIER REVISION DATES

REVISION DATES 06-04-13 10-05-14 12-30-13 SHEET 7 OF 11

FILE => 57-RW3-z-ltb01.dgn

USERNAME => s125624 DATE PLOTTED => 12-JUN-2015 TIME PLOTTED => 10:35

DIST	COUNTY	ROUTE	POST MILES TOTAL PROJECT	SHEET No.	TOTAL SHEETS
07	LA	60	R7.4/R8.1	235	238

REGISTERED CIVIL ENGINEER 11-5-14 DATE

6-1-15
PLANS APPROVAL DATE

REGISTERED PROFESSIONAL ENGINEER Haitao Liu No. C66398 Exp. 6-30-16 CIVIL STATE OF CALIFORNIA

The State of California or its officers or agents shall not be responsible for the accuracy or completeness of electronic copies of this plan sheet.

This LOTB sheet was prepared in accordance with the Caltrans Soil & Rock Logging, Classification, & Presentation Manual (2010 Edition).

See 2010 Standard Plans A10F and A10G for Soil Legend, and A10H for Rock Legend.

FOR PLAN VIEW, SEE
"LOG OF TEST BORINGS 1 OF 5"

85.0' Rt Sta 104+78.0 "B" Line

A-12-001

354.0

Elev	Blows	Description
354.0	6	SILTY SAND (SM); very dense; light brown; dry; few fine GRAVEL; mostly fine SAND; few nonplastic fines.
	50/4 | 1.4	
	10 | 1.4	-medium dense; brown; trace fine GRAVEL; mostly medium to fine SAND; some low plasticity fines.
	23 | 1.4	SILTY SAND with GRAVEL (SM); medium dense; brown; dry; some coarse to fine GRAVEL; mostly medium to fine SAND; little low plasticity fines.
	43 | 1.4	-dense.
	68 | 1.4	-very dense; subangular to subrounded GRAVEL; mostly coarse to fine SAND; little fines; moderate cementation.
	59 | 1.4	
	48 | 1.4	SILTY SAND (SM); very dense; brown; dry; few fine GRAVEL; mostly medium to fine SAND; little fines.
	62 | 1.4	-moist; few coarse to fine, subangular to subrounded GRAVEL; mostly coarse to fine SAND; little fines.
	82 | 1.4	
	78 | 1.4	SILTY SAND with GRAVEL (SM); very dense; brown; moist; little fine, subangular to subrounded GRAVEL; mostly coarse to fine SAND; little nonplastic fines.
	58 | 1.4	-wet.
GWS Elev 295.0 10-30-12	52 | 1.4	Well-graded SAND with SILT (SW-SM); very dense; brown; wet; trace fine, subrounded GRAVEL; mostly coarse to fine SAND; few fines.
	62 | 1.4	-few coarse to fine, subangular to subrounded GRAVEL.
	87 | 1.4	-few fine GRAVEL.
	50/5.5 | 1.4	SILTY SAND with GRAVEL (SM); very dense; brown; wet; little fine GRAVEL; mostly coarse to fine SAND; little fines.
	89 | 1.4	
	50/5 | 1.4	SILTY SAND (SM); very dense; brown; wet; few fine GRAVEL; mostly coarse to fine SAND; little fines.
	50/5 | 1.4	SILTY SAND with GRAVEL (SM); very dense; brown; wet; some coarse to fine GRAVEL; mostly coarse to fine SAND; little fines.
	50/5 | 1.4	-moist.
	50/5 | 1.4	-little coarse to fine GRAVEL.

10-31-12
Terminated at Elev 239.0
ERi = 68%

360 350 340 330 320 310 300 290 280 270 260 250 240

104+50 105+50 106+50

PROFILE
Horiz: 1" = 10'
Vert: 1" = 10'

ENGINEERING SERVICES	MATERIALS AND GEOTECHNICAL SERVICES	STATE OF CALIFORNIA DEPARTMENT OF TRANSPORTATION	DIVISION OF ENGINEERING SERVICES STRUCTURE DESIGN DESIGN BRANCH X	BRIDGE NO. 53E0295 POST MILE 7.4/8.1	RETAINING WALL NO. 3 LOG OF TEST BORINGS 2 OF 5
FUNCTIONAL SUPERVISOR NAME: D. Jang	DRAWN BY: W. Tang 05/13 CHECKED BY: S. Han	FIELD INVESTIGATION BY: J. Wong			

OGS CIVIL LOG OF TEST BORINGS SHEET

ORIGINAL SCALE IN INCHES FOR REDUCED PLANS 0 1 2 3

UNIT: 3643
PROJECT NUMBER & PHASE: 07150001321 CONTRACT NO.: 07-3X7114

DISREGARD PRINTS BEARING EARLIER REVISION DATES → REVISION DATES 06-04-13 10-05-14 12-30-13 SHEET 8 OF 11

FILE => 57-RW3-z-ltb02.dgn

USERNAME => s125624 DATE PLOTTED => 12-JUN-2015 TIME PLOTTED => 10:35

NO AS BUILT CORRECTIONS

CORRECTIONS TRANSFERRED BY: LAN T TRAN
FIELD CORRECTIONS BY: ALI EL-ZAYNAB

TRANSFER DATE: 09-18-2012
FIELD CORRECTION DATE: 07-24-2012

CONTRACT NO: 07-293904

DIST	COUNTY	ROUTE	POST MILES TOTAL PROJECT	SHEET No.	TOTAL SHEETS
07	LA	60	R7.8	107	114

REGISTERED CIVIL ENGINEER — DATE 1-10-12

2-6-12
PLANS APPROVAL DATE

REGISTERED PROFESSIONAL ENGINEER — Sungro Cho — No. C75151 — Exp. 12-31-13 — CIVIL — STATE OF CALIFORNIA

The State of California or its officers or agents shall not be responsible for the accuracy or completeness of electronic copies of this plan sheet.

This LOTB sheet was prepared in accordance with the Caltrans Soil & Rock Logging, Classification, & Presentation Manual (2010 Edition).

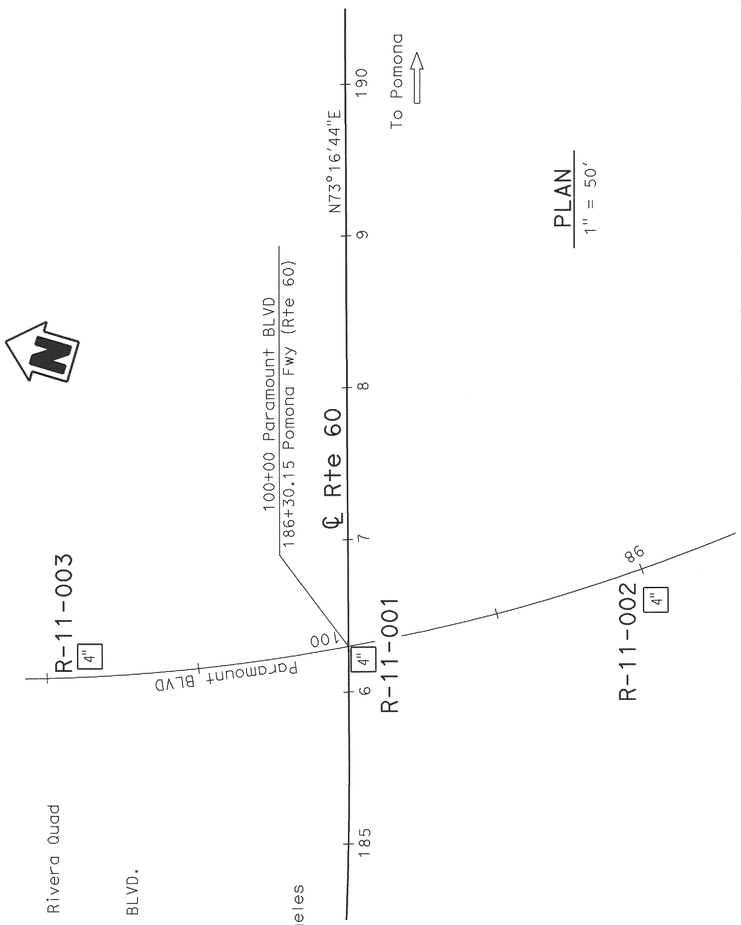

PLAN
1" = 50'

Note: Ground water was not measured during field investigation.

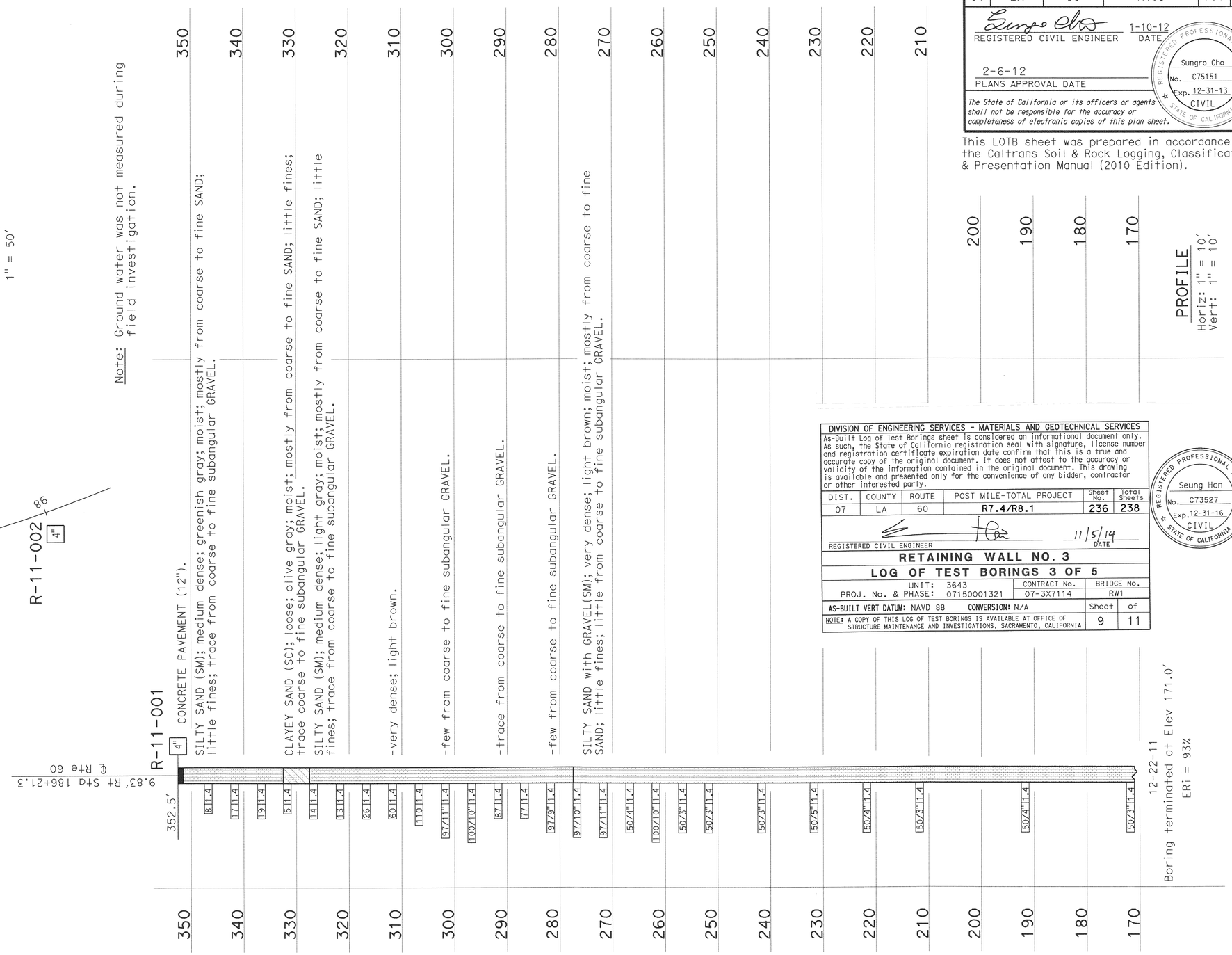

BENCH MARK
L.A. County Bench # 9832 of the Rivera Quad
NAVD88 2005 Adjustment.
Elev.: 304.104'.
L&T IN S CB ARRPYO DR
1FT E/O BCR at SW COR PARAMOUNT BLVD.

DIVISION OF ENGINEERING SERVICES - MATERIALS AND GEOTECHNICAL SERVICES

As-Built Log of Test Borings sheet is considered an informational document only. As such, the State of California registration seal with signature, license number and registration certificate expiration date confirm that this is a true and accurate copy of the original document. It does not attest to the accuracy or validity of the information contained in the original document. This drawing is available and presented only for the convenience of any bidder, contractor or other interested party.

DIST.	COUNTY	ROUTE	POST MILE-TOTAL PROJECT	Sheet No.	Total Sheets
07	LA	60	R7.4/R8.1	236	238

REGISTERED CIVIL ENGINEER — DATE 11/5/14

REGISTERED PROFESSIONAL ENGINEER — Seung Han — No. C73527 — Exp. 12-31-16 — CIVIL — STATE OF CALIFORNIA

RETAINING WALL NO. 3

LOG OF TEST BORINGS 3 OF 5

UNIT: 3643 — CONTRACT No. 07-3X7114 — BRIDGE No. RW1
PROJ. No. & PHASE: 07150001321

AS-BUILT VERT DATUM: NAVD 88 — CONVERSION: N/A — Sheet 9 of 11

NOTE: A COPY OF THIS LOG OF TEST BORINGS IS AVAILABLE AT OFFICE OF STRUCTURE MAINTENANCE AND INVESTIGATIONS, SACRAMENTO, CALIFORNIA

ENGINEERING SERVICES	MATERIALS AND GEOTECHNICAL SERVICES	STATE OF CALIFORNIA DEPARTMENT OF TRANSPORTATION	DIVISION OF ENGINEERING SERVICES STRUCTURE DESIGN DESIGN BRANCH 20	BRIDGE NO. 53-3076 / POST MILE R 7.8	PARAMOUNT BLVD OC (REPLACE)
FUNCTIONAL SUPERVISOR	DRAWN BY: F. Nguyen	FIELD INVESTIGATION BY:			LOG OF TEST BORINGS 1 OF 5
NAME: D. Jang	CHECKED BY: S. Han	S. Cho			

OGS CIVIL LOG OF TEST BORINGS SHEET

ORIGINAL SCALE IN INCHES FOR REDUCED PLANS 0 1 2 3

UNIT: 3643
PROJECT NUMBER & PHASE: 0712000254 1
CONTRACT NO.: 07-293901

DISREGARD PRINTS BEARING EARLIER REVISION DATES → 01-05-12 01-06-12 01-09-12

REVISION DATES — SHEET 23 OF 27

FILE => 53-3076-z-lrb01.dvd

USERNAME => s131071 DATE PLOTTED => 19-SEP-2012 TIME PLOTTED => 12:52

DIST	COUNTY	ROUTE	POST MILES TOTAL PROJECT	SHEET No.	TOTAL SHEETS
07	LA	60	R7.8	108	114

REGISTERED CIVIL ENGINEER 1-10-12 DATE

2-6-12
PLANS APPROVAL DATE

The State of California or its officers or agents shall not be responsible for the accuracy or completeness of electronic copies of this plan sheet.

REGISTERED PROFESSIONAL ENGINEER Sungro Cho No. C75151 Exp. 12-31-13 CIVIL STATE OF CALIFORNIA

This LOTB sheet was prepared in accordance with the Caltrans Soil & Rock Logging, Classification, & Presentation Manual (2010 Edition).

FOR PLAN VIEW, SEE
"LOG OF TEST BORINGS 1 OF 5"

DIVISION OF ENGINEERING SERVICES - MATERIALS AND GEOTECHNICAL SERVICES

As-Built Log of Test Borings sheet is considered an informational document only. As such, the State of California registration seal with signature, license number and registration certificate expiration date confirm that this is a true and accurate copy of the original document. It does not attest to the accuracy or validity of the information contained in the original document. This drawing is available and presented only for the convenience of any bidder, contractor or other interested party.

DIST.	COUNTY	ROUTE	POST MILE-TOTAL PROJECT	Sheet No.	Total Sheets
07	LA	60	R7.4/R8.1	237	238

REGISTERED CIVIL ENGINEER 11/5/14 DATE

REGISTERED PROFESSIONAL ENGINEER Seung Han No. C73527 Exp. 12-31-16 CIVIL STATE OF CALIFORNIA

RETAINING WALL NO. 3

LOG OF TEST BORINGS 4 OF 5

UNIT: 3643 | CONTRACT No. 07-3X7114 | BRIDGE No. RW1
PROJ. No. & PHASE: 07150001321

AS-BUILT VERT DATUM: NAVD 88 CONVERSION: N/A | Sheet 10 of 11

NOTE: A COPY OF THIS LOG OF TEST BORINGS IS AVAILABLE AT OFFICE OF STRUCTURE MAINTENANCE AND INVESTIGATIONS, SACRAMENTO, CALIFORNIA

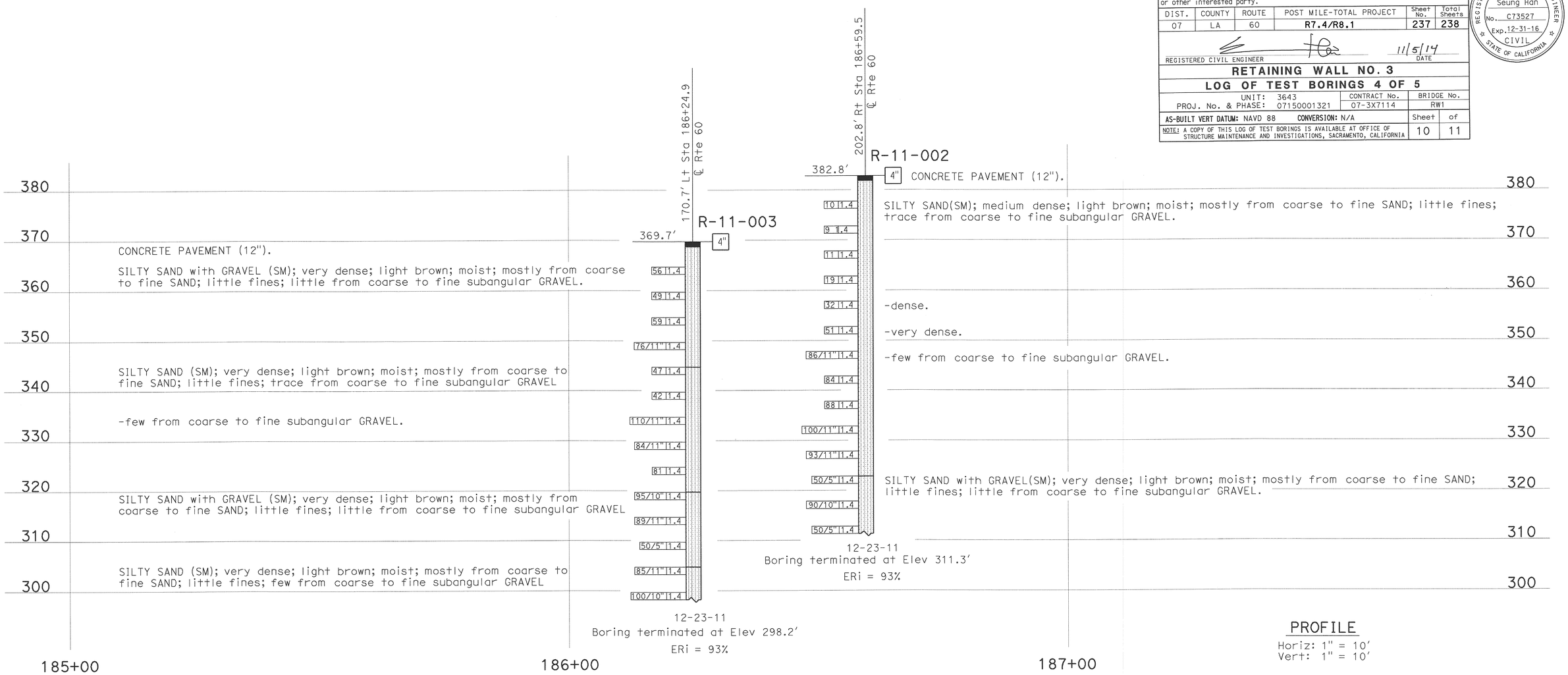

PROFILE
Horiz: 1" = 10'
Vert: 1" = 10'

ENGINEERING SERVICES	MATERIALS AND GEOTECHNICAL SERVICES	STATE OF CALIFORNIA DEPARTMENT OF TRANSPORTATION	DIVISION OF ENGINEERING SERVICES STRUCTURE DESIGN DESIGN BRANCH 20	BRIDGE NO. 53-3076 POST MILE R 7.8	PARAMOUNT BLVD OC (REPLACE) LOG OF TEST BORINGS 2 OF 5
FUNCTIONAL SUPERVISOR NAME: D. Jang	DRAWN BY: F. Nguyen CHECKED BY: S. Han	FIELD INVESTIGATION BY: S. Cho			

OGS CIVIL LOG OF TEST BORINGS SHEET

ORIGINAL SCALE IN INCHES FOR REDUCED PLANS 0 1 2 3

UNIT: 3643
PROJECT NUMBER & PHASE: 0712000254 1 CONTRACT NO.: 07-293901

DISREGARD PRINTS BEARING EARLIER REVISION DATES → REVISION DATES ~~01-05-12~~ ~~01-06-12~~ 01-09-12 SHEET 24 OF 27

FILE => 53-3076-z-ltb02.avd

NO AS BUILT CORRECTIONS

CORRECTIONS TRANSFERED BY: LAN T TRAN
FIELD CORRECTIONS BY: ALI EL-ZAYNAB

TRANSFER DATE: 09-18-2012
FIELD CORRECTION DATE: 07-24-2012

CONTRACT NO: 07-293904

USERNAME = s53107t DATE PLOTTED => 19-SEP-2012 TIME PLOTTED => 12:52

FED. ROAD DIV. No.	STATE	F. A. PROJECT No.	SHEET No.	TOTAL SHEETS
7	CALIF.			

DIST.	COUNTY	ROUTE	SECTION	SHEET No.	TOTAL SHEETS
07	LA	60	R7.9	50	50

BRIDGE ENGINEER — CIVIL ENGINEER—LICENSE 5055

DATE APPROVED March 6, 1967

BENCH MARK

BM #22-A-54 Elev. 350.29

Fd. 2" I.P. with spk. cast into proj. 1.3' above surface. 15' E. fence cor. post & * in fence 200' ± W. barn 10' ± N. road 1000' ± E along fence line from B.M. #21-A-54

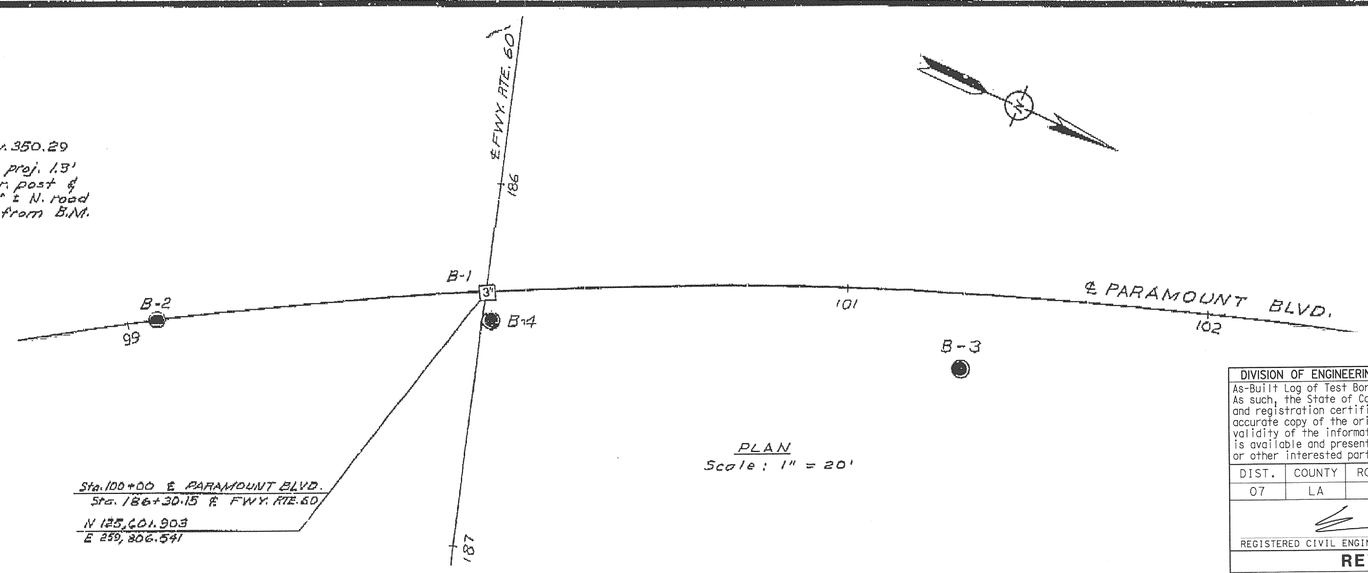

PLAN
Scale: 1" = 20'

DIVISION OF ENGINEERING SERVICES - MATERIALS AND GEOTECHNICAL SERVICES					
As-Built Log of Test Borings sheet is considered an informational document only. As such, the State of California registration seal with signature, license number and registration certificate expiration date confirm that this is a true and accurate copy of the original document. It does not attest to the accuracy or validity of the information contained in the original document. This drawing is available and presented only for the convenience of any bidder, contractor or other interested party.					
DIST.	COUNTY	ROUTE	POST MILE-TOTAL PROJECT	Sheet No.	Total Sheets
07	LA	60	R7.4/R8.1	238	238
REGISTERED CIVIL ENGINEER			DATE 11/5/14		
RETAINING WALL NO. 3					
LOG OF TEST BORINGS 5 OF 5					
UNIT: 3643			CONTRACT No.	BRIDGE No.	
PROJ. No. & PHASE: 07150001321			07-3X7114	RW1	
AS-BUILT VERT DATUM: NAVD 88 CONVERSION: N/A				Sheet	of
NOTE: A COPY OF THIS LOG OF TEST BORINGS IS AVAILABLE AT OFFICE OF STRUCTURE MAINTENANCE AND INVESTIGATIONS, SACRAMENTO, CALIFORNIA				11	11

REGISTERED PROFESSIONAL ENGINEER
Seung Han
No. C73527
Exp. 12-31-16
CIVIL
STATE OF CALIFORNIA

AS BUILT
CORRECTIONS
CONTRACT NO.
DATE

LEGEND OF BORING OPERATIONS

Penetrometer
2½" Core Penetrometer
Sampler Boring (Dry)
Rotary Boring (Wet)
Auger Boring (Dry)
Jet Boring
Core Boring
Test Pit

Penetration Boring
Rotary Boring
1" Soil Tube

Legend of Earth Materials

Gravel — Silty Clay or Clayey Silt
Sand — Peat and Organic Matter
Silt — Fill Material
Clay — Igneous Rock
Sandy Clay or Clayey Sand — Sedimentary Rock
Sandy Silt or Silty Sand — Metamorphic Rock

Classification of Material Based on Standard Grade Size Limits

NOTE: Classification of earth material as shown on this sheet is based upon field inspection and is not to be construed to imply mechanical analysis.

AS BUILT PLANS
Contract No. 07-033154
Date Completed 3-6-68
Document No. 70000128

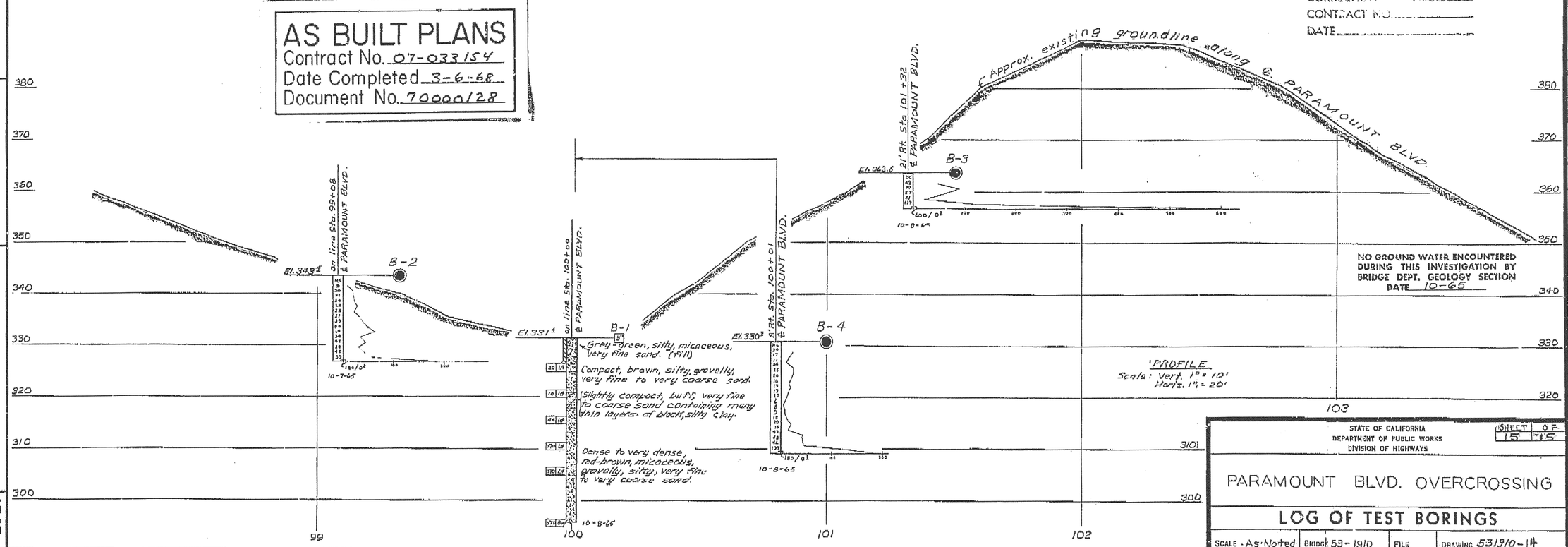

PROFILE
Scale: Vert. 1" = 10'
Horiz. 1" = 20'

NO GROUND WATER ENCOUNTERED DURING THIS INVESTIGATION BY BRIDGE DEPT. GEOLOGY SECTION
DATE 10-65

STATE OF CALIFORNIA
DEPARTMENT OF PUBLIC WORKS
DIVISION OF HIGHWAYS

SHEET 15 OF 15

PARAMOUNT BLVD. OVERCROSSING

LOG OF TEST BORINGS

SCALE - As Noted | BRIDGE 53-1910 | FILE | DRAWING 53191O-14

FIELD STUDY	W.K. Gwin	10-8-65
DRAWN	W.K. Gwin	10-28-65
CHECKED	W.C. Takizawa	10-28-65
Approval Recommended:	Engineer Geologist	

BRIDGE DEPARTMENT
ENGINEERING GEOLOGY SECTION

510

Charge: 07212
WA: 033151

Disregard prints bearing earlier numbers

PREL. DRAWING No. PR-