Dist	COUNTY	ROUTE	POST MILES TOTAL PROJECT	SHEET No.	TOTAL SHEETS
07	LA	60	R7.4/R8.1	1	238

STATE OF CALIFORNIA

DEPARTMENT OF TRANSPORTATION

ACSTP-19P1(004)E

PROJECT PLANS FOR CONSTRUCTION ON

STATE HIGHWAY

IN LOS ANGELES COUNTY
IN MONTEBELLO
AT PARAMOUNT BOULEVARD OVERCROSSING

TO BE SUPPLEMENTED BY STANDARD PLANS DATED 2010

INDEX OF PLANS

SHEET No.	DESCRIPTION
1	TITLE AND LOCATION MAP
2-4	TYPICAL CROSS SECTIONS
5-7	LAYOUTS
8-13	PROFILES AND SUPERELEVATION DIAGRAM
14-28	CONSTRUCTION DETAILS
29-37	CONTOUR GRADING
38-59	DRAINAGE PLANS, PROFILES, DETAILS AND QUANTITIES
60	UTILITY PLANS AND DETAILS
61	CONSTRUCTION AREA SIGNS
62-74	STAGE CONSTRUCTION PLANS
75-80	TRAFFIC HANDLING PLANS
81-84	PAVEMENT DELINEATION PLANS, DETAILS AND QUANTITIES
85-96	SIGN PLANS, DETAILS AND QUANTITIES
97-98	SUMMARY OF QUANTITIES
99-111	HIGHWAY PLANTING PLANS
112-145	ELECTRICAL PLANS
146-148	SPECIAL ELECTRICAL STRUCTURES
149-209	REVISED STANDARD PLANS

STRUCTURE PLANS

210-216	RETAINING WALL No. 1
217-227	RETAINING WALL No. 2
228-238	RETAINING WALL No. 3

THE STANDARD PLANS LIST APPLICABLE TO THIS CONTRACT IS INCLUDED IN THE NOTICE TO BIDDERS AND SPECIAL PROVISIONS BOOK.

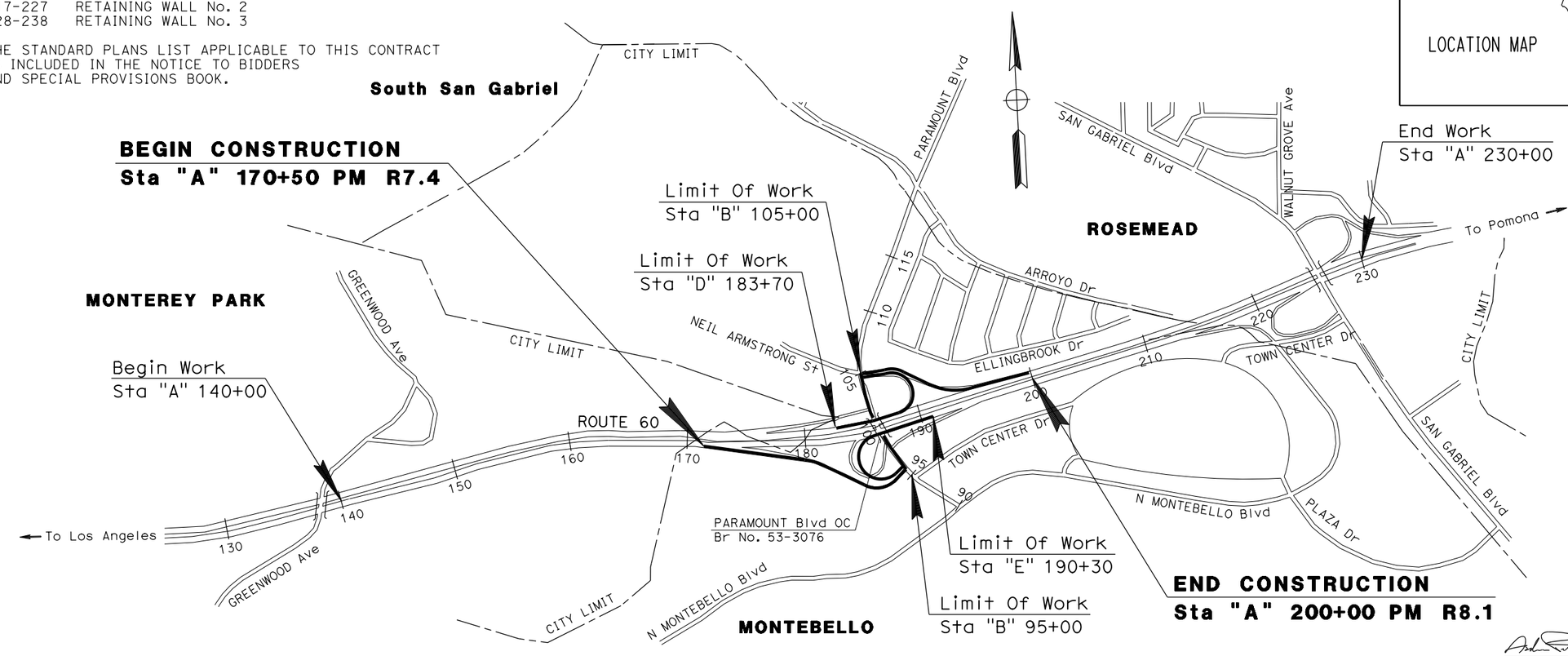

LOCATIONS OF HUB AND LARTMC FOR SYSTEM TESTING			
ROUTE	PM	LOCATION	DESCRIPTION
5	16.9	NORTHBOUND ROUTE 5 NEAR GARNETT STREET	ELA - EAST LOS ANGELES HUB BUILDING
2	18.7	ROUTE 134 AND ROUTE 2 INTERCHANGE (2901 WEST BROADWAY, LOS ANGELES, CA 90041)	LARTMC (TMC) - LOS ANGELES REGIONAL TRANSPORTATION MANAGEMENT CENTER

NO SCALE

THE CONTRACTOR SHALL POSSESS THE CLASS (OR CLASSES) OF LICENSE AS SPECIFIED IN THE "NOTICE TO BIDDERS."

PROJECT ENGINEER — DATE 1-22-14
REGISTERED CIVIL ENGINEER

June 1, 2015
PLANS APPROVAL DATE

REGISTERED PROFESSIONAL ENGINEER — ASADOUR TERTERIAN — No. C56966 — Exp. 6-30-17 — CIVIL — STATE OF CALIFORNIA

THE STATE OF CALIFORNIA OR ITS OFFICERS OR AGENTS SHALL NOT BE RESPONSIBLE FOR THE ACCURACY OR COMPLETENESS OF SCANNED COPIES OF THIS PLAN SHEET.

CONTRACT No.	07-3X7114
PROJECT ID	0715000132

PROJECT MANAGER: ZAREH SHAHBAZIAN
DESIGN ENGINEER: ASADOUR TERTERIAN

LAST REVISION 05-01-15 — DATE PLOTTED => 22-JUN-2015 — TIME PLOTTED => 07:08

Dist	COUNTY	ROUTE	POST MILES TOTAL PROJECT	SHEET No.	TOTAL SHEETS
07	LA	60	R7.4/R8.1	2	238

REGISTERED CIVIL ENGINEER 1-22-14 DATE

6-1-15
PLANS APPROVAL DATE

REGISTERED PROFESSIONAL ENGINEER RUDDY HARTONO No. 63146 Exp. 6-30-16 CIVIL STATE OF CALIFORNIA

THE STATE OF CALIFORNIA OR ITS OFFICERS OR AGENTS SHALL NOT BE RESPONSIBLE FOR THE ACCURACY OR COMPLETENESS OF SCANNED COPIES OF THIS PLAN SHEET.

NOTES:

1. FOR ACCURATE RIGHT OF WAY DATA, CONTACT RIGHT OF WAY ENGINEERING AT DISTRICT OFFICE.
2. DIMENSIONS OF THE PAVEMENT STRUCTURES (STRUCTURAL SECTIONS) ARE SUBJECT TO TOLERANCES SPECIFIED IN THE STANDARD SPECIFICATIONS.
3. SUPERELEVATIONS AS SHOWN ON SUPERELEVATION DIAGRAMS OR AS DIRECTED BY THE ENGINEER.

TYPICAL PAVEMENT STRUCTURE SECTIONS

PROPOSED

1
- 0.60' HMA (TYPE A)
- 0.60' LCB
- 1.15' CLASS 3 AB

2
- 0.60' HMA (TYPE A)
- 0.60' LCBRS
- 1.15' CLASS 3 AB

3
- 0.35' HMA (TYPE A)
- --- GPI
- 0.25' HMA (TYPE A)
- 0.60' LCB
- 1.15' CLASS 3 AB

4
- 0.15' RUBBERIZED HMA (GAP GRADED)

5
- 0.85' JPCP
- 0.35' LCB
- 0.60' CLASS 3 AB

6
- 0.85' JPCP (RSC)
- 0.35' LCBRS
- 0.60' CLASS 3 AB

EXISTING

A
- 0.75' CLASS B PCC
- 0.33' CLASS A CTB
- 0.34' CLASS A AGGREGATE
- 0.58' CLASS 4 AS

B
- 0.33' AC (TYPE B)
- 0.50' CLASS A AGGREGATE
- 1.17' Var CLASS 4 AS

C
- 0.33' AC (TYPE B)
- 0.67' CLASS A CTB

D
- 0.33' AC (TYPE B)
- 0.67' CLASS A CTB
- 0.42' CLASS A AGGREGATE
- 0.38' CLASS 4 AS

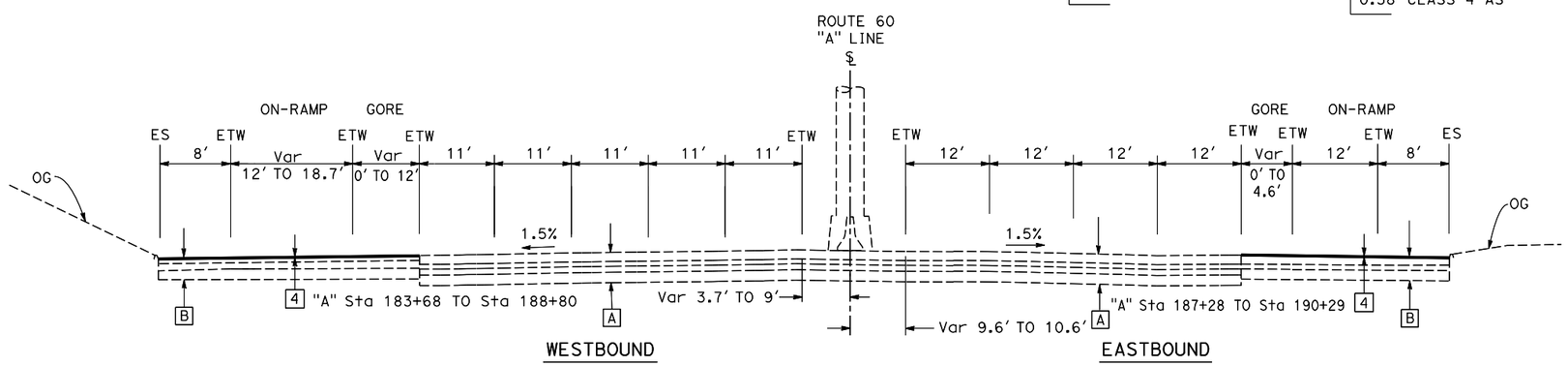

"A" LINE Sta 183+68 TO Sta 190+29

ROUTE 60

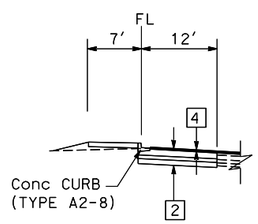

SOUTHBOUND

"B" Sta 101+40 TO Sta 101+91

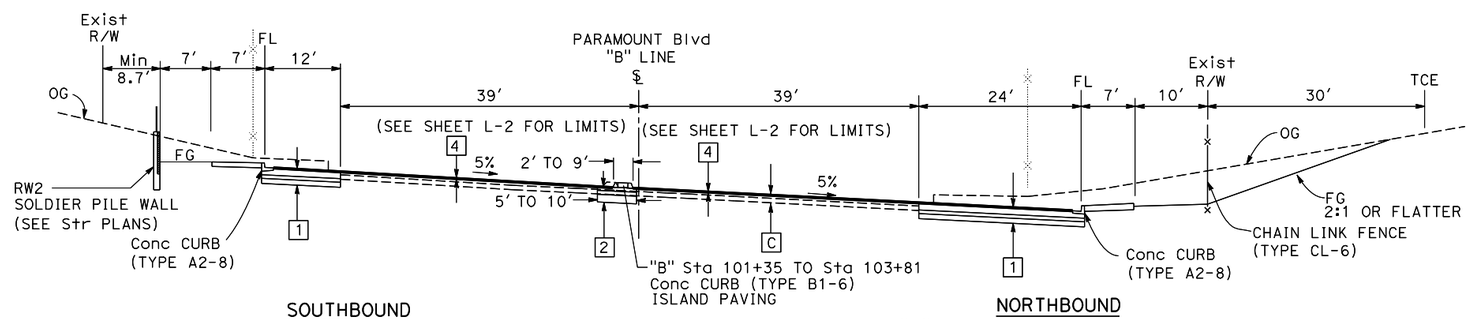

SOUTHBOUND

"B" Sta 101+91 TO Sta 104+03

NORTHBOUND

"B" Sta 101+36 TO Sta 103+69

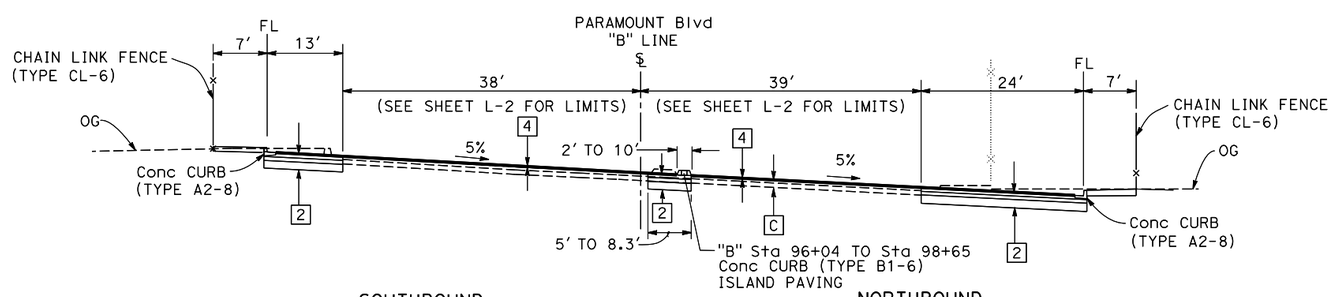

SOUTHBOUND

"B" Sta 96+03 TO Sta 98+79

NORTHBOUND

"B" Sta 98+00 TO Sta 98+53

PARAMOUNT Blvd

ABBREVIATIONS:

JPCP	JOINTED PLAIN CONCRETE PAVEMENT
RSC	RAPID STRENGTH CONCRETE
LCBRS	LEAN CONCRETE BASE RAPID SETTING
GPI	GEOSYNTHETIC PAVEMENT INTERLAYER (PAVING FABRIC)

TYPICAL CROSS SECTIONS

NO SCALE

X-1

REVISED BY	DATE REVISED

CALCULATED-DESIGNED BY	CHECKED BY
RUDDY HARTONO	KEDAR SAWANT

FUNCTIONAL SUPERVISOR: ASADOUR TERTERIAN

STATE OF CALIFORNIA - DEPARTMENT OF TRANSPORTATION

Caltrans DESIGN

LAST REVISION 00-00-00

DATE PLOTTED => 22-JUN-2015
TIME PLOTTED => 07:08

Dist	COUNTY	ROUTE	POST MILES TOTAL PROJECT	SHEET No.	TOTAL SHEETS
07	LA	60	R7.4/R8.1	3	238

REGISTERED CIVIL ENGINEER 1-22-14 DATE

6-1-15
PLANS APPROVAL DATE

REGISTERED PROFESSIONAL ENGINEER RUDDY HARTONO No. 63146 Exp. 6-30-16 CIVIL STATE OF CALIFORNIA

THE STATE OF CALIFORNIA OR ITS OFFICERS OR AGENTS SHALL NOT BE RESPONSIBLE FOR THE ACCURACY OR COMPLETENESS OF SCANNED COPIES OF THIS PLAN SHEET.

NOTE:

FOR ACCURATE RIGHT OF WAY DATA, CONTACT RIGHT OF WAY ENGINEERING AT THE DISTRICT OFFICE.

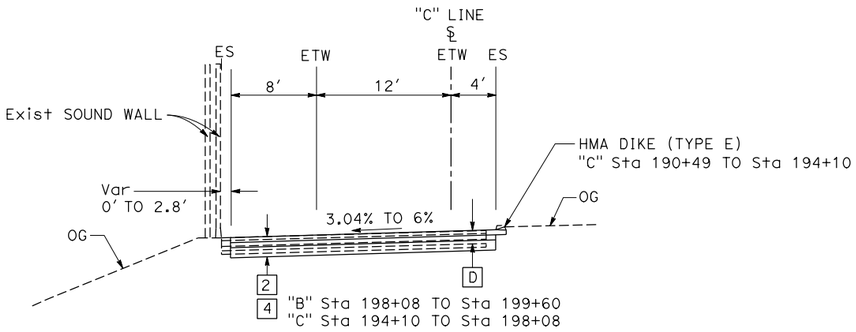

RAMP C

"C" LINE Sta 190+49 TO Sta 198+08

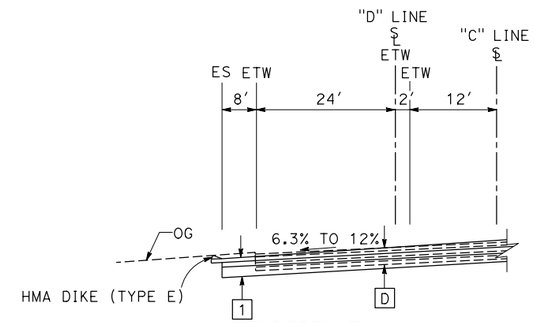

RAMP D

"D" LINE Sta 192+99 TO Sta 194+93

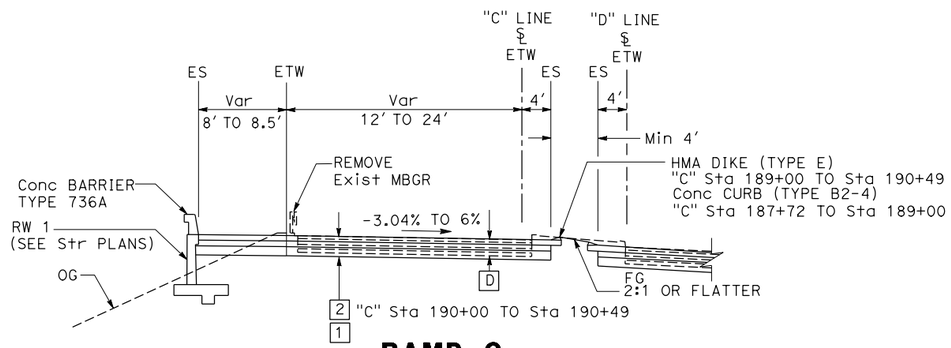

RAMP C

"C" LINE Sta 187+72 TO Sta 190+49

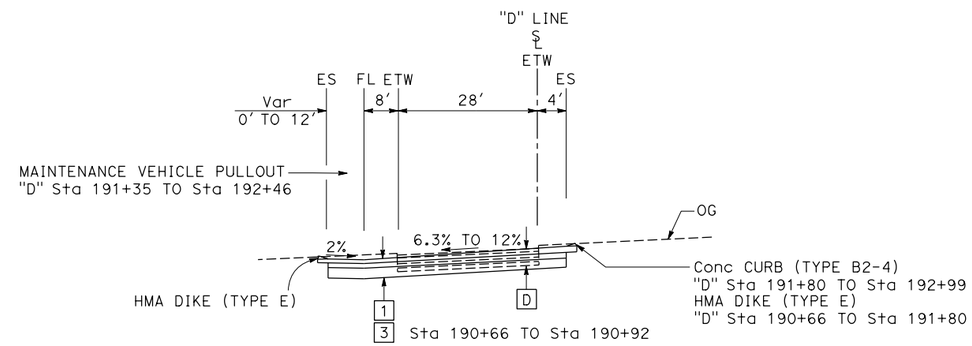

RAMP D

"D" LINE Sta 190+66 TO Sta 192+99

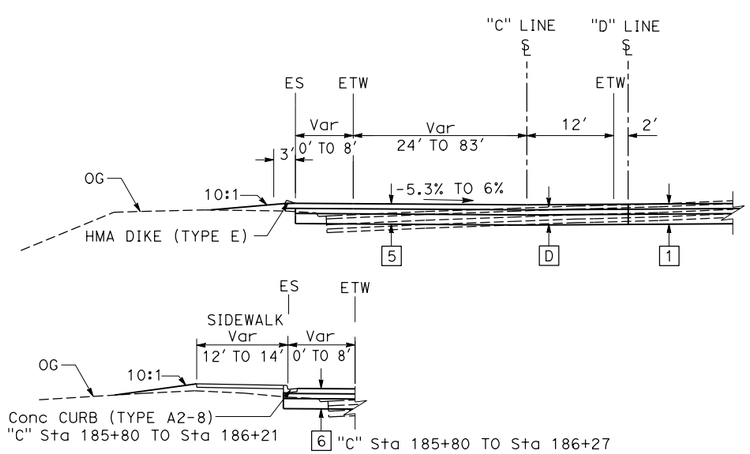

RAMP C

"C" LINE Sta 185+80 TO Sta 187+72

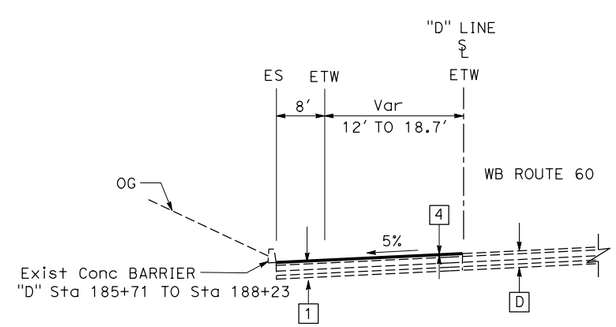

RAMP D

"D" LINE Sta 183+69 TO Sta 188+00

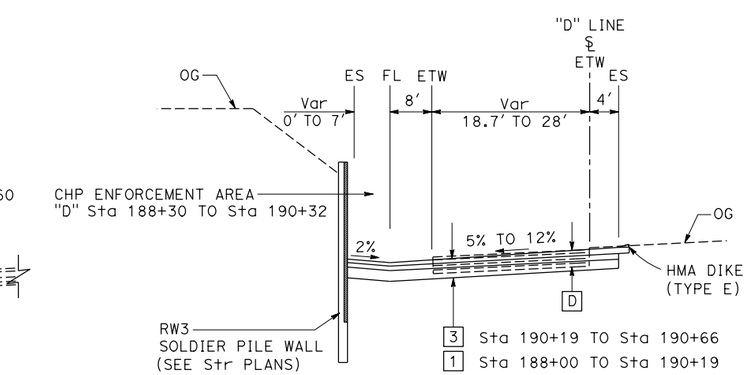

RAMP D

"D" LINE Sta 188+00 TO Sta 190+66

TYPICAL CROSS SECTIONS

NO SCALE

X-2

REVISED BY	DATE REVISED
RUDDY HARTONO	KEDAR SAWANT

CALCULATED-DESIGNED BY / CHECKED BY

FUNCTIONAL SUPERVISOR: ASADOUR TERTERIAN

STATE OF CALIFORNIA - DEPARTMENT OF TRANSPORTATION

Caltrans® **DESIGN**

LAST REVISION 00-00-00 | DATE PLOTTED => 22-JUN-2015 | TIME PLOTTED => 07:08

Dist	COUNTY	ROUTE	POST MILES TOTAL PROJECT	SHEET No.	TOTAL SHEETS
07	LA	60	R7.4/R8.1	4	238

REGISTERED CIVIL ENGINEER 1-22-14 DATE

6-1-15
PLANS APPROVAL DATE

REGISTERED PROFESSIONAL ENGINEER RUDDY HARTONO No. 63146 Exp. 6-30-16 CIVIL STATE OF CALIFORNIA

THE STATE OF CALIFORNIA OR ITS OFFICERS OR AGENTS SHALL NOT BE RESPONSIBLE FOR THE ACCURACY OR COMPLETENESS OF SCANNED COPIES OF THIS PLAN SHEET.

NOTE:

FOR ACCURATE RIGHT OF WAY DATA, CONTACT RIGHT OF WAY ENGINEERING AT THE DISTRICT OFFICE.

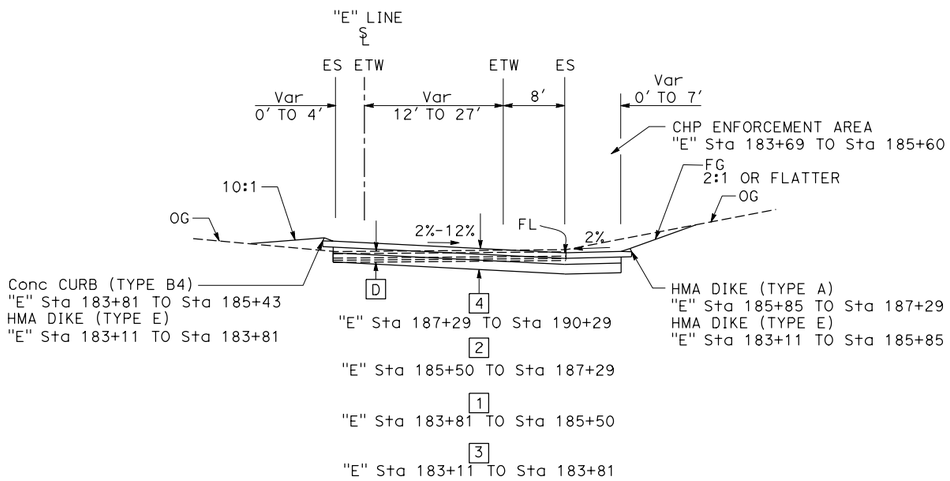

RAMP E

"E" LINE Sta 183+11 TO Sta 190+29

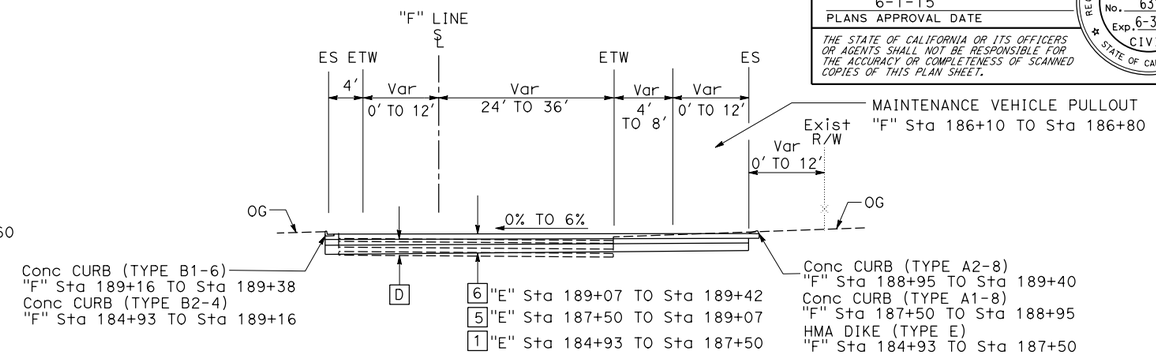

RAMP F

"F" LINE Sta 184+93 TO Sta 189+42

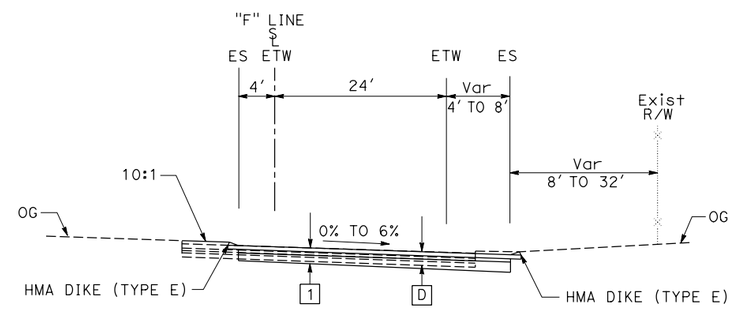

RAMP F

"F" LINE Sta 177+86 TO Sta 184+93

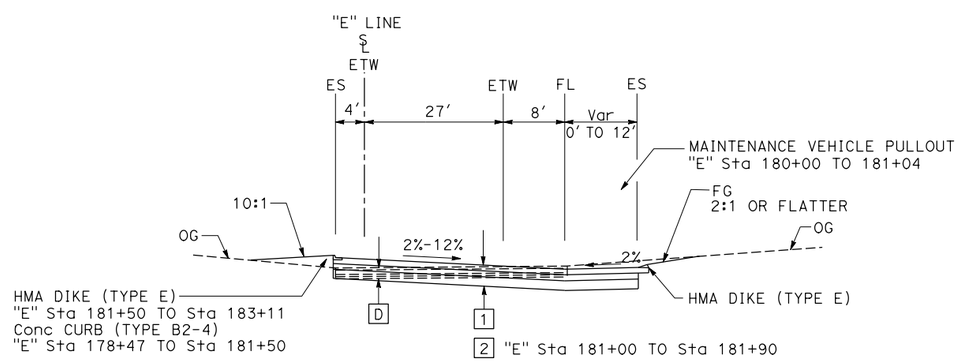

RAMP E

"E" LINE Sta 178+47 TO Sta 183+11

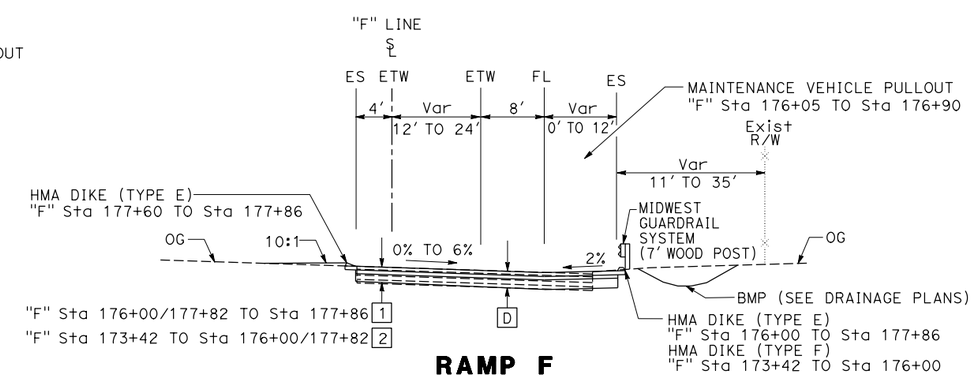

RAMP F

"F" LINE Sta 173+42 TO Sta 177+86

TYPICAL CROSS SECTIONS

NO SCALE

X-3

STATE OF CALIFORNIA - DEPARTMENT OF TRANSPORTATION
Caltrans®
DESIGN

FUNCTIONAL SUPERVISOR: ASADOUR TERTERIAN
CALCULATED-DESIGNED BY: RUDDY HARTONO
CHECKED BY: KEDAR SAWANT
REVISED BY
DATE REVISED

LAST REVISION 00-00-00
DATE PLOTTED => 22-JUN-2015
TIME PLOTTED => 07:08

Dist	COUNTY	ROUTE	POST MILES TOTAL PROJECT	SHEET No.	TOTAL SHEETS
07	LA	60	R7.4/R8.1	5	238

REGISTERED CIVIL ENGINEER 1-22-14 DATE

6-1-15
PLANS APPROVAL DATE

REGISTERED PROFESSIONAL ENGINEER RUDDY HARTONO No. 63146 Exp. 6-30-16 CIVIL STATE OF CALIFORNIA

THE STATE OF CALIFORNIA OR ITS OFFICERS OR AGENTS SHALL NOT BE RESPONSIBLE FOR THE ACCURACY OR COMPLETENESS OF SCANNED COPIES OF THIS PLAN SHEET.

NOTE:

FOR ACCURATE RIGHT OF WAY DATA, CONTACT RIGHT OF WAY ENGINEERING AT DISTRICT OFFICE.

ABBREVIATIONS:

CHPEA - CHP ENFORCEMENT AREA
C&O - COLDPLANE & OVERLAY

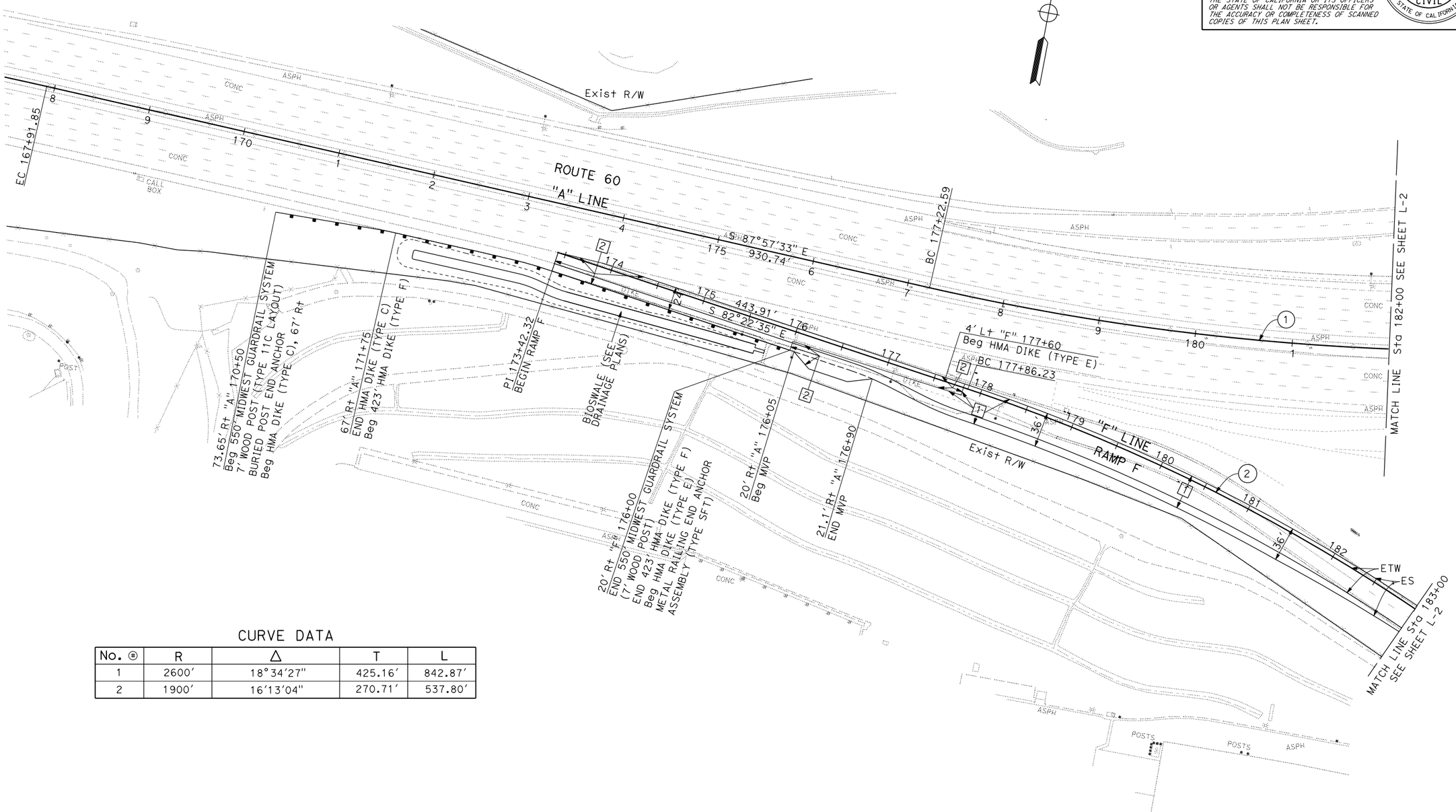

CURVE DATA

No. ⊕	R	Δ	T	L
1	2600′	18°34′27"	425.16′	842.87′
2	1900′	16°13′04"	270.71′	537.80′

LAYOUT

SCALE: 1" = 50′

L-1

REVISED BY	DATE REVISED

CALCULATED-DESIGNED BY: RUDDY HARTONO
CHECKED BY: ASADOUR TERTERIAN

FUNCTIONAL SUPERVISOR: ASADOUR TERTERIAN

STATE OF CALIFORNIA - DEPARTMENT OF TRANSPORTATION
Caltrans
DESIGN

LAST REVISION 00-00-00
DATE PLOTTED => 22-JUN-2015
TIME PLOTTED => 07:08

Dist	COUNTY	ROUTE	POST MILES TOTAL PROJECT	SHEET No.	TOTAL SHEETS
07	LA	60	R7.4/R8.1	6	238

REGISTERED CIVIL ENGINEER 1-22-14 DATE

6-1-15
PLANS APPROVAL DATE

REGISTERED PROFESSIONAL ENGINEER RUDDY HARTONO No. 63146 Exp. 6-30-16 CIVIL STATE OF CALIFORNIA

THE STATE OF CALIFORNIA OR ITS OFFICERS OR AGENTS SHALL NOT BE RESPONSIBLE FOR THE ACCURACY OR COMPLETENESS OF SCANNED COPIES OF THIS PLAN SHEET.

NOTE:
FOR ACCURATE RIGHT OF WAY DATA, CONTACT RIGHT OF WAY ENGINEERING AT DISTRICT OFFICE.

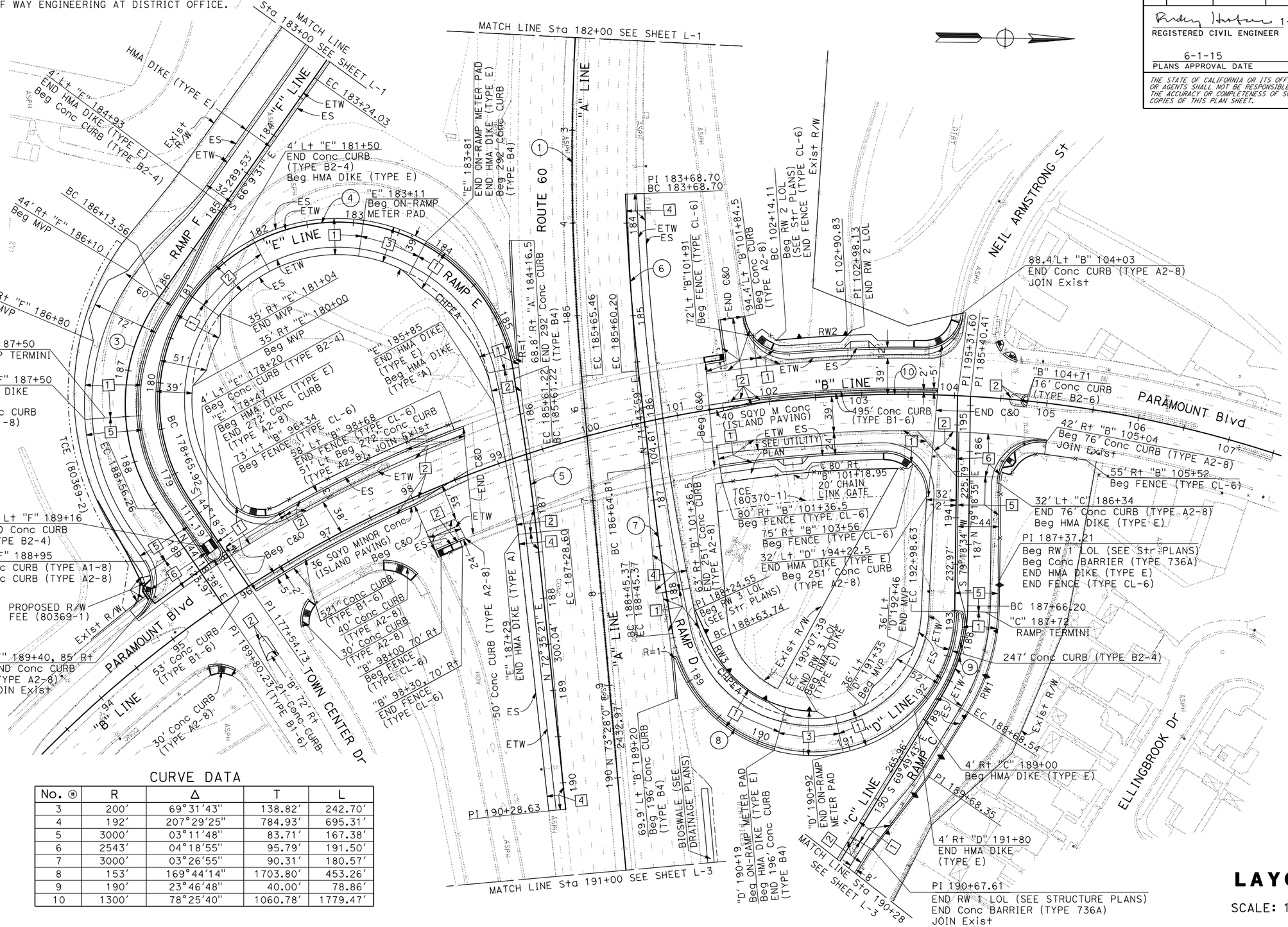

CURVE DATA

No. ⊕	R	Δ	T	L
3	200′	69°31′43"	138.82′	242.70′
4	192′	207°29′25"	784.93′	695.31′
5	3000′	03°11′48"	83.71′	167.38′
6	2543′	04°18′55"	95.79′	191.50′
7	3000′	03°26′55"	90.31′	180.57′
8	153′	169°44′14"	1703.80′	453.26′
9	190′	23°46′48"	40.00′	78.86′
10	1300′	78°25′40"	1060.78′	1779.47′

LAYOUT

SCALE: 1" = 50′

L-2

STATE OF CALIFORNIA - DEPARTMENT OF TRANSPORTATION			
Caltrans® DESIGN	FUNCTIONAL SUPERVISOR ASADOUR TERTERIAN	CALCULATED-DESIGNED BY RUDDY HARTONO	REVISED BY
		CHECKED BY ASADOUR TERTERIAN	DATE REVISED

LAST REVISION 00-00-00 | DATE PLOTTED => 22-JUN-2015 TIME PLOTTED => 07:08

BORDER LAST REVISED 7/2/2010 | USERNAME => s112049 DGN FILE => 73x711ea002.dgn | RELATIVE BORDER SCALE IS IN INCHES 0 1 2 3 | UNIT 1799 | PROJECT NUMBER & PHASE 07150001321

Dist	COUNTY	ROUTE	POST MILES TOTAL PROJECT	SHEET No.	TOTAL SHEETS
07	LA	60	R7.4/R8.1	7	238

REGISTERED CIVIL ENGINEER 1-22-14 DATE

6-1-15
PLANS APPROVAL DATE

REGISTERED PROFESSIONAL ENGINEER RUDDY HARTONO No. 63146 Exp. 6-30-16 CIVIL STATE OF CALIFORNIA

THE STATE OF CALIFORNIA OR ITS OFFICERS OR AGENTS SHALL NOT BE RESPONSIBLE FOR THE ACCURACY OR COMPLETENESS OF SCANNED COPIES OF THIS PLAN SHEET.

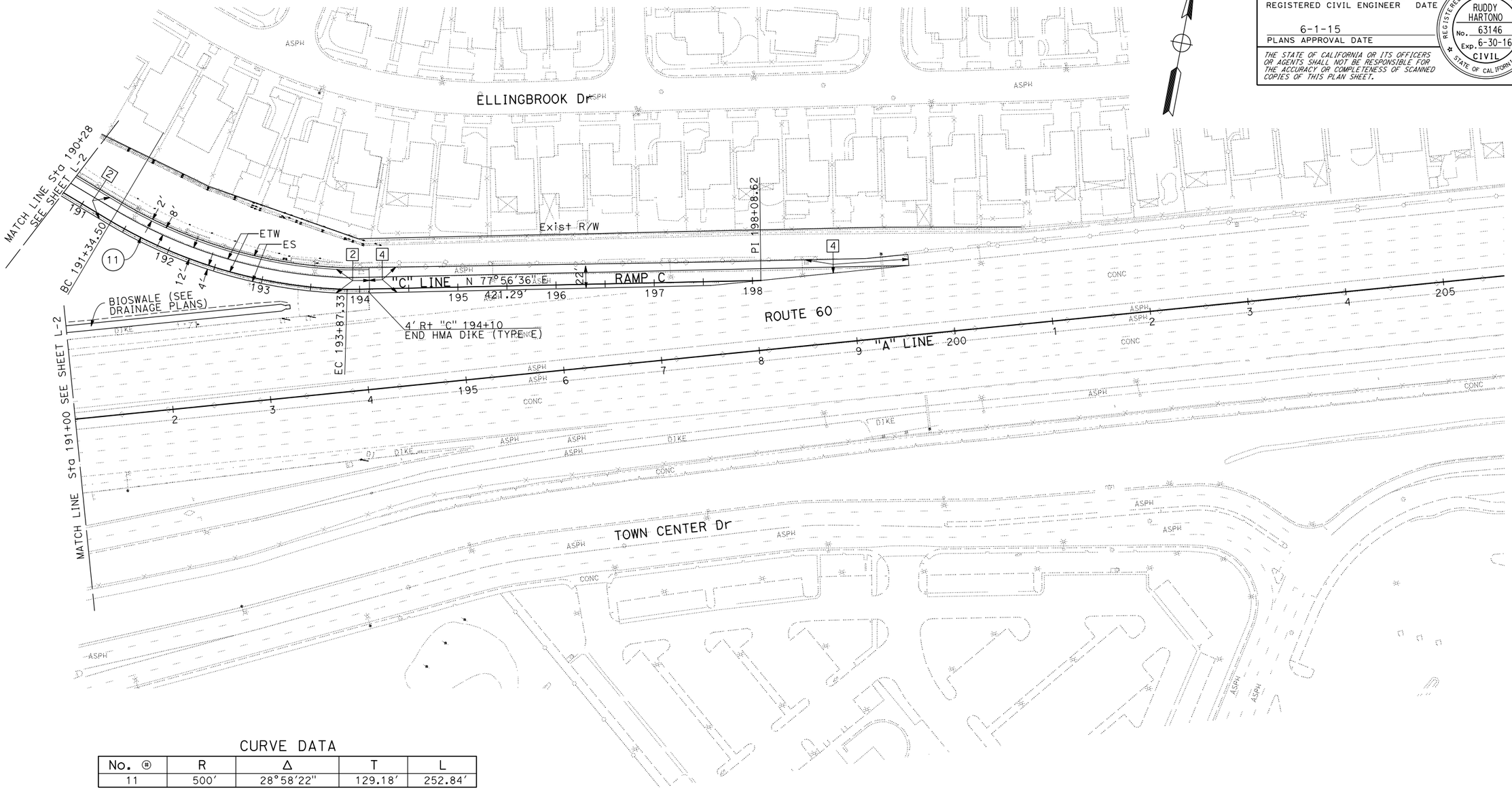

CURVE DATA

No. ⊛	R	Δ	T	L
11	500′	28°58′22″	129.18′	252.84′

LAYOUT

SCALE: 1" = 50′

L-3

STATE OF CALIFORNIA - DEPARTMENT OF TRANSPORTATION

Caltrans

DESIGN

FUNCTIONAL SUPERVISOR: ASADOUR TERTERIAN

CALCULATED-DESIGNED BY: RUDDY HARTONO

CHECKED BY: ASADOUR TERTERIAN

REVISED BY

DATE REVISED

LAST REVISION 00-00-00

DATE PLOTTED => 22-JUN-2015
TIME PLOTTED => 07:08

Dist	COUNTY	ROUTE	POST MILES TOTAL PROJECT	SHEET No.	TOTAL SHEETS
07	LA	60	R7.4/R8.1	8	238

REGISTERED CIVIL ENGINEER 1-22-14 DATE

6-1-15
PLANS APPROVAL DATE

REGISTERED PROFESSIONAL ENGINEER RUDDY HARTONO No. 63146 Exp. 6-30-16 CIVIL STATE OF CALIFORNIA

THE STATE OF CALIFORNIA OR ITS OFFICERS OR AGENTS SHALL NOT BE RESPONSIBLE FOR THE ACCURACY OR COMPLETENESS OF SCANNED COPIES OF THIS PLAN SHEET.

SUPERELEVATION DIAGRAM

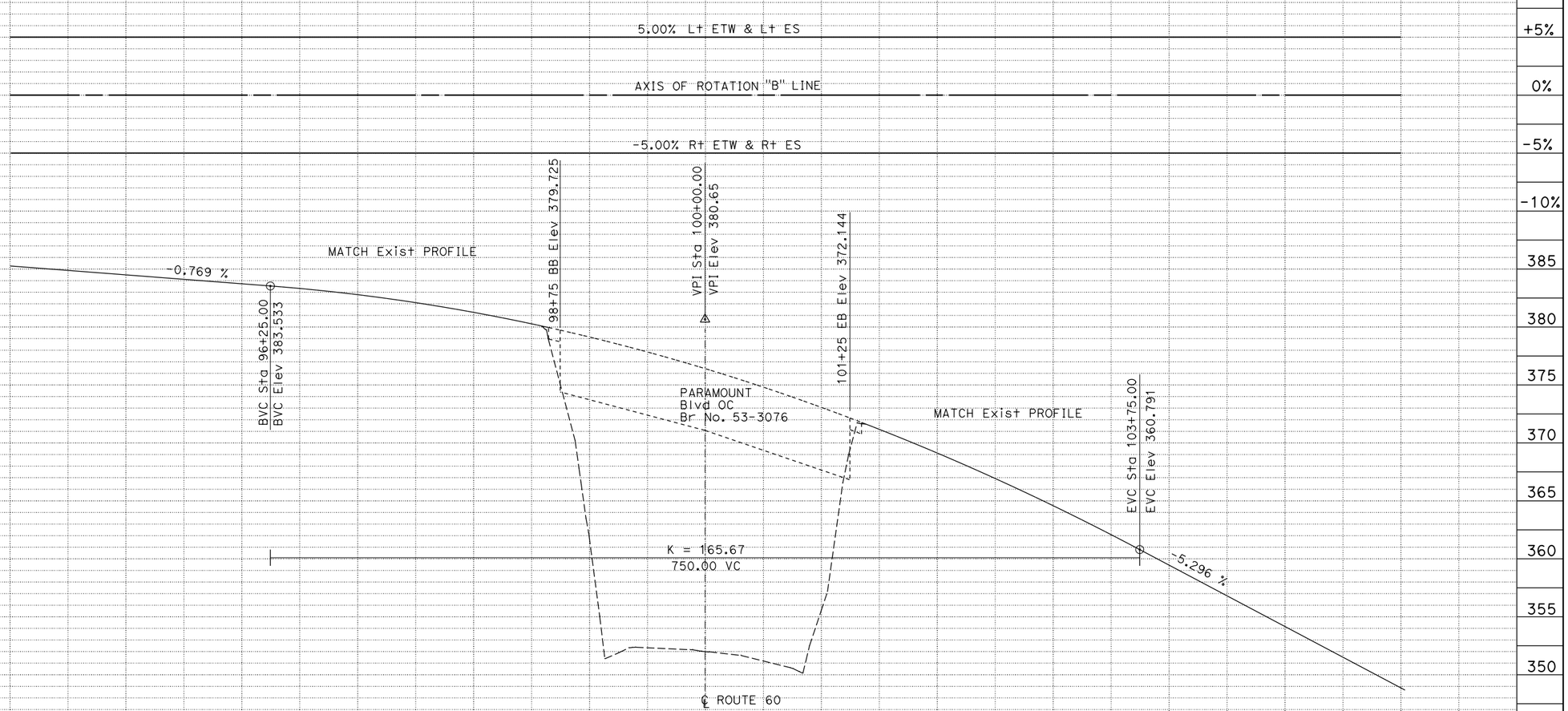

PROFILE

PARAMOUNT Blvd OC

"B" LINE

PROFILE AND SUPERELEVATION DIAGRAM

SCALE: Horiz 1" = 50'
Vert 1" = 5'

PS-1

STATION	93	94	95	96	97	98	99	100	101	102	103	104	105	106	TOTAL
CY Exc			670						2000						2670
CY Emb									90						90

REVISED BY | DATE REVISED
MEDARDO DE LA CRUZ | HUNG H TIEU
CALCULATED-DESIGNED BY | CHECKED BY
FUNCTIONAL SUPERVISOR | ASADOUR TERTERIAN
STATE OF CALIFORNIA - DEPARTMENT OF TRANSPORTATION
Caltrans
DESIGN

LAST REVISION 00-00-00
DATE PLOTTED => 22-JUN-2015
TIME PLOTTED => 07:08

Dist	COUNTY	ROUTE	POST MILES TOTAL PROJECT	SHEET No.	TOTAL SHEETS
07	LA	60	R7.4/R8.1	9	238

REGISTERED CIVIL ENGINEER 1-22-14 DATE

6-1-15
PLANS APPROVAL DATE

REGISTERED PROFESSIONAL ENGINEER RUDDY HARTONO No. 63146 Exp. 6-30-16 CIVIL STATE OF CALIFORNIA

THE STATE OF CALIFORNIA OR ITS OFFICERS OR AGENTS SHALL NOT BE RESPONSIBLE FOR THE ACCURACY OR COMPLETENESS OF SCANNED COPIES OF THIS PLAN SHEET.

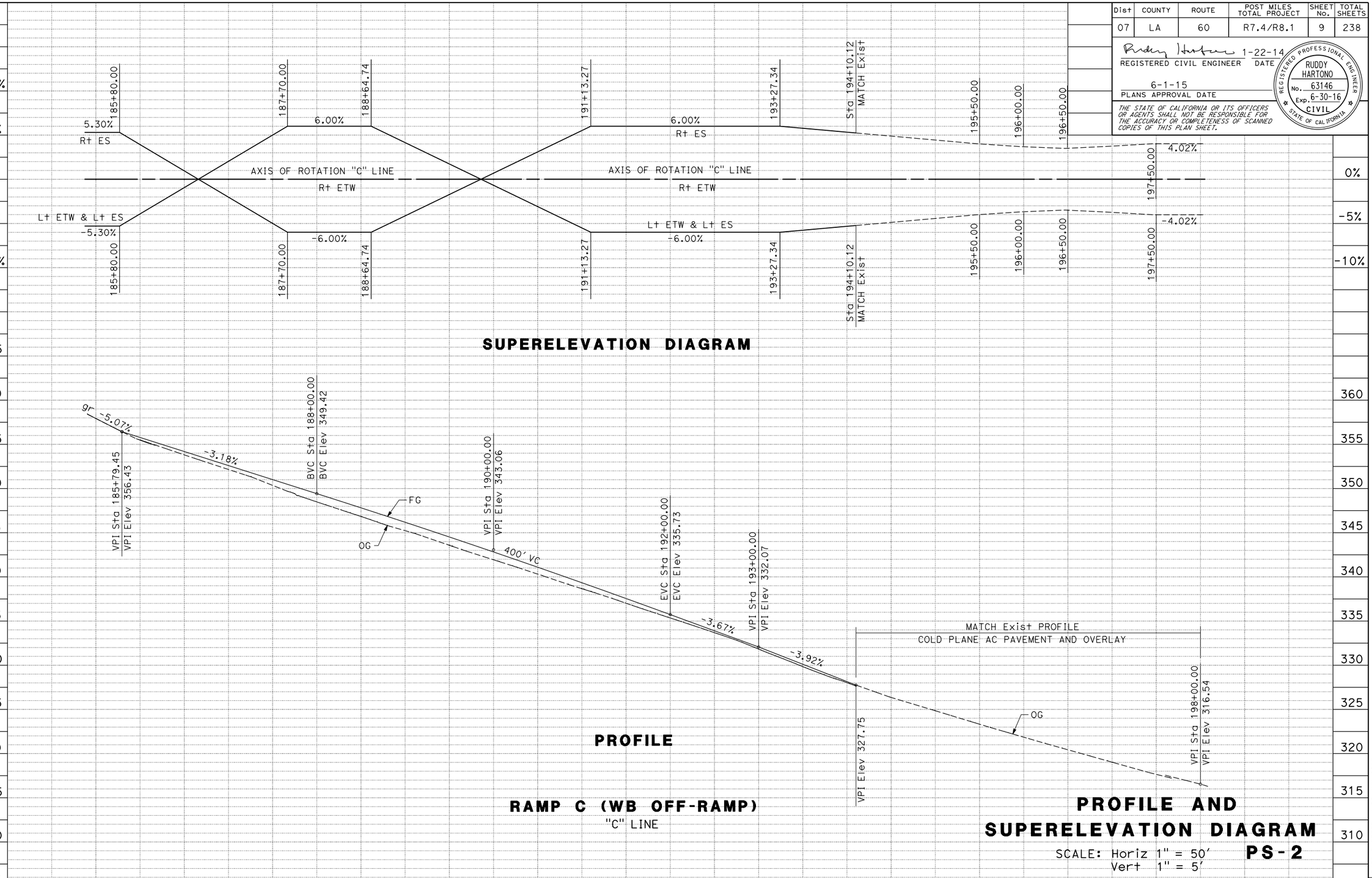

STATION	185	186	187	188	189	190	191	192	193	194	195	196	197	198	199	TOTAL
CY Exc		450		1490												1940
CY Emb		18		5												23

REVISED BY | DATE REVISED
KEDAR SAWANT | RUDDY HARTONO
CALCULATED-DESIGNED BY | CHECKED BY
FUNCTIONAL SUPERVISOR: ASADOUR TERTERIAN

STATE OF CALIFORNIA - DEPARTMENT OF TRANSPORTATION
Caltrans® DESIGN

LAST REVISION 00-00-00 | DATE PLOTTED => 22-JUN-2015 | TIME PLOTTED => 07:08

Dist	COUNTY	ROUTE	POST MILES TOTAL PROJECT	SHEET No.	TOTAL SHEETS
07	LA	60	R7.4/R8.1	10	238

REGISTERED CIVIL ENGINEER 1-22-14 DATE

6-1-15
PLANS APPROVAL DATE

REGISTERED PROFESSIONAL ENGINEER RUDDY HARTONO No. 63146 Exp. 6-30-16 CIVIL STATE OF CALIFORNIA

THE STATE OF CALIFORNIA OR ITS OFFICERS OR AGENTS SHALL NOT BE RESPONSIBLE FOR THE ACCURACY OR COMPLETENESS OF SCANNED COPIES OF THIS PLAN SHEET.

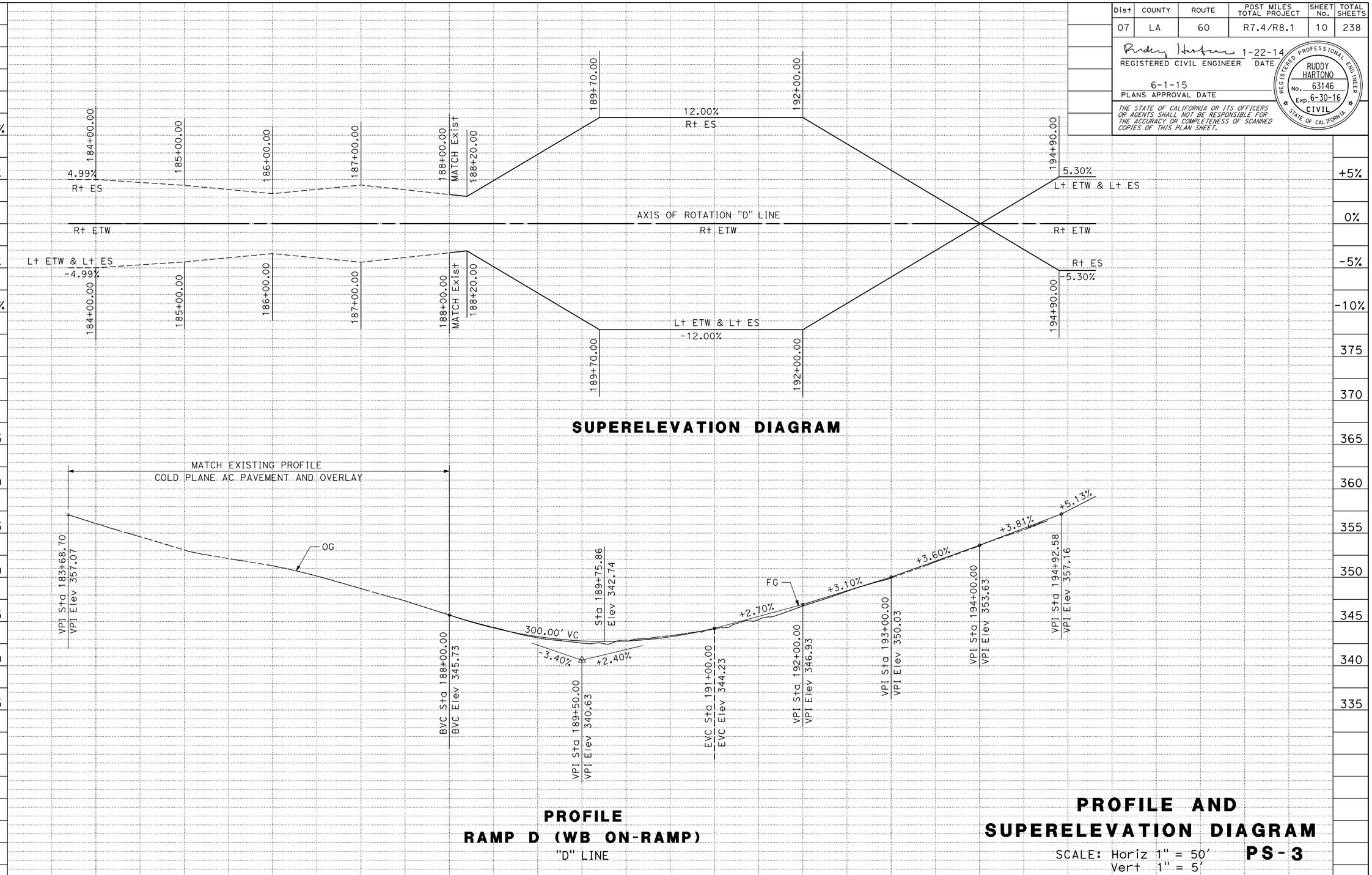

STATE OF CALIFORNIA - DEPARTMENT OF TRANSPORTATION
Caltrans DESIGN

FUNCTIONAL SUPERVISOR: ASADOUR TERTERIAN
CALCULATED-DESIGNED BY: KEDAR SAWANT
CHECKED BY: RUDDY HARTONO
REVISED BY
DATE REVISED

LAST REVISION 00-00-00
DATE PLOTTED => 22-JUN-2015
TIME PLOTTED => 07:08

BORDER LAST REVISED 7/2/2010
USERNAME => s112049
DGN FILE => 73x711fb003.dgn
RELATIVE BORDER SCALE IS IN INCHES 0 1 2 3
UNIT 1799
PROJECT NUMBER & PHASE 07150001321

Dist	COUNTY	ROUTE	POST MILES TOTAL PROJECT	SHEET No.	TOTAL SHEETS
07	LA	60	R7.4/R8.1	11	238

REGISTERED CIVIL ENGINEER 1-22-14 DATE

6-1-15
PLANS APPROVAL DATE

REGISTERED PROFESSIONAL ENGINEER RUDDY HARTONO No. 63146 Exp. 6-30-16 CIVIL STATE OF CALIFORNIA

THE STATE OF CALIFORNIA OR ITS OFFICERS OR AGENTS SHALL NOT BE RESPONSIBLE FOR THE ACCURACY OR COMPLETENESS OF SCANNED COPIES OF THIS PLAN SHEET.

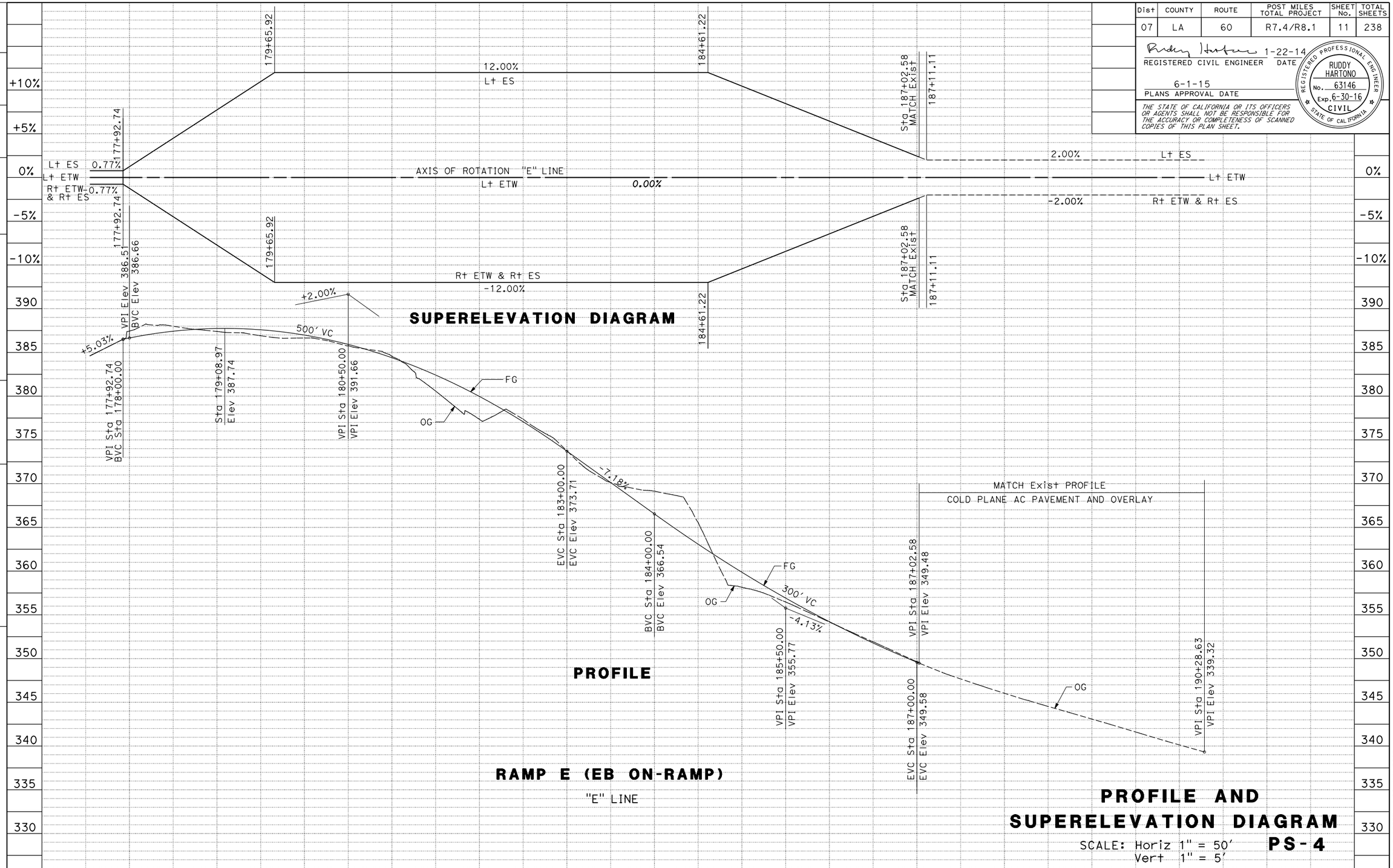

STATE OF CALIFORNIA - DEPARTMENT OF TRANSPORTATION
Caltrans DESIGN

FUNCTIONAL SUPERVISOR: ASADOUR TERTERIAN
CALCULATED-DESIGNED BY: KEDAR SAWANT
CHECKED BY: RUDDY HARTONO
REVISED BY
DATE REVISED

LAST REVISION 00-00-00
DATE PLOTTED => 22-JUN-2015
TIME PLOTTED => 07:08

BORDER LAST REVISED 7/2/2010
USERNAME => s112049
DGN FILE => 73x711fb004.dgn
RELATIVE BORDER SCALE IS IN INCHES 0 1 2 3
UNIT 1799
PROJECT NUMBER & PHASE 07150001321

Dist	COUNTY	ROUTE	POST MILES TOTAL PROJECT	SHEET No.	TOTAL SHEETS
07	LA	60	R7.4/R8.1	12	238

REGISTERED CIVIL ENGINEER 1-22-14 DATE

6-1-15
PLANS APPROVAL DATE

REGISTERED PROFESSIONAL ENGINEER RUDDY HARTONO No. 63146 Exp. 6-30-16 CIVIL STATE OF CALIFORNIA

THE STATE OF CALIFORNIA OR ITS OFFICERS OR AGENTS SHALL NOT BE RESPONSIBLE FOR THE ACCURACY OR COMPLETENESS OF SCANNED COPIES OF THIS PLAN SHEET.

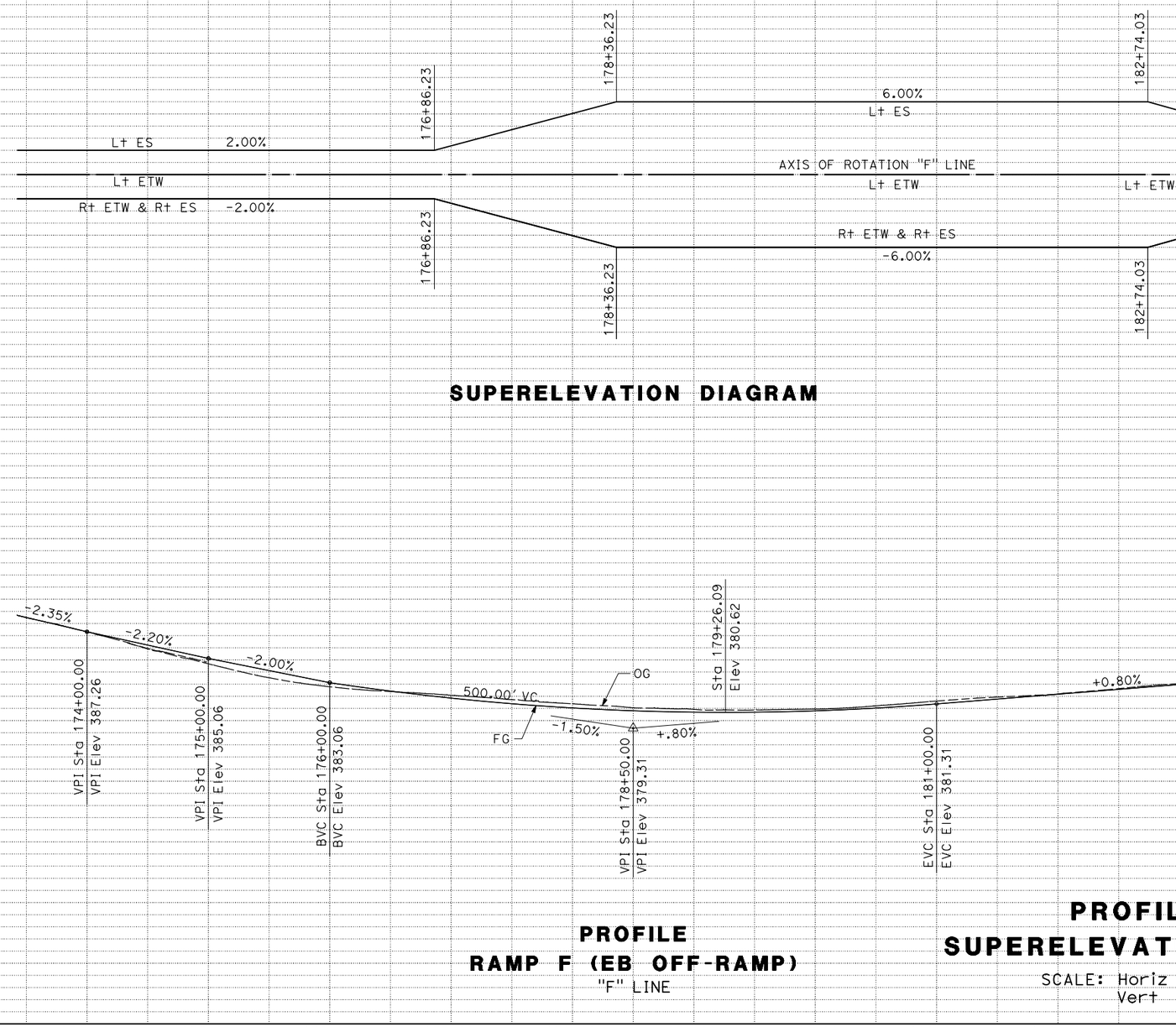

SUPERELEVATION DIAGRAM

PROFILE
RAMP F (EB OFF-RAMP)
"F" LINE

PROFILE AND SUPERELEVATION DIAGRAM

SCALE: Horiz 1" = 50'
Vert 1" = 5'

PS-5

STATION	173+00	174+00	175+00	176+00	177+00	178+00	179+00	180+00	181+00	182+00	183+00	184+00	TOTAL
CY Exc		2680											2680
CY Emb		2											2

REVISED BY	DATE REVISED
KEDAR SAWANT	RUDDY HARTONO
CALCULATED-DESIGNED BY	CHECKED BY
FUNCTIONAL SUPERVISOR	ASADOUR TERTERIAN

STATE OF CALIFORNIA - DEPARTMENT OF TRANSPORTATION
Caltrans
DESIGN

LAST REVISION 00-00-00
DATE PLOTTED => 22-JUN-2015
TIME PLOTTED => 07:08

Dist	COUNTY	ROUTE	POST MILES TOTAL PROJECT	SHEET No.	TOTAL SHEETS
07	LA	60	R7.4/R8.1	13	238

REGISTERED CIVIL ENGINEER 1-22-14 DATE

6-1-15
PLANS APPROVAL DATE

REGISTERED PROFESSIONAL ENGINEER RUDDY HARTONO No. 63146 Exp. 6-30-16 CIVIL STATE OF CALIFORNIA

THE STATE OF CALIFORNIA OR ITS OFFICERS OR AGENTS SHALL NOT BE RESPONSIBLE FOR THE ACCURACY OR COMPLETENESS OF SCANNED COPIES OF THIS PLAN SHEET.

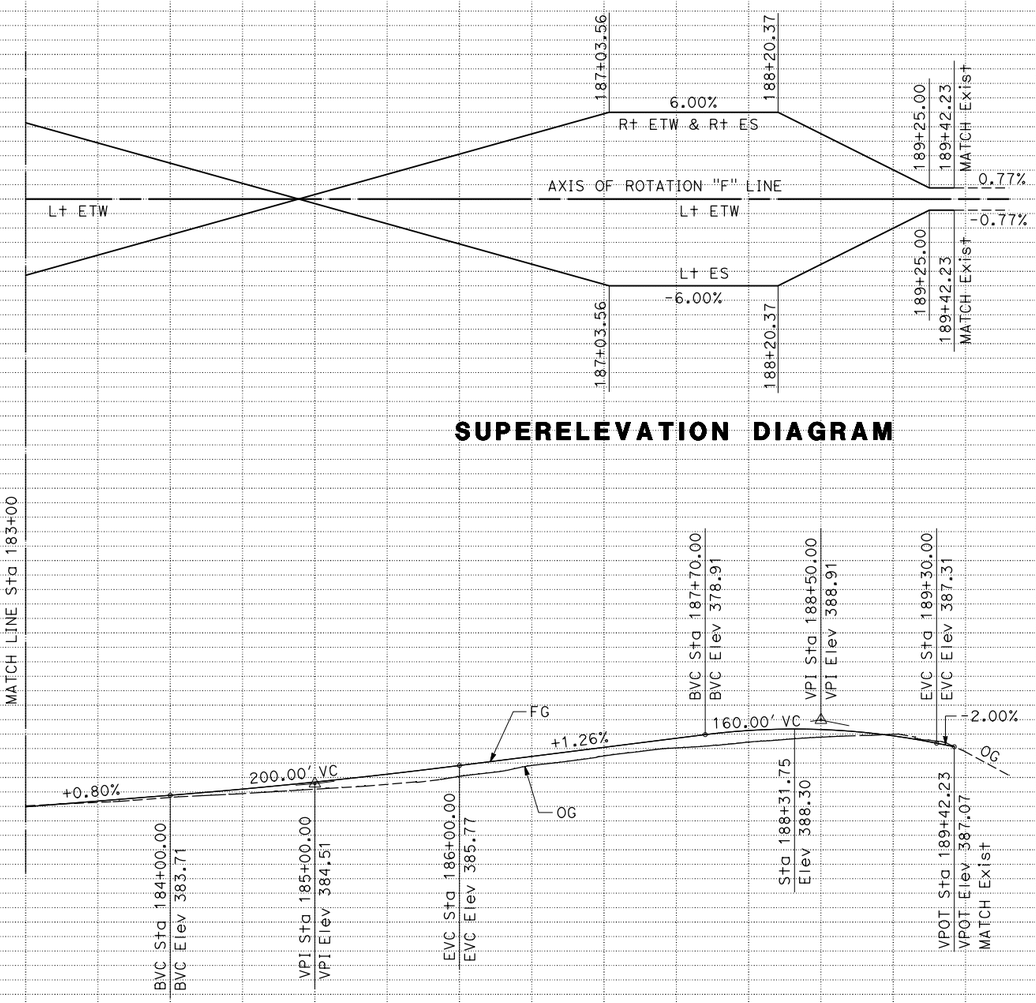

SUPERELEVATION DIAGRAM

PROFILE
RAMP F (EB OFF-RAMP)
"F" LINE

PROFILE AND SUPERELEVATION DIAGRAM

SCALE: Horiz 1" = 50'
Vert 1" = 5'

PS-6

STATION	182+00	183+00	184+00	185+00	186+00	187+00	188+00	189+00	190+00	191+00	192+00	193+00	TOTAL
CY Exc		2920											2920
CY Emb		13											13

STATE OF CALIFORNIA - DEPARTMENT OF TRANSPORTATION
Caltrans® DESIGN

FUNCTIONAL SUPERVISOR: ASADOUR TERTERIAN
CALCULATED-DESIGNED BY: KEDAR SAWANT
CHECKED BY: RUDDY HARTONO
REVISED BY
DATE REVISED

LAST REVISION 00-00-00
DATE PLOTTED => 22-JUN-2015
TIME PLOTTED => 07:08

BORDER LAST REVISED 7/2/2010
USERNAME => s112049
DGN FILE => 73x711fb006.dgn
RELATIVE BORDER SCALE IS IN INCHES 0 1 2 3
UNIT 1799
PROJECT NUMBER & PHASE 07150001321

Dist	COUNTY	ROUTE	POST MILES TOTAL PROJECT	SHEET No.	TOTAL SHEETS
07	LA	60	R7.4/R8.1	14	238

REGISTERED CIVIL ENGINEER 1-22-14 DATE

6-1-15
PLANS APPROVAL DATE

REGISTERED PROFESSIONAL ENGINEER
RUDDY HARTONO
No. 63146
Exp. 6-30-16
CIVIL
STATE OF CALIFORNIA

THE STATE OF CALIFORNIA OR ITS OFFICERS OR AGENTS SHALL NOT BE RESPONSIBLE FOR THE ACCURACY OR COMPLETENESS OF SCANNED COPIES OF THIS PLAN SHEET.

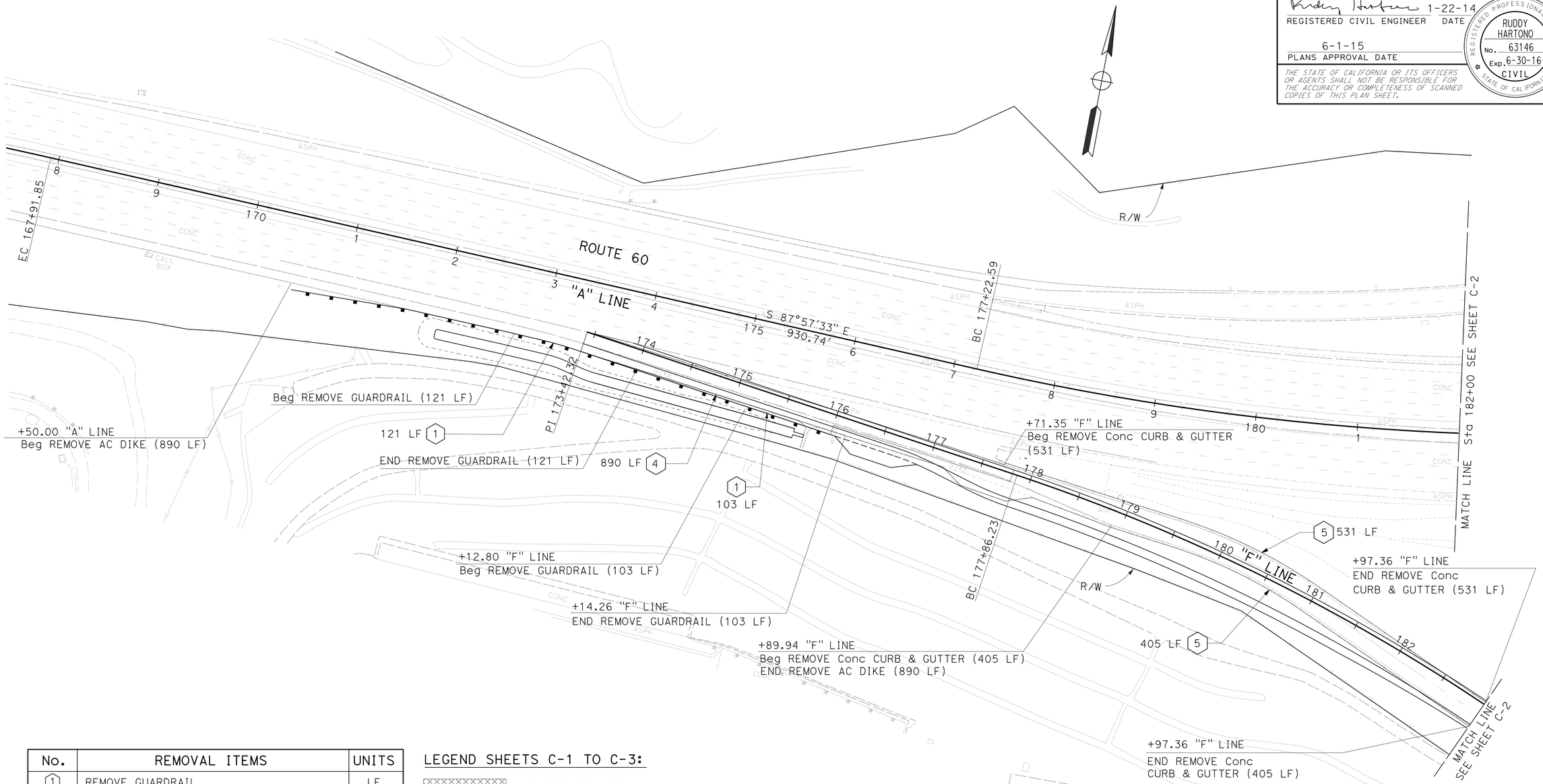

No.	REMOVAL ITEMS	UNITS
1	REMOVE GUARDRAIL	LF
2	REMOVE CHAIN LINK FENCE	LF
3	OBLITERATE SURFACING	SQYD
4	REMOVE AC DIKE	LF
5	REMOVE CONCRETE CURB AND GUTTER	LF
6	REMOVE CONCRETE SIDEWALK AND DRIVEWAY	CY
7	REMOVE CONCRETE CURB	LF

LEGEND SHEETS C-1 TO C-3:

OBLITERATE SURFACING

REMOVE CONCRETE SIDEWALK AND DRIVEWAY

(X) REMOVE ITEM No.

CONSTRUCTION DETAILS
REMOVAL PLAN

SCALE: 1" = 50'

C-1

STATE OF CALIFORNIA - DEPARTMENT OF TRANSPORTATION
Caltrans
DESIGN

FUNCTIONAL SUPERVISOR: ASADOUR TERTERIAN
CALCULATED-DESIGNED BY: MANJINDER BRAR
CHECKED BY: RUDDY HARTONO
REVISED BY
DATE REVISED

LAST REVISION 00-00-00
DATE PLOTTED => 04-AUG-2015
TIME PLOTTED => 15:54

Dist	COUNTY	ROUTE	POST MILES TOTAL PROJECT	SHEET No.	TOTAL SHEETS
07	LA	60	R7.4/R8.1	15	238

REGISTERED CIVIL ENGINEER 1-22-14 DATE

6-1-15
PLANS APPROVAL DATE

REGISTERED PROFESSIONAL ENGINEER RUDDY HARTONO No. 63146 Exp. 6-30-16 CIVIL STATE OF CALIFORNIA

THE STATE OF CALIFORNIA OR ITS OFFICERS OR AGENTS SHALL NOT BE RESPONSIBLE FOR THE ACCURACY OR COMPLETENESS OF SCANNED COPIES OF THIS PLAN SHEET.

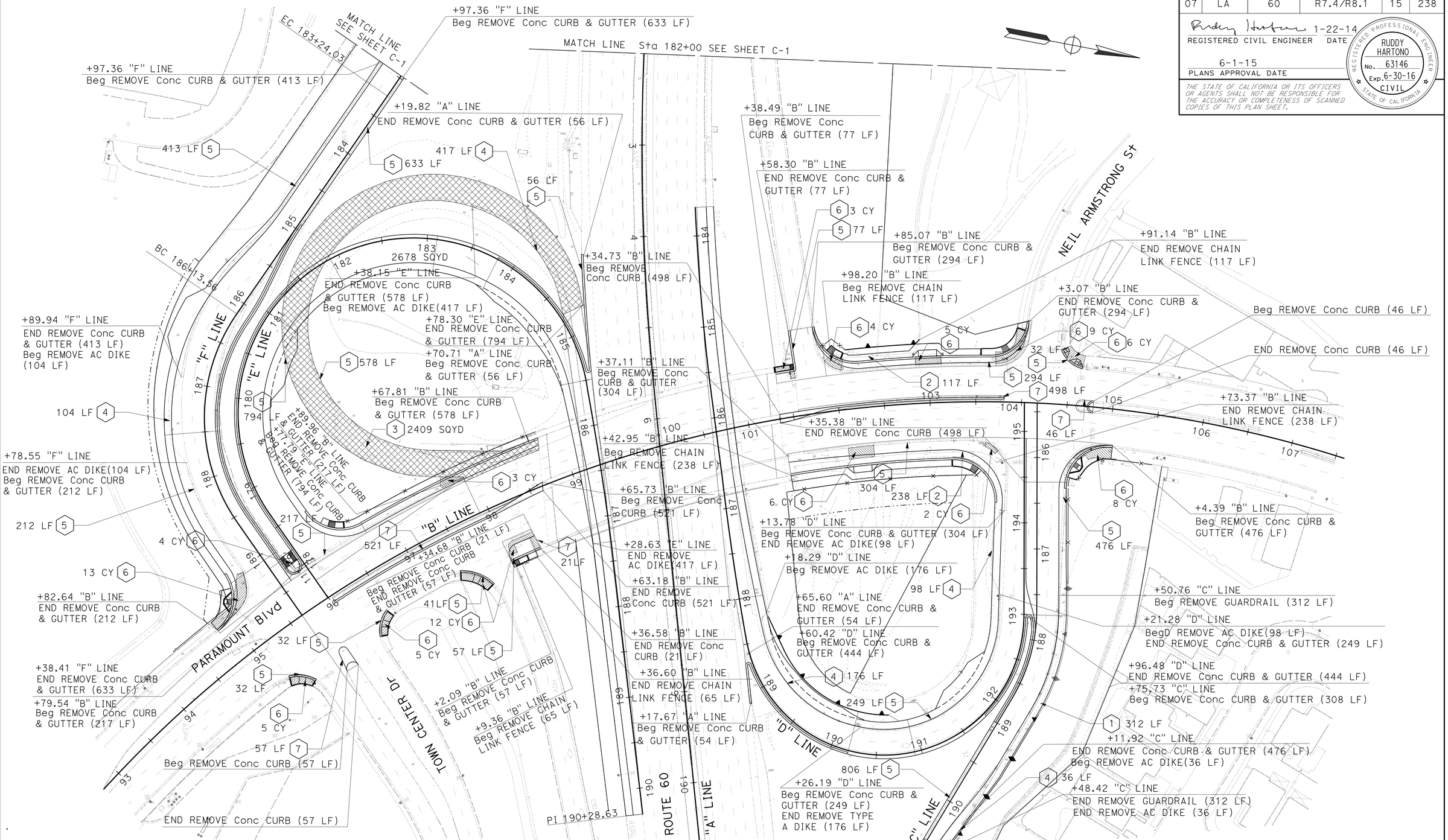

CONSTRUCTION DETAILS
REMOVAL PLAN

SCALE: 1" = 50'

C-2

STATE OF CALIFORNIA - DEPARTMENT OF TRANSPORTATION
Caltrans
DESIGN

FUNCTIONAL SUPERVISOR: ASADOUR TERTERIAN
CALCULATED-DESIGNED BY: MANJINDER BRAR
CHECKED BY: RUDDY HARTONO
REVISED BY
DATE REVISED

LAST REVISION 00-00-00
DATE PLOTTED => 05-AUG-2015
TIME PLOTTED => 08:58

Dist	COUNTY	ROUTE	POST MILES TOTAL PROJECT	SHEET No.	TOTAL SHEETS
07	LA	60	R7.4/R8.1	16	238

REGISTERED CIVIL ENGINEER 1-22-14 DATE

6-1-15
PLANS APPROVAL DATE

REGISTERED PROFESSIONAL ENGINEER RUDDY HARTONO No. 63146 Exp. 6-30-16 CIVIL STATE OF CALIFORNIA

THE STATE OF CALIFORNIA OR ITS OFFICERS OR AGENTS SHALL NOT BE RESPONSIBLE FOR THE ACCURACY OR COMPLETENESS OF SCANNED COPIES OF THIS PLAN SHEET.

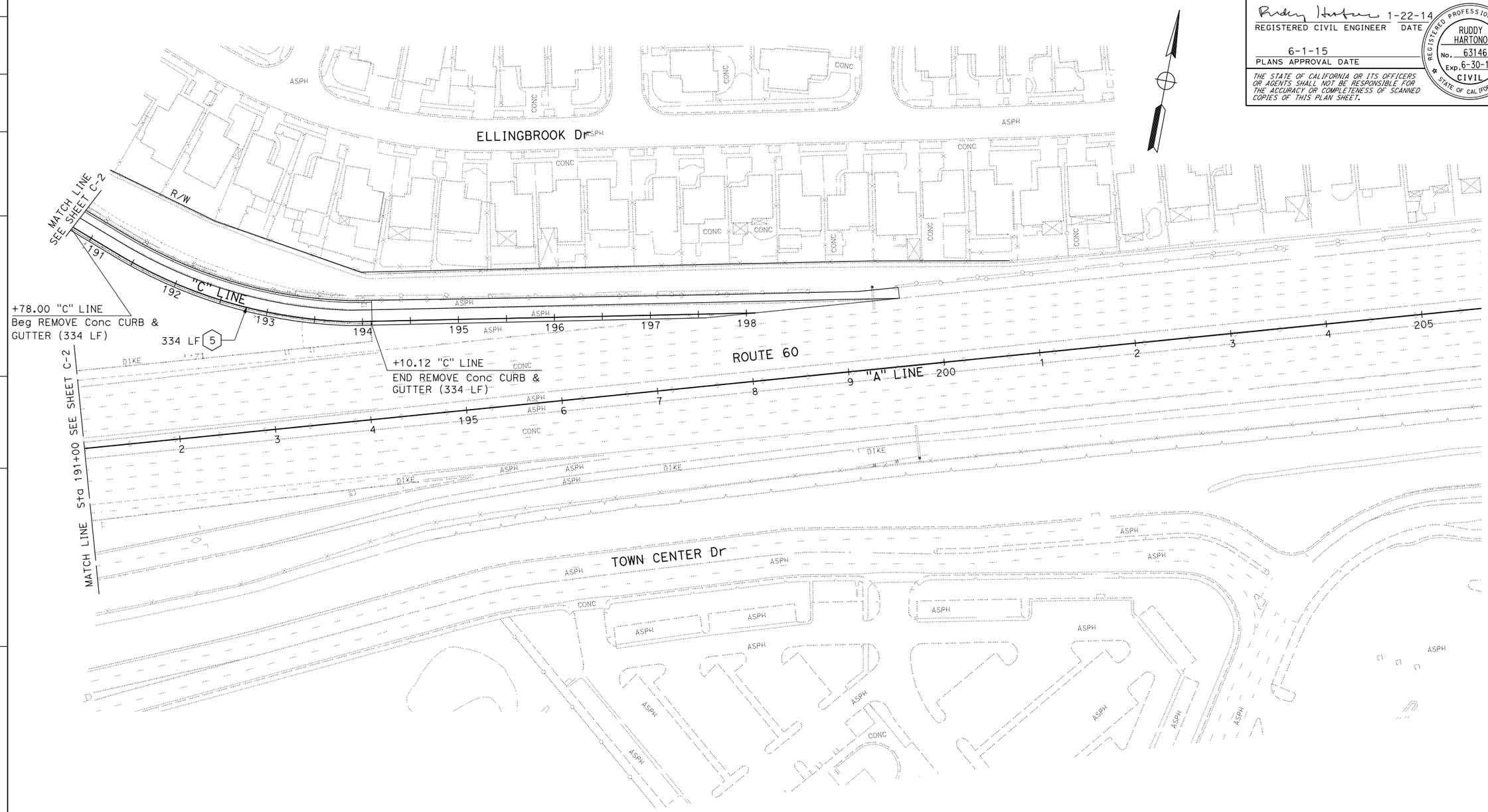

CONSTRUCTION DETAILS
REMOVAL PLAN

SCALE: 1" = 50'

C-3

STATE OF CALIFORNIA - DEPARTMENT OF TRANSPORTATION
Caltrans
DESIGN

FUNCTIONAL SUPERVISOR: ASADOUR TERTERIAN
CALCULATED-DESIGNED BY: MANJINDER BRAR
CHECKED BY: RUDDY HARTONO
REVISED BY
DATE REVISED

LAST REVISION 00-00-00
DATE PLOTTED => 22-JUN-2015
TIME PLOTTED => 07:08

Dist	COUNTY	ROUTE	POST MILES TOTAL PROJECT	SHEET No.	TOTAL SHEETS
07	LA	60	R7.4/R8.1	17	238

REGISTERED CIVIL ENGINEER 1-22-14 DATE

6-1-15
PLANS APPROVAL DATE

REGISTERED PROFESSIONAL ENGINEER RUDDY HARTONO No. 63146 Exp. 6-30-16 CIVIL STATE OF CALIFORNIA

THE STATE OF CALIFORNIA OR ITS OFFICERS OR AGENTS SHALL NOT BE RESPONSIBLE FOR THE ACCURACY OR COMPLETENESS OF SCANNED COPIES OF THIS PLAN SHEET.

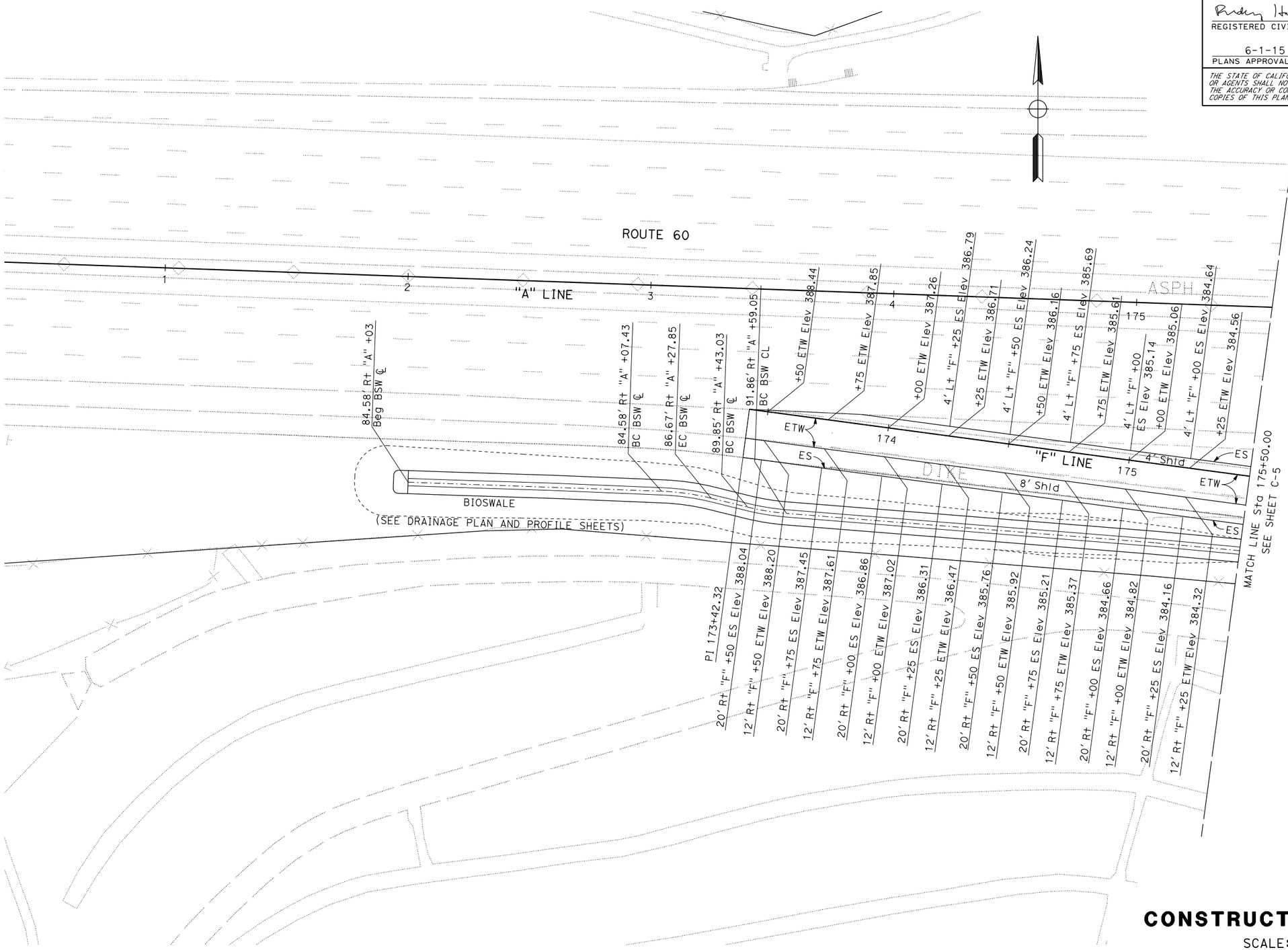

CONSTRUCTION DETAILS

SCALE: 1" = 20'

C-4

STATE OF CALIFORNIA - DEPARTMENT OF TRANSPORTATION	FUNCTIONAL SUPERVISOR	CALCULATED-DESIGNED BY	KEDAR SAWANT	REVISED BY
Caltrans DESIGN	ASADOUR TERTERIAN	CHECKED BY	RUDDY HARTONO	DATE REVISED

LAST REVISION 00-00-00 | DATE PLOTTED => 22-JUN-2015 | TIME PLOTTED => 07:08

BORDER LAST REVISED 7/2/2010 | USERNAME => s112049 | DGN FILE => 73x711ga004.dgn | RELATIVE BORDER SCALE IS IN INCHES 0 1 2 3 | UNIT 1799 | PROJECT NUMBER & PHASE 07150001321

Dist	COUNTY	ROUTE	POST MILES TOTAL PROJECT	SHEET No.	TOTAL SHEETS
07	LA	60	R7.4/R8.1	18	238

REGISTERED CIVIL ENGINEER 1-22-14 DATE

6-1-15
PLANS APPROVAL DATE

REGISTERED PROFESSIONAL ENGINEER
RUDDY HARTONO
No. 63146
Exp. 6-30-16
CIVIL
STATE OF CALIFORNIA

THE STATE OF CALIFORNIA OR ITS OFFICERS OR AGENTS SHALL NOT BE RESPONSIBLE FOR THE ACCURACY OR COMPLETENESS OF SCANNED COPIES OF THIS PLAN SHEET.

CONSTRUCTION DETAILS

SCALE: 1" = 20'

C-5

STATE OF CALIFORNIA - DEPARTMENT OF TRANSPORTATION	FUNCTIONAL SUPERVISOR	CALCULATED-DESIGNED BY	KEDAR SAWANT	REVISED BY
Caltrans® DESIGN	ASADOUR TERTERIAN	CHECKED BY	RUDDY HARTONO	DATE REVISED

LAST REVISION 00-00-00 | DATE PLOTTED => 22-JUN-2015 | TIME PLOTTED => 07:08

BORDER LAST REVISED 7/2/2010 | USERNAME => s112049 | DGN FILE => 73x711ga005.dgn | RELATIVE BORDER SCALE IS IN INCHES 0 1 2 3 | UNIT 1799 | PROJECT NUMBER & PHASE 07150001321

Dist	COUNTY	ROUTE	POST MILES TOTAL PROJECT	SHEET No.	TOTAL SHEETS
07	LA	60	R7.4/R8.1	19	238

REGISTERED CIVIL ENGINEER 1-22-14 DATE

6-1-15
PLANS APPROVAL DATE

REGISTERED PROFESSIONAL ENGINEER
RUDDY HARTONO
No. 63146
Exp. 6-30-16
CIVIL
STATE OF CALIFORNIA

THE STATE OF CALIFORNIA OR ITS OFFICERS OR AGENTS SHALL NOT BE RESPONSIBLE FOR THE ACCURACY OR COMPLETENESS OF SCANNED COPIES OF THIS PLAN SHEET.

CONSTRUCTION DETAILS

SCALE: 1" = 20'

C-6

STATE OF CALIFORNIA - DEPARTMENT OF TRANSPORTATION	CALCULATED-DESIGNED BY	KEDAR SAWANT	REVISED BY
Caltrans® DESIGN	CHECKED BY	RUDDY HARTONO	DATE REVISED
FUNCTIONAL SUPERVISOR: ASADOUR TERTERIAN			

LAST REVISION	DATE PLOTTED => 22-JUN-2015
00-00-00	TIME PLOTTED => 07:08

Dist	COUNTY	ROUTE	POST MILES TOTAL PROJECT	SHEET No.	TOTAL SHEETS
07	LA	60	R7.4/R8.1	20	238

REGISTERED CIVIL ENGINEER 1-22-14 DATE

6-1-15
PLANS APPROVAL DATE

REGISTERED PROFESSIONAL ENGINEER RUDDY HARTONO No. 63146 Exp. 6-30-16 CIVIL STATE OF CALIFORNIA

THE STATE OF CALIFORNIA OR ITS OFFICERS OR AGENTS SHALL NOT BE RESPONSIBLE FOR THE ACCURACY OR COMPLETENESS OF SCANNED COPIES OF THIS PLAN SHEET.

CURVE DATA

No. ⊕	R	Δ	T	L
13	45′	85°16′24"	41.43′	66.97′
14	45′	85°18′14"	41.45′	67.00′
15	7′	182°12′14"	371.72′	22.74′
16	7′	169°51′38"	80.60′	21.20′

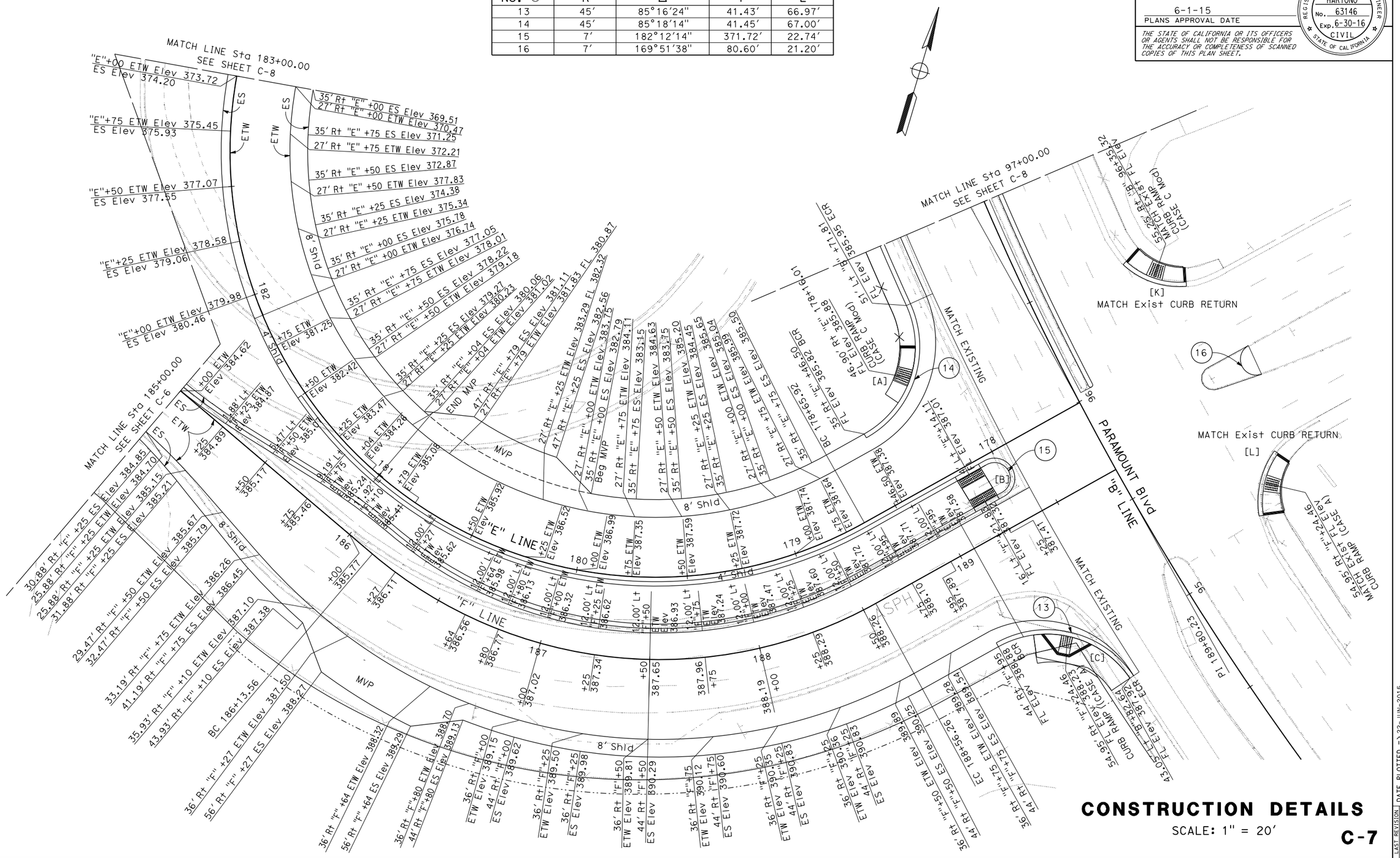

CONSTRUCTION DETAILS

SCALE: 1" = 20′

C-7

STATE OF CALIFORNIA - DEPARTMENT OF TRANSPORTATION	FUNCTIONAL SUPERVISOR	CALCULATED-DESIGNED BY	KEDAR SAWANT	REVISED BY	
Caltrans® DESIGN	ASADOUR TERTERIAN	CHECKED BY	RUDDY HARTONO	DATE REVISED	

LAST REVISION 00-00-00 | DATE PLOTTED => 22-JUN-2015 | TIME PLOTTED => 07:08

Dist	COUNTY	ROUTE	POST MILES TOTAL PROJECT	SHEET No.	TOTAL SHEETS
07	LA	60	R7.4/R8.1	21	238

REGISTERED CIVIL ENGINEER 1-22-14 DATE

6-1-15
PLANS APPROVAL DATE

REGISTERED PROFESSIONAL ENGINEER RUDDY HARTONO No. 63146 Exp. 6-30-16 CIVIL STATE OF CALIFORNIA

THE STATE OF CALIFORNIA OR ITS OFFICERS OR AGENTS SHALL NOT BE RESPONSIBLE FOR THE ACCURACY OR COMPLETENESS OF SCANNED COPIES OF THIS PLAN SHEET.

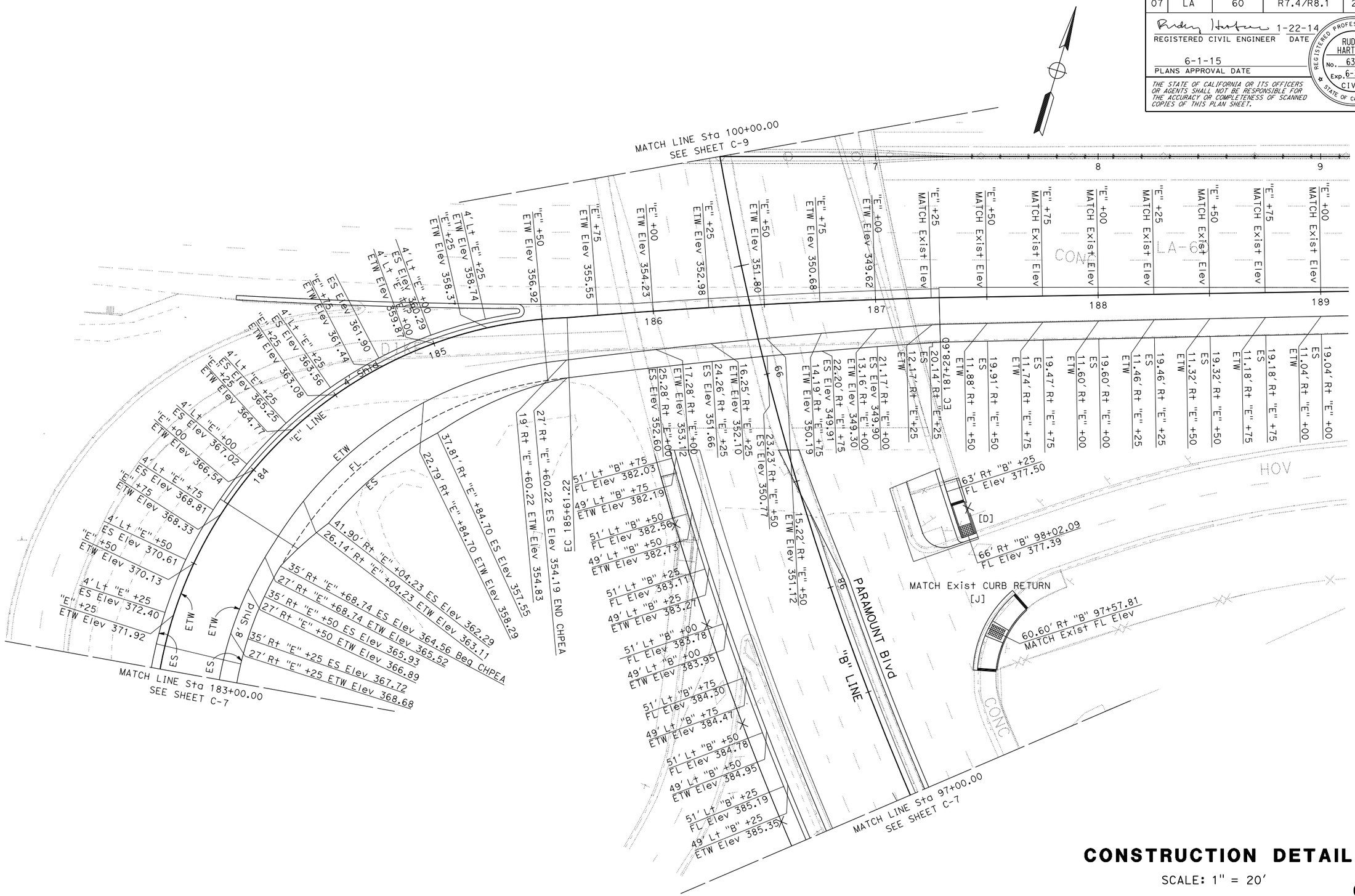

CONSTRUCTION DETAILS

SCALE: 1" = 20'

C-8

CALCULATED-DESIGNED BY	KEDAR SAWANT	REVISED BY
CHECKED BY	RUDDY HARTONO	DATE REVISED

FUNCTIONAL SUPERVISOR: ASADOUR TERTERIAN

STATE OF CALIFORNIA - DEPARTMENT OF TRANSPORTATION

Caltrans DESIGN

LAST REVISION 00-00-00 | DATE PLOTTED => 22-JUN-2015 | TIME PLOTTED => 07:08

Dist	COUNTY	ROUTE	POST MILES TOTAL PROJECT	SHEET No.	TOTAL SHEETS
07	LA	60	R7.4/R8.1	22	238

REGISTERED CIVIL ENGINEER 1-22-14 DATE

6-1-15
PLANS APPROVAL DATE

REGISTERED PROFESSIONAL ENGINEER RUDDY HARTONO No. 63146 Exp. 6-30-16 CIVIL STATE OF CALIFORNIA

THE STATE OF CALIFORNIA OR ITS OFFICERS OR AGENTS SHALL NOT BE RESPONSIBLE FOR THE ACCURACY OR COMPLETENESS OF SCANNED COPIES OF THIS PLAN SHEET.

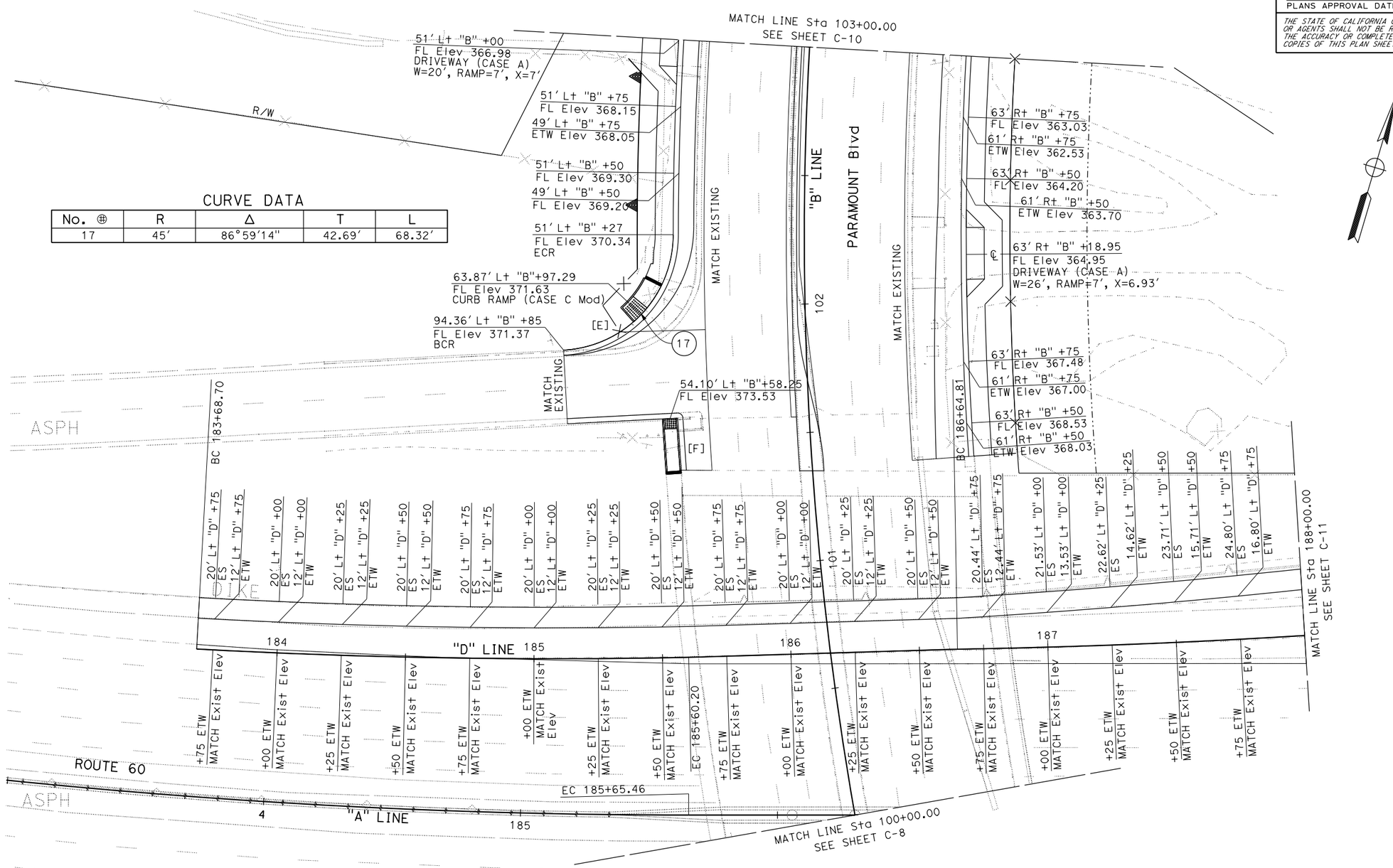

CURVE DATA

No. ⊕	R	Δ	T	L
17	45'	86°59'14"	42.69'	68.32'

CONSTRUCTION DETAILS

SCALE: 1" = 20'

C-9

REVISED BY	DATE REVISED
KEDAR SAWANT	RUDDY HARTONO
CALCULATED-DESIGNED BY	CHECKED BY
FUNCTIONAL SUPERVISOR	ASADOUR TERTERIAN

STATE OF CALIFORNIA - DEPARTMENT OF TRANSPORTATION
Caltrans
DESIGN

LAST REVISION 00-00-00
DATE PLOTTED => 22-JUN-2015
TIME PLOTTED => 07:08

Dist	COUNTY	ROUTE	POST MILES TOTAL PROJECT	SHEET No.	TOTAL SHEETS
07	LA	60	R7.4/R8.1	23	238

REGISTERED CIVIL ENGINEER 1-22-14 DATE

6-1-15
PLANS APPROVAL DATE

REGISTERED PROFESSIONAL ENGINEER RUDDY HARTONO No. 63146 Exp. 6-30-16 CIVIL STATE OF CALIFORNIA

THE STATE OF CALIFORNIA OR ITS OFFICERS OR AGENTS SHALL NOT BE RESPONSIBLE FOR THE ACCURACY OR COMPLETENESS OF SCANNED COPIES OF THIS PLAN SHEET.

CURVE DATA

No. ⊕	R	Δ	T	L
18	40′	83°57′00″	35.98′	58.61′
19	5′	181°06′42″	500.73′	15.36′
20	45′	96°40′13″	50.57′	75.92′
21	45′	93°26′12″	47.78′	73.38′
22	2′	175°44′33″	41.70′	4.75′

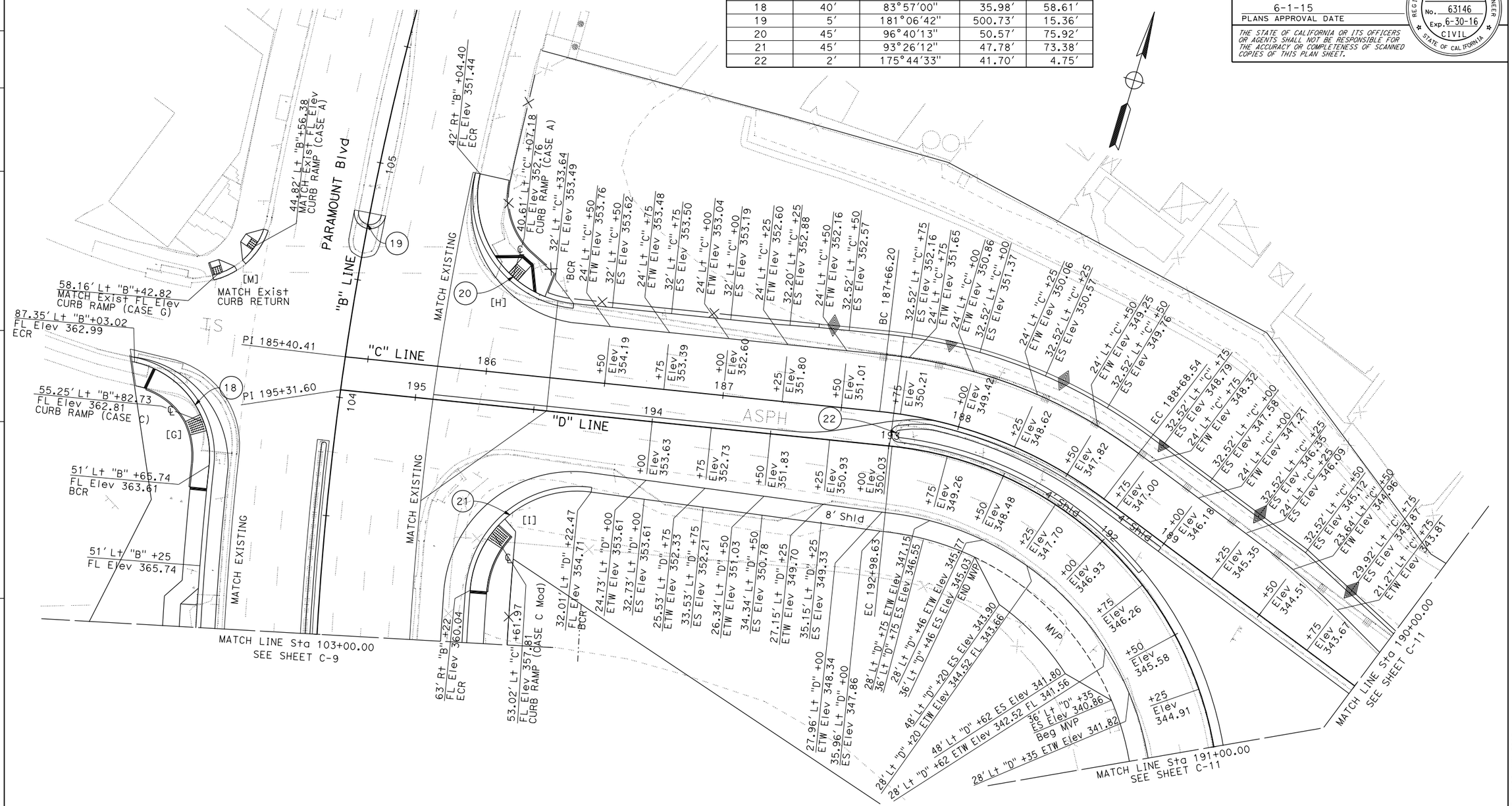

CONSTRUCTION DETAILS

SCALE: 1" = 20′

C-10

STATE OF CALIFORNIA - DEPARTMENT OF TRANSPORTATION			
Caltrans®	DESIGN	FUNCTIONAL SUPERVISOR	ASADOUR TERTERIAN
		CALCULATED-DESIGNED BY	KEDAR SAWANT
		CHECKED BY	RUDDY HARTONO
		REVISED BY	
		DATE REVISED	

LAST REVISION 00-00-00 | DATE PLOTTED => 22-JUN-2015 | TIME PLOTTED => 07:08

Dist	COUNTY	ROUTE	POST MILES TOTAL PROJECT	SHEET No.	TOTAL SHEETS
07	LA	60	R7.4/R8.1	24	238

REGISTERED CIVIL ENGINEER 1-22-14 DATE

6-1-15
PLANS APPROVAL DATE

REGISTERED PROFESSIONAL ENGINEER RUDDY HARTONO No. 63146 Exp. 6-30-16 CIVIL STATE OF CALIFORNIA

THE STATE OF CALIFORNIA OR ITS OFFICERS OR AGENTS SHALL NOT BE RESPONSIBLE FOR THE ACCURACY OR COMPLETENESS OF SCANNED COPIES OF THIS PLAN SHEET.

CONSTRUCTION DETAILS

SCALE: 1" = 20'

C-11

REVISED BY	DATE REVISED

CALCULATED-DESIGNED BY	KEDAR SAWANT
CHECKED BY	RUDDY HARTONO

FUNCTIONAL SUPERVISOR: ASADOUR TERTERIAN

STATE OF CALIFORNIA - DEPARTMENT OF TRANSPORTATION

Caltrans®

DESIGN

LAST REVISION 00-00-00

DATE PLOTTED => 22-JUN-2015
TIME PLOTTED => 07:08

Dist	COUNTY	ROUTE	POST MILES TOTAL PROJECT	SHEET No.	TOTAL SHEETS
07	LA	60	R7.4/R8.1	25	238

REGISTERED CIVIL ENGINEER 1-22-14 DATE

6-1-15
PLANS APPROVAL DATE

REGISTERED PROFESSIONAL ENGINEER
RUDDY HARTONO
No. 63146
Exp. 6-30-16
CIVIL
STATE OF CALIFORNIA

THE STATE OF CALIFORNIA OR ITS OFFICERS OR AGENTS SHALL NOT BE RESPONSIBLE FOR THE ACCURACY OR COMPLETENESS OF SCANNED COPIES OF THIS PLAN SHEET.

CONSTRUCTION DETAILS

SCALE: 1" = 20'

C-12

REVISED BY	KEDAR SAWANT
DATE REVISED	RUDDY HARTONO
CALCULATED-DESIGNED BY	
CHECKED BY	
FUNCTIONAL SUPERVISOR	ASADOUR TERTERIAN

STATE OF CALIFORNIA - DEPARTMENT OF TRANSPORTATION

Caltrans®

DESIGN

LAST REVISION 00-00-00

DATE PLOTTED => 22-JUN-2015
TIME PLOTTED => 07:08

Dist	COUNTY	ROUTE	POST MILES TOTAL PROJECT	SHEET No.	TOTAL SHEETS
07	LA	60	R7.4/R8.1	26	238

REGISTERED CIVIL ENGINEER 1-22-14 DATE

6-1-15
PLANS APPROVAL DATE

REGISTERED PROFESSIONAL ENGINEER RUDDY HARTONO No. 63146 Exp. 6-30-16 CIVIL STATE OF CALIFORNIA

THE STATE OF CALIFORNIA OR ITS OFFICERS OR AGENTS SHALL NOT BE RESPONSIBLE FOR THE ACCURACY OR COMPLETENESS OF SCANNED COPIES OF THIS PLAN SHEET.

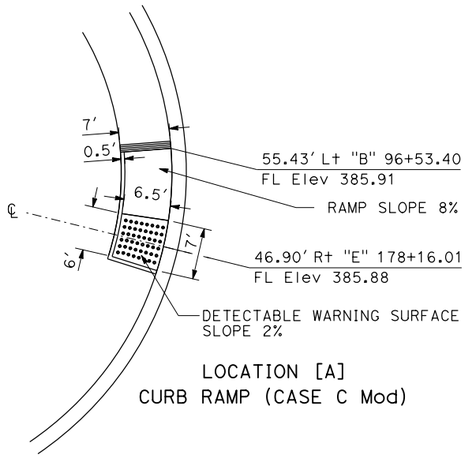

LOCATION [A]
CURB RAMP (CASE C Mod)

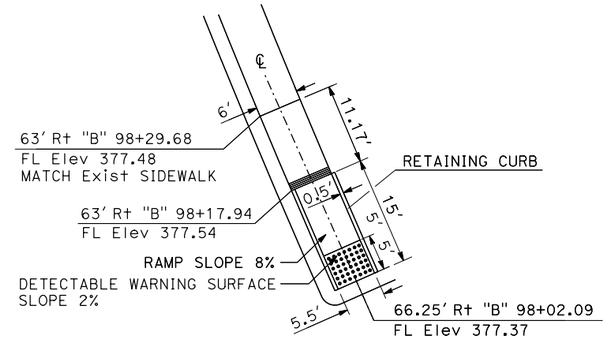

LOCATION [D]

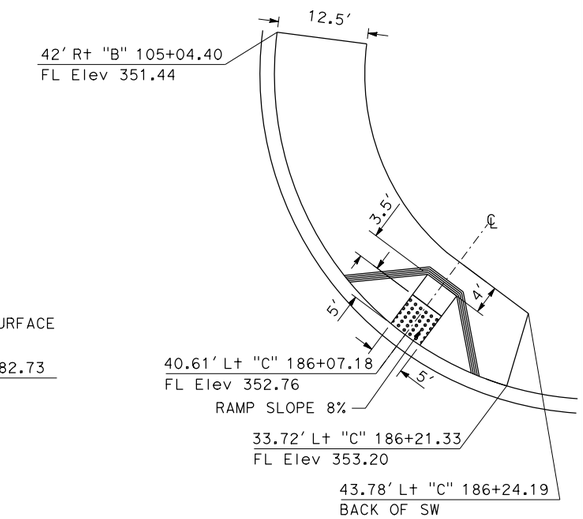

LOCATION [H]
CURB RAMP (CASE A)

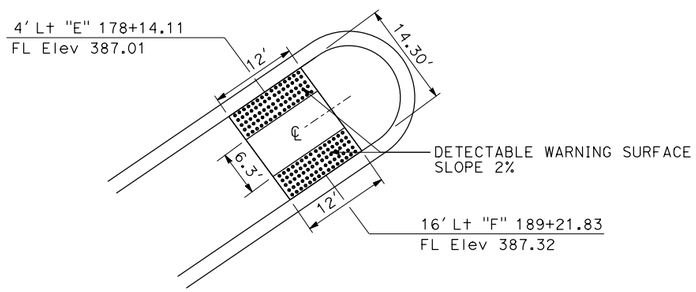

LOCATION [B]
TYPE A PASSAGEWAY

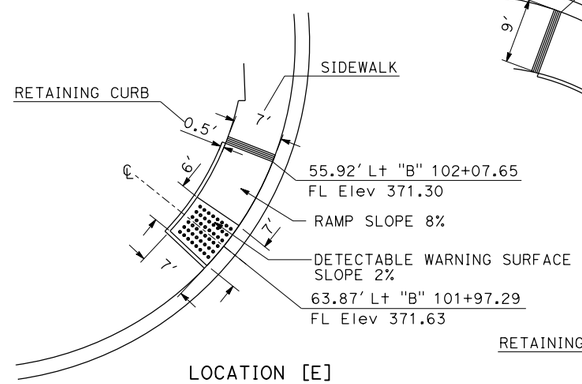

LOCATION [E]
CURB RAMP (CASE C Mod)

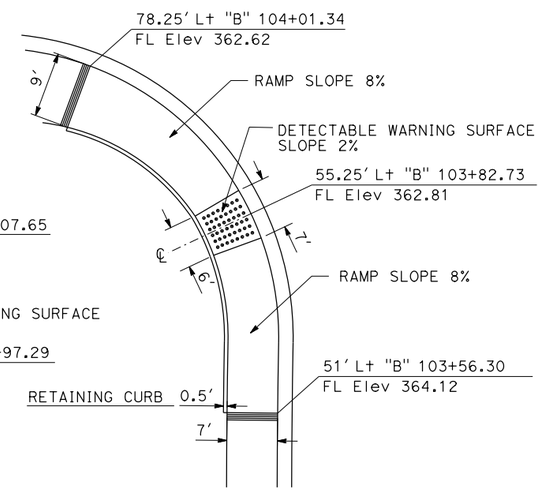

LOCATION [G]
CURB RAMP (CASE C)

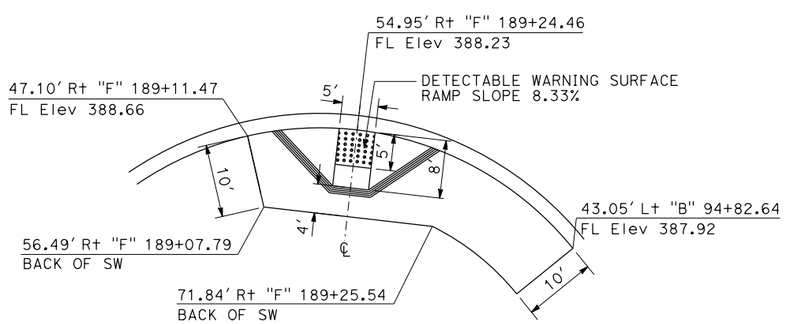

LOCATION [C]
CURB RAMP (CASE A)

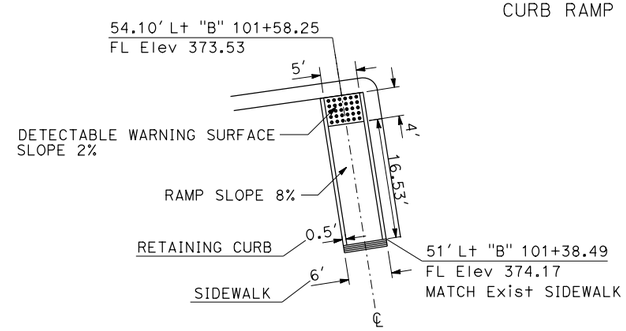

LOCATION [F]

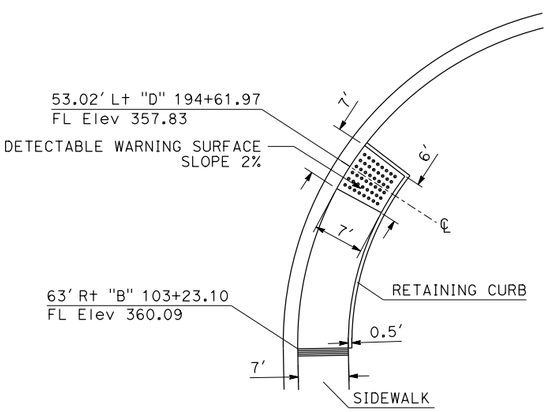

LOCATION [I]
CURB RAMP (CASE C Mod)

CURB RAMP DETAILS

CONSTRUCTION DETAILS

NO SCALE

C-13

STATE OF CALIFORNIA - DEPARTMENT OF TRANSPORTATION
Caltrans® DESIGN

FUNCTIONAL SUPERVISOR: ASADOUR TERTERIAN
CALCULATED-DESIGNED BY: KEDAR SAWANT
CHECKED BY: RUDDY HARTONO
REVISED BY
DATE REVISED

LAST REVISION 00-00-00
DATE PLOTTED => 22-JUN-2015
TIME PLOTTED => 07:08

Dist	COUNTY	ROUTE	POST MILES TOTAL PROJECT	SHEET No.	TOTAL SHEETS
07	LA	60	R7.4/R8.1	27	238

REGISTERED CIVIL ENGINEER 1-22-14 DATE

6-1-15
PLANS APPROVAL DATE

REGISTERED PROFESSIONAL ENGINEER RUDDY HARTONO No. 63146 Exp. 6-30-16 CIVIL STATE OF CALIFORNIA

THE STATE OF CALIFORNIA OR ITS OFFICERS OR AGENTS SHALL NOT BE RESPONSIBLE FOR THE ACCURACY OR COMPLETENESS OF SCANNED COPIES OF THIS PLAN SHEET.

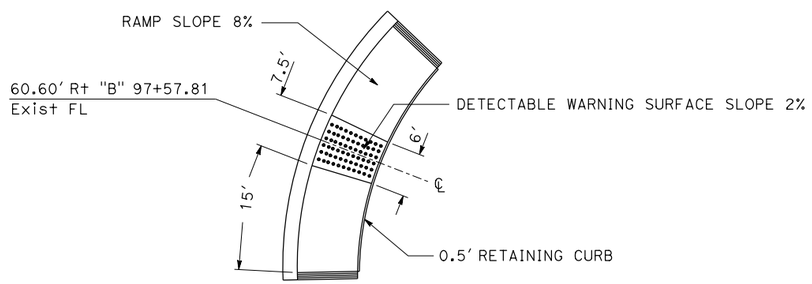

MATCH EXISTING WIDTH OF SIDEWALK

LOCATION [J]
CURB RAMP (CASE C)

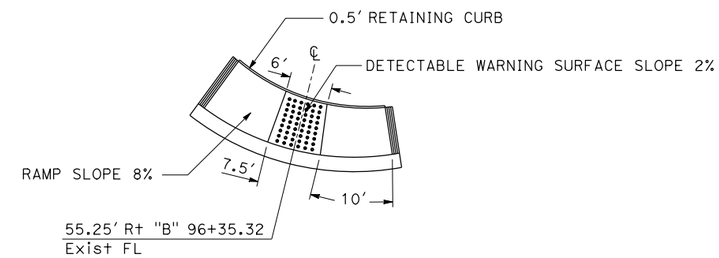

MATCH EXISTING WIDTH OF SIDEWALK

LOCATION [K]
CURB RAMP (CASE C)

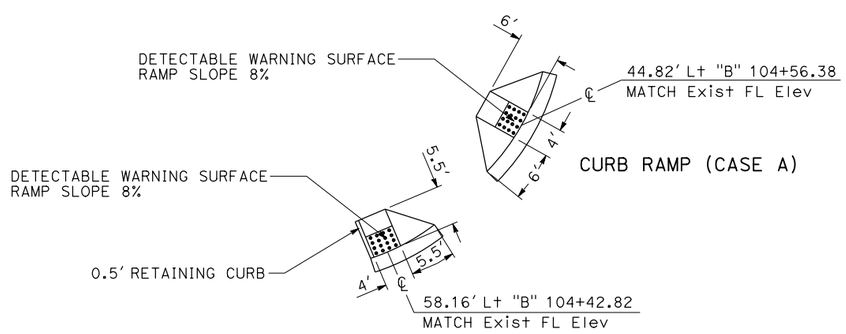

CURB RAMP (CASE G)

LOCATION [M]

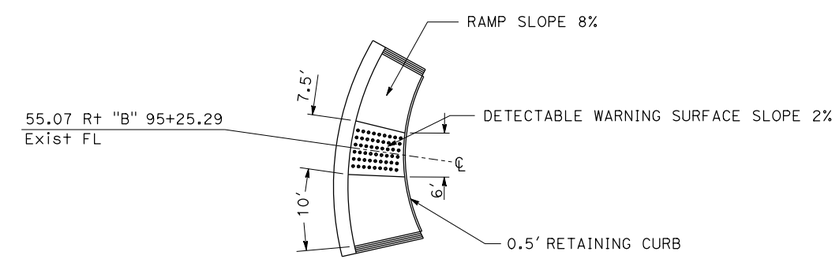

MATCH EXISTING WIDTH OF SIDEWALK

LOCATION [L]
CURB RAMP (CASE C)

CURB RAMP DETAILS

CONSTRUCTION DETAILS

NO SCALE

C-14

STATE OF CALIFORNIA - DEPARTMENT OF TRANSPORTATION
Caltrans® DESIGN

FUNCTIONAL SUPERVISOR: ASADOUR TERTERIAN
CALCULATED-DESIGNED BY: KEDAR SAWANT
CHECKED BY: RUDDY HARTONO
REVISED BY
DATE REVISED

LAST REVISION 00-00-00
DATE PLOTTED => 22-JUN-2015
TIME PLOTTED => 07:08

Dist	COUNTY	ROUTE	POST MILES TOTAL PROJECT	SHEET No.	TOTAL SHEETS
07	LA	60	R7.4/R8.1	28	238

REGISTERED CIVIL ENGINEER 1-22-14 DATE

6-1-15
PLANS APPROVAL DATE

REGISTERED PROFESSIONAL ENGINEER RUDDY HARTONO No. 63146 Exp. 6-30-16 CIVIL STATE OF CALIFORNIA

THE STATE OF CALIFORNIA OR ITS OFFICERS OR AGENTS SHALL NOT BE RESPONSIBLE FOR THE ACCURACY OR COMPLETENESS OF SCANNED COPIES OF THIS PLAN SHEET.

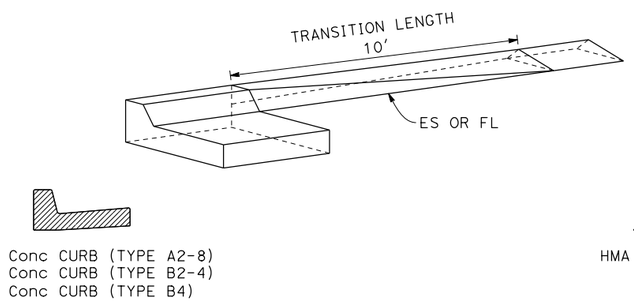

CONCRETE CURB (TYPE A2-8) TO HMA DIKE (TYPE E) TRANSITION

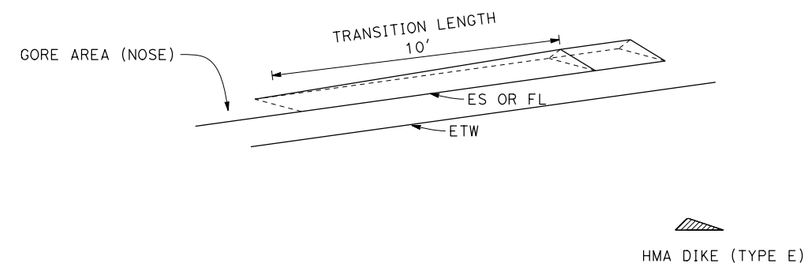

GORE AREA HMA DIKE (TYPE E) TRANSITION

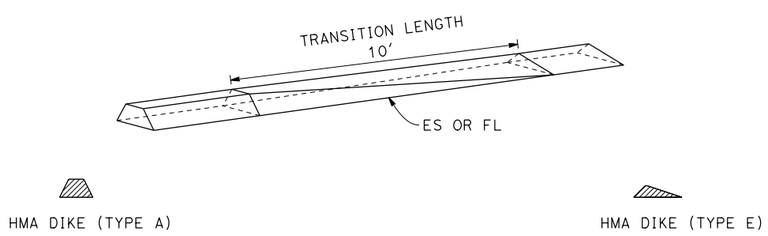

HMA DIKE (TYPE A) TO HMA DIKE (TYPE E) TRANSITION

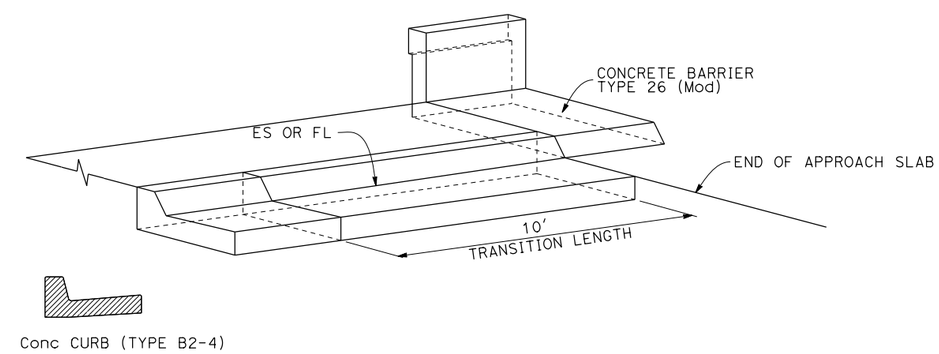

CONCRETE CURB (TYPE A2-8) TO CONRETE BARRIER (TYPE 26 Mod) TRANSITION

CURB TO DIKE TRANSITION DETAILS

CONSTRUCTION DETAILS

NO SCALE

C-15

REVISED BY	DATE REVISED
KEDAR SAWANT	RUDDY HARTONO
CALCULATED-DESIGNED BY	CHECKED BY
FUNCTIONAL SUPERVISOR	ASADOUR TERTERIAN

STATE OF CALIFORNIA - DEPARTMENT OF TRANSPORTATION
Caltrans DESIGN

LAST REVISION 00-00-00 | DATE PLOTTED => 22-JUN-2015 | TIME PLOTTED => 07:08

Dist	COUNTY	ROUTE	POST MILES TOTAL PROJECT	SHEET No.	TOTAL SHEETS
07	LA	60	R7.4/R8.1	29	238

REGISTERED CIVIL ENGINEER 1-22-14 DATE

6-1-15
PLANS APPROVAL DATE

REGISTERED PROFESSIONAL ENGINEER
RUDDY HARTONO
No. 63146
Exp. 6-30-16
CIVIL
STATE OF CALIFORNIA

THE STATE OF CALIFORNIA OR ITS OFFICERS OR AGENTS SHALL NOT BE RESPONSIBLE FOR THE ACCURACY OR COMPLETENESS OF SCANNED COPIES OF THIS PLAN SHEET.

NOTE:

FOR ACCURATE RIGHT OF WAY DATA, CONTACT RIGHT OF WAY ENGINEERING AT DISTRICT OFFICE.

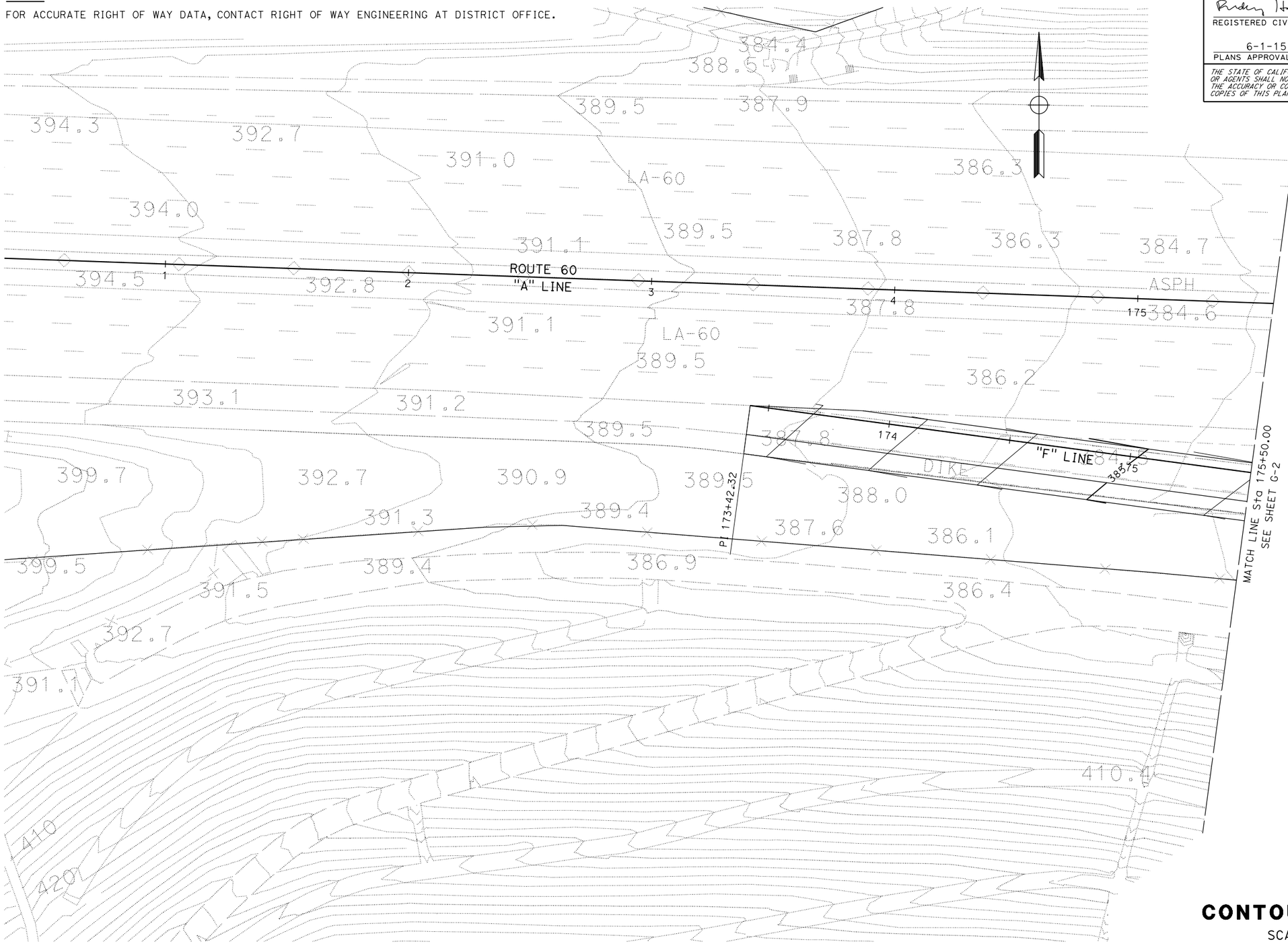

CONTOUR GRADING

SCALE: 1" = 20'

G-1

APPROVED FOR CONTOUR GRADING WORK ONLY

STATE OF CALIFORNIA - DEPARTMENT OF TRANSPORTATION
Caltrans
DESIGN

FUNCTIONAL SUPERVISOR: ASADOUR TERTERIAN
CALCULATED-DESIGNED BY: KEDAR SAWANT
CHECKED BY: RUDDY HARTONO
REVISED BY
DATE REVISED

LAST REVISION 00-00-00
DATE PLOTTED => 22-JUN-2015
TIME PLOTTED => 07:08

Dist	COUNTY	ROUTE	POST MILES TOTAL PROJECT	SHEET No.	TOTAL SHEETS
07	LA	60	R7.4/R8.1	30	238

REGISTERED CIVIL ENGINEER 1-22-14 DATE

6-1-15
PLANS APPROVAL DATE

REGISTERED PROFESSIONAL ENGINEER RUDDY HARTONO No. 63146 Exp. 6-30-16 CIVIL STATE OF CALIFORNIA

THE STATE OF CALIFORNIA OR ITS OFFICERS OR AGENTS SHALL NOT BE RESPONSIBLE FOR THE ACCURACY OR COMPLETENESS OF SCANNED COPIES OF THIS PLAN SHEET.

NOTE:

FOR ACCURATE RIGHT OF WAY DATA, CONTACT RIGHT OF WAY ENGINEERING AT DISTRICT OFFICE.

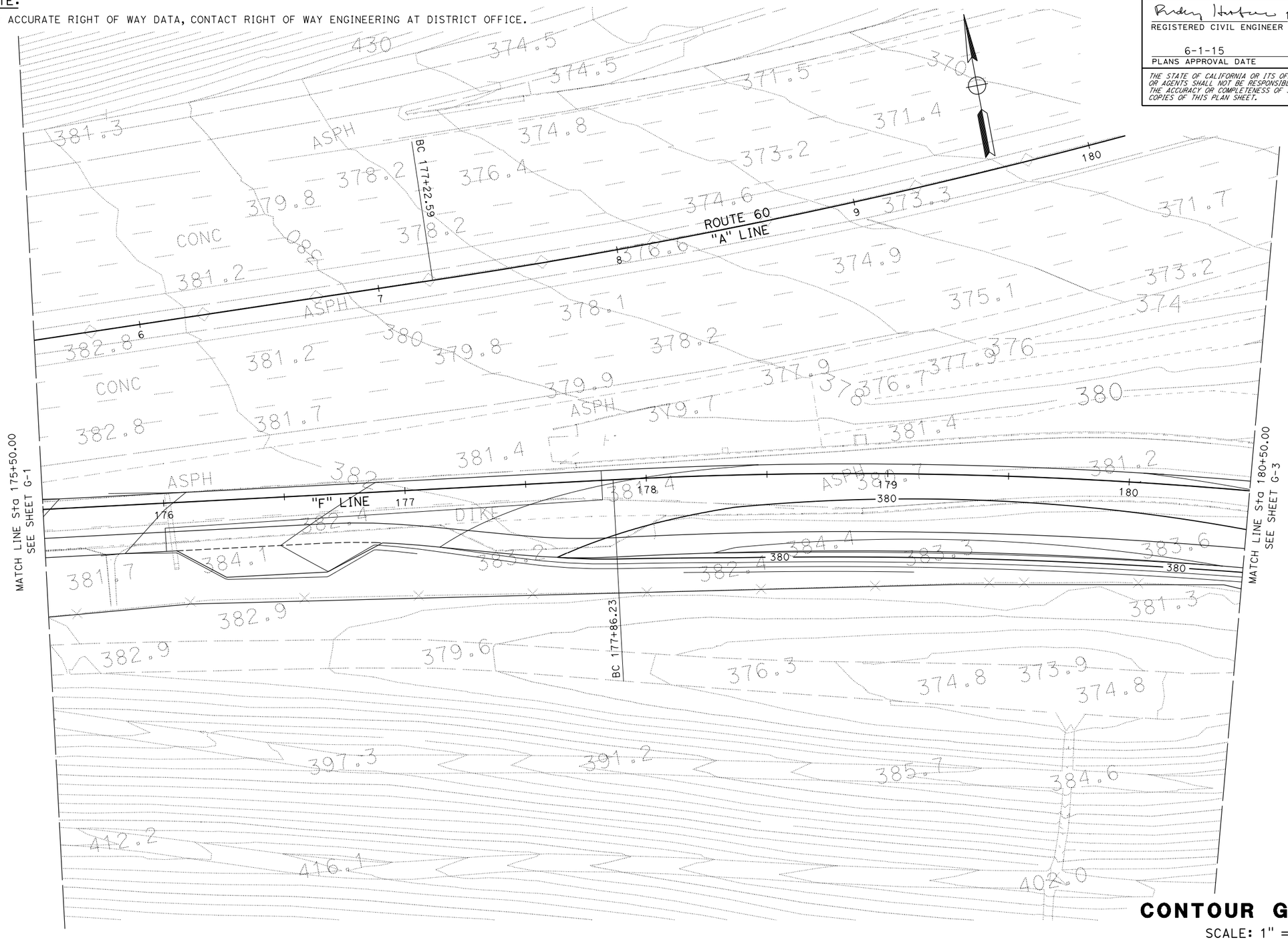

CONTOUR GRADING

SCALE: 1" = 20'

APPROVED FOR CONTOUR GRADING WORK ONLY

G-2

STATE OF CALIFORNIA - DEPARTMENT OF TRANSPORTATION

Caltrans

DESIGN

FUNCTIONAL SUPERVISOR: ASADOUR TERTERIAN

CALCULATED-DESIGNED BY: KEDAR SAWANT

CHECKED BY: RUDDY HARTONO

REVISED BY

DATE REVISED

LAST REVISION 00-00-00

DATE PLOTTED => 22-JUN-2015
TIME PLOTTED => 07:08

Dist	COUNTY	ROUTE	POST MILES TOTAL PROJECT	SHEET No.	TOTAL SHEETS
07	LA	60	R7.4/R8.1	31	238

REGISTERED CIVIL ENGINEER 1-22-14 DATE

6-1-15
PLANS APPROVAL DATE

REGISTERED PROFESSIONAL ENGINEER RUDDY HARTONO No. 63146 Exp. 6-30-16 CIVIL STATE OF CALIFORNIA

THE STATE OF CALIFORNIA OR ITS OFFICERS OR AGENTS SHALL NOT BE RESPONSIBLE FOR THE ACCURACY OR COMPLETENESS OF SCANNED COPIES OF THIS PLAN SHEET.

NOTE:

FOR ACCURATE RIGHT OF WAY DATA, CONTACT RIGHT OF WAY ENGINEERING AT DISTRICT OFFICE.

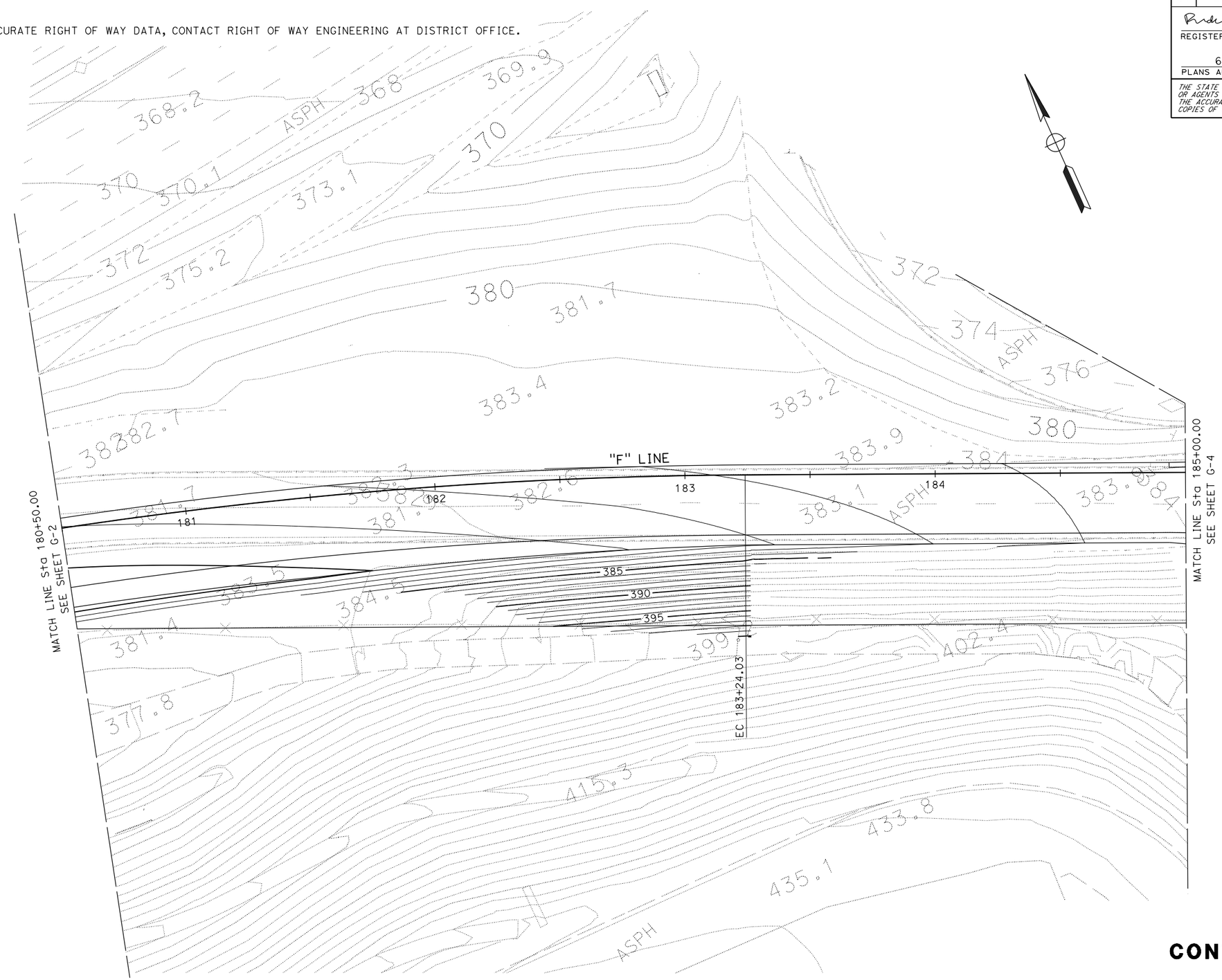

CONTOUR GRADING

SCALE: 1" = 20'

G-3

APPROVED FOR CONTOUR GRADING WORK ONLY

STATE OF CALIFORNIA - DEPARTMENT OF TRANSPORTATION

Caltrans

DESIGN

FUNCTIONAL SUPERVISOR: ASADOUR TERTERIAN

CALCULATED-DESIGNED BY: KEDAR SAWANT

CHECKED BY: RUDDY HARTONO

REVISED BY

DATE REVISED

LAST REVISION 00-00-00

DATE PLOTTED => 22-JUN-2015

TIME PLOTTED => 07:08

Dist	COUNTY	ROUTE	POST MILES TOTAL PROJECT	SHEET No.	TOTAL SHEETS
07	LA	60	R7.4/R8.1	32	238

REGISTERED CIVIL ENGINEER — DATE: 1-22-14

PLANS APPROVAL DATE: 6-1-15

REGISTERED PROFESSIONAL ENGINEER — RUDDY HARTONO — No. 63146 — Exp. 6-30-16 — CIVIL — STATE OF CALIFORNIA

THE STATE OF CALIFORNIA OR ITS OFFICERS OR AGENTS SHALL NOT BE RESPONSIBLE FOR THE ACCURACY OR COMPLETENESS OF SCANNED COPIES OF THIS PLAN SHEET.

NOTE:

FOR ACCURATE RIGHT OF WAY DATA, CONTACT RIGHT OF WAY ENGINEERING AT DISTRICT OFFICE.

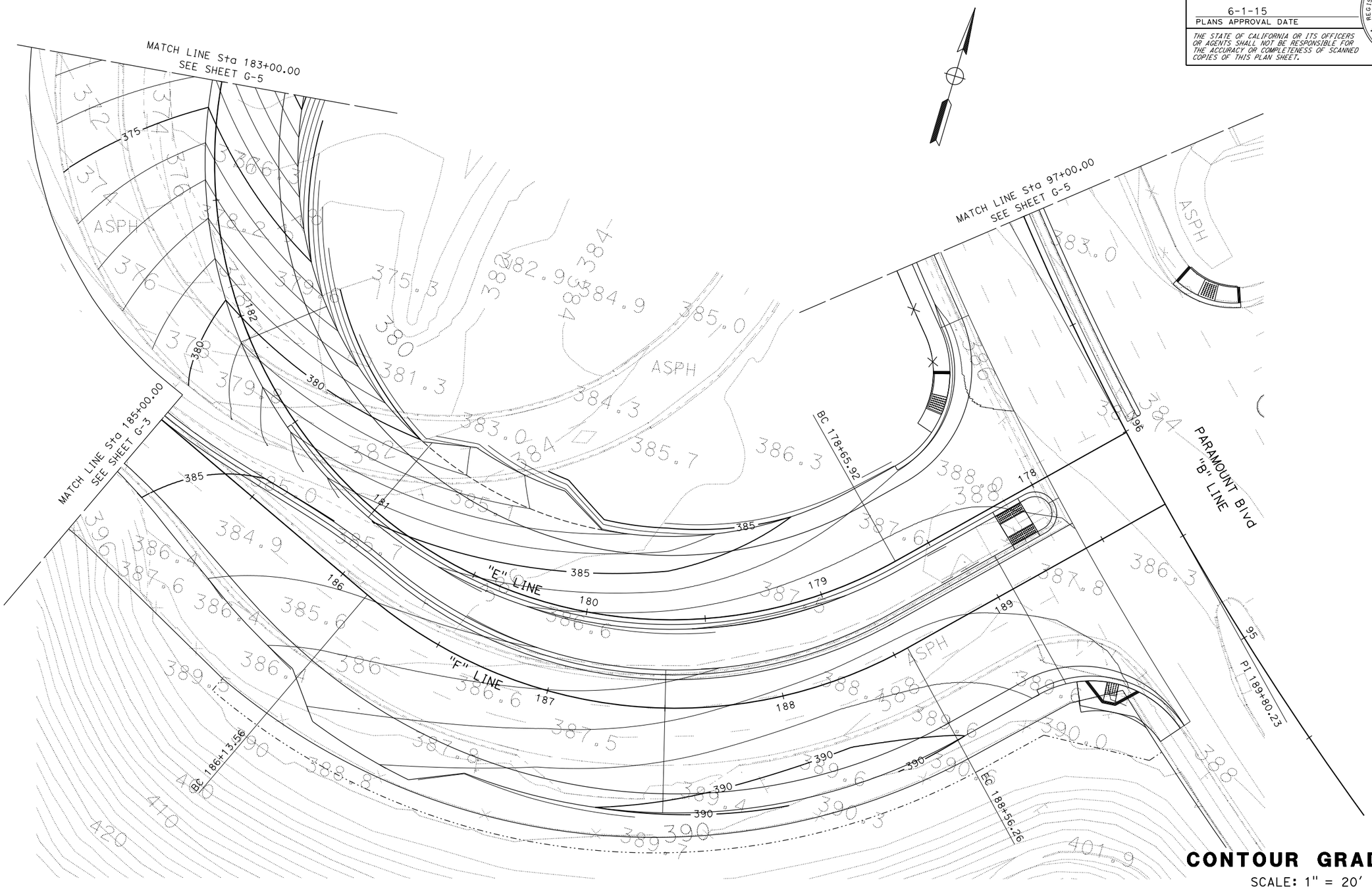

CONTOUR GRADING

SCALE: 1" = 20'

G-4

APPROVED FOR CONTOUR GRADING WORK ONLY

REVISED BY	DATE REVISED

CALCULATED-DESIGNED BY	KEDAR SAWANT
CHECKED BY	RUDDY HARTONO
FUNCTIONAL SUPERVISOR	ASADOUR TERTERIAN

STATE OF CALIFORNIA - DEPARTMENT OF TRANSPORTATION

Caltrans

DESIGN

LAST REVISION 00-00-00 | DATE PLOTTED => 22-JUN-2015 | TIME PLOTTED => 07:08

Dist	COUNTY	ROUTE	POST MILES TOTAL PROJECT	SHEET No.	TOTAL SHEETS
07	LA	60	R7.4/R8.1	33	238

REGISTERED CIVIL ENGINEER 1-22-14 DATE

6-1-15
PLANS APPROVAL DATE

REGISTERED PROFESSIONAL ENGINEER RUDDY HARTONO No. 63146 Exp. 6-30-16 CIVIL STATE OF CALIFORNIA

THE STATE OF CALIFORNIA OR ITS OFFICERS OR AGENTS SHALL NOT BE RESPONSIBLE FOR THE ACCURACY OR COMPLETENESS OF SCANNED COPIES OF THIS PLAN SHEET.

NOTE:

FOR ACCURATE RIGHT OF WAY DATA, CONTACT RIGHT OF WAY ENGINEERING AT DISTRICT OFFICE.

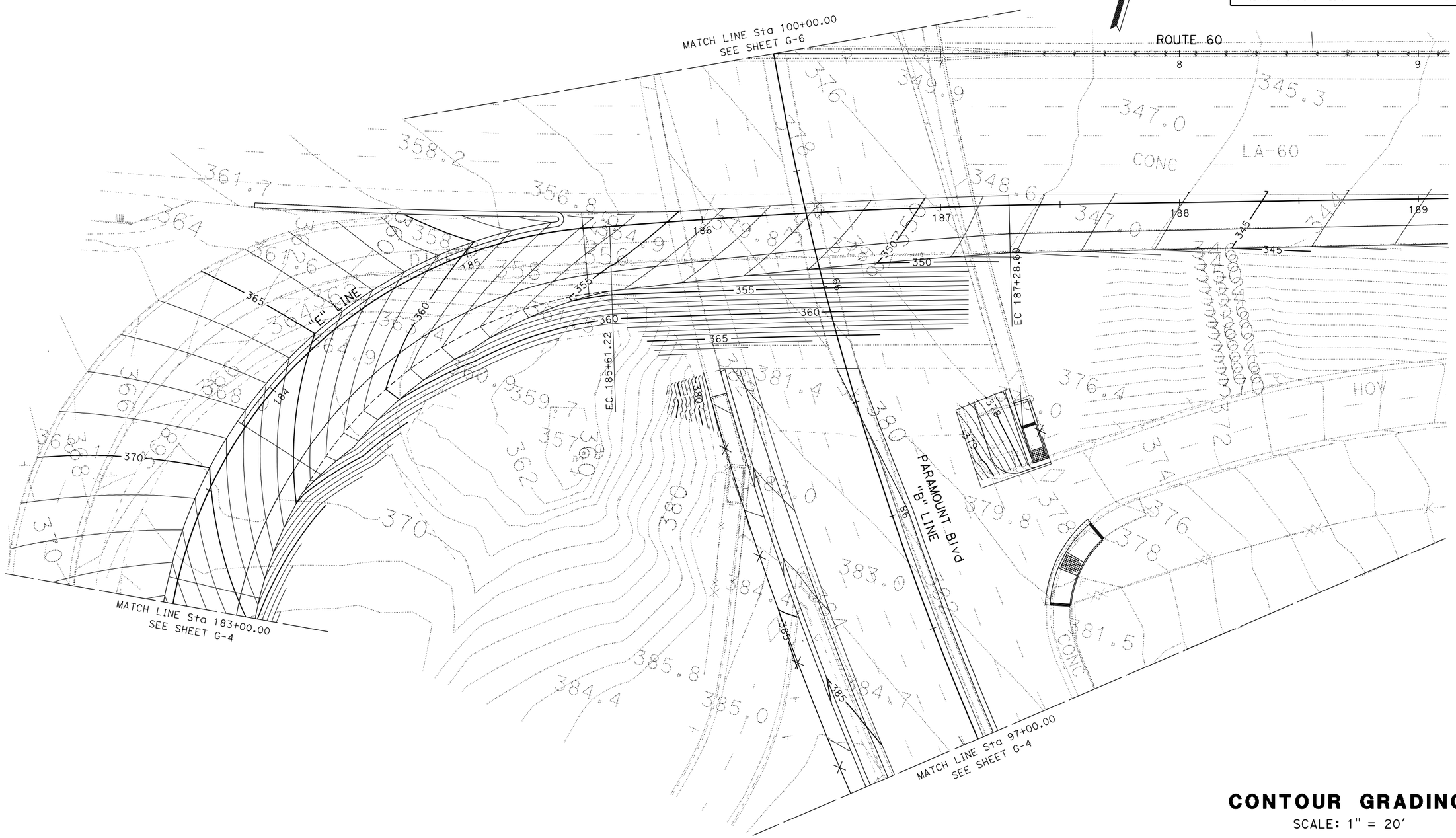

CONTOUR GRADING

SCALE: 1" = 20'

G-5

APPROVED FOR CONTOUR GRADING WORK ONLY

STATE OF CALIFORNIA - DEPARTMENT OF TRANSPORTATION

Caltrans

DESIGN

FUNCTIONAL SUPERVISOR: ASADOUR TERTERIAN

CALCULATED-DESIGNED BY: KEDAR SAWANT

CHECKED BY: RUDDY HARTONO

REVISED BY

DATE REVISED

LAST REVISION 00-00-00

DATE PLOTTED => 22-JUN-2015
TIME PLOTTED => 07:08

Dist	COUNTY	ROUTE	POST MILES TOTAL PROJECT	SHEET No.	TOTAL SHEETS
07	LA	60	R7.4/R8.1	34	238

REGISTERED CIVIL ENGINEER 1-22-14 DATE

6-1-15
PLANS APPROVAL DATE

REGISTERED PROFESSIONAL ENGINEER RUDDY HARTONO No. 63146 Exp. 6-30-16 CIVIL STATE OF CALIFORNIA

THE STATE OF CALIFORNIA OR ITS OFFICERS OR AGENTS SHALL NOT BE RESPONSIBLE FOR THE ACCURACY OR COMPLETENESS OF SCANNED COPIES OF THIS PLAN SHEET.

NOTE:

FOR ACCURATE RIGHT OF WAY DATA, CONTACT RIGHT OF WAY ENGINEERING AT DISTRICT OFFICE.

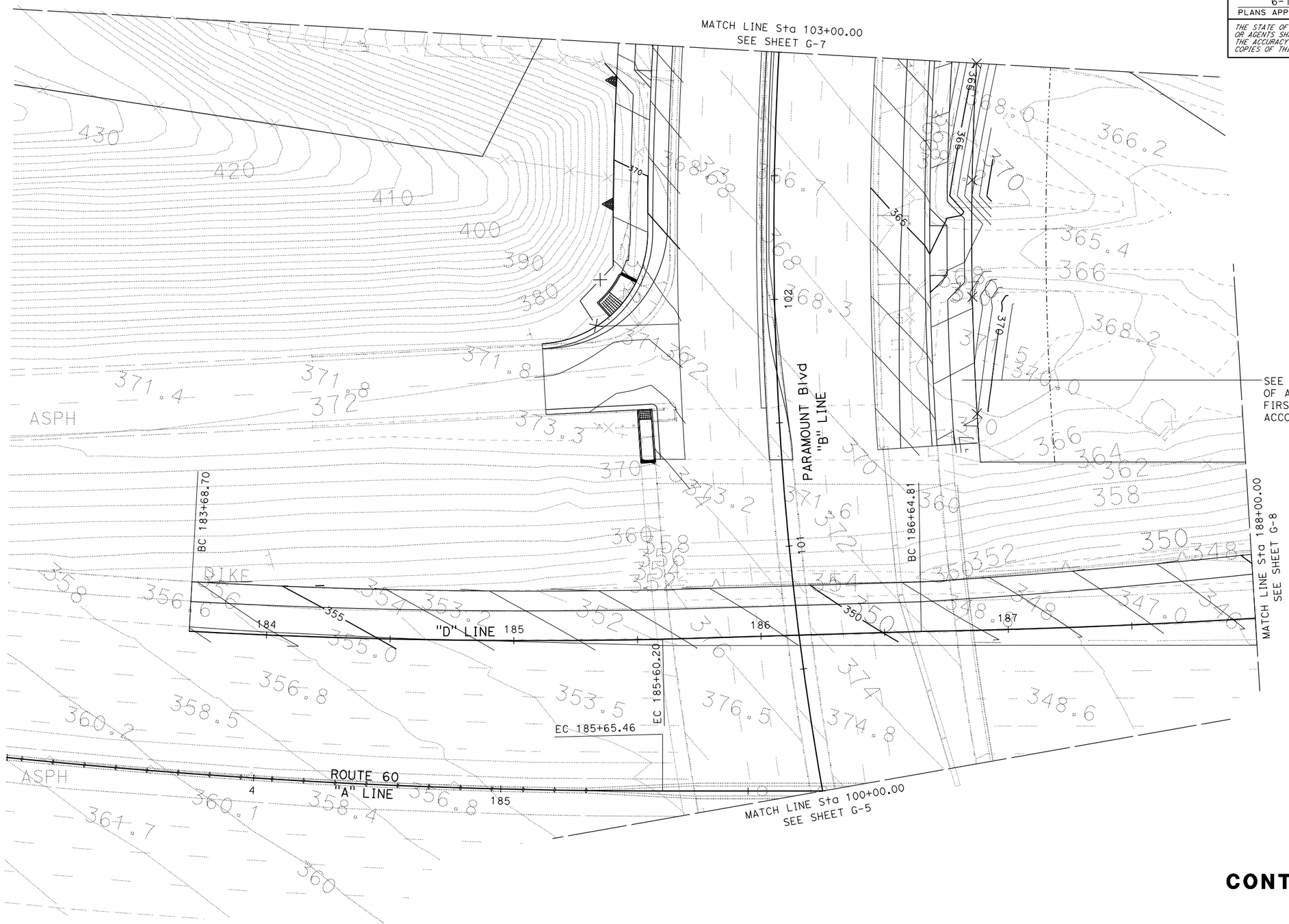

CONTOUR GRADING

SCALE: 1" = 20'

G-6

APPROVED FOR CONTOUR GRADING WORK ONLY

STATE OF CALIFORNIA - DEPARTMENT OF TRANSPORTATION
Caltrans
DESIGN

FUNCTIONAL SUPERVISOR: ASADOUR TERTERIAN
CALCULATED-DESIGNED BY: KEDAR SAWANT
CHECKED BY: RUDDY HARTONO
REVISED BY
DATE REVISED

LAST REVISION 00-00-00
DATE PLOTTED => 22-JUN-2015
TIME PLOTTED => 07:08

Dist	COUNTY	ROUTE	POST MILES TOTAL PROJECT	SHEET No.	TOTAL SHEETS
07	LA	60	R7.4/R8.1	35	238

REGISTERED CIVIL ENGINEER — DATE: 1-22-14

6-1-15
PLANS APPROVAL DATE

REGISTERED PROFESSIONAL ENGINEER — RUDDY HARTONO — No. 63146 — Exp. 6-30-16 — CIVIL — STATE OF CALIFORNIA

THE STATE OF CALIFORNIA OR ITS OFFICERS OR AGENTS SHALL NOT BE RESPONSIBLE FOR THE ACCURACY OR COMPLETENESS OF SCANNED COPIES OF THIS PLAN SHEET.

NOTE:
FOR ACCURATE RIGHT OF WAY DATA, CONTACT RIGHT OF WAY ENGINEERING AT DISTRICT OFFICE.

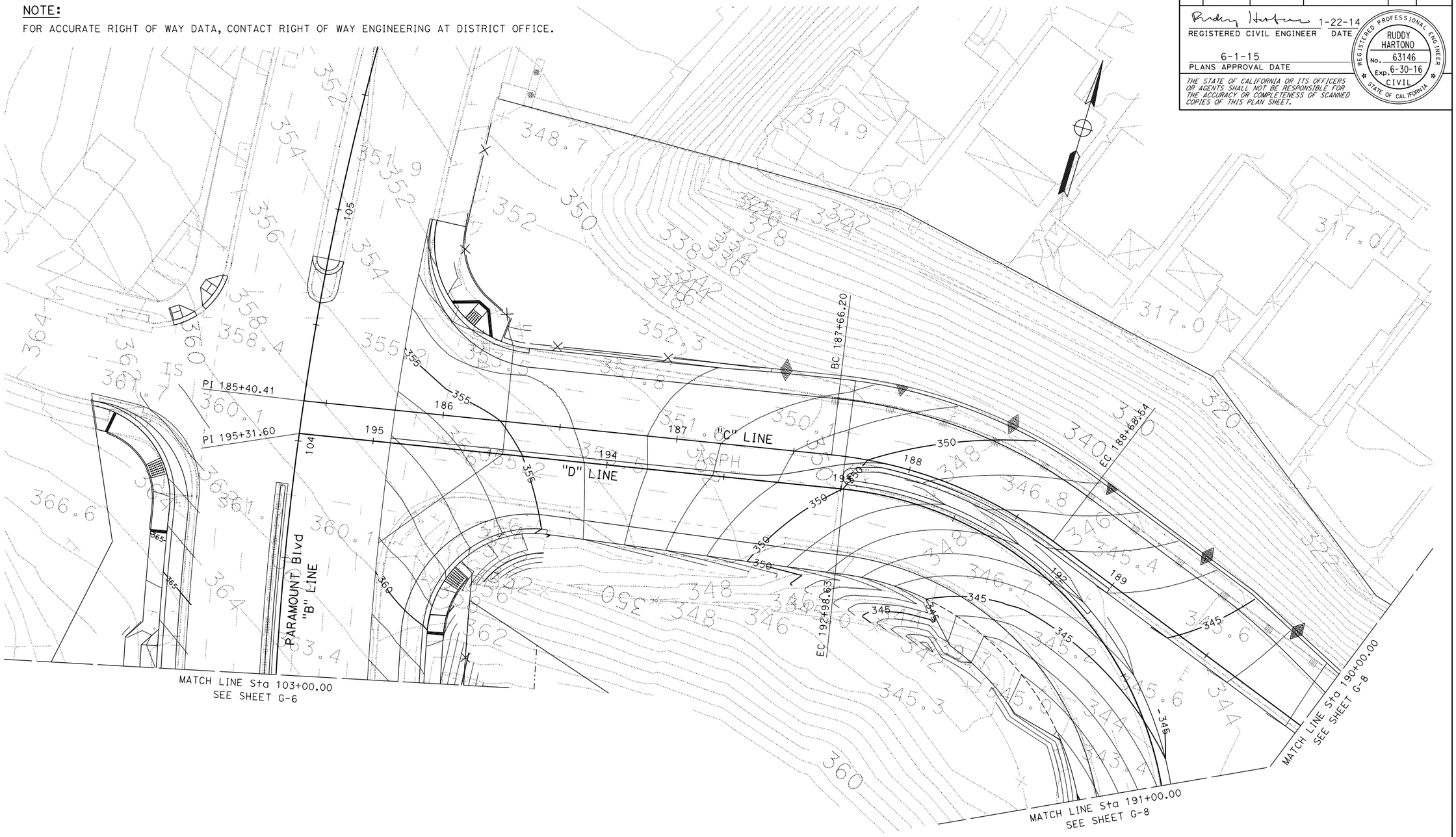

CONTOUR GRADING

SCALE: 1" = 20'

G-7

APPROVED FOR CONTOUR GRADING WORK ONLY

STATE OF CALIFORNIA - DEPARTMENT OF TRANSPORTATION
Caltrans® DESIGN

FUNCTIONAL SUPERVISOR: ASADOUR TERTERIAN
CALCULATED-DESIGNED BY: KEDAR SAWANT
CHECKED BY: RUDDY HARTONO
REVISED BY
DATE REVISED

LAST REVISION 00-00-00
DATE PLOTTED => 22-JUN-2015
TIME PLOTTED => 07:08

Dist	COUNTY	ROUTE	POST MILES TOTAL PROJECT	SHEET No.	TOTAL SHEETS
07	LA	60	R7.4/R8.1	36	238

REGISTERED CIVIL ENGINEER 1-22-14 DATE

6-1-15
PLANS APPROVAL DATE

REGISTERED PROFESSIONAL ENGINEER RUDDY HARTONO No. 63146 Exp. 6-30-16 CIVIL STATE OF CALIFORNIA

THE STATE OF CALIFORNIA OR ITS OFFICERS OR AGENTS SHALL NOT BE RESPONSIBLE FOR THE ACCURACY OR COMPLETENESS OF SCANNED COPIES OF THIS PLAN SHEET.

NOTE:

FOR ACCURATE RIGHT OF WAY DATA, CONTACT RIGHT OF WAY ENGINEERING AT DISTRICT OFFICE.

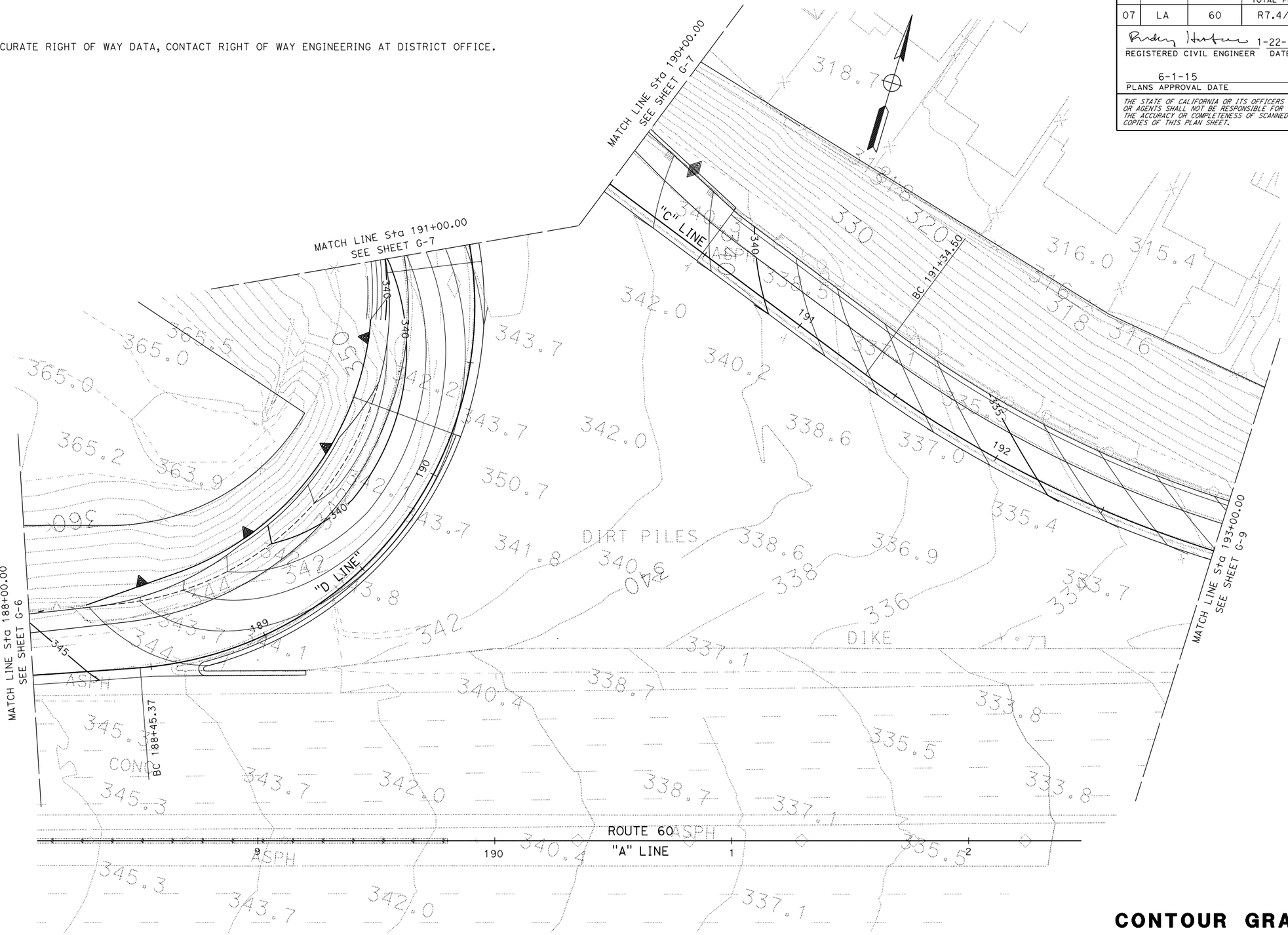

CONTOUR GRADING

SCALE: 1" = 20'

G-8

APPROVED FOR CONTOUR GRADING WORK ONLY

STATE OF CALIFORNIA - DEPARTMENT OF TRANSPORTATION
Caltrans
DESIGN

FUNCTIONAL SUPERVISOR: ASADOUR TERTERIAN
CALCULATED-DESIGNED BY: KEDAR SAWANT
CHECKED BY: RUDDY HARTONO
REVISED BY
DATE REVISED

LAST REVISION 00-00-00
DATE PLOTTED => 22-JUN-2015
TIME PLOTTED => 07:08

Dist	COUNTY	ROUTE	POST MILES TOTAL PROJECT	SHEET No.	TOTAL SHEETS
07	LA	60	R7.4/R8.1	37	238

REGISTERED CIVIL ENGINEER 1-22-14 DATE

6-1-15
PLANS APPROVAL DATE

REGISTERED PROFESSIONAL ENGINEER RUDDY HARTONO No. 63146 Exp. 6-30-16 CIVIL STATE OF CALIFORNIA

THE STATE OF CALIFORNIA OR ITS OFFICERS OR AGENTS SHALL NOT BE RESPONSIBLE FOR THE ACCURACY OR COMPLETENESS OF SCANNED COPIES OF THIS PLAN SHEET.

NOTE:
FOR ACCURATE RIGHT OF WAY DATA, CONTACT RIGHT OF WAY ENGINEERING AT DISTRICT OFFICE.

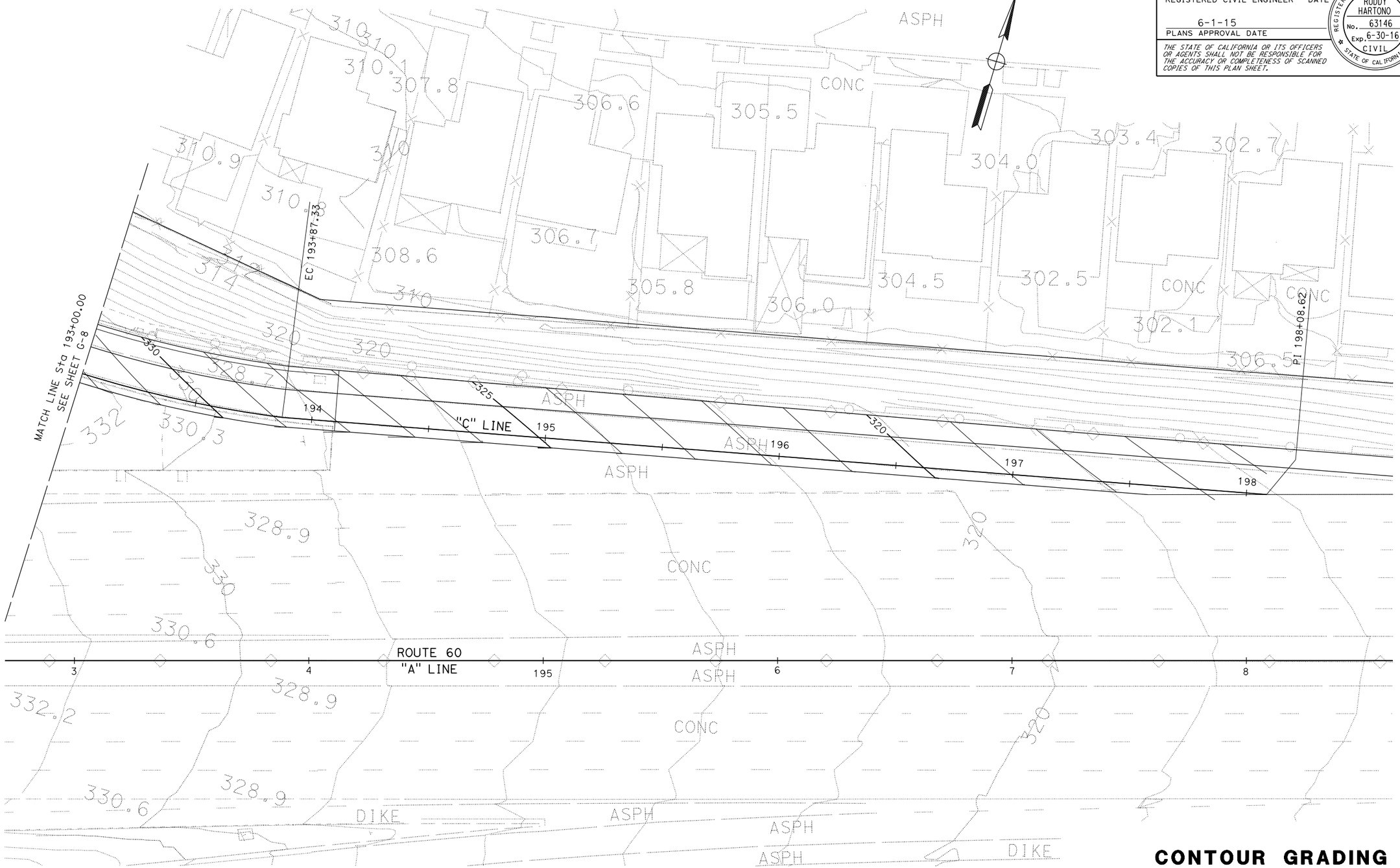

CONTOUR GRADING

SCALE: 1" = 20'

G-9

APPROVED FOR CONTOUR GRADING WORK ONLY

STATE OF CALIFORNIA - DEPARTMENT OF TRANSPORTATION
Caltrans® DESIGN

FUNCTIONAL SUPERVISOR: ASADOUR TERTERIAN
CALCULATED-DESIGNED BY: KEDAR SAWANT
CHECKED BY: RUDDY HARTONO
REVISED BY
DATE REVISED

LAST REVISION 00-00-00
DATE PLOTTED => 22-JUN-2015
TIME PLOTTED => 07:08

Dist	COUNTY	ROUTE	POST MILES TOTAL PROJECT	SHEET No.	TOTAL SHEETS
07	LA	60	R7.4/R8.1	38	238

REGISTERED CIVIL ENGINEER 2-3-14 DATE

6-1-15
PLANS APPROVAL DATE

REGISTERED PROFESSIONAL ENGINEER DAVE BHALLA No. 34350 Exp. 9-30-15 CIVIL STATE OF CALIFORNIA

THE STATE OF CALIFORNIA OR ITS OFFICERS OR AGENTS SHALL NOT BE RESPONSIBLE FOR THE ACCURACY OR COMPLETENESS OF SCANNED COPIES OF THIS PLAN SHEET.

NOTE:

1. FOR ACCURATE RIGHT OF WAY DATA, CONTACT RIGHT OF WAY ENGINEERING AT DISTRICT OFFICE.

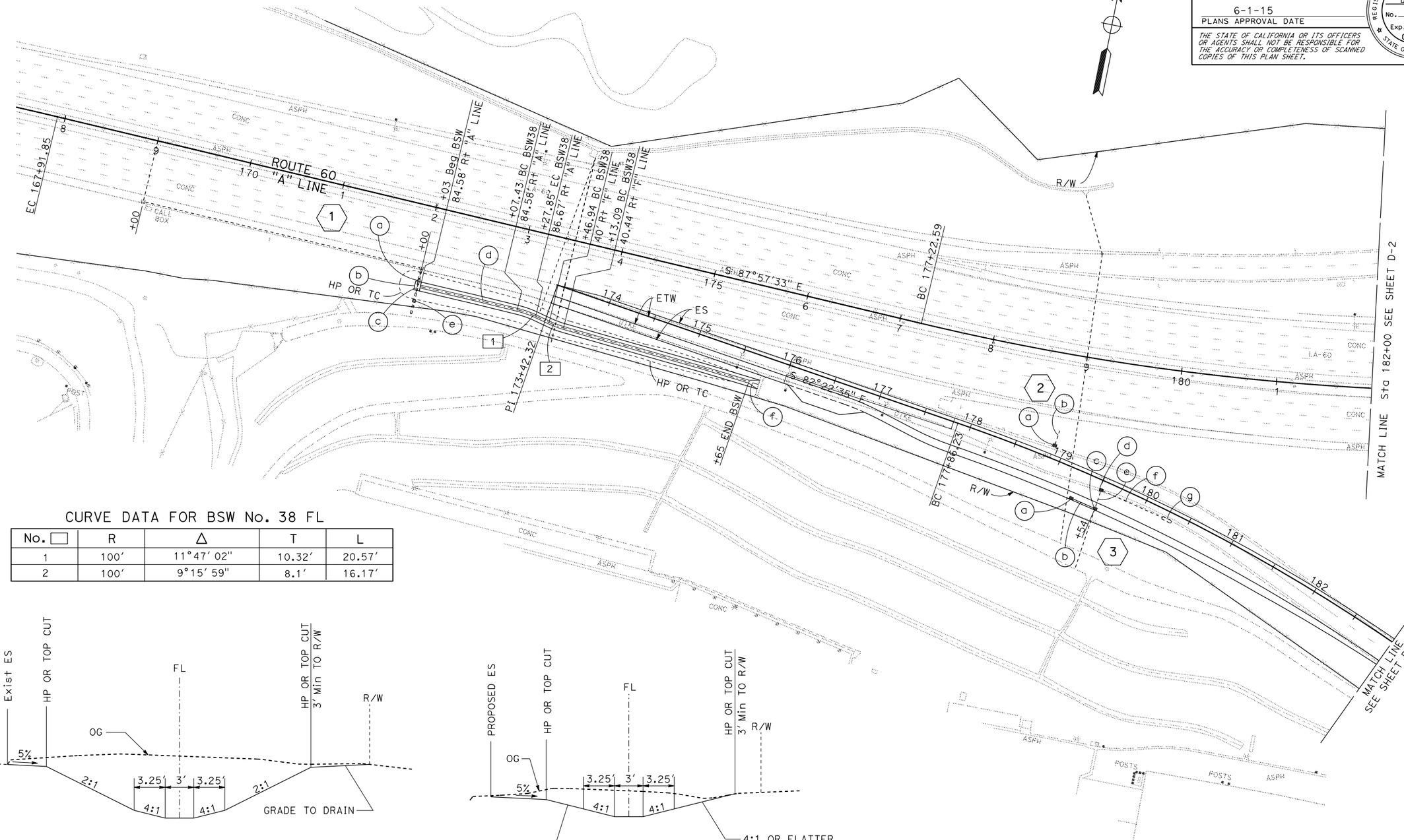

CURVE DATA FOR BSW No. 38 FL

No. ☐	R	Δ	T	L
1	100′	11°47′02″	10.32′	20.57′
2	100′	9°15′59″	8.1′	16.17′

BSW38
TYPICAL
Sta 72+03 TO Sta 74+50
NO SCALE

BSW38
TYPICAL
Sta 74+75 TO Sta 75+70
NO SCALE

DRAINAGE PLAN

SCALE: 1" = 50′

D-1

REVISED BY	DATE REVISED

CALCULATED-DESIGNED BY: CEDRIC ESTRADA
CHECKED BY: DAVE BHALLA
FUNCTIONAL SUPERVISOR: MARIA QUINONEZ

STATE OF CALIFORNIA - DEPARTMENT OF TRANSPORTATION
Caltrans
HYDRAULICS

LAST REVISION 02-03-14
DATE PLOTTED => 22-JUN-2015
TIME PLOTTED => 07:08

Dist	COUNTY	ROUTE	POST MILES TOTAL PROJECT	SHEET No.	TOTAL SHEETS
07	LA	60	R7.4/R8.1	39	238

REGISTERED CIVIL ENGINEER 2-3-14 DATE

6-1-15
PLANS APPROVAL DATE

REGISTERED PROFESSIONAL ENGINEER DAVE BHALLA No. 34350 Exp. 9-30-15 CIVIL STATE OF CALIFORNIA

THE STATE OF CALIFORNIA OR ITS OFFICERS OR AGENTS SHALL NOT BE RESPONSIBLE FOR THE ACCURACY OR COMPLETENESS OF SCANNED COPIES OF THIS PLAN SHEET.

CURVE DATA FOR DRAINAGE SYSTEM 10 i

No.	R	Δ	T	L
3	90′	23°04′43″	36.01′	36.25′

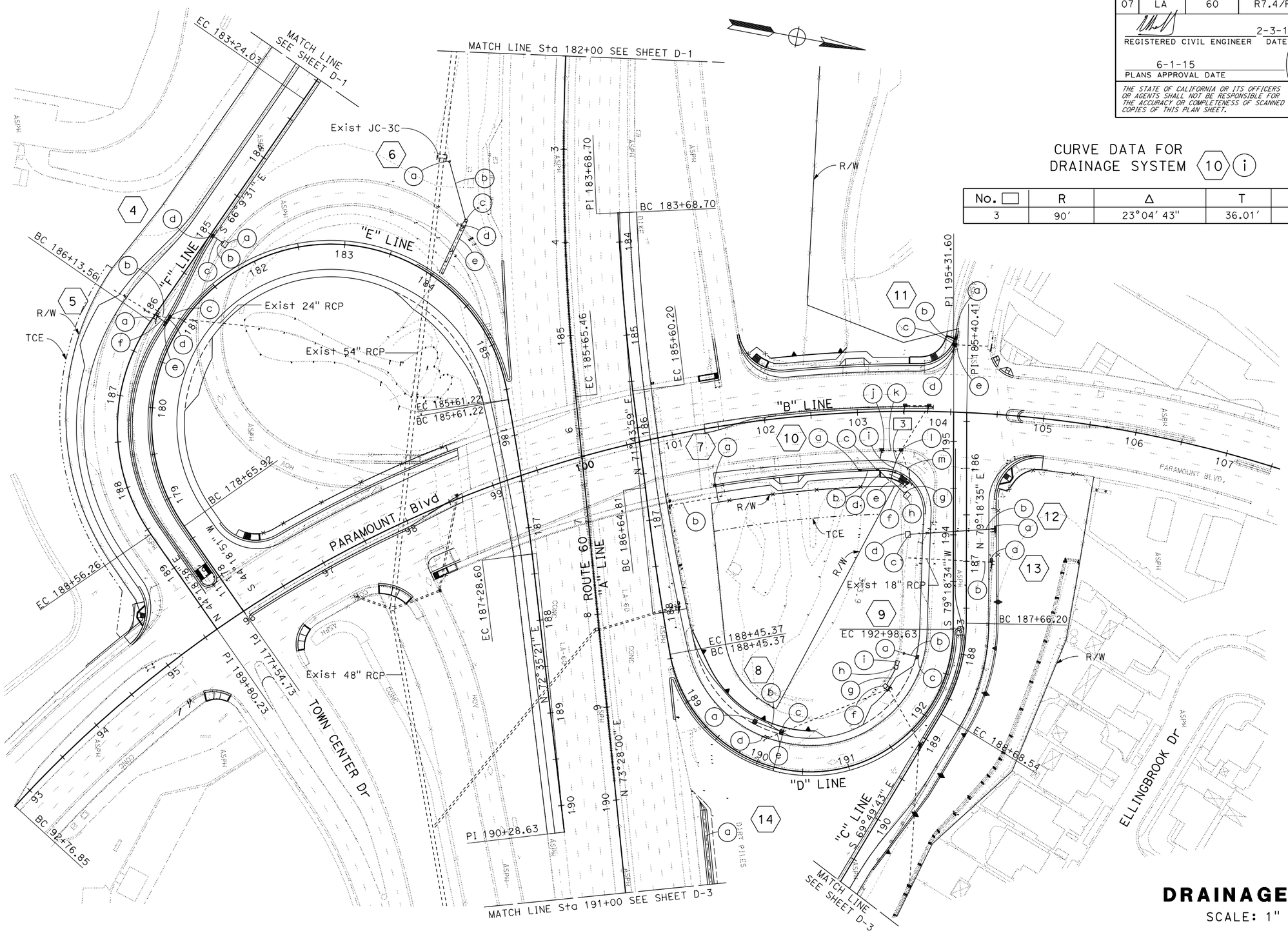

DRAINAGE PLAN

SCALE: 1" = 50′

D-2

STATE OF CALIFORNIA - DEPARTMENT OF TRANSPORTATION	FUNCTIONAL SUPERVISOR	CALCULATED-DESIGNED BY	REVISED BY
Caltrans® HYDRAULICS	MARIA QUINONEZ	CEDRIC ESTRADA	
		CHECKED BY	DATE REVISED
		DAVE BHALLA	

LAST REVISION 02-03-14 DATE PLOTTED => 22-JUN-2015 TIME PLOTTED => 07:08

Dist	COUNTY	ROUTE	POST MILES TOTAL PROJECT	SHEET No.	TOTAL SHEETS
07	LA	60	R7.4/R8.1	40	238

REGISTERED CIVIL ENGINEER 2-3-14 DATE

6-1-15
PLANS APPROVAL DATE

REGISTERED PROFESSIONAL ENGINEER
DAVE BHALLA
No. 34350
Exp. 9-30-15
CIVIL
STATE OF CALIFORNIA

THE STATE OF CALIFORNIA OR ITS OFFICERS OR AGENTS SHALL NOT BE RESPONSIBLE FOR THE ACCURACY OR COMPLETENESS OF SCANNED COPIES OF THIS PLAN SHEET.

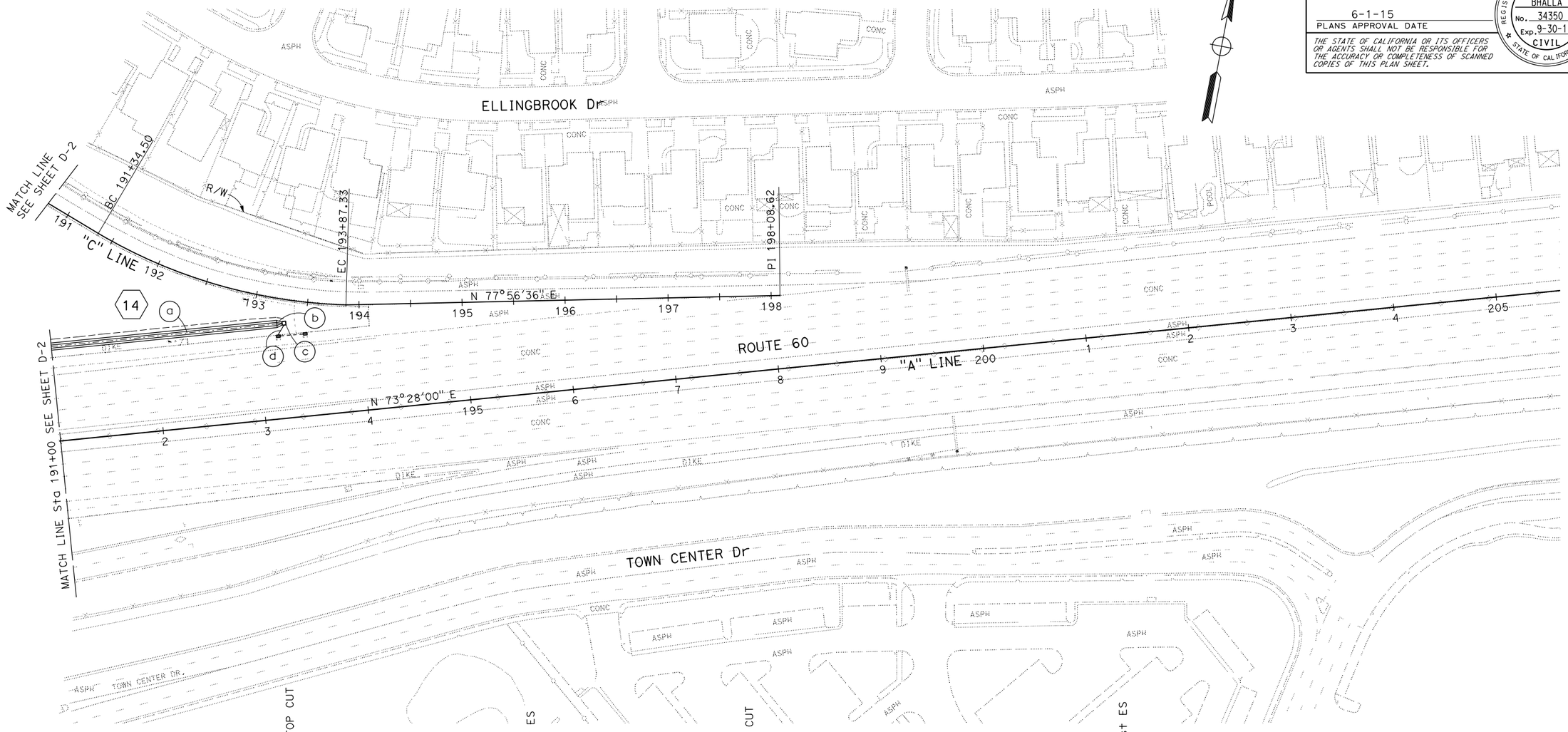

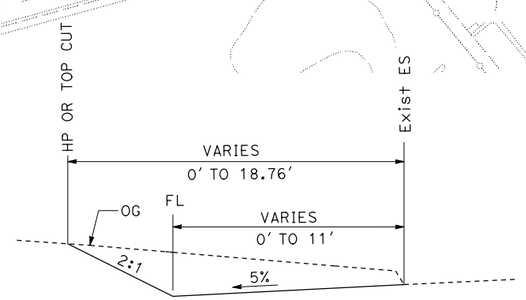

BSW41
TYPICAL
Sta 189+96 TO Sta 190+10
NO SCALE

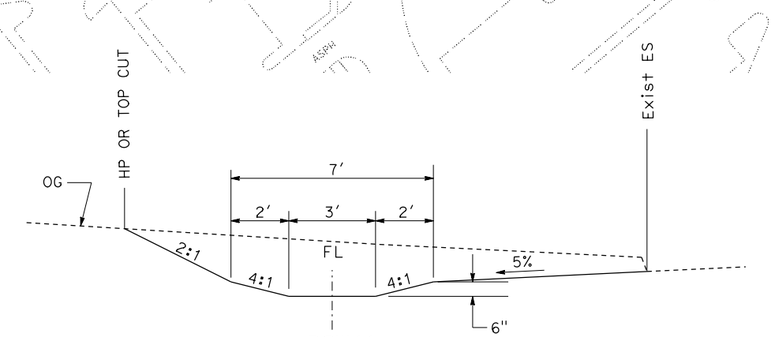

BSW41
TYPICAL
Sta 190+10 TO Sta 193+20
NO SCALE

DRAINAGE PLAN

SCALE: 1" = 50'

D-3

STATE OF CALIFORNIA - DEPARTMENT OF TRANSPORTATION
Caltrans® HYDRAULICS

FUNCTIONAL SUPERVISOR: MARIA QUINONEZ
CALCULATED-DESIGNED BY: CEDRIC ESTRADA
CHECKED BY: DAVE BHALLA
REVISED BY
DATE REVISED

LAST REVISION 02-03-14
DATE PLOTTED => 22-JUN-2015
TIME PLOTTED => 07:08

Dist	COUNTY	ROUTE	POST MILES TOTAL PROJECT	SHEET No.	TOTAL SHEETS
07	LA	60	R7.4/R8.1	41	238

REGISTERED CIVIL ENGINEER 2-3-14 DATE

6-1-15
PLANS APPROVAL DATE

REGISTERED PROFESSIONAL ENGINEER DAVE BHALLA No. 34350 Exp. 9-30-15 CIVIL STATE OF CALIFORNIA

THE STATE OF CALIFORNIA OR ITS OFFICERS OR AGENTS SHALL NOT BE RESPONSIBLE FOR THE ACCURACY OR COMPLETENESS OF SCANNED COPIES OF THIS PLAN SHEET.

NOTES:

1. THE CONTRACTOR MUST VERIFY LOCATIONS AND ELEVATIONS OF EXISTING DRAINAGE SYSTEMS BEFORE COMMENCEMENT OF WORK.
2. FOR INFORMATION AND DETAILS NOT SHOWN, SEE Std PLANS AND DRAINAGE DETAILS SHEETS.

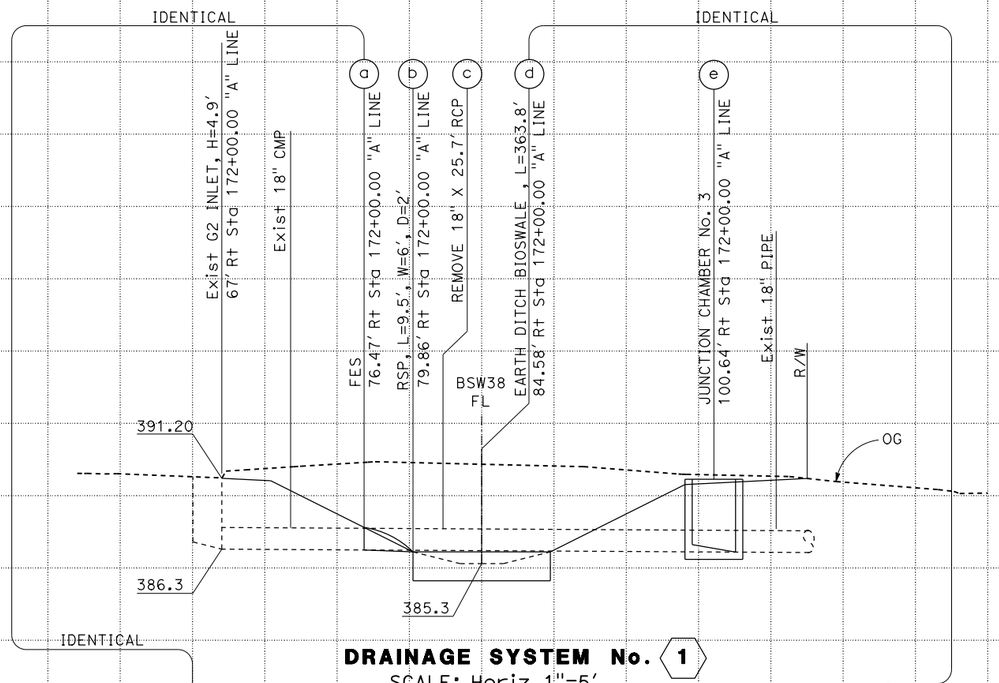

DRAINAGE SYSTEM No. 1
SCALE: Horiz 1"=5′
Vert 1"=5′

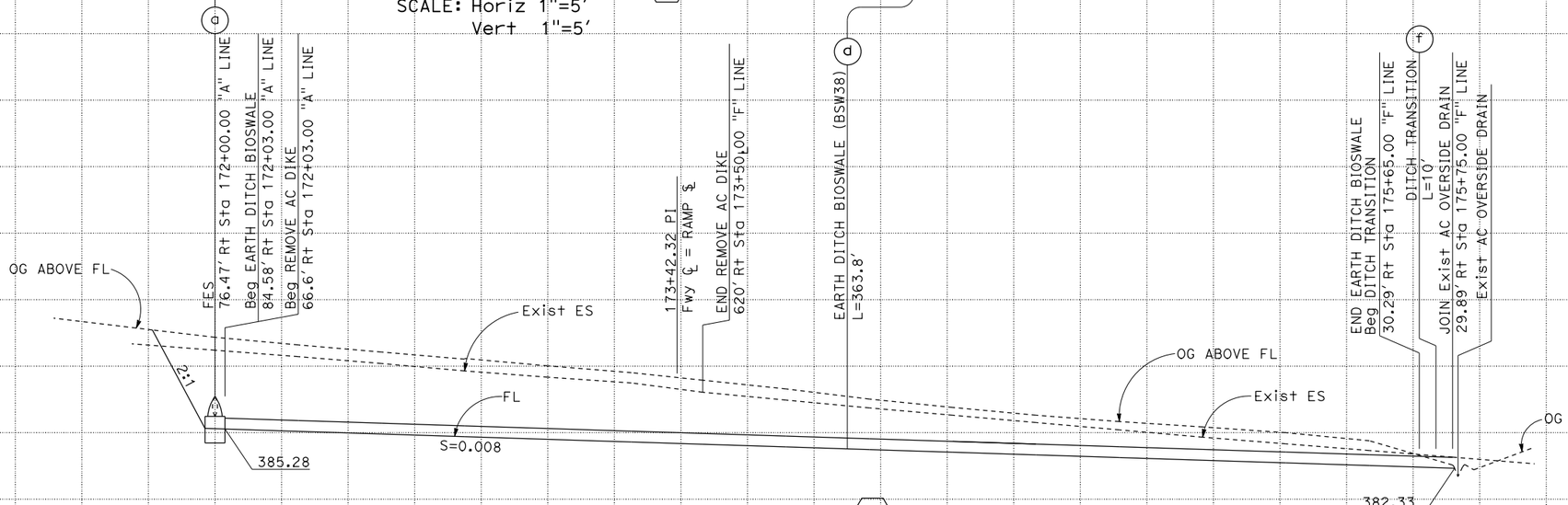

DRAINAGE SYSTEM No. 1
SCALE: Horiz 1" = 20′
Vert 1" = 5′

DRAINAGE PROFILES

SCALE AS SHOWN

DP-1

STATE OF CALIFORNIA - DEPARTMENT OF TRANSPORTATION
Caltrans HYDRAULICS

FUNCTIONAL SUPERVISOR: MARIA QUINONEZ
CALCULATED-DESIGNED BY: CEDRIC ESTRADA
CHECKED BY: DAVE BHALLA
REVISED BY
DATE REVISED

LAST REVISION 02-03-14
DATE PLOTTED => 22-JUN-2015
TIME PLOTTED => 07:08

Dist	COUNTY	ROUTE	POST MILES TOTAL PROJECT	SHEET No.	TOTAL SHEETS
07	LA	60	R7.4/R8.1	42	238

REGISTERED CIVIL ENGINEER 2-3-14 DATE

6-1-15
PLANS APPROVAL DATE

REGISTERED PROFESSIONAL ENGINEER
DAVE BHALLA
No. 34350
Exp. 9-30-15
CIVIL
STATE OF CALIFORNIA

THE STATE OF CALIFORNIA OR ITS OFFICERS OR AGENTS SHALL NOT BE RESPONSIBLE FOR THE ACCURACY OR COMPLETENESS OF SCANNED COPIES OF THIS PLAN SHEET.

NOTES:

1. THE CONTRACTOR MUST VERIFY LOCATIONS AND ELEVATIONS OF EXISTING DRAINAGE SYSTEMS BEFORE COMMENCEMENT OF WORK.
2. FOR INFORMATION AND DETAILS NOT SHOWN, SEE Std PLANS AND DRAINAGE DETAILS SHEETS.

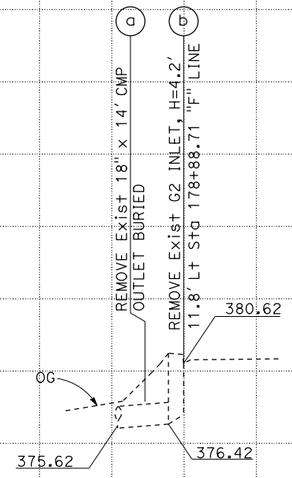

DRAINAGE SYSTEM No. 2
SCALE: Horiz 1" = 20'
Vert 1" = 5'

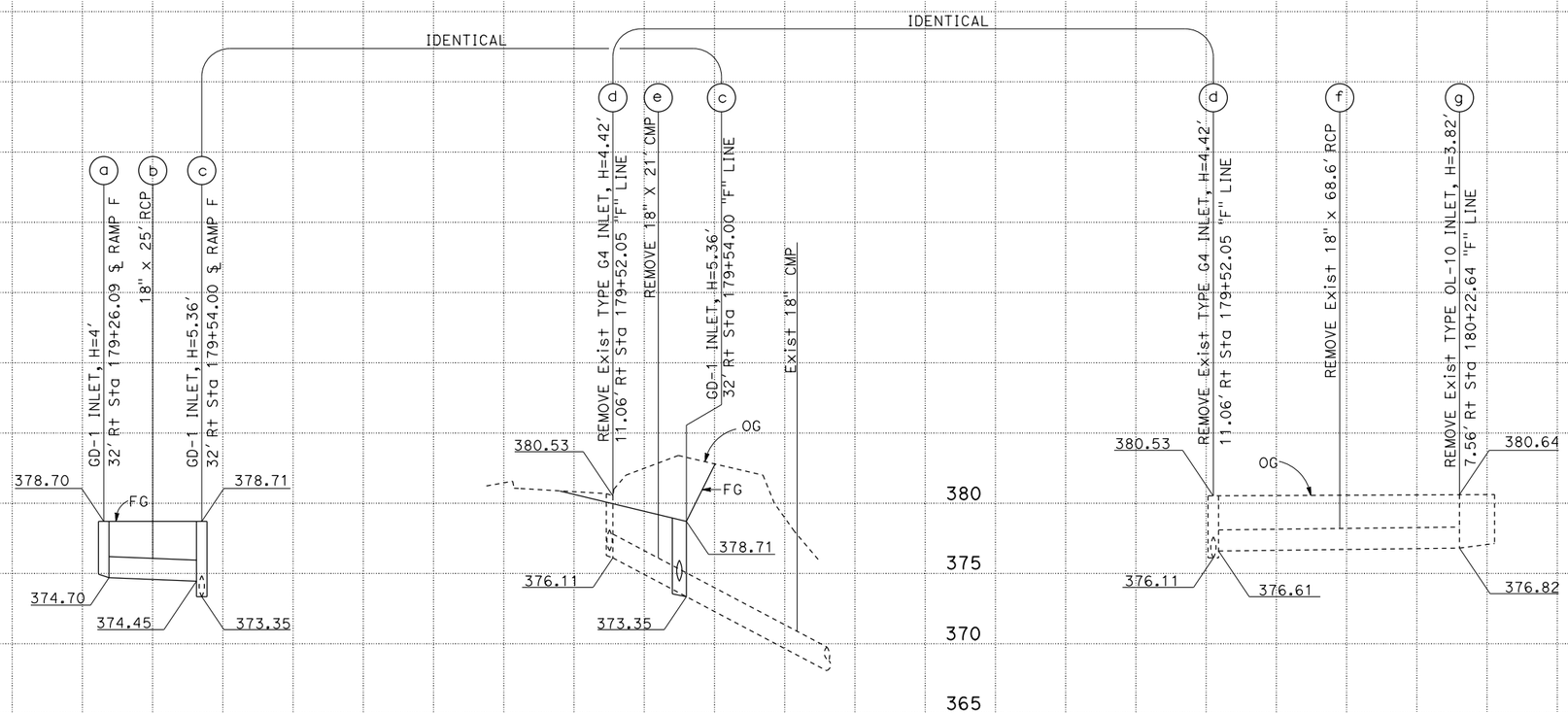

DRAINAGE SYSTEM No. 3
SCALE: Horiz 1" = 20'
Vert 1" = 5'

DRAINAGE PROFILES

SCALE AS SHOWN

DP-2

CALCULATED-DESIGNED BY
CHECKED BY
REVISED BY
DATE REVISED
CEDRIC ESTRADA
DAVE BHALLA
FUNCTIONAL SUPERVISOR
MARIA QUINONEZ
STATE OF CALIFORNIA - DEPARTMENT OF TRANSPORTATION
Caltrans
HYDRAULICS

LAST REVISION 02-03-14
DATE PLOTTED => 22-JUN-2015
TIME PLOTTED => 07:09

Dist	COUNTY	ROUTE	POST MILES TOTAL PROJECT	SHEET No.	TOTAL SHEETS
07	LA	60	R7.4/R8.1	43	238

REGISTERED CIVIL ENGINEER 2-3-14 DATE

6-1-15
PLANS APPROVAL DATE

REGISTERED PROFESSIONAL ENGINEER DAVE BHALLA No. 34350 Exp. 9-30-15 CIVIL STATE OF CALIFORNIA

THE STATE OF CALIFORNIA OR ITS OFFICERS OR AGENTS SHALL NOT BE RESPONSIBLE FOR THE ACCURACY OR COMPLETENESS OF SCANNED COPIES OF THIS PLAN SHEET.

NOTES:

1. THE CONTRACTOR MUST VERIFY LOCATIONS AND ELEVATIONS OF EXISTING DRAINAGE SYSTEMS BEFORE COMMENCEMENT OF WORK.
2. FOR INFORMATION AND DETAILS NOT SHOWN, SEE Std PLANS AND DRAINAGE DETAILS SHEETS.

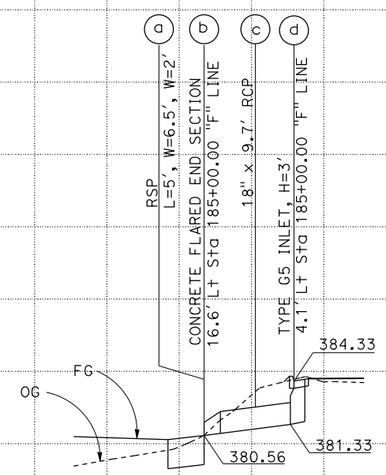

DRAINAGE SYSTEM No. 4
SCALE: Horiz 1" = 10'
Vert 1" = 5'

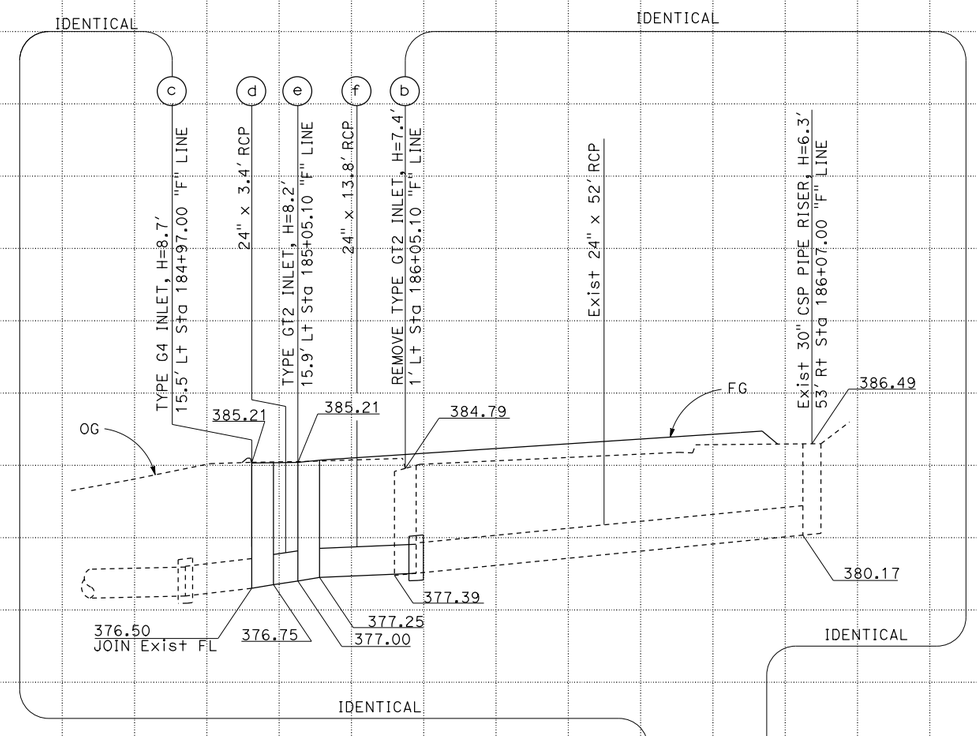

DRAINAGE SYSTEM No. 5
SCALE: Horiz 1" = 10'
Vert 1" = 5'

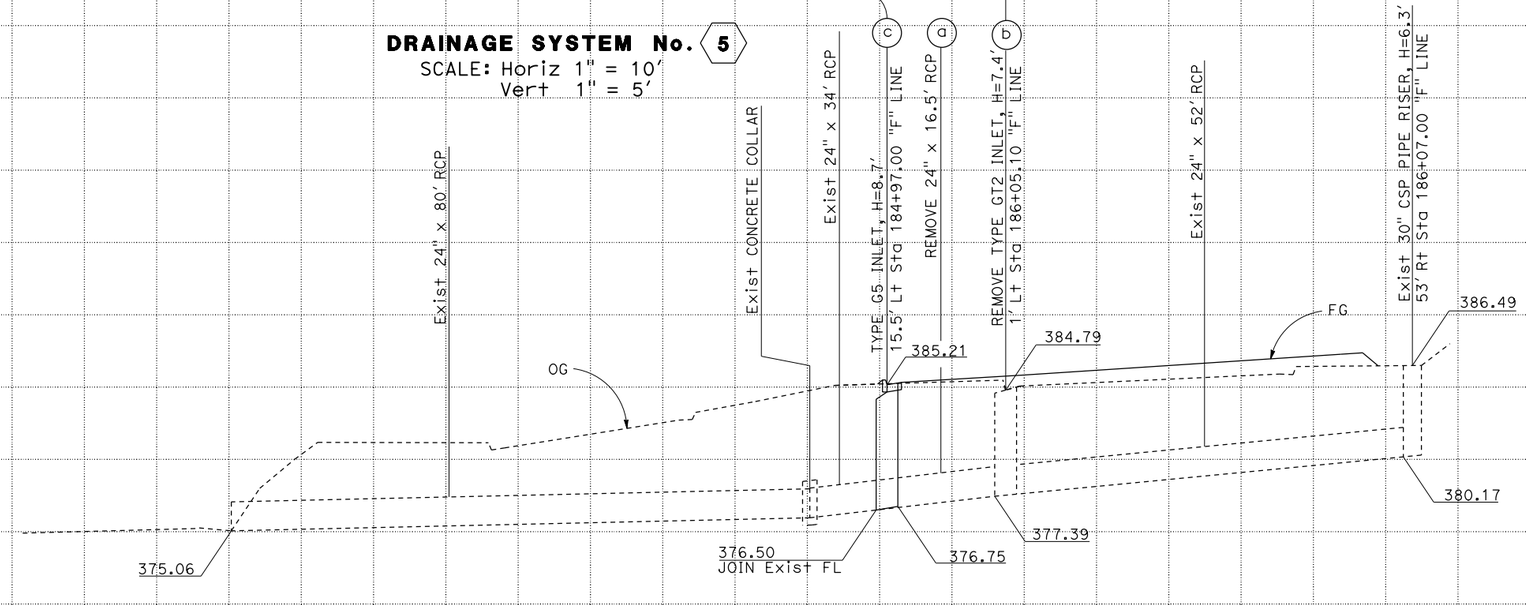

DRAINAGE SYSTEM No. 5
SCALE: Horiz 1" = 10'
Vert 1" = 5'

DRAINAGE PROFILES

SCALE AS SHOWN

DP-3

STATE OF CALIFORNIA - DEPARTMENT OF TRANSPORTATION
Caltrans HYDRAULICS

FUNCTIONAL SUPERVISOR: MARIA QUINONEZ
CALCULATED-DESIGNED BY: CEDRIC ESTRADA
CHECKED BY: DAVE BHALLA
REVISED BY
DATE REVISED

LAST REVISION 02-03-14
DATE PLOTTED =>
TIME PLOTTED =>

Dist	COUNTY	ROUTE	POST MILES TOTAL PROJECT	SHEET No.	TOTAL SHEETS
07	LA	60	R7.4/R8.1	44	238

REGISTERED CIVIL ENGINEER 2-3-14 DATE

6-1-15
PLANS APPROVAL DATE

REGISTERED PROFESSIONAL ENGINEER
DAVE BHALLA
No. 34350
Exp. 9-30-15
CIVIL
STATE OF CALIFORNIA

THE STATE OF CALIFORNIA OR ITS OFFICERS OR AGENTS SHALL NOT BE RESPONSIBLE FOR THE ACCURACY OR COMPLETENESS OF SCANNED COPIES OF THIS PLAN SHEET.

NOTES:

1. THE CONTRACTOR MUST VERIFY LOCATIONS AND ELEVATIONS OF EXISTING DRAINAGE SYSTEMS BEFORE COMMENCEMENT OF WORK.

2. FOR INFORMATION AND DETAILS NOT SHOWN, SEE Std PLANS AND DRAINAGE DETAILS SHEETS.

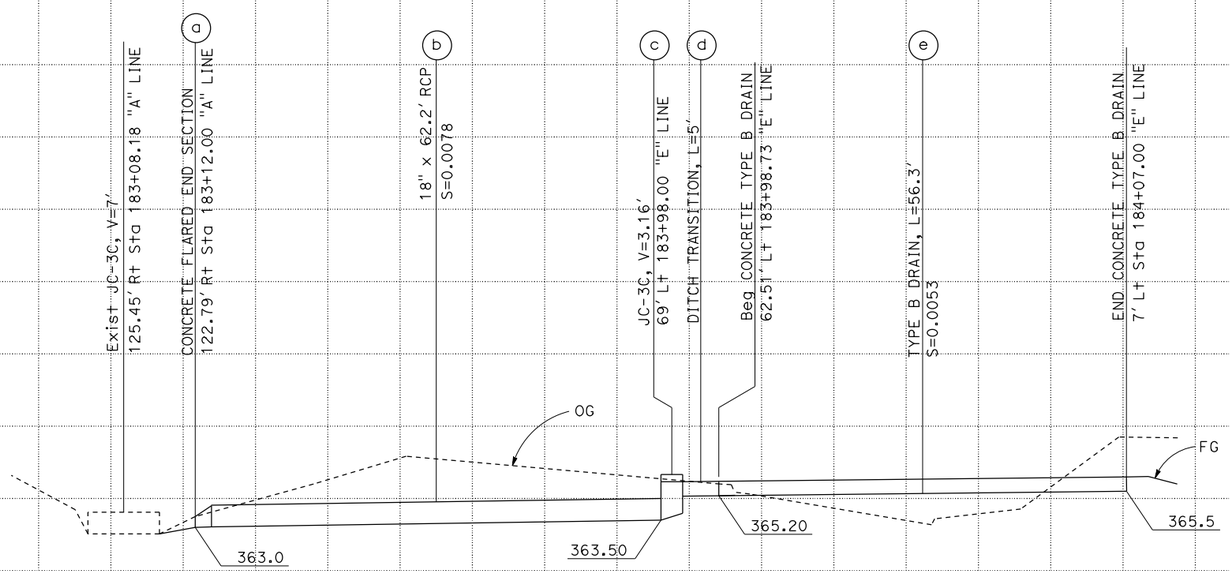

DRAINAGE SYSTEM No. 6
SCALE: Horiz 1" = 10'
Vert 1" = 5'

DRAINAGE PROFILES

SCALE AS SHOWN

DP-4

STATE OF CALIFORNIA - DEPARTMENT OF TRANSPORTATION
Caltrans HYDRAULICS

FUNCTIONAL SUPERVISOR: MARIA QUINONEZ
CALCULATED-DESIGNED BY: CEDRIC ESTRADA
CHECKED BY: DAVE BHALLA
REVISED BY
DATE REVISED

LAST REVISION 02-03-14
DATE PLOTTED => 22-JUN-2015
TIME PLOTTED => 07:09

Dist	COUNTY	ROUTE	POST MILES TOTAL PROJECT	SHEET No.	TOTAL SHEETS
07	LA	60	R7.4/R8.1	45	238

REGISTERED CIVIL ENGINEER 2-3-14 DATE

6-1-15
PLANS APPROVAL DATE

REGISTERED PROFESSIONAL ENGINEER
DAVE BHALLA
No. 34350
Exp. 9-30-15
CIVIL
STATE OF CALIFORNIA

THE STATE OF CALIFORNIA OR ITS OFFICERS OR AGENTS SHALL NOT BE RESPONSIBLE FOR THE ACCURACY OR COMPLETENESS OF SCANNED COPIES OF THIS PLAN SHEET.

NOTES:

1. THE CONTRACTOR MUST VERIFY LOCATION AND ELEVATION OF EXISTING WALL GUTTER BEFORE COMMENCEMENT OF WORK.
2. FOR CORRUGATED METAL PIPE DOWNDRAIN DETAILS, SEE STANDARD PLAN D87A.

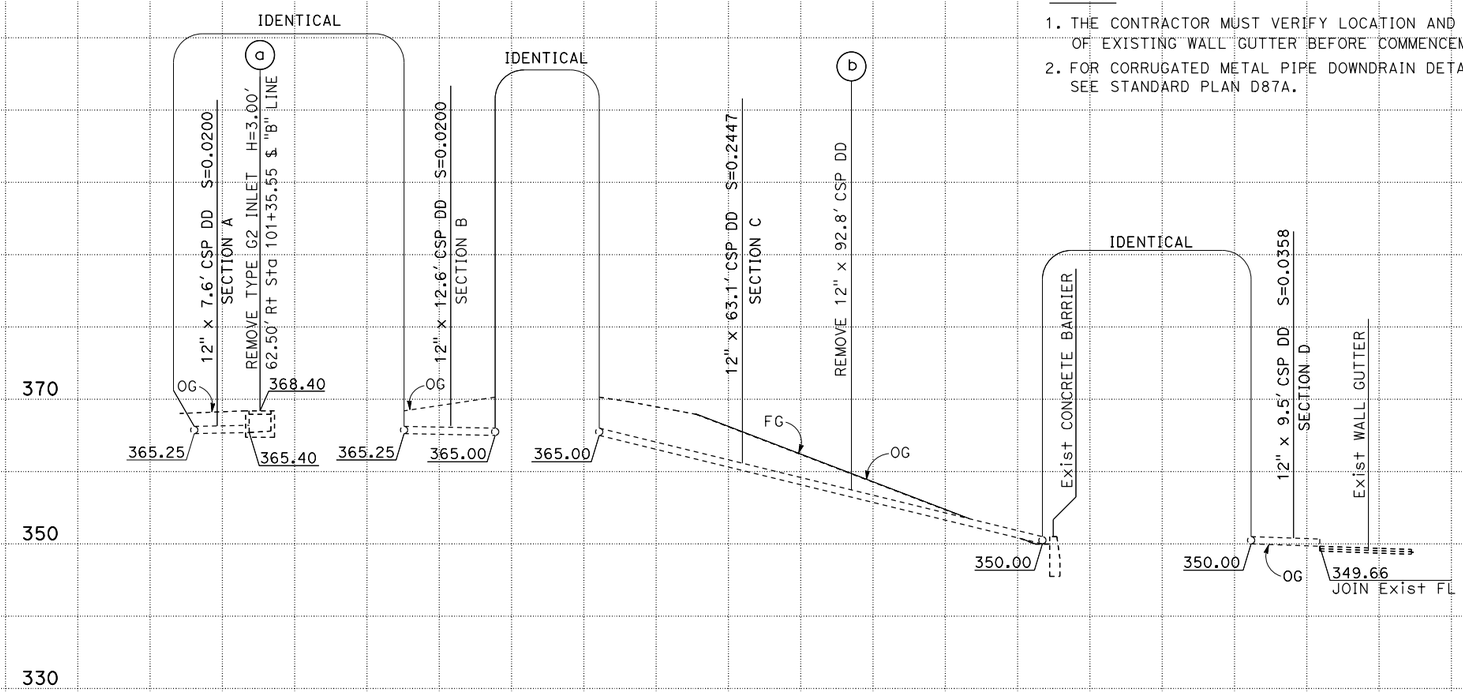

DRAINAGE SYSTEM No. 7

SCALE: Horiz 1" = 10'
Vert 1" = 10'

DRAINAGE PROFILES

SCALE AS SHOWN

DP-5

STATE OF CALIFORNIA - DEPARTMENT OF TRANSPORTATION
Caltrans HYDRAULICS

FUNCTIONAL SUPERVISOR: MARIA QUINONEZ
CALCULATED-DESIGNED BY: CEDRIC ESTRADA
CHECKED BY: DAVE BHALLA
REVISED BY
DATE REVISED

LAST REVISION 02-03-14
DATE PLOTTED => 22-JUN-2015
TIME PLOTTED => 07:09

Dist	COUNTY	ROUTE	POST MILES TOTAL PROJECT	SHEET No.	TOTAL SHEETS
07	LA	60	R7.4/R8.1	46	238

REGISTERED CIVIL ENGINEER 2-3-14 DATE

6-1-15
PLANS APPROVAL DATE

REGISTERED PROFESSIONAL ENGINEER DAVE BHALLA No. 34350 Exp. 9-30-15 CIVIL STATE OF CALIFORNIA

THE STATE OF CALIFORNIA OR ITS OFFICERS OR AGENTS SHALL NOT BE RESPONSIBLE FOR THE ACCURACY OR COMPLETENESS OF SCANNED COPIES OF THIS PLAN SHEET.

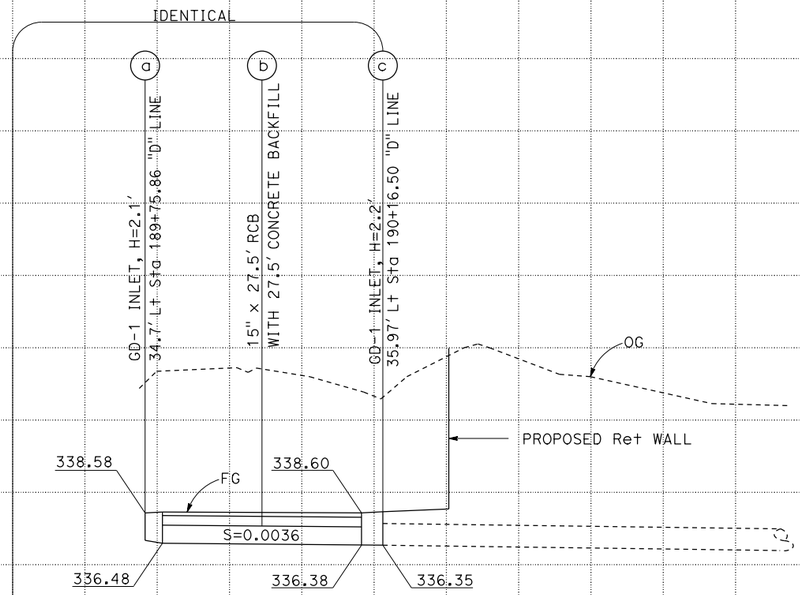

DRAINAGE SYSTEM No. 8
SCALE: Horiz 1" = 10'
Vert 1" = 5'

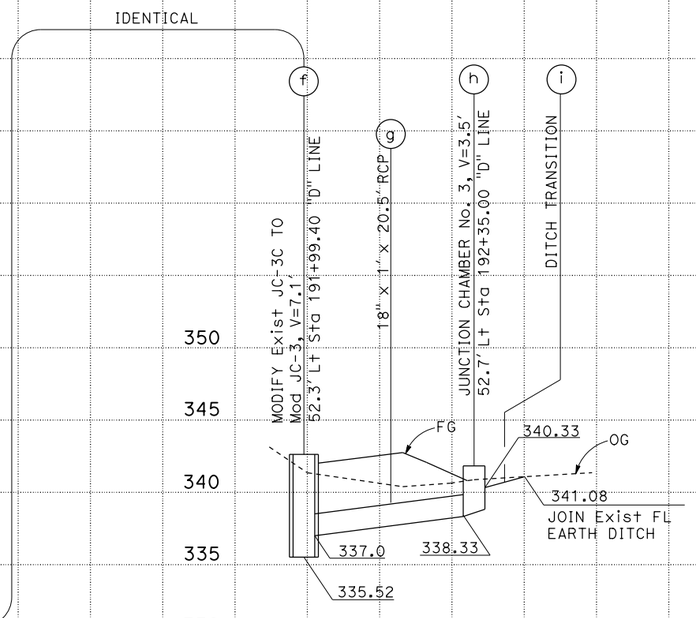

DRAINAGE SYSTEM No. 8
SCALE: Horiz 1" = 10'
Vert 1" = 5'

NOTES:

1. THE CONTRACTOR MUST VERIFY LOCATIONS AND ELEVATIONS OF EXISTING DRAINAGE SYSTEMS BEFORE COMMENCEMENT OF WORK.
2. FOR INFORMATION AND DETAILS NOT SHOWN, SEE Std PLANS AND DRAINAGE DETAILS SHEETS.

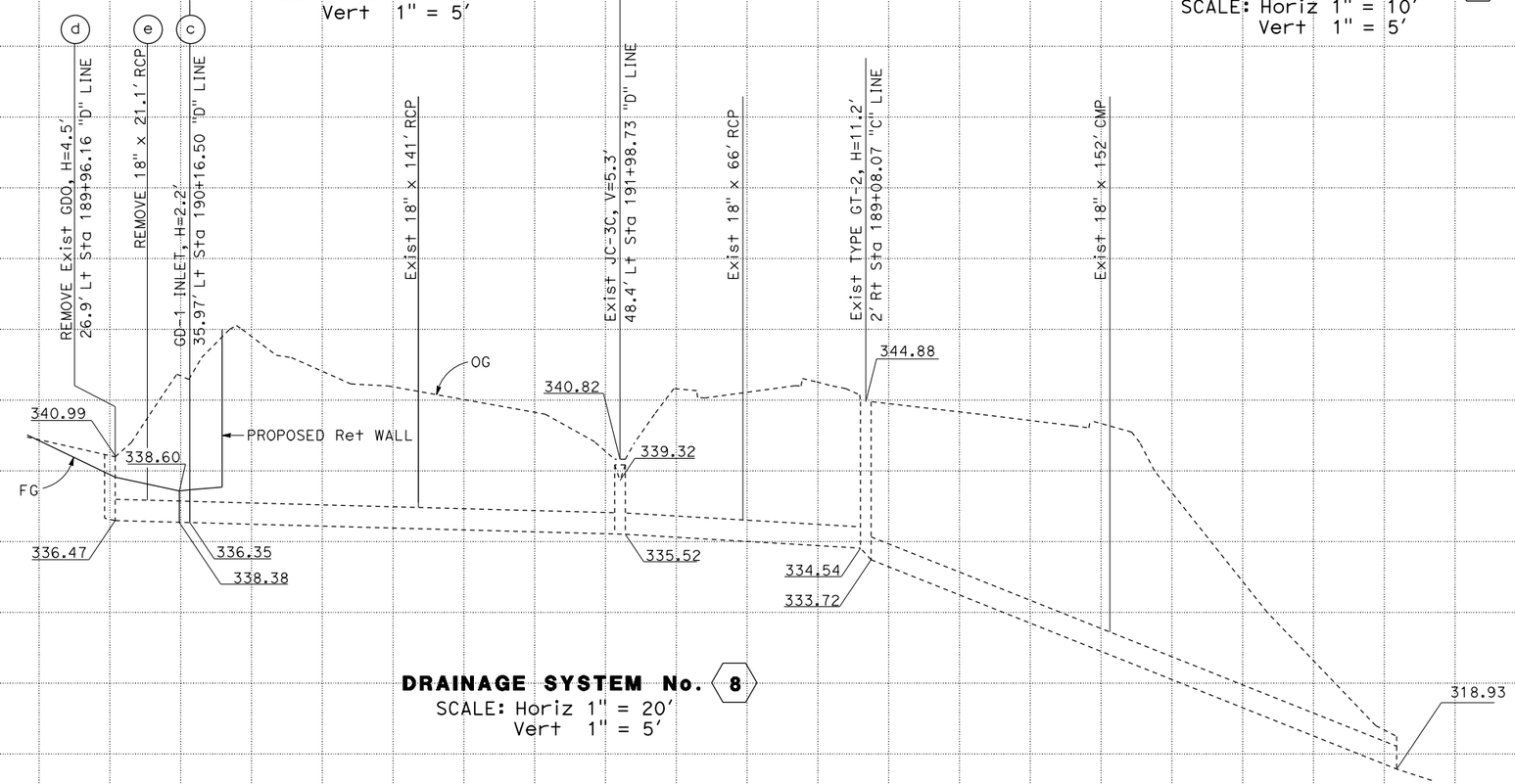

DRAINAGE SYSTEM No. 8
SCALE: Horiz 1" = 20'
Vert 1" = 5'

DRAINAGE PROFILES

SCALE AS SHOWN

DP-6

REVISED BY	DATE REVISED

CEDRIC ESTRADA — DAVE BHALLA — CALCULATED-DESIGNED BY — CHECKED BY

FUNCTIONAL SUPERVISOR: MARIA QUINONEZ

STATE OF CALIFORNIA - DEPARTMENT OF TRANSPORTATION — Caltrans — HYDRAULICS

LAST REVISION 02-03-14 — DATE PLOTTED => 22-JUN-2015 — TIME PLOTTED => 07:09

Dist	COUNTY	ROUTE	POST MILES TOTAL PROJECT	SHEET No.	TOTAL SHEETS
07	LA	60	R7.4/R8.1	47	238

REGISTERED CIVIL ENGINEER 2-3-14 DATE

6-1-15
PLANS APPROVAL DATE

REGISTERED PROFESSIONAL ENGINEER DAVE BHALLA No. 34350 Exp. 9-30-15 CIVIL STATE OF CALIFORNIA

THE STATE OF CALIFORNIA OR ITS OFFICERS OR AGENTS SHALL NOT BE RESPONSIBLE FOR THE ACCURACY OR COMPLETENESS OF SCANNED COPIES OF THIS PLAN SHEET.

NOTES:

1. THE CONTRACTOR MUST VERIFY LOCATIONS AND ELEVATIONS OF EXISTING DRAINAGE SYSTEMS BEFORE COMMENCEMENT OF WORK.
2. FOR INFORMATION AND DETAILS NOT SHOWN, SEE Std PLANS AND DRAINAGE DETAILS SHEETS.

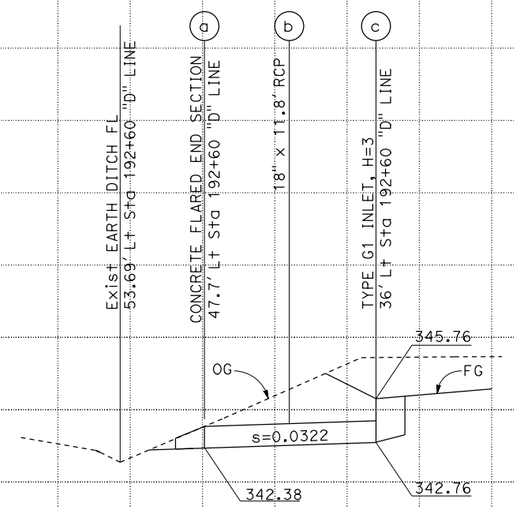

DRAINAGE SYSTEM No. 9
SCALE: Horiz 1" = 5'
Vert 1" = 5'

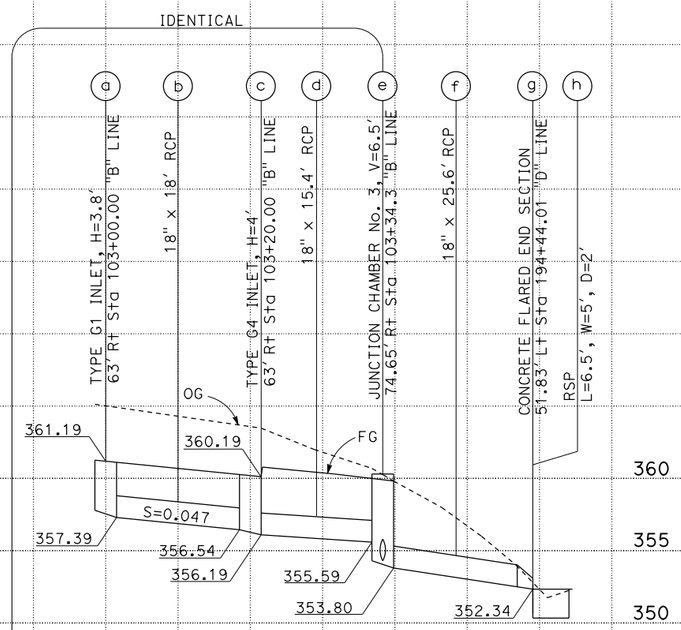

DRAINAGE SYSTEM No. 10
SCALE: Horiz 1" = 10'
Vert 1" = 5'

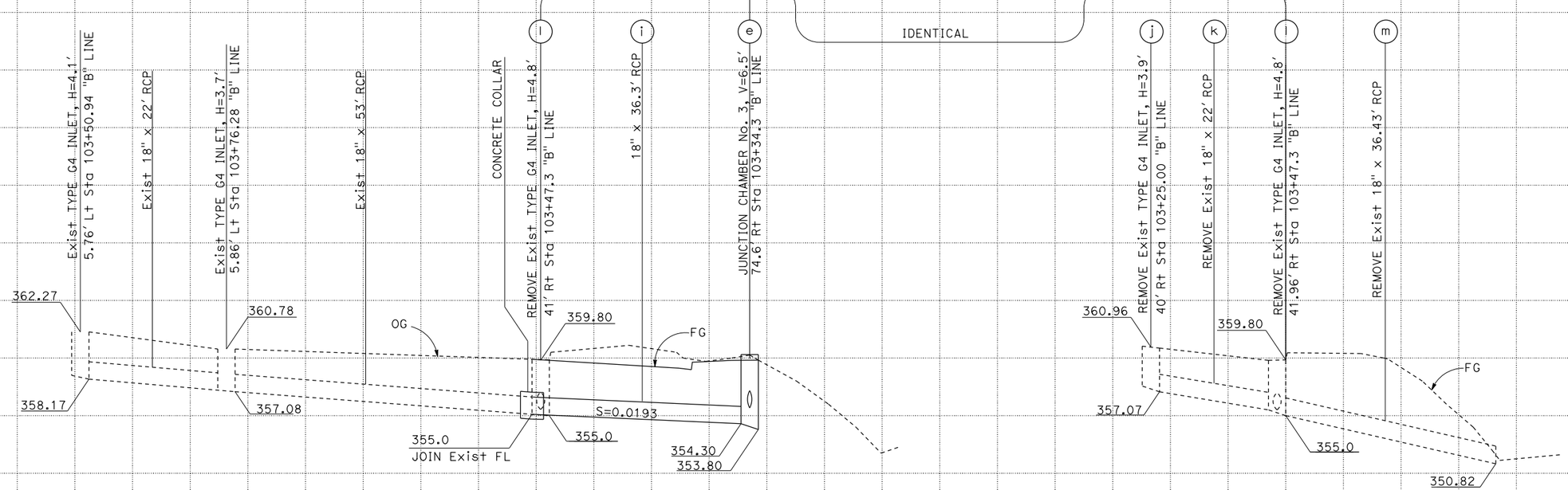

DRAINAGE SYSTEM No. 10
SCALE: Horiz 1" = 10'
Vert 1" = 5'

DRAINAGE PROFILES

SCALE AS SHOWN

DP-7

STATE OF CALIFORNIA - DEPARTMENT OF TRANSPORTATION
Caltrans HYDRAULICS
FUNCTIONAL SUPERVISOR: MARIA QUINONEZ
CALCULATED-DESIGNED BY: CEDRIC ESTRADA
CHECKED BY: DAVE BHALLA
REVISED BY
DATE REVISED

LAST REVISION 02-03-14
DATE PLOTTED => 22-JUN-2015
TIME PLOTTED => 07:09

Dist	COUNTY	ROUTE	POST MILES TOTAL PROJECT	SHEET No.	TOTAL SHEETS
07	LA	60	R7.4/R8.1	48	238

REGISTERED CIVIL ENGINEER 2-3-14 DATE

6-1-15
PLANS APPROVAL DATE

REGISTERED PROFESSIONAL ENGINEER DAVE BHALLA No. 34350 Exp. 9-30-15 CIVIL STATE OF CALIFORNIA

THE STATE OF CALIFORNIA OR ITS OFFICERS OR AGENTS SHALL NOT BE RESPONSIBLE FOR THE ACCURACY OR COMPLETENESS OF SCANNED COPIES OF THIS PLAN SHEET.

NOTES:

1. THE CONTRACTOR MUST VERIFY LOCATIONS AND ELEVATIONS OF EXISTING DRAINAGE SYSTEMS BEFORE COMMENCEMENT OF WORK.
2. FOR INFORMATION AND DETAILS NOT SHOWN, SEE Std PLANS AND DRAINAGE DETAILS SHEETS.

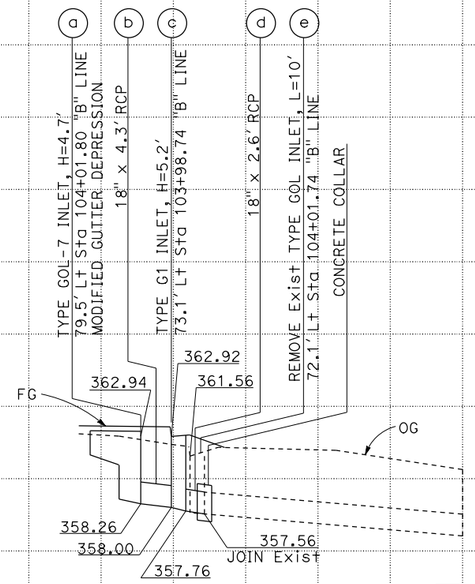

DRAINAGE SYSTEM No. 11
SCALE: Horiz 1" = 10'
Vert 1" = 5'

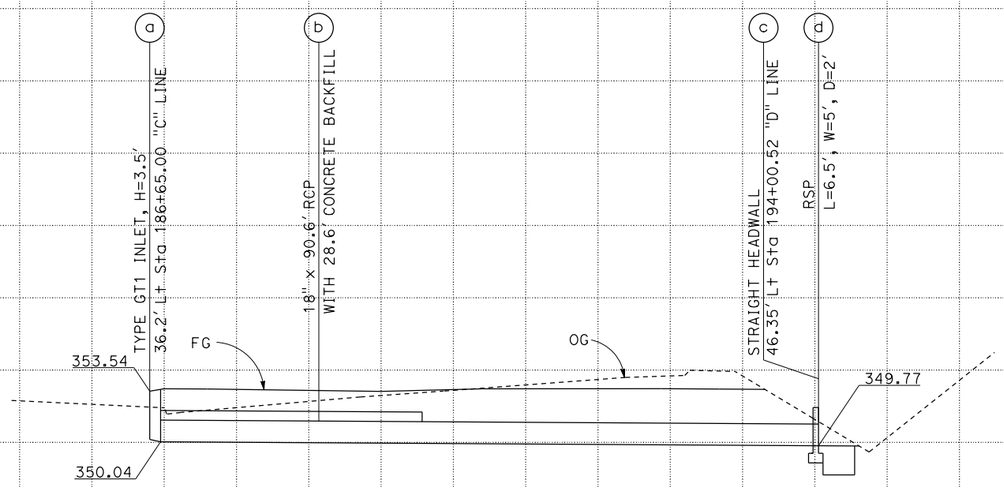

DRAINAGE SYSTEM No. 12
SCALE: Horiz 1" = 10'
Vert 1" = 5'

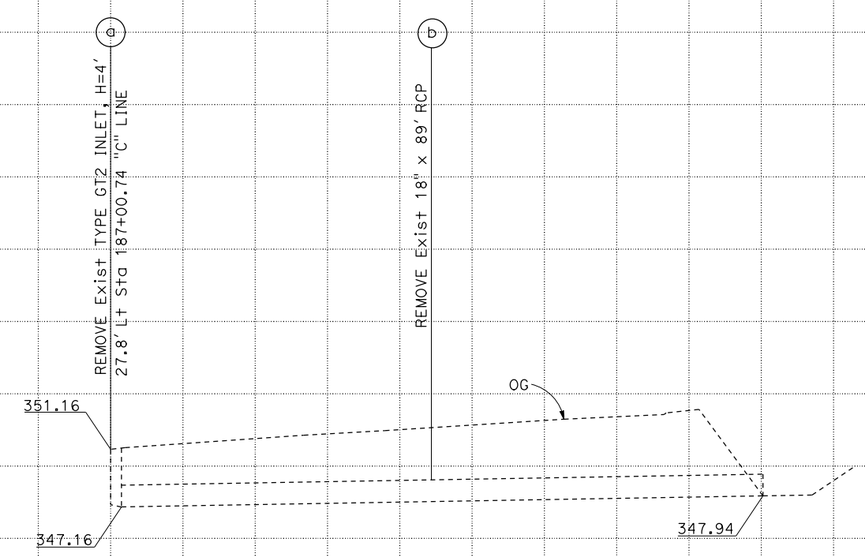

DRAINAGE SYSTEM No. 13
SCALE: Horiz 1" = 10'
Vert 1" = 5'

DRAINAGE PROFILES

SCALE AS SHOWN

DP-8

REVISED BY	DATE REVISED

CEDRIC ESTRADA — DAVE BHALLA — CALCULATED-DESIGNED BY — CHECKED BY

FUNCTIONAL SUPERVISOR: MARIA QUINONEZ

STATE OF CALIFORNIA - DEPARTMENT OF TRANSPORTATION
Caltrans
HYDRAULICS

LAST REVISION 02-03-14 | DATE PLOTTED => 22-JUN-2015 | TIME PLOTTED => 07:09

Dist	COUNTY	ROUTE	POST MILES TOTAL PROJECT	SHEET No.	TOTAL SHEETS
07	LA	60	R7.4/R8.1	49	238

REGISTERED CIVIL ENGINEER 2-3-14 DATE

6-1-15
PLANS APPROVAL DATE

REGISTERED PROFESSIONAL ENGINEER
DAVE BHALLA
No. 34350
Exp. 9-30-15
CIVIL
STATE OF CALIFORNIA

THE STATE OF CALIFORNIA OR ITS OFFICERS OR AGENTS SHALL NOT BE RESPONSIBLE FOR THE ACCURACY OR COMPLETENESS OF SCANNED COPIES OF THIS PLAN SHEET.

NOTES:

1. THE CONTRACTOR MUST VERIFY LOCATIONS AND ELEVATIONS OF EXISTING DRAINAGE SYSTEMS BEFORE COMMENCEMENT OF WORK.
2. FOR INFORMATION AND DETAILS NOT SHOWN, SEE Std PLANS AND DRAINAGE DETAILS SHEETS.

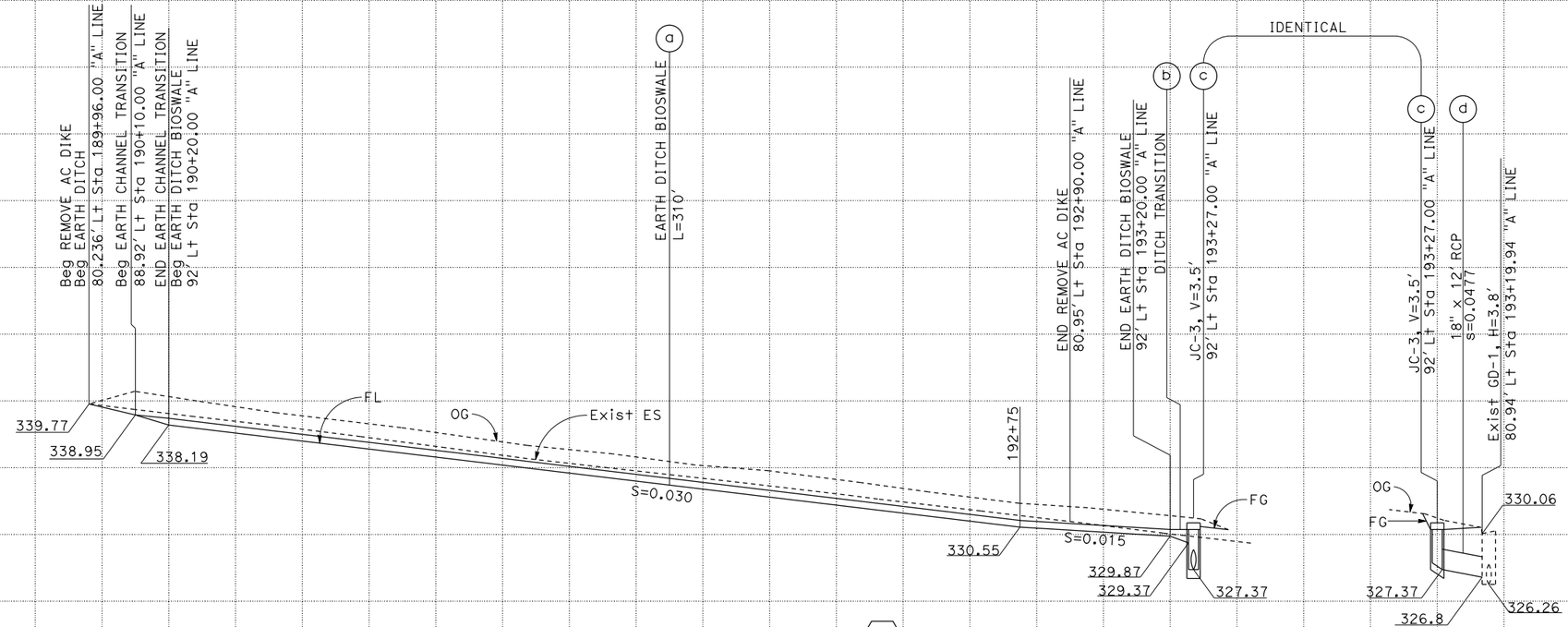

DRAINAGE SYSTEM No. 14
SCALE: Horiz 1" = 20'
Vert 1" = 5'

DRAINAGE PROFILES

SCALE AS SHOWN

DP-9

STATE OF CALIFORNIA - DEPARTMENT OF TRANSPORTATION
Caltrans HYDRAULICS

FUNCTIONAL SUPERVISOR: MARIA QUINONEZ
CALCULATED-DESIGNED BY: CEDRIC ESTRADA
CHECKED BY: DAVE BHALLA
REVISED BY
DATE REVISED

LAST REVISION 02-03-14
DATE PLOTTED => 22-JUN-2015
TIME PLOTTED => 07:09

Dist	COUNTY	ROUTE	POST MILES TOTAL PROJECT	SHEET No.	TOTAL SHEETS
07	LA	60	R7.4/R8.1	50	238

REGISTERED CIVIL ENGINEER 2-3-14 DATE

6-1-15
PLANS APPROVAL DATE

REGISTERED PROFESSIONAL ENGINEER DAVE BHALLA No. 34350 Exp. 9-30-15 CIVIL STATE OF CALIFORNIA

THE STATE OF CALIFORNIA OR ITS OFFICERS OR AGENTS SHALL NOT BE RESPONSIBLE FOR THE ACCURACY OR COMPLETENESS OF SCANNED COPIES OF THIS PLAN SHEET.

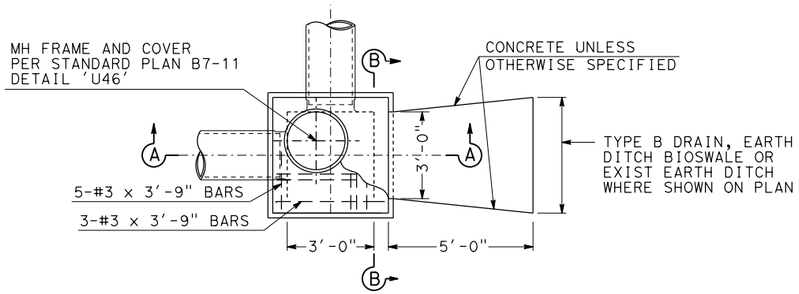

PLAN

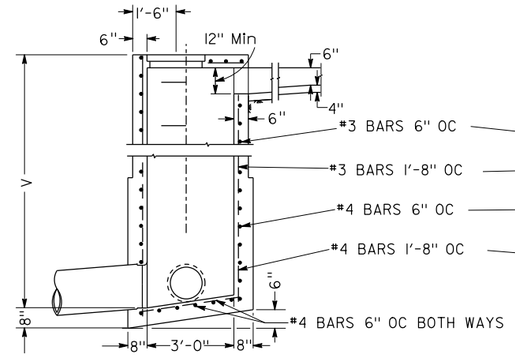

SECTION A-A

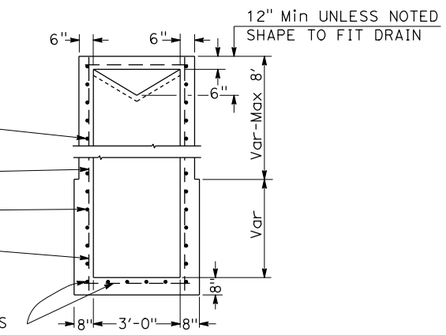

SECTION B-B

JUNCTION CHAMBER No. 3-C (JC 3-C)

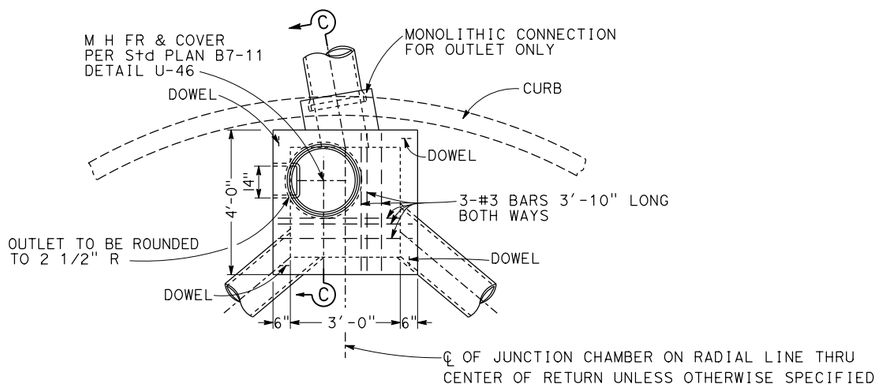

PLAN

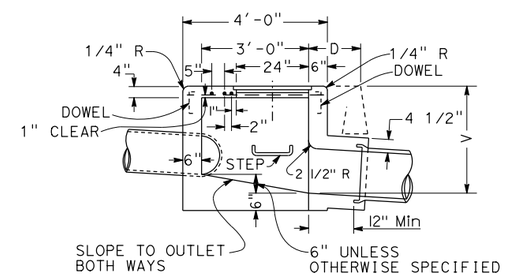

SECTION C-C

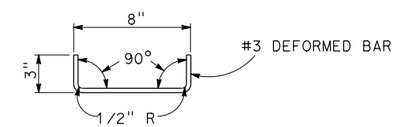

DETAIL OF DOWEL

ONE AT EACH CORNER TO BE USED
WHEN TOP IS POURED SEPARATE

JUNCTION CHAMBER No. 3 (JC 3)

NOTES:

1. CONNECTION PIPES MAY BE PLACED IN ANY POSITION AROUND THE WALLS PROVIDED THEY POINT IN THE PROPER DIRECTION AND THE POSITION IS OTHERWISE CONSISTENT WITH THE DRAINAGE PLAN.
2. DIMENSIONS: D=18" UNLESS OTHERWISE SPECIFIED.
   V=3'-6" UNLESS OTHERWISE SPECIFIED.
3. EXPOSED SURFACE OF THE JUNCTION CHAMBER SHALL CONFORM IN SLOPE, GRADE, COLOR, FINISH AND SCORING TO EXISTING SIDEWALK ADJACENT TO THE JUNCTION CHAMBER. WHERE NO SIDEWALK EXISTS, THE TOP SHALL BE FINISHED TO CONFORM TO STANDARD SIDEWALK SLOPEAND FINISH, AND SCORING LINES SHALL CONFORM AS NEARLY AS POSSIBLE TO 20" SQUARES.
4. FLOOR OF CHAMBER SHALL BE GIVEN A STEEL-TROWELED FINISH AND SHALL SLOPE FROM ALL DIRECTIONS TO OUTLET.
5. MANHOLE SHALL BE PLACED IN CORNER NEAREST OUTLET.
6. OUTLET PIPE SHALL BE CONNECTED TO JUNCTION CHAMBER WITH MONOLITHIC CONNECTION.
7. REINFORCING STEEL NOT REQUIRED IN WALLS WHEN V=6' OR LESS.
8. STEPS: NONE REQUIRED WHERE V=3'-6" OR LESS.
   INSTALL ONE STEP 16"± ABOVE FLOOR WHEN V IS MORE THAN 3'-6" AND LESS THAN 5'-0".
   WHERE V IS MORE THAN 5'-0" STEPS SHALL BE EVENLY SPACED AT 12"± INTERVALS FROM 16"± ABOVE FLOOR TO WITHIN 12"± OF THE TOP OF THE BOX.

DRAINAGE DETAILS

NO SCALE

DD-1

REVISED BY	DATE REVISED

CALCULATED-DESIGNED BY	CHECKED BY
CEDRIC ESTRADA	DAVE BHALLA

FUNCTIONAL SUPERVISOR: MARIA QUINONEZ

STATE OF CALIFORNIA - DEPARTMENT OF TRANSPORTATION
Caltrans HYDRAULICS

LAST REVISION 02-03-14 | DATE PLOTTED => 22-JUN-2015 | TIME PLOTTED => 07:09

Dist	COUNTY	ROUTE	POST MILES TOTAL PROJECT	SHEET No.	TOTAL SHEETS
07	LA	60	R7.4/R8.1	51	238

REGISTERED CIVIL ENGINEER 2-3-14 DATE

6-1-15
PLANS APPROVAL DATE

REGISTERED PROFESSIONAL ENGINEER DAVE BHALLA No. 34350 Exp. 9-30-15 CIVIL STATE OF CALIFORNIA

THE STATE OF CALIFORNIA OR ITS OFFICERS OR AGENTS SHALL NOT BE RESPONSIBLE FOR THE ACCURACY OR COMPLETENESS OF SCANNED COPIES OF THIS PLAN SHEET.

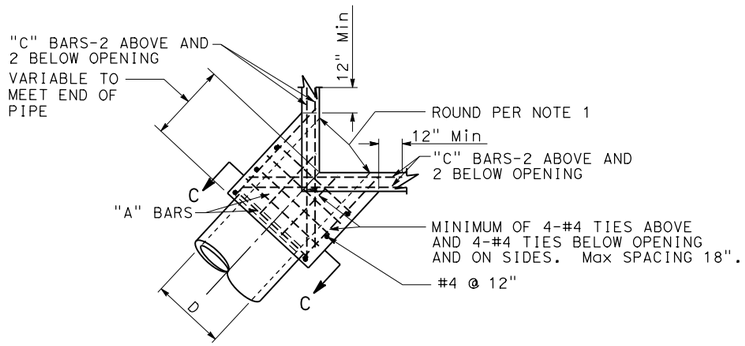

PLAN
CORNER CONNECTION

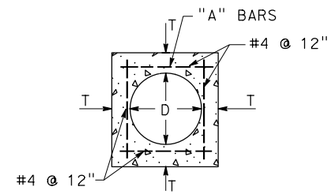

SECTION C-C

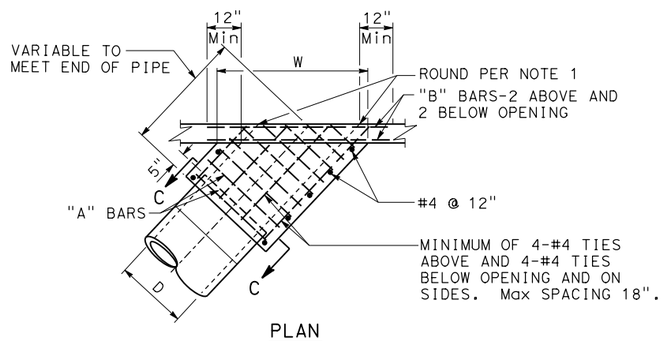

PLAN
SIDE CONNECTION

D	T	"A"	"B"-"C"
12"	4-½"	#4 @ 6"	#5
15"	4-½"		
18"	5"		
21"	5-½"		
24"	6"		
27"	6-½"		
30"	7"		
33"	7"		
36"	7-½"		
39"	8"		
42"	8"		
45"	8"	#5 @ 6"	#6
48"	8"		
51"	8"		
54"	8"		
57"	10"		
60"	10"		
63"	10"		
66"	11"		
69"	11"		
72"	11"		

NOTES:

1. ROUND EDGE OF OUTLET TO 3" RADIUS.
2. REINFORCEMENT SHALL BE 1½" CLEAR FROM THE FACE OF CONCRETE.
3. IN CONNECTING TO AN EXISTING STRUCTURE BREAK OUT PORTIONS OF THE EXISTING STRUCTURE SIX INCHES OUTSIDE ITS INTERSECTION WITH THE NEW CONNECTION. BEND ENDS OF #4 BARS OVER CONNECTION OPENING AS REQUIRED.

MONOLITHIC CONNECTION
FOR PIPES 12" TO 72" INCLUSIVE

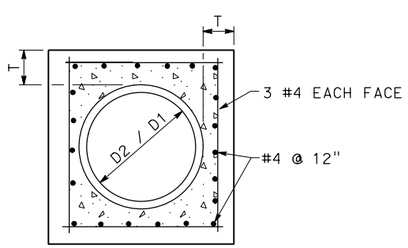

SECTION B-B

D	L	T
12"	1.0'	4"
18"	1.0'	5"
24"	1.0'	6"
36"	1.5'	8"
48"	1.5'	10"
54"	1.5'	10"
60"	1.75'	11"
66"	1.75'	11"
72"	2.0'	12"

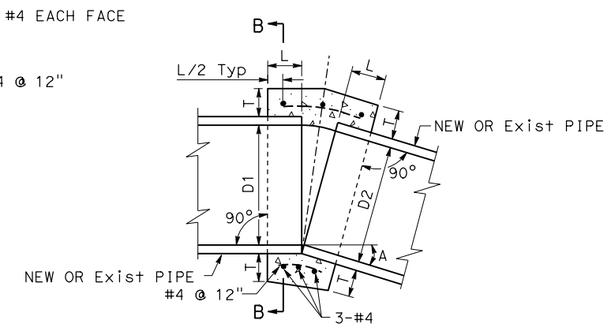

CONCRETE COLLAR

NOTES:

1. WHERE PIPES OF DIFFERENT DIAMETERS ARE JOINED WITH A CONCRETE COLLAR, `L' AND `T' SHALL BE THOSE OF THE LARGER PIPE. D=D1 OR D2, WHICHEVER IS GREATER.
2. FOR PIPE SIZE NOT LISTED USE NEXT SIZE LARGER.
3. OMIT REINFORCING ON PIPES 24" AND LESS IN DIAMETER AND ON ALL PIPES WHERE ANGLE A IS LESS THAN 10°.
4. JOIN PIPES AT INVERTS.
5. REINFORCEMENT SHALL BE PLACED 1½" CLEAR FROM OUTSIDE DIAMETER OF PIPE.

DRAINAGE DETAILS

NO SCALE

DD-2

STATE OF CALIFORNIA - DEPARTMENT OF TRANSPORTATION
Caltrans HYDRAULICS

FUNCTIONAL SUPERVISOR: MARIA QUINONEZ
CALCULATED-DESIGNED BY: CEDRIC ESTRADA
CHECKED BY: DAVE BHALLA
REVISED BY
DATE REVISED

LAST REVISION 02-03-14
DATE PLOTTED => 22-JUN-2015
TIME PLOTTED => 07:09

Dist	COUNTY	ROUTE	POST MILES TOTAL PROJECT	SHEET No.	TOTAL SHEETS
07	LA	60	R7.4/R8.1	52	238

REGISTERED CIVIL ENGINEER 2-3-14 DATE

6-1-15
PLANS APPROVAL DATE

REGISTERED PROFESSIONAL ENGINEER DAVE BHALLA No. 34350 Exp. 9-30-15 CIVIL STATE OF CALIFORNIA

THE STATE OF CALIFORNIA OR ITS OFFICERS OR AGENTS SHALL NOT BE RESPONSIBLE FOR THE ACCURACY OR COMPLETENESS OF SCANNED COPIES OF THIS PLAN SHEET.

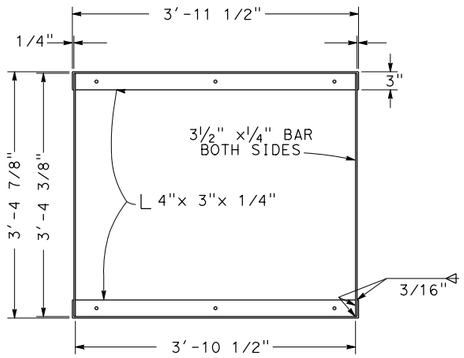

GRATE FRAME DETAIL

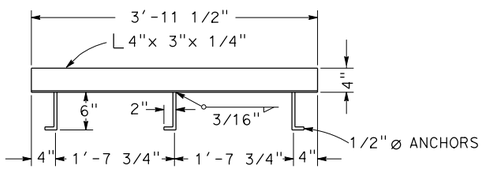

ANCHOR PLACEMENT DETAIL

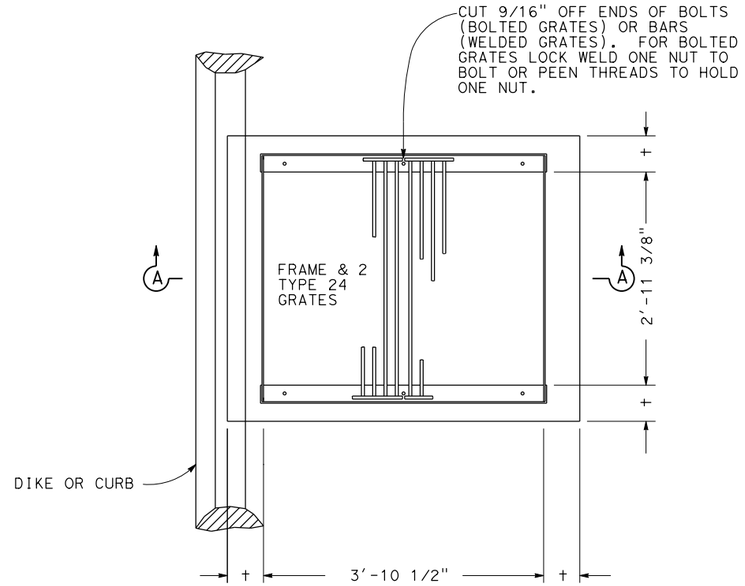

PLAN

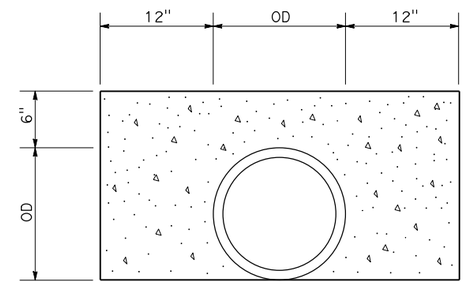

CONCRETE BACKFILL

NOTES:

1. 'H' IS THE DIFFERENCE IN ELEVATION BETWEEN THE OUTLET PIPE FLOW LINE AND THE FLOW LINE OF THE GRATES.
2. STEPS - NONE REQUIRED WHEN 'H' IS 3'-6" OR LESS. INSTALL ONE STEP 16"± ABOVE FLOOR WHEN 'H' IS MORE THAN 3'-6" AND LESS THAN 5'-0". WHERE 'H' IS MORE THAN 5'-0" STEPS SHALL BE EVENLY SPACED @ 12"± INTERVALS FROM 16"± ABOVE FLOOR TO WITHIN 12"± OF THE TOP OF THE BOX. PLACE STEPS IN WALL WITHOUT PIPE OPENINGS. SEE STANDARD PLAN D74C FOR STEP DETAIL.
3. PIPE(S) CAN BE PLACED IN ANY WALL.
4. REINFORCING STEEL NOT REQUIRED IN WALLS WHEN H=6' OR LESS.
5. REINFORCING STEEL IN WALLS SHALL BE #4 BARS @ 18"± CENTERS PLACED 1 1/2" CLEAR TO INSIDE OF BOX.

MISCELLANEOUS IRON & STEEL

INLET TYPE	GRATE TYPE	WEIGHT
GD-1	24 - 12	580

H	t
8'-0" OR LESS	6"
8'1" to 20'- 0"	8"

DRAINAGE INLETS

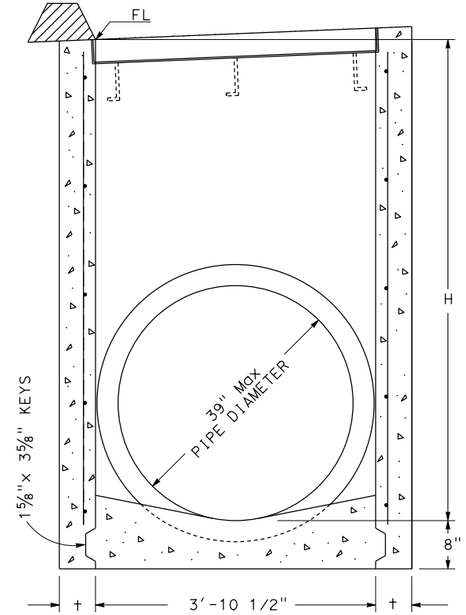

SECTION A-A
(FOR PIPE DIAMETERS 39" OR LESS)

GD-1

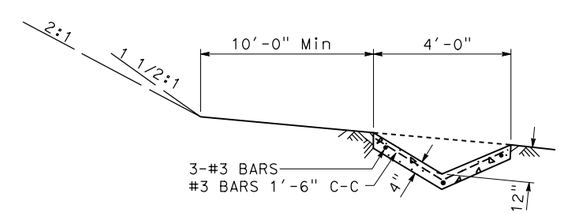

TYPE B DRAIN

DRAINAGE DETAILS

NO SCALE

DD-3

STATE OF CALIFORNIA - DEPARTMENT OF TRANSPORTATION
Caltrans
HYDRAULICS

FUNCTIONAL SUPERVISOR: MARIA QUINONEZ
CALCULATED-DESIGNED BY: CEDRIC ESTRADA
CHECKED BY: DAVE BHALLA
REVISED BY
DATE REVISED

LAST REVISION 02-03-14
DATE PLOTTED => 22-JUN-2015
TIME PLOTTED => 07:09

Dist	COUNTY	ROUTE	POST MILES TOTAL PROJECT	SHEET No.	TOTAL SHEETS
07	LA	60	R7.4/R8.1	53	238

REGISTERED CIVIL ENGINEER 2-3-14 DATE

6-1-15
PLANS APPROVAL DATE

REGISTERED PROFESSIONAL ENGINEER
DAVE BHALLA
No. 34350
Exp. 9-30-15
CIVIL
STATE OF CALIFORNIA

THE STATE OF CALIFORNIA OR ITS OFFICERS OR AGENTS SHALL NOT BE RESPONSIBLE FOR THE ACCURACY OR COMPLETENESS OF SCANNED COPIES OF THIS PLAN SHEET.

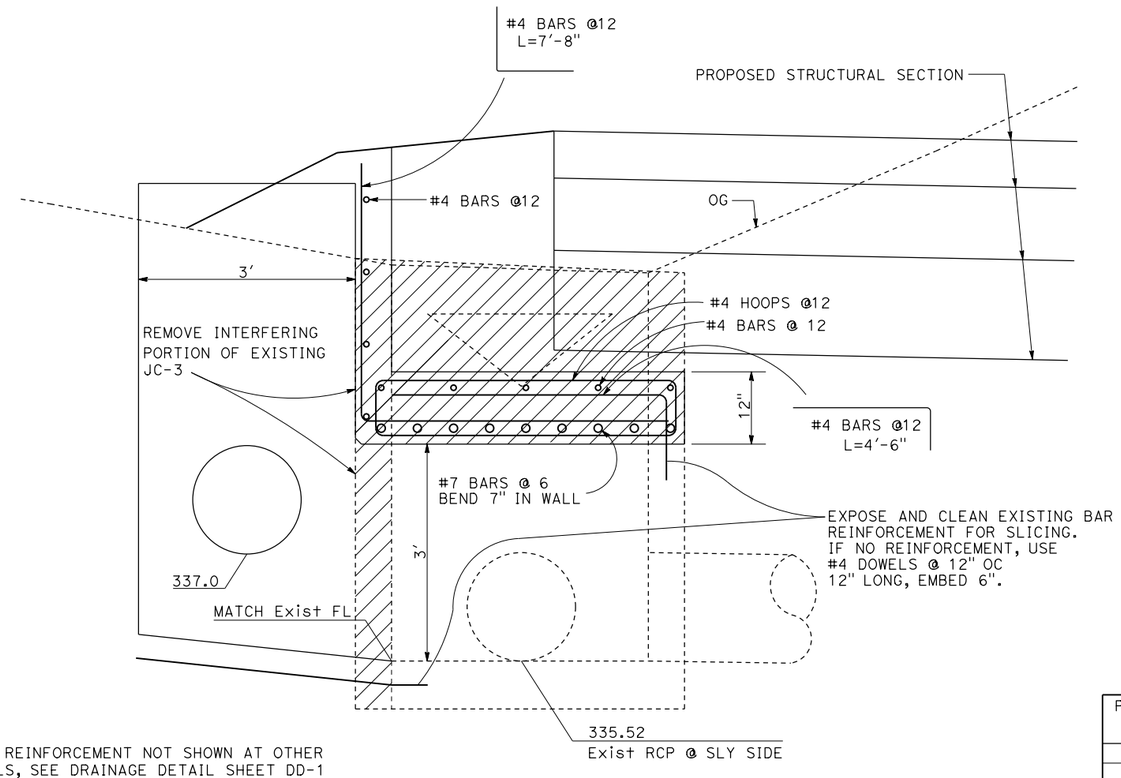

FOR REINFORCEMENT NOT SHOWN AT OTHER WALLS, SEE DRAINAGE DETAIL SHEET DD-1

MODIFY EXISTING JUNCTION CHAMBER No. 3-C
TO MODIFIED JUNCTION CHAMBER No. 3

DRAINAGE SYSTEM No. 8 f

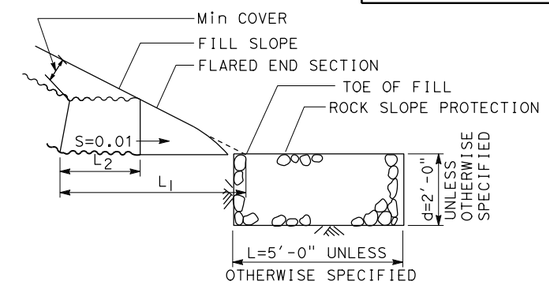

PROFILE

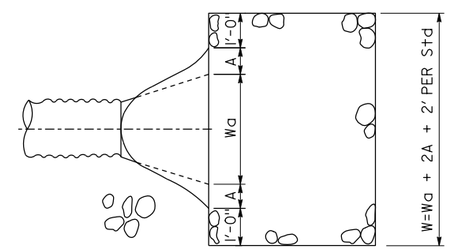

PLAN

ROCK SLOPE PROTECTION DETAIL

PIPE SLOPE S - %	Ø	D=8"	D=12"		D=18"		D=24"	
		L_1	L_1	L_2	L_1	L_2	L_1	L_2
10-15	6°-9°	2'-6"	3'-3"	1'-3"	5'-6"	2'-4"	6'-6"	2'-5"
15-20	9°-11°	2'-7"	3'-3"	1'-3"	5'-6"	2'-5"	6'-7"	2'-5"
20-25	11°-14°	2'-7"	3'-4"	1'-3"	5'-7"	2'-5"	6'-7"	2'-6"
25-30	14°-17°	2'-7"	3'-4"	1'-4"	5'-7"	2'-5"	6'-8"	2'-6"
30-35	17°-19°	2'-7"	3'-4"	1'-4"	5'-7"	2'-6"	6'-9"	2'-7"
35-40	19°-22°	2'-7"	3'-5"	1'-4"	5'-8"	2'-6"	6'-9"	2'-7"
40-45	22°-24°	2'-8"	3'-5"	1'-5"	5'-8"	2'-7"	6'-10"	2'-8"
45-50	24°-26°	2'-8"	3'-5"	1'-5"	5'-8"	2'-7"	6'-10"	2'-8"

OUTLET DETAIL FOR CSP @ TOE OF SLOPE

D	Min COVER
8"	6"
12"	6"
18"	12"
24"	12"

DRAINAGE DETAILS

NO SCALE

DD-4

STATE OF CALIFORNIA - DEPARTMENT OF TRANSPORTATION
Caltrans
HYDRAULICS

FUNCTIONAL SUPERVISOR: MARIA QUINONEZ
CALCULATED-DESIGNED BY: CEDRIC ESTRADA
CHECKED BY: DAVE BHALLA
REVISED BY
DATE REVISED

LAST REVISION 02-03-14
DATE PLOTTED => 22-JUN-2015
TIME PLOTTED => 07:09

Dist	COUNTY	ROUTE	POST MILES TOTAL PROJECT	SHEET No.	TOTAL SHEETS
07	LA	60	R7.4/R8.1	54	238

REGISTERED CIVIL ENGINEER 2-3-14 DATE

6-1-15
PLANS APPROVAL DATE

REGISTERED PROFESSIONAL ENGINEER
DAVE BHALLA
No. 34350
Exp. 9-30-15
CIVIL
STATE OF CALIFORNIA

THE STATE OF CALIFORNIA OR ITS OFFICERS OR AGENTS SHALL NOT BE RESPONSIBLE FOR THE ACCURACY OR COMPLETENESS OF SCANNED COPIES OF THIS PLAN SHEET.

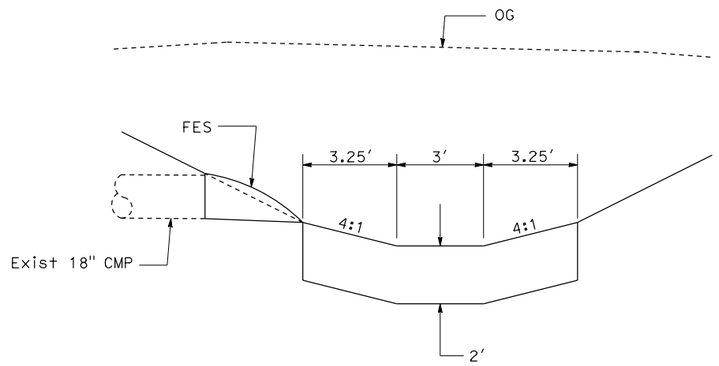

ROCK SLOPE PROTECTION (1) (b)
PROFILE

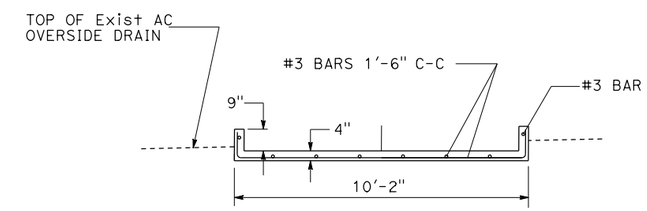

X-SECTION AT END
OF DITCH TRANSITION

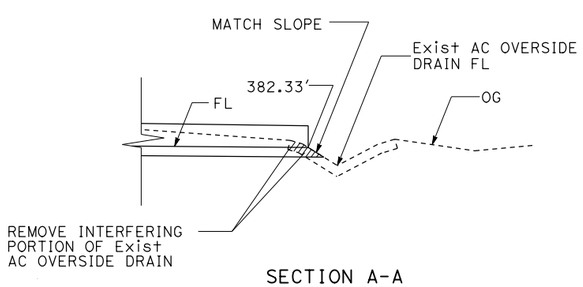

SECTION A-A

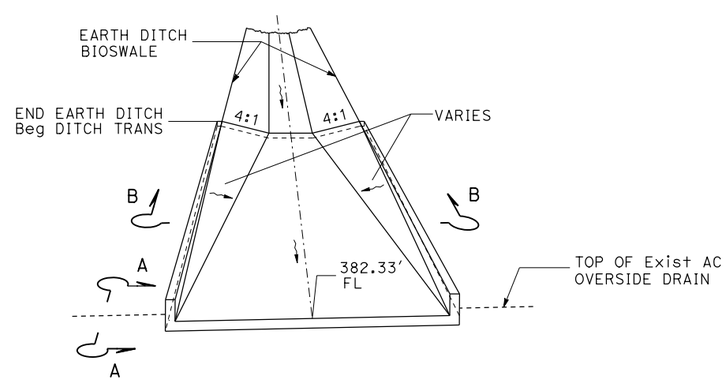

DITCH TRANSITION
DRAINAGE SYSTEM No. (1) (f)

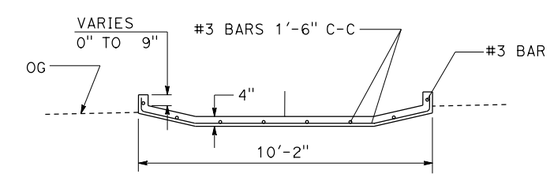

SECTION B-B

DRAINAGE DETAILS

NO SCALE

DD-5

REVISED BY	DATE REVISED

CEDRIC ESTRADA	DAVE BHALLA
CALCULATED-DESIGNED BY	CHECKED BY
FUNCTIONAL SUPERVISOR	MARIA QUINONEZ

STATE OF CALIFORNIA - DEPARTMENT OF TRANSPORTATION
Caltrans
HYDRAULICS

LAST REVISION 02-03-14
DATE PLOTTED => 22-JUN-2015
TIME PLOTTED => 07:09

Dist	COUNTY	ROUTE	POST MILES TOTAL PROJECT	SHEET No.	TOTAL SHEETS
07	LA	60	R7.4/R8.1	55	238

REGISTERED CIVIL ENGINEER 2-3-14 DATE

6-1-15
PLANS APPROVAL DATE

REGISTERED PROFESSIONAL ENGINEER DAVE BHALLA No. 34350 Exp. 9-30-15 CIVIL STATE OF CALIFORNIA

THE STATE OF CALIFORNIA OR ITS OFFICERS OR AGENTS SHALL NOT BE RESPONSIBLE FOR THE ACCURACY OR COMPLETENESS OF SCANNED COPIES OF THIS PLAN SHEET.

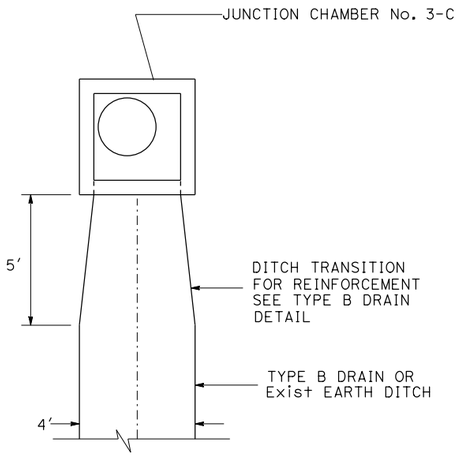

PLAN

DRAINAGE SYSTEM No. 6 d

DRAINAGE SYSTEM No. 8 i

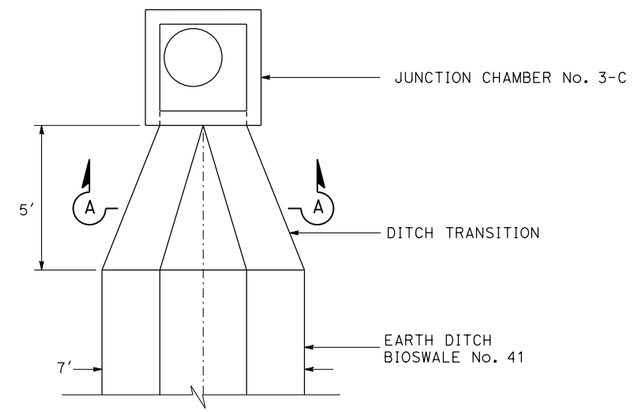

PLAN

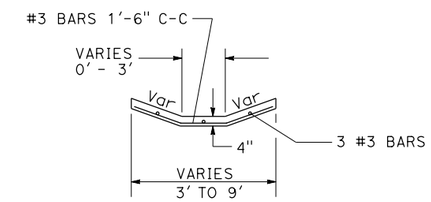

SECTION A-A

DRAINAGE SYSTEM No. 14 b

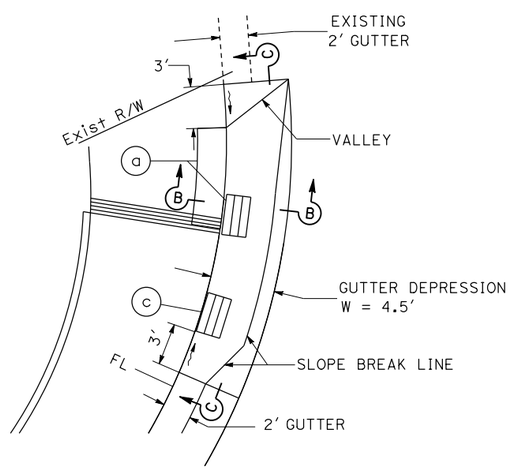

PLAN

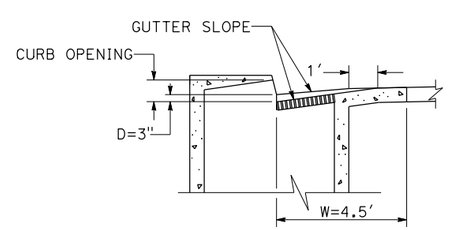

SECTION B-B

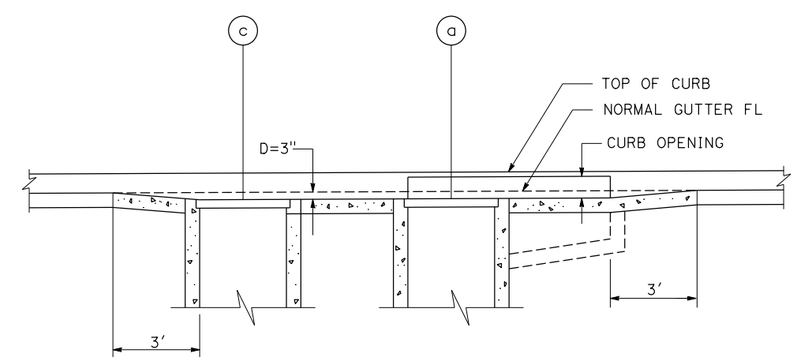

SECTION C-C

NOTE: ESTABLISH CURB OPENING HEIGHT AT MIDPOINT OF GRATE.

MODIFIED GUTTER DEPRESSION FOR

DRAINAGE SYSTEM No. 11 a & 11 c

DRAINAGE DETAILS

NO SCALE

DD-6

STATE OF CALIFORNIA - DEPARTMENT OF TRANSPORTATION
Caltrans
HYDRAULICS

FUNCTIONAL SUPERVISOR: MARIA QUINONEZ

CALCULATED-DESIGNED BY: CEDRIC ESTRADA
CHECKED BY: DAVE BHALLA
REVISED BY
DATE REVISED

LAST REVISION 02-03-14
DATE PLOTTED => 22-JUN-2015
TIME PLOTTED => 07:09

Dist	COUNTY	ROUTE	POST MILES TOTAL PROJECT	SHEET No.	TOTAL SHEETS
07	LA	60	R7.4/R8.1	56	238

REGISTERED CIVIL ENGINEER 2-3-14 DATE

6-1-15
PLANS APPROVAL DATE

REGISTERED PROFESSIONAL ENGINEER DAVE BHALLA No. 34350 Exp. 9-30-15 CIVIL STATE OF CALIFORNIA

THE STATE OF CALIFORNIA OR ITS OFFICERS OR AGENTS SHALL NOT BE RESPONSIBLE FOR THE ACCURACY OR COMPLETENESS OF SCANNED COPIES OF THIS PLAN SHEET.

SUMMARY OF DRAINAGE QUANTITIES

DRAINAGE PLAN SHEET No.	DRAINAGE SYSTEM No.	DRAINAGE UNIT	"H" OR "V"	TYPE 24-12 FRAME AND GRATE (N)	TYPE 18-9 FRAME AND GRATE (N)	TYPE 24-12X FRAME AND GRATE (N)	Misc IRON AND STEEL	MINOR CONCRETE (MINOR STRUCTURE)	MINOR CONCRETE (BACKFILL)	MINOR CONCRETE (DITCH LINING)	MINOR Conc (GUTTER DEPRESSION)	DITCH EXCAVATION	REMOVE PIPE	REMOVE INLET	ROCK SLOPE PROTECTION (FACING, METHOD B)	18" Conc FLARED END SECTION	15" RCP	18" RCP	24" RCP	TYPE U46 MANHOLE FRAME AND COVER (N)	MAXIMUM COVER (N)	PIPE JOINT CLASSIFICATION (N)	DESCRIPTION	STATION	DRAINAGE PLAN SHEET No.	DRAINAGE SYSTEM No.	DRAINAGE UNIT
			LF	EA	EA	EA	LB	CY	CY	CY	CY	CY	LF	EA	CY	EA	LF	LF	LF	EA	LF						
D-1	1	a														1							CONCRETE FLARED END SECTION	76.47′ R+ 172+00.00 "A" LINE	D-1	1	a
		b													4.2								ROCK SLOPE PROTECTION	79.85′ R+ 172+00.00 "A" LINE			b
		c											25.7										REMOVE 18" x 19′ RCP				c
		d										975											EARTH DITCH (BIOSWALE)				d
		e	5				235	1.5												1			JUNCTION CHAMBER No. 3	100.64′ R+ 172+00.00 "A" LINE			e
		f								1.2													DITCH TRANSITION	11.8′ L+ 178+88.71 "F" LINE			f
D-1	2	a											14										REMOVE 18" CMP		D-1	2	a
		b												1									REMOVE INLET	11.8′ L+ 178+88.71 "F" LINE			b
D-1	3	a	4.0	2			580	1.64															GD-1 INLET	32′ R+ 179+26.09 "F" LINE	D-1	3	a
		b																25			2.7	S	18" RCP				b
		c	5.4	2			580	2.05															GD-1 INLET	32′ R+ 179+54.00 "F" LINE			c
		d											21										REMOVE 18" CMP				d
		e												1									REMOVE INLET	11.06′ R+ 179+52.05 "F" LINE			e
		f											68.6										REMOVE 18" RCP				f
		g												1									REMOVE INLET	7.56′ R+ 180+22.64 "F" LINE			g
D-2	4	a													2.41								ROCK SLOPE PROTECTION		D-2	4	a
		b														1							CONCRETE FLARED END SECTION	16.6′ L+ 185+00.00 "F" LINE			b
		c																9.7			1.5	S	18" RCP				c
		d	3.0		1		249	1.02															TYPE G5 INLET	4.1′ L+ 185+00.00 "F" LINE			d
SHEET DQ-1 TOTAL				4	1		1644	6.21		1.2		975	129.3	3	6.61	2		34.7		1							

(N) - NOT A SEPARATE PAY ITEM, FOR INFORMATION ONLY.

DRAINAGE QUANTITIES

DQ-1

CEDRIC ESTRADA — REVISED BY
DAVE BHALLA — DATE REVISED
CALCULATED-DESIGNED BY
CHECKED BY
FUNCTIONAL SUPERVISOR
MARIA QUINONEZ

STATE OF CALIFORNIA - DEPARTMENT OF TRANSPORTATION
Caltrans
HYDRAULICS

LAST REVISION 02-03-14
DATE PLOTTED => 22-JUN-2015
TIME PLOTTED => 07:09

Dist	COUNTY	ROUTE	POST MILES TOTAL PROJECT	SHEET No.	TOTAL SHEETS
07	LA	60	R7.4/R8.1	57	238

REGISTERED CIVIL ENGINEER 2-3-14 DATE

6-1-15
PLANS APPROVAL DATE

REGISTERED PROFESSIONAL ENGINEER DAVE BHALLA No. 34350 Exp. 9-30-15 CIVIL STATE OF CALIFORNIA

THE STATE OF CALIFORNIA OR ITS OFFICERS OR AGENTS SHALL NOT BE RESPONSIBLE FOR THE ACCURACY OR COMPLETENESS OF SCANNED COPIES OF THIS PLAN SHEET.

SUMMARY OF DRAINAGE QUANTITIES

DRAINAGE PLAN SHEET No.	DRAINAGE SYSTEM No.	DRAINAGE UNIT	"H" OR "V"	TYPE 24-12 FRAME AND GRATE (N)	TYPE 18-9 FRAME AND GRATE (N)	TYPE 24-12X FRAME AND GRATE (N)	Misc IRON AND STEEL	MINOR CONCRETE (MINOR STRUCTURE)	MINOR CONCRETE (BACKFILL)	MINOR CONCRETE (DITCH LINING)	MINOR Conc (GUTTER DEPRESSION)	DITCH EXCAVATION	REMOVE PIPE	REMOVE INLET	ROCK SLOPE PROTECTION (FACING, METHOD B)	18" Conc FLARED END SECTION	15" RCP	18" RCP	24" RCP	TYPE U46 MANHOLE FRAME AND COVER (N)	MAXIMUM COVER (N)	PIPE JOINT CLASSIFICATION (N)	DESCRIPTION	STATION	DRAINAGE PLAN SHEET No.	DRAINAGE SYSTEM No.	DRAINAGE UNIT
			LF	EA	EA	EA	LB	CY	CY	CY	CY	CY	LF	EA	CY	EA	LF	LF	LF	EA	LF						
D-2	5	a											16.5										REMOVE 24" RCP		D-2	5	a
		b												1									REMOVE INLET	1' L+ 186+05.10.00 "F" LINE			b
		c	8.7		1		249	3.71															TYPE G4 INLET	15.5' L+ 184+97.00 "F" LINE			c
		d																	3.4		6.3	S	24" RCP				d
		e	8.2		2		498	5.45															TYPE GT2 INLET	15.9' L+ 185+05.10 "F" LINE			e
		f																	13.8		6.3	S	24" RCP				f
D-2	6	a														1							CONCRETE FLARED END SECTION	122.79 R+ 183+12.00 "A" LINE	D-2	6	a
		b																62.2					18" RCP				b
		c	3.16				235	1.33												1			JUNCTION CHAMBER No. 3-C	69' L+ 183+98.00 "E" LINE			c
		d								0.21													DITCH TRANSITION				d
		e								3.11													TYPE B DRAIN				e
D-2	7	a												1									REMOVE INLET	62.50' R+ 101+35.55 "B" LINE	D-2	7	a
		b											92.8										REMOVE 12" CSP DD				b
D-2	8	a	2.1	2			580	1.06															GD-1 INLET	34.7' L+ 189+75.86 "D" LINE	D-2	8	a
		b							4.54								27.5						15" RCP				b
		c	2.2	2			580	1.09															GD-1 INLET	35.97' L+ 190+16.50 "D" LINE			c
		d												1									REMOVE INLET	26.9' L+ 189+96.16 "D" LINE			d
		e											21.1										REMOVE 18" RCP				e
		f	7.1				235	2.77												1			MODIFY Exist JC-3C TO MODIFIED JC-3	52.3' L+ 191+99.40 "D" LINE			f
SHEET DQ-2 TOTAL				4	3		2,377	15.41	4.54	3.32			130.4	3		1	27.5	62.2	17.2	2							

(N) - NOT A SEPARATE PAY ITEM, FOR INFORMATION ONLY.

DRAINAGE QUANTITIES

DQ-2

CEDRIC ESTRADA — REVISED BY
DAVE BHALLA — DATE REVISED
CALCULATED-DESIGNED BY
CHECKED BY
FUNCTIONAL SUPERVISOR
MARIA QUINONEZ
STATE OF CALIFORNIA - DEPARTMENT OF TRANSPORTATION
Caltrans
HYDRAULICS

LAST REVISION 02-03-14 DATE PLOTTED => 22-JUN-2015 TIME PLOTTED => 07:09

Dist	COUNTY	ROUTE	POST MILES TOTAL PROJECT	SHEET No.	TOTAL SHEETS
07	LA	60	R7.4/R8.1	58	238

REGISTERED CIVIL ENGINEER 2-3-14 DATE

6-1-15
PLANS APPROVAL DATE

REGISTERED PROFESSIONAL ENGINEER DAVE BHALLA No. 34350 Exp. 9-30-15 CIVIL STATE OF CALIFORNIA

THE STATE OF CALIFORNIA OR ITS OFFICERS OR AGENTS SHALL NOT BE RESPONSIBLE FOR THE ACCURACY OR COMPLETENESS OF SCANNED COPIES OF THIS PLAN SHEET.

SUMMARY OF DRAINAGE QUANTITIES

DRAINAGE PLAN SHEET No.	DRAINAGE SYSTEM No.	DRAINAGE UNIT	"H" OR "V"	TYPE 24-12 FRAME AND GRATE (N)	TYPE 18-9 FRAME AND GRATE (N)	TYPE 24-12X FRAME AND GRATE (N)	Misc IRON AND STEEL	MINOR CONCRETE (MINOR STRUCTURE)	MINOR CONCRETE (BACKFILL)	MINOR CONCRETE (DITCH LINING)	MINOR Conc (GUTTER DEPRESSION)	DITCH EXCAVATION	REMOVE PIPE	REMOVE INLET	ROCK SLOPE PROTECTION (FACING, METHOD B)	18" Conc FLARED END SECTION	15" RCP	18" RCP	24" RCP	TYPE U46 MANHOLE FRAME AND COVER (N)	MAXIMUM COVER (N)	PIPE JOINT CLASSIFICATION (N)	DESCRIPTION	STATION	DRAINAGE PLAN SHEET No.	DRAINAGE SYSTEM No.	DRAINAGE UNIT
			LF	EA	EA	EA	LB	CY	CY	CY	CY	CY	LF	EA	CY	EA	LF	LF	LF	EA	LF						
D-2	8	g								0.21								20.5			3.5	S	18" RCP				g
		h	3.5				235	1.41												1			JUNCTION CHAMBER No. 3-C	52.7′ L+ 192+35.00 "D" LINE			h
		i																					DITCH TRANSITION				i
D-2	9	a														1							CONCRETE FLARED END SECTION	47.7′ L+ 192+60.00 "D" LINE	D-2	9	a
		b																11.8					18" RCP				b
		c	3.0	1			326	0.95															TYPE G1 INLET	36′ L+ 192+60.00 "D" LINE			c
D-2	10	a	3.8			1	239	1.13															TYPE G1 INLET	63′ R+ 103+00.00 "B" LINE	D-2	10	a
		b																18			2.3	S	18" RCP				b
		c	4			1	239	1.53															TYPE G4 INLET	63′ R+ 103+20.00 "B" LINE			c
		d																15.4			2.9	S	18" RCP				d
		e	6.5				235	2.56												1			JUNCTION CHAMBER No. 3	74.65′ R+ 103+34.30 "B" LINE			e
		f																25.6			4.5	S	18" RCP				f
		g														1							CONCRETE FLARED END SECTION	53.04′ L+ 194+41.20 "D" LINE			g
		h													2.41								ROCK SLOPE PROTECTION	53.04′ L+ 194+41.20 "D" LINE			h
		i																36.3			4.0	S	18" RCP				i
		j												1									REMOVE INLET	40′ R+ 103+25.00 "B" LINE			j
		k											22.0										REMOVE 18" RCP				k
		l												1									REMOVE INLET	41.96′ R+ 103+47.30 "B" LINE			l
		m											36.4										REMOVE 18" RCP				m
SHEET DQ-3 TOTAL			1		2	1274	7.58		0.21			58.4	2	2.41	2		127.6		2								

(N) - NOT A SEPARATE PAY ITEM, FOR INFORMATION ONLY

DRAINAGE QUANTITIES

DQ-3

CEDRIC ESTRADA — REVISED BY
DAVE BHALLA — DATE REVISED
CALCULATED-DESIGNED BY
CHECKED BY
FUNCTIONAL SUPERVISOR
MARIA QUINONEZ

STATE OF CALIFORNIA - DEPARTMENT OF TRANSPORTATION
Caltrans
HYDRAULICS

LAST REVISION 02-03-14
DATE PLOTTED => 22-JUN-2015
TIME PLOTTED => 07:09

Dist	COUNTY	ROUTE	POST MILES TOTAL PROJECT	SHEET No.	TOTAL SHEETS
07	LA	60	R7.4/R8.1	59	238

REGISTERED CIVIL ENGINEER 2-3-14 DATE

6-1-15
PLANS APPROVAL DATE

REGISTERED PROFESSIONAL ENGINEER DAVE BHALLA No. 34350 Exp. 9-30-15 CIVIL STATE OF CALIFORNIA

THE STATE OF CALIFORNIA OR ITS OFFICERS OR AGENTS SHALL NOT BE RESPONSIBLE FOR THE ACCURACY OR COMPLETENESS OF SCANNED COPIES OF THIS PLAN SHEET.

SUMMARY OF DRAINAGE QUANTITIES

DRAINAGE PLAN SHEET No.	DRAINAGE SYSTEM No.	DRAINAGE UNIT	"H" OR "V"	TYPE 24-12 FRAME AND GRATE (N)	TYPE 18-9 FRAME AND GRATE (N)	TYPE 24-12X FRAME AND GRATE (N)	Misc IRON AND STEEL	MINOR CONCRETE (MINOR STRUCTURE)	MINOR CONCRETE (BACKFILL)	MINOR CONCRETE (DITCH LINING)	MINOR Conc (GUTTER DEPRESSION)	DITCH EXCAVATION	REMOVE PIPE	REMOVE INLET	ROCK SLOPE PROTECTION (FACING, METHOD B)	18" Conc FLARED END SECTION	15" RCP	18" RCP	24" RCP	TYPE U46 MANHOLE FRAME AND COVER (N)	MAXIMUM COVER (N)	PIPE JOINT CLASSIFICATION (N)	DESCRIPTION	STATION	DRAINAGE PLAN SHEET No.	DRAINAGE SYSTEM No.	DRAINAGE UNIT
			LF	EA	EA	EA	LB	CY	CY	CY	CY	CY	LF	EA	CY	EA	LF	LF	LF	EA	LF						
D-2	11	a	4.7			1	239	3.37			1.5												TYPE GOL-7 INLET	79.5′ Lt Sta 104+01.80 "B" LINE	D-2	11	a
		b																4.3			3.8	S	18" RCP				b
		c	5.2			1	239	1.43															TYPE G1 INLET	73.1′ Lt Sta 103+98.74 "B" LINE			c
		d																2.6			3.8	S	18" RCP				d
		e												1									REMOVE INLET	72.1′ Lt Sta 103+98.74 "B" LINE			e
D-2	12	a	3.5		2		498	1.91															TYPE GT1 INLET	36.2′ Lt 186+65.00 "C" LINE	D-2	12	a
		b							6.82									90.6			2.4	S	18" RCP				b
		c						0.97															STRAIGHT HEADWALL	46.35′ Lt 194+00.52 "D" LINE			c
		d													2.41								ROCK SLOPE PROTECTION	46.35′ Lt 194+00.52 "D" LINE			d
D-2	13	a												1									REMOVE INLET	27.8′ Lt Sta 187+00.74 "C" LINE	D-2	13	a
		b											89										REMOVE 18" RCP				b
D-3	14	a										230											EARTH DITCH (BIOSWALE)		D-3	14	a
		b								0.25													DITCH TRANSITION				b
		c	3.5				235	1.41												1			JUNCTION CHAMBER No. 3-C	92′ Lt 193+27.00 ℄ Fwy			c
		d																12.0			2.2	S	18" RCP				d
SHEET DQ-4 TOTAL				2		1211	9.09	6.82	0.25	1.5	230	89	2	2.41			109.5		1								
SHEET DQ-3 TOTAL			1		2	1274	7.58		0.21			58.4	2	2.41	2		127.6		2								
SHEET DQ-2 TOTAL			4	3		2377	15.41	4.54	3.32			130.4	3		1	27.5	62.2	17.2	2								
SHEET DQ-1 TOTAL			4	1		1644	6.21		1.2		975	129.3	3	6.61	2		34.7		1								
PROJECT TOTAL			9	6	2	6506	38.29	11.36	4.98	1.5	1205	407.1	10	11.43	5	27.5	334.0	17.2	6								

(N) - NOT A SEPARATE PAY ITEM, FOR INFORMATION ONLY

DRAINAGE QUANTITIES

DQ-4

CEDRIC ESTRADA — REVISED BY
DAVE BHALLA — DATE REVISED
CALCULATED-DESIGNED BY
CHECKED BY
FUNCTIONAL SUPERVISOR
MARIA QUINONEZ

STATE OF CALIFORNIA - DEPARTMENT OF TRANSPORTATION
Caltrans
HYDRAULICS

LAST REVISION 02-03-14
DATE PLOTTED => 22-JUN-2015
TIME PLOTTED => 07:09

Dist	COUNTY	ROUTE	POST MILES TOTAL PROJECT	SHEET No.	TOTAL SHEETS
07	LA	60	R7.4/R8.1	60	238

REGISTERED CIVIL ENGINEER 1-22-14 DATE

6-1-15
PLANS APPROVAL DATE

REGISTERED PROFESSIONAL ENGINEER HAYKAZ AGHAJANIAN No. C53866 Exp 12-31-15 CIVIL STATE OF CALIFORNIA

THE STATE OF CALIFORNIA OR ITS OFFICERS OR AGENTS SHALL NOT BE RESPONSIBLE FOR THE ACCURACY OR COMPLETENESS OF SCANNED COPIES OF THIS PLAN SHEET.

NOTES:

1. FOR ACCURATE RIGHT OF WAY DATA, CONTACT RIGHT OF WAY ENGINEERING AT DISTRICT OFFICE.
2. (*) THE EXISTING MANHOLE OWNED BY AT&T TO BE ABANDONED BY CONTRACTOR.
3. (*1) UTILITY RELOCATION SHALL BE DONE BY OTHERS AFTER ROUGH GRADING IS PERFORMED BY CONTRACTOR. FINAL GRADING TO BE COMPLETED BY THE CONTRACTOR AFTER THE UTILITY RELOCATION.
4. (*2) THE AREA FOR THE UTILITY FACILITIES MANHOLE, TRANSFORME AND POWER METER OWNED BY SCE TO BE RELOCATED BY OTHERS.
5. (***) UTILITY FACILITIES TO BE RELOCATED BY OTHERS.
6. (X1) THE EXISTING UNDERGROUND POWER OWNED BY T-MOBILE SHALL BE RELOCATED TWO WEEKS PRIOR TO CONSTRUCTION BY OTHERS.
7. UTILITY OWNERS FOR THIS PROJECT:

POWER	- SOUTHERN CALIFORNIA EDISON (SCE)
TELEPHONE	- AMERICAN TELEPHONE & TELEGRAPH (AT&T)
FIBER OPTIC	- AMERICAN TELEPHONE & TELEGRAPH (AT&T) T-MOBILE
WATER	- SAN GABRIEL VALLEY WATER COMPANY (SGVWC)
GAS	- SOUTHERN CALIFORNIA GAS COMPANY

ABBREVIATIONS:

NS	NORTH OF SOUTH P/L
SN	SOUTH OF NORTH P/L
EW	EAST OF WEST P/L
UG	UNDER GROUND
MCD	MULTIPLE CONCRETE DUCT
Tel	TELEPHONE
C-PC	PLASTIC DUCT (NOT ENCASED)
C/F	CURB FACE
Du CEM	DUCT CEMENT

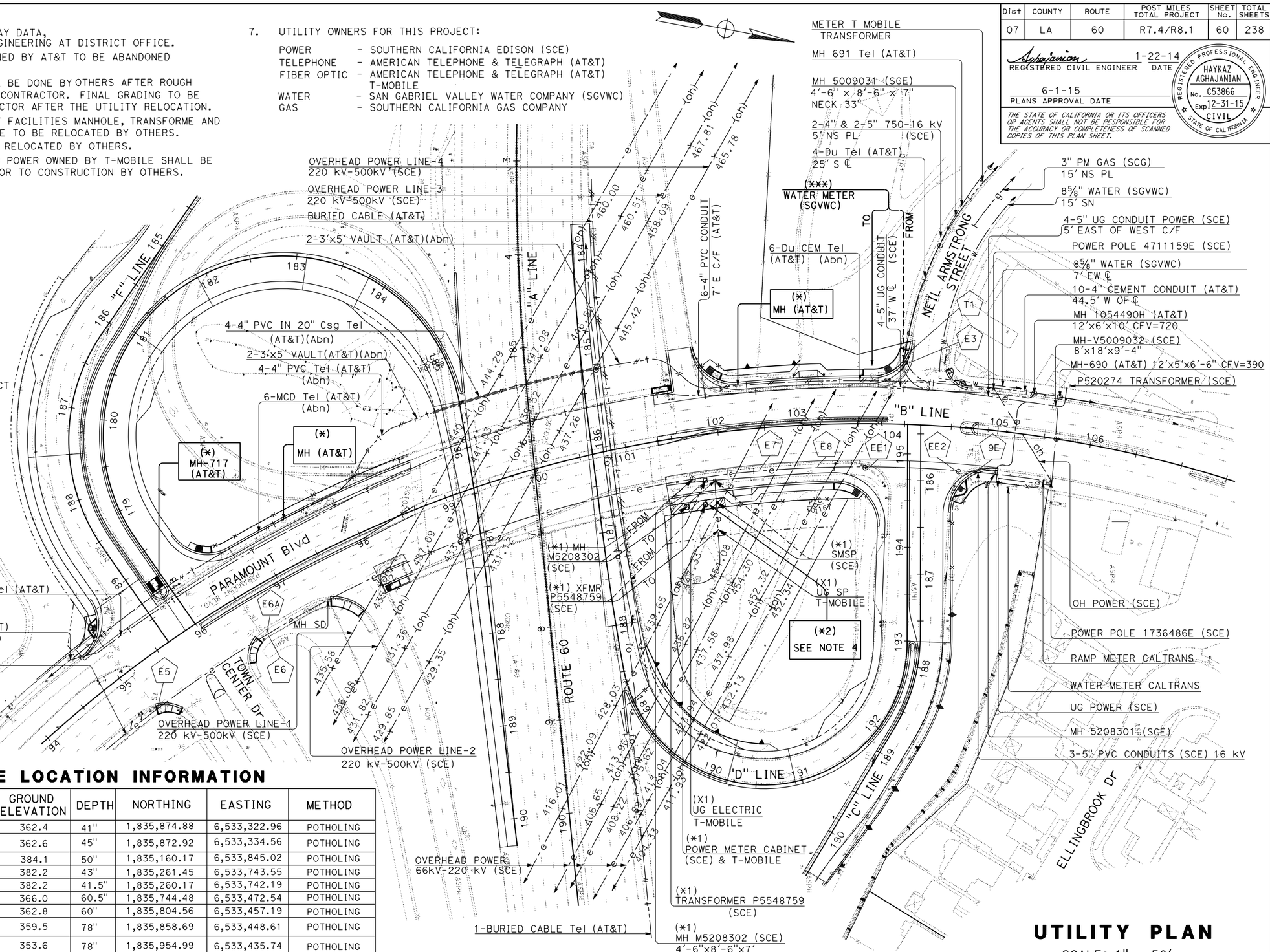

POSITIVE LOCATION INFORMATION

No. (G3)	UTILITY FACILITY	UTILITY COMPANY	GROUND ELEVATION	DEPTH	NORTHING	EASTING	METHOD
T1	4-DU	(AT&T)	362.4	41"	1,835,874.88	6,533,322.96	POTHOLING
E3	2-4" Cond 2-5" Cond	(SCE)	362.6	45"	1,835,872.92	6,533,334.56	POTHOLING
E5	3-5" Cond	(SCE)	384.1	50"	1,835,160.17	6,533,845.02	POTHOLING
E6	3-5" Cond	(SCE)	382.2	43"	1,835,261.45	6,533,743.55	POTHOLING
E6A	3-5" Cond	(SCE)	382.2	41.5"	1,835,260.17	6,533,742.19	POTHOLING
E7	3-5" Cond	(SCE)	366.0	60.5"	1,835,744.48	6,533,472.54	POTHOLING
E8	3-5" Cond	(SCE)	362.8	60"	1,835,804.56	6,533,457.19	POTHOLING
EE1	3-5" Cond 16" Stl Csg	(SCE)	359.5	78"	1,835,858.69	6,533,448.61	POTHOLING
EE2	3-5" Cond 16" Stl Csg	(SCE)	353.6	78"	1,835,954.99	6,533,435.74	POTHOLING
9E	3-5" Cond	(SCE)	353.5	92"	1,835,970.67	6,533,431.88	POTHOLING

APPROVED FOR EXISTING UTILITIES INFORMATION ONLY

UTILITY PLAN

SCALE: 1" = 50'

U-1

REVISED BY	DATE REVISED

CALCULATED-DESIGNED BY	CHECKED BY
H AGHAJANIAN	RUDDY HARTONO

FUNCTIONAL SUPERVISOR: CELINA AVILES

STATE OF CALIFORNIA - DEPARTMENT OF TRANSPORTATION
Caltrans® OFFICE OF DESIGN A

LAST REVISION 00-00-00
DATE PLOTTED => 22-JUN-2015
TIME PLOTTED => 07:09

Dist	COUNTY	ROUTE	POST MILES TOTAL PROJECT	SHEET No.	TOTAL SHEETS
07	LA	60	R7.4/R8.1	61	238

REGISTERED CIVIL ENGINEER 1-22-14 DATE

6-1-15
PLANS APPROVAL DATE

REGISTERED PROFESSIONAL ENGINEER RUDDY HARTONO No. 63146 Exp. 6-30-16 CIVIL STATE OF CALIFORNIA

THE STATE OF CALIFORNIA OR ITS OFFICERS OR AGENTS SHALL NOT BE RESPONSIBLE FOR THE ACCURACY OR COMPLETENESS OF SCANNED COPIES OF THIS PLAN SHEET.

NOTES:

1. LOCATIONS OF CONSTRUCTION AREA SIGNS SHOWN ARE APPROXIMATE. EXACT LOCATIONS WILL BE DETERMINED BY THE ENGINEER.
2. "TRAFFIC FINES DOUBLED IN CONSTRUCTION ZONES" SIGNS SHALL BE PLACED APPROXIMATELY 500 FEET IN ADVANCE OF "ROAD WORK AHEAD" OR AS DETERMINED BY THE ENGINEER.
3. FOR ADDITIONAL CONSTRUCTION AREA SIGNS, SEE STAGE CONSTRUCTION AND TRAFFIC HANDLING PLANS.

STATIONARY MOUNTED CONSTRUCTION AREA SIGNS

SIGN No. (X)	SIGN CODE		PANEL SIZE	SIGN MESSAGE	NUMBER OF POSTS AND SIZE	NUMBER OF SIGNS
	FEDERAL	CALIFORNIA				
A	W20-1		48" x 48"	ROAD WORK AHEAD	2 - 4" x 6"	2
B	W20-1		36" x 36"	ROAD WORK AHEAD	1 - 4" x 6"	2
C	G20-2		48" x 24"	END ROAD WORK	1 - 4" x 4"	4
D		C40(CA)	144" x 60"	TRAFFIC FINES DOUBLED IN CONSTRUCTION ZONES	2 - 4" x 6"	2

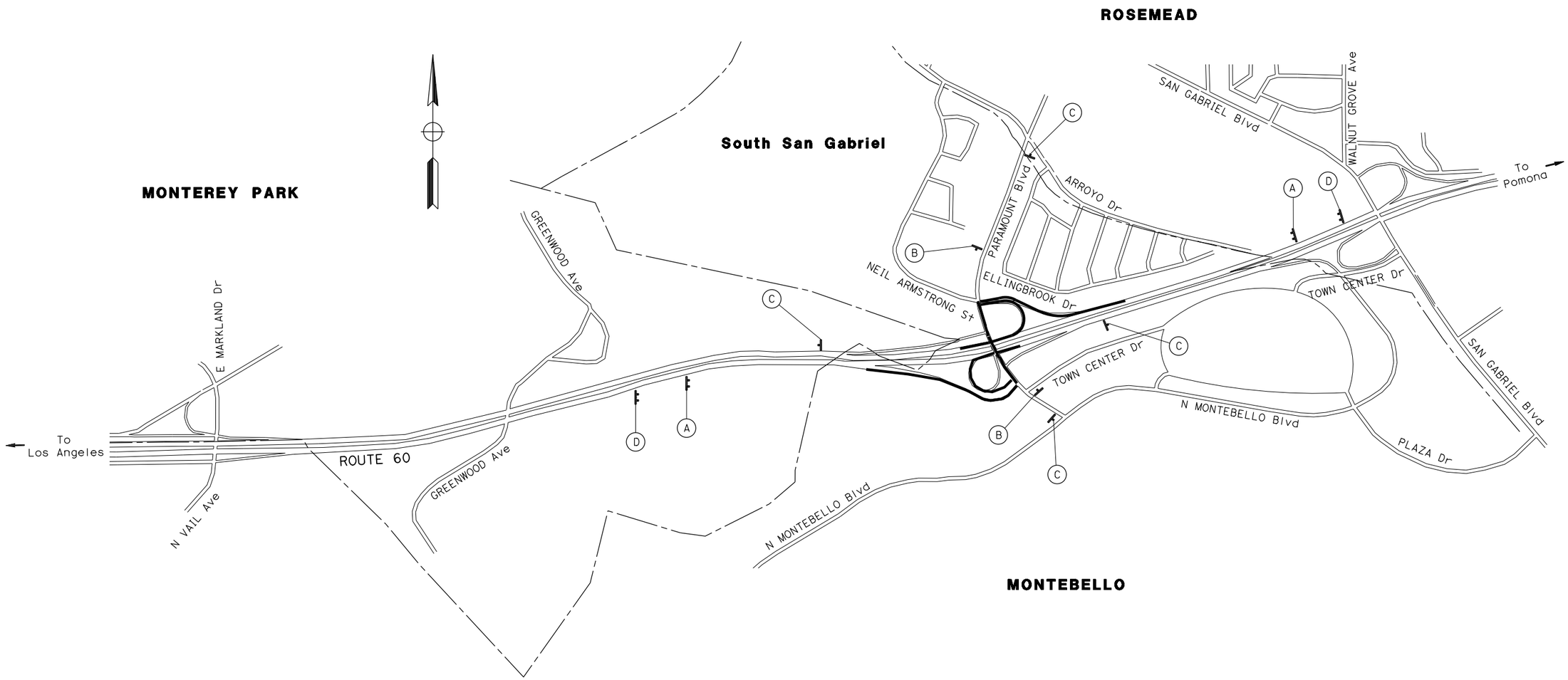

APPROVED FOR CONSTRUCTION AREA SIGN WORK ONLY

CONSTRUCTION AREA SIGNS

NO SCALE

CS-1

STATE OF CALIFORNIA - DEPARTMENT OF TRANSPORTATION
Caltrans® DESIGN

FUNCTIONAL SUPERVISOR: ASADOUR TERTERIAN
CALCULATED-DESIGNED BY: MANJINDER BRAR
CHECKED BY: RUDDY HARTONO
REVISED BY
DATE REVISED

LAST REVISION 00-00-00
DATE PLOTTED => 22-JUN-2015
TIME PLOTTED => 07:09

Dist	COUNTY	ROUTE	POST MILES TOTAL PROJECT	SHEET No.	TOTAL SHEETS
07	LA	60	R7.4/R8.1	62	238

REGISTERED CIVIL ENGINEER 1-22-14 DATE

6-1-15
PLANS APPROVAL DATE

REGISTERED PROFESSIONAL ENGINEER RUDDY HARTONO No. 63146 Exp. 6-30-16 CIVIL STATE OF CALIFORNIA

THE STATE OF CALIFORNIA OR ITS OFFICERS OR AGENTS SHALL NOT BE RESPONSIBLE FOR THE ACCURACY OR COMPLETENESS OF SCANNED COPIES OF THIS PLAN SHEET.

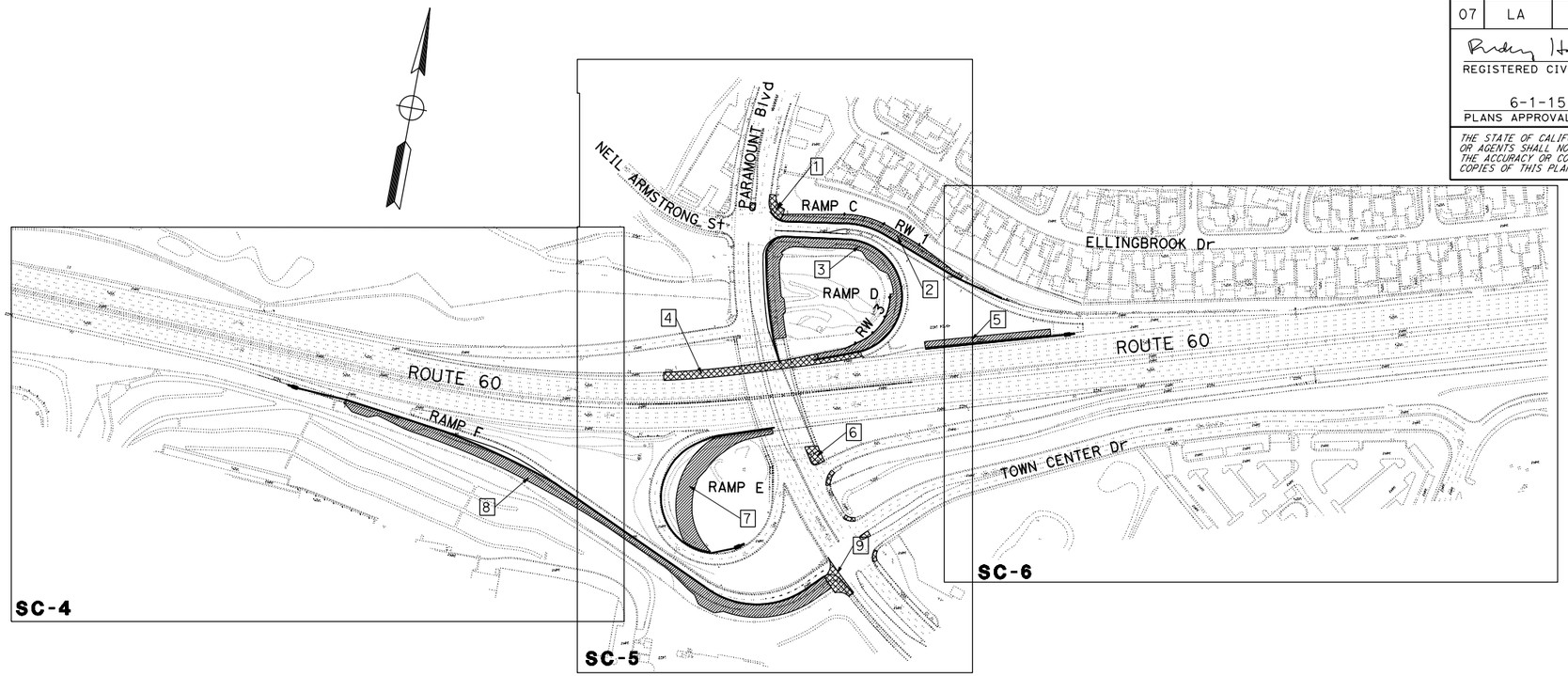

STAGE 1 CONSTRUCTION OVERVIEW

LOCATION	RAMP	STREET	RW	OTHER	SHEET No.
1		NB PARAMOUNT Blvd & RAMP C*			SC-5
2	RAMP C (WB OFF-RAMP) WIDENING		RW 1		SC-5
3	RAMP D (WB ON-RAMP) WIDENING	NB PARAMOUNT Blvd WIDENING	RW 3		SC-5
4	RAMP D (WB ON-RAMP)*				SC-5
5				BIOSWALE	SC-5 & SC-6
6		NB PARAMOUNT Blvd WIDENING*			SC-5
7	RAMP E (EB ON-RAMP)				SC-5
8	RAMP F (EB OFF-RAMP) WIDENING				SC-4 & SC-5
9		SB PARAMOUNT Blvd & RAMP F*			SC-5

*WORK TO BE PERFORMED IN SHORT-TERM RAMP/STREET CLOSURE

LEGEND:

- CONSTRUCTION AREA
- WORK TO BE PERFORMED IN SHORT-TERM RAMP/STREET CLOSURE (SEE SPECIAL PROVISIONS)
- TEMPORARY TRANSITION PAVEMENT: HMA, SUPERPAVE (TYPE A) WORK TO BE PERFORMED IN SHORT-TERM RAMP CLOSURE (SEE SPECIAL PROVISIONS)
- (XX) PAVEMENT DELINEATION DETAIL NUMBER PER STANDARD PLANS
- (PD) PAVEMENT DELINEATION DETAIL, SEE PAVEMENT DELINEATION PLANS
- TEMPORARY CRASH CUSHION
- TEMPORARY RAILING (TYPE K) WITH SCUPPERS, UNLESS OTHERWISE NOTED
- DIRECTION OF TRAFFIC
- YYYY CALIFORNIA SIGN CODE PER CA MUTCD
- CONSTRUCTION AREA SIGN (1 POST OR 2 POST)
- CHANNELIZER (SURFACE MOUNTED)
- YYYY CALIFORNIA SIGN CODE ON TYPE II BARRICADE

APPROVED FOR STAGE CONSTRUCTION AND TRAFFIC HANDLING WORK ONLY

STAGE CONSTRUCTION
STAGE 1 INDEX
NO SCALE

SC-1

STATE OF CALIFORNIA - DEPARTMENT OF TRANSPORTATION
Caltrans® DESIGN

FUNCTIONAL SUPERVISOR: ASADOUR TERTERIAN
CALCULATED-DESIGNED BY: MANJINDER BRAR
CHECKED BY: RUDDY HARTONO
REVISED BY
DATE REVISED

LAST REVISION 00-00-00
DATE PLOTTED => 22-JUN-2015
TIME PLOTTED => 07:09

Dist	COUNTY	ROUTE	POST MILES TOTAL PROJECT	SHEET No.	TOTAL SHEETS
07	LA	60	R7.4/R8.1	63	238

REGISTERED CIVIL ENGINEER 1-22-14 DATE

6-1-15
PLANS APPROVAL DATE

REGISTERED PROFESSIONAL ENGINEER RUDDY HARTONO No. 63146 Exp. 6-30-16 CIVIL STATE OF CALIFORNIA

THE STATE OF CALIFORNIA OR ITS OFFICERS OR AGENTS SHALL NOT BE RESPONSIBLE FOR THE ACCURACY OR COMPLETENESS OF SCANNED COPIES OF THIS PLAN SHEET.

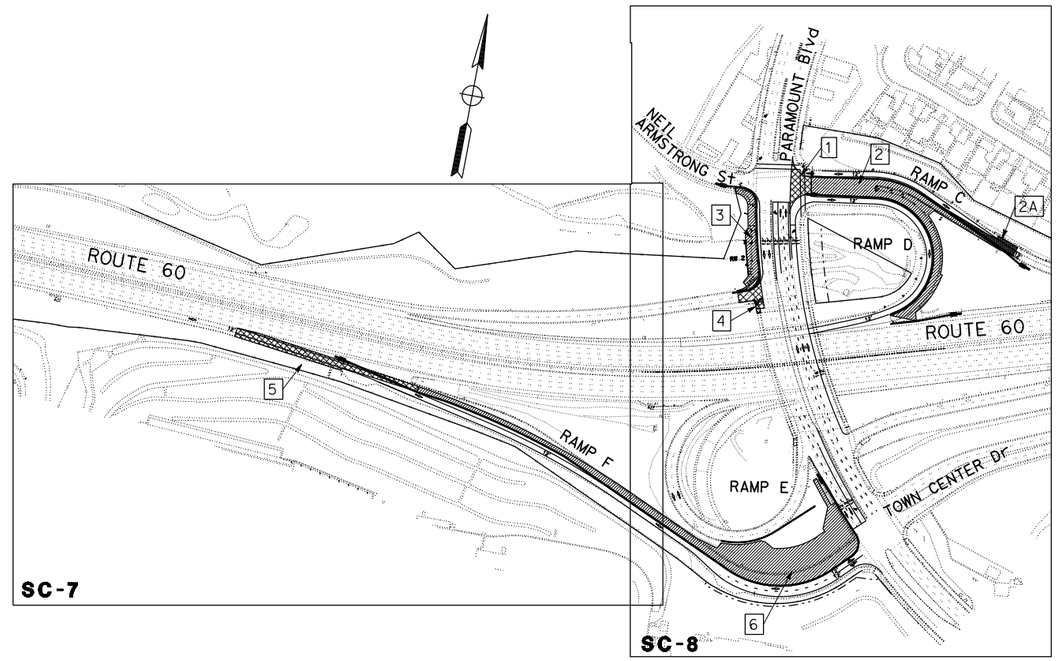

STAGE 2 CONSTRUCTION OVERVIEW

LOCATION	RAMP	STREET	RW	OTHER	SHEET No.
1		NB PARAMOUNT Blvd, RAMP C & RAMP D*			SC-8
2	RAMP C (WB OFF-RAMP) & RAMP D (WB ON-RAMP)				SC-8
2A	RAMP C (WB OFF-RAMP) Temp TRANSITION Pvmt*				SC-8
3		SB PARAMOUNT Blvd WIDENING	RW 2		SC-8
4		SB PARAMOUNT Blvd*			SC-8
5	RAMP F (EB OFF-RAMP)*			BIOSWALE	SC-7
6	RAMP F (EB OFF-RAMP) & RAMP E (EB ON-RAMP)	SB PARAMOUNT Blvd WIDENING			SC-7 & SC-8

*WORK TO BE PERFORMED IN SHORT-TERM RAMP/STREET CLOSURE

APPROVED FOR STAGE CONSTRUCTION AND TRAFFIC HANDLING WORK ONLY

STAGE CONSTRUCTION
STAGE 2 INDEX
NO SCALE

SC-2

STATE OF CALIFORNIA - DEPARTMENT OF TRANSPORTATION
Caltrans® DESIGN

FUNCTIONAL SUPERVISOR: ASADOUR TERTERIAN
CALCULATED-DESIGNED BY: MANJINDER BRAR
CHECKED BY: RUDDY HARTONO
REVISED BY
DATE REVISED

LAST REVISION 00-00-00
DATE PLOTTED => 22-JUN-2015
TIME PLOTTED => 07:09

Dist	COUNTY	ROUTE	POST MILES TOTAL PROJECT	SHEET No.	TOTAL SHEETS
07	LA	60	R7.4/R8.1	64	238

REGISTERED CIVIL ENGINEER 1-22-14 DATE

6-1-15
PLANS APPROVAL DATE

REGISTERED PROFESSIONAL ENGINEER RUDDY HARTONO No. 63146 Exp. 6-30-16 CIVIL STATE OF CALIFORNIA

THE STATE OF CALIFORNIA OR ITS OFFICERS OR AGENTS SHALL NOT BE RESPONSIBLE FOR THE ACCURACY OR COMPLETENESS OF SCANNED COPIES OF THIS PLAN SHEET.

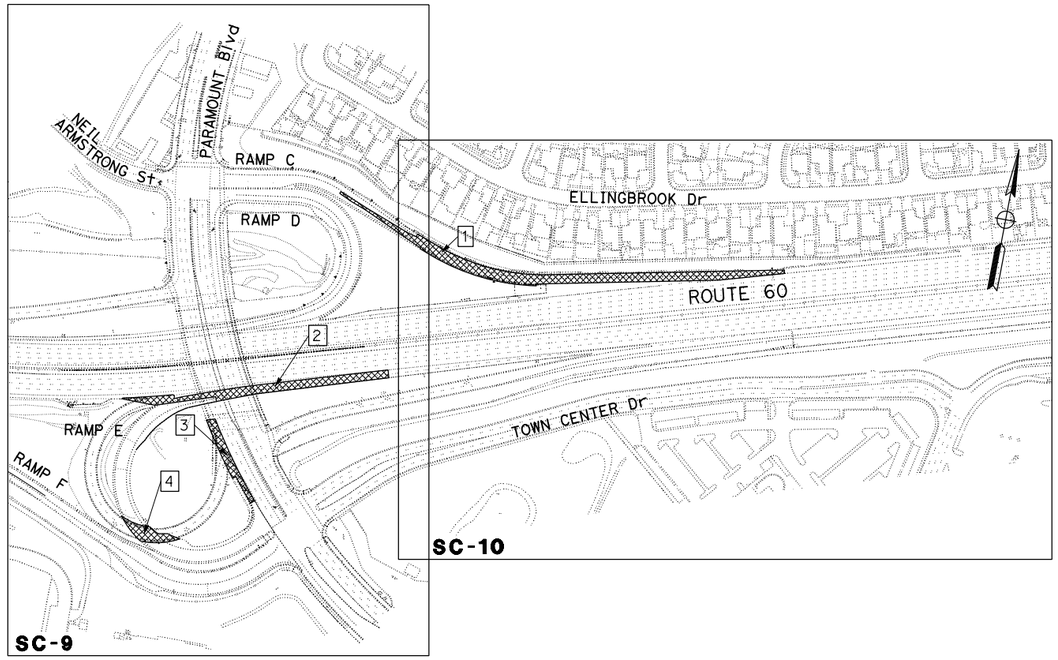

STAGE 3 PHASE 1

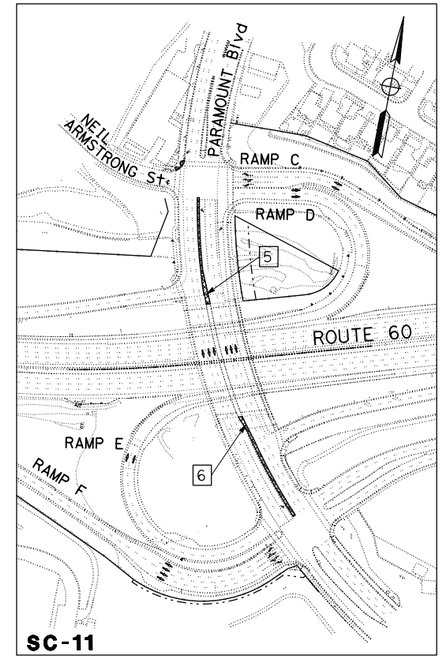

STAGE 3 PHASE 2

STAGE 3 PHASE 1 CONSTRUCTION OVERVIEW

LOCATION	RAMP	STREET	RW	OTHER	SHEET No.
1	RAMP C (WB OFF-RAMP)*				SC-9 & SC-10
2	RAMP E (EB ON-RAMP)*				SC-9
3		SB PARAMOUNT Blvd			SC-9
4	RAMP E (EB ON-RAMP)*				SC-9

STAGE 3 PHASE 2 CONSTRUCTION OVERVIEW

LOCATION	RAMP	STREET	RW	OTHER	SHEET No.
5		PARAMOUNT Blvd MEDIAN*			SC-11
6		PARAMOUNT Blvd MEDIAN*			SC-11
		PARAMOUNT Blvd COLDPLANE & OVERLAY*			SC-11

*WORK TO BE PERFORMED IN SHORT-TERM RAMP/STREET CLOSURE

STAGE CONSTRUCTION
STAGE 3 PHASE 1 AND STAGE 3 PHASE 2 INDEX

NO SCALE

SC-3

APPROVED FOR STAGE CONSTRUCTION AND TRAFFIC HANDLING WORK ONLY

STATE OF CALIFORNIA - DEPARTMENT OF TRANSPORTATION
Caltrans® DESIGN

FUNCTIONAL SUPERVISOR: ASADOUR TERTERIAN
CALCULATED-DESIGNED BY: MANJINDER BRAR
CHECKED BY: RUDDY HARTONO
REVISED BY
DATE REVISED

LAST REVISION 00-00-00
DATE PLOTTED => 22-JUN-2015
TIME PLOTTED => 07:09

Dist	COUNTY	ROUTE	POST MILES TOTAL PROJECT	SHEET No.	TOTAL SHEETS
07	LA	60	R7.4/R8.1	65	238

REGISTERED CIVIL ENGINEER 1-22-14 DATE

6-1-15
PLANS APPROVAL DATE

REGISTERED PROFESSIONAL ENGINEER RUDDY HARTONO No. 63146 Exp. 6-30-16 CIVIL STATE OF CALIFORNIA

THE STATE OF CALIFORNIA OR ITS OFFICERS OR AGENTS SHALL NOT BE RESPONSIBLE FOR THE ACCURACY OR COMPLETENESS OF SCANNED COPIES OF THIS PLAN SHEET.

NOTES:

1. LOCATIONS OF CONSTRUCTION AREA SIGNS SHOWN ARE APPROXIMATE. EXACT LOCATIONS WILL BE DETERMINED BY THE ENGINEER.
2. TEMPORARY RAILING (TYPE K) MUST BE USING CAPPED STAKES WHEN TEMPORARY RAILING IS LESS THAN TWO (2) FEET FROM AN EXCAVATION OR WITHIN LIMITS OF FALSEWORK.
3. CONFLICTING STRIPING MUST BE REMOVED.

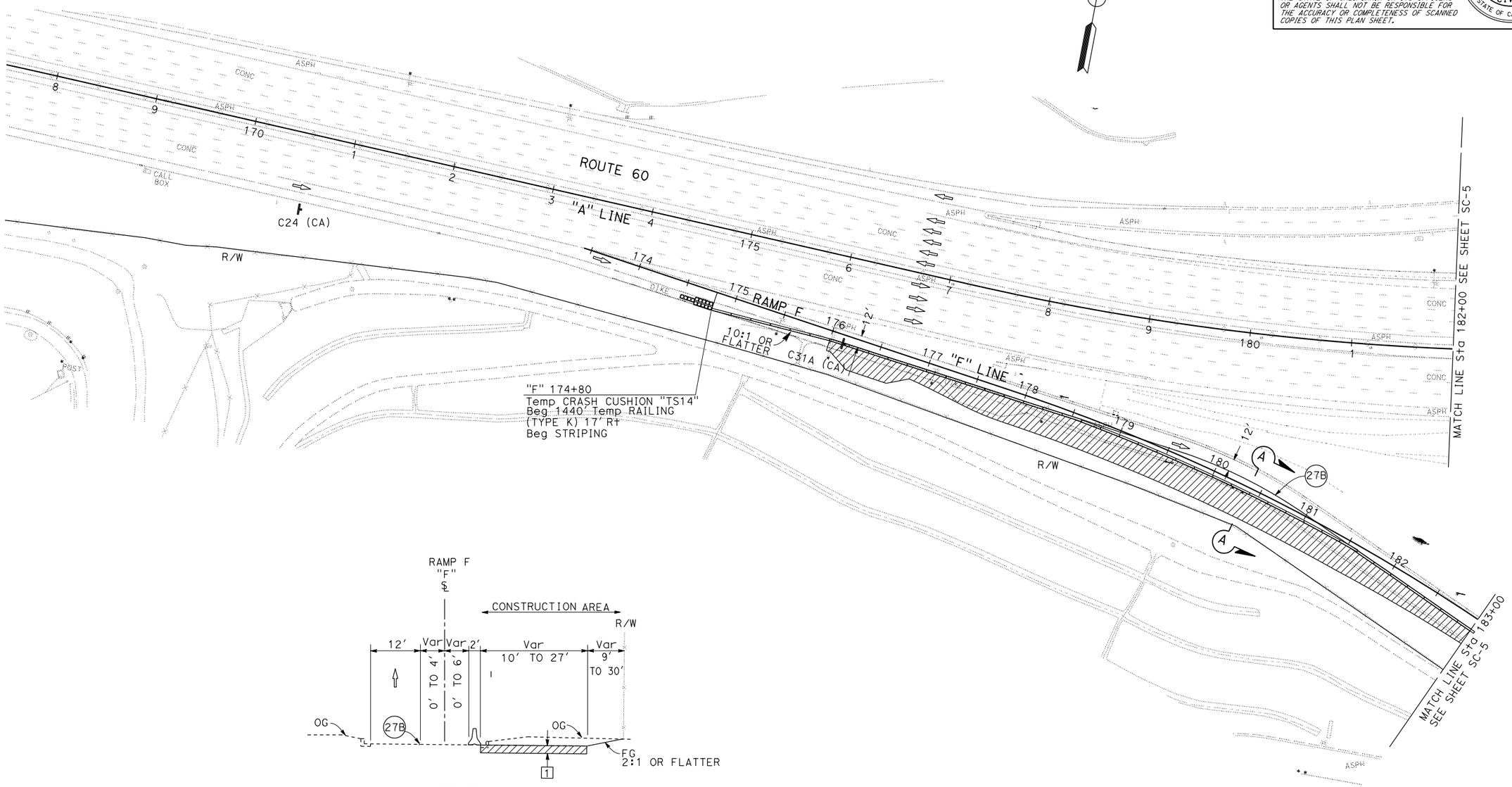

STAGE CONSTRUCTION AND TRAFFIC HANDLING PLAN

STAGE 1

NO SCALE

SC-4

APPROVED FOR STAGE CONSTRUCTION AND TRAFFIC HANDLING WORK ONLY

REVISED BY	
DATE REVISED	
CALCULATED-DESIGNED BY	RUDDY HARTONO
CHECKED BY	ASADOUR TERTERIAN
FUNCTIONAL SUPERVISOR	ASADOUR TERTERIAN

STATE OF CALIFORNIA - DEPARTMENT OF TRANSPORTATION
Caltrans
DESIGN

LAST REVISION 00-00-00
DATE PLOTTED => 22-JUN-2015
TIME PLOTTED => 07:09

Dist	COUNTY	ROUTE	POST MILES TOTAL PROJECT	SHEET No.	TOTAL SHEETS
07	LA	60	R7.4/R8.1	66	238

REGISTERED CIVIL ENGINEER — DATE: 1-22-14

PLANS APPROVAL DATE: 6-1-15

REGISTERED PROFESSIONAL ENGINEER — RUDDY HARTONO — No. 63146 — Exp. 6-30-16 — CIVIL — STATE OF CALIFORNIA

THE STATE OF CALIFORNIA OR ITS OFFICERS OR AGENTS SHALL NOT BE RESPONSIBLE FOR THE ACCURACY OR COMPLETENESS OF SCANNED COPIES OF THIS PLAN SHEET.

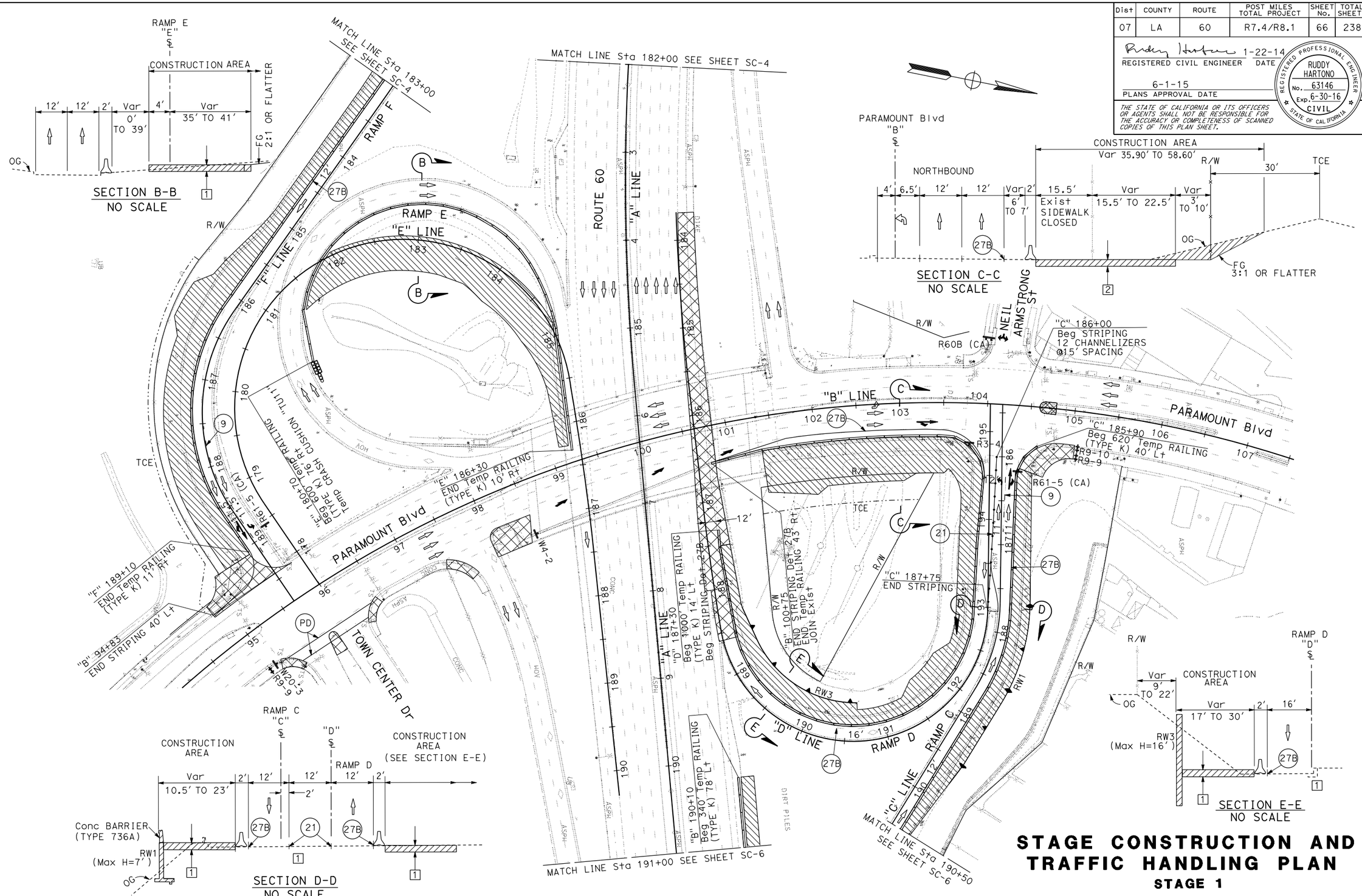

STAGE CONSTRUCTION AND TRAFFIC HANDLING PLAN

STAGE 1

SCALE: 1" = 50'

SC-5

APPROVED FOR STAGE CONSTRUCTION AND TRAFFIC HANDLING WORK ONLY

REVISED BY	DATE REVISED

CALCULATED-DESIGNED BY	RUDDY HARTONO
CHECKED BY	ASADOUR TERTERIAN
FUNCTIONAL SUPERVISOR	ASADOUR TERTERIAN

STATE OF CALIFORNIA - DEPARTMENT OF TRANSPORTATION

Caltrans® **DESIGN**

LAST REVISION 00-00-00 | DATE PLOTTED => 22-JUN-2015 | TIME PLOTTED => 07:09

Dist	COUNTY	ROUTE	POST MILES TOTAL PROJECT	SHEET No.	TOTAL SHEETS
07	LA	60	R7.4/R8.1	67	238

Ruddy Hartono 1-22-14
REGISTERED CIVIL ENGINEER DATE

6-1-15
PLANS APPROVAL DATE

REGISTERED PROFESSIONAL ENGINEER
RUDDY HARTONO
No. 63146
Exp. 6-30-16
CIVIL
STATE OF CALIFORNIA

THE STATE OF CALIFORNIA OR ITS OFFICERS OR AGENTS SHALL NOT BE RESPONSIBLE FOR THE ACCURACY OR COMPLETENESS OF SCANNED COPIES OF THIS PLAN SHEET.

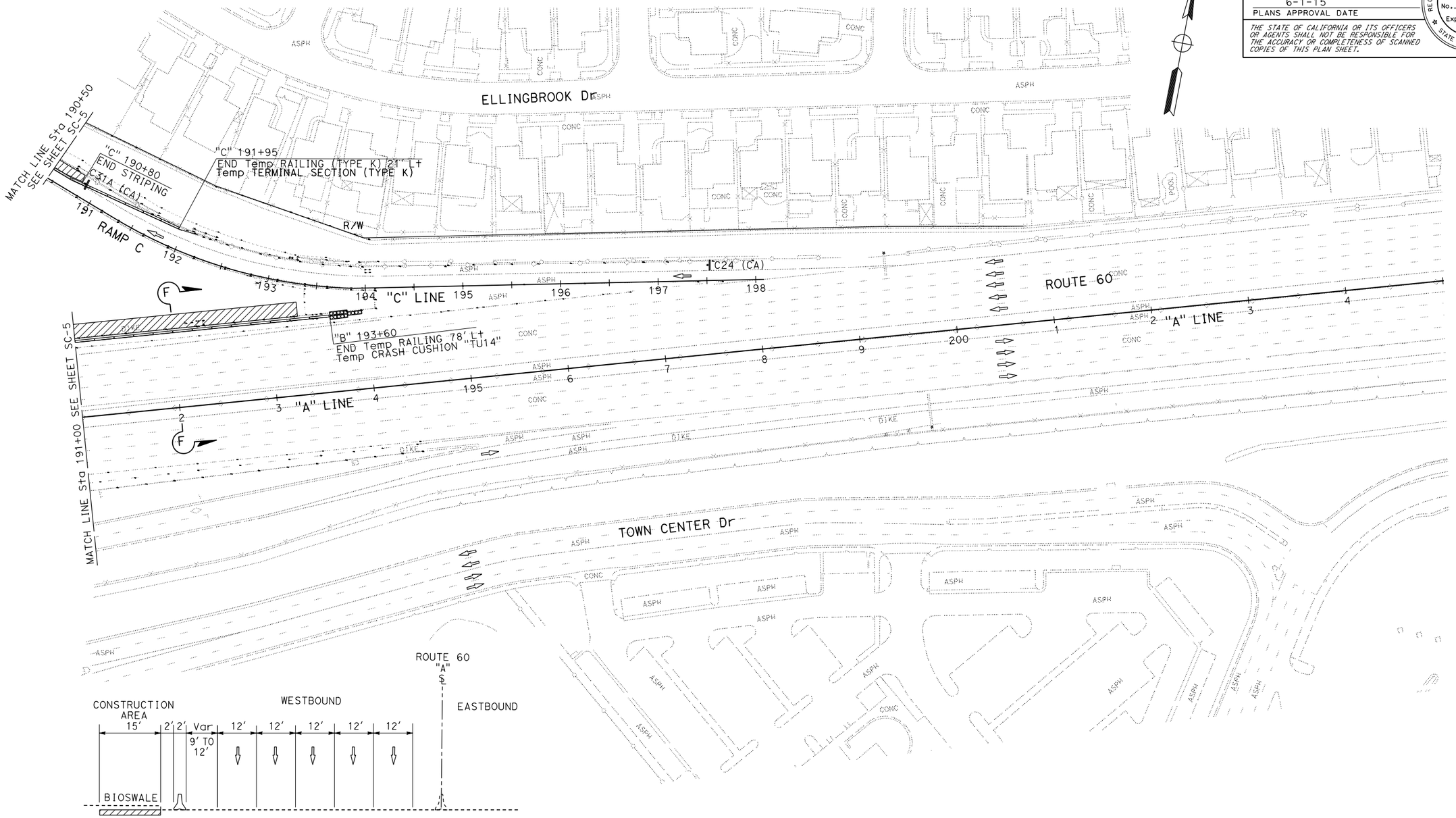

SECTION F-F
NO SCALE

APPROVED FOR STAGE CONSTRUCTION AND TRAFFIC HANDLING WORK ONLY

STAGE CONSTRUCTION AND TRAFFIC HANDLING PLAN

STAGE 1

SCALE: 1" = 50'

SC-6

REVISED BY	DATE REVISED

CALCULATED-DESIGNED BY	RUDDY HARTONO
CHECKED BY	ASADOUR TERTERIAN

FUNCTIONAL SUPERVISOR	ASADOUR TERTERIAN

STATE OF CALIFORNIA - DEPARTMENT OF TRANSPORTATION
Caltrans
DESIGN

LAST REVISION 00-00-00
DATE PLOTTED => 22-JUN-2015
TIME PLOTTED => 07:09

Dist	COUNTY	ROUTE	POST MILES TOTAL PROJECT	SHEET No.	TOTAL SHEETS
07	LA	60	R7.4/R8.1	68	238

REGISTERED CIVIL ENGINEER 1-22-14 DATE

6-1-15
PLANS APPROVAL DATE

REGISTERED PROFESSIONAL ENGINEER
RUDDY HARTONO
No. 63146
Exp. 6-30-16
CIVIL
STATE OF CALIFORNIA

THE STATE OF CALIFORNIA OR ITS OFFICERS OR AGENTS SHALL NOT BE RESPONSIBLE FOR THE ACCURACY OR COMPLETENESS OF SCANNED COPIES OF THIS PLAN SHEET.

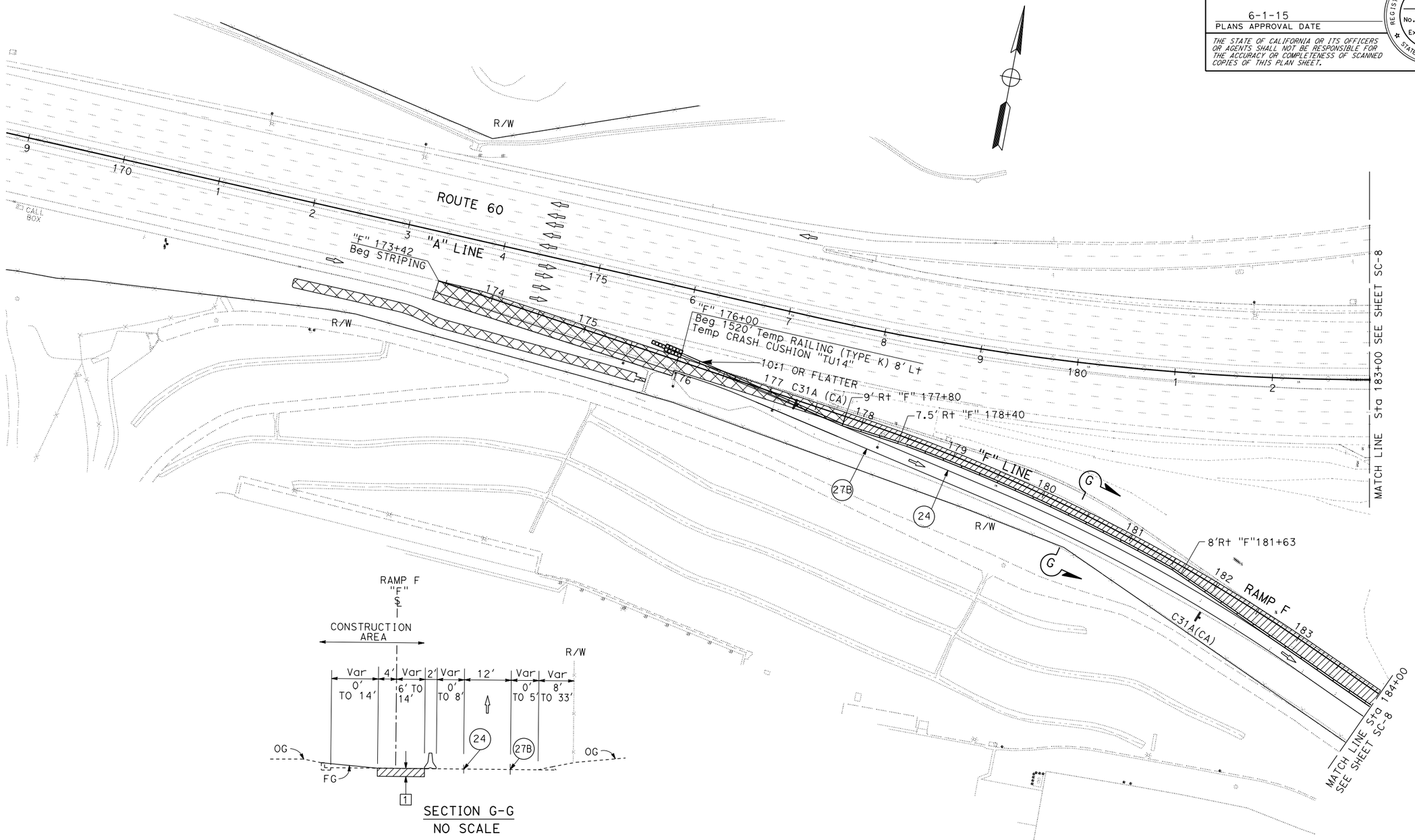

STAGE CONSTRUCTION AND TRAFFIC HANDLING PLAN

STAGE 2

SCALE: 1" = 50'

SC-7

APPROVED FOR STAGE CONSTRUCTION AND TRAFFIC HANDLING WORK ONLY

STATE OF CALIFORNIA - DEPARTMENT OF TRANSPORTATION
Caltrans®
DESIGN

FUNCTIONAL SUPERVISOR: ASADOUR TERTERIAN
CALCULATED-DESIGNED BY: RUDDY HARTONO
CHECKED BY: ASADOUR TERTERIAN
REVISED BY
DATE REVISED

LAST REVISION 00-00-00
DATE PLOTTED => 22-JUN-2015
TIME PLOTTED => 07:09

Dist	COUNTY	ROUTE	POST MILES TOTAL PROJECT	SHEET No.	TOTAL SHEETS
07	LA	60	R7.4/R8.1	69	238

REGISTERED CIVIL ENGINEER 1-22-14 DATE

6-1-15
PLANS APPROVAL DATE

REGISTERED PROFESSIONAL ENGINEER RUDDY HARTONO No. 63146 Exp. 6-30-16 CIVIL STATE OF CALIFORNIA

THE STATE OF CALIFORNIA OR ITS OFFICERS OR AGENTS SHALL NOT BE RESPONSIBLE FOR THE ACCURACY OR COMPLETENESS OF SCANNED COPIES OF THIS PLAN SHEET.

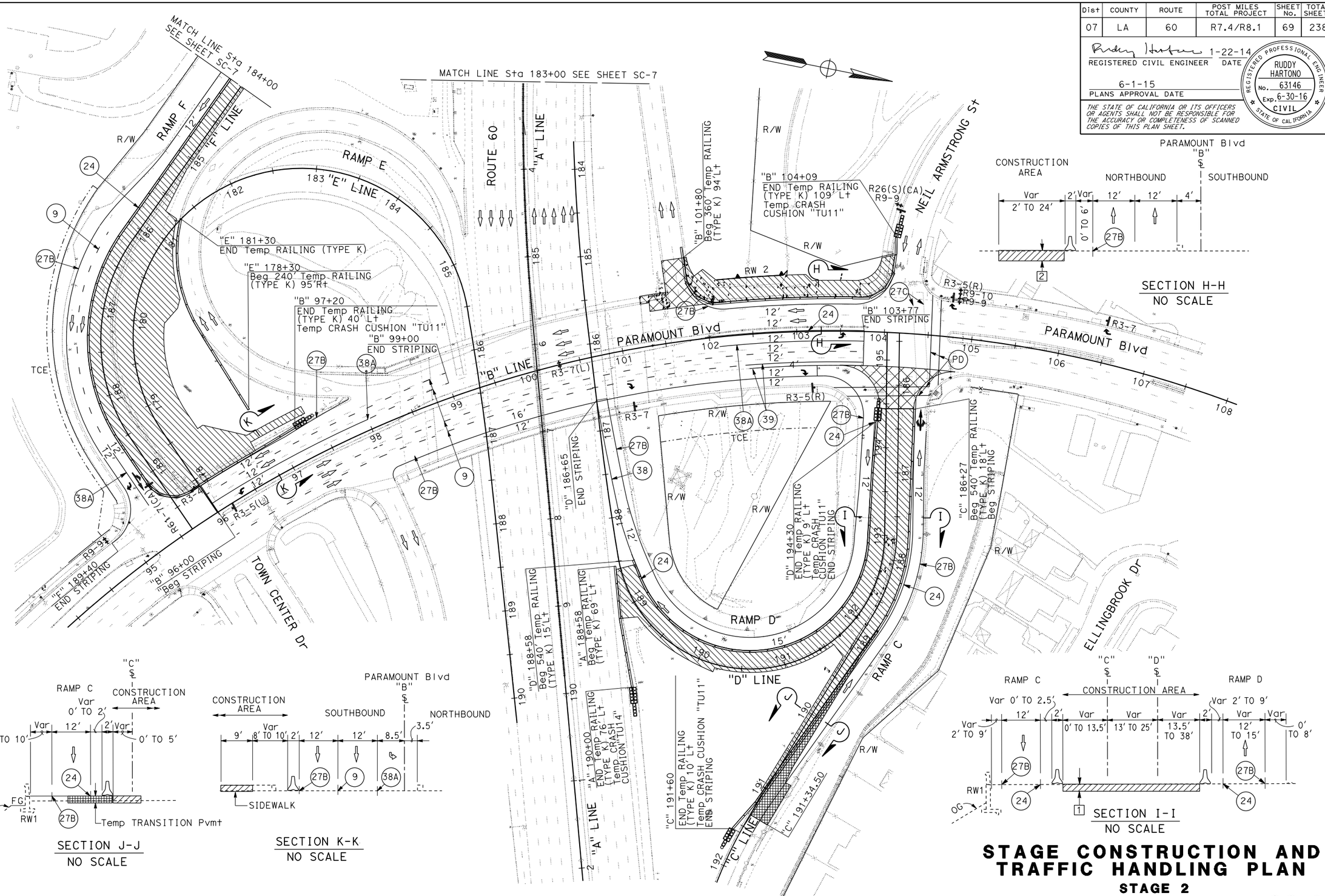

APPROVED FOR STAGE CONSTRUCTION AND TRAFFIC HANDLING WORK ONLY

STAGE CONSTRUCTION AND TRAFFIC HANDLING PLAN

STAGE 2

SCALE: 1" = 50'

SC-8

STATE OF CALIFORNIA - DEPARTMENT OF TRANSPORTATION

Caltrans® **DESIGN**

FUNCTIONAL SUPERVISOR: ASADOUR TERTERIAN

CALCULATED-DESIGNED BY: RUDDY HARTONO

CHECKED BY: ASADOUR TERTERIAN

REVISED BY

DATE REVISED

LAST REVISION 00-00-00

DATE PLOTTED => 22-JUN-2015
TIME PLOTTED => 07:09

BORDER LAST REVISED 7/2/2010

USERNAME => s112049
DGN FILE => 73x711ma008.dgn

RELATIVE BORDER SCALE IS IN INCHES 0 1 2 3

UNIT 1799

PROJECT NUMBER & PHASE 07150001321

Dist	COUNTY	ROUTE	POST MILES TOTAL PROJECT	SHEET No.	TOTAL SHEETS
07	LA	60	R7.4/R8.1	70	238

REGISTERED CIVIL ENGINEER 1-22-14 DATE

6-1-15
PLANS APPROVAL DATE

REGISTERED PROFESSIONAL ENGINEER
RUDDY HARTONO
No. 63146
Exp. 6-30-16
CIVIL
STATE OF CALIFORNIA

THE STATE OF CALIFORNIA OR ITS OFFICERS OR AGENTS SHALL NOT BE RESPONSIBLE FOR THE ACCURACY OR COMPLETENESS OF SCANNED COPIES OF THIS PLAN SHEET.

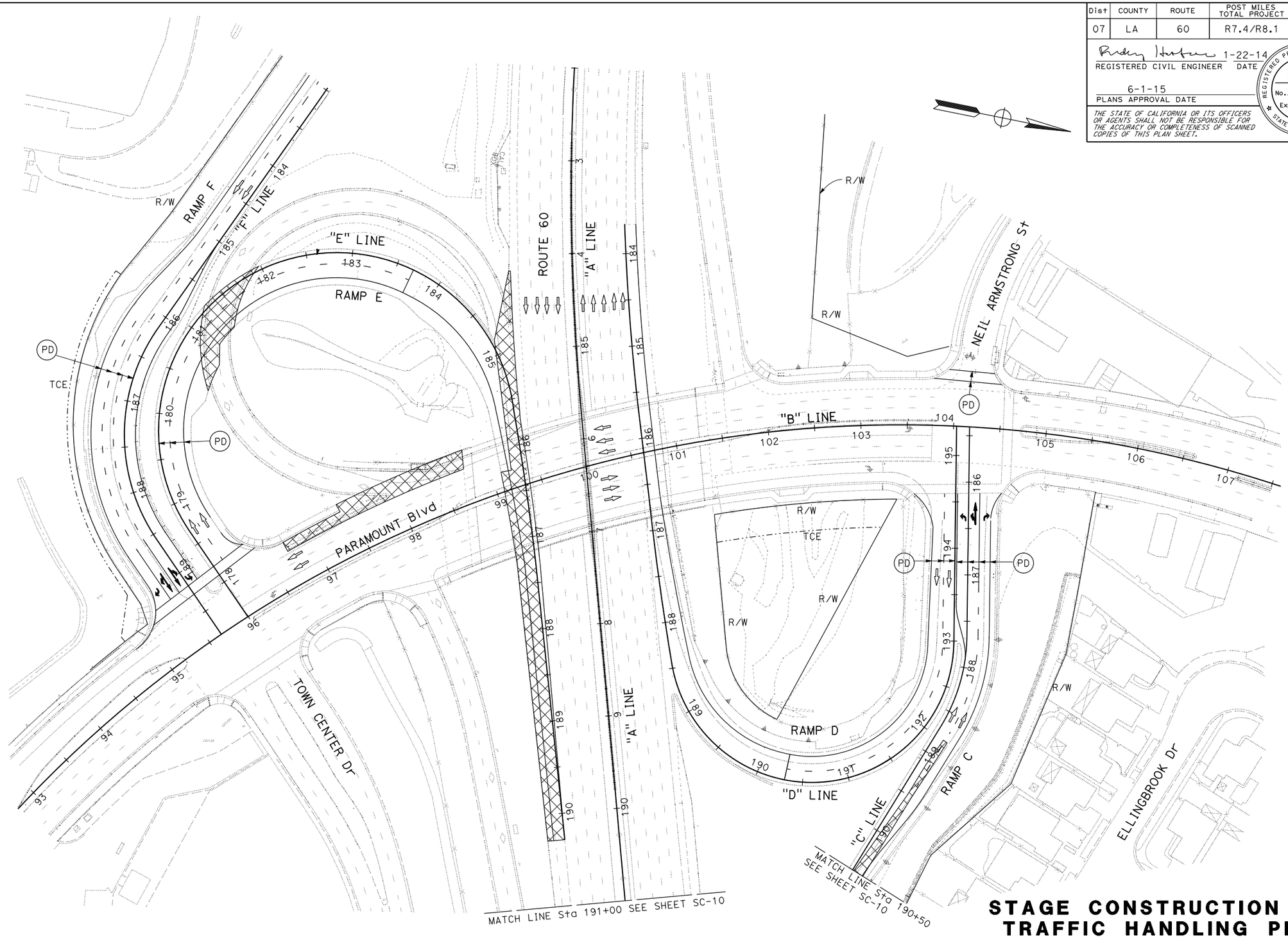

APPROVED FOR STAGE CONSTRUCTION AND TRAFFIC HANDLING WORK ONLY

STAGE CONSTRUCTION AND TRAFFIC HANDLING PLAN

STAGE 3 PHASE 1

SCALE: 1" = 50'

SC-9

STATE OF CALIFORNIA - DEPARTMENT OF TRANSPORTATION
Caltrans
DESIGN

FUNCTIONAL SUPERVISOR: ASADOUR TERTERIAN
CALCULATED-DESIGNED BY: RUDDY HARTONO
CHECKED BY: ASADOUR TERTERIAN
REVISED BY
DATE REVISED

LAST REVISION 00-00-00
DATE PLOTTED => 22-JUN-2015
TIME PLOTTED => 07:09

BORDER LAST REVISED 7/2/2010
USERNAME => s112049
DGN FILE => 73x711ma009.dgn
RELATIVE BORDER SCALE IS IN INCHES 0 1 2 3
UNIT 1799
PROJECT NUMBER & PHASE 07150001321

Dist	COUNTY	ROUTE	POST MILES TOTAL PROJECT	SHEET No.	TOTAL SHEETS
07	LA	60	R7.4/R8.1	71	238

REGISTERED CIVIL ENGINEER 1-22-14 DATE

6-1-15
PLANS APPROVAL DATE

REGISTERED PROFESSIONAL ENGINEER
RUDDY HARTONO
No. 63146
Exp. 6-30-16
CIVIL
STATE OF CALIFORNIA

THE STATE OF CALIFORNIA OR ITS OFFICERS OR AGENTS SHALL NOT BE RESPONSIBLE FOR THE ACCURACY OR COMPLETENESS OF SCANNED COPIES OF THIS PLAN SHEET.

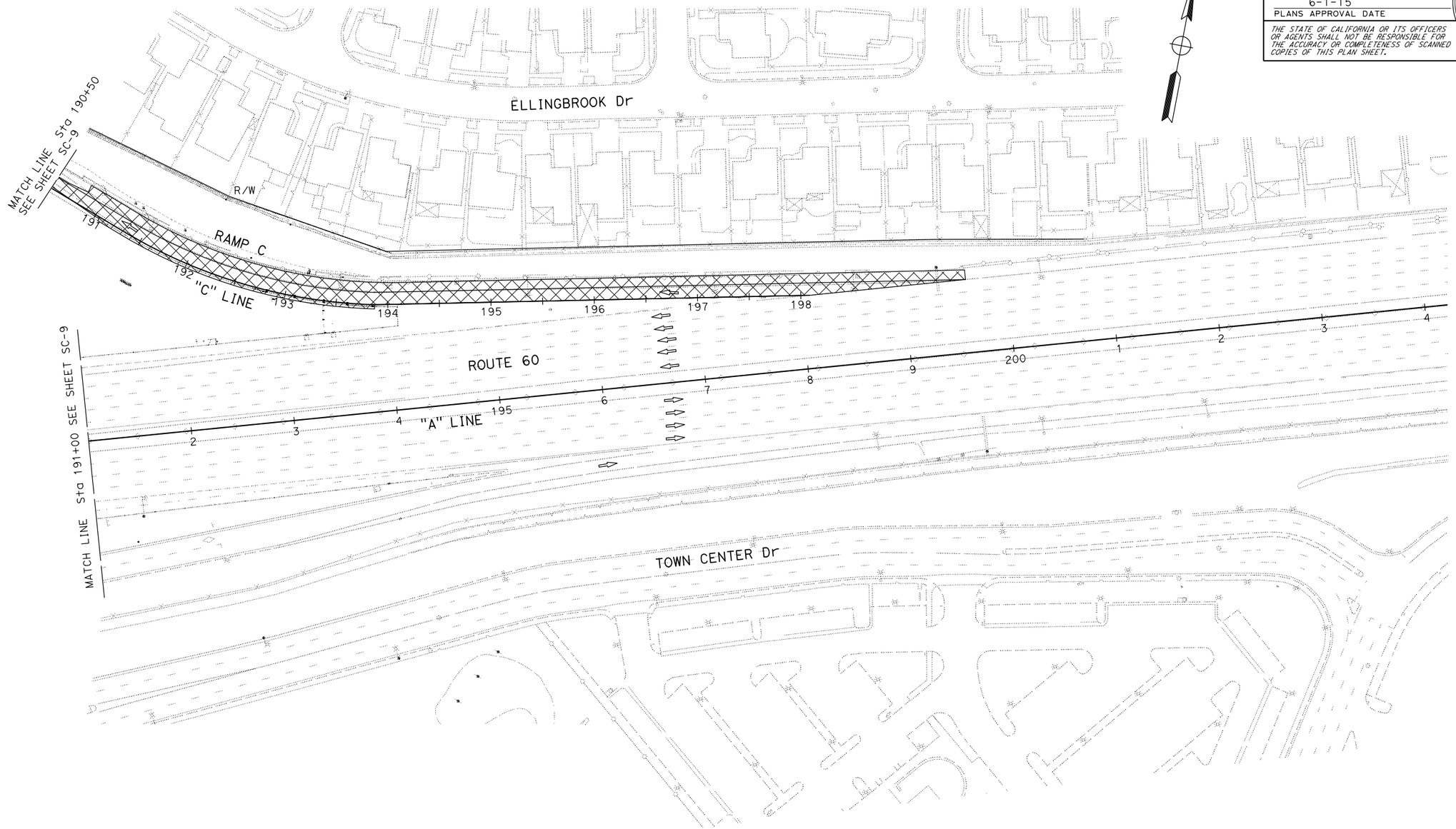

STAGE CONSTRUCTION AND TRAFFIC HANDLING PLAN

STAGE 3 PHASE 1

SCALE: 1" = 50'

SC-10

APPROVED FOR STAGE CONSTRUCTION AND TRAFFIC HANDLING WORK ONLY

STATE OF CALIFORNIA - DEPARTMENT OF TRANSPORTATION
Caltrans® DESIGN

FUNCTIONAL SUPERVISOR: ASADOUR TERTERIAN
CALCULATED-DESIGNED BY: RUDDY HARTONO
CHECKED BY: ASADOUR TERTERIAN
REVISED BY
DATE REVISED

LAST REVISION 00-00-00
DATE PLOTTED => 22-JUN-2015
TIME PLOTTED => 07:09

Dist	COUNTY	ROUTE	POST MILES TOTAL PROJECT	SHEET No.	TOTAL SHEETS
07	LA	60	R7.4/R8.1	72	238

REGISTERED CIVIL ENGINEER — DATE: 1-22-14

PLANS APPROVAL DATE: 6-1-15

REGISTERED PROFESSIONAL ENGINEER — RUDDY HARTONO — No. 63146 — Exp. 6-30-16 — CIVIL — STATE OF CALIFORNIA

THE STATE OF CALIFORNIA OR ITS OFFICERS OR AGENTS SHALL NOT BE RESPONSIBLE FOR THE ACCURACY OR COMPLETENESS OF SCANNED COPIES OF THIS PLAN SHEET.

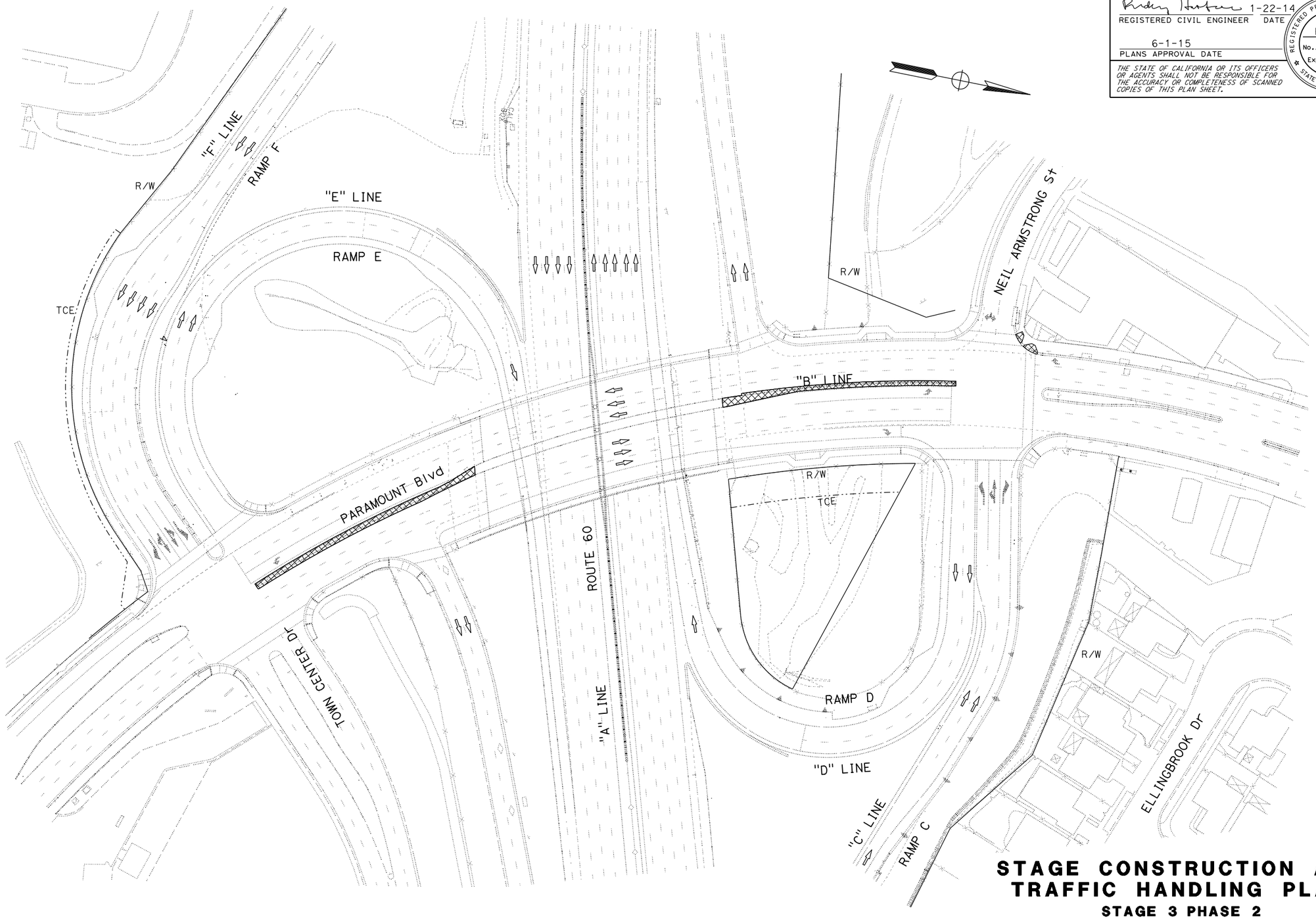

STAGE CONSTRUCTION AND TRAFFIC HANDLING PLAN

STAGE 3 PHASE 2

SCALE: 1" = 50'

SC-11

APPROVED FOR STAGE CONSTRUCTION AND TRAFFIC HANDLING WORK ONLY

STATE OF CALIFORNIA - DEPARTMENT OF TRANSPORTATION

Caltrans®

DESIGN

FUNCTIONAL SUPERVISOR: ASADOUR TERTERIAN

CALCULATED-DESIGNED BY: RUDDY HARTONO

CHECKED BY: ASADOUR TERTERIAN

REVISED BY

DATE REVISED

LAST REVISION 00-00-00

DATE PLOTTED => 22-JUN-2015
TIME PLOTTED => 07:09

Dist	COUNTY	ROUTE	POST MILES TOTAL PROJECT	SHEET No.	TOTAL SHEETS
07	LA	60	R7.4/R8.1	73	238

REGISTERED CIVIL ENGINEER 1-22-14 DATE

6-1-15
PLANS APPROVAL DATE

REGISTERED PROFESSIONAL ENGINEER RUDDY HARTONO No. 63146 Exp. 6-30-16 CIVIL STATE OF CALIFORNIA

THE STATE OF CALIFORNIA OR ITS OFFICERS OR AGENTS SHALL NOT BE RESPONSIBLE FOR THE ACCURACY OR COMPLETENESS OF SCANNED COPIES OF THIS PLAN SHEET.

STAGE CONSTRUCTION AND TRAFFIC HANDLING QUANTITIES

SHEET No.	DETAIL No./ PAVEMENT MARKING	PAVEMENT MARKER * RETROREFLECTIVE TYPE G	Temp TRAFFIC STRIPE (PAINT) 4"	Temp TRAFFIC STRIPE (PAINT) 8"	TEMPORARY PAVEMENT MARKING (PAINT) (2-COAT)	REMOVE PAVEMENT MARKER TYPE D	REMOVE PAVEMENT MARKER TYPE G	REMOVE THERMOPLASTIC TRAFFIC STRIPE	REMOVE YELLOW THERMOPLASTIC TRAFFIC STRIPE (HAZARDOUS WASTE)	REMOVE THERMOPLASTIC PAVEMENT MARKING	TEMPORARY RAILING (TYPE K)	TEMPORARY TERMINAL SECTION (TYPE K)	TEMPORARY CRASH CUSHION MODULE	CHANNELIZER (SURFACE MOUNTED)	TYPE II BARRICADE	HOT MIX ASPHALT (TYPE A) - Temp PAVEMENT ***	ROADWAY EXCAVATION **	STAGE
		EA	LF	LF	SQFT	EA	EA	LF	LF	SQFT	LF	EA	EA	EA	EA	TON	CY	
SC-4	27B		698								815		14					
SC-5	9	6	246				16	716			2,700		11	12	3			
	21		237															
	27B		2,300															
	12						16	175										
	27					24			720									
	ARROW TYPE II				135					90								
	ARROW TYPE III(B)				73													
	ARROW TYPE IV				30					15								
	ARROW TYPE VI				126													
SC-6	27B		34								405	1						
SC-7	24		1,055								790		14		4			
	27B		1,051										14					
SC-8	9	43	2,039				52	2,491			2,510		58			240	123	
	24		2,040															
	27B		2,830															
	38	8		192														
	38A			440														
	39		266															
					45													
	ARROW TYPE II(B)				59													
	ARROW TYPE IV				105													
	ARROW TYPE VII(L)				45													
	ARROW TYPE VIII				36													
	LIMIT LINE				536													
SC-9	9	42	1,993															
	38A		237															
	ARROW TYPE II				105													
	ARROW TYPE IV				135													
	LIMIT LINE & CROSS WALK				668													
SUB TOTAL		99	15,026	632 (x2)	1,944	24	84	3,382	720	105	7,220	1	111	12	7	240	123	
TOTAL		99	16,290		1,944	108		3,382	720	105	7,220	1	111	12	7	240	123	

STAGE: 1 (SC-5); 2 (SC-4, SC-6, SC-7, SC-8); 3 PHASE 1 (SC-9)

* SEE PAVEMENT DELINEATION PLANS FOR ADDITIONAL QUANTITIES
** SEE PLAN SHEET Q-1 FOR TOTAL
*** SEE PLAN SHEET Q-2 FOR TOTAL

STAGE CONSTRUCTION AND TRAFFIC HANDLING QUANTITIES

SCQ-1

REVISED BY	DATE REVISED

CALCULATED-DESIGNED BY	MANJINDER BRAR
CHECKED BY	RUDDY HARTONO
FUNCTIONAL SUPERVISOR	ASADOUR TERTERIAN

STATE OF CALIFORNIA - DEPARTMENT OF TRANSPORTATION
Caltrans® DESIGN

LAST REVISION 00-00-00 | DATE PLOTTED => 22-JUN-2015 | TIME PLOTTED => 07:09

Dist	COUNTY	ROUTE	POST MILES TOTAL PROJECT	SHEET No.	TOTAL SHEETS
07	LA	60	R7.4/R8.1	74	238

REGISTERED CIVIL ENGINEER 1-22-14 DATE

6-1-15
PLANS APPROVAL DATE

REGISTERED PROFESSIONAL ENGINEER RUDDY HARTONO No. 63146 Exp. 6-30-16 CIVIL STATE OF CALIFORNIA

THE STATE OF CALIFORNIA OR ITS OFFICERS OR AGENTS SHALL NOT BE RESPONSIBLE FOR THE ACCURACY OR COMPLETENESS OF SCANNED COPIES OF THIS PLAN SHEET.

TEMPORARY ROADSIDE SIGN QUANTITIES*

SHEET No.	SIGN CODE (N)	PANEL SIZE	No. OF POST AND SIZE	No. OF SIGNS (EA)	SIGN MESSAGE	STAGE
SC-4	C24 (CA)	48" x 48"	1 - 6" x 8"	1	SHOULDER WORK AHEAD	1
	C31A (CA)	48" x 48"	1 - 6" x 8"	1	NO SHOULDER	
SC-5	R61-5 (CA)	36" x 30"	1 - 6" x 8"	2	INTERSECTION LANE CONTROL	
	R60B(CA)	54" x 48"	2 - 6" x 8"	1	MOVEMENT LANE CONTROL	
	R9-9	24" x 12"	(ON TYPE II BARRICADE)	2	SIDEWALK CLOSED	
	R9-10	24" x 12"	(ON TYPE II BARRICADE)	1	SIDEWALK CLOSED, USE OTHER SIDE	
	R3-4	36" x 36"	1 - 6" x 8"	1	NO U TURN	
	W4-2	48" x 48"	1 - 6" x 8"	1	LANE ENDS	
	W20-5	36" x 36"	1 - 6" x 8"	1	RIGHT LANE CLOSED AHEAD	
SC-6	C24 (CA)	48" x 48"	1 - 6" x 8"	1	SHOULDER WORK AHEAD	
	C31A (CA)	48" x 48"	1 - 6" x 8"	1	NO SHOULDER	
SC-7	C31A (CA)	48" x 48"	1 - 6" x 8"	2	NO SHOULDER	2
SC-8	R9-9	24" x 12"	(ON TYPE II BARRICADE)	3	SIDEWALK CLOSED	
	R9-10	24" x 12"	(ON TYPE II BARRICADE)	1	SIDEWALK CLOSED, USE OTHER SIDE	
	R3-5(R)	30" x 12"	1 - 6" x 6"	2	RIGHT LANE	
	R3-5(L)	30" x 12"	1 - 6" x 6"	1	LEFT LANE	
	R3-4	36" x 36"	1 - 6" x 8"	1	NO U TURN	
	R3-7 (R)	36" x 36"	1 - 6" x 8"	3	RIGHT LANE MUST TURN RIGHT	
	R3-7 (L)	36" x 36"	1 - 6" x 8"	1	LEFT LANE MUST TURN LEFT	
	R26(S)(CA)	12" x 18"	1 - 6" x 6"	1	NO STOPPING ANY TIME	
	R61-7(CA)	36" x 30"	1 - 6" x 8"	1	INTERSECTION LANE CONTROL	

* NON SEPARATE PAY ITEM, FOR INFORMATION ONLY

STAGE CONSTRUCTION AND TRAFFIC HANDLING QUANTITIES

SCQ-2

REVISED BY | DATE REVISED

MANJINDER BRAR | RUDDY HARTONO

CALCULATED-DESIGNED BY | CHECKED BY

FUNCTIONAL SUPERVISOR | ASADOUR TERTERIAN

STATE OF CALIFORNIA - DEPARTMENT OF TRANSPORTATION

Caltrans DESIGN

LAST REVISION 00-00-00 | DATE PLOTTED => 22-JUN-2015 TIME PLOTTED => 07:09

Dist	COUNTY	ROUTE	POST MILES TOTAL PROJECT	SHEET No.	TOTAL SHEETS
07	LA	60	R7.4/R8.1	75	238

REGISTERED CIVIL ENGINEER 5-3-13 DATE

6-1-15
PLANS APPROVAL DATE

REGISTERED PROFESSIONAL ENGINEER BENJAMIN RAMOS No. C 61340 Exp. 6-30-17 CIVIL STATE OF CALIFORNIA

THE STATE OF CALIFORNIA OR ITS OFFICERS OR AGENTS SHALL NOT BE RESPONSIBLE FOR THE ACCURACY OR COMPLETENESS OF SCANNED COPIES OF THIS PLAN SHEET.

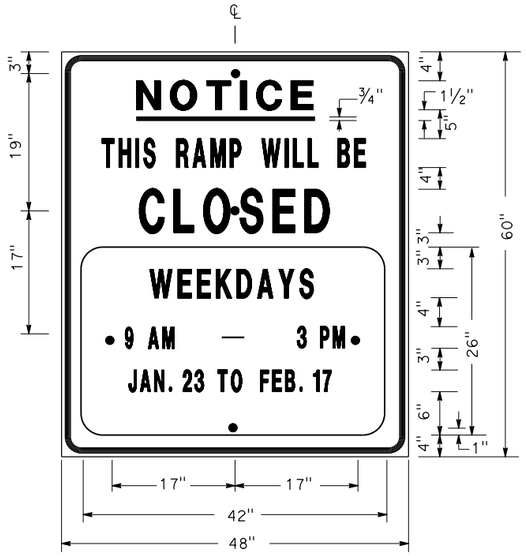

SIGN SP-1

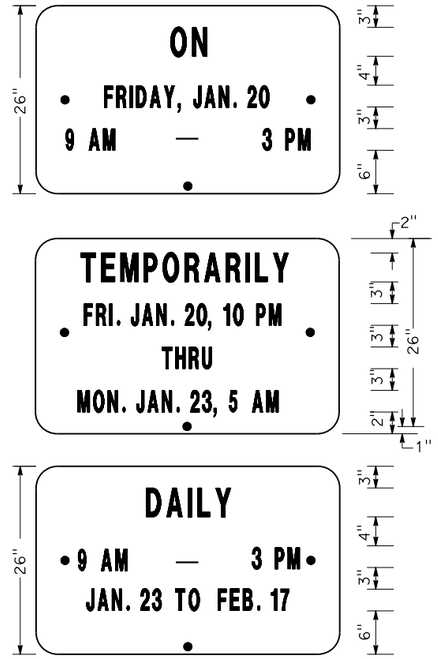

ALTERNATE OVERLAY PANELS (TYPICAL)

SPECIAL ADVANCE NOTICE PUBLICITY SIGN

NOTES: (SIGN SP-1)

1. LETTERS AND BORDER MUST BE BLACK ON REFLECTORIZED ORANGE BACKGROUND.
2. BOLT HOLES MUST BE 3/8" DIAMETER.
3. BASE MATERIAL MUST BE ALUMINUM (MINIMUM 0.06").
4. SIGNS MUST BE MOUNTED WITH BOTTOMS OF SIGNS A MINIMUM OF 7' ABOVE GROUND.

SIZE	BORDER WIDTH	MARGIN WIDTH	LETTER SIZE					CORNER RADIUS
			LINE 1	LINE 2*	LINE 3	LINE 4	LINE 5, 6, & 7*	
48"x60"	1 1/4"	3/4"	4E	4D	6E	4D		3"
42"x26"	OVERLAY						3D	1 1/2"
* CONDENSED SPACING IF NECESSARY								

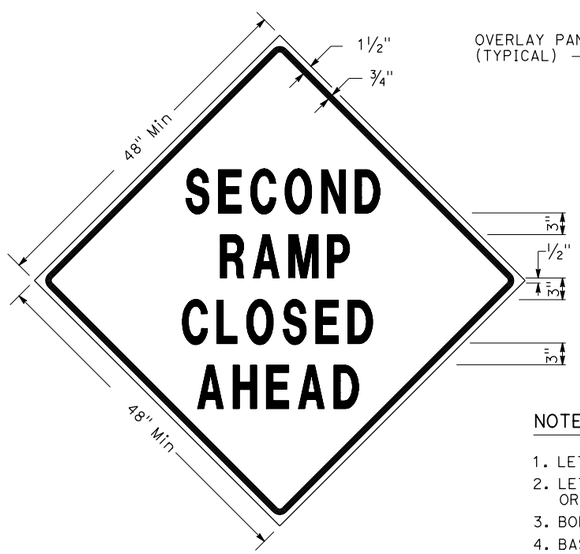

SIGN SP-3

SIGN SP-5

NOTES: (SIGNS SP-3 & SP-5)

1. LETTERS - 6" SERIES D.
2. LETTERS AND BORDER MUST BE BLACK ON REFLECTORIZED ORANGE BACKGROUND.
3. BOLT HOLES MUST BE 3/8" DIAMETER.
4. BASE MATERIAL MUST BE ALUMINUM (MINIMUM 0.06").
5. SIGNS MUST BE MOUNTED WITH BOTTOMS OF SIGNS A MINIMUM OF 7' ABOVE GROUND.
6. SIGN SP-5 MUST BE USED IF THE OFF-RAMP TO BE CLOSED FOLLOWS A FREEWAY OFF-CONNECTOR.

SPECIAL SIGNS FOR EXIT RAMP CLOSURES

SIGN SP-4

NOTES: (SIGN SP-4)

1. LETTERS - 6" SERIES C.
2. LETTERS AND BORDER MUST BE BLACK ON REFLECTORIZED WHITE BACKGROUND.
3. BOLT HOLES MUST BE 3/8" DIAMETER.
4. BASE MATERIAL MUST BE ALUMINUM (MINIMUM 0.06").
5. SIGNS MUST BE PLACED AT RAMP ENTRANCES IN ADDITION TO SIGNS POSTED IN ACCORDANCE WITH REVISED STANDARD PLAN RSP T14.

SPECIAL SIGN FOR ENTRANCE RAMP CLOSURES

TRAFFIC HANDLING DETAILS
TRAFFIC CONTROL SYSTEM FOR RAMP CLOSURES, DETOUR SIGNS, AND MISCELLANEOUS DETAILS
SHEET 1 OF 2

NO SCALE

THD-1

REVISED BY	JC
DATE REVISED	3/12
CALCULATED-DESIGNED BY	ALBERT K YU
CHECKED BY	JOCELYN C CHIANG
FUNCTIONAL SUPERVISOR	MARTIN OREGEL

STATE OF CALIFORNIA - DEPARTMENT OF TRANSPORTATION
Caltrans® DTM

LAST REVISION 00-00-00 | DATE PLOTTED => 22-JUN-2015 | TIME PLOTTED => 07:09

Dist	COUNTY	ROUTE	POST MILES TOTAL PROJECT	SHEET No.	TOTAL SHEETS
07	LA	60	R7.4/R8.1	76	238

REGISTERED CIVIL ENGINEER 5-3-13 DATE

6-1-15
PLANS APPROVAL DATE

REGISTERED PROFESSIONAL ENGINEER BENJAMIN RAMOS No. C 61340 Exp. 6-30-17 CIVIL STATE OF CALIFORNIA

THE STATE OF CALIFORNIA OR ITS OFFICERS OR AGENTS SHALL NOT BE RESPONSIBLE FOR THE ACCURACY OR COMPLETENESS OF SCANNED COPIES OF THIS PLAN SHEET.

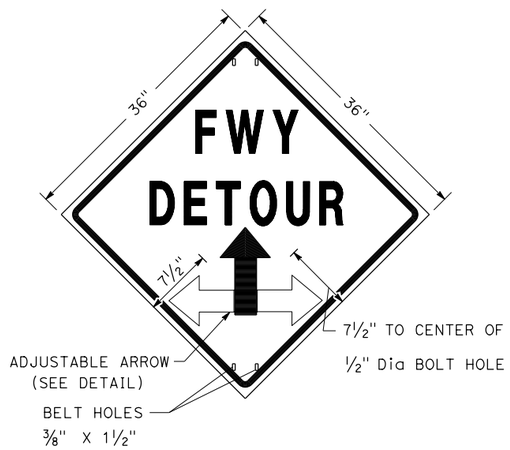

SIGN SP-2

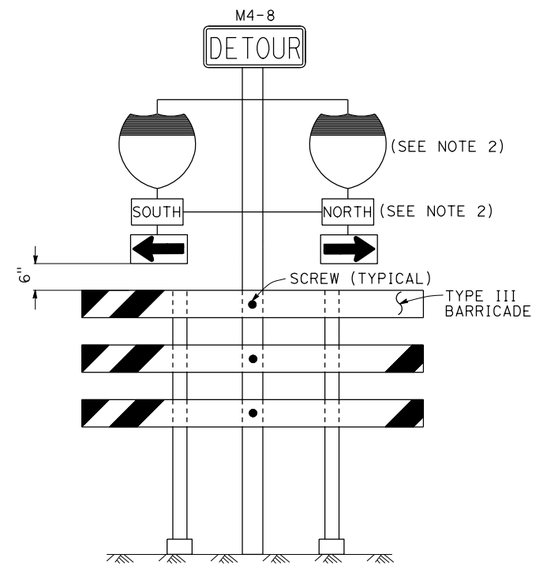

SIGN SP-6 (SEE NOTE 1)

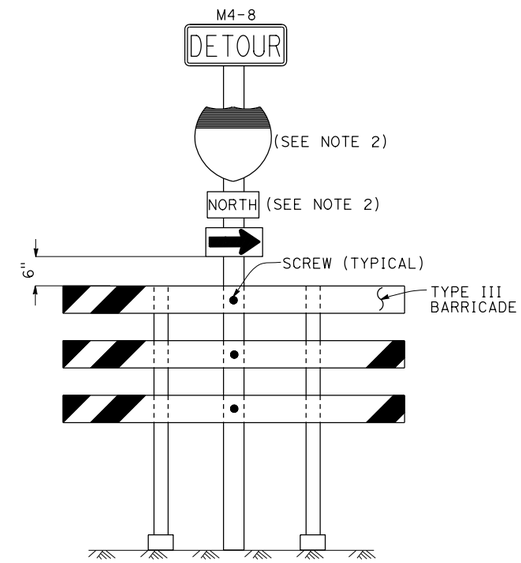

SIGN SP-7 (SEE NOTE 1)

NOTES: SIGN SP-2

1. LETTERS - 6" SERIES E.
2. LETTERS, BORDER AND ARROW - BLACK ON RETROREFLECTORIZED ORANGE BACKGROUND.
3. BASE MATERIAL FOR SIGNS AND ARROWS MUST BE ALUMINUM (MINIMUM 0.06").
4. BELTS (LUGGAGE STRAPS) MUST BE 1" WIDE BY 48" LONG, MADE OF COTTON OR POLYPROPYLENE WEB MATERIAL.
5. SIGNS MUST BE MOUNTED WITH BOTTOMS OF SIGNS A MINIMUM OF 7' ABOVE GROUND EXCEPT AS OTHERWISE SHOWN ON OTHER TRAFFIC HANDLING DETAILS PLANS.

NOTES: SIGNS SP-6 & SP-7

1. IN LIEU OF PLACING SIGNS ON TYPE III BARRICADES, SIGNS, INCLUDING POSTS, MAY BE PLACED INTO THE GROUND OR FASTENED ONTO ELECTROLIERS.
2. USE APPROPRIATE ROUTE MARKER [G26-2(CA), G27-2(CA), G28-2(CA)] AND CARDINAL DIRECTION [NORTH (M3-1), SOUTH (M3-3), EAST (M3-2), WEST (M3-4)].

SPECIAL PORTABLE FREEWAY DETOUR SIGNS

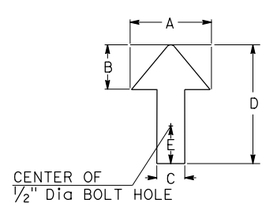

DIMENSIONS				
A	B	C	D	E
6"	3"	2"	8"	1"

ADJUSTABLE ARROW DETAIL

ABBREVIATION

(CA) CALIFORNIA CODE

TRAFFIC HANDLING DETAILS

TRAFFIC CONTROL SYSTEM FOR RAMP CLOSURES, DETOUR SIGNS, AND MISCELLANEOUS DETAILS

SHEET 2 OF 2

NO SCALE

THD-2

STATE OF CALIFORNIA - DEPARTMENT OF TRANSPORTATION
Caltrans DTM

FUNCTIONAL SUPERVISOR: MARTIN OREGEL
CALCULATED-DESIGNED BY: ALBERT K YU
CHECKED BY: JOCELYN C CHIANG
REVISED BY: JC
DATE REVISED: 3/12

LAST REVISION 00-00-00
DATE PLOTTED => 22-JUN-2015
TIME PLOTTED => 07:09

Dist	COUNTY	ROUTE	POST MILES TOTAL PROJECT	SHEET No.	TOTAL SHEETS
07	LA	60	R7.4/R8.1	77	238

REGISTERED CIVIL ENGINEER 5-3-13 DATE

6-1-15
PLANS APPROVAL DATE

REGISTERED PROFESSIONAL ENGINEER BENJAMIN RAMOS No. C 61340 Exp. 6-30-17 CIVIL STATE OF CALIFORNIA

THE STATE OF CALIFORNIA OR ITS OFFICERS OR AGENTS SHALL NOT BE RESPONSIBLE FOR THE ACCURACY OR COMPLETENESS OF SCANNED COPIES OF THIS PLAN SHEET.

LEGEND

- SIGN SP-2
- AND/OR — DESIGNATED DETOUR ROUTE
- DETOUR DIRECTION
- CONTROLLED INTERSECTION

NOTES:

1. SP-2 SIGNS MAY BE STRAPPED ON EXISTING ELECTROLIER, SIGNAL POST OR SIGN POST.
2. SP-2 SIGNS MUST NOT BE INSTALLED ON BARRICADES EXCEPT AS OTHERWISE SHOWN.
3. SIGN LOCATIONS ARE APPROXIMATE. EXACT LOCATIONS WILL BE DETERMINED BY THE ENGINEER.
4. SP-2 SIGNS MUST BE POSTED AT EACH CONTROLLED INTERSECTION (EXCEPT AT COMMERCIAL PROPERTY, RESIDENTIAL COMPLEX OR T-INTERSECTION FROM ONE-WAY STREET) ALONG THE DESIGNATED DETOUR ROUTE.
5. UNLESS OTHERWISE SHOWN ON OTHER THD PLANS, WHEN CONTROLLED INTERSECTIONS ALONG THE DESIGNATED DETOUR ROUTE ARE CLOSELY SPACED, PLACE SP-2 SIGNS AT CONTROLLED INTERSECTIONS AT A DISTANCE NOT TO EXCEED 1/4 MILE FROM THE PRECEDING DETOUR SIGN.
6. EXCEPT AS OTHERWISE SHOWN ON OTHER PLANS OR SPECIFIED IN THE SPECIAL PROVISIONS, SP-2 SIGNS MUST BE PLACED AS SHOWN ON THIS PLAN.

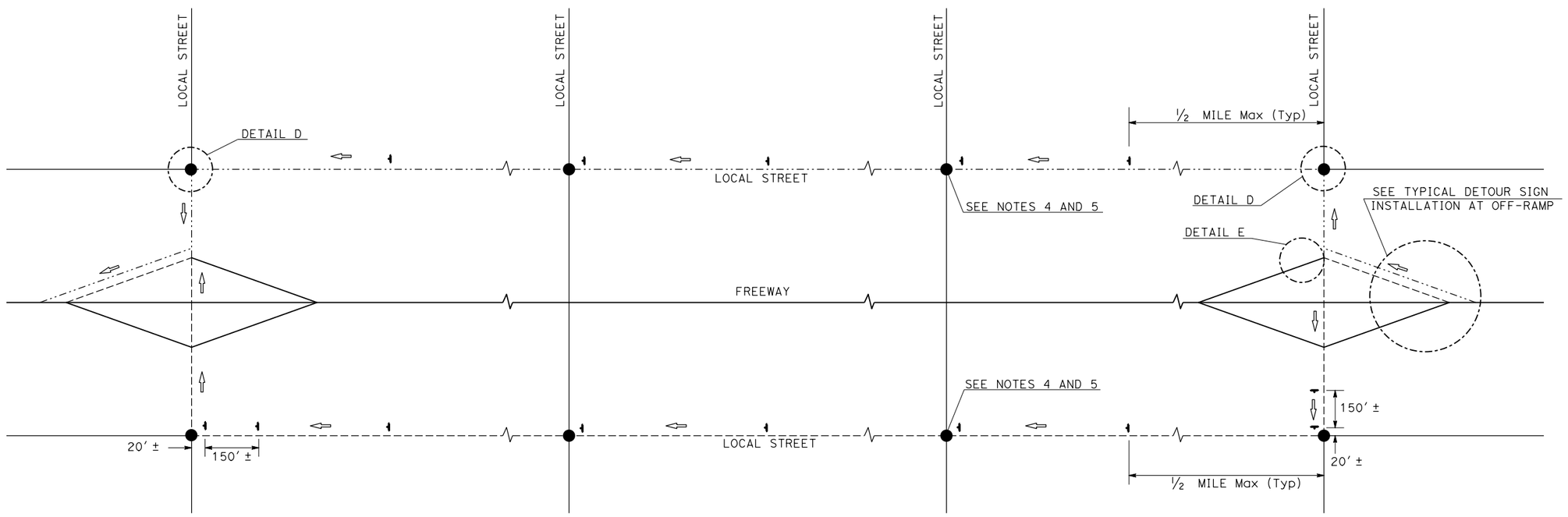

TYPICAL DETOUR SIGN INSTALLATION ALONG DESIGNATED DETOUR ROUTE

TRAFFIC HANDLING DETAILS

TRAFFIC CONTROL SYSTEM FOR DETOUR SIGN INSTALLATION ALONG DESIGNATED DETOUR ROUTE

SHEET 1 OF 3

NO SCALE

THD-3

STATE OF CALIFORNIA - DEPARTMENT OF TRANSPORTATION
Caltrans DTM

FUNCTIONAL SUPERVISOR: MARTIN OREGEL
CALCULATED-DESIGNED BY: ALBERT K YU
CHECKED BY: JOCELYN C CHIANG
REVISED BY: JC
DATE REVISED: 3/12

LAST REVISION 00-00-00
DATE PLOTTED => 22-JUN-2015
TIME PLOTTED => 07:09

Dist	COUNTY	ROUTE	POST MILES TOTAL PROJECT	SHEET No.	TOTAL SHEETS
07	LA	60	R7.4/R8.1	78	238

REGISTERED CIVIL ENGINEER 5-3-13 DATE

6-1-15
PLANS APPROVAL DATE

REGISTERED PROFESSIONAL ENGINEER BENJAMIN RAMOS No. C 61340 Exp. 6-30-17 CIVIL STATE OF CALIFORNIA

THE STATE OF CALIFORNIA OR ITS OFFICERS OR AGENTS SHALL NOT BE RESPONSIBLE FOR THE ACCURACY OR COMPLETENESS OF SCANNED COPIES OF THIS PLAN SHEET.

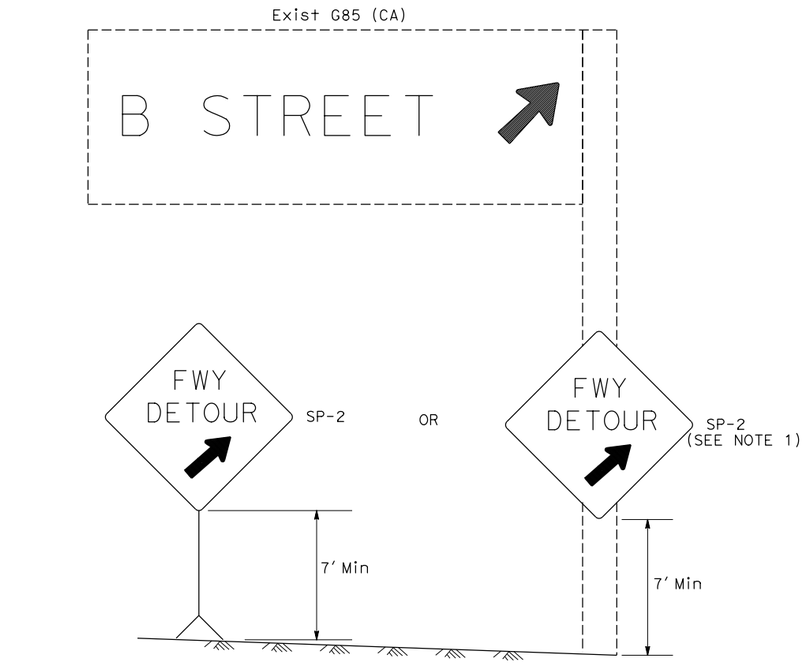

DETAIL A (SEE NOTE 3)

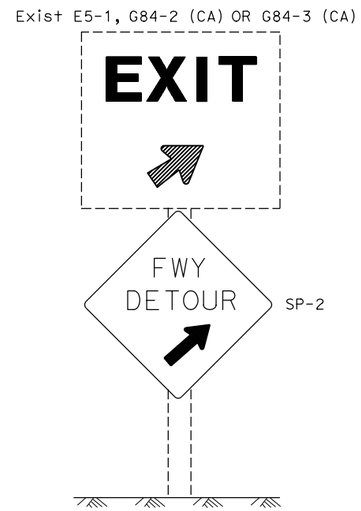

DETAIL B (SEE NOTE 3)

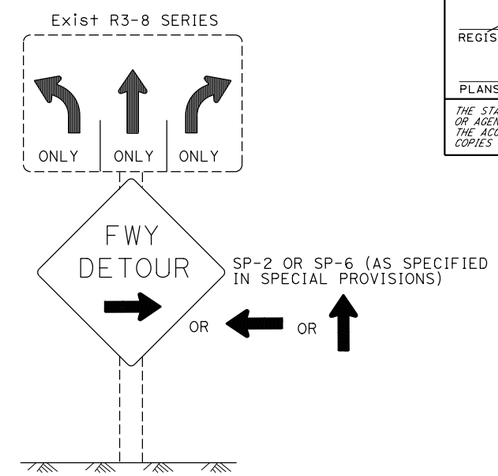

DETAIL C (SEE NOTES 4, 5, AND 6)

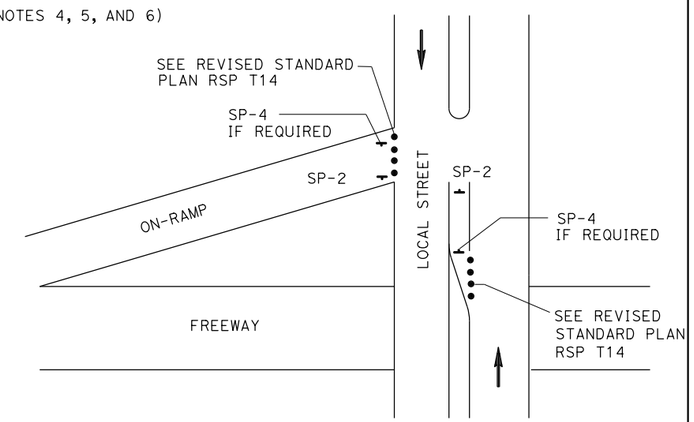

DETAIL E

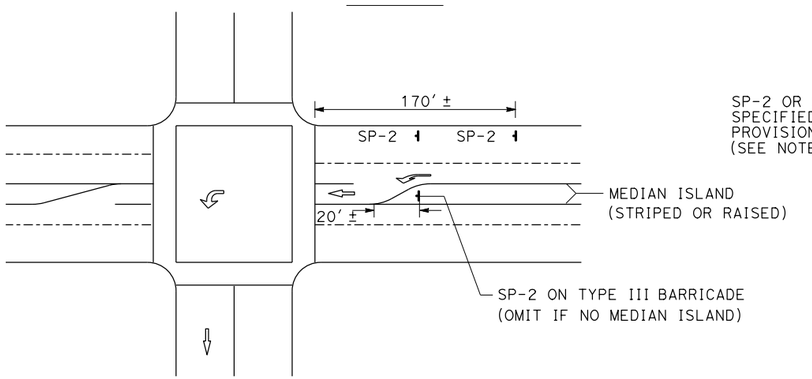

DETAIL D

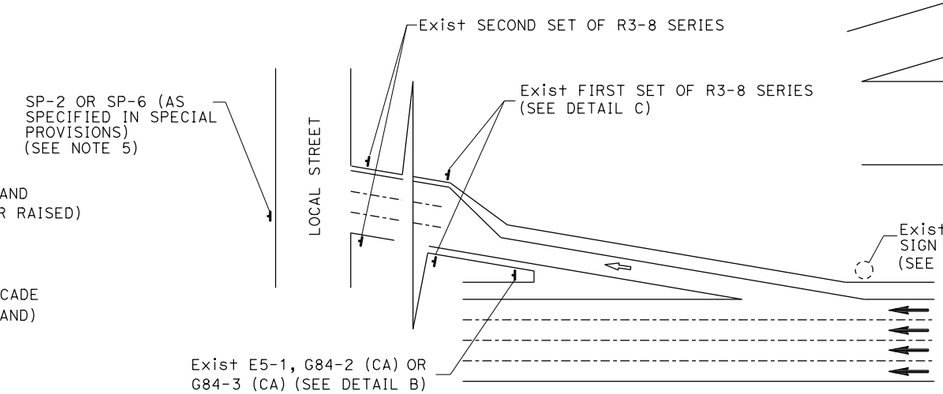

TYPICAL DETOUR SIGN INSTALLATION AT OFF-RAMP

LEGEND

- CONE
- PORTABLE SIGN
- DIRECTION OF TRAVEL
- DETOUR DIRECTION
- EXISTING OVERHEAD SIGN

NOTES: SIGN SP-2

1. SP-2 SIGNS MAY BE STRAPPED ON EXISTING ELECTROLIER, SIGNAL POST OR SIGN POST.
2. SP-2 SIGNS MUST NOT BE INSTALLED ON BARRICADES EXCEPT AS OTHERWISE SHOWN.
3. OMIT DETAILS A AND B FOR FULL FREEWAY CLOSURES.
4. SEE TRAFFIC HANDLING DETAILS-TRAFFIC CONTROL SYSTEM FOR RAMP CLOSURES, DETOUR SIGNS, AND MISCELLANEOUS DETAILS PLAN SHEET 2 OF 2 FOR SP-6 SIGN DETAILS.
5. IF R3-8 SERIES SIGNS ARE NOT PRESENT AT THE OFF-RAMP, SP-2 OR SP-6 SIGNS MUST BE FASTENED ONTO EXISTING ELECTROLIER, SIGNAL POST OR SIGN POST.
6. EXCEPT FOR DETAILS A & B, OMIT SP-2 SIGNS IF RAMP HAS MANDATORY SINGLE MOVE.

SIGN CODE LEGEND

XXYY-Y: FEDERAL SIGN CODE PER MANUAL ON UNIFORM TRAFFIC CONTROL DEVICES (MUTCD)

XXYY-Y (CA): CALIFORNIA SIGN CODE PER CALIFORNIA MUTCD

TRAFFIC HANDLING DETAILS
TRAFFIC CONTROL SYSTEM FOR DETOUR SIGN INSTALLATION ALONG DESIGNATED DETOUR ROUTE SHEET 2 OF 3

NO SCALE

THD-4

STATE OF CALIFORNIA - DEPARTMENT OF TRANSPORTATION
Caltrans DTM

FUNCTIONAL SUPERVISOR: MARTIN OREGEL
CALCULATED-DESIGNED BY: ALBERT K YU
CHECKED BY: JOCELYN C CHIANG
REVISED BY: JC
DATE REVISED: 3/12

LAST REVISION 00-00-00
DATE PLOTTED => 22-JUN-2015
TIME PLOTTED => 07:09

Dist	COUNTY	ROUTE	POST MILES TOTAL PROJECT	SHEET No.	TOTAL SHEETS
07	LA	60	R7.4/R8.1	79	238

REGISTERED CIVIL ENGINEER 5-3-13 DATE

6-1-15
PLANS APPROVAL DATE

REGISTERED PROFESSIONAL ENGINEER BENJAMIN RAMOS No. C 61340 Exp. 6-30-17 CIVIL STATE OF CALIFORNIA

THE STATE OF CALIFORNIA OR ITS OFFICERS OR AGENTS SHALL NOT BE RESPONSIBLE FOR THE ACCURACY OR COMPLETENESS OF SCANNED COPIES OF THIS PLAN SHEET.

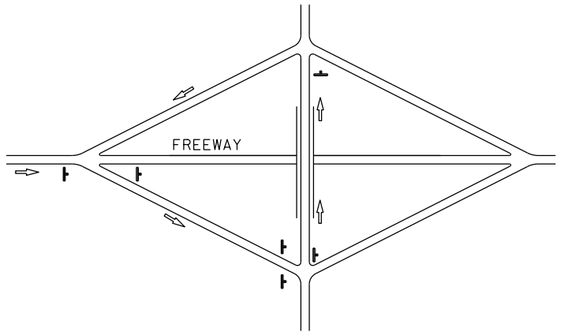

TYPE I

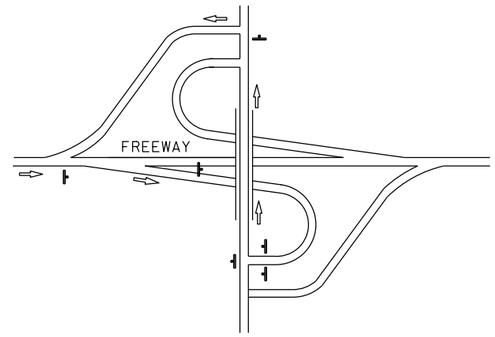

TYPE II

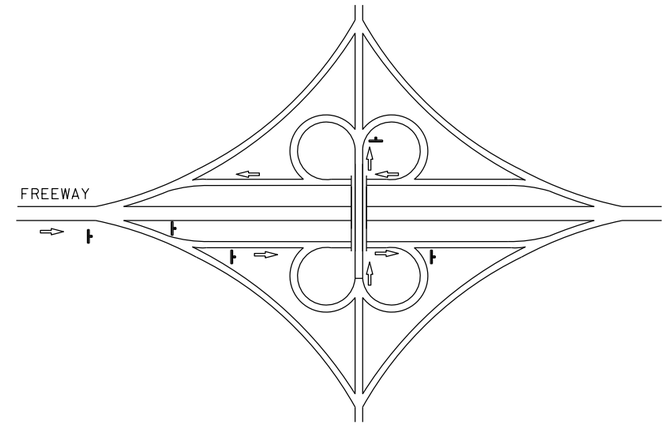

TYPE III

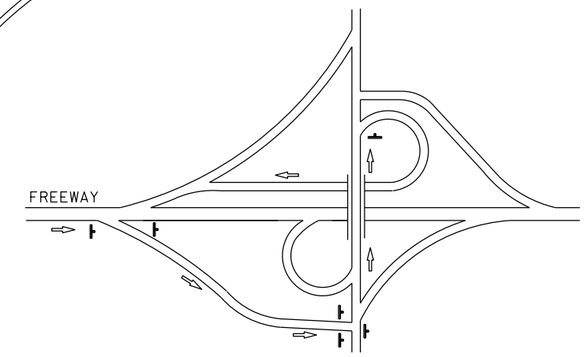

TYPE IV

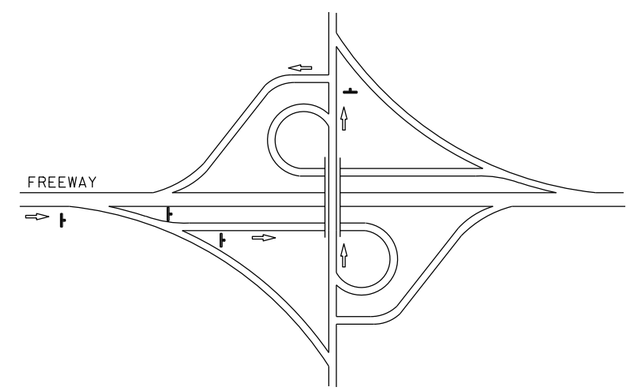

TYPE V

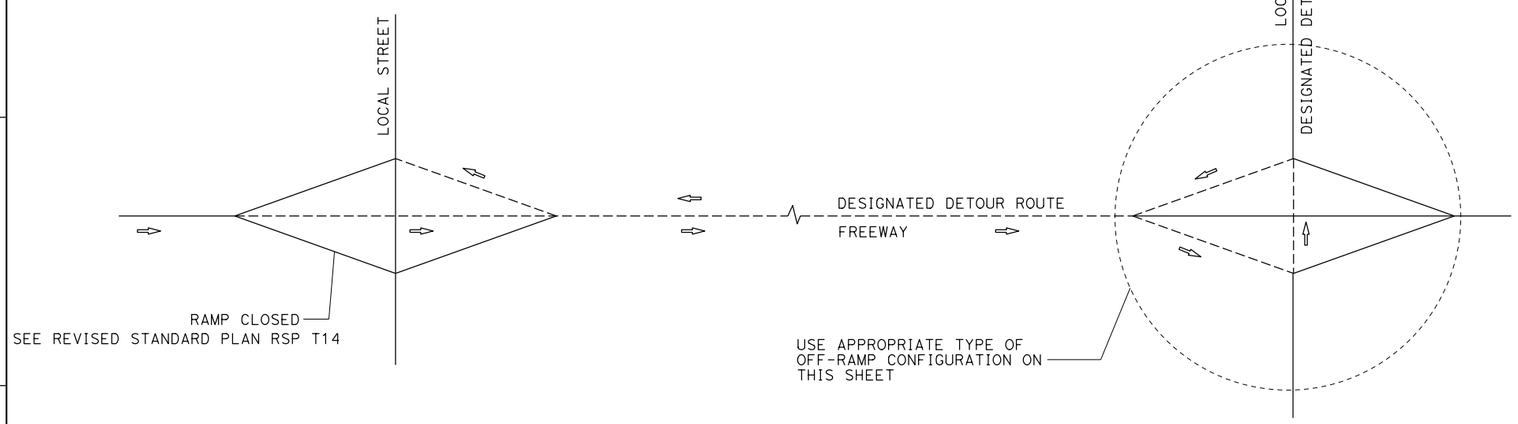

TYPE OF OFF-RAMP CONFIGURATION	MINIMUM No. OF SP-2
TYPE I	6
TYPE II	6
TYPE III	5
TYPE IV	6
TYPE V	4

TYPICAL DETOUR SIGN INSTALLATION FOR OFF-RAMP CLOSURE

NOTES:

1. FOR RAMP CONFIGURATIONS NOT SHOWN, THE EXACT LOCATIONS AND MINIMUM NUMBER OF SP-2 SIGNS MUST BE DETERMINED BY THE ENGINEER.
2. SEE TRAFFIC HANDLING DETAILS-TRAFFIC CONTROL SYSTEM FOR RAMP CLOSURES, DETOUR SIGNS, AND MISCELLANEOUS DETAILS PLAN SHEET 2 OF 2 FOR SP-2 SIGN DETAILS.

LEGEND

- SIGN SP-2
- DETOUR DIRECTION
- DESIGNATED DETOUR ROUTE

TRAFFIC HANDLING DETAILS
TRAFFIC CONTROL SYSTEM FOR DETOUR SIGN INSTALLATION ALONG DESIGNATED DETOUR ROUTE
SHEET 3 OF 3

NO SCALE

THD-5

REVISED BY	JC
DATE REVISED	3/12
ALBERT K YU	
JOCELYN C CHIANG	
CALCULATED-DESIGNED BY	
CHECKED BY	
FUNCTIONAL SUPERVISOR	MARTIN OREGEL

STATE OF CALIFORNIA - DEPARTMENT OF TRANSPORTATION
Caltrans DTM

LAST REVISION 00-00-00 | DATE PLOTTED => 22-JUN-2015 | TIME PLOTTED => 07:09

Dist	COUNTY	ROUTE	POST MILES TOTAL PROJECT	SHEET No.	TOTAL SHEETS
07	LA	60	R7.4/R8.1	80	238

REGISTERED CIVIL ENGINEER 5-3-13 DATE

6-1-15
PLANS APPROVAL DATE

REGISTERED PROFESSIONAL ENGINEER BENJAMIN RAMOS No. C 61340 Exp. 6-30-17 CIVIL STATE OF CALIFORNIA

THE STATE OF CALIFORNIA OR ITS OFFICERS OR AGENTS SHALL NOT BE RESPONSIBLE FOR THE ACCURACY OR COMPLETENESS OF SCANNED COPIES OF THIS PLAN SHEET.

LEGEND

- CONE
- TRAFFIC PLASTIC DRUM
- FLASHING ARROW SIGN
- PORTABLE SIGN
- DIRECTION OF TRAVEL
- PCMS

ABBREVIATIONS

(CA) CALIFORNIA CODE

PCMS PORTABLE CHANGEABLE MESSAGE SIGN

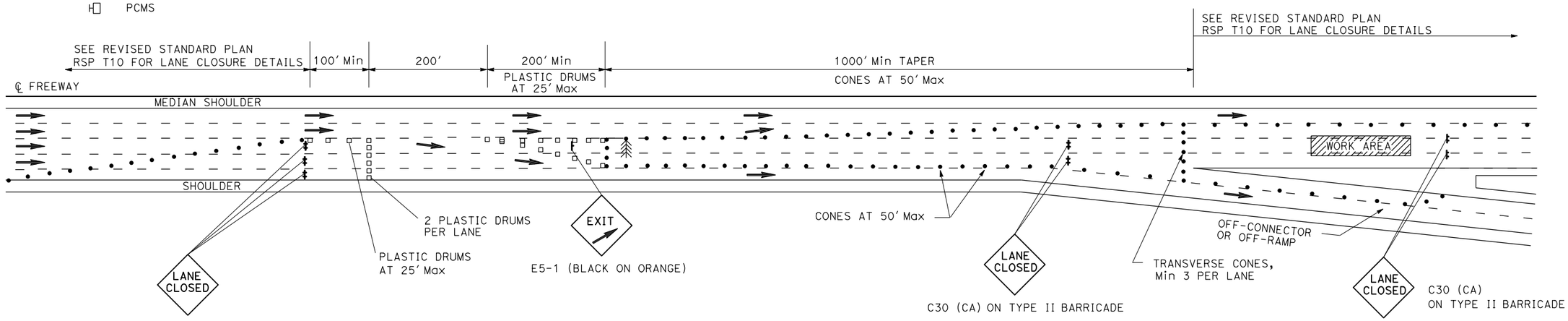

OPTION 1

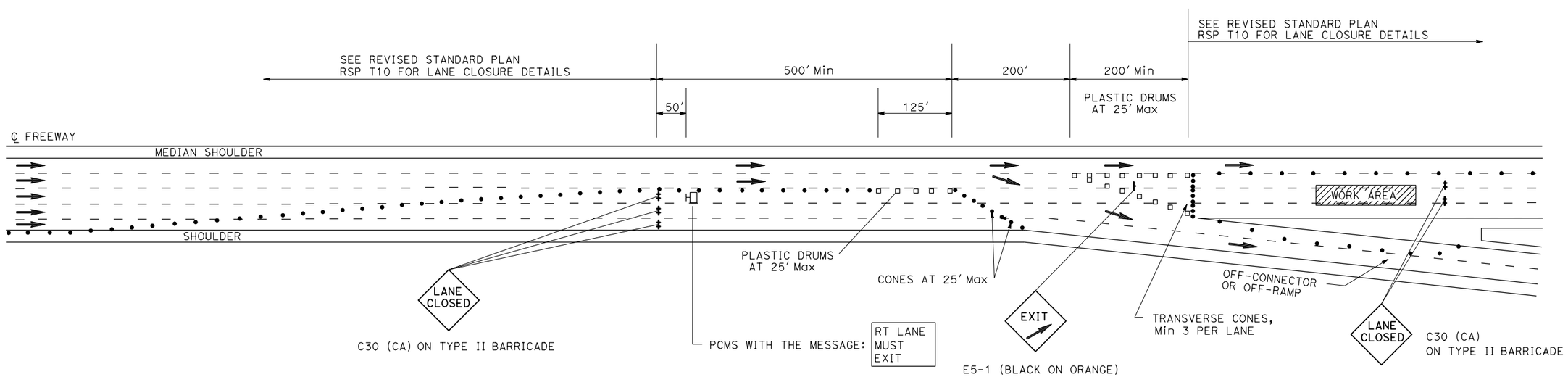

OPTION 2

TRAFFIC HANDLING DETAILS

TRAFFIC CONTROL SYSTEM FOR SLIP-RAMP AT OFF-CONNECTOR OR OFF-RAMP

NO SCALE

THD-6

REVISED BY	DATE REVISED
JC	3/12

ALBERT K YU — JOCELYN C CHIANG

CALCULATED-DESIGNED BY — CHECKED BY

FUNCTIONAL SUPERVISOR — MARTIN OREGEL

STATE OF CALIFORNIA - DEPARTMENT OF TRANSPORTATION — DTM — Caltrans

LAST REVISION 00-00-00 — DATE PLOTTED => 22-JUN-2015 — TIME PLOTTED => 07:09

Dist	COUNTY	ROUTE	POST MILES TOTAL PROJECT	SHEET No.	TOTAL SHEETS
07	LA	60	R7.4/R8.1	81	238

REGISTERED CIVIL ENGINEER — DATE 1/29/14

6-1-15
PLANS APPROVAL DATE

REGISTERED PROFESSIONAL ENGINEER — VINCENT NGUYEN — No. C57797 — Exp. 3/31/16 — CIVIL — STATE OF CALIFORNIA

THE STATE OF CALIFORNIA OR ITS OFFICERS OR AGENTS SHALL NOT BE RESPONSIBLE FOR THE ACCURACY OR COMPLETENESS OF SCANNED COPIES OF THIS PLAN SHEET.

NOTES:

1. ALL STRIPES AND PAVEMENT MARKINGS MUST BE THERMOPLASTIC, UNLESS OTHERWISE NOTED.
2. CHEVRON AND DIAGONAL MARKINGS MUST BE APPLIED AT A 45 DEGREE ANGLE FROM THE ETW.
3. ALL CONFLICTING STRIPING MUST BE REMOVED.
4. ALL LIMIT LINES, CROSSWALKS, CHEVRONS AND DIAGONALS MUST BE 12" SOLID WHITE, UNLESS OTHERWISE NOTED.

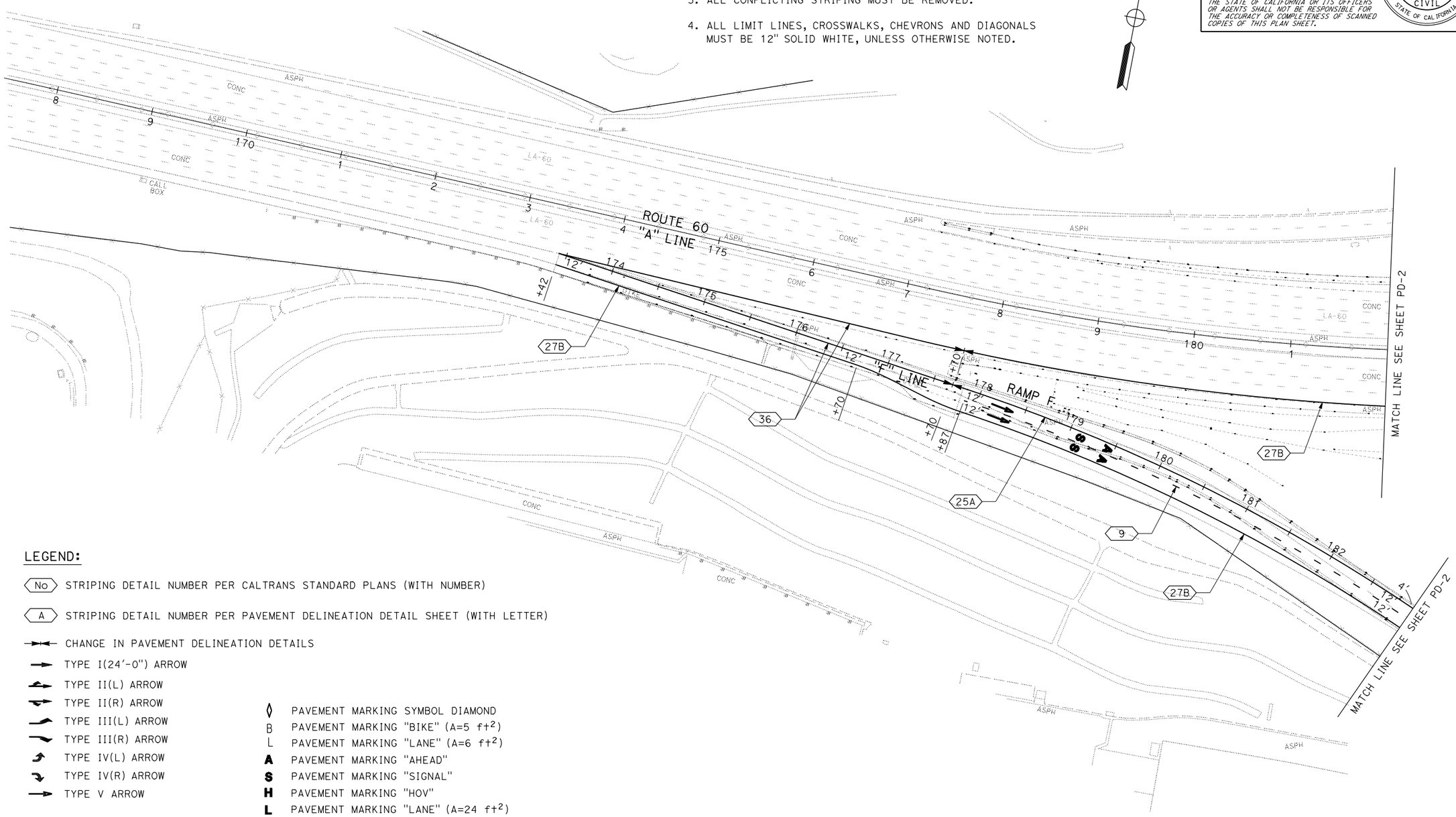

LEGEND:

- (No) STRIPING DETAIL NUMBER PER CALTRANS STANDARD PLANS (WITH NUMBER)
- (A) STRIPING DETAIL NUMBER PER PAVEMENT DELINEATION DETAIL SHEET (WITH LETTER)
- CHANGE IN PAVEMENT DELINEATION DETAILS
- TYPE I(24'-0") ARROW
- TYPE II(L) ARROW
- TYPE II(R) ARROW
- TYPE III(L) ARROW
- TYPE III(R) ARROW
- TYPE IV(L) ARROW
- TYPE IV(R) ARROW
- TYPE V ARROW

- ◊ PAVEMENT MARKING SYMBOL DIAMOND
- B PAVEMENT MARKING "BIKE" (A=5 ft^2)
- L PAVEMENT MARKING "LANE" (A=6 ft^2)
- **A** PAVEMENT MARKING "AHEAD"
- **S** PAVEMENT MARKING "SIGNAL"
- **H** PAVEMENT MARKING "HOV"
- **L** PAVEMENT MARKING "LANE" (A=24 ft^2)

APPROVED FOR PAVEMENT DELINEATION WORK ONLY

PAVEMENT DELINEATION PLAN

SCALE: 1" = 50'

PD-1

STATE OF CALIFORNIA - DEPARTMENT OF TRANSPORTATION
Caltrans® **TRAFFIC DESIGN**

FUNCTIONAL SUPERVISOR: GRISH BIGLARIAN
CALCULATED-DESIGNED BY: EDGAR HERRERA
CHECKED BY: VINCENT NGUYEN
REVISED BY
DATE REVISED

LAST REVISION 07-30-13 | DATE PLOTTED => 22-JUN-2015 | TIME PLOTTED => 07:09

Dist	COUNTY	ROUTE	POST MILES TOTAL PROJECT	SHEET No.	TOTAL SHEETS
07	LA	60	R7.4/R8.1	82	238

REGISTERED CIVIL ENGINEER — DATE 1/29/14

6-1-15
PLANS APPROVAL DATE

REGISTERED PROFESSIONAL ENGINEER — VINCENT NGUYEN — No. C57797 — Exp. 3/31/16 — CIVIL — STATE OF CALIFORNIA

THE STATE OF CALIFORNIA OR ITS OFFICERS OR AGENTS SHALL NOT BE RESPONSIBLE FOR THE ACCURACY OR COMPLETENESS OF SCANNED COPIES OF THIS PLAN SHEET.

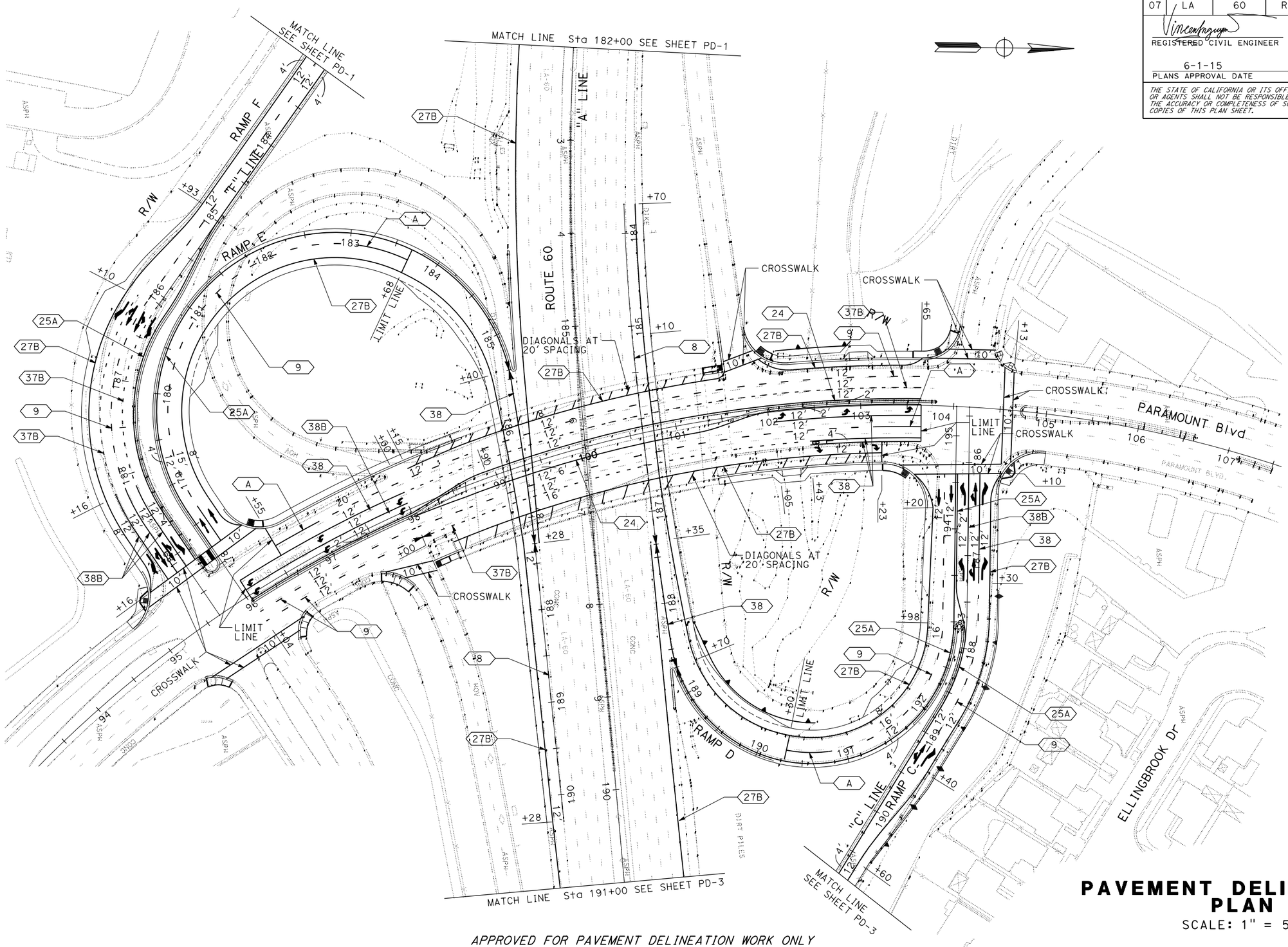

PAVEMENT DELINEATION PLAN

SCALE: 1" = 50'

PD-2

APPROVED FOR PAVEMENT DELINEATION WORK ONLY

REVISED BY	DATE REVISED

CALCULATED-DESIGNED BY	EDGAR HERRERA
CHECKED BY	VINCENT NGUYEN
FUNCTIONAL SUPERVISOR	GRISH BIGLARIAN

STATE OF CALIFORNIA - DEPARTMENT OF TRANSPORTATION
Caltrans® **TRAFFIC DESIGN**

LAST REVISION 07-30-13 | DATE PLOTTED => 22-JUN-2015 | TIME PLOTTED => 07:09

Dist	COUNTY	ROUTE	POST MILES TOTAL PROJECT	SHEET No.	TOTAL SHEETS
07	LA	60	R7.4/R8.1	83	238

REGISTERED CIVIL ENGINEER — DATE 1/29/14

6-1-15
PLANS APPROVAL DATE

REGISTERED PROFESSIONAL ENGINEER — VINCENT NGUYEN — No. C57797 — Exp. 3/31/16 — CIVIL — STATE OF CALIFORNIA

THE STATE OF CALIFORNIA OR ITS OFFICERS OR AGENTS SHALL NOT BE RESPONSIBLE FOR THE ACCURACY OR COMPLETENESS OF SCANNED COPIES OF THIS PLAN SHEET.

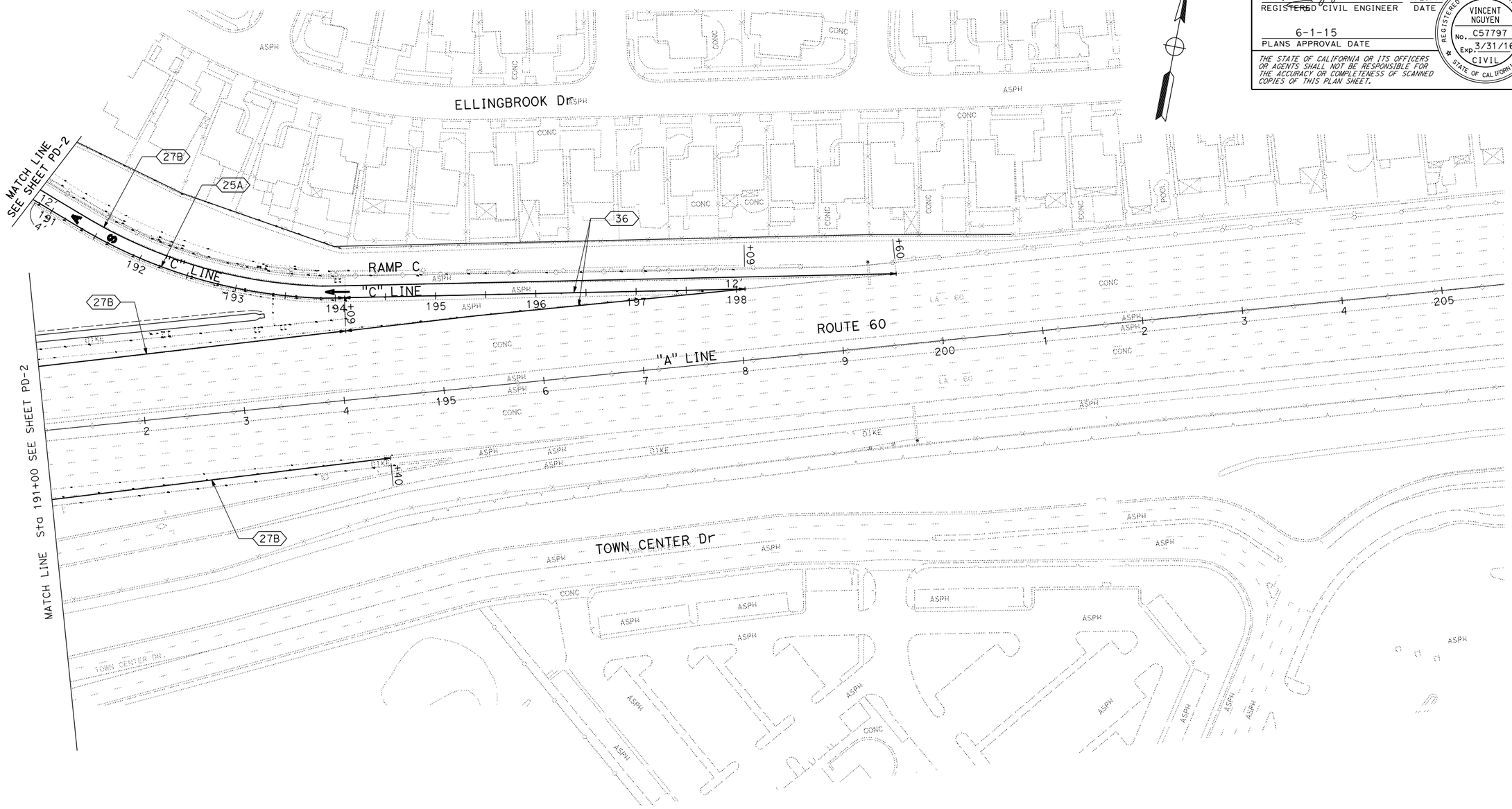

PAVEMENT DELINEATION PLAN

SCALE: 1" = 50'

PD-3

APPROVED FOR PAVEMENT DELINEATION WORK ONLY

REVISED BY	DATE REVISED

EDGAR HERRERA	CALCULATED-DESIGNED BY
VINCENT NGUYEN	CHECKED BY

FUNCTIONAL SUPERVISOR: GRISH BIGLARIAN

STATE OF CALIFORNIA - DEPARTMENT OF TRANSPORTATION
Caltrans® **TRAFFIC DESIGN**

LAST REVISION 07-30-13 | DATE PLOTTED => 22-JUN-2015 | TIME PLOTTED => 07:10

Dist	COUNTY	ROUTE	POST MILES TOTAL PROJECT	SHEET No.	TOTAL SHEETS
07	LA	60	R7.4/R8.1	84	238

REGISTERED CIVIL ENGINEER 1/29/14 DATE

6-1-15
PLANS APPROVAL DATE

REGISTERED PROFESSIONAL ENGINEER VINCENT NGUYEN No. C57797 Exp. 3/31/16 CIVIL STATE OF CALIFORNIA

THE STATE OF CALIFORNIA OR ITS OFFICERS OR AGENTS SHALL NOT BE RESPONSIBLE FOR THE ACCURACY OR COMPLETENESS OF SCANNED COPIES OF THIS PLAN SHEET.

SHEET No.	THERMOPLASTIC TRAFFIC STRIPE										THERMOPLASTIC PAVEMENT MARKING				PAVEMENT MARKER *	
	4"						8"						12"		RETRO-REFLECTIVE	
	DETAIL 8 (BROKEN 17'- 7')	DETAIL 9 (BROKEN 17'- 7')	DETAIL A SOLID WHITE STRIPE	DETAIL 24 SOLID YELLOW STRIPE	DETAIL 25A SOLID YELLOW STRIPE	DETAIL 27B SOLID WHITE STRIPE	DETAIL 36 SOLID WHITE	DETAIL 38 SOLID WHITE	DETAIL 38B SOLID WHITE	DETAIL 37B (BROKEN 12'- 3')	ARROW	WORDS	CROSSWALK/ LIMIT LINE	DIAGONALS WHITE STRIPE	TYPE G	TYPE H
	LF	LF	LF	LF	LF	LF	LF	LF	LF	LF	SQFT	SQFT	SQFT	SQFT	EA	EA
PD-1		513			530	1,388	856				66	126			46	22
PD-2	665	2,842	200	1,522	6,892	5,304		1,048	616	1,442	997	11	1,133	457	258	287
PD-3					331	1,431	800				33	63			33	14
SUBTOTAL	665	3,355	200	1,522	7,753	8,123	1,656	1,048	616	1,442	1,096	200	1,133	457	337	323
TOTAL	4,020		17,598				3,320			1,442	2,886				660	

* FOR ADDITIONAL QUANTITIES AND TOTAL, SEE PLAN SHEET SCQ-1

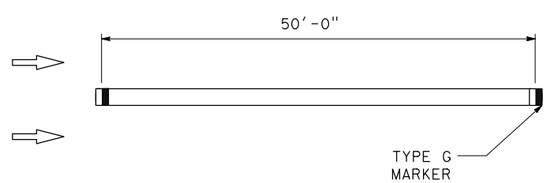

DETAIL A
NO SCALE

PAVEMENT DELINEATION QUANTITIES

PDQ-1

STATE OF CALIFORNIA - DEPARTMENT OF TRANSPORTATION
Caltrans® TRAFFIC DESIGN

FUNCTIONAL SUPERVISOR: GRISH BIGLARIAN
CALCULATED-DESIGNED BY: EDGAR HERRERA
CHECKED BY: VINCENT NGUYEN
REVISED BY
DATE REVISED

LAST REVISION 07-30-13
DATE PLOTTED => 22-JUN-2015
TIME PLOTTED => 07:10

Dist	COUNTY	ROUTE	POST MILES TOTAL PROJECT	SHEET No.	TOTAL SHEETS
07	LA	60	R7.4/R8.1	85	238

REGISTERED CIVIL ENGINEER — DATE 1/29/14

6-1-15
PLANS APPROVAL DATE

REGISTERED PROFESSIONAL ENGINEER — EDGAR HERRERA — No. C67603 — Exp. 6/30/17 — CIVIL — STATE OF CALIFORNIA

THE STATE OF CALIFORNIA OR ITS OFFICERS OR AGENTS SHALL NOT BE RESPONSIBLE FOR THE ACCURACY OR COMPLETENESS OF SCANNED COPIES OF THIS PLAN SHEET.

LEGEND:

- (E) EXISTING SIGN TO REMAIN
- (I) INSTALL SIGN (OVERHEAD & ROADSIDE)
- (R) REMOVE ROADSIDE SIGN
- (RL) RELOCATE ROADSIDE SIGN
- SINGLE POST SIGN
- DOUBLE POST SIGN
- (A) OVERHEAD SIGN IDENTIFICATION (WITH NUMBER & LETTER)
- (No) ROADSIDE SIGN IDENTIFICATION (WITH NUMBER)

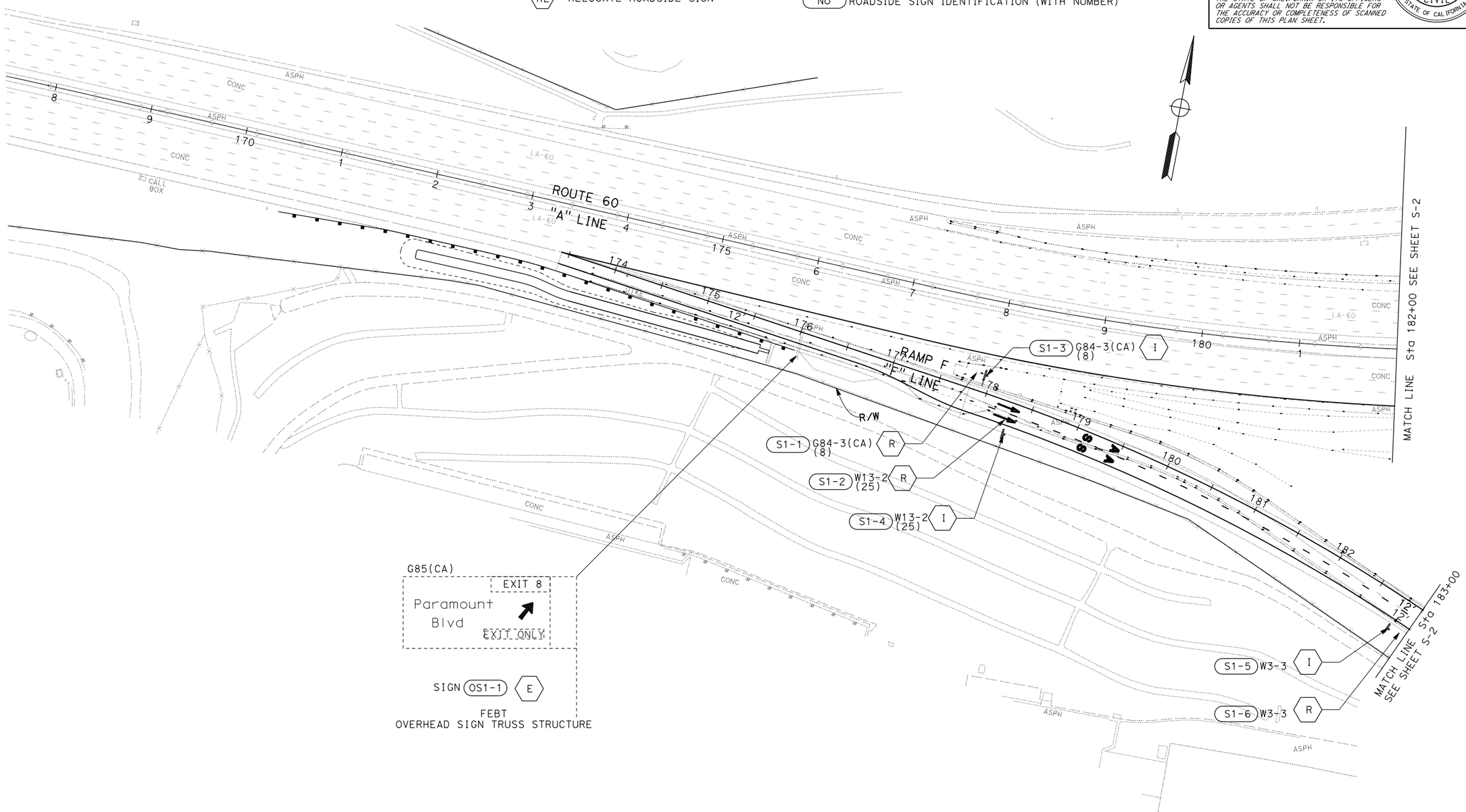

SIGN PLAN

SCALE: 1" = 50'

S-1

APPROVED FOR SIGN WORK ONLY

REVISED BY	DATE REVISED

CALCULATED-DESIGNED BY	EDGAR HERRERA
CHECKED BY	VINCENT NGUYEN

FUNCTIONAL SUPERVISOR: GRISH BIGLARIAN

STATE OF CALIFORNIA - DEPARTMENT OF TRANSPORTATION

Caltrans® **TRAFFIC DESIGN**

LAST REVISION 07-30-13 | DATE PLOTTED => 22-JUN-2015 | TIME PLOTTED => 07:10

Dist	COUNTY	ROUTE	POST MILES TOTAL PROJECT	SHEET No.	TOTAL SHEETS
07	LA	60	R7.4/R8.1	86	238

REGISTERED CIVIL ENGINEER 1/29/14 DATE

6-1-15
PLANS APPROVAL DATE

REGISTERED PROFESSIONAL ENGINEER EDGAR HERRERA No. C67603 Exp. 6/30/17 CIVIL STATE OF CALIFORNIA

THE STATE OF CALIFORNIA OR ITS OFFICERS OR AGENTS SHALL NOT BE RESPONSIBLE FOR THE ACCURACY OR COMPLETENESS OF SCANNED COPIES OF THIS PLAN SHEET.

NOTE: FOR SIGN REMOVAL SEE SHEET S-4

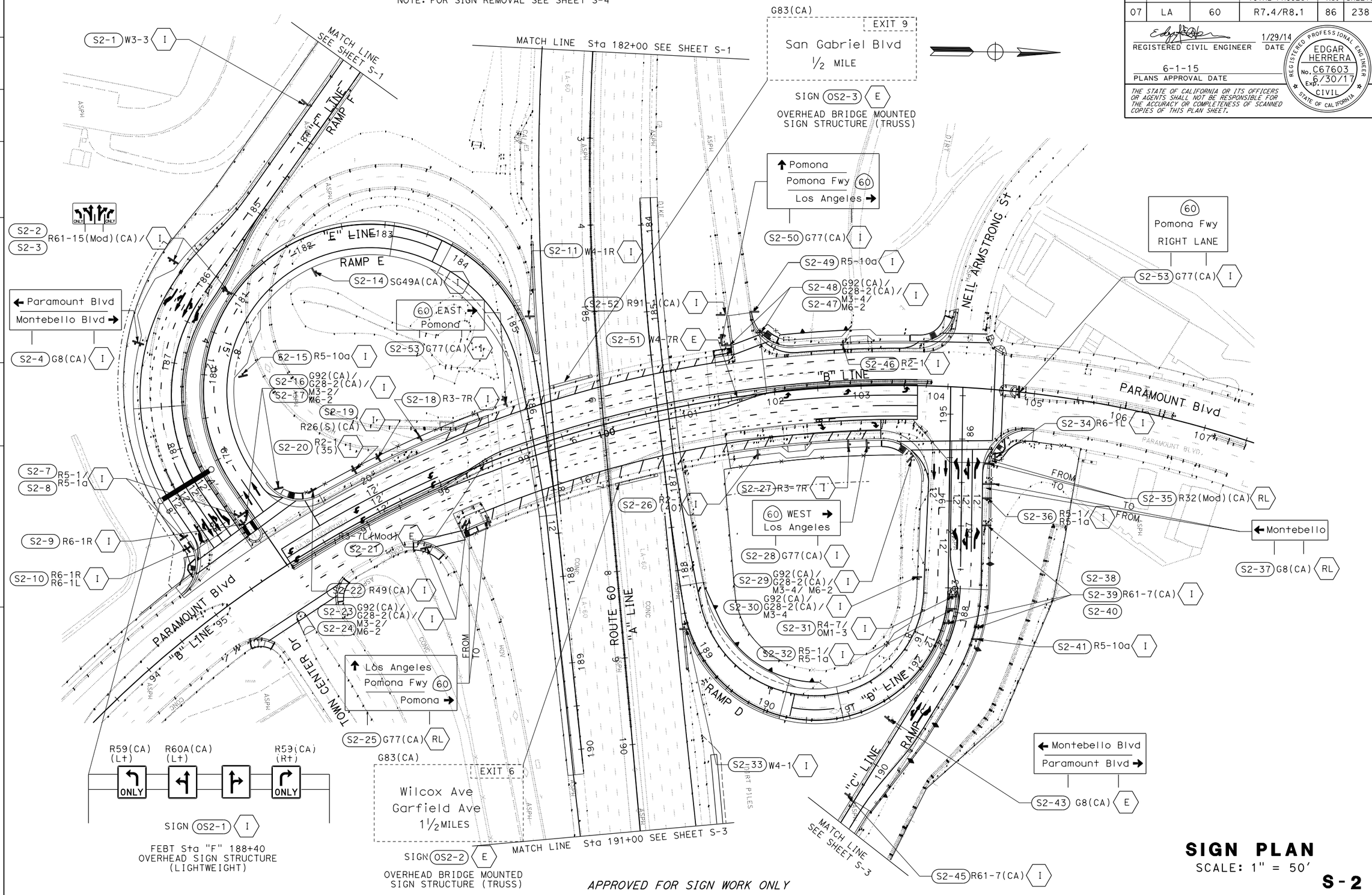

APPROVED FOR SIGN WORK ONLY

SIGN PLAN

SCALE: 1" = 50'

S-2

STATE OF CALIFORNIA - DEPARTMENT OF TRANSPORTATION
Caltrans® **TRAFFIC DESIGN**

FUNCTIONAL SUPERVISOR: GRISH BIGLARIAN
CALCULATED-DESIGNED BY: EDGAR HERRERA
CHECKED BY: VINCENT NGUYEN
REVISED BY
DATE REVISED

LAST REVISION 07-30-13
DATE PLOTTED => 22-JUN-2015
TIME PLOTTED => 07:10

Dist	COUNTY	ROUTE	POST MILES TOTAL PROJECT	SHEET No.	TOTAL SHEETS
07	LA	60	R7.4/R8.1	87	238

REGISTERED CIVIL ENGINEER — DATE 1/29/14

6-1-15
PLANS APPROVAL DATE

REGISTERED PROFESSIONAL ENGINEER — EDGAR HERRERA — No. C67603 — Exp. 6/30/17 — CIVIL — STATE OF CALIFORNIA

THE STATE OF CALIFORNIA OR ITS OFFICERS OR AGENTS SHALL NOT BE RESPONSIBLE FOR THE ACCURACY OR COMPLETENESS OF SCANNED COPIES OF THIS PLAN SHEET.

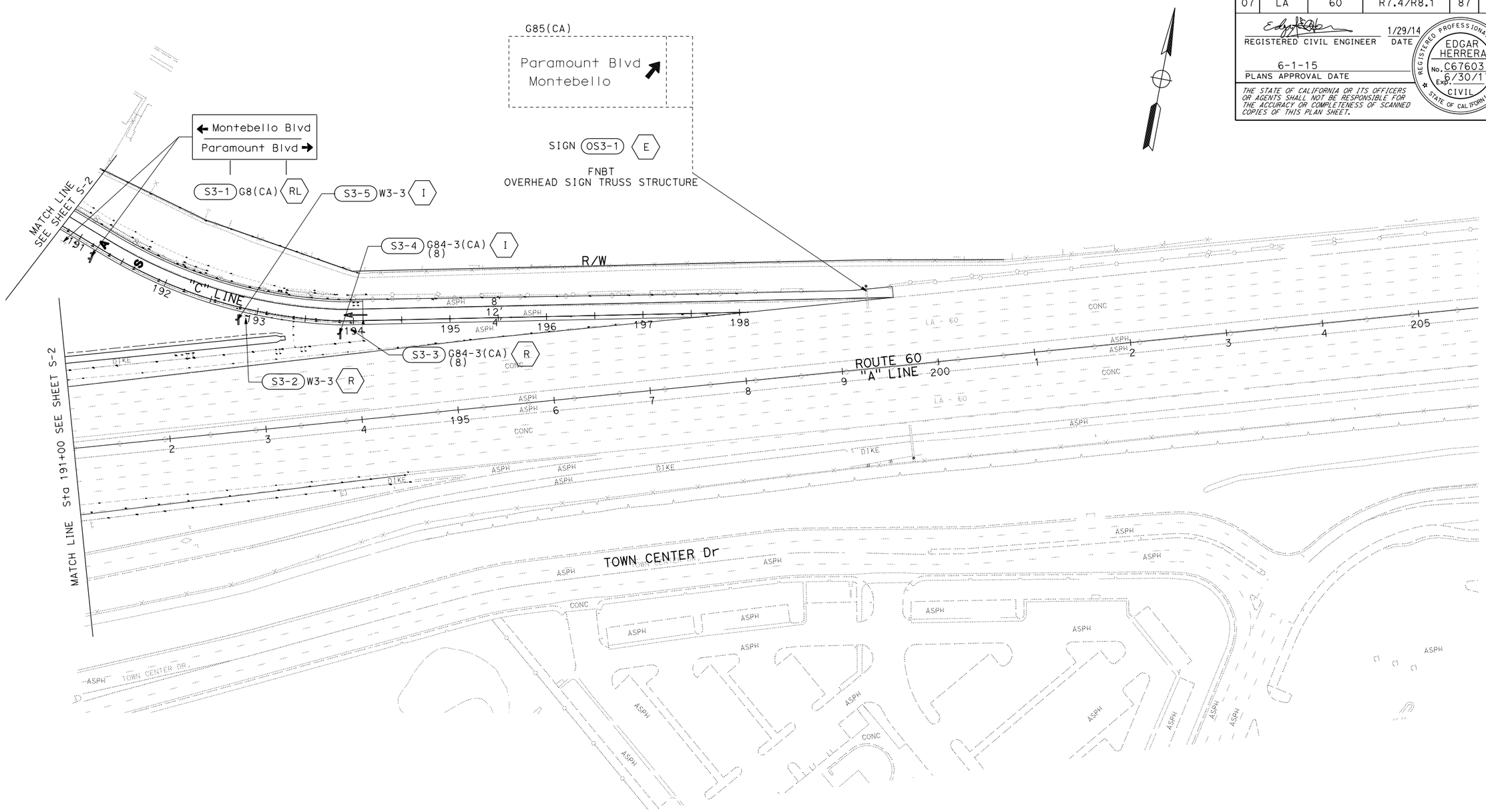

SIGN PLAN

SCALE: 1" = 50'

S-3

APPROVED FOR SIGN WORK ONLY

STATE OF CALIFORNIA - DEPARTMENT OF TRANSPORTATION
Caltrans® TRAFFIC DESIGN

FUNCTIONAL SUPERVISOR: GRISH BIGLARIAN
CALCULATED-DESIGNED BY: EDGAR HERRERA
CHECKED BY: VINCENT NGUYEN
REVISED BY
DATE REVISED

LAST REVISION 07-30-13
DATE PLOTTED => 22-JUN-2015
TIME PLOTTED => 07:10

BORDER LAST REVISED 7/2/2010
USERNAME => s112049
DGN FILE => 73x711oa003.dgn
RELATIVE BORDER SCALE IS IN INCHES 0 1 2 3
UNIT 1877
PROJECT NUMBER & PHASE 07150001321

Dist	COUNTY	ROUTE	POST MILES TOTAL PROJECT	SHEET No.	TOTAL SHEETS
07	LA	60	R7.4/R8.1	88	238

REGISTERED CIVIL ENGINEER — DATE 1/29/14

6-1-15
PLANS APPROVAL DATE

REGISTERED PROFESSIONAL ENGINEER — EDGAR HERRERA — No. C67603 — Exp. 6/30/17 — CIVIL — STATE OF CALIFORNIA

THE STATE OF CALIFORNIA OR ITS OFFICERS OR AGENTS SHALL NOT BE RESPONSIBLE FOR THE ACCURACY OR COMPLETENESS OF SCANNED COPIES OF THIS PLAN SHEET.

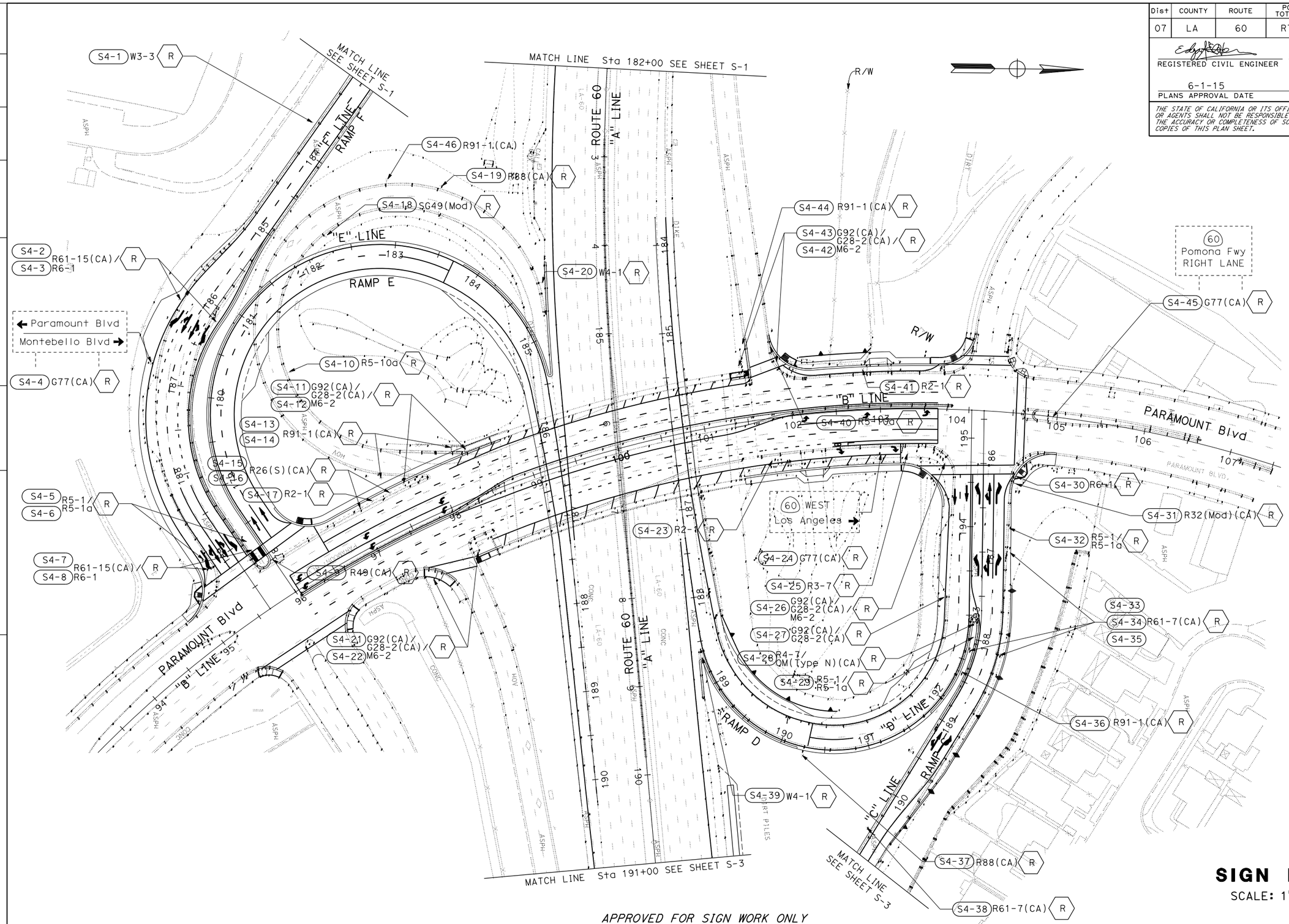

SIGN PLAN

SCALE: 1" = 50'

S-4

APPROVED FOR SIGN WORK ONLY

STATE OF CALIFORNIA - DEPARTMENT OF TRANSPORTATION
Caltrans® **TRAFFIC DESIGN**

FUNCTIONAL SUPERVISOR: GRISH BIGLARIAN
CALCULATED-DESIGNED BY: EDGAR HERRERA
CHECKED BY: VINCENT NGUYEN
REVISED BY
DATE REVISED

LAST REVISION 07-30-13 | DATE PLOTTED => 22-JUN-2015 | TIME PLOTTED => 07:10

BORDER LAST REVISED 7/2/2010 | USERNAME => s112049 | DGN FILE => 73x711oa004.dgn | RELATIVE BORDER SCALE IS IN INCHES 0 1 2 3 | UNIT 1877 | PROJECT NUMBER & PHASE 07150001321

Dist	COUNTY	ROUTE	POST MILES TOTAL PROJECT	SHEET No.	TOTAL SHEETS
07	LA	60	R7.4/R8.1	89	238

REGISTERED CIVIL ENGINEER 1/29/14 DATE

6-1-15
PLANS APPROVAL DATE

REGISTERED PROFESSIONAL ENGINEER EDGAR HERRERA No. C67603 Exp. 6/30/17 CIVIL STATE OF CALIFORNIA

THE STATE OF CALIFORNIA OR ITS OFFICERS OR AGENTS SHALL NOT BE RESPONSIBLE FOR THE ACCURACY OR COMPLETENESS OF SCANNED COPIES OF THIS PLAN SHEET.

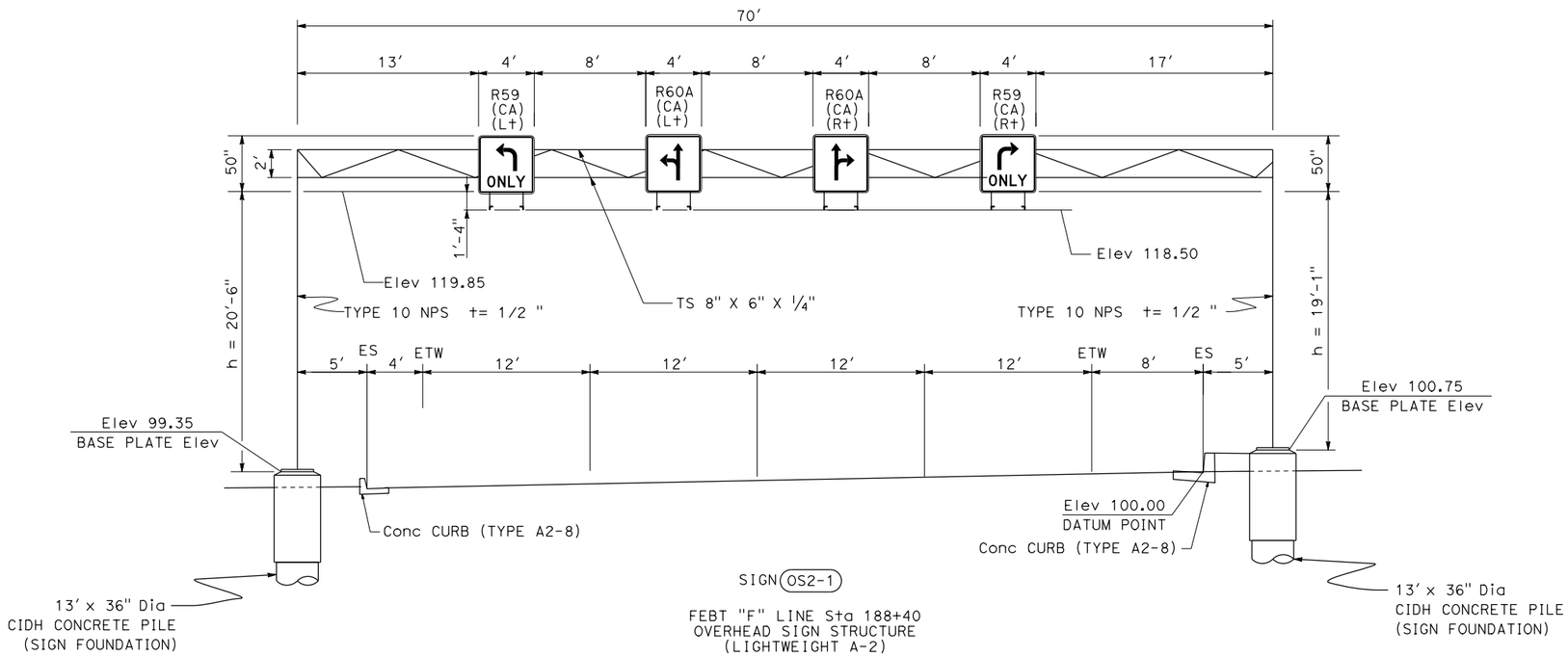

SIGN (OS2-1)

FEBT "F" LINE Sta 188+40
OVERHEAD SIGN STRUCTURE
(LIGHTWEIGHT A-2)

R61-15(Mod)(CA)

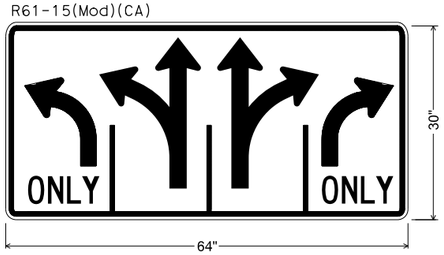

(S2-2)
(S2-3)

G8(CA)

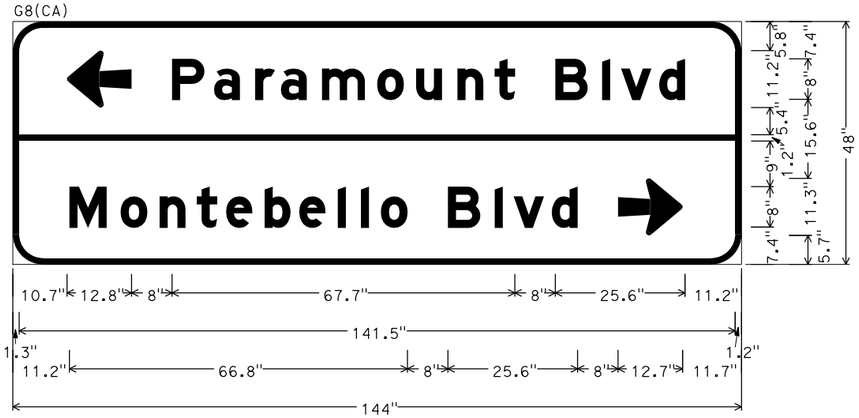

6.0" Radius, 1.3" Border, White on Green;
Arrow 8UC-1L - 12.8" 180{; [Paramount Blvd] E Mod;
[Montebello Blvd] E Mod; Arrow 8UC-1L - 12.8" 0{;

(S2-4)

G20(CA)

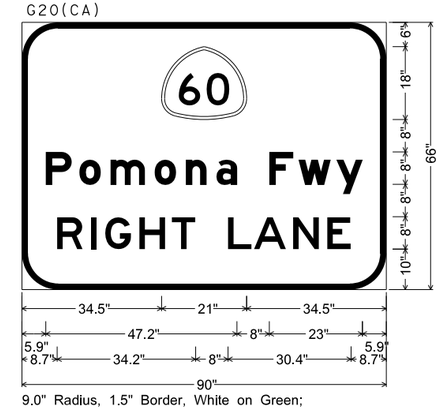

9.0" Radius, 1.5" Border, White on Green;
[Pomona Fwy] E Mod; [RIGHT LANE] E;

(S2-53)

SIGN DETAILS

NO SCALE

SD-1

APPROVED FOR SIGN WORK ONLY

REVISED BY	DATE REVISED
EDGAR HERRERA	VINCENT NGUYEN
CALCULATED-DESIGNED BY	CHECKED BY
FUNCTIONAL SUPERVISOR	GRISH BIGLARIAN

STATE OF CALIFORNIA - DEPARTMENT OF TRANSPORTATION
Caltrans® TRAFFIC DESIGN

LAST REVISION 07-30-13 | DATE PLOTTED => 22-JUN-2015 | TIME PLOTTED => 07:10

Dist	COUNTY	ROUTE	POST MILES TOTAL PROJECT	SHEET No.	TOTAL SHEETS
07	LA	60	R7.4/R8.1	90	238

REGISTERED CIVIL ENGINEER — DATE 1/29/14

6-1-15
PLANS APPROVAL DATE

REGISTERED PROFESSIONAL ENGINEER — EDGAR HERRERA — No. C67603 — Exp. 6/30/17 — CIVIL — STATE OF CALIFORNIA

THE STATE OF CALIFORNIA OR ITS OFFICERS OR AGENTS SHALL NOT BE RESPONSIBLE FOR THE ACCURACY OR COMPLETENESS OF SCANNED COPIES OF THIS PLAN SHEET.

G77(CA)

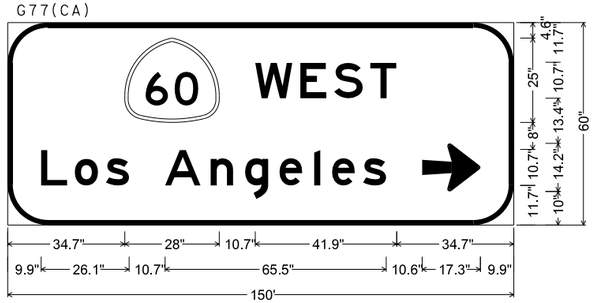

12.0" Radius, 1.5" Border, White on Green;
[WEST] E; [Los Angeles] E; Arrow 10.67UC-1L - 17.3" 0°;

S2-28

G77(CA)

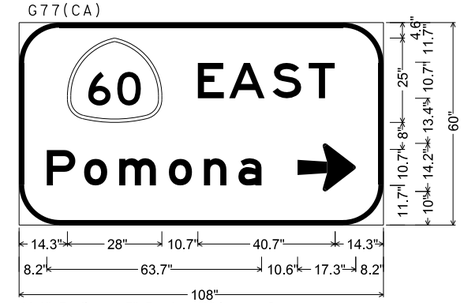

12.0" Radius, 1.5" Border, White on Green;
[EAST] E; [Pomona] E;
Arrow 10.67UC-1L - 17.3" 0°;

S2-53

G77(CA)

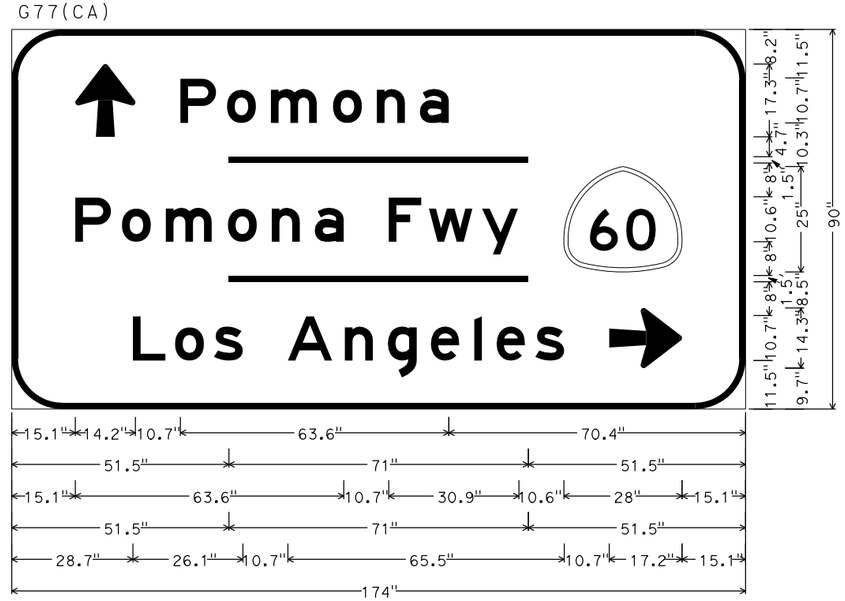

12.0" Radius, 1.5" Border, White on Green;
Arrow 10.67UC-1L - 17.3" 90{; [Pomona] E; [Pomona Fwy] E; [Los Angeles] E;
Arrow 10.67UC-1L - 17.3" 0{;

S2-50

SIGN DETAILS

NO SCALE

SD-2

APPROVED FOR SIGN WORK ONLY

REVISED BY	DATE REVISED
EDGAR HERRERA	VINCENT NGUYEN

CALCULATED-DESIGNED BY / CHECKED BY

FUNCTIONAL SUPERVISOR: GRISH BIGLARIAN

STATE OF CALIFORNIA - DEPARTMENT OF TRANSPORTATION
Caltrans® TRAFFIC DESIGN

LAST REVISION 07-30-13 | DATE PLOTTED => 22-JUN-2015 | TIME PLOTTED => 07:10

Dist	COUNTY	ROUTE	POST MILES TOTAL PROJECT	SHEET No.	TOTAL SHEETS
07	LA	60	R7.4/R8.1	91	238

REGISTERED CIVIL ENGINEER — DATE 1/29/14

6-1-15
PLANS APPROVAL DATE

REGISTERED PROFESSIONAL ENGINEER — EDGAR HERRERA — No. C67603 — Exp. 6/30/17 — CIVIL — STATE OF CALIFORNIA

THE STATE OF CALIFORNIA OR ITS OFFICERS OR AGENTS SHALL NOT BE RESPONSIBLE FOR THE ACCURACY OR COMPLETENESS OF SCANNED COPIES OF THIS PLAN SHEET.

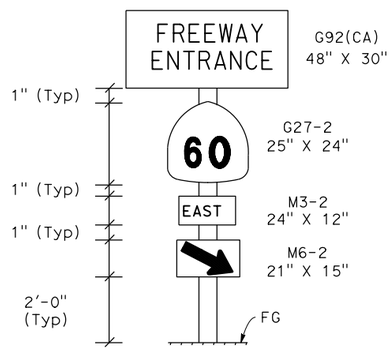

S2-16 S2-23

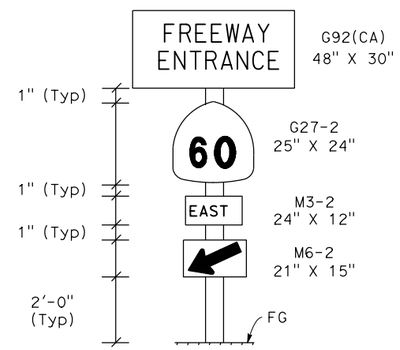

S2-17 S2-24

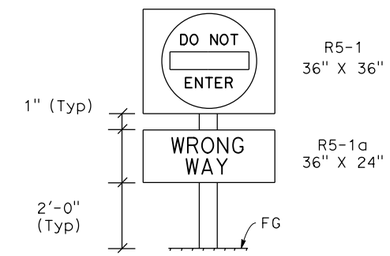

S2-7 S2-8 S2-32 S2-36

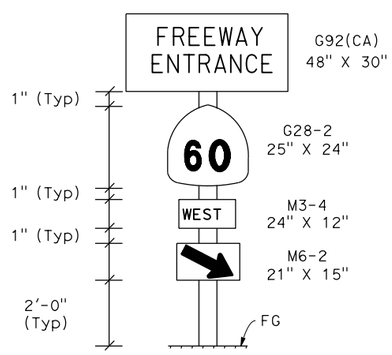

S2-47

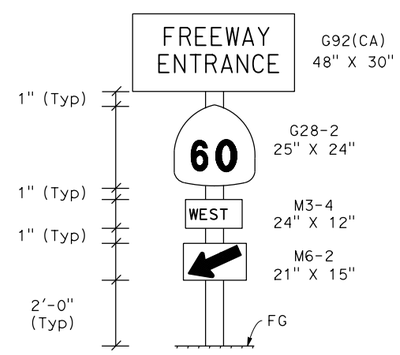

S2-29 S2-48

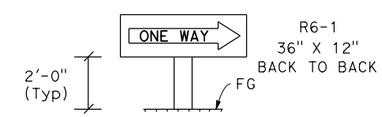

S2-9 S2-10 S2-34

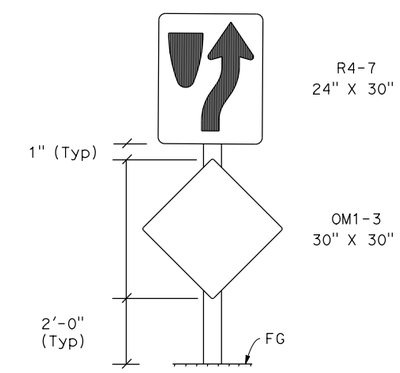

S2-31

SIGN DETAILS

NO SCALE

SD-3

APPROVED FOR SIGN WORK ONLY

STATE OF CALIFORNIA - DEPARTMENT OF TRANSPORTATION
Caltrans® TRAFFIC DESIGN

FUNCTIONAL SUPERVISOR: GRISH BIGLARIAN
CALCULATED-DESIGNED BY: EDGAR HERRERA
CHECKED BY: VINCENT NGUYEN
REVISED BY
DATE REVISED

LAST REVISION 07-30-13
DATE PLOTTED => 22-JUN-2015
TIME PLOTTED => 07:10

Dist	COUNTY	ROUTE	POST MILES TOTAL PROJECT	SHEET No.	TOTAL SHEETS
07	LA	60	R7.4/R8.1	92	238

REGISTERED CIVIL ENGINEER 1/29/14 DATE

6-1-15
PLANS APPROVAL DATE

REGISTERED PROFESSIONAL ENGINEER EDGAR HERRERA No. C67603 Exp. 6/30/17 CIVIL STATE OF CALIFORNIA

THE STATE OF CALIFORNIA OR ITS OFFICERS OR AGENTS SHALL NOT BE RESPONSIBLE FOR THE ACCURACY OR COMPLETENESS OF SCANNED COPIES OF THIS PLAN SHEET.

NOTES:

1. EXACT LOCATION AND POSITION OF ROADSIDE SIGNS WILL BE DETERMINED BY THE ENGINEER.
2. SIGNS ARE MUTCD (MANUAL ON UNIFORM TRAFFIC CONTROL DEVICES, JANUARY 2012 EDITION) CODED EXCEPT AS NOTED.
3. (CA) DENOTES CALIFORNIA CODED SIGNS.
4. FOR SIGN SPECIFICATIONS SEE CALTRANS WEBSITE: http://www.dot.ca.gov/hq/traffops/signtech/signdel/specs.htm

ROADSIDE SIGN QUANTITIES

SHEET No.	SIGN No.	SIGN CODE	PANEL SIZE (L X D)	SIGN FACING MATERIAL: SINGLE FACED	DOUBLE FACED	BACKGROUND: SHEETING COLOR	BACKGROUND: RETRO - REFLECTIVE ASTM TYPE	LEGEND: SHEETING COLOR	LEGEND: RETRO - REFLECTIVE ASTM TYPE	LEGEND: NON - REFLECTIVE	GRAFFITI FILM PREMIUM	FURNISH SINGLE SHEET ALUMINUM SIGN FOR RETROREFLECTIVE SHEETING (TYPE XI): UNFRAMED ALUMINUM 0.063" SQFT	UNFRAMED ALUMINUM 0.080" SQFT	FRAMED ALUMINUM 0.063" SQFT	FRAMED ALUMINUM 0.080" SQFT	FURNISH LAMINATED PANEL SIGN (1" TYPE B) FOR RETROREFLECTIVE SHEETING(TYPE XI) SQFT	ROADSIDE SIGN WOOD: ONE POST EA	ROADSIDE SIGN WOOD: TWO POST EA	RELOCATE ROADSIDE SIGN EA	REMARKS
S-1	S1-3	G84-3(CA)	48" x 60"	X		G	XI	W	XI		X		20.0				1			EXIT 8
	S1-4	W13-2	36" x 48"	X		Y	XI	B		X	X	12.0					1			25 MPH
	S1-5	W3-3	48" X 48"	X		Y	XI			X	X		16.0				1			
S-2	S2-1	W3-3	48" X 48"	X		Y	XI	B		X	X		16.0				1			
	S2-2	R61-15(Mod)(CA)	64" X 30"	X		W	XI	B		X	X			13.3				1		
	S2-3	R61-15(Mod)(CA)	64" X 30"	X	XI	W	XI	B		X	X			13.3				1		
	S2-4	G8(CA)	144" X 48"	X		G	XI	W	XI		X					48.0		1		
	S2-5																			DO NOT USE
	S2-6																			DO NOT USE
	S2-7	R5-1	36" X 36"	X		W	XI	R	XI		X		9.0				1			
		R5-1a	36" X 24"	X		R	XI	W	XI		X	6.0								
	S2-8	R5-1	36" X 36"	X		W	XI	R	XI		X		9.0				1			
		R5-1a	36" X 24"	X		R	XI	W	XI		X	6.0								
	S2-9	R6-1R	36" X 12"	X		W	XI	B		X	X	3.0					1			
	S2-10	R6-1R	36" X 12"	X		W	XI	B		X	X	3.0					1			
		R6-1L	36" X 12"	X		W	XI	B		X	X	3.0								
	S2-11	W4-1R	48" X 48"	X		Y	XI	B		X	X		16.0				1			
	S2-12																			DO NOT USE
	S2-13																			DO NOT USE
	S2-14	SG49A(CA)	42" X 54"	X		BLU	XI	W	XI		X		15.8				1			
	S2-15	R5-10a	36" X 30"	X		W	XI	B		X	X	7.5					1			
	S2-16	G92(CA)	48" x 30"	X		G	XI	W	XI		X		10.0				1			G28-2(CA) - 60
		G28-2(CA)	25" x 24"	X		G	XI	W	XI		X	4.2								
		M3-2	24" x 12"	X		G	XI	W	XI		X	2.0								
		M6-2(R+)	21" x 15"	X		G	XI	W	XI		X	2.2								
	SQ-1 SHEET TOTAL											48.9	111.8	26.6	0	48.0	12	3		

LEGEND: B = BLACK ; Y = YELLOW ; R = RED ; W = WHITE ; G = GREEN ; BLU = BLUE ; BRW = BROWN ; PANTONE = PA

SIGN QUANTITIES SQ-1

REVISED BY	DATE REVISED
EDGAR HERRERA	VINCENT NGUYEN
CALCULATED-DESIGNED BY	CHECKED BY
FUNCTIONAL SUPERVISOR	GRISH BIGLARIAN

STATE OF CALIFORNIA - DEPARTMENT OF TRANSPORTATION
Caltrans TRAFFIC DESIGN

LAST REVISION 07-30-13 | DATE PLOTTED => 22-JUN-2015 TIME PLOTTED => 07:10

Dist	COUNTY	ROUTE	POST MILES TOTAL PROJECT	SHEET No.	TOTAL SHEETS
07	LA	60	R7.4/R8.1	93	238

REGISTERED CIVIL ENGINEER 1/29/14 DATE

6-1-15
PLANS APPROVAL DATE

REGISTERED PROFESSIONAL ENGINEER EDGAR HERRERA No. C67603 Exp. 6/30/17 CIVIL STATE OF CALIFORNIA

THE STATE OF CALIFORNIA OR ITS OFFICERS OR AGENTS SHALL NOT BE RESPONSIBLE FOR THE ACCURACY OR COMPLETENESS OF SCANNED COPIES OF THIS PLAN SHEET.

ROADSIDE SIGN QUANTITIES

SHEET No.	SIGN No.	SIGN CODE	PANEL SIZE (L X D)	SIGN FACING MATERIAL: SINGLE FACED	DOUBLE FACED	BACKGROUND: SHEETING COLOR	BACKGROUND: RETRO - REFLECTIVE ASTM TYPE	LEGEND: SHEETING COLOR	LEGEND: RETRO - REFLECTIVE ASTM TYPE	LEGEND: NON - REFLECTIVE	GRAFFITI FILM PREMIUM	FURNISH SINGLE SHEET ALUMINUM SIGN FOR RETROREFLECTIVE SHEETING (TYPE XI): UNFRAMED ALUMINUM 0.063"	UNFRAMED ALUMINUM 0.080"	FRAMED ALUMINUM 0.063"	FRAMED ALUMINUM 0.080"	FURNISH LAMINATED PANEL SIGN (1" TYPE B) FOR RETROREFLECTIVE SHEETING (TYPE XI)	ROADSIDE SIGN: WOOD: ONE POST	ROADSIDE SIGN: WOOD: TWO POST	RELOCATE ROADSIDE SIGN	REMARKS
												SQFT	SQFT	SQFT	SQFT	SQFT	EA	EA	EA	
S-2	S2-17	G92(CA)	48" x 30"	X		G	XI	W	XI		X		10.0							
		G28-2(CA)	25" x 24"	X		G	XI	W	XI		X	4.2					1			G28-2(CA) - 60
		M3-2	24" x 12"	X		G	XI	W	XI		X	2.0								
		M6-2(L†)	21" x 15"	X		G	XI	W	XI		X	2.2								
	S2-18	R3-7R	30" X 30"	X		W	XI	B		X	X	6.3					1			
	S2-19	R26(S)(CA)	12" X 18"	X		W	XI	R	XI		X	1.5					1			NO STOPPING ANY TIME
	S2-20	R2-1	24" X 30"	X		W	XI	B		X	X	5.0					1			SPEED LIMIT 35
	S2-22	R49(CA)	42" X 18"	X		W	XI	B		X	X	5.3					1			LEFT ARROW
	S2-23	G92(CA)	48" x 30"	X		G	XI	W	XI		X		10.0							
		G28-2(CA)	25" x 24"	X		G	XI	W	XI		X	4.2					1			G28-2(CA) - 60
		M3-2	24" x 12"	X		G	XI	W	XI		X	2.0								
		M6-2(L†)	21" x 15"	X		G	XI	W	XI		X	2.2								
	S2-24	G92(CA)	48" x 30"	X		G	XI	W	XI		X		10.0							
		G28-2(CA)	25" x 24"	X		G	XI	W	XI		X	4.2					1			G28-2(CA) - 60
		M3-2	24" x 12"	X		G	XI	W	XI		X	2.0								
		M6-2(R†)	21" x 15"	X		G	XI	W	XI		X	2.2								
	S2-25	G77(CA)																	1	
	S2-26	R2-1	24" X 30"	X		W	XI	B		X	X	5.0					1			SPEED LIMIT 40
	S2-27	R3-7R	30" X 30"	X		W	XI	B		X	X	6.3					1			
	S2-28	G77(CA)	150" X 60"	X		G	XI	W	XI		X					62.5		1		
	S2-29	G92(CA)	48" x 30"	X		G	XI	W	XI		X		10.0							
		G28-2(CA)	25" x 24"	X		G	XI	W	XI		X	4.2					1			G28-2(CA) - 60
		M3-4	24" x 12"	X		G	XI	W	XI		X	2.0								
		M6-2(L†)	21" x 15"	X		G	XI	W	XI		X	2.2								
	S2-30	G92(CA)	48" x 30"	X		G	XI	W	XI		X		10.0							
		G28-2(CA)	25" x 24"	X		G	XI	W	XI		X	4.2					1			G28-2(CA) - 60
		M3-4	24" x 12"	X		G	XI	W	XI		X	2.0								
	SQ-2 SHEET TOTAL											69.2	50.0	0	0	62.5	11	1	1	

SIGN QUANTITIES
SQ-2

STATE OF CALIFORNIA - DEPARTMENT OF TRANSPORTATION
Caltrans TRAFFIC DESIGN

FUNCTIONAL SUPERVISOR: GRISH BIGLARIAN
CALCULATED-DESIGNED BY: EDGAR HERRERA
CHECKED BY: VINCENT NGUYEN
REVISED BY
DATE REVISED

LAST REVISION 07-30-13
DATE PLOTTED => 22-JUN-2015
TIME PLOTTED => 07:10

Dist	COUNTY	ROUTE	POST MILES TOTAL PROJECT	SHEET No.	TOTAL SHEETS
07	LA	60	R7.4/R8.1	94	238

REGISTERED CIVIL ENGINEER 1/29/14 DATE

6-1-15
PLANS APPROVAL DATE

REGISTERED PROFESSIONAL ENGINEER EDGAR HERRERA No. C67603 Exp. 6/30/17 CIVIL STATE OF CALIFORNIA

THE STATE OF CALIFORNIA OR ITS OFFICERS OR AGENTS SHALL NOT BE RESPONSIBLE FOR THE ACCURACY OR COMPLETENESS OF SCANNED COPIES OF THIS PLAN SHEET.

ROADSIDE SIGN QUANTITIES

SHEET No.	SIGN No.	SIGN CODE	PANEL SIZE (L X D)	SIGN FACING MATERIAL: SINGLE FACED	DOUBLE FACED	BACKGROUND: SHEETING COLOR	BACKGROUND: RETRO - REFLECTIVE ASTM TYPE	LEGEND: SHEETING COLOR	LEGEND: RETRO - REFLECTIVE ASTM TYPE	LEGEND: NON - REFLECTIVE	GRAFFITI FILM PREMIUM	FURNISH SINGLE SHEET ALUMINUM SIGN FOR RETROREFLECTIVE SHEETING (TYPE XI): UNFRAMED ALUMINUM 0.063" SQFT	UNFRAMED ALUMINUM 0.080" SQFT	FRAMED ALUMINUM 0.063" SQFT	FRAMED ALUMINUM 0.080" SQFT	FURNISH LAMINATED PANEL SIGN (1"- TYPE B) FOR RETROREFLECTIVE SHEETING (TYPE XI) SQFT	ROADSIDE SIGN: WOOD: ONE POST EA	ROADSIDE SIGN: WOOD: TWO POST EA	RELOCATE ROADSIDE SIGN EA	REMARKS
S-2	S2-31	R4-7	24" X 30"	X		W	XI	B		X	X	5.0					1			
		OM1-3	30" X 30"	X		Y	XI				X	6.3								
	S2-32	R5-1	36" X 36"	X		W	XI	R	XI		X		9.0				1			
		R5-1a	36" X 24"	X		R	XI	W	XI		X	6.0								
	S2-33	W4-1R	48" X 48"	X		Y	XI	B		X	X		16.0				1			
	S2-34	R6-1L	36" X 12"	X		W	XI	B		X	X	3.0					1			
	S2-35	R32(Mod)(CA)																	1	
	S2-36	R5-1	36" X 36"	X		W	XI	R	XI		X		9.0				1			
		R5-1a	36" X 24"	X		R	XI	W	XI		X	6.0								
	S2-37	G8(CA)																	1	
	S2-38	R61-7(CA)	36" X 30"	X		W	XI	B		X	X	7.5					1			
	S2-39	R61-7(CA)	36" X 30"	X		W	XI	B		X	X	7.5					1			
	S2-40	R61-7(CA)	36" X 30"	X		W	XI	B		X	X	7.5					1			
	S2-41	R5-10a	36" X 30"	X		W	XI	B		X	X	7.5					1			
	S2-42																			DO NOT USE
	S2-44																			DO NOT USE
	S2-45	R61-7(CA)	36" X 30"	X		W	XI	B		X	X	7.5					1			
	S2-46	R2-1	24" X 30"	X		W	XI	B		X	X	5.0					1			SPEED LIMIT 40
	S2-47	G92(CA)	48" x 30"	X		G	XI	W	XI		X		10.0				1			G28-2(CA) - 60
		G28-2(CA)	25" x 24"	X		G	XI	W	XI		X	4.2								
		M3-4	24" x 12"	X		G	XI	W	XI		X	2.0								
		M6-2(R†)	21" x 15"	X		G	XI	W	XI		X	2.2								
	S2-48	G92(CA)	48" x 30"	X		G	XI	W	XI		X		10.0				1			G28-2(CA) - 60
		G28-2(CA)	25" x 24"	X		G	XI	W	XI		X	4.2								
		M3-4	24" x 12"	X		G	XI	W	XI		X	2.0								
		M6-2(L†)	21" x 15"	X		G	XI	W	XI		X	2.2								
	SQ-3 SHEET TOTAL											85.6	54	0	0	0	13	0	2	

SIGN QUANTITIES
SQ-3

REVISED BY	DATE REVISED

EDGAR HERRERA	VINCENT NGUYEN

CALCULATED-DESIGNED BY	CHECKED BY

FUNCTIONAL SUPERVISOR
GRISH BIGLARIAN

STATE OF CALIFORNIA - DEPARTMENT OF TRANSPORTATION
Caltrans® TRAFFIC DESIGN

LAST REVISION 07-30-13 | DATE PLOTTED => 22-JUN-2015 TIME PLOTTED => 07:10

Dist	COUNTY	ROUTE	POST MILES TOTAL PROJECT	SHEET No.	TOTAL SHEETS
07	LA	60	R7.4/R8.1	95	238

REGISTERED CIVIL ENGINEER 1/29/14 DATE

6-1-15
PLANS APPROVAL DATE

REGISTERED PROFESSIONAL ENGINEER EDGAR HERRERA No. C67603 Exp. 6/30/17 CIVIL STATE OF CALIFORNIA

THE STATE OF CALIFORNIA OR ITS OFFICERS OR AGENTS SHALL NOT BE RESPONSIBLE FOR THE ACCURACY OR COMPLETENESS OF SCANNED COPIES OF THIS PLAN SHEET.

ROADSIDE SIGN QUANTITIES

SHEET No.	SIGN No.	SIGN CODE	PANEL SIZE (L X D)	SIGN FACING MATERIAL: SINGLE FACED	DOUBLE FACED	BACKGROUND: SHEETING COLOR	BACKGROUND: RETRO - REFLECTIVE ASTM TYPE	LEGEND: SHEETING COLOR	LEGEND: RETRO - REFLECTIVE ASTM TYPE	LEGEND: NON - REFLECTIVE	GRAFFITI FILM PREMIUM	FURNISH SINGLE SHEET ALUMINUM SIGN FOR RETROREFLECTIVE SHEETING (TYPE XI): UNFRAMED ALUMINUM 0.063"	UNFRAMED ALUMINUM 0.080"	FRAMED ALUMINUM 0.063"	FRAMED ALUMINUM 0.080"	FURNISH LAMINATED PANEL SIGN (1"- TYPE B) FOR RETROREFLECTIVE SHEETING (TYPE XI)	ROADSIDE SIGN: WOOD: ONE POST	ROADSIDE SIGN: WOOD: TWO POST	RELOCATE ROADSIDE SIGN	REMARKS
												SQFT	SQFT	SQFT	SQFT	SQFT	EA	EA	EA	
S-2	S2-49	R5-10a	36" X 30"	X		W	XI	B		X	X	7.5					1			
	S2-50	G77(CA)	174" X 90"	X		G	XI	W	XI		X					108.8		1		
	S2-52	R91-1(CA)	48" X 66"	X		W	XI	B		X	X		22.0				1			LINE 1: LEFT LINE 6: WHEN METERED
	S2-53	G77(CA)	108" X 60"	X		G	XI	W	XI		X					45.0		1		
S-3	S3-1	G8(CA)	144" X 48"	X															1	
	S3-4	G84-3(CA)	48" x 60"	X		G	XI	W	XI		X		20.0				1			EXIT 8 RIGHT 45° ARROW
	S3-5	W3-3	48" X 48"	X		Y	XI	B		X	X		16.0				1			
	SQ-4 SHEET TOTAL											7.5	58	0	0	153.8	4	2	1	
	GRAND TOTAL											211.2	273.8	26.6	0	264.3	40	6	4	

ROADSIDE SIGN REMOVAL QUANTITIES

SHEET No	SIGN No	REMOVE ROADSIDE SIGN: ONE POST	REMOVE ROADSIDE SIGN: TWO POST	TREATED WOOD WASTE
		EA	EA	LB
S-1	S1-1, S1-2, S1-6	3		240
S-3	S3-2, S3-3	2		160
S-4	S4-1,S4-2,S4-3, S4-5,S4-6,S4-7,S4-8,S4-9,S4-10,S4-11,S4-12,S4-13,S4-14,S4-15, S4-16,S4-17,S4-18,S4-19,S4-20,S4-21,S4-22,S4-23,S4-25,S4-26,S4-27,S4-28,S4-29, S4-30,S4-31,S4-32,S4-33,S4-34,S4-35,S4-36,S4-37,S4-38,S4-39,S4-40,S4-41,S4-42 S4-43,S4-44,S4-46	43		3,359
	S4-4,S4-24,S4-45		3	480
	TOTAL	51		4,239

STATE OF CALIFORNIA - DEPARTMENT OF TRANSPORTATION
Caltrans TRAFFIC DESIGN

FUNCTIONAL SUPERVISOR: GRISH BIGLARIAN
CALCULATED-DESIGNED BY: EDGAR HERRERA
CHECKED BY: VINCENT NGUYEN
REVISED BY
DATE REVISED

LAST REVISION 07-30-13
DATE PLOTTED => 22-JUN-2015
TIME PLOTTED => 07:10

SIGN QUANTITIES
SQ-4

Dist	COUNTY	ROUTE	POST MILES TOTAL PROJECT	SHEET No.	TOTAL SHEETS
07	LA	60	R7.4/R8.1	96	238

REGISTERED CIVIL ENGINEER 1/29/14 DATE

6-1-15
PLANS APPROVAL DATE

REGISTERED PROFESSIONAL ENGINEER EDGAR HERRERA No. C67603 Exp. 6/30/17 CIVIL STATE OF CALIFORNIA

THE STATE OF CALIFORNIA OR ITS OFFICERS OR AGENTS SHALL NOT BE RESPONSIBLE FOR THE ACCURACY OR COMPLETENESS OF SCANNED COPIES OF THIS PLAN SHEET.

OVERHEAD SIGN QUANTITIES

SHEET No.	SIGN No.	LOCATION	SIGN CODE	SIGN SIZE (L X D)	CIDH CONCRETE PILE (SIGN FOUNDATION) 3'-0"		SIGN STRUCTURE (LIGHTWEIGHT)		MATERIAL SUMMARY								REMARKS
									SINGLE FACED	BACKGROUND		LEGEND		GRAFFITI FILM		FURNISH LAMINATED SIGN PANEL (1" TYPE A) FOR RETROREFLECTIVE SHEETING (TYPE XI)	
					Lt	Rt	FURNISH	INSTALL		SHEETING COLOR	RETROREFLECTIVE ASTM TYPE	SHEETING COLOR	RETROREFLECTIVE ASTM TYPE	STANDARD	PREMIUM		
					LF	LF	LBS	LBS								SQFT	
S-2	OS2-1	FEBT "F" LINE Sta 188+40	R59(CA)(Lt) R60A(CA)(Lt) R60A(CA)(Rt) R59(CA)(Rt)	48" X 50" 48" X 50" 48" X 50" 48" X 50"	13	13	7,979	7,979	X	WHITE	IV	BLACK			X	67	
TOTAL					26		7,979	7,979								67	

STATE OF CALIFORNIA - DEPARTMENT OF TRANSPORTATION
Caltrans® TRAFFIC DESIGN

FUNCTIONAL SUPERVISOR: GRISH BIGLARIAN
CALCULATED-DESIGNED BY: EDGAR HERRERA
CHECKED BY: VINCENT NGUYEN
REVISED BY
DATE REVISED

SIGN QUANTITIES
SQ-5

LAST REVISION 07-30-13
DATE PLOTTED => 22-JUN-2015
TIME PLOTTED => 07:10

Dist	COUNTY	ROUTE	POST MILES TOTAL PROJECT	SHEET No.	TOTAL SHEETS
07	LA	60	R7.4/R8.1	97	238

Ruddy Hartono 1-22-14
REGISTERED CIVIL ENGINEER DATE

6-1-15
PLANS APPROVAL DATE

REGISTERED PROFESSIONAL ENGINEER
RUDDY HARTONO
No. 63146
Exp. 6-30-16
CIVIL
STATE OF CALIFORNIA

THE STATE OF CALIFORNIA OR ITS OFFICERS OR AGENTS SHALL NOT BE RESPONSIBLE FOR THE ACCURACY OR COMPLETENESS OF SCANNED COPIES OF THIS PLAN SHEET.

REMOVAL QUANTITIES

SHEET No.	LOCATION	OBLITERATE SURFACING	REMOVE: GUARDRAIL	CHAIN LINK FENCE	AC DIKE	CONCRETE (CURB & GUTTER)	CONCRETE SIDEWALK & DRIVEWAY	CONCRETE CURB	TREATED WOOD WASTE*
		SQYD	LF	LF	LF	LF	CY	LF	LB
C-1	RAMP F		103		890	531			1,470
	RAMP F		121			405			1,580
C-2	RAMP F				104	413	13		
	RAMP F					212	4		
	RAMP E & F					1,700			
	RAMP E	2,446			417	578			
	RAMP C & D					806			
	RAMP D				98	249	2		
	PARAMOUNT Blvd			238		304	3		
	RAMP C		312		36	476	8		4,160
	PARAMOUNT Blvd			117		77	6	521	
	PARAMOUNT Blvd			65		294	3	498	
	PARAMOUNT Blvd					57	4	21	
	PARAMOUNT Blvd					32	5	57	
	PARAMOUNT Blvd					32	9	46	
	PARAMOUNT Blvd					41	5		
	PARAMOUNT Blvd					32	5		
	PARAMOUNT Blvd						5		
	PARAMOUNT Blvd						7		
	PARAMOUNT Blvd						6		
	PARAMOUNT Blvd								
	RAMP D								
	RAMP D				176				
C-3	RAMP C					334			
SQ-4									4,239
TOTAL		2,446	536	420	1,721	6,573	85	1,143	11,449

EARTHWORK QUANTITIES

LOCATION	STATION	ROADWAY EXCAVATION**	EMBANKMENT (N)
		CY	CY
"C" LINE	186+20.00 TO 187+72.00	450	18
"C" LINE	187+72.00 TO 194+10.00	1,490	5
"D" LINE	188+00.00 TO 190+65.00	1,820	
"D" LINE	190+65.00 TO 194+50.00	1,885	75
"E" LINE	178+20.00 TO 181+00.00	1,370	5
"E" LINE	181+00.00 TO 187+29.00	3,530	950
"F" LINE	173+43.00 TO 189+20.00	5,600	15
"B" LINE	94+80.00 TO 98+80.00	670	
"B" LINE	101+25.00 TO 105+25.00	2,000	90
	FROM SCQ-1	123	
	TOTAL	18,938	1,158

(N) NOT A SEPARATE PAY ITEM, FOR INFORMATION ONLY
* SEE SIGN PLANS FOR ADDITIONAL QUANTITIES
** SEE STAGE CONSTRUCTION PLANS FOR ADDITIONAL QUANTITIES

SUMMARY OF QUANTITIES

Q-1

REVISED BY | DATE REVISED
MANJINDER BRAR | KEDAR SAWANT
CALCULATED-DESIGNED BY | CHECKED BY
FUNCTIONAL SUPERVISOR: ASADOUR TERTERIAN
STATE OF CALIFORNIA - DEPARTMENT OF TRANSPORTATION
Caltrans® DESIGN

LAST REVISION 00-00-00 | DATE PLOTTED => 05-AUG-2015 | TIME PLOTTED => 08:59

Dist	COUNTY	ROUTE	POST MILES TOTAL PROJECT	SHEET No.	TOTAL SHEETS
07	LA	60	R7.4/R8.1	98	238

REGISTERED CIVIL ENGINEER 1-22-14 DATE

6-1-15
PLANS APPROVAL DATE

REGISTERED PROFESSIONAL ENGINEER RUDDY HARTONO No. 63146 Exp. 6-30-16 CIVIL STATE OF CALIFORNIA

THE STATE OF CALIFORNIA OR ITS OFFICERS OR AGENTS SHALL NOT BE RESPONSIBLE FOR THE ACCURACY OR COMPLETENESS OF SCANNED COPIES OF THIS PLAN SHEET.

ROADWAY QUANTITIES

SHEET No.	LOCATION	HOT MIX ASPHALT (TYPE A) *	JOINTED PLAIN CONCRETE PAVEMENT	JOINTED PLAIN CONCRETE PAVEMENT (RSC)	GEOSYNTHETIC PAVEMENT INTERLAYER (PAVING FABRIC)	LEAN CONCRETE BASE(LCB)	LEAN CONCRETE BASE RAPID SETTING (LCBRS)	CLASS 3 AGGREGATE BASE	COLD PLANE ASPHALT CONCRETE PAVEMENT	RUBBERIZED HOT MIX ASPHALT (GAP GRADED)	TACK COAT	PLACE HOT MIX ASPHALT DIKE (TYPE A)	PLACE HOT MIX ASPHALT DIKE (TYPE C)	PLACE HOT MIX ASPHALT DIKE (TYPE E)	PLACE HOT MIX ASPHALT DIKE (TYPE F)	MINOR CONCRETE (CURB, GUTTER, SIDEWALK AND DRIVEWAY)	MINOR CONCRETE (CURB RAMP)	MINOR CONCRETE (ISLAND PAVING)	MIDWEST GUARDRAIL SYSTEM (7' WOOD POST)	CHAIN LINK FENCE (TYPE CL-6)	20' CHAIN LINK GATE (TYPE CL-6)	DETECTABLE WARNING SURFACE	PRE/POST CONSTRUCTION SURVEYS	ABANDON MANHOLE **
		TON	CY	CY	SQYD	CY	CY	CY	SQYD	TON	TON	LF	LF	LF	LF	CY	CY	CY	LF	LF	EA	SQFT	EA	EA
L-1	"F" LINE	1,399				481	189	1,284					125	1,249	425				550					
L-2	SB "B" LINE	344				69	107	337	3,108	306	0.3					84	16			306		278	7	3
	MEDIAN "B" LINE	148					76	145								39		9						
	NB "B" LINE	238				96	26	233	2,035	200	0.2					61	7			385	1	230	6	
	"C" LINE	471	213	94		308	53	666						282		7				104				
	"D" LINE	1,214			293	582	23	1,160	1,186	116	0.1			522		19								
	"E" LINE	1,551			283	581	183	1,464	719	70	0.1	135		849		36								
	"F" LINE	979	311	87		603	36	1,191						858		23								
L-3	"C" LINE	352					172	330	1,328	129	0.1			334										
SCQ-1		240																						
	TOTAL	6,936	524	181	576	2,720	865	6,810	8,376	821	0.8	135	125	4,094	425	269	23	9	550	795	1	508	13	3

* SEE STAGE CONSTRUCTION PLANS FOR ADDITIONAL QUANTITITES
** SEE UTILITY PLAN SHEET U-1

TEMPORAY WATER POLLUTION CONTROL QUANTITIES

SHEET No.	MOVE-IN/MOVE-OUT (Temp EROSION CONTROL)	TEMPORARY FENCE (TYPE ESA)	TEMPORARY HYDRAULIC MULCH	TEMPORARY FIBER ROLLS	TEMPORARY GRAVEL BAG BERM	TEMPORARY DRAINAGE INLET PROTECTION	TEMPORARY COVER	TEMPORARY CONSTRUCTION ENTRANCE
	EA	LF	SQYD	LF	EA	EA	SQYD	EA
L1 TO L3	2	2,000	709	500	4,000	18	2,000	2
TOTAL	2	2,000	709	500	4,000	18	2,000	2

SUMMARY OF QUANTITIES

Q-2

STATE OF CALIFORNIA - DEPARTMENT OF TRANSPORTATION
Caltrans DESIGN

FUNCTIONAL SUPERVISOR: ASADOUR TERTERIAN
CALCULATED-DESIGNED BY: RUDDY HARTONO
CHECKED BY: ASADOUR TERTERIAN
REVISED BY
DATE REVISED

LAST REVISION 00-00-00
DATE PLOTTED => 22-JUN-2015
TIME PLOTTED => 07:10

Dist	COUNTY	ROUTE	POST MILES TOTAL PROJECT	SHEET No.	TOTAL SHEETS
07	LA	60	R7.4/R8.1	99	238

LICENSED LANDSCAPE ARCHITECT

6-1-15
PLANS APPROVAL DATE

THE STATE OF CALIFORNIA OR ITS OFFICERS OR AGENTS SHALL NOT BE RESPONSIBLE FOR THE ACCURACY OR COMPLETENESS OF SCANNED COPIES OF THIS PLAN SHEET.

LICENSED LANDSCAPE ARCHITECT
GENE KIMMEL
NO. 5104
Signature
10-31-16
Renewal Date
1-22-14
Date
STATE OF CALIFORNIA

NOTE:

FOR ACCURATE RIGHT OF WAY DATA,
CONTACT RIGHT OF WAY ENGINEERING AT THE DISTRICT OFFICE.

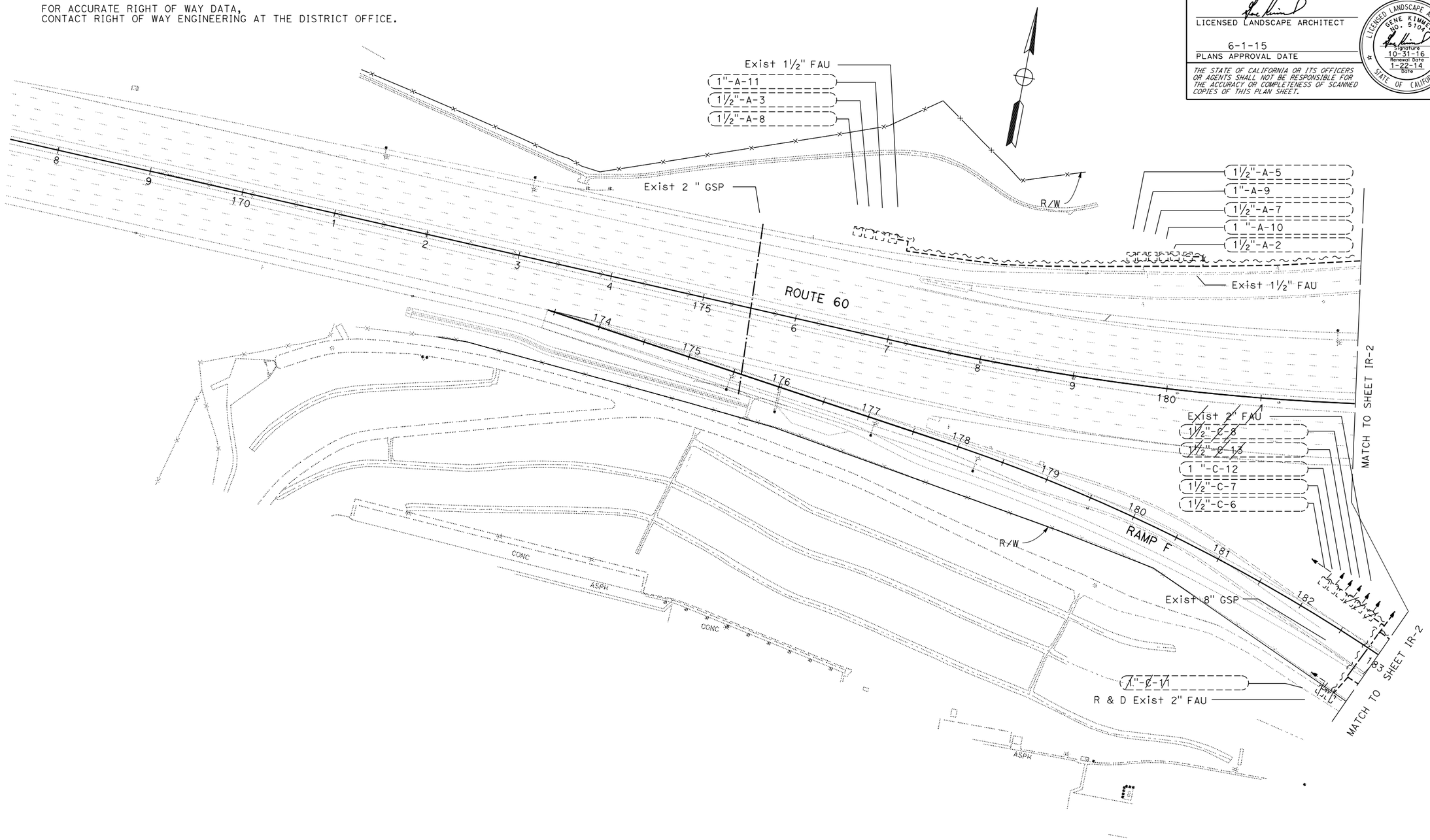

IRRIGATION REMOVAL PLAN

SCALE: 1" = 50'

IR-1

APPROVED FOR IRRIGATION REMOVAL WORK ONLY

STATE OF CALIFORNIA - DEPARTMENT OF TRANSPORTATION
Caltrans® LANDSCAPE ARCHITECTURE

SENIOR LANDSCAPE ARCHITECT: JENNIFER TAIRA
CALCULATED-DESIGNED BY: RICH KESTER
CHECKED BY: JENNIFER TAIRA
REVISED BY
DATE REVISED

LAST REVISION 00-00-00
DATE PLOTTED => 22-JUN-2015
TIME PLOTTED => 07:10

Dist	COUNTY	ROUTE	POST MILES TOTAL PROJECT	SHEET No.	TOTAL SHEETS
07	LA	60	R7.4/R8.1	100	238

LICENSED LANDSCAPE ARCHITECT

6-1-15
PLANS APPROVAL DATE

LICENSED LANDSCAPE ARCHITECT
GENE KIMMEL
NO. 5104
Signature
10-31-16
Renewal Date
1-22-14
Date
STATE OF CALIFORNIA

THE STATE OF CALIFORNIA OR ITS OFFICERS OR AGENTS SHALL NOT BE RESPONSIBLE FOR THE ACCURACY OR COMPLETENESS OF SCANNED COPIES OF THIS PLAN SHEET.

NOTE:

FOR ACCURATE RIGHT OF WAY DATA,
CONTACT RIGHT OF WAY ENGINEERING AT THE DISTRICT OFFICE.

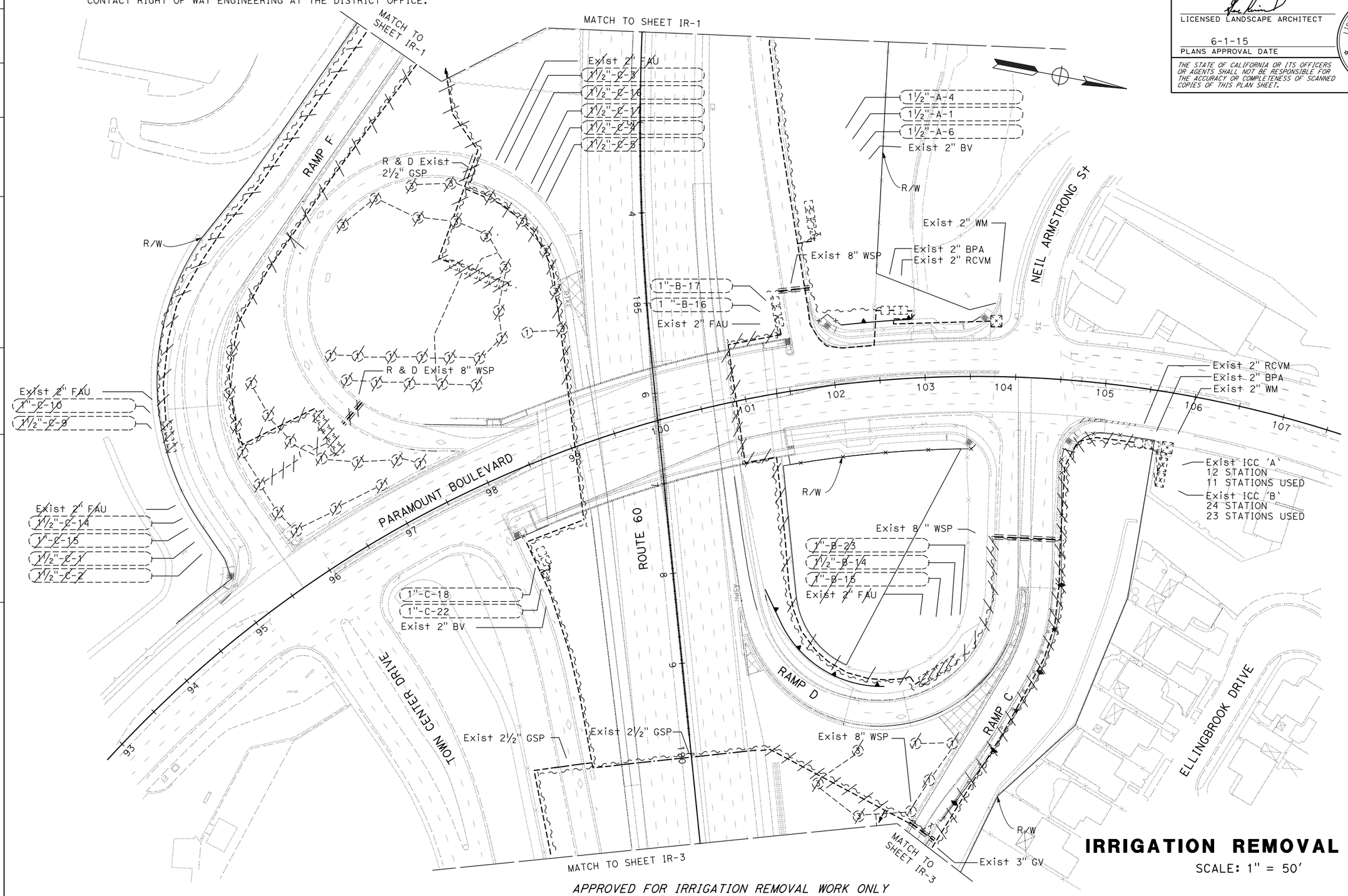

IRRIGATION REMOVAL PLAN

SCALE: 1" = 50'

IR-2

APPROVED FOR IRRIGATION REMOVAL WORK ONLY

STATE OF CALIFORNIA - DEPARTMENT OF TRANSPORTATION
Caltrans® LANDSCAPE ARCHITECTURE

SENIOR LANDSCAPE ARCHITECT: JENNIFER TAIRA

CALCULATED-DESIGNED BY: RICH KESTER
CHECKED BY: JENNIFER TAIRA

REVISED BY
DATE REVISED

LAST REVISION 00-00-00
DATE PLOTTED => 22-JUN-2015
TIME PLOTTED => 07:10