PROJECT EA 31660

DESIGN STUDY ONLY

SHEET 1 OF 33

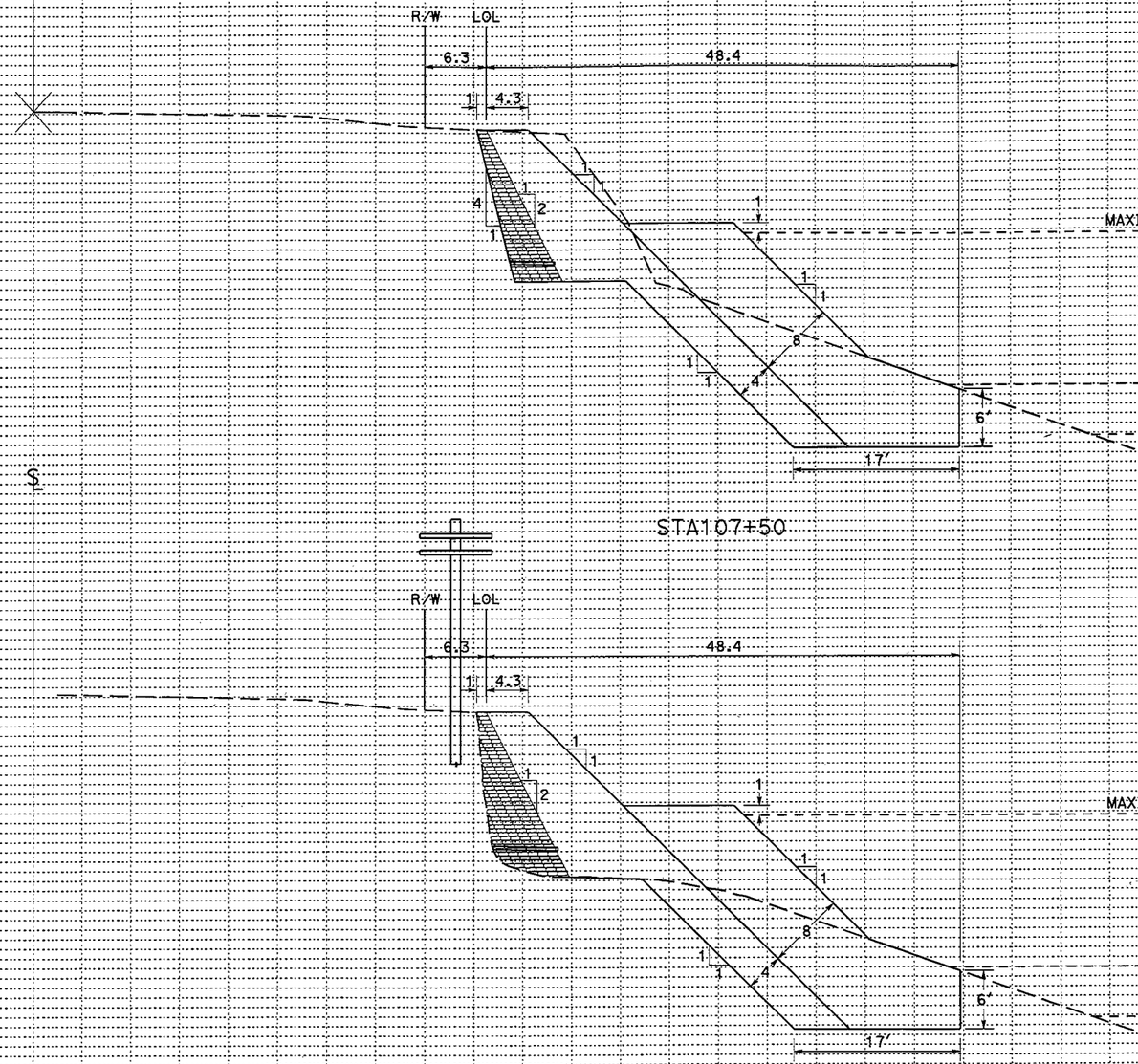

30 25 20 15 10 5 0

-30 -20 -10 SL 10 20 30 40 50 60 70 80 90 100 110 120 130 140 150 160 170 180 190

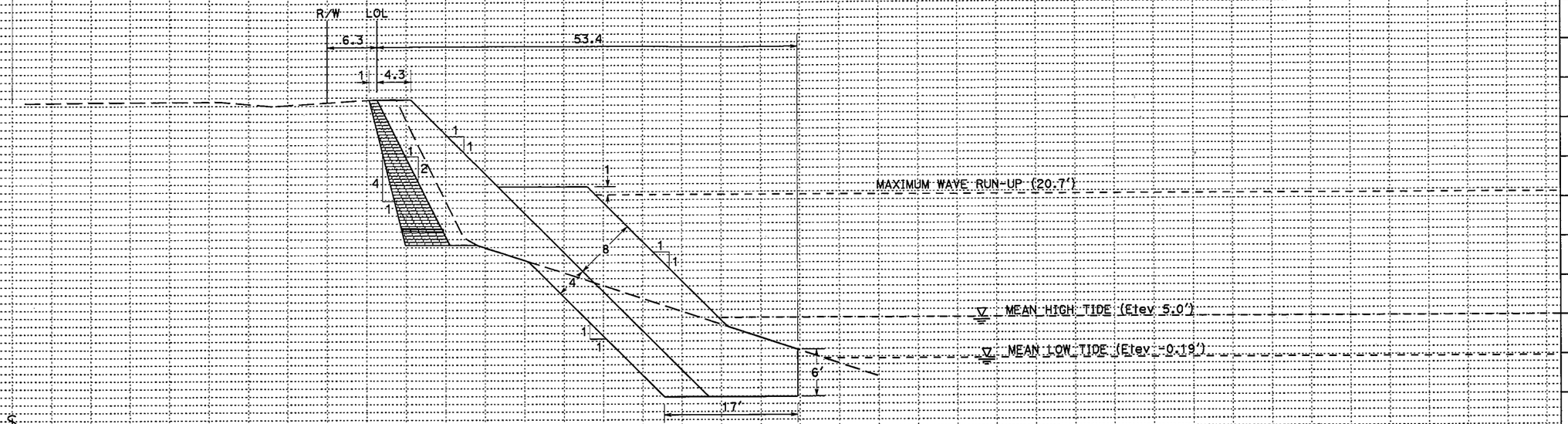
℄
R/W
LOL
6.3
53.4
1
4.3
1
1
1
2
4
1
1
1
8
1
1
4
1
1
MAXIMUM WAVE RUN-UP (20.7')
MEAN HIGH TIDE (Elev 5.0')
MEAN LOW TIDE (Elev -0.19')
6'
17'
℄
STA108+00
R/W
LOL
6.3
50.2
1
4.3
1
1
1
2
4
1
1
1
8
1
1
4
1
1
MAXIMUM WAVE RUN-UP (20.7')
MEAN HIGH TIDE (Elev 5.0')
MEAN LOW TIDE (Elev -0.19')
6'
17'
STA107+75
30
25
20
15
10
5
0
-30
-20
-10
SL
10
20
30
40
50
60
70
80
90
100
110
120
130
140
150
160
170
180
190

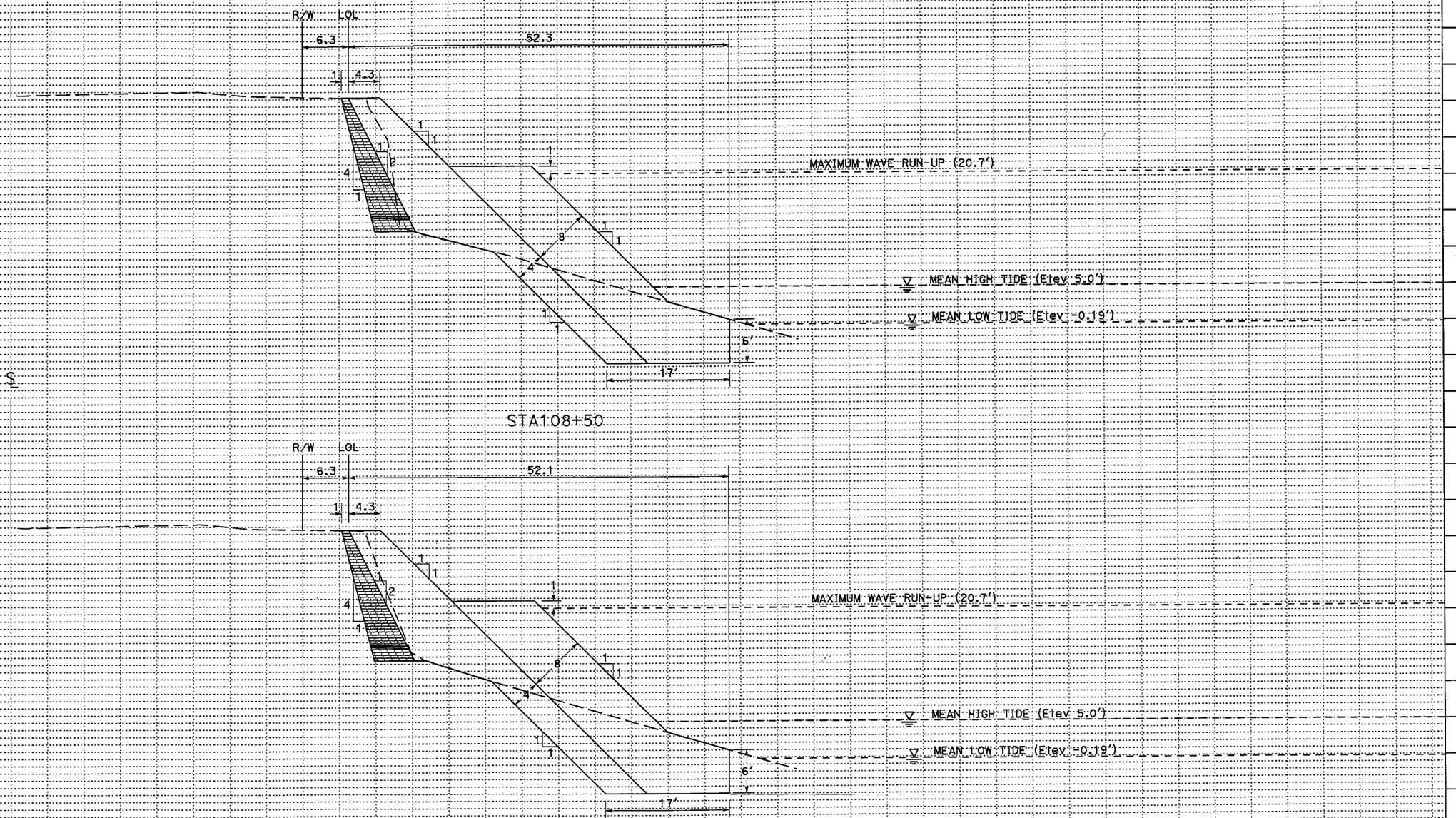
STA108+50
R/W
LOL
6.3
52.3
1
4.3
1
1
1
2
4
1
1
1
8
1
1
4
1
1
6'
17'
MAXIMUM WAVE RUN-UP (20.7')
MEAN HIGH TIDE (Elev 5.0')
MEAN LOW TIDE (Elev -0.19')
STA108+25
R/W
LOL
6.3
52.1
1
4.3
1
1
1
2
4
1
1
1
8
1
1
4
1
1
6'
17'
MAXIMUM WAVE RUN-UP (20.7')
MEAN HIGH TIDE (Elev 5.0')
MEAN LOW TIDE (Elev -0.19')
30
25
20
15
10
5
0
-30
-20
-10
SL
10
20
30
40
50
60
70
80
90
100
110
120
130
140
150
160
170
180
190

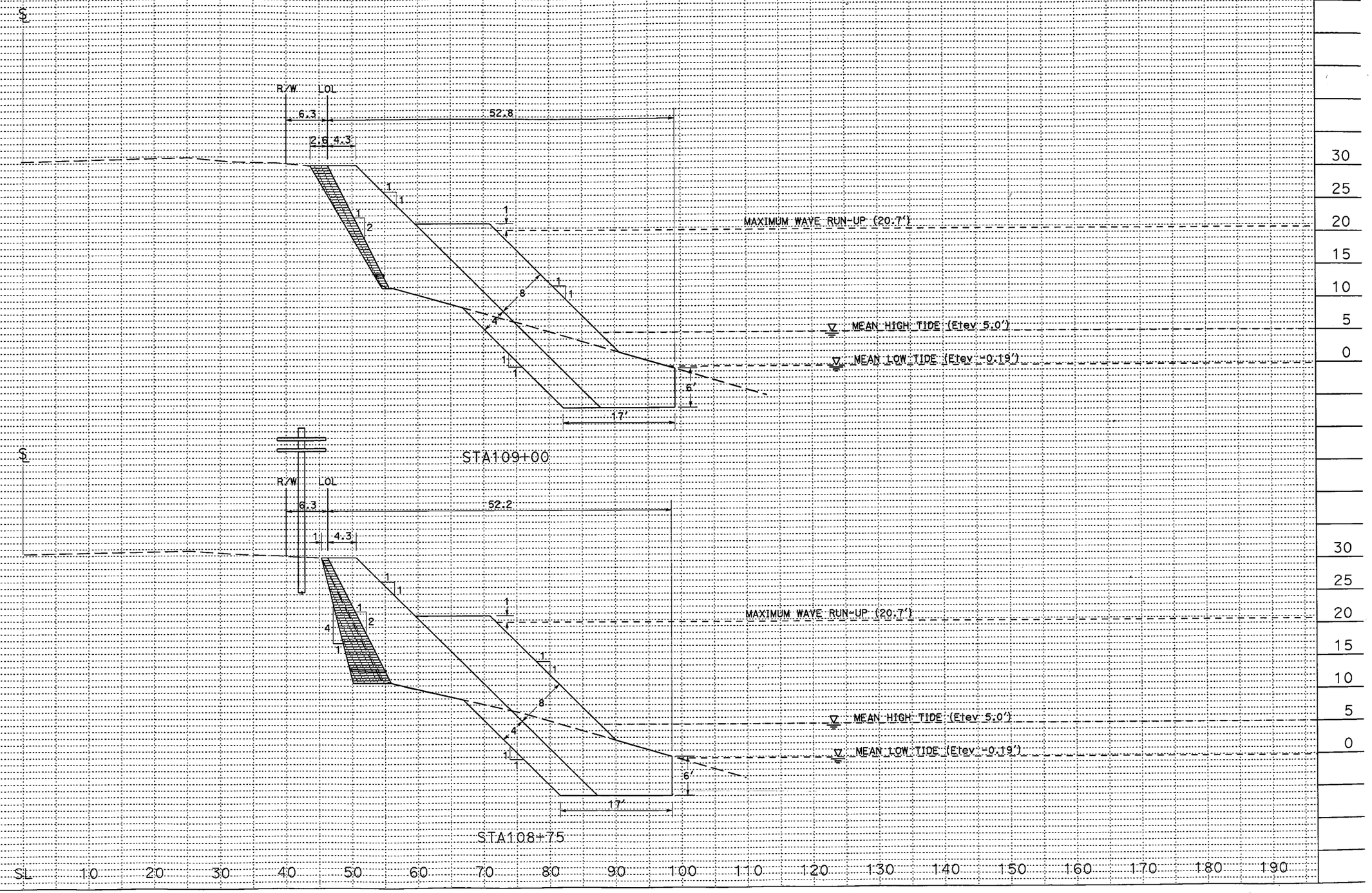
℄
R/W
LOL
6.3
2.6
4.3
52.8
1
1
1
2
1
1
8
4
1
1
6'
17'
MAXIMUM WAVE RUN-UP (20.7')
MEAN HIGH TIDE (Elev 5.0')
MEAN LOW TIDE (Elev -0.19')
STA109+00
℄
R/W
LOL
6.3
1
4.3
52.2
1
1
1
2
4
1
1
1
8
4
1
1
6'
17'
MAXIMUM WAVE RUN-UP (20.7')
MEAN HIGH TIDE (Elev 5.0')
MEAN LOW TIDE (Elev -0.19')
STA108+75
30
25
20
15
10
5
0
-30
-20
-10
SL
10
20
30
40
50
60
70
80
90
100
110
120
130
140
150
160
170
180
190

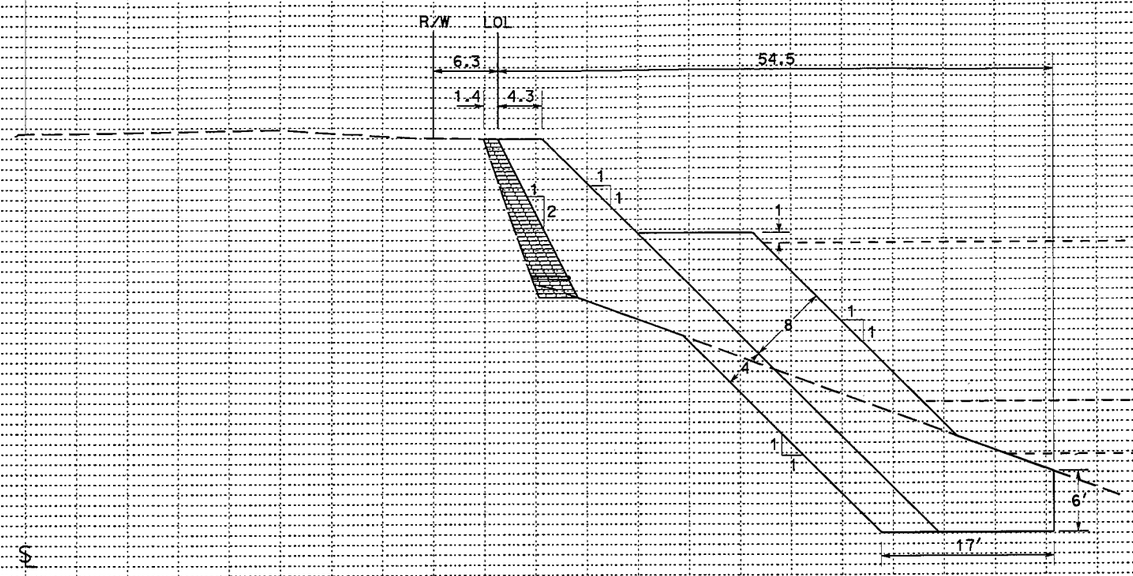

STA109+50

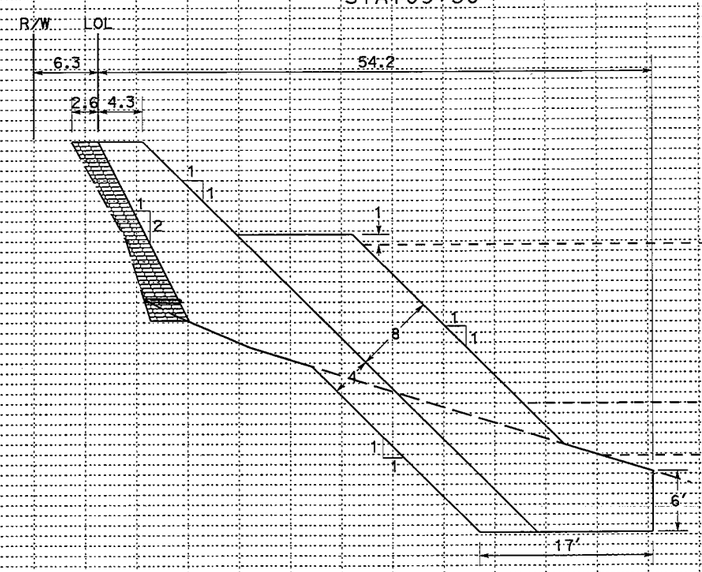

STA109+25

30 25 20 15 10 5 0

-30 -20 -10 SL 10 20 30 40 50 60 70 80 90 100 110 120 130 140 150 160 170 180 190

PROJECT EA 31660

DESIGN STUDY ONLY

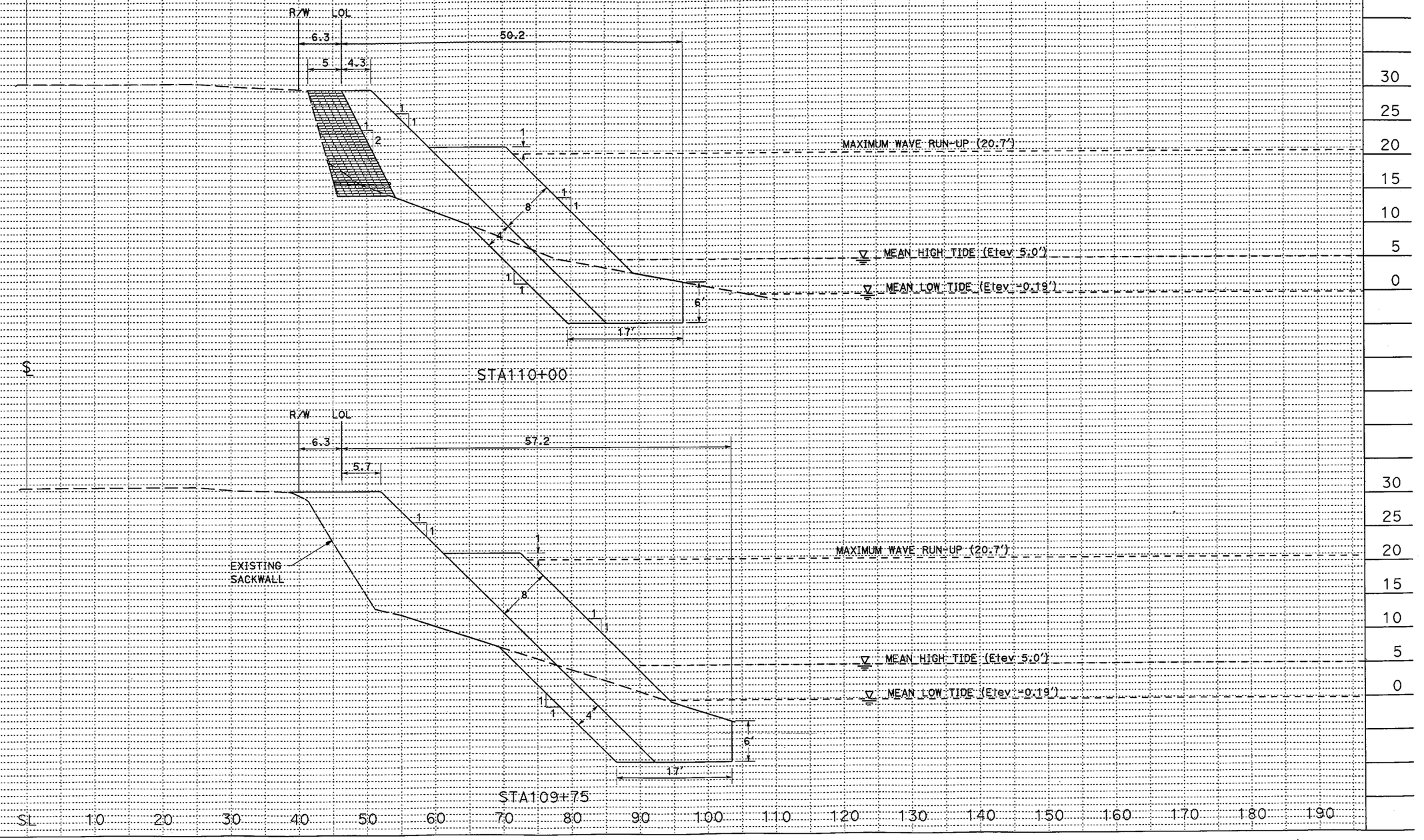

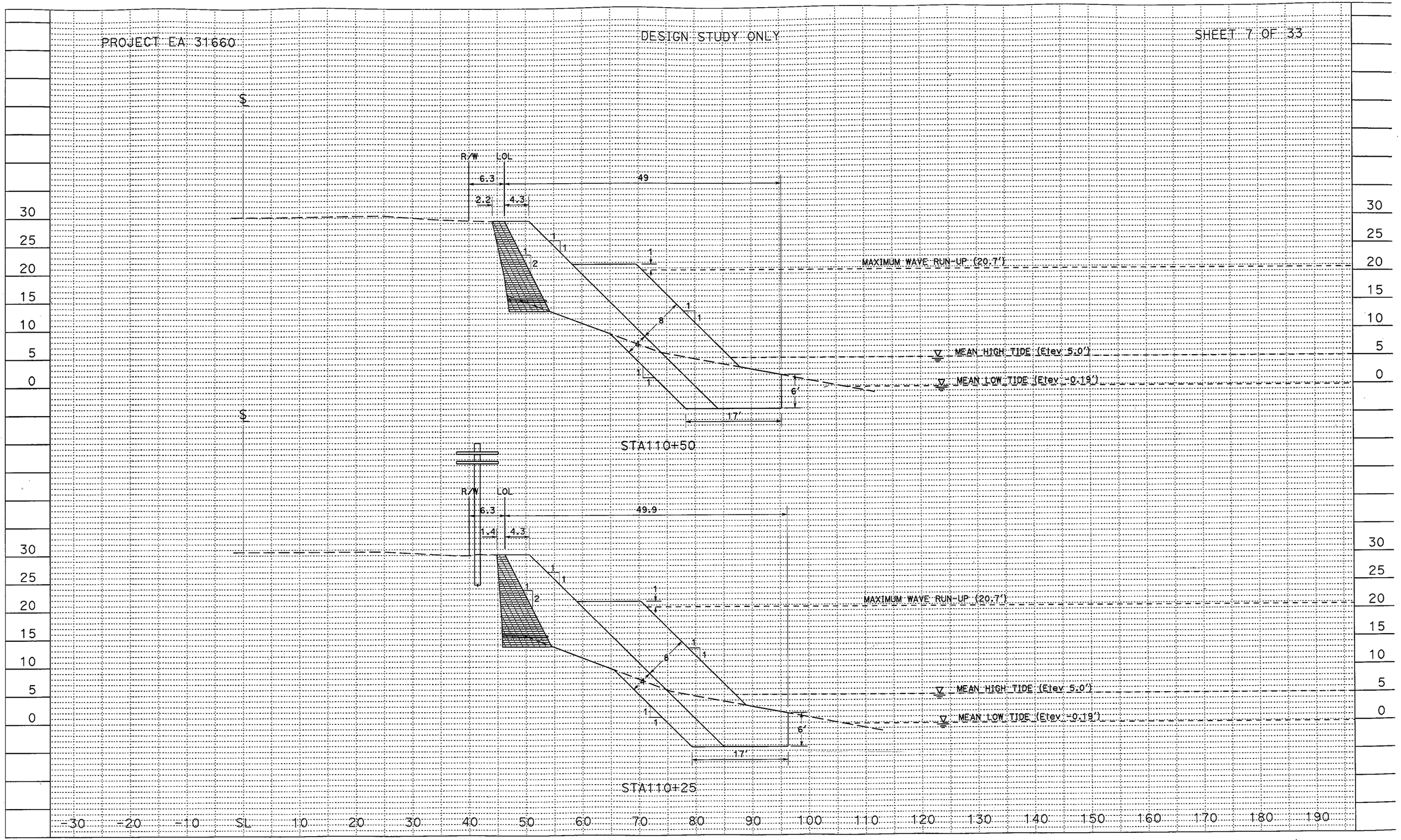
R/W
LOL
6.3
49
2.2
4.3
MAXIMUM WAVE RUN-UP (20.7')
MEAN HIGH TIDE (Etev 5.0')
MEAN LOW TIDE (Etev -0.19')
6'
17'
STA110+50
R/W
LOL
6.3
49.9
1.4
4.3
MAXIMUM WAVE RUN-UP (20.7')
MEAN HIGH TIDE (Etev 5.0')
MEAN LOW TIDE (Etev -0.19')
6'
17'
STA110+25
30
25
20
15
10
5
0
-30
-20
-10
SL
10
20
30
40
50
60
70
80
90
100
110
120
130
140
150
160
170
180
190

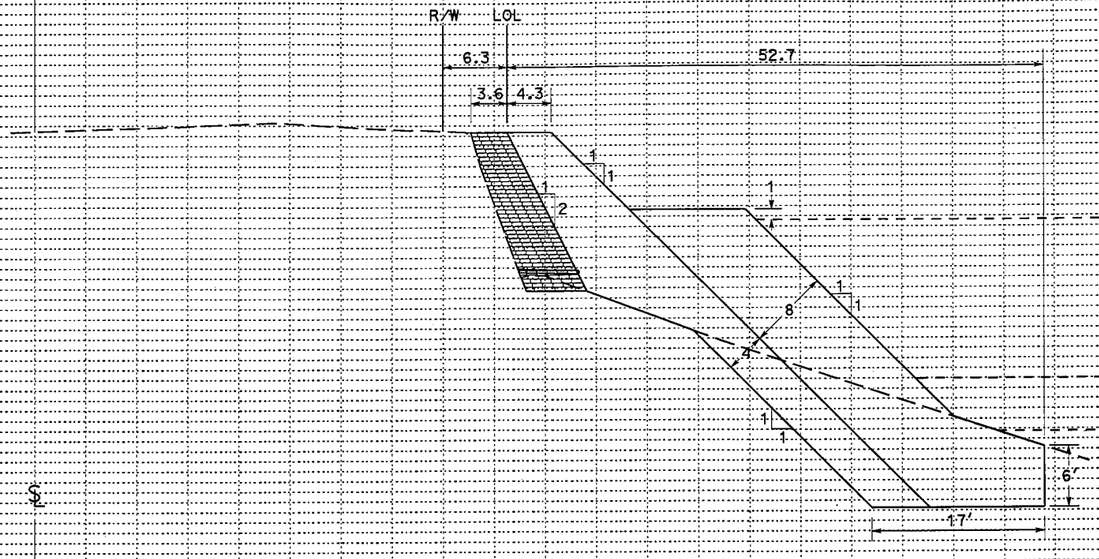

STA111+00

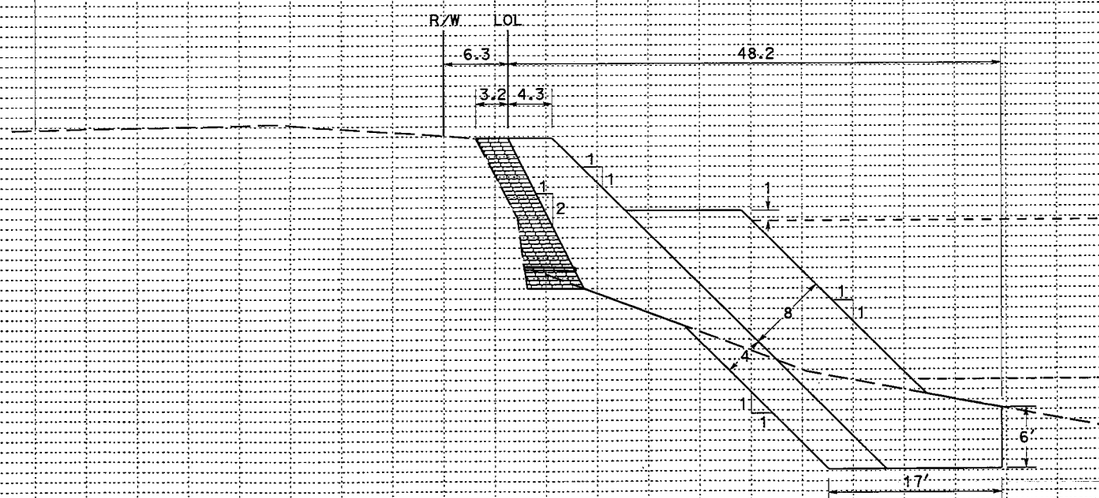

STA110+75

30 25 20 15 10 5 0

-30 -20 -10 SL 10 20 30 40 50 60 70 80 90 100 110 120 130 140 150 160 170 180 190

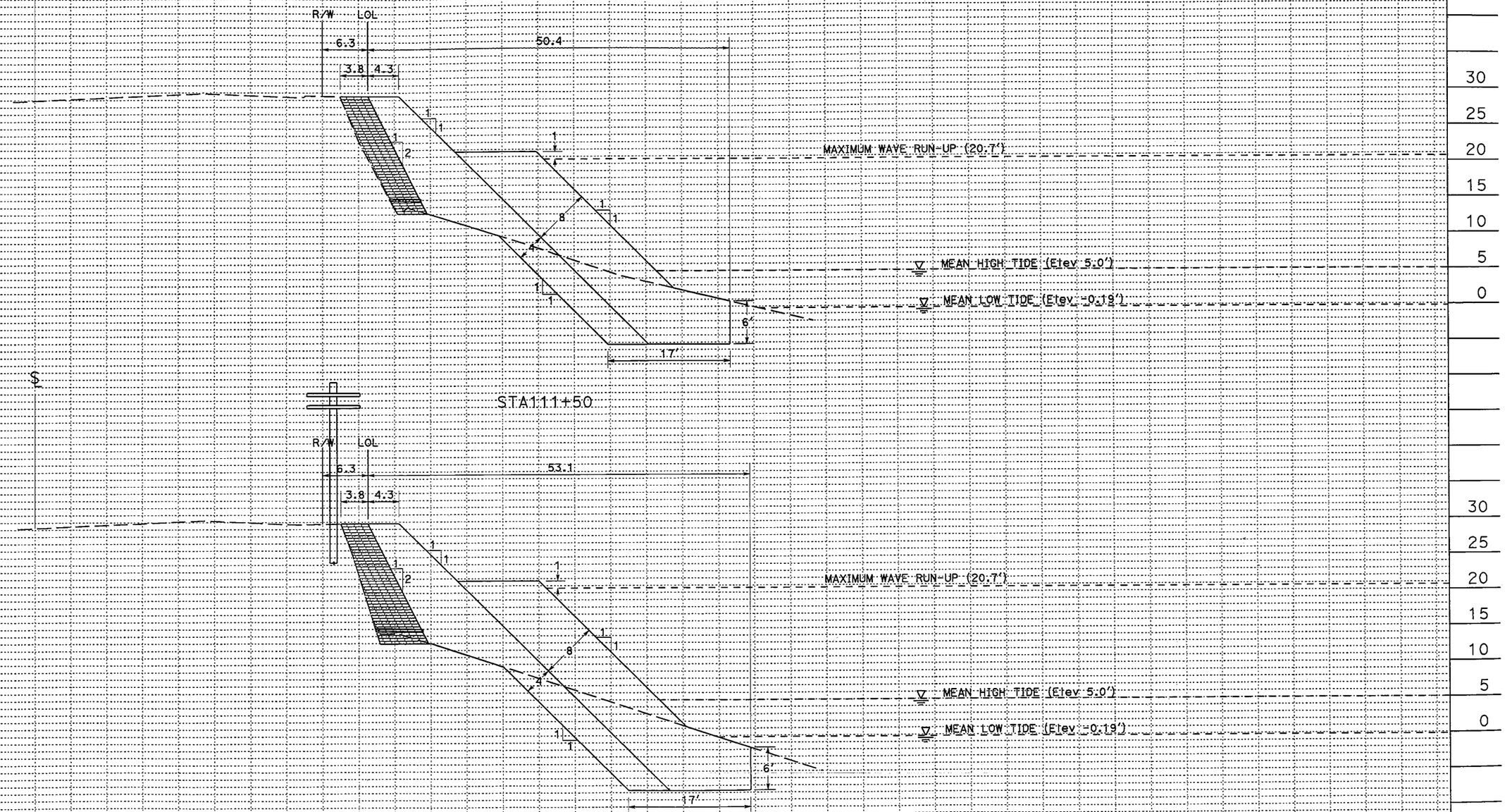
STA111+50
R/W
LOL
6.3
3.8
4.3
50.4
1
1
1
2
1
1
8
4
1
1
MAXIMUM WAVE RUN-UP (20.7')
MEAN HIGH TIDE (Elev 5.0')
MEAN LOW TIDE (Elev -0.19')
6'
17'
STA111+25
R/W
LOL
6.3
3.8
4.3
53.1
1
1
1
2
1
1
8
4
1
1
MAXIMUM WAVE RUN-UP (20.7')
MEAN HIGH TIDE (Elev 5.0')
MEAN LOW TIDE (Elev -0.19')
6'
17'
30
25
20
15
10
5
0
-30
-20
-10
SL
10
20
30
40
50
60
70
80
90
100
110
120
130
140
150
160
170
180
190

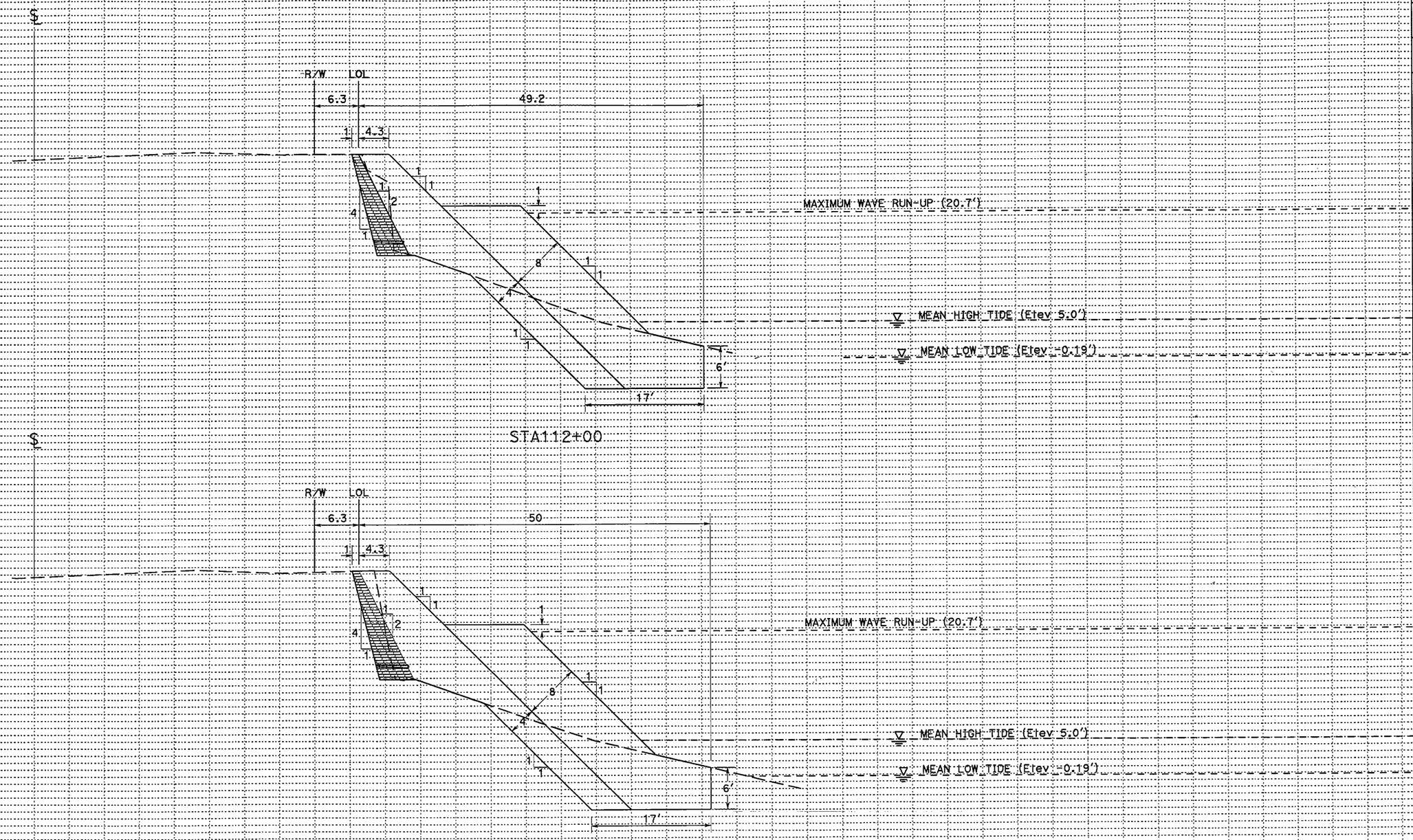
℄
R/W
LOL
6.3
49.2
1
4.3
1
1
1
2
4
1
1
1
8
4
1
1
6
17'
MAXIMUM WAVE RUN-UP (20.7')
MEAN HIGH TIDE (Elev 5.0')
MEAN LOW TIDE (Elev -0.19')
STA112+00
℄
R/W
LOL
6.3
50
1
4.3
1
1
1
2
4
1
1
1
8
4
1
1
6'
17'
MAXIMUM WAVE RUN-UP (20.7')
MEAN HIGH TIDE (Elev 5.0')
MEAN LOW TIDE (Elev -0.19')
STA111+75
30
25
20
15
10
5
0
-30
-20
-10
SL
10
20
30
40
50
60
70
80
90
100
110
120
130
140
150
160
170
180
190

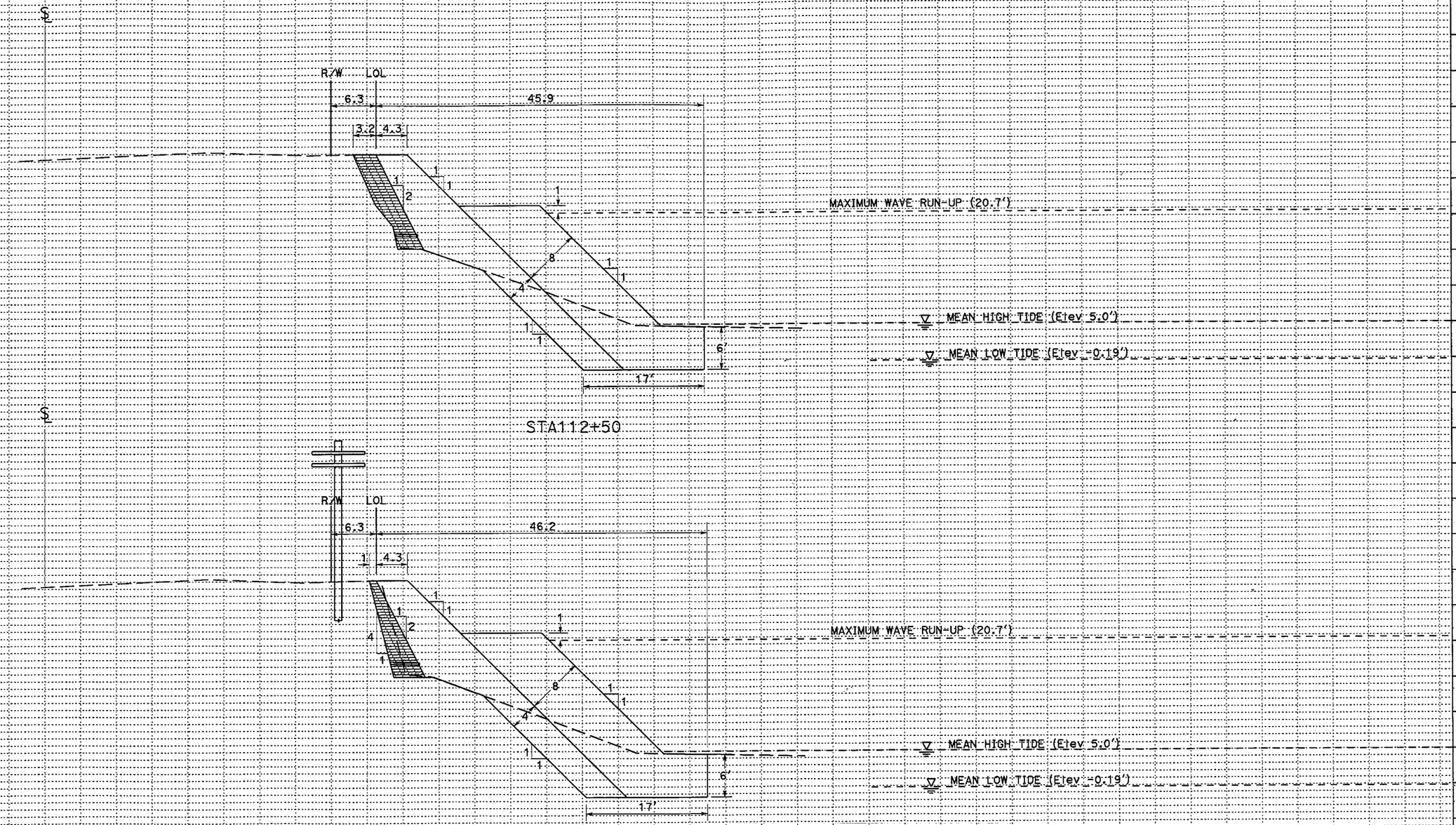
℄
R/W
LOL
6.3
45.9
3.2
4.3
1
2
8
4
6'
17'
MAXIMUM WAVE RUN-UP (20.7')
MEAN HIGH TIDE (Elev 5.0')
MEAN LOW TIDE (Elev -0.19')
STA112+50
℄
R/W
LOL
6.3
46.2
4.3
4
8
4
6'
17'
MAXIMUM WAVE RUN-UP (20.7')
MEAN HIGH TIDE (Elev 5.0')
MEAN LOW TIDE (Elev -0.19')
STA112+25
30
25
20
15
10
5
0
-30
-20
-10
SL
10
20
30
40
50
60
70
80
90
100
110
120
130
140
150
160
170
180
190

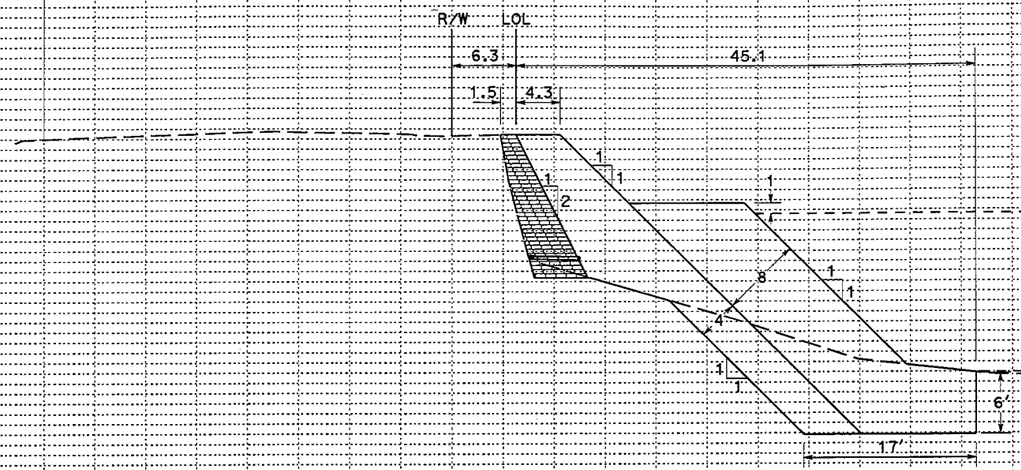

STA113+00

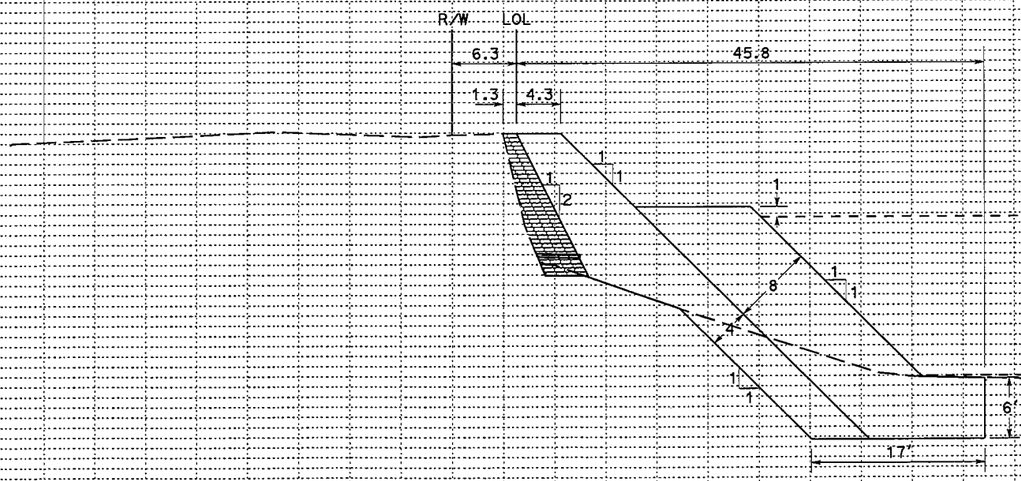

STA112+75

30 25 20 15 10 5 0

-30 -20 -10 SL 10 20 30 40 50 60 70 80 90 100 110 120 130 140 150 160 170 180 190

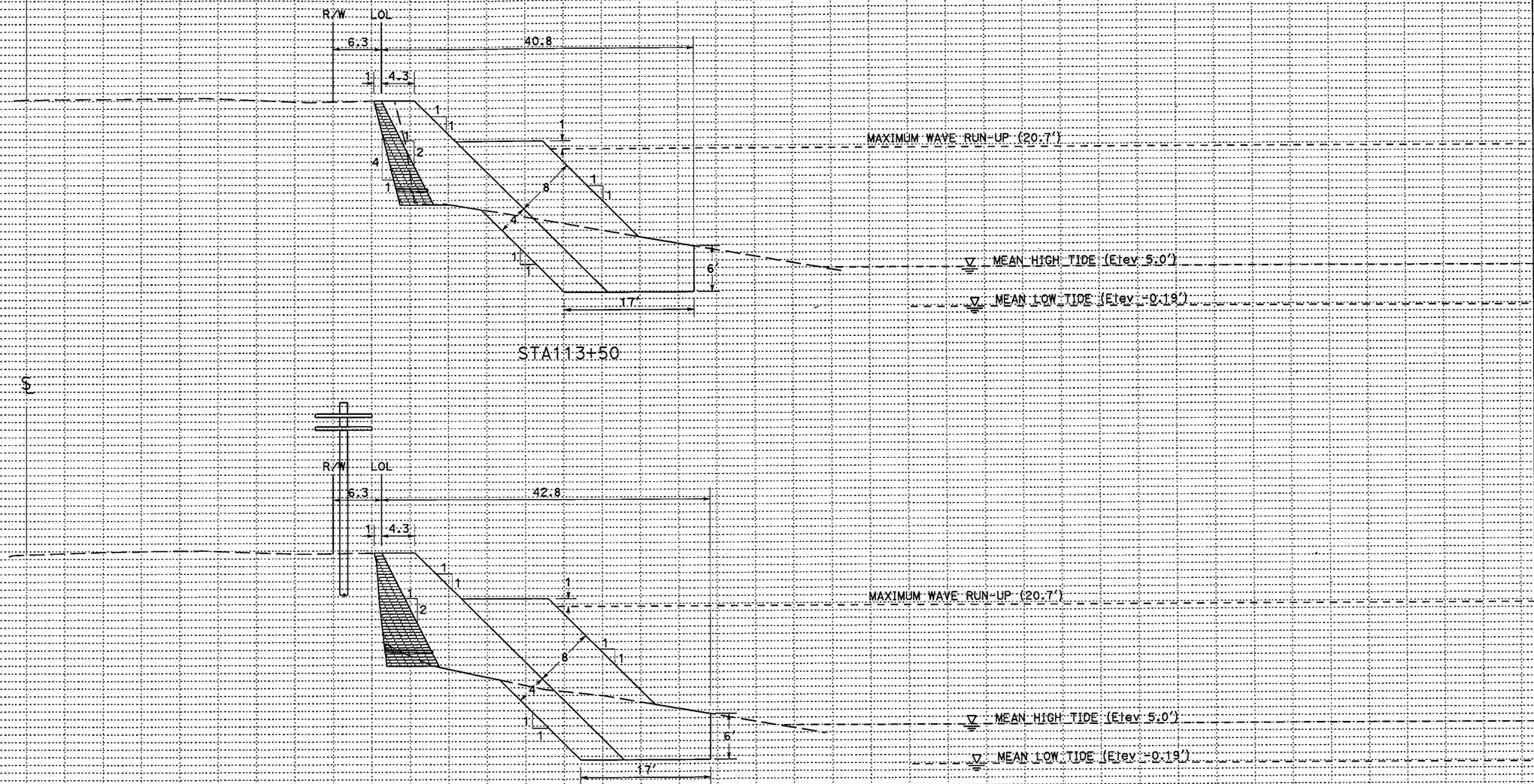
℄
R/W
LOL
6.3
40.8
1
4.3
1
1
1
2
4
1
1
1
8
4
1
1
1
1
6'
17'
MAXIMUM WAVE RUN-UP (20.7')
MEAN HIGH TIDE (Elev 5.0')
MEAN LOW TIDE (Elev -0.19')
STA113+50
℄
R/W
LOL
6.3
42.8
1
4.3
1
1
1
2
1
1
1
8
4
1
1
1
6'
17'
MAXIMUM WAVE RUN-UP (20.7')
MEAN HIGH TIDE (Elev 5.0')
MEAN LOW TIDE (Elev -0.19')
STA113+25
30
25
20
15
10
5
0
-30
-20
-10
SL
10
20
30
40
50
60
70
80
90
100
110
120
130
140
150
160
170
180
190

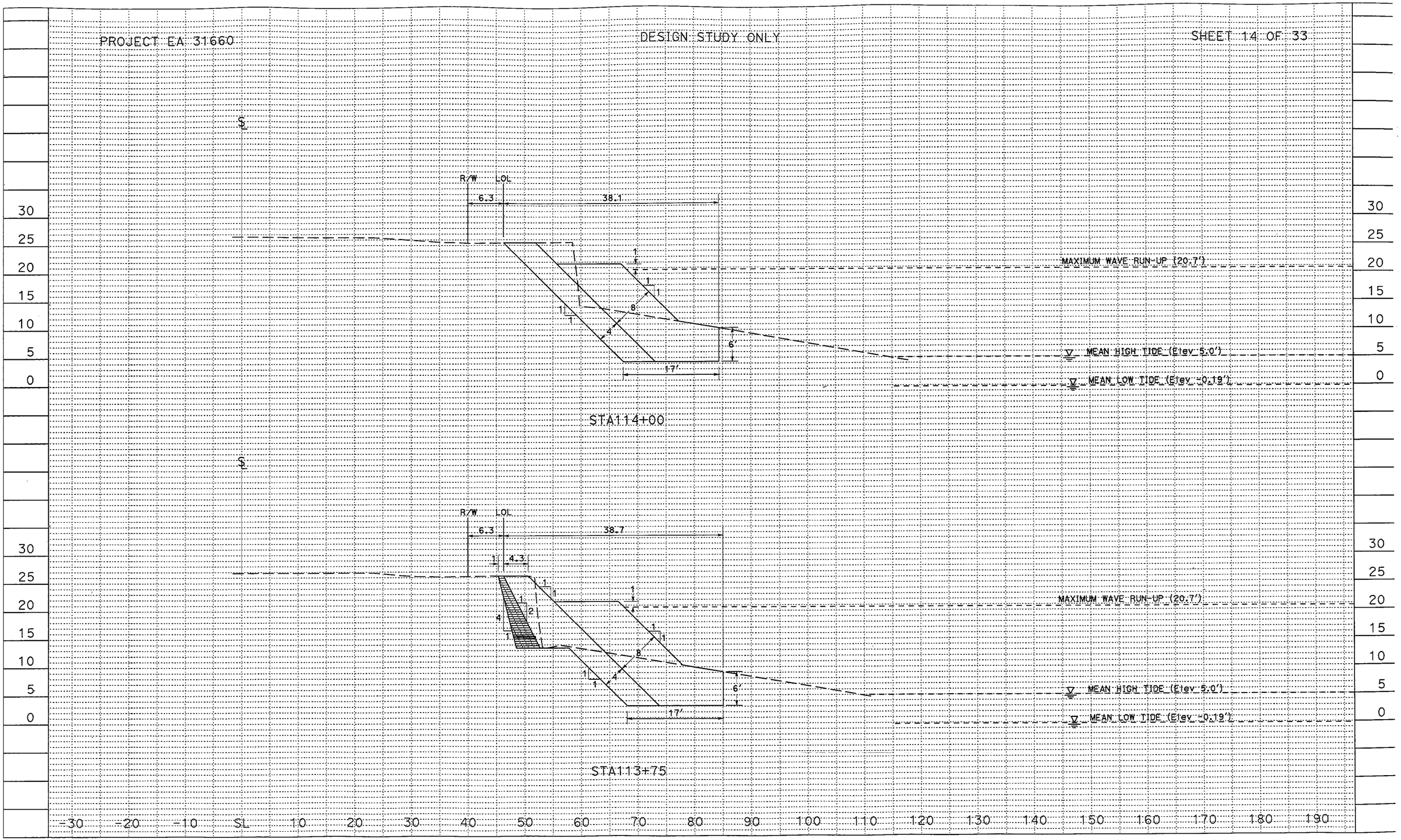
R/W
LOL
6.3
38.1
MAXIMUM WAVE RUN-UP (20.7')
MEAN HIGH TIDE (Elev 5.0')
MEAN LOW TIDE (Elev -0.19')
6'
17'
STA114+00
R/W
LOL
6.3
38.7
4.3
MAXIMUM WAVE RUN-UP (20.7')
MEAN HIGH TIDE (Elev 5.0')
MEAN LOW TIDE (Elev -0.19')
6'
17'
STA113+75
30
25
20
15
10
5
0
-30
-20
-10
SL
10
20
30
40
50
60
70
80
90
100
110
120
130
140
150
160
170
180
190

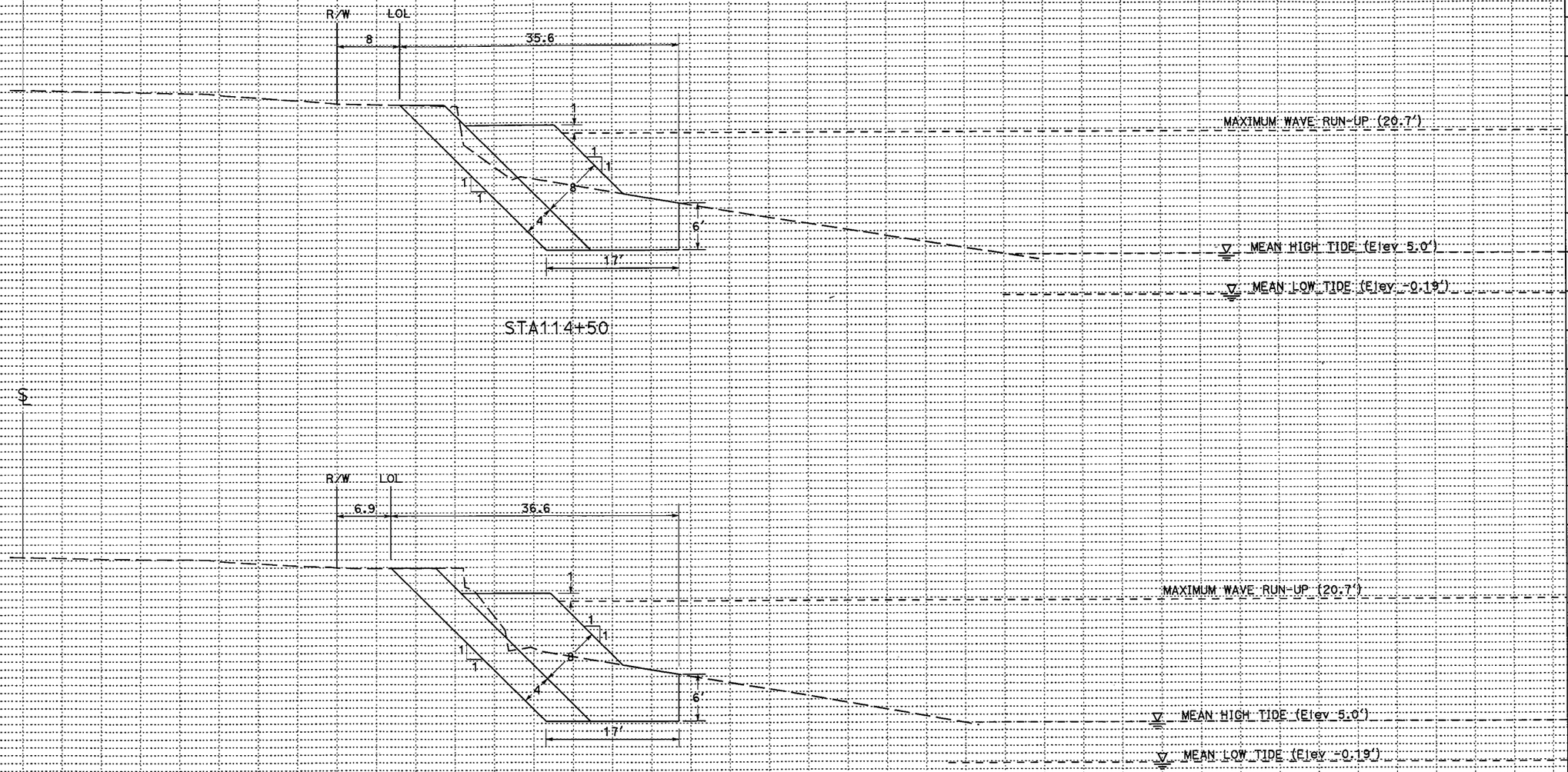
R/W
LOL
8
35.6
1
1
1
1
8
4
6'
17'
MAXIMUM WAVE RUN-UP (20.7')
MEAN HIGH TIDE (Elev 5.0')
MEAN LOW TIDE (Elev -0.19')
STA114+50
R/W
LOL
6.9
36.6
1
1
1
1
8
4
6'
17'
MAXIMUM WAVE RUN-UP (20.7')
MEAN HIGH TIDE (Elev 5.0')
MEAN LOW TIDE (Elev -0.19')
STA114+25
30
25
20
15
10
5
0
-30
-20
-10
SL
10
20
30
40
50
60
70
80
90
100
110
120
130
140
150
160
170
180
190

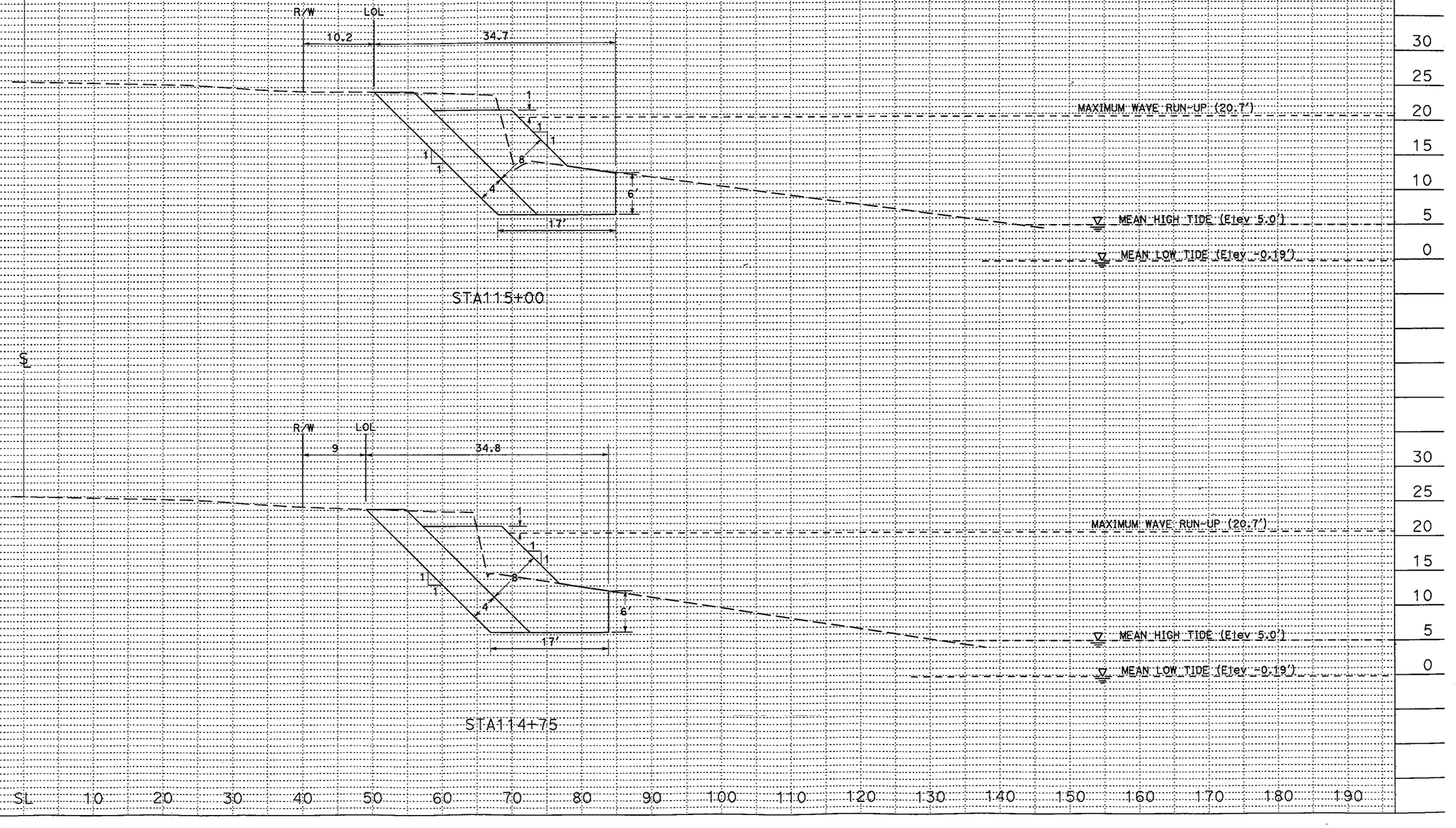
℄
R/W
LOL
10.2
34.7
1
1
1
1
1
1
8
4
6'
17'
MAXIMUM WAVE RUN-UP (20.7')
MEAN HIGH TIDE (Elev 5.0')
MEAN LOW TIDE (Elev -0.19')
STA115+00
℄
R/W
LOL
9
34.8
1
1
1
1
1
1
8
4
6'
17'
MAXIMUM WAVE RUN-UP (20.7')
MEAN HIGH TIDE (Elev 5.0')
MEAN LOW TIDE (Elev -0.19')
STA114+75
30
25
20
15
10
5
0
-30
-20
-10
SL
10
20
30
40
50
60
70
80
90
100
110
120
130
140
150
160
170
180
190

PROJECT EA 31660

DESIGN STUDY ONLY

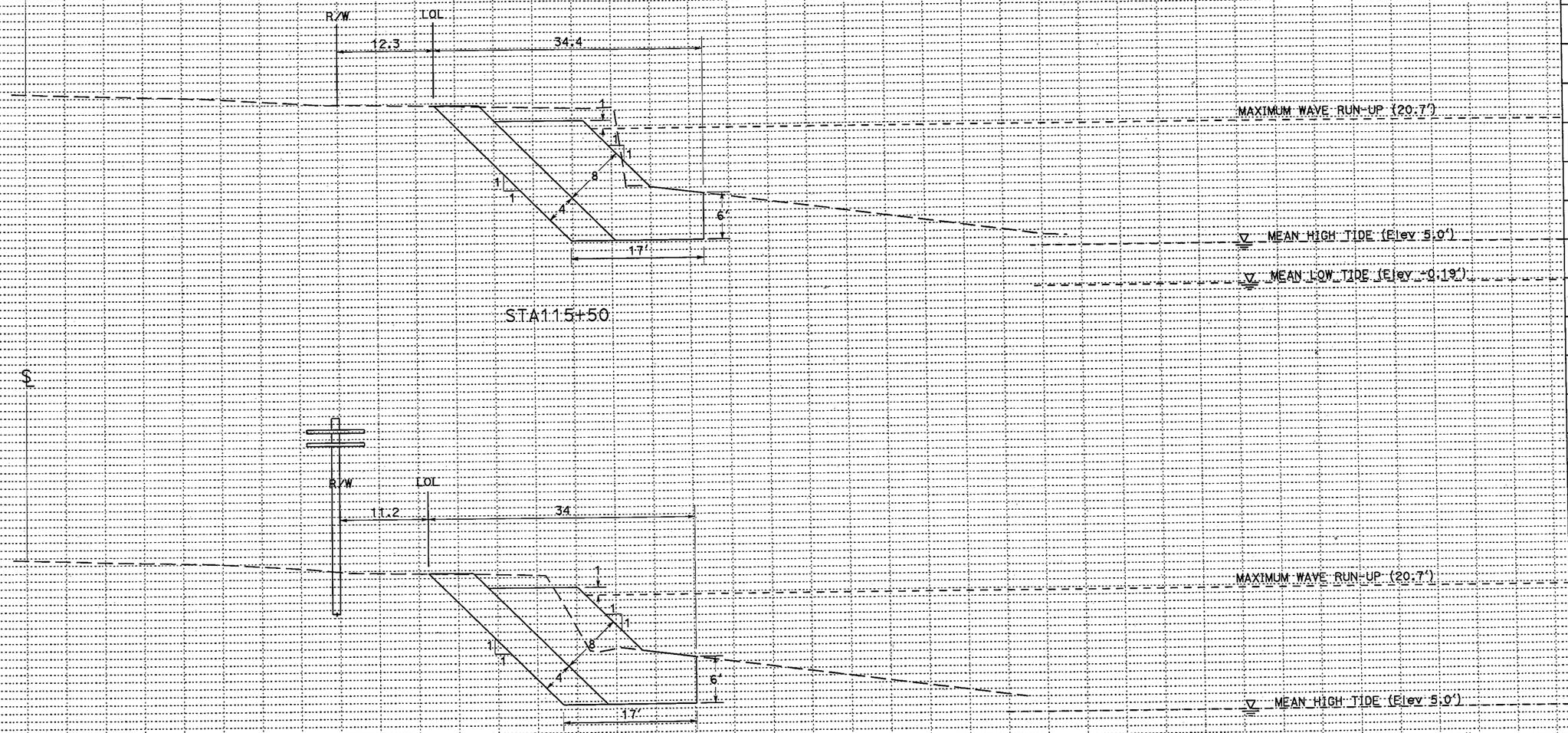

30 25 20 15 10 5 0

-30 -20 -10 SL 10 20 30 40 50 60 70 80 90 100 110 120 130 140 150 160 170 180 190

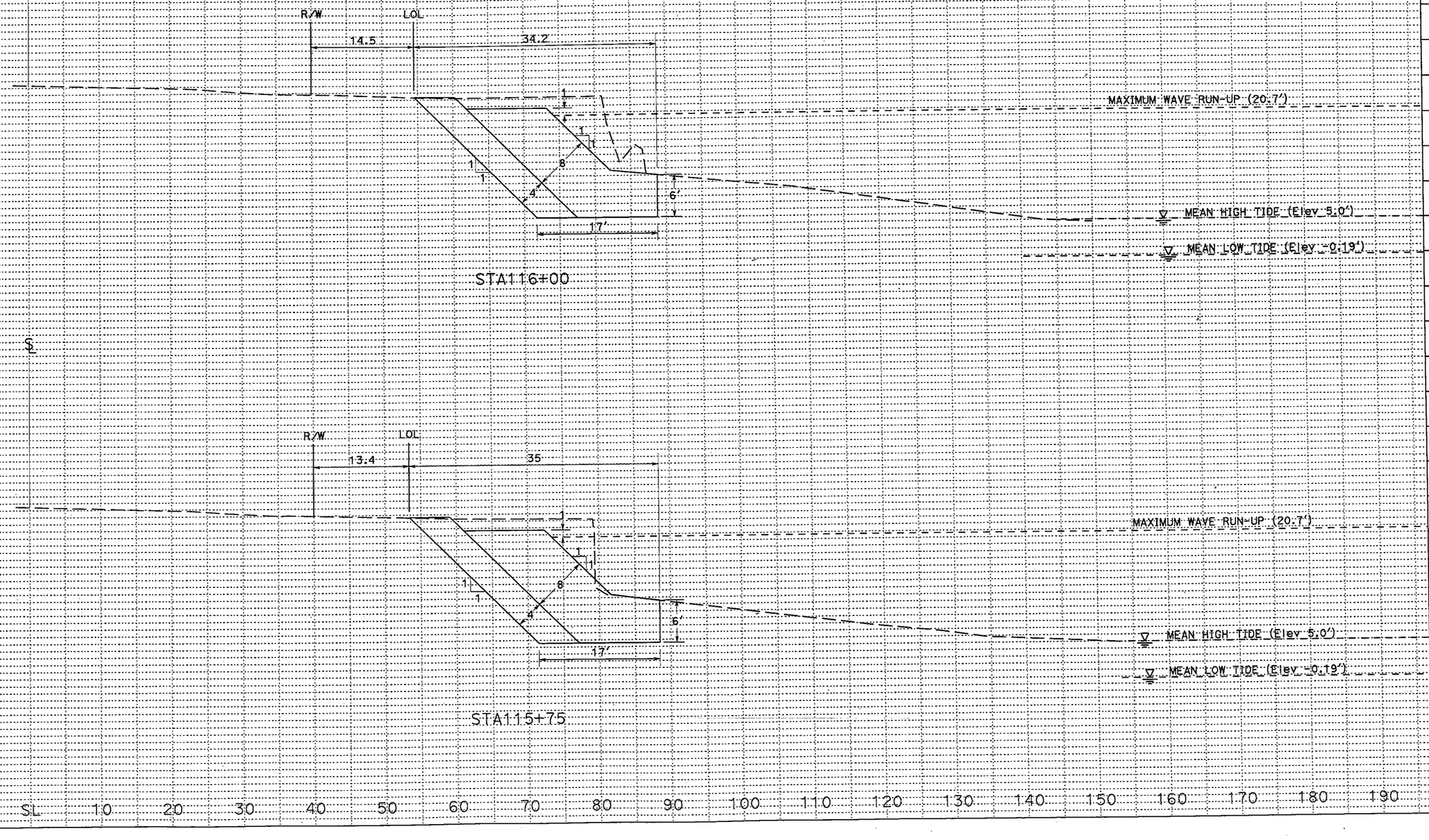
℄
R/W
LOL
14.5
34.2
1
1
1
1
1
1
8
4'
6'
17'
MAXIMUM WAVE RUN-UP (20.7')
MEAN HIGH TIDE (Elev 5.0')
MEAN LOW TIDE (Elev -0.19')
STA116+00
℄
R/W
LOL
13.4
35
1
1
1
1
1
1
8
4'
6'
17'
MAXIMUM WAVE RUN-UP (20.7')
MEAN HIGH TIDE (Elev 5.0')
MEAN LOW TIDE (Elev -0.19')
STA115+75
30
25
20
15
10
5
0
-30
-20
-10
SL
10
20
30
40
50
60
70
80
90
100
110
120
130
140
150
160
170
180
190

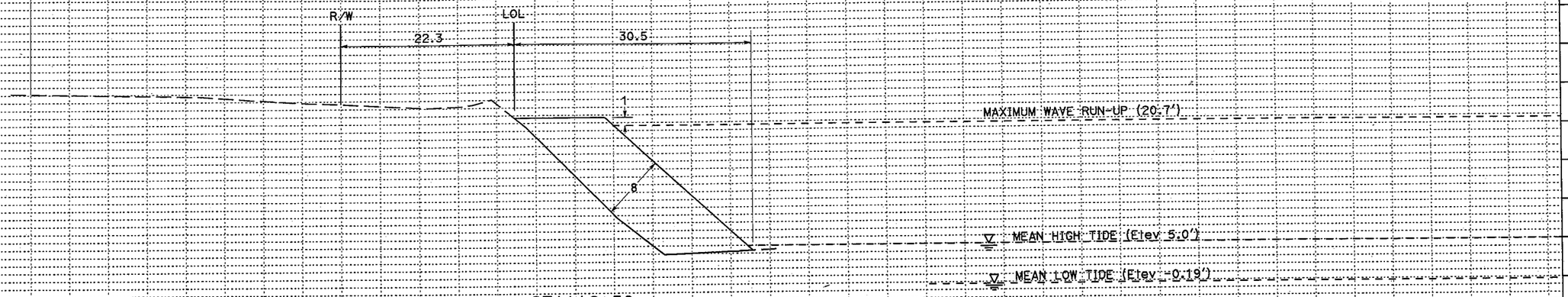

STA116+50

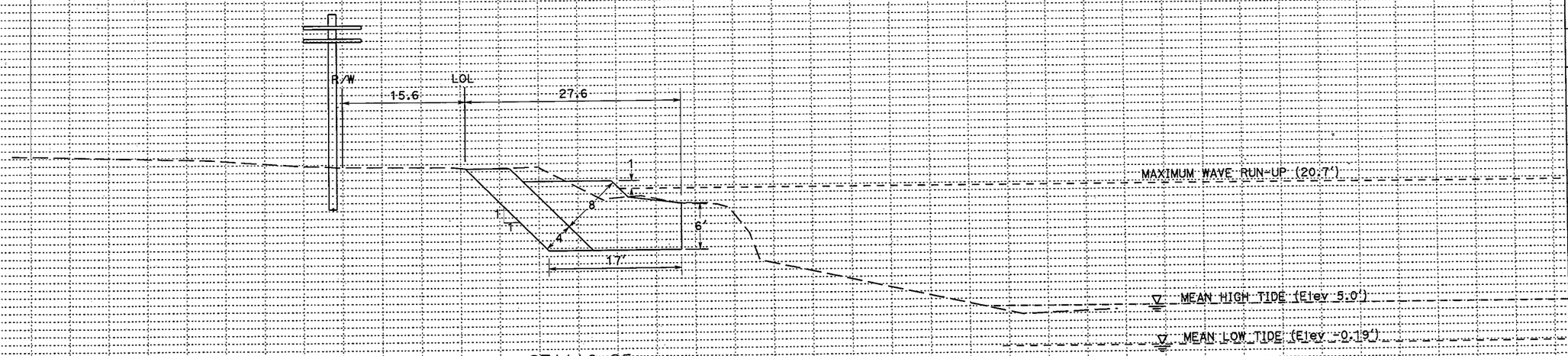

STA116+25

30 25 20 15 10 5 0

-30 -20 -10 SL 10 20 30 40 50 60 70 80 90 100 110 120 130 140 150 160 170 180 190

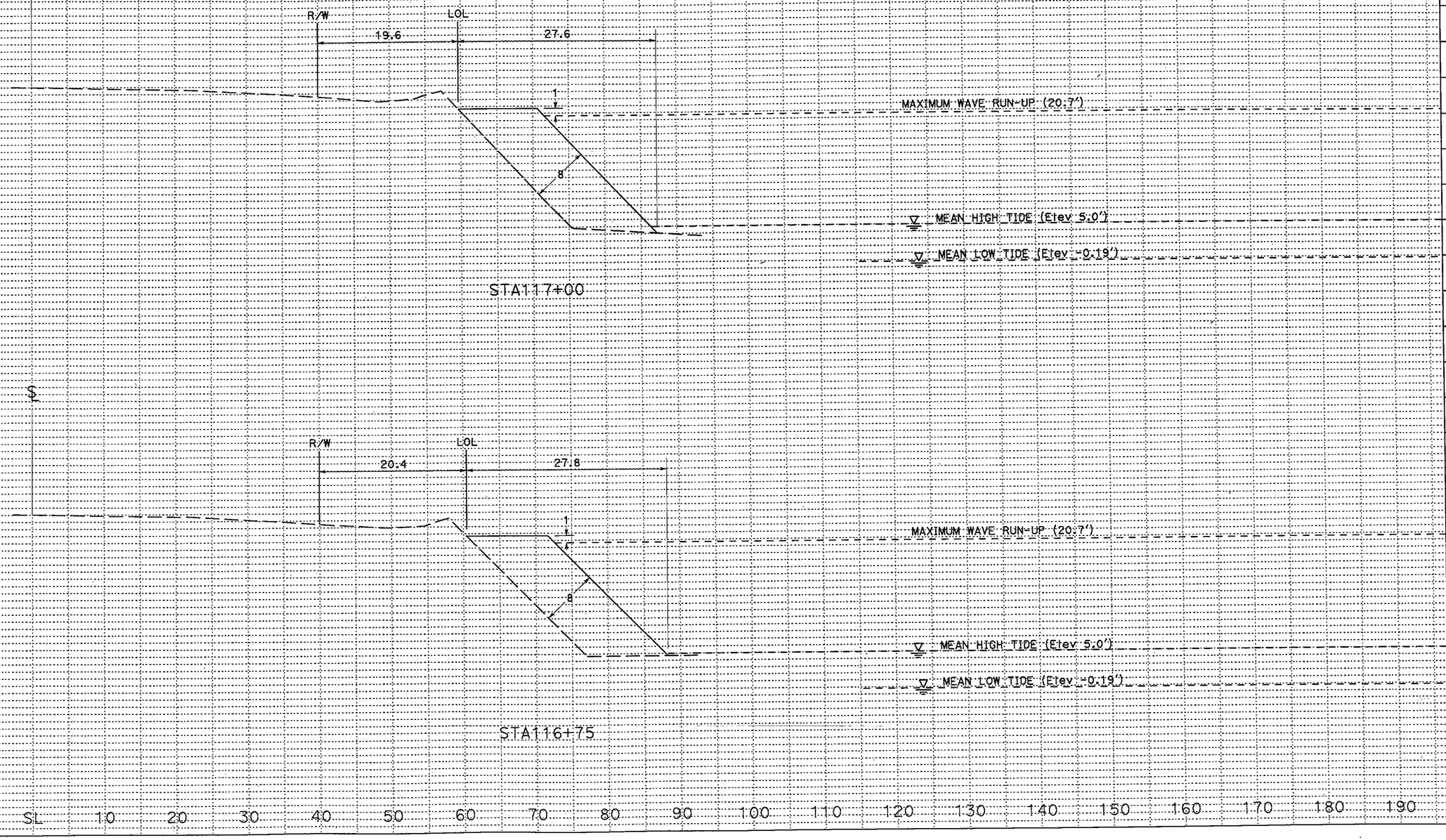
℄
R/W
LOL
19.6
27.6
1
1
8
MAXIMUM WAVE RUN-UP (20.7')
MEAN HIGH TIDE (Elev 5.0')
MEAN LOW TIDE (Elev -0.19')
STA117+00
℄
R/W
LOL
20.4
27.8
1
1
8
MAXIMUM WAVE RUN-UP (20.7')
MEAN HIGH TIDE (Elev 5.0')
MEAN LOW TIDE (Elev -0.19')
STA116+75
30
25
20
15
10
5
0
-30
-20
-10
SL
10
20
30
40
50
60
70
80
90
100
110
120
130
140
150
160
170
180
190

PROJECT EA 31660

DESIGN STUDY ONLY

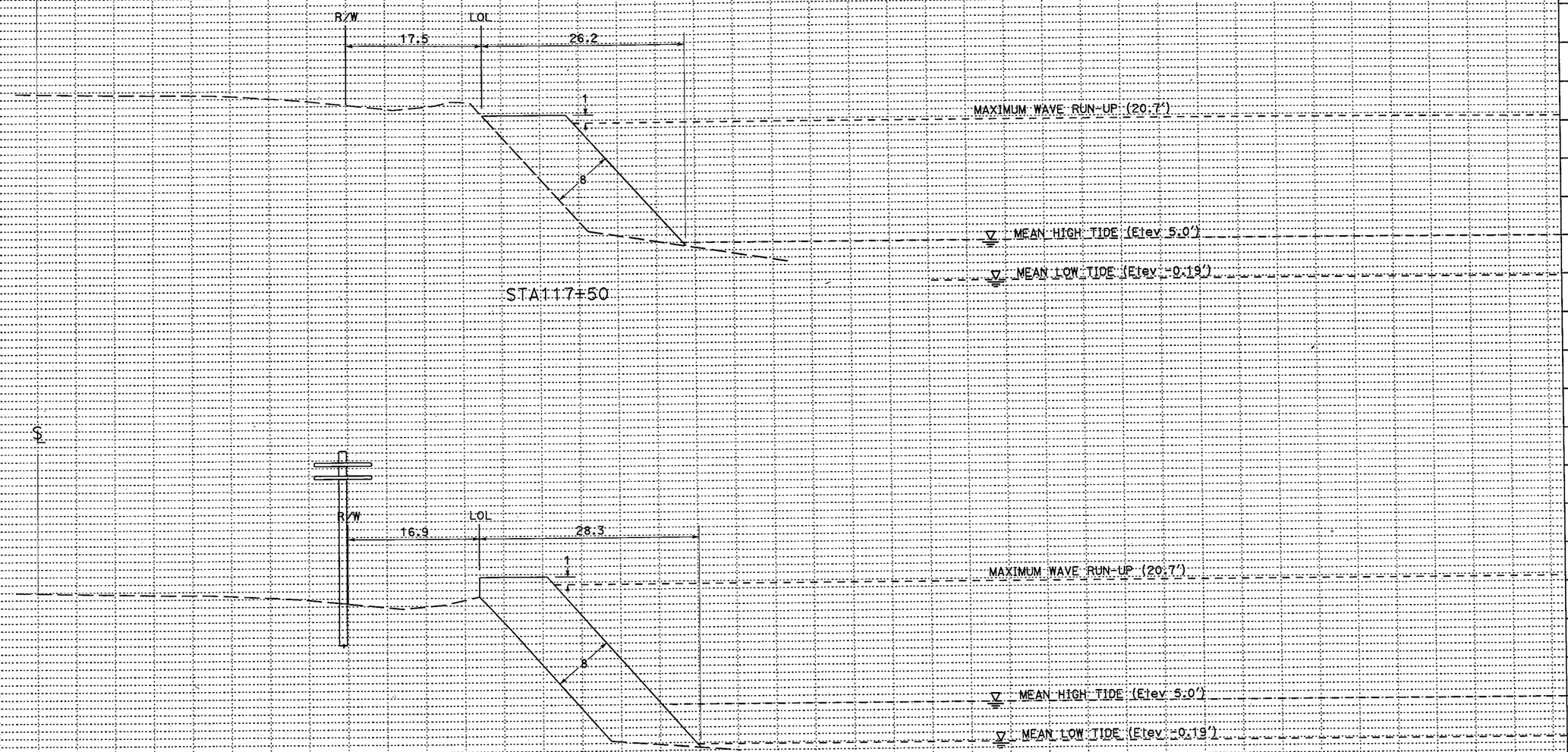

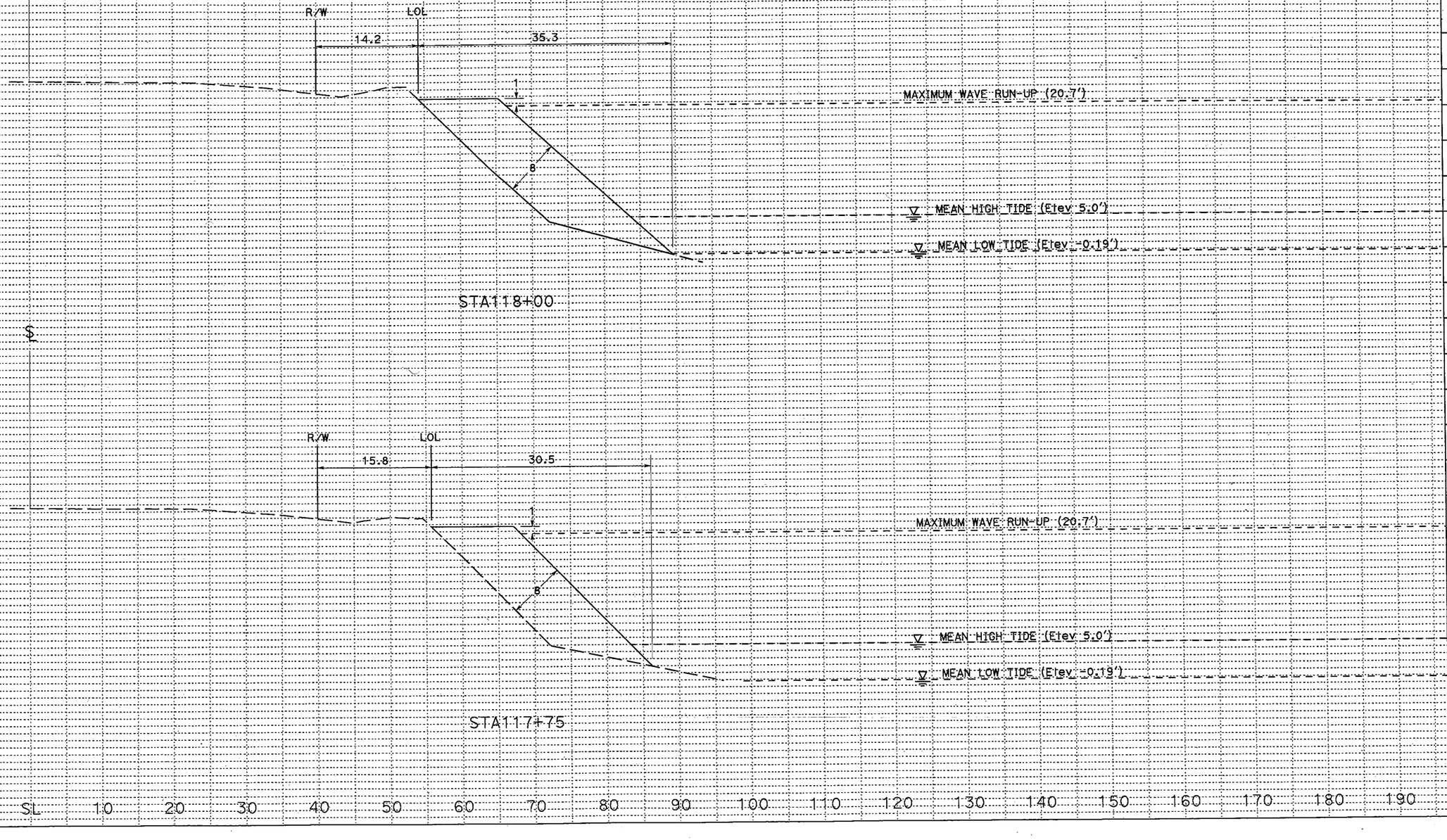
℄
R/W
LOL
14.2
35.3
1
1
8
MAXIMUM WAVE RUN-UP (20.7')
MEAN HIGH TIDE (Elev 5.0')
MEAN LOW TIDE (Elev -0.19')
STA118+00
℄
R/W
LOL
15.8
30.5
1
1
8
MAXIMUM WAVE RUN-UP (20.7')
MEAN HIGH TIDE (Elev 5.0')
MEAN LOW TIDE (Elev -0.19')
STA117+75
30
25
20
15
10
5
0
-30
-20
-10
SL
10
20
30
40
50
60
70
80
90
100
110
120
130
140
150
160
170
180
190

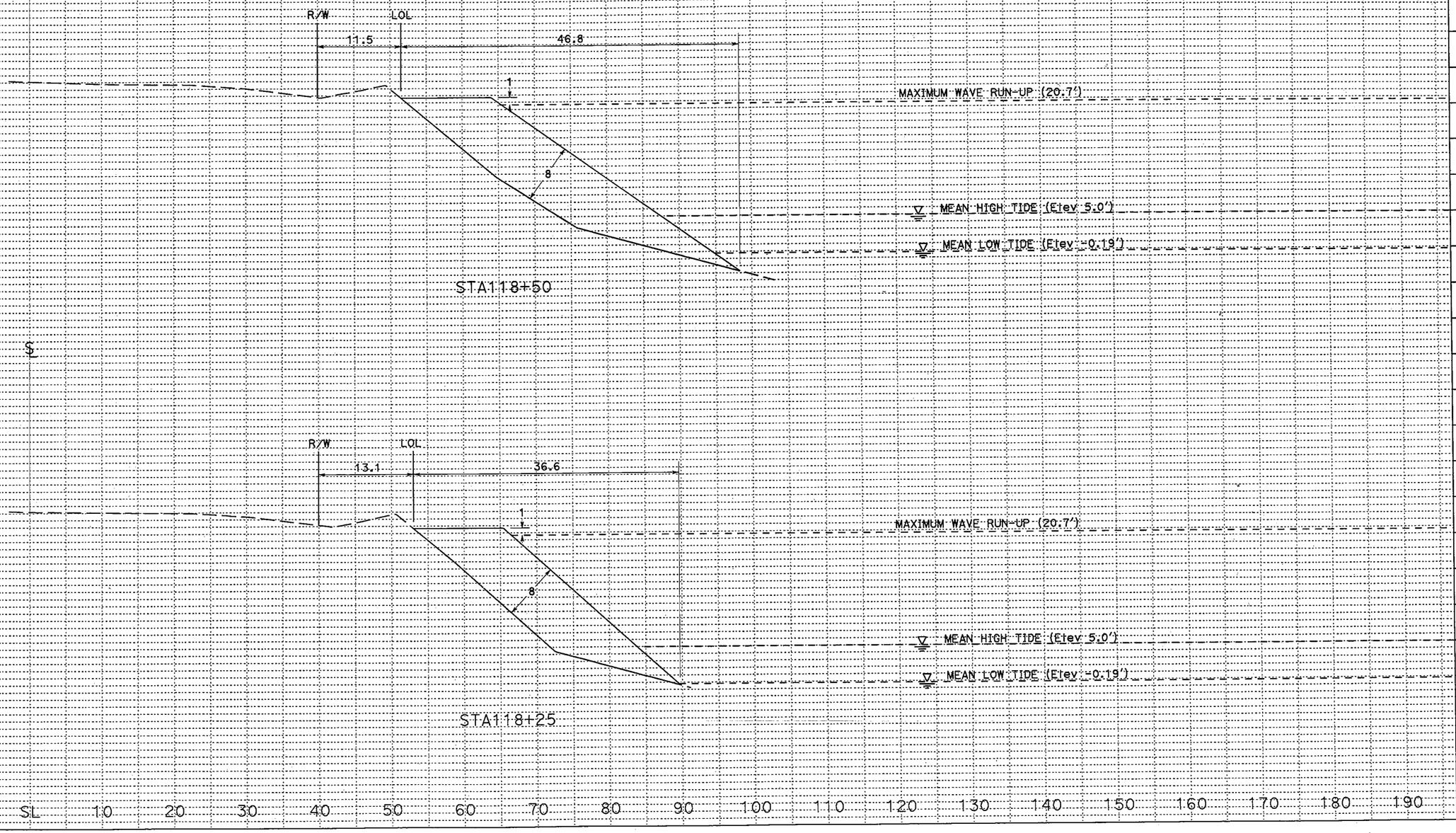
℄
R/W
LOL
11.5
46.8
1
8
MAXIMUM WAVE RUN-UP (20.7')
MEAN HIGH TIDE (Elev 5.0')
MEAN LOW TIDE (Elev -0.19')
STA118+50
℄
R/W
LOL
13.1
36.6
1
8
MAXIMUM WAVE RUN-UP (20.7')
MEAN HIGH TIDE (Elev 5.0')
MEAN LOW TIDE (Elev -0.19')
STA118+25
30
25
20
15
10
5
0
-30
-20
-10
SL
10
20
30
40
50
60
70
80
90
100
110
120
130
140
150
160
170
180
190

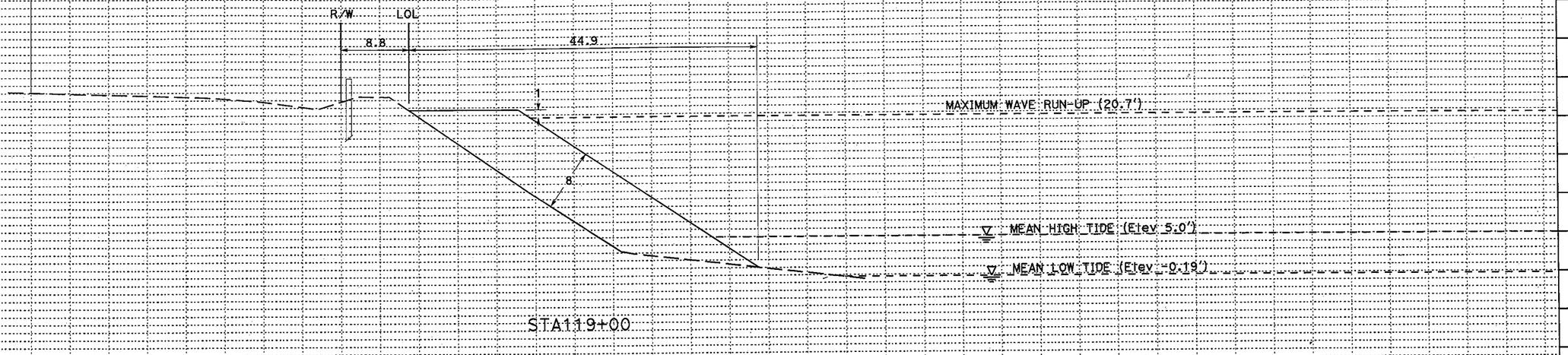

STA119+00

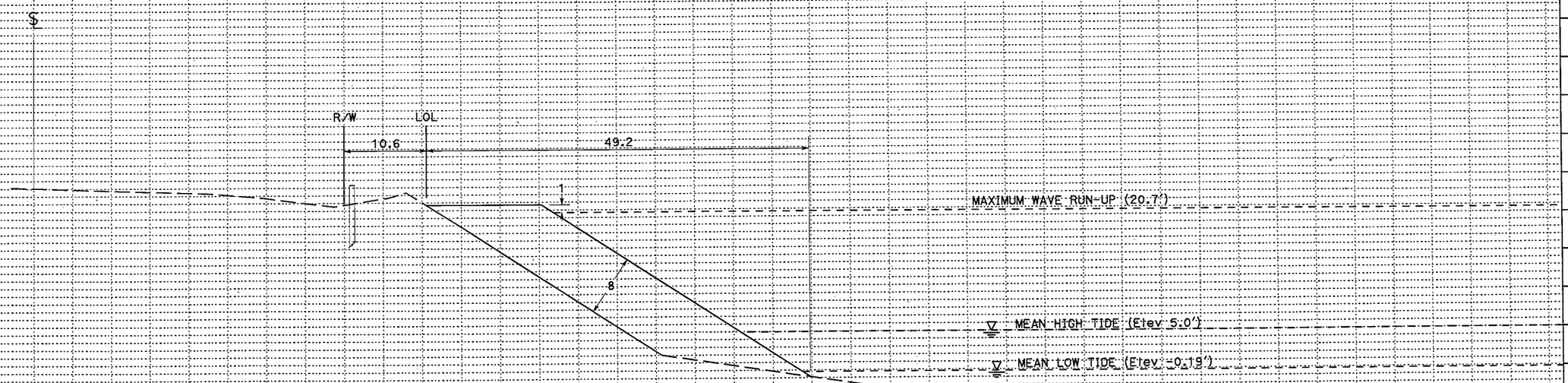

STA118+75

30 25 20 15 10 5 0

-30 -20 -10 SL 10 20 30 40 50 60 70 80 90 100 110 120 130 140 150 160 170 180 190

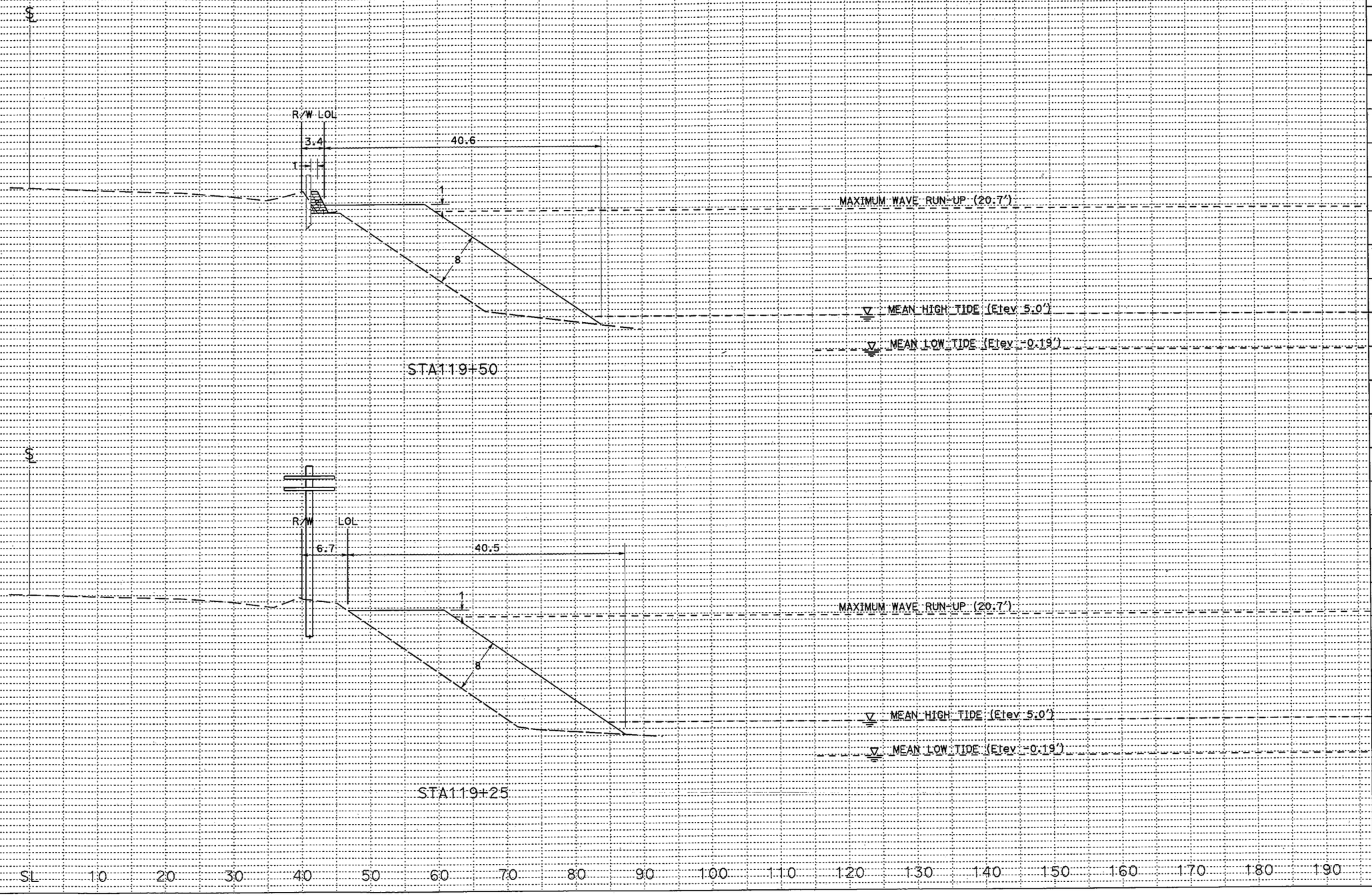
℄
R/W LOL
3.4
40.6
1
1
8
MAXIMUM WAVE RUN-UP (20.7')
MEAN HIGH TIDE (Elev 5.0')
MEAN LOW TIDE (Elev -0.19')
STA119+50
℄
R/W
LOL
6.7
40.5
1
8
MAXIMUM WAVE RUN-UP (20.7')
MEAN HIGH TIDE (Elev 5.0')
MEAN LOW TIDE (Elev -0.19')
STA119+25
30
25
20
15
10
5
0
-30
-20
-10
SL
10
20
30
40
50
60
70
80
90
100
110
120
130
140
150
160
170
180
190

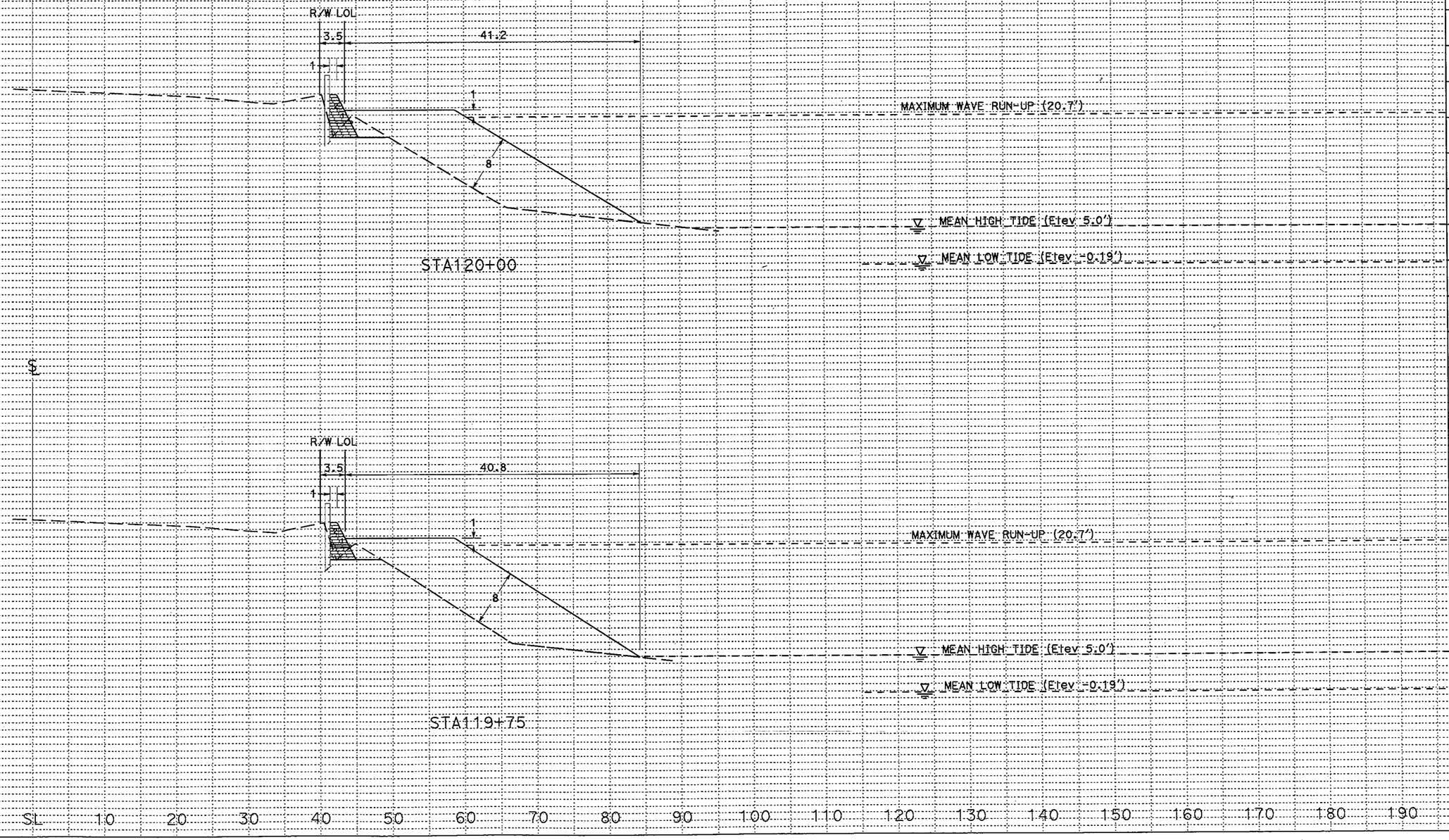
℄
R/W LOL
3.5
41.2
1
1
8
MAXIMUM WAVE RUN-UP (20.7')
MEAN HIGH TIDE (Elev 5.0')
MEAN LOW TIDE (Elev -0.19')
STA120+00
℄
R/W LOL
3.5
40.8
1
1
8
MAXIMUM WAVE RUN-UP (20.7')
MEAN HIGH TIDE (Elev 5.0')
MEAN LOW TIDE (Elev -0.19')
STA119+75
30
25
20
15
10
5
0
-30
-20
-10
SL
10
20
30
40
50
60
70
80
90
100
110
120
130
140
150
160
170
180
190

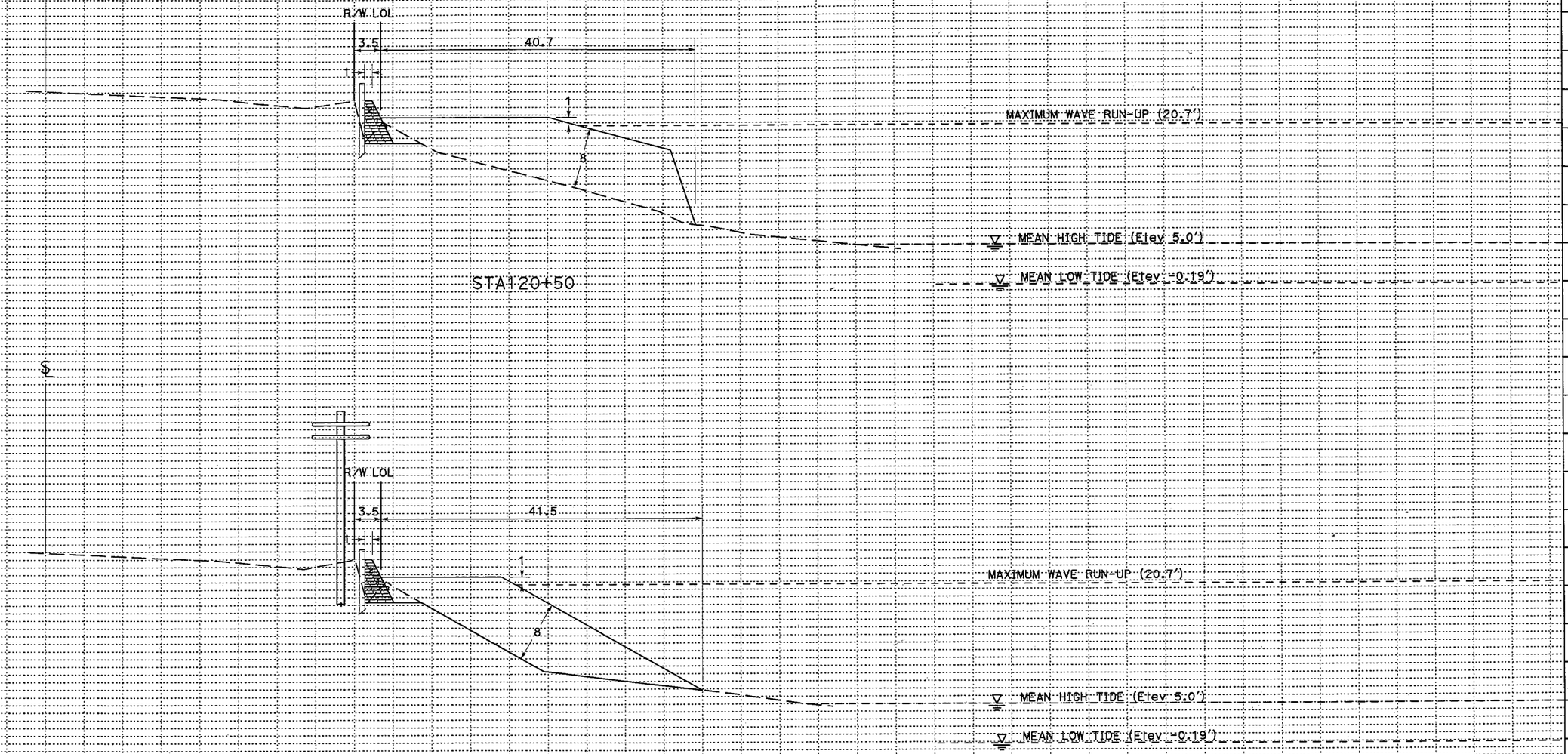
℄
R/W LOL
3.5
40.7
1
1
8
MAXIMUM WAVE RUN-UP (20.7')
MEAN HIGH TIDE (Elev 5.0')
MEAN LOW TIDE (Elev -0.19')
STA120+50
℄
R/W LOL
3.5
41.5
1
1
8
MAXIMUM WAVE RUN-UP (20.7')
MEAN HIGH TIDE (Elev 5.0')
MEAN LOW TIDE (Elev -0.19')
STA120+25
30
25
20
15
10
5
0
-30
-20
-10
SL
10
20
30
40
50
60
70
80
90
100
110
120
130
140
150
160
170
180
190

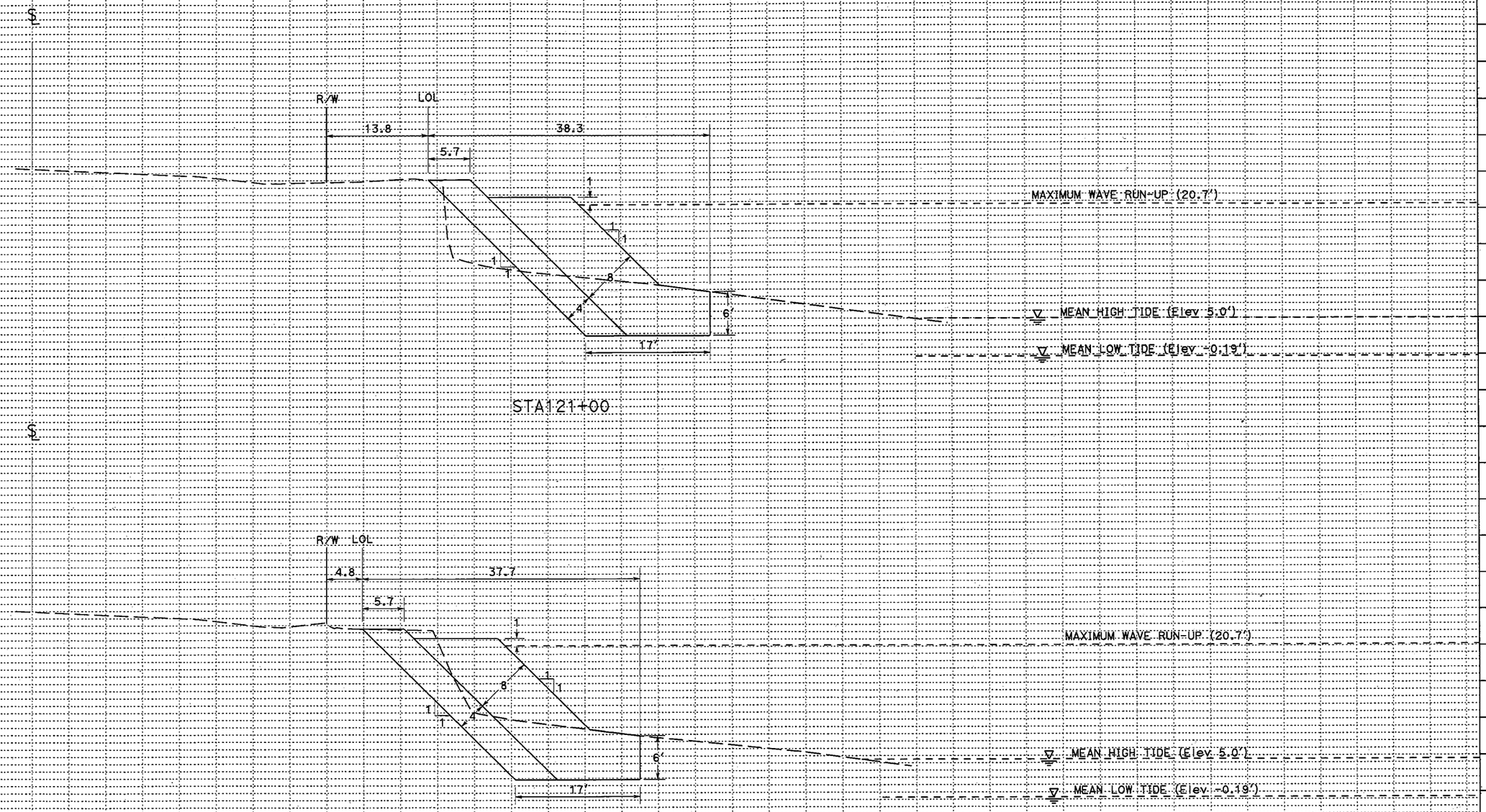
℄
R/W
LOL
13.8
38.3
5.7
1
1
1
1
8
4
6'
17'
MAXIMUM WAVE RUN-UP (20.7')
MEAN HIGH TIDE (Elev 5.0')
MEAN LOW TIDE (Elev -0.19')
STA121+00
℄
R/W
LOL
4.8
37.7
5.7
1
1
1
1
8
4
6'
17'
MAXIMUM WAVE RUN-UP (20.7')
MEAN HIGH TIDE (Elev 5.0')
MEAN LOW TIDE (Elev -0.19')
STA120+75
30
25
20
15
10
5
0
-30
-20
-10
SL
10
20
30
40
50
60
70
80
90
100
110
120
130
140
150
160
170
180
190

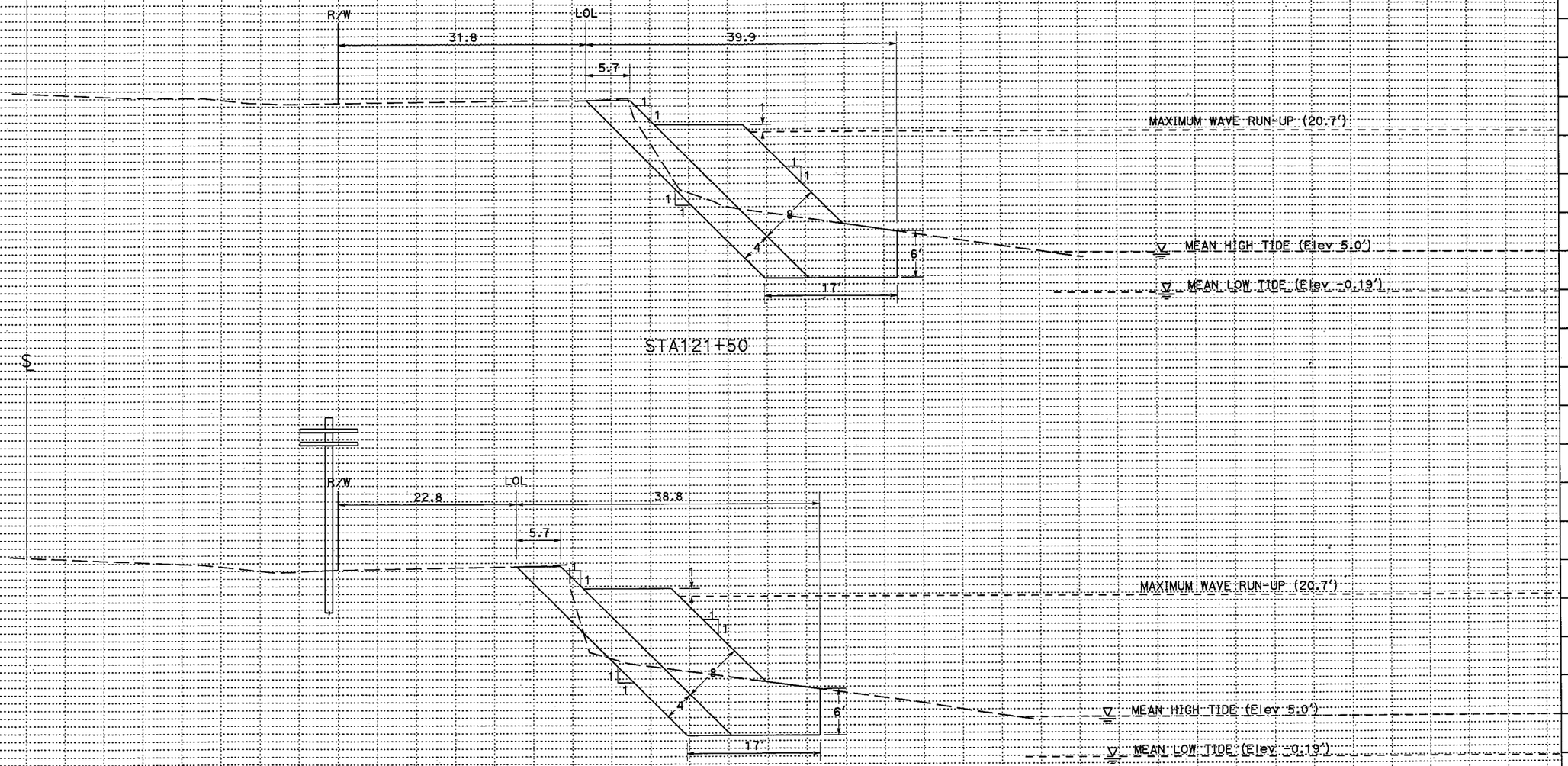
℄
R/W
LOL
31.8
39.9
5.7
1
1
1
1
1
1
8
4
6'
17'
MAXIMUM WAVE RUN-UP (20.7')
MEAN HIGH TIDE (Elev 5.0')
MEAN LOW TIDE (Elev -0.19')
STA121+50
℄
R/W
LOL
22.8
38.8
5.7
1
1
1
1
1
1
8
4
6'
17'
MAXIMUM WAVE RUN-UP (20.7')
MEAN HIGH TIDE (Elev 5.0')
MEAN LOW TIDE (Elev -0.19')
STA121+25
30
25
20
15
10
5
0
-30
-20
-10
SL
10
20
30
40
50
60
70
80
90
100
110
120
130
140
150
160
170
180
190

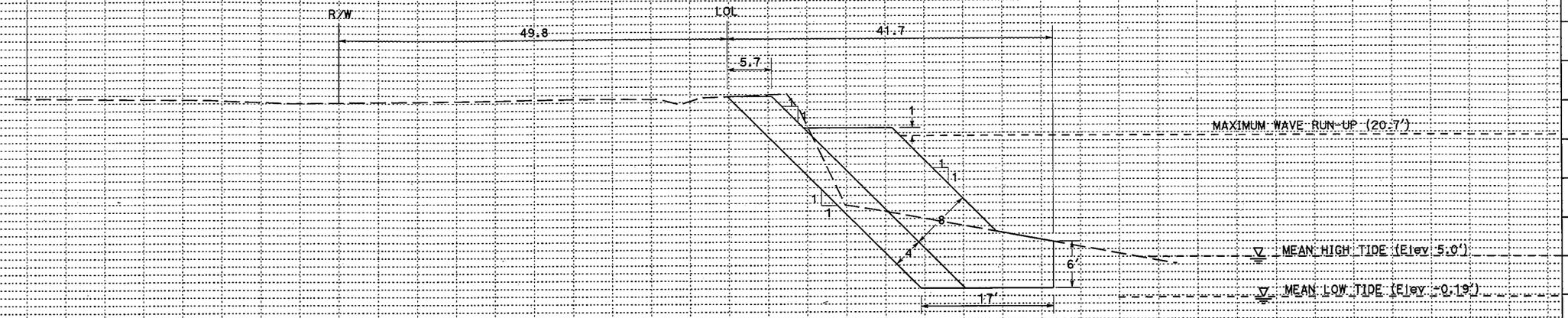

STA122+00

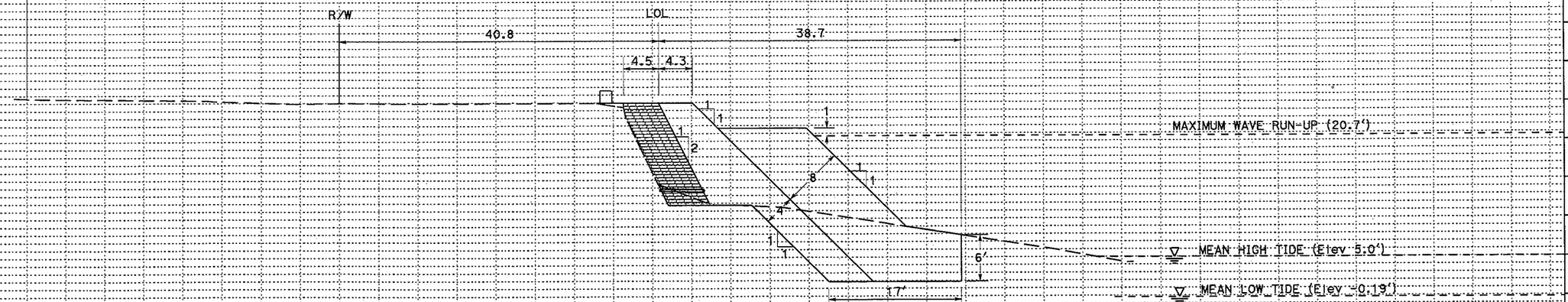

STA121+75

-30 -20 -10 SL 10 20 30 40 50 60 70 80 90 100 110 120 130 140 150 160 170 180 190

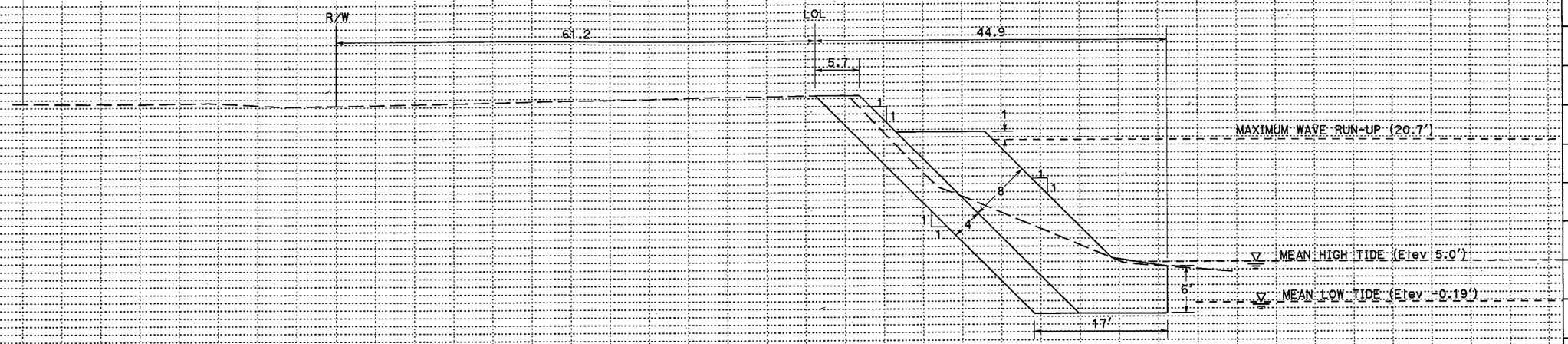

STA122+50

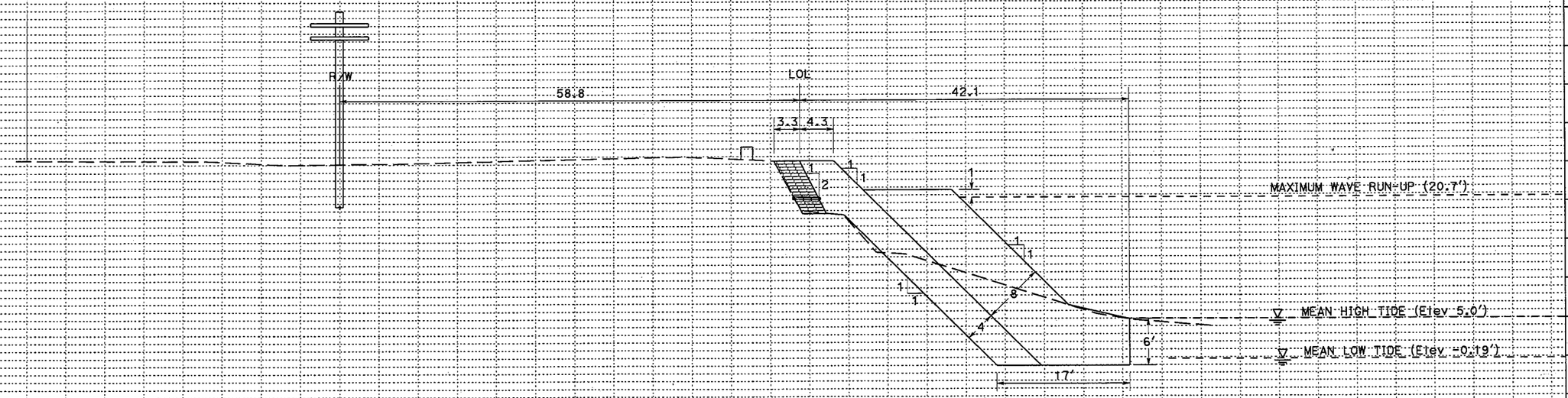

STA122+25

-30 -20 -10 SL 10 20 30 40 50 60 70 80 90 100 110 120 130 140 150 160 170 180 190

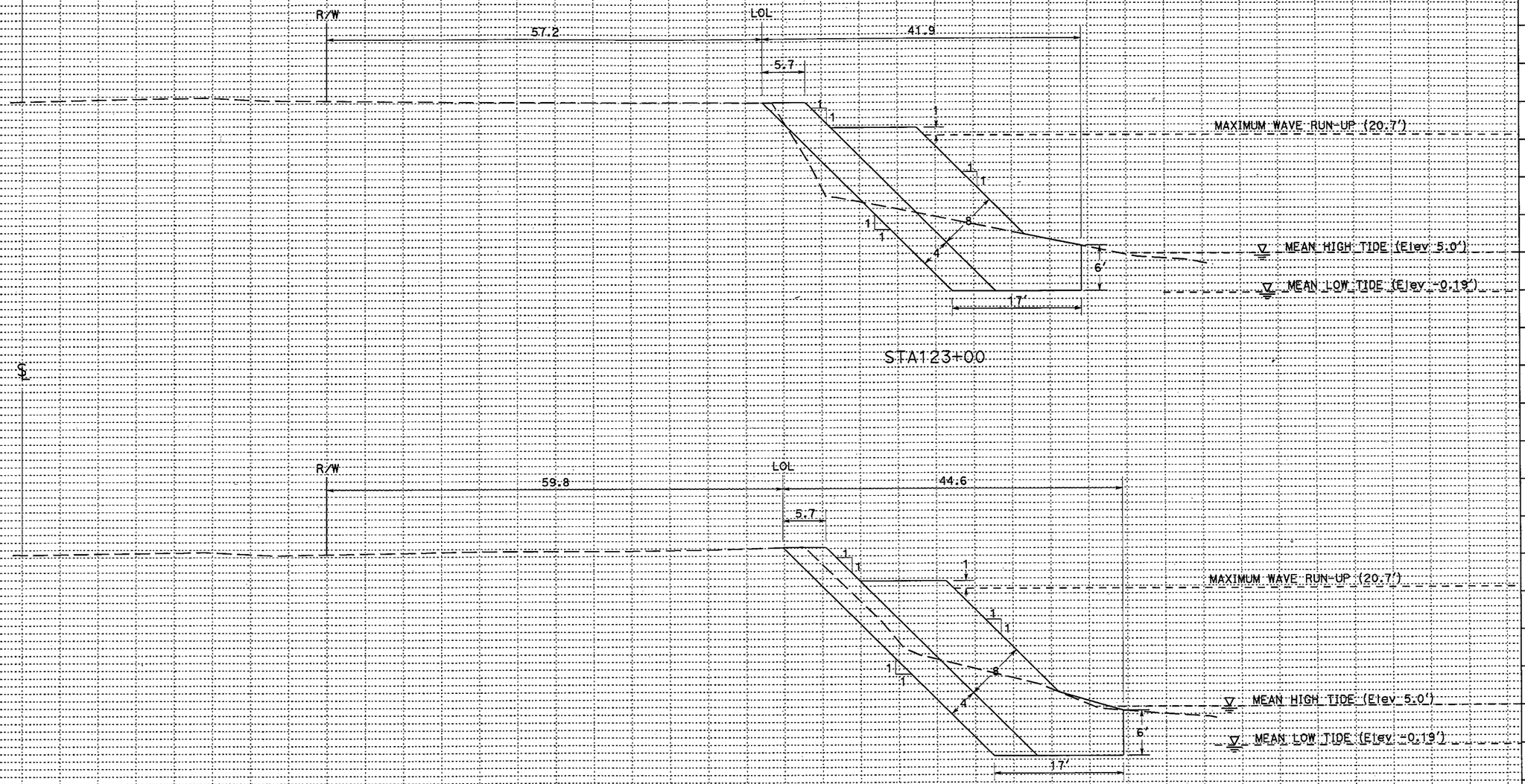
℄
R/W
LOL
57.2
41.9
5.7
1
1
1
1
1
1
1
1
8
4
6'
17'
MAXIMUM WAVE RUN-UP (20.7')
MEAN HIGH TIDE (Elev 5.0')
MEAN LOW TIDE (Elev -0.19')
STA123+00
℄
R/W
LOL
59.8
44.6
5.7
1
1
1
1
1
1
1
1
8
4
6'
17'
MAXIMUM WAVE RUN-UP (20.7')
MEAN HIGH TIDE (Elev 5.0')
MEAN LOW TIDE (Elev -0.19')
STA122+75
30
25
20
15
10
5
0
-30
-20
-10
SL
10
20
30
40
50
60
70
80
90
100
110
120
130
140
150
160
170
180
190

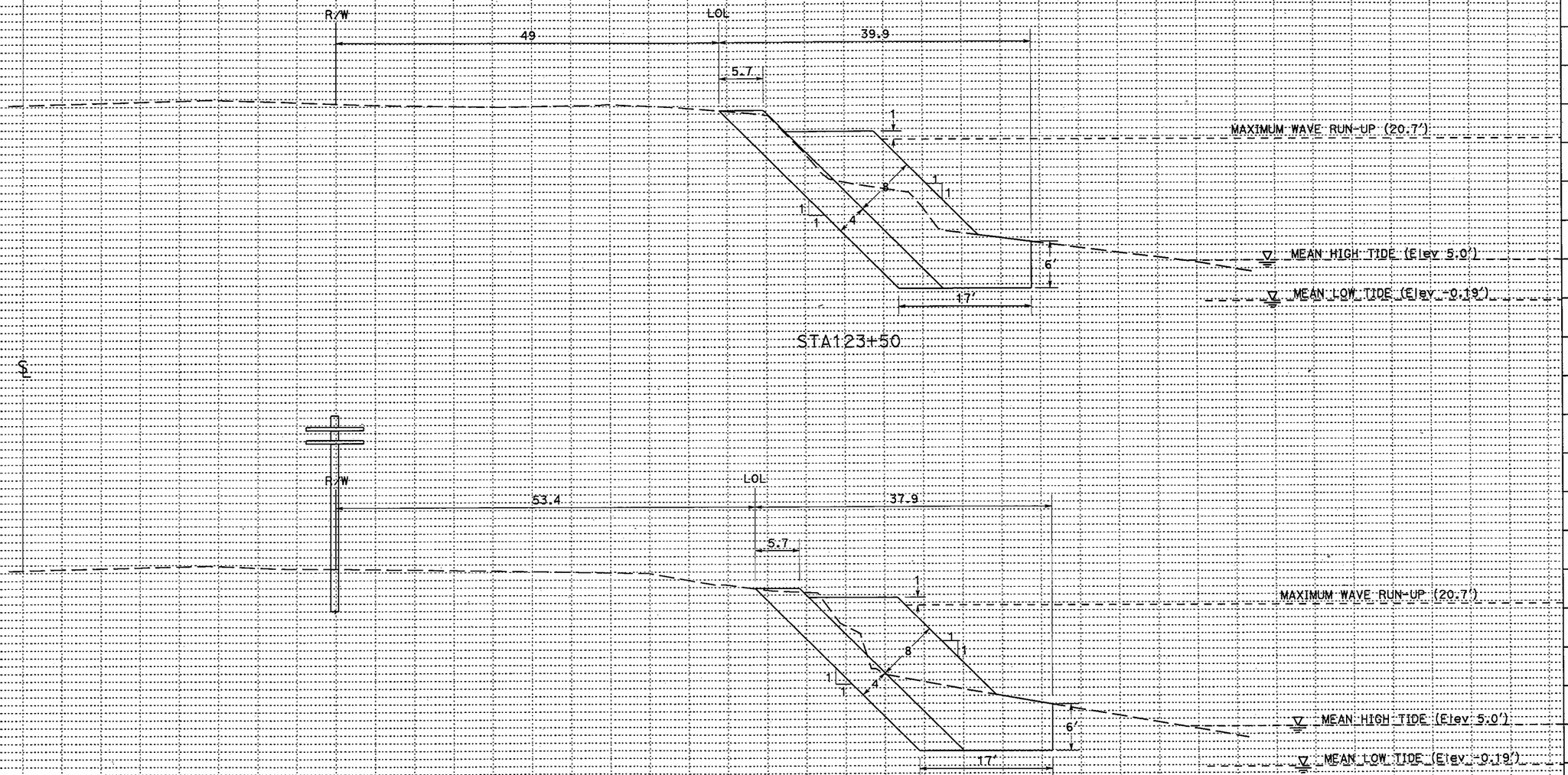
℄
R/W
LOL
49
39.9
5.7
1
1
8
1
1
1
4
MAXIMUM WAVE RUN-UP (20.7')
MEAN HIGH TIDE (Elev 5.0')
MEAN LOW TIDE (Elev -0.19')
6'
17'
STA123+50
℄
R/W
LOL
53.4
37.9
5.7
1
1
8
1
1
1
4
MAXIMUM WAVE RUN-UP (20.7')
MEAN HIGH TIDE (Elev 5.0')
MEAN LOW TIDE (Elev -0.19')
6'
17'
STA123+25
30
25
20
15
10
5
0
-30
-20
-10
SL
10
20
30
40
50
60
70
80
90
100
110
120
130
140
150
160
170
180
190