Dist	COUNTY	ROUTE	POST MILES TOTAL PROJECT	SHEET No.	TOTAL SHEETS
07	LA	5	C43.9/C46.4	101	199

REGISTERED ELECTRICAL ENGINEER DATE 6/8/15

PLANS APPROVAL DATE 6-29-15

REGISTERED PROFESSIONAL ENGINEER PATRICK P. LUI No. E17534 Exp. 06/30/17 ELECTRICAL STATE OF CALIFORNIA

THE STATE OF CALIFORNIA OR ITS OFFICERS OR AGENTS SHALL NOT BE RESPONSIBLE FOR THE ACCURACY OR COMPLETENESS OF SCANNED COPIES OF THIS PLAN SHEET.

NOTES:

1. FOR ACCURATE RIGHT OF WAY DATA, CONTACT RIGHT OF WAY ENGINEERING AT DISTRICT OFFICE.
2. FOR ABBREVIATIONS AND NOTES SEE SHEET E-1.

LEGEND: (THIS SHEET ONLY)

1. Exist 4"C, RC CABLES. ADD 72SMFO, 2-48SMFO IN 3-1" INNERDUCTS.
2. INSTALL 2-4"C, 72SMFO, 2-48SMFO IN 3-1" INNERDUCTS. SEE SHEET E-15 FOR DETAILS.
3. Exist 4"C, 50P22, 8MMFO, 24SMFO. FOR REFERENCE ONLY.
4. RC CCTV CAMERA ASSEMBLY, FOCM AND CCR. INSTALL NEW CCTV CAMERA ASSEMBLY, VIDEO ENCODER, ETHERNET SWITCH TYPE 2, 2-LX SFP MODULE, 2-ZX SFP MODULES, TEMPERATURE SENSOR, 12SMFO, AND 2-48SMFO FDU. SEE SHEET E-23 FOR DETAILS.
5. TERMINATE 12SMFO.
6. INSTALL FIBER OPTIC SPLICE ENCLOSURES FOR 48SMFO VIDEO/DATA AND 72SMFO TRUNK CABLES. COIL 30 FEET AND CAP END OF 48SMFO VIDEO/DATA AND 48SMFO SPARE CABLES.
7. FOR REFERENCE ONLY.

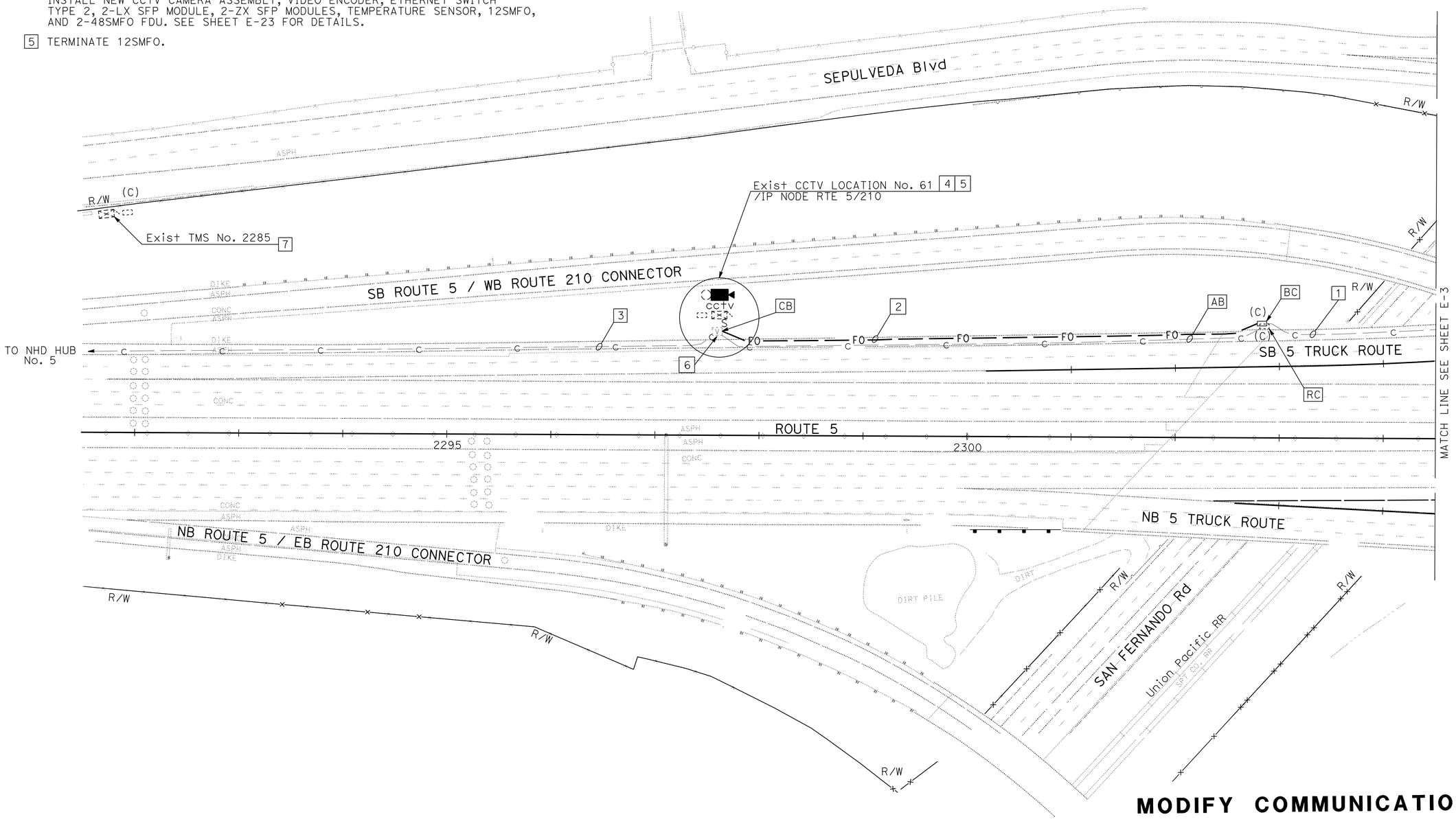

APPROVED FOR ELECTRICAL WORK ONLY

MODIFY COMMUNICATION SYSTEM

SCALE: 1" = 50'

E-2

STATE OF CALIFORNIA - DEPARTMENT OF TRANSPORTATION
Caltrans
OFFICE OF ITS

FUNCTIONAL SUPERVISOR: JACQUELINE C. TAN
CALCULATED-DESIGNED BY: PATRICK P. LUI
CHECKED BY: JACQUELINE C. TAN
REVISED BY
DATE REVISED

LAST REVISION 00-00-00
DATE PLOTTED => 05-AUG-2015
TIME PLOTTED => 10:23

Dist	COUNTY	ROUTE	POST MILES TOTAL PROJECT	SHEET No.	TOTAL SHEETS
07	LA	5	C43.9/C46.4	102	199

REGISTERED ELECTRICAL ENGINEER 6/8/15 DATE

PLANS APPROVAL DATE 6-29-15

REGISTERED PROFESSIONAL ENGINEER PATRICK P. LUI No. E17534 Exp. 06/30/17 ELECTRICAL STATE OF CALIFORNIA

THE STATE OF CALIFORNIA OR ITS OFFICERS OR AGENTS SHALL NOT BE RESPONSIBLE FOR THE ACCURACY OR COMPLETENESS OF SCANNED COPIES OF THIS PLAN SHEET.

NOTES:

1. FOR ACCURATE RIGHT OF WAY DATA, CONTACT RIGHT OF WAY ENGINEERING AT DISTRICT OFFICE.
2. FOR ABBREVIATIONS AND NOTES SEE SHEET E-1.

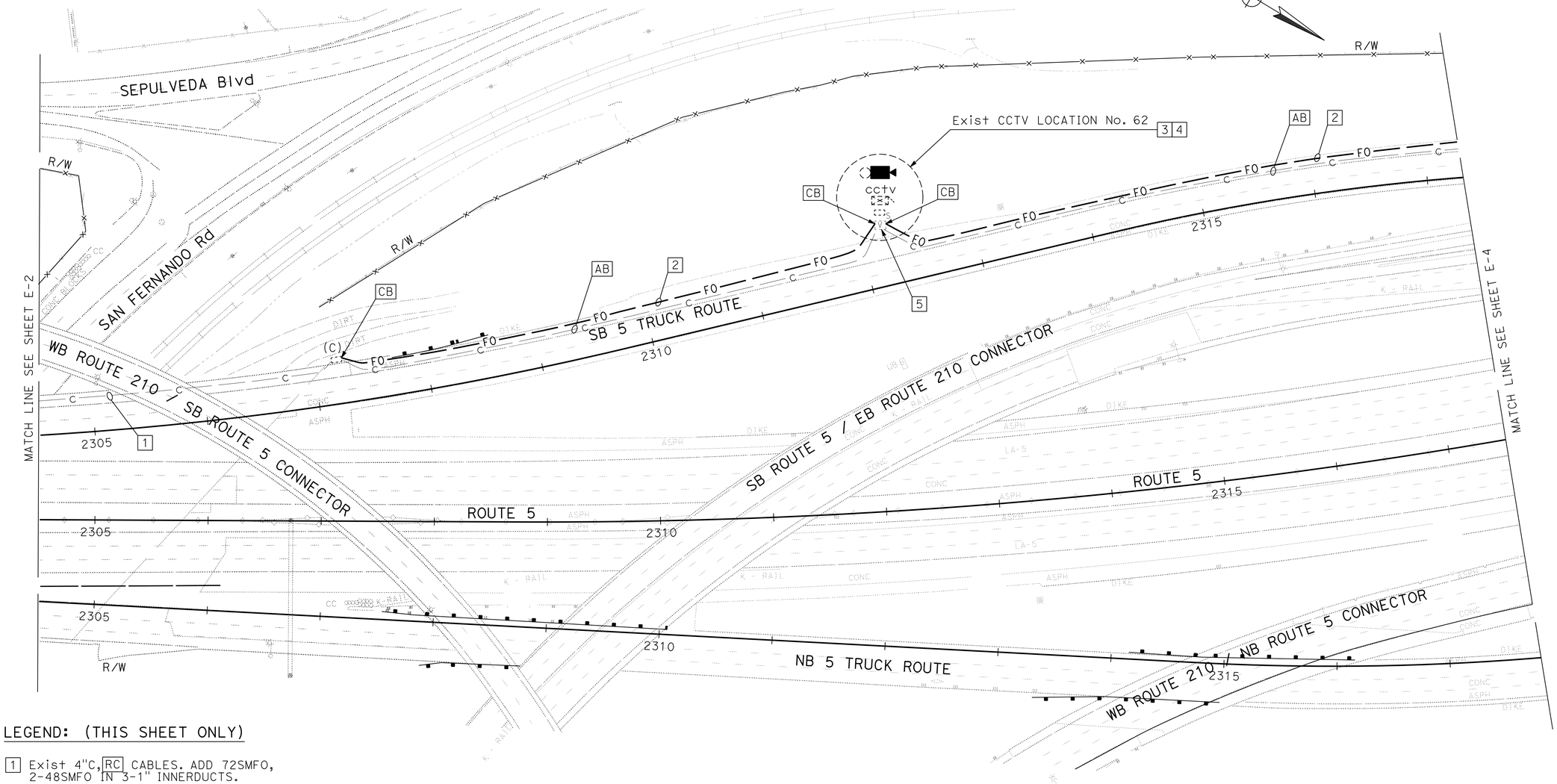

LEGEND: (THIS SHEET ONLY)

1 Exist 4"C, RC CABLES. ADD 72SMFO, 2-48SMFO IN 3-1" INNERDUCTS.

2 INSTALL 2-4"C, 72SMFO, 2-48SMFO IN 3-1" INNERDUCTS. SEE SHEET E-15 FOR DETAILS.

3 RC CCTV CAMERA ASSEMBLY, FOCM AND CCR. INSTALL NEW CCTV CAMERA, VIDEO ENCODER, ETHERNET SWITCH TYPE 1, 2-LX SFP MODULES, TEMPERATURE SENSOR, 12SMFO AND 12SMFO FDU. SEE SHEET E-23 FOR DETAILS.

4 TERMINATE 12SMFO.

5 INSTALL FIBER OPTIC SPLICE ENCLOSURE FOR 48SMFO VIDEO/DATA CABLE.

R/W R/W

MODIFY COMMUNICATION SYSTEM

SCALE: 1" = 50'

APPROVED FOR ELECTRICAL WORK ONLY

E-3

STATE OF CALIFORNIA - DEPARTMENT OF TRANSPORTATION
Caltrans
OFFICE OF ITS

FUNCTIONAL SUPERVISOR: JACQUELINE C. TAN
CALCULATED-DESIGNED BY: PATRICK P. LUI
CHECKED BY: JACQUELINE C. TAN
REVISED BY
DATE REVISED

LAST REVISION 00-00-00
DATE PLOTTED => 05-AUG-2015
TIME PLOTTED => 10:23

Dist	COUNTY	ROUTE	POST MILES TOTAL PROJECT	SHEET No.	TOTAL SHEETS
07	LA	5	C43.9/C46.4	103	199

REGISTERED ELECTRICAL ENGINEER 6/8/15 DATE

PLANS APPROVAL DATE 6-29-15

REGISTERED PROFESSIONAL ENGINEER PATRICK P. LUI No. E17534 Exp. 06/30/17 ELECTRICAL STATE OF CALIFORNIA

THE STATE OF CALIFORNIA OR ITS OFFICERS OR AGENTS SHALL NOT BE RESPONSIBLE FOR THE ACCURACY OR COMPLETENESS OF SCANNED COPIES OF THIS PLAN SHEET.

NOTES:

1. FOR ACCURATE RIGHT OF WAY DATA, CONTACT RIGHT OF WAY ENGINEERING AT DISTRICT OFFICE.
2. FOR ABBREVIATIONS AND NOTES SEE SHEET E-1.

LEGEND: (THIS SHEET ONLY)

1 EXIST 4"C, RC CABLES. ADD 72SMFO, 2-48SMFO IN 3-1" INNERDUCTS.

2 INSTALL 2-4"C, 72SMFO, 2-48SMFO IN 3-1" INNERDUCTS. SEE SHEET E-15 FOR DETAILS.

3 RC 4"C AND CABLES. INSTALL A SECTION OF 4" SPLIT FIBERGLASS CONDUIT FROM EXPOSED CONDUIT AT THE END OF BRIDGE RAILING TO THE PULL BOX. SEE SHEET E-17. INSTALL 72SMFO, 2-48SMFO IN 3-1" INNERDUCT. SEE SHEET E-15 FOR DETAILS.

4 INSTALL 2"C, 2-12SMFO IN 2-1" INNERDUCTS. SEE SHEET E-15 FOR DETAILS.

5 INSTALL 3"C BY JACKING, 2-12SMFO IN 2-1" INNERDUCTS. SEE SHEET E-16 FOR DETAILS.

6 INSTALL ETHERNET SWITCH TYPE 1, 2-LX SFP MODULES, TEMPERATURE SENSOR, 12SMFO AND 12SMFO FDU. SEE SHEET E-24 FOR DETAILS.

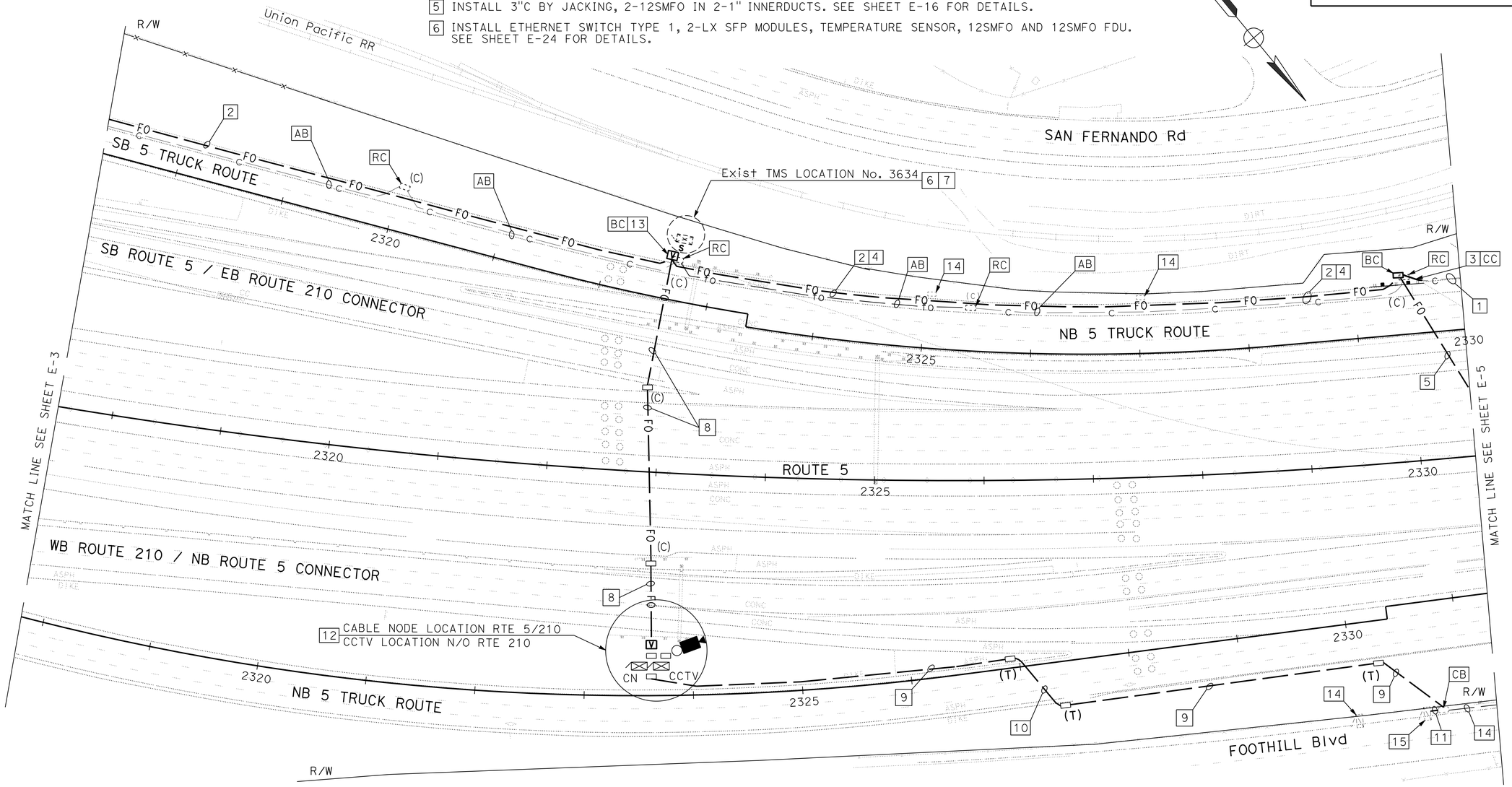

7 TERMINATE 12SMFO.

8 INSTALL 2-4"C BY JACKING, 2-72SMFO, 12SMFO IN 3-1" INNERDUCTS. SEE SHEET E-16 FOR DETAILS.

9 INSTALL 2"C, 4#4, 1#8 (G) FOR CABLE NODE AND CCTV CABINETS. SEE SHEET E-15 FOR DETAILS.

10 INSTALL 2"C BY JACKING, 4#4, 1#8 (G) FOR CABLE NODE AND CCTV CABINETS. SEE SHEET E-16 FOR DETAILS.

11 ADD 4#4, 1#8 (G) FOR CABLE NODE AND CCTV CABINETS.

12 SEE SHEET E-14 FOR INSTALLATION DETAILS.

13 INSTALL FIBER OPTIC SPLICE ENCLOSURE FOR 48SMFO VIDEO/DATA CABLE.

14 FOR INFORMATION ONLY.

15 EXISTING TYPE III-BF SERVICE EQUIPMENT ENCLOSURE.
ADD 30 A, 120 V, 1P, CB FOR CABLE NODE
ADD 30 A, 120 V, 1P, CB FOR CCTV
Ctid No. 07-53-005-R-044.299
ADDRESS: 17001 1/2 FOOTHILL Blvd

APPROVED FOR ELECTRICAL WORK ONLY

MODIFY COMMUNICATION SYSTEM

SCALE: 1" = 50'

E-4

STATE OF CALIFORNIA - DEPARTMENT OF TRANSPORTATION
Caltrans
OFFICE OF ITS

FUNCTIONAL SUPERVISOR: JACQUELINE C TAN
CALCULATED-DESIGNED BY: PATRICK P. LUI
CHECKED BY: JACQUELINE C. TAN
REVISED BY
DATE REVISED

LAST REVISION 00-00-00
DATE PLOTTED => 05-AUG-2015
TIME PLOTTED => 10:23

Dist	COUNTY	ROUTE	POST MILES TOTAL PROJECT	SHEET No.	TOTAL SHEETS
07	LA	5	C43.9/C46.4	104	199

REGISTERED ELECTRICAL ENGINEER 6/8/15 DATE

PLANS APPROVAL DATE 6-29-15

REGISTERED PROFESSIONAL ENGINEER PATRICK P. LUI No. E17534 Exp. 06/30/17 ELECTRICAL STATE OF CALIFORNIA

THE STATE OF CALIFORNIA OR ITS OFFICERS OR AGENTS SHALL NOT BE RESPONSIBLE FOR THE ACCURACY OR COMPLETENESS OF SCANNED COPIES OF THIS PLAN SHEET.

NOTES:

1. FOR ACCURATE RIGHT OF WAY DATA, CONTACT RIGHT OF WAY ENGINEERING AT DISTRICT OFFICE.
2. FOR ABBREVIATIONS AND NOTES SEE SHEET E-1.

LEGEND: (THIS SHEET ONLY)

1 RC 4"C AND CABLES. INSTALL A SECTION OF 4" SPLIT FIBERGLASS CONDUIT FROM EXPOSED CONUIT AT END OF BRIDGE RAILING TO THE PULL BOX. SEE SHEET E-18. INSTALL 72SMFO, 2-48SMFO IN 3-1" INNERDUCTS. SEE SHEET E-15 FOR DETAILS.

2 AB 4"C AND CABLES. INSTALL 2-4"C, 72SMFO, 2-48SMFO IN 3-1" INNERDUCTS. SEE SHEET E-15 FOR INSTALLATION DETAILS.

3 INSTALL 3"C BY JACKING, 2-12SMFO IN 2-1" INNERDUCTS. SEE SHEET E-16 FOR DETAILS.

4 INSTALL 3"C, 2-12SMFO IN 2-1" INNERDUCTS. SEE SHEET E-15 FOR DETAILS.

5 Exist 3"C, ADD 12SMFO IN 1" INNERDUCT.

6 INSTALL ETHERNET SWITCH TYPE 1, 2-LX SFP MODULES, TEMPERATURE SENSOR, 12SMFO AND 12SMFO FDU. SEE SHEET E-24 FOR DETAILS.

7 FOR INFORMATION ONLY.

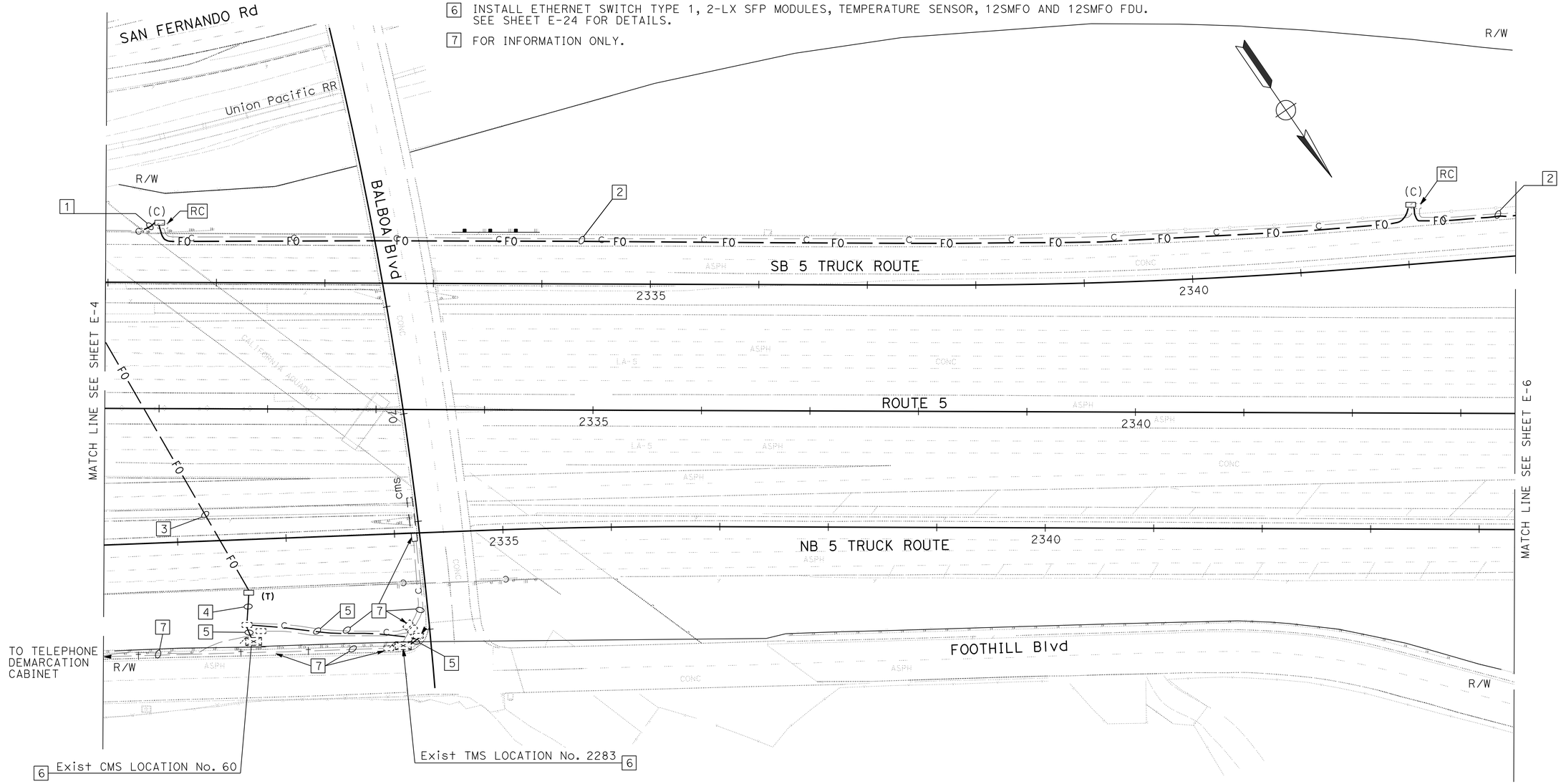

APPROVED FOR ELECTRICAL WORK ONLY

MODIFY COMMUNICATION SYSTEM

SCALE: 1" = 50'

E-5

STATE OF CALIFORNIA - DEPARTMENT OF TRANSPORTATION

Caltrans

OFFICE OF ITS

FUNCTIONAL SUPERVISOR: JACQUELINE C. TAN

CALCULATED-DESIGNED BY: PATRICK P. LUI

CHECKED BY: JACQUELINE C. TAN

REVISED BY

DATE REVISED

LAST REVISION 00-00-00

DATE PLOTTED => 05-AUG-2015

TIME PLOTTED => 10:23

Dist	COUNTY	ROUTE	POST MILES TOTAL PROJECT	SHEET No.	TOTAL SHEETS
07	LA	5	C43.9/C46.4	105	199

REGISTERED ELECTRICAL ENGINEER 6/8/15 DATE

6-29-15
PLANS APPROVAL DATE

REGISTERED PROFESSIONAL ENGINEER PATRICK P. LUI No. E17534 Exp. 06/30/17 ELECTRICAL STATE OF CALIFORNIA

THE STATE OF CALIFORNIA OR ITS OFFICERS OR AGENTS SHALL NOT BE RESPONSIBLE FOR THE ACCURACY OR COMPLETENESS OF SCANNED COPIES OF THIS PLAN SHEET.

NOTES:

1. FOR ACCURATE RIGHT OF WAY DATA, CONTACT RIGHT OF WAY ENGINEERING AT DISTRICT OFFICE.
2. FOR ABBREVIATIONS AND NOTES SEE SHEET E-1.

LEGEND: (THIS SHEET ONLY)

1 Exist 2"C, 2#4, 1#8 (G).
Exist 4"C, RC CABLES. ADD 72SMFO, 2-48SMFO, 12SMFO IN 4-1" INNERDUCTS.

2 Exist 2"C, 2#4, 1#8 (G).
AB 4"C.

3 INSTALL 2-4"C, 72SMFO, 2-48SMFO, 12SMFO IN 4-1" INNERDUCTS.
SEE SHEET E-15 FOR DETAILS.

4 Exist 2"C, RC CABLES. ADD 12SMFO IN 1" INNERDUCT.

5 FOR INFORMATION ONLY. Exist 2"C, 2#4, 1#8 (G).

6 RC CCTV ASSEMBLY, CCR AND FOTM. INSTALL CCTV ASSEMBLY, ETHERNET SWITCH TYPE 1, 2-LX SFP MODULES, TEMPERATURE SENSOR, VIDEO ENCODER, 12SMFO AND 12SMFO FDU.
SEE SHEET E-23 FOR DETAILS.

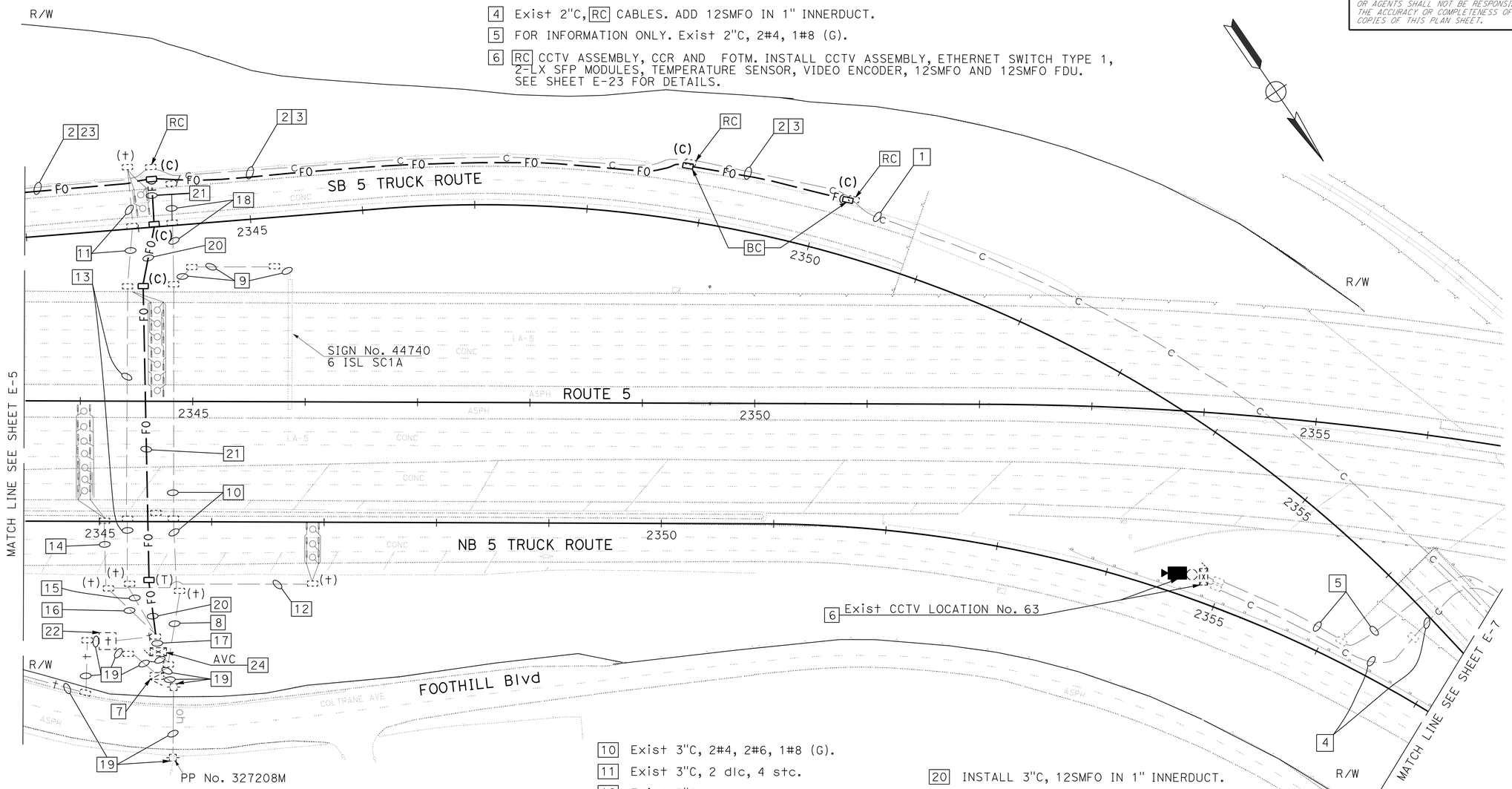

7 Exist 120/240 V MODIFIED TYPE III-CF, SINGLE METERED, SERVICE EQUIPMENT ENCLOSURE WITH:
1-200A, 2P, 240 V, CB-MAIN FOR THE FOLLOWING CIRCUITS:
TUNNEL LIGHTING;
1-20 A, 1P, 120 V, CB-NC PEC
4-30 A, 2P, 240 V, CB-TUNNEL LIGHTING No. 1, 2, 3, 10 (CONTINUOUS)
7-30 A, 2P, 240 V, CB-TUNNEL LIGHTING No. 4, 5, 6, 7, 8, 9, 11 (DAY CIRCUIT)
1-20 A, 120 V, 1P, CB-NO PEC
1-30 A, 120 V, 1P, CB-AVC
1-20 A, 120 V, 1P, CB-TDC
1-30 A, 240 V, 2P, CB-SIGN LIGHTING
1-30 A, 120 V, 1P, CB-CCTV
ADDRESS: 1700 3/4 FOOTHILL Blvd
Ctid No. 07-53-005-046.750

8 Exist 1"C, 2#4, 2#6, 1#8 (G).

9 Exist 2"C, 2#6, 1#8 (G).

10 Exist 3"C, 2#4, 2#6, 1#8 (G).

11 Exist 3"C, 2 dlc, 4 stc.

12 Exist 3"C, 3 dlc, 6 stc

13 Exist 3"C, 9 dlc, 18 stc.

14 Exist 3"C, 7 dlc, 14 stc.

15 Exist 4"C, 9 dlc, 18 stc.

16 Exist 4"C, 10 dlc, 20 stc.

17 Exist 2-3"C, 19 dlc, 38 stc, 6P22.
ADD 12SMFO IN 1" INNERDUCT.

18 Exist 2"C, 2#4, 1#8 (G).

19 FOR INFORMATION ONLY.

20 INSTALL 3"C, 12SMFO IN 1" INNERDUCT.

21 INSTALL 3"C BY JACKING, 12SMFO IN 1" INNERDUCT.

22 Exist TYPE C TELEPHONE DEMARCATION CABINET.

23 INSTALL 2-4"C, 72SMFO, 2-48SMFO IN 3-1" INNERDUCTS.
SEE SHEET E-15 FOR DETAILS.

24 INSTALL ETHERNET SWITCH TYPE 1, 2-LX SFP MODULES, TEMPERATURE SENSOR, 12SMFO AND 12SMFO FDU.
SEE SHEET E-24 FOR DETAILS.

APPROVED FOR ELECTRICAL WORK ONLY

MODIFY COMMUNICATION SYSTEM

SCALE: 1" = 50'

E-6

STATE OF CALIFORNIA - DEPARTMENT OF TRANSPORTATION
Caltrans® OFFICE OF ITS

FUNCTIONAL SUPERVISOR: JACQUELINE C. TAN
CALCULATED-DESIGNED BY: PATRICK P. LUI
CHECKED BY: JACQUELINE C. TAN
REVISED BY
DATE REVISED

LAST REVISION 00-00-00
DATE PLOTTED => 05-AUG-2015
TIME PLOTTED => 10:23

Dist	COUNTY	ROUTE	POST MILES TOTAL PROJECT	SHEET No.	TOTAL SHEETS
07	LA	5	C43.9/C46.4	106	199

REGISTERED ELECTRICAL ENGINEER 6/8/15 DATE

PLANS APPROVAL DATE 6-29-15

REGISTERED PROFESSIONAL ENGINEER PATRICK P. LUI No. E17534 Exp. 06/30/17 ELECTRICAL STATE OF CALIFORNIA

THE STATE OF CALIFORNIA OR ITS OFFICERS OR AGENTS SHALL NOT BE RESPONSIBLE FOR THE ACCURACY OR COMPLETENESS OF SCANNED COPIES OF THIS PLAN SHEET.

NOTES:

1. FOR ACCURATE RIGHT OF WAY DATA, CONTACT RIGHT OF WAY ENGINEERING AT DISTRICT OFFICE.
2. FOR ABBREVIATIONS AND NOTES SEE SHEET E-1.

LEGEND: (THIS SHEET ONLY)

1 Exist 4"C, RC CABLES. ADD 72SMFO, 2-48SMFO, 12SMFO IN 4-1" INNERDUCTS.

2 AB 4"C.

3 INSTALL 2-4"C, 72SMFO, 2-48SMFO IN 3-1" INNERDUCTS. SEE SHEET E-15 FOR DETAILS.

4 Exist 2"C, RC CABLES. INSTALL 12SMFO IN 1" INNERDUCT.

5 FOR INFORMATION ONLY.

6 RC SPLICE VAULT, FIBER OPTIC SPLICE ENCLOSURE AND CABLES.

7 INSTALL SPLICE VAULT AND FIBER OPTIC SPLICE ENCLOSURE FOR 48SMFO VIDEO/DATA CABLE.

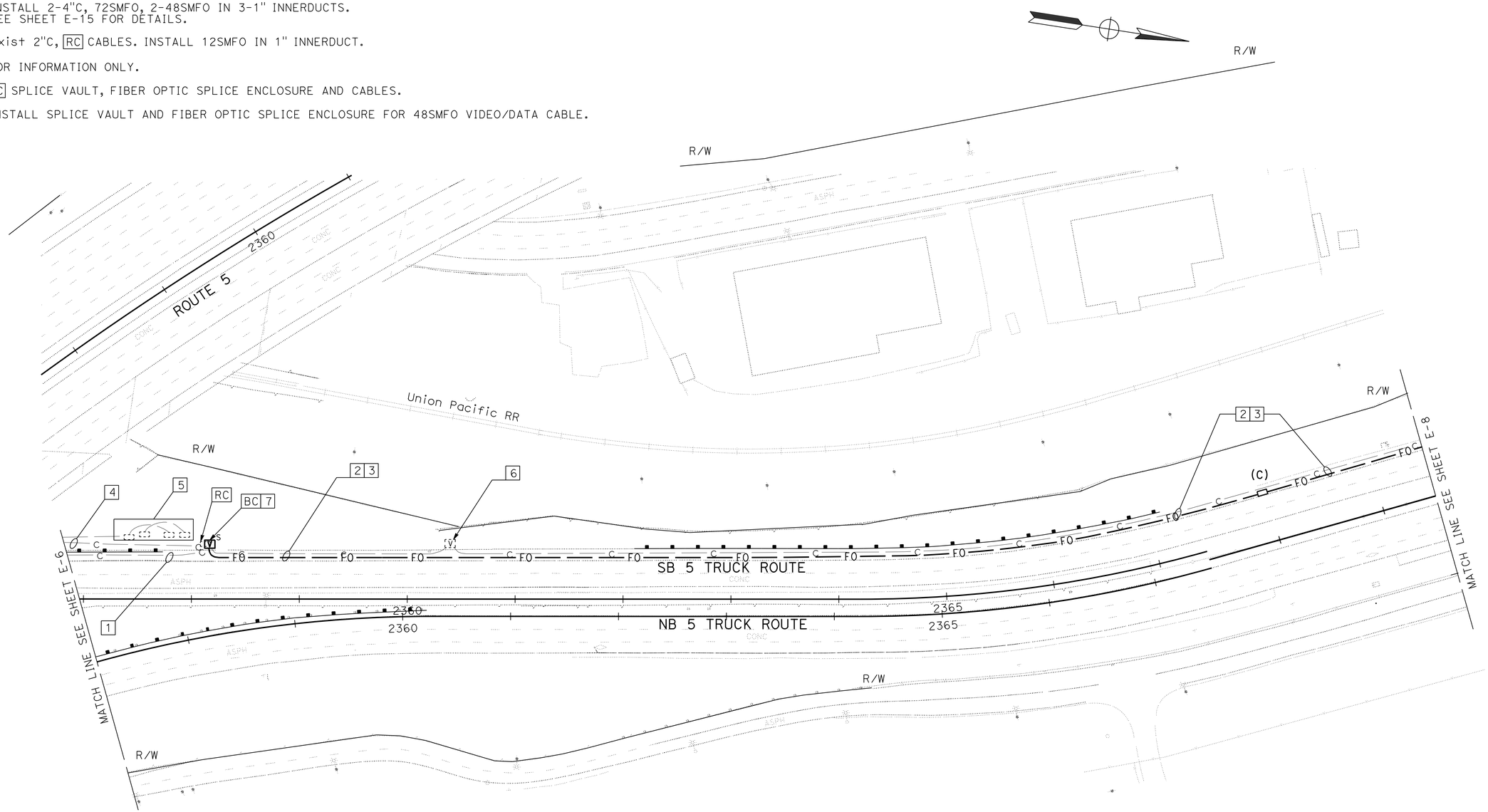

APPROVED FOR ELECTRICAL WORK ONLY

MODIFY COMMUNICATION SYSTEM

SCALE: 1" = 50'

E-7

STATE OF CALIFORNIA - DEPARTMENT OF TRANSPORTATION

Caltrans

OFFICE OF ITS

FUNCTIONAL SUPERVISOR: JACQUELINE C. TAN

CALCULATED-DESIGNED BY: PATRICK P. LUI

CHECKED BY: JACQUELINE C. TAN

REVISED BY | DATE REVISED

LAST REVISION 00-00-00 | DATE PLOTTED => 05-AUG-2015 | TIME PLOTTED => 10:23

Dist	COUNTY	ROUTE	POST MILES TOTAL PROJECT	SHEET No.	TOTAL SHEETS
07	LA	5	C43.9/C46.4	107	199

REGISTERED ELECTRICAL ENGINEER 6/8/15 DATE

6-29-15
PLANS APPROVAL DATE

REGISTERED PROFESSIONAL ENGINEER PATRICK P. LUI No. E17534 Exp. 06/30/17 ELECTRICAL STATE OF CALIFORNIA

THE STATE OF CALIFORNIA OR ITS OFFICERS OR AGENTS SHALL NOT BE RESPONSIBLE FOR THE ACCURACY OR COMPLETENESS OF SCANNED COPIES OF THIS PLAN SHEET.

NOTES:

1. FOR ACCURATE RIGHT OF WAY DATA, CONTACT RIGHT OF WAY ENGINEERING AT DISTRICT OFFICE.
2. FOR ABBREVIATIONS AND NOTES SEE SHEET E-1.

LEGEND: (THIS SHEET ONLY)

1 INSTALL 2-4"C, 72SMFO, 2-48SMFO IN 3-1" INNERDUCTS. SEE SHEET E-15 FOR DETAILS.

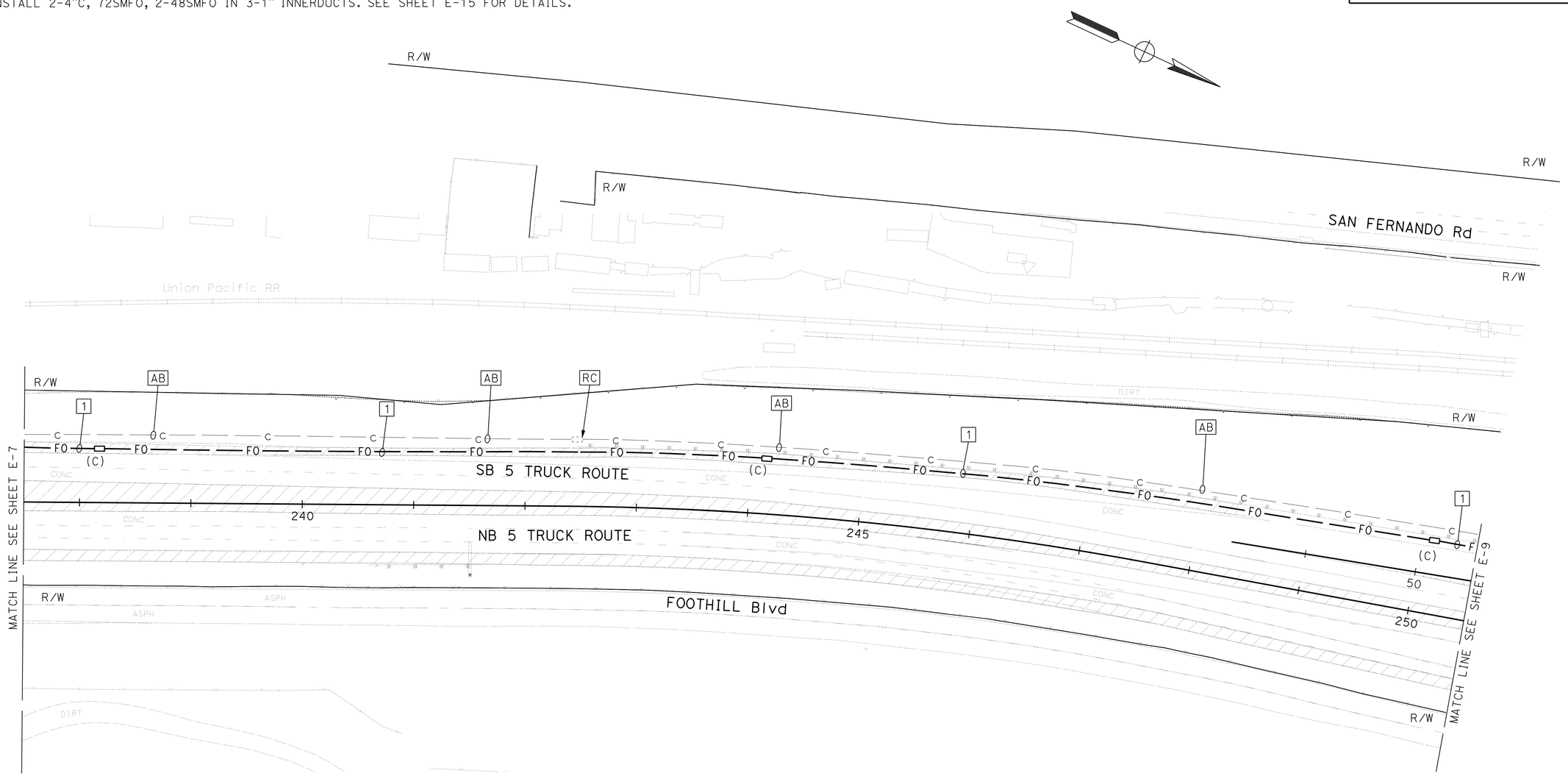

APPROVED FOR ELECTRICAL WORK ONLY

MODIFY COMMUNICATION SYSTEM

SCALE: 1" = 50'

E-8

STATE OF CALIFORNIA - DEPARTMENT OF TRANSPORTATION
Caltrans®
OFFICE OF ITS

FUNCTIONAL SUPERVISOR: JACQUELINE C. TAN
CALCULATED-DESIGNED BY: PATRICK P. LUI
CHECKED BY: JACQUELINE C. TAN
REVISED BY
DATE REVISED

LAST REVISION 00-00-00
DATE PLOTTED => 05-AUG-2015
TIME PLOTTED => 10:23

Dist	COUNTY	ROUTE	POST MILES TOTAL PROJECT	SHEET No.	TOTAL SHEETS
07	LA	5	C43.9/C46.4	108	199

REGISTERED ELECTRICAL ENGINEER 6/8/15 DATE

6-29-15
PLANS APPROVAL DATE

REGISTERED PROFESSIONAL ENGINEER PATRICK P. LUI No. E17534 Exp. 06/30/17 ELECTRICAL STATE OF CALIFORNIA

THE STATE OF CALIFORNIA OR ITS OFFICERS OR AGENTS SHALL NOT BE RESPONSIBLE FOR THE ACCURACY OR COMPLETENESS OF SCANNED COPIES OF THIS PLAN SHEET.

NOTES:

1. FOR ACCURATE RIGHT OF WAY DATA, CONTACT RIGHT OF WAY ENGINEERING AT DISTRICT OFFICE.
2. FOR ABBREVIATIONS AND NOTES SEE SHEET E-1.

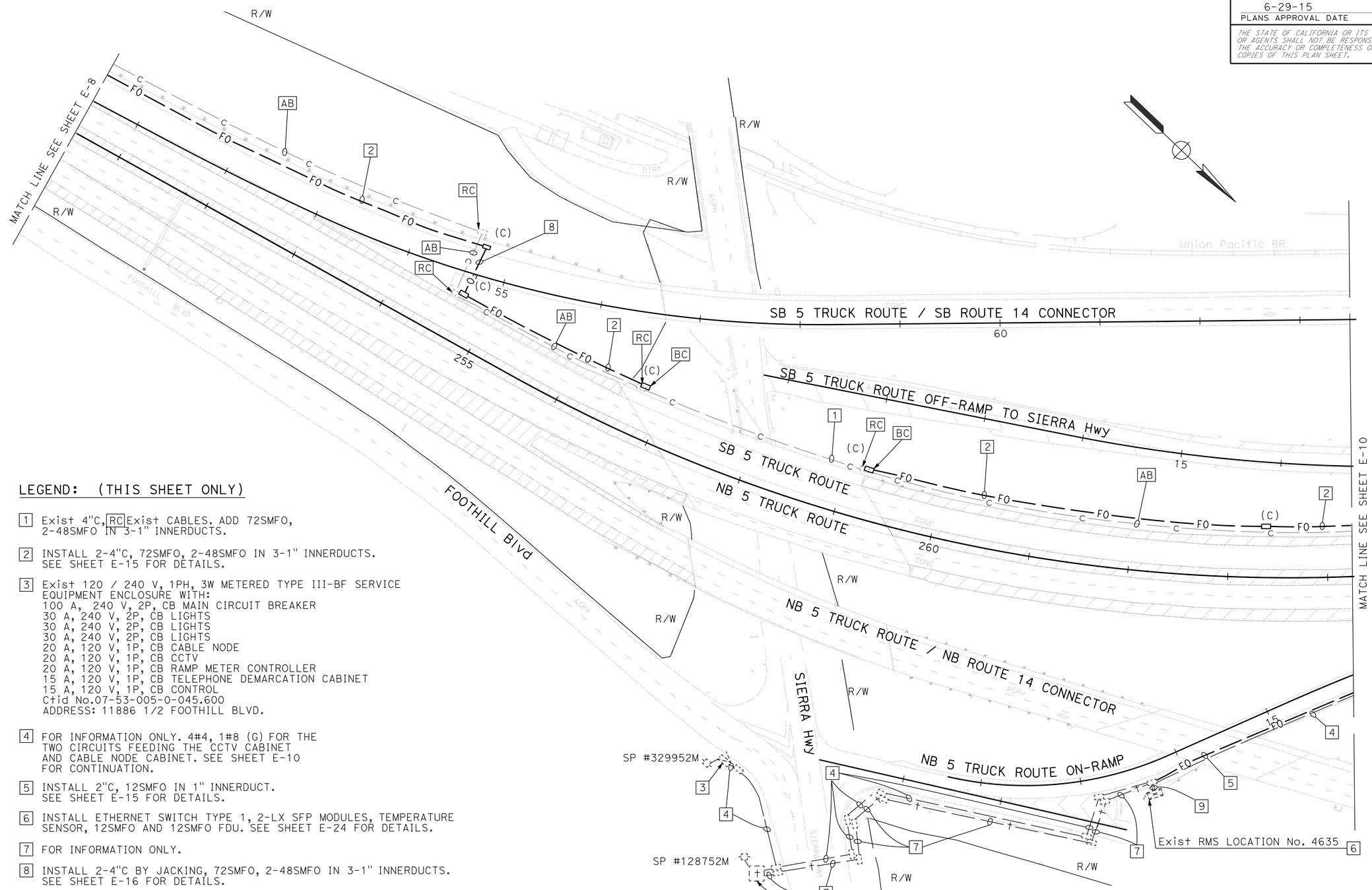

LEGEND: (THIS SHEET ONLY)

1. Exist 4"C, RC Exist CABLES. ADD 72SMFO, 2-48SMFO IN 3-1" INNERDUCTS.
2. INSTALL 2-4"C, 72SMFO, 2-48SMFO IN 3-1" INNERDUCTS. SEE SHEET E-15 FOR DETAILS.
3. Exist 120 / 240 V, 1PH, 3W METERED TYPE III-BF SERVICE EQUIPMENT ENCLOSURE WITH:
   100 A, 240 V, 2P, CB MAIN CIRCUIT BREAKER
   30 A, 240 V, 2P, CB LIGHTS
   30 A, 240 V, 2P, CB LIGHTS
   30 A, 240 V, 2P, CB LIGHTS
   20 A, 120 V, 1P, CB CABLE NODE
   20 A, 120 V, 1P, CB CCTV
   20 A, 120 V, 1P, CB RAMP METER CONTROLLER
   15 A, 120 V, 1P, CB TELEPHONE DEMARCATION CABINET
   15 A, 120 V, 1P, CB CONTROL
   Ctid No.07-53-005-0-045.600
   ADDRESS: 11886 1/2 FOOTHILL BLVD.
4. FOR INFORMATION ONLY. 4#4, 1#8 (G) FOR THE TWO CIRCUITS FEEDING THE CCTV CABINET AND CABLE NODE CABINET. SEE SHEET E-10 FOR CONTINUATION.
5. INSTALL 2"C, 12SMFO IN 1" INNERDUCT. SEE SHEET E-15 FOR DETAILS.
6. INSTALL ETHERNET SWITCH TYPE 1, 2-LX SFP MODULES, TEMPERATURE SENSOR, 12SMFO AND 12SMFO FDU. SEE SHEET E-24 FOR DETAILS.
7. FOR INFORMATION ONLY.
8. INSTALL 2-4"C BY JACKING, 72SMFO, 2-48SMFO IN 3-1" INNERDUCTS. SEE SHEET E-16 FOR DETAILS.
9. Exist 2-3"C, ADD 12SMFO IN 1" INNERDUCT.

APPROVED FOR ELECTRICAL WORK ONLY

MODIFY COMMUNICATION SYSTEM

SCALE: 1" = 50'

E-9

STATE OF CALIFORNIA - DEPARTMENT OF TRANSPORTATION
OFFICE OF ITS
FUNCTIONAL SUPERVISOR: JACQUELINE C. TAN
CALCULATED-DESIGNED BY: PATRICK P. LUI
CHECKED BY: JACQUELINE C. TAN
REVISED BY
DATE REVISED

LAST REVISION 00-00-00
DATE PLOTTED => 05-AUG-2015
TIME PLOTTED => 10:23

Dist	COUNTY	ROUTE	POST MILES TOTAL PROJECT	SHEET No.	TOTAL SHEETS
07	LA	5	C43.9/C46.4	109	199

REGISTERED ELECTRICAL ENGINEER DATE 6/8/15

PLANS APPROVAL DATE 6-29-15

REGISTERED PROFESSIONAL ENGINEER PATRICK P. LUI No. E17534 Exp. 06/30/17 ELECTRICAL STATE OF CALIFORNIA

THE STATE OF CALIFORNIA OR ITS OFFICERS OR AGENTS SHALL NOT BE RESPONSIBLE FOR THE ACCURACY OR COMPLETENESS OF SCANNED COPIES OF THIS PLAN SHEET.

NOTES:

1. FOR ACCURATE RIGHT OF WAY DATA, CONTACT RIGHT OF WAY ENGINEERING AT DISTRICT OFFICE.
2. FOR ABBREVIATIONS AND NOTES SEE SHEET E-1.

LEGEND: (THIS SHEET ONLY)

1. INSTALL 2-4"C, 72SMFO, 2-48SMFO IN 3-1" INNERDUCTS. SEE SHEET E-15 FOR DETAILS.
2. FOR INFORMATION ONLY. Exist 2", 4#4, 1#8 (G) FOR THE TWO CIRCUITS FEEDING THE CCTV CABINET AND CABLE NODE CABINET. SEE SHEET E-9 FOR CONTINUATION.
3. INSTALL 2-4"C, 2-72SMFO, 12SMFO IN 3-1" INNERDUCTS. SEE SHEET E-15 FOR DETAILS.
4. Exist 4"C, RC CABLES. INSTALL 72SMFO, 2-48SMFO IN 3-1" INNERDUCTS.
5. SEE DETAIL A THIS SHEET.
6. SEE DETAIL B THIS SHEET.

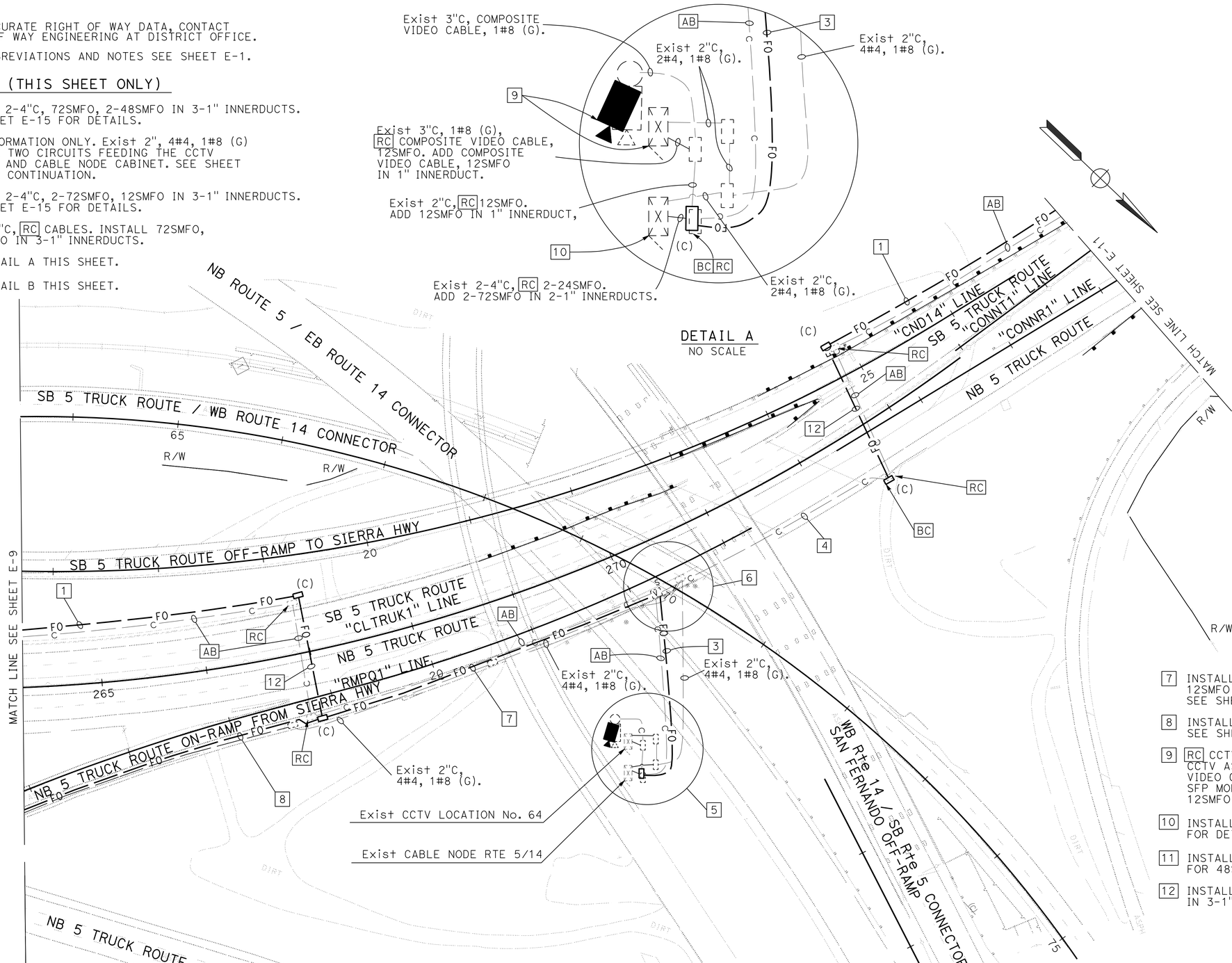

7. INSTALL 2-4"C, 72SMFO, 2-48SMFO, 12SMFO IN 4-1" INNERDUCTS. SEE SHEET E-15 FOR DETAILS.
8. INSTALL 2"C, 12SMFO IN 1" INNERDUCT. SEE SHEET E-15 FOR DETAILS.
9. RC CCTV ASSEMBLY, CCR AND FOTM. INSTALL CCTV ASSEMBLY, VIDEO ENCODER, COMPOSITE VIDEO CABLE, ETHERNET SWITCH TYPE 1, 2-LX SFP MODULES, TEMPERATURE SENSOR AND 12SMFO FDU, SEE SHEET E-21 FOR DETAILS.
10. INSTALL 2-72SMFO FDU, SEE SHEET E-24 FOR DETAILS.
11. INSTALL FIBER OPTIC SPLICE ENCLOSURE FOR 48SMFO VIDEO/DATA CABLE.
12. INSTALL 2-4"C BY JACKING, 72SMFO, 2-48SMFO IN 3-1" INNERDUCTS. SEE SHEET E-16 FOR DETAILS.

MODIFY COMMUNICATION SYSTEM

SCALE: 1" = 50'

APPROVED FOR ELECTRICAL WORK ONLY

FOR ABBREVIATIONS AND NOTES SEE SHEET E-1

E-10

STATE OF CALIFORNIA - DEPARTMENT OF TRANSPORTATION
Caltrans® OFFICE OF ITS

FUNCTIONAL SUPERVISOR: JACQUELINE C. TAN
CALCULATED-DESIGNED BY: PATRICK P. LUI
CHECKED BY: JACQUELINE C. TAN
REVISED BY / DATE REVISED

LAST REVISION 00-00-00 | DATE PLOTTED => 05-AUG-2015 | TIME PLOTTED => 10:23

Dist	COUNTY	ROUTE	POST MILES TOTAL PROJECT	SHEET No.	TOTAL SHEETS
07	LA	5	C43.9/C46.4	110	199

REGISTERED ELECTRICAL ENGINEER 6/8/15 DATE

6-29-15
PLANS APPROVAL DATE

REGISTERED PROFESSIONAL ENGINEER PATRICK P. LUI No. E17534 Exp. 06/30/17 ELECTRICAL STATE OF CALIFORNIA

THE STATE OF CALIFORNIA OR ITS OFFICERS OR AGENTS SHALL NOT BE RESPONSIBLE FOR THE ACCURACY OR COMPLETENESS OF SCANNED COPIES OF THIS PLAN SHEET.

NOTES:

1. FOR ACCURATE RIGHT OF WAY DATA, CONTACT RIGHT OF WAY ENGINEERING AT DISTRICT OFFICE.
2. FOR ABBREVIATIONS AND NOTES SEE SHEET E-1.

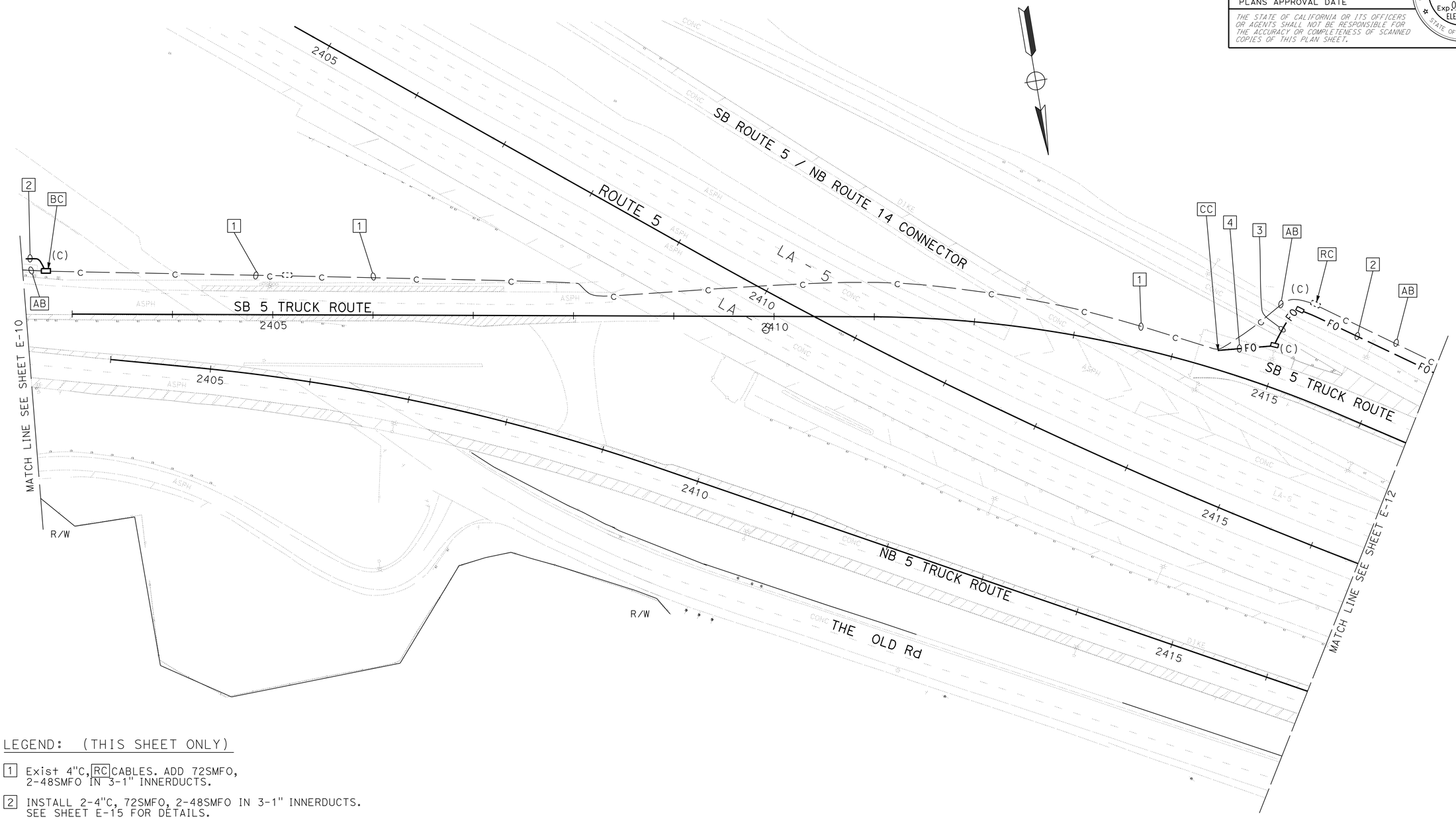

LEGEND: (THIS SHEET ONLY)

1. Exist 4"C, RC CABLES. ADD 72SMFO, 2-48SMFO IN 3-1" INNERDUCTS.
2. INSTALL 2-4"C, 72SMFO, 2-48SMFO IN 3-1" INNERDUCTS. SEE SHEET E-15 FOR DETAILS.
3. INSTALL 2-4"C BY JACKING, 72SMFO, 2-48SMFO IN 3-1" INNERDUCTS. SEE SHEET E-16 FOR DETAILS.
4. INSTALL 4"C, 72SMFO, 2-48SMFO IN 3-1" INNERDUCTS. SEE SHEET E-15 FOR DETAILS.

APPROVED FOR ELECTRICAL WORK ONLY

MODIFY COMMUNICATION SYSTEM

SCALE: 1" = 50'

E-11

REVISED BY	DATE REVISED
PATRICK P. LUI	JACQUELINE C. TAN
CALCULATED-DESIGNED BY	CHECKED BY
FUNCTIONAL SUPERVISOR	JACQUELINE C. TAN

STATE OF CALIFORNIA - DEPARTMENT OF TRANSPORTATION
Caltrans
OFFICE OF ITS

LAST REVISION 00-00-00 | DATE PLOTTED => 05-AUG-2015 | TIME PLOTTED => 10:23

Dist	COUNTY	ROUTE	POST MILES TOTAL PROJECT	SHEET No.	TOTAL SHEETS
07	LA	5	C43.9/C46.4	111	199

REGISTERED ELECTRICAL ENGINEER 6/8/15 DATE

6-29-15
PLANS APPROVAL DATE

REGISTERED PROFESSIONAL ENGINEER PATRICK P. LUI No. E17534 Exp. 06/30/17 ELECTRICAL STATE OF CALIFORNIA

THE STATE OF CALIFORNIA OR ITS OFFICERS OR AGENTS SHALL NOT BE RESPONSIBLE FOR THE ACCURACY OR COMPLETENESS OF SCANNED COPIES OF THIS PLAN SHEET.

NOTES:

1. FOR ACCURATE RIGHT OF WAY DATA, CONTACT RIGHT OF WAY ENGINEERING AT DISTRICT OFFICE.
2. FOR ABBREVIATIONS AND NOTES SEE SHEET E-1.

LEGEND: (THIS SHEET ONLY)

1 INSTALL 2-4"C, 72SMFO, 2-48SMFO AND 12SMFO IN 4-1" INNERDUCTS. SEE SHEET E-15 FOR DETAILS.

2 COIL 30 FEET AND CAP END OF 12SMFO CABLE FOR FUTURE USE.

3 INSTALL 2-4"C, 72SMFO, 2-48SMFO IN 3-1" INNERDUCTS. SEE SHEET E-15 FOR DETAILS.

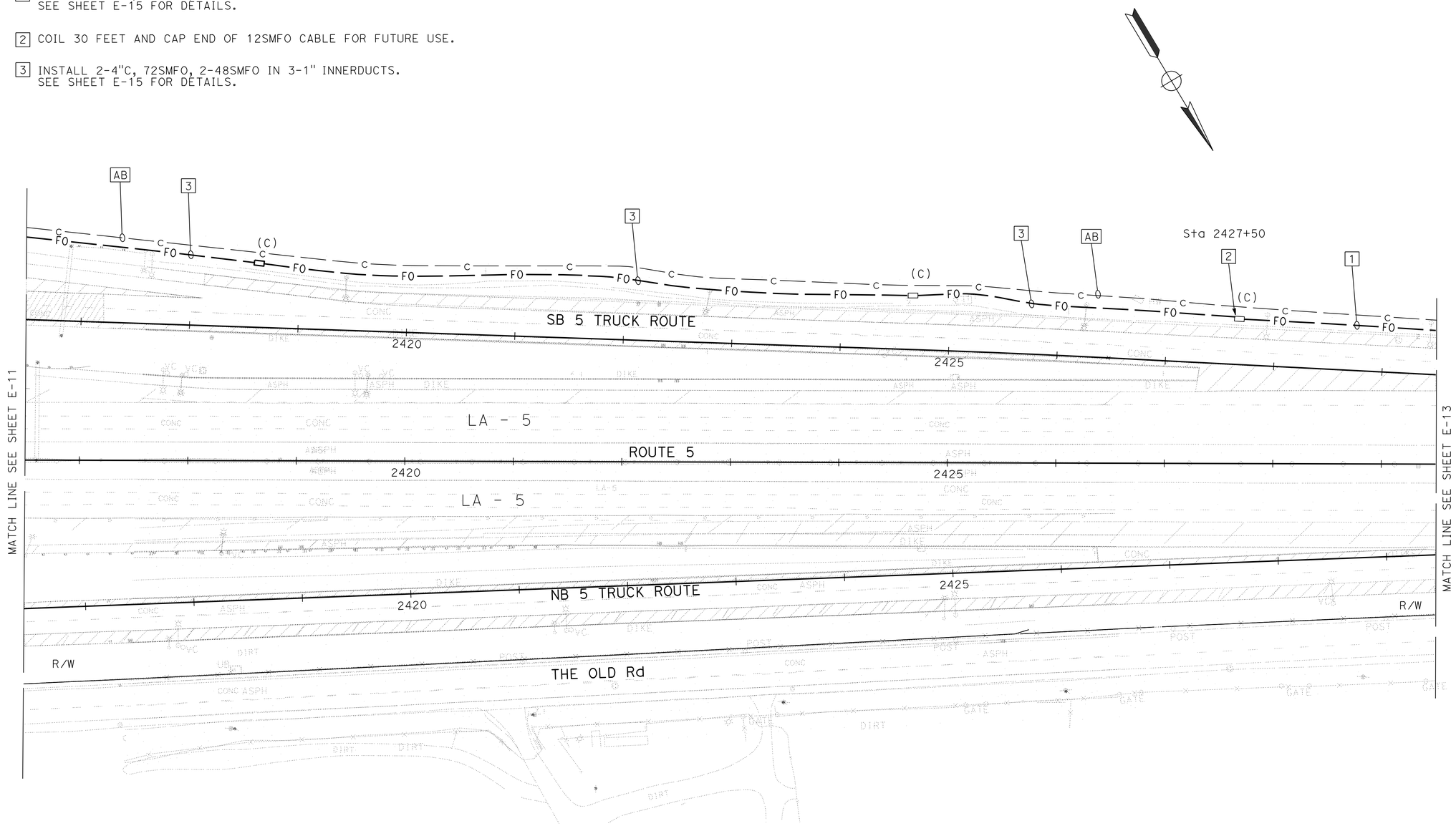

APPROVED FOR ELECTRICAL WORK ONLY

MODIFY COMMUNICATION SYSTEM

SCALE: 1" = 50'

E-12

STATE OF CALIFORNIA - DEPARTMENT OF TRANSPORTATION
Caltrans®
OFFICE OF ITS

FUNCTIONAL SUPERVISOR: JACQUELINE C. TAN
CALCULATED-DESIGNED BY: PATRICK P. LUI
CHECKED BY: JACQUELINE C. TAN
REVISED BY
DATE REVISED

LAST REVISION 00-00-00
DATE PLOTTED => 05-AUG-2015
TIME PLOTTED => 10:23

Dist	COUNTY	ROUTE	POST MILES TOTAL PROJECT	SHEET No.	TOTAL SHEETS
07	LA	5	C43.9/C46.4	112	199

REGISTERED ELECTRICAL ENGINEER 6/8/15 DATE

6-29-15
PLANS APPROVAL DATE

REGISTERED PROFESSIONAL ENGINEER PATRICK P. LUI No. E17534 Exp. 06/30/17 ELECTRICAL STATE OF CALIFORNIA

THE STATE OF CALIFORNIA OR ITS OFFICERS OR AGENTS SHALL NOT BE RESPONSIBLE FOR THE ACCURACY OR COMPLETENESS OF SCANNED COPIES OF THIS PLAN SHEET.

NOTES:

1. FOR ACCURATE RIGHT OF WAY DATA, CONTACT RIGHT OF WAY ENGINEERING AT DISTRICT OFFICE.
2. FOR ABBREVIATIONS AND NOTES SEE SHEET E-1.

LEGEND: (THIS SHEET ONLY)

1 RC CCTV CAMERA ASSEMBLY. INSTALL CCTV CAMERA ASSEMBLY ON Exist OVERHEAD SIGN.

2 Exist 2"C, 2#4, 1#8 (G).

3 INSTALL 2"C, 2#4, 1#8 (G).

4 INSTALL 2-4"C, 72SMFO, 2-48SMFO AND 12SMFO IN 4-1" INNERDUCTS. SEE SHEET E-15 FOR DETAILS.

5 INSTALL 2"C, 2-48SMFO, 12SMFO IN 3-1" INNERDUCTS.

6 INSTALL 2-4"C, 2-48 SMFO, 12SMFO IN 3-1" INNERDUCTS, COMPOSITE VIDEO CABLE, 1#8 (G).

7 Exist 3"C, RC COMPOSITE VIDEO CABLE, CCR AND FOCM. INSTALL NEW COMPOSITE VIDEO, 1#8 (G).

8 INSTALL MODEL 334-TV CONTROLLER CABINET, VIDEO ENCODER, ETHERNET SWITCH TYPE 2, 2-LX SFP MODULES, 2-ZX SFP MODULES, TEMPERATURE SENSOR, 12SMFO AND 2-48SMFO FDU. SEE SHEET E-23 FOR DETAILS.

9 RC SPLICE VAULT, PULL BOXES, CONTROLLER CABINET AND ITS CONTENTS. AB CONDUIT.

10 INSTALL FIBER OPTIC SPLICE ENCLOSURE FOR 48SMFO VIDEO/DATA CABLE. COIL 30 FEET AND CAP END OF 48SMFO SPARE AND 72SMFO TRUNK CABLES FOR FUTURE USE.

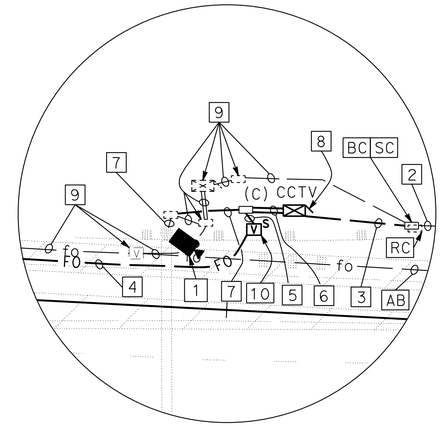

DETAIL A
NO SCALE

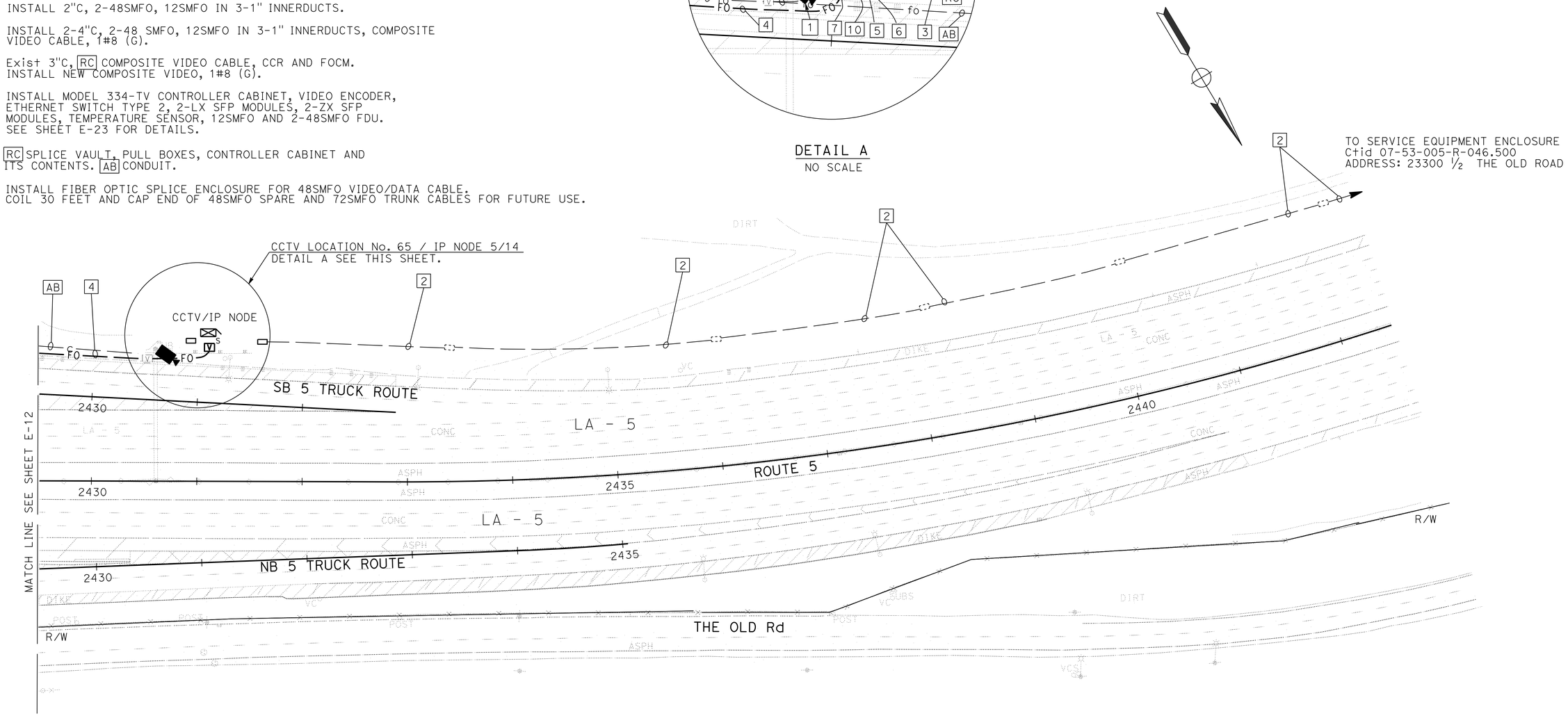

APPROVED FOR ELECTRICAL WORK ONLY
FOR ABBREVIATIONS AND NOTES SEE SHEET E-1

MODIFY COMMUNICATION SYSTEM

SCALE: 1" = 50'

E-13

STATE OF CALIFORNIA - DEPARTMENT OF TRANSPORTATION
Caltrans
OFFICE OF ITS

FUNCTIONAL SUPERVISOR: JACQUELINE C. TAN
CALCULATED-DESIGNED BY: PATRICK P. LUI
CHECKED BY: JACQUELINE C. TAN
REVISED BY
DATE REVISED

LAST REVISION 00-00-00
DATE PLOTTED => 05-AUG-2015
TIME PLOTTED => 10:23

Dist	COUNTY	ROUTE	POST MILES TOTAL PROJECT	SHEET No.	TOTAL SHEETS
07	LA	5	C43.9/C46.4	113	199

REGISTERED ELECTRICAL ENGINEER 6/8/15 DATE

6-29-15
PLANS APPROVAL DATE

REGISTERED PROFESSIONAL ENGINEER
PATRICK P. LUI
No. E17534
Exp. 06/30/17
ELECTRICAL
STATE OF CALIFORNIA

THE STATE OF CALIFORNIA OR ITS OFFICERS OR AGENTS SHALL NOT BE RESPONSIBLE FOR THE ACCURACY OR COMPLETENESS OF SCANNED COPIES OF THIS PLAN SHEET.

NOTE:

FOR ACCURATE RIGHT OF WAY DATA, CONTACT
RIGHT OF WAY ENGINEERING AT THE DISTRICT OFFICE.

LEGEND: (THIS SHEET ONLY)

1. FOR REFERENCE ONLY. SEE SHEET E-4 FOR DETAILS.
2. INSTALL 2-4"C, 2-72SMFO, 12SMFO IN 3-1" INNERDUCTS. SEE SHEET E-15 FOR DETAILS.
3. INSTALL 2-3"C, 2-72SMFO IN 2-1" INNERDUCTS.
4. INSTALL ETHERNET SWITCH TYPE 1, 2-LX SFP MODULES TEMPERATURE SENSOR, VIDEO ENCODER, 12SMFO AND 12SMFO FDU. SEE SHEET E-23 FOR DETAILS.
5. INSTALL 2"C, 2#4, 1#8 (G) FOR CABLE NODE CABINET. SEE SHEET E-21 AND E-15 FOR DETAILS.
6. INSTALL 2"C, 2#4, 1#8 (G) FOR CCTV CABINETS. SEE SHEET E-21 AND E-15 FOR DETAILS.
7. INSTALL 2-72SMFO FDU. TERMINATE EACH 72SMFO AT INDIVIDUAL FDU IN THE CABINET. SEE SHEET E-22 AND E-15 FOR DETAILS.
8. INSTALL CCTV 35 POLE AND CCTV CAMERA ASSEMBLY, 1#8 (G), COMPOSITE VIDEO CABLE.
9. INSTALL 2"C, 1#8 (G), COMPOSITE VIDEO CABLE.
10. INSTALL 2-3"C, 12SMFO IN 1" INNERDUCT.

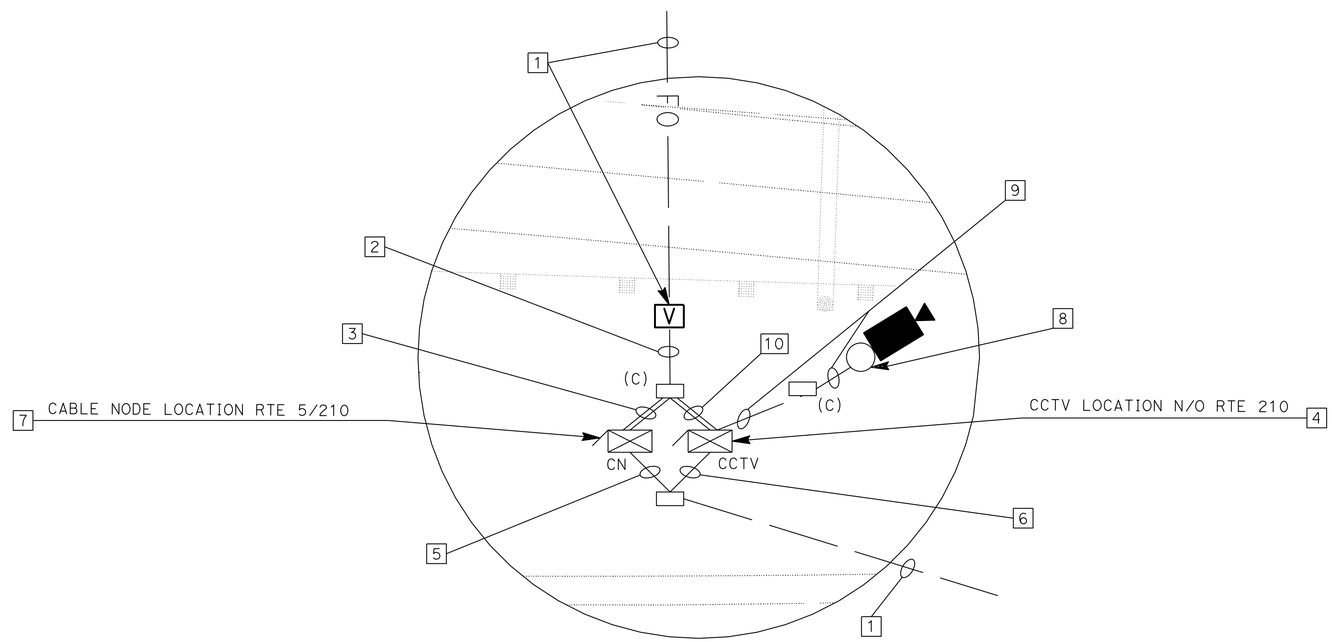

MODIFY COMMUNICATION SYSTEM

NO SCALE

E-14

STATE OF CALIFORNIA - DEPARTMENT OF TRANSPORTATION
Caltrans®
OFFICE OF ITS

FUNCTIONAL SUPERVISOR: JACQUELINE C. TAN
CALCULATED-DESIGNED BY: PATRICK P. LUI
CHECKED BY: JACQUELINE C. TAN
REVISED BY
DATE REVISED

LAST REVISION 00-00-00
DATE PLOTTED => 05-AUG-2015
TIME PLOTTED => 10:23

Dist	COUNTY	ROUTE	POST MILES TOTAL PROJECT	SHEET No.	TOTAL SHEETS
07	LA	5	C43.9/C46.4	114	199

REGISTERED ELECTRICAL ENGINEER DATE 6/8/15

PLANS APPROVAL DATE 6-29-15

REGISTERED PROFESSIONAL ENGINEER PATRICK P. LUI No. E17534 Exp. 06/30/17 ELECTRICAL STATE OF CALIFORNIA

THE STATE OF CALIFORNIA OR ITS OFFICERS OR AGENTS SHALL NOT BE RESPONSIBLE FOR THE ACCURACY OR COMPLETENESS OF SCANNED COPIES OF THIS PLAN SHEET.

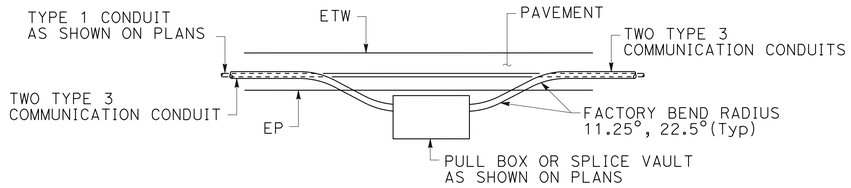

OUTSIDE SHOULDER PULL BOX INSTALLATION (TOP VIEW)

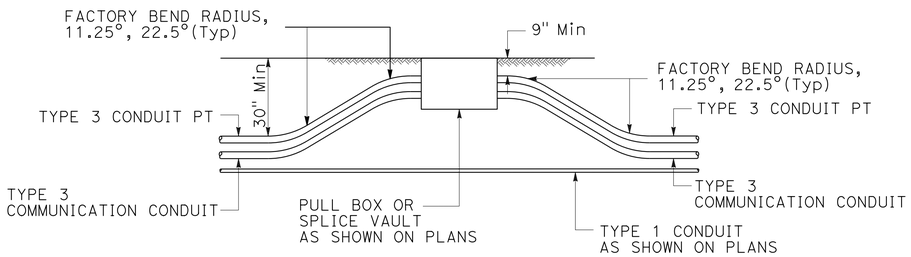

PULL BOX FOR SOIL AREA TRENCHING (ELEVATION)

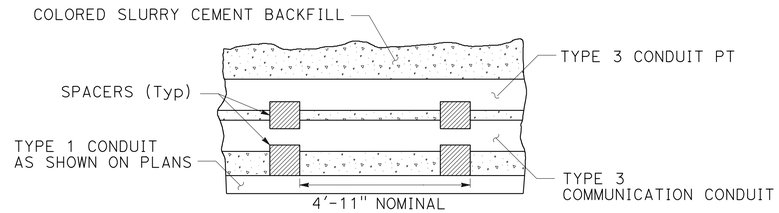

CONDUIT SPACER PLACEMENT (SIDE VIEW)

NOTES: (THIS SHEET ONLY)

1. REPLACE AC DIKE IN KIND, AS NECESSARY.
2. TRENCH TO BE CENTERED IN SHOULDER OR AS DIRECTED BY ENGINEER.
3. MAINTAIN 24" MINIMUM COVER AND BACKFILL TRENCH WITH SLURRY CEMENT BETWEEN PULL BOX AND PAVED SHOULDER.
4. WHERE TRENCH TRANSITIONS FROM ASPHALT TO UNPAVED AREA, EXCEPT AT PULL BOXES, CONDUIT TO GRADUALLY TRANSITION FROM 24" MINIMUM DEPTH TO 30" MINIMUM DEPTH WITHIN THE UNPAVED AREA.
5. 24" MINIMUM COVER MAY BE REDUCED TO 9" MINIMUM COVER IF NEEDED TO CLEAR A STORM DRAIN OR OTHER FIXED OBJECT AS DIRECTED BY THE ENGINEER.
6. PROVIDE MINIMUM 4'-11" CLEARANCE BETWEEN ANY CONDUIT AND EXISTING STRUCTURE FOUNDATIONS.
7. ANCHOR/RESTRAIN TOP CONDUIT FROM FLOATING DURING SLURRY CEMENT BACKFILL.
8. CONDUITS MUST BE INSTALLED IN NEW ASPHALT PAVEMENT AFTER AGGREGATE BASE IS PLACED AND COMPACTED. CONDUIT INSTALLATION MUST PRECEDE ROADWAY PAVING.
9. FOR ABBREVIATIONS AND NOTES SEE SHEET E-1.

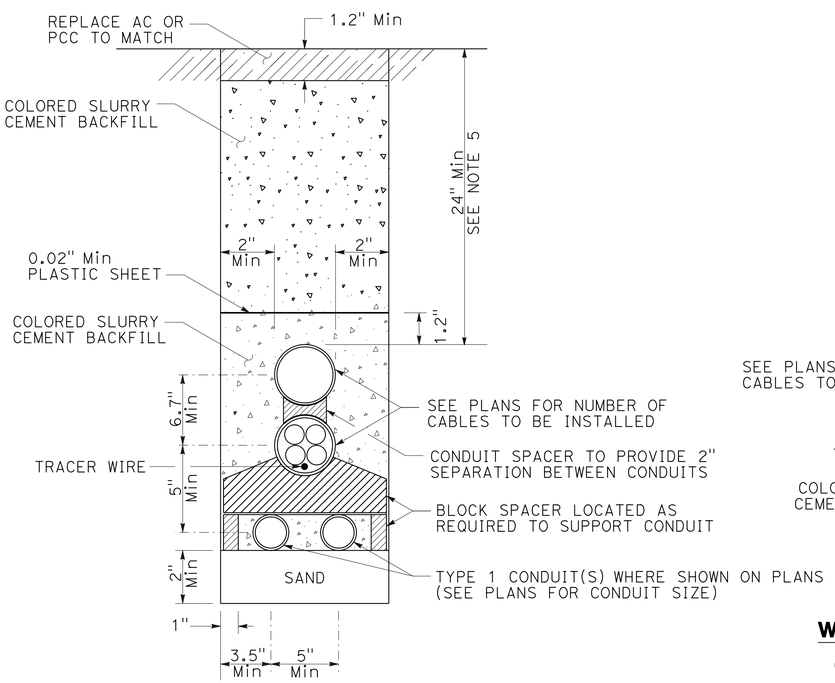

TRENCH IN PAVEMENT (CONCRETE OR ASPHALT) WITH TYPE 3 COMMUNICATION CONDUIT(S) AND TYPE 1 CONDUIT(S)

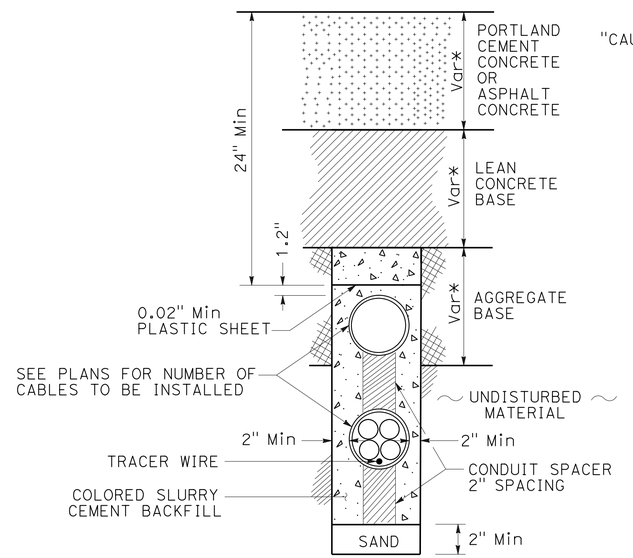

NEW PAVEMENT (PCC or ASPHALT) WITH TYPE 3 COMMUNICATION CONDUIT(S)

(* PAVEMENT THICKNESS, SEE TYPICAL CROSS SECTION PLANS)

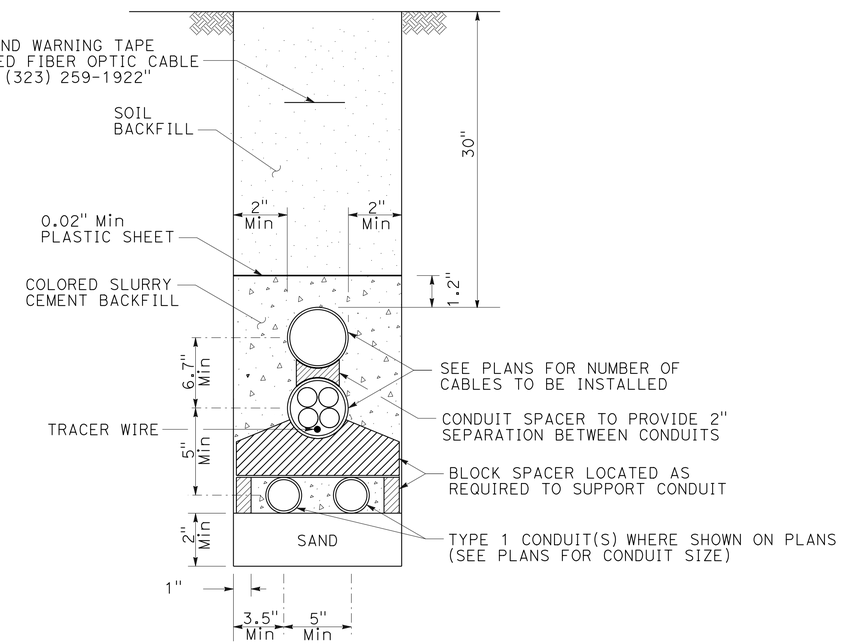

TRENCH IN SOIL WITH TYPE 3 COMMUNICATION CONDUIT(S) AND TYPE 1 CONDUIT(S)

MODIFY COMMUNICATION SYSTEM

NO SCALE

(TYPICAL COMMUNICATION CONDUIT INSTALLATION DETAILS)

E-15

STATE OF CALIFORNIA - DEPARTMENT OF TRANSPORTATION
Caltrans
OFFICE OF ITS

FUNCTIONAL SUPERVISOR: JACQUELINE C. TAN
CALCULATED-DESIGNED BY: PATRICK P. LUI
CHECKED BY: JACQUELINE C. TAN
REVISED BY
DATE REVISED

LAST REVISION 00-00-00
DATE PLOTTED => 05-AUG-2015
TIME PLOTTED => 10:23

Dist	COUNTY	ROUTE	POST MILES TOTAL PROJECT	SHEET No.	TOTAL SHEETS
07	LA	5	C43.9/C46.4	115	199

REGISTERED ELECTRICAL ENGINEER 6/8/15 DATE

PLANS APPROVAL DATE 6-29-15

REGISTERED PROFESSIONAL ENGINEER PATRICK P. LUI No. E17534 Exp. 06/30/17 ELECTRICAL STATE OF CALIFORNIA

THE STATE OF CALIFORNIA OR ITS OFFICERS OR AGENTS SHALL NOT BE RESPONSIBLE FOR THE ACCURACY OR COMPLETENESS OF SCANNED COPIES OF THIS PLAN SHEET.

NOTES: (THIS SHEET ONLY)

1. JACKED COMMUNICATION CONDUITS SHALL BE 30" MINIMUM BELOW FINISHED GRADE.
2. PLACE PULL BOXES OR SPLICE VAULTS AS SHOWN PER PLANS.
3. BENDS MUST BE FACTORY BENDS.
4. FOR ABBREVIATIONS AND NOTES SEE SHEET E-1.

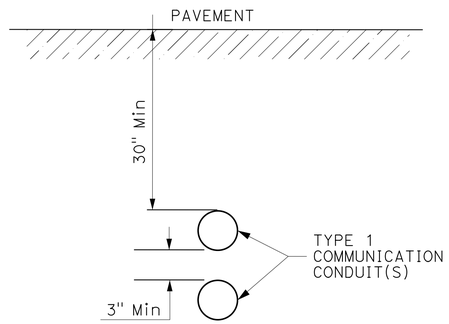

SECTION A-A

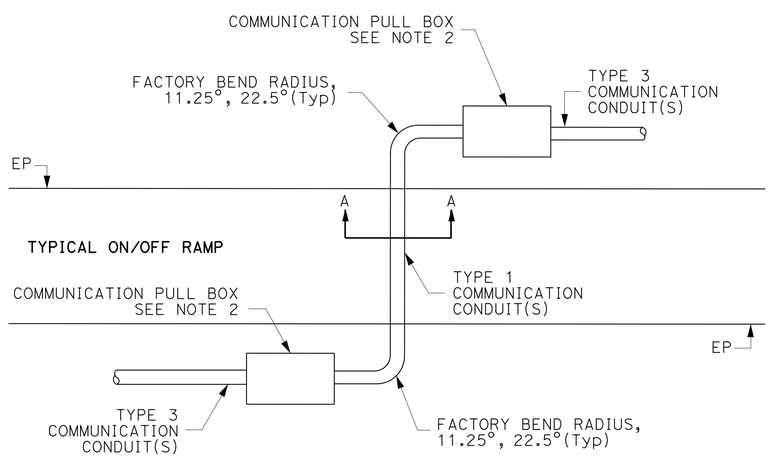

TYPICAL ON/OFF RAMP CROSSING

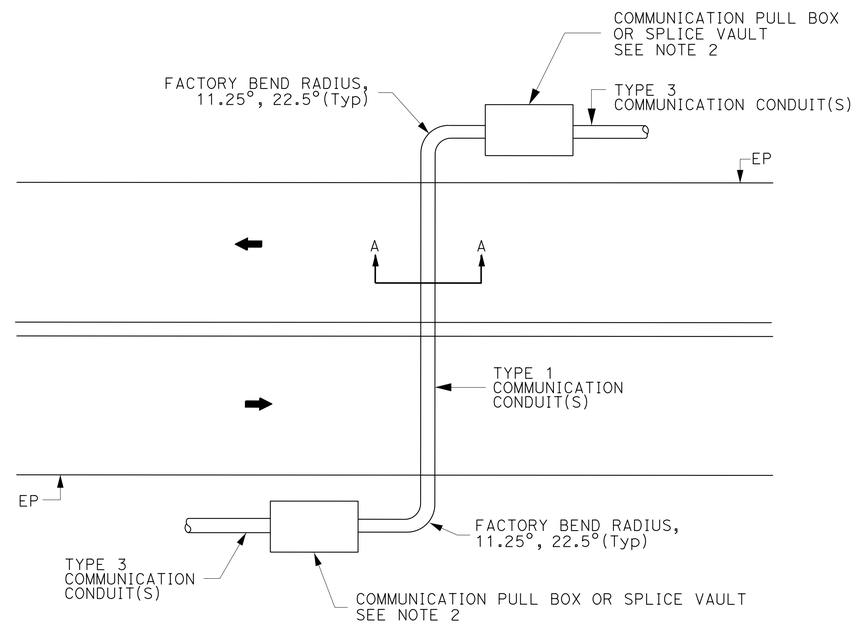

TYPICAL MAINLINE CROSSING (4 OR MORE LANES)

(JACKED CONDUIT DETAILS)

MODIFY COMMUNICATION SYSTEM

NO SCALE

E-16

STATE OF CALIFORNIA - DEPARTMENT OF TRANSPORTATION
Caltrans
OFFICE OF ITS

FUNCTIONAL SUPERVISOR: JACQUELINE C. TAN
CALCULATED-DESIGNED BY: PATRICK P. LUI
CHECKED BY: JACQUELINE C. TAN
REVISED BY
DATE REVISED

LAST REVISION 00-00-00
DATE PLOTTED => 05-AUG-2015
TIME PLOTTED => 10:23

Dist	COUNTY	ROUTE	POST MILES TOTAL PROJECT	SHEET No.	TOTAL SHEETS
07	LA	5	C43.9/C46.4	116	199

REGISTERED ELECTRICAL ENGINEER DATE 6/8/15

PLANS APPROVAL DATE 6-29-15

REGISTERED PROFESSIONAL ENGINEER PATRICK P. LUI No. E17534 Exp. 06/30/17 ELECTRICAL STATE OF CALIFORNIA

THE STATE OF CALIFORNIA OR ITS OFFICERS OR AGENTS SHALL NOT BE RESPONSIBLE FOR THE ACCURACY OR COMPLETENESS OF SCANNED COPIES OF THIS PLAN SHEET.

LEGEND: (SHEETS E-17 AND E-18)

1 RC Exist CONDUIT, Exist INNERDUCTS TO REMAIN, INSTALL 4" COMMUNICATION CONDUIT (BRIDGE).

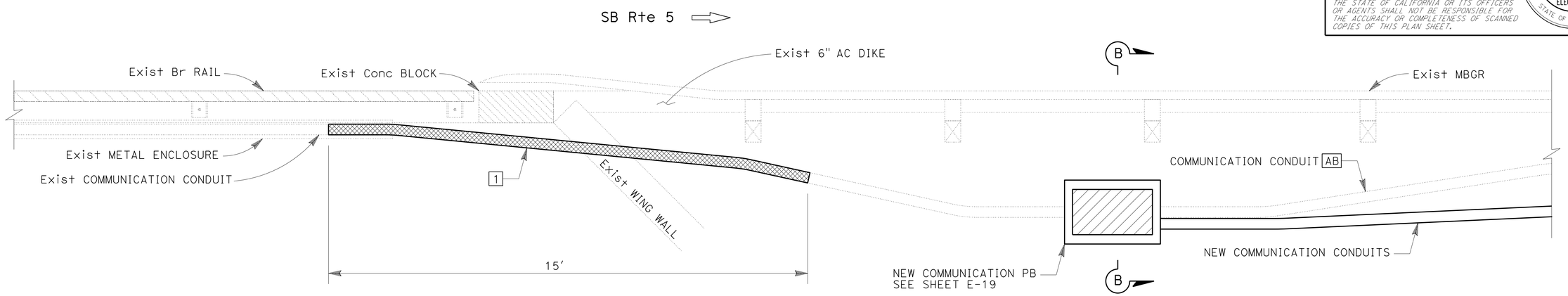

PLAN VIEW

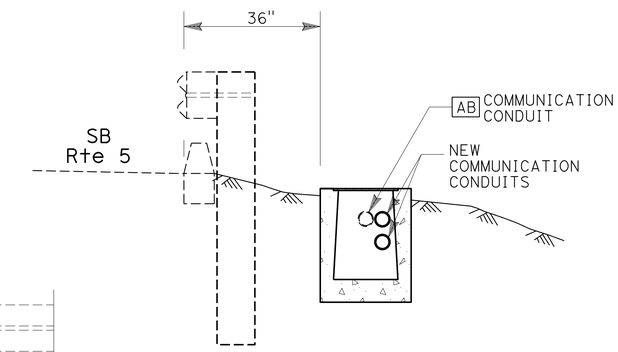

SECTION B-B

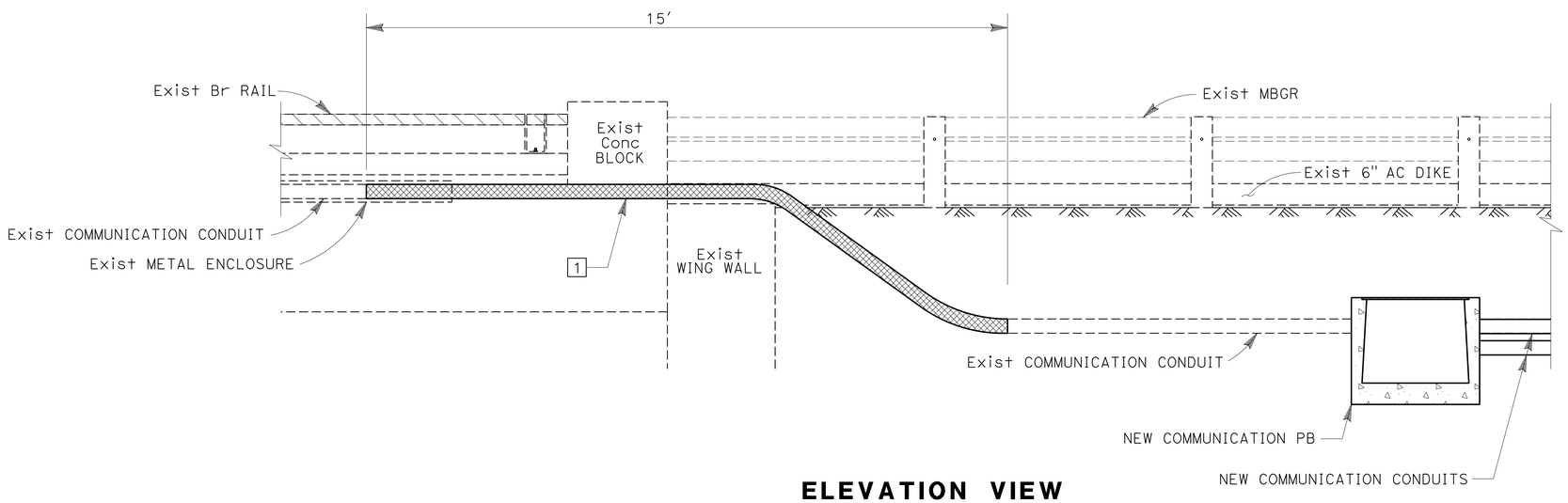

ELEVATION VIEW

COMMUNICATION CONDUIT BRIDGE DETAILS - SOUTH END (LA AQUADUCT, PM R44.41)

MODIFY COMMUNICATION SYSTEM

NO SCALE

E-17

STATE OF CALIFORNIA - DEPARTMENT OF TRANSPORTATION
Caltrans
OFFICE OF ITS

FUNCTIONAL SUPERVISOR: JACQUELINE C. TAN

CALCULATED-DESIGNED BY: PATRICK P. LUI
CHECKED BY: JACQUELINE C. TAN

REVISED BY
DATE REVISED

LAST REVISION 00-00-00
DATE PLOTTED => 05-AUG-2015
TIME PLOTTED => 10:23

Dist	COUNTY	ROUTE	POST MILES TOTAL PROJECT	SHEET No.	TOTAL SHEETS
07	LA	5	C43.9/C46.4	117	199

REGISTERED ELECTRICAL ENGINEER 6/8/15 DATE

6-29-15
PLANS APPROVAL DATE

REGISTERED PROFESSIONAL ENGINEER PATRICK P. LUI No. E17534 Exp. 06/30/17 ELECTRICAL STATE OF CALIFORNIA

THE STATE OF CALIFORNIA OR ITS OFFICERS OR AGENTS SHALL NOT BE RESPONSIBLE FOR THE ACCURACY OR COMPLETENESS OF SCANNED COPIES OF THIS PLAN SHEET.

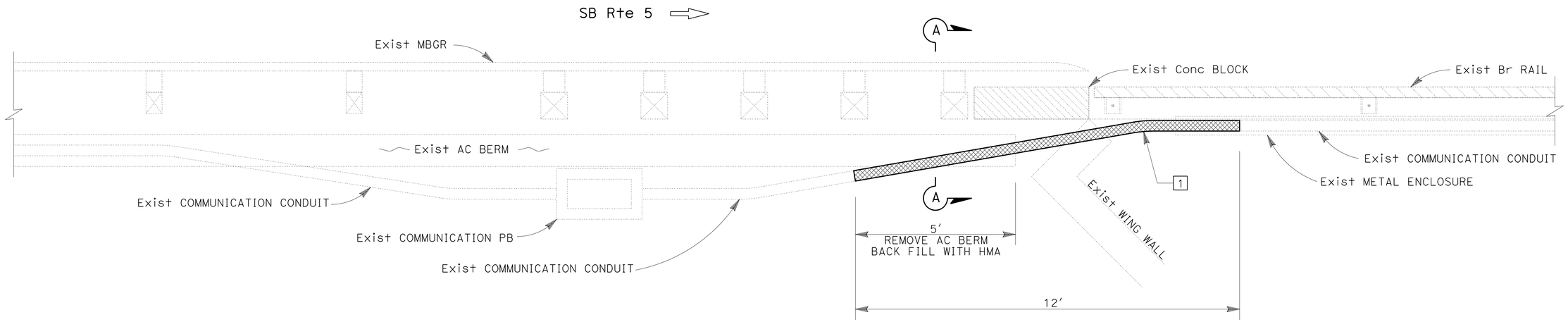

PLAN VIEW

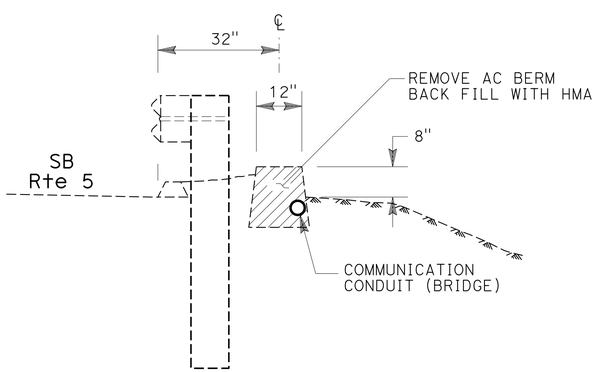

SECTION A-A

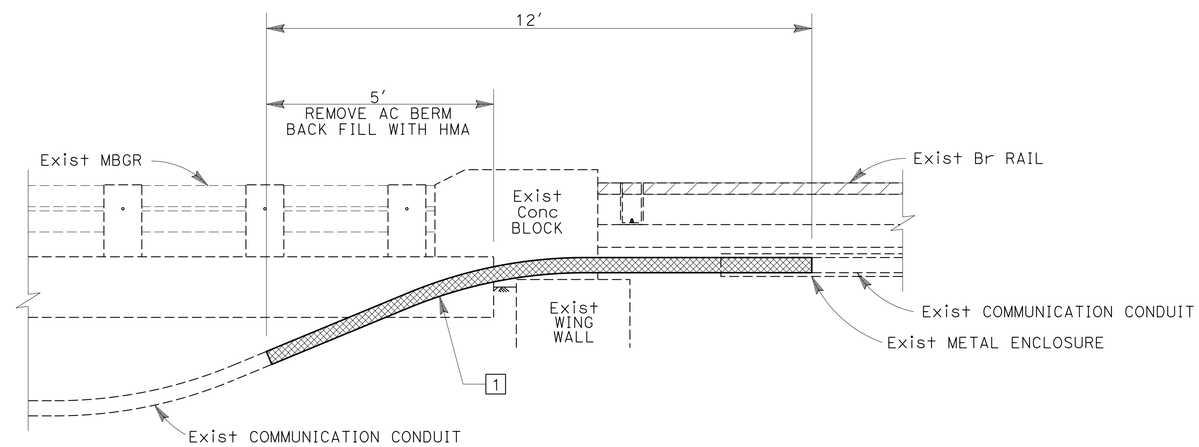

ELEVATION VIEW

COMMUNICATION CONDUIT BRIDGE DETAILS - NORTH END
(LA AQUADUCT, PM R44.41)

MODIFY COMMUNICATION SYSTEM

NO SCALE

E-18

REVISED BY	DATE REVISED

PATRICK P. LUI — JACQUELINE C. TAN

CALCULATED-DESIGNED BY — CHECKED BY

FUNCTIONAL SUPERVISOR: JACQUELINE C. TAN

STATE OF CALIFORNIA - DEPARTMENT OF TRANSPORTATION
Caltrans® OFFICE OF ITS

LAST REVISION 00-00-00 — DATE PLOTTED => 05-AUG-2015 — TIME PLOTTED => 10:23

Dist	COUNTY	ROUTE	POST MILES TOTAL PROJECT	SHEET No.	TOTAL SHEETS
07	LA	5	C43.9/C46.4	118	199

REGISTERED ELECTRICAL ENGINEER 6/8/15 DATE

PLANS APPROVAL DATE 6-29-15

REGISTERED PROFESSIONAL ENGINEER PATRICK P. LUI No. E17534 Exp. 06/30/17 ELECTRICAL STATE OF CALIFORNIA

THE STATE OF CALIFORNIA OR ITS OFFICERS OR AGENTS SHALL NOT BE RESPONSIBLE FOR THE ACCURACY OR COMPLETENESS OF SCANNED COPIES OF THIS PLAN SHEET.

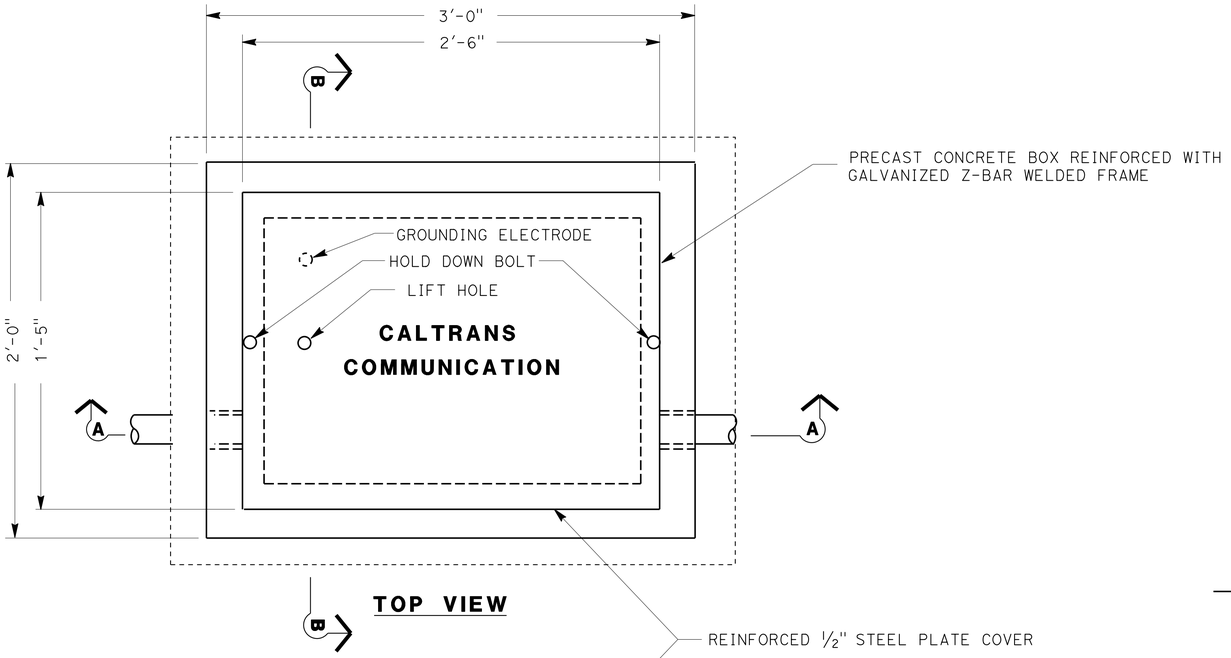

TOP VIEW

LEGEND: (THIS SHEET ONLY)

1 8# COPPER WIRE ATTACHED TO GROUNDING PROVISION ON COMMUNICATION PULL BOX WITH TERMINAL LUG

NOTES: (THIS SHEET ONLY)

1. FOR DETAILS NOT SHOWN SEE STD PLAN RSP ES-8B.
2. CONDUITS SHOWN ARE FOR EXAMPLE ONLY. ADDITIONAL CONDUITS MAY BE REQUIRED AS SHOWN ON THE PLAN SHEETS.
3. SEE SPECIAL PROVISIONS REGARDING HOLDDOWN BOLTS FOR TRAFFIC RATE COVERS.

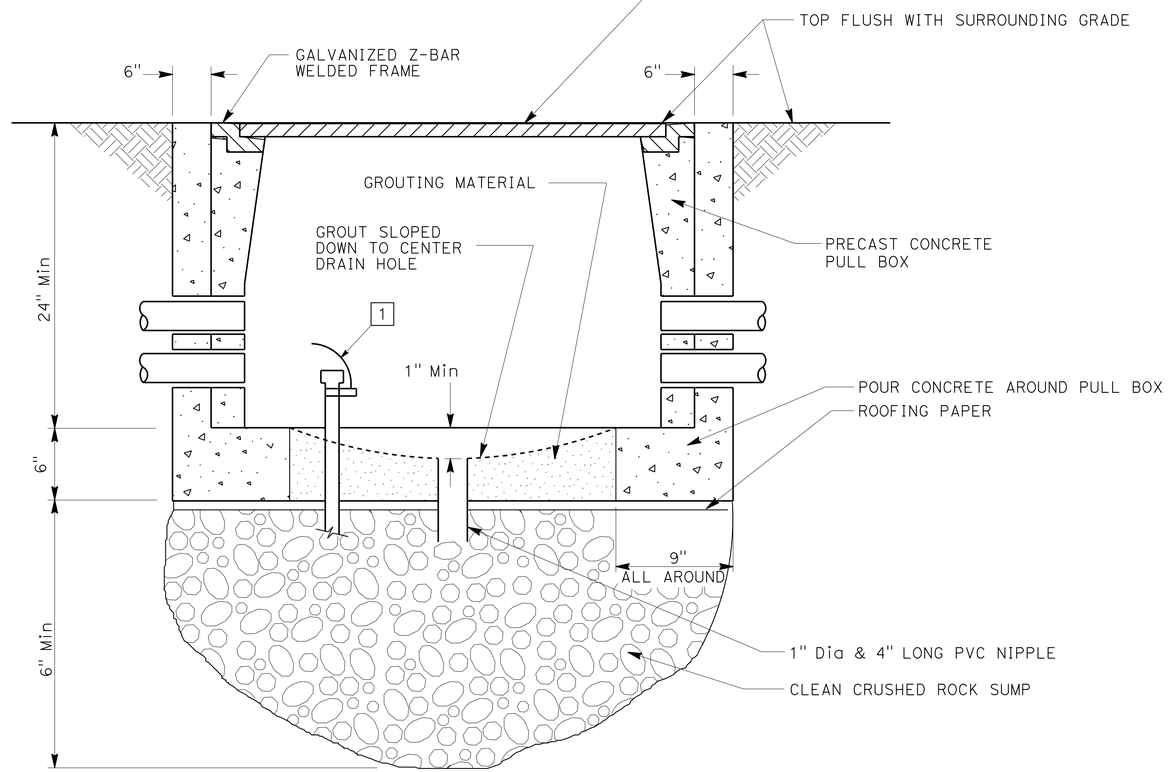

SECTION A-A

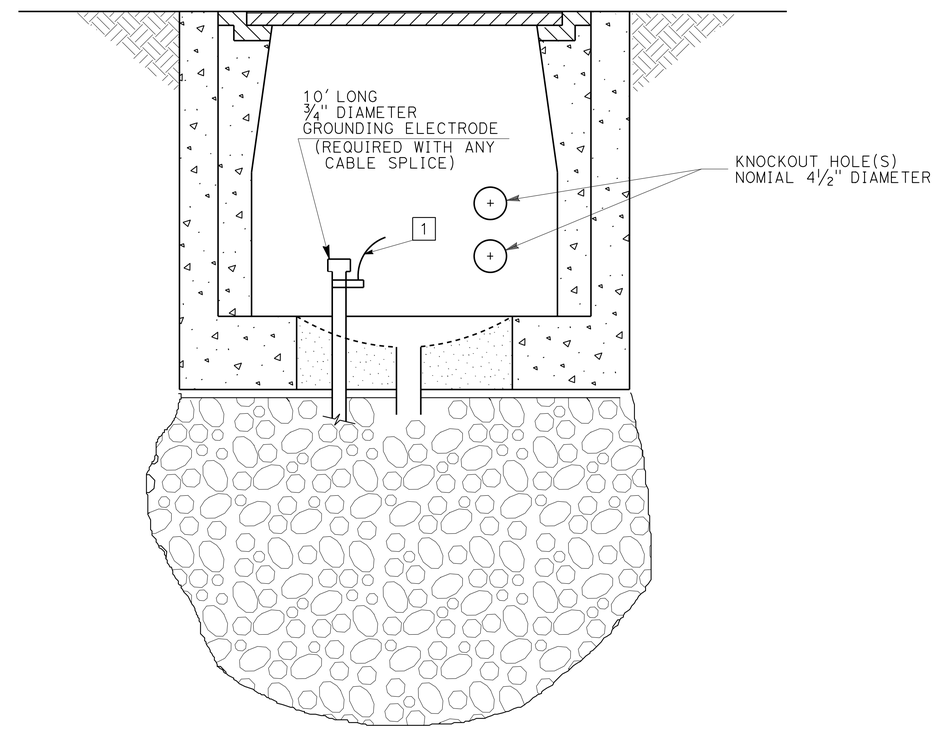

SECTION B-B

(COMMUNICATION PULL BOX DETAILS)

MODIFY COMMUNICATION SYSTEM

NO SCALE

E-19

STATE OF CALIFORNIA - DEPARTMENT OF TRANSPORTATION

Caltrans® OFFICE OF ITS

FUNCTIONAL SUPERVISOR JACQUELINE C. TAN

CALCULATED-DESIGNED BY PATRICK P. LUI

CHECKED BY JACQUELINE C. TAN

REVISED BY

DATE REVISED

LAST REVISION 00-00-00

DATE PLOTTED => 05-AUG-2015

TIME PLOTTED => 10:23

Dist	COUNTY	ROUTE	POST MILES TOTAL PROJECT	SHEET No.	TOTAL SHEETS
07	LA	5	C43.9/C46.4	119	199

REGISTERED ELECTRICAL ENGINEER 6/8/15 DATE

PLANS APPROVAL DATE 6-29-15

PATRICK P. LUI No. E17534 Exp. 06/30/17 ELECTRICAL — REGISTERED PROFESSIONAL ENGINEER — STATE OF CALIFORNIA

THE STATE OF CALIFORNIA OR ITS OFFICERS OR AGENTS SHALL NOT BE RESPONSIBLE FOR THE ACCURACY OR COMPLETENESS OF SCANNED COPIES OF THIS PLAN SHEET.

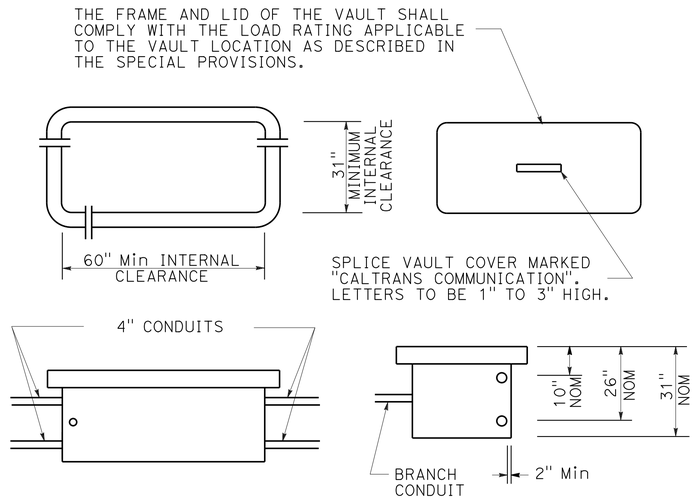

SPLICE VAULT DIMENSIONS

NOTES: (THIS SHEET ONLY)

1. UPON ACCEPTANCE OF THE WORK ALL CONDUITS MUST BE SEALED WITH COMPATIBLE SEALANT MATERIAL
2. ALL GROUND CONNECTIONS MUST BE COATED WITH OXIDATION PROHIBITING COMPOUND.
3. ALL CABLE STRAPS MUST BE DESIGNED TO WITHSTAND ULTRA-VIOLET EXPOSURE.
4. THE VAULT MUST BE CAULKED AFTER ALL KNOWN ENTRANCES HAVE BEEN MADE.
5. INSTALL ALL CABLES IN LOWER 4" CONDUIT.
6. UPPER 4" CONDUIT IS SPARE ONLY.
7. VAULT MUST HAVE INTEGRAL BASE OR MUST BE GROUTED PER STANDARD SPECIFICATION OF PULL BOXES.
8. NUMBER OF SPLICE ENCLOSURES MAY VARY.
9. SPLICE VAULT COVERS MUST BE STEEL PLATED.
10. SEE PLANS IF ANY ADDITIONAL KNOCKOUTS ARE REQUIRED AND INSTALL PER MANUFACTURER'S RECOMMENDATION.
11. COIL 32' OF FIBER OPTIC CABLES IN SPLICE VAULT.
12. CONCRETE ENCASEMENT AROUND SPLICE VAULT MUST BE MINOR CONCRETE.
13. PAVEMENT AND SUBGRADE TO BE AS DIRECTED BY THE ENGINEER.
14. LONGER SIDE OF THE SPLICE VAULT MUST BE PARALLEL TO THE DIRECTION OF TRAVEL.
15. FOR ABBREVIATIONS AND NOTES SEE SHEET E-1.

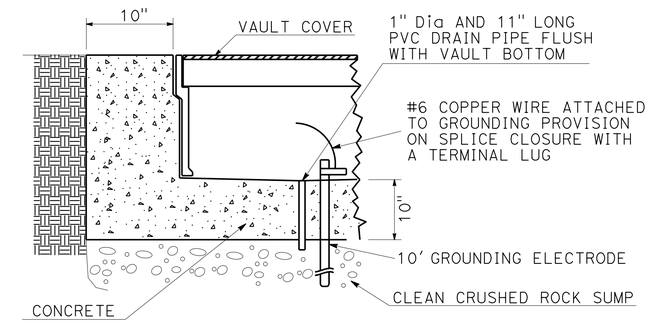

SPLICE VAULT INSTALLATION

INSTALLATION IN ASPHALT PAVEMENT OR COMPACTED EARTH

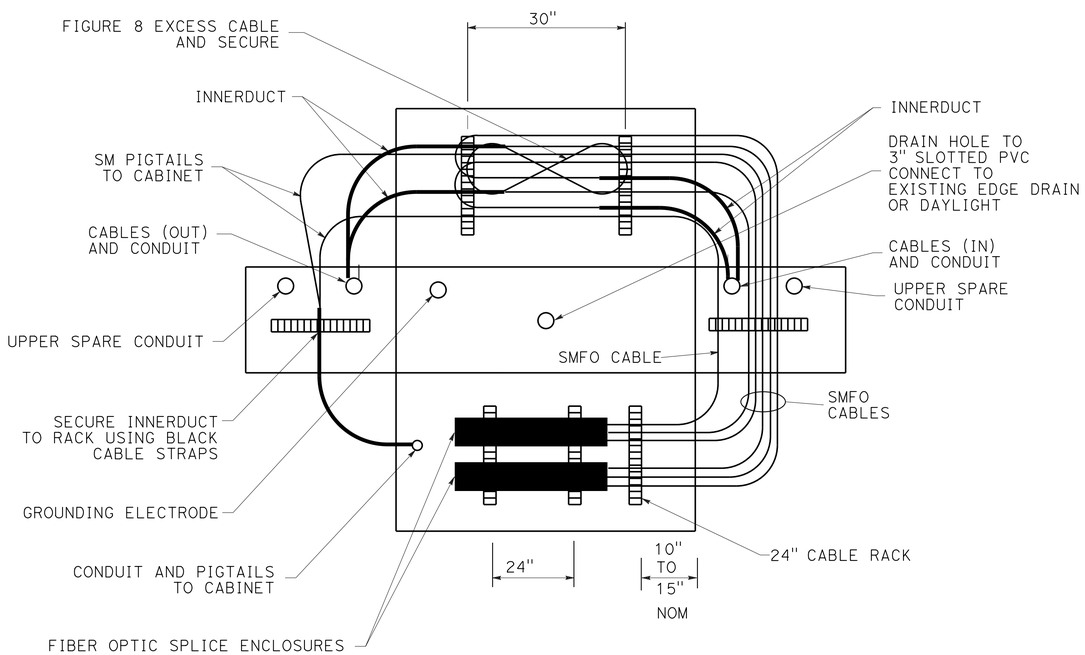

CABLE INSTALLATION

TOP VIEW - WALLS FOLDED DOWN FOR CLARITY

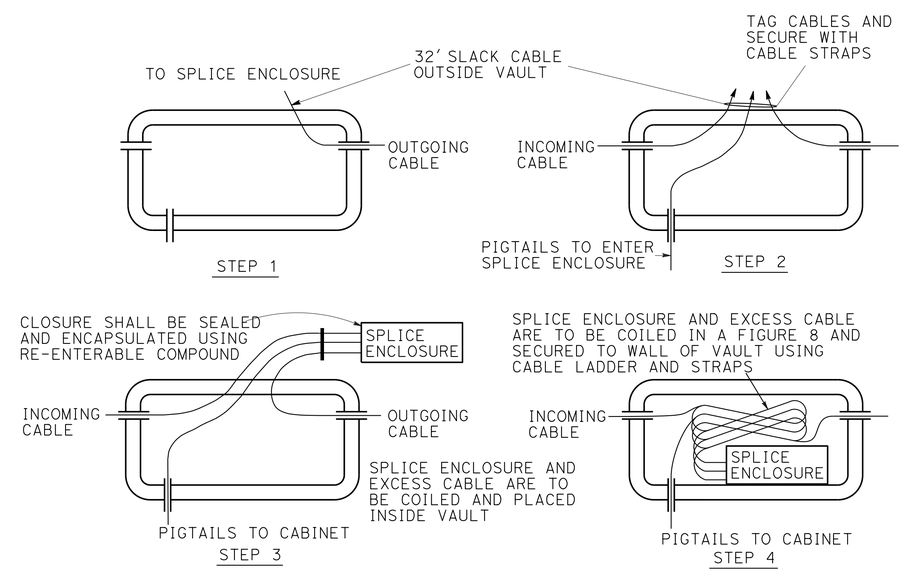

SPLICE PROCEDURE

MODIFY COMMUNICATION SYSTEM

(TYPICAL SPLICE VAULT DETAILS)

E-20

STATE OF CALIFORNIA - DEPARTMENT OF TRANSPORTATION
OFFICE OF ITS
Caltrans®

FUNCTIONAL SUPERVISOR: JACQUELINE C. TAN
CALCULATED-DESIGNED BY: PATRICK P. LUI
CHECKED BY: JACQUELINE C. TAN
REVISED BY
DATE REVISED

LAST REVISION 00-00-00
DATE PLOTTED => 05-AUG-2015
TIME PLOTTED => 10:23

Dist	COUNTY	ROUTE	POST MILES TOTAL PROJECT	SHEET No.	TOTAL SHEETS
07	LA	5	C43.9/C46.4	120	199

REGISTERED ELECTRICAL ENGINEER 6/8/15 DATE

PLANS APPROVAL DATE 6-29-15

PATRICK P. LUI No. E17534 Exp. 06/30/17 ELECTRICAL — REGISTERED PROFESSIONAL ENGINEER — STATE OF CALIFORNIA

THE STATE OF CALIFORNIA OR ITS OFFICERS OR AGENTS SHALL NOT BE RESPONSIBLE FOR THE ACCURACY OR COMPLETENESS OF SCANNED COPIES OF THIS PLAN SHEET.

NOTES: (SHEETS E-21 TO E-22)

1. USE MANUFACTURER SUPPLIED COMPOSITE VIDEO CABLE.
2. ALL CABLES MUST BE ALUMINUM SHIELDED TO PREVENT CROSS TALK.
3. CONNECT ALL DRAIN WIRES OF SHIELDED CONDUCTORS TO CABINET GROUND.
4. WATERPROOF ALL CONNECTORS AND CABLES USING WATER-TIGHT GROMETS, SEALING COMPOUNDS, AND TAPE.
5. AS REQUIRED, INSTALL ADAPTER MOUNTING PLATES TO MOUNT CCTV CAMERA ON EXISTING POLE OR TRUSS MOUNT.
6. ALL COMPONENTS AND CONNECTORS MUST BE TS 2 REQUIREMENTS.
7. FOR ABBREVIATIONS AND NOTES SHEET SHEET E-1.

LEGEND: (THIS SHEET ONLY)

[1] SEE PLANS FOR INSTALLATION OF ETHERNET SWITCH TYPE 1 OR 2.

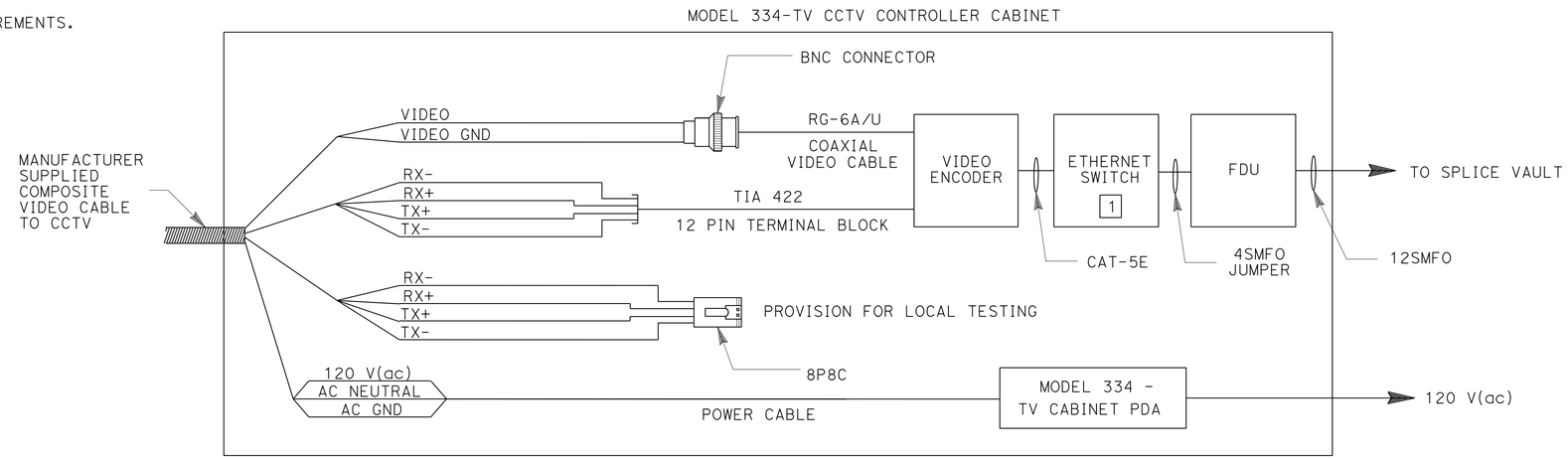

TYPICAL WIRING DIAGRAM

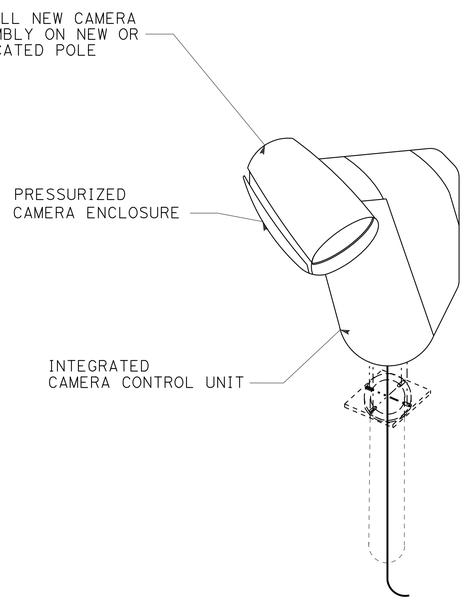

PROPOSED TYPICAL CAMERA WITH PAN/TILT UNIT

VIDEO BLANKING PRIVACY ZONES TO EXCLUDE NON-TRAFFIC FEATURES WHICH ARE NOT TO BE VIEWED (EG, RESIDENTIAL HOUSING). THE PRIVACY ZONES MUST BE ADJUSTED AS DIRECTED BY THE ENGINEER.

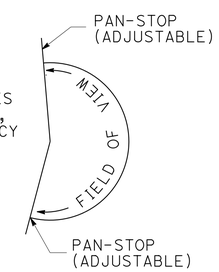

(CLOSED CIRCUIT TELEVISION CAMERA WIRING DIAGRAM WITH PAN/TILT UNIT)

MODIFY COMMUNICATION SYSTEM

E-21

STATE OF CALIFORNIA - DEPARTMENT OF TRANSPORTATION
Caltrans® OFFICE OF ITS

FUNCTIONAL SUPERVISOR: JACQUELINE C. TAN
CALCULATED-DESIGNED BY: PATRICK P. LUI
CHECKED BY: JACQUELINE C. TAN
REVISED BY
DATE REVISED

LAST REVISION 00-00-00
DATE PLOTTED => 05-AUG-2015
TIME PLOTTED => 10:23

Dist	COUNTY	ROUTE	POST MILES TOTAL PROJECT	SHEET No.	TOTAL SHEETS
07	LA	5	C43.9/C46.4	121	199

REGISTERED ELECTRICAL ENGINEER 6/8/15 DATE

PLANS APPROVAL DATE 6-29-15

REGISTERED PROFESSIONAL ENGINEER PATRICK P. LUI No. E17534 Exp. 06/30/17 ELECTRICAL STATE OF CALIFORNIA

THE STATE OF CALIFORNIA OR ITS OFFICERS OR AGENTS SHALL NOT BE RESPONSIBLE FOR THE ACCURACY OR COMPLETENESS OF SCANNED COPIES OF THIS PLAN SHEET.

NOTE: (THIS SHEET ONLY)

1. FOR ABBREVIATIONS AND NOTES SEE SHEET E-1.

LEGEND: (THIS SHEET ONLY)

[1] CONNECTORIZING DONE AT THE MODEL 334-TV CONTROLLER CABINET.

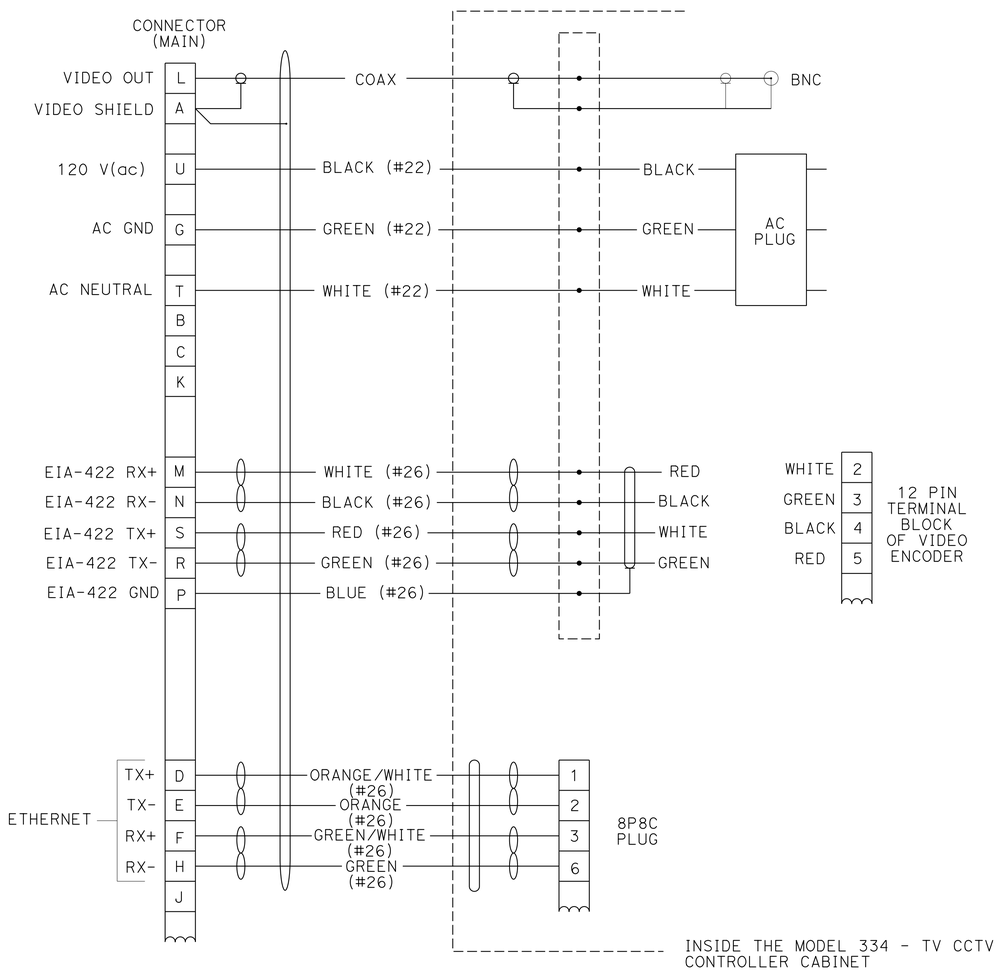

CABLE SCHEMATIC

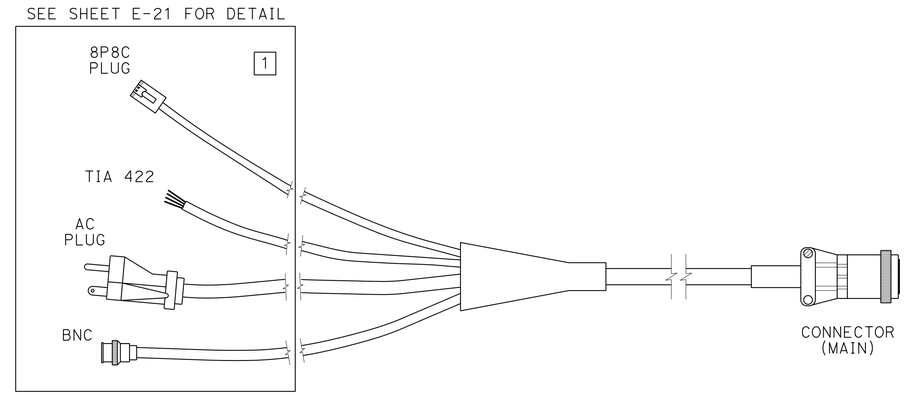

COMPOSITE VIDEO CABLE

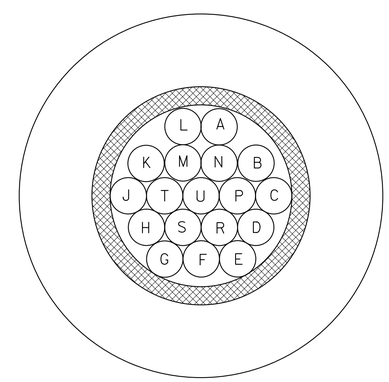

COMPOSITE VIDEO CABLE CROSS SECTION

MODIFY COMMUNICATION SYSTEM

(TYPICAL COMPOSITE VIDEO CABLE)

E-22

STATE OF CALIFORNIA - DEPARTMENT OF TRANSPORTATION
OFFICE OF ITS

PATRICK P. LUI — JACQUELINE C. TAN — CALCULATED-DESIGNED BY
JACQUELINE C. TAN — FUNCTIONAL SUPERVISOR — CHECKED BY
REVISED BY — DATE REVISED

LAST REVISION 00-00-00 | DATE PLOTTED => 05-AUG-2015 | TIME PLOTTED => 10:23

Dist	COUNTY	ROUTE	POST MILES TOTAL PROJECT	SHEET No.	TOTAL SHEETS
07	LA	5	C43.9/C46.4	122	199

REGISTERED ELECTRICAL ENGINEER 6/8/15 DATE

6-29-15
PLANS APPROVAL DATE

REGISTERED PROFESSIONAL ENGINEER PATRICK P. LUI No. E17534 Exp. 06/30/17 ELECTRICAL STATE OF CALIFORNIA

THE STATE OF CALIFORNIA OR ITS OFFICERS OR AGENTS SHALL NOT BE RESPONSIBLE FOR THE ACCURACY OR COMPLETENESS OF SCANNED COPIES OF THIS PLAN SHEET.

NOTES: (THIS SHEET ONLY)

1. VIDEO ENCODER TO BE COMPATIBLE WITH EXISTING DECODER MODULE IN EXISTING DECODER RACK AT THE LARTMC.
2. FOR ABBREVIATIONS AND NOTES SEE SHEET E-1.

LEGEND: (THIS SHEET ONLY)

1 SEE PLANS FOR INSTALLATION OF ETHERNET SWITCH TYPE 1 OR 2.

2 SEE PLANS FOR INSTALLATION OF FDU CAPACITY.

POWER DISTRIBUTION ONE-LINE DIAGRAM

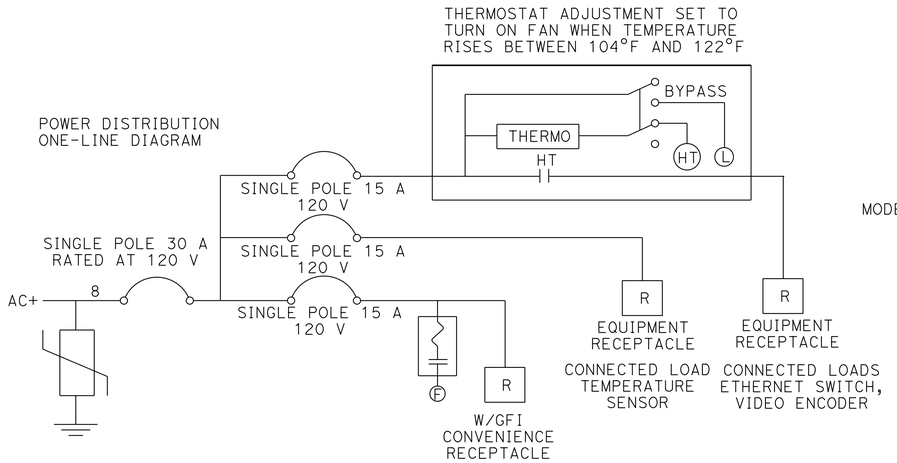

NEW OR Exist POWER DISTRIBUTION ASSEMBLY
(SHEETS E-23 TO E-24)

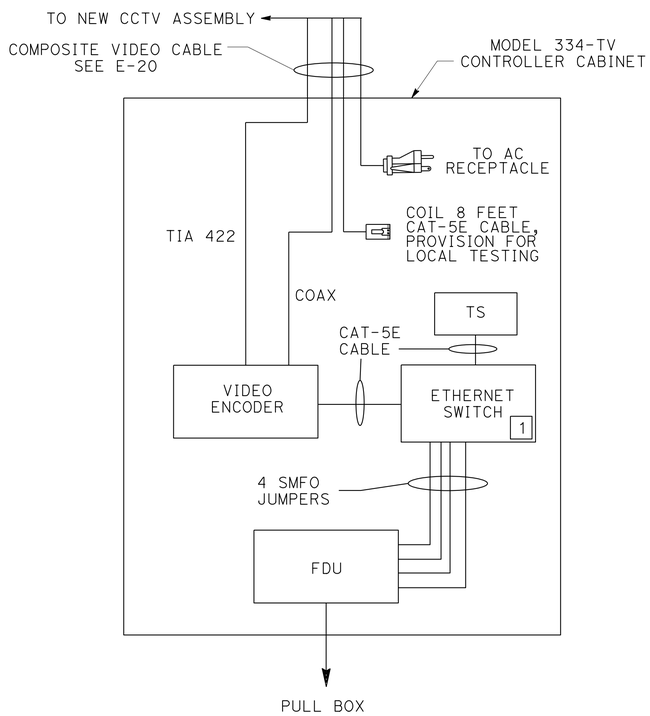

TYPICAL
NEW OR Exist MODEL 334-TV CONTROLLER
CABINET WIRING DETAIL

MODEL 334-TV CONTROLLER CABINET

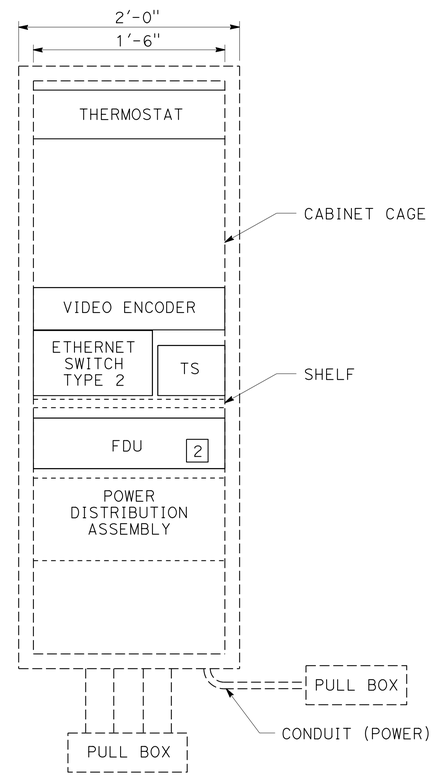

TYPICAL
Exist MODEL 334-TV CONTROLLER
(CCTV/IP NODE)
CABINET EQUIPMENT LAYOUT

CCTV CAMERA
MODEL 334-TV CONTROLLER CABINET

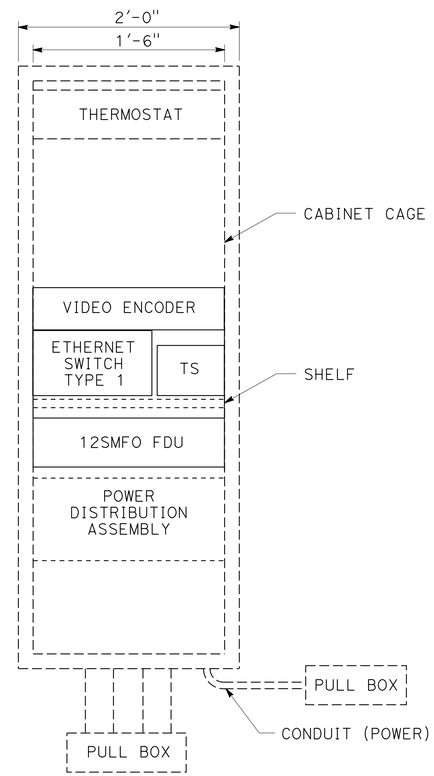

TYPICAL
Exist MODEL 334-TV CONTROLLER
CABINET EQUIPMENT LAYOUT

CCTV CAMERA
MODEL 334-TV CONTROLLER CABINET

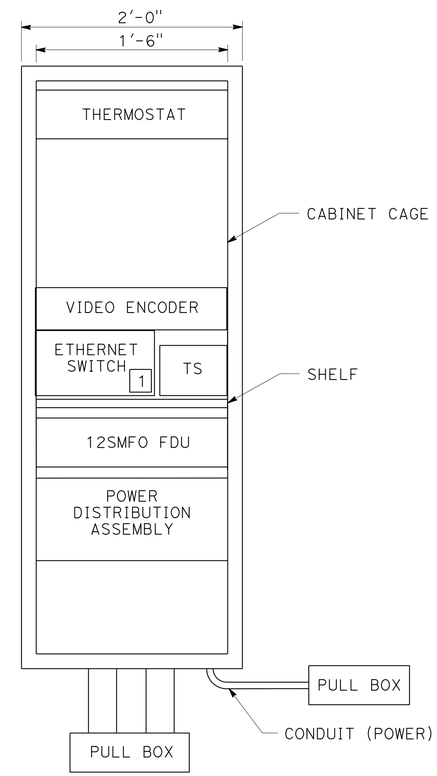

TYPICAL
NEW MODEL 334-TV CONTROLLER
(CCTV OR CCTV/IP NODE)
CABINET EQUIPMENT LAYOUT

(MODEL 334-TV CONTROLLER CABINET DETAILS)

MODIFY COMMUNICATION SYSTEM

E-23

STATE OF CALIFORNIA - DEPARTMENT OF TRANSPORTATION
Caltrans® OFFICE OF ITS

FUNCTIONAL SUPERVISOR: JACQUELINE C. TAN
CALCULATED-DESIGNED BY: PATRICK P. LUI
CHECKED BY: JACQUELINE C. TAN
REVISED BY
DATE REVISED

LAST REVISION 00-00-00
DATE PLOTTED => 05-AUG-2015
TIME PLOTTED => 10:23

Dist	COUNTY	ROUTE	POST MILES TOTAL PROJECT	SHEET No.	TOTAL SHEETS
07	LA	5	C43.9/C46.4	123	199

REGISTERED ELECTRICAL ENGINEER DATE 6/8/15

PLANS APPROVAL DATE 6-29-15

REGISTERED PROFESSIONAL ENGINEER PATRICK P. LUI No. E17534 Exp. 06/30/17 ELECTRICAL STATE OF CALIFORNIA

THE STATE OF CALIFORNIA OR ITS OFFICERS OR AGENTS SHALL NOT BE RESPONSIBLE FOR THE ACCURACY OR COMPLETENESS OF SCANNED COPIES OF THIS PLAN SHEET.

NOTES: (THIS SHEET ONLY)

1. VIDEO ENCODER TO BE COMPATIBLE WITH EXISTING DECODER MODULE IN EXISTING DECODER RACK AT THE LARTMC.
2. FOR ABBREVIATIONS AND NOTES SEE SHEET E-1.

MODEL 334-L CONTROLLER CABINET

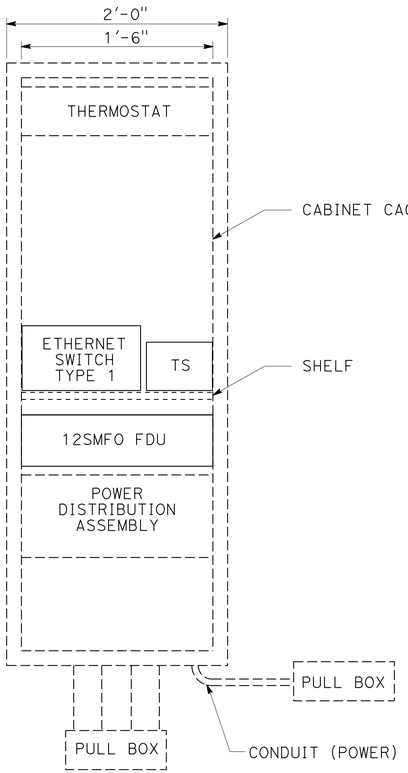

TYPICAL
Exist MODEL 334L - CONTROLLER
(CMS, RMS, TMS, AVC)
CABINET EQUIPMENT LAYOUT

MODEL 334-L CONTROLLER CABINET

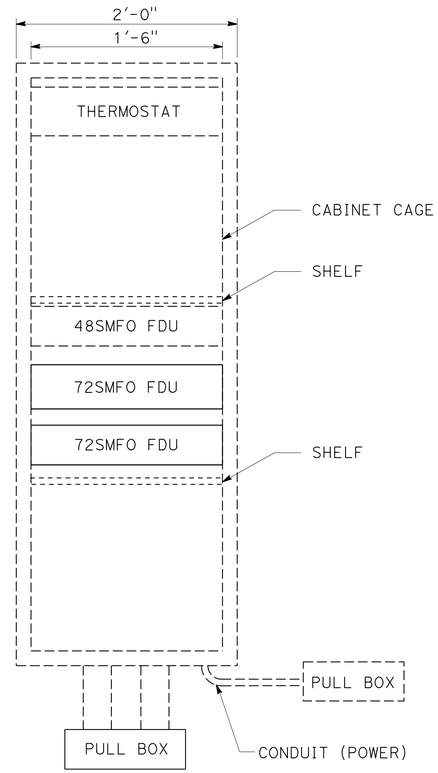

Exist MODEL 334L - CONTROLLER
(CABLE NODE RTE 5/14)
CABINET EQUIPMENT LAYOUT

MODEL 334-L CONTROLLER CABINET

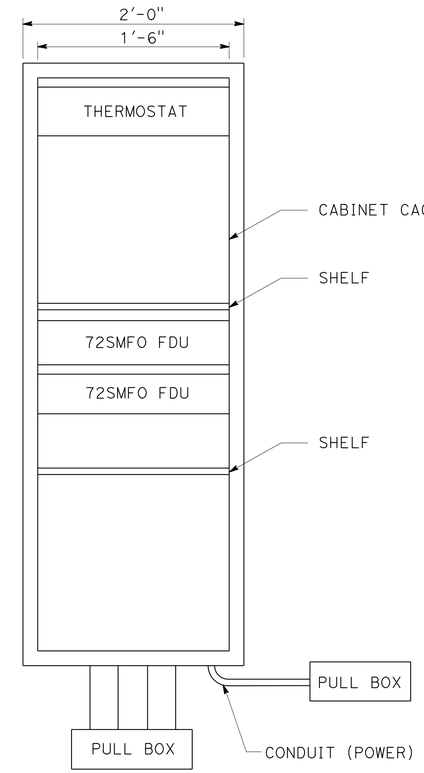

NEW MODEL 334L - CONTROLLER
(CABLE NODE RTE 5/210)
CABINET EQUIPMENT LAYOUT

MODIFY COMMUNICATION SYSTEM

(TYPICAL MODEL 334-L CONTROLLER CABINET DETAILS)

E-24

STATE OF CALIFORNIA - DEPARTMENT OF TRANSPORTATION
Caltrans
OFFICE OF ITS

FUNCTIONAL SUPERVISOR: JACQUELINE C. TAN
CALCULATED-DESIGNED BY: PATRICK P. LUI
CHECKED BY: JACQUELINE C. TAN
REVISED BY
DATE REVISED

LAST REVISION 00-00-00
DATE PLOTTED => 05-AUG-2015
TIME PLOTTED => 10:23

Dist	COUNTY	ROUTE	POST MILES TOTAL PROJECT	SHEET No.	TOTAL SHEETS
07	LA	5	C43.9/C46.4	124	199

REGISTERED ELECTRICAL ENGINEER DATE 6/8/15

PLANS APPROVAL DATE 6-29-15

REGISTERED PROFESSIONAL ENGINEER PATRICK P. LUI No. E17534 Exp. 06/30/17 ELECTRICAL STATE OF CALIFORNIA

THE STATE OF CALIFORNIA OR ITS OFFICERS OR AGENTS SHALL NOT BE RESPONSIBLE FOR THE ACCURACY OR COMPLETENESS OF SCANNED COPIES OF THIS PLAN SHEET.

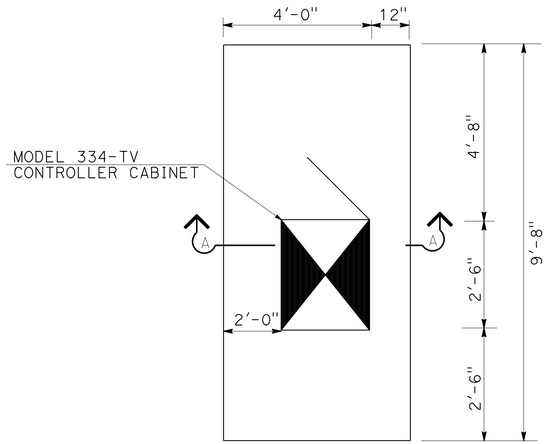

DETAIL A
PLAN VIEW

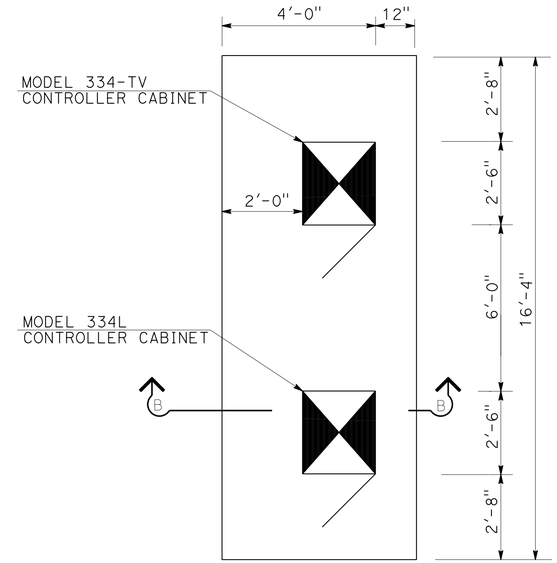

DETAIL B
PLAN VIEW

NOTES: (THIS SHEET ONLY)

1. CABINETS TO BE INSTALLED 30 FEET FROM ETW OR 6 FEET FROM MBGR FOR TYPICAL FIXED OBJECT INSTALLATION .
2. CONSTRUCT PAD AND GRADE TO DRAIN AROUND AND AWAY FROM CABINET IN KEEPING WITH EXISTING DRAINAGE PATTERN.
3. CABINET DOOR MUST BE LOCATED PER PLAN AND HINGED TO SWING AWAY FROM TRAVELED WAY.
4. FOR INFORMATION NOT SHOWN, SEE STANDARD PLAN SHEET ES-3C.

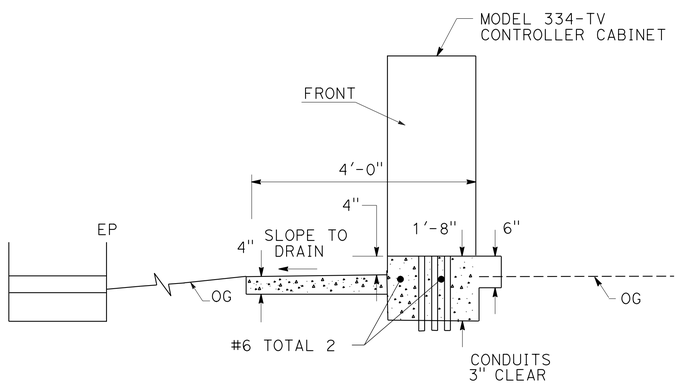

SECTION A-A

ELEVATION VIEW FOR DETAIL A

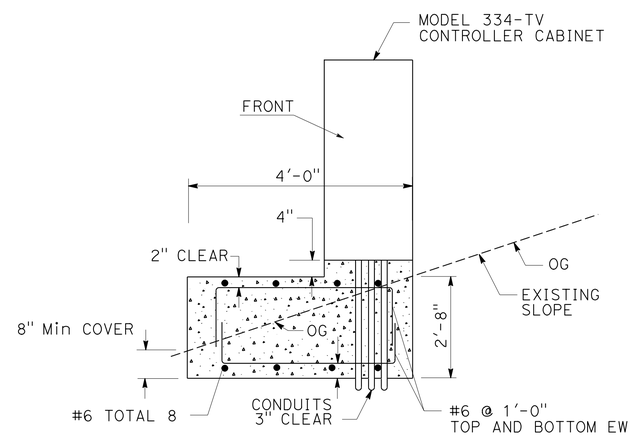

SECTION B-B

ELEVATION VIEW FOR DETAIL B

(CONTROLLER CABINET FOUNDATION DETAILS)

MODIFY COMMUNICATION SYSTEM

NO SCALE

E-25

STATE OF CALIFORNIA - DEPARTMENT OF TRANSPORTATION
Caltrans
OFFICE OF ITS

FUNCTIONAL SUPERVISOR: JACQUELINE C. TAN

CALCULATED-DESIGNED BY: PATRICK P. LUI
CHECKED BY: JACQUELINE C. TAN

REVISED BY | DATE REVISED

LAST REVISION 00-00-00 | DATE PLOTTED => 05-AUG-2015 | TIME PLOTTED => 10:23

Dist	COUNTY	ROUTE	POST MILES TOTAL PROJECT	SHEET No.	TOTAL SHEETS
07	LA	5	C43.9/C46.4	125	199

REGISTERED ELECTRICAL ENGINEER 6/8/15 DATE

6-29-15
PLANS APPROVAL DATE

REGISTERED PROFESSIONAL ENGINEER PATRICK P. LUI No. E17534 Exp. 06/30/17 ELECTRICAL STATE OF CALIFORNIA

THE STATE OF CALIFORNIA OR ITS OFFICERS OR AGENTS SHALL NOT BE RESPONSIBLE FOR THE ACCURACY OR COMPLETENESS OF SCANNED COPIES OF THIS PLAN SHEET.

LEGEND: (SHEETS E-26 AND E-27)

1. ETHERNET SWITCH TYPE 1 WITH 2 (LX TYPE) SFP MODULES AND POWER SUPPLY.
2. ETHERNET SWITCH TYPE 2 WITH 2 (LX TYPE) AND 2 (ZX TYPE) SFP MODULES WITH POWER SUPPLIES.
3. COMPOSITE VIDEO CABLE SEE SHEET E-21, E-22.
4. SEE SHEET E-24 FOR CABLE NODE CONTROLLER CABINET DETAILS.
5. SEE SHEET E-23 FOR NEW CCTV CONTROLLER CABINET DETAILS.
6. COIL 30 FEET AND CAP END OF 48SMFO VIDEO/DATA AND 48SMFO SPARE FOR FUTURE USE.
7. SEE SHEET E-30 FOR SPLICING Exist 24SMFO TO NEW 72SMFO TRUNK CABLE.
8. COIL 30 FEET AND CAP END OF 72SMFO TRUNK AND 48SMFO SPARE CABLES FOR FUTURE USE.

NOTES: (SHEETS E-26 AND E-27)

1. PROVIDE SWITCHES TO THE ENGINEER FOR CONFIGURATION BEFORE FIELD INSTALLATION BEGINS.
2. TERMINATE REDUNDANT PATH FIBER CABLE PER THE ENGINEER.
3. FOR ABBREVIATIONS AND NOTES SEE SHEET E-1.

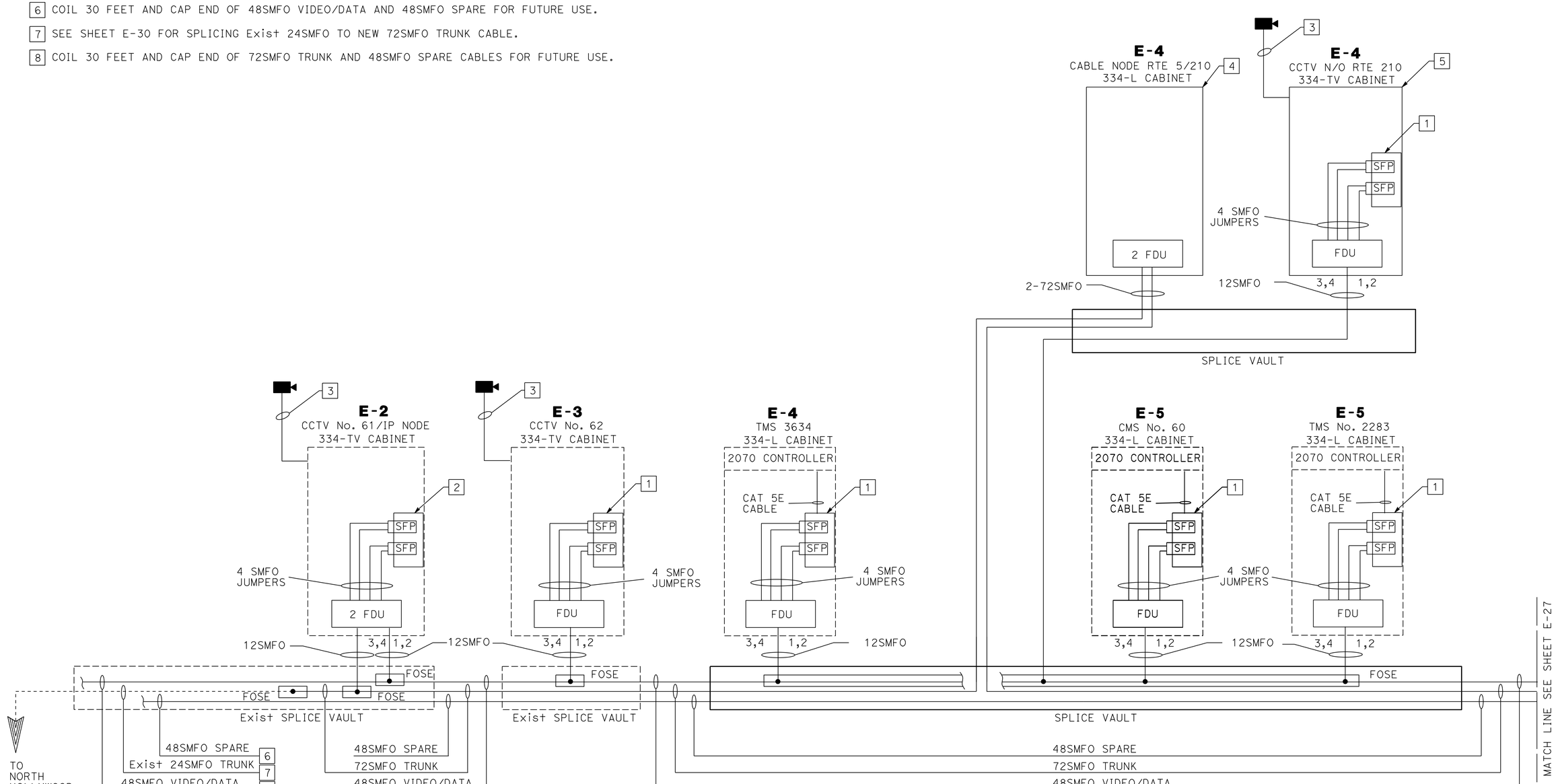

MODIFY COMMUNICATION SYSTEM

(SCHEMATIC)

E-26

STATE OF CALIFORNIA - DEPARTMENT OF TRANSPORTATION
Caltrans
OFFICE OF ITS

FUNCTIONAL SUPERVISOR: JACQUELINE C. TAN
CALCULATED-DESIGNED BY: PATRICK P. LUI
CHECKED BY: JACQUELINE C. TAN
REVISED BY
DATE REVISED

LAST REVISION 00-00-00
DATE PLOTTED => 05-AUG-2015
TIME PLOTTED => 10:23

Dist	COUNTY	ROUTE	POST MILES TOTAL PROJECT	SHEET No.	TOTAL SHEETS
07	LA	5	C43.9/C46.4	126	199

REGISTERED ELECTRICAL ENGINEER DATE 6/8/15

PLANS APPROVAL DATE 6-29-15

REGISTERED PROFESSIONAL ENGINEER PATRICK P. LUI No. E17534 Exp. 06/30/17 ELECTRICAL STATE OF CALIFORNIA

THE STATE OF CALIFORNIA OR ITS OFFICERS OR AGENTS SHALL NOT BE RESPONSIBLE FOR THE ACCURACY OR COMPLETENESS OF SCANNED COPIES OF THIS PLAN SHEET.

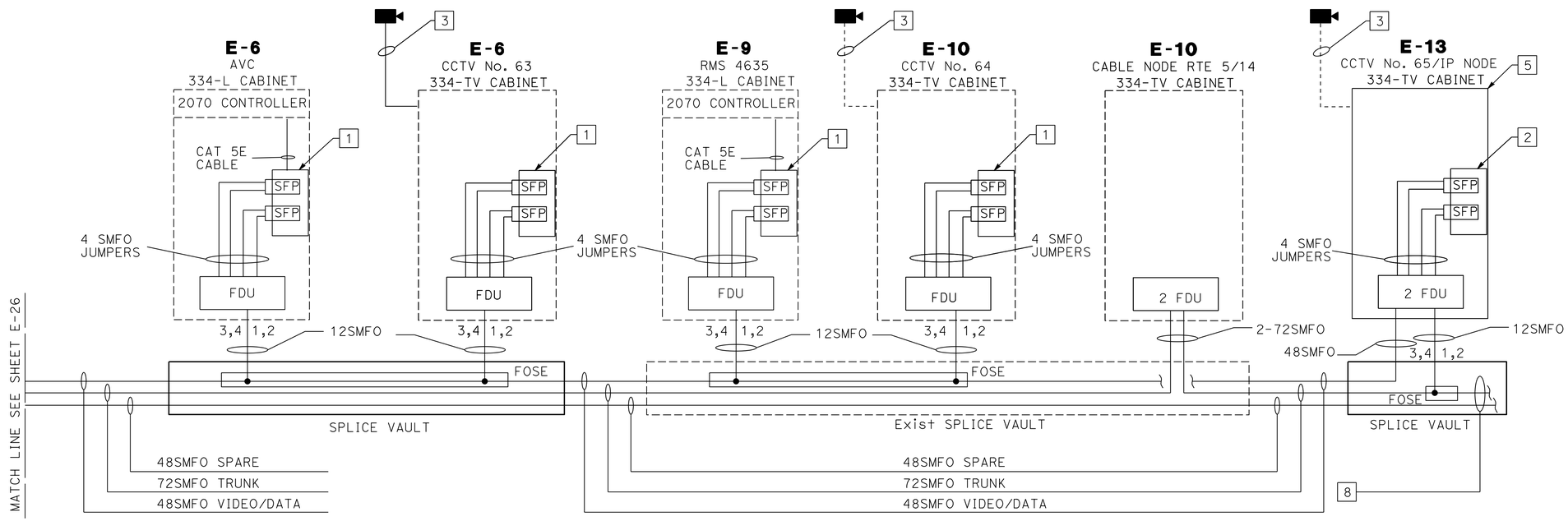

MODIFY COMMUNICATION SYSTEM

(SCHEMATIC)

E-27

STATE OF CALIFORNIA - DEPARTMENT OF TRANSPORTATION

Caltrans OFFICE OF ITS

FUNCTIONAL SUPERVISOR: JACQUELINE C. TAN

CALCULATED-DESIGNED BY: PATRICK P. LUI

CHECKED BY: JACQUELINE C. TAN

REVISED BY

DATE REVISED

LAST REVISION 00-00-00

DATE PLOTTED => 05-AUG-2015

TIME PLOTTED => 10:23

Dist	COUNTY	ROUTE	POST MILES TOTAL PROJECT	SHEET No.	TOTAL SHEETS
07	LA	5	C43.9/C46.4	127	199

REGISTERED ELECTRICAL ENGINEER 6/8/15 DATE

PLANS APPROVAL DATE 6-29-15

REGISTERED PROFESSIONAL ENGINEER PATRICK P. LUI No. E17534 Exp. 06/30/17 ELECTRICAL STATE OF CALIFORNIA

THE STATE OF CALIFORNIA OR ITS OFFICERS OR AGENTS SHALL NOT BE RESPONSIBLE FOR THE ACCURACY OR COMPLETENESS OF SCANNED COPIES OF THIS PLAN SHEET.

NOTE: (THIS SHEET ONLY)

1. FOR ABBREVIATIONS AND NOTES SEE SHEET E-1.

LEGEND: (THIS SHEET ONLY)

[1] INSTALL 2 ZX SFP MODULES IN EXISTING TYPE 2 ETHERNET SWITCH WITH 43.4 MILE CONNECTION DISTANCE AND COMPATIBLE WITH FIELD SFP MODULES.

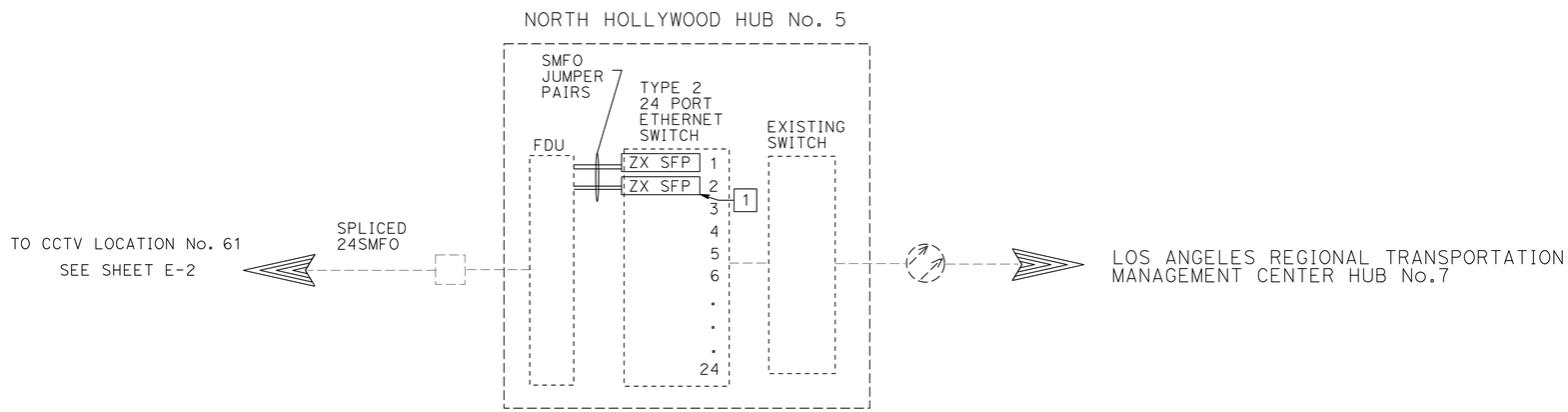

(SCHEMATIC)

WORK AT NORTH HOLLYWOOD HUB

E-28

STATE OF CALIFORNIA - DEPARTMENT OF TRANSPORTATION
Caltrans OFFICE OF ITS

FUNCTIONAL SUPERVISOR: JACQUELINE C. TAN
CALCULATED-DESIGNED BY: PATRICK P. LUI
CHECKED BY: JACQUELINE C. TAN
REVISED BY
DATE REVISED

LAST REVISION 00-00-00 | DATE PLOTTED => 05-AUG-2015 | TIME PLOTTED => 10:23

Dist	COUNTY	ROUTE	POST MILES TOTAL PROJECT	SHEET No.	TOTAL SHEETS
07	LA	5	C43.9/C46.4	128	199

REGISTERED ELECTRICAL ENGINEER 6/8/15 DATE

PLANS APPROVAL DATE 6-29-15

REGISTERED PROFESSIONAL ENGINEER PATRICK P. LUI No. E17534 Exp. 06/30/17 ELECTRICAL STATE OF CALIFORNIA

THE STATE OF CALIFORNIA OR ITS OFFICERS OR AGENTS SHALL NOT BE RESPONSIBLE FOR THE ACCURACY OR COMPLETENESS OF SCANNED COPIES OF THIS PLAN SHEET.

NOTE: (THIS SHEET ONLY)

1. FOR ABBREVIATIONS AND NOTES SEE SHEET E-1.

LEGEND: (THIS SHEET ONLY)

[1] INSTALL 6 VIDEO DECODER MODULES IN EXISTING VIDEO RACK TO BE USED TO DECODE INCOMING VIDEO.

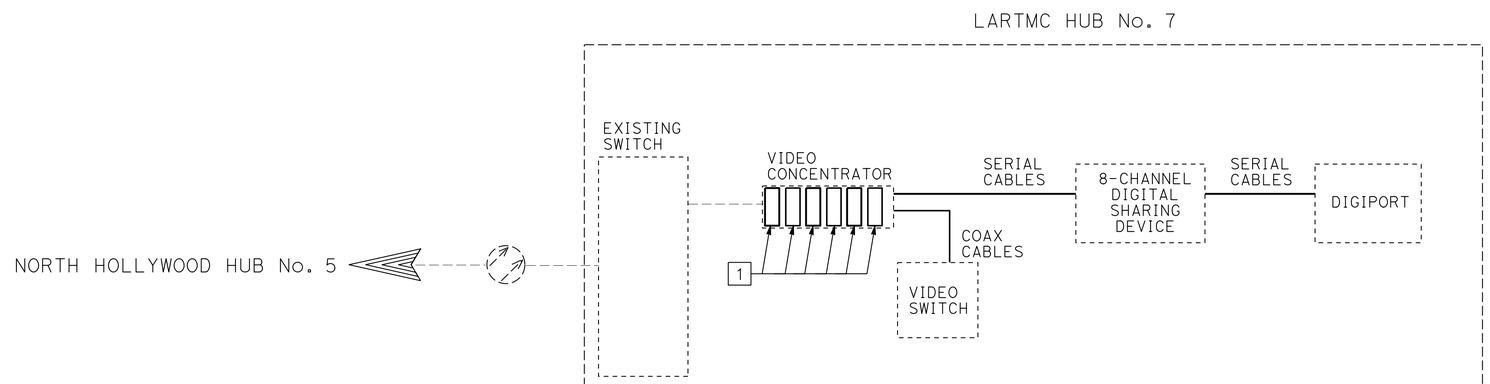

(SCHEMATIC)

WORK AT LOS ANGELES REGIONAL TRANSPORTATION MANAGEMENT CENTER

E-29

STATE OF CALIFORNIA - DEPARTMENT OF TRANSPORTATION
Caltrans OFFICE OF ITS

FUNCTIONAL SUPERVISOR: JACQUELINE C. TAN

CALCULATED-DESIGNED BY: PATRICK P. LUI
CHECKED BY: JACQUELINE C. TAN

REVISED BY
DATE REVISED

LAST REVISION 00-00-00
DATE PLOTTED => 05-AUG-2015
TIME PLOTTED => 10:23

Dist	COUNTY	ROUTE	POST MILES TOTAL PROJECT	SHEET No.	TOTAL SHEETS
07	LA	5	C43.9/C46.4	129	199

REGISTERED ELECTRICAL ENGINEER 6/8/15 DATE

PLANS APPROVAL DATE 6-29-15

REGISTERED PROFESSIONAL ENGINEER PATRICK P. LUI No. E17534 Exp. 06/30/17 ELECTRICAL STATE OF CALIFORNIA

THE STATE OF CALIFORNIA OR ITS OFFICERS OR AGENTS SHALL NOT BE RESPONSIBLE FOR THE ACCURACY OR COMPLETENESS OF SCANNED COPIES OF THIS PLAN SHEET.

LEGEND: (THIS SHEET ONLY)

X - TERMINATE ACTIVE AT FDU

T - TERMINATE PER THE ENGINEER

~ - SPLICE EXISTING 24SMFO (4 FIBERS, FIBERS 19 TO 22) TRUNK CABLE WITH NEW 72SMFO (4 FIBERS, FIBERS 19 TO 22) TRUNK CABLE. SEE TABLE BELOW FOR ASSIGNMENTS.

- COIL AND CAP 30 FEET OF 12SMFO CABLE IN PULL BOX ADJACENT TO CONTROLLER CABINET. CHECK WITH THE ENGINEER FOR TERMINATION OF FIBER.

NOTE: (THIS SHEET ONLY)

1. PROVIDE SWITCHES TO THE ENGINEER FOR CONFIGURATION BEFORE FIELD INSTALLATION BEGINS.
2. FIBER NUMBERS MAY BE RE-ASSIGNED BY THE ENGINEER DURING CONSTRUCTION.

TRUNK FIBER OPTIC CABLE (72SMFO) ASSIGNMENT TABLE (PM 43.9 TO PM 46.49)

FIBER	USE	SB S/O RTE 210 Exist SPLICE VAULT Exist 24smfo Trunk	SB S/O RTE 210 CCTV No. 61 / IP NODE	NB CN TO WB RTE 210 CABLE NODE 5/210	NB RTE 5/14 INTERCHANGE CABLE NODE 5/14	SB N/O RTE 14 CCTV No. 65 / IP NODE	NOTES
	PM	43.85	43.85	44.25	45.68	46.23	
FIBER 1	SPARE						
FIBER 2	SPARE						
FIBER 3	SPARE						
•	SPARE						
•	SPARE						
FIBER 19	VIDEO/DATA IN 1	~	X	X	X	X	
FIBER 20	VIDEO/DATA OUT 1	~	X	X	X	X	
FIBER 21	VIDEO/DATA IN 2	T	T			T	
FIBER 22	VIDEO/DATA OUT 2	T	T			T	
•	SPARE						
•	SPARE						
FIBER 71	SPARE						
FIBER 72	SPARE						

VIDEO/DATA DISTRIBUTION FIBER OPTIC CABLE (48SMFO) ASSIGNMENT TABLE (PM 43.9 TO PM 46.49)

FIBER	USE	SB S/O RTE 210 CCTV No. 61 / IP NODE	SB CN TO EB RTE 210 CCTV No. 62	SB 5 TRUCK ROUTE TMS No. 3634	NB CN TO WB RTE 210 CABLE NODE 5/210	NB CN TO WB RTE 210 CCTV N/O RTE 5/210	NB BALBOA Blvd CMS No. 60	NB 5 TRUCK ROUTE TMS No. 2283	NB 5 TRUCK ROUTE AVC	NB 5 TRUCK ROUTE CCTV No. 63	NB 5 TRUCK ROUTE ON-RAMP RMS No. 4635	NB RTE 5/14 INTERCHANGE CCTV No. 64	NB RTE 5/14 INTERCHANGE CABLE NODE 5/14	SB N/O RTE 14 CCTV No. 65 / IP NODE	NOTES
	PM	43.85	44.02	44.20	44.25	44.25	44.31	44.32	44.44	44.78	45.60	45.68	45.68	46.23	
FIBER 1	DATA IN 1			X							X				
FIBER 2	DATA OUT 1			X							X				
FIBER 3	DATA IN 2							X							
FIBER 4	DATA OUT 2							X							
FIBER 5	DATA IN 3								#						
FIBER 6	DATA OUT 3								#						
FIBER 7	SPARE														
FIBER 8	SPARE														
FIBER 9	CMS IN 1						X								
FIBER 10	CMS OUT 1						X								
FIBER 11	SPARE														
FIBER 12	SPARE														
FIBER 13	CCTV IN 1	X	X			X				X		X		X	
FIBER 14	CCTV OUT 1	X	X			X				X		X		X	
FIBER 15	CCTV IN 2														
FIBER 16	CCTV OUT 2														
FIBER 17	SPARE														
FIBER 18	SPARE														
FIBER 19	SPARE														
•	SPARE														
•	SPARE														
•	SPARE														
FIBER 46	SPARE														
FIBER 47	SPARE														
FIBER 48	SPARE														

MODIFY COMMUNICATION SYSTEM

(FIBER ASSIGNMENT TABLES)

E-30

REVISED BY | DATE REVISED

PATRICK P. LUI | JACQUELINE C. TAN

CALCULATED-DESIGNED BY | CHECKED BY

FUNCTIONAL SUPERVISOR: JACQUELINE C. TAN

STATE OF CALIFORNIA - DEPARTMENT OF TRANSPORTATION

Caltrans® OFFICE OF ITS

LAST REVISION 00-00-00 | DATE PLOTTED => 05-AUG-2015 | TIME PLOTTED => 10:24

Dist	COUNTY	ROUTE	POST MILES TOTAL PROJECT	SHEET No.	TOTAL SHEETS
07	LA	5	C43.9/C46.4	130	199

REGISTERED ELECT ENGINEER 3/9/15 DATE

6-29-15
PLANS APPROVAL DATE

REGISTERED PROFESSIONAL ENGINEER CECILIO BURCIAGA No. E015302 Exp. 3/31/17 ELECT STATE OF CALIFORNIA

THE STATE OF CALIFORNIA OR ITS OFFICERS OR AGENTS SHALL NOT BE RESPONSIBLE FOR THE ACCURACY OR COMPLETENESS OF SCANNED COPIES OF THIS PLAN SHEET.

NOTES: (THIS SHEET ONLY)

1. FOR ACCURATE RIGHT OF WAY DATA, CONTACT RIGHT OF WAY ENGINEERING AT THE DISTRICT OFFICE.
2. FOR WIRING DIAGRAM SEE SHEET E-33.

LEGEND: (THIS SHEET ONLY)

1 RC PULL BOX AND INSTALL NEW TRAFFIC PULL BOX WITH TAMPER RESISTANT COVER. SEE SHEET E-37 FOR DETAILS.

2 INSTALL 2"C, 2#6 (L+g), 1#8 (G).

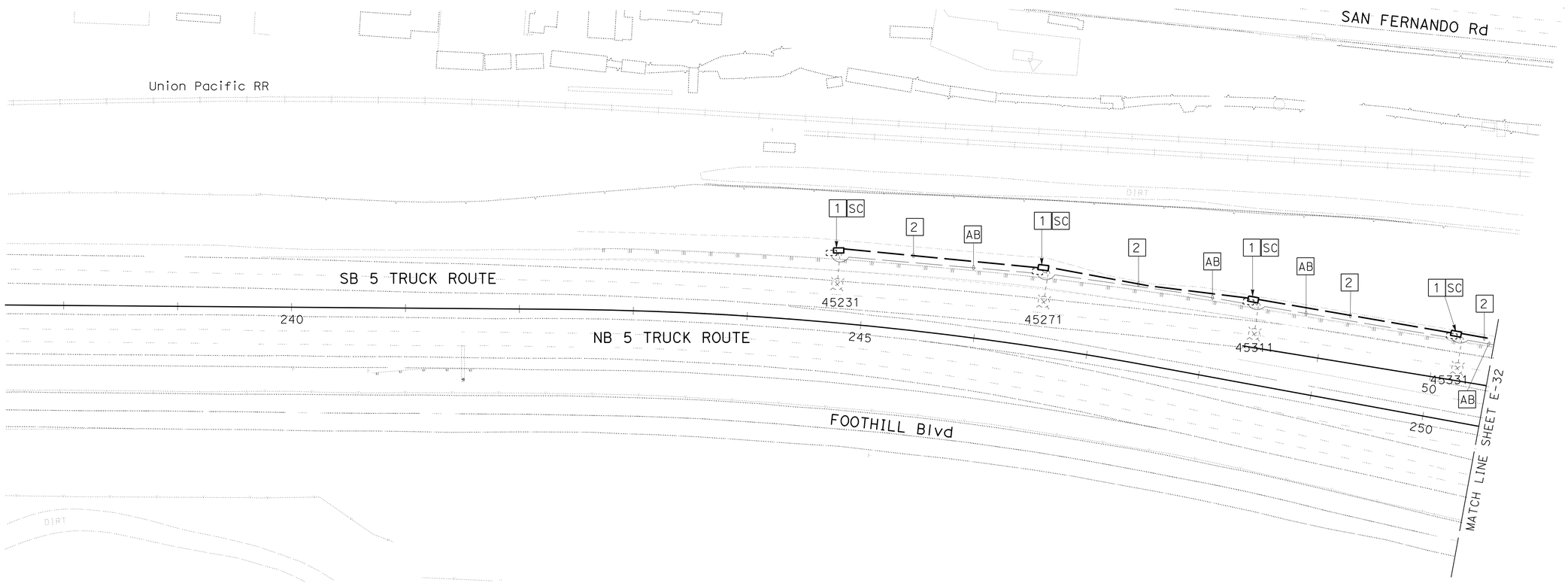

MODIFY LIGHTING AND SIGN ILLUMINATION

SCALE 1"=50'

APPROVED FOR ELECTRICAL WORK ONLY

E-31

STATE OF CALIFORNIA - DEPARTMENT OF TRANSPORTATION
Caltrans® TRAFFIC DESIGN
FUNCTIONAL SUPERVISOR: YI TSAU
CALCULATED-DESIGNED BY: QUINCIE TRAN
CHECKED BY: CECILIO BURCIAGA
REVISED BY
DATE REVISED

LAST REVISION 03-17-15
DATE PLOTTED => 05-AUG-2015
TIME PLOTTED => 10:24

BORDER LAST REVISED 7/2/2010
USERNAME => s119140
DGN FILE => 730290ua031.dgn
RELATIVE BORDER SCALE IS IN INCHES 0 1 2 3
UNIT 1880
PROJECT NUMBER & PHASE 07130004781

Dist	COUNTY	ROUTE	POST MILES TOTAL PROJECT	SHEET No.	TOTAL SHEETS
07	LA	5	C43.9/C46.4	131	199

REGISTERED ELECT ENGINEER 3/9/15 DATE

6-29-15
PLANS APPROVAL DATE

REGISTERED PROFESSIONAL ENGINEER CECILIO BURCIAGA No. E015302 Exp. 3/31/17 ELECT STATE OF CALIFORNIA

THE STATE OF CALIFORNIA OR ITS OFFICERS OR AGENTS SHALL NOT BE RESPONSIBLE FOR THE ACCURACY OR COMPLETENESS OF SCANNED COPIES OF THIS PLAN SHEET.

NOTES: (THIS SHEET ONLY)

1. FOR ACCURATE RIGHT OF WAY DATA, CONTACT RIGHT OF WAY ENGINEERING AT THE DISTRICT OFFICE.
2. FOR WIRING DIAGRAM SEE SHEET E-33.

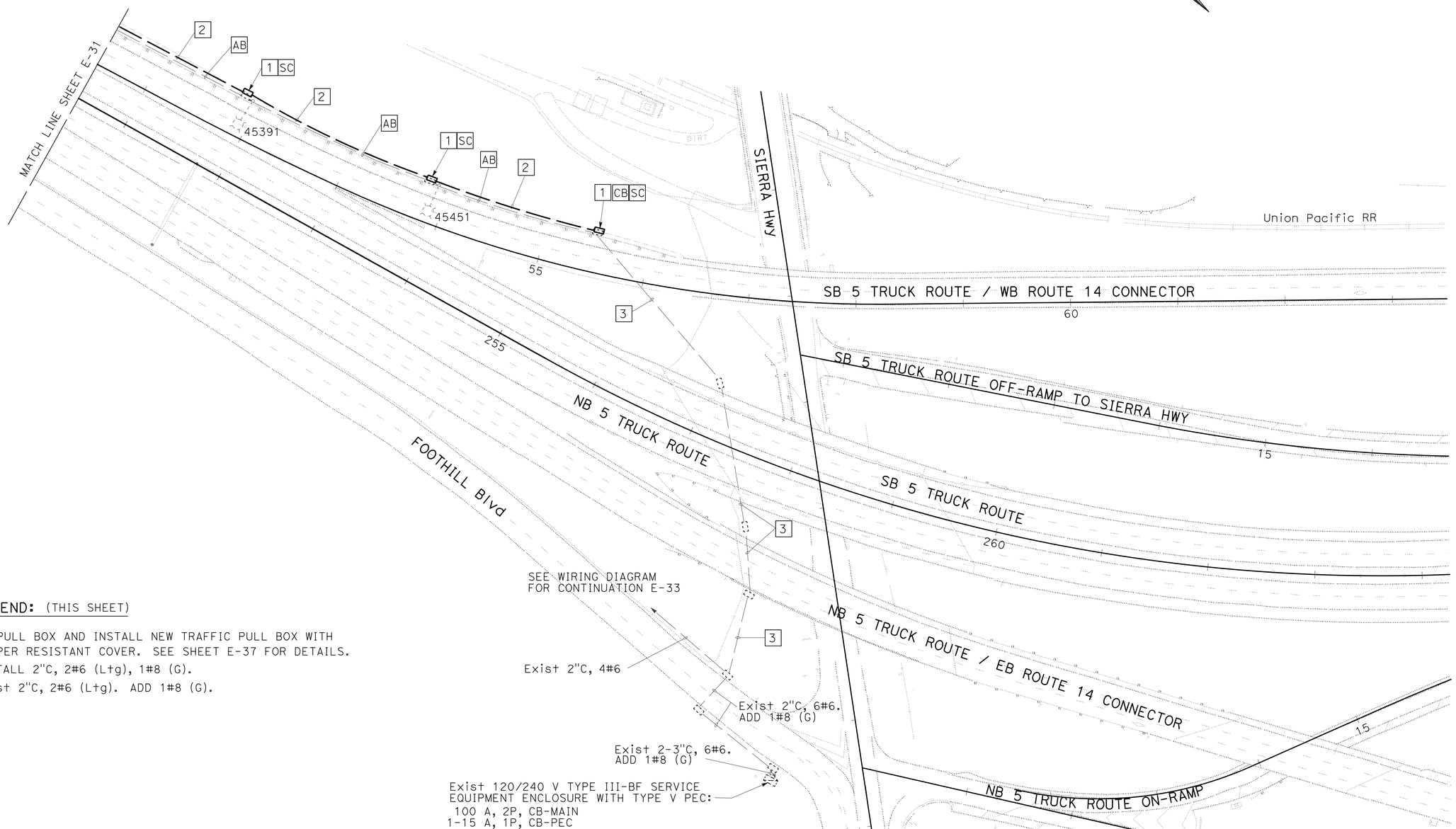

LEGEND: (THIS SHEET)

1 RC PULL BOX AND INSTALL NEW TRAFFIC PULL BOX WITH TAMPER RESISTANT COVER. SEE SHEET E-37 FOR DETAILS.
2 INSTALL 2"C, 2#6 (Ltg), 1#8 (G).
3 Exist 2"C, 2#6 (Ltg). ADD 1#8 (G).

APPROVED FOR ELECTRICAL WORK ONLY

MODIFY LIGHTING AND SIGN ILLUMINATION

SCALE 1"=50'

E-32

STATE OF CALIFORNIA - DEPARTMENT OF TRANSPORTATION
Caltrans® **TRAFFIC DESIGN**
FUNCTIONAL SUPERVISOR: Y1 TSAU
CALCULATED-DESIGNED BY: QUINCIE TRAN
CHECKED BY: CECILIO BURCIAGA
REVISED BY
DATE REVISED

LAST REVISION 03-17-15 | DATE PLOTTED => 05-AUG-2015 | TIME PLOTTED => 10:24

Dist	COUNTY	ROUTE	POST MILES TOTAL PROJECT	SHEET No.	TOTAL SHEETS
07	LA	5	C43.9/C46.4	132	199

REGISTERED ELECT ENGINEER 3/9/15 DATE

6-29-15
PLANS APPROVAL DATE

REGISTERED PROFESSIONAL ENGINEER CECILIO BURCIAGA No. E015302 Exp. 3/31/17 ELECT STATE OF CALIFORNIA

THE STATE OF CALIFORNIA OR ITS OFFICERS OR AGENTS SHALL NOT BE RESPONSIBLE FOR THE ACCURACY OR COMPLETENESS OF SCANNED COPIES OF THIS PLAN SHEET.

LEGEND:

- EXISTING LAMP AND BALLAST.
- EXISTING SIGN LAMP AND BALLAST
- EXISTING SPLICE.
- RC CONDUCTOR.
- EXISTING CONDUCTOR TO REMAIN.
- INSTALL No. 6 AWG CONDUCTORS.
- SPLICE CONDUCTORS.

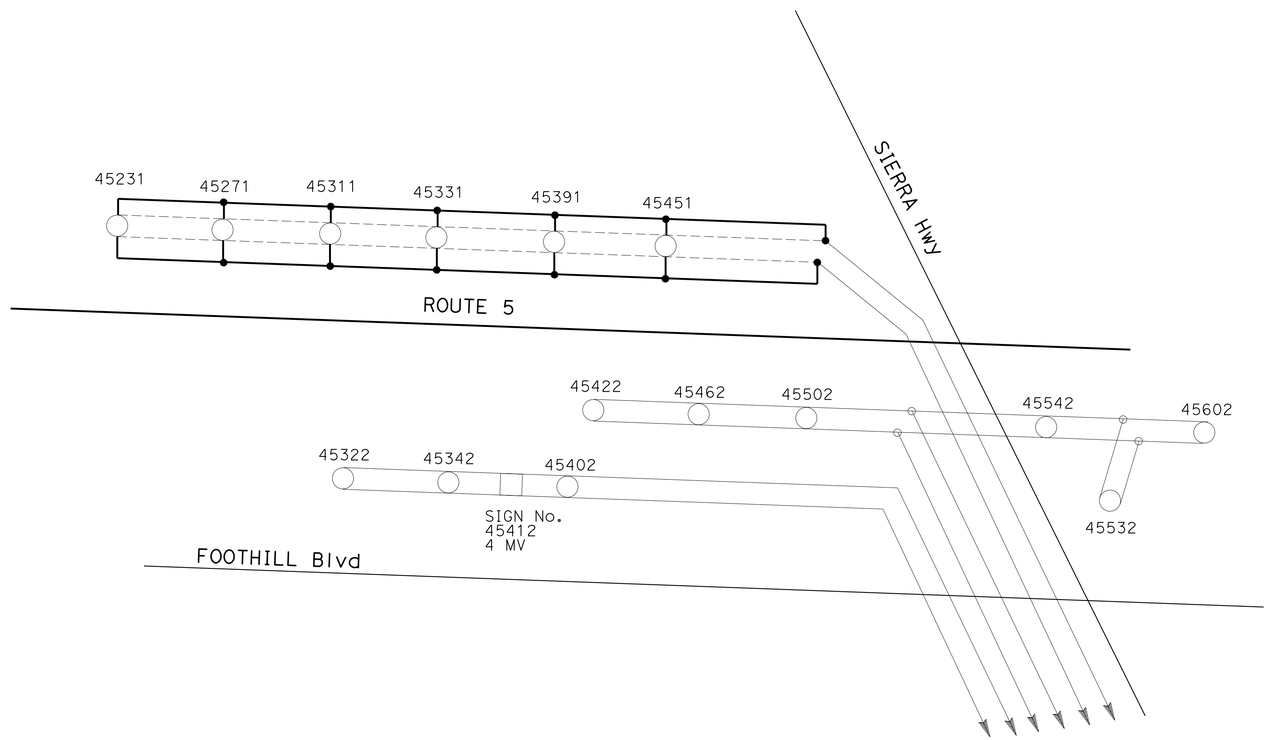

Exist 120/240 V TYPE III-BF SERVICE
EQUIPMENT ENCLOSURE WITH TYPE V PEC:
100 A, 2P, CB-MAIN
1-15 A, 1P, CB-PEC
3-30 A, 2P, CB-Ltg
1-20 A, 1P, CB-TMS
1-15 A, 1P, CB-RM
Ctid No. 07-53-000-0-045.60PM
ADDRESS: 11886 ½ FOOTHILL Blvd

EXISTING WIRING DIAGRAM TO BE MODIFIED

(WIRING DIAGRAM)

MODIFY LIGHTING AND SIGN ILLUMINATION

NO SCALE

E-33

STATE OF CALIFORNIA - DEPARTMENT OF TRANSPORTATION
Caltrans® **TRAFFIC DESIGN**

FUNCTIONAL SUPERVISOR: YI TSAU
CALCULATED-DESIGNED BY: QUINCIE TRAN
CHECKED BY: CECILIO BURCIAGA
REVISED BY
DATE REVISED

LAST REVISION 02-24-15
DATE PLOTTED => 05-AUG-2015
TIME PLOTTED => 10:24

Dist	COUNTY	ROUTE	POST MILES TOTAL PROJECT	SHEET No.	TOTAL SHEETS
07	LA	5	C43.9/C46.4	133	199

REGISTERED ELECT ENGINEER 3/9/15 DATE

6-29-15
PLANS APPROVAL DATE

REGISTERED PROFESSIONAL ENGINEER CECILIO BURCIAGA No. E015302 Exp. 3/31/17 ELECT STATE OF CALIFORNIA

THE STATE OF CALIFORNIA OR ITS OFFICERS OR AGENTS SHALL NOT BE RESPONSIBLE FOR THE ACCURACY OR COMPLETENESS OF SCANNED COPIES OF THIS PLAN SHEET.

NOTES: (THIS SHEET ONLY)

1. NEW STUBOUTS SHALL BE 2"C. ABANDON EXISTING STUBOUTS.
2. PRIOR TO CONSTRUCTION, THE CONTRACTOR MUST LOCATE EXISTING INDUCTIVE LOOP DETECTORS.
3. NEW INDUCTIVE LOOP DETECTORS MUST BE SPLICED TO EXISTING DLC IN ADJACENT PULL BOX.
4. TAG EXISTING DLC IN ADJACENT PULL BOX AND AT CONTROLLER CABINET.

MODIFY TRAFFIC MONITORING STATION (ROUTE 5)

Approx PM	LOCATION	LOCATION OF LOOP DETECTORS					No. OF STUBOUTS (RESET)
		1	2	3	4	5	
44.3	SOUTH OF BALBOA Blvd OC	X	X	X	X	X	2

X - INSTALL TYPE E LOOP DETECTOR. ABANDON EXISTING LOOP(S) DETECTOR AT SAME LOCATION.

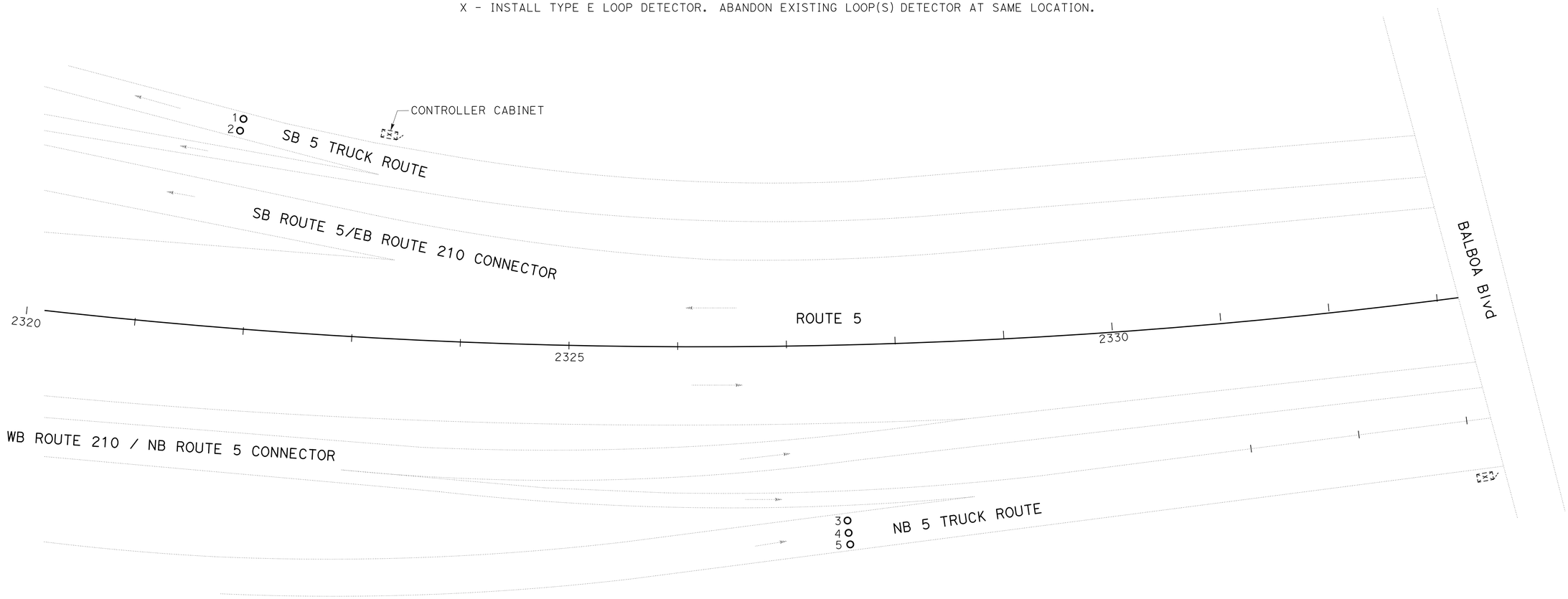

MODIFY TRAFFIC MONITORING STATION

NO SCALE

APPROVED FOR ELECTRICAL WORK ONLY

E-34

STATE OF CALIFORNIA - DEPARTMENT OF TRANSPORTATION
Caltrans® **TRAFFIC DESIGN**

FUNCTIONAL SUPERVISOR: YI TSAU
CALCULATED-DESIGNED BY: QUINCIE TRAN
CHECKED BY: CECILIO BURCIAGA
REVISED BY / DATE REVISED

LAST REVISION 03-17-15 | DATE PLOTTED => 05-AUG-2015 | TIME PLOTTED => 10:24

Dist	COUNTY	ROUTE	POST MILES TOTAL PROJECT	SHEET No.	TOTAL SHEETS
07	LA	5	C43.9/C46.4	134	199

REGISTERED ELECT ENGINEER 3/9/15 DATE

6-29-15
PLANS APPROVAL DATE

REGISTERED PROFESSIONAL ENGINEER CECILIO BURCIAGA No. E015302 Exp. 3/31/17 ELECT STATE OF CALIFORNIA

THE STATE OF CALIFORNIA OR ITS OFFICERS OR AGENTS SHALL NOT BE RESPONSIBLE FOR THE ACCURACY OR COMPLETENESS OF SCANNED COPIES OF THIS PLAN SHEET.

LEGEND: (THIS SHEET ONLY)

1. INSTALL 2 LOOP DETECTORS AND 4 PIEZO-ELECTRIC AXLE SENSORS. SEE SHEET E-36 FOR INSTALLATION.
2. INSTALL 3 LOOP DETECTORS AND 6 PIEZO-ELECTRIC AXLE SENSORS. SEE SHEET E-36 FOR INSTALLATION.
3. AB LOOP DETECTORS AND AXLE SENSORS.
4. Exist 3"C, 3 DLC, 6 STC. ADD 1#8 (G).
5. Exist 3"C, 2 DLC, 4 STC. ADD 1#8 (G).
6. Exist 3"C, 9 DLC, 18 STC. ADD 1#8 (G).
7. Exist 4"C, 16 DLC, 32 STC. ADD 1#8 (G).

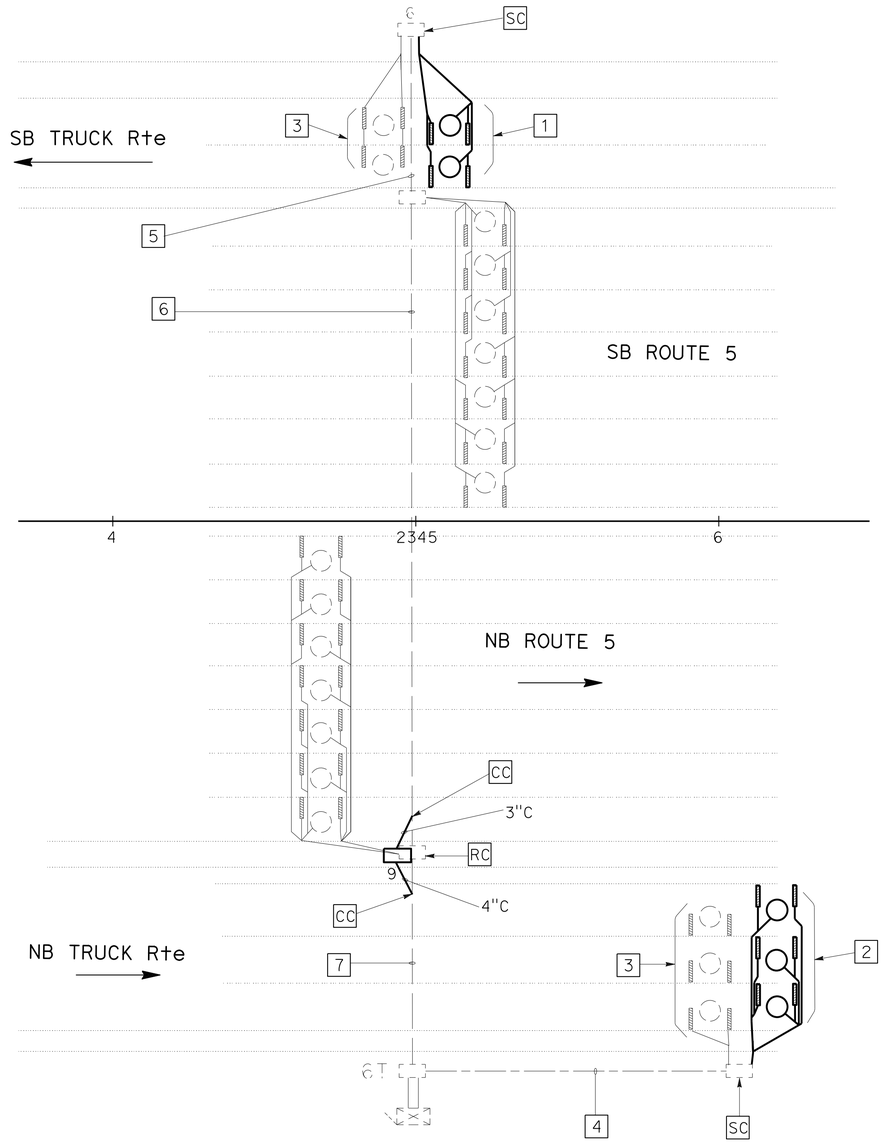

0.22 MILE NORTH OF BALBOA Blvd OC

PM C44.669R

MODIFY AUTOMATIC VEHICLE CLASSIFICATION STATION

NO SCALE

APPROVED FOR ELECTRICAL WORK ONLY

E-35

STATE OF CALIFORNIA - DEPARTMENT OF TRANSPORTATION
Caltrans® TRAFFIC DESIGN

FUNCTIONAL SUPERVISOR: YI TSAU
CALCULATED-DESIGNED BY: QUINCIE TRAN
CHECKED BY: CECILIO BURCIAGA
REVISED BY
DATE REVISED

LAST REVISION 03-17-15 | DATE PLOTTED => 05-AUG-2015 | TIME PLOTTED => 10:24

Dist	COUNTY	ROUTE	POST MILES TOTAL PROJECT	SHEET No.	TOTAL SHEETS
07	LA	5	C43.9/C46.4	135	199

REGISTERED ELECT ENGINEER DATE 3/9/15

PLANS APPROVAL DATE 6-29-15

REGISTERED PROFESSIONAL ENGINEER CECILIO BURCIAGA No. E015302 Exp. 3/31/17 ELECT STATE OF CALIFORNIA

THE STATE OF CALIFORNIA OR ITS OFFICERS OR AGENTS SHALL NOT BE RESPONSIBLE FOR THE ACCURACY OR COMPLETENESS OF SCANNED COPIES OF THIS PLAN SHEET.

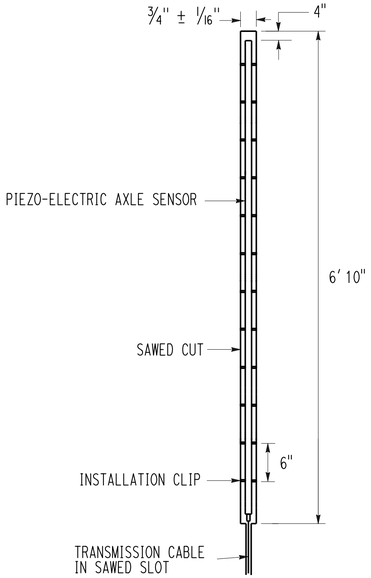

DETAIL A

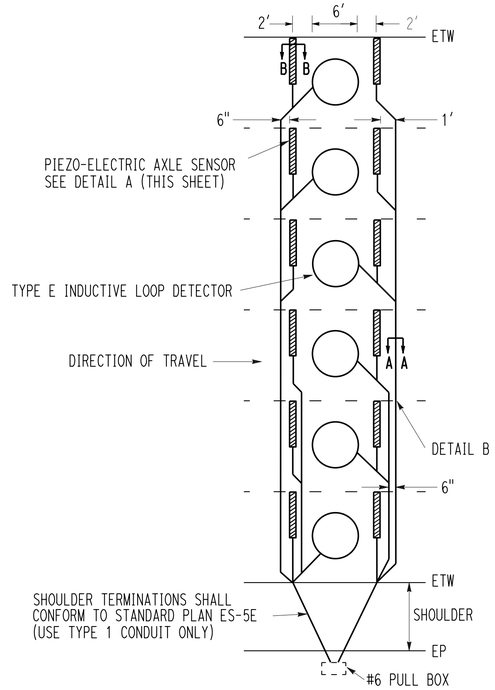

TYPICAL AXLE SENSOR INSTALLATION

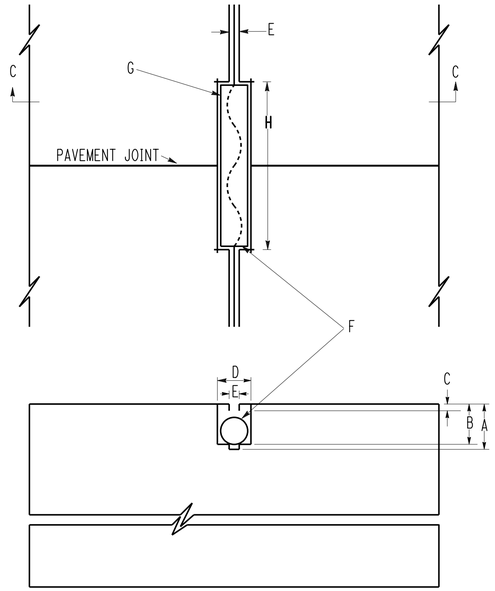

SECTION C-C

DETAIL B
(TYPICAL LEAD-IN AT PAVEMENT JOINT)

NOTES: (FOR DETAIL B THIS SHEET)

A. SAW CUT DEPTH TO ACCOMODATE SPECIFIED NUMBER OF CONDUCTORS WITH A MINIMUM OF 1" FROM TOP OF WIRE TO PAVEMENT SURFACE (3-1/4" MAX.).

B. SLOT SAW-CUT DEPTH TO ACCOMODATE 1" TYPE 3 CONDUIT WITH 1/2" MINIMUM FROM TOP OF CONDUIT TO PAVEMENT SURFACE.

C. 1/2" MINIMUM BETWEEN TOP OF CONDUIT AND PAVEMENT SURFACE.

D. SAW-CUT WIDTH TO ACCOMODATE 1" TYPE 3 CONDUIT WITH 1/8" CLEARANCE AT PAVEMENT JOINTS.

E. SAW-CUT 1/2" WIDE.

F. 1" TYPE 3 CONDUIT, 6" LONG. PLUG BOTH ENDS WITH CAULKING COMPOUND TO KEEP OUT EPOXY.

G. CONDUCTORS WITH 1/2" MINIMUM SLACK INSIDE CONDUIT.

H. SAW-CUT LENGTH OF SLOT 1/8" LONGER THAN CONDUIT.

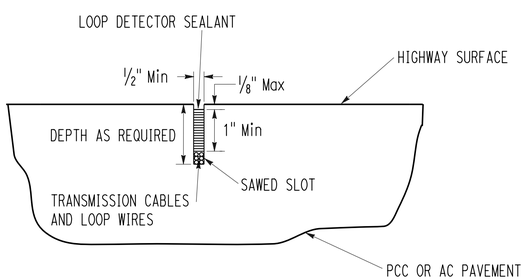

SECTION A-A

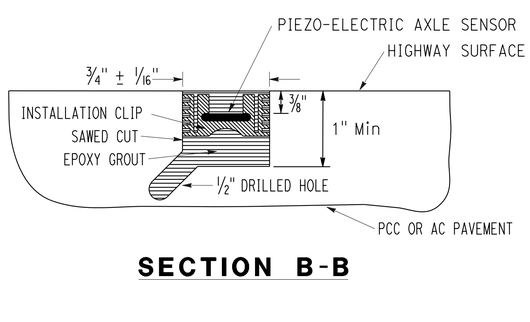

SECTION B-B

AXLE SENSOR INSTALLATION PROCEDURE

1. MARK THE POSITION OF THE AXLE SENSORS AS DIRECTED BY THE ENGINEER. AXLE SENSOR CHANNELS MUST BE PERPENDICULAR TO TRAFFIC.
2. MARK THE POSITION OF THE LOOP DETECTORS. THE DETECTORS SHALL BE CENTERED IN THE LANE AND BETWEEN THE AXLE SENSORS.
3. MARK THE HOME RUN CUTS AS SHOWN IN THE AXLE SENSOR INSTALLATION DETAIL.
4. USING A CONCRETE SAW CUT THE AXLE SENSOR CHANNELS 3/4" WIDE BY 1" DEEP IN A SINGLE PASS. CUTS SHALL BE STRAIGHT AND TRUE.
5. CUT THE LOOP DETECTORS AND HOME RUNS IN ACCORDANCE WITH CALTRANS SPECIFICATIONS.
6. DRILL 1/2" HOLES, 1" DEEP, AT A 45 DEGREE ANGLE AT THE BOTTOM CORNERS OF EACH AXLE SENSOR CHANNEL. HOLES SHALL BE 1' APART AND ON ALTERNATING SIDES OF THE CHANNEL.
7. WASH OUT THE CHANNELS AND ALL SAW CUTS THOROUGHLY WITH HIGH PRESSURE WATER. DRY COMPLETELY WITH AN AIR COMPRESSOR. IN PCC PAVEMENT ONLY, WIPE OUT THE CHANNELS WITH LACQUER THINNER AND CLEAN COTTON RAGS.
8. PLACE 4" DUCT TAPE STRIPS ON THE PAVEMENT AROUND THE CHANNELS.
9. ENSURE THAT EACH SENSOR IS STRAIGHT AND FLAT. BEND EACH END DOWN SLIGHTLY AND PLACE THE INSTALLATION CLIPS ON THE SENSOR.
10. BLOCK OFF THE CABLE END OF THE CHANNEL WITH DUCT SEAL TO PREVENT THE EPOXY FLOWING OUT OF THE CHANNEL.
11. INSERT SENSOR EPOXY CARTRIDGE INTO CAULKING GUN. ATTACH STATIC MIXING TUBE ONTO CARTRIDGE.
12. WHILE WEARING PROTECTIVE GLOVES, HALF FILL THE CHANNEL WITH SENSOR EPOXY. ENSURE THAT THE BOTTOM OF THE CHANNEL IS COMPLETELY COVERED, AND THAT THE HOLES DRILLED IN STEP 6 ARE FILLED.
13. PLACE THE SENSOR IN THE CHANNEL WITH THE BRASS ELEMENT 3/8" BELOW THE ROAD SURFACE, WITH NO VOIDS BENEATH THE SENSOR.
14. COMPLETELY FILL THE CHANNEL WITH SENSOR EPOXY. SMOOTH OUT THE EPOXY ON TOP OF THE SENSOR TO ROAD LEVEL, WITH NO TROUGH ON TOP.
15. WHEN SENSOR EPOXY HAS BEGUN TO SET, REMOVE THE DUCT TAPE FROM THE PAVEMENT. REMOVE THE DUCT SEAL FROM THE END OF THE CHANNEL.
16. INSTALL THE LOOP DETECTORS AS PER CALTRANS SPECIFICATIONS.
17. INSTALL ALL LEAD-IN CABLES IN THE HOME RUN SLOTS, INSTALLING TYPE 3 CONDUIT AT THE EXPANSION JOINT CROSSINGS. PULL CABLES THROUGH STUB-OUT CONDUIT AND COIL IN PULL BOX.
18. SEAL ALL SAW CUTS. ELASTOMERIC SEALANT ONLY SHALL BE USED IN ALL CUTS CONTAINING SCREENED TRANSMISSION CABLE.
19. REMOVE ANY HIGH SPOTS IN THE SENSOR EPOXY WITH A HAND GRINDER.
20. CLEAN UP THE SITE. WHEN ALL SEALANTS ARE COMPLETELY CURED, LANES MAY BE OPENED TO TRAFFIC.

MODIFY AUTOMATIC VEHICLE CLASSIFICATION STATION (DETAILS)

NO SCALE

E-36

STATE OF CALIFORNIA - DEPARTMENT OF TRANSPORTATION
Caltrans® TRAFFIC DESIGN

FUNCTIONAL SUPERVISOR: YI TSAU
CALCULATED-DESIGNED BY: QUINCIE TRAN
CHECKED BY: CECILIO BURCIAGA
REVISED BY
DATE REVISED

LAST REVISION 03-17-15
DATE PLOTTED => 05-AUG-2015
TIME PLOTTED => 10:24

Dist	COUNTY	ROUTE	POST MILES TOTAL PROJECT	SHEET No.	TOTAL SHEETS
07	LA	5	C43.9/C46.4	136	199

REGISTERED ELECTRICAL ENGINEER 3/9/15 DATE

6-29-15
PLANS APPROVAL DATE

REGISTERED PROFESSIONAL ENGINEER CECILIO BURCIAGA No. E015302 Exp. 3/31/17 ELECTRICAL STATE OF CALIFORNIA

THE STATE OF CALIFORNIA OR ITS OFFICERS OR AGENTS SHALL NOT BE RESPONSIBLE FOR THE ACCURACY OR COMPLETENESS OF SCANNED COPIES OF THIS PLAN SHEET.

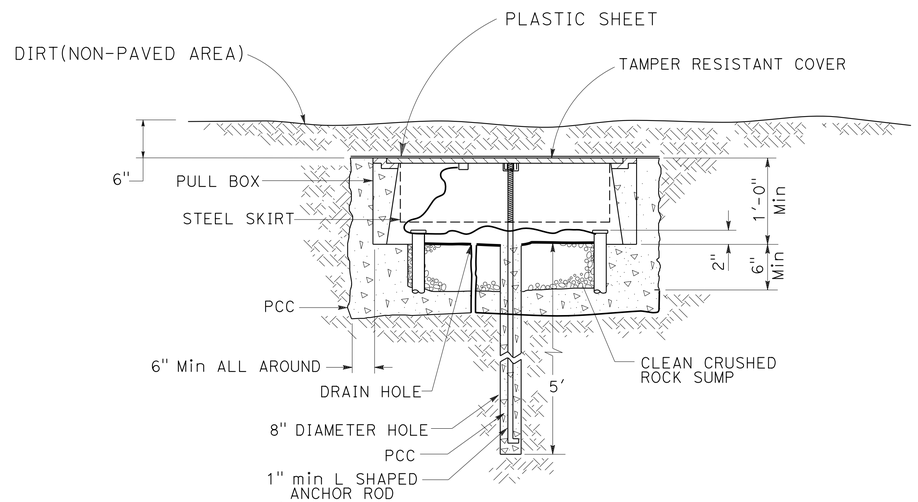

PULL BOX INSTALLATION DETAILS
FOR NON-PAVED AREAS

(PULL BOX WITH TAMPER RESISTANT COVER INSTALLATION DETAILS)

ELECTRICAL DETAILS

NO SCALE

E-37

STATE OF CALIFORNIA - DEPARTMENT OF TRANSPORTATION
Caltrans® **TRAFFIC DESIGN**

FUNCTIONAL SUPERVISOR: YI TSAU
CALCULATED-DESIGNED BY: QUINCIE TRAN
CHECKED BY: CECILIO BURCIAGA
REVISED BY
DATE REVISED

LAST REVISION 03-17-15 | DATE PLOTTED => 05-AUG-2015 | TIME PLOTTED => 10:24

Dist	COUNTY	ROUTE	POST MILES TOTAL PROJECT	SHEET No.	TOTAL SHEETS
07	LA	5	C43.9/C46.4	137	199

REGISTERED ELECTRICAL ENGINEER DATE 6/8/15

PLANS APPROVAL DATE 6-29-15

REGISTERED PROFESSIONAL ENGINEER PATRICK P. LUI No. E17534 Exp. 06/30/17 ELECTRICAL STATE OF CALIFORNIA

THE STATE OF CALIFORNIA OR ITS OFFICERS OR AGENTS SHALL NOT BE RESPONSIBLE FOR THE ACCURACY OR COMPLETENESS OF SCANNED COPIES OF THIS PLAN SHEET.

LEGEND: (THIS SHEET ONLY)

1. MODEL 334-TV CONTROLLER CABINET WITH FOUNDATION
2. MODEL 334-L CONTROLLER CABINET WITH FOUNDATION
3. TYPE CCTV 35 POLE WITH FOUNDATION
4. TEMPERATURE SENSOR
5. COMMUNICATION CONDUIT (BRIDGE)

NOTE: ITEMS SHOWN IN TABLE ARE NOT A SEPARATE PAY ITEM, FOR INFORMATION ONLY

MODIFY COMMUNICATION SYSTEM

SHEET No.	2"C	3"C	* 5	4"C	1" INNER-DUCT	12SMFO	48SMFO	72SMFO	TRACER WIRE	#4 AWG	#8(G) AWG	SPLICE VAULT	PB (C)	PB (T)	PB	1	2	3	30A CB	CCTV ASSEMBLY	4	ETHERNET SWITCH TYPE 1	SFP MODULES (LX)	ETHERNET SWITCH TYPE 2	SFP MODULES (ZX)	VIDEO ENCODER	FDU	FOSE
	LF	LF	LF	LF	LF	LF	LF	LF	LF	LF	LF	EA	EA	EA	EA	EA	EA	EA	EA	EA	EA	EA	EA	EA	EA	EA	EA	EA
E-2				1580	3950	720	1450	730	730				3							1	1		2	1	2	1	2	3
E-3				2580	3870		2580	1300	1030											1	1	1	2			1	1	1
E-4	1925	230	12	4180	8990	3010	3580	2600	2150	1600	800	1	3	3					2		1	1	2				4	1
E-5		470	15	2540	4910	770	2540	1270	2120				2	1							2	2	4				2	
E-6		430		1480	5280	2200	3140	1570	2020				3	3						1	2	2	4			1	2	
E-7				2560	3980	170	2620	1310	1310			1	1															1
E-8				2620	3930		2620	1310	1340				3															
E-9	240			1940	3840	270	1940	1200	1440				4								1	1	2				1	
E-10	300			2110	4960	940	2770	1810	1870				5							1	1	1	4	1	2	1	3	1
E-11				480	4340		2820	1420	1420				3															
E-12				2640	4130	210	2640	1320	1320				3															
E-13	80	40		380	550	210	470	230	330	160	80	1	1		1	1				1	1		2	1	2	1	2	1
E-14	70	70		50	180	50		100	60			1	2		1	1	1	1		1	2	1	2	1	2	1	3	

* - CONDUIT TRANSITION FROM BRIDGE STRUCTURE TO COMMUNICATION PULL BOX

WORK AT NORTH HOLLYWOOD HUB

SHEET No.	SFP (ZX)	FIBER JUMPER PAIRS
	EA	EA
E-28	2	2

WORK AT LOS ANGELES REGIONAL TRANSPORTATION MANAGEMENT CENTER

SHEET No.	COAX	SERIAL CABLE	VIDEO DECODER
	EA	EA	EA
E-29	6	12	6

ELECTRICAL QUANTITIES

E-38

REVISED BY | DATE REVISED

PATRICK P. LUI | JACQUELINE C. TAN

CALCULATED-DESIGNED BY | CHECKED BY

FUNCTIONAL SUPERVISOR: JACQUELINE C. TAN

STATE OF CALIFORNIA - DEPARTMENT OF TRANSPORTATION

Caltrans® OFFICE OF ITS

LAST REVISION 00-00-00 | DATE PLOTTED => 05-AUG-2015 | TIME PLOTTED => 10:24

Dist	COUNTY	ROUTE	POST MILES TOTAL PROJECT	SHEET No.	TOTAL SHEETS
07	LA	5	C43.9/C46.4	138	199

REGISTERED ELECT ENGINEER 3/9/15 DATE

6-29-15
PLANS APPROVAL DATE

REGISTERED PROFESSIONAL ENGINEER CECILIO BURCIAGA No. E015302 Exp. 3/31/17 ELECT STATE OF CALIFORNIA

THE STATE OF CALIFORNIA OR ITS OFFICERS OR AGENTS SHALL NOT BE RESPONSIBLE FOR THE ACCURACY OR COMPLETENESS OF SCANNED COPIES OF THIS PLAN SHEET.

NOTE: (THIS SHEET ONLY)

(N) - NOT A SEPARATE PAY ITEM, FOR INFORMATION ONLY.

MODIFY LIGHTING AND SIGN ILLUMINATION

	PULL BOX	2"C	No. 6 AWG	No. 8 (G)
SHEET No.	EA (N)	FT (N)	FT (N)	FT (N)
E-31	4	585	1170	585
E-32	3	487	974	1087
TOTAL	7	1072	2144	1672

MODIFY TRAFFIC MONITORING STATION

	TYPE E LOOP DETECTOR	STUBOUT
SHEET No.	EA (N)	EA (N)
E-34	5	2

MODIFY AUTOMATIC VEHICLE CLASSIFICATION STATION

SHEET No.	LOCATION/STATION	3"C FT (N)	4"C FT (N)	No. 8 (G) FT (N)	PULL BOX EA (N)	LOOPS EA (N)	AXLE SENSORS EA (N)
E-35	BALBOA Blvd	5	5	590	1	5	10

ELECTRICAL QUANTITIES

E-39

STATE OF CALIFORNIA - DEPARTMENT OF TRANSPORTATION
Caltrans TRAFFIC DESIGN

FUNCTIONAL SUPERVISOR: YI TSAU
CALCULATED-DESIGNED BY: QUINCIE TRAN
CHECKED BY: CECILIO BURCIAGA
REVISED BY
DATE REVISED

LAST REVISION 02-25-15
DATE PLOTTED => 05-AUG-2015
TIME PLOTTED => 10:24

M

Maint	MAINTENANCE
Max	MAXIMUM
MB	METAL BEAM
MBB	METAL BEAM BARRIER
MBGR	METAL BEAM GUARD RAILING
Med	MEDIAN
MGS	MIDWEST GUARDRAIL SYSTEM
MH	MANHOLE
Min	MINIMUM
Misc	MISCELLANEOUS
Misc I & S	MISCELLANEOUS IRON AND STEEL
Mkr	MARKER
Mod	MODIFIED,
	MODIFY
Mon	MONUMENT
MP	METAL PLATE
MPGR	METAL PLATE GUARD RAILING
MR	MOVEMENT RATING
MSE	MECHANICALLY STABILIZED EMBANKMENT
Mt	MOUNTAIN, MOUNT
Mtl	MATERIAL
MVP	MAINTENANCE VEHICLE PULLOUT

N

N	NORTH
NB	NORTHBOUND
No.	NUMBER (MUST HAVE PERIOD)
Nos.	NUMBERS (MUST HAVE PERIOD)
NPS	NOMINAL PIPE SIZE
NS	NEAR SIDE
NSP	NEW STANDARD PLAN
NTS	NOT TO SCALE

O

Oblr	OBLITERATE
OC	OVERCROSSING
OD	OUTSIDE DIAMETER
OF	OUTSIDE FACE
OG	ORIGINAL GROUND
OGAC	OPEN GRADED ASPHALT CONCRETE
OGFC	OPEN GRADED FRICTION COURSE
OH	OVERHEAD
OHWM	ORDINARY HIGH WATER MARK
O-O	OUT TO OUT
Opp	OPPOSITE
OSD	OVERSIDE DRAIN

P

P	PAGE
PAP	PERFORATED ALUMINUM PIPE
PB	PULL BOX
PC	POINT OF CURVATURE,
	PRECAST
PCC	POINT OF COMPOUND CURVE,
	PORTLAND CEMENT CONCRETE
PCMS	PORTABLE CHANGEABLE MESSAGE SIGN
PCP	PERFORATED CONCRETE PIPE,
	PRESTRESSED CONCRETE PIPE
PCVC	POINT OF COMPOUND VERTICAL CURVE
PEC	PERMIT TO ENTER AND CONSTRUCT
Ped	PEDESTRIAN
Ped OC	PEDESTRIAN OVERCROSSING
Ped UC	PEDESTRIAN UNDERCROSSING
Perm Mtl	PERMEABLE MATERIAL

P continued

PG	PROFILE GRADE
PI	POINT OF INTERSECTION
PJP	PARTIAL JOINT PENETRATION
Pkwy	PARKWAY
ℙ,PL	PLATE
P/L	PROPERTY LINE
PM	POST MILE,
	TIME FROM NOON TO MIDNIGHT
PN	PAVING NOTCH
POC	POINT OF HORIZONTAL CURVE
POT	POINT OF TANGENT
POVC	POINT OF VERTICAL CURVE
PP	PIPE PILE,
	PLASTIC PIPE,
	POWER POLE
PPL	PREFORMED PERMEABLE LINER
PPP	PERFORATED PLASTIC PIPE
PRC	POINT OF REVERSE CURVE
PRF	PAVEMENT REINFORCING FABRIC
PRVC	POINT OF REVERSE VERTICAL CURVE
PS&E	PLANS, SPECIFICATIONS AND ESTIMATES
PS, P/S	PRESTRESSED
PSP	PERFORATED STEEL PIPE
PT	POINT OF TANGENCY
PVC	POLYVINYL CHLORIDE
Pvmt	PAVEMENT

Q

Qty	QUANTITY

R

R	RADIUS
R & D	REMOVE AND DISPOSE
R & S	REMOVE AND SALVAGE
R/C	RATE OF CHANGE
RCA	REINFORCED CONCRETE ARCH
RCB	REINFORCED CONCRETE BOX
RCP	REINFORCED CONCRETE PIPE
RCPA	REINFORCED CONCRETE PIPE ARCH
Rd	ROAD
Reinf	REINFORCED,
	REINFORCEMENT,
	REINFORCING
Rel	RELOCATE
Repl	REPLACEMENT
Ret	RETAINING
Rev	REVISED, REVISION
Rdwy	ROADWAY
RHMA	RUBBERIZED HOT MIX ASPHALT
Riv	RIVER
RM	ROAD-MIXED
RP	RADIUS POINT,
	REFERENCE POINT
RR	RAILROAD
RSP	ROCK SLOPE PROTECTION,
	REVISED STANDARD PLAN
Rt	RIGHT
Rte	ROUTE
RW	REDWOOD,
	RETAINING WALL
R/W	RIGHT OF WAY
Rwy	RAILWAY

S

S	SOUTH,
	SUPPLEMENT
SAE	STRUCTURE APPROACH EMBANKMENT
Salv	SALVAGE
SAPP	STRUCTURAL ALUMINUM PLATE PIPE
SB	SOUTHBOUND
SC	SAND CUSHION
SCSP	SLOTTED CORRUGATED STEEL PIPE
SD	STORM DRAIN
Sec	SECOND,
	SECTION
Sep	SEPARATION
SG	SUBGRADE
Shld	SHOULDER
Sht	SHEET
Sim	SIMILAR
℄	STATION LINE
SM	SELECTED MATERIAL
Spec	SPECIAL,
	SPECIFICATIONS
SPP	SLOTTED PLASTIC PIPE
SS	SLOPE STAKE
SSBM	STRAP AND SADDLE BRACKET METHOD
SSD	STRUCTURAL SECTION DRAIN
SSPA	STRUCTURAL STEEL PLATE ARCH
SSPP	STRUCTURAL STEEL PLATE PIPE
SSPPA	STRUCTURAL STEEL PLATE PIPE ARCH
SSRP	STEEL SPIRAL RIB PIPE
St	STREET
Sta	STATION
STBB	SINGLE THRIE BEAM BARRIER
Std	STANDARD
Str	STRUCTURE
Surf	SURFACING
SW	SIDEWALK,
	SOUND WALL
Swr	SEWER
Sym	SYMMETRICAL
S4S	SURFACE 4 SIDES

T

T	SEMI-TANGENT
Tan	TANGENT
TBB	THRIE BEAM BARRIER
Tbr	TIMBER
TC	TOP OF CURB
TCB	TRAFFIC CONTROL BOX
TCE	TEMPORARY CONSTRUCTION EASEMENT
Tel	TELEPHONE
Temp	TEMPORARY
TG	TOP OF GRADE
Tot	TOTAL
TP	TELEPHONE POLE
TPB	TREATED PERMEABLE BASE
TPM	TREATED PERMEABLE MATERIAL
Trans	TRANSITION

T continued

TS	TRANSVERSE,
	TRAFFIC SIGNAL,
	TUBULAR STEEL
Typ	TYPICAL

U

UC	UNDERCROSSING
UD	UNDERDRAIN
UG	UNDERGROUND
UON	UNLESS OTHERWISE NOTED
UP	UNDERPASS

V

V	VALVE,
	DESIGN SPEED
Var	VARIABLE,
	VARIES
VC	VERTICAL CURVE
VCP	VITRIFIED CLAY PIPE
Vert	VERTICAL
Via	VIADUCT
Vol	VOLUME

W

W	WEST,
	WIDTH
WB	WESTBOUND
WH	WEEP HOLE
WM	WIRE MESH
WS	WATER SURFACE
WSP	WELDED STEEL PIPE
Wt	WEIGHT
WV	WATER VALVE
WW	WINGWALL
WWLOL	WINGWALL LAYOUT LINE

X

X Sec	CROSS SECTION
Xing	CROSSING

Y

Yr	YEAR
Yrs	YEARS

Dist	COUNTY	ROUTE	POST MILES TOTAL PROJECT	SHEET No.	TOTAL SHEETS
07	LA	5	C43.9/C46.4	139	199

Grace M. Tsushima
REGISTERED CIVIL ENGINEER

July 19, 2013
PLANS APPROVAL DATE

REGISTERED PROFESSIONAL ENGINEER
Grace M. Tsushima
No. C49814
Exp. 9-30-14
CIVIL
STATE OF CALIFORNIA

THE STATE OF CALIFORNIA OR ITS OFFICERS OR AGENTS SHALL NOT BE RESPONSIBLE FOR THE ACCURACY OR COMPLETENESS OF SCANNED COPIES OF THIS PLAN SHEET.

TO ACCOMPANY PLANS DATED 6-29-15

UNIT OF MEASUREMENT SYMBOLS:

Some of the symbols used in the project plan quantity tables and in the Bid Item List are:

TABLE A

SYMBOL USED	DEFINITIONS
ACRE	ACRE
CF	CUBIC FOOT
CY	CUBIC YARD
EA	EACH
GAL	GALLON
LB	POUND
LF	LINEAR FOOT
SQFT	SQUARE FOOT
SQYD	SQUARE YARD
STA	100 FEET
TAB	TABLET
TON	2,000 POUNDS

Some of the symbols used in the plans other than in the project plan quantity tables are:

TABLE B

SYMBOL USED	DEFINITIONS
ksi	KIPS PER SQUARE INCH
ksf	KIPS PER SQUARE FOOT
psi	POUNDS PER SQUARE INCH
psf	POUNDS PER SQUARE FOOT
lb/ft^3, pcf	POUNDS PER CUBIC FOOT
tsf	TONS PER SQUARE FOOT
mph, MPH *	MILES PER HOUR
ø	NOMINAL DIAMETER
oz	OUNCE
lb	POUND
kip	1,000 POUNDS
cal	CALORIE
ft	FOOT OR FEET
gal	GALLON

* For use on a sign panel only

STATE OF CALIFORNIA
DEPARTMENT OF TRANSPORTATION

ABBREVIATIONS (SHEET 2 OF 2)

NO SCALE

RSP A10B DATED JULY 19, 2013 SUPERSEDES STANDARD PLAN A10B DATED MAY 20, 2011 - PAGE 2 OF THE STANDARD PLANS BOOK DATED 2010.

REVISED STANDARD PLAN RSP A10B

2010 REVISED STANDARD PLAN RSP A10B

6-7-13

Dist	COUNTY	ROUTE	POST MILES TOTAL PROJECT	SHEET No.	TOTAL SHEETS
07	LA	5	C43.9/C46.4	140	199

REGISTERED CIVIL ENGINEER

July 19, 2013
PLANS APPROVAL DATE

REGISTERED PROFESSIONAL ENGINEER Roberta L. McLaughlin No. C40375 Exp. 3-31-15 CIVIL STATE OF CALIFORNIA

THE STATE OF CALIFORNIA OR ITS OFFICERS OR AGENTS SHALL NOT BE RESPONSIBLE FOR THE ACCURACY OR COMPLETENESS OF SCANNED COPIES OF THIS PLAN SHEET.

TO ACCOMPANY PLANS DATED 6-29-15

2010 REVISED STANDARD PLAN RSP A20C

EXIT RAMP NEUTRAL AREA (GORE) TREATMENT

DETAIL 36

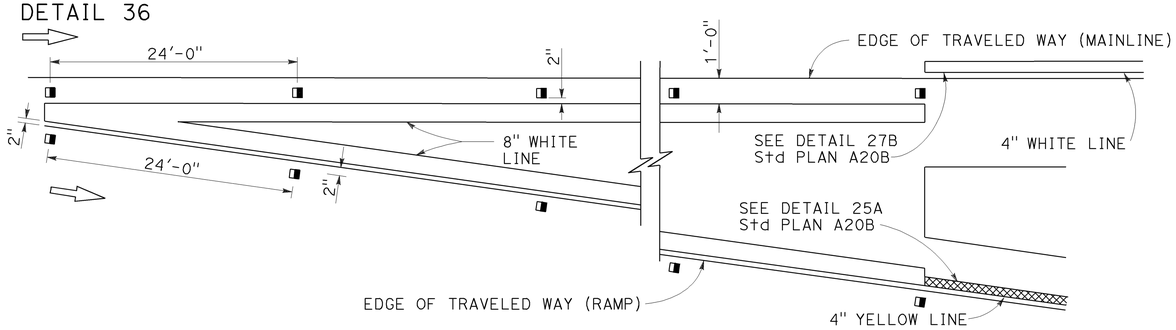

ENTRANCE RAMP NEUTRAL AREA (MERGE) TREATMENT

DETAIL 36A

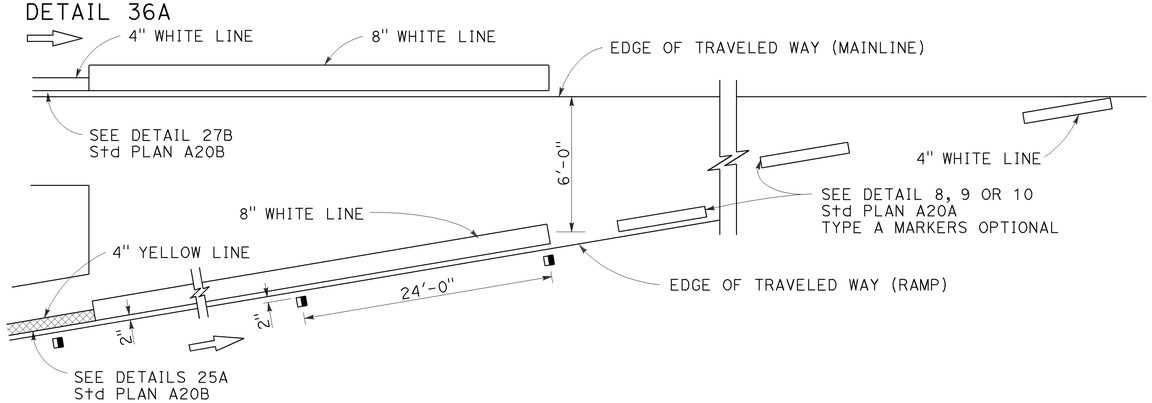

ENTRANCE RAMP NEUTRAL AREA (ACCELERATION LANE) TREATMENT

DETAIL 36B

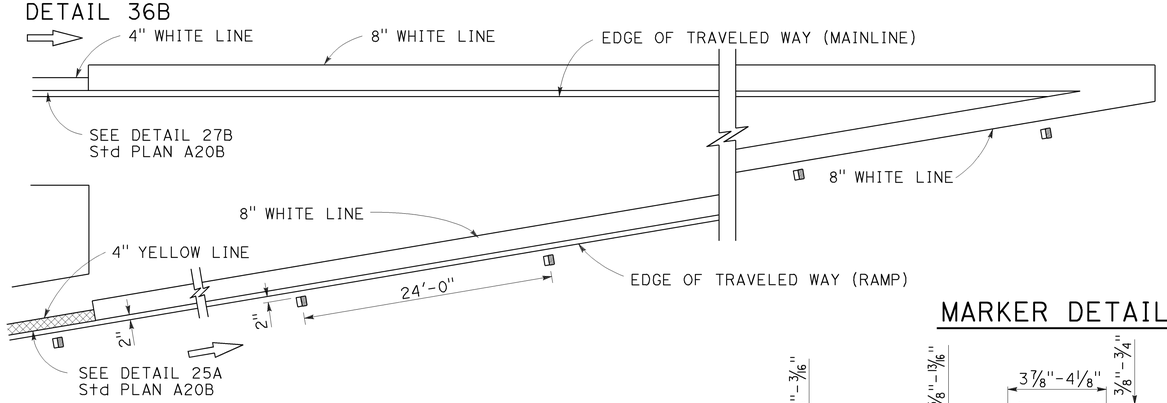

MARKER DETAILS

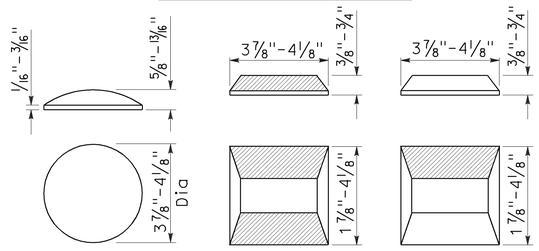

RETROREFLECTIVE FACE

LEGEND:

MARKERS

- ○ TYPE A WHITE NON-REFLECTIVE
- ⊟ TYPE C RED-CLEAR RETROREFLECTIVE
- ◨ TYPE G ONE-WAY CLEAR RETROREFLECTIVE

LANE DROP AT EXIT RAMPS

DETAIL 37

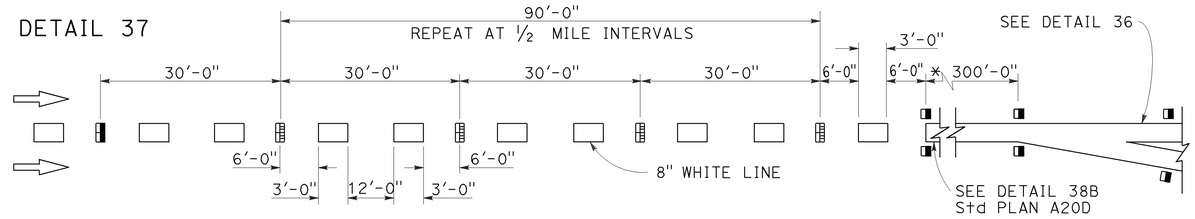

DETAIL 37A

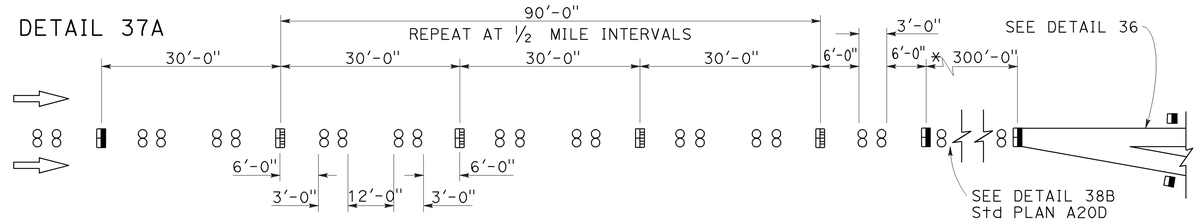

* The solid channelizing line shown may be omitted on short auxiliary lanes where weaving length is critical.

LANE DROP AT INTERSECTIONS

DETAIL 37B

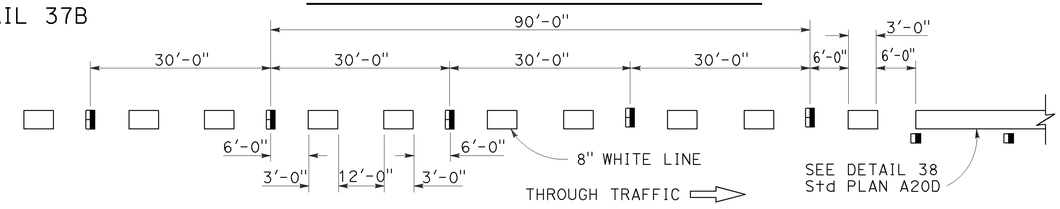

DETAIL 37C

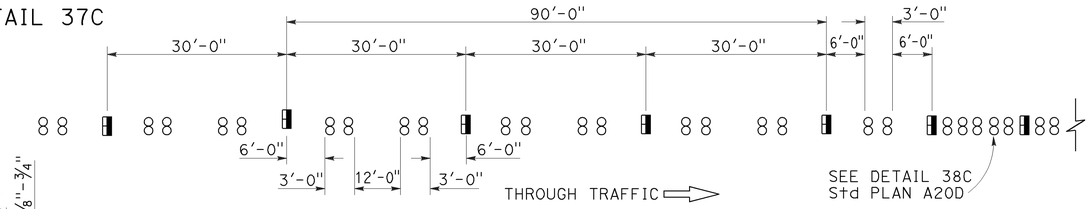

STATE OF CALIFORNIA
DEPARTMENT OF TRANSPORTATION

PAVEMENT MARKERS AND TRAFFIC LINE TYPICAL DETAILS

NO SCALE

RSP A20C DATED JULY 19, 2013 SUPERSEDES STANDARD PLAN A20C DATED MAY 20, 2011 - PAGE 11 OF THE STANDARD PLANS BOOK DATED 2010.

REVISED STANDARD PLAN RSP A20C

4-29-13

Dist	COUNTY	ROUTE	POST MILES TOTAL PROJECT	SHEET No.	TOTAL SHEETS
07	LA	5	C43.9/C46.4	141	199

REGISTERED CIVIL ENGINEER

April 20, 2012
PLANS APPROVAL DATE

REGISTERED PROFESSIONAL ENGINEER
Roberta L. McLaughlin
No. C40375
Exp. 3-31-13
CIVIL
STATE OF CALIFORNIA

THE STATE OF CALIFORNIA OR ITS OFFICERS OR AGENTS SHALL NOT BE RESPONSIBLE FOR THE ACCURACY OR COMPLETENESS OF SCANNED COPIES OF THIS PLAN SHEET.

TO ACCOMPANY PLANS DATED 6-29-15

2010 REVISED STANDARD PLAN RSP A24A

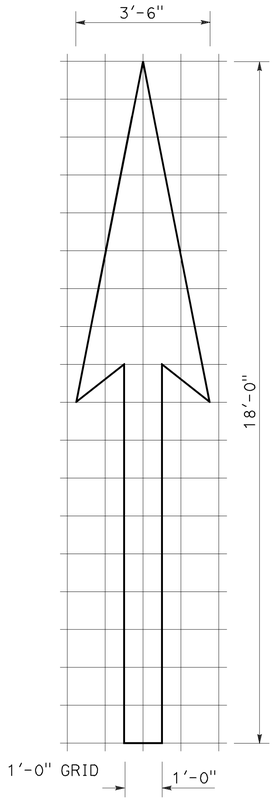

A=25 ft^2

TYPE I 18'-0" ARROW

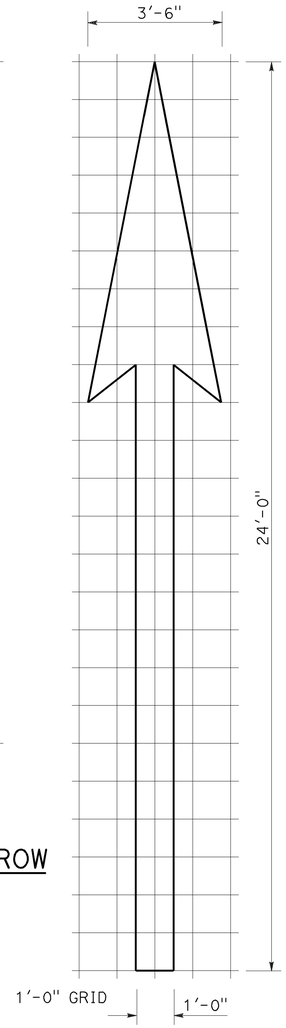

A=31 ft^2

TYPE I 24'-0" ARROW

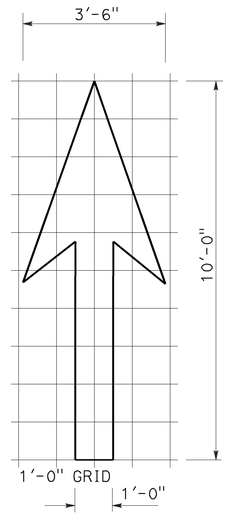

A=14 ft^2

TYPE I 10'-0" ARROW

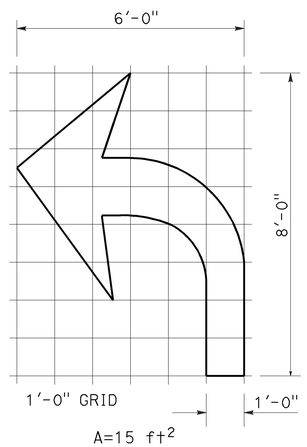

A=15 ft^2

TYPE IV (L) ARROW

(For Type IV (R) arrow, use mirror image)

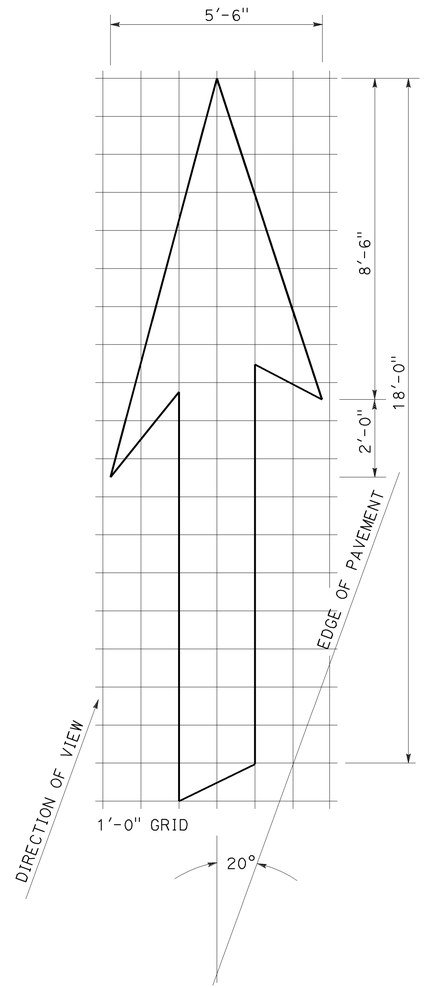

A=42 ft^2

TYPE VI ARROW

Right lane drop arrow
(For left lane, use mirror image)

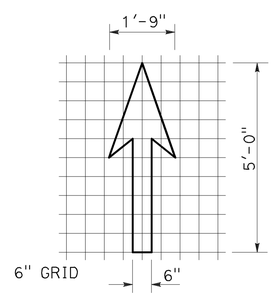

A=3.5 ft^2

BIKE LANE ARROW

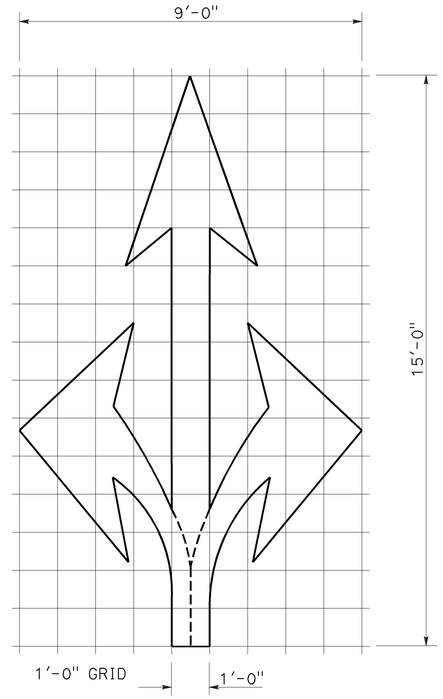

A=36 ft^2

TYPE VIII ARROW

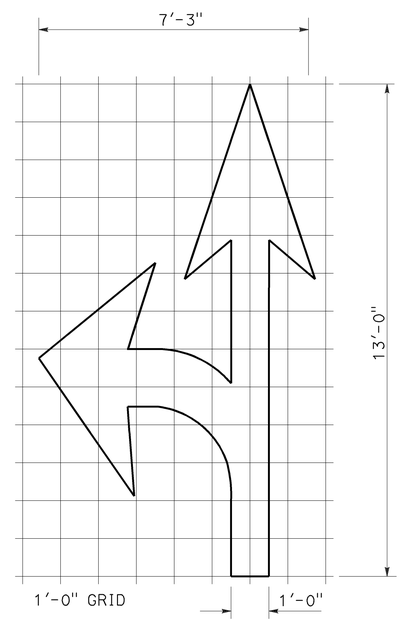

A=27 ft^2

TYPE VII (L) ARROW

(For Type VII (R) arrow, use mirror image)

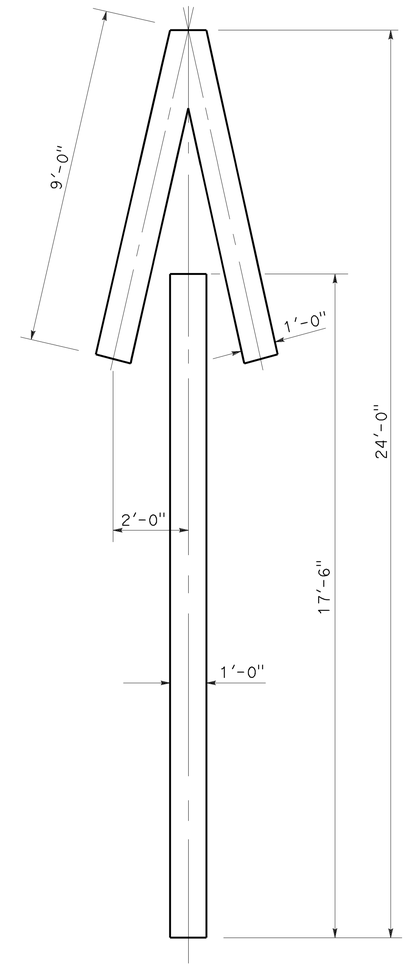

A=33 ft^2

TYPE V ARROW

NOTE:
Minor variations in dimensions may be accepted by the Engineer.

STATE OF CALIFORNIA
DEPARTMENT OF TRANSPORTATION

PAVEMENT MARKINGS ARROWS

NO SCALE

RSP A24A DATED APRIL 20, 2012 SUPERSEDES STANDARD PLAN A24A DATED MAY 20, 2011 - PAGE 13 OF THE STANDARD PLANS BOOK DATED 2010.

REVISED STANDARD PLAN RSP A24A

Dist	COUNTY	ROUTE	POST MILES TOTAL PROJECT	SHEET No.	TOTAL SHEETS
07	LA	5	C43.9/C46.4	142	199

REGISTERED CIVIL ENGINEER

October 19, 2012
PLANS APPROVAL DATE

REGISTERED PROFESSIONAL ENGINEER
Roberta L. McLaughlin
No. C40375
Exp. 3-31-13
CIVIL
STATE OF CALIFORNIA

THE STATE OF CALIFORNIA OR ITS OFFICERS OR AGENTS SHALL NOT BE RESPONSIBLE FOR THE ACCURACY OR COMPLETENESS OF SCANNED COPIES OF THIS PLAN SHEET.

NOTE: TO ACCOMPANY PLANS DATED 6-29-15

Minor variations in dimensions may be accepted by the Engineer.

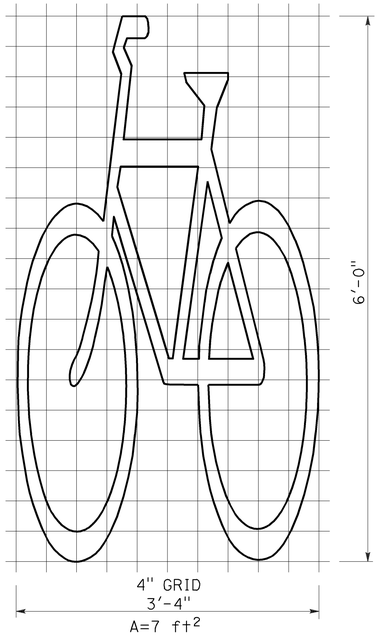

BIKE LANE SYMBOL WITHOUT PERSON

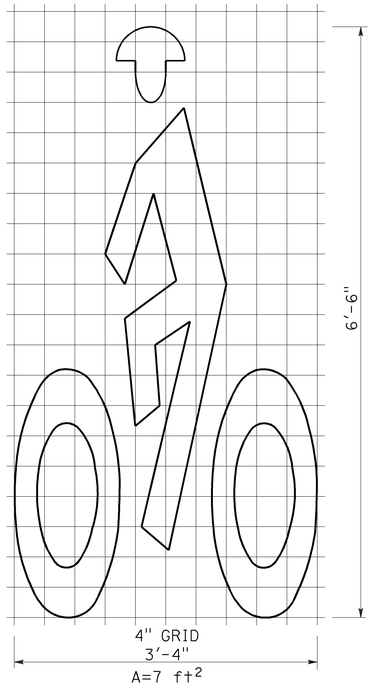

BIKE LANE SYMBOL WITH PERSON

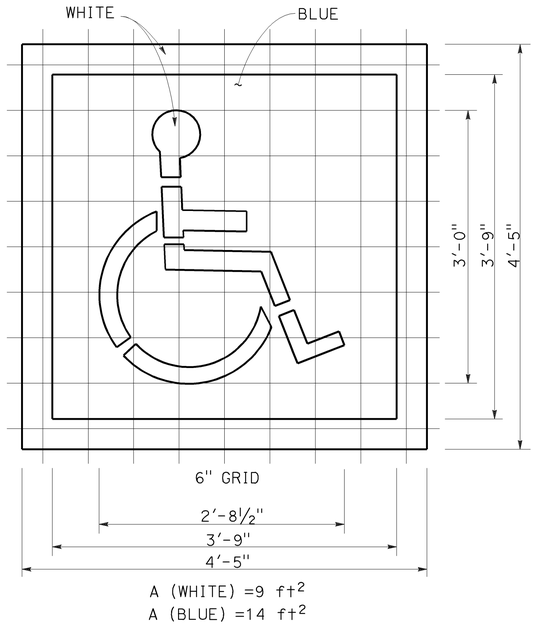

INTERNATIONAL SYMBOL OF ACCESSIBILITY (ISA) MARKING

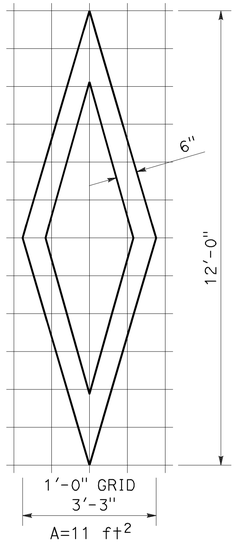

DIAMOND SYMBOL

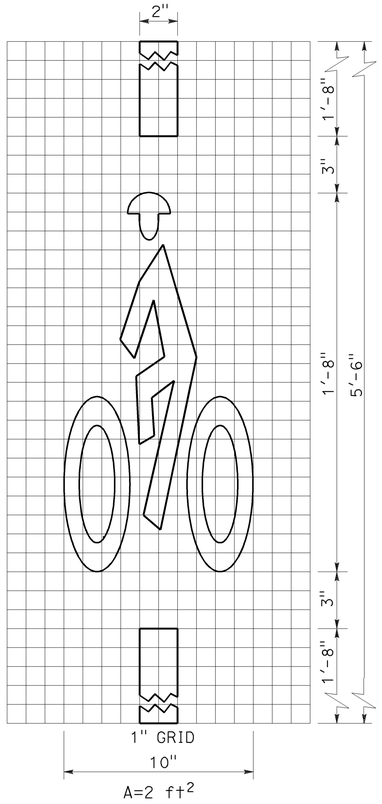

BICYCLE LOOP DETECTOR SYMBOL

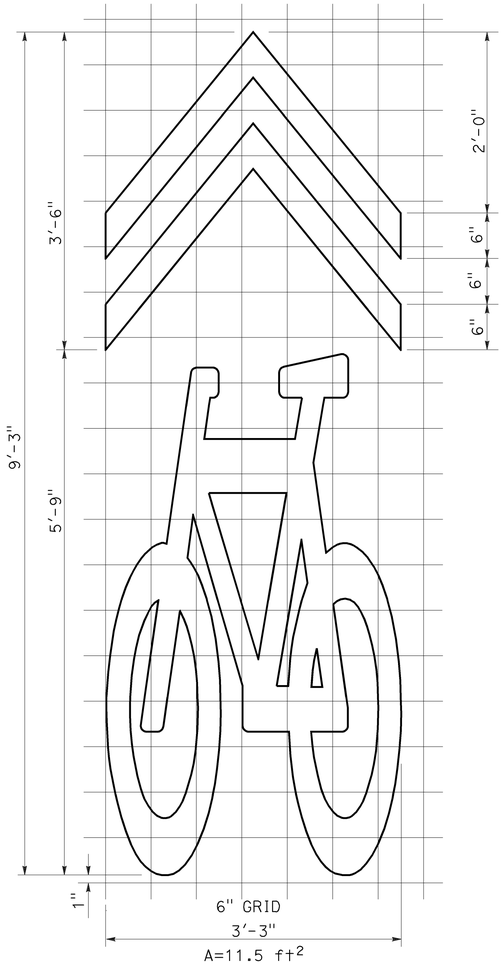

SHARED ROADWAY BICYCLE MARKING

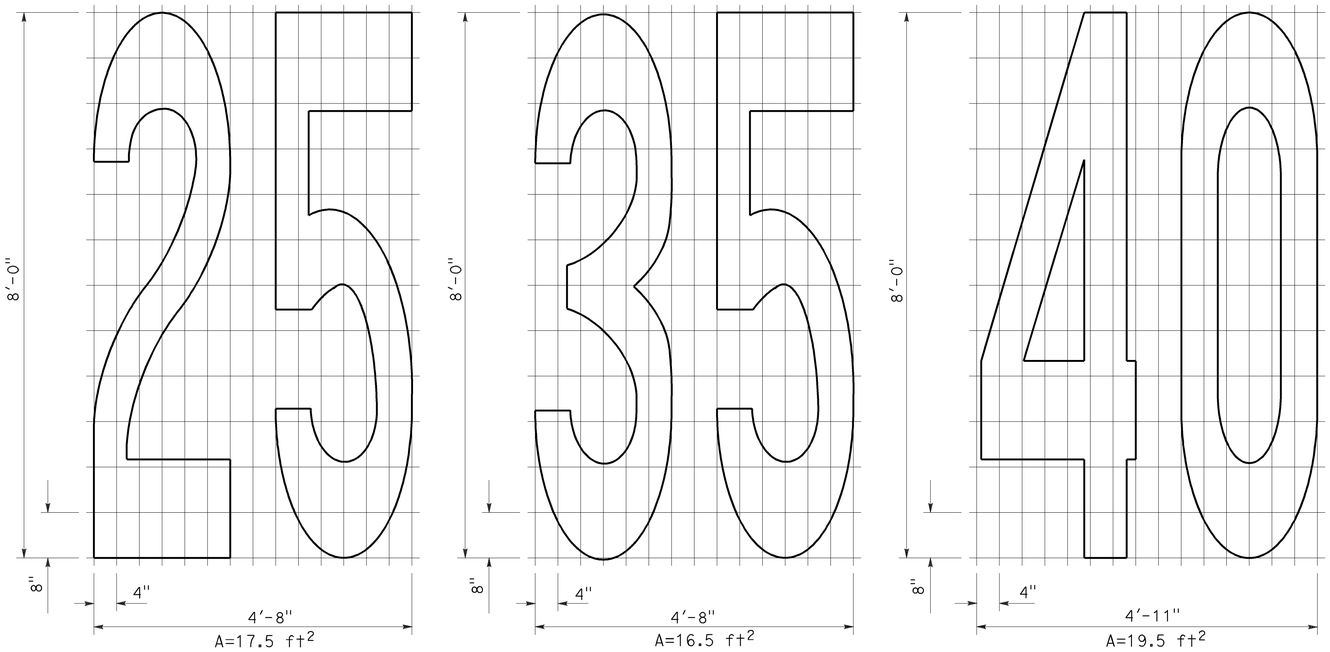

NUMERALS

STATE OF CALIFORNIA
DEPARTMENT OF TRANSPORTATION

PAVEMENT MARKINGS SYMBOLS AND NUMERALS

NO SCALE

RSP A24C DATED OCTOBER 19, 2012 SUPERSEDES STANDARD PLAN A24C DATED MAY 20, 2011 - PAGE 15 OF THE STANDARD PLANS BOOK DATED 2010.

REVISED STANDARD PLAN RSP A24C

2010 REVISED STANDARD PLAN RSP A24C

6-28-12

Dist	COUNTY	ROUTE	POST MILES TOTAL PROJECT	SHEET No.	TOTAL SHEETS
07	LA	5	C43.9/C46.4	143	199

REGISTERED CIVIL ENGINEER

July 20, 2012
PLANS APPROVAL DATE

REGISTERED PROFESSIONAL ENGINEER
Roberta L. McLaughlin
No. C40375
Exp. 3-31-13
CIVIL
STATE OF CALIFORNIA

THE STATE OF CALIFORNIA OR ITS OFFICERS OR AGENTS SHALL NOT BE RESPONSIBLE FOR THE ACCURACY OR COMPLETENESS OF SCANNED COPIES OF THIS PLAN SHEET.

TO ACCOMPANY PLANS DATED 6-29-15

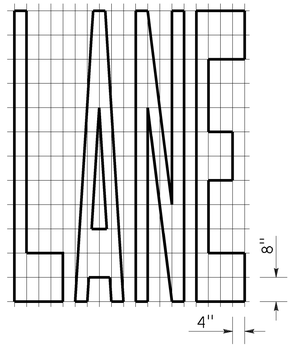

A=24 ft^2

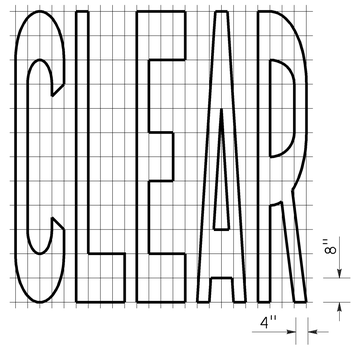

A=27 ft^2

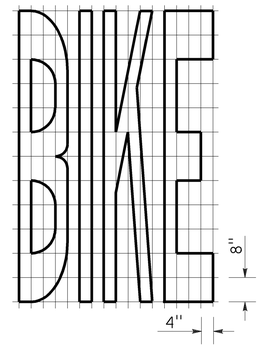

A=21 ft^2

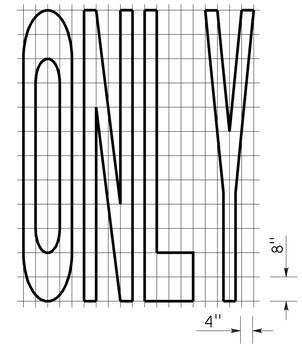

A=22 ft^2

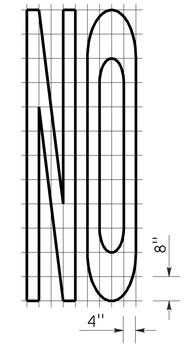

A=14 ft^2

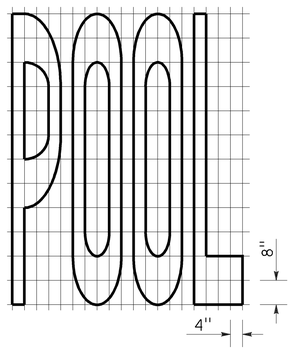

A=23 ft^2

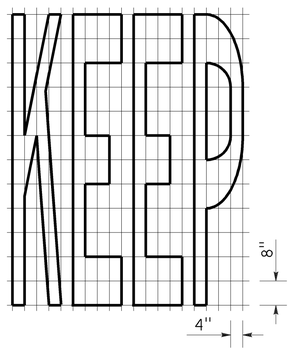

A=24 ft^2

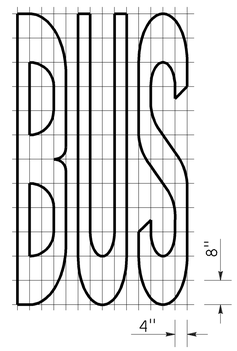

A=20 ft^2

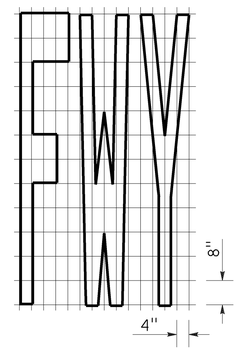

A=16 ft^2

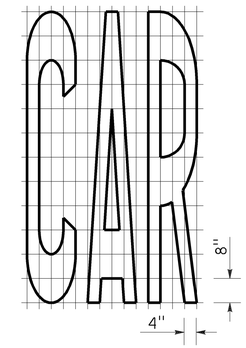

A=17 ft^2

WORD MARKINGS			
ITEM	ft^2	ITEM	ft^2
LANE	24	NO	14
POOL	23	BIKE	21
CAR	17	BUS	20
CLEAR	27	ONLY	22
KEEP	24	FWY	16

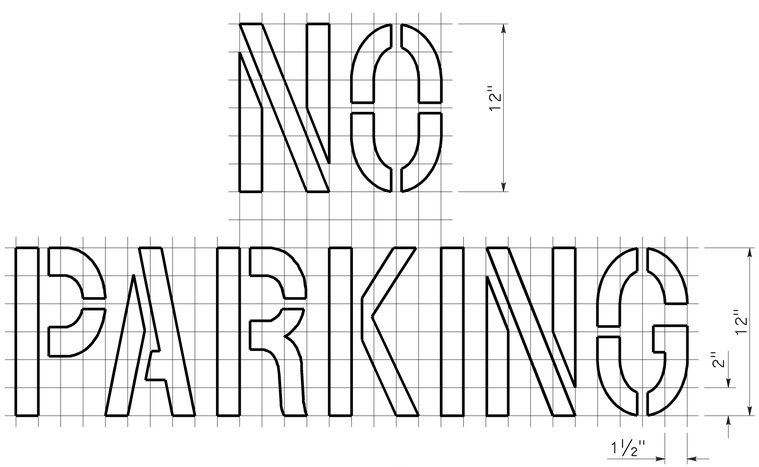

A=2 ft^2
See Notes 6 and 7

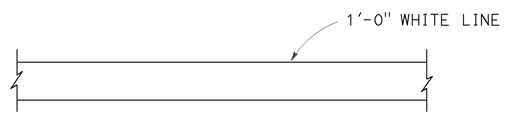

LIMIT LINE (STOP LINE)

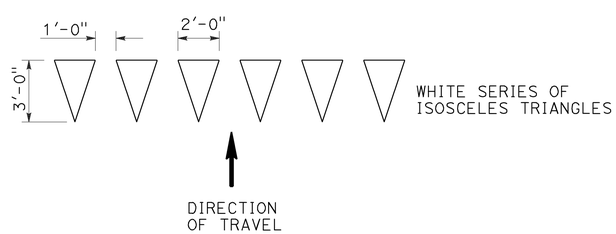

YIELD LINE

NOTES:

1. If a message consists of more than one word, it should read "UP", i.e., the first word should be nearest the driver.
2. The space between words should be at least four times the height of the characters for low speed roads, but not more than ten times the height of the characters. The space may be reduced appropriately where there is limited space because of local conditions.
3. Minor variations in dimensions may be accepted by the Engineer.
4. Portions of a letter, number or symbol may be separated by connecting segments not to exceed 2" in width.
5. The words "NO PARKING" pavement marking is to be used for parking facilities. For typical locations of markings, see Standard Plans A90A and A90B.
6. The words "NO PARKING", shall be painted in white letters no less than 1'-0" high on a contrasting background and located so that it is visible to traffic enforcement officials.

STATE OF CALIFORNIA
DEPARTMENT OF TRANSPORTATION

PAVEMENT MARKINGS WORDS, LIMIT AND YIELD LINES

NO SCALE

RSP A24E DATED JULY 20, 2012 SUPERSEDES STANDARD PLAN A24E
DATED MAY 20, 2011 - PAGE 17 OF THE STANDARD PLANS BOOK DATED 2010.

REVISED STANDARD PLAN RSP A24E

2010 REVISED STANDARD PLAN RSP A24E

6-12-12

Dist	COUNTY	ROUTE	POST MILES TOTAL PROJECT	SHEET No.	TOTAL SHEETS
07	LA	5	C43.9/C46.4	144	199

REGISTERED CIVIL ENGINEER

July 20, 2012
PLANS APPROVAL DATE

REGISTERED PROFESSIONAL ENGINEER
Roberta L. McLaughlin
No. C40375
Exp. 3-31-13
CIVIL
STATE OF CALIFORNIA

THE STATE OF CALIFORNIA OR ITS OFFICERS OR AGENTS SHALL NOT BE RESPONSIBLE FOR THE ACCURACY OR COMPLETENESS OF SCANNED COPIES OF THIS PLAN SHEET.

TO ACCOMPANY PLANS DATED 6-29-15

2010 REVISED STANDARD PLAN RSP A24F

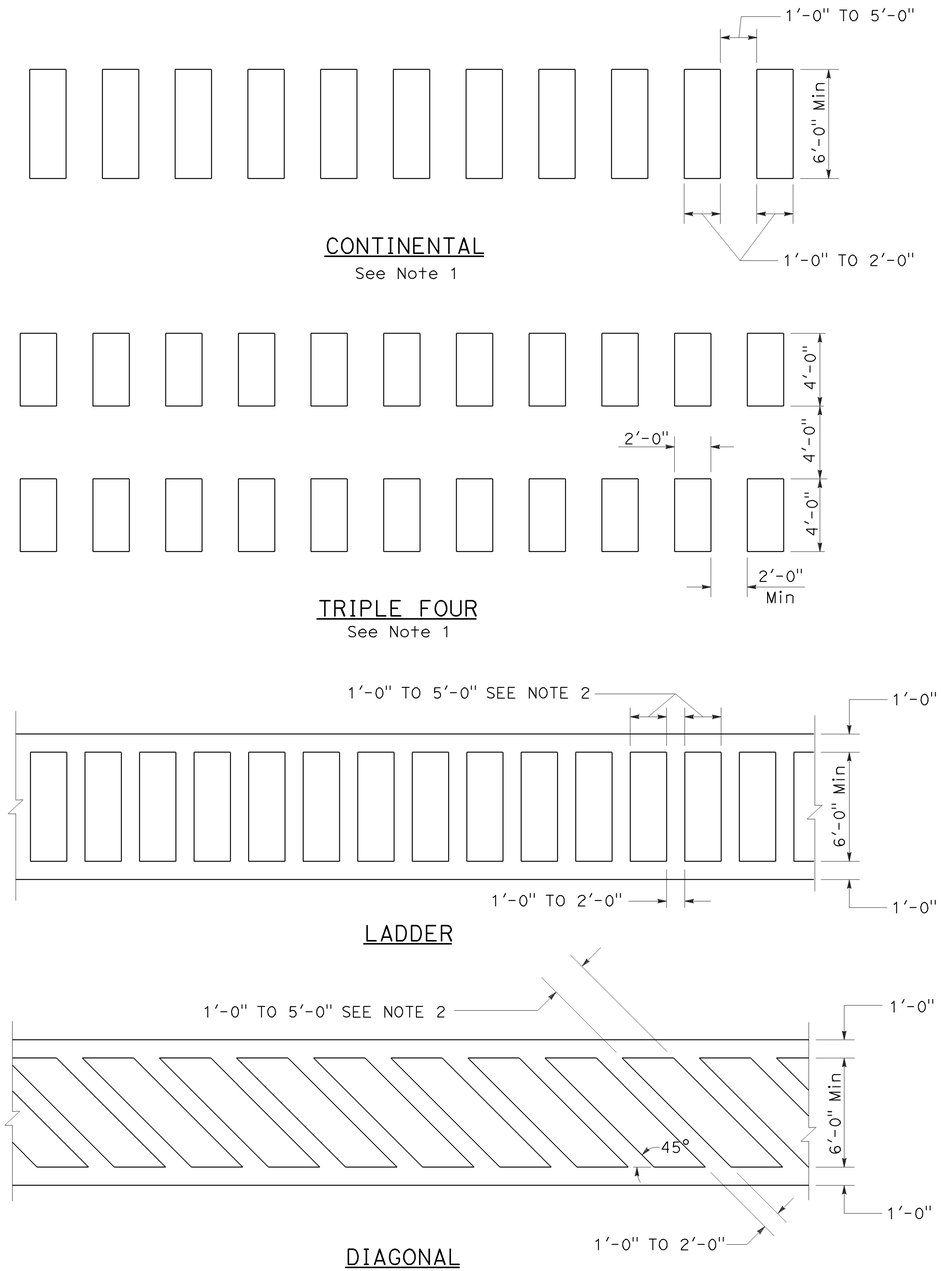

HIGHER VISIBILITY CROSSWALKS

NOTES:

1. Spaces between markings should be placed in wheel tracks of each lane.
2. Spacings not to exceed 2.5 times width of longitudinal line.
3. All crosswalk markings must be white except for those near schools must be yellow.

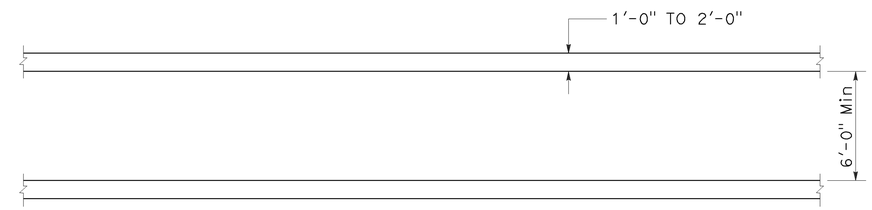

BASIC

STATE OF CALIFORNIA
DEPARTMENT OF TRANSPORTATION

PAVEMENT MARKINGS CROSSWALKS

NO SCALE

RSP A24F DATED JULY 20, 2012 SUPPLEMENTS THE STANDARD PLANS BOOK DATED 2010.

REVISED STANDARD PLAN RSP A24F

Dist	COUNTY	ROUTE	POST MILES TOTAL PROJECT	SHEET No.	TOTAL SHEETS
07	LA	5	C43.9/C46.4	145	199

Randell D. Hiatt
REGISTERED CIVIL ENGINEER

July 19, 2013
PLANS APPROVAL DATE

REGISTERED PROFESSIONAL ENGINEER
Randell D. Hiatt
No. C50200
Exp. 6-30-15
CIVIL
STATE OF CALIFORNIA

THE STATE OF CALIFORNIA OR ITS OFFICERS OR AGENTS SHALL NOT BE RESPONSIBLE FOR THE ACCURACY OR COMPLETENESS OF SCANNED COPIES OF THIS PLAN SHEET.

TO ACCOMPANY PLANS DATED 6-29-15

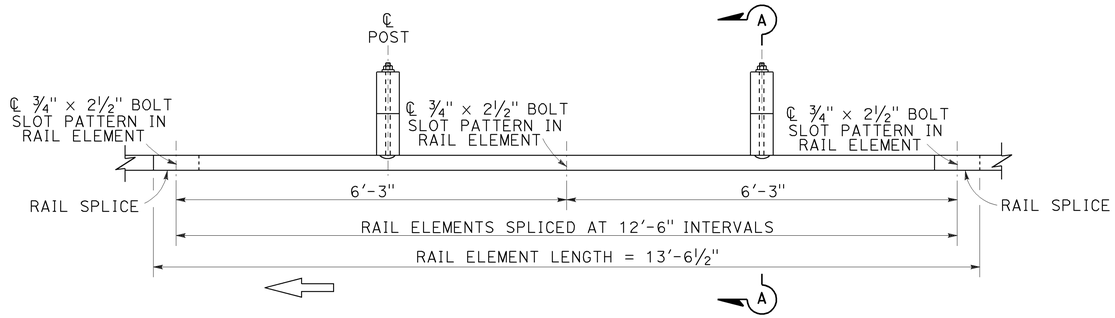

PLAN

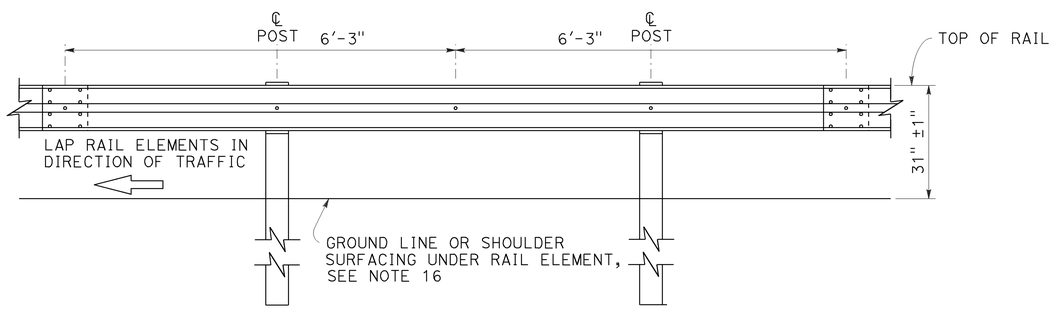

ELEVATION

MIDWEST GUARDRAIL SYSTEM WITH WOOD POST AND BLOCKS

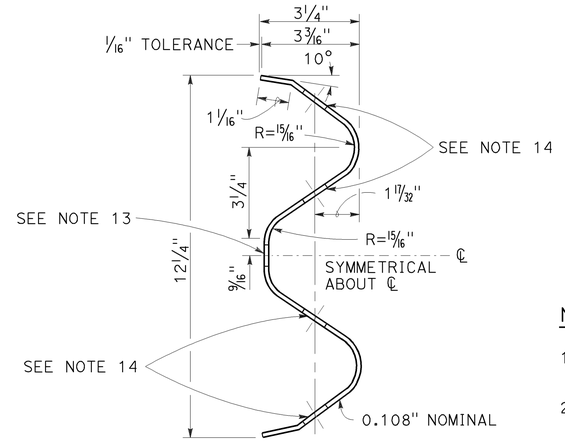

SECTION THRU RAIL ELEMENT

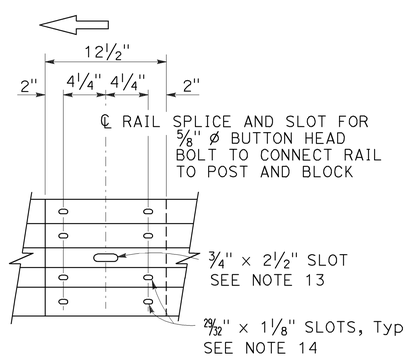

ELEVATION

RAIL ELEMENT SPLICE DETAIL

a) Connect the over lapped end of the rail elements with ⅝" ø × 1⅜" button head oval shoulder splice bolts inserted into the 29⁄32" × 1⅛" slots and bolted together with ⅝" ø recessed hex nuts. Recess of hex nut points toward rail element. A total of 8 bolts and nuts are to be used at each rail splice connection.

b) The ends of the rail elements are to be overlapped in the direction of traffic (see details).

c) Where end cap is to be attached to the end of a rail element, a total of 4 of the above described splice bolts and nuts are to be used.

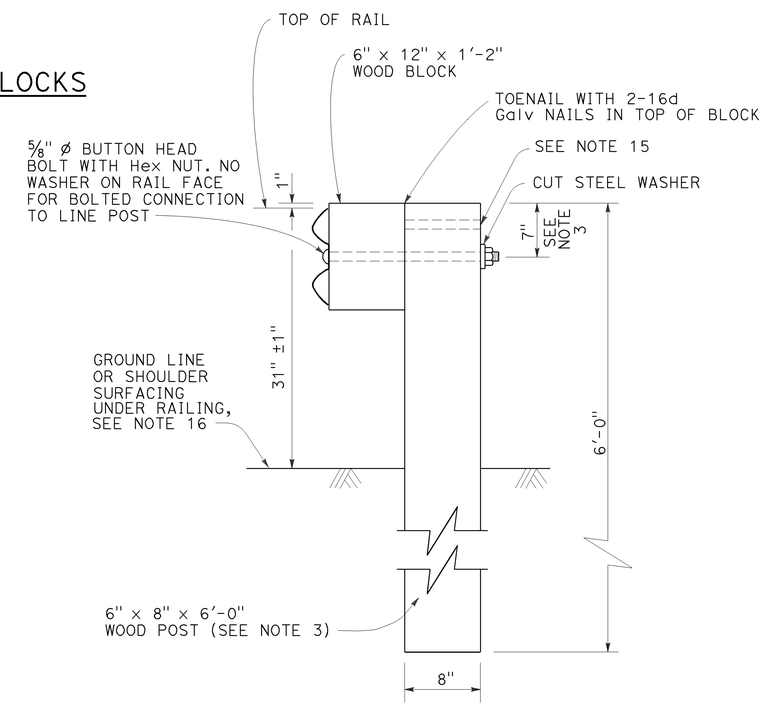

SECTION A-A

TYPICAL WOOD LINE POST INSTALLATION

See Note 4

NOTES:

1. For details of steel post installations, see Revised Standard Plan RSP A77L2.
2. For details of standard hardware used to construct MGS, see Revised Standard Plan RSP A77M1.
3. For details of wood posts and wood blocks used to construct MGS, see Revised Standard Plan RSP A77N1.
4. For additional installation details, see Revised Standard Plan RSP A77N3.
5. MGS post spacing to be 6'-3" center to center, except as otherwise noted.
6. For MGS typical layouts, see the A77P, A77Q and A77R Series of Standard Plans.
7. If railing is connected to terminal system end treatment, use 31" height terminal system end treatment.
8. For MGS end anchor details, see Revised Standard Plans RSP A77S1 and RSP A77T2.
9. For details of MGS transition to bridge railing, see Revised Standard Plan RSP A77U4.
10. For additional details of MSG connection to bridge railing, see Revised Standard Plans RSP A77U1, RSP A77U2 and RSP A77V1.
11. For MGS connection details to abutments and walls, see Revised Standard Plan RSP A77U3.
12. For typical MGS delineation and dike positioning details, see Revised Standard Plan RSP A77N4.
13. Slotted hole for bolted connection of rail element to block and post. See "Section Thru Rail Element".
14. Slotted holes for splice bolts to overlap ends of rail element. See "Section Thru Rail Element".
15. Additional hole in uppermost portion of line post is for potential future adjustments of railing height. See Revised Standard Plan RSP A77N1.
16. Install posts in soil.

STATE OF CALIFORNIA
DEPARTMENT OF TRANSPORTATION

MIDWEST GUARDRAIL SYSTEM STANDARD RAILING SECTION (WOOD POST WITH WOOD BLOCK)

NO SCALE

RSP A77L1 DATED JULY 19, 2013 SUPPLEMENTS STANDARD PLANS BOOK DATED 2010.

REVISED STANDARD PLAN RSP A77L1

2010 REVISED STANDARD PLAN RSP A77L1

7-3-13

Dist	COUNTY	ROUTE	POST MILES TOTAL PROJECT	SHEET No.	TOTAL SHEETS
07	LA	5	C43.9/C46.4	146	199

Randell D. Hiatt
REGISTERED CIVIL ENGINEER

July 19, 2013
PLANS APPROVAL DATE

REGISTERED PROFESSIONAL ENGINEER
Randell D. Hiatt
No. C50200
Exp. 6-30-15
CIVIL
STATE OF CALIFORNIA

THE STATE OF CALIFORNIA OR ITS OFFICERS OR AGENTS SHALL NOT BE RESPONSIBLE FOR THE ACCURACY OR COMPLETENESS OF SCANNED COPIES OF THIS PLAN SHEET.

TO ACCOMPANY PLANS DATED 6-29-15

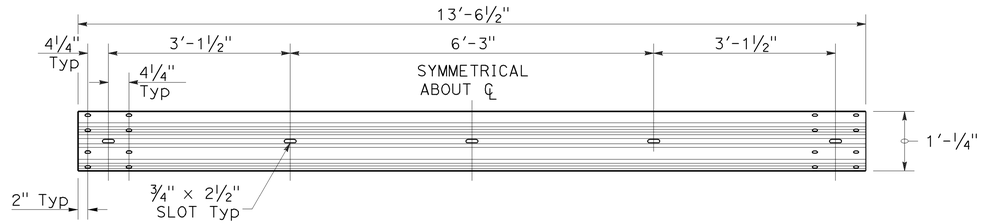

TYPICAL RAIL ELEMENT

NOTE:

1. Slotted holes for splice bolts to overlap ends of rail element.

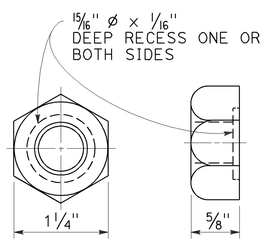

⅝" ø RECESS NUT

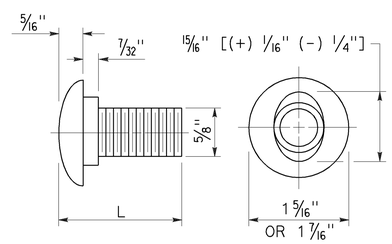

⅝" ø BUTTON HEAD BOLT

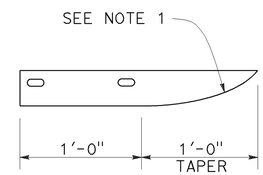

PLAN

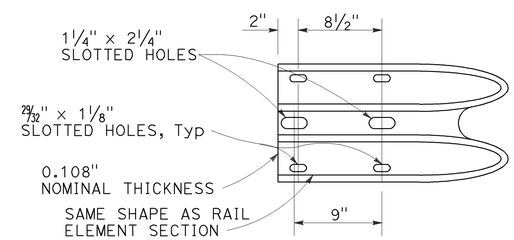

ELEVATION

END CAP
(TYPE A)

BUTTON HEAD BOLT

L	THREAD LENGTH
1⅜"	FULL THREAD LENGTH
2"	FULL THREAD LENGTH
10"	4" Min THREAD LENGTH
18"	4" Min THREAD LENGTH
20"	4" Min THREAD LENGTH
22"	4" Min THREAD LENGTH
26"	4" Min THREAD LENGTH
36"	4" Min THREAD LENGTH
** 2¾"	2" Min THREAD LENGTH
** 19"	4" Min THREAD LENGTH

** For nested rail applications.

STATE OF CALIFORNIA
DEPARTMENT OF TRANSPORTATION

MIDWEST GUARDRAIL SYSTEM STANDARD HARDWARE

NO SCALE

RSP A77M1 DATED JULY 19, 2013 SUPPLEMENTS THE STANDARD PLANS BOOK DATED 2010.

REVISED STANDARD PLAN RSP A77M1

2010 REVISED STANDARD PLAN RSP A77M1

Dist	COUNTY	ROUTE	POST MILES TOTAL PROJECT	SHEET No.	TOTAL SHEETS
07	LA	5	C43.9/C46.4	147	199

Randell D. Hiatt
REGISTERED CIVIL ENGINEER

July 19, 2013
PLANS APPROVAL DATE

REGISTERED PROFESSIONAL ENGINEER
Randell D. Hiatt
No. C50200
Exp. 6-30-15
CIVIL
STATE OF CALIFORNIA

THE STATE OF CALIFORNIA OR ITS OFFICERS OR AGENTS SHALL NOT BE RESPONSIBLE FOR THE ACCURACY OR COMPLETENESS OF SCANNED COPIES OF THIS PLAN SHEET.

TO ACCOMPANY PLANS DATED 6-29-15

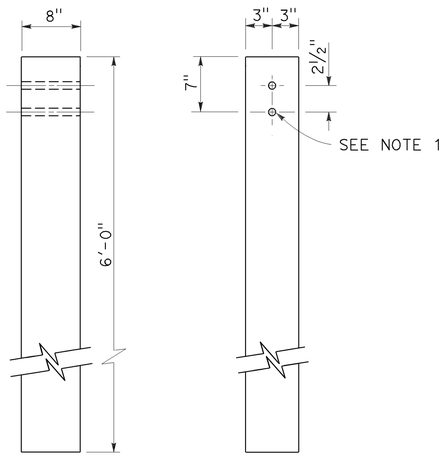

SIDE FRONT

6" x 8" WOOD POST
See Note 3

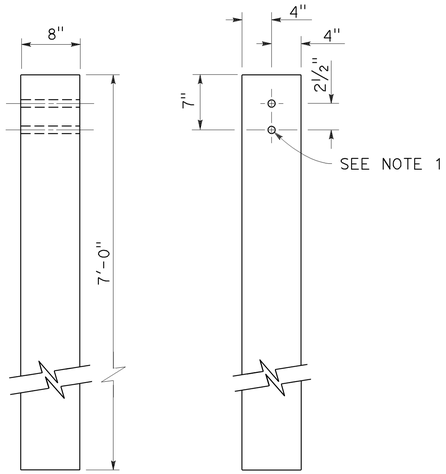

SIDE FRONT

8" x 8" WOOD POST
See Note 4

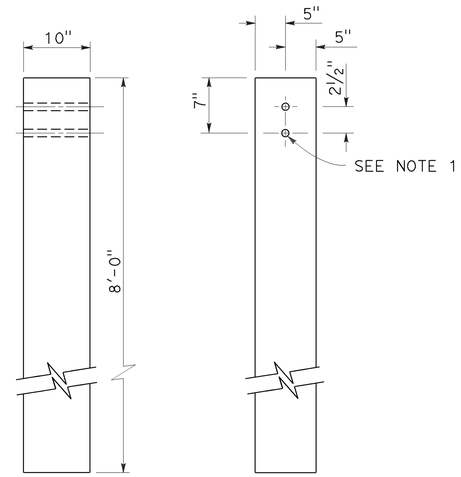

SIDE FRONT

10" x 10" WOOD POST
See Note 5

NOTES:

1. All holes in wood posts and blocks shall be ¾" Dia ± 1/16".
2. Dimensions shown for wood post are nominal.
3. This post and block combination used for standard line post sections of MGS.
4. This post and 8" x 12" block combination used for line post sections of MGS on narrow roadways.
5. This post and 8" x 12" block combination is typically used where strengthened line post sections of MGS are warranted to shield fixed objects.
6. See Revised Standard Plan RSP A77L3 for use of 6" x 8" and 8" x 8" wood blocks.

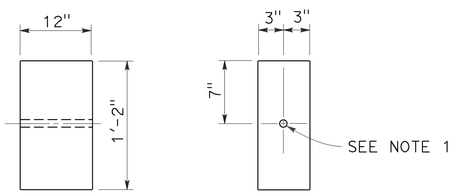

SIDE FRONT

6" x 12" WOOD BLOCK
See Note 3

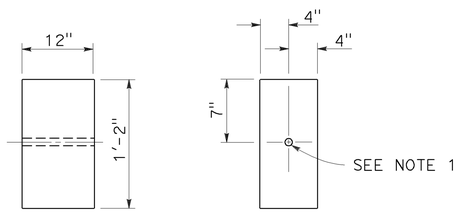

SIDE FRONT

8" x 12" WOOD BLOCK

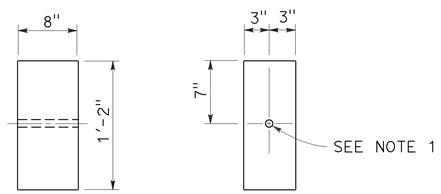

SIDE FRONT

6" x 8" WOOD BLOCK
Only for use with metal beam guard rail see Note 6

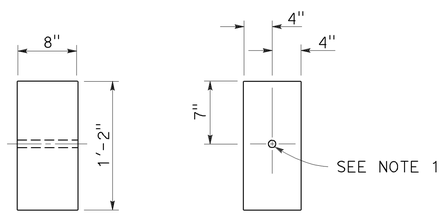

SIDE FRONT

8" x 8" WOOD BLOCK
Only for use with metal beam guard rail see Note 6

STATE OF CALIFORNIA
DEPARTMENT OF TRANSPORTATION

MIDWEST GUARDRAIL SYSTEM WOOD POST AND WOOD BLOCK DETAILS

NO SCALE

RSP A77N1 DATED JULY 19, 2013 SUPPLEMENTS THE STANDARD PLANS BOOK DATED 2010.

REVISED STANDARD PLAN RSP A77N1

2010 REVISED STANDARD PLAN RSP A77N1

7-3-13

Dist	COUNTY	ROUTE	POST MILES TOTAL PROJECT	SHEET No.	TOTAL SHEETS
07	LA	5	C43.9/C46.4	148	199

Randell D. Hiatt
REGISTERED CIVIL ENGINEER

November 15, 2013
PLANS APPROVAL DATE

REGISTERED PROFESSIONAL ENGINEER
Randell D. Hiatt
No. C50200
Exp. 6-30-15
CIVIL
STATE OF CALIFORNIA

THE STATE OF CALIFORNIA OR ITS OFFICERS OR AGENTS SHALL NOT BE RESPONSIBLE FOR THE ACCURACY OR COMPLETENESS OF SCANNED COPIES OF THIS PLAN SHEET.

TO ACCOMPANY PLANS DATED 6-29-15

2010 REVISED STANDARD PLAN RSP A77N3

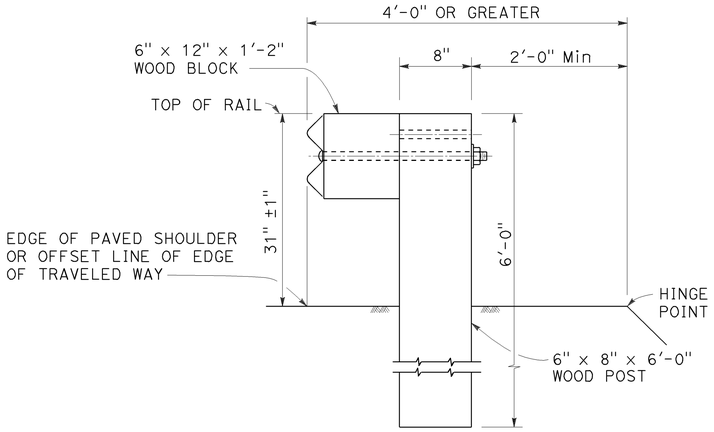

DETAIL A

TYPICAL ROADWAY INSTALLATION

See Note 1

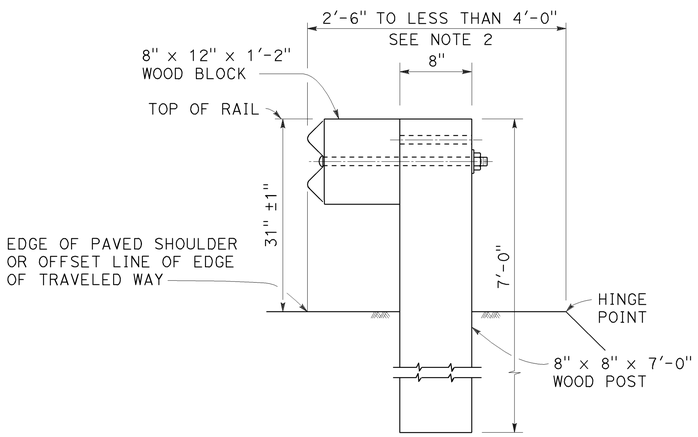

DETAIL B

NARROW ROADWAY INSTALLATION

See Note 1

POST EMBEDMENT

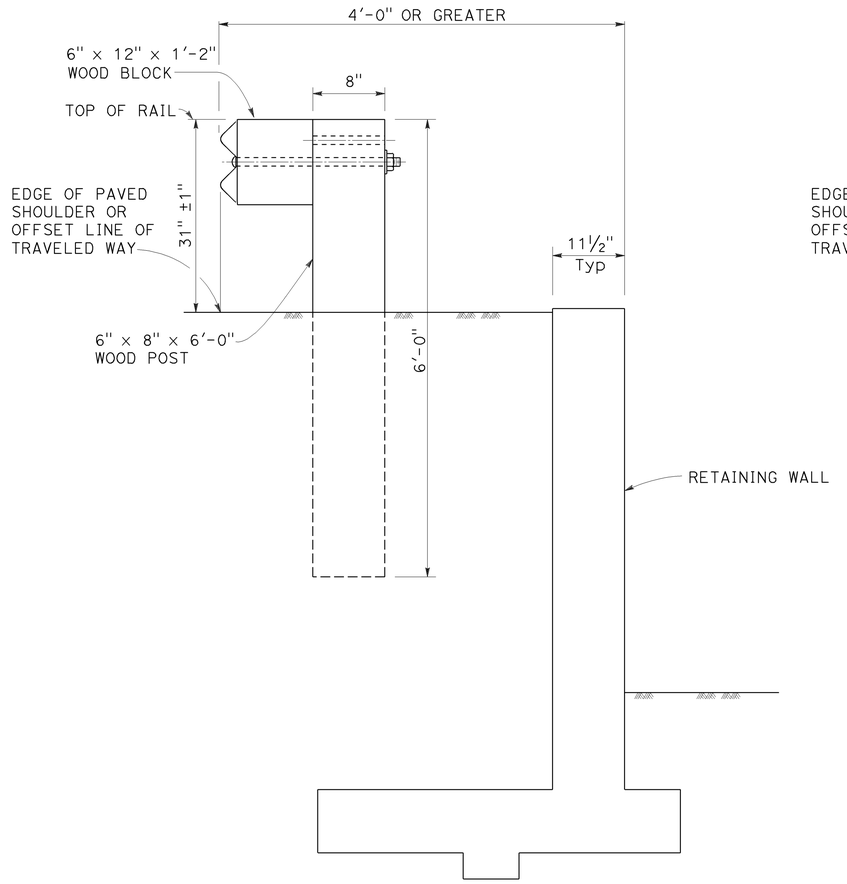

DETAIL C

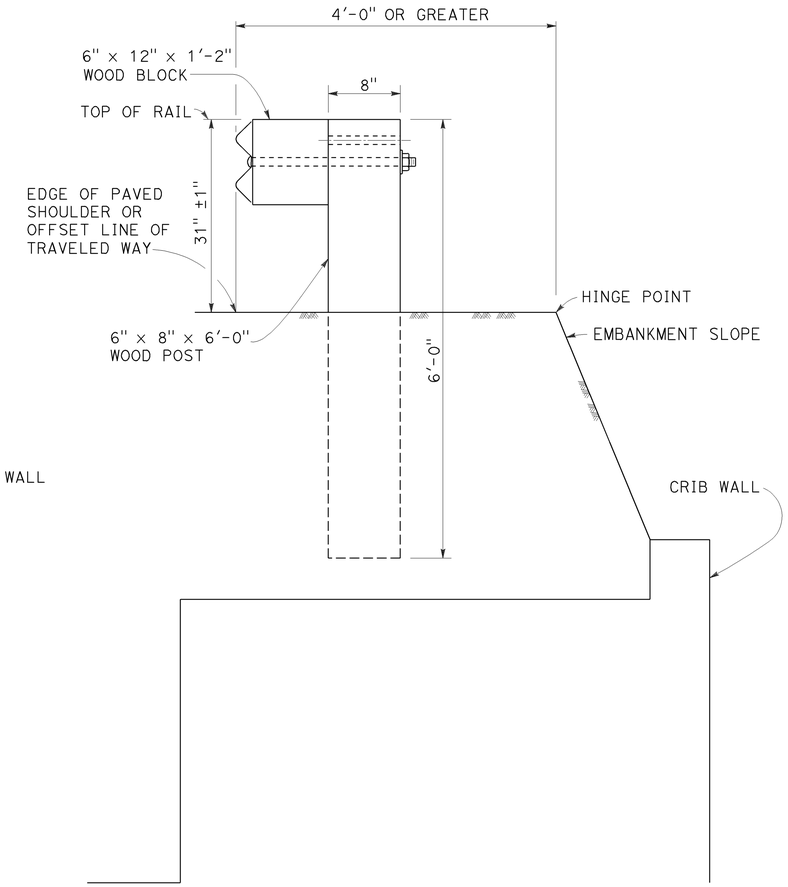

DETAIL D

INSTALLATION AT EARTH RETAINING WALLS

NOTES:

1. These installation details also applicable to steel line post installations. For Detail A, C, and D, where steel line post installations are constructed, W6 x 8.5 or W6 x 9 steel post, 6'-0" in length, with 6" x 12" x 1'-2" notched wood blocks or notched recycled plastic blocks are to be used in place of the size of wood post and wood block shown. For Detail B, where steel line post installations are constructed, W6 x 15 steel post, 8'-0" in length, with 8" x 12" x 1'-2" notched wood blocks or notched recycled plastic blocks are to be used in place of the size of wood post and wood block shown. For additional installation details, see Revised Standard Plan RSP A77L1 and RSP A77L2.
2. Where the distance between the face of the rail and the hinge point is less than 2'-6", see the Project Plans for special details.
3. For dike positioning with MGS installations, see Revised Standard Plan RSP A77N4.

STATE OF CALIFORNIA
DEPARTMENT OF TRANSPORTATION

MIDWEST GUARDRAIL SYSTEM TYPICAL LINE POST EMBEDMENT AND HINGE POINT OFFSET DETAILS

NO SCALE

RSP A77N3 DATED NOVEMBER 15, 2013 SUPERSEDES RSP A77N3
DATED JULY 19, 2013 THAT SUPPLEMENTS THE STANDARD PLANS BOOK DATED 2010.

REVISED STANDARD PLAN RSP A77N3

Dist	COUNTY	ROUTE	POST MILES TOTAL PROJECT	SHEET No.	TOTAL SHEETS
07	LA	5	C43.9/C46.4	149	199

Randell D. Hiatt
REGISTERED CIVIL ENGINEER

July 19, 2013
PLANS APPROVAL DATE

REGISTERED PROFESSIONAL ENGINEER
Randell D. Hiatt
No. C50200
Exp. 6-30-15
CIVIL
STATE OF CALIFORNIA

THE STATE OF CALIFORNIA OR ITS OFFICERS OR AGENTS SHALL NOT BE RESPONSIBLE FOR THE ACCURACY OR COMPLETENESS OF SCANNED COPIES OF THIS PLAN SHEET.

TO ACCOMPANY PLANS DATED 6-29-15

NOTES:

1. When necessary to place dike more than 7" in front of face of MGS, only Type C dike may be used. For dike details, see Revised Standard Plan RSP A87B.
2. For standard railing post embedment, see Revised Standard Plan RSP A77N3.
3. MGS delineation to be used where shown on the Project Plans.
4. When dike or curb is placed under MGS, the maximum height of the dike or curb shall be 6". Mountable dike should not be used. For dike and curb details, see Revised Standard Plans RSP A87A and RSP A87B.
5. For details of typical distance between the face of rail and hinge point, see Revised Standard Plan RSP A77N3.
6. For steel line posts, use 1/4 - 20 self-tapping screws in 0.22" diameter holes or 1/4" bolts in 9/32" diameter holes.

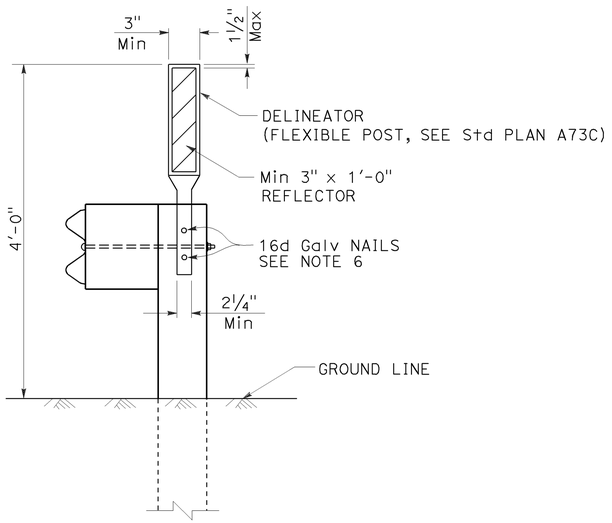

MGS DELINEATION

See Note 3

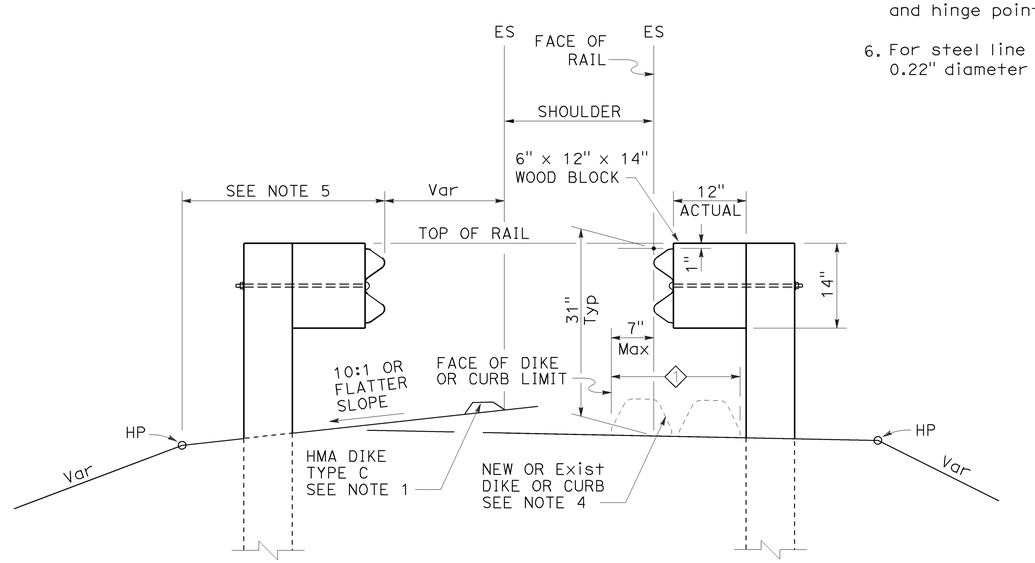

DIKE POSITIONING

See Note 1

1 PERMISSIBLE DIKE OR CURB PLACEMENT AREA

STATE OF CALIFORNIA
DEPARTMENT OF TRANSPORTATION

MIDWEST GUARDRAIL SYSTEM TYPICAL RAILING DELINEATION AND DIKE POSITIONING DETAILS

NO SCALE

RSP A77N4 DATED JULY 19, 2013 SUPPLEMENTS THE STANDARD PLANS BOOK DATED 2010.

REVISED STANDARD PLAN RSP A77N4

2010 REVISED STANDARD PLAN RSP A77N4

7-10-13

Dist	COUNTY	ROUTE	POST MILES TOTAL PROJECT	SHEET No.	TOTAL SHEETS
07	LA	5	C43.9/C46.4	150	199

Randell D. Hiatt
REGISTERED CIVIL ENGINEER

July 19, 2013
PLANS APPROVAL DATE

REGISTERED PROFESSIONAL ENGINEER
Randell D. Hiatt
No. C50200
Exp. 6-30-15
CIVIL
STATE OF CALIFORNIA

THE STATE OF CALIFORNIA OR ITS OFFICERS OR AGENTS SHALL NOT BE RESPONSIBLE FOR THE ACCURACY OR COMPLETENESS OF SCANNED COPIES OF THIS PLAN SHEET.

TO ACCOMPANY PLANS DATED 6-29-15

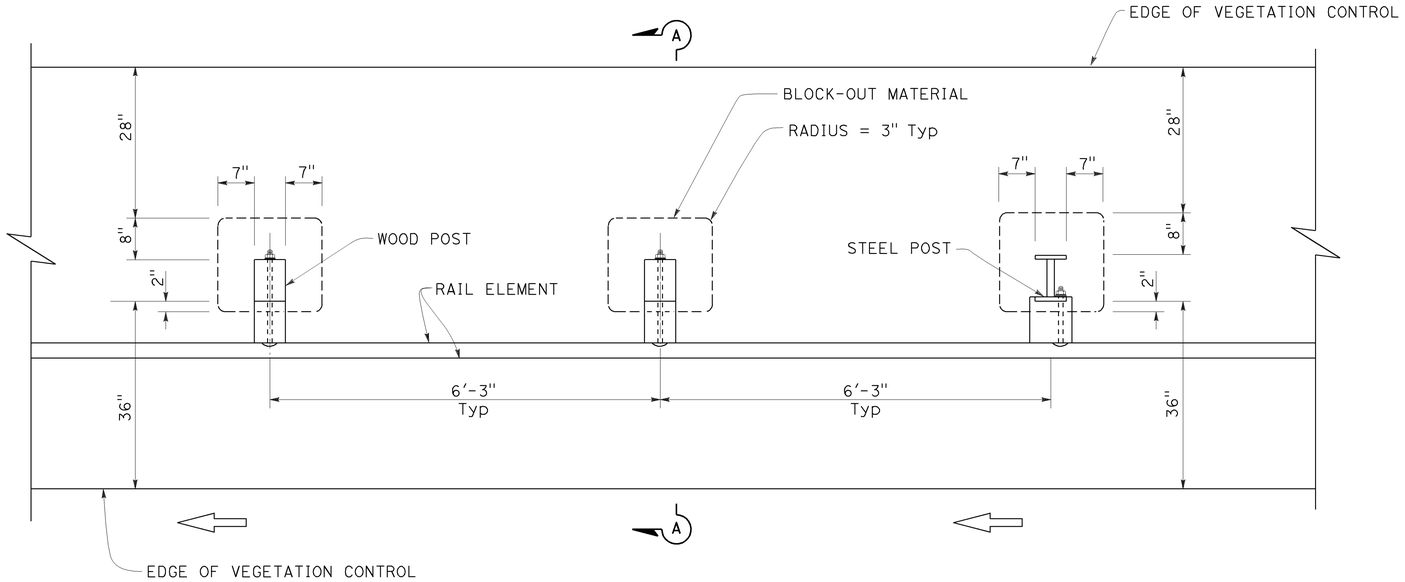

PLAN

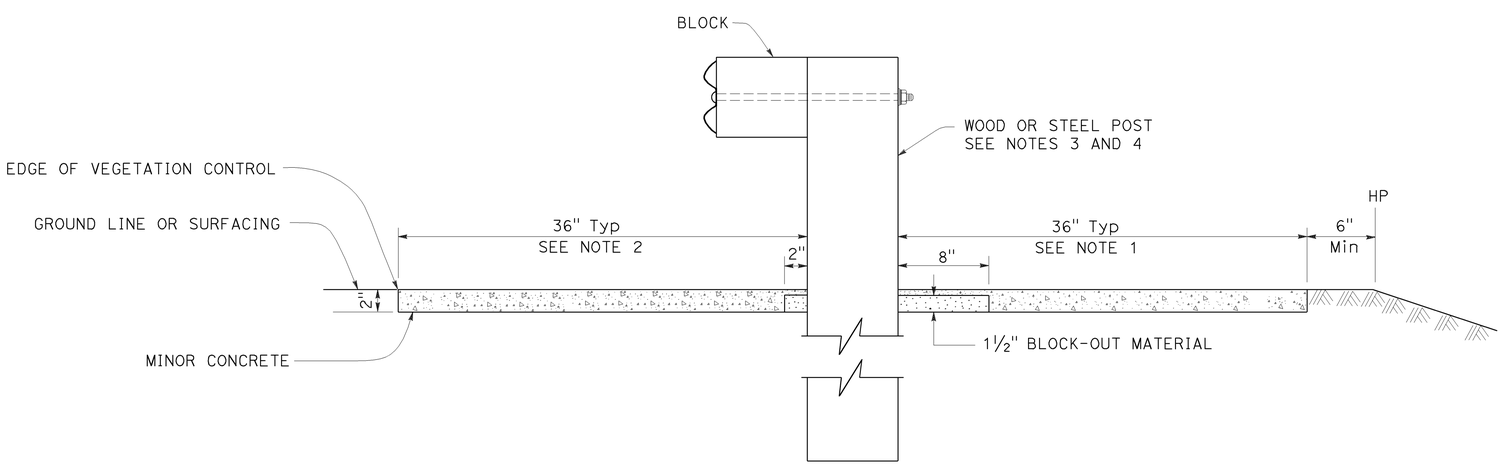

SECTION A-A

NOTES:

1. Where the distance between back of post and hinge point is less than 42", construct vegetation control to 6" from hinge point while maintaining the 8" block-out at back of post. If the 8" block-out at back of post can not be maintained, construct vegetation control flush with the back edge of post.
2. Where dike is constructed under railing, construct vegetation control to back edge of dike. Where paved shoulder is constructed within 36" in front of the post, construct vegetation control to the edge of paved shoulder.
3. For wood post sizes, see Revised Standard Plan RSP A77N1.
4. For steel post sizes, see Revised Standard Plan RSP A77N2.
5. For details not shown, see Revised Standard Plans RSP A77L1 and RSP A77L2.

STATE OF CALIFORNIA
DEPARTMENT OF TRANSPORTATION

MIDWEST GUARDRAIL SYSTEM TYPICAL VEGETATION CONTROL STANDARD RAILING SECTION

NO SCALE

RSP A77N5 DATED JULY 19, 2013 SUPPLEMENTS THE STANDARD PLANS BOOK DATED 2010.

REVISED STANDARD PLAN RSP A77N5

2010 REVISED STANDARD PLAN RSP A77N5

7-3-13

Dist	COUNTY	ROUTE	POST MILES TOTAL PROJECT	SHEET No.	TOTAL SHEETS
07	LA	5	C43.9/C46.4	151	199

Randell D. Hiatt
REGISTERED CIVIL ENGINEER

July 19, 2013
PLANS APPROVAL DATE

REGISTERED PROFESSIONAL ENGINEER
Randell D. Hiatt
No. C50200
Exp. 6-30-15
CIVIL
STATE OF CALIFORNIA

THE STATE OF CALIFORNIA OR ITS OFFICERS OR AGENTS SHALL NOT BE RESPONSIBLE FOR THE ACCURACY OR COMPLETENESS OF SCANNED COPIES OF THIS PLAN SHEET.

TO ACCOMPANY PLANS DATED 6-29-15

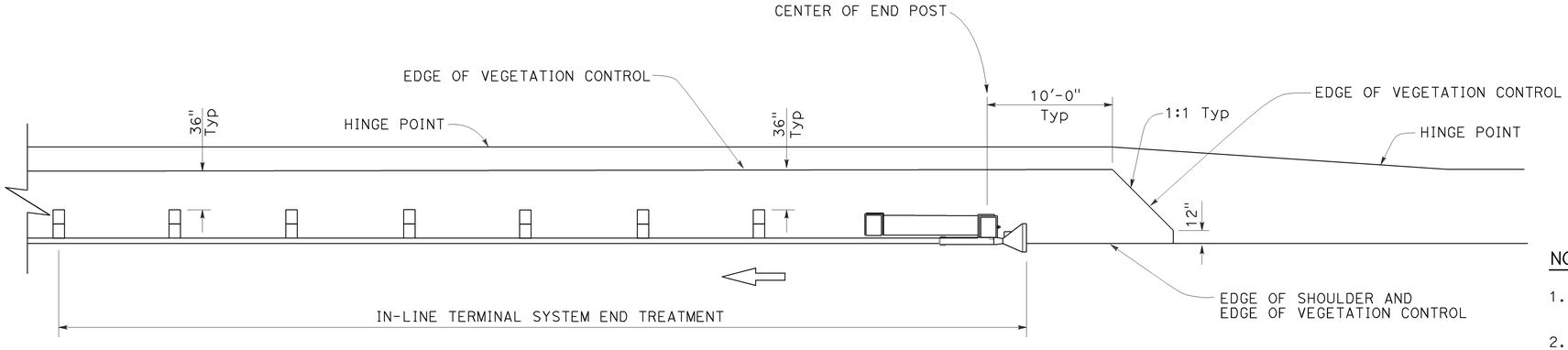

PLAN

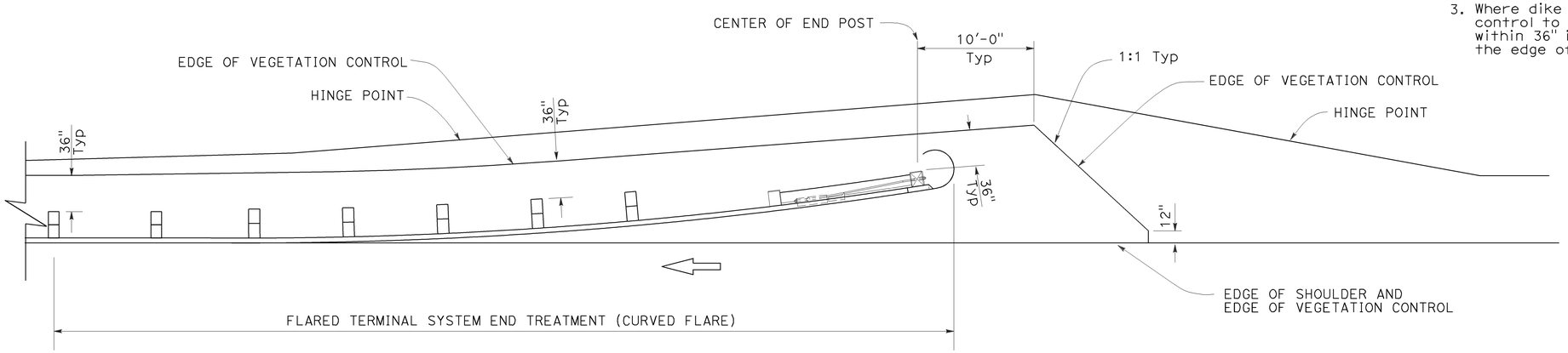

PLAN

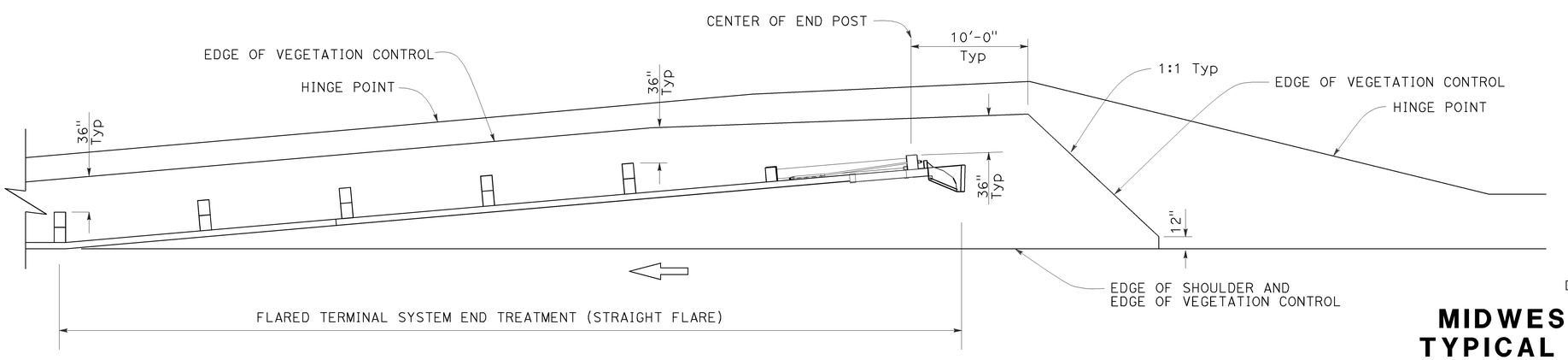

PLAN

NOTES:

1. See Revised Standard Plan RSP A77N5 for additional vegetation control details.
2. Where the distance between back of post and hinge point is less than 42", construct vegetation control to 6" from hinge point while maintaining the 8" block-out at back of post. If the 8" block-out at back of post can not be maintained, construct vegetation control flush with the back edge of post.
3. Where dike is constructed under railing, construct vegetation control to back edge of dike. Where paved shoulder is constructed within 36" in front of the post, construct vegetation control to the edge of paved shoulder.

STATE OF CALIFORNIA
DEPARTMENT OF TRANSPORTATION

MIDWEST GUARDRAIL SYSTEM TYPICAL VEGETATION CONTROL FOR TERMINAL SYSTEM END TREATMENTS

NO SCALE

RSP A77N6 DATED JULY 19, 2013 SUPPLEMENTS THE STANDARD PLANS BOOK DATED 2010.

REVISED STANDARD PLAN RSP A77N6

2010 REVISED STANDARD PLAN RSP A77N6

6-12-13

Dist	COUNTY	ROUTE	POST MILES TOTAL PROJECT	SHEET No.	TOTAL SHEETS
07	LA	5	C43.9/C46.4	152	199

Randell D. Hiatt
REGISTERED CIVIL ENGINEER

July 19, 2013
PLANS APPROVAL DATE

REGISTERED PROFESSIONAL ENGINEER
Randell D. Hiatt
No. C50200
Exp. 6-30-15
CIVIL
STATE OF CALIFORNIA

THE STATE OF CALIFORNIA OR ITS OFFICERS OR AGENTS SHALL NOT BE RESPONSIBLE FOR THE ACCURACY OR COMPLETENESS OF SCANNED COPIES OF THIS PLAN SHEET.

TO ACCOMPANY PLANS DATED 6-29-15

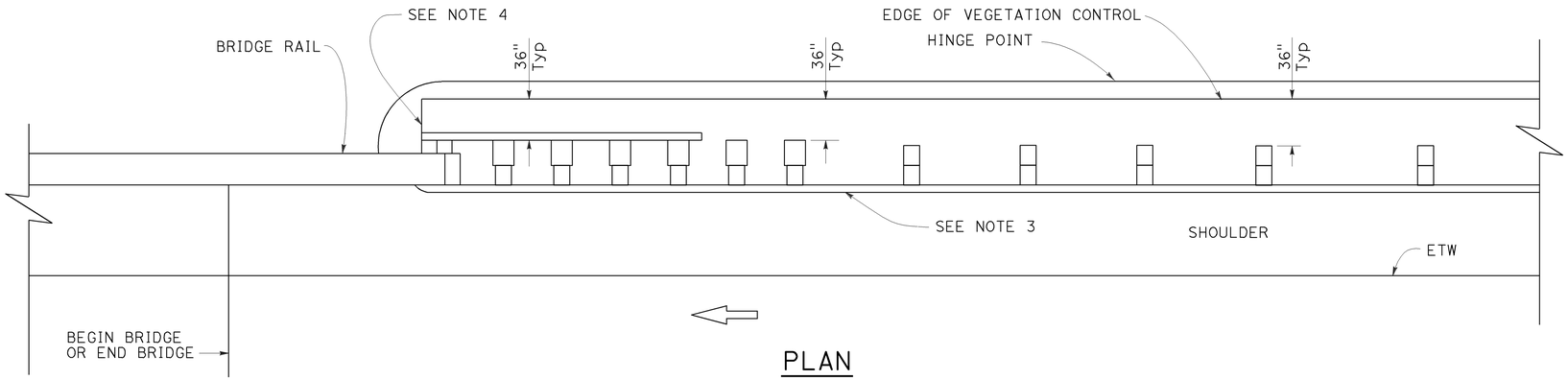

PLAN

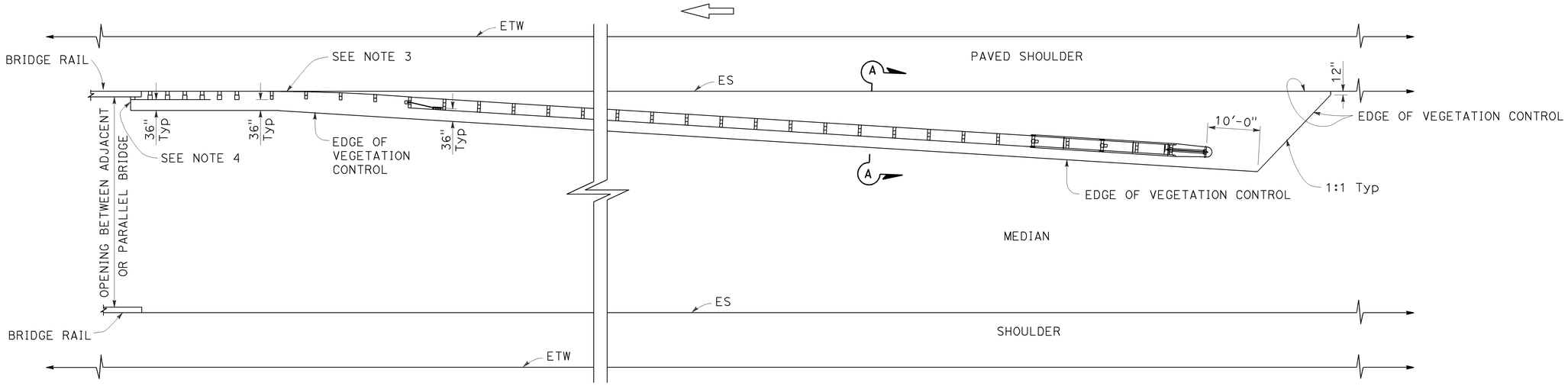

PLAN

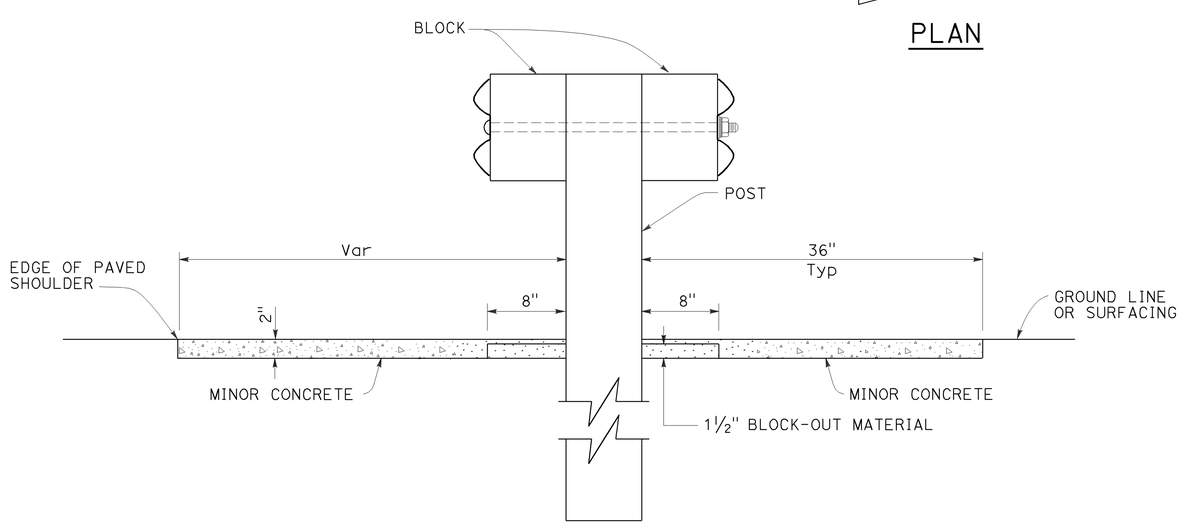

SECTION A-A

NOTES:

1. See Revised Standard Plan RSP A77N5 for additional vegetation control details.
2. Where the distance between back of post and hinge point is less than 42", construct vegetation control to 6" from hinge point while maintaining the 8" block-out at back of post. If the 8" block-out at back of post can not be maintained, construct vegetation control flush with the back edge of post.
3. Where dike is constructed under railing, construct vegetation control to back edge of dike. Where paved shoulder is constructed within 36" in front of the post, construct vegetation control to the edge of paved shoulder.
4. End vegetation control at end of backside rail element.

STATE OF CALIFORNIA
DEPARTMENT OF TRANSPORTATION

MIDWEST GUARDRAIL SYSTEM TYPICAL VEGETATION CONTROL AT STRUCTURE APPROACH

NO SCALE

RSP A77N7 DATED JULY 19, 2013 SUPPLEMENTS THE STANDARD PLANS BOOK DATED 2010.

REVISED STANDARD PLAN RSP A77N7

2010 REVISED STANDARD PLAN RSP A77N7

6-12-13

Dist	COUNTY	ROUTE	POST MILES TOTAL PROJECT	SHEET No.	TOTAL SHEETS
07	LA	5	C43.9/C46.4	153	199

Randell D. Hiatt
REGISTERED CIVIL ENGINEER

July 19, 2013
PLANS APPROVAL DATE

REGISTERED PROFESSIONAL ENGINEER
Randell D. Hiatt
No. C50200
Exp. 6-30-15
CIVIL
STATE OF CALIFORNIA

THE STATE OF CALIFORNIA OR ITS OFFICERS OR AGENTS SHALL NOT BE RESPONSIBLE FOR THE ACCURACY OR COMPLETENESS OF SCANNED COPIES OF THIS PLAN SHEET.

TO ACCOMPANY PLANS DATED 6-29-15

NOTES:

1. See Revised Standard Plan RSP A77N5 for additional vegetation control details.
2. Where the distance between back of post and hinge point is less than 42", construct vegetation control to 6" from hinge point while maintaining the 8" block-out at back of post. If the 8" block-out at back of post can not be maintained, construct vegetation control flush with the back edge of post.
3. Where dike is constructed under railing, construct vegetation control to back edge of dike. Where paved shoulder is constructed within 36" in front of the post, construct vegetation control to the edge of paved shoulder.

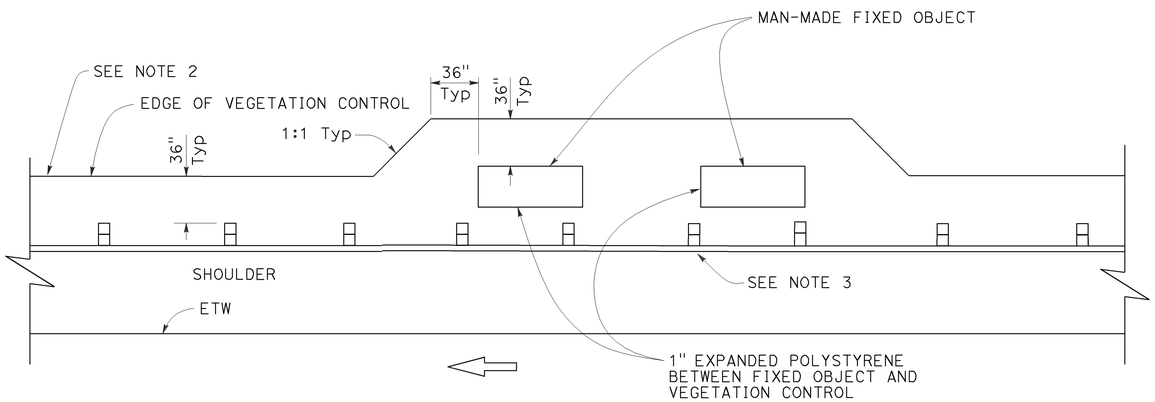

PLAN

Fixed object(s) on shoulder

STATE OF CALIFORNIA
DEPARTMENT OF TRANSPORTATION

MIDWEST GUARDRAIL SYSTEM TYPICAL VEGETATION CONTROL AT FIXED OBJECT

NO SCALE

RSP A77N8 DATED JULY 19, 2013 SUPPLEMENTS THE STANDARD PLANS BOOK DATED 2010.

REVISED STANDARD PLAN RSP A77N8

2010 REVISED STANDARD PLAN RSP A77N8

6-12-13

Dist	COUNTY	ROUTE	POST MILES TOTAL PROJECT	SHEET No.	TOTAL SHEETS
07	LA	5	C43.9/C46.4	154	199

Randell D. Hiatt
REGISTERED CIVIL ENGINEER

July 19, 2013
PLANS APPROVAL DATE

REGISTERED PROFESSIONAL ENGINEER
Randell D. Hiatt
No. C50200
Exp. 6-30-15
CIVIL
STATE OF CALIFORNIA

THE STATE OF CALIFORNIA OR ITS OFFICERS OR AGENTS SHALL NOT BE RESPONSIBLE FOR THE ACCURACY OR COMPLETENESS OF SCANNED COPIES OF THIS PLAN SHEET.

TO ACCOMPANY PLANS DATED 6-29-15

2010 REVISED STANDARD PLAN RSP A77N10

NOTES:

1. See Revised Standard Plan RSP A77N5 for additional vegetation control details.
2. Where dike is constructed under railing, construct vegetation control to back edge of dike. Where paved shoulder is constructed within 36" in front of the post, construct vegetation control to the edge of paved shoulder.

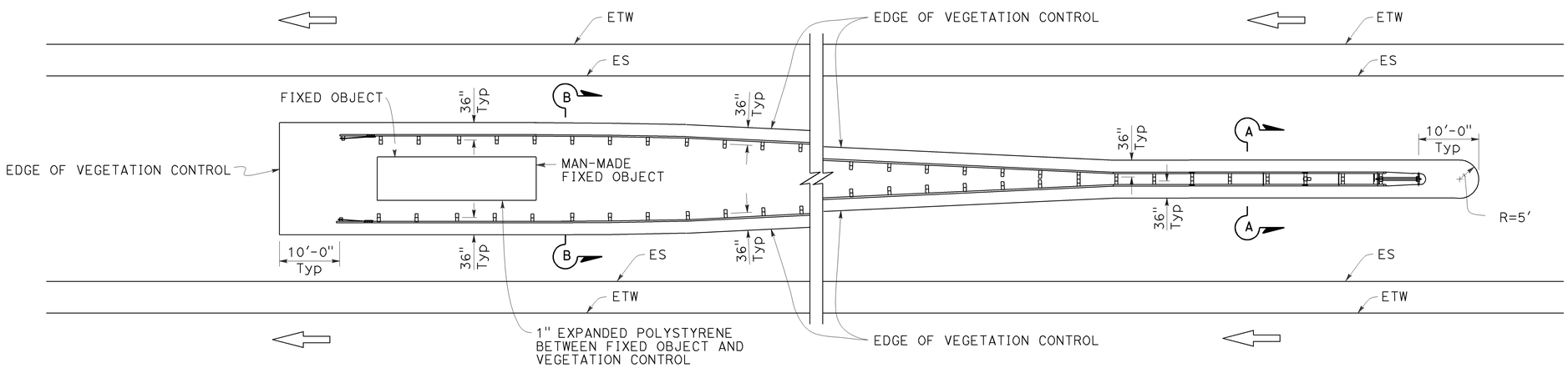

PLAN

Fixed object(s) between separate roadbeds
(One-Way Traffic)

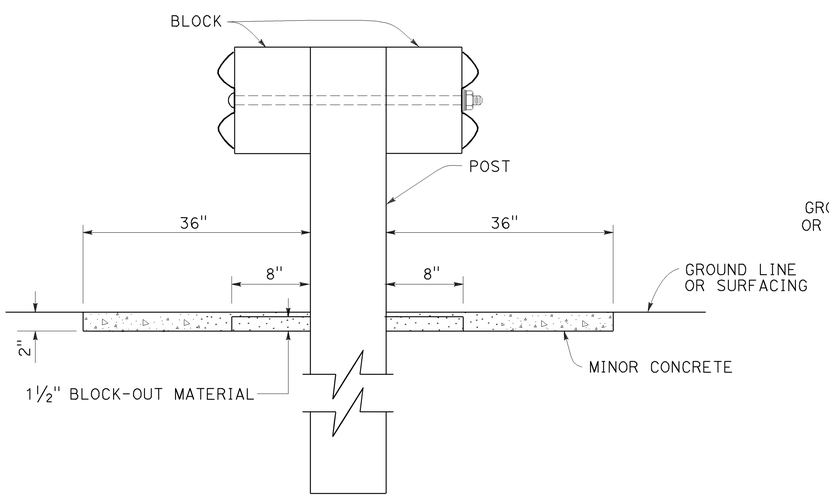

SECTION A-A

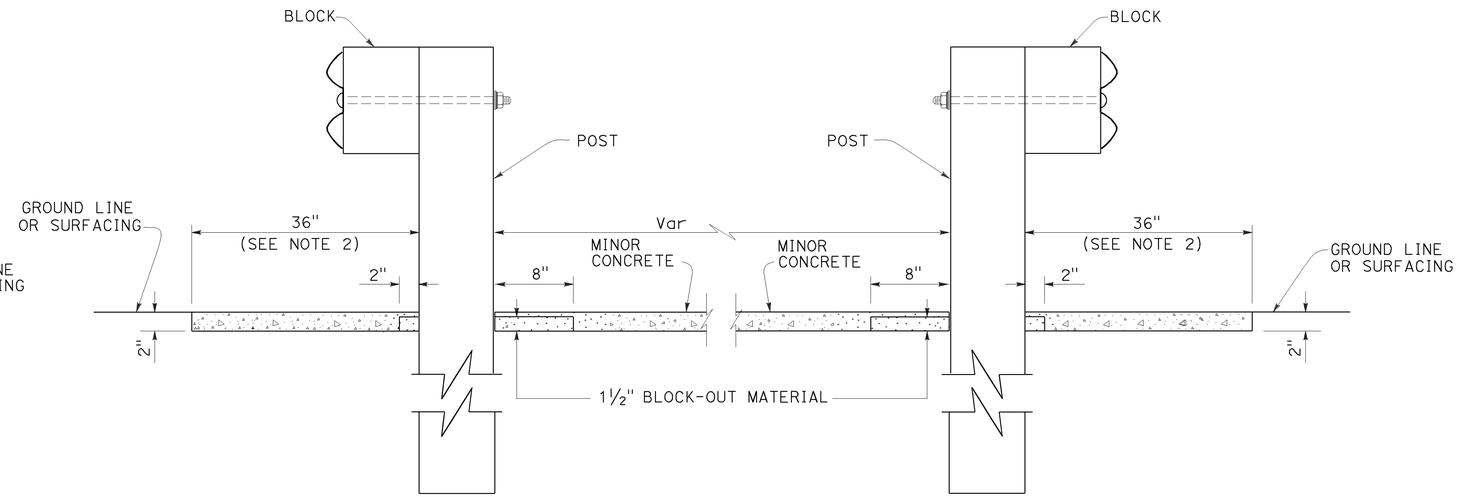

SECTION B-B

STATE OF CALIFORNIA
DEPARTMENT OF TRANSPORTATION

MIDWEST GUARDRAIL SYSTEM TYPICAL VEGETATION CONTROL AT FIXED OBJECT

NO SCALE

RSP A77N10 DATED JULY 19, 2013 SUPPLEMENTS THE STANDARD PLANS BOOK DATED 2010.

REVISED STANDARD PLAN RSP A77N10

6-12-13

Dist	COUNTY	ROUTE	POST MILES TOTAL PROJECT	SHEET No.	TOTAL SHEETS
07	LA	5	C43.9/C46.4	155	199

Randell D. Hiatt
REGISTERED CIVIL ENGINEER

November 15, 2013
PLANS APPROVAL DATE

REGISTERED PROFESSIONAL ENGINEER
Randell D. Hiatt
No. C50200
Exp. 6-30-15
CIVIL
STATE OF CALIFORNIA

THE STATE OF CALIFORNIA OR ITS OFFICERS OR AGENTS SHALL NOT BE RESPONSIBLE FOR THE ACCURACY OR COMPLETENESS OF SCANNED COPIES OF THIS PLAN SHEET.

TO ACCOMPANY PLANS DATED 6-29-15

2010 REVISED STANDARD PLAN RSP A77P1

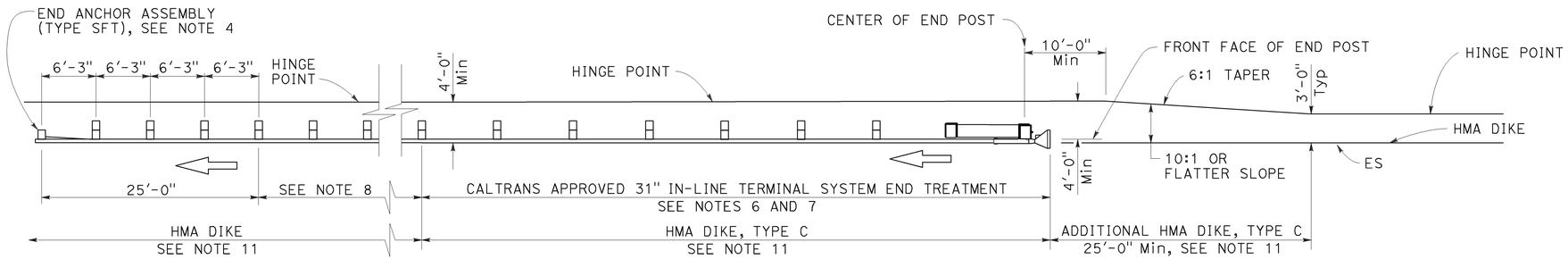

TYPE 11A LAYOUT

(Embankment MGS installation with 31" in-line end treatment at traffic approach end of railing) see Note 5

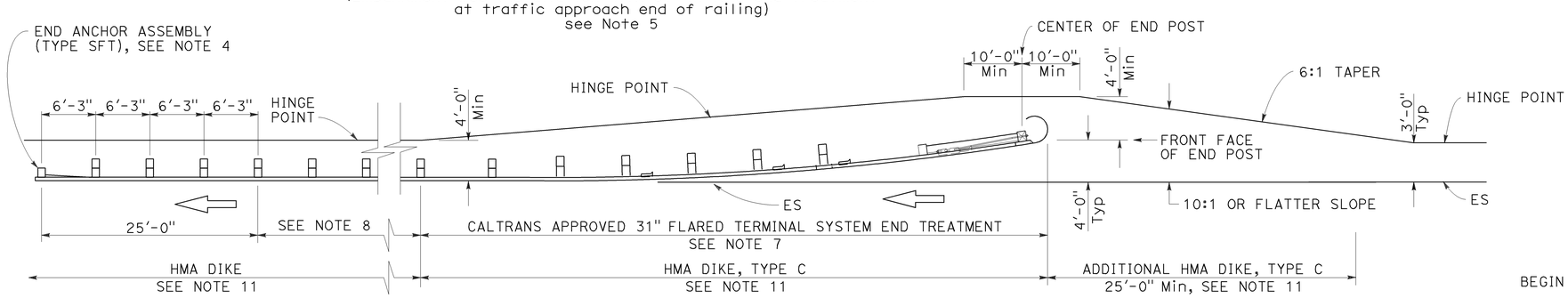

TYPE 11B LAYOUT

(Embankment MGS installation with 31" flared end treatment at traffic approach end of railing) see Note 5

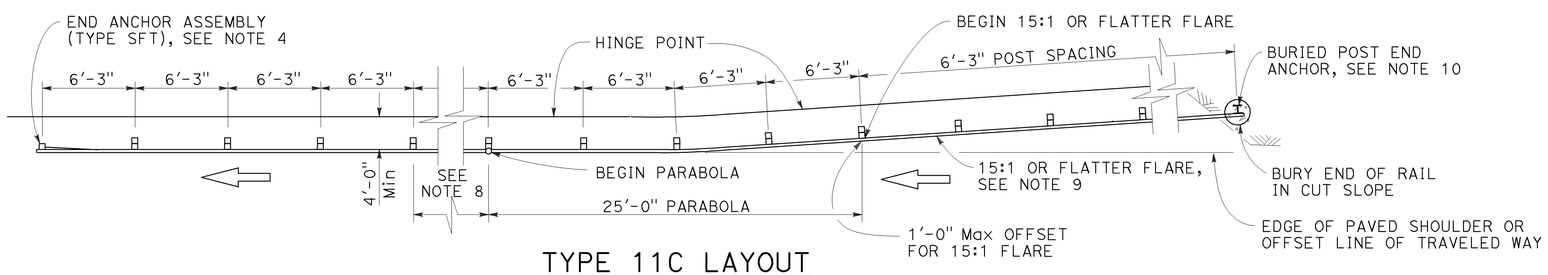

TYPE 11C LAYOUT

(Embankment MGS installation with buried end anchor treatment at traffic approach end of railing) see Notes 5 and 11

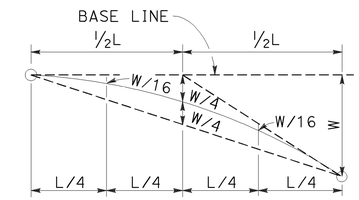

TYPICAL PARABOLIC LAYOUT

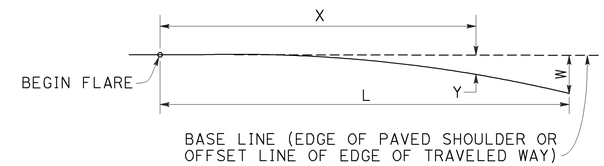

$$Y = \frac{WX^2}{L^2}$$

Y = OFFSET FROM BASE LINE
W = MAXIMUM OFFSET
X = DISTANCE ALONG BASE LINE
L = LENGTH OF FLARE

PARABOLIC FLARE OFFSETS

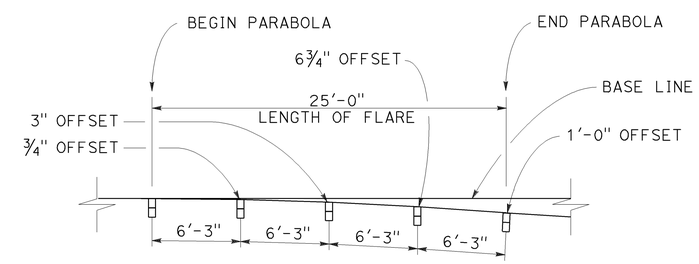

TYPICAL FLARE OFFSETS FOR 1 FOOT Max END OFFSET

NOTES:

1. Line post, blocks and hardware to be used are shown on Revised Standard Plans RSP A77L1, RSP A77L2, RSP A77M1, RSP A77N1 and RSP A77N2.
2. MGS post spacing to be 6'-3" center to center, except as otherwise noted.
3. Except as noted, line posts are 6" x 8" x 6'-0" wood with 6" x 12" x 1'-2" wood blocks. W6 x 8.5 or W6 x 9 steel posts, 6'-0" in length, with 6" x 12" x 1'-2" notched wood blocks or recycled plastic blocks may be used for 6" x 8" x 6'-0" wood post with 6" x 12" x 1'-2" wood blocks where applicable and when specified.
4. For End Anchor Assembly (Type SFT) details, see Revised Standard Plan RSP A77S1.
5. Layout Types 11A, 11B or 11C are typically used where MGS is recommended to shield embankment slopes and a crashworthy end treatment is required for only one direction of traffic.
6. 31" in-line terminal system end treatments are used where site conditions will not accommodate a flared end treatment.
7. The type of 31" terminal system end treatment to be used will be shown on the Project Plans.
8. Dependent on site conditions (embankment height and side slope), construction of additional MGS (length equal to multiples of 12'-6" with 6'-3" post spacing) may be advisable.
9. The 15:1 or flatter flare used with buried end anchors is based on the edge of the paved shoulder or offset line of edge of the traveled way. The length of MGS within the 15:1 or flatter flare is based on site conditions and should be a length equal to multiples of 12'-6".
10. For details of the buried post end anchor used with Type 11C Layout, see Revised Standard Plan RSP A77T2.
11. Where placement of dike is required with MGS installations, see Revised Standard Plan RSP A77N4 for dike positioning details.

STATE OF CALIFORNIA
DEPARTMENT OF TRANSPORTATION

MIDWEST GUARDRAIL SYSTEM TYPICAL LAYOUTS FOR EMBANKMENTS

NO SCALE

RSP A77P1 DATED NOVEMBER 15, 2013 SUPERSEDES RSP A77P1 DATED JULY 19, 2013 THAT SUPPLEMENTS THE STANDARD PLANS BOOK DATED 2010.

REVISED STANDARD PLAN RSP A77P1

10-4-13

Dist	COUNTY	ROUTE	POST MILES TOTAL PROJECT	SHEET No.	TOTAL SHEETS
07	LA	5	C43.9/C46.4	156	199

Randell D. Hiatt
REGISTERED CIVIL ENGINEER

July 19, 2013
PLANS APPROVAL DATE

REGISTERED PROFESSIONAL ENGINEER
Randell D. Hiatt
No. C50200
Exp. 6-30-15
CIVIL
STATE OF CALIFORNIA

THE STATE OF CALIFORNIA OR ITS OFFICERS OR AGENTS SHALL NOT BE RESPONSIBLE FOR THE ACCURACY OR COMPLETENESS OF SCANNED COPIES OF THIS PLAN SHEET.

TO ACCOMPANY PLANS DATED 6-29-15

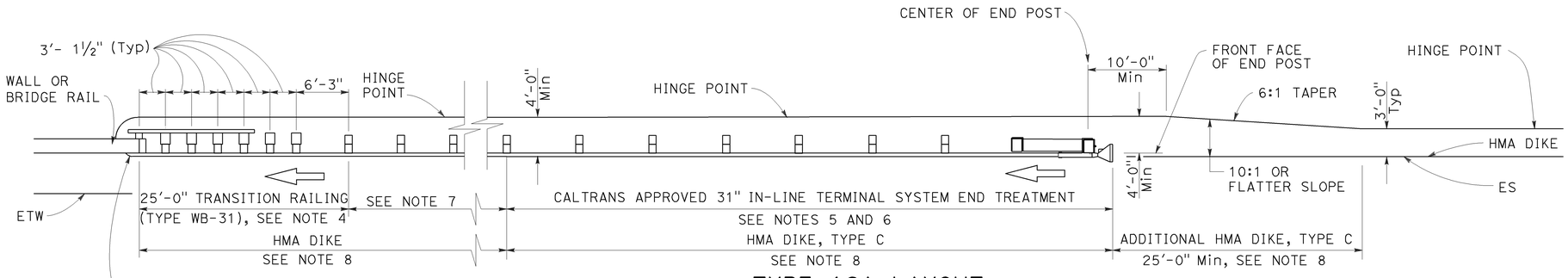

TYPE 12A LAYOUT

(MGS installation at structure approach with
31" In-line end treatment at traffic approach end of railing)
See Notes 9

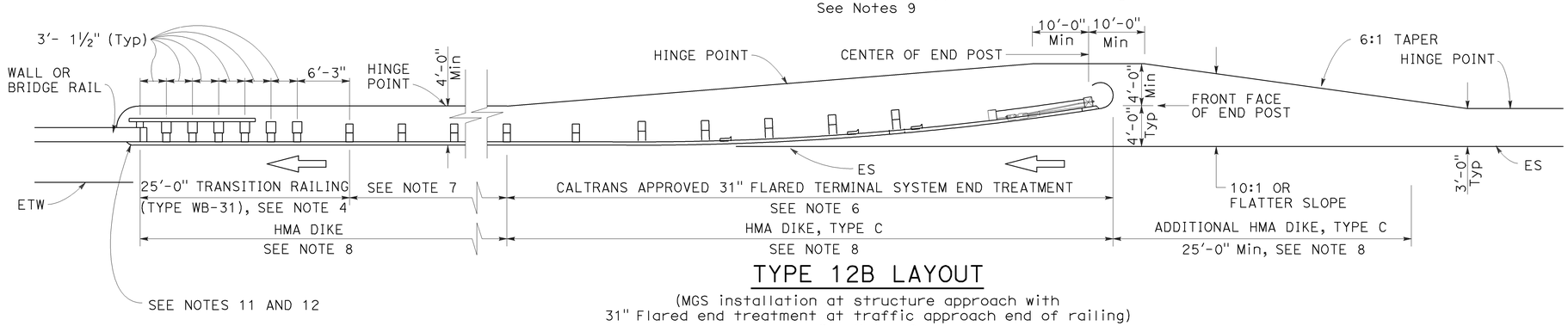

TYPE 12B LAYOUT

(MGS installation at structure approach with
31" Flared end treatment at traffic approach end of railing)
See Notes 9

NOTES:

1. Line post, blocks and hardware to be used are shown on Revised Standard Plans RSP A77L1, RSP A77L2, RSP A77M1, RSP A77N1 and RSP A77N2.
2. MGS post spacing to be 6'-3" center to center, except as otherwise noted.
3. Except as noted, line posts are 6" x 8" x 6'-0" wood with 6" x 12" x 1'-2" wood blocks. W6 x 8.5 or W6 x 9 steel posts, 6'-0" in length, with 6" x 12" x 1'-2" notched wood blocks or plastic blocks may be used for 6" x 8" x 6'-0" wood posts with 6" x 12" x 1'-2" wood blocks where applicable and when specified.
4. For Transition Railing (Type WB-31) details for Types 12A and 12B Layouts, see Revised Standard Plan RSP A77U4.
5. 31" in-line terminal system end treatments are used where site conditions will not accommodate a 31" flared end treatment.
6. The type 31" of terminal system end treatment to be used will be shown on the Project Plans.
7. Dependent on site conditions (embankment height, side slopes, or other fixed objects), it may be advisable to construct additional guard railing (a length equal to multiples of 12'-6" with 6'-3" post spacing) between the transition railing and end treatment. A 12.5 degree angle of departure can be drawn on the Project Plans from the edge of traveled way through the outer most point of the fixed object to determine the additional length of railing needed.
8. Where placement of dike is required with guard railing installations, see Revised Standard Plan RSP A77N4 for dike positioning details.
9. Type 12A or Type 12B Layouts are typically used:
   a. To the right of approaching traffic, at the end of a structure, on two-lane conventional highway where the roadbed width across the structure is less than 40 feet.
   b. To the left of approaching traffic, at the end of a structure, on two-lane conventional highway where the roadbed width across the structure is less than 40 feet.
   c. To the right of approaching traffic at the end of each structure on multilane freeways or expressways with separate adjacent or parallel bridges.
   d. To the right of approaching traffic at the end of the structure on multilane freeways or expressways with decked median on the bridge.
10. See Revised Standard Plan RSP A77Q3 for typical layout used left of approaching traffic at the ends of each structure on multilane freeways or expressways with separate adjacent or parallel bridges.
11. For additional details of typical connections to bridge rail, see Connection Detail AA on Revised Standard Plans RSP A77U1 and RSP A77U2 and Connection Detail FF on Revised Standard Plans RSP A77V1 and RSP A77V2.
12. For additional details of a typical connection to walls or abutments, see Revised Standard Plan RSP A77U3.

STATE OF CALIFORNIA
DEPARTMENT OF TRANSPORTATION

MIDWEST GUARDRAIL SYSTEM TYPICAL LAYOUTS FOR STRUCTURE APPROACH

NO SCALE

RSP A77Q1 DATED JULY 19, 2013 SUPPLEMENTS THE STANDARD PLANS BOOK DATED 2010.

REVISED STANDARD PLAN RSP A77Q1

2010 REVISED STANDARD PLAN RSP A77Q1

Dist	COUNTY	ROUTE	POST MILES TOTAL PROJECT	SHEET No.	TOTAL SHEETS
07	LA	5	C43.9/C46.4	157	199

Randell D. Hiatt
REGISTERED CIVIL ENGINEER

July 19, 2013
PLANS APPROVAL DATE

REGISTERED PROFESSIONAL ENGINEER
Randell D. Hiatt
No. C50200
Exp. 6-30-15
CIVIL
STATE OF CALIFORNIA

THE STATE OF CALIFORNIA OR ITS OFFICERS OR AGENTS SHALL NOT BE RESPONSIBLE FOR THE ACCURACY OR COMPLETENESS OF SCANNED COPIES OF THIS PLAN SHEET.

TO ACCOMPANY PLANS DATED 6-29-15

2010 REVISED STANDARD PLAN RSP A77Q2

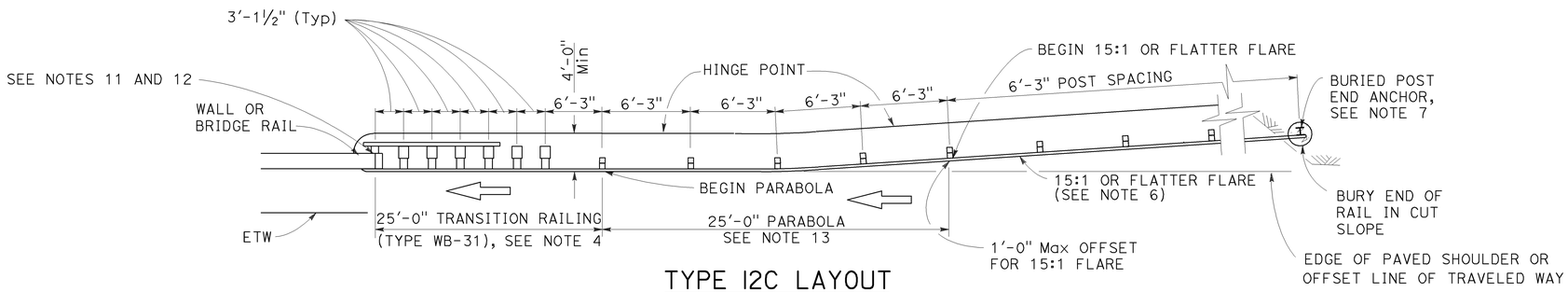

TYPE 12C LAYOUT

(MGS installation at structure approach with a Buried end anchor treatment at traffic approach end of railing)
See Notes 8 and 9

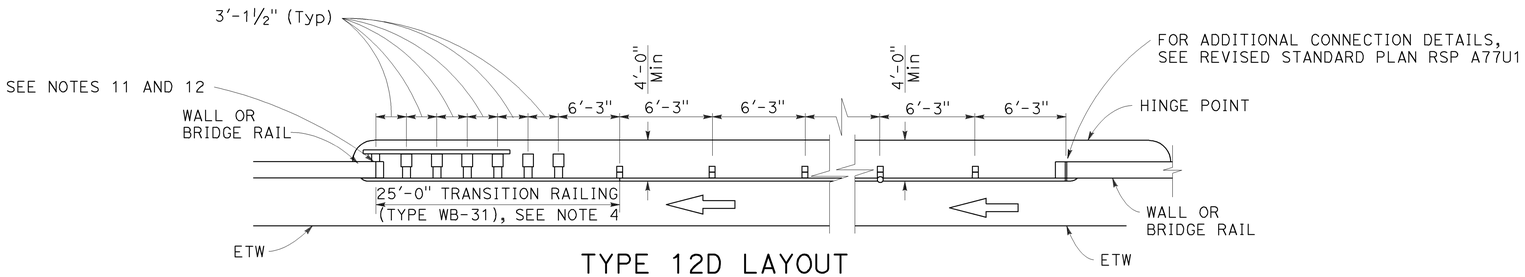

TYPE 12D LAYOUT

(Continuous MGS installation between structures)
See Notes 5 and 9

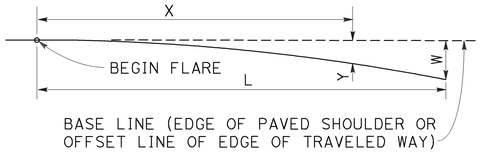

$$Y = \frac{WX^2}{L^2}$$

Y = OFFSET FROM BASE LINE
W = MAXIMUM OFFSET
X = DISTANCE ALONG BASE LINE
L = LENGTH OF FLARE

PARABOLIC FLARE OFFSETS

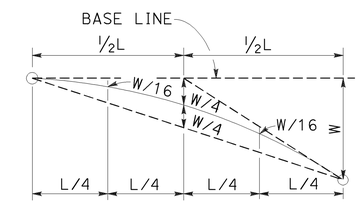

TYPICAL PARABOLIC LAYOUT

NOTES:

1. Line post, blocks and hardware to be used are shown on Revised Standard Plans RSP A77L1, RSP A77L2, RSP A77M1, RSP A77N1 and RSP A77N2.
2. MGS post spacing to be 6'-3" center to center, except as otherwise noted.
3. Except as noted, line posts are 6" x 8" x 6'-0" m wood with 6" x 12" x 1'-2" wood blocks. W6 x 8.5 or W6 x 9 steel posts, 6'-0" in length, with 6" x 12" x 1'-2" notched wood blocks or plastic blocks may be used for 6" x 8" x 6'-0" wood posts with 6" x 12" x 1'-2" wood blocks where applicable and when specified.
4. For Transition Railing (Type WB-31) details for Types 12C and 12D Layouts, see Revised Standard Plan RSP A77U4.
5. Type 12D layout is typically used where continous MGS is recommended between structures.
6. The 15:1 or flatter flare for Type 12C Layout is based on the edge of the paved shoulder or offset line of edge of the traveled way. The length of MGS with the 15:1 or flatter flare is based on site conditions and should be a length equal to multiples of 12'-6".
7. For details of the buried post end anchor used with Type 12C Layout, see Revised Standard Plan RSP A77T2.
8. Where placement of dike is required with MGS installations, see Revised Standard Plan RSP A77N4 for dike positioning details.
9. Type 12C Layout is typically used:
   a. To the right of approaching traffic, at the end of the structure, on two-lane conventional highway where the roadbed width across the structure is less than 40 feet.
   b. To the left of approaching traffic, at each of a structure, on two-lane conventional highway where the roadbed width across the structure is less than 40 feet.
   c. To the right of approaching traffic at the end of each structure on multilane freeways or expressways with separate adjacent or parallel bridges.
   d. To the right of approaching traffic at the end of the structure on multilane freeways or expressways with decked median on the bridge.
10. See Revised Standard Plan RSP A77Q3 for typical layout used left of approaching traffic at the ends of each structure on multilane freeways or expressways with separate adjacent or parallel bridges.
11. For additional details of typical connections to bridge rail, see Connection Detail AA on Revised Standard Plans RSP A77U1 and RSP A77U2 and Connection Detail FF on Revised Standard Plans RSP A77V1 and RSP A77V2.
12. For additional details of a typical connection to walls or abutments, see Revised Standard Plan RSP A77U3.
13. For typical flare offsets for 25'-0" length parabola with maximum offset of 1'-0", see Revised Standard Plan RSP A77P1.

STATE OF CALIFORNIA
DEPARTMENT OF TRANSPORTATION

MIDWEST GUARDRAIL SYSTEM TYPICAL LAYOUTS FOR STRUCTURE APPROACH AND BETWEEN STRUCTURES

NO SCALE

RSP A77Q2 DATED JULY 19, 2013 SUPPLEMENTS THE STANDARD PLANS BOOK DATED 2010.

REVISED STANDARD PLAN RSP A77Q2

Dist	COUNTY	ROUTE	POST MILES TOTAL PROJECT	SHEET No.	TOTAL SHEETS
07	LA	5	C43.9/C46.4	158	199

Randell D. Hiatt
REGISTERED CIVIL ENGINEER

July 19, 2013
PLANS APPROVAL DATE

REGISTERED PROFESSIONAL ENGINEER
Randell D. Hiatt
No. C50200
Exp. 6-30-15
CIVIL
STATE OF CALIFORNIA

THE STATE OF CALIFORNIA OR ITS OFFICERS OR AGENTS SHALL NOT BE RESPONSIBLE FOR THE ACCURACY OR COMPLETENESS OF SCANNED COPIES OF THIS PLAN SHEET.

TO ACCOMPANY PLANS DATED 6-29-15

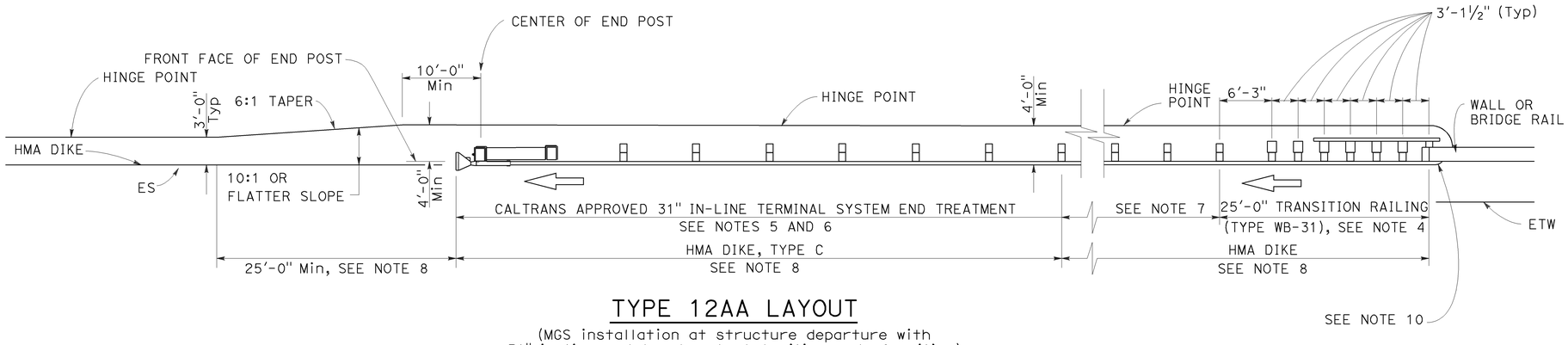

TYPE 12AA LAYOUT

(MGS installation at structure departure with
31" in-line end treatment at trailing end of railing)
See Notes 8 and 9

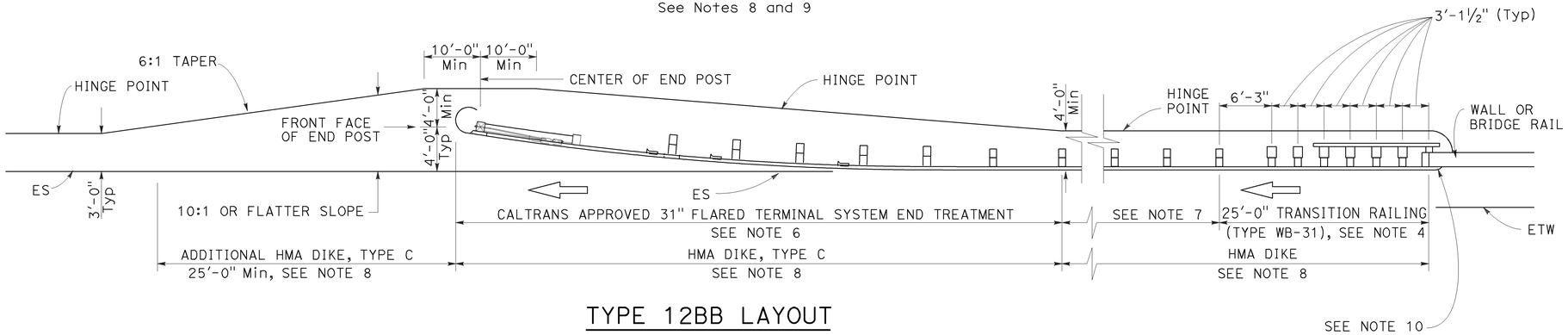

TYPE 12BB LAYOUT

(MGS installation at structure departure with
31" flared end treatment at trailing end of railing)
See Notes 8 and 9

NOTES:

1. Line post, blocks and hardware to be used are shown on Revised Standard Plans RSP A77L1, RSP A77L2, RSP A77M1, RSP A77N1 and RSP A77N2.
2. MGS post spacing to be 6'-3" center to center, except as otherwise noted.
3. Except as noted, line posts are 6" x 8" x 6'-0" wood with 6" x 12" x 1'-2" wood blocks. W6 x 8.5 or W6 x 9 steel posts, 6'-0" in length, with 6" x 12" x 1-2" notched wood blocks or notched recycled plastic blocks may be used for 6" x 8" x 6'-0" wood posts with 6" x 12" x 1'-2" wood blocks where applicable and when specified.
4. For Transition Railing (Type WB-31) details for Types 12AA and 12BB Layouts, see Revised Standard Plan RSP A77U4.
5. 31" in-line terminal system treatments are used where site conditions will not accommodate a 31" flared end treatment.
6. The type of 31" terminal system to be used will be shown on the Project Plans.
7. Dependent on site conditions (embankment height, side slopes, other fixed objects), it may be advisable to construct additional MGS (a length equal to multiples of 12'-6" with 6'-3" post spacing) between the transition railing and 31" end treatments.
8. Where placement of dike is required with MGS installations, see Revised Standard Plan RSP A77N4 for dike positioning details.
9. Type 12AA or Type 12BB Layouts are typically used to the right of traffic departing a structure on two-way conventional highways where the roadbed width across the structure is less than 40 feet.
10. For additional details of typical connections to bridge rail, see Connection Detail CC on Revised Standard Plan RSP A77U2 and Connection Detail HH on Revised Standard Plan RSP A77V2.

STATE OF CALIFORNIA
DEPARTMENT OF TRANSPORTATION

MIDWEST GUARDRAIL SYSTEM TYPICAL LAYOUTS FOR STRUCTURE DEPARTURE

NO SCALE

RSP A77Q4 DATED JULY 19, 2013 SUPPLEMENTS THE STANDARD PLANS BOOK DATED 2010.

REVISED STANDARD PLAN RSP A77Q4

2010 REVISED STANDARD PLAN RSP A77Q4

6-19-13

Dist	COUNTY	ROUTE	POST MILES TOTAL PROJECT	SHEET No.	TOTAL SHEETS
07	LA	5	C43.9/C46.4	159	199

Randell D. Hiatt
REGISTERED CIVIL ENGINEER

July 19, 2013
PLANS APPROVAL DATE

REGISTERED PROFESSIONAL ENGINEER
Randell D. Hiatt
No. C50200
Exp. 6-30-15
CIVIL
STATE OF CALIFORNIA

THE STATE OF CALIFORNIA OR ITS OFFICERS OR AGENTS SHALL NOT BE RESPONSIBLE FOR THE ACCURACY OR COMPLETENESS OF SCANNED COPIES OF THIS PLAN SHEET.

TO ACCOMPANY PLANS DATED 6-29-15

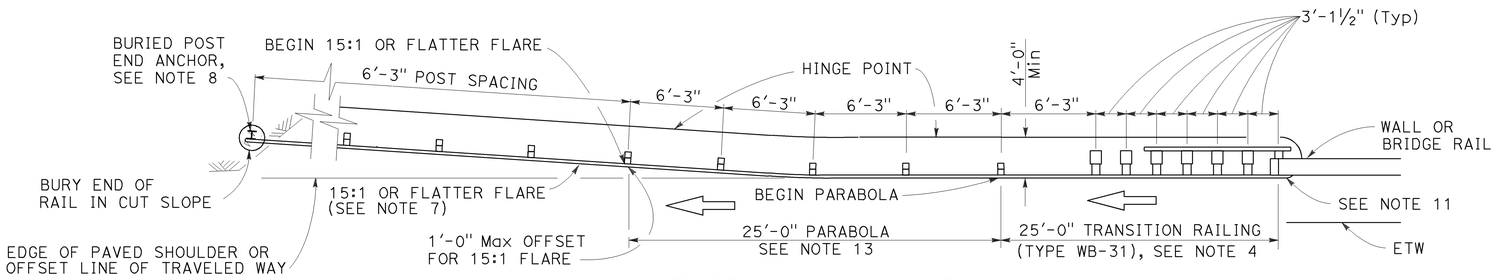

TYPE 12CC LAYOUT

(MGS installation at structure departure with a
Buried end anchor treatment at trailing end of railing)
See Notes 9 and 10

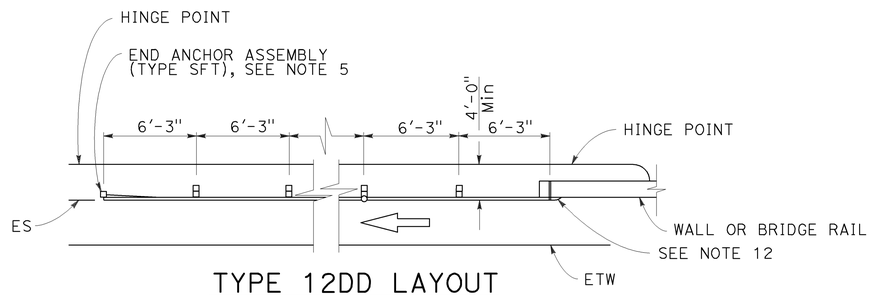

TYPE 12DD LAYOUT

(MGS installation at structure departure
With end anchor assembly at trailing end of railing)
See Notes 6 and 9

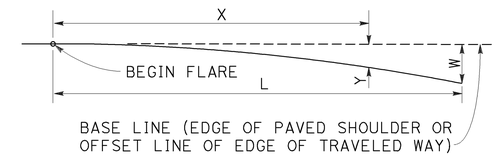

$$Y = \frac{WX^2}{L^2}$$

Y = OFFSET FROM BASE LINE
W = MAXIMUM OFFSET
X = DISTANCE ALONG BASE LINE
L = LENGTH OF FLARE

PARABOLIC FLARE OFFSETS

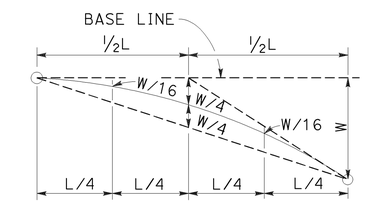

TYPICAL PARABOLIC LAYOUT

NOTES:

1. Line post, blocks and hardware to be used are shown on Revised Standard Plans RSP A77L1, RSP A77L2, RSP A77M1, RSP A77N1 and RSP A77N2.
2. MSG post spacing to be 6'-3" center to center, except as otherwise noted.
3. Except as noted, line posts are 6" x 8" x 6'-0" wood with 6" x 12" x 1'-2" wood blocks. W6 x 8.5 or W6 x 9 steel posts, 6'-0" in length, with 6" x 12" x 1'-2" notched wood blocks or notched recycled plastic blocks may be used for 6" x 8" x 6'-0" wood line posts with 6" x 12" x 1'-2" wood blocks where applicable and when specified.
4. For Transition Railing (Type WB-31) details for Type 12CC Layout, see Revised Standard Plan RSP A77U4.
5. For details of End Anchor Assembly (Type SFT) used with Type 12DD Layout, see Revised Standard Plan RSP A77S1.
6. Type 12DD layout is typically used to the right of traffic departing a structure on two-way conventional highways where the roadbed width across the structure is equal to or greater than 40 feet and MGS is recommended (embankment height, side slopes, other fixed objects). Length of railing to be equal to multiples of 12'-6". For MGS connection details to bridge rail, see Revised Standard Plans RSP A77U1 and RSP A77V1. For MGS connection details to wall, see Revised Standard Plan RSP A77U3.
7. The 15:1 or flatter flare for Type 12CC Layout is based on the edge of the paved shoulder or offset line of edge of the traveled way. The length of MGS within the 15:1 or flatter flare is based on site conditions and should be a length equal to multiples of 12'-6".
8. For details of the buried post end anchor used with Type 12CC Layout, see Revised Standard Plan RSP A77T2.
9. Where placement of dike is required with MGS installations, see Revised Standard Plan RSP A77N4 for dike positioning details.
10. Type 12CC Layout is typically used to the right of traffic departing a structure on two-way conventional highways where the roadbed width across the structure is less than 40 feet.
11. For additional details of a typical connection to bridge rail for Layout Type 12CC, see Connection Detail CC on Revised Standard Plan RSP A77U2 and Connection Detail HH on Revised Standard Plan RSP A77V2.
12. For additional details of a typical connection to bridge rail for Layout Type 12DD, see Connection Detail BB on Revised Standard Plan RSP A77U1 and Connection Detail GG on Revised Standard Plan RSP A77V1.
13. For typical flare offsets for 25'-0" length parabola with maximum offset of 1'-0", see Revised Standard Plan RSP A77P1.

STATE OF CALIFORNIA
DEPARTMENT OF TRANSPORTATION

MIDWEST GUARDRAIL SYSTEM TYPICAL LAYOUTS FOR STRUCTURE DEPARTURE

NO SCALE

RSP A77Q5 DATED JULY 19, 2013 SUPPLEMENTS THE STANDARD PLANS BOOK DATED 2010.

REVISED STANDARD PLAN RSP A77Q5

2010 REVISED STANDARD PLAN RSP A77Q5

6-20-13

Dist	COUNTY	ROUTE	POST MILES TOTAL PROJECT	SHEET No.	TOTAL SHEETS
07	LA	5	C43.9/C46.4	160	199

Randell D. Hiatt
REGISTERED CIVIL ENGINEER

July 19, 2013
PLANS APPROVAL DATE

REGISTERED PROFESSIONAL ENGINEER
Randell D. Hiatt
No. C50200
Exp. 6-30-15
CIVIL
STATE OF CALIFORNIA

THE STATE OF CALIFORNIA OR ITS OFFICERS OR AGENTS SHALL NOT BE RESPONSIBLE FOR THE ACCURACY OR COMPLETENESS OF SCANNED COPIES OF THIS PLAN SHEET.

TO ACCOMPANY PLANS DATED 6-29-15

NOTES:

1. Line post, blocks and hardware to be used are shown on Revised Standard Plans RSP A77L1, RSP A77L2, RSP A77M1, RSP A77N1 and RSP A77N2.
2. MGS post spacing to be 6'-3" center to center, except as otherwise noted.
3. Except as noted, line posts are 6" x 8" x 6'-0" wood with 6" x 12" x 1'-2" wood blocks. W6 x 8.5 or W6 x 9 steel posts, 6'-0" in length, with 6" x 12" x 1'-2" notched wood blocks or notched recycled plastic blocks may be used for 6" x 8" x 6'-0" wood line posts with 6" x 12" x 1'-2" wood blocks where applicable and when specified.
4. A 4'-0" minimum clearance is required between the face of the railing and the face of a fixed object located directly behind MGS section with post spacing of 6'-3". Construct MGS as shown in the detail "Strengthened Midwest Guardrail System Sections for Fixed Object" on this plan, where the clearance between the face of the railing and the face of a fixed object is less than 4'-0", but not less than 3'-0". Where the clearance is less than 3'-0", a concrete wall or barrier should be constructed to shield the fixed object(s).
5. For End Anchor Assembly (Type SFT) details, see Standard Plan RSP A77S1.
6. Type of crash cushion to be used will be shown on the Project Plans.
7. Type 15A layout is typically used on multilane freeways or expressways to shield fixed objects in the area between separated one-way roadbeds.
8. For typical flare offsets for 25'-0" length parabola with maximum offset of 1'-0", see Revised Standard Plan RSP A77P1.
9. The 15:1 or flatter flare is measured off of the edge of the traveled way.
10. W6 x 15 steel post, 8'-0" in length, with 8" x 12" x 1'-2" notched wood block or notched recycled plastic blocks may be used in place of the 10" x 10" x 8'-0" wood post with 8" x 12" x 1'-2" wood block shown in the detail "Strengthened Midwest Guardrail System Sections for Fixed Object".

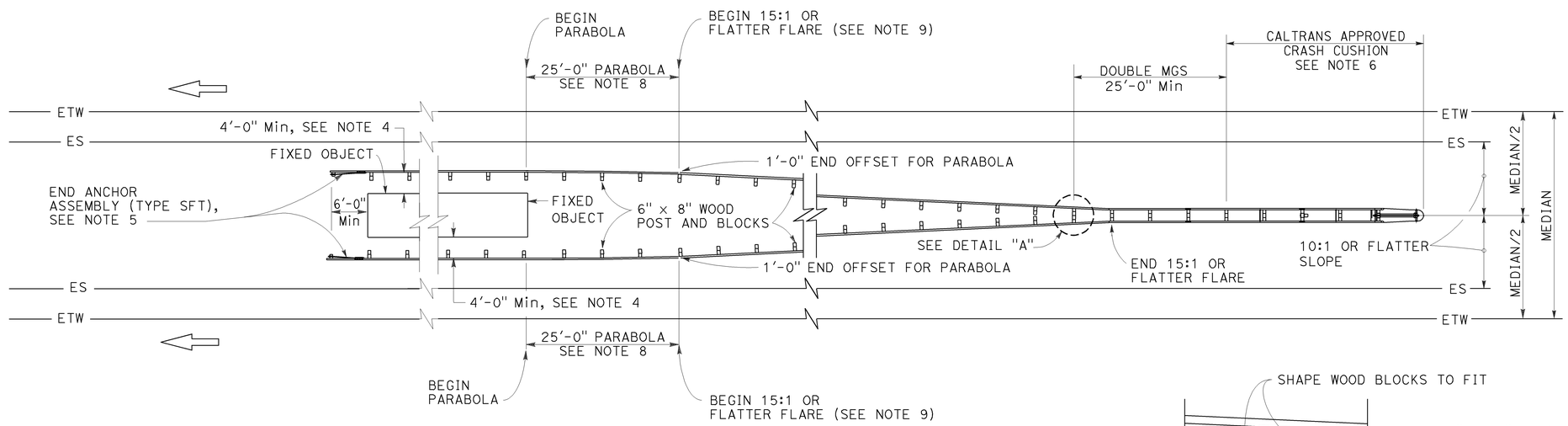

TYPE 15A LAYOUT

See Note 7

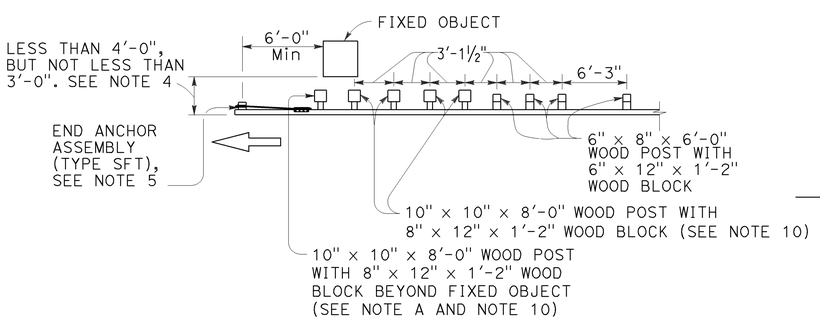

NOTE A: For a series of fixed objects (bridge columns, overhead sign supports, etc.) additional 10" x 10" x 8'-0" wood post with 8" x 12" x 1'-2" wood blocks at 3'-1½" center to center spacing are to be used between fixed objects.

STRENGTHENED MIDWEST GUARDRAIL SYSTEM SECTIONS FOR FIXED OBJECT

Use strengthened MGS sections with Type 15A layout where minimum clearance between the face of the MGS and the fixed object(s) is less than 4'-0", but not less than 3'-0". See Note 4.

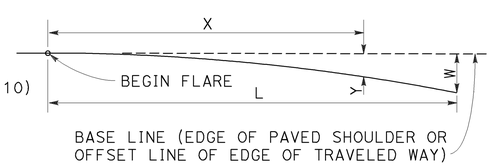

$$Y = \frac{WX^2}{L^2}$$

Y = OFFSET FROM BASE LINE
W = MAXIMUM OFFSET
X = DISTANCE ALONG BASE LINE
L = LENGTH OF FLARE

PARABOLIC FLARE OFFSETS

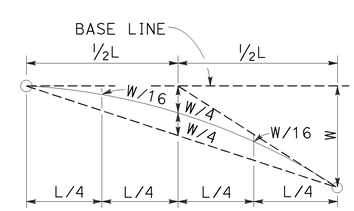

TYPICAL PARABOLIC LAYOUT

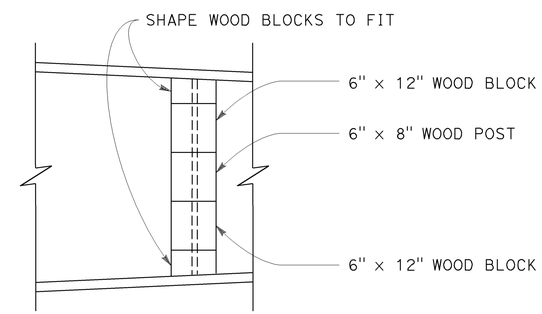

DETAIL "A"

STATE OF CALIFORNIA
DEPARTMENT OF TRANSPORTATION

MIDWEST GUARDRAIL SYSTEM TYPICAL LAYOUTS FOR FIXED OBJECTS BETWEEN SEPARATE ROADBEDS (ONE-WAY TRAFFIC)

NO SCALE

RSP A77R2 DATED JULY 19, 2013 SUPPLEMENTS THE STANDARD PLANS BOOK DATED 2010.

REVISED STANDARD PLAN RSP A77R2

2010 REVISED STANDARD PLAN RSP A77R2

Dist	COUNTY	ROUTE	POST MILES TOTAL PROJECT	SHEET No.	TOTAL SHEETS
07	LA	5	C43.9/C46.4	161	199

Randell D. Hiatt
REGISTERED CIVIL ENGINEER

July 19, 2013
PLANS APPROVAL DATE

REGISTERED PROFESSIONAL ENGINEER
Randell D. Hiatt
No. C50200
Exp. 6-30-15
CIVIL
STATE OF CALIFORNIA

THE STATE OF CALIFORNIA OR ITS OFFICERS OR AGENTS SHALL NOT BE RESPONSIBLE FOR THE ACCURACY OR COMPLETENESS OF SCANNED COPIES OF THIS PLAN SHEET.

TO ACCOMPANY PLANS DATED 6-29-15

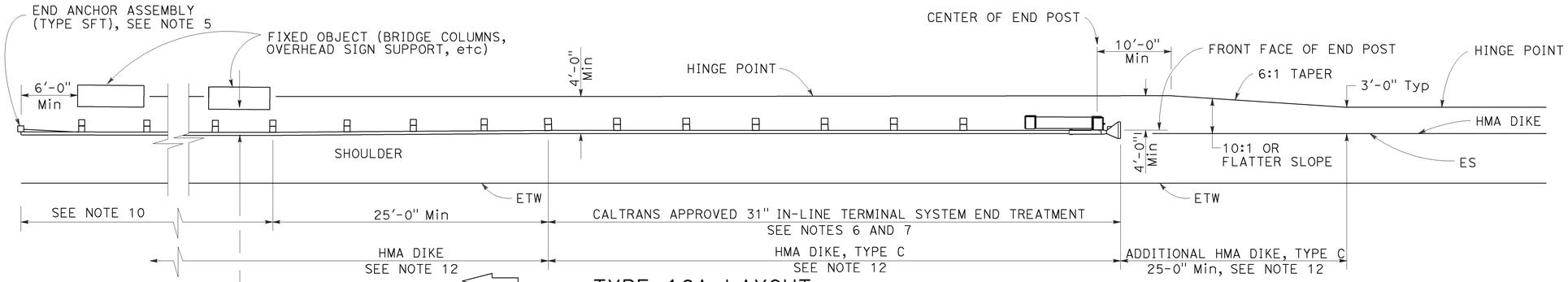

TYPE 16A LAYOUT

(MGS installation at roadside fixed object or objects with 31" in-line end treatment at traffic approach end of railing)
See Notes 11 and 12

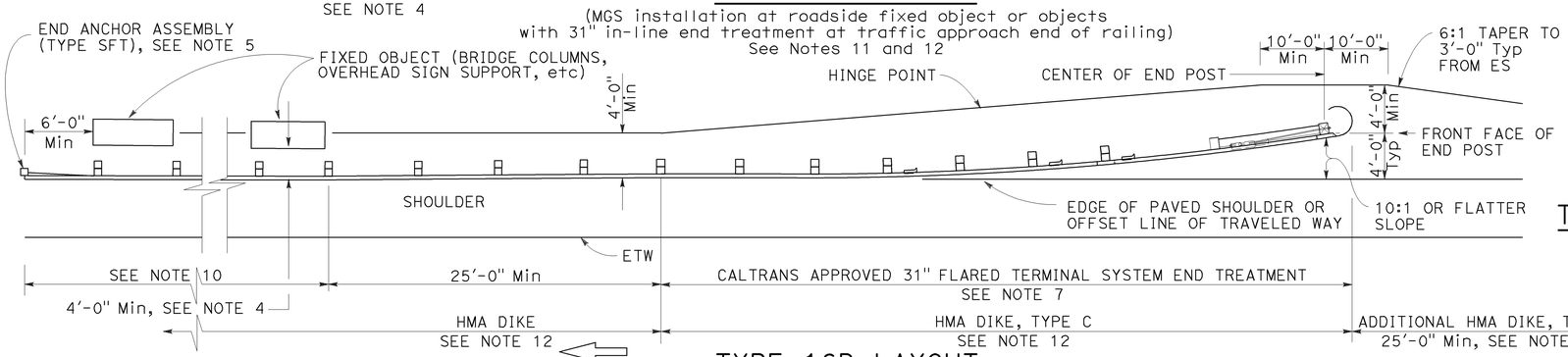

TYPE 16B LAYOUT

(MGS installation at roadside fixed object or objects with 31' flared end treatment at traffic approach end of railing)
See Notes 11 and 12

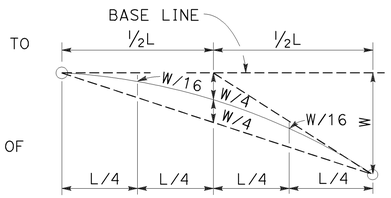

TYPIC AL PARABOLIC LAYOUT

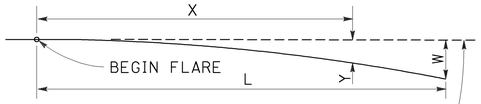

BASE LINE (EDGE OF PAVED SHOULDER OR OFFSET LINE OF EDGE OF TRAVELED WAY)

$$Y = \frac{WX^2}{L^2}$$

Y = OFFSET FROM BASE LINE
W = MAXIMUM OFFSET
X = DISTANCE ALONG BASE LINE
L = LENGTH OF FLARE

PARABOLIC FLARE OFFSETS

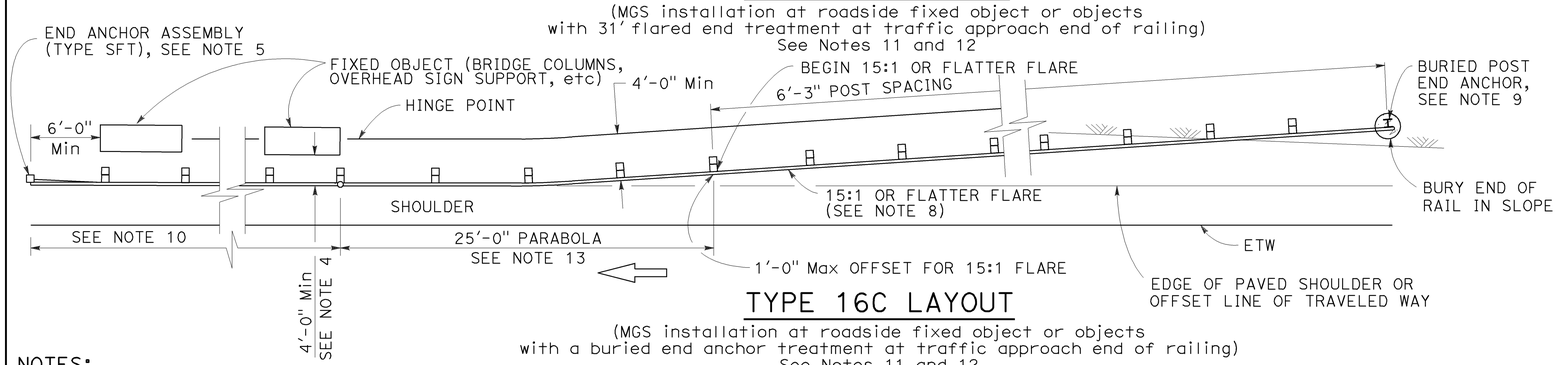

TYPE 16C LAYOUT

(MGS installation at roadside fixed object or objects with a buried end anchor treatment at traffic approach end of railing)
See Notes 11 and 12

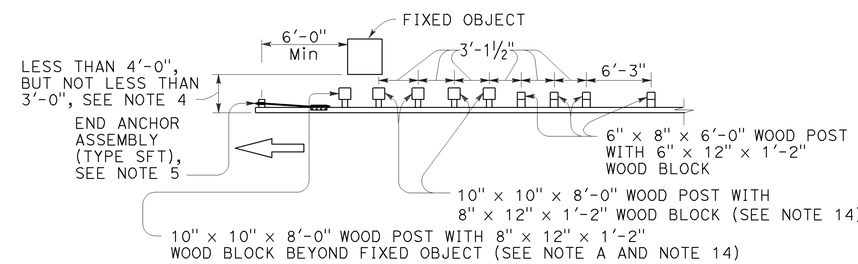

NOTE A: For a series of fixed objects (bridge columns, overhead sign supports, etc.) additional 10" x 10" x 8'-0" wood post with 8" x 12" x 1'-2" wood blocks at 3'-1½" center to center spacing are to be used between fixed objects.

STRENGTHENED MIDWEST GUARDRAIL SYSTEM SECTIONS FOR FIXED OBJECT

Use strengthened MGS sections with Types 16A, 16B or 16C layouts where minimum clearance between the face of the railing and fixed object(s) is less than 4'-0", but not less than 3'-0". See Note 4

NOTES:

1. Line post, blocks and hardware to be used are shown on Revised Standard Plans RSP A77L1, RSP A77L2, RSP A77M1, RSP A77N1 and RSP A77N2.
2. MGS post spacing to be 6'-3" center to center, except as otherwise noted.
3. Except as noted, line posts are 6" x 8" x 6'-0" wood with 6" x 12" x 1'-2" wood blocks. W6 x 8.5 or W6 x 9 steel posts, 6'-0" in length, with 6" x 12" x 1'-2" notched wood blocks or notched recycled plastic blocks may be used for 6" x 8" x 6'-0" wood line posts with 6" x 12" x 1'-2" wood blocks where applicable and when specified.
4. A 4'-0" minimum clearance is required between the face of the railing and the face of a fixed object located directly behind MGS sections with post spacing of 6'-3". Construct MGS as shown in the detail "Strengthened Midwest Guardrail System Sections for Fixed Object" on this plan, where the clearance between the face of the railing and the face of a fixed object is less than 4'-0", but not less than 3'-0". Where the clearance is less than 3'-0", a concrete wall or barrier should be constructed to shield the fixed object(s).
5. For End Anchor Assembly (Type SFT) details, see Revised Standard Plan RSP A77S1.
6. 31" in-line terminal system end treatments are used where site conditions will not accommodate a 31" flared end treatment.
7. The type of 31" terminal system to be used will be shown on the Project Plans.
8. The 15:1 or flatter flare used with Type 16C Layout is based on the edge of the paved shoulder or offset line of edge of the traveled way. The length of MGS within the 15:1 or flatter flare is based on site conditions and should be a length equal to multiples of 12'-6".
9. For details of the Buried Post End Anchor used with Type 16C Layout, see Revised Standard Plan RSP A77T2.
10. As site conditions dictate, construct additional MGS to shield fixed object(s). Additional MGS length equal to multiples of 12'-6". Post spacing at 6'-3" except as specified in Note 4.
11. Layout Types 16A, 16B or 16C are typically used where MGS is recommended to shield roadside fixed object(s) and a crashworthy 31" end treatment is required for only one direction of traffic.
12. Where placement of dike is required with MGS, see Revised Standard Plan RSP A77N4 for dike positioning details.
13. For typical flare offsets for 25'-0" length parabola with maximum offset of 1'-0", see Revised Standard Plan RSP A77P1.
14. W6 x 15 steel post, 8'-0" in length, with 8" x 12" x 1'-2" notched wood block or notched recycled plastic blocks may be used in place of the 10" x 10" x 8'-0" wood post with 8" x 12" x 1'-2" wood block shown in the detail "Strengthened Midwest Guardrail System Sections for Fixed Object".

STATE OF CALIFORNIA
DEPARTMENT OF TRANSPORTATION

MIDWEST GUARDRAIL SYSTEM TYPICAL LAYOUTS FOR ROADSIDE FIXED OBJECTS

NO SCALE

RSP A77R3 DATED JULY 19, 2013 SUPPLEMENTS THE STANDARD PLANS BOOK DATED 2010.

REVISED STANDARD PLAN RSP A77R3

2010 REVISED STANDARD PLAN RSP A77R3

6-20-13

Dist	COUNTY	ROUTE	POST MILES TOTAL PROJECT	SHEET No.	TOTAL SHEETS
07	LA	5	C43.9/C46.4	162	199

Randell D. Hiatt
REGISTERED CIVIL ENGINEER

November 15, 2013
PLANS APPROVAL DATE

REGISTERED PROFESSIONAL ENGINEER
Randell D. Hiatt
No. C50200
Exp. 6-30-15
CIVIL
STATE OF CALIFORNIA

THE STATE OF CALIFORNIA OR ITS OFFICERS OR AGENTS SHALL NOT BE RESPONSIBLE FOR THE ACCURACY OR COMPLETENESS OF SCANNED COPIES OF THIS PLAN SHEET.

TO ACCOMPANY PLANS DATED 6-29-15

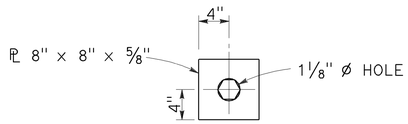

DETAIL "A"
CABLE CONNECTION
END PLATE

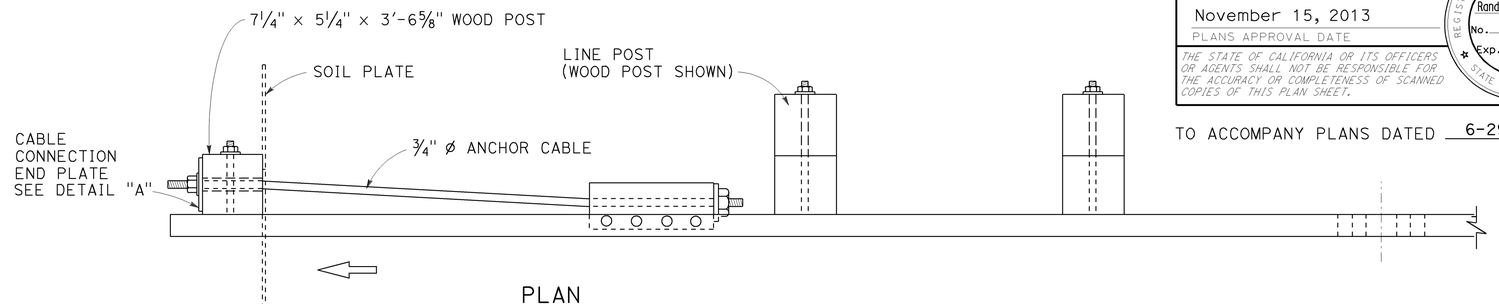

PLAN

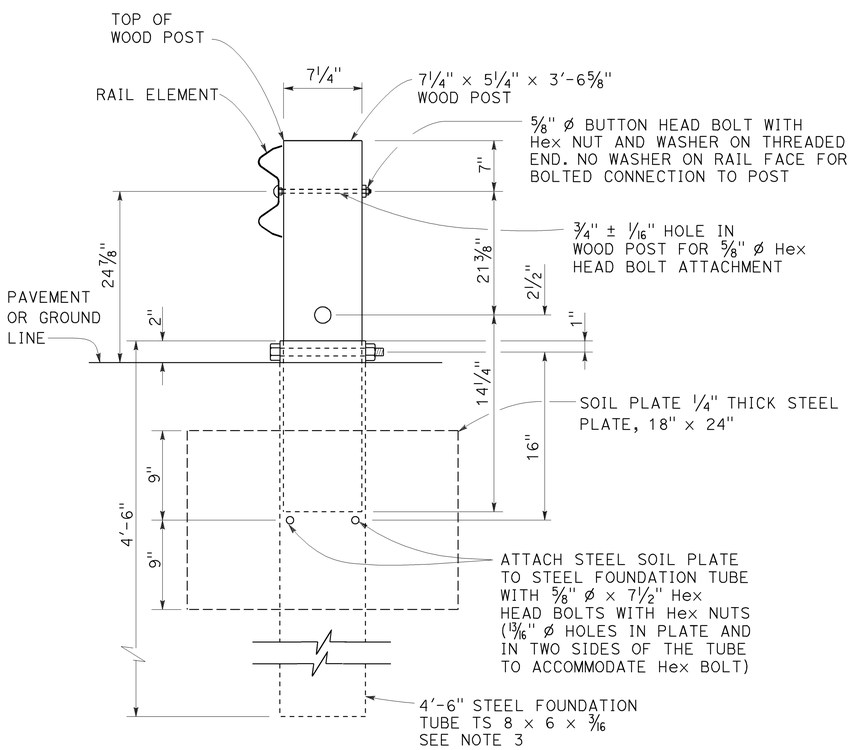

SECTION A-A

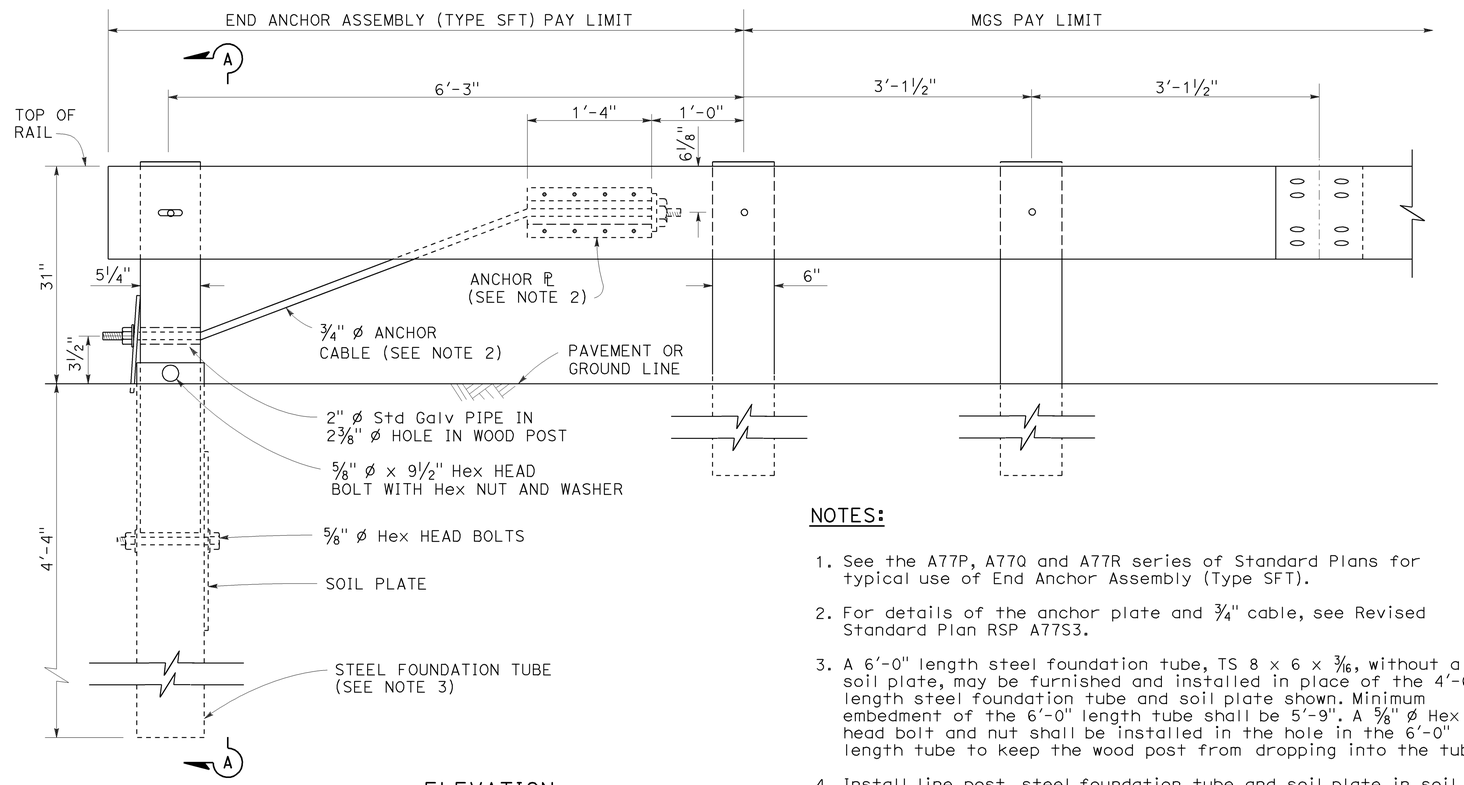

ELEVATION

END ANCHOR
ASSEMBLY (TYPE SFT)
See Note 1

NOTES:

1. See the A77P, A77Q and A77R series of Standard Plans for typical use of End Anchor Assembly (Type SFT).
2. For details of the anchor plate and 3/4" cable, see Revised Standard Plan RSP A77S3.
3. A 6'-0" length steel foundation tube, TS 8 x 6 x 3/16, without a soil plate, may be furnished and installed in place of the 4'-6" length steel foundation tube and soil plate shown. Minimum embedment of the 6'-0" length tube shall be 5'-9". A 5/8" ø Hex head bolt and nut shall be installed in the hole in the 6'-0" length tube to keep the wood post from dropping into the tube.
4. Install line post, steel foundation tube and soil plate in soil.

STATE OF CALIFORNIA
DEPARTMENT OF TRANSPORTATION

MIDWEST GUARDRAIL SYSTEM END ANCHOR ASSEMBLY (TYPE SFT)

NO SCALE

RSP A77S1 DATED NOVEMBER 15, 2013 SUPERSEDES RSP A77S1
DATED JULY 19, 2013 THAT SUPPLEMENTS THE STANDARD PLANS BOOK DATED 2010.

REVISED STANDARD PLAN RSP A77S1

2010 REVISED STANDARD PLAN RSP A77S1

10-4-13

Dist	COUNTY	ROUTE	POST MILES TOTAL PROJECT	SHEET No.	TOTAL SHEETS
07	LA	5	C43.9/C46.4	163	199

Randell D. Hiatt
REGISTERED CIVIL ENGINEER

July 19, 2013
PLANS APPROVAL DATE

REGISTERED PROFESSIONAL ENGINEER
Randell D. Hiatt
No. C50200
Exp. 6-30-15
CIVIL
STATE OF CALIFORNIA

THE STATE OF CALIFORNIA OR ITS OFFICERS OR AGENTS SHALL NOT BE RESPONSIBLE FOR THE ACCURACY OR COMPLETENESS OF SCANNED COPIES OF THIS PLAN SHEET.

TO ACCOMPANY PLANS DATED 6-29-15

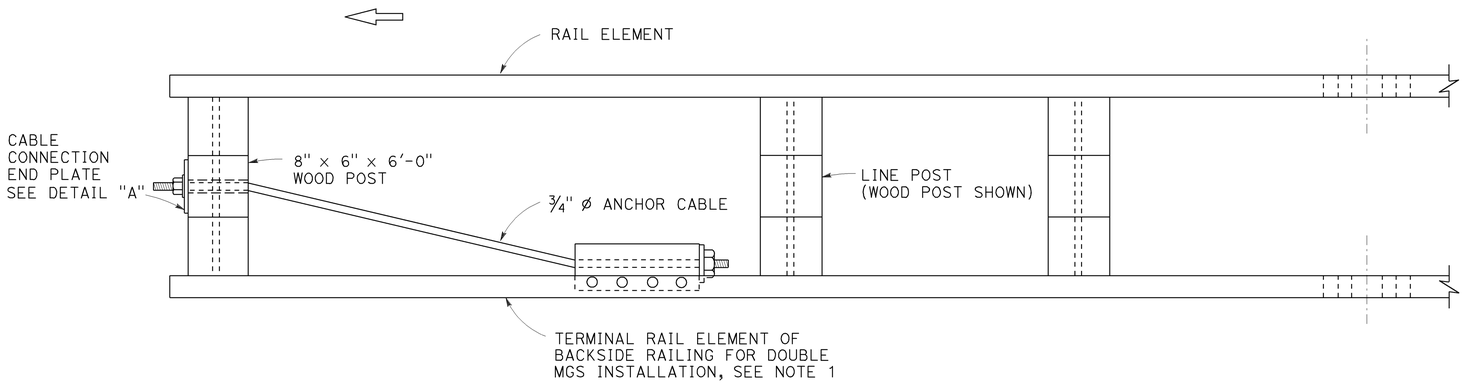

PLAN

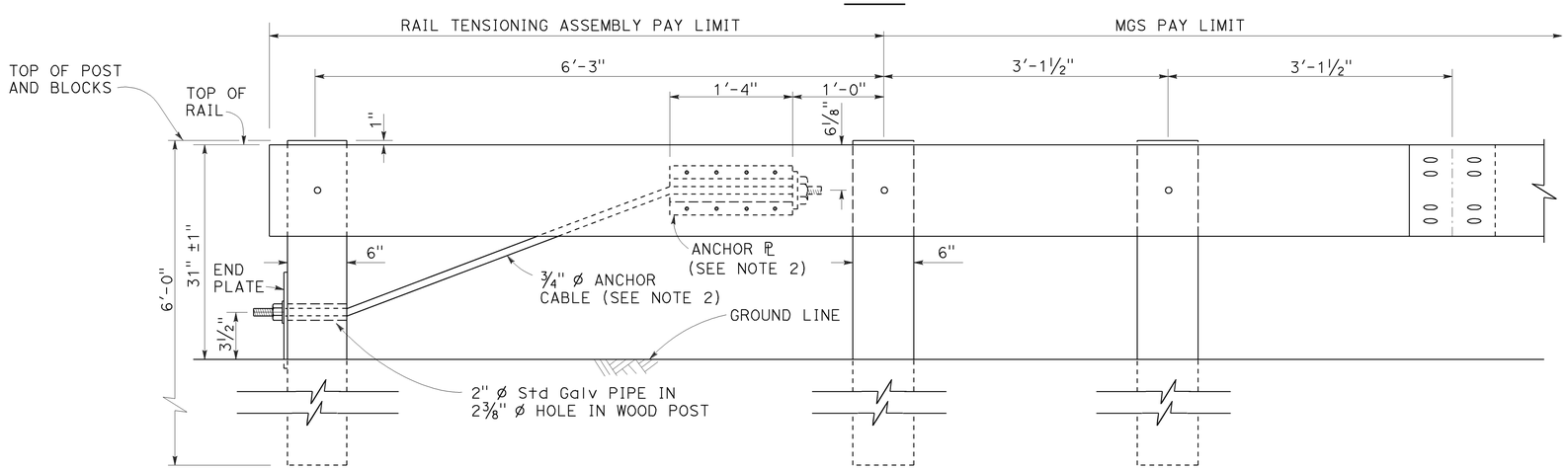

ELEVATION
RAIL TENSIONING ASSEMBLY
See Note 1

NOTES:

1. See Revised Standard Plans RSP A77Q3 and RSP A77R1 for typical use of rail tensioning assembly.
2. For details of the anchor plate and ¾" cable, see Revised Standard Plan RSP A77S3.

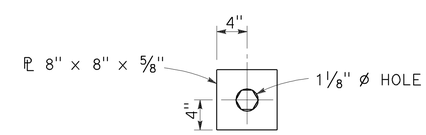

DETAIL "A"
CABLE CONNECTION END PLATE

STATE OF CALIFORNIA
DEPARTMENT OF TRANSPORTATION

MIDWEST GUARDRAIL SYSTEM RAIL TENSIONING ASSEMBLY

NO SCALE

RSP A77S2 DATED JULY 19, 2013 SUPPLEMENTS THE STANDARD PLANS BOOK DATED 2010.

REVISED STANDARD PLAN RSP A77S2

2010 REVISED STANDARD PLAN RSP A77S2

7-3-13

Dist	COUNTY	ROUTE	POST MILES TOTAL PROJECT	SHEET No.	TOTAL SHEETS
07	LA	5	C43.9/C46.4	164	199

Randell D. Hiatt
REGISTERED CIVIL ENGINEER

November 15, 2013
PLANS APPROVAL DATE

REGISTERED PROFESSIONAL ENGINEER
Randell D. Hiatt
No. C50200
Exp. 6-30-15
CIVIL
STATE OF CALIFORNIA

THE STATE OF CALIFORNIA OR ITS OFFICERS OR AGENTS SHALL NOT BE RESPONSIBLE FOR THE ACCURACY OR COMPLETENESS OF SCANNED COPIES OF THIS PLAN SHEET.

TO ACCOMPANY PLANS DATED 6-29-15

NOTE:

See Revised Standard Plans RSP A77S1, RSP A77S2 and RSP A77T1 for typical use of anchor cable and anchor plate.

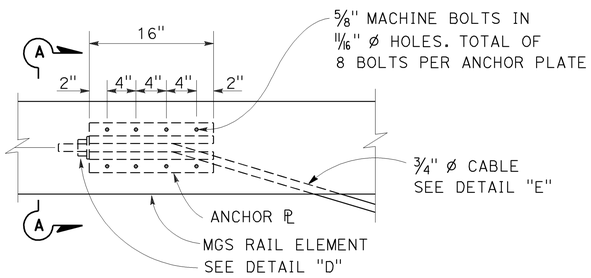

ANCHOR PLATE DETAIL

(MGS shown, TBB similar)

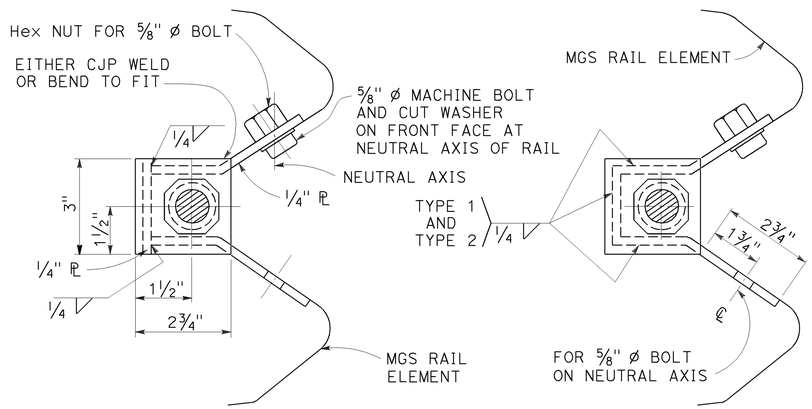

NOTE:

Dimensioning applies to both types.

SECTION A-A
(ALTERNATIVE TYPE 1)

SECTION A-A
(ALTERNATIVE TYPE 2)

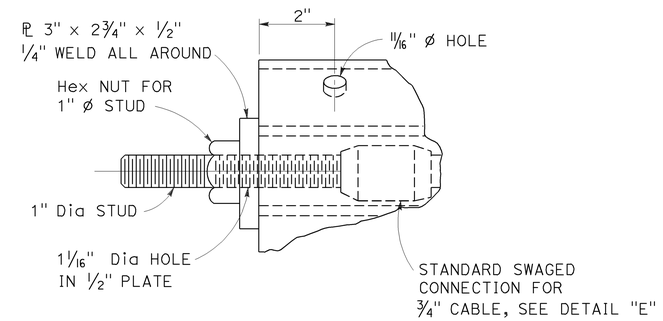

DETAIL "D"

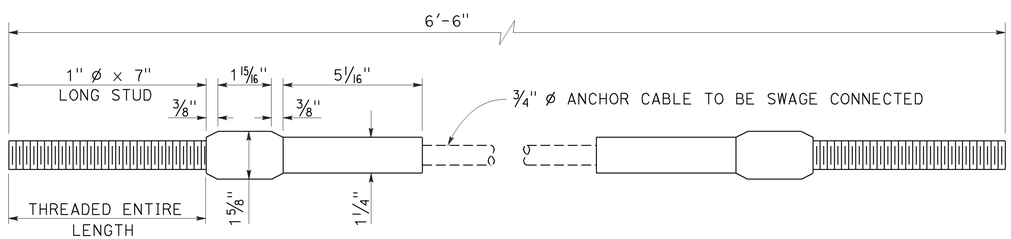

ANCHOR CABLE WITH SWAGED FITTING AND STUD

DETAIL "E"

STATE OF CALIFORNIA
DEPARTMENT OF TRANSPORTATION

METAL RAILING ANCHOR CABLE AND ANCHOR PLATE DETAILS

NO SCALE

RSP A77S3 DATED NOVEMBER 15, 2013 SUPERSEDES RSP A77S3
DATED JULY 19, 2013 THAT SUPPLEMENTS THE STANDARD PLANS BOOK DATED 2010.

REVISED STANDARD PLAN RSP A77S3

2010 REVISED STANDARD PLAN RSP A77S3

10-4-13

Dist	COUNTY	ROUTE	POST MILES TOTAL PROJECT	SHEET No.	TOTAL SHEETS
07	LA	5	C43.9/C46.4	165	199

Randell D. Hiatt
REGISTERED CIVIL ENGINEER

November 15, 2013
PLANS APPROVAL DATE

REGISTERED PROFESSIONAL ENGINEER
Randell D. Hiatt
No. C50200
Exp. 6-30-15
CIVIL
STATE OF CALIFORNIA

THE STATE OF CALIFORNIA OR ITS OFFICERS OR AGENTS SHALL NOT BE RESPONSIBLE FOR THE ACCURACY OR COMPLETENESS OF SCANNED COPIES OF THIS PLAN SHEET.

TO ACCOMPANY PLANS DATED 6-29-15

2010 REVISED STANDARD PLAN RSP A77T1

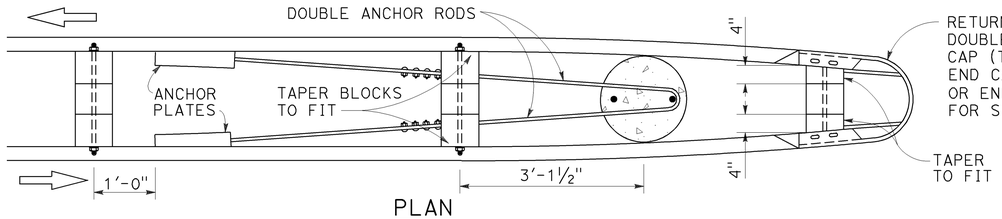

PLAN
See Note 4

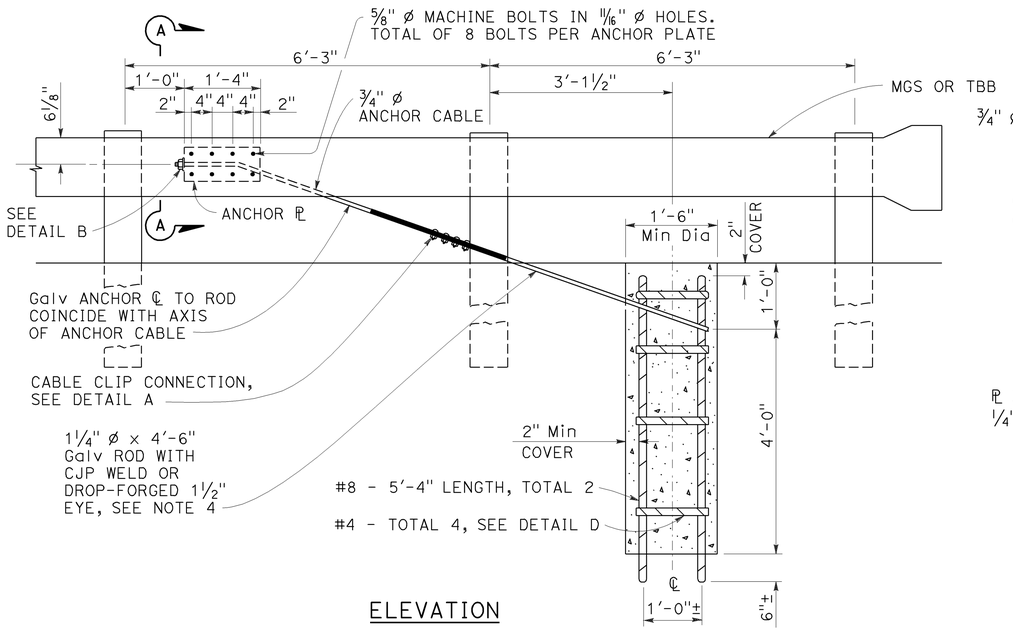

ELEVATION
END ANCHOR ASSEMBLY
(TYPE CA)
(Wood post, MGS shown, details similar for Thrie Beam Barrier.)

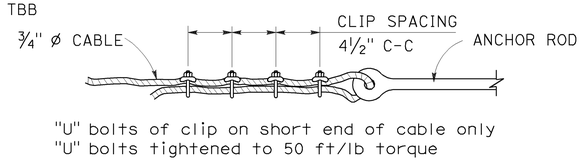

DETAIL A
CABLE CLIP CONNECTION

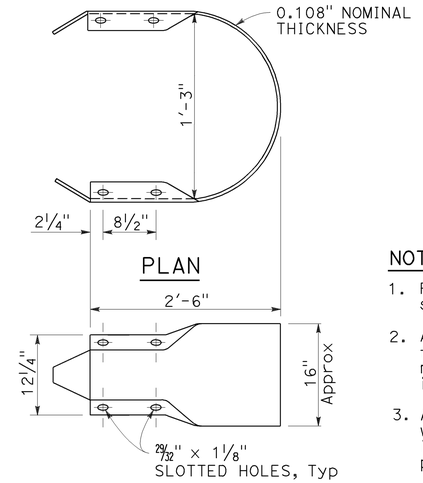

ELEVATION
RETURN CAP
(TYPE A)

NOTES:

1. For typical use of this type of end anchor, see Revised Standard Plan RSP A78E2.
2. Anchor cable to be parallel to railing for straight runs of rail. Anchor cable may have angle point at anchor plate if railing is curved.
3. Anchor rod hooks to be in contact with anchor reinforcement when concrete is placed. Wire ties may be used to position anchor rods.
4. Single sided railing installations require only one anchor plate, anchor rod and anchor cable. Single sided railing will not have a rail element or blockouts on backside of line posts as shown in the plan view.

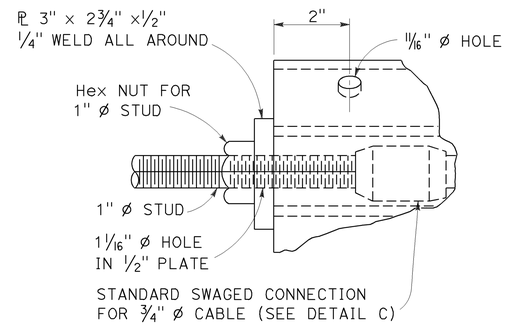

DETAIL B

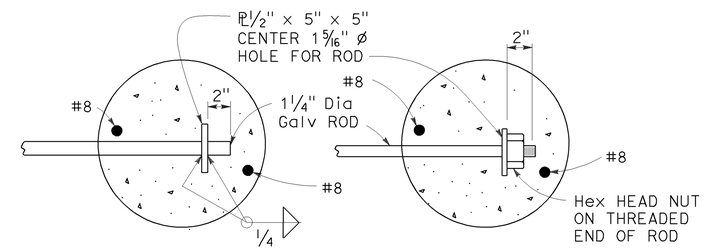

OPTIONAL ENDS ON SINGLE ANCHOR ROD
(Not to be used for double anchors)

NOTE:
Use two 1¼" Ø Galv rods with hook and eye for double MGS anchor.

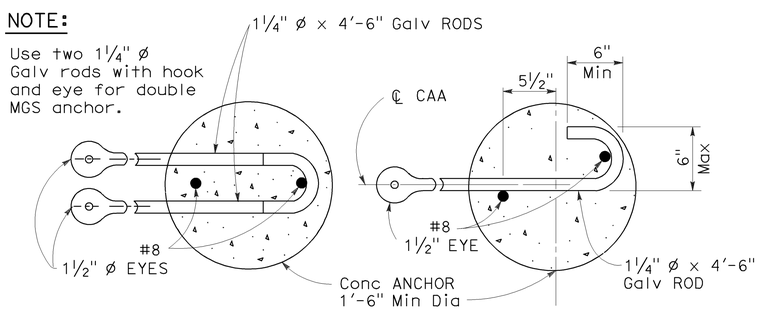

DOUBLE ANCHOR SINGLE ANCHOR
ANCHOR RODS

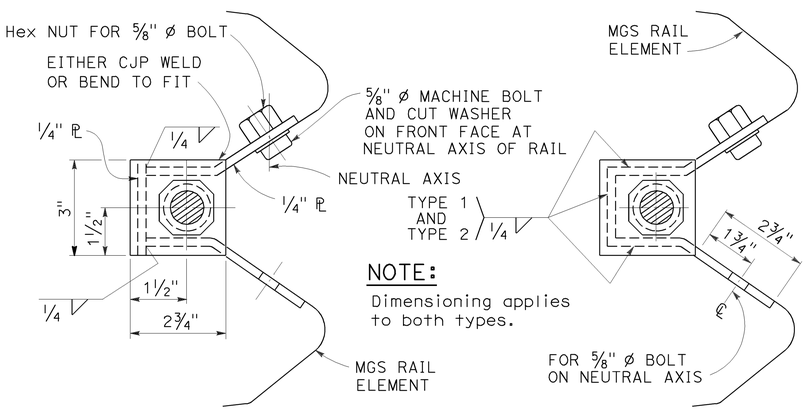

NOTE:
Dimensioning applies to both types.

SECTION A-A
(Alternative Type 1)

SECTION A-A
(Alternative Type 2)

ANCHOR PLATE DETAILS

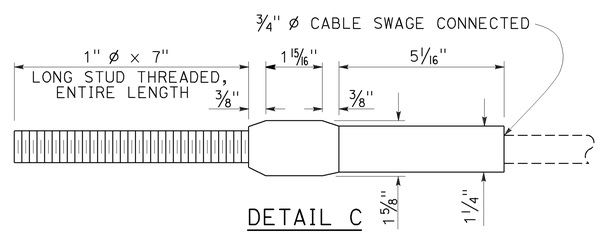

DETAIL C

ANCHOR CABLE WITH
SWAGED FITTING AND STUD

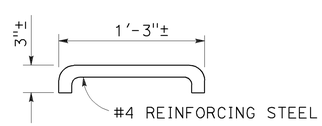

DETAIL D

STATE OF CALIFORNIA
DEPARTMENT OF TRANSPORTATION

METAL RAILING END ANCHOR ASSEMBLY (TYPE CA)

NO SCALE

RSP A77T1 DATED NOVEMBER 15, 2013 SUPERSEDES RSP A77T1 DATED JULY 19, 2013 THAT SUPPLEMENTS THE STANDARD PLANS BOOK DATED 2010.

REVISED STANDARD PLAN RSP A77T1

10-22-13

Dist	COUNTY	ROUTE	POST MILES TOTAL PROJECT	SHEET No.	TOTAL SHEETS
07	LA	5	C43.9/C46.4	166	199

Randell D. Hiatt
REGISTERED CIVIL ENGINEER

July 19, 2013
PLANS APPROVAL DATE

REGISTERED PROFESSIONAL ENGINEER
Randell D. Hiatt
No. C50200
Exp. 6-30-15
CIVIL
STATE OF CALIFORNIA

THE STATE OF CALIFORNIA OR ITS OFFICERS OR AGENTS SHALL NOT BE RESPONSIBLE FOR THE ACCURACY OR COMPLETENESS OF SCANNED COPIES OF THIS PLAN SHEET.

TO ACCOMPANY PLANS DATED 6-29-15

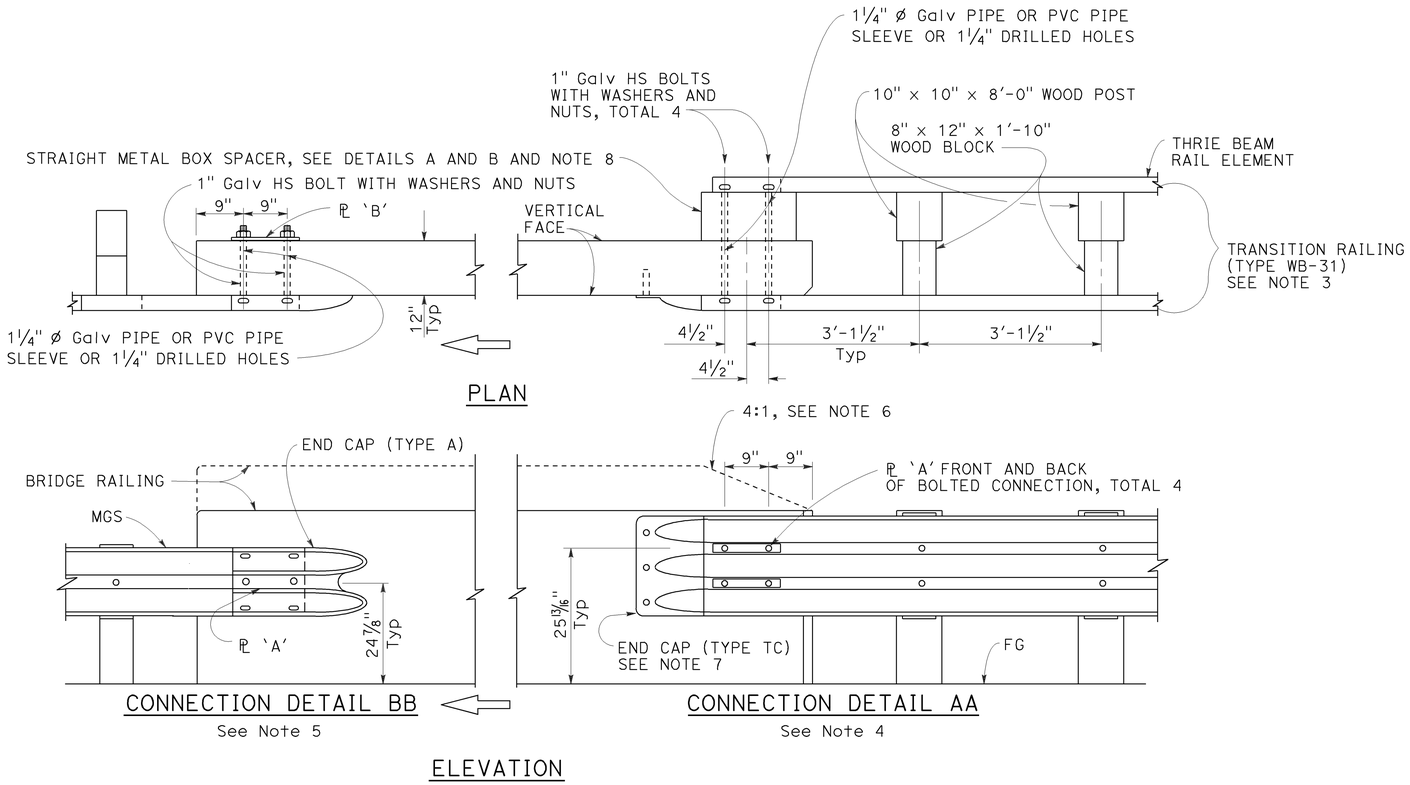

MIDWEST GUARDRAIL SYSTEM CONNECTION TO BRIDGE RAILING WITHOUT SIDEWALK

NOTES:

1. See Revised Standard Plan RSP A77U2 for additional connection details to bridges without sidewalks.
2. Additional details of posts, blocks and hardware are shown on Revised Standard Plans RSP A77M1, RSP A77N1 and RSP A77N2.
3. For additional details of Transition Railing (Type WB-31), see Revised Standard Plan RSP A77U4. Transition Railing (Type WB-31) transitions the 12 gauge MGS railing section to a heavier gage nested thrie beam railing section which is connected to the concrete bridge railing.
4. For typical use of Connection Detail AA, see Layout Types 12A and 12B on Revised Standard Plan RSP A77Q1, Layout Types 12C and 12D on Revised Standard Plan RSP A77Q2, and Layout Type 12E on Revised Standard Plan RSP A77Q3.
5. For typical use of Connection Detail BB, see Layout Type 12D (structure departure railing connection) on Revised Standard Plan RSP A77Q2 and Layout Type 12DD on Revised Standard Plan RSP A77Q5.
6. Where the height of the bridge railing exceeds the height of the thrie beam railing by more than 1" at Connection Detail AA, taper the top of the end of the bridge railing at 4:1 to match the top elevation of the thrie beam rail.
7. For details of End Cap (Type TC), see Revised Standard Plan RSP A77U4.
8. See Revised Standard Plan RSP A77U4 for additional details regarding depth dimension for straight metal box spacer.

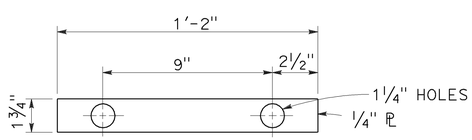

PLATE 'A'

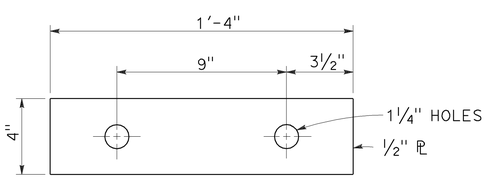

PLATE 'B'
(For backside of connection BB)

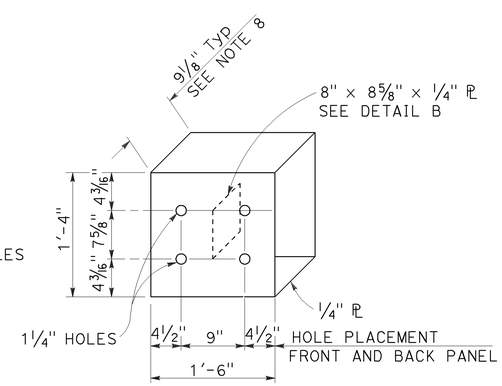

DETAIL A

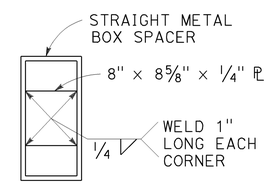

DETAIL B

STRAIGHT METAL BOX SPACER

STATE OF CALIFORNIA
DEPARTMENT OF TRANSPORTATION

MIDWEST GUARDRAIL SYSTEM CONNECTIONS TO BRIDGE RAILINGS WITHOUT SIDEWALKS DETAILS No. 1

NO SCALE

RSP A77U1 DATED JULY 19, 2013 SUPPLEMENTS THE STANDARD PLANS BOOK DATED 2010.

REVISED STANDARD PLAN RSP A77U1

2010 REVISED STANDARD PLAN RSP A77U1

7-8-13

Dist	COUNTY	ROUTE	POST MILES TOTAL PROJECT	SHEET No.	TOTAL SHEETS
07	LA	5	C43.9/C46.4	167	199

Randell D. Hiatt
REGISTERED CIVIL ENGINEER

July 19, 2013
PLANS APPROVAL DATE

REGISTERED PROFESSIONAL ENGINEER
Randell D. Hiatt
No. C50200
Exp. 6-30-15
CIVIL
STATE OF CALIFORNIA

THE STATE OF CALIFORNIA OR ITS OFFICERS OR AGENTS SHALL NOT BE RESPONSIBLE FOR THE ACCURACY OR COMPLETENESS OF SCANNED COPIES OF THIS PLAN SHEET.

TO ACCOMPANY PLANS DATED 6-29-15

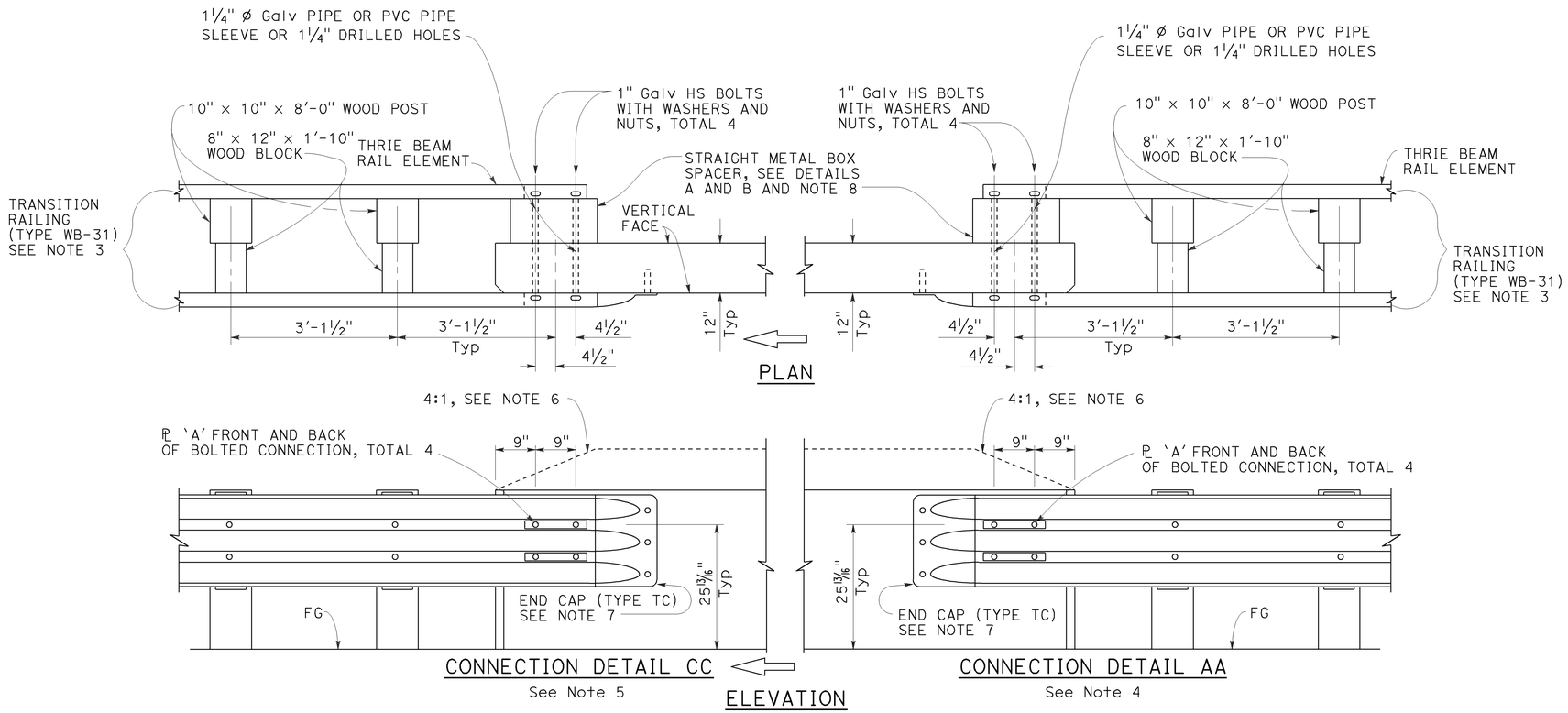

MIDWEST GUARDRAIL SYSTEM CONNECTION TO BRIDGE RAILING WITHOUT SIDEWALK

NOTES:

1. See Revised Standard Plan RSP A77U1 for additional connection details to bridges without sidewalks.
2. Additional details of posts, blocks and hardware are shown on Revised Standard Plans RSP A77M1, RSP A77N1 and RSP A77N2.
3. For additional details of Transition Railing (Type WB-31), see Revised Standard Plan RSP A77U4. Transition Railing (Type WB-31) transitions the 12 gauge MGS railing section to a heavier gage nested thrie beam railing section which is connected to the concrete bridge railing.
4. For typical use of Connection Detail AA, see Layout Types 12A and 12B on Revised Standard Plan RSP A77Q1, Layout Types 12C and 12D on Revised Standard Plan RSP A77Q2, and Layout Type 12E on Revised Standard Plan RSP A77Q3.
5. For typical use of Connection Detail CC, see Layout Types 12AA and 12BB on Revised Standard Plan RSP A77Q4 and Layout Type 12CC on Revised Standard Plan RSP A77Q5.
6. Where the height of the bridge railing exceeds the height of the thrie beam railing by more than 1" at Connection Detail AA and connection Detail CC, taper the top of the end of the bridge railing at 4:1 to match the top elevation of the thrie beam railing.
7. For details of End Cap (Type TC), see Revised Standard Plan RSP A77U4.
8. See Revised Standard Plan RSP A77U4 for additional details regarding depth dimension for straight metal box spacer.

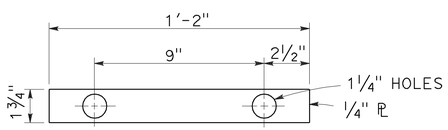

PLATE 'A'

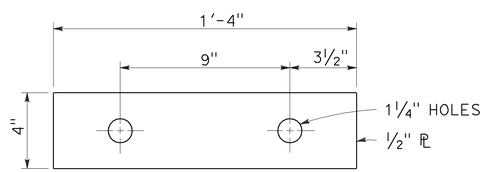

PLATE 'B'
(For backside of connection BB)

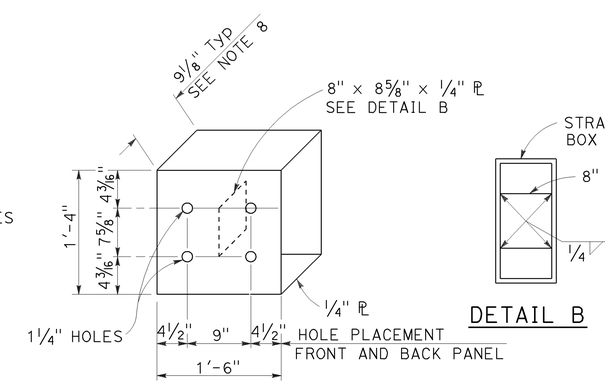

DETAIL A

STRAIGHT METAL BOX SPACER

STATE OF CALIFORNIA
DEPARTMENT OF TRANSPORTATION

MIDWEST GUARDRAIL SYSTEM CONNECTIONS TO BRIDGE RAILINGS WITHOUT SIDEWALKS DETAILS No. 2

NO SCALE

RSP A77U2 DATED JULY 19, 2013 SUPPLEMENTS THE STANDARD PLANS BOOK DATED 2010.

REVISED STANDARD PLAN RSP A77U2

2010 REVISED STANDARD PLAN RSP A77U2

6-20-13

Dist	COUNTY	ROUTE	POST MILES TOTAL PROJECT	SHEET No.	TOTAL SHEETS
07	LA	5	C43.9/C46.4	168	199

Randell D. Hiatt
REGISTERED CIVIL ENGINEER

July 19, 2013
PLANS APPROVAL DATE

REGISTERED PROFESSIONAL ENGINEER
Randell D. Hiatt
No. C50200
Exp. 6-30-15
CIVIL
STATE OF CALIFORNIA

THE STATE OF CALIFORNIA OR ITS OFFICERS OR AGENTS SHALL NOT BE RESPONSIBLE FOR THE ACCURACY OR COMPLETENESS OF SCANNED COPIES OF THIS PLAN SHEET.

TO ACCOMPANY PLANS DATED 6-29-15

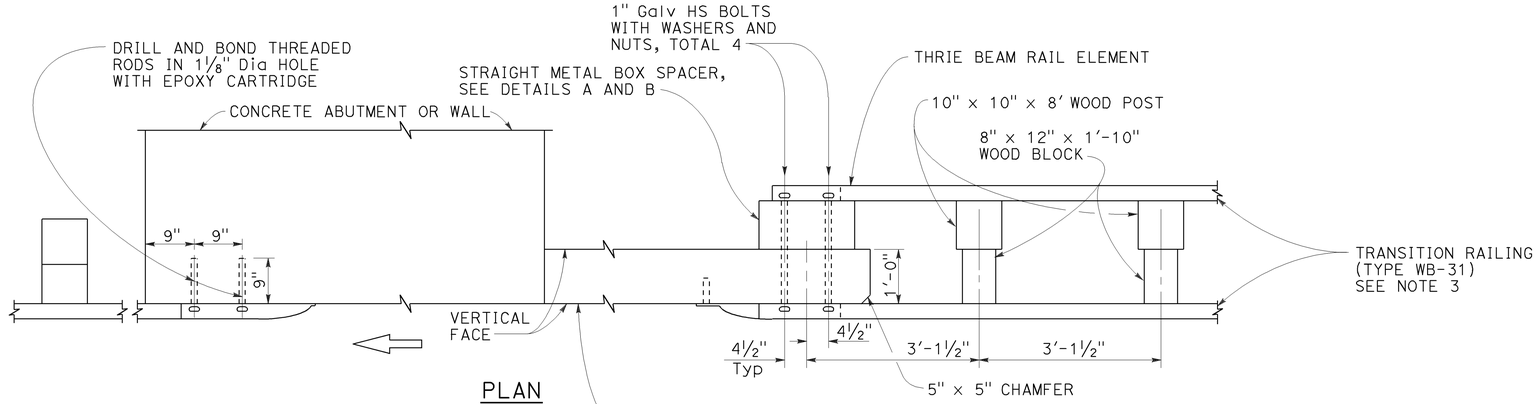

PLAN

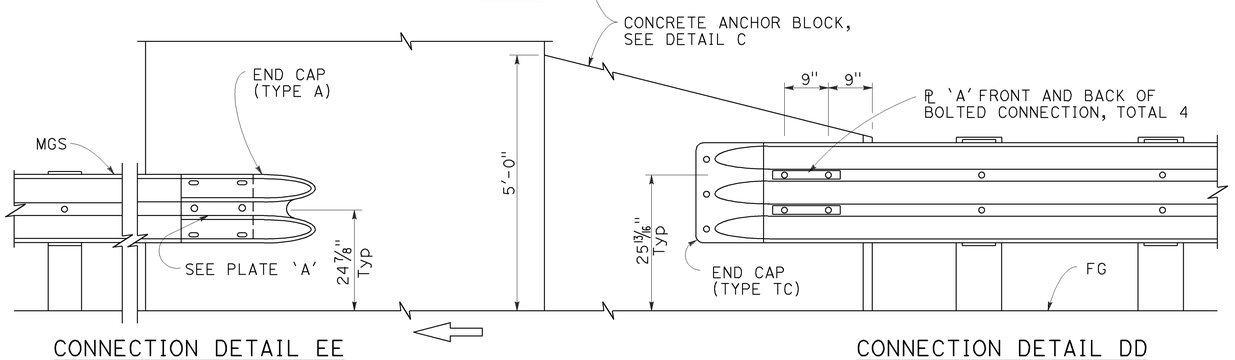

CONNECTION DETAIL EE
See Note 5

CONNECTION DETAIL DD
See Note 4

ELEVATION

MIDWEST GUARDRAIL SYSTEM CONNECTION TO ABUTMENT OR WALL

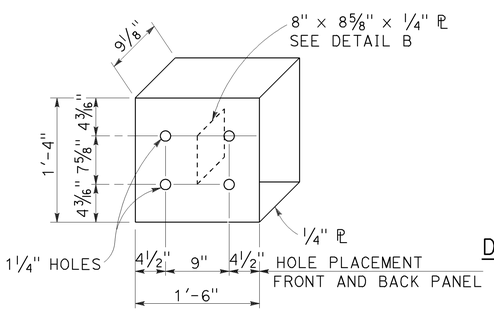

DETAIL A

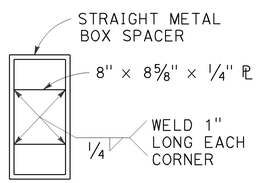

DETAIL B

STRAIGHT METAL BOX SPACER

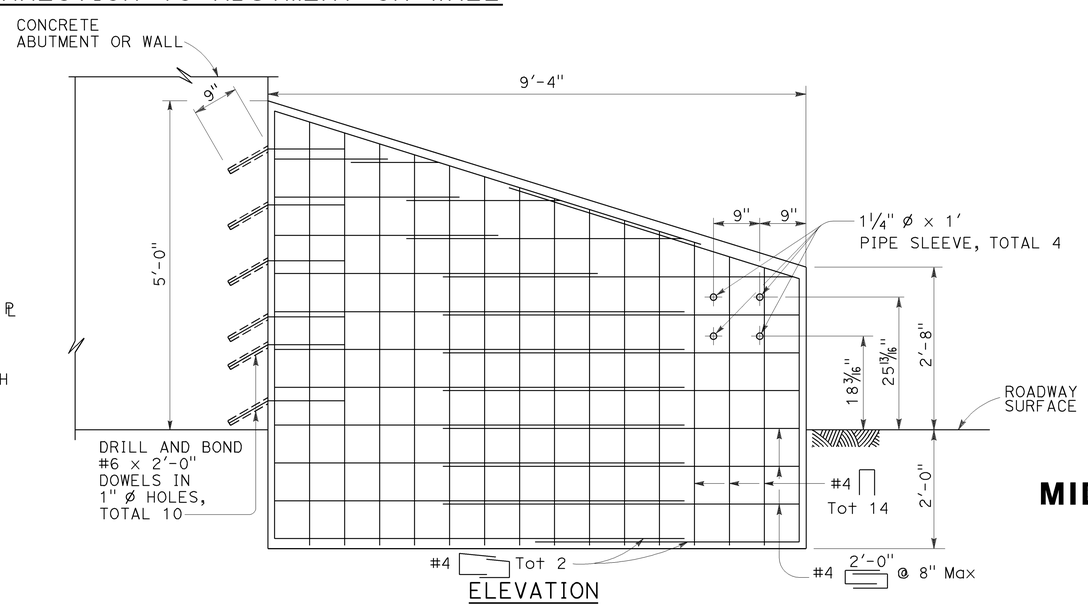

ELEVATION

ANCHOR BLOCK FOR TRANSITION RAILING CONNECTION

DETAIL C

NOTES:

1. These connection details apply to abutments and walls.
2. Additional details of posts, blocks and hardware are shown on Revised Standard Plans RSP A77M1, RSP A77N1 and RSP A77N2.
3. For additional details of Transition Railing (Type WB-31), see Revised Standard Plan RSP A77U4. Transition Railing (Type WB-31) transitions the 12 gauge MGS railing section to a heavier gage nested thrie beam railingsection which is connected to the concrete anchor block.
4. For typical use of Connection Details DD, see Layout Types 12A and 12B on Revised Standard Plan RSP A77Q1 and Layout Types 12C and 12D on Revised Standard Plan RSP A77Q2.
5. For typical use of Connection Detail EE, see Layout Type 12D on Revised Standard Plan RSP A77Q2 and Layout Type 12DD on Revised Standard Plan RSP A77Q5.

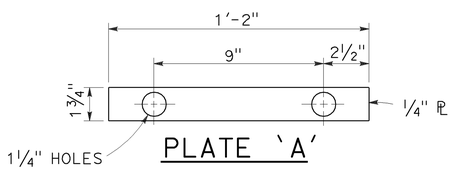

PLATE 'A'

STATE OF CALIFORNIA
DEPARTMENT OF TRANSPORTATION

MIDWEST GUARDRAIL SYSTEM CONNECTIONS TO ABUTMENTS AND WALLS

NO SCALE

RSP A77U3 DATED JULY 19, 2013 SUPPLEMENTS THE STANDARD PLANS BOOK DATED 2010.

REVISED STANDARD PLAN RSP A77U3

2010 REVISED STANDARD PLAN RSP A77U3

7-8-13

Dist	COUNTY	ROUTE	POST MILES TOTAL PROJECT	SHEET No.	TOTAL SHEETS
07	LA	5	C43.9/C46.4	169	199

Randell D. Hiatt
REGISTERED CIVIL ENGINEER

January 23, 2015
PLANS APPROVAL DATE

REGISTERED PROFESSIONAL ENGINEER
Randell D. Hiatt
No. C50200
Exp. 6-30-15
CIVIL
STATE OF CALIFORNIA

THE STATE OF CALIFORNIA OR ITS OFFICERS OR AGENTS SHALL NOT BE RESPONSIBLE FOR THE ACCURACY OR COMPLETENESS OF SCANNED COPIES OF THIS PLAN SHEET.

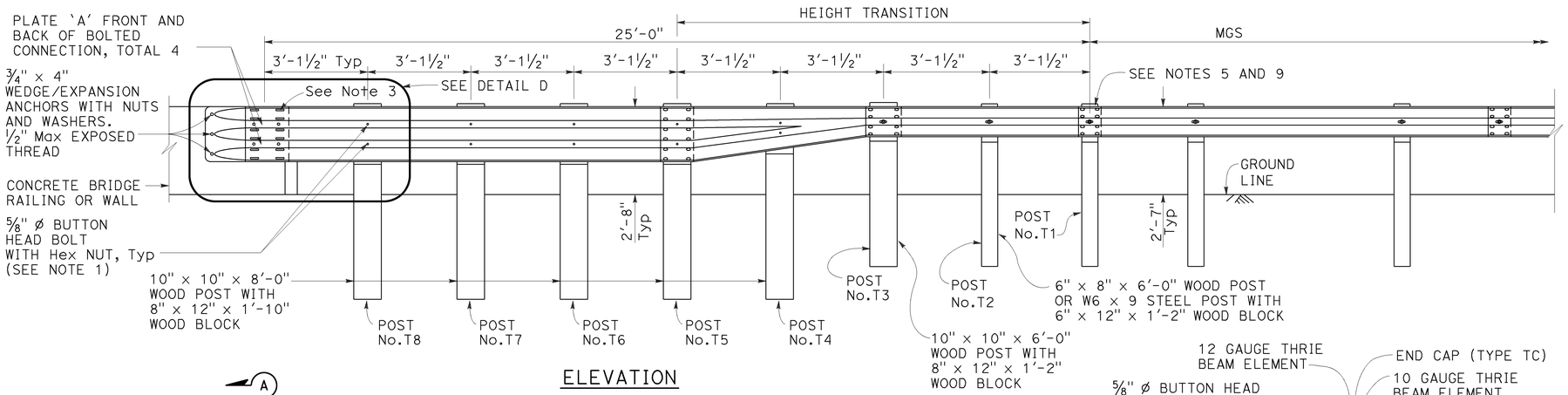

ELEVATION

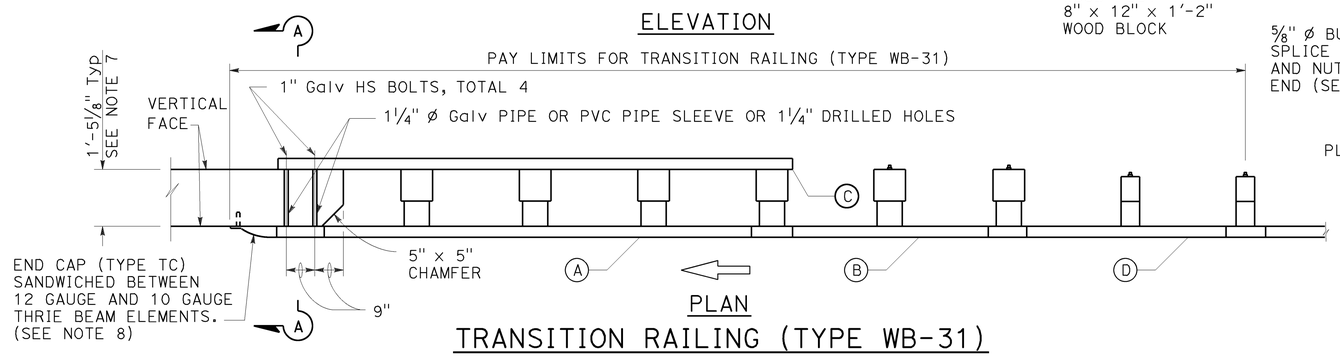

PLAN

TRANSITION RAILING (TYPE WB-31)

(No Blockout Attachment)

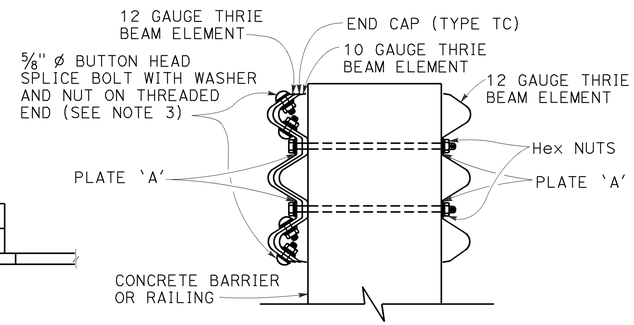

SECTION A-A

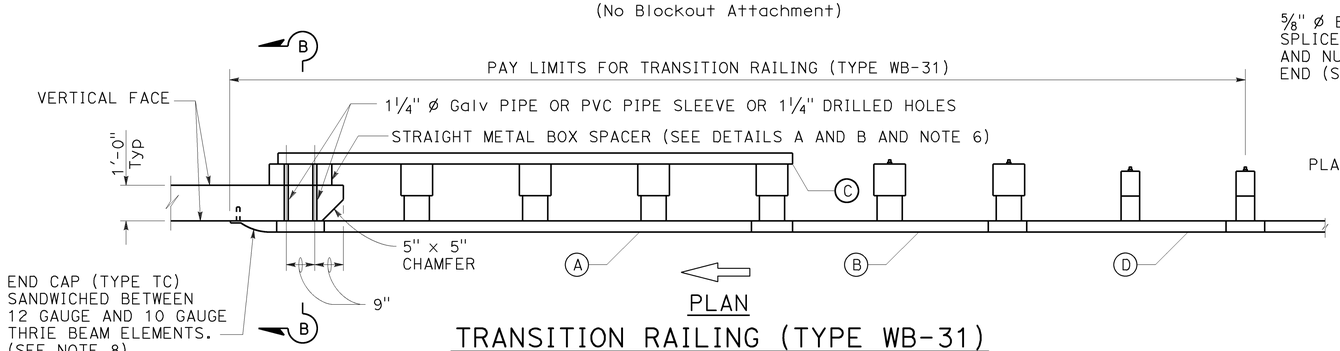

PLAN

TRANSITION RAILING (TYPE WB-31)

(Blockout Attachment)

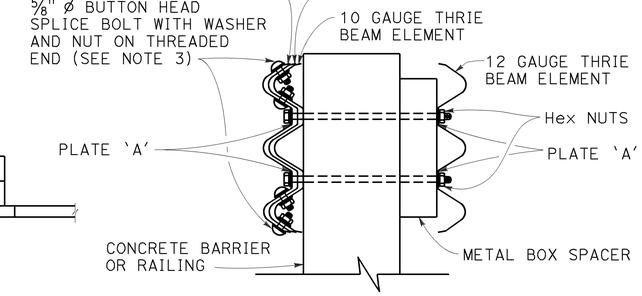

SECTION B-B

LEGEND:

- (A) NESTED THRIE BEAM ELEMENTS (ONE 12 GAUGE ELEMENT NESTED OVER ONE 10 GAUGE ELEMENT).
- (B) ONE ASYMMETRICAL 10 GAUGE "W" BEAM TO THRIE BEAM ELEMENT.
- (C) ONE 12 GAUGE THRIE BEAM ELEMENT.
- (D) ONE 10 GAUGE "W" BEAM RAIL ELEMENT (7'-3 1/2"LENGTH)

10 GAUGE = 0.138" THICK
12 GAUGE = 0.108" THICK

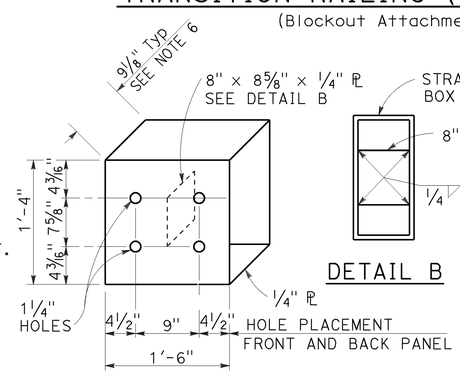

DETAIL A

STRAIGHT METAL BOX SPACER

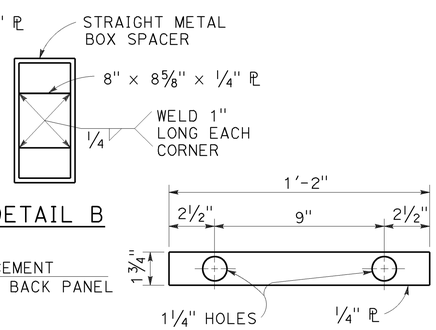

DETAIL B

DETAIL C

PLATE 'A'

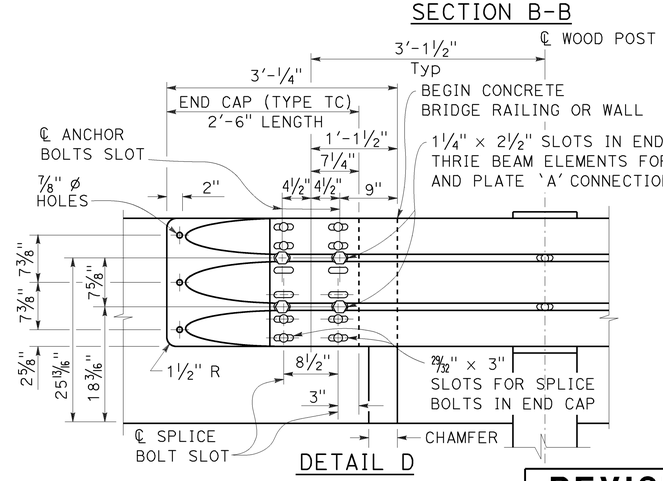

DETAIL D

NOTES:

TO ACCOMPANY PLANS DATED 6-29-15

1. Use 5/8" ø Button head bolts and hex nuts for connections to posts. No washer on rail face for bolted connections to post.
2. The nested rail elements, end cap, and 'W' beam to thrie beam element may be spliced together prior to bolting the elements to the wood post and concrete barrier or railing.
3. Exterior splice bolt holes for rail element splices at Post No. T5 and the connection to the concrete barrier or railing shall be the standard 29/32" x 1 1/8" slot size. Interior splice bolt holes at these locations may be increased up to 1 1/4" ø. Only the top 4 and the bottom 4 splice bolts with washers and nuts are required for rail splices at Post No. T5 and the connection to the concrete barrier or railing.
4. The top elevation of Posts No. T2 through No. T7 shall not project more than 1" above the top elevation of the rail element.
5. Typically, the railing connected to Transition Railing (Type WB-31) will be either standard railing section of MGS with height transition ratio of 150:1 or a Caltrans approved 31" end treatment attached to Post No. T1.
6. The depth of the metal box spacer varies from the 9 1/8" to 1 1/2" and is dependent on the width of the concrete railing or wall. The combined dimension for the depth of the metal box spacer plus the width of railing or wall is typically 21 1/8". Where the space between the backside of the concrete railing or wall and the rear thrie beam element is less than 1 1/2", metal plates similar to Plate 'A' are to be used as spacers.
7. Where the width of the concrete railing or wall is greater than 17 1/8", wood blocks are to be used to fill the space created between the backside of Posts No. T5 through No. T8 and the rear thrie beam element. These wood blocks shall be 8" in width and 1'-2" in length. The dimension between the front thrie beam element and the rear thrie beam element is to match the width of the concrete railing or wall.
8. End cap may be installed over 12 gauge and 10 gauge thrie beam elements where transition railing is installed on the departure end of bridge railing.
9. Conform standard railing section height to 31" at Post No. T1 using height transition ratio of 150:1.

STATE OF CALIFORNIA
DEPARTMENT OF TRANSPORTATION

MIDWEST GUARDRAIL SYSTEM TRANSITION RAILING (TYPE WB-31)

NO SCALE

RSP A77U4 DATED JANUARY 23, 2015 SUPERSEDES RSP A77U4 DATED NOVEMBER 15, 2013 AND RSP A77U4 DATED JULY 19, 2013 THAT SUPPLEMENTS THE STANDARD PLANS BOOK DATED 2010.

REVISED STANDARD PLAN RSP A77U4

2010 REVISED STANDARD PLAN RSP A77U4

1-8-15

Dist	COUNTY	ROUTE	POST MILES TOTAL PROJECT	SHEET No.	TOTAL SHEETS
07	LA	5	C43.9/C46.4	170	199

REGISTERED CIVIL ENGINEER

July 19, 2013
PLANS APPROVAL DATE

REGISTERED PROFESSIONAL ENGINEER
Michael Janzen
No. 44788
Exp. 03-31-14
CIVIL
STATE OF CALIFORNIA

THE STATE OF CALIFORNIA OR ITS OFFICERS OR AGENTS SHALL NOT BE RESPONSIBLE FOR THE ACCURACY OR COMPLETENESS OF SCANNED COPIES OF THIS PLAN SHEET.

TO ACCOMPANY PLANS DATED 6-29-15

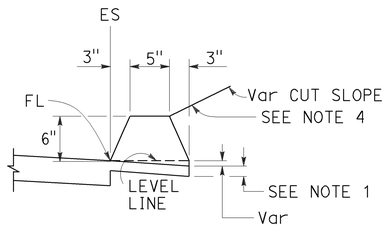

TYPE A
See Note 3

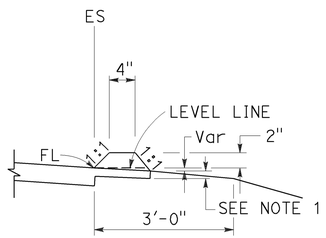

TYPE C

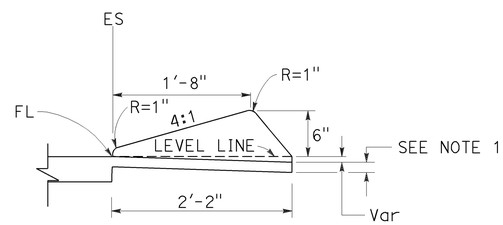

TYPE D

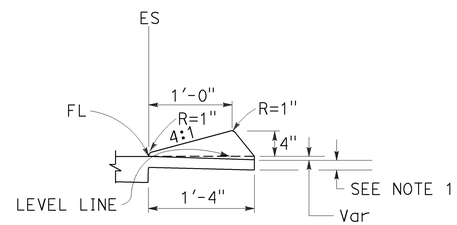

TYPE E

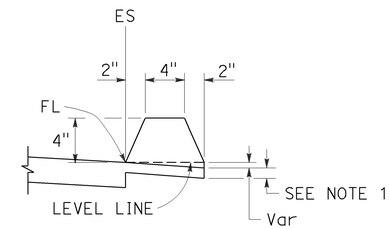

TYPE F
See Note 5

DIKES

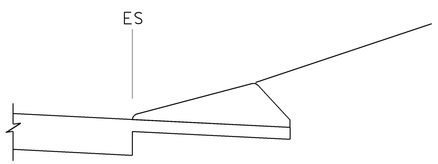

CASE C-1
Cut Slope

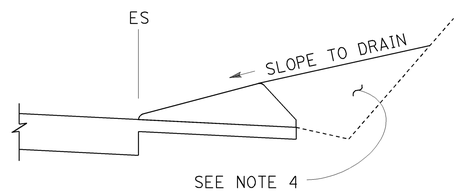

CASE C-2
Cut Slope

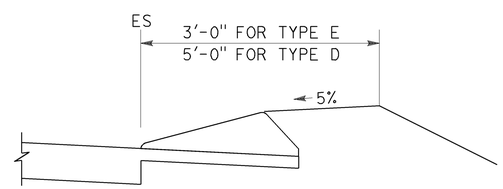

CASE F

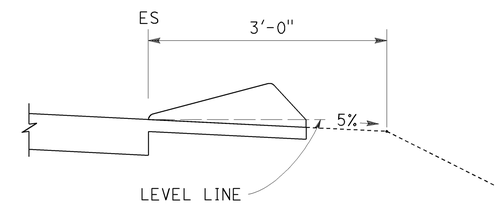

CASE R
See Note 2

TYPE D AND E BACKFILL DETAILS

NOTES:

1. For HMA shoulders only, extend top layer of HMA placed on the shoulder under dike with no joint at the ES. For projects with OGFC shoulders, do not extend OGFC under dike. See project plans for modified dike detail.
2. Case R applies to retrofit only projects where restrictive conditions do not provide enough width for Case F backfill.
3. Type A dike only to be used where restrictive slope conditions do not provide enough width to use Type D or Type E dike.
4. Fill and compact with excavated material to top of dike.
5. Use Type F dike, where dike is required with guard railing installations. See Revised Standard Plan RSP A77N4 for dike positioning details.

DIKE QUANTITIES

TYPE	CUBIC YARDS PER LINEAR FOOT
A	0.0135
C	0.0038
D	0.0293
E	0.0130
F	0.0066

Quantities based on 5% cross slope.

STATE OF CALIFORNIA
DEPARTMENT OF TRANSPORTATION

HOT MIX ASPHALT DIKES

NO SCALE

RSP A87B DATED JULY 19, 2013 SUPERSEDES STANDARD PLAN A87B DATED MAY 20, 2011 - PAGE 120 OF THE STANDARD PLANS BOOK DATED 2010.

REVISED STANDARD PLAN RSP A87B

2010 REVISED STANDARD PLAN RSP A87B

6-27-13

Dist	COUNTY	ROUTE	POST MILES TOTAL PROJECT	SHEET No.	TOTAL SHEETS
07	LA	5	C43.9/C46.4	171	199

William K. Farnbach
REGISTERED CIVIL ENGINEER

July 19, 2013
PLANS APPROVAL DATE

REGISTERED PROFESSIONAL ENGINEER
William K. Farnbach
No. C49042
Exp. 9-30-14
CIVIL
STATE OF CALIFORNIA

THE STATE OF CALIFORNIA OR ITS OFFICERS OR AGENTS SHALL NOT BE RESPONSIBLE FOR THE ACCURACY OR COMPLETENESS OF SCANNED COPIES OF THIS PLAN SHEET.

TO ACCOMPANY PLANS DATED 6-29-15

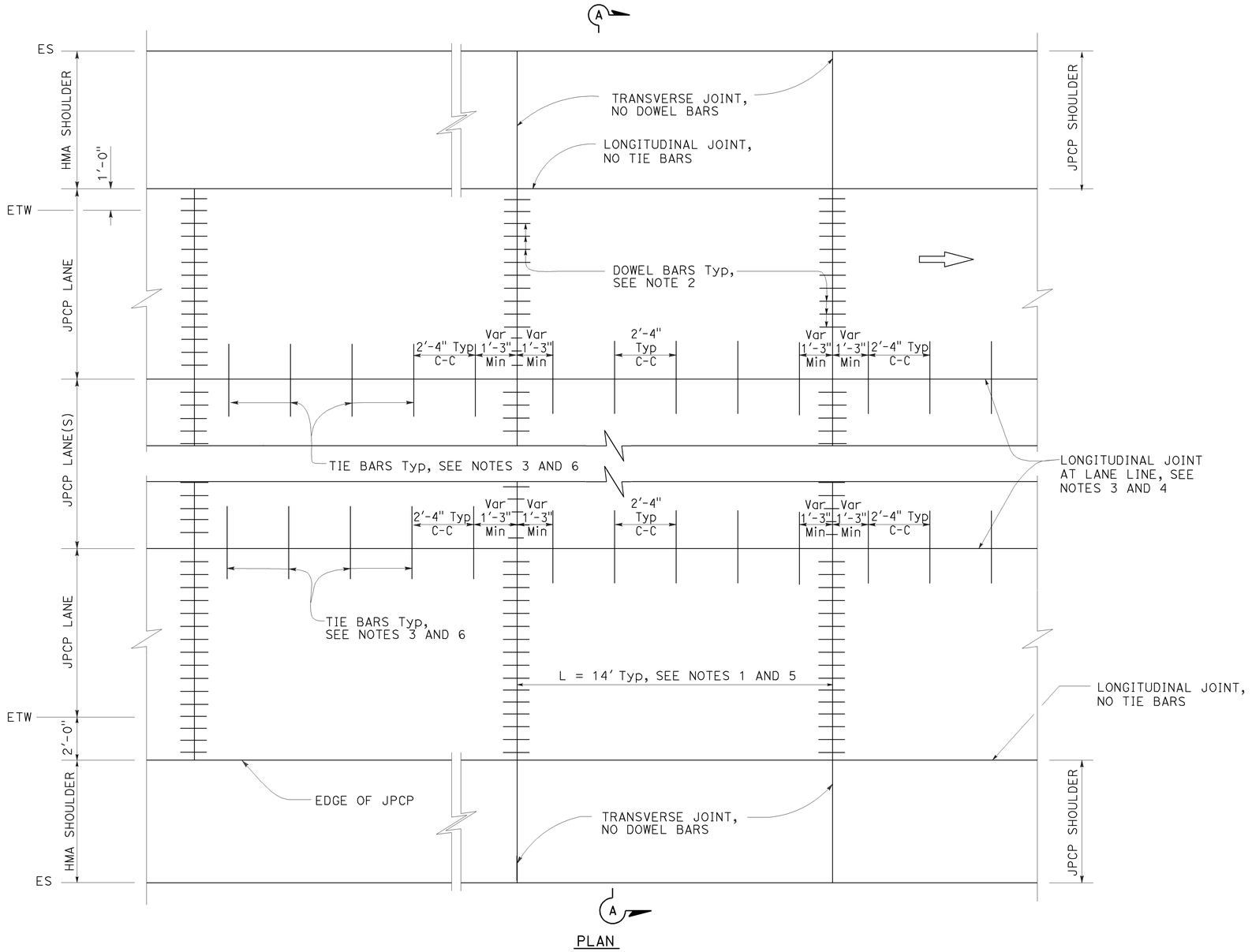

PLAN

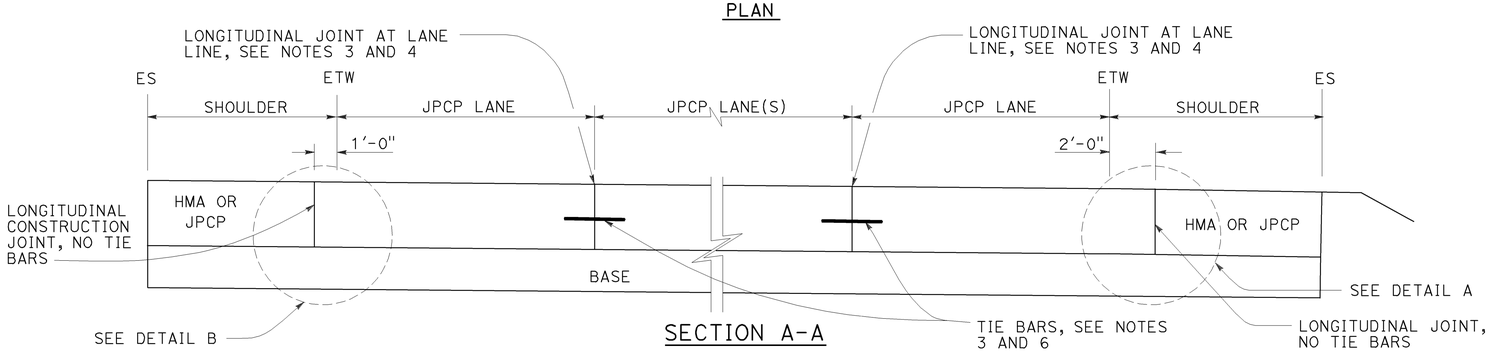

SECTION A-A

NOTES:

1. Transverse joint spacing may be adjusted to no less than 10' and no more than 14' to conform to bridges, change in pavement type, and hardened concrete pavement.
2. For transverse joint and dowel bar details not shown, see Revised Standard Plan RSP P10.
3. For longitudinal joint and tie bar details not shown, see Revised Standard Plan RSP P15.
4. For additional longitudinal joint layout details, see Revised Standard Plan RSP P18.
5. For joint layout at intersections, see Project Plans.
6. For dowel bars at longitudinal joint. see Revised Standard Plan RSP P18.
7. For limits of rumble strips, see Projects Plans.

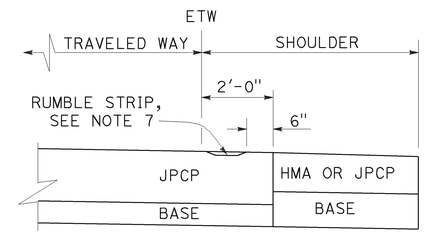

DETAIL A

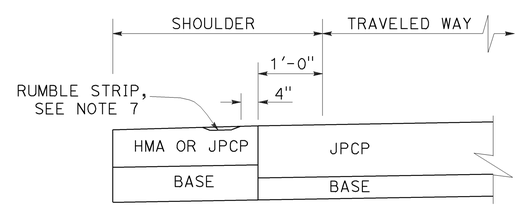

DETAIL B

STATE OF CALIFORNIA
DEPARTMENT OF TRANSPORTATION

JOINTED PLAIN CONCRETE PAVEMENT (WIDENED LANE) NEW CONSTRUCTION

NO SCALE

RSP P2 DATED JULY 19, 2013 SUPERSEDES STANDARD PLAN P2 DATED MAY 20, 2011 - PAGE 126 OF THE STANDARD PLANS BOOK DATED 2010.

REVISED STANDARD PLAN RSP P2

2010 REVISED STANDARD PLAN RSP P2

5-31-13

Dist	COUNTY	ROUTE	POST MILES TOTAL PROJECT	SHEET No.	TOTAL SHEETS
07	LA	5	C43.9/C46.4	172	199

William K. Farnbach
REGISTERED CIVIL ENGINEER

July 19, 2013
PLANS APPROVAL DATE

REGISTERED PROFESSIONAL ENGINEER William K. Farnbach No. C49042 Exp. 9-30-14 CIVIL STATE OF CALIFORNIA

THE STATE OF CALIFORNIA OR ITS OFFICERS OR AGENTS SHALL NOT BE RESPONSIBLE FOR THE ACCURACY OR COMPLETENESS OF SCANNED COPIES OF THIS PLAN SHEET.

TO ACCOMPANY PLANS DATED 6-29-15

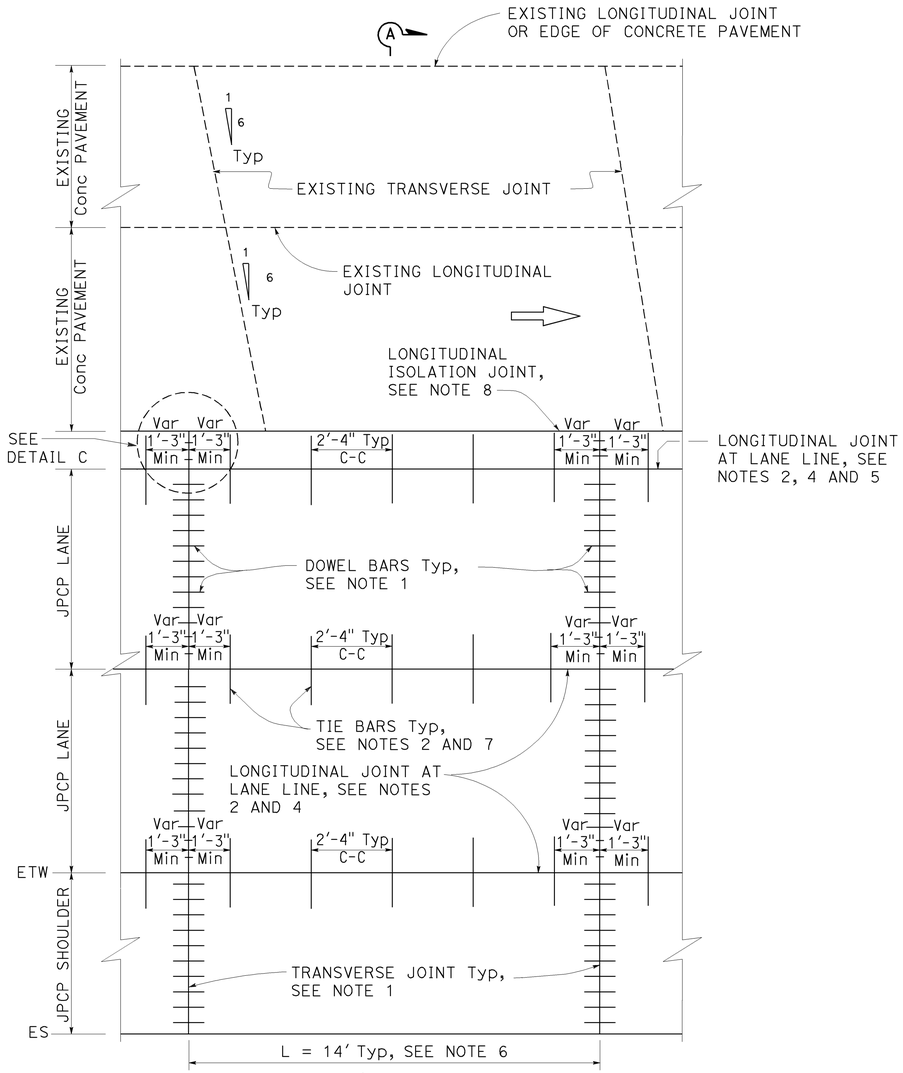

PLAN
ISOLATED
See Note 3

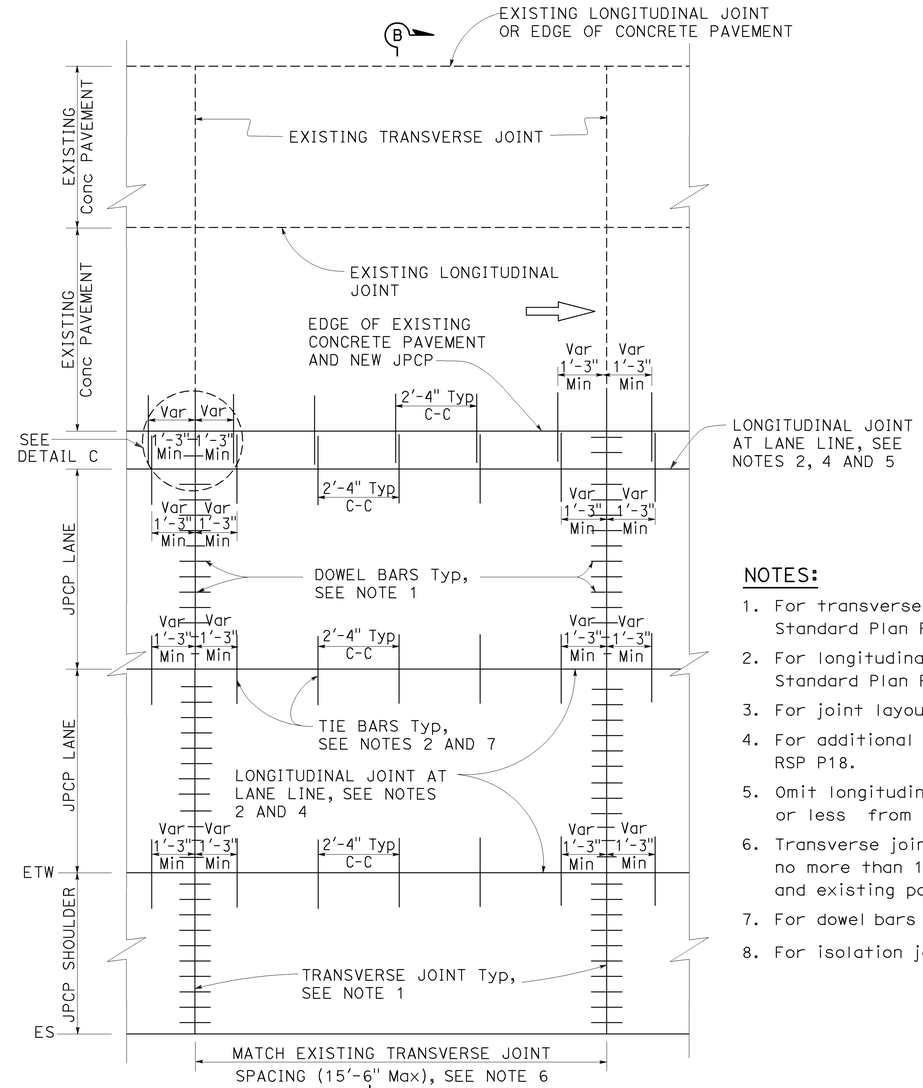

PLAN
TIED
See Note 3

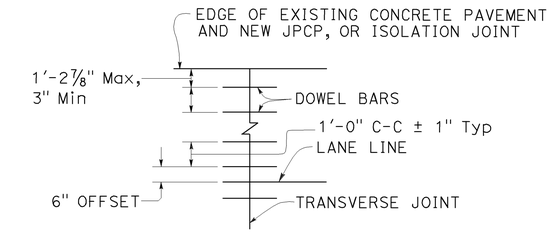

DETAIL C

NOTES:

1. For transverse joint and dowel bar details not shown, see Revised Standard Plan RSP P10.
2. For longitudinal joint and tie bar details not shown, see Revised Standard Plan RSP P15.
3. For joint layout at intersections, see Project Plans.
4. For additional longitudinal joint details, see Revised Standard Plan RSP P18.
5. Omit longitudinal joint when edge of new concrete pavement is 3'-3" or less from JPCP lane line.
6. Transverse joint spacing may be adjusted to no less than 10' and no more than 15'-6" to conform to bridges, change in pavement type and existing pavement.
7. For dowel bars at longitudinal joint. see Revised Standard Plan RSP P18.
8. For isolation joints, see Detail A on Revised Standard Plan RSP P18.

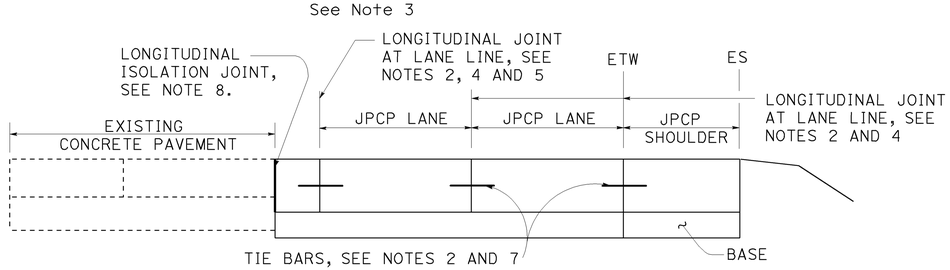

SECTION A-A

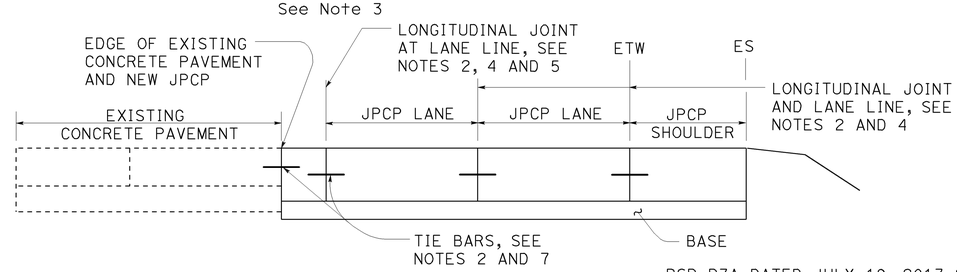

SECTION B-B

STATE OF CALIFORNIA
DEPARTMENT OF TRANSPORTATION

JOINTED PLAIN CONCRETE PAVEMENT LANE & SHOULDER ADDITION OR REPLACEMENT

NO SCALE

RSP P3A DATED JULY 19, 2013 SUPPLEMENTS THE STANDARD PLANS BOOK DATED 2010.

REVISED STANDARD PLAN RSP P3A

2010 REVISED STANDARD PLAN RSP P3A

5-31-13

Dist	COUNTY	ROUTE	POST MILES TOTAL PROJECT	SHEET No.	TOTAL SHEETS
07	LA	5	C43.9/C46.4	173	199

REGISTERED CIVIL ENGINEER

July 19, 2013
PLANS APPROVAL DATE

REGISTERED PROFESSIONAL ENGINEER — William K. Farnbach — No. C49042 — Exp. 9-30-14 — CIVIL — STATE OF CALIFORNIA

THE STATE OF CALIFORNIA OR ITS OFFICERS OR AGENTS SHALL NOT BE RESPONSIBLE FOR THE ACCURACY OR COMPLETENESS OF SCANNED COPIES OF THIS PLAN SHEET.

TO ACCOMPANY PLANS DATED 6-29-15

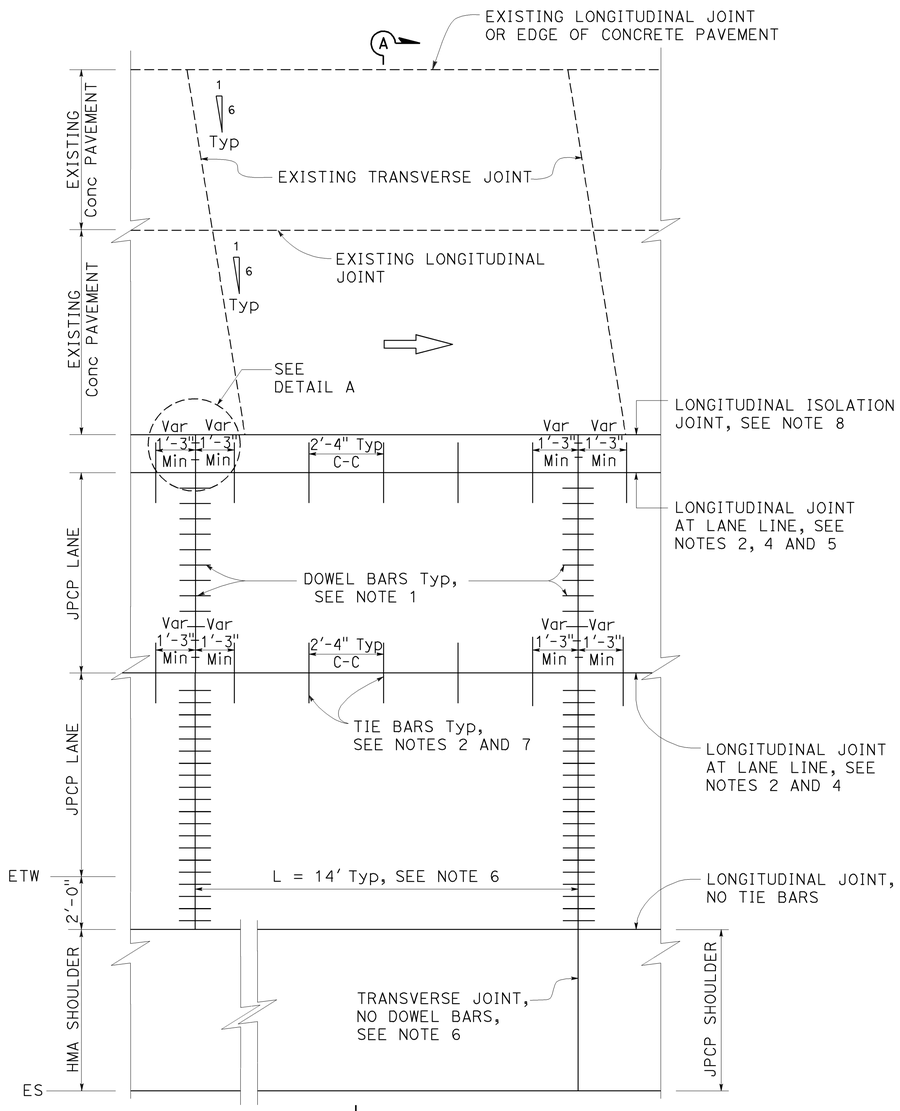

A PLAN
ISOLATED
See Note 3

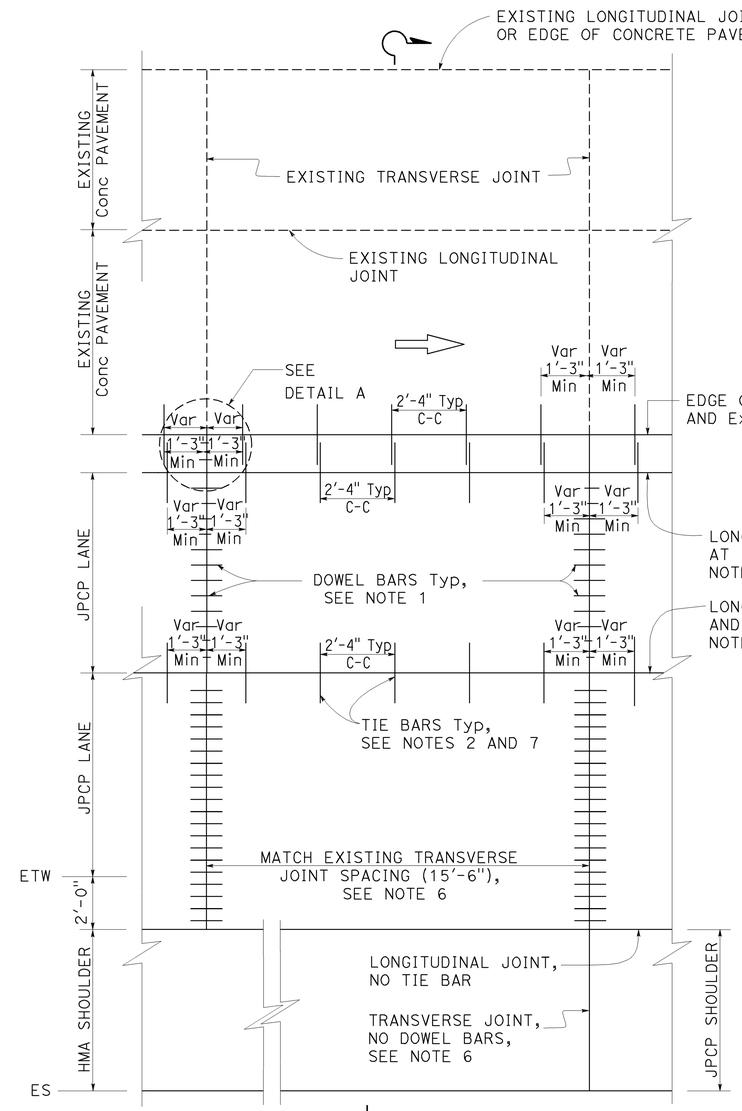

B PLAN
TIED
See Note 3

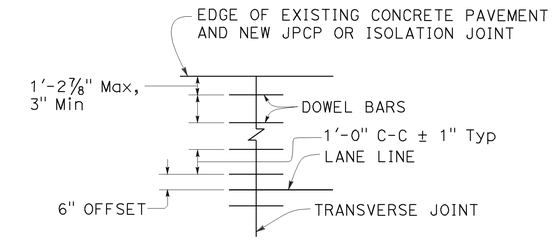

DETAIL A

NOTES:

1. For transverse joint and dowel bar details not shown, see Revised Standard Plan RSP P10.
2. For longitudinal joint and tie bar details not shown, see Revised Standard Plan RSP P15.
3. For joint layout at intersections, see Project Plans.
4. For additional longitudinal joint details, see Revised Standard Plan RSP P18.
5. Omit longitudinal joint when edge of new concrete pavement is 3'-3" or less from JPCP lane line.
6. Transverse joint spacing may be adjusted to no less than 10' and no more than 15'-6" to conform to bridges, change in pavement type and existing pavement.
7. For dowel bars at longitudinal joint. see Revised Standard Plan RSP P18.
8. For isolation joints, see Detail A on Revised Standard Plan RSP P18.

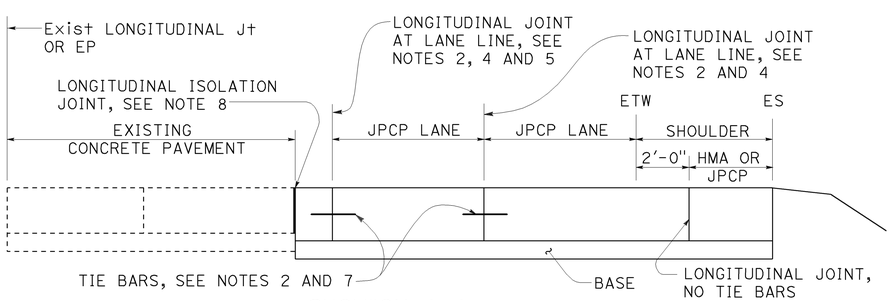

SECTION A-A

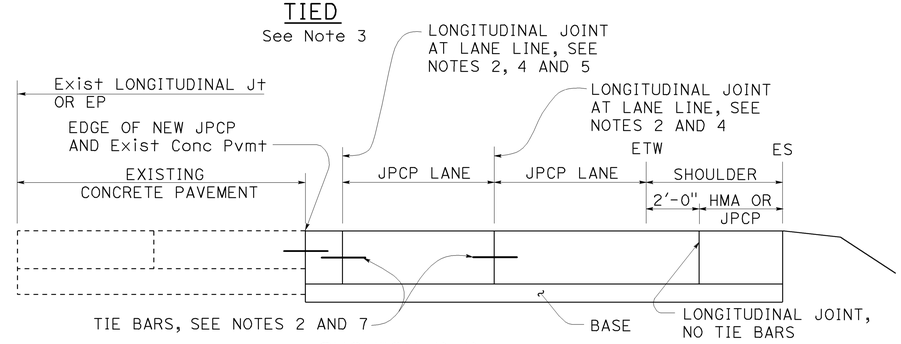

SECTION B-B

STATE OF CALIFORNIA
DEPARTMENT OF TRANSPORTATION

JOINTED PLAIN CONCRETE PAVEMENT (WIDENED LANE) LANE AND SHOULDER ADDITION OR REPLACEMENT

NO SCALE

RSP P3B DATED JULY 19, 2013 SUPPLEMENTS THE STANDARD PLANS BOOK DATED 2010.

REVISED STANDARD PLAN RSP P3B

2010 REVISED STANDARD PLAN RSP P3B

5-31-13

Dist	COUNTY	ROUTE	POST MILES TOTAL PROJECT	SHEET No.	TOTAL SHEETS
07	LA	5	C43.9/C46.4	174	199

William K. Farnbach
REGISTERED CIVIL ENGINEER

July 19, 2013
PLANS APPROVAL DATE

REGISTERED PROFESSIONAL ENGINEER
William K. Farnbach
No. C49042
Exp. 9-30-14
CIVIL
STATE OF CALIFORNIA

THE STATE OF CALIFORNIA OR ITS OFFICERS OR AGENTS SHALL NOT BE RESPONSIBLE FOR THE ACCURACY OR COMPLETENESS OF SCANNED COPIES OF THIS PLAN SHEET.

TO ACCOMPANY PLANS DATED 6-29-15

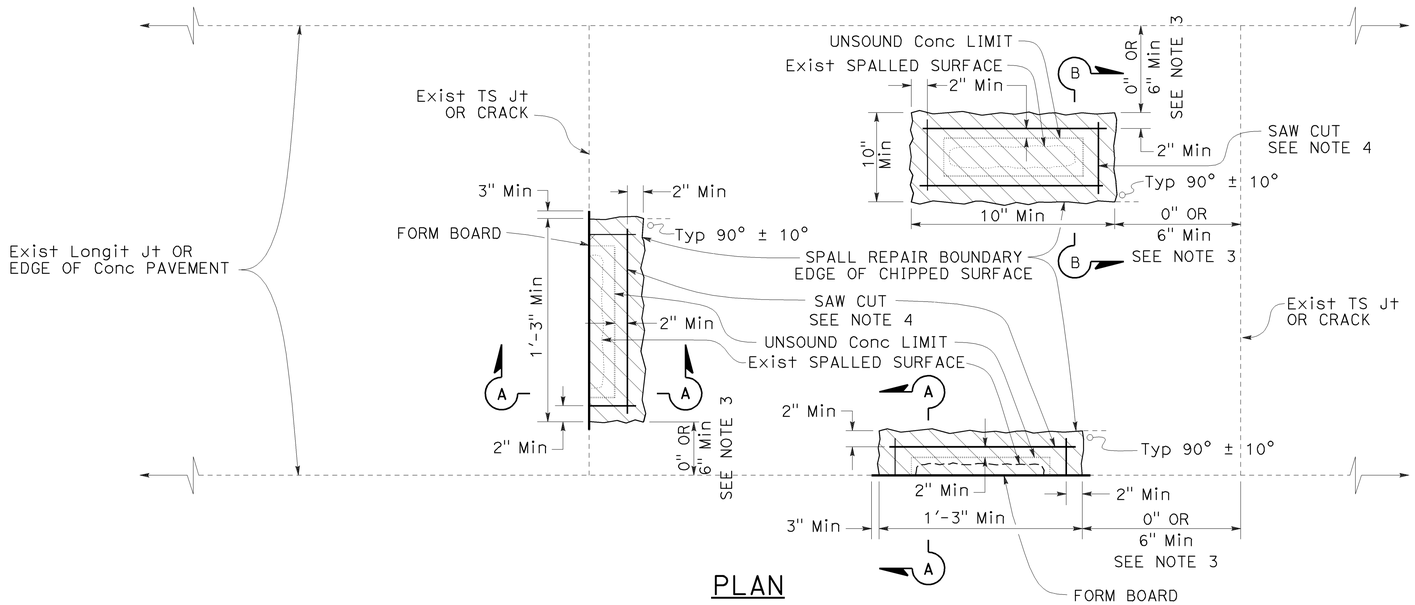

PLAN

LEGEND

SPALL REPAIR

NOTES:

1. See Project Plans for spall repair locations.
2. Combine spall repair areas closer than 2' apart.
3. If the spall repair area is less than 6" from a joint, extend the repair to the joint.
4. Cut at least 2" beyond the rectangular limits of unsound concrete determined by the Engineer. Determine the saw cut depth using the following table:

Conc MATERIAL	SAW CUT DEPTH	
	Min	Max
FAST-SETTING	2"	3½"
POLYESTER	1½"	3½"

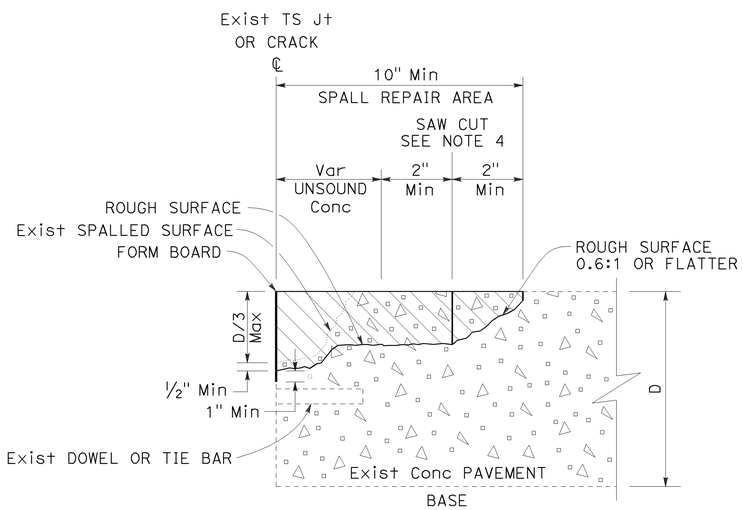

SECTION A-A

JOINT, CRACK, OR EDGE OF CONCRETE PAVEMENT REPAIR

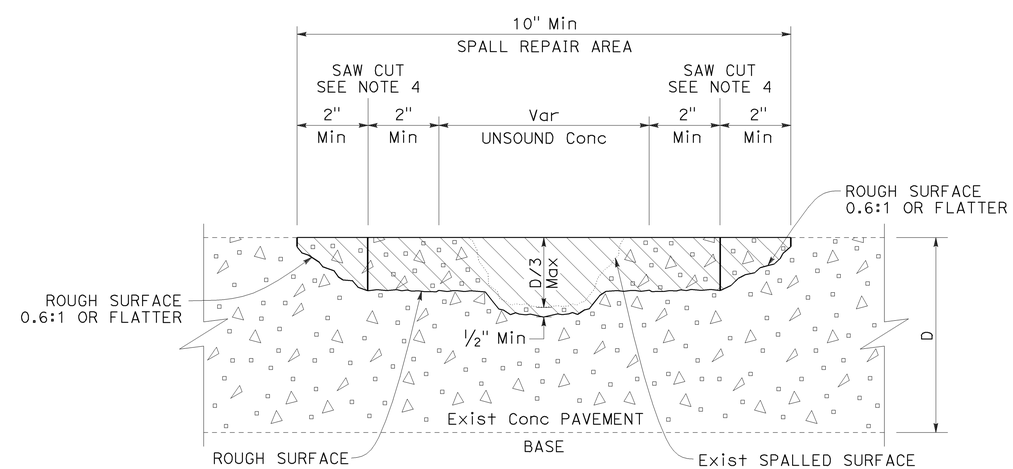

SECTION B-B

MISCELLANEOUS SPALL REPAIR

STATE OF CALIFORNIA
DEPARTMENT OF TRANSPORTATION

SPALL REPAIR

NO SCALE

RSP P6 DATED JULY 19, 2013 SUPPLEMENTS THE STANDARD PLANS BOOK DATED 2010.

REVISED STANDARD PLAN RSP P6

2010 REVISED STANDARD PLAN RSP P6

5-31-13

Dist	COUNTY	ROUTE	POST MILES TOTAL PROJECT	SHEET No.	TOTAL SHEETS
07	LA	5	C43.9/C46.4	175	199

William K. Farnbach
REGISTERED CIVIL ENGINEER

July 19, 2013
PLANS APPROVAL DATE

REGISTERED PROFESSIONAL ENGINEER
William K. Farnbach
No. C49042
Exp. 9-30-14
CIVIL
STATE OF CALIFORNIA

THE STATE OF CALIFORNIA OR ITS OFFICERS OR AGENTS SHALL NOT BE RESPONSIBLE FOR THE ACCURACY OR COMPLETENESS OF SCANNED COPIES OF THIS PLAN SHEET.

TO ACCOMPANY PLANS DATED 6-29-15

NOTES:

1. Details for skewed joints also apply to perpendicular joints.
2. Use 1′-6" ± ¼" long dowel bars with a 1¼" diameter except 1" diameter dowel bars may be used if D < 0.70′.
3. Caulk existing transverse joint at bottom and sides of the dowel bar slot prior to placing dowel bar and foam insert.
4. Foam insert thickness must match width of existing transverse joint or crack.

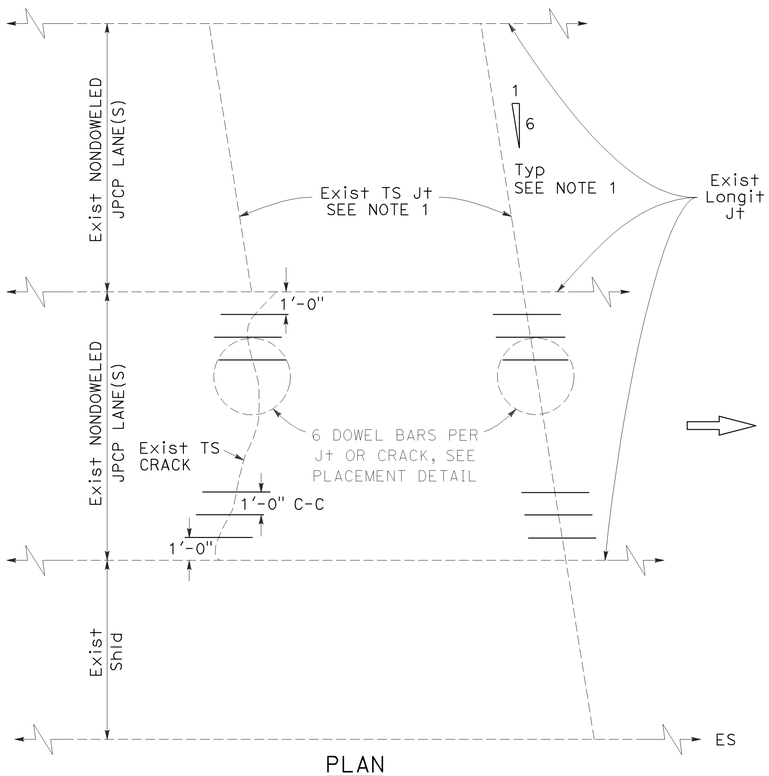

PLAN

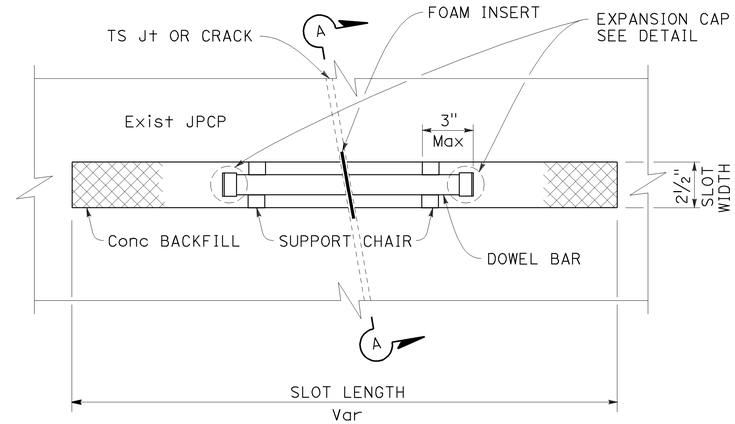

PLAN

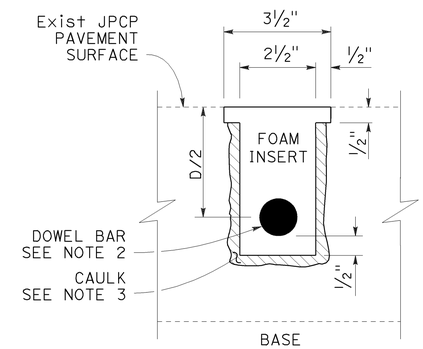

SECTION A-A

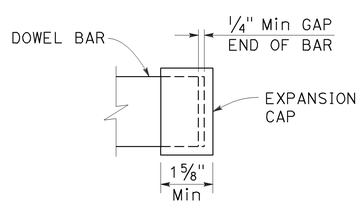

EXPANSION CAP DETAIL

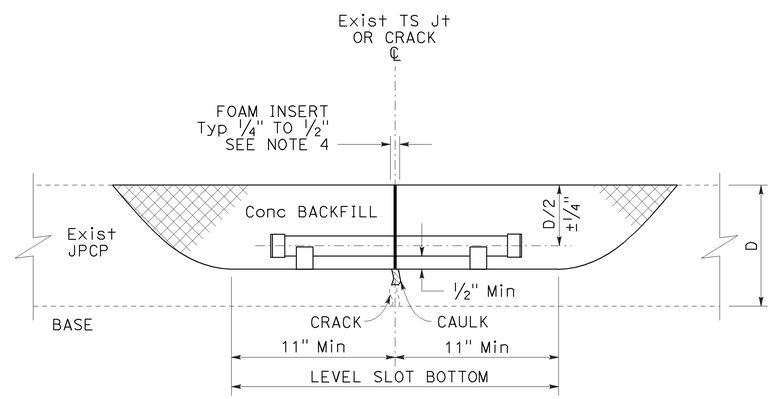

ELEVATION

DOWEL BAR PLACEMENT DETAIL

STATE OF CALIFORNIA
DEPARTMENT OF TRANSPORTATION

DOWEL BAR RETROFIT

NO SCALE

RSP P7 DATED JULY 19, 2013 SUPERSEDES STANDARD PLAN P7
DATED MAY 20, 2011 - PAGE 129 OF THE STANDARD PLANS BOOK DATED 2010.

REVISED STANDARD PLAN RSP P7

2010 REVISED STANDARD PLAN RSP P7

6-17-13

Dist	COUNTY	ROUTE	POST MILES TOTAL PROJECT	SHEET No.	TOTAL SHEETS
07	LA	5	C43.9/C46.4	176	199

William K. Farnbach
REGISTERED CIVIL ENGINEER

July 19, 2013
PLANS APPROVAL DATE

REGISTERED PROFESSIONAL ENGINEER William K. Farnbach No. C49042 Exp. 9-30-14 CIVIL STATE OF CALIFORNIA

THE STATE OF CALIFORNIA OR ITS OFFICERS OR AGENTS SHALL NOT BE RESPONSIBLE FOR THE ACCURACY OR COMPLETENESS OF SCANNED COPIES OF THIS PLAN SHEET.

TO ACCOMPANY PLANS DATED 6-29-15

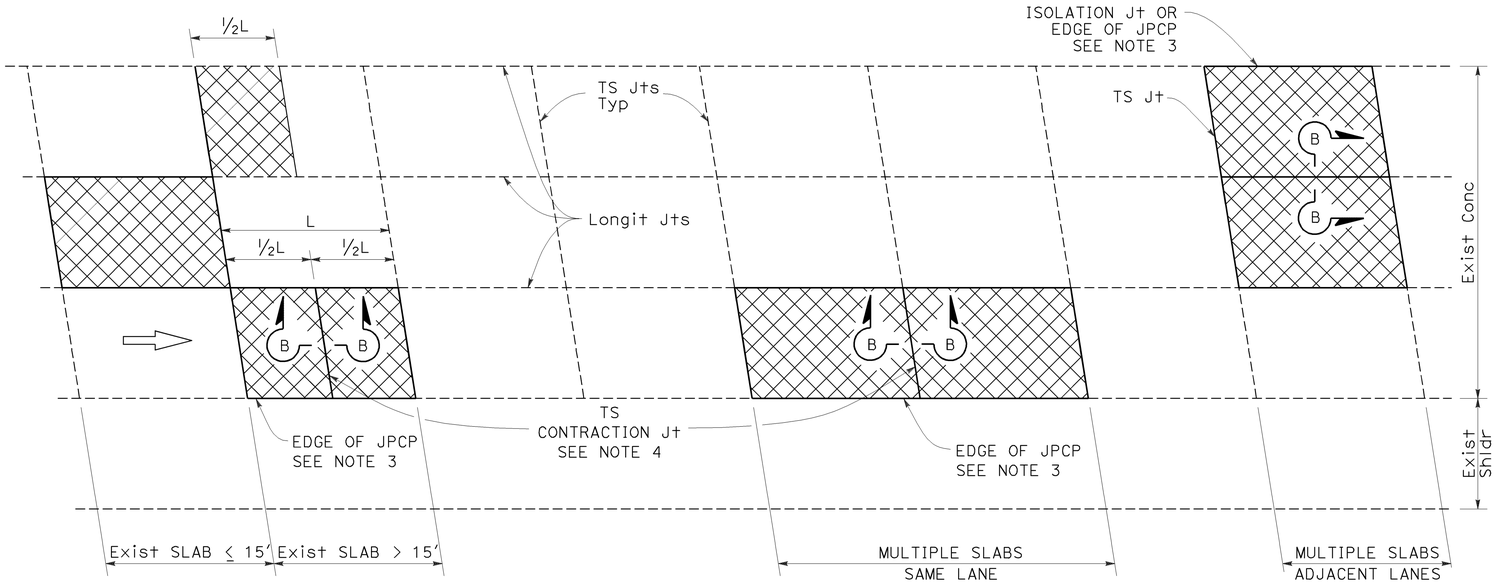

PLAN

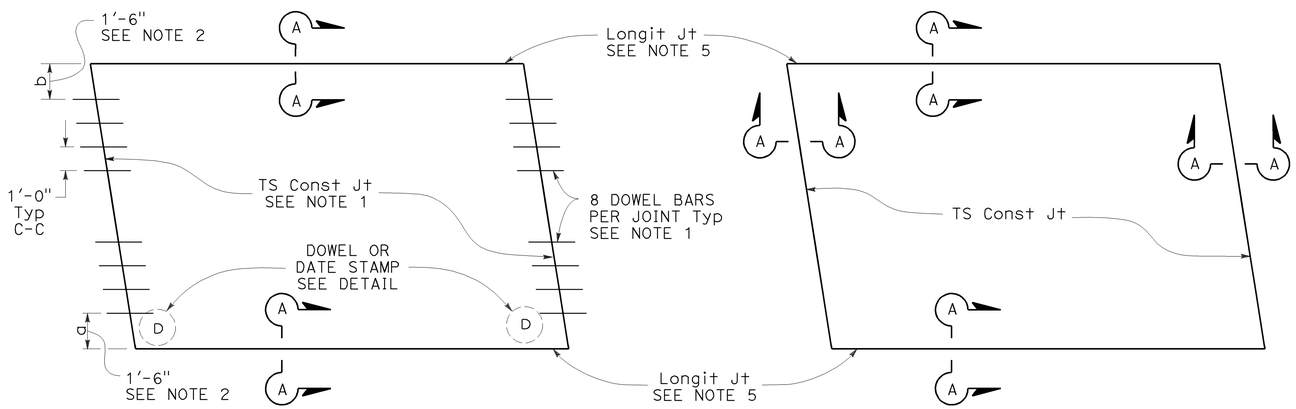

TYPE I
See Design Note 1

TYPE II
See Design Note 2

SLAB LAYOUT

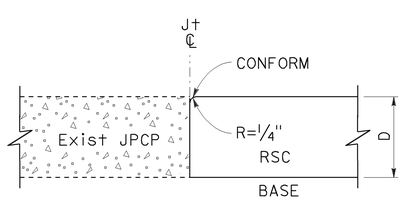

SECTION A-A

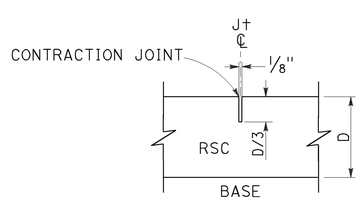

SECTION B-B

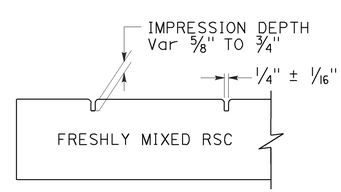

SECTION C-C

LEGEND:

RSC RAPID STRENGTH CONCRETE

INDIVIDUAL SLAB REPLACEMENT WITH RSC

NOTES:

1. For details not shown, see Revised Standard Plan RSP P10.
2. Where the existing outside shoulder is asphalt concrete pavement, "a" = 1'-0" and "b" = 2'-0".
3. Use side forms where edge of RSC pavement is adjacent to asphalt concrete.
4. Transverse contraction joint to match skew of existing joint. Omit dowel bars.
5. Do not place tie bars at longitudinal joints.

DESIGN NOTES:

1. For concrete slab repair with at least 5 years design life.
2. For short term repairs < 5 yrs design life or for slab replacements with cracking and seating.

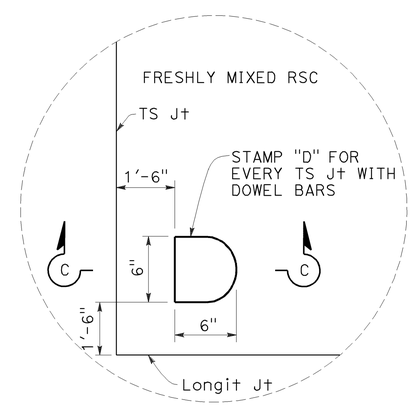

DOWEL STAMP DETAIL

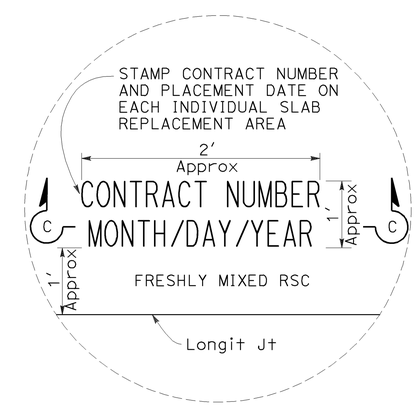

DATE STAMP DETAIL

STATE OF CALIFORNIA
DEPARTMENT OF TRANSPORTATION

INDIVIDUAL SLAB REPLACEMENT WITH RAPID STRENGTH CONCRETE

NO SCALE

RSP P8 DATED JULY 19, 2013 SUPERSEDES RSP P8 DATED APRIL 20, 2012 AND STANDARD PLAN P8 DATED MAY 20, 2011 - PAGE 130 OF THE STANDARD PLANS BOOK DATED 2010.

REVISED STANDARD PLAN RSP P8

2010 REVISED STANDARD PLAN RSP P8

5-31-13

Dist	COUNTY	ROUTE	POST MILES TOTAL PROJECT	SHEET No.	TOTAL SHEETS
07	LA	5	C43.9/C46.4	177	199

REGISTERED CIVIL ENGINEER

July 19, 2013
PLANS APPROVAL DATE

REGISTERED PROFESSIONAL ENGINEER William K. Farnbach No. C49042 Exp. 9-30-14 CIVIL STATE OF CALIFORNIA

THE STATE OF CALIFORNIA OR ITS OFFICERS OR AGENTS SHALL NOT BE RESPONSIBLE FOR THE ACCURACY OR COMPLETENESS OF SCANNED COPIES OF THIS PLAN SHEET.

TO ACCOMPANY PLANS DATED 6-29-15

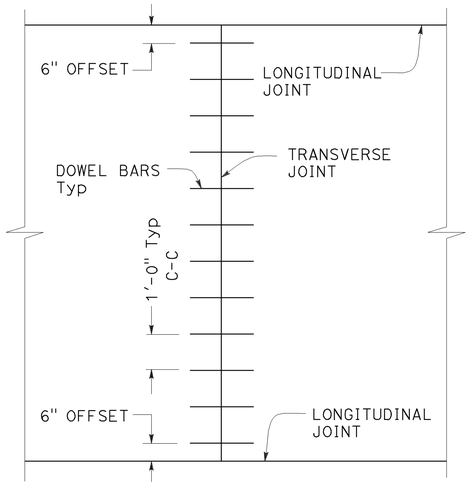

TRANSVERSE JOINT DOWEL BAR LAYOUT

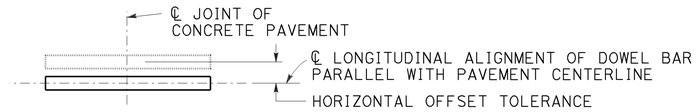

PLAN

HORIZONTAL OFFSET TOLERANCE

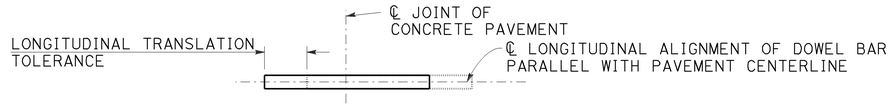

PLAN

LONGITUDINAL TRANSLATION TOLERANCE

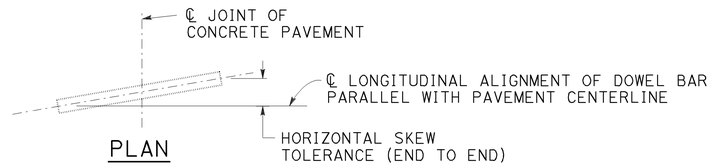

PLAN

HORIZONTAL SKEW TOLERANCE

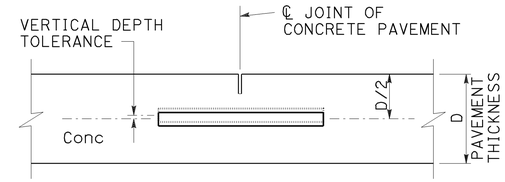

ELEVATION

VERTICAL DEPTH TOLERANCE

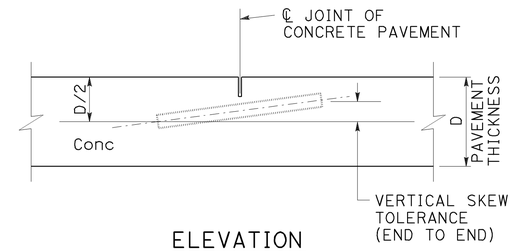

ELEVATION

VERTICAL SKEW TOLERANCE

NOTES:

1. See Revised Standard Plan RSP P1 for typical dowel bar placement and locations.
2. Where fresh concrete pavement is placed against new concrete or existing concrete pavement, rounding the corner of the existing concrete pavement is not required.
3. May also use ¾" Dia dowel bars 2'-4" ± ¼" in length. Center the length of dowel bars at the centerline of longitudinal joint.

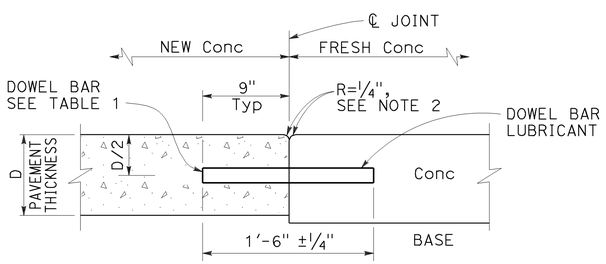

TRANSVERSE CONSTRUCTION JOINT DETAIL

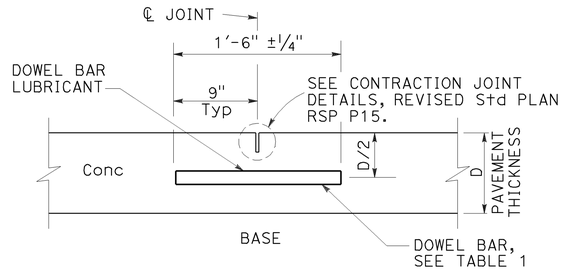

TRANSVERSE CONTRACTION JOINT

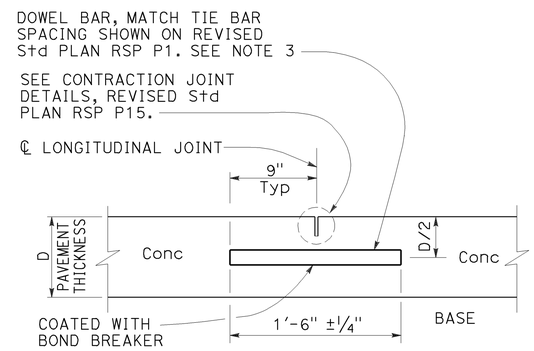

LONGITUDINAL CONTRACTION JOINT WITH DOWEL BARS

See Revised Std Plan RSP P18

TABLE 1

DOWEL BAR DIAMETER TABLE			
PAVEMENT THICKNESS	0.65'	> 0.65' - 0.85'	> 0.85'
MINIMUM DOWEL * BAR DIAMETER	1"	1¼"	1½"

* The drilled hole diameter must be ⅛" to 3/16" larger than the bar diameter.

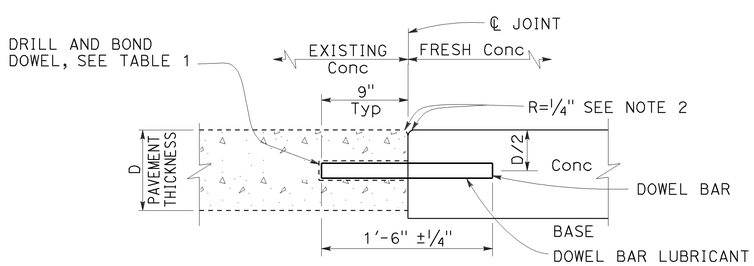

TRANSVERSE CONSTRUCTION JOINT FOR EXISTING CONCRETE PAVEMENT

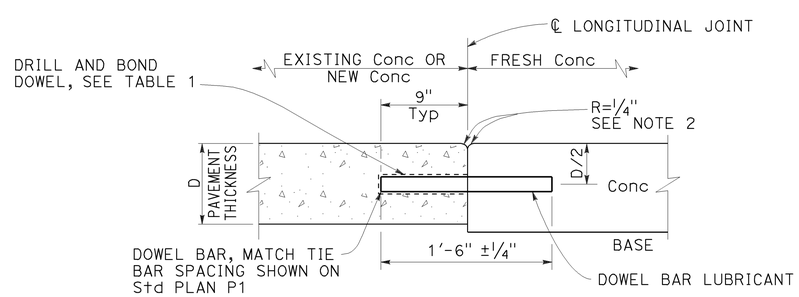

LONGITUDINAL CONSTRUCTION JOINT WITH DOWEL BARS

See Revised Std Plan RSP P18

STATE OF CALIFORNIA
DEPARTMENT OF TRANSPORTATION

CONCRETE PAVEMENT DOWEL BAR DETAILS

NO SCALE

RSP P10 DATED JULY 19, 2013 SUPERSEDES RSP P10 DATED APRIL 20, 2012 AND STANDARD PLAN P10 DATED MAY 20, 2011 - PAGE 131 OF THE STANDARD PLANS BOOK DATED 2010.

REVISED STANDARD PLAN RSP P10

2010 REVISED STANDARD PLAN RSP P10

5-31-13

Dist	COUNTY	ROUTE	POST MILES TOTAL PROJECT	SHEET No.	TOTAL SHEETS
07	LA	5	C43.9/C46.4	178	199

William K. Farnbach
REGISTERED CIVIL ENGINEER

July 19, 2013
PLANS APPROVAL DATE

REGISTERED PROFESSIONAL ENGINEER William K. Farnbach No. C49042 Exp. 9-30-14 CIVIL STATE OF CALIFORNIA

THE STATE OF CALIFORNIA OR ITS OFFICERS OR AGENTS SHALL NOT BE RESPONSIBLE FOR THE ACCURACY OR COMPLETENESS OF SCANNED COPIES OF THIS PLAN SHEET.

TO ACCOMPANY PLANS DATED 6-29-15

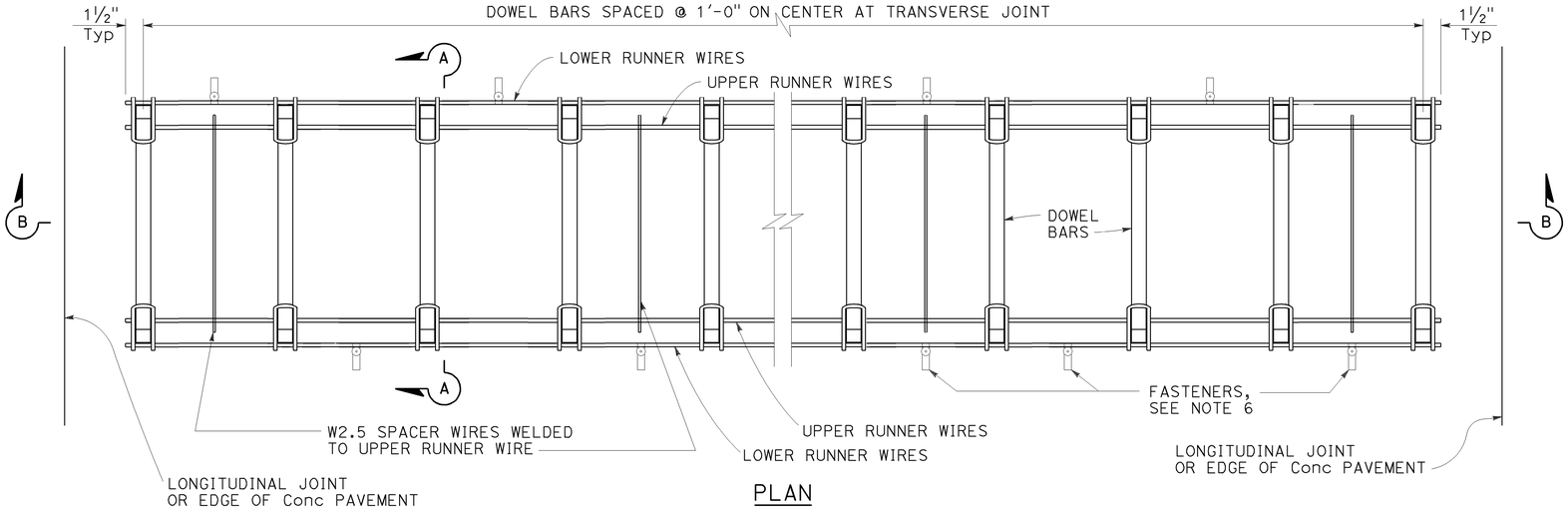

PLAN

DOWEL BAR BASKET (TRANSVERSE JOINT)

See Note 1

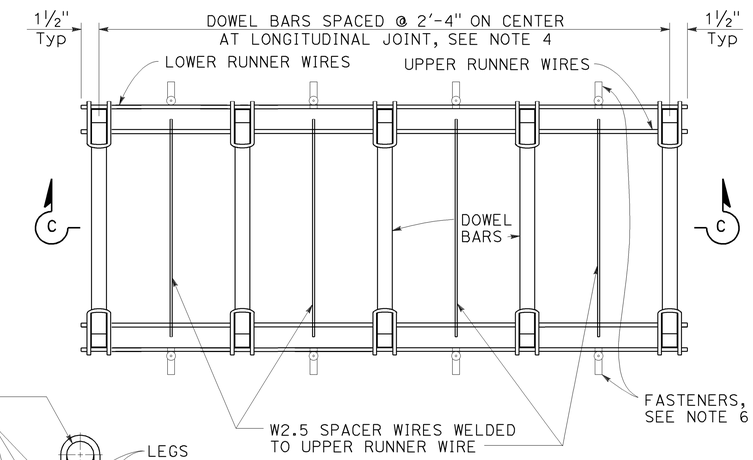

PLAN

DOWEL BAR BASKET (LONGITUDINAL JOINT)

See Note 1

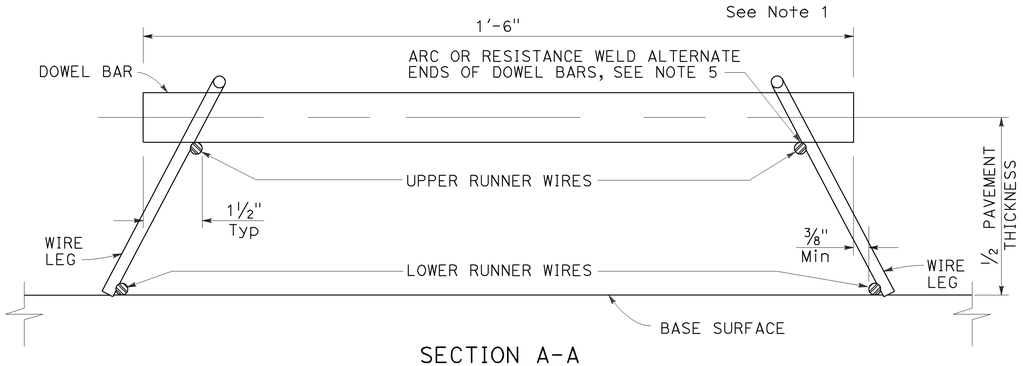

SECTION A-A

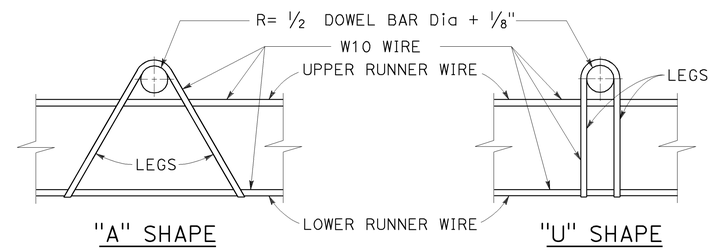

ASSEMBLY FRAME DETAILS

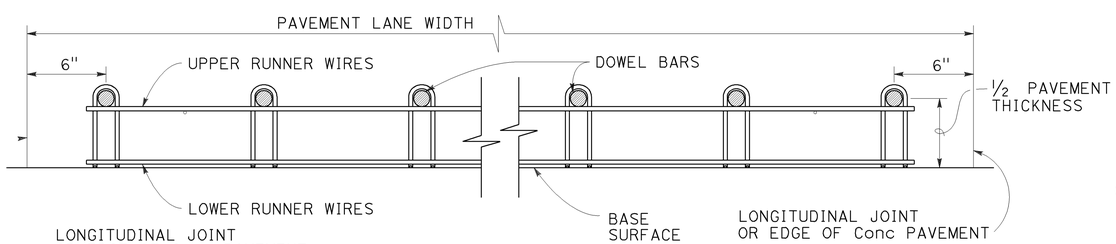

SECTION B-B

See Note 1

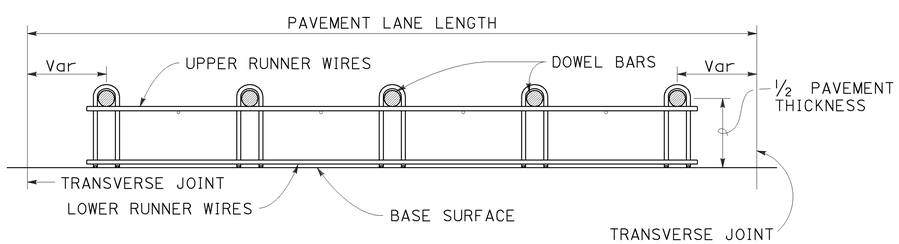

SECTION C-C

See Notes 1 and 4

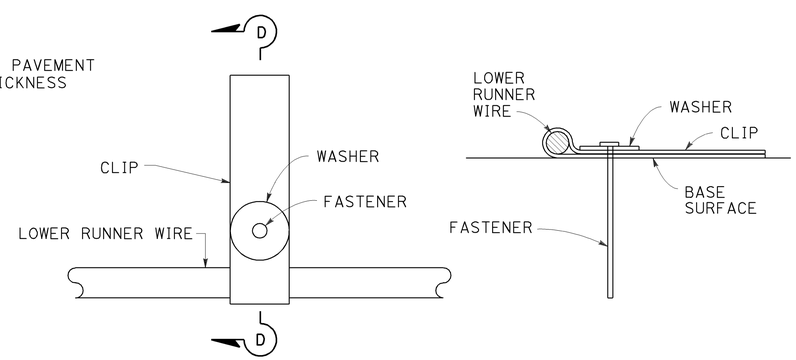

PLAN

SECTION D-D

FASTENER DETAIL

See Note 6

NOTES:

1. "U" frame shape assembly shown. Use either "U" frame shape or "A" frame shape.
2. Wire sizes shown are the minimum required.
3. All wire intersections must be resistance welded.
4. Use tie bar spacing for longitudinal dowel bar locations. See Revised Standard Plans RSP P1, RSP P2, RSP P3A, and RSP P3B for tie bar requirements.
5. Weld may be at the top or bottom of the dowel bar.
6. Use anchor pins where soil or granular base is used. See Revised Standard Plan RSP P17 for Anchor Pin Detail.

STATE OF CALIFORNIA
DEPARTMENT OF TRANSPORTATION

CONCRETE PAVEMENT DOWEL BAR BASKET DETAILS

NO SCALE

RSP P12 DATED JULY 19, 2013 SUPERSEDES STANDARD PLAN P12
DATED MAY 20, 2011 - PAGE 132 OF THE STANDARD PLANS BOOK DATED 2010.

REVISED STANDARD PLAN RSP P12

2010 REVISED STANDARD PLAN RSP P12

5-31-13

Dist	COUNTY	ROUTE	POST MILES TOTAL PROJECT	SHEET No.	TOTAL SHEETS
07	LA	5	C43.9/C46.4	179	199

William K. Farnbach
REGISTERED CIVIL ENGINEER

July 19, 2013
PLANS APPROVAL DATE

REGISTERED PROFESSIONAL ENGINEER
William K. Farnbach
No. C49042
Exp. 9-30-14
CIVIL
STATE OF CALIFORNIA

THE STATE OF CALIFORNIA OR ITS OFFICERS OR AGENTS SHALL NOT BE RESPONSIBLE FOR THE ACCURACY OR COMPLETENESS OF SCANNED COPIES OF THIS PLAN SHEET.

TO ACCOMPANY PLANS DATED 6-29-15

2010 REVISED STANDARD PLAN RSP P15

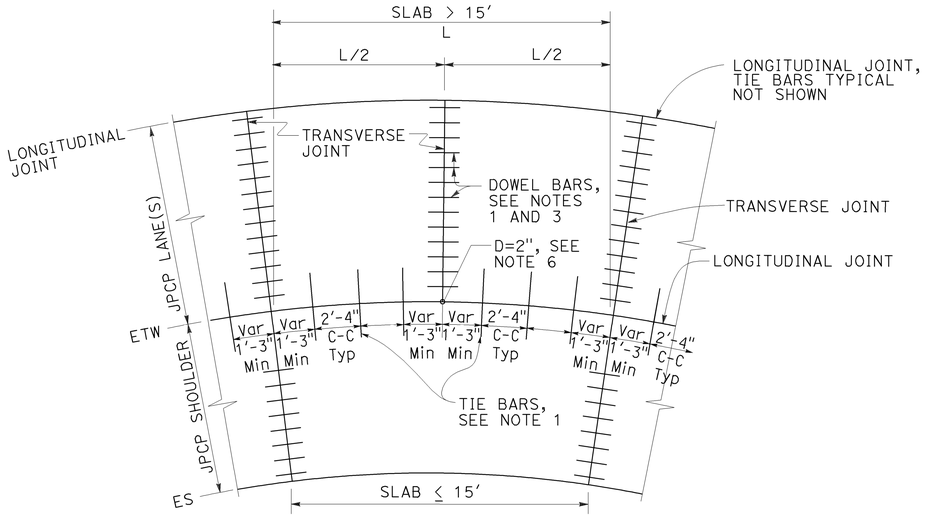

TIE BAR LAYOUT IN CURVED LANES

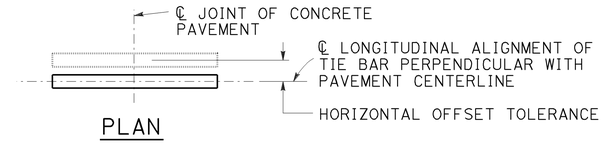

PLAN

HORIZONTAL OFFSET TOLERANCE

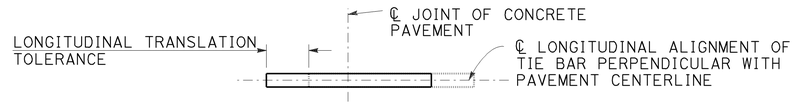

PLAN

LONGITUDINAL TRANSLATION TOLERANCE

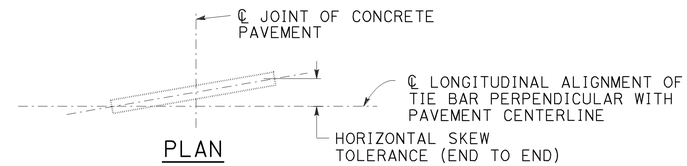

PLAN

HORIZONTAL SKEW TOLERANCE

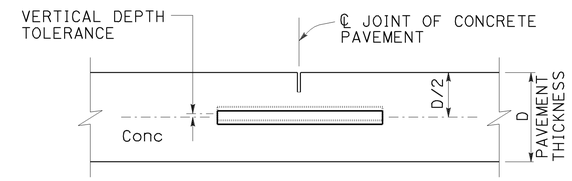

ELEVATION

VERTICAL DEPTH TOLERANCE

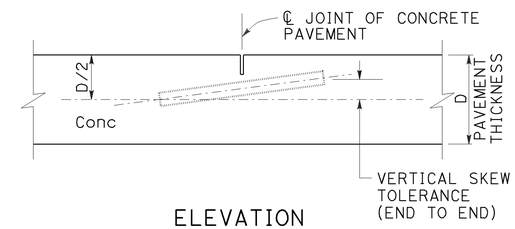

ELEVATION

VERTICAL SKEW TOLERANCE

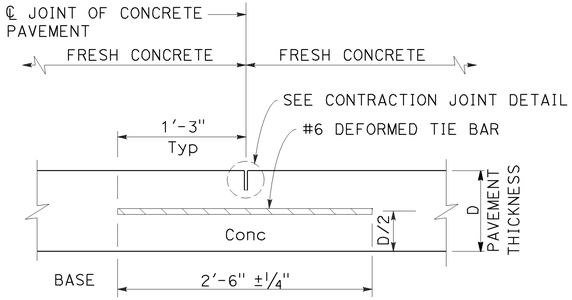

LONGITUDINAL CONTRACTION JOINT

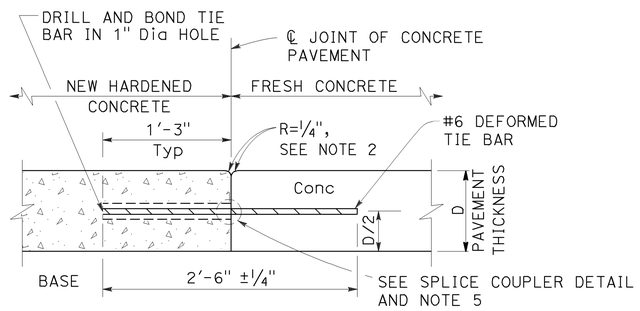

LONGITUDINAL CONSTRUCTION JOINT

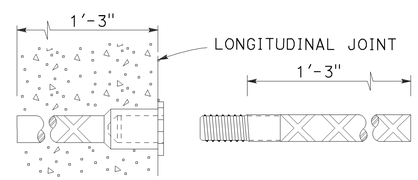

ALTERNATIVE SPLICE COUPLER

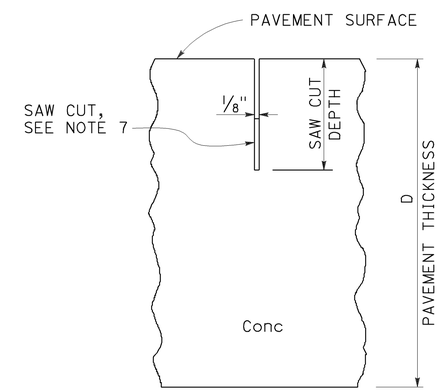

CONTRACTION JOINT DETAIL

NOTES:

1. See Revised Standard Plan RSP P1 for typical dowel bar and tie bar placement and locations.
2. Where new pavement is placed against existing concrete pavement, rounding the corner is not required.
3. For dowel bar sizes, See Revised Standard Plan RSP P10.
4. Tie bar details apply to inside widenings.
5. Use either drill and bond or splice couplers.
6. Full depth drilled hole. Fill hole with filler material.
7. The bottom of the saw cut must be at least 0.5" clear of any dowel bar, tie bar and bar reinforcement.

STATE OF CALIFORNIA
DEPARTMENT OF TRANSPORTATION

CONCRETE PAVEMENT-TIE BAR DETAILS

NO SCALE

RSP P15 DATED JULY 19, 2013 SUPPLEMENTS THE STANDARD PLANS BOOK DATED 2010.

REVISED STANDARD PLAN RSP P15

5-31-13

Dist	COUNTY	ROUTE	POST MILES TOTAL PROJECT	SHEET No.	TOTAL SHEETS
07	LA	5	C43.9/C46.4	180	199

William K. Farnbach
REGISTERED CIVIL ENGINEER

July 19, 2013
PLANS APPROVAL DATE

REGISTERED PROFESSIONAL ENGINEER
William K. Farnbach
No. C49042
Exp. 9-30-14
CIVIL
STATE OF CALIFORNIA

THE STATE OF CALIFORNIA OR ITS OFFICERS OR AGENTS SHALL NOT BE RESPONSIBLE FOR THE ACCURACY OR COMPLETENESS OF SCANNED COPIES OF THIS PLAN SHEET.

TO ACCOMPANY PLANS DATED 6-29-15

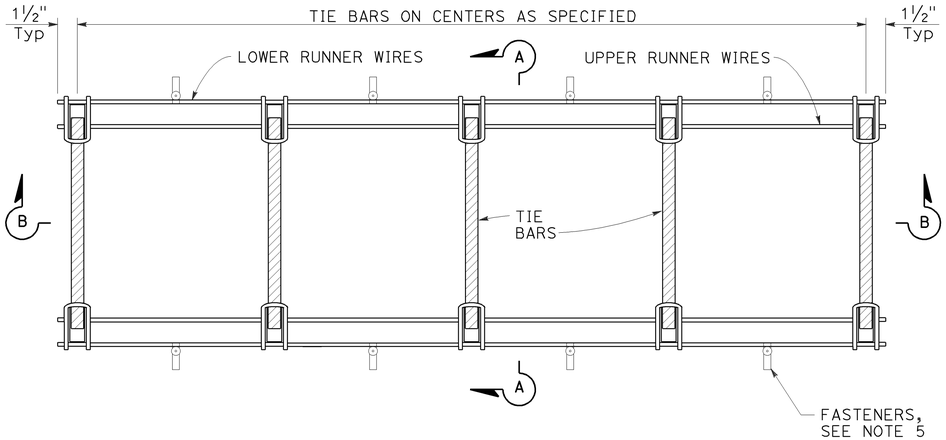

PLAN

TIE BAR BASKET

(Tie bars at longitudinal joint)
See Note 1

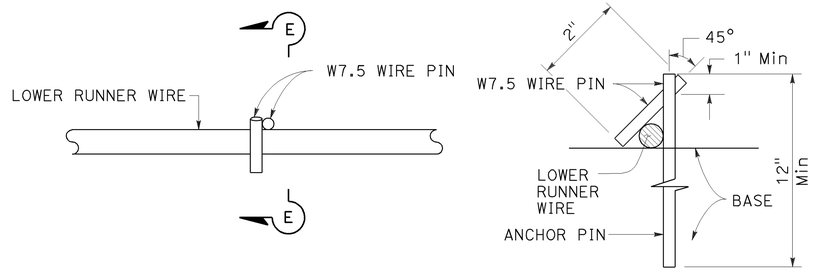

PLAN

SECTION E-E

ANCHOR PIN DETAIL

See Note 5

NOTES:

1. "U" frame shape assembly shown. Use either "U" frame shape or "A" frame shape.
2. Wire sizes shown are the minimum required.
3. All wire intersections must be resistance welded.
4. Weld may be at top or bottom of tie bars.
5. Use anchor pins where soil or granular base is used.

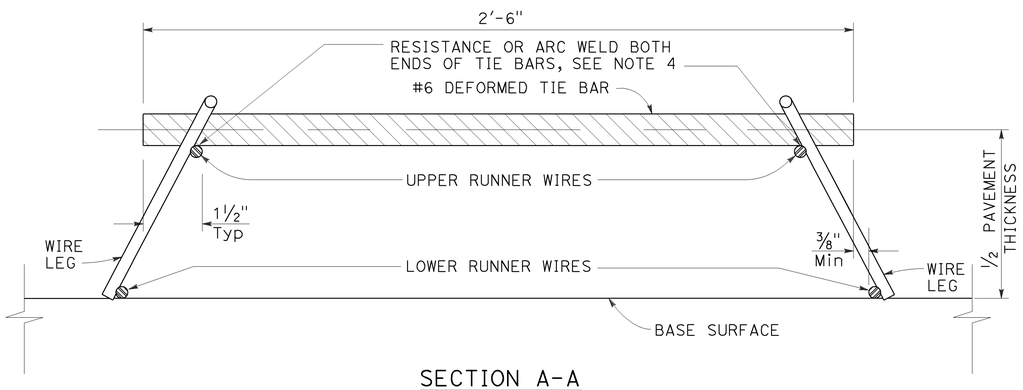

SECTION A-A

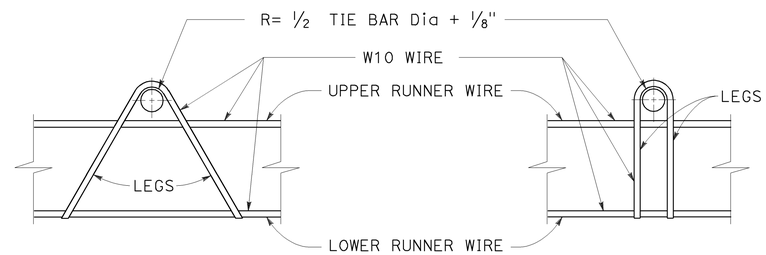

"A" SHAPE

"U" SHAPE

ASSEMBLY FRAME DETAILS

See Note 1

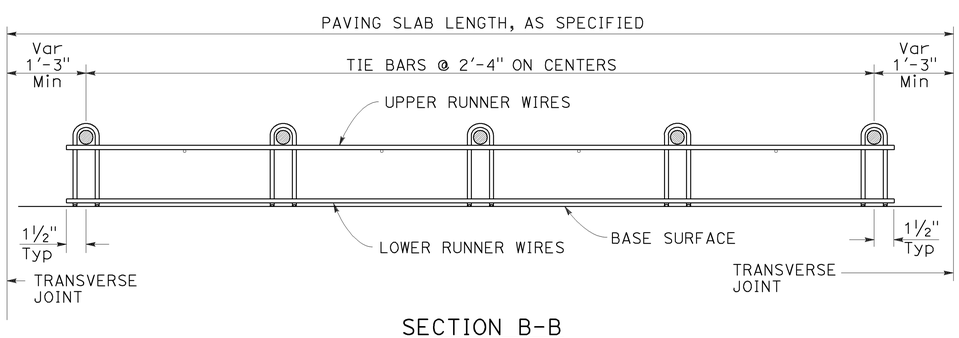

SECTION B-B

See Note 1

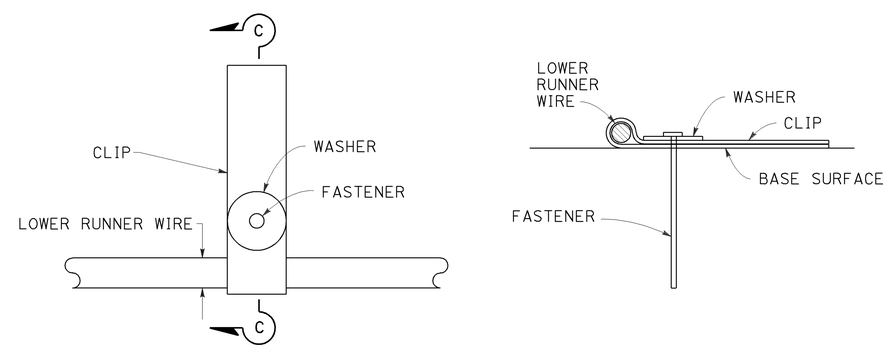

PLAN

SECTION C-C

FASTENER DETAIL

STATE OF CALIFORNIA
DEPARTMENT OF TRANSPORTATION

CONCRETE PAVEMENT TIE BAR BASKET DETAILS

NO SCALE

RSP P17 DATED JULY 19, 2013 SUPERSEDES STANDARD PLAN P17
DATED MAY 20, 2011 - PAGE 134 OF THE STANDARD PLANS BOOK DATED 2010.

REVISED STANDARD PLAN RSP P17

2010 REVISED STANDARD PLAN RSP P17

5-31-13

Dist	COUNTY	ROUTE	POST MILES TOTAL PROJECT	SHEET No.	TOTAL SHEETS
07	LA	5	C43.9/C46.4	181	199

William K. Farnbach
REGISTERED CIVIL ENGINEER

July 19, 2013
PLANS APPROVAL DATE

REGISTERED PROFESSIONAL ENGINEER William K. Farnbach No. C49042 Exp. 9-30-14 CIVIL STATE OF CALIFORNIA

THE STATE OF CALIFORNIA OR ITS OFFICERS OR AGENTS SHALL NOT BE RESPONSIBLE FOR THE ACCURACY OR COMPLETENESS OF SCANNED COPIES OF THIS PLAN SHEET.

TO ACCOMPANY PLANS DATED 6-29-15

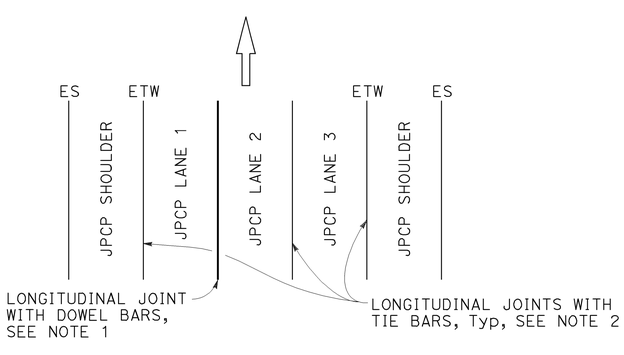

3 LANES WITH CONCRETE SHOULDERS
PLAN

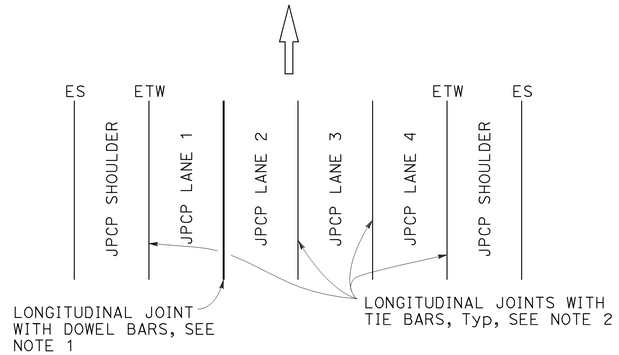

4 LANES WITH CONCRETE SHOULDERS
PLAN

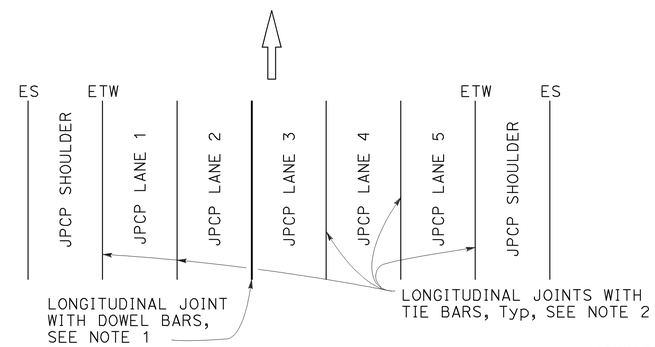

5 LANES WITH CONCRETE SHOULDERS
PLAN

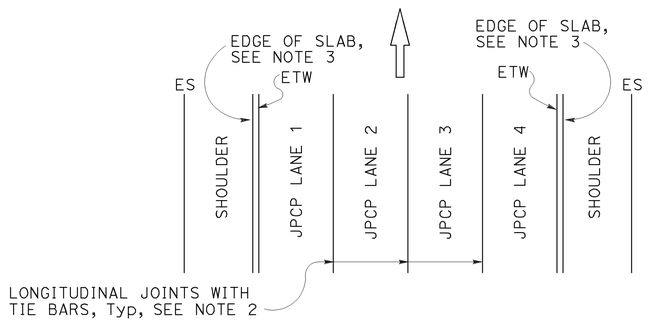

4 LANES OR LESS WITH AC SHOULDERS
PLAN

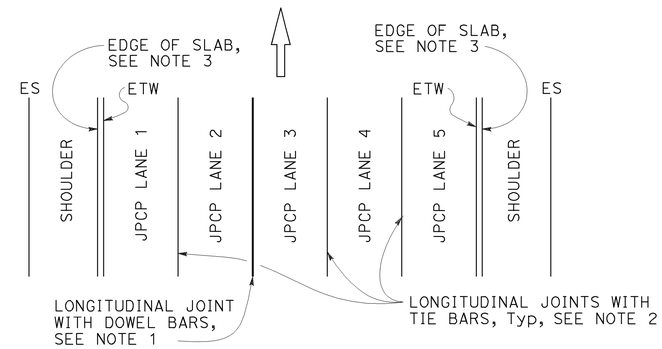

5 LANES WITH AC SHOULDERS
PLAN

NEW CONSTRUCTION

Location of Longitudinal Joints
For JPCP

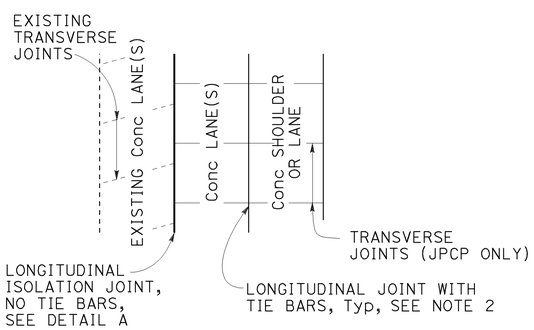

CASE 1
PLAN

Transverse Joints do not align between new and existing.

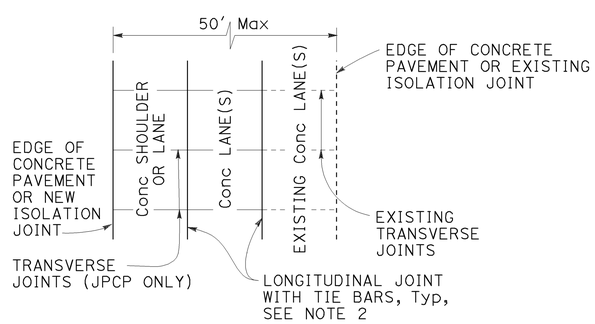

CASE 2
PLAN

Transverse Joints align between new and existing.
(For JPCP only)

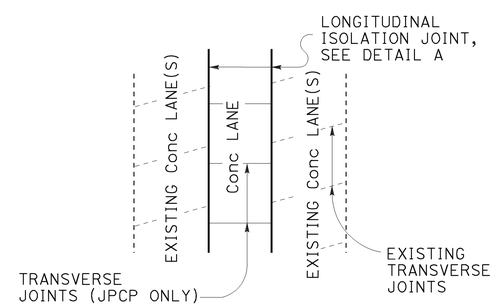

CASE 3 (INTERIOR LANE REPLACEMENT)
PLAN

Transverse Joints do not align between new and existing.

LANE/SHOULDER ADDITION OR RECONSTRUCTION

For JPCP and CRCP

NOTES:

1. See Revised Standard Plan RSP P10 for longitudinal joint with dowel bars.
2. See Revised Standard Plan RSP P15 for longitudinal joint with tie bars.
3. S= Reservoir depth.
   S= 7/8" ± 1/16" for asphalt rubber seals
   S= 9/16" ± 1/16" for silicone seals
   Preformed compression seals must be 13/16" wide and S= 1 11/16" ± 1/16"

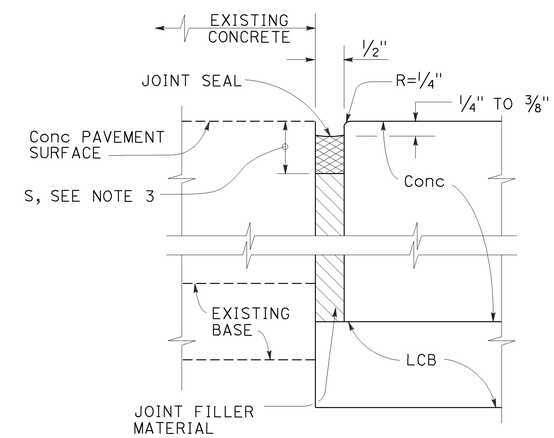

DETAIL "A"

ISOLATION JOINT

STATE OF CALIFORNIA
DEPARTMENT OF TRANSPORTATION

CONCRETE PAVEMENT LANE SCHEMATICS AND ISOLATION JOINT DETAIL

NO SCALE

RSP P18 DATED JULY 19, 2013 SUPERSEDES RSP P18 DATED APRIL 20, 2012 AND STANDARD PLAN P18 DATED MAY 20, 2011 - PAGE 135 OF THE STANDARD PLANS BOOK DATED 2010.

REVISED STANDARD PLAN RSP P18

2010 REVISED STANDARD PLAN RSP P18

5-31-13

Dist	COUNTY	ROUTE	POST MILES TOTAL PROJECT	SHEET No.	TOTAL SHEETS
07	LA	5	C43.9/C46.4	182	199

William K. Farnbach
REGISTERED CIVIL ENGINEER

July 19, 2013
PLANS APPROVAL DATE

REGISTERED PROFESSIONAL ENGINEER
William K. Farnbach
No. C49042
Exp. 9-30-14
CIVIL
STATE OF CALIFORNIA

THE STATE OF CALIFORNIA OR ITS OFFICERS OR AGENTS SHALL NOT BE RESPONSIBLE FOR THE ACCURACY OR COMPLETENESS OF SCANNED COPIES OF THIS PLAN SHEET.

TO ACCOMPANY PLANS DATED 6-29-15

2010 REVISED STANDARD PLAN RSP P20

NOTES:

1. Details do not apply to isolation joints and longitudinal construction joints.
2. Tie bars, dowel bars, and bar reinforcement are not shown.
3. Depths are measured from the final concrete pavement surface elevation after any grinding.

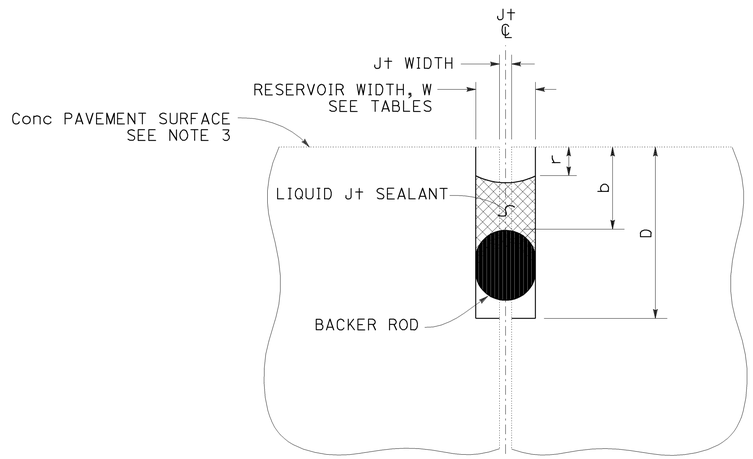

LIQUID JOINT SEALANT

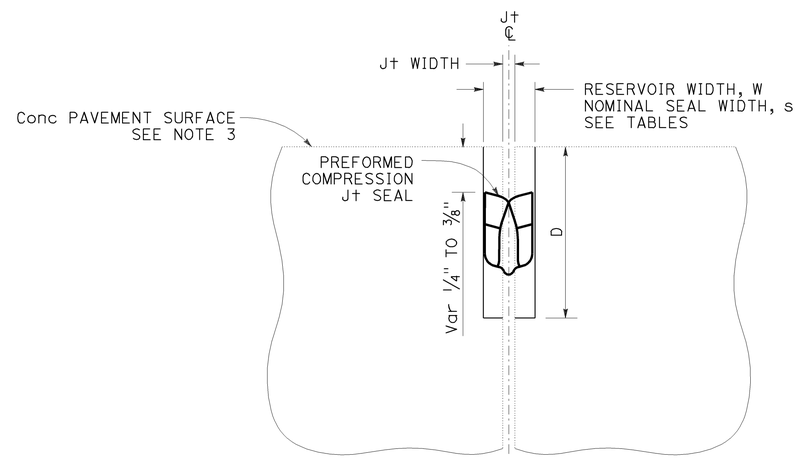

PREFORMED COMPRESSION JOINT SEAL

Const SEASON	Min RESERVOIR WIDTH * W ± 1/16"
WINTER	1/4"
SPRING	3/8"
SUMMER	
FALL	

* Minimum reservoir width for replace joint seal = existing joint width + 1/8"

RESERVOIR WIDTH W ±1/16"	LIQUID JOINT SEALANT DIMENSIONS					
	BACKER ROD NOMINAL Dia *	DEPTHS (ASPHALT RUBBER) **		DEPTHS (SILICONE)		
		RESERVOIR D ± 1/4"	BACKER ROD b ± 1/16"	RESERVOIR D ± 1/4"	BACKER ROD b ± 1/16"	RECESS r ± 1/16"
1/4"	3/8"	1 3/4"	7/8"	1 3/8"	1/2"	1/4"
3/8"	1/2"	1 7/8"	7/8"	1 1/2"	1/2"	1/4"
1/2"	3/4"	2"	7/8"	1 3/4"	9/16"	5/16"
5/8"	7/8"	2 1/4"	1"	2"	5/8"	5/16"
3/4"	1"	2 3/4"	1 1/8"	2 1/4"	3/4"	3/8"
7/8"	1 1/4"	3"	1 1/4"	2 1/2"	13/16"	3/8"
1"	1 1/2"	3 1/4"	1 3/8"	2 5/8"	7/8"	3/8"
1 1/8"	1 1/2"	3 1/2"	1 1/2"	2 13/16"	1"	1/2"

* Larger diameter backer rods may be substituted according to manufacturer recommendations if reservoir depth is increased equivalently.

** Asphalt rubber sealant recess depth "r" varies from 1/4" to 3/8"

RESERVOIR WIDTH W ±1/16"	PREFORMED COMPRESSION JOINT SEAL DIMENSIONS	
	NOMINAL SEAL WIDTH s	RESERVOIR DEPTH D ± 1/4"
1/4"	7/16"	1 1/4"
3/8"	11/16"	1 7/16"
1/2"	13/16"	1 11/16"
5/8"	1"	1 7/8"
3/4"	1 1/4"	2 1/8"
7/8"	1 5/8"	2 5/8"
1"	1 5/8"	2 5/8"
1 1/8"	2"	2 7/8"

STATE OF CALIFORNIA
DEPARTMENT OF TRANSPORTATION

JOINT SEALS

NO SCALE

RSP P20 DATED JULY 19, 2013 SUPERSEDES STANDARD PLAN P20
DATED MAY 20, 2011 - PAGE 136 OF THE STANDARD PLANS BOOK DATED 2010.

REVISED STANDARD PLAN RSP P20

DIST	COUNTY	ROUTE	POST MILES TOTAL PROJECT	SHEET No.	TOTAL SHEETS
07	LA	5	C43.9/C46.4	183	199

REGISTERED CIVIL ENGINEER

November 15, 2013
PLANS APPROVAL DATE

REGISTERED PROFESSIONAL ENGINEER
Cornelis M. Hakim
No. C55610
Exp. 12-31-14
CIVIL
STATE OF CALIFORNIA

THE STATE OF CALIFORNIA OR ITS OFFICERS OR AGENTS SHALL NOT BE RESPONSIBLE FOR THE ACCURACY OR COMPLETENESS OF SCANNED COPIES OF THIS PLAN SHEET.

TO ACCOMPANY PLANS DATED 6-29-15

LEGEND:

- HMA PAVEMENT
- HMA OR CONCRETE PAVEMENT
- CONCRETE PAVEMENT

ABBREVIATIONS:

SE SAFETY EDGE
TT TOTAL THICKNESS OF SE
HW HINGE WIDTH, DISTANCE FROM ES OR EP TO HP

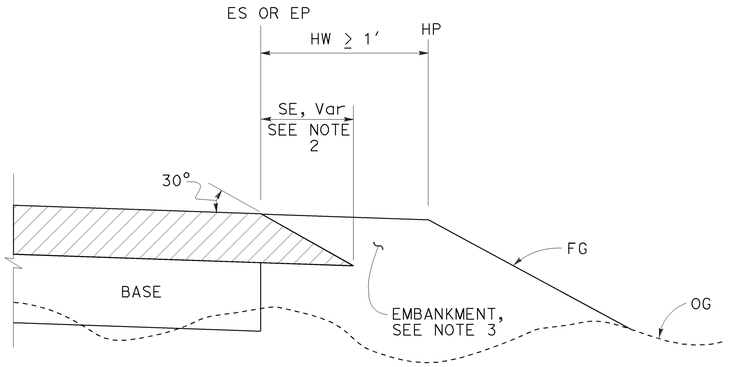

CASE K
Safety Edge - Fill Section, HW ≥ 1′

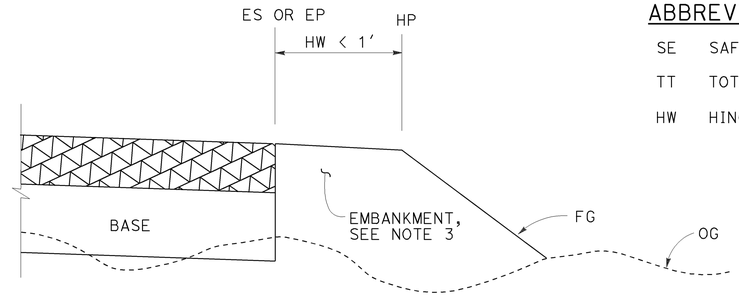

CASE L
Vertical Edge - Fill Section, HW < 1′

FILL SECTION

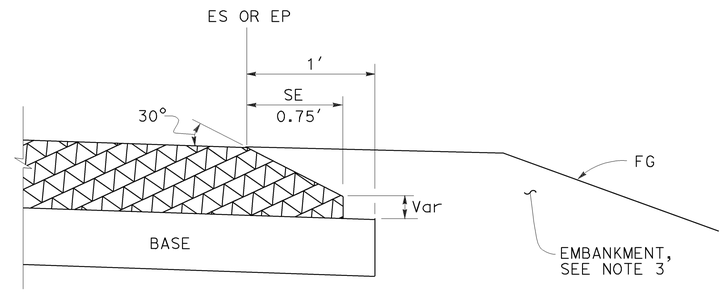

DETAIL "B"
For HMA pavement thickness more than 0.43′ or concrete pavement

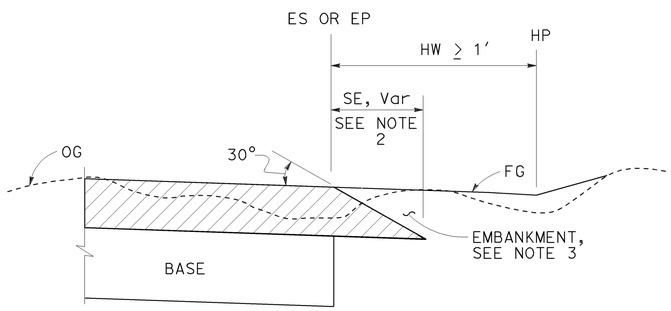

CASE M
Safety Edge - Cut Section, HW ≥ 1′

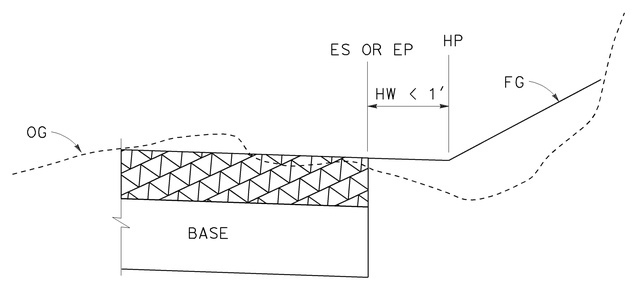

CASE N
Vertical Edge - Cut Section, HW < 1′

CUT SECTION

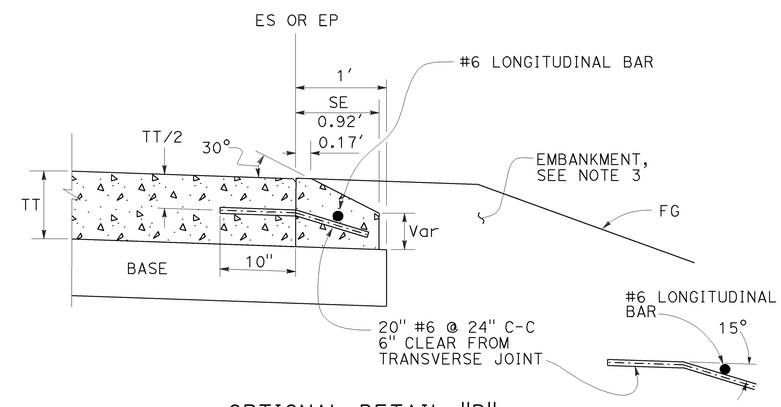

OPTIONAL DETAIL "B"
For concrete pavement
See Note 4

NOTES:

1. For limits of safety edge and vertical edge treatments, see Revised Standard Plan RSP P74
2. Details shown for HMA pavement thickness less than 0.43′. See Detail "B" for HMA pavement thickness more than 0.43′ or concrete pavement.
3. For locations and limits of embankment see project plans.
4. Safety edge transverse joint must match pavement transverse joint. End of #6 longitudinal bar must be 2" ±½" clear from transverse joint.
5. Safety edge is not needed in the area of MGS, barrier, right turn lane and acceleration lane. See Revised Standard Plan RSP P74.

STATE OF CALIFORNIA
DEPARTMENT OF TRANSPORTATION

PAVEMENT EDGE TREATMENTS-NEW CONSTRUCTION

NO SCALE

RSP P76 DATED NOVEMBER 15, 2013 SUPERSEDES RSP P76 DATED JANUARY 20, 2012 THAT SUPPLEMENTS THE STANDARD PLANS BOOK DATED 2010.

REVISED STANDARD PLAN RSP P76

2010 REVISED STANDARD PLAN RSP P76

10-4-13

TO ACCOMPANY PLANS DATED 6-29-15

Dist	COUNTY	ROUTE	POST MILES TOTAL PROJECT	SHEET No.	TOTAL SHEETS
07	LA	5	C43.9/C46.4	184	199

REGISTERED CIVIL ENGINEER

October 19, 2012
PLANS APPROVAL DATE

REGISTERED PROFESSIONAL ENGINEER Glenn DeCou No. C34547 Exp. 9-30-13 CIVIL STATE OF CALIFORNIA

THE STATE OF CALIFORNIA OR ITS OFFICERS OR AGENTS SHALL NOT BE RESPONSIBLE FOR THE ACCURACY OR COMPLETENESS OF SCANNED COPIES OF THIS PLAN SHEET.

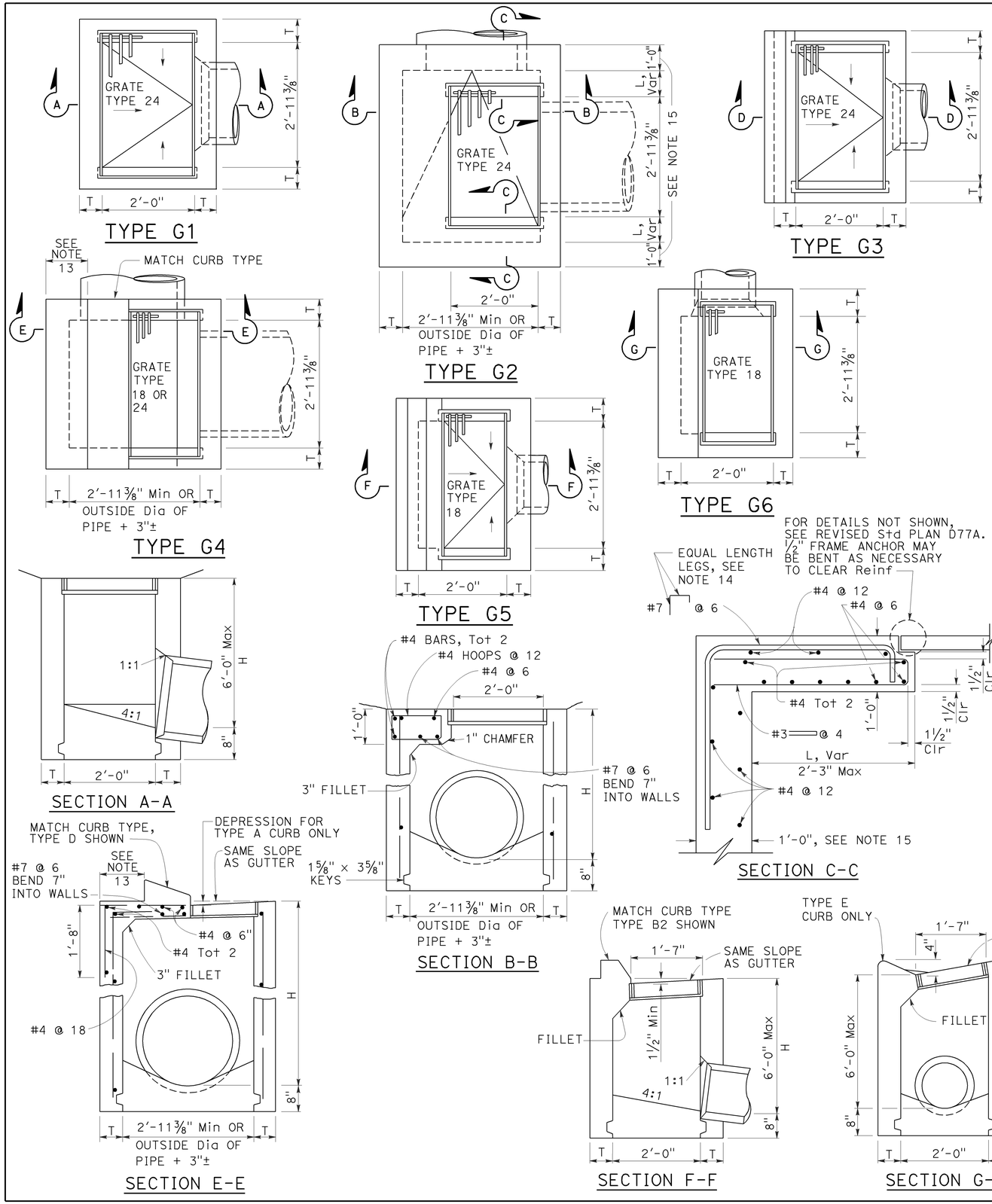

NOTES:

1. "H" is the difference in elevation between the outlet pipe flow line and the normal gutter grade line undepressed.
2. For "T" wall thickness, see Table A below.
3. Wall reinforcing not required when "H" is 8'-0" or less and the unsupported width or length is 7'-0" or less. Walls exceeding these limits shall be reinforced with #4 bars @ 1'-6" ± centers placed 1½" clear to inside of box unless otherwise shown.
4. Inlet bottom reinforcing not required. See Standard Plan D74C for alternative reinforced bottom and alternative half round bottom.
5. Steps-None required where "H" is less than 2'-6". Where "H" is 2'-6" or more, install steps with lowest rung 1'-0" above the floor and highest rung not more than 6" below top of inlet. The distance between steps shall not exceed 1'-0" and shall be uniform throughout the length of the wall. Place steps in the wall without an opening. Steps inserts may be substituted for the bar steps. Step inserts shall comply with State Industrial Safety requirements. See Standard Plan D74C for step details.
6. Details shown apply to both metal and concrete pipe.
7. Pipe(s) can be placed in any wall.
8. Curb section shall match adjacent curb.
9. Basin floors shall have wood trowel finish and a minimum slope of 12:3 from all directions toward outlet pipe.
10. Set inlet so that grate bars are parallel to direction of principal surface flow.
11. See Revised Standard Plans D77A and D77B for grate and frame details and weights of miscellaneous iron and steel.
12. See Standard Plan D78A for gutter depression details.
13. This dimenison will vary with different grates, curbs types, box width and wall thickness.
14. Bar may be rotated as necessary to clear opening. Where "L" is 6" or less, bar may be omitted.
15. Where "L" is 6" or less, wall thickness shall be as shown in Table A.
16. Cast-in-place inlets to be formed around all pipes/stubs intersecting the inlet, and concrete poured in one continuous operation. Precast inlets shall have mortared connections conforming to details for Type GCP Inlet shown on Standard Plan D75B. See Standard Specifications for mortar composition.

TABLE A

CONCRETE QUANTITIES				
TYPE	H=3'-0" TO 8'-0" (T=6")		H=8'-1" TO 20'-0" (T=8")	
	H=3'-0" (CY)	ADDITIONAL PCC PER FOOT (CY)	H=8'-1" (CY)	ADDITIONAL PCC PER FOOT (CY)
G-1	0.95	0.220	See Note A	SEE NOTE A
G-2*	1.31	0.255	3.50	0.357
G-3	1.03	0.220	See Note A	SEE NOTE A
G-4* (TYPE 24)	1.27	0.255	3.48	0.357
G-4* (TYPE 18)	1.30	0.255	3.50	0.357
G-5	1.02	0.220	SEE NOTE A	SEE NOTE A
G-6	1.04	0.220	SEE NOTE A	SEE NOTE A

TABLE BASED ON 8" FLOOR SLAB. NO DEDUCTIONS ARE TO BE MADE TO THESE QUANTITIES BECAUSE OF PIPE OPENINGS, DIFFERENT FLOOR ALTERNATIVES OR DIFFERENT CURB TYPES. * QUANTITIES FOR TYPE G-2 AND G-4 INLETS BASED ON THE MINIMUM INTERIOR DIMENSIONS.

NOTE A:

Maximum allowable height 6'-0".

STATE OF CALIFORNIA
DEPARTMENT OF TRANSPORTATION

DRAINAGE INLETS

NO SCALE

RSP D73 DATED OCTOBER 19, 2012 SUPERSEDES STANDARD PLAN D73 DATED MAY 20, 2011 - PAGE 156 OF THE STANDARD PLANS BOOK DATED 2010.

REVISED STANDARD PLAN RSP D73

2010 REVISED STANDARD PLAN RSP D73

7-19-12

Dist	COUNTY	ROUTE	POST MILES TOTAL PROJECT	SHEET No.	TOTAL SHEETS
07	LA	5	C43.9/C46.4	185	199

REGISTERED CIVIL ENGINEER

April 19, 2013
PLANS APPROVAL DATE

Raymond Don Tsztoo No. C37332 Exp. 6-30-14 CIVIL STATE OF CALIFORNIA REGISTERED PROFESSIONAL ENGINEER

THE STATE OF CALIFORNIA OR ITS OFFICERS OR AGENTS SHALL NOT BE RESPONSIBLE FOR THE ACCURACY OR COMPLETENESS OF SCANNED COPIES OF THIS PLAN SHEET.

TO ACCOMPANY PLANS DATED 6-29-15

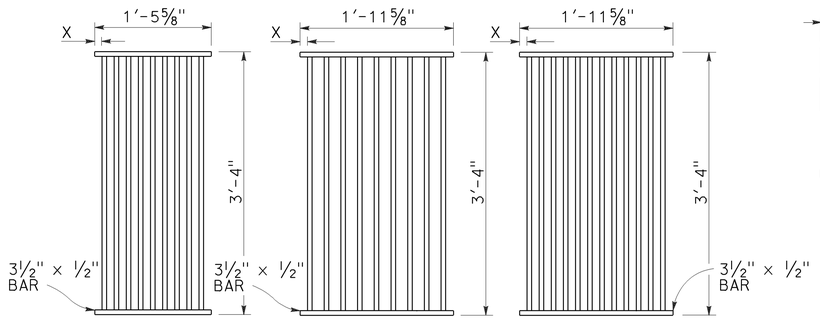

TYPE 18-9

1⅜" Clear spacing. Use within the roadbed on highways where bicycles and pedestrians are excluded.

TYPE 24-9

2" Clear spacing. Use in locations off the roadbed on all types of highways.

TYPE 24-12

1⅜" Clear spacing. Use within the roadbed on highways where bicycles and pedestrians are excluded.

RECTANGULAR GRATE DETAILS

(See table below)

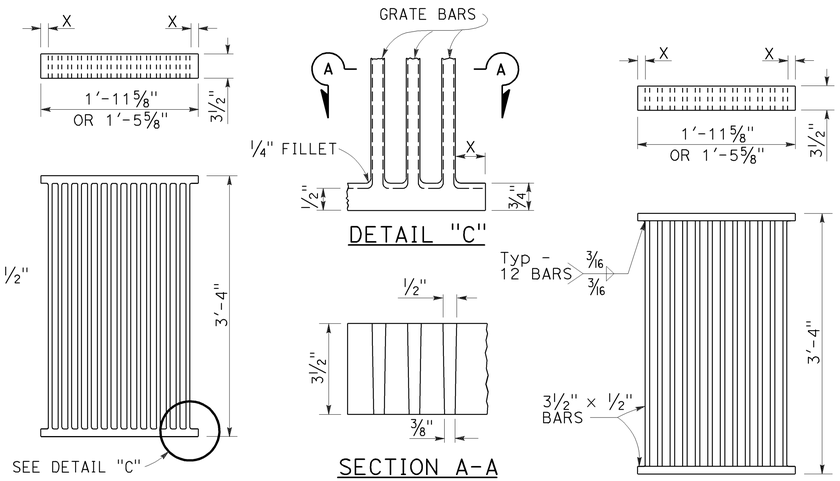

ALTERNATIVE CAST DUCTILE IRON GRATE OR CAST CARBON STEEL GRATE

ALTERNATIVE WELDED GRATE

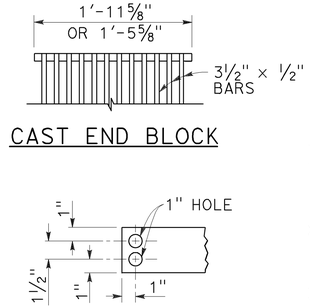

CAST END BLOCK

END OF BAR

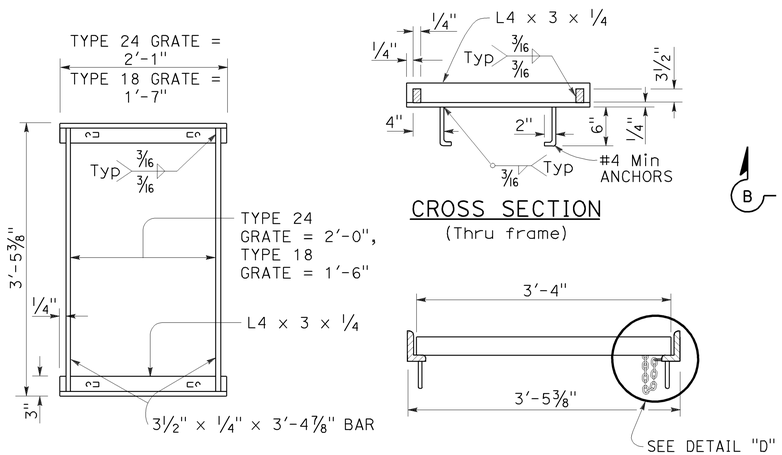

TYPICAL FRAME

CROSS SECTION
(Thru frame)

LONGITUDINAL SECTION
(Thru frame and grate)

RECTANGULAR FRAME DETAILS

(For all rectangular grates)

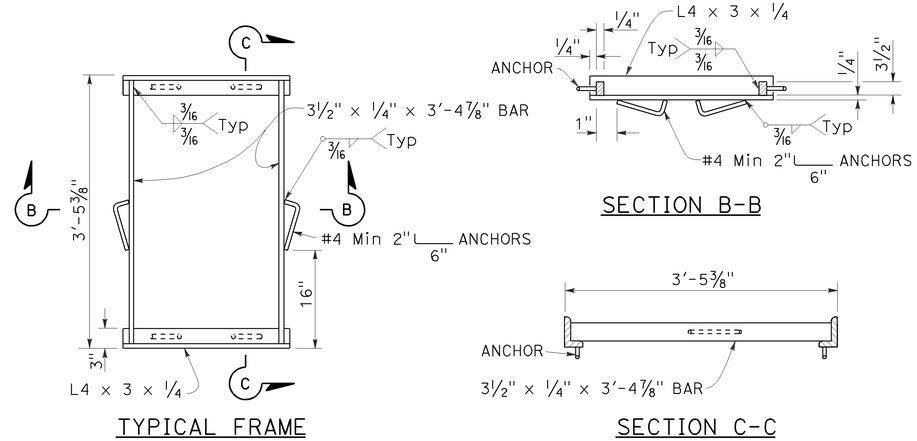

TYPICAL FRAME

SECTION B-B

SECTION C-C

ALTERNATIVE ANCHOR FOR RECTANGULAR FRAME

(For details not shown, See Rectangular Frame Details)

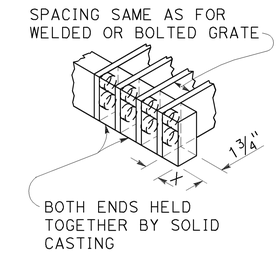

ALTERNATIVE CAST DUCTILE IRON OR CAST CARBON STEEL END BLOCK GRATE

NOTES:

1. Grate type numbers refer to approximate width of grate in inches and number of bars, respectively.
2. Contractor has the option of using cast ductile iron, cast carbon steel, welded, bolted, or cast end block grate.
3. Rounded top of bars optional on all grates.
4. Pipe inlets with a grate shall be placed so that bars parallel direction of principle surface flow.
5. Complete joint penetration butt welds may be substituted for the fillet welds on all anchors.
6. Standard square, hexagon, round or equivalent headed anchors may be substituted for the right angle hooks on the anchors shown on this plan.
7. Grate and frame weights are based on welded grates (weights of face angles, steps, protection bars, etc. are not included).
8. Connect chain to grate and frame only at locations shown on the plans. When chain is required, do not use cast ductile iron grates.

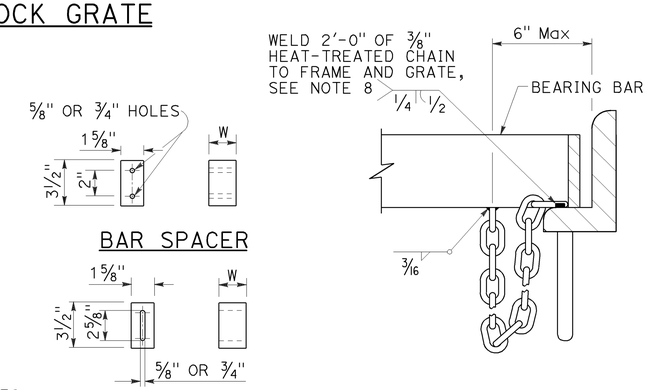

ALTERNATIVE BOLTED GRATE

GRATE BAR SPACING TABLE

TYPE	No. OF BARS	CLEAR BAR SPACING	X
18-9	9	1⅜"	1 1/16"
24-9	9	2"	1 9/16"
24-12	12	1⅜"	1¼"

INLET TYPE	COVER TYPE	WEIGHT LB
OS	PLATE	174
OL-7	PLATE	170
OL-10	PLATE	170
OL-14	PLATE	170
OL-21	PLATE	170
OCP	PLATE	112
OCPI	PLATE	112
OCPI	REDWOOD	42
OMP	PLATE	177
OMPI	PLATE	177

INLET TYPE	GRATE TYPE	No. OF GRATES	WEIGHT LB
GDO	24-12	2	634
GOL-7	24-12	1	326
GOL-10	24-12	1	326
GO,G1,G2,G3,G4 (TYPE 24)	24-9	1	263
	24-12	1	326
G4 (TYPE 18),G5,G6	18-9	1	249
GT1	18-9	2	498
GT2	18-9	2	498
GT3	24-12	2	652
GT4	24-12	2	652
TRASH RACK			22
GRATE CHAIN			3

BASIS FOR Misc IRON & STEEL FINAL PAY WEIGHTS FOR DRAINAGE INLETS

(See Note 7)

STATE OF CALIFORNIA
DEPARTMENT OF TRANSPORTATION

GRATE DETAILS No. 1

NO SCALE

RSP D77A DATED APRIL 19, 2013 SUPERSEDES RSP D77A DATED JULY 20, 2012 AND STANDARD PLAN D77A DATED MAY 20, 2011 - PAGE 164 OF THE STANDARD PLANS BOOK DATED 2010.

REVISED STANDARD PLAN RSP D77A

2010 REVISED STANDARD PLAN RSP D77A

4-4-13

Dist	COUNTY	ROUTE	POST MILES TOTAL PROJECT	SHEET No.	TOTAL SHEETS
07	LA	5	C43.9/C46.4	186	199

Gregory A. Balzer
LICENSED LANDSCAPE ARCHITECT

July 19, 2013
PLANS APPROVAL DATE

THE STATE OF CALIFORNIA OR ITS OFFICERS OR AGENTS SHALL NOT BE RESPONSIBLE FOR THE ACCURACY OR COMPLETENESS OF SCANNED COPIES OF THIS PLAN SHEET.

LICENSED LANDSCAPE ARCHITECT
Gregory A. Balzer 2576
Gregory A. Balzer
07-19-13
2-28-15
Renewal Date
7-19-13
Date
STATE OF CALIFORNIA

TO ACCOMPANY PLANS DATED 6-29-15

A

AB	AGGREGATE BASE
ABS	ACRYLONITRILE-BUTADIENE-STYRENE
AC	ASPHALT CONCRETE
ACC	ARMOR-CLAD CONDUCTORS
Adj	ADJACENT/ADJUSTABLE
AIC	AUXILIARY IRRIGATION CONTROLLER
Alt	ALTERNATIVE
AMEND	AMENDMENT
ARV	AIR RELEASE VALVE
AUTO	AUTOMATIC
AUX	AUXILIARY
AVB	ATMOSPHERIC VACUUM BREAKER

B

B&B	BALLED AND BURLAPPED
B/B	BRASS/BRONZE
B/B/PL	BRASS/BRONZE/PLASTIC
B/PL	BRASS/PLASTIC
BFM	BONDED FIBER MATRIX
Bit Ctd	BITUMINOUS COATED
BP	BOOSTER PUMP
BPA	BACKFLOW PREVENTER ASSEMBLY
BPE	BACKFLOW PREVENTER ENCLOSURE
BV	BALL VALVE

C

C	CONDUIT
CAP	CORRUGATED ALUMINUM PIPE
CARV	COMBINATION AIR RELEASE VALVE
CB	COUPLING BAND
CCA	CAM COUPLER ASSEMBLY
CEC	CONTROLLER ENCLOSURE CABINET
CHDPE	CORRUGATED HIGH DENSITY POLYETHYLENE
CL	CHAIN LINK
CNC	CONTROL AND NEUTRAL CONDUCTORS
Conc	CONCRETE
CP	COPPER PIPE
CS	COMPOST SOCK
CSP	CORRUGATED STEEL PIPE
CST	CENTER STRIP
CV	CHECK VALVE

D

Dia	DIAMETER
DIP	DUCTILE IRON PIPE
DIT	DRIP IRRIGATION TUBING
DG	DECOMPOSED GRANITE
DN	DIAMETER NOMINAL
DVA	DRIP VALVE ASSEMBLY

E

EC	EROSION CONTROL
ECTC	EROSION CONTROL TECHNOLOGY COUNCIL
Elect	ELECTRIC/ELECTRICAL
Elev	ELEVATION
ELL	ELBOW
ENCL	ENCLOSURE
EP	EDGE OF PAVEMENT
ES	EDGE OF SHOULDER
EST	END STRIP
ESTB	ESTABLISHMENT
ETW	EDGE OF TRAVELED WAY

F

F	FULL CIRCLE
F/P	FULL/PART CIRCLE
FCV	FLOW CONTROL VALVE
FERT	FERTILIZER
FG	FINISHED GRADE
FH	FLEXIBLE HOSE
FIPT	FEMALE IRON PIPE THREAD
FIS	FERTILIZER INJECTOR SYSTEM
FL	FLOW LINE
FR	FIBER ROLL
FS	FLOW SENSOR
FSC	FLOW SENSOR CABLE
FV	FLUSH VALVE

G

Galv	GALVANIZED
GARV	GARDEN VALVE
GARVA	GARDEN VALVE ASSEMBLY
GM	GRAVEL MULCH
GPH	GALLONS PER HOUR
GPM	GALLONS PER MINUTE
GSP	GALVANIZED STEEL PIPE
GV	GATE VALVE

H

H	HALF CIRCLE
HDPE	HIGH DENSITY POLYETHYLENE
HP	HORSEPOWER/HINGE POINT
HPL	HIGH PRESSURE LINE
Hwy	HIGHWAY

I

IC	IRRIGATION CONTROLLER
ICC	IRRIGATION CONTROLLER(S) IN CONTROLLER ENCLOSURE CABINET
ID	INSIDE DIAMETER
IFS	IRRIGATION FILTRATION SYSTEM
IPS	IRON PIPE SIZE
IPT	IRON PIPE THREAD
Irr	IRRIGATION

L

L	LENGTH

M

Max	MAXIMUM
MBGR	METAL BEAM GUARD RAILING
MCV	MANUAL CONTROL VALVE
MIC	MASTER IRRIGATION CONTROLLER
Min	MINIMUM
MIPT	MALE IRON PIPE THREAD
Misc	MISCELLANEOUS
Mtl	MATERIAL
MVP	MAINTENANCE VEHICLE PULLOUT

N

NCN	NO COMMON NAME
NL	NOZZLE LINE
No.	NUMBER
NPT	NATIONAL PIPE THREAD

O

O/C	ON CENTER
OD	OUTSIDE DIAMETER
OL	OVERLAP

P

P	PART CIRCLE
PB	PULL BOX
PCC	PORTLAND CEMENT CONCRETE
PE	POLYETHYLENE
Pkt	PACKET
PL	PLASTIC
PLS	PURE LIVE SEED
PLT	PLANT/PLANTING
PLT ESTB	PLANT ESTABLISHMENT
PM	POST MILE
PR	PRESSURE RATED
PRLV	PRESSURE RELIEF VALVE
PRV	PRESSURE REGULATING VALVE
PVC	POLYVINYL CHLORIDE
Pvmt	PAVEMENT

Q

Q	QUARTER CIRCLE
QCV	QUICK COUPLING VALVE

R

R	RADIUS
RCP	REINFORCED CONCRETE PIPE
RCV	REMOTE CONTROL VALVE
RCVM	REMOTE CONTROL VALVE (MASTER)
RCVMF	REMOTE CONTROL VALVE (MASTER) W/FLOW SENSOR
RCVP	REMOTE CONTROL VALVE W/PRESSURE REGULATOR
RCW	RECYCLED WATER
RECP	ROLLED EROSION CONTROL PRODUCT
REQ	REQUIRED
RICS	REMOTE IRRIGATION CONTROL SYSTEM
R/W	RIGHT OF WAY

S

S	SLIP
SCH	SCHEDULE
SF	STATE-FURNISHED
Shld	SHOULDER
Sq	SQUARE
SST	SIDE STRIP
Sta	STATION
Std	STANDARD
SW	SIDEWALK/SOUND WALL

T

T	THIRD CIRCLE/THREAD
TLS	TRUCK LOADING STANDPIPE
TQ	THREE QUARTER CIRCLE
TRM	TURF REINFORCEMENT MAT
TT	TWO-THIRDS CIRCLE
TWSA	TREE WELL SPRINKLER ASSEMBLY
Typ	TYPICAL

U

UG	UNDERGROUND

W

W	WIDTH
W/	WITH
WM	WATER METER
WS	WYE STRAINER
WSA	WYE STRAINER ASSEMBLY
WSP	WELDED STEEL PIPE
WWM	WELDED WIRE MESH

NOTE:

For additional abbreviations, see Standard Plans A10A and A10B.

STATE OF CALIFORNIA
DEPARTMENT OF TRANSPORTATION

LANDSCAPE AND EROSION CONTROL ABBREVIATIONS

NO SCALE

RSP H1 DATED JULY 19, 2013 SUPERSEDES STANDARD PLAN H1 DATED MAY 20, 2011 - PAGE 218 OF THE STANDARD PLANS BOOK DATED 2010.

REVISED STANDARD PLAN RSP H1

2010 REVISED STANDARD PLAN RSP H1

Dist	COUNTY	ROUTE	POST MILES TOTAL PROJECT	SHEET No.	TOTAL SHEETS
07	LA	5	C43.9/C46.4	187	199

LICENSED LANDSCAPE ARCHITECT

November 15, 2013
PLANS APPROVAL DATE

LICENSED LANDSCAPE ARCHITECT — Gregory A. Balzer — 2376 — Renewal Date 2-28-15 — Renewal Date 11-15-13 — Date — STATE OF CALIFORNIA

THE STATE OF CALIFORNIA OR ITS OFFICERS OR AGENTS SHALL NOT BE RESPONSIBLE FOR THE ACCURACY OR COMPLETENESS OF SCANNED COPIES OF THIS PLAN SHEET.

TO ACCOMPANY PLANS DATED 6-29-15

EXISTING	NEW	ITEM DESCRIPTION
		WATER METER (WM)
		BACKFLOW PREVENTER ASSEMBLY (BPA)
		BACKFLOW PREVENTER ENCLOSURE (BPE)
		BOOSTER PUMP (BP)
		TRUCK LOADING STANDPIPE (TLS)
	FS	FLOW SENSOR (FS)
		MASTER IRRIGATION CONTROLLER (MIC)
		AUXILIARY IRRIGATION CONTROLLER (AIC)
		IRRIGATION CONTROLLER (IC) IRRIGATION CONTROLLER (IC) (BATTERY) IRRIGATION CONTROLLER (IC) (SOLAR) IRRIGATION CONTROLLER (IC) (TWO WIRE) IRRIGATION CONTROLLER(S) IN CONTROLLER ENCLOSURE CABINET (ICC)
acc	ACC	ARMOR-CLAD CONDUCTORS (ACC)
cnc	CNC	CONTROL AND NEUTRAL CONDUCTORS (CNC)
		IRRIGATION CONDUIT
		EXTEND IRRIGATION CONDUIT
dip	DIP	DUCTILE IRON PIPE (SUPPLY LINE) (MAIN) (DIP)
		GALVANIZED STEEL PIPE (SUPPLY LINE) (MAIN) (GSP)
		GALVANIZED STEEL PIPE (SUPPLY LINE) (LATERAL) (GSP)
		PLASTIC PIPE (SUPPLY LINE) (MAIN)
		PLASTIC PIPE (SUPPLY LINE) (LATERAL)
cp	CP	COPPER PIPE (SUPPLY LINE)
dit	DIT	DRIP IRRIGATION TUBING
		REMOTE CONTROL VALVE (RCV) REMOTE CONTROL VALVE (MASTER) (RCVM) REMOTE CONTROL VALVE (MASTER) W/FLOW METER (RCVMF)
P	P	REMOTE CONTROL VALVE W/PRESSURE REGULATOR (RCVP)
		EXISTING MANUAL CONTROL VALVE (MCV)
	V	DRIP VALVE ASSEMBLY (DVA)
	Y	WYE STRAINER ASSEMBLY (WSA)

EXISTING	NEW	ITEM DESCRIPTION
		GATE VALVE (GV)
		BALL VALVE (BV)
		QUICK COUPLING VALVE (QCV)
		CAM COUPLER ASSEMBLY (CCA)
		GARDEN VALVE ASSEMBLY (GARVA)
		PRESSURE REGULATING VALVE (PRV)
		PRESSURE RELIEF VALVE (PRLV)
		FLOW CONTROL VALVE (FCV)
		COMBINATION AIR RELEASE VALVE (CARV)
		CHECK VALVE (CV)
		FLUSH VALVE (FV)
		EXISTING NOZZLE LINE W/TURNING UNION
		EXISTING IRRIGATION SYSTEM
		EXISTING IRRIGATION SYSTEM TO BE REMOVED
		CHAIN LINK GATE
		QUICK COUPLING VALVE W/SPRINKLER PROTECTOR
3	3	SPRINKLER W/SPRINKLER PROTECTOR
	C	CONNECT TO EXISTING SYSTEM
		CAP
		CAP EXISTING
	FR	FIBER ROLL
	CS	COMPOST SOCK

- RCV SIZE
- IRRIGATION CONTROLLER
- CONTROLLER STATION
- VALVE IN PARALLEL (IF APPLICABLE)
- GPM
- QUANTITY OF SPRINKLERS (WHEN SHOWN)

* 2½"-A-2b-40-60

VALVE CODE

* VALVE CODES FOR EXISTING VALVES ARE SHOWN IN A DASHED ENCLOSURE.

STATE OF CALIFORNIA
DEPARTMENT OF TRANSPORTATION

LANDSCAPE AND EROSION CONTROL SYMBOLS

NO SCALE

RSP H2 DATED NOVEMBER 15, 2013 SUPERSEDES RSP H2 DATED JULY 19, 2013 AND STANDARD PLAN H2 DATED MAY 20, 2011 - PAGE 219 OF THE STANDARD PLANS BOOK DATED 2010.

REVISED STANDARD PLAN RSP H2

2010 REVISED STANDARD PLAN RSP H2

10-9-13

Dist	COUNTY	ROUTE	POST MILES TOTAL PROJECT	SHEET No.	TOTAL SHEETS
07	LA	5	C43.9/C46.4	188	199

REGISTERED CIVIL ENGINEER

July 19, 2013
PLANS APPROVAL DATE

REGISTERED PROFESSIONAL ENGINEER
Gurinderpal Bhullar
No. C48815
Exp. 9-30-14
CIVIL
STATE OF CALIFORNIA

THE STATE OF CALIFORNIA OR ITS OFFICERS OR AGENTS SHALL NOT BE RESPONSIBLE FOR THE ACCURACY OR COMPLETENESS OF SCANNED COPIES OF THIS PLAN SHEET.

TO ACCOMPANY PLANS DATED 6-29-15

2010 REVISED STANDARD PLAN RSP T9

TABLE 1

TAPER LENGTH CRITERIA AND CHANNELIZING DEVICE SPACING

SPEED (S)	MINIMUM TAPER LENGTH * FOR WIDTH OF OFFSET 12 FEET (W)				MAXIMUM CHANNELIZING DEVICE SPACING		
					X	Y	Z **
	TANGENT 2L	MERGING L	SHIFTING L/2	SHOULDER L/3	TAPER	TANGENT	CONFLICT
mph	ft	ft	ft	ft	ft	ft	ft
20	160	80	40	27	20	40	10
25	250	125	63	42	25	50	12
30	360	180	90	60	30	60	15
35	490	245	123	82	35	70	17
40	640	320	160	107	40	80	20
45	1080	540	270	180	45	90	22
50	1200	600	300	200	50	100	25
55	1320	660	330	220	55	110	27
60	1440	720	360	240	60	120	30
65	1560	780	390	260	65	130	32
70	1680	840	420	280	70	140	35

* - For other offsets, use the following merging taper length formula for L:
For speed of 40 mph or less, $L = WS^2/60$
For speed of 45 mph or more, $L = WS$

Where: L = Taper length in feet
W = Width of offset in feet
S = Posted speed limit, off-peak 85th-percentile speed prior to work starting, or the anticipated operating speed in mph

** - Use for taper and tangent sections where there are no pavement markings or where there is a conflict between existing pavement markings and channelizers (CA).

TABLE 2

LONGITUDINAL BUFFER SPACE AND FLAGGER STATION SPACING

SPEED *	Min D **	DOWNGRADE Min D ***		
		-3%	-6%	-9%
mph	ft	ft	ft	ft
20	115	116	120	126
25	155	158	165	173
30	200	205	215	227
35	250	257	271	287
40	305	315	333	354
45	360	378	400	427
50	425	446	474	507
55	495	520	553	593
60	570	598	638	686
65	645	682	728	785
70	730	771	825	891

* - Speed is posted speed limit, off-peak 85th-percentile speed prior to work starting, or the anticipated operating speed in mph

** - Longitudinal buffer space or flagger station spacing

*** - Use on sustained downgrade steeper than -3 percent and longer than 1 mile.

TABLE 3

ADVANCE WARNING SIGN SPACING

ROAD TYPE	DISTANCE BETWEEN SIGNS *		
	A	B	C
	ft	ft	ft
URBAN - 25 mph OR LESS	100	100	100
URBAN - MORE THAN 25 mph TO 40 mph	250	250	250
URBAN - MORE THAN 40 mph	350	350	350
RURAL	500	500	500
EXPRESSWAY / FREEWAY	1000	1500	2640

* - The distances are approximate, are intended for guidance purposes only, and should be applied with engineering judgment. These distances should be adjusted by the Engineer for field conditions, if necessary, by increasing or decreasing the recommmended distances.

STATE OF CALIFORNIA
DEPARTMENT OF TRANSPORTATION

TRAFFIC CONTROL SYSTEM TABLES FOR LANE AND RAMP CLOSURES

NO SCALE

RSP T9 DATED JULY 19, 2013 SUPERSEDES RSP T9 DATED APRIL 19, 2013 THAT SUPPLEMENTS THE STANDARD PLANS BOOK DATED 2010.

REVISED STANDARD PLAN RSP T9

TO ACCOMPANY PLANS DATED 6-29-15

Dist	COUNTY	ROUTE	POST MILES TOTAL PROJECT	SHEET No.	TOTAL SHEETS
07	LA	5	C43.9/C46.4	189	199

REGISTERED CIVIL ENGINEER

April 19, 2013
PLANS APPROVAL DATE

REGISTERED PROFESSIONAL ENGINEER Gurinderpal Bhullar No. C48815 Exp. 9-30-14 CIVIL STATE OF CALIFORNIA

THE STATE OF CALIFORNIA OR ITS OFFICERS OR AGENTS SHALL NOT BE RESPONSIBLE FOR THE ACCURACY OR COMPLETENESS OF SCANNED COPIES OF THIS PLAN SHEET.

NOTES:

See Revised Standard Plan RSP T9 for tables.

Use cone spacing X for taper segment, Y for tangent segment or Z for conflict situations, as approriate, per Table 1, unless X, Y, or Z cone spacing is shown on this sheet.

Unless otherwise specified in the special provisions, all temporary warning signs shall have black legend on fluorescent orange background.

California codes are designated by (CA). Otherwise, Federal (MUTCD) codes are shown.

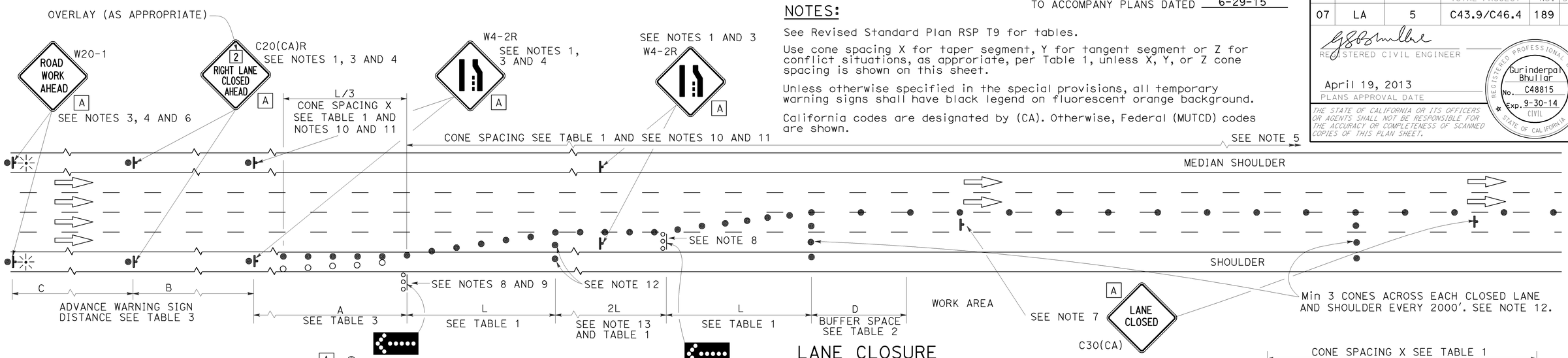

LANE CLOSURE

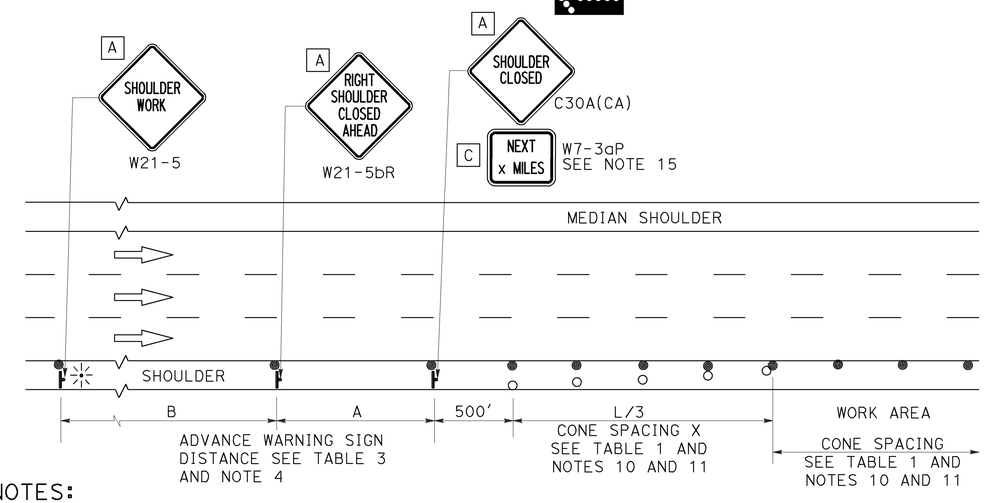

SHOULDER CLOSURE

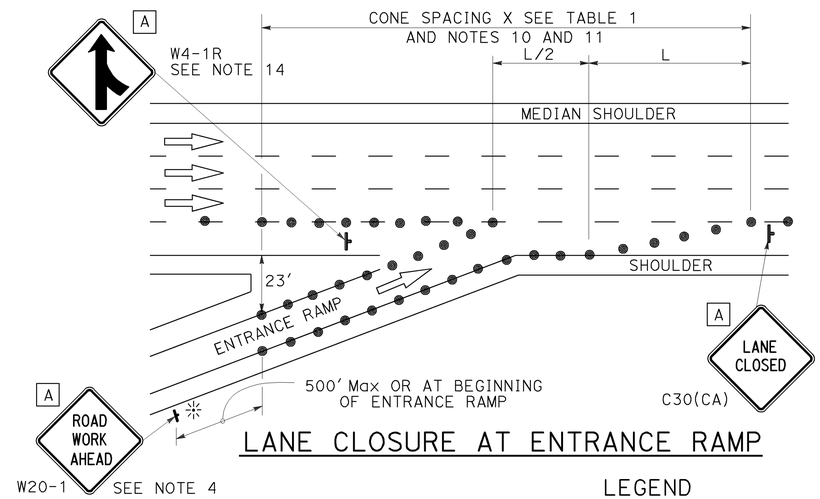

LANE CLOSURE AT ENTRANCE RAMP

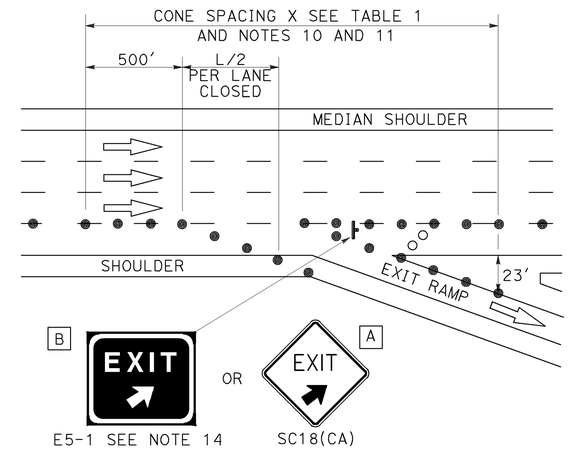

LANE CLOSURE AT EXIT RAMP

NOTES:

1. Median lane closures shall conform to the details as shown except that C20(CA)L and W4-2L signs shall be used.
2. At least one person shall be assigned to provide full time maintenance of traffic control devices for lane closures.
3. Duplicate sign installations are not required:
   a) On opposite shoulder if at least one-half of the available lanes remain open to traffic.
   b) In the median if the width of the median shoulder is less than 8' and the outside lanes are to be closed.
4. Each advance warning sign on each side of the roadway shall be equipped with at least two flags for daytime closure. Each flag shall be at least 16" x 16" in size and shall be orange or fluorescent red-orange in color. Flashing beacons shall be placed at the locations indicated for lane closure during hours of darkness.
5. A G20-2 "END ROAD WORK" sign, with minimum size of 48" x 24" as appropriate, shall be placed at the end of the lane closure unless the end of work area is obvious or ends within a larger project's limits.
6. If the W20-1 sign would follow within 2000' of a stationary W20-1 or G20-1 "ROAD WORK NEXT _____ MILES", use a C20(CA) sign for the first advance warning sign.
7. Place a C30(CA) sign every 2000' throughout length of lane closure.
8. One flashing arrow sign for each lane closed. The flashing arrow signs shall be Type I.
9. A minimum 1500' of sight distance shall be provided where possible for vehicles approaching the first flashing arrow sign. Lane closures shall not begin at top of crest vertical curve or on a horizontal curve.
10. All cones used for lane closures during the hours of darkness shall be fitted with retroreflective bands (or sleeves) as specified in the specifications.
11. Portable delineators, placed at one-half the spacing indicated for traffic cones may be used instead of cones for daytime closures only.
12. Unless otherwise specified in the special provisions, a minimum of 3 cones shall be placed transversely across each closed lane and shoulder at each location where a taper across a traffic lane ends and every 2000' as shown on the "Lane Closure" detail. Two Type II barricades may be used instead of the 3 cones. The transverse alignment of the cones or barricades on the closed shoulder may be shifted from the transverse alignment to provide access to the work.
13. Unless otherwise specified in the special provisions, the 2L tangent shown along lane lines shall be used between the L tapers required for each closed traffic lane.
14. Unless otherwise specified in the special provisions, the E5-1 or SC18(CA) and W4-1 signs shall be used as shown.
15. A W7-3aP "NEXT____ MILES" plaque must be used if theshoulder closure extends beyond the distance that can be perceived by road users.

LEGEND

- TRAFFIC CONE
- TRAFFIC CONE (OPTIONAL TAPER)
- TEMPORARY TRAFFIC CONTROL SIGN
- FLASHING ARROW SIGN (FAS)
- FAS SUPPORT OR TRAILER
- PORTABLE FLASHING BEACON

SIGN PANEL SIZE (Min)

A	48" x 48"
B	72" x 60"
C	36" x 30"

STATE OF CALIFORNIA
DEPARTMENT OF TRANSPORTATION

TRAFFIC CONTROL SYSTEM FOR LANE CLOSURE ON FREEWAYS AND EXPRESSWAYS

NO SCALE

RSP T10 DATED APRIL 19, 2013 SUPERSEDES STANDARD PLAN T10 DATED MAY 20, 2011 - PAGE 237 OF THE STANDARD PLANS BOOK DATED 2010.

REVISED STANDARD PLAN RSP T10

2010 REVISED STANDARD PLAN RSP T10

12-18-12

TO ACCOMPANY PLANS DATED 6-29-15

Dist	COUNTY	ROUTE	POST MILES TOTAL PROJECT	SHEET No.	TOTAL SHEETS
07	LA	5	C43.9/C46.4	190	199

REGISTERED CIVIL ENGINEER

April 19, 2013
PLANS APPROVAL DATE

REGISTERED PROFESSIONAL ENGINEER Gurinderpal Bhullar No. C48815 Exp. 9-30-14 CIVIL STATE OF CALIFORNIA

THE STATE OF CALIFORNIA OR ITS OFFICERS OR AGENTS SHALL NOT BE RESPONSIBLE FOR THE ACCURACY OR COMPLETENESS OF SCANNED COPIES OF THIS PLAN SHEET.

NOTES: See Revised Standard Plan RSP T9 for tables.

Use cone spacing X for taper segment, Y for tangent segment or Z for conflict situations, as approriate, per Table 1, unless X, Y, or Z cone spacing is shown on this sheet.

Unless otherwise specified in the special provisions, all temporary warning signs shall have black legend on fluorescent orange background.

California codes are designated by (CA). Otherwise, Federal (MUTCD) codes are shown.

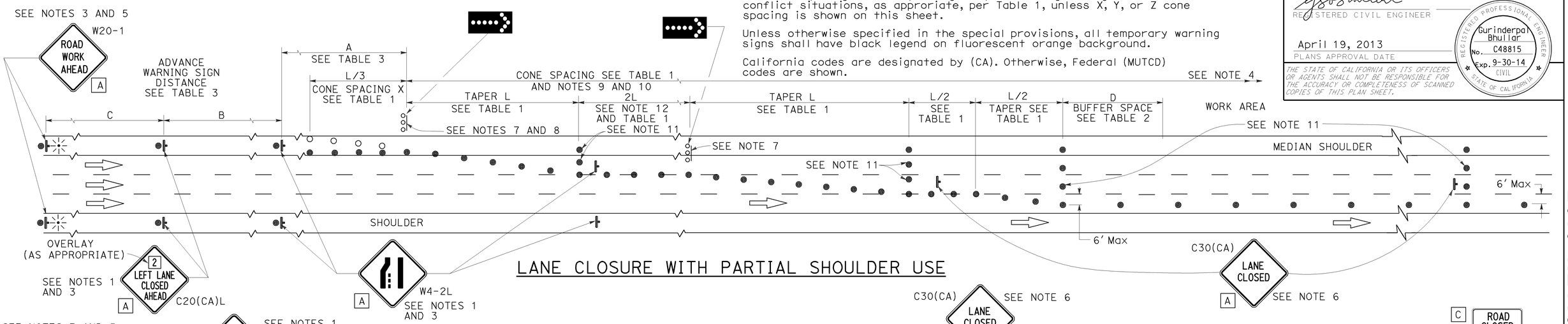

LANE CLOSURE WITH PARTIAL SHOULDER USE

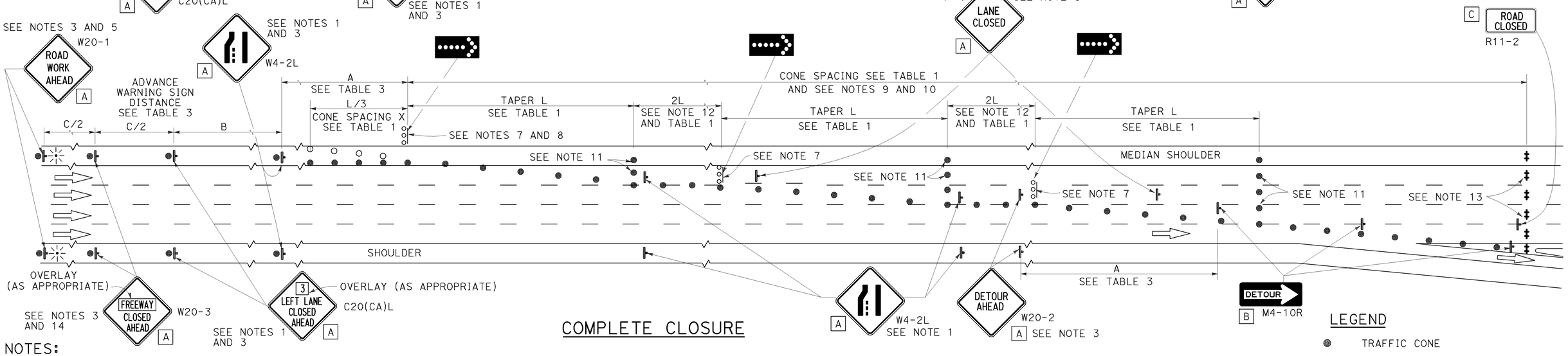

COMPLETE CLOSURE

NOTES:

1. Lane closures on the right side using partial median shoulder as a traffic lane shall conform to the details as shown except that C20(CA)R and W4-2R signs shall be used.
2. At least one person shall be assigned to provide full time maintenance of traffic control devices for lane closures.
3. Each advance warning sign on each side of the roadway shall be equipped with at least two flags for daytime closure. Each flag shall be at least 16" X 16" in size and shall be orange or fluorescent red-orange in color. Flashing beacons shall be placed at the locations indicated for lane closure during hours of darkness.
4. A G20-2 "END ROAD WORK" sign, with minimum size of 48" x 24" as appropriate, shall be placed at the end of the lane closure unless the end of work area is obvious or ends within a larger project's limits.
5. If the W20-1 sign would follow within 2000' of a stationary W20-1 or G20-1 "ROAD WORK NEXT ___ MILES", use a C20(CA) sign for the first advance warning sign.
6. Place a C30(CA) sign every 2000' throughout length of lane closure.
7. One flashing arrow sign for each lane closed. The flashing arrow signs shall be Type I.
8. A minimum 1500' of sight distance shall be provided where possible for vehicles approaching the first flashing arrow sign. Lane closures shall not begin at the top of crest vertical curve or on a horizontal curve.
9. All cones used for lane closures during the hours of darkness shall be fitted with retroreflective bands (or sleeves) as specified in the specifications.
10. Portable delineators, placed at one-half the spacing indicated for traffic cones, may be used instead of cones for daytime closures only.
11. Unless otherwise specified in the special provisions, a minimum of 3 cones shall be placed transversely across each closed lane and shoulder at each location where a taper across a traffic lane ends and every 2000' as shown on the "Lane Closure With Partial Shoulder Use" detail. Two Type II barricades may be used instead of the 3 cones. The transverse alignment of the cones or barricades on the closed shoulder may be shifted from the transverse alignment to provide access to the work.
12. Unless otherwise specified in the special provisions, the 2L tangent shown along lane lines shall be used between the L tapers required for each closed traffic lane.
13. A minimum of Two Type II or III barricades shall be placed across each closed lane and shoulder at the location shown and every 2000' within the complete closure area. Within the complete closure area, the transverse alignment of the barricades on the closed shoulder may be shifted from the transverse alignment to provide access to the work.
14. When specified in the special provisions, a W20-2 "DETOUR AHEAD" sign is to be used in place of the W20-3 "FREEWAY CLOSED AHEAD" sign.

SIGN PANEL SIZE (Min)

A	48" x 48"
B	48" x 18"
C	48" x 30"

LEGEND

- TRAFFIC CONE
- TRAFFIC CONE (OPTIONAL TAPER)
- TEMPORARY TRAFFIC CONTROL SIGN
- FLASHING ARROW SIGN (FAS)
- FAS SUPPORT OR TRAILER
- PORTABLE FLASHING BEACON

STATE OF CALIFORNIA
DEPARTMENT OF TRANSPORTATION

TRAFFIC CONTROL SYSTEM FOR LANE CLOSURES ON FREEWAYS AND EXPRESSWAYS

NO SCALE

RSP T10A DATED APRIL 19, 2013 SUPERSEDES STANDARD PLAN T10A DATED MAY 20, 2011 - PAGE 238 OF THE STANDARD PLANS BOOK DATED 2010.

REVISED STANDARD PLAN RSP T10A

2010 REVISED STANDARD PLAN RSP T10A

12-18-12

Dist	COUNTY	ROUTE	POST MILES TOTAL PROJECT	SHEET No.	TOTAL SHEETS
07	LA	5	C43.9/C46.4	191	199

REGISTERED CIVIL ENGINEER

April 19, 2013
PLANS APPROVAL DATE

REGISTERED PROFESSIONAL ENGINEER Gurinderpal Bhullar No. C48815 Exp. 9-30-14 CIVIL STATE OF CALIFORNIA

THE STATE OF CALIFORNIA OR ITS OFFICERS OR AGENTS SHALL NOT BE RESPONSIBLE FOR THE ACCURACY OR COMPLETENESS OF SCANNED COPIES OF THIS PLAN SHEET.

TO ACCOMPANY PLANS DATED 6-29-15

TYPICAL RAMP CLOSURES

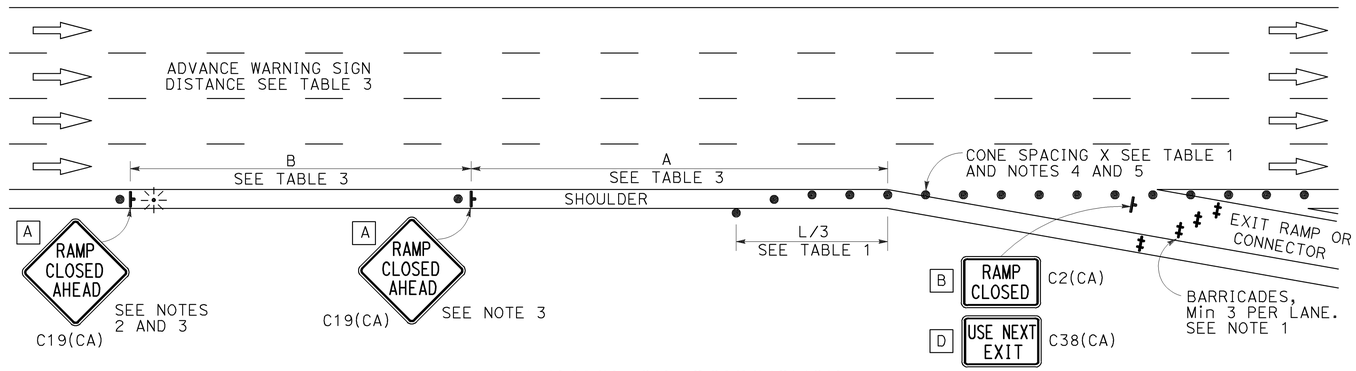

EXIT RAMP OR CONNECTOR

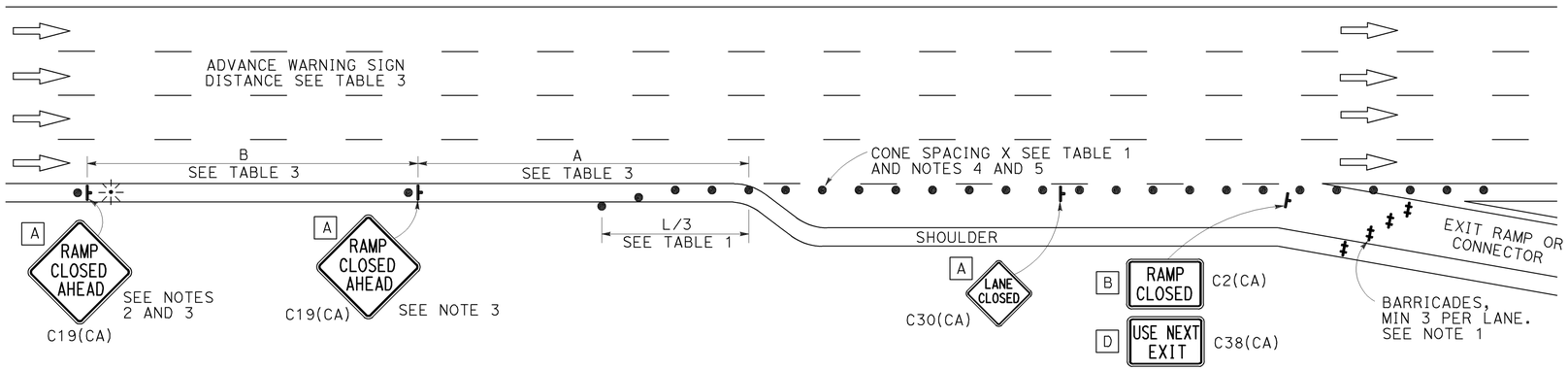

EXIT RAMP OR CONNECTOR WITH ADDITIONAL LANE

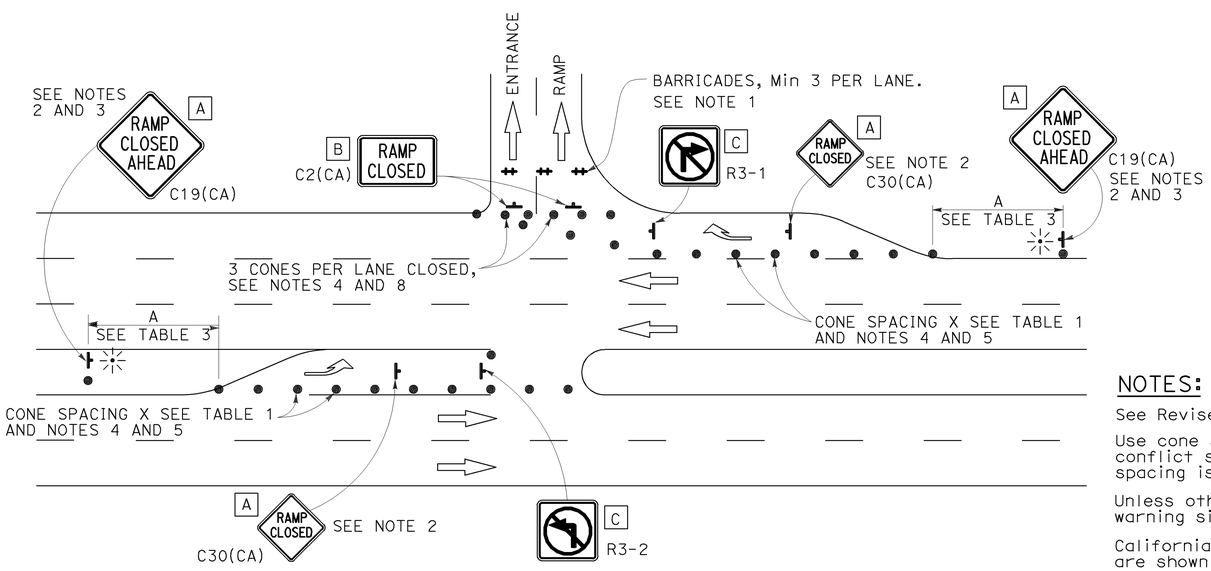

ENTRANCE RAMP WITH TURNING POCKETS

SIGN PANEL SIZE (Min)

- A 48" × 48"
- B 48" × 30"
- C 36" × 36"
- D 48" × 36"

LEGEND

- TRAFFIC CONE
- TEMPORARY TRAFFIC CONTROL SIGN
- BARRICADES
- PORTABLE FLASHING BEACON

NOTES:

1. Barricades shall be Type I, II, or III for closures lasting one week or less and Type III for closures lasting longer than one week.
2. In addition to placing the C19(CA) "RAMP CLOSED AHEAD" and C30(CA) "RAMP CLOSED" signs, black on orange overlay plates with the word "CLOSED" may be mounted, as directed by the Engineer, on all guide signs that refer to the closed ramp. The letter size on the overlay shall be the same as the guide sign.
3. Each advance C19(CA) "RAMP CLOSED AHEAD" sign shall be equipped with at least two flags for daytime closure. Each flag shall be at least 16" × 16" in size and shall be orange or fluorescent red-orange in color. A flashing beacon shall be placed on top of the first C19(CA) sign during hours of darkness.
4. All cones used for ramp closures during the hours of darkness shall be fitted with retroreflective bands (or sleeves) as specified in the specifications.
5. Portable delineators, placed at one-half the spacing indicated for traffic cones, may be used instead of cones for daytime ramp closures only.
6. At least one person shall be assigned to provide full time maintenance of traffic control devices, unless otherwise directed by the Engineer.
7. The existing "EXIT" signs shall be covered during ramp closures.
8. A minimum of 3 cones shall be placed transversely across each closed lane and shoulder.

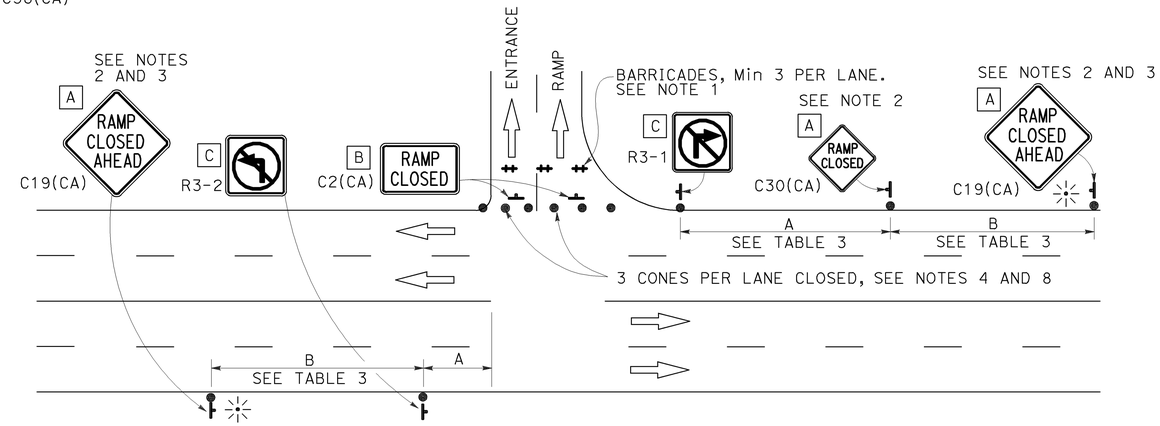

ENTRANCE RAMP WITHOUT TURNING POCKETS

NOTES:

See Revised Standard Plan RSP T9 for tables.

Use cone spacing X for taper segment, Y for tangent segment or Z for conflict situations, as approriate, per Table 1, unless X, Y, or Z cone spacing is shown on this sheet.

Unless otherwise specified in the special provisions, all temporary warning signs shall have black legend on fluorescent orange background.

California codes are designated by (CA). Otherwise, Federal (MUTCD) codes are shown.

STATE OF CALIFORNIA
DEPARTMENT OF TRANSPORTATION

TRAFFIC CONTROL SYSTEM FOR RAMP CLOSURE

NO SCALE

RSP T14 DATED APRIL 19, 2013 SUPERSEDES STANDARD PLAN T14
DATED MAY 20, 2011 - PAGE 242 OF THE STANDARD PLANS BOOK DATED 2010.

REVISED STANDARD PLAN RSP T14

2010 REVISED STANDARD PLAN RSP T14

12-18-12

Dist	COUNTY	ROUTE	POST MILES TOTAL PROJECT	SHEET No.	TOTAL SHEETS
07	LA	5	C43.9/C46.4	192	199

REGISTERED CIVIL ENGINEER

October 21, 2011
PLANS APPROVAL DATE

REGISTERED PROFESSIONAL ENGINEER Tillat Satter No. C42892 Exp. 3-31-12 CIVIL STATE OF CALIFORNIA

THE STATE OF CALIFORNIA OR ITS OFFICERS OR AGENTS SHALL NOT BE RESPONSIBLE FOR THE ACCURACY OR COMPLETENESS OF SCANNED COPIES OF THIS PLAN SHEET.

TO ACCOMPANY PLANS DATED 6-29-15

2010 REVISED STANDARD PLAN RSP B11-47

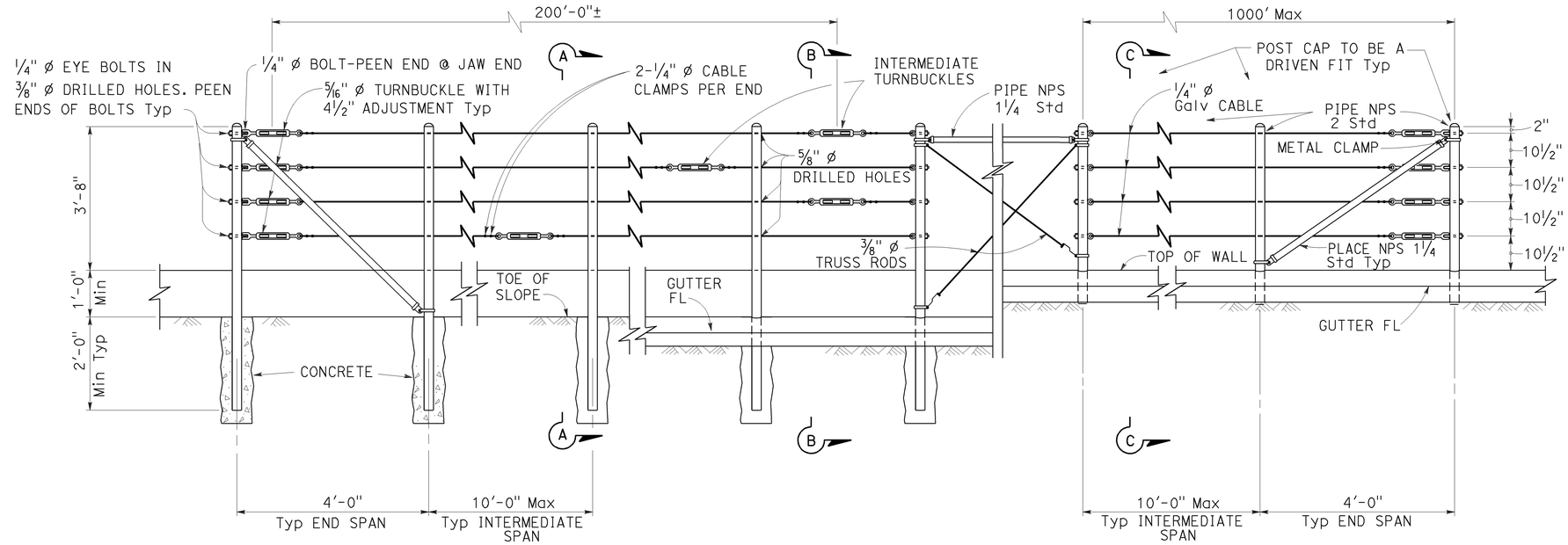

EXISTING WALL (WITHOUT GUTTER)
Existing

RETAINING WALL (WITH GUTTER)
Existing

RETAINING WALL (WITH GUTTER)
New construction

ELEVATION

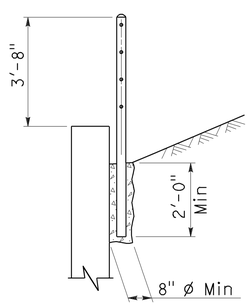

SECTION A-A
Existing

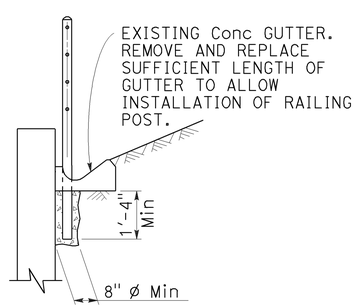

SECTION B-B
Existing

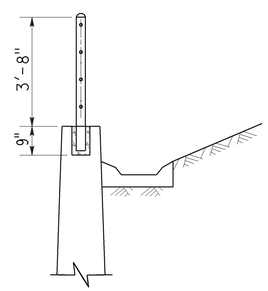

SECTION C-C
New construction

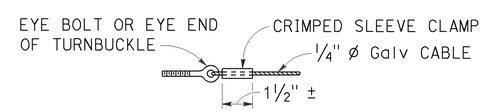

ALTERNATIVE CABLE CONNECTION

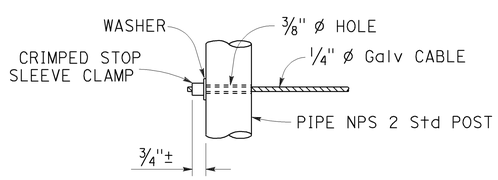

ALTERNATIVE DEAD END ANCHORAGE

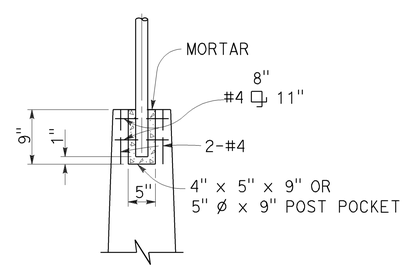

POST POCKET

NOTES:

1. Maximum distance between turnbuckles shall be 200'-0"±.
2. Intermediate turnbuckles to be placed in adjacent spans.
3. Cable shall not be spliced between intermediate turnbuckles and end posts.
4. Posts to be vertical.
5. Alignment of holes in posts may vary to conform to slope of top of retaining wall.
6. The Contractor shall verify all dependent dimensions in the field before ordering or fabricating any material.
7. Line posts shall be braced horizontally and trussed diagonally in both directions at intervals not to exceed 1000'.
8. Post pockets to be centered in top of wall.
9. Typical end spans, braced in both directions, shall be constructed at changes in line where the angle of deflection is 15° or more.
10. Provide thimbles at all cable loops.

STATE OF CALIFORNIA
DEPARTMENT OF TRANSPORTATION

CABLE RAILING

NO SCALE

RSP B11-47 DATED OCTOBER 21, 2011 SUPERSEDES STANDARD PLAN B11-47 DATED MAY 20, 2011 - PAGE 293 OF THE STANDARD PLANS BOOK DATED 2010.

REVISED STANDARD PLAN RSP B11-47

9-14-11

Dist	COUNTY	ROUTE	POST MILES TOTAL PROJECT	SHEET No.	TOTAL SHEETS
07	LA	5	C43.9/C46.4	193	199

Theresa Gabriel
REGISTERED ELECTRICAL ENGINEER

July 19, 2013
PLANS APPROVAL DATE

REGISTERED PROFESSIONAL ENGINEER Theresa Aziz Gabriel No. E15129 Exp. 6-30-14 ELECTRICAL STATE OF CALIFORNIA

THE STATE OF CALIFORNIA OR ITS OFFICERS OR AGENTS SHALL NOT BE RESPONSIBLE FOR THE ACCURACY OR COMPLETENESS OF SCANNED COPIES OF THIS PLAN SHEET.

TO ACCOMPANY PLANS DATED 6-29-15

2010 REVISED STANDARD PLAN RSP ES-1A

LEGEND:

AB	ABANDON. IF APPLIED TO CONDUIT, REMOVE CONDUCTORS
BC	INSTALL PULL BOX IN EXISTING CONDUIT RUN
BP	PEDESTRIAN BARRICADE, TYPE AS INDICATED ON PLAN
CB	INSTALL CONDUIT INTO EXISTING PULL BOX
CC	CONNECT NEW AND EXISTING CONDUIT. REMOVE EXISTING CONDUCTORS AND INSTALL CONDUCTORS AS INDICATED
CF	CONDUIT TO REMAIN FOR FUTURE USE. REMOVE CONDUCTORS. INSTALL PULL TAPE
DH	DETECTOR HANDHOLE
FA	FOUNDATION TO BE ABANDONED
IS	INSTALL SIGN ON SIGNAL MAST ARM
NS	NO SLIP BASE ON STANDARD
PEC	PHOTOELECTRIC CONTROL
PEU	PHOTOELECTRIC UNIT
RC	EQUIPMENT OR MATERIAL TO BE REMOVED AND BECOME THE PROPERTY OF THE CONTRACTOR
RE	REMOVE ELECTROLIER, FUSES AND BALLAST. TAPE ENDS OF CONDUCTORS
RL	RELOCATE EQUIPMENT
RR	REMOVE AND REUSE EQUIPMENT
RS	REMOVE AND SALVAGE EQUIPMENT
SC	SPLICE NEW TO EXISTING CONDUCTORS
SD	SERVICE DISCONNECT
TSP	TELEPHONE SERVICE POINT

ABBREVIATIONS

APS	ACCESSIBLE PEDESTRIAN SIGNAL
BBS	BATTERY BACKUP SYSTEM
BC	BOLT CIRCLE
BPB	BICYCLE PUSH BUTTON
C	CONDUIT
CB	CIRCUIT BREAKER
CCTV	CLOSED CIRCUIT TELEVISION
Ckt	CIRCUIT
CMS	CHANGEABLE MESSAGE SIGN
Ctid	CALTRANS IDENTIFICATION
Comm	COMMUNICATION
DLC	LOOP DETECTOR LEAD-IN CABLE
EMS	EXTINGUISHABLE MESSAGE SIGN
EVUC	EMERGENCY VEHICLE UNIT CABLE
EVUD	EMERGENCY VEHICLE UNIT DETECTOR
FB	FLASHING BEACON
FBCA	FLASHING BEACON CONTROL ASSEMBLY
FBS	FLASHING BEACON WITH SLIP BASE
FO	FIBER OPTIC
G	EQUIPMENT GROUNDING CONDUCTOR
GB	GROUND BUS
GFCI	GROUND FAULT CIRCUIT INTERRUPTER
HAR	HIGHWAY ADVISORY RADIO
Hex	HEXAGONAL
HPS	HIGH PRESSURE SODIUM
IISNS	INTERNALLY ILLUMINATED STREET NAME SIGN
ISL	INDUCTION SIGN LIGHTING
LED	LIGHT EMITTING DIODE
LMA	LUMINAIRE MAST ARM
LPS	LOW PRESSURE SODIUM
Ltg	LIGHTING
Lum	LUMINAIRE
M	METERED
MAT	MAST ARM MOUNTING TOP ATTACHMENT
MAS	MAST ARM MOUNTING SIDE ATTACHMENT
M/M	MULTIPLE TO MULTIPLE TRANSFORMER
Mtg	MOUNTING
MV	MERCURY VAPOR LIGHTING FIXTURE
MVDS	MICROWAVE VEHICLE DETECTION SYSTEM
N	NEUTRAL (GROUNDED CONDUCTOR)
NB	NEUTRAL BUS
NC	NORMALLY CLOSE
NO	NORMALLY OPEN
P	CIRCUIT BREAKER'S POLE
PB	PULL BOX
PBA	PUSH BUTTON ASSEMBLY
PEC	PHOTOELECTRIC CONTROL
Ped	PEDESTRIAN
PEU	PHOTOELECTRIC UNIT
PT	CONDUIT WITH PULL TAPE
RE	RELOCATED EQUIPMENT
RM	RAMP METERING
RWIS	ROADSIDE WEATHER INFORMATION SYSTEM
SB	SLIP BASE
SIC	SIGNAL INTERCONNECT CABLE
Sig	SIGNAL
SMA	SIGNAL MAST ARM
SNS	STREET NAME SIGN
SP	SERVICE POINT
TDC	TELEPHONE DEMARCATION CABINET
TMS	TRAFFIC MONITORING STATION
TOS	TRAFFIC OPERATIONS SYSTEM
Veh	VEHICLE
VIVDS	VIDEO IMAGE VEHICLE DETECTION SYSTEM
WIM	WEIGH-IN-MOTION
Xfmr	TRANSFORMER

SOFFIT AND WALL MOUNTED LUMINAIRES

PENDANT, 70 W HPS UNLESS OTHERWISE SPECIFIED

FLUSH, 70 W HPS UNLESS OTHERWISE SPECIFIED

WALL SURFACE, 70 W HPS UNLESS OTHERWISE SPECIFIED

EXISTING SOFFIT OR WALL LUMINAIRE TO REMAIN UNMODIFIED

EXISTING SOFFIT OR WALL LUMINAIRE TO BE MODIFIED AS SPECIFIED

NOTE:

Arrow indicates "street side" of luminaire.

COMMONLY USED SYMBOLS FOR UNITED STATES CUSTOMARY UNITS OF MEASUREMENT:

SYMBOL USED	DEFINITIONS
Ω	OHMS
min	MINUTE
s	SECOND
bps	BITS PER SECOND
Bps	BYTES PER SECOND
A	AMPERE
V	VOLT
V(dc)	VOLT (DIRECT CURRENT)
V(ac)	VOLT (ALTERNATING CURRENT)
FC	FOOT - CANDLE
W	WATTS
VA	VOLT-AMPERE
M	MEGA
k	KILO
m	MILLI
μ	MICRO
P	PICO
Hz	HERTZ

MISCELLANEOUS ELECTROLIERS

NEW	EXISTING	
		LUMINAIRE ON WOOD POLE
		NON-STANDARD ELECTROLIER (SEE PROJECT NOTES OR PROJECT PLANS)
		CITY ELECTROLIER
		ELECTROLIER FOUNDATION (FUTURE INSTALLATION)

NOTES:

1. HPS luminaires shall be 310 W HPS when installed on Type 21, 21D, 30, 31 and 32 Standards, unless otherwise specified. HPS luminaires shall be 200 W when installed on other type standards or poles, unless otherwise specified.
2. LED luminaires shall be 235 W when installed on Type 21, 21D, 30, 31 and 32 Standards, unless otherwise specified. LED luminaires shall be 165 W when installed on other type standards or poles, unless otherwise specified.
3. Luminaires shall be the cutoff type, ANSI Type III medium cutoff lighting distribution, unless otherwise specified.

STANDARD ELECTROLIER

NEW	EXISTING	STANDARD TYPE
		15
		15D
		15 STRUCTURE
		15D STRUCTURE
		21
		21D
		21 STRUCTURE
		21D STRUCTURE
		30
		31
		32

STATE OF CALIFORNIA
DEPARTMENT OF TRANSPORTATION

ELECTRICAL SYSTEMS (LEGEND AND ABBREVIATIONS)

NO SCALE

RSP ES-1A DATED JULY 19, 2013 SUPERSEDES STANDARD PLAN ES-1A DATED MAY 20, 2011 - PAGE 425 OF THE STANDARD PLANS BOOK DATED 2010.

REVISED STANDARD PLAN RSP ES-1A

Dist	COUNTY	ROUTE	POST MILES TOTAL PROJECT	SHEET No.	TOTAL SHEETS
07	LA	5	C43.9/C46.4	194	199

Theresa Gabriel
REGISTERED ELECTRICAL ENGINEER

July 19, 2013
PLANS APPROVAL DATE

REGISTERED PROFESSIONAL ENGINEER
Theresa Aziz Gabriel
No. E15129
Exp. 6-30-14
ELECTRICAL
STATE OF CALIFORNIA

THE STATE OF CALIFORNIA OR ITS OFFICERS OR AGENTS SHALL NOT BE RESPONSIBLE FOR THE ACCURACY OR COMPLETENESS OF SCANNED COPIES OF THIS PLAN SHEET.

TO ACCOMPANY PLANS DATED 6-29-15

CONDUIT

NEW	EXISTING	
		LIGHTING CONDUIT, UNLESS OTHERWISE INDICATED OR NOTED
		TRAFFIC SIGNAL CONDUIT
C	c	COMMUNICATION CONDUIT
T	t	TELEPHONE CONDUIT
F	f	FIRE ALARM CONDUIT
FO	fo	FIBER OPTIC CONDUIT
		CONDUIT TERMINATION
R	r	CONDUIT RISER ATTACHED TO THE STRUCTURE OR SERVICE POLE

SERVICE EQUIPMENT

NEW	EXISTING	
OH	oh	OVERHEAD LINES
U	U	WOOD POLE, "U" INDICATES UTILITY OWNED
		POLE GUY WITH ANCHOR
		UTILITY TRANSFORMER - GROUND MOUNTED
III	III	SERVICE EQUIPMENT ENCLOSURE TYPE. DOOR INDICATES FRONT OF ENCLOSURE
T	t	TELEPHONE DEMARCATION CABINET

POLE-MOUNTED SERVICE DESIGNATION

TYPE H SERVICE, 28'-10" — TYPE OF INSTALLATION AND POLE HEIGHT ABOVE GRADE

FLASHING BEACON

NEW	EXISTING	
R	R	FLASHING BEACON (ONE VEHICLE SIGNAL HEAD WITH BACKPLATE AND VISOR) "R" INDICATES RED INDICATION, "Y" INDICATES YELLOW INDICATION
Y Y	Y Y	FLASHING BEACON WITH TYPE 15-FBS STANDARD AND A SIGN.
R R	R R	FLASHING BEACON WITH TYPES 9, 9A OR 9B SIGN UNLESS OTHERWISE SPECIFIED OR INDICATED

SIGNAL EQUIPMENT

NEW	EXISTING	
C	C	PEDESTRIAN SIGNAL HEAD "C" INDICATES COUNTDOWN PEDESTRIAN HEAD
		PUSH BUTTON ASSEMBLY POST
		PEDESTRIAN BARRICADE
		VEHICLE SIGNAL HEAD (WITH BACKPLATE AND 3-SECTIONS: RED, YELLOW AND GREEN)
		VEHICLE SIGNAL HEAD WITH ANGLE VISOR
PV	PV	MODIFICATIONS OF BASIC SYMBOL: "L" INDICATES ALL NON-ARROW SECTIONS LOUVERED "LG" INDICATES LOUVERED GREEN SECTION ONLY "PV" INDICATES ALL 12" SECTIONS PROGRAMMED VISIBILITY "8" INDICATES ALL 8" SECTIONS (ONLY WHEN SPECIFIED)
		VEHICLE SIGNAL HEAD CONSISTING OF RED, YELLOW AND GREEN LEFT ARROW SECTIONS
		VEHICLE SIGNAL HEAD CONSISTING OF RED AND YELLOW SECTIONS WITH AN UP GREEN ARROW SECTION
		VEHICLE SIGNAL HEAD (5 SECTION) CONSISTING OF RED, YELLOW AND GREEN SECTIONS WITH YELLOW AND GREEN RIGHT ARROW SECTIONS
		TYPE 15TS STANDARD WITH VEHICLE SIGNAL HEAD AND LUMINAIRE
		TYPE 21TS STANDARD WITH VEHICLE SIGNAL HEAD AND LUMINAIRE
		STANDARD WITH LUMINAIRE AND SIGNAL MAST ARMS AND ATTACHED VEHICLE SIGNAL HEADS
		TYPE 1 STANDARD WITH ATTACHED VEHICLE SIGNAL HEADS
		STANDARD WITH A SIGNAL MAST ARM, ATTACHED VEHICLE SIGNAL HEADS AND INTERNALLY ILLUMINATED STREET NAME SIGN
		CONTROLLER ASSEMBLY. DOOR INDICATES FRONT OF CABINET

SIGNAL EQUIPMENT Cont

NEW	EXISTING	
		GUARD POST
		TYPE 1 STANDARD WITH RAMP METERING SIGN
		OPTICAL DETECTOR FOR THE EMERGENCY VEHICLE DETECTION SYSTEM

NOTES:

1. All signal sections shall be 12" unless shown otherwise.
2. Signal heads shall be provided with backplates unless shown otherwise.

ILLUMINATED OVERHEAD SIGN

NEW	EXISTING	
		SINGLE POST, SINGLE ILLUMINATED SIGN, BALANCED BUTTERFLY
		SINGLE POST, DOUBLE ILLUMINATED SIGN, BALANCED BUTTERFLY
		SINGLE POST, SINGLE ILLUMINATED SIGN, FULL CANTILEVER
		DOUBLE POST, SINGLE ILLUMINATED SIGN
		SINGLE ILLUMINATED SIGN MOUNTED ON STRUCTURE
		DOUBLE POST, SINGLE ILLUMINATED SIGN WITH ELECTROLIER

STATE OF CALIFORNIA
DEPARTMENT OF TRANSPORTATION

ELECTRICAL SYSTEMS (LEGEND AND ABBREVIATIONS)

NO SCALE

RSP ES-1B DATED JULY 19, 2013 SUPERSEDES STANDARD PLAN ES-1B DATED MAY 20, 2011 - PAGE 426 OF THE STANDARD PLANS BOOK DATED 2010.

REVISED STANDARD PLAN RSP ES-1B

2010 REVISED STANDARD PLAN RSP ES-1B

7-15-13

Dist	COUNTY	ROUTE	POST MILES TOTAL PROJECT	SHEET No.	TOTAL SHEETS
07	LA	5	C43.9/C46.4	195	199

Theresa Gabriel
REGISTERED ELECTRICAL ENGINEER

July 19, 2013
PLANS APPROVAL DATE

REGISTERED PROFESSIONAL ENGINEER
Theresa Aziz Gabriel
No. E15129
Exp. 6-30-14
ELECTRICAL
STATE OF CALIFORNIA

THE STATE OF CALIFORNIA OR ITS OFFICERS OR AGENTS SHALL NOT BE RESPONSIBLE FOR THE ACCURACY OR COMPLETENESS OF SCANNED COPIES OF THIS PLAN SHEET.

TO ACCOMPANY PLANS DATED 6-29-15

2010 REVISED STANDARD PLAN RSP ES-5B

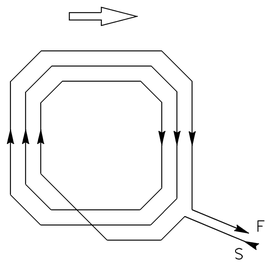

WINDING DETAIL

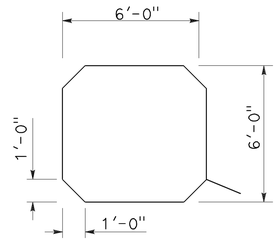

SAWCUT DETAIL

TYPE A LOOP DETECTOR CONFIGURATION

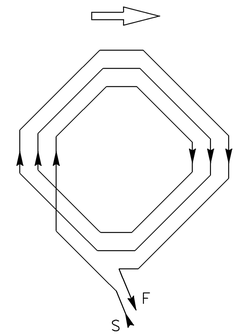

WINDING DETAIL

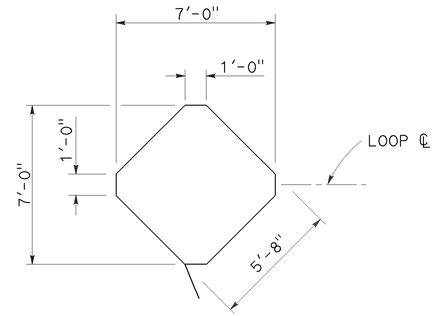

SAWCUT DETAIL

TYPE B LOOP DETECTOR CONFIGURATION

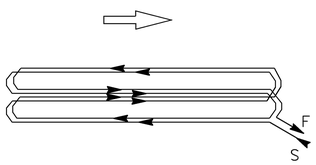

WINDING DETAIL

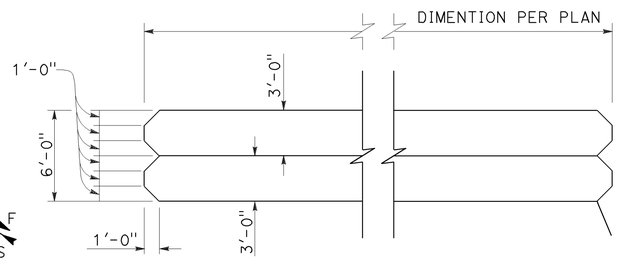

SAWCUT DETAIL

TYPE C LOOP DETECTOR CONFIGURATION

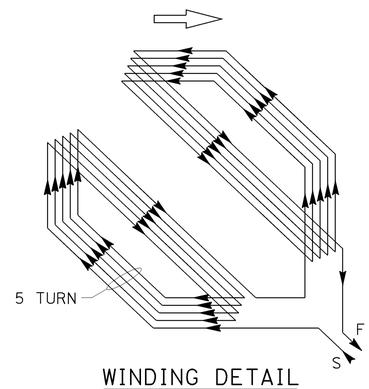

WINDING DETAIL

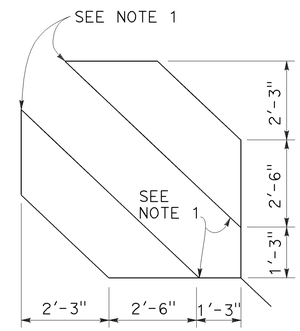

SAWCUT DETAIL

TYPE D LOOP DETECTOR CONFIGURATION

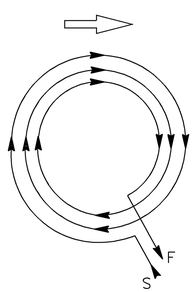

WINDING DETAIL

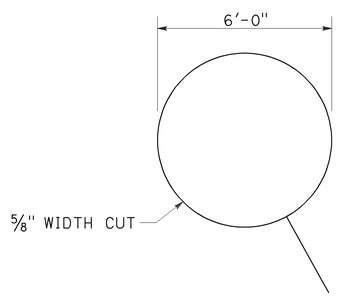

SAWCUT DETAIL

TYPE E LOOP DETECTOR CONFIGURATION

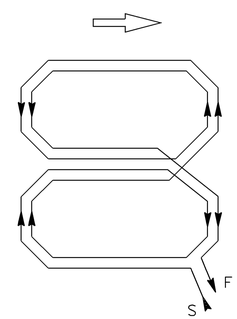

WINDING DETAIL

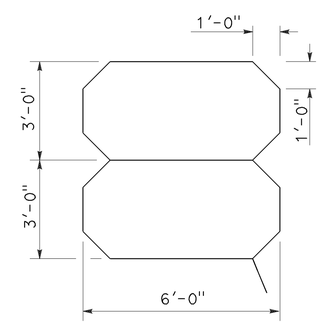

SAWCUT DETAIL

TYPE Q LOOP DETECTOR CONFIGURATION

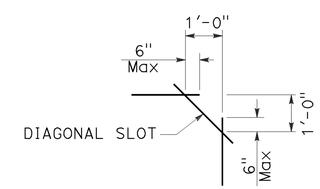

PLAN VIEW OF DIAGONAL SLOT AT CORNERS

NOTES:

1. Round corners of acute angle sawcuts to prevent damage to conductors.
2. Typical distance separating loops from edge to edge is 10' for Type A, B, D and E installation in single lane.

STATE OF CALIFORNIA
DEPARTMENT OF TRANSPORTATION

ELECTRICAL SYSTEMS (DETECTORS)

NO SCALE

RSP ES-5B DATED JULY 19, 2013 SUPERSEDES STANDARD PLAN ES-5B DATED MAY 20, 2011 - PAGE 449 OF THE STANDARD PLANS BOOK DATED 2010.

REVISED STANDARD PLAN RSP ES-5B

Dist	COUNTY	ROUTE	POST MILES TOTAL PROJECT	SHEET No.	TOTAL SHEETS
07	LA	5	C43.9/C46.4	196	199

Theresa Gabriel
REGISTERED ELECTRICAL ENGINEER

July 19, 2013
PLANS APPROVAL DATE

REGISTERED PROFESSIONAL ENGINEER Theresa Aziz Gabriel No. E15129 Exp. 6-30-14 ELECTRICAL STATE OF CALIFORNIA

THE STATE OF CALIFORNIA OR ITS OFFICERS OR AGENTS SHALL NOT BE RESPONSIBLE FOR THE ACCURACY OR COMPLETENESS OF SCANNED COPIES OF THIS PLAN SHEET.

TO ACCOMPANY PLANS DATED 6-29-15

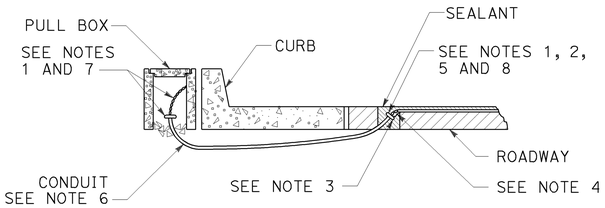

TYPE A
CURB TERMINATION DETAIL

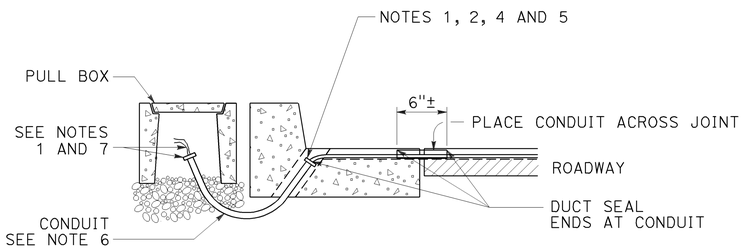

CROSS SECTION

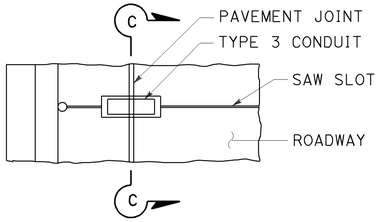

PLAN VIEW

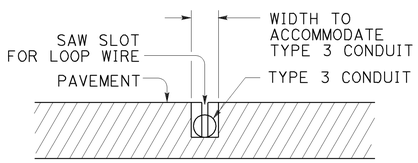

SECTION C-C

TYPE B
CURB TERMINATION DETAIL

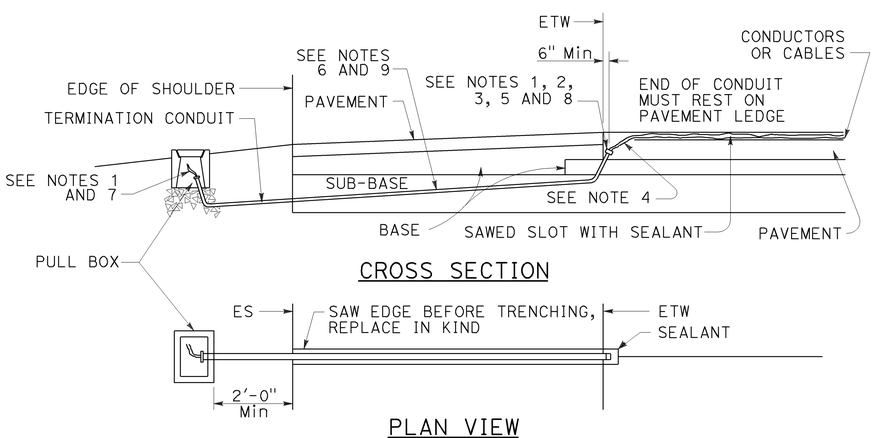

CROSS SECTION

PLAN VIEW

SHOULDER TERMINATION DETAILS

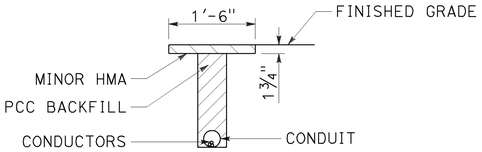

"T" TRENCH
DETAIL T

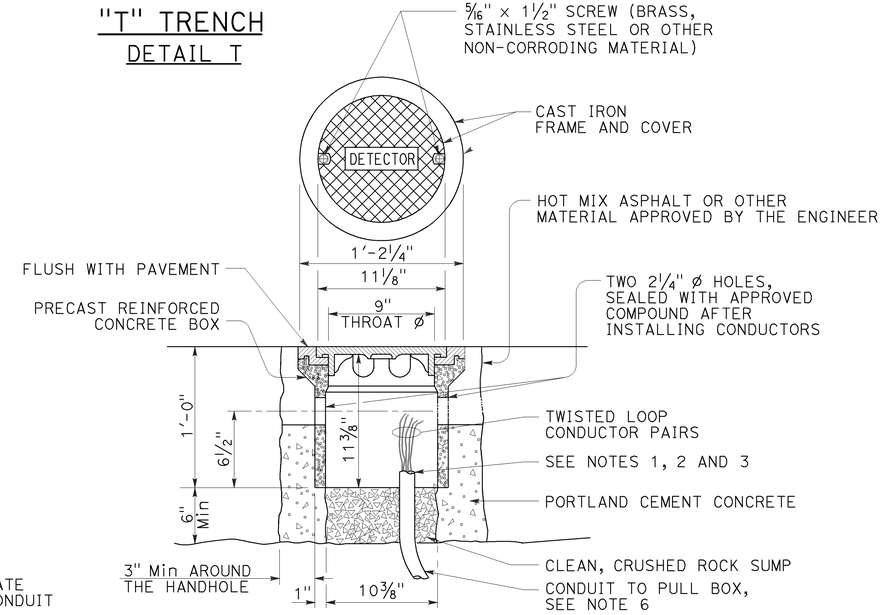

DETECTOR HANDHOLE DETAIL

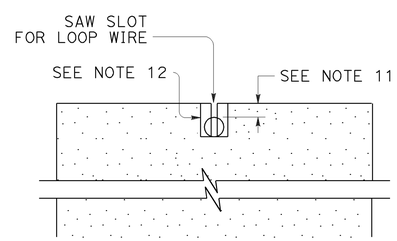

SECTION A-A

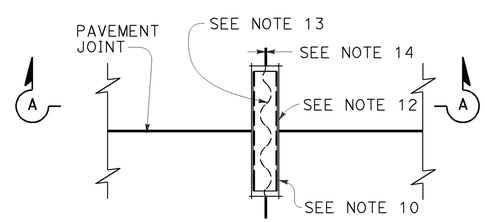

PLAN VIEW

TYPICAL LOOP LEAD-IN DETAIL
AT PAVEMENT JOINT

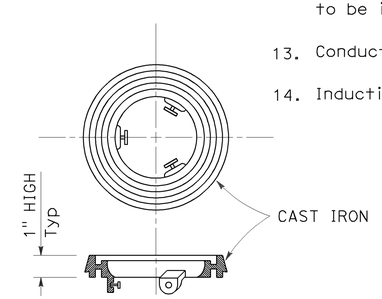

LOCKING GRADE RING

NOTES:

1. Bushing shall be used at end of conduit.
2. Tape detector conductors or cables 3" each side of bushings.
3. Install duct seal compound to each end of termination conduit before installing sealant.
4. Round all sharp edges where detector conductors or cables have to pass.
5. End of conduit shall be 3⅛" below roadway surface.
6. Conduit size / Loop conductors
   - 1"C minimum — 1 to 2 pairs
   - 1½"C minimum — 3 to 4 pairs
   - 2"C minimum — 5 or more pairs
7. Splice detector conductors or cables to detector lead-in-cable.
8. Location of detector handhole when shown on plans.
9. When the shoulder and traveled way are paved with the same material and there is no joint between them, the conduit shall extend only 2'-0" into the shoulder pavement.
10. ¾"C, Type 3 conduit 6" long minimum, plug both ends with duct compound to keep out sealant.
11. ½" Minimum between top of conduit and pavement surface.
12. Sawcut shall not exceed 1" in width and ⅛" longer than conduit to be installed.
13. Conductors with ½" minimum slack inside conduit.
14. Inductive loop detector saw slot.

STATE OF CALIFORNIA
DEPARTMENT OF TRANSPORTATION

ELECTRICAL SYSTEMS (CURB TERMINATION AND HANDHOLE)

NO SCALE

RSP ES-5D DATED JULY 19, 2013 SUPERSEDES STANDARD PLAN ES-5D DATED MAY 20, 2011 - PAGE 451 OF THE STANDARD PLANS BOOK DATED 2010.

REVISED STANDARD PLAN RSP ES-5D

2010 REVISED STANDARD PLAN RSP ES-5D

7-9-13

DIST	COUNTY	ROUTE	POST MILES TOTAL PROJECT	SHEET NO.	TOTAL SHEETS
07	LA	5	C43.9/C46.4	197	199

Theresa Gabriel
REGISTERED ELECTRICAL ENGINEER

July 19, 2013
PLANS APPROVAL DATE

REGISTERED PROFESSIONAL ENGINEER Theresa Aziz Gabriel No. E15129 Exp. 6-30-14 ELECTRICAL STATE OF CALIFORNIA

THE STATE OF CALIFORNIA OR ITS OFFICERS OR AGENTS SHALL NOT BE RESPONSIBLE FOR THE ACCURACY OR COMPLETENESS OF SCANNED COPIES OF THIS PLAN SHEET.

TO ACCOMPANY PLANS DATED 6-29-15

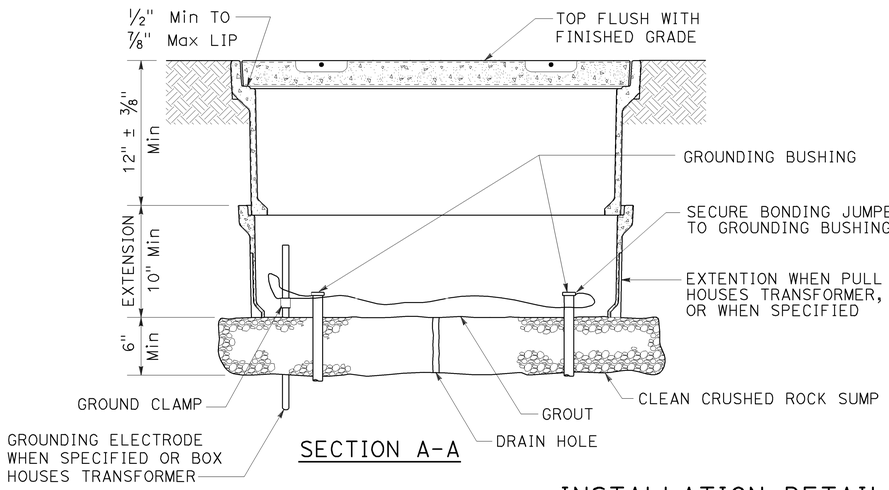

SECTION A-A

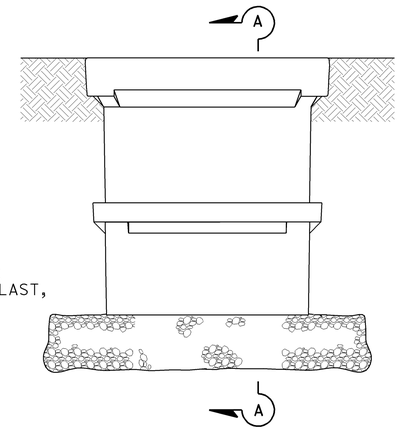

SIDE VIEW

INSTALLATION DETAILS

DETAIL A

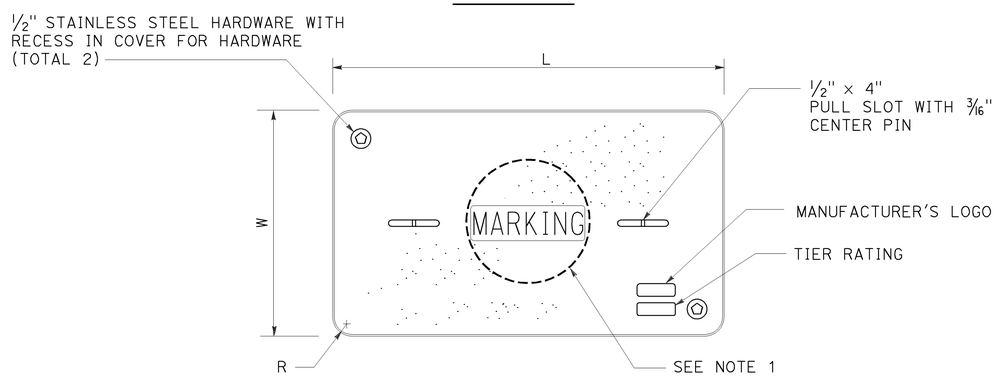

COVER TOP VIEW

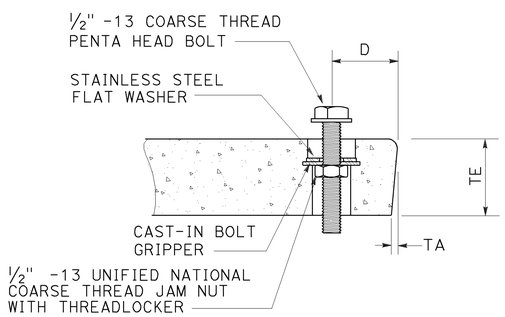

TYPICAL COVER CAPTIVE BOLT

OR SIMILAR

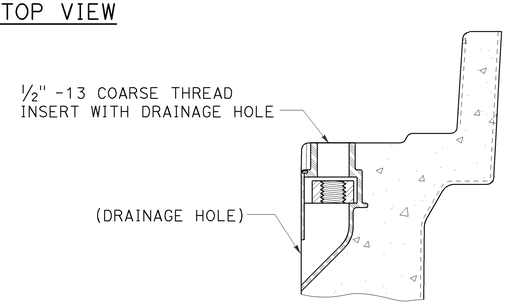

TYPICAL THREADED INSERT

OR SIMILAR

DIMENSION TABLE										
PULL BOX	PULL BOX			COVER						
	MINIMUM DEPTH BOX	MINIMUM DEPTH EXTENSION	MAXIMUM WEIGHT	L	W	R	TE	TA	D	MAXIMUM WEIGHT
No. 3½	12"	N/A	40 lb	1′ - 3⅜"	10⅛"	1⅜"	2"	⅛"	1¾"	30 lb
No. 5	12"	10"	55 lb	1′ - 11¼"	1′ - 1¾"	1⅜"	2"	⅛"	1¾"	60 lb
No. 6	12"	10"	70 lb	2′ - 6½"	1′ - 5½"	1⅜"	2"	⅛"	2"	85 lb

NOTES:

1. Pull box covers shall be marked as follows: "SERVICE" Service circuits between service point and service disconnect; "SPRINKLER-CONTROL" sprinkler control circuits, 50 V or less; "CALTRANS" on all pull boxes, except pull boxes marked "SPRINKLER-CONTROL"; and "TELEPHONE" Telephone service;
   - A) No. 3½ pull box.
     - 1) "SIGNAL" - Traffic signal circuits with or without lighting or sign lighting circuits.
     - 2) "LIGHTING" - Lighting or sign lighting circuits where voltage is under 600 V.
   - B) No. 5, 6, 9 or 9A pull box.
     - 1) "TRAFFIC SIGNAL" - Traffic signal circuits with or without lighting or sign lighting circuits.
     - 2) "LIGHTING" - Lighting or sign lighting circuits where voltage is under 600 V.
     - 3) "LIGHTING-HIGH VOLTAGE" - Lighting or sign lighting circuits where voltage is above 600 V.
     - 4) "IRRIGATION" - Circuits to irrigation controller 120 V or more.
     - 5) "RAMP METER" - Ramp meter circuits.
     - 6) "COUNT STATION" - Count or speed monitor circuits.
     - 7) "COMMUNICATIONS" - Communication circuits.
     - 8) "TOS COMMUNICATIONS" - TOS communication line.
     - 9) "TOS POWER" - TOS power.
     - 10) "TDC POWER" - Telephone demarcation cabinet power.
     - 11) "CCTV" - Closed circuit television circuits.
     - 12) "TMS" - Traffic monitoring station circuits.
     - 13) "CMS" - Changeable message sign circuits.
     - 14) "HAR" - Highway advisory radio circuits.
     - 15) "BOOSTER PUMP" - Booster pump circuit.
2. The nominal dimensions of the opening in which the cover sets shall be the same as the cover dimensions except the length and width dimensions shall be ⅛" greater.
3. Covers and boxes shall be interchangeable with California standard male and female gages. When interchanged with a standard male or female gage, the top surfaces shall be flush within ⅛". Top outside radius of covers and pull boxes shall have a ⅛" radius.
4. Pull box extension may be another pull box as long as the bottom edge of the pull box can fit into the cover opening.
5. All dimensions for the cover for non-traffic pull box are nominal values.

STATE OF CALIFORNIA
DEPARTMENT OF TRANSPORTATION

ELECTRICAL SYSTEMS (NON-TRAFFIC PULL BOX)

NO SCALE

RSP ES-8A DATED JULY 19, 2013 SUPERSEDES RSP ES-8A DATED JANUARY 20, 2012 THAT SUPPLEMENTS THE STANDARD PLANS BOOK DATED 2010.

REVISED STANDARD PLAN RSP ES-8A

2010 REVISED STANDARD PLAN RSP ES-8A

7-15-13

DIST	COUNTY	ROUTE	POST MILES TOTAL PROJECT	SHEET NO.	TOTAL SHEETS
07	LA	5	C43.9/C46.4	198	199

Theresa Gabriel
REGISTERED ELECTRICAL ENGINEER

July 19, 2013
PLANS APPROVAL DATE

REGISTERED PROFESSIONAL ENGINEER
Theresa Aziz Gabriel
No. E15129
Exp. 6-30-14
ELECTRICAL
STATE OF CALIFORNIA

THE STATE OF CALIFORNIA OR ITS OFFICERS OR AGENTS SHALL NOT BE RESPONSIBLE FOR THE ACCURACY OR COMPLETENESS OF SCANNED COPIES OF THIS PLAN SHEET.

TO ACCOMPANY PLANS DATED 6-29-15

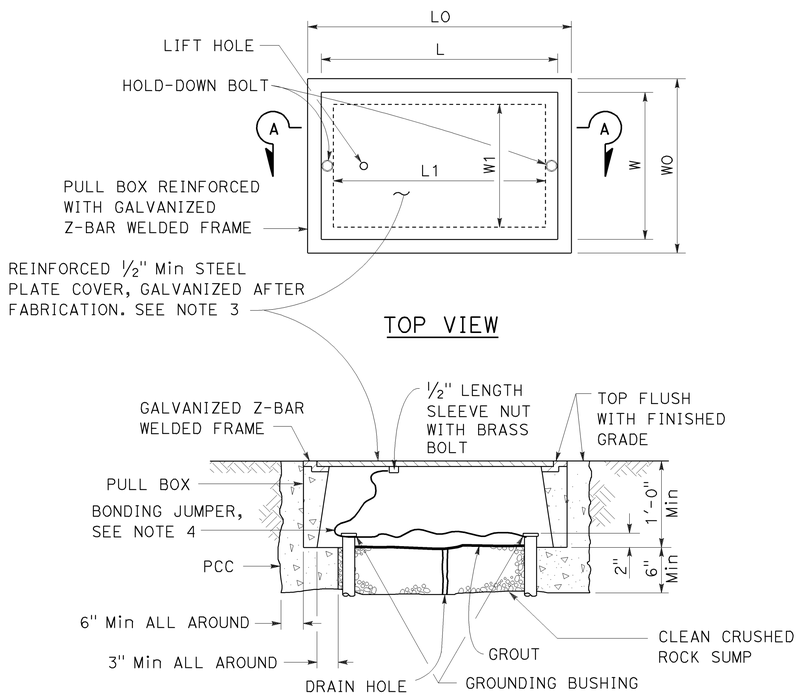

SECTION A-A

No. 3½(T), No. 5(T) AND No. 6(T) TRAFFIC PULL BOX

NOTES:

1. Traffic pull box shall be provided with steel cover and special concrete footing. Steel cover shall have embossed non-skid pattern.
2. Steel reinforcing shall be as regularly used in the standard products of the respective manufacturer.
3. Pull box covers shall be marked as follows: "SERVICE" Service circuits between service point and service disconnect; "SPRINKLER-CONTROL" Sprinkler control circuits, 50 V or less; "CALTRANS" On all pull boxes, except pull boxes marked "SPRINKLER-CONTROL"; and "TELEPHONE" Telephone service.
   A) No. 3½(T) pull box.
      1) "SIGNAL" - Traffic signal circuits with or without lighting or sign lighting circuits.
      2) "LIGHTING" - Lighting or sign lighting circuits where voltage is under 600 V.
   B) No. 5(T) or 6(T) pull box.
      1) "TRAFFIC SIGNAL" - Traffic signal circuits with or without lighting or sign lighting circuits.
      2) "LIGHTING" - Lighting or sign lighting circuits where voltage is under 600 V.
      3) "LIGHTING-HIGH VOLTAGE" - Lighting or sign lighting circuits where voltage is above 600 V.
      4) "IRRIGATION" - Circuits to irrigation controller 120 V or more.
      5) "RAMP METER" - Ramp meter circuits.
      6) "COUNT STATION" - Count or speed monitor circuits.
      7) "COMMUNICATION" - Communication circuits.
      8) "TOS COMMUNICATIONS" - TOS communications line.
      9) "TOS POWER" - TOS power.
      10) "TDC POWER" - Telephone demarcation cabinet power.
      11) "CCTV" - Closed circuit television circuits.
      12) "TMS" - Traffic monitoring station circuits.
      13) "CMS" - Changeable message sign circuits.
      14) "HAR" - Highway advisory radio circuits.
      15) "BOOSTER PUMP" - Booster pump circuit.
4. Bonding jumper for metal covers shall be 3' long, minimum.
5. The nominal dimensions of the opening in which the cover sets shall be the same as the cover dimensions except the length and width dimensions shall be ⅛" greater.
6. Covers and boxes shall be interchangeable with California standard male and female gages. When interchanged with a standard male or female gage, the top surfaces shall be flush within ⅛".

DIMENSION TABLE

PULL BOX	PULL BOX						COVER				
	MINIMUM * THICKNESS	MINIMUM DEPTH BOX AND EXTENSION	WO	LO	L1	W1	L **	W **	R	EDGE THICKNESS	EDGE TAPER
No. 3½(T)	1½"	1'-0"	1'-5"± 1"	1'-8⅞"±	1'-2½"±	10⅝"± 1"	1'-8"±	1'-1¾"±	0"	½"	NONE
No. 5(T)	1¾"	1'-0"	1'-11½"± 1"	2'-5½"±	1'-7"±	1'-1"± 1"	2'-3"±	1'-4"±	0"	½"	NONE
No. 6(T)	2"	1'-0"	2'-6"± 1"	2'-11½"±	1'-11½"±	1'-5"± 1"	2'-9"±	1'-8"±	0"	½"	NONE

* EXCLUDING CONDUIT WEB ** TOP DIMENSION

STATE OF CALIFORNIA
DEPARTMENT OF TRANSPORTATION

ELECTRICAL SYSTEMS (TRAFFIC PULL BOX)

NO SCALE

RSP ES-8B DATED JULY 19, 2013 SUPERSEDES RSP ES-8B DATED JANUARY 20, 2012 THAT SUPPLEMENTS THE STANDARD PLANS BOOK DATED 2010.

REVISED STANDARD PLAN RSP ES-8B

2010 REVISED STANDARD PLAN RSP ES-8B

Dist	COUNTY	ROUTE	POST MILES TOTAL PROJECT	SHEET No.	TOTAL SHEETS
07	LA	5	C43.9/C46.4	199	199

REGISTERED CIVIL ENGINEER

November 15, 2013
PLANS APPROVAL DATE

REGISTERED PROFESSIONAL ENGINEER
Stanley P. Johnson
No. C57793
Exp. 3-31-14
CIVIL
STATE OF CALIFORNIA

THE STATE OF CALIFORNIA OR ITS OFFICERS OR AGENTS SHALL NOT BE RESPONSIBLE FOR THE ACCURACY OR COMPLETENESS OF SCANNED COPIES OF THIS PLAN SHEET.

TO ACCOMPANY PLANS DATED 6-29-15

POLE TYPE	POLE DATA				BASE PLATE DATA				CIDH	
	HEIGHT "h"	Min OD		THICKNESS	"C"	THICKNESS	ANCHOR BOLT SIZE	BC = BOLT CIRCLE	Dia	"d"
		BASE	TOP							
CCTV 25	25′	7⅜"	3¾"	0.1793"	1′-1"	1"	1½" ø x 36"	11½"	2′-6"	7′-0"
CCTV 30	30′	8"			1′-1½"			1′-0"		7′-6"
CCTV 35	35′	8⅝"			1′-2"			1′-1"		8′-0"
CCTV 40	40′	9⅜"			1′-3"			1′-1½"		8′-6"
CCTV 45	45′	10"						1′-2"		

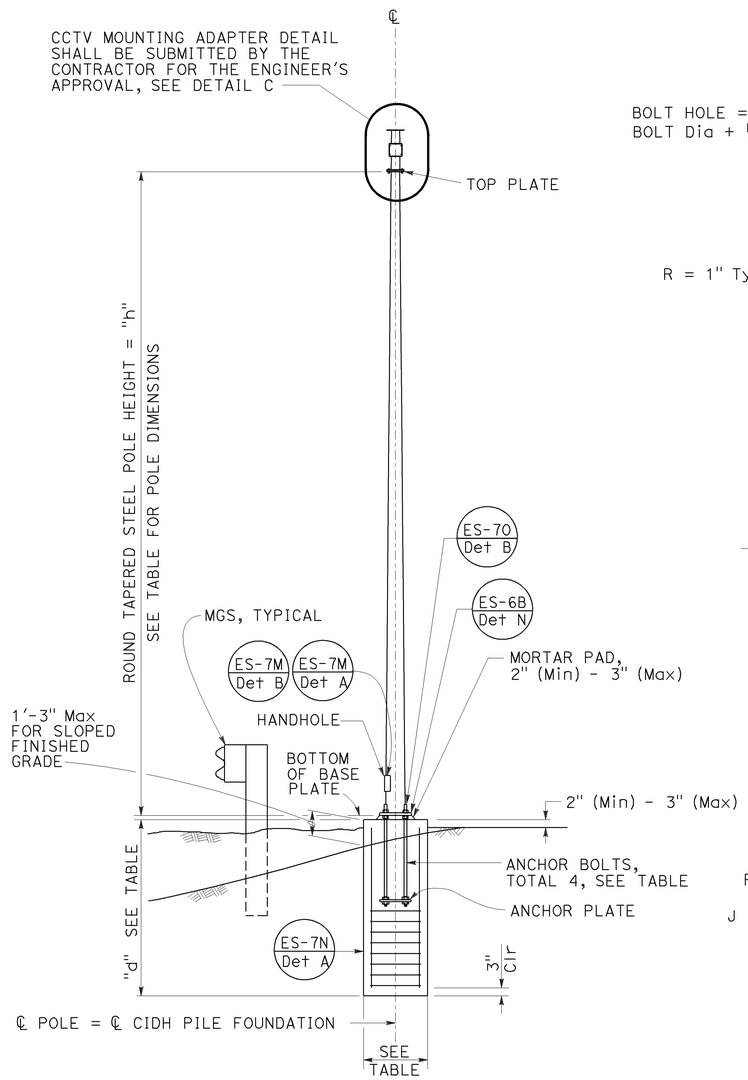

ELEVATION A

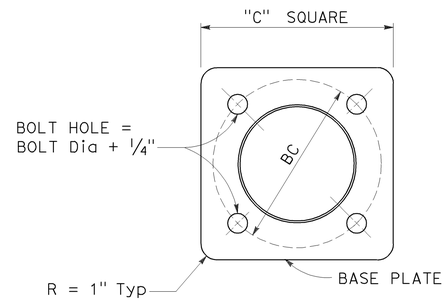

BASE PLATE

DETAIL A

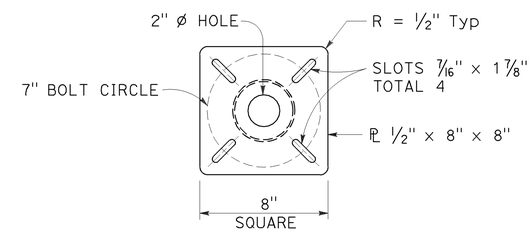

TOP PLATE

DETAIL B

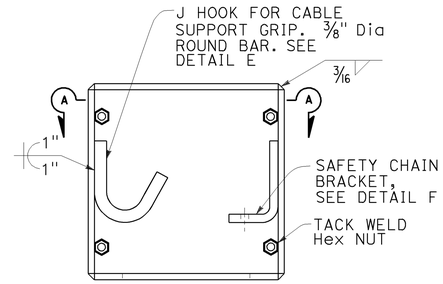

BOX ENCLOSURE

DETAIL D

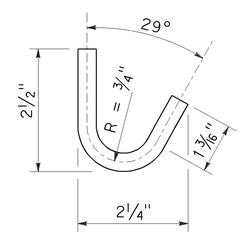

J HOOK

DETAIL E

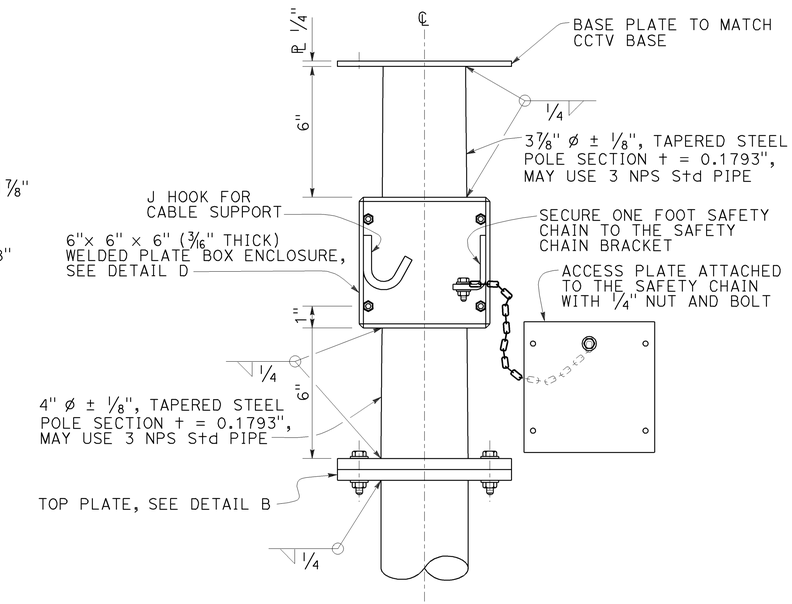

CLOSED CIRCUIT TELEVISION MOUNTING ADAPTER

DETAIL C

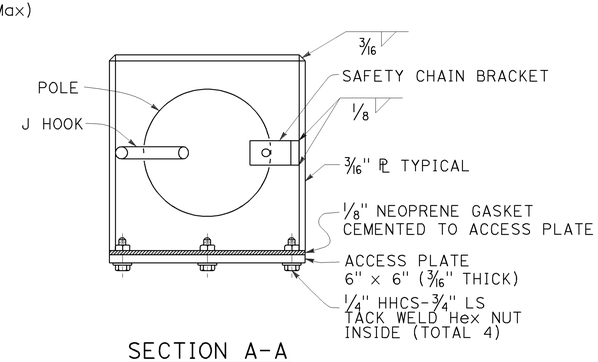

SECTION A-A

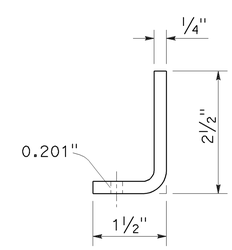

SAFETY CHAIN BRACKET

DETAIL F

NOTES:

1. The Contractor shall verify controlling field dimensions before ordering or fabricating any material.
2. During pole installation, the post shall be raked as necessary with the use of leveling nuts to provide a plumb pole axis.
3. Wind Loadings (3-second gust): 100 mph
4. Unit Stresses (Structural Steel):
   a. fy = 55,000 psi (tapered steel tube and anchor bolts)
   b. fy = 50,000 psi (unless otherwise noted)
5. Unit Stresses (Reinforced Concrete):
   a. f′c = 3,625 psi
   b. fy = 60,000 psi

STATE OF CALIFORNIA
DEPARTMENT OF TRANSPORTATION

ELECTRICAL SYSTEMS (CLOSED CIRCUIT TELEVISION, 25' TO 45' POLE)

NO SCALE

RSP ES-16B DATED NOVEMBER 15, 2013 SUPERSEDES STANDARD PLAN ES-16B DATED MAY 20, 2011 - PAGE 501 OF THE STANDARD PLANS BOOK DATED 2010.

REVISED STANDARD PLAN RSP ES-16B

2010 REVISED STANDARD PLAN RSP ES-16B

10-4-13