Dist	COUNTY	ROUTE	POST MILES TOTAL PROJECT	SHEET No.	TOTAL SHEETS
07	LA	405	28.0/39.0	1	108

STATE OF CALIFORNIA **ACNHPI-405-3(023)E**

DEPARTMENT OF TRANSPORTATION

PROJECT PLANS FOR CONSTRUCTION ON STATE HIGHWAY

IN LOS ANGELES
IN LOS ANGELES COUNTY
FROM VENICE BOULEVARD SEPARATION TO VENTURA BOULEVARD UNDERCROSSING

TO BE SUPPLEMENTED BY STANDARD PLANS DATED 2010

INDEX OF PLANS

SHEET No.	DESCRIPTION
1	TITLE AND LOCATION MAP
2-27	TYPICAL CROSS SECTIONS
28-31	LAYOUTS
32-34	CONSTRUCTION DETAILS
35	CONSTRUCTION AREA SIGNS
36-46	TRAFFIC HANDLING PLANS AND DETAILS
47-48	PAVEMENT DELINEATION QUANTITIES
49-56	SUMMARY OF QUANTITIES
57-63	ELECTRICAL PLANS
64-108	REVISED STANDARD PLANS

THE STANDARD PLANS LIST APPLICABLE TO THIS CONTRACT IS INCLUDED IN THE BID BOOK AND SPECIAL PROVISIONS BOOK.

LOCATION MAP

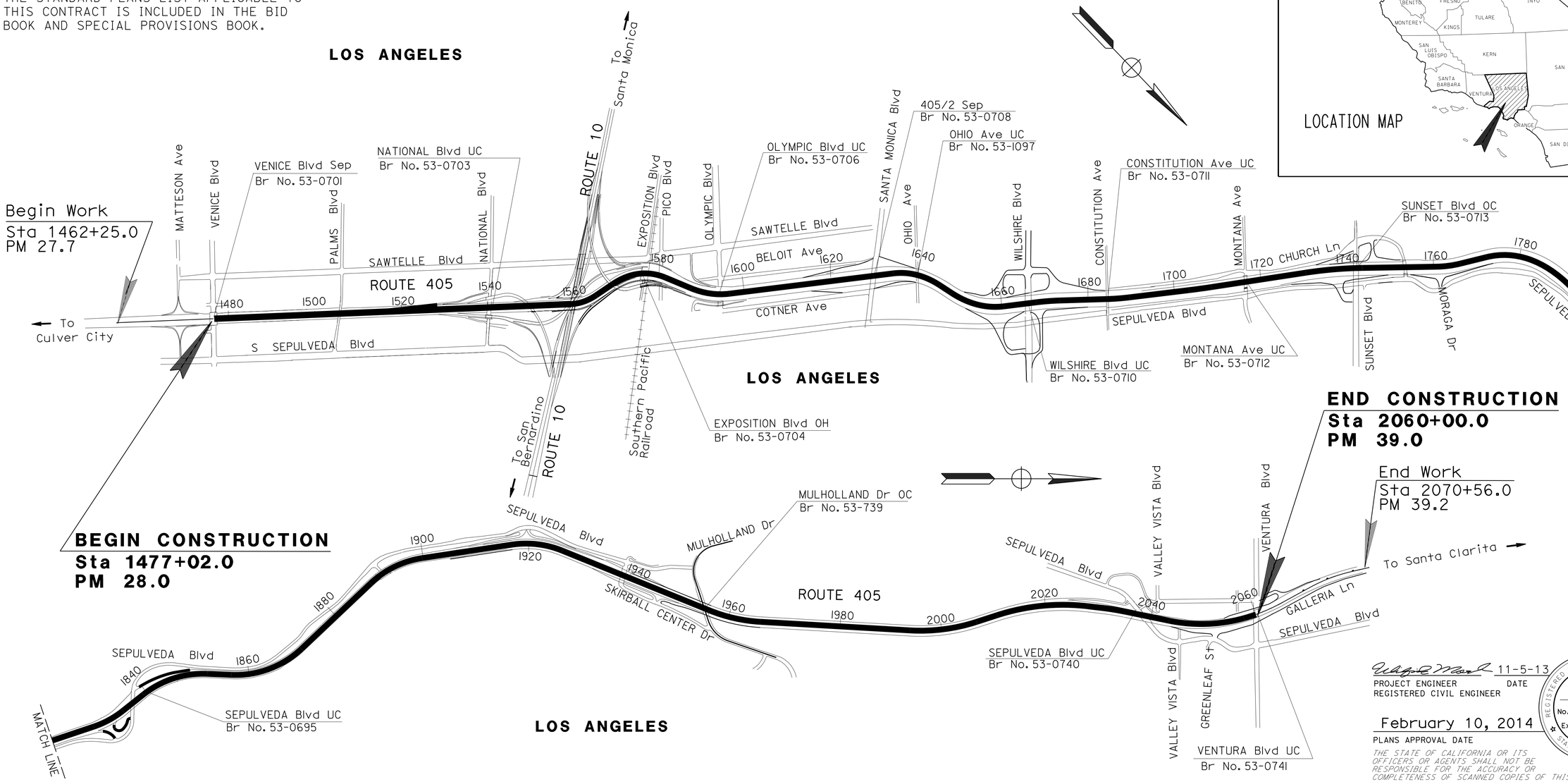

THE CONTRACTOR SHALL POSSESS THE CLASS (OR CLASSES) OF LICENSE AS SPECIFIED IN THE "NOTICE TO BIDDERS."

NO SCALE

11-5-13
PROJECT ENGINEER DATE
REGISTERED CIVIL ENGINEER

February 10, 2014
PLANS APPROVAL DATE

REGISTERED PROFESSIONAL ENGINEER WILFRIDO MORALES No. 67533 Exp. 6/30/15 CIVIL STATE OF CALIFORNIA

THE STATE OF CALIFORNIA OR ITS OFFICERS OR AGENTS SHALL NOT BE RESPONSIBLE FOR THE ACCURACY OR COMPLETENESS OF SCANNED COPIES OF THIS PLAN SHEET.

CONTRACT No.	07-296804
PROJECT ID	0713000092

PROJECT MANAGER JAVAD RAHIMZADEH
DESIGN ENGINEER WILFRIDO MORALES

LAST REVISION 00-00-00
DATE PLOTTED => 04-MAR-2014
TIME PLOTTED => 13:33

Dist	COUNTY	ROUTE	POST MILES TOTAL PROJECT	SHEET No.	TOTAL SHEETS
07	LA	405	28.0/39.0	2	108

REGISTERED CIVIL ENGINEER 11-5-13 DATE

2-10-14
PLANS APPROVAL DATE

REGISTERED PROFESSIONAL ENGINEER WILFRIDO MORALES No. 67533 Exp. 6/30/15 CIVIL STATE OF CALIFORNIA

THE STATE OF CALIFORNIA OR ITS OFFICERS OR AGENTS SHALL NOT BE RESPONSIBLE FOR THE ACCURACY OR COMPLETENESS OF SCANNED COPIES OF THIS PLAN SHEET.

NOTES:

1. DIMENSIONS OF THE PAVEMENT SECTIONS ARE SUBJECT TO TOLERANCES SPECIFIED IN THE STANDARD SPECIFICATIONS.
2. SUPERELEVATION AS SHOWN OR AS DIRECTED BY THE ENGINEER.
3. FOR ACCURATE RIGHT OF WAY AND ACCESS DATA, CONTACT RIGHT OF WAY ENGINEERING AT THE DISTRICT OFFICE.
4. EXISTING DRAINAGE INLETS HAVE NOT BEEN PLOTTED ON THESE PLANS.
5. OMIT COLD PLANING AND RHMA-SP-G OVERLAY ON BRIDGE DECKS AND Conc PAVEMENT.
6. SEE SUMMARY OF QUANTITIES SHEET FOR LOCATIONS AND QUANTITIES OF GRIND EXISTING CONCRETE PAVEMENT, REPLACE CONCRETE PAVEMENT (RSC) AND LEAN CONCRETE BASE RAPID SETTING (LCBRS). EXACT LOCATIONS OF GRIND EXISTING CONCRETE PAVEMENT, REPLACE CONCRETE PAVEMENT (RSC) AND LCBRS WILL BE DETERMINED BY THE ENGINEER.
7. OMIT PCC GRINDING ON APPROACH SLABS AND BRIDGE DECKS.
8. APPROXIMATE LOCATION FOR SLAB REPLACEMENT.
9. ACTUAL SLAB REPLACEMENT WILL BE DETERMINED BY ENGINEER.

ABBREVIATIONS:

RHMA-SP-G:	RUBBERIZED HOT MIX ASPHALT SUPERPAVE GAP GRADED
HMA-SP-(LEVELING):	HOT MIX ASPHALT, SUPERPAVE (LEVELING)
HMA-SP-A:	HOT MIX ASPHALT, SUPERPAVE (TYPE A)
RSC:	RAPID STRENGTH CONCRETE
LCB RS:	LEAN CONCRETE BASE RAPID SETTING

LEGEND:

EXISTING PAVEMENT STRUCTURES

A
- A1: 0.40′ & Var HMA
- OR
- A2: 0.40′ & Var HMA; 0.67′ JPCP; 0.67′ PROCESSED SELECTED MATERIAL; 0.67′ SM
- OR
- A3: 0.75′ JPCP; 0.33′ CTB; 0.57′ SM; 0.67′ UNTREATED BASE
- OR
- A4: 0.75′ JPCP; 0.95′ TO 1.05′ JPCP; 0.50′ LCB; 0.70′ AS

B: 0.50′ HMA-A; Var THICKNESS AB; 0.67′ Cl 4 AS

C — RAMP TERMINI
- C1: 0.95′ JPCP; 1.0′ Cl 3 AB
- OR
- C2: 0.85′ JPCP (RSC); 0.35′ LCBRS

D1: 0.87′ PCC; 0.5′ LCB; 0.71′ Cl 3 AB

D2: 1.2′ HMA-B; 0.33′ Cl 3 AB

D3: 0.33′ HMA -B

E1: 0.67′ JPCP; 0.33′ Cl A CTB; 0.67′ AB; 0.67′ Cl 4 AS

E2: 0.75′ PCC; 0.33′ Cl A CTB; 0.57′ AB; 0.67′ Cl 4 AS

E3: 0.74′ AC (TYPE B); Var Cl 2 AS

E4: 0.94′ AC (TYPE B); Var Cl 2 AS

F: 0.20′ AC; 0.55′ JPCP; 0.33′ CTB; 0.57′ SM; 0.67′ UNTREATED BASE

PAVEMENT CLIMATE REGION

SOUTH COAST

TYPICAL PAVEMENT STRUCTURES

1: 0.15′ RHMA-SP-G; ASPHALT-RUBBER BINDER SCREENINGS; 0.10′ HMA-SP-(LEVELING); 0.25′ COLD PLANE AC PAVEMENT

2: 0.20′ RHMA-SP-G; 0.20′ COLD PLANE AC PAVEMENT

3: 0.20′ RHMA-SP-G; 0.20′ HMA-SP-A; 0.40′ REMOVE ASPHALT CONCRETE SURFACING

4: 0.65′ INDIVIDUAL SLAB REPLACEMENT; REPLACE BASE

5: GRIND EXISTING CONCRETE PAVEMENT

6: SLURRY SEAL

7: 0.15′ RHMA-SP-G; 0.15′ COLD PLANE AC PAVEMENT

8: 0.95′ JPCP (RSC); 0.50′ ALTERNATE TREATED BASE; 0.70′ CL 3 AGGREGATE BASE

9: 0.95′ JPCP (RSC); 0.50′ ALTERNATE TREATED BASE

10: 0.75′ INDIVIDUAL SLAB REPLACEMENT; REPLACE BASE

TYPICAL CROSS SECTIONS

NO SCALE

X-1

STATE OF CALIFORNIA - DEPARTMENT OF TRANSPORTATION
Caltrans® OFFICE OF DESIGN A

FUNCTIONAL SUPERVISOR: MARIO GUTIERREZ
CALCULATED-DESIGNED BY: TING TING LEE
CHECKED BY: WILFRIDO MORALES
REVISED BY / DATE REVISED

LAST REVISION 08-22-13 | DATE PLOTTED => 04-MAR-2014 | TIME PLOTTED => 13:33

Dist	COUNTY	ROUTE	POST MILES TOTAL PROJECT	SHEET No.	TOTAL SHEETS
07	LA	405	28.0/39.0	3	108

11-5-13
REGISTERED CIVIL ENGINEER DATE

2-10-14
PLANS APPROVAL DATE

REGISTERED PROFESSIONAL ENGINEER
WILFRIDO MORALES
No. 67533
Exp. 6/30/15
CIVIL
STATE OF CALIFORNIA

THE STATE OF CALIFORNIA OR ITS OFFICERS OR AGENTS SHALL NOT BE RESPONSIBLE FOR THE ACCURACY OR COMPLETENESS OF SCANNED COPIES OF THIS PLAN SHEET.

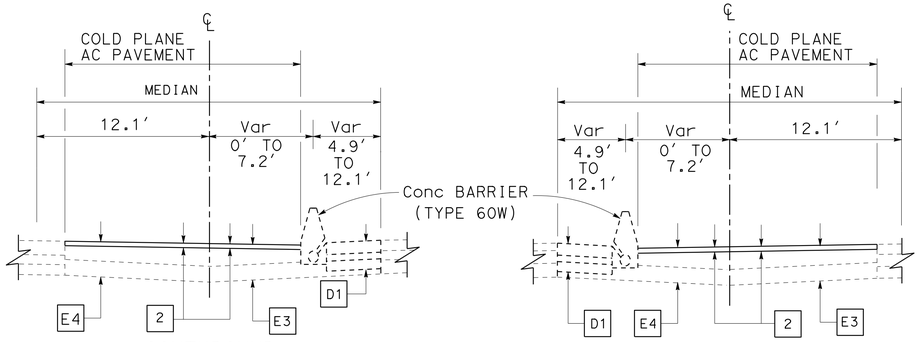

SOUTHBOUND
PM 28.00 TO 28.14

NORTHBOUND
PM 28.14 TO 28.65

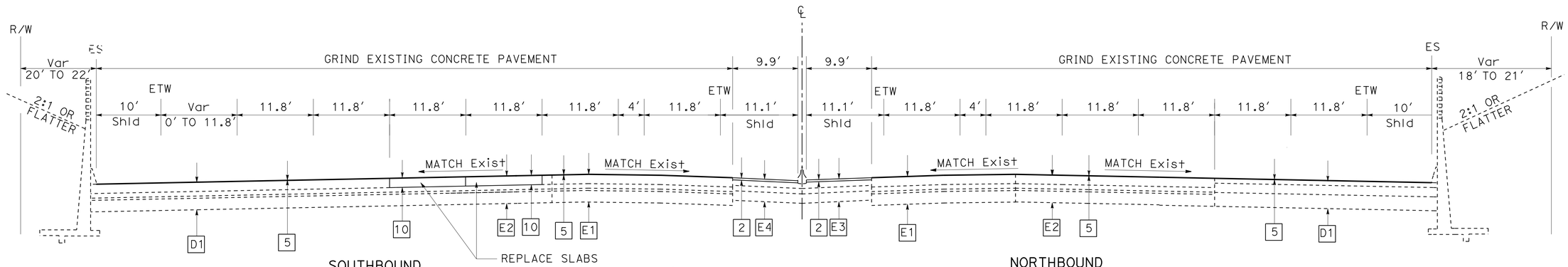

REPLACE SLABS
(SEE NOTES 8 & 9 ON X-1)

SOUTHBOUND
PM 28.33 TO 28.37

NORTHBOUND
PM 28.14 TO 28.24

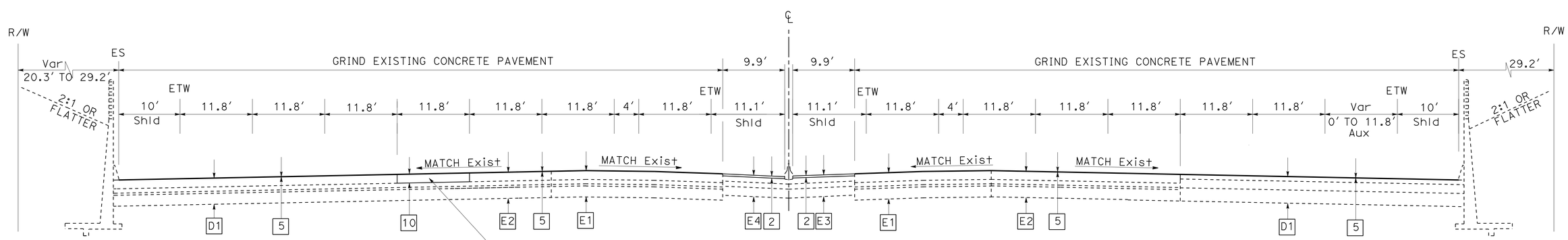

REPLACE SLABS
(SEE NOTES 8 & 9 ON X-1)

SOUTHBOUND
PM 28.00 TO 28.23
PM 28.81 TO 28.94

NORTHBOUND
PM 28.00 TO 28.13

ROUTE 405

TYPICAL CROSS SECTIONS

NO SCALE

X-2

STATE OF CALIFORNIA - DEPARTMENT OF TRANSPORTATION
Caltrans® OFFICE OF DESIGN A

FUNCTIONAL SUPERVISOR: MARIO GUTIERREZ
CALCULATED-DESIGNED BY: TIANQIANG GUO
CHECKED BY: WILFRIDO MORALES
REVISED BY / DATE REVISED

LAST REVISION 01-24-11
DATE PLOTTED => 04-MAR-2014
TIME PLOTTED => 13:33

Dist	COUNTY	ROUTE	POST MILES TOTAL PROJECT	SHEET No.	TOTAL SHEETS
07	LA	405	28.0/39.0	4	108

REGISTERED CIVIL ENGINEER 11-5-13 DATE

2-10-14
PLANS APPROVAL DATE

REGISTERED PROFESSIONAL ENGINEER WILFRIDO MORALES No. 67533 Exp. 6/30/15 CIVIL STATE OF CALIFORNIA

THE STATE OF CALIFORNIA OR ITS OFFICERS OR AGENTS SHALL NOT BE RESPONSIBLE FOR THE ACCURACY OR COMPLETENESS OF SCANNED COPIES OF THIS PLAN SHEET.

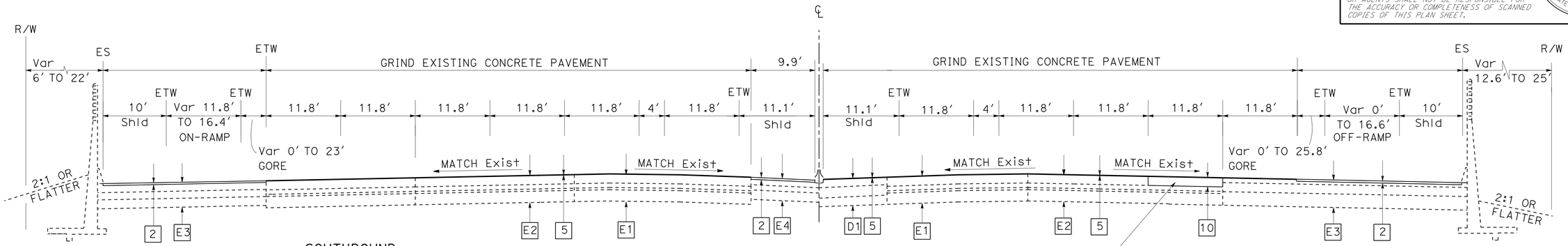

SOUTHBOUND
PM 28.91 TO 29.03

REPLACE SLABS
(SEE NOTES 8 & 9 ON X-1)

NORTHBOUND
PM 28.97 TO 29.05

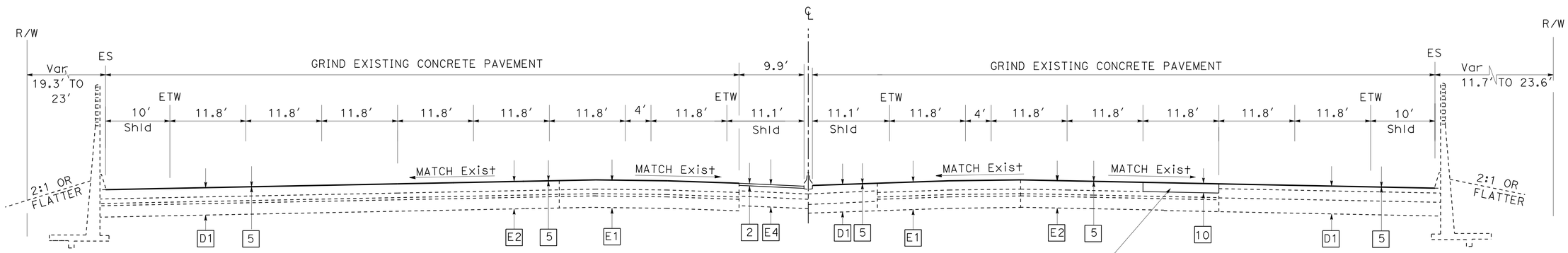

SOUTHBOUND
PM 28.62 TO 28.85

REPLACE SLABS
(SEE NOTES 8 & 9 ON X-1)

NORTHBOUND
PM 28.56 TO 28.94

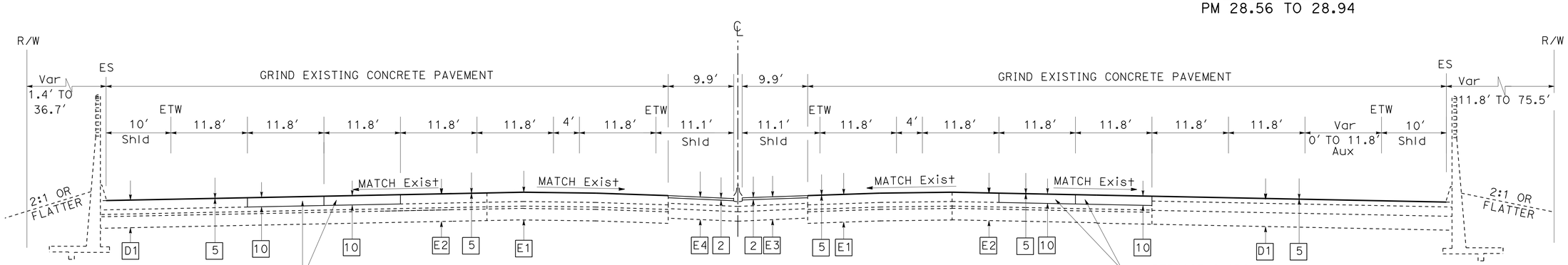

REPLACE SLABS
(SEE NOTES 8 & 9 ON X-1)

SOUTHBOUND
PM 28.37 TO 28.62

NORTHBOUND
PM 28.31 TO 28.56

ROUTE 405

TYPICAL CROSS SECTIONS

NO SCALE

X-3

STATE OF CALIFORNIA - DEPARTMENT OF TRANSPORTATION
Caltrans® OFFICE OF DESIGN A

FUNCTIONAL SUPERVISOR: MARIO GUTIERREZ

CALCULATED-DESIGNED BY: TIANQIANG GUO
CHECKED BY: WILFRIDO MORALES

REVISED BY
DATE REVISED

LAST REVISION 01-24-11
DATE PLOTTED => 04-MAR-2014
TIME PLOTTED => 13:33

Dist	COUNTY	ROUTE	POST MILES TOTAL PROJECT	SHEET No.	TOTAL SHEETS
07	LA	405	28.0/39.0	5	108

11-5-13
REGISTERED CIVIL ENGINEER DATE

2-10-14
PLANS APPROVAL DATE

REGISTERED PROFESSIONAL ENGINEER
WILFRIDO MORALES
No. 67533
Exp. 6/30/15
CIVIL
STATE OF CALIFORNIA

THE STATE OF CALIFORNIA OR ITS OFFICERS OR AGENTS SHALL NOT BE RESPONSIBLE FOR THE ACCURACY OR COMPLETENESS OF SCANNED COPIES OF THIS PLAN SHEET.

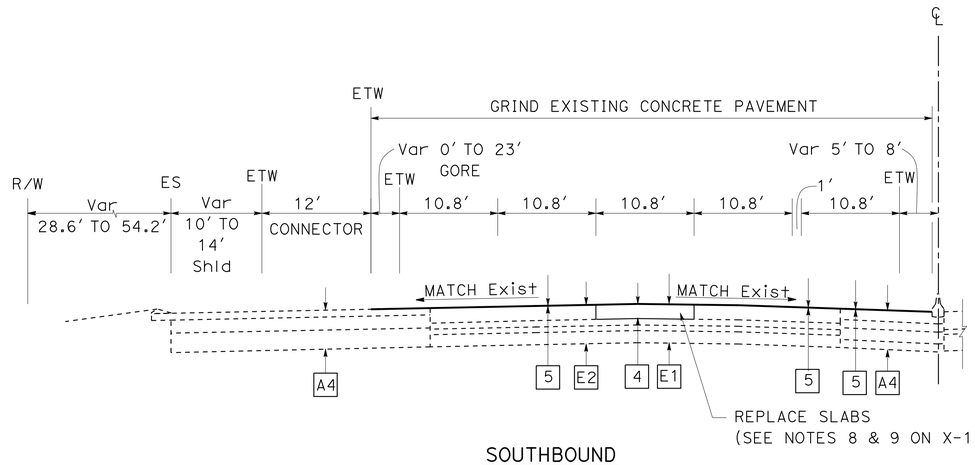

SOUTHBOUND
PM 29.37 TO 29.46

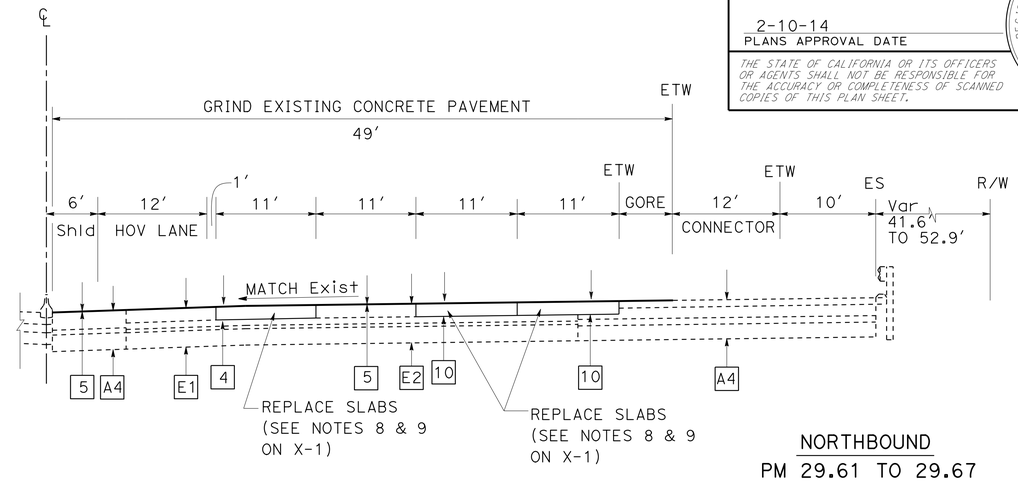

NORTHBOUND
PM 29.61 TO 29.67

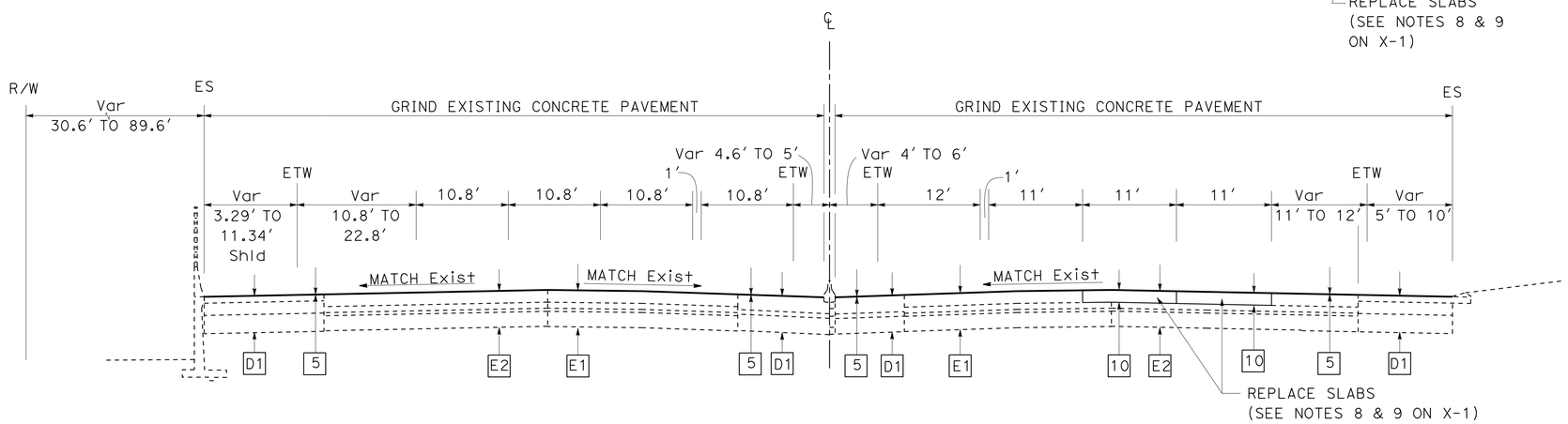

SOUTHBOUND
PM 29.21 TO 29.32

NORTHBOUND
PM 29.21 TO 29.61

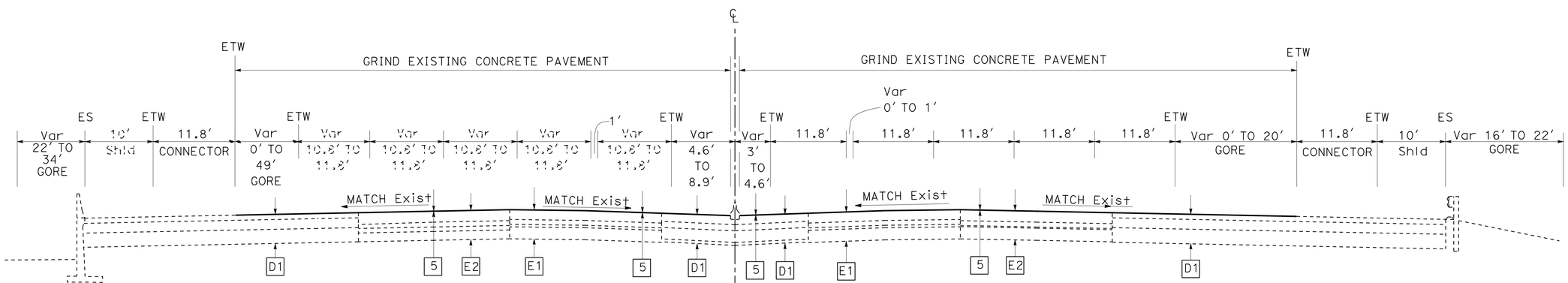

SOUTHBOUND
PM 29.07 TO 29.16

ROUTE 405

NORTHBOUND
PM 29.07 TO 29.16

TYPICAL CROSS SECTIONS

NO SCALE

X-4

STATE OF CALIFORNIA - DEPARTMENT OF TRANSPORTATION
Caltrans® OFFICE OF DESIGN A

FUNCTIONAL SUPERVISOR: MARIO GUTIERREZ
CALCULATED-DESIGNED BY: TIANQIANG GUO
CHECKED BY: WILFRIDO MORALES
REVISED BY
DATE REVISED

LAST REVISION 01-24-11
DATE PLOTTED => 04-MAR-2014
TIME PLOTTED => 13:33

Dist	COUNTY	ROUTE	POST MILES TOTAL PROJECT	SHEET No.	TOTAL SHEETS
07	LA	405	28.0/39.0	6	108

REGISTERED CIVIL ENGINEER 11-5-13 DATE

2-10-14
PLANS APPROVAL DATE

REGISTERED PROFESSIONAL ENGINEER WILFRIDO MORALES No. 67533 Exp. 6/30/15 CIVIL STATE OF CALIFORNIA

THE STATE OF CALIFORNIA OR ITS OFFICERS OR AGENTS SHALL NOT BE RESPONSIBLE FOR THE ACCURACY OR COMPLETENESS OF SCANNED COPIES OF THIS PLAN SHEET.

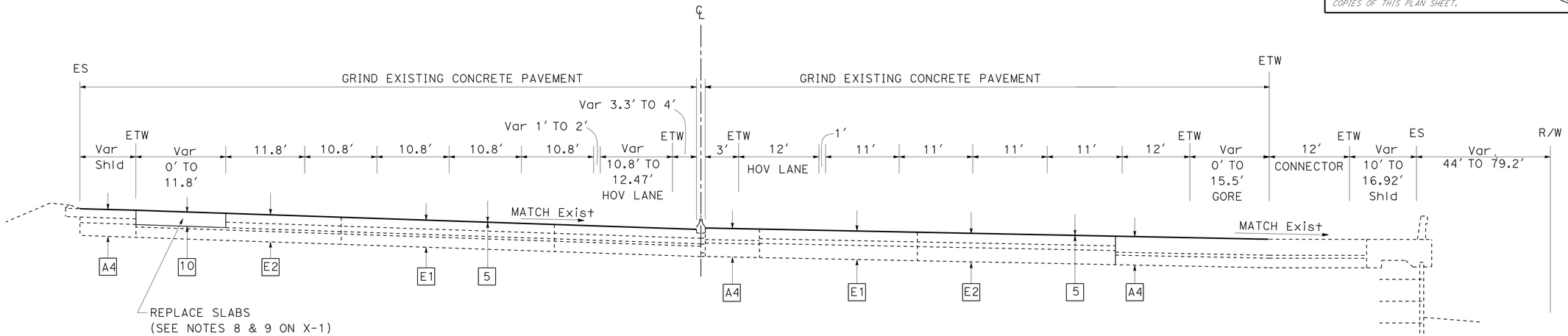

SOUTHBOUND
PM 29.71 TO 29.84
PM 29.95 TO 30.18
PM 30.20 TO 30.23

NORTHBOUND
PM 29.95 TO 30.04

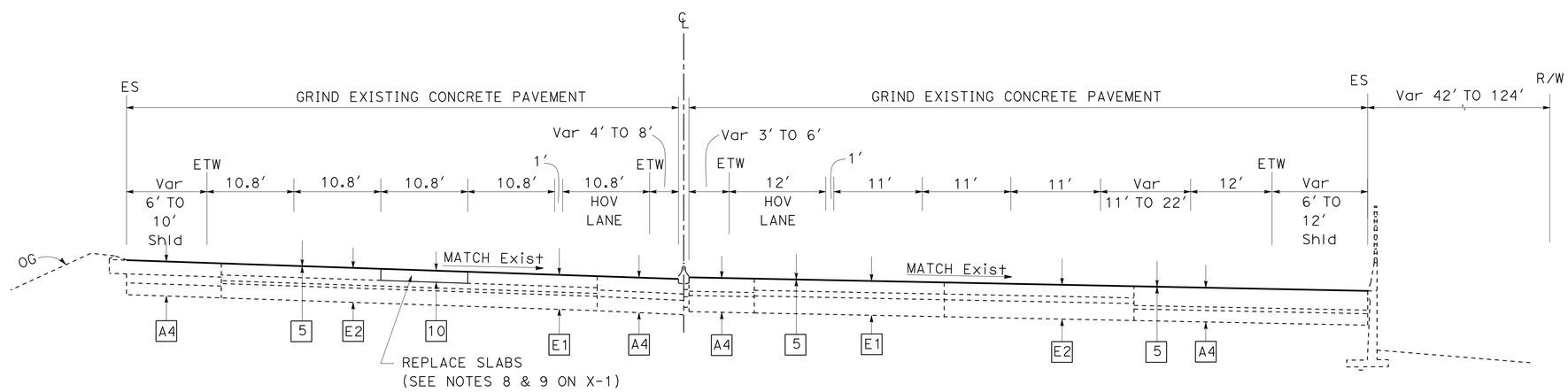

SOUTHBOUND
PM 29.46 TO 29.71

NORTHBOUND
PM 29.67 TO 29.84

ROUTE 405

TYPICAL CROSS SECTIONS

NO SCALE

X-5

STATE OF CALIFORNIA - DEPARTMENT OF TRANSPORTATION
Caltrans® OFFICE OF DESIGN A

FUNCTIONAL SUPERVISOR: MARIO GUTIERREZ
CALCULATED-DESIGNED BY: TIANQIANG GUO
CHECKED BY: WILFRIDO MORALES
REVISED BY
DATE REVISED

LAST REVISION 01-24-11
DATE PLOTTED => 04-MAR-2014
TIME PLOTTED => 13:33

Dist	COUNTY	ROUTE	POST MILES TOTAL PROJECT	SHEET No.	TOTAL SHEETS
07	LA	405	28.0/39.0	7	108

REGISTERED CIVIL ENGINEER 11-5-13 DATE

2-10-14
PLANS APPROVAL DATE

REGISTERED PROFESSIONAL ENGINEER
WILFRIDO MORALES
No. 67533
Exp. 6/30/15
CIVIL
STATE OF CALIFORNIA

THE STATE OF CALIFORNIA OR ITS OFFICERS OR AGENTS SHALL NOT BE RESPONSIBLE FOR THE ACCURACY OR COMPLETENESS OF SCANNED COPIES OF THIS PLAN SHEET.

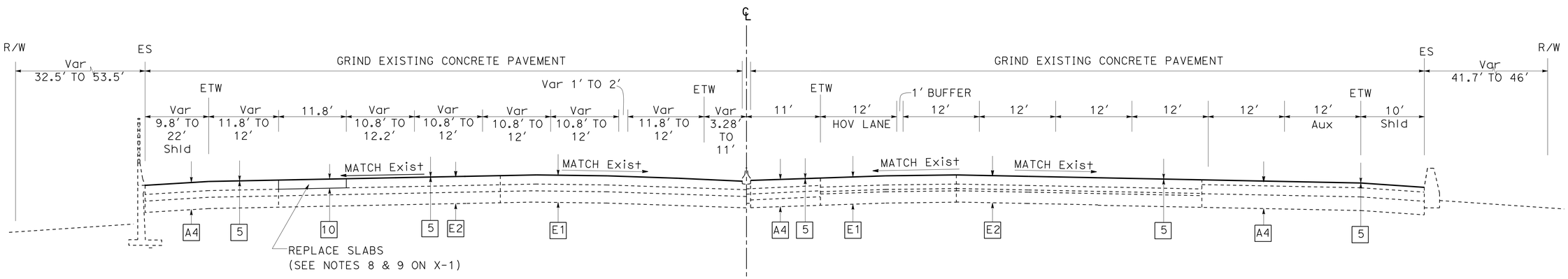

SOUTHBOUND
PM 30.15 TO 30.43

NORTHBOUND
PM 30.31 TO 30.43

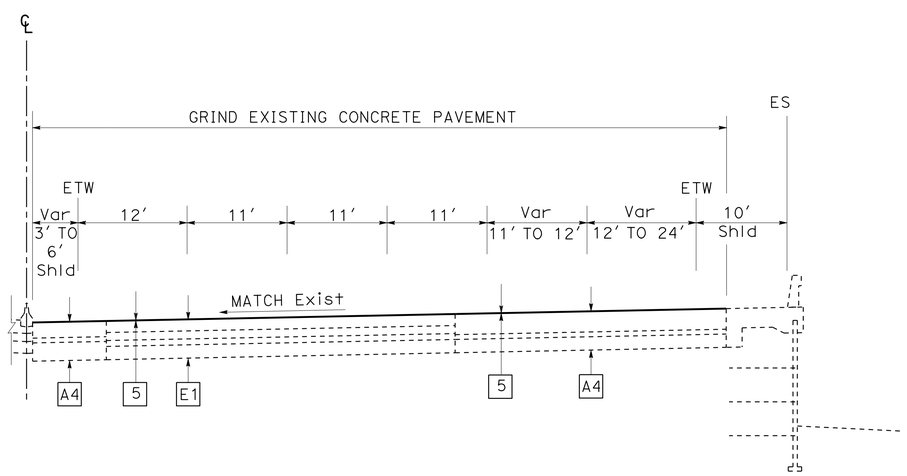

NORTHBOUND
PM 30.04 TO 30.18

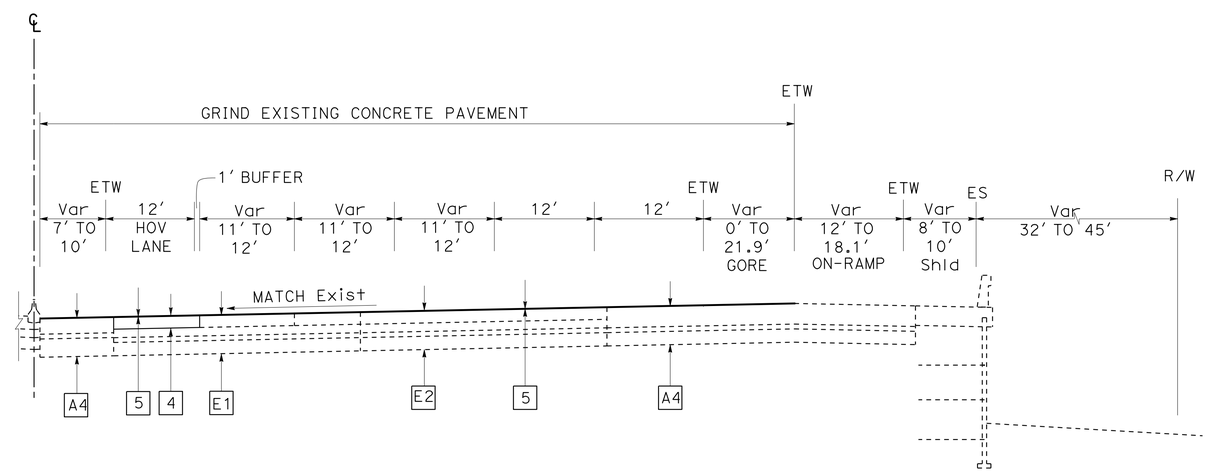

NORTHBOUND
PM 30.20 TO 30.31

ROUTE 405

TYPICAL CROSS SECTIONS

NO SCALE

X-6

STATE OF CALIFORNIA - DEPARTMENT OF TRANSPORTATION
Caltrans® OFFICE OF DESIGN A

FUNCTIONAL SUPERVISOR: MARIO GUTIERREZ

CALCULATED-DESIGNED BY: TIANQIANG GUO
CHECKED BY: WILFRIDO MORALES

REVISED BY
DATE REVISED

LAST REVISION 01-24-11
DATE PLOTTED => 04-MAR-2014
TIME PLOTTED => 13:33

Dist	COUNTY	ROUTE	POST MILES TOTAL PROJECT	SHEET No.	TOTAL SHEETS
07	LA	405	28.0/39.0	8	108

REGISTERED CIVIL ENGINEER 11-5-13 DATE

2-10-14
PLANS APPROVAL DATE

REGISTERED PROFESSIONAL ENGINEER
WILFRIDO MORALES
No. 67533
Exp. 6/30/15
CIVIL
STATE OF CALIFORNIA

THE STATE OF CALIFORNIA OR ITS OFFICERS OR AGENTS SHALL NOT BE RESPONSIBLE FOR THE ACCURACY OR COMPLETENESS OF SCANNED COPIES OF THIS PLAN SHEET.

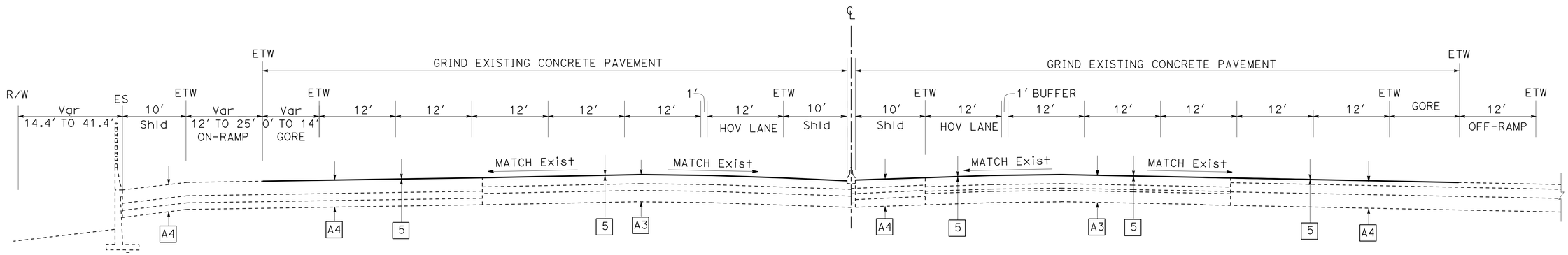

SOUTHBOUND

PM 30.60 TO 30.69

NORTHBOUND

PM 30.60 TO 30.64

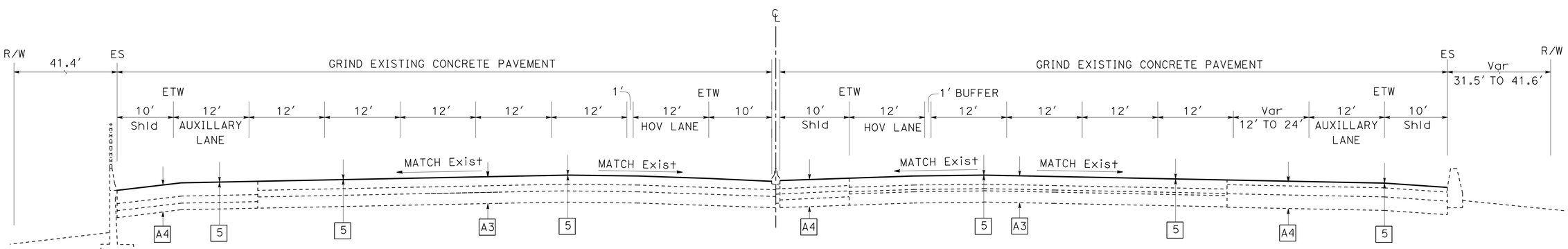

SOUTHBOUND

PM 30.43 TO 30.60

NORTHBOUND

PM 30.43 TO 30.60

ROUTE 405

TYPICAL CROSS SECTIONS

NO SCALE

X-7

STATE OF CALIFORNIA - DEPARTMENT OF TRANSPORTATION
Caltrans® OFFICE OF DESIGN A

FUNCTIONAL SUPERVISOR: MARIO GUTIERREZ
CALCULATED-DESIGNED BY: TIANQIANG GUO
CHECKED BY: WILFRIDO MORALES
REVISED BY
DATE REVISED

LAST REVISION 01-24-11
DATE PLOTTED => 04-MAR-2014
TIME PLOTTED => 13:33

Dist	COUNTY	ROUTE	POST MILES TOTAL PROJECT	SHEET No.	TOTAL SHEETS
07	LA	405	28.0/39.0	9	108

REGISTERED CIVIL ENGINEER 11-5-13 DATE

2-10-14
PLANS APPROVAL DATE

REGISTERED PROFESSIONAL ENGINEER
WILFRIDO MORALES
No. 67533
Exp. 6/30/15
CIVIL
STATE OF CALIFORNIA

THE STATE OF CALIFORNIA OR ITS OFFICERS OR AGENTS SHALL NOT BE RESPONSIBLE FOR THE ACCURACY OR COMPLETENESS OF SCANNED COPIES OF THIS PLAN SHEET.

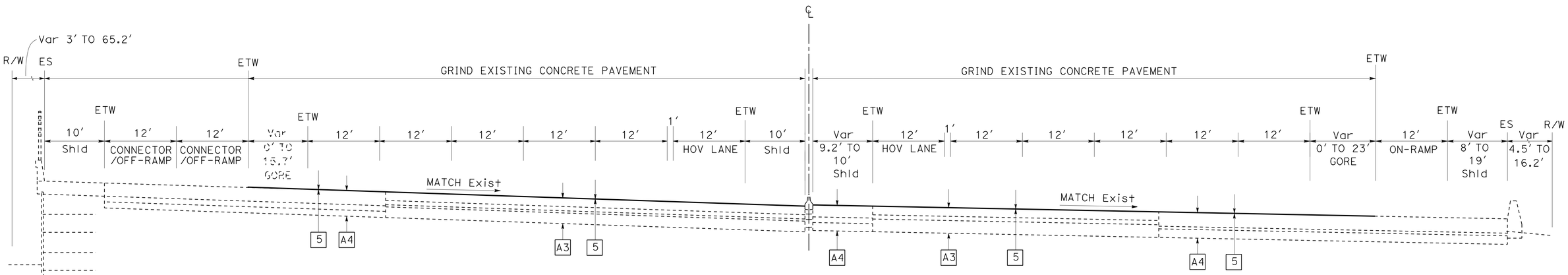

SOUTHBOUND
PM 31.02 TO 31.05
PM 31.06 TO 31.07

NORTHBOUND
PM 30.95 TO 31.05

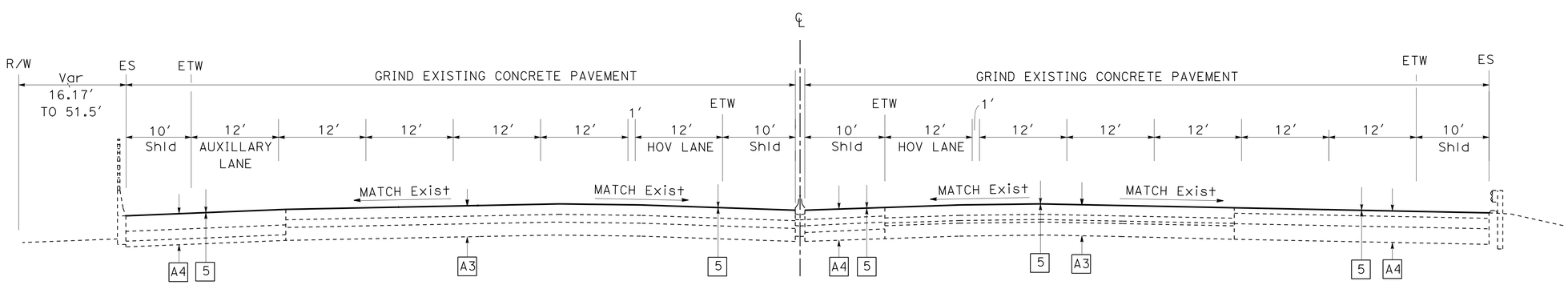

SOUTHBOUND
PM 30.69 TO 30.85
PM 30.87 TO 31.02

NORTHBOUND
PM 30.64 TO 30.85
PM 30.87 TO 30.95

ROUTE 405

TYPICAL CROSS SECTIONS

NO SCALE

X-8

STATE OF CALIFORNIA - DEPARTMENT OF TRANSPORTATION
Caltrans® OFFICE OF DESIGN A

FUNCTIONAL SUPERVISOR: MARIO GUTIERREZ
CALCULATED-DESIGNED BY: TIANQIANG GUO
CHECKED BY: WILFRIDO MORALES
REVISED BY
DATE REVISED

LAST REVISION 01-24-11
DATE PLOTTED => 04-MAR-2014
TIME PLOTTED => 13:33

Dist	COUNTY	ROUTE	POST MILES TOTAL PROJECT	SHEET No.	TOTAL SHEETS
07	LA	405	28.0/39.0	10	108

REGISTERED CIVIL ENGINEER 11-5-13 DATE

2-10-14
PLANS APPROVAL DATE

REGISTERED PROFESSIONAL ENGINEER
WILFRIDO MORALES
No. 67533
Exp. 6/30/15
CIVIL
STATE OF CALIFORNIA

THE STATE OF CALIFORNIA OR ITS OFFICERS OR AGENTS SHALL NOT BE RESPONSIBLE FOR THE ACCURACY OR COMPLETENESS OF SCANNED COPIES OF THIS PLAN SHEET.

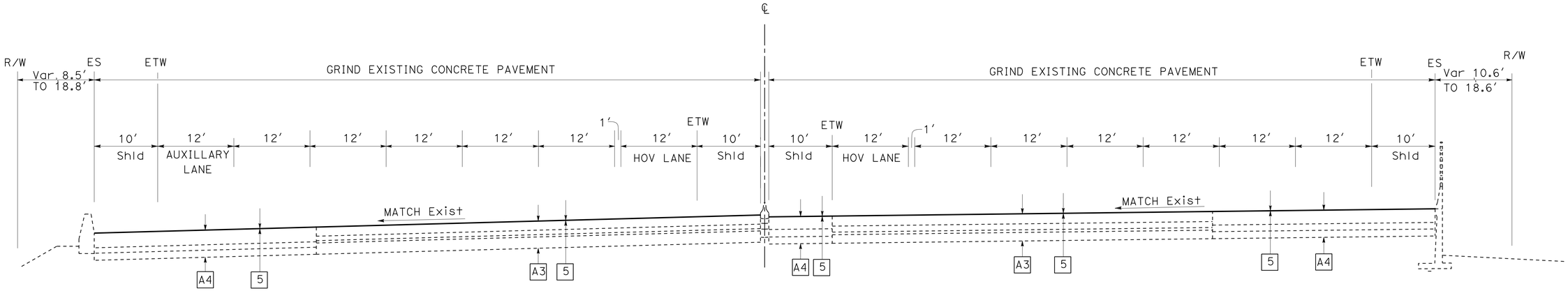

SOUTHBOUND
PM 31.21 TO 31.26

NORTHBOUND
PM 31.21 TO 31.26

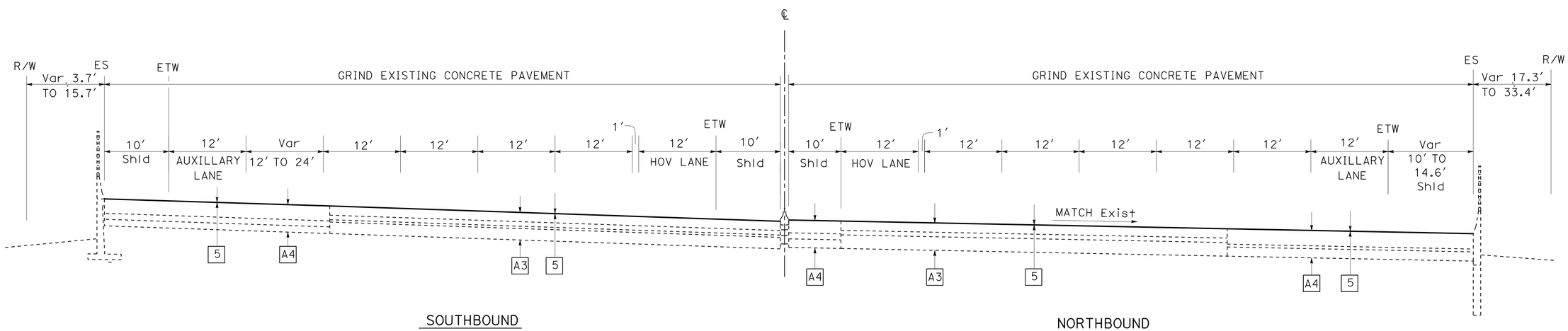

SOUTHBOUND
PM 31.07 TO 31.21

NORTHBOUND
PM 31.06 TO 31.21

ROUTE 405

TYPICAL CROSS SECTIONS

NO SCALE

X-9

STATE OF CALIFORNIA - DEPARTMENT OF TRANSPORTATION
Caltrans® OFFICE OF DESIGN A

FUNCTIONAL SUPERVISOR: MARIO GUTIERREZ

CALCULATED-DESIGNED BY: TIANQIANG GUO
CHECKED BY: WILFRIDO MORALES

REVISED BY | DATE REVISED

LAST REVISION 01-24-11 | DATE PLOTTED => 04-MAR-2014 | TIME PLOTTED => 13:33

Dist	COUNTY	ROUTE	POST MILES TOTAL PROJECT	SHEET No.	TOTAL SHEETS
07	LA	405	28.0/39.0	11	108

REGISTERED CIVIL ENGINEER 11-5-13 DATE

2-10-14
PLANS APPROVAL DATE

REGISTERED PROFESSIONAL ENGINEER WILFRIDO MORALES No. 67533 Exp. 6/30/15 CIVIL STATE OF CALIFORNIA

THE STATE OF CALIFORNIA OR ITS OFFICERS OR AGENTS SHALL NOT BE RESPONSIBLE FOR THE ACCURACY OR COMPLETENESS OF SCANNED COPIES OF THIS PLAN SHEET.

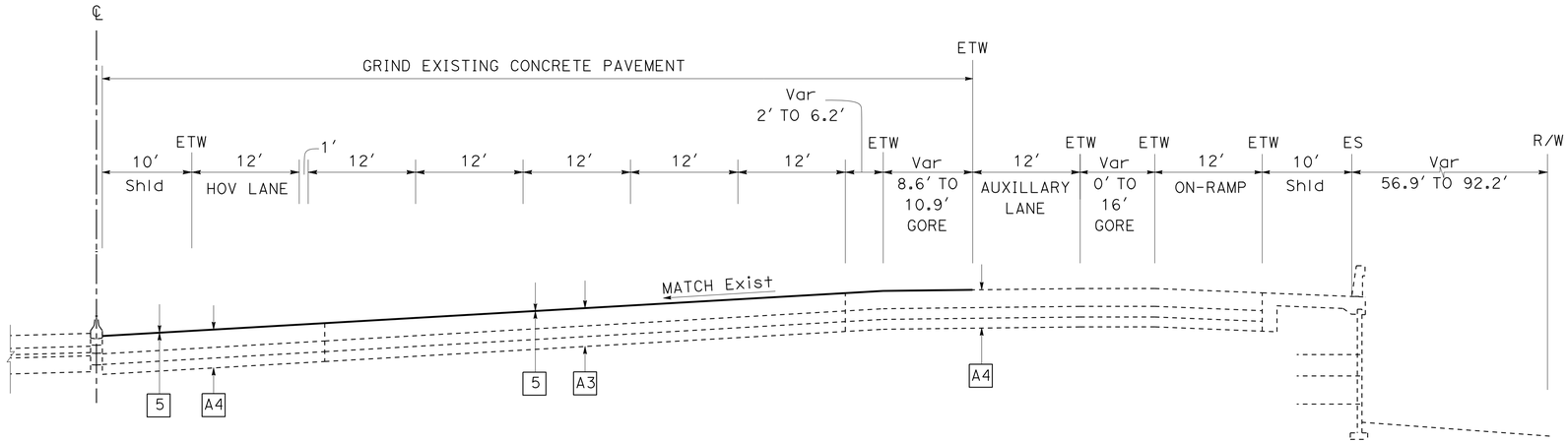

NORTHBOUND
PM 31.35 TO 31.36

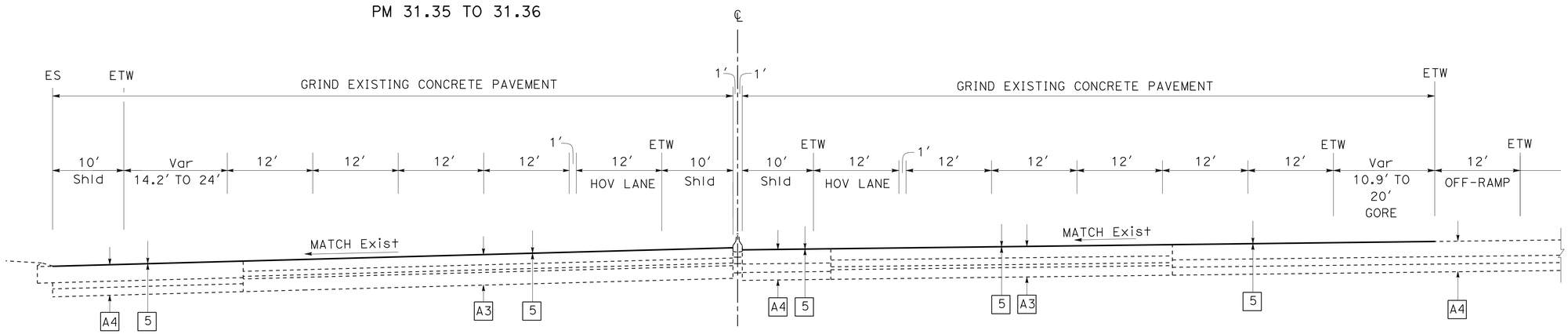

SOUTHBOUND
PM 31.36 TO 31.45

NORTHBOUND
PM 31.36 TO 31.46

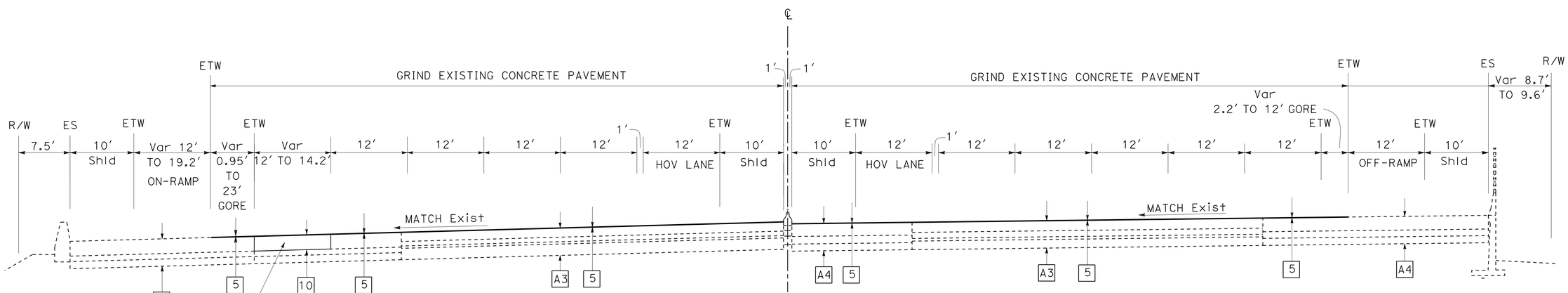

SOUTHBOUND
PM 31.26 TO 31.35

NORTHBOUND
PM 31.26 TO 31.35

ROUTE 405

TYPICAL CROSS SECTIONS

NO SCALE

X-10

STATE OF CALIFORNIA - DEPARTMENT OF TRANSPORTATION
Caltrans® OFFICE OF DESIGN A

FUNCTIONAL SUPERVISOR: MARIO GUTIERREZ
CALCULATED-DESIGNED BY: TIANQIANG GUO
CHECKED BY: WILFRIDO MORALES
REVISED BY
DATE REVISED

LAST REVISION 01-24-11
DATE PLOTTED => 04-MAR-2014
TIME PLOTTED => 13:33

Dist	COUNTY	ROUTE	POST MILES TOTAL PROJECT	SHEET No.	TOTAL SHEETS
07	LA	405	28.0/39.0	12	108

REGISTERED CIVIL ENGINEER 11-5-13 DATE

2-10-14
PLANS APPROVAL DATE

REGISTERED PROFESSIONAL ENGINEER
WILFRIDO MORALES
No. 67533
Exp. 6/30/15
CIVIL
STATE OF CALIFORNIA

THE STATE OF CALIFORNIA OR ITS OFFICERS OR AGENTS SHALL NOT BE RESPONSIBLE FOR THE ACCURACY OR COMPLETENESS OF SCANNED COPIES OF THIS PLAN SHEET.

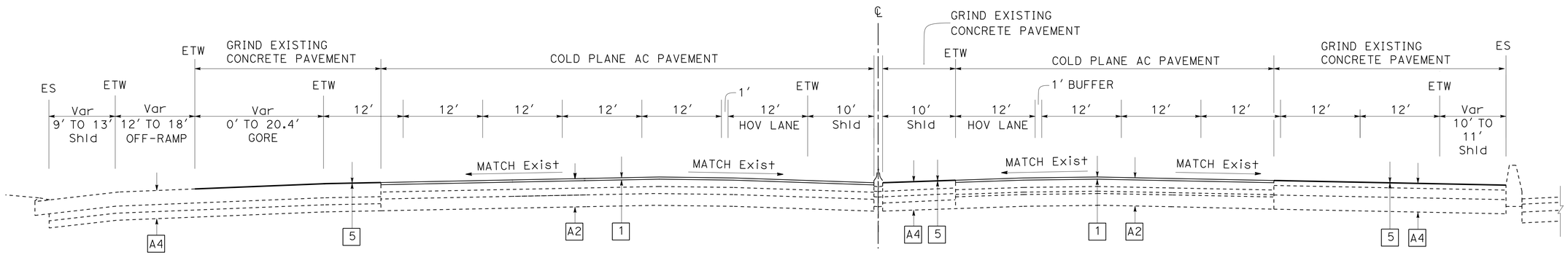

SOUTHBOUND
PM 31.56 TO 31.58

NORTHBOUND
PM 31.56 TO 31.66

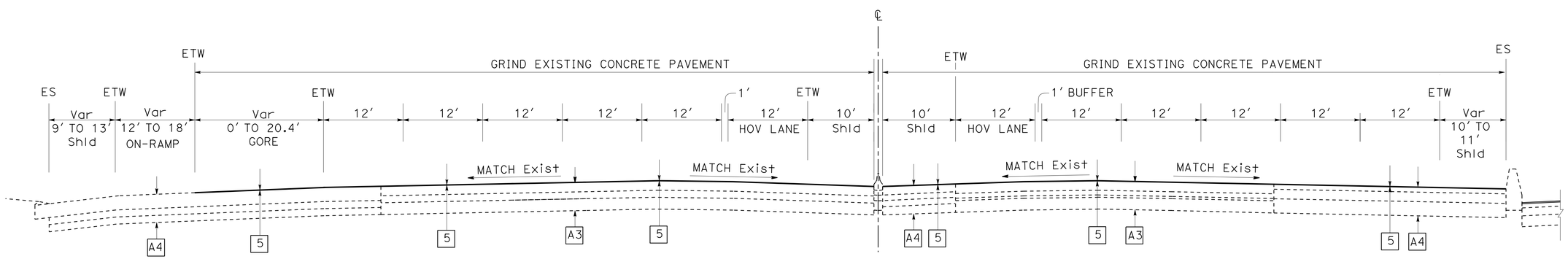

SOUTHBOUND
PM 31.45 TO 31.54

NORTHBOUND
PM 31.46 TO 31.54

ROUTE 405

TYPICAL CROSS SECTIONS

NO SCALE

X-11

STATE OF CALIFORNIA - DEPARTMENT OF TRANSPORTATION
Caltrans® OFFICE OF DESIGN A

FUNCTIONAL SUPERVISOR: MARIO GUTIERREZ
CALCULATED-DESIGNED BY: TIANQIANG GUO
CHECKED BY: WILFRIDO MORALES
REVISED BY
DATE REVISED

LAST REVISION 00-00-00
DATE PLOTTED => 04-MAR-2014
TIME PLOTTED => 13:33

Dist	COUNTY	ROUTE	POST MILES TOTAL PROJECT	SHEET No.	TOTAL SHEETS
07	LA	405	28.0/39.0	13	108

REGISTERED CIVIL ENGINEER 11-5-13 DATE

2-10-14
PLANS APPROVAL DATE

REGISTERED PROFESSIONAL ENGINEER WILFRIDO MORALES No. 67533 Exp. 6/30/15 CIVIL STATE OF CALIFORNIA

THE STATE OF CALIFORNIA OR ITS OFFICERS OR AGENTS SHALL NOT BE RESPONSIBLE FOR THE ACCURACY OR COMPLETENESS OF SCANNED COPIES OF THIS PLAN SHEET.

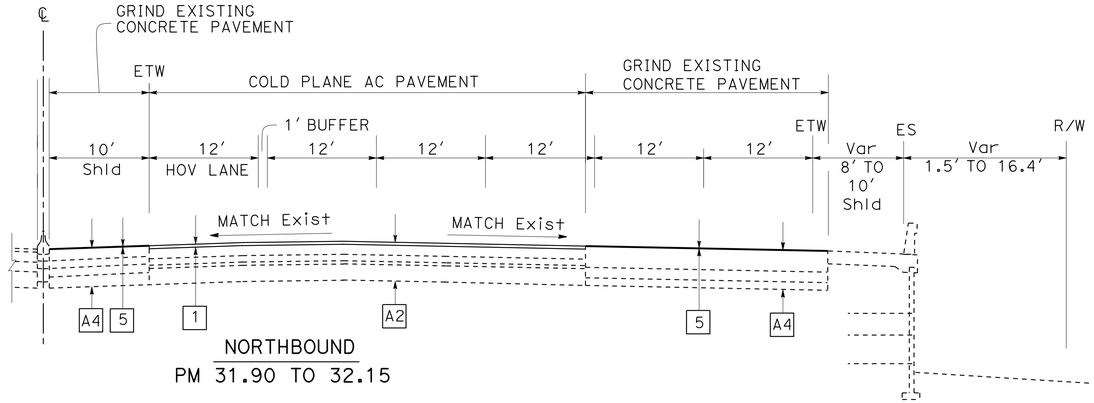

NORTHBOUND
PM 31.90 TO 32.15

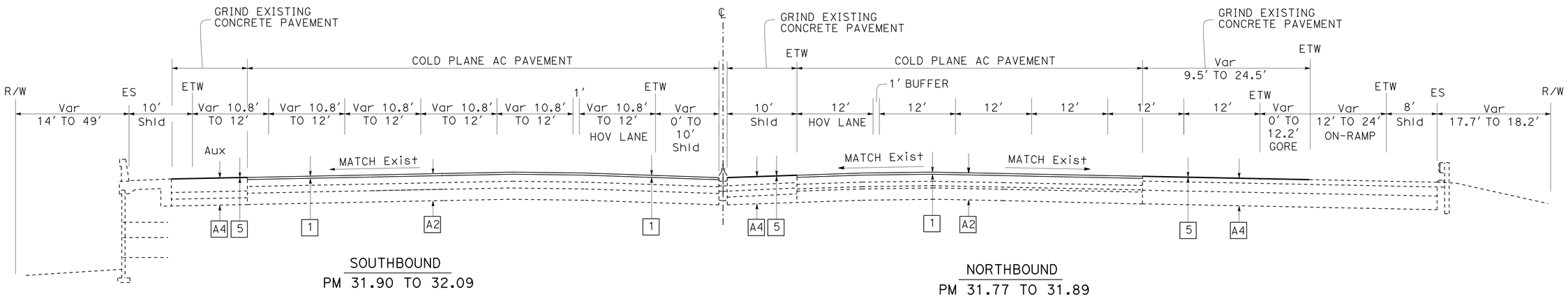

SOUTHBOUND
PM 31.90 TO 32.09

NORTHBOUND
PM 31.77 TO 31.89

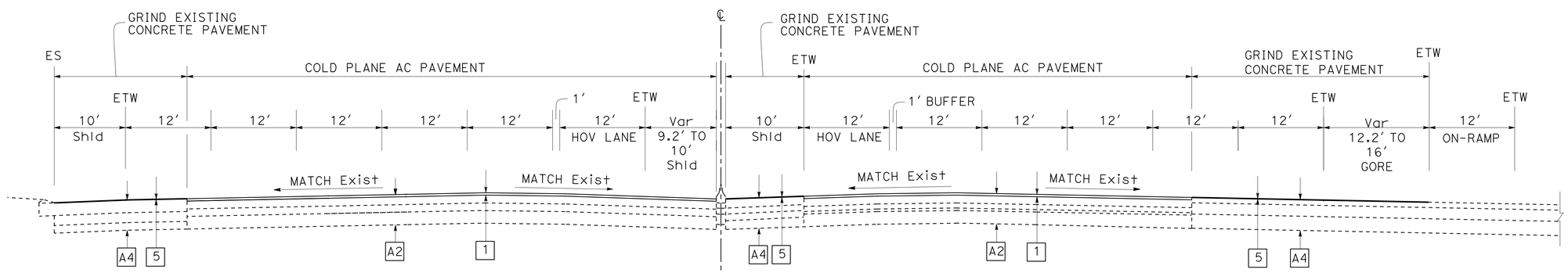

SOUTHBOUND
PM 31.58 TO 31.89

NORTHBOUND
PM 31.66 TO 31.77

TYPICAL CROSS SECTIONS

NO SCALE

ROUTE 405

X-12

STATE OF CALIFORNIA - DEPARTMENT OF TRANSPORTATION
Caltrans® OFFICE OF DESIGN A

FUNCTIONAL SUPERVISOR: MARIO GUTIERREZ
CALCULATED-DESIGNED BY: WILFRIDO MORALES
CHECKED BY
REVISED BY
DATE REVISED

LAST REVISION 00-00-00
DATE PLOTTED => 04-MAR-2014
TIME PLOTTED => 13:33

Dist	COUNTY	ROUTE	POST MILES TOTAL PROJECT	SHEET No.	TOTAL SHEETS
07	LA	405	28.0/39.0	14	108

REGISTERED CIVIL ENGINEER 11-5-13 DATE

2-10-14
PLANS APPROVAL DATE

REGISTERED PROFESSIONAL ENGINEER WILFRIDO MORALES No. 67533 Exp. 6/30/15 CIVIL STATE OF CALIFORNIA

THE STATE OF CALIFORNIA OR ITS OFFICERS OR AGENTS SHALL NOT BE RESPONSIBLE FOR THE ACCURACY OR COMPLETENESS OF SCANNED COPIES OF THIS PLAN SHEET.

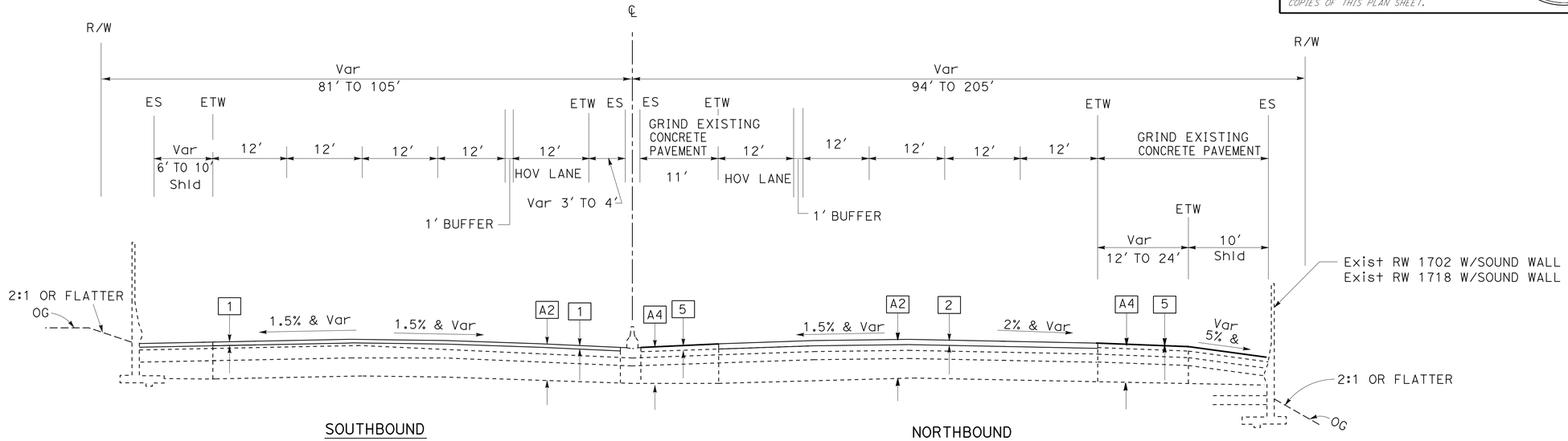

SOUTHBOUND
PM 32.54 TO 32.76

NORTHBOUND
PM 32.51 TO 32.98

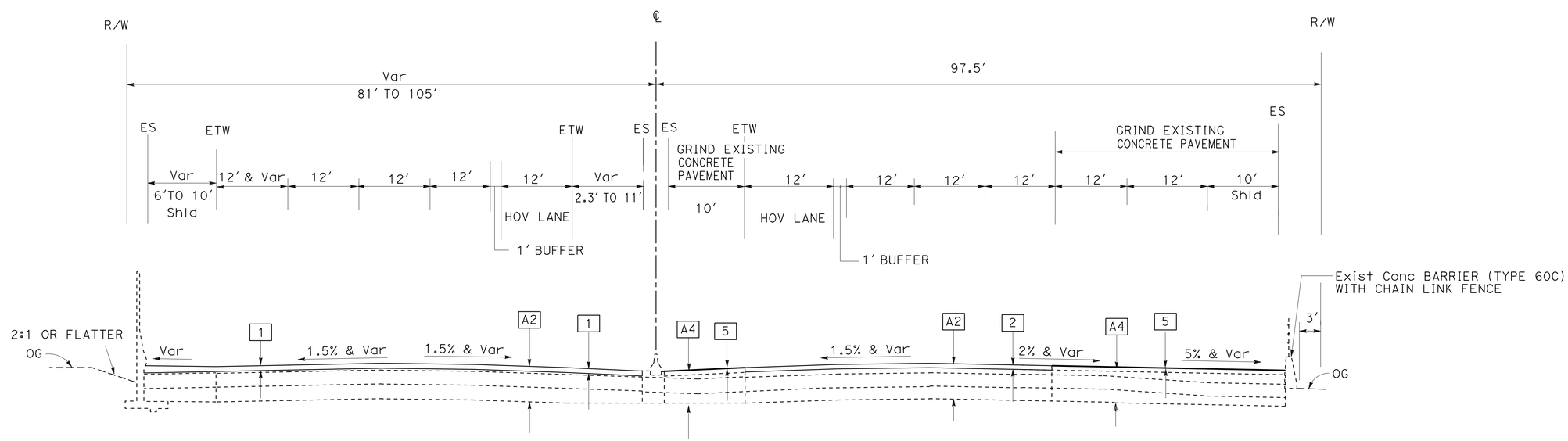

SOUTHBOUND
PM 32.11 TO 32.54

NORTHBOUND
PM 32.11 TO 32.49

ROUTE 405

TYPICAL CROSS SECTIONS

NO SCALE

X-13

STATE OF CALIFORNIA - DEPARTMENT OF TRANSPORTATION
Caltrans® OFFICE OF DESIGN A

FUNCTIONAL SUPERVISOR: MARIO A. GUTIERREZ

CALCULATED-DESIGNED BY: TING TING LEE
CHECKED BY: WILFRIDO MORALES

REVISED BY | DATE REVISED

LAST REVISION 08-22-13 | DATE PLOTTED => 04-MAR-2014 | TIME PLOTTED => 13:33

Dist	COUNTY	ROUTE	POST MILES TOTAL PROJECT	SHEET No.	TOTAL SHEETS
07	LA	405	28.0/39.0	15	108

REGISTERED CIVIL ENGINEER 11-5-13 DATE

2-10-14
PLANS APPROVAL DATE

REGISTERED PROFESSIONAL ENGINEER WILFRIDO MORALES No. 67533 Exp. 6/30/15 CIVIL STATE OF CALIFORNIA

THE STATE OF CALIFORNIA OR ITS OFFICERS OR AGENTS SHALL NOT BE RESPONSIBLE FOR THE ACCURACY OR COMPLETENESS OF SCANNED COPIES OF THIS PLAN SHEET.

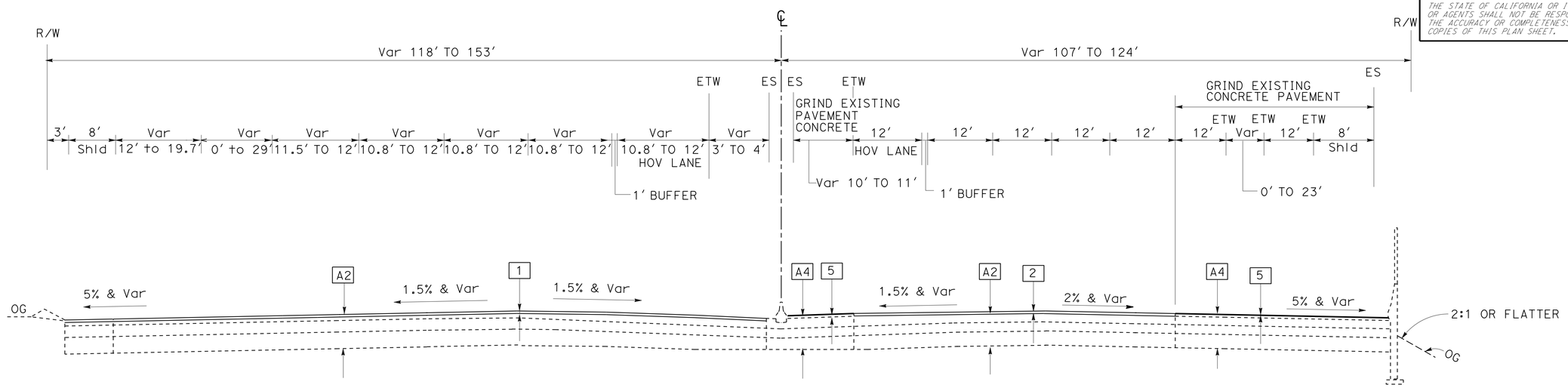

SOUTHBOUND
PM 32.87 TO 33.02

NORTHBOUND
PM 33.0 TO 33.09

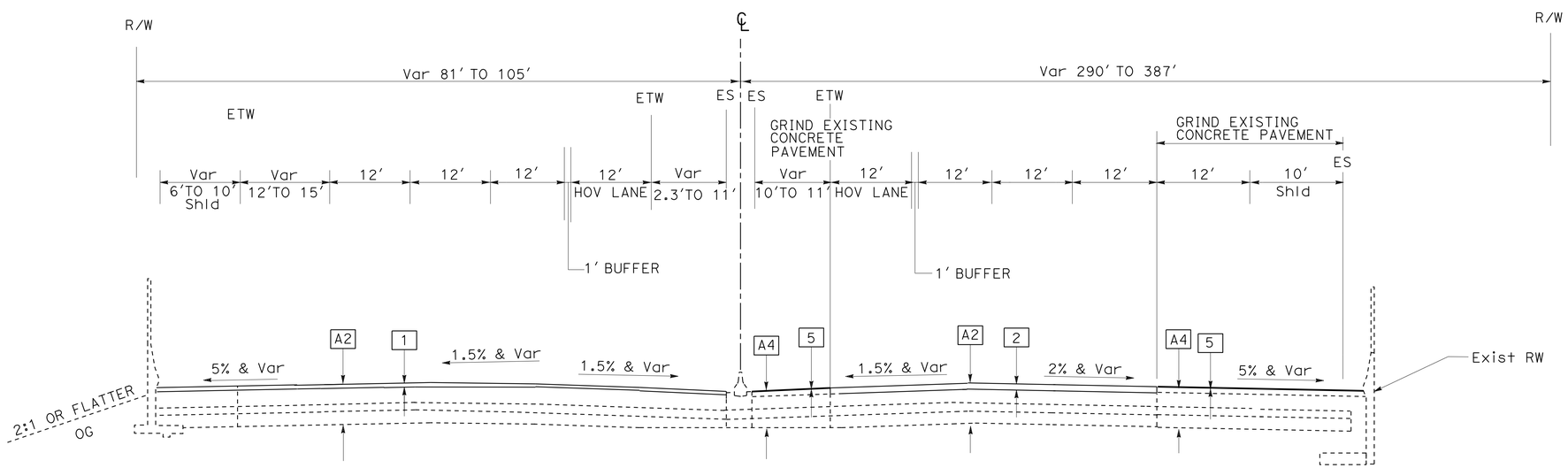

SOUTHBOUND
PM 32.76 TO 32.87

NORTHBOUND
PM 32.98 TO 33.0

ROUTE 405

TYPICAL CROSS SECTIONS

NO SCALE

X-14

STATE OF CALIFORNIA - DEPARTMENT OF TRANSPORTATION
Caltrans® OFFICE OF DESIGN A

FUNCTIONAL SUPERVISOR: MARIO GUTIERREZ

CALCULATED-DESIGNED BY: TING TING LEE
CHECKED BY: WILFRIDO MORALES

REVISED BY | DATE REVISED

LAST REVISION 08-22-13 | DATE PLOTTED => 04-MAR-2014 | TIME PLOTTED => 13:33

Dist	COUNTY	ROUTE	POST MILES TOTAL PROJECT	SHEET No.	TOTAL SHEETS
07	LA	405	28.0/39.0	16	108

REGISTERED CIVIL ENGINEER 11-5-13 DATE

2-10-14
PLANS APPROVAL DATE

REGISTERED PROFESSIONAL ENGINEER WILFRIDO MORALES No. 67533 Exp. 6/30/15 CIVIL STATE OF CALIFORNIA

THE STATE OF CALIFORNIA OR ITS OFFICERS OR AGENTS SHALL NOT BE RESPONSIBLE FOR THE ACCURACY OR COMPLETENESS OF SCANNED COPIES OF THIS PLAN SHEET.

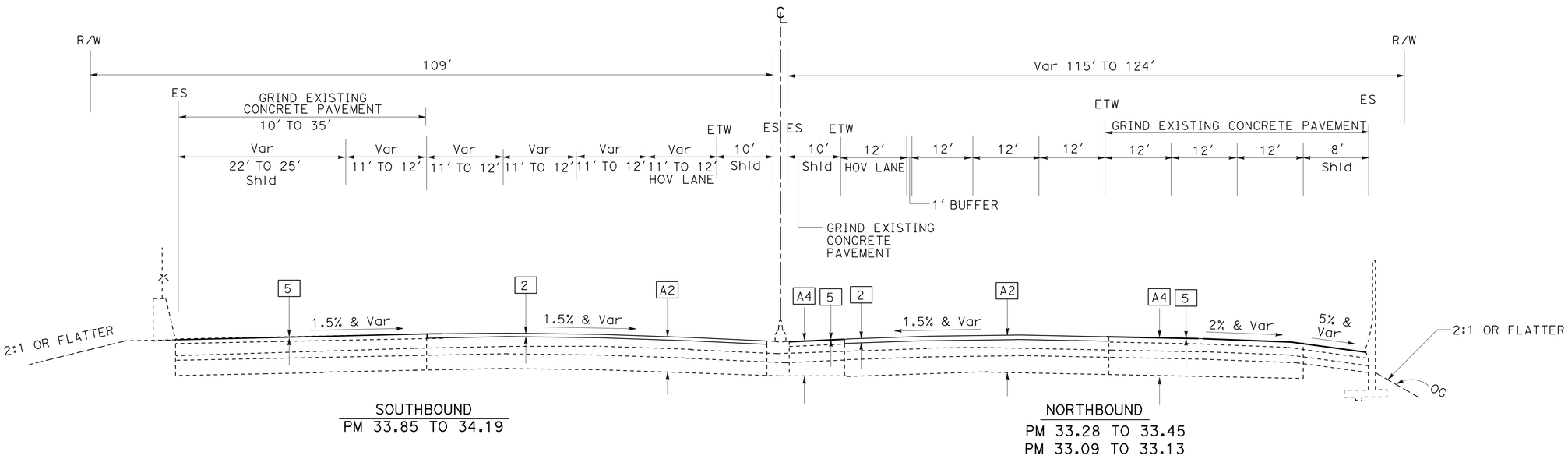

SOUTHBOUND
PM 33.85 TO 34.19

NORTHBOUND
PM 33.28 TO 33.45
PM 33.09 TO 33.13

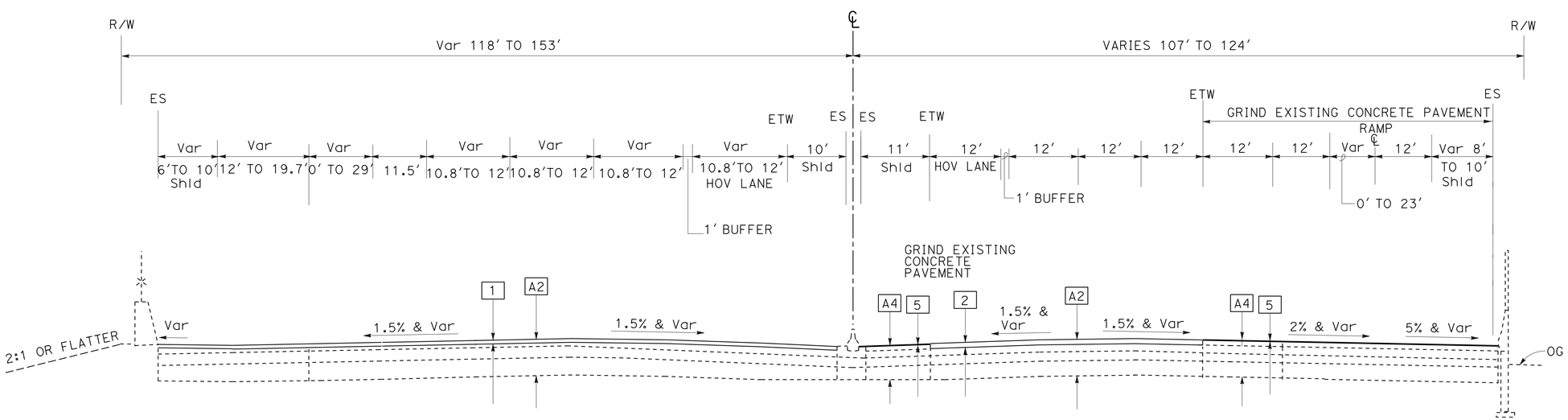

SOUTHBOUND
PM 33.02 TO 33.85

NORTHBOUND
PM 33.45 TO 33.59
PM 33.13 TO 33.28

ROUTE 405

TYPICAL CROSS SECTIONS

NO SCALE

X-15

REVISED BY | DATE REVISED
TING TING LEE | WILFRIDO MORALES
CALCULATED-DESIGNED BY | CHECKED BY
FUNCTIONAL SUPERVISOR | MARIO GUTIERREZ

STATE OF CALIFORNIA - DEPARTMENT OF TRANSPORTATION
Caltrans® OFFICE OF DESIGN A

LAST REVISION 08-23-13 | DATE PLOTTED => 04-MAR-2014 | TIME PLOTTED => 13:33

Dist	COUNTY R/W	ROUTE	POST MILES TOTAL PROJECT	SHEET No.	TOTAL SHEETS
07	LA	405	28.0/39.0	17	108

REGISTERED CIVIL ENGINEER 11-5-13 DATE

2-10-14
PLANS APPROVAL DATE

REGISTERED PROFESSIONAL ENGINEER WILFRIDO MORALES No. 67533 Exp. 6/30/15 CIVIL STATE OF CALIFORNIA

THE STATE OF CALIFORNIA OR ITS OFFICERS OR AGENTS SHALL NOT BE RESPONSIBLE FOR THE ACCURACY OR COMPLETENESS OF SCANNED COPIES OF THIS PLAN SHEET.

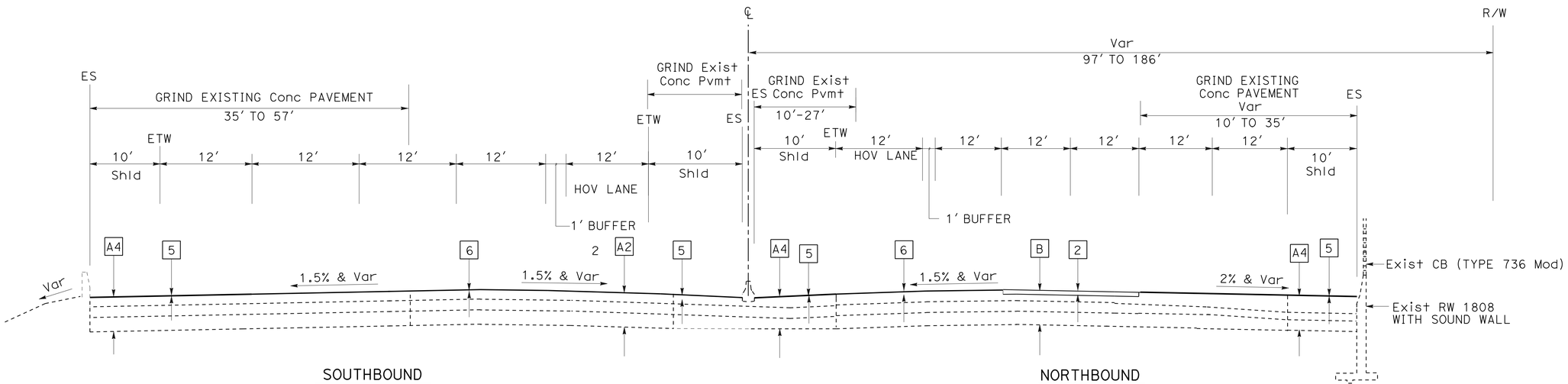

SOUTHBOUND
PM 34.23 TO PM 34.67

NORTHBOUND
PM 34.23 TO 34.44

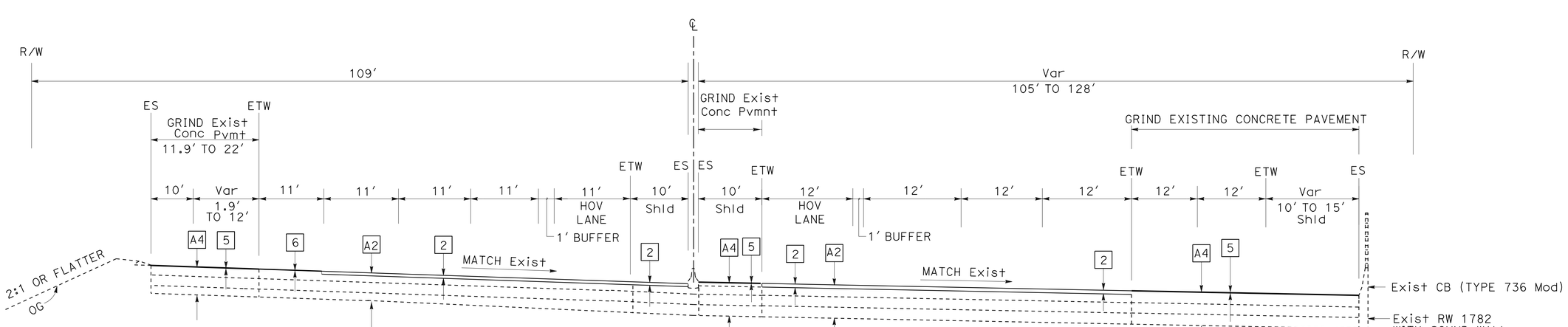

SOUTHBOUND
PM 34.01 TO 34.19

NORTHBOUND
PM 33.59 TO 34.19

ROUTE 405

TYPICAL CROSS SECTIONS

NO SCALE

X-16

STATE OF CALIFORNIA - DEPARTMENT OF TRANSPORTATION
Caltrans® OFFICE OF DESIGN A

FUNCTIONAL SUPERVISOR: MARIO GUTIERREZ

CALCULATED-DESIGNED BY: TING TING LEE
CHECKED BY: WILFRIDO MORALES

REVISED BY | DATE REVISED

LAST REVISION 08-22-13 | DATE PLOTTED => 04-MAR-2014 | TIME PLOTTED => 13:33

Dist	COUNTY	ROUTE	POST MILES TOTAL PROJECT	SHEET No.	TOTAL SHEETS
07	LA	405	28.0/39.0	18	108

REGISTERED CIVIL ENGINEER 11-5-13 DATE

2-10-14
PLANS APPROVAL DATE

REGISTERED PROFESSIONAL ENGINEER WILFRIDO MORALES No. 67533 Exp. 6/30/15 CIVIL STATE OF CALIFORNIA

THE STATE OF CALIFORNIA OR ITS OFFICERS OR AGENTS SHALL NOT BE RESPONSIBLE FOR THE ACCURACY OR COMPLETENESS OF SCANNED COPIES OF THIS PLAN SHEET.

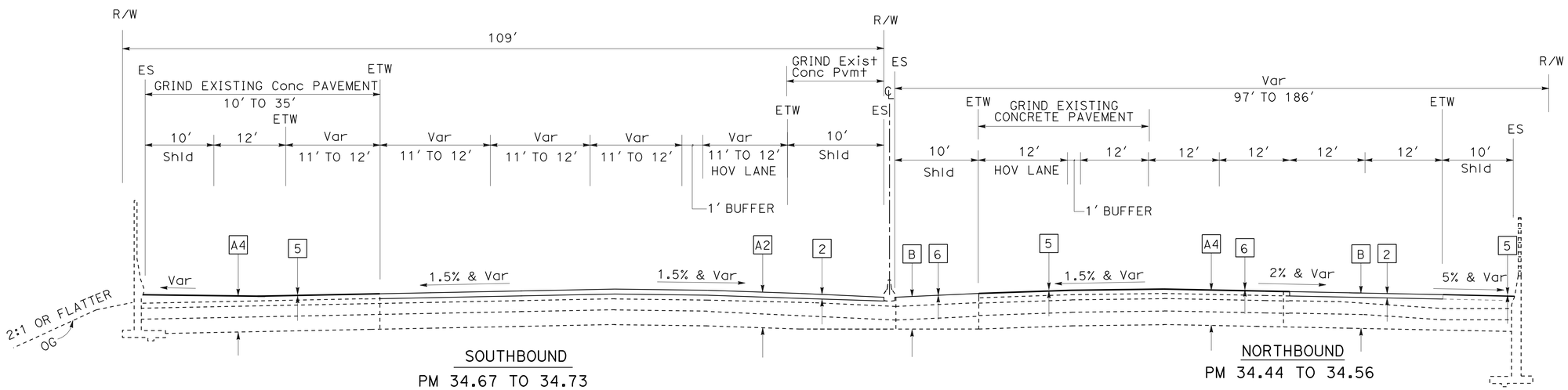

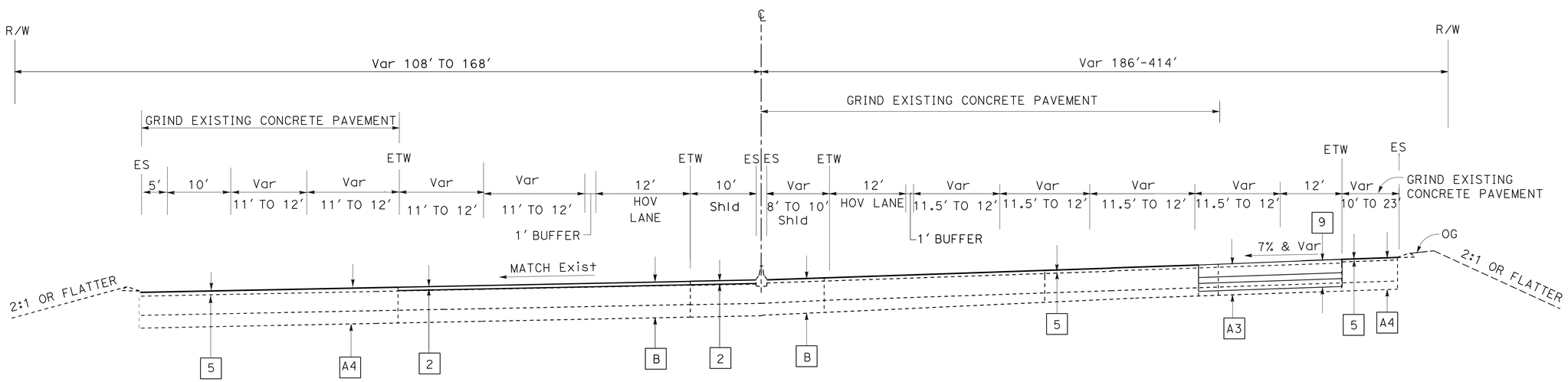

SOUTHBOUND
PM 34.65 TO 34.67

NORTHBOUND
PM 34.56 TO 34.70

ROUTE 405

TYPICAL CROSS SECTIONS

NO SCALE

X-17

STATE OF CALIFORNIA - DEPARTMENT OF TRANSPORTATION
Caltrans® OFFICE OF DESIGN A

FUNCTIONAL SUPERVISOR: MARIO GUTIERREZ

CALCULATED-DESIGNED BY: TING TING LEE
CHECKED BY: WILFRIDO MORALES

REVISED BY | DATE REVISED

LAST REVISION 08-22-13 | DATE PLOTTED => 04-MAR-2014 | TIME PLOTTED => 13:33

Dist	COUNTY	ROUTE	POST MILES TOTAL PROJECT	SHEET No.	TOTAL SHEETS
07	LA	405	28.0/39.0	19	108

REGISTERED CIVIL ENGINEER 11-5-13 DATE

2-10-14
PLANS APPROVAL DATE

REGISTERED PROFESSIONAL ENGINEER WILFRIDO MORALES No. 67533 Exp. 6/30/15 CIVIL STATE OF CALIFORNIA

THE STATE OF CALIFORNIA OR ITS OFFICERS OR AGENTS SHALL NOT BE RESPONSIBLE FOR THE ACCURACY OR COMPLETENESS OF SCANNED COPIES OF THIS PLAN SHEET.

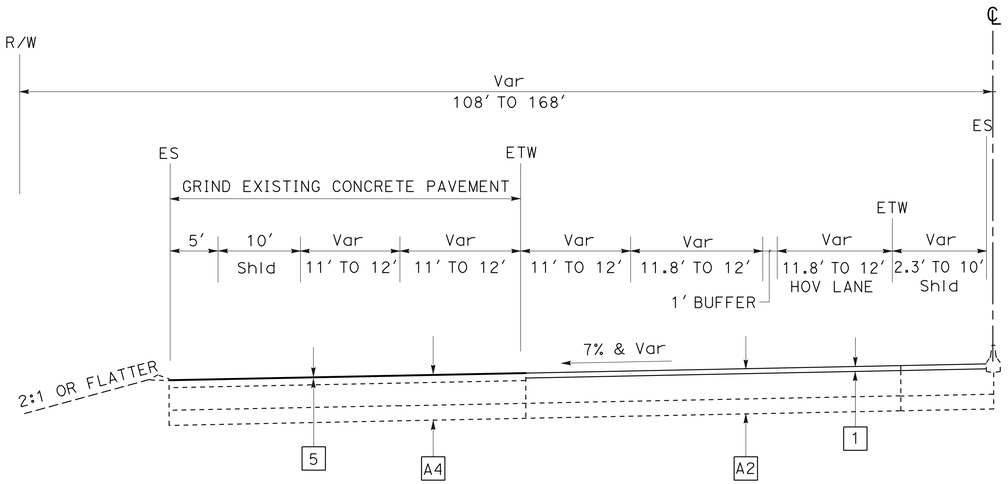

SOUTHBOUND
PM 34.71 TO 34.75

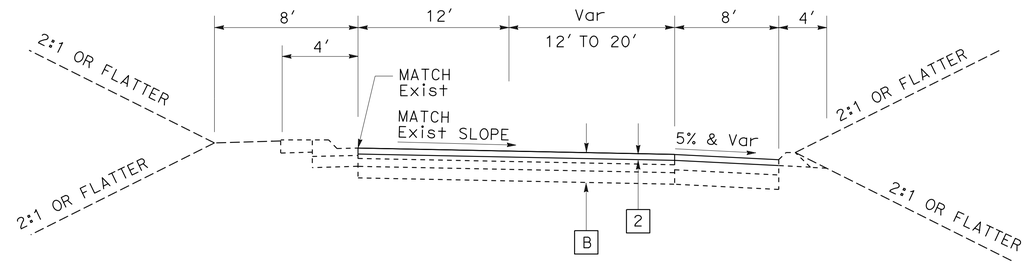

ON & OFF-RAMP

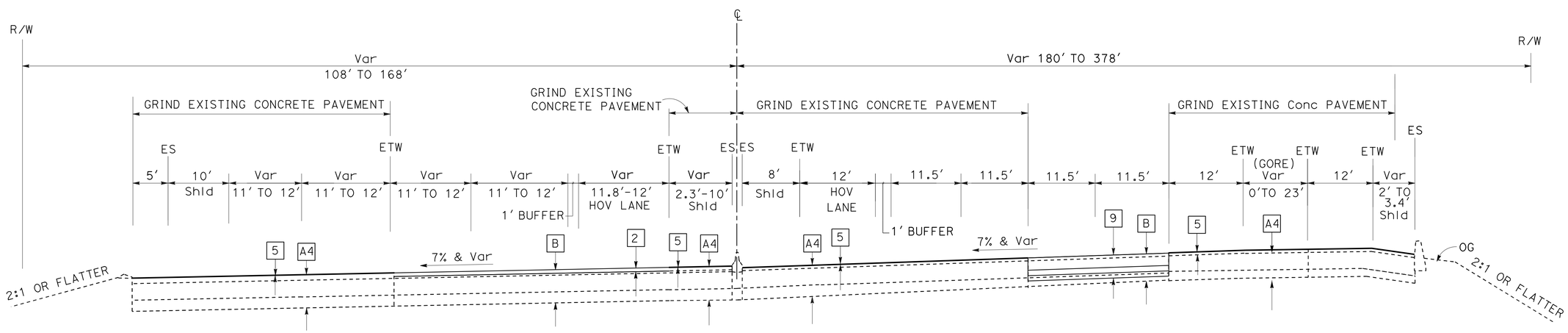

ROUTE 405

SOUTHBOUND
PM 34.67 TO 34.71

NORTHBOUND
PM 34.70 TO 34.75

TYPICAL CROSS SECTIONS

NO SCALE

X-18

STATE OF CALIFORNIA - DEPARTMENT OF TRANSPORTATION
Caltrans® OFFICE OF DESIGN A

FUNCTIONAL SUPERVISOR: MARIO GUTIERREZ

CALCULATED-DESIGNED BY: TING TING LEE
CHECKED BY: WILFRIDO MORALES

REVISED BY | DATE REVISED

LAST REVISION 08-22-13 | DATE PLOTTED => 04-MAR-2014 | TIME PLOTTED => 13:33

Dist	COUNTY	ROUTE	POST MILES TOTAL PROJECT	SHEET No.	TOTAL SHEETS
07	LA	405	28.0/39.0	20	108

11-5-13
REGISTERED CIVIL ENGINEER DATE

2-10-14
PLANS APPROVAL DATE

REGISTERED PROFESSIONAL ENGINEER
WILFRIDO MORALES
No. 67533
Exp. 6/30/15
CIVIL
STATE OF CALIFORNIA

THE STATE OF CALIFORNIA OR ITS OFFICERS OR AGENTS SHALL NOT BE RESPONSIBLE FOR THE ACCURACY OR COMPLETENESS OF SCANNED COPIES OF THIS PLAN SHEET.

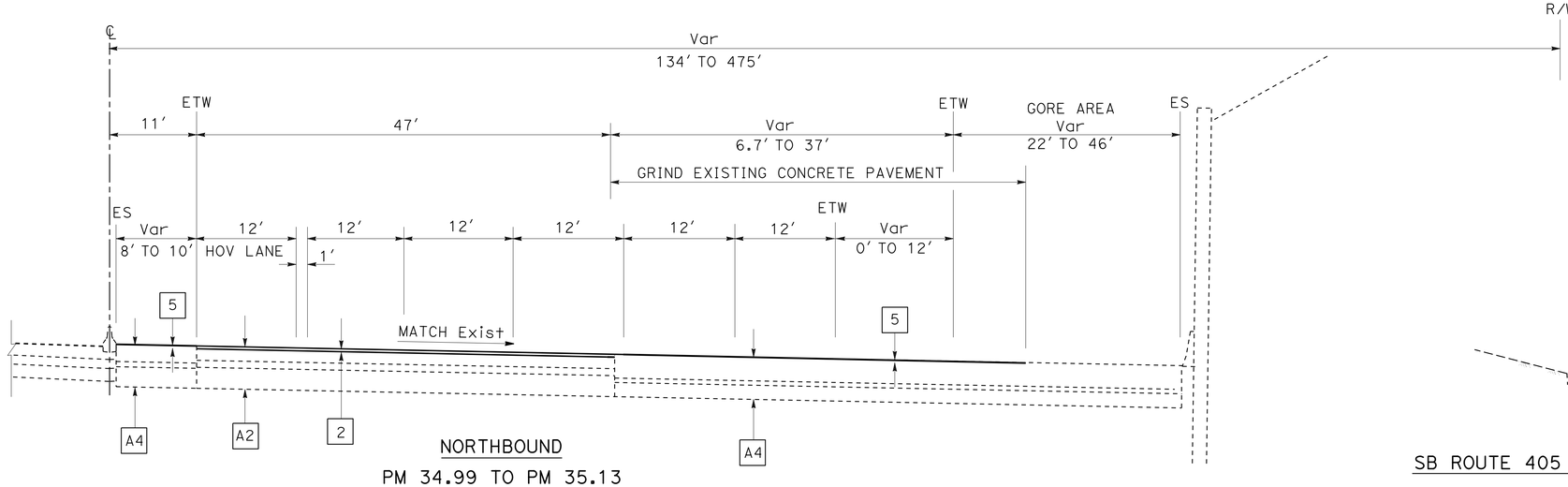

NORTHBOUND
PM 34.99 TO PM 35.13
PM 35.83 TO PM 36.50

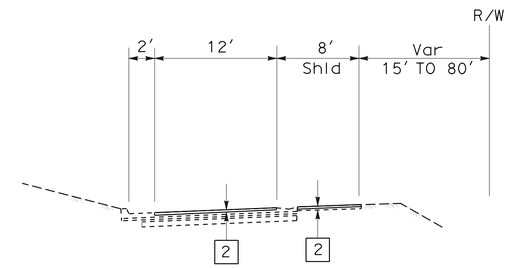

SB ROUTE 405 TO SEPULVEDA/GETTY CENTER OFF-RAMP
PM 34.76 TO PM 35.03

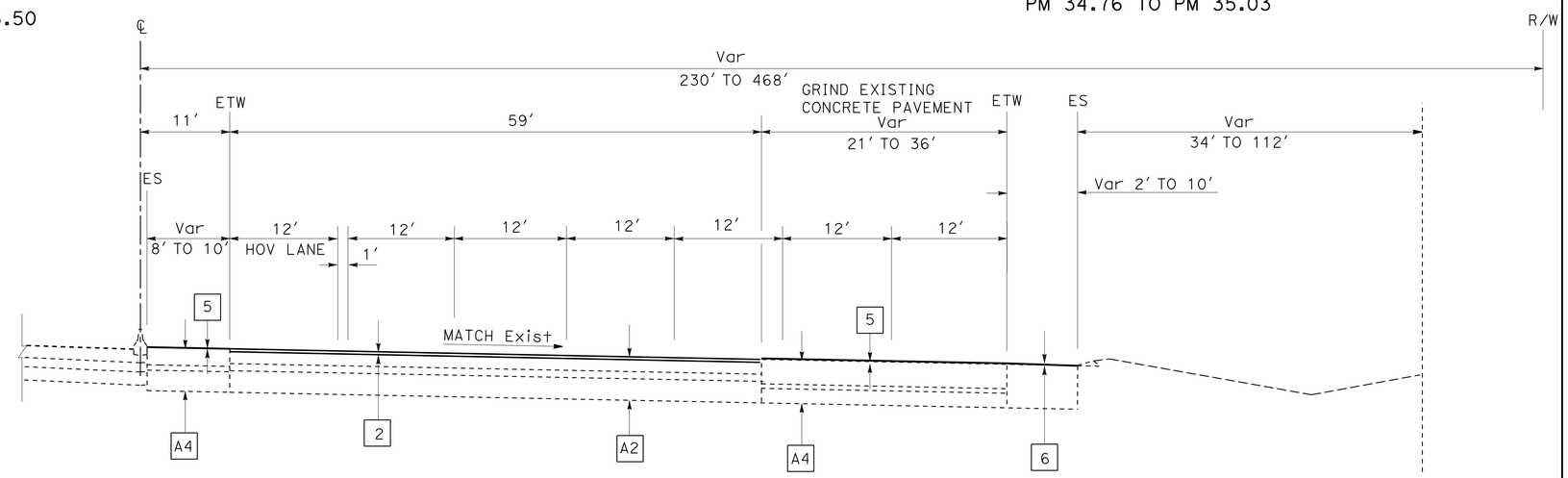

NORTHBOUND
PM 34.78 TO PM 34.99

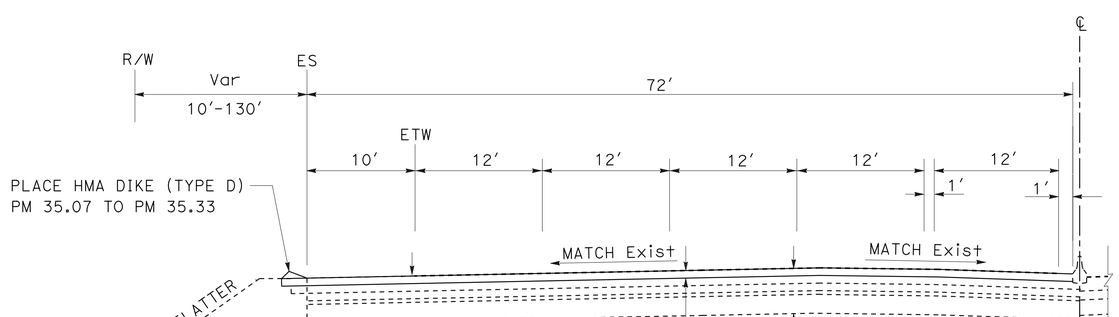

SOUTHBOUND
PM 34.78 TO PM 35.81

ROUTE 405

TYPICAL CROSS SECTIONS
NO SCALE

X-19

STATE OF CALIFORNIA - DEPARTMENT OF TRANSPORTATION
Caltrans® OFFICE OF DESIGN A

FUNCTIONAL SUPERVISOR: MARIO GUTIERREZ
CALCULATED-DESIGNED BY: WILFRIDO MORALES
CHECKED BY: JOSEPH REYNOZA
REVISED BY
DATE REVISED

LAST REVISION 00-00-00
DATE PLOTTED => 04-MAR-2014
TIME PLOTTED => 13:33

Dist	COUNTY	ROUTE	POST MILES TOTAL PROJECT	SHEET No.	TOTAL SHEETS
07	LA	405	28.0/39.0	21	108

REGISTERED CIVIL ENGINEER 11-5-13 DATE

2-10-14
PLANS APPROVAL DATE

REGISTERED PROFESSIONAL ENGINEER
WILFRIDO MORALES
No. 67533
Exp. 6/30/15
CIVIL
STATE OF CALIFORNIA

THE STATE OF CALIFORNIA OR ITS OFFICERS OR AGENTS SHALL NOT BE RESPONSIBLE FOR THE ACCURACY OR COMPLETENESS OF SCANNED COPIES OF THIS PLAN SHEET.

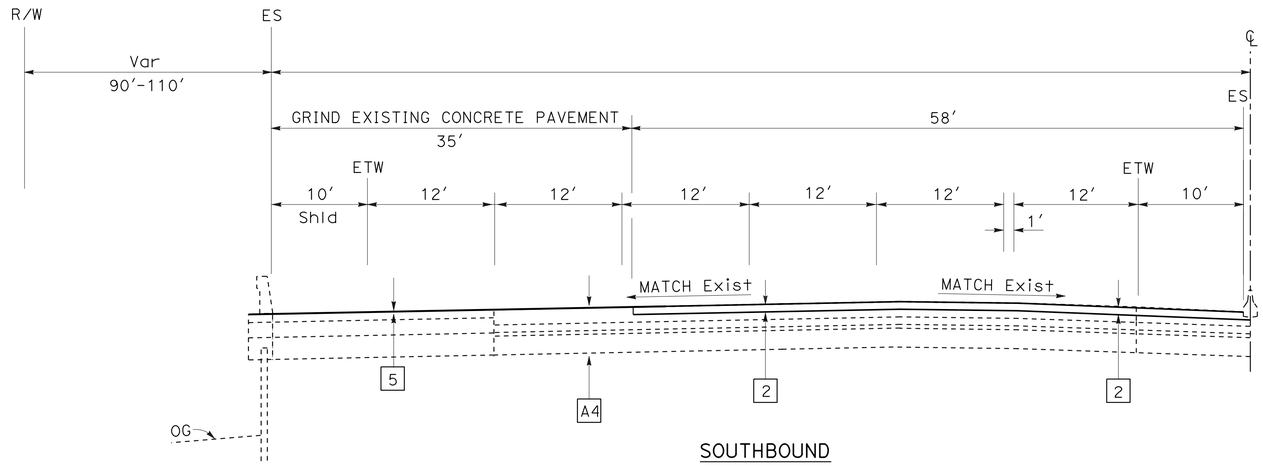

SOUTHBOUND
PM 36.18 TO PM 36.66

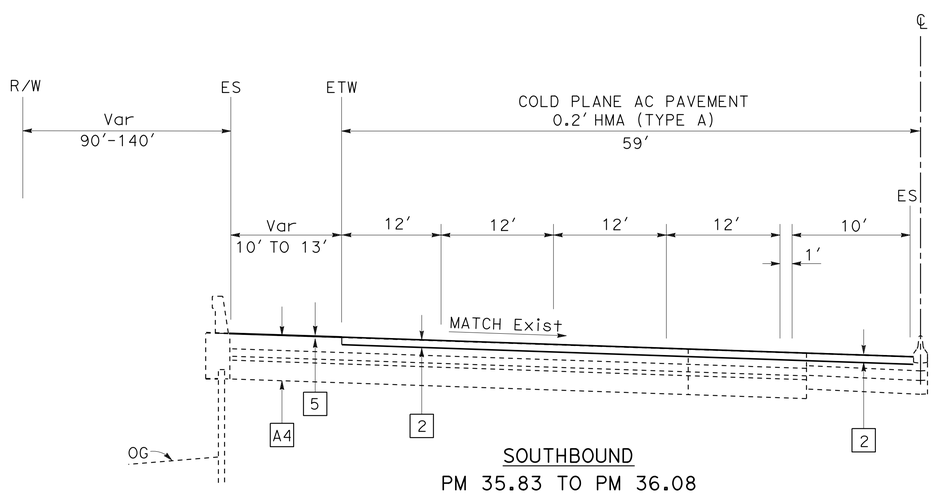

SOUTHBOUND
PM 35.83 TO PM 36.08

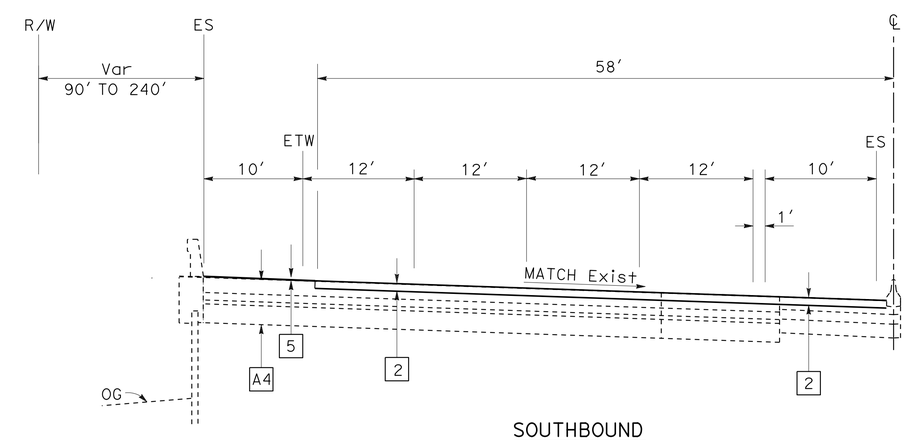

SOUTHBOUND
PM 36.08 TO PM 36.18

ROUTE 405

TYPICAL CROSS SECTIONS
NO SCALE

X-20

STATE OF CALIFORNIA - DEPARTMENT OF TRANSPORTATION
Caltrans® OFFICE OF DESIGN A

FUNCTIONAL SUPERVISOR: MARIO GUTIERREZ
CALCULATED-DESIGNED BY: WILFRIDO MORALES
CHECKED BY: JOSEPH REYNOZA
REVISED BY
DATE REVISED

LAST REVISION 00-00-00
DATE PLOTTED => 04-MAR-2014
TIME PLOTTED => 13:33

Dist	COUNTY	ROUTE	POST MILES TOTAL PROJECT	SHEET No.	TOTAL SHEETS
07	LA	405	28.0/39.0	22	108

REGISTERED CIVIL ENGINEER 11-5-13 DATE

2-10-14
PLANS APPROVAL DATE

REGISTERED PROFESSIONAL ENGINEER WILFRIDO MORALES No. 67533 Exp. 6/30/15 CIVIL STATE OF CALIFORNIA

THE STATE OF CALIFORNIA OR ITS OFFICERS OR AGENTS SHALL NOT BE RESPONSIBLE FOR THE ACCURACY OR COMPLETENESS OF SCANNED COPIES OF THIS PLAN SHEET.

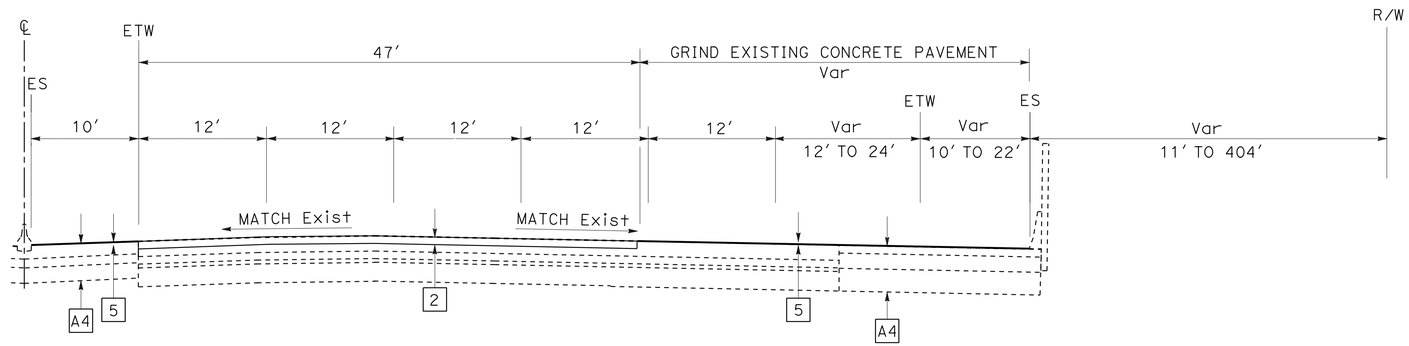

NORTHBOUND
PM 35.13 TO PM 35.78

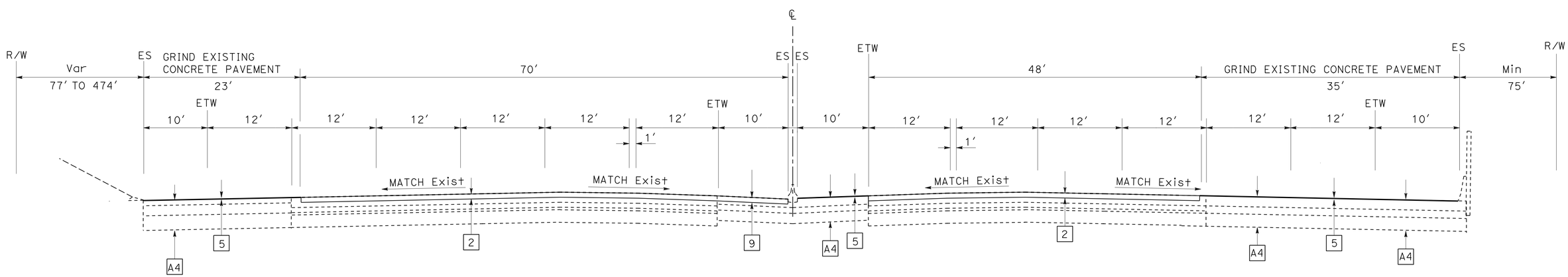

SOUTHBOUND
PM 36.73 TO PM 36.88

NORTHBOUND
PM 36.50 TO PM 36.86

ROUTE 405

TYPICAL CROSS SECTIONS
NO SCALE

X-21

STATE OF CALIFORNIA - DEPARTMENT OF TRANSPORTATION
Caltrans® OFFICE OF DESIGN A

FUNCTIONAL SUPERVISOR: MARIO GUTIERREZ
CALCULATED-DESIGNED BY: WILFRIDO MORALES
CHECKED BY: JOSEPH REYNOZA
REVISED BY
DATE REVISED

LAST REVISION 00-00-00
DATE PLOTTED => 04-MAR-2014
TIME PLOTTED => 13:33

Dist	COUNTY	ROUTE	POST MILES TOTAL PROJECT	SHEET No.	TOTAL SHEETS
07	LA	405	28.0/39.0	23	108

11-5-13
REGISTERED CIVIL ENGINEER DATE

2-10-14
PLANS APPROVAL DATE

REGISTERED PROFESSIONAL ENGINEER
WILFRIDO MORALES
No. 67533
Exp. 6/30/15
CIVIL
STATE OF CALIFORNIA

THE STATE OF CALIFORNIA OR ITS OFFICERS OR AGENTS SHALL NOT BE RESPONSIBLE FOR THE ACCURACY OR COMPLETENESS OF SCANNED COPIES OF THIS PLAN SHEET.

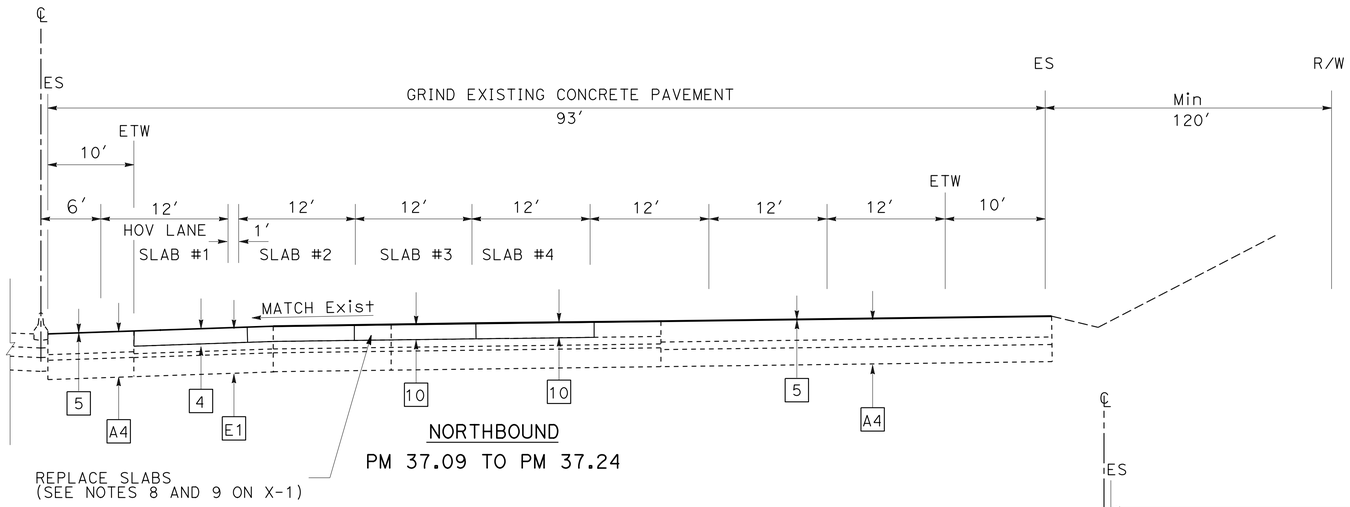

NORTHBOUND
PM 37.09 TO PM 37.24

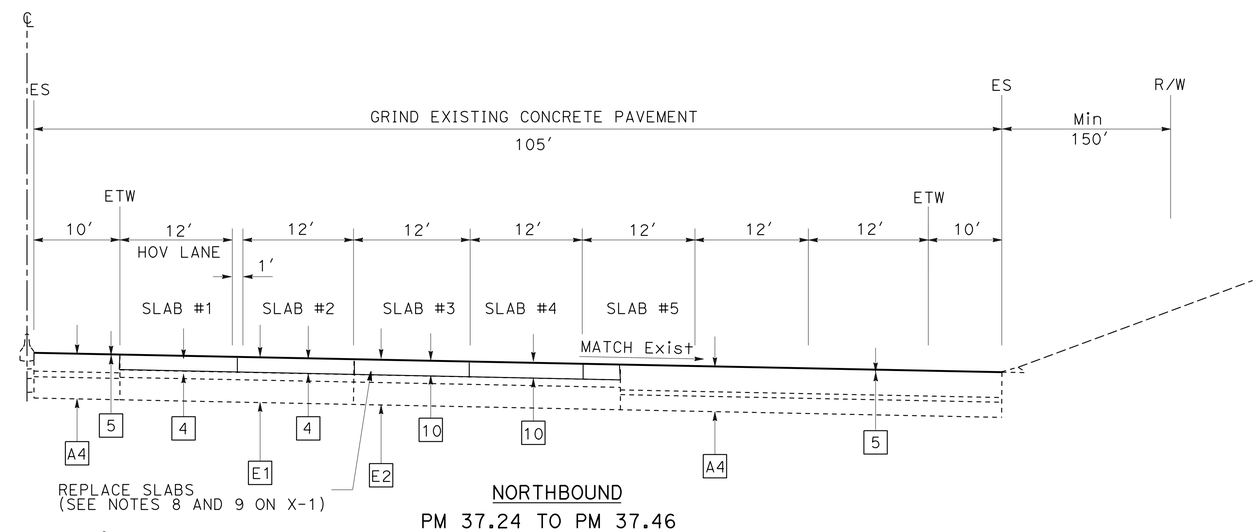

NORTHBOUND
PM 37.24 TO PM 37.46

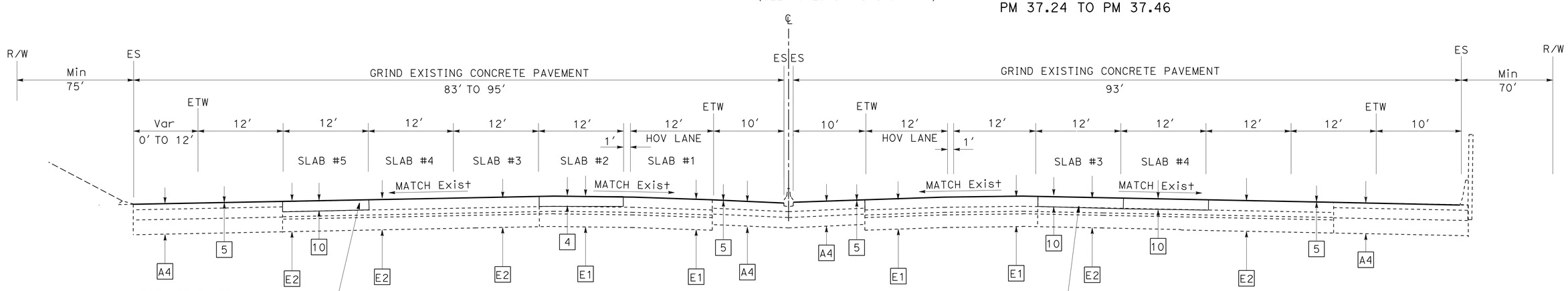

SOUTHBOUND
PM 36.88 TO PM 37.46

NORTHBOUND
PM 36.86 TO PM 37.09

ROUTE 405

TYPICAL CROSS SECTIONS

NO SCALE

X-22

STATE OF CALIFORNIA - DEPARTMENT OF TRANSPORTATION
Caltrans® OFFICE OF DESIGN A

FUNCTIONAL SUPERVISOR: MARIO GUTIERREZ
CALCULATED-DESIGNED BY: WILFRIDO MORALES
CHECKED BY: JOSEPH REYNOZA
REVISED BY
DATE REVISED

LAST REVISION 00-00-00
DATE PLOTTED => 04-MAR-2014
TIME PLOTTED => 13:33

Dist	COUNTY	ROUTE	POST MILES TOTAL PROJECT	SHEET No.	TOTAL SHEETS
07	LA	405	28.0/39.0	24	108

REGISTERED CIVIL ENGINEER 11-5-13 DATE

2-10-14
PLANS APPROVAL DATE

REGISTERED PROFESSIONAL ENGINEER WILFRIDO MORALES No. 67533 Exp. 6/30/15 CIVIL STATE OF CALIFORNIA

THE STATE OF CALIFORNIA OR ITS OFFICERS OR AGENTS SHALL NOT BE RESPONSIBLE FOR THE ACCURACY OR COMPLETENESS OF SCANNED COPIES OF THIS PLAN SHEET.

JOINTED PLAIN CONCRETE PAVEMENT (RSC) SECTIONS

PM 37.63 TO PM 37.71
PM 37.83 TO PM 37.86
PM 38.39 TO PM 38.41

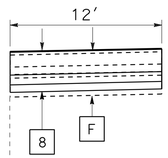

JOINTED PLAIN CONCRETE PAVEMENT (RSC) SECTIONS

PM 37.54 TO PM 37.60
PM 37.71 TO PM 37.77
PM 37.92 TO PM 38.03

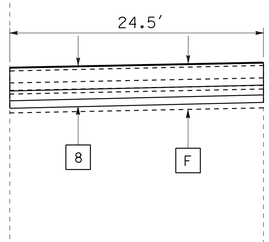

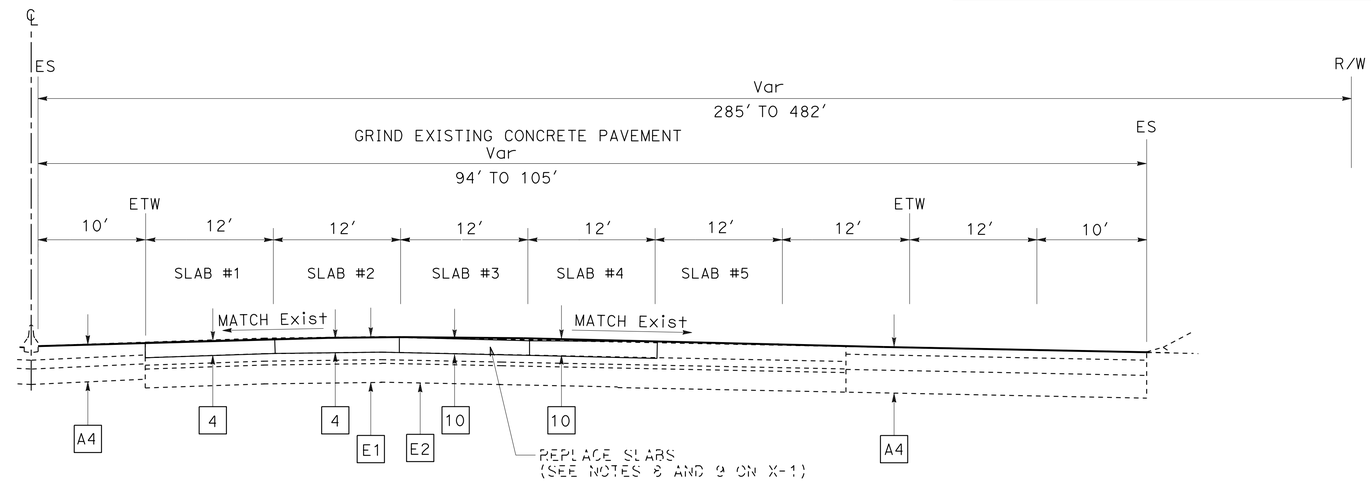

NORTHBOUND

MULHOLLAND Dr OC TO 0.7 MILE N OF MULHOLLAND Dr OC

PM 37.46 TO PM 37.71

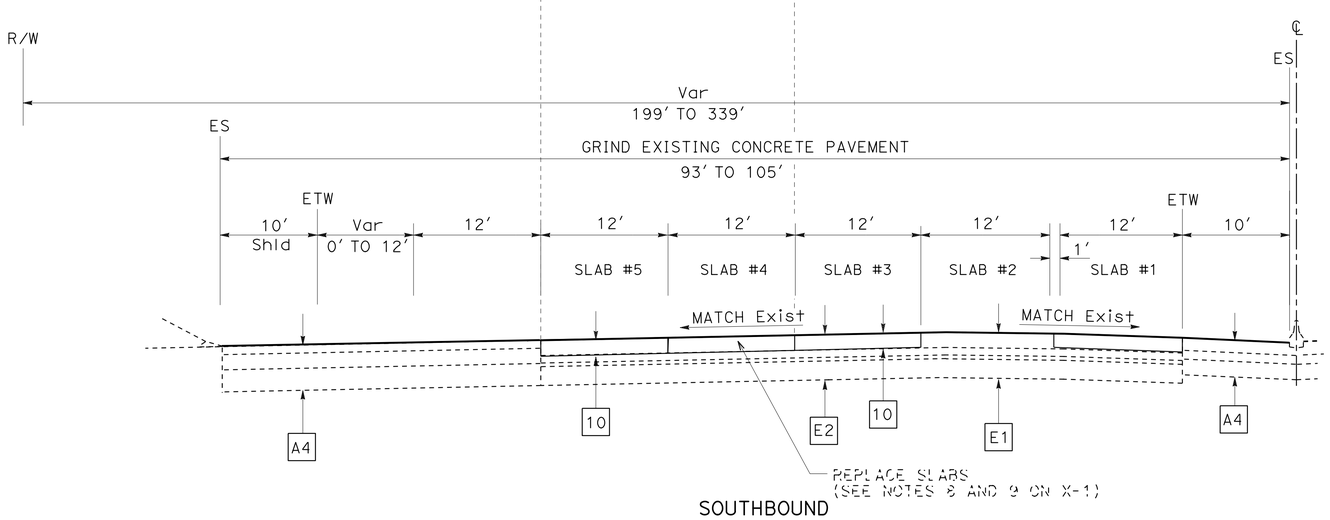

SOUTHBOUND

MULHOLLAND Dr OC TO SEPULVEDA Blvd OC

PM 37.46 TO PM 38.57

ROUTE 405

TYPICAL CROSS SECTIONS

NO SCALE

X-23

REVISED BY | DATE REVISED
WILFRIDO MORALES | JOSEPH REYNOZA
CALCULATED-DESIGNED BY | CHECKED BY
FUNCTIONAL SUPERVISOR: MARIO GUTIERREZ

STATE OF CALIFORNIA - DEPARTMENT OF TRANSPORTATION
Caltrans® OFFICE OF DESIGN A

LAST REVISION 00-00-00 | DATE PLOTTED => 04-MAR-2014 | TIME PLOTTED => 13:33

Dist	COUNTY	ROUTE	POST MILES TOTAL PROJECT	SHEET No.	TOTAL SHEETS
07	LA	405	28.0/39.0	25	108

REGISTERED CIVIL ENGINEER 11-5-13 DATE

2-10-14
PLANS APPROVAL DATE

REGISTERED PROFESSIONAL ENGINEER WILFRIDO MORALES No. 67533 Exp. 6/30/15 CIVIL STATE OF CALIFORNIA

THE STATE OF CALIFORNIA OR ITS OFFICERS OR AGENTS SHALL NOT BE RESPONSIBLE FOR THE ACCURACY OR COMPLETENESS OF SCANNED COPIES OF THIS PLAN SHEET.

JOINTED PLAIN CONCRETE PAVEMENT (RSC) SECTION

PM 38.82 TO PM 38.85
LANE #1 (FROM CARPOOL SIGN TO 150' SOUTH)

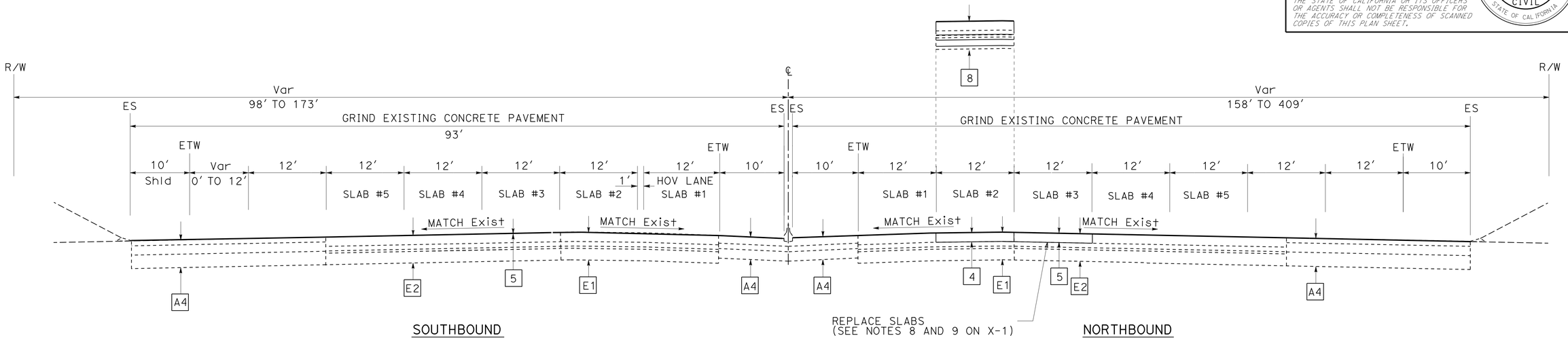

SOUTHBOUND

NORTHBOUND

SEPULVEDA Blvd UC TO VENTURA Blvd

PM 38.73 TO PM 38.97

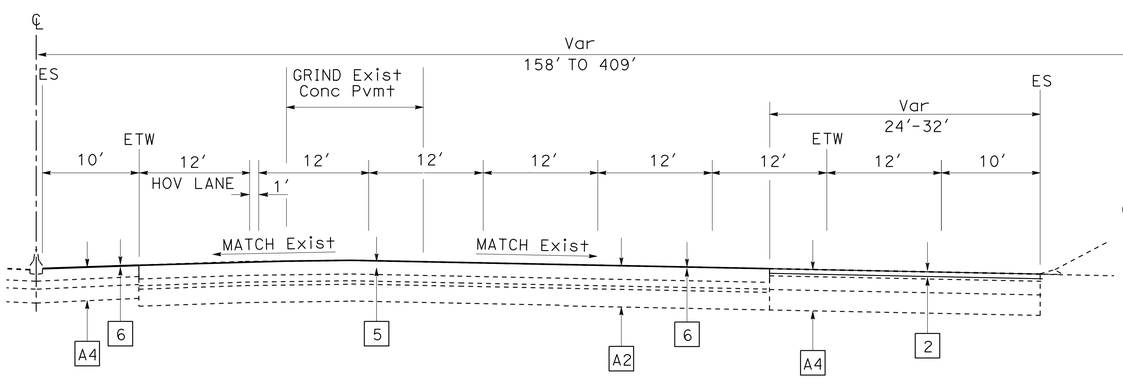

NORTHBOUND

PM 38.41TO PM 38.59
PM 38.62 TO PM 38.73

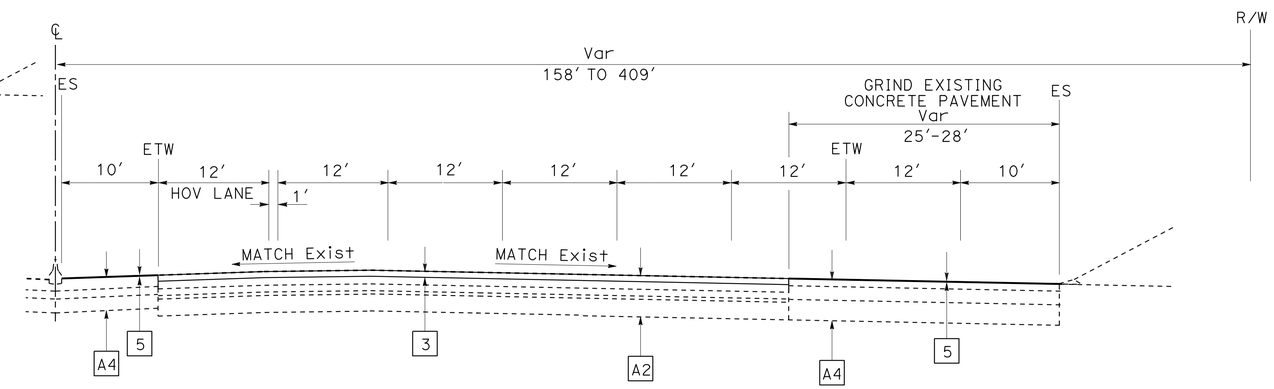

NORTHBOUND

0.7 MILE N OF MULHOLLAND Dr OC TO SEPULVEDA Blvd UC

PM 37.71 TO PM 38.41

TYPICAL CROSS SECTIONS

NO SCALE

ROUTE 405

X-24

STATE OF CALIFORNIA - DEPARTMENT OF TRANSPORTATION
Caltrans® OFFICE OF DESIGN A

FUNCTIONAL SUPERVISOR: MARIO GUTIERREZ
CALCULATED-DESIGNED BY: WILFRIDO MORALES
CHECKED BY: JOSEPH REYNOZA
REVISED BY
DATE REVISED

LAST REVISION 00-00-00
DATE PLOTTED => 04-MAR-2014
TIME PLOTTED => 13:33

Dist	COUNTY	ROUTE	POST MILES TOTAL PROJECT	SHEET No.	TOTAL SHEETS
07	LA	405	28.0/39.0	26	108

11-5-13
REGISTERED CIVIL ENGINEER DATE

2-10-14
PLANS APPROVAL DATE

REGISTERED PROFESSIONAL ENGINEER
WILFRIDO MORALES
No. 67533
Exp. 6/30/15
CIVIL
STATE OF CALIFORNIA

THE STATE OF CALIFORNIA OR ITS OFFICERS OR AGENTS SHALL NOT BE RESPONSIBLE FOR THE ACCURACY OR COMPLETENESS OF SCANNED COPIES OF THIS PLAN SHEET.

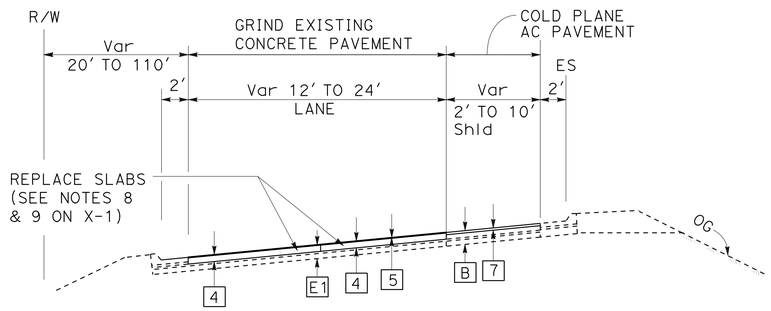

ROUTE 10 WEST TO ROUTE 405 SOUTH CONNECTOR

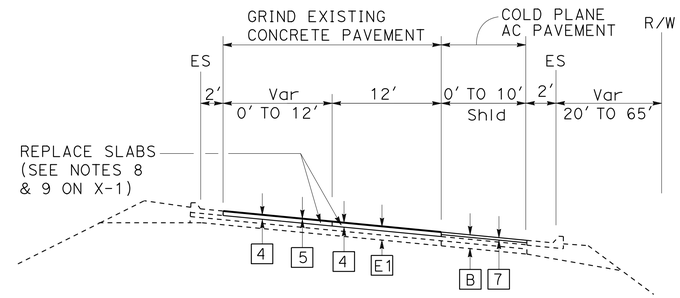

ROUTE 405 NORTH TO ROUTE 10 EAST CONNECTOR

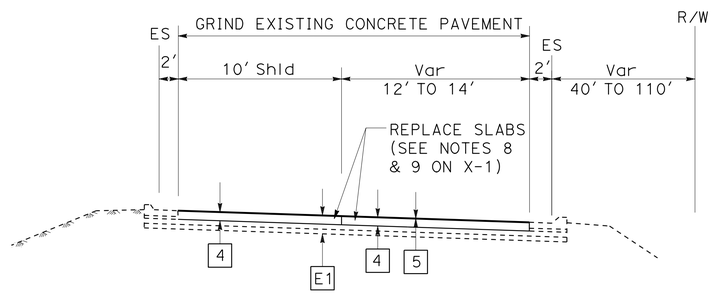

ROUTE 10 EAST TO ROUTE 405 SOUTH CONNECTOR

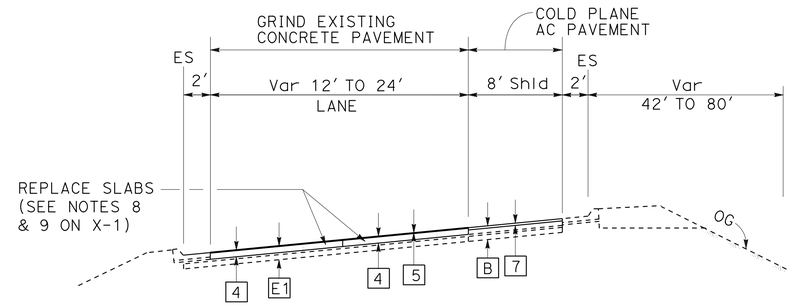

ROUTE 405 NORTH TO ROUTE 10 WEST CONNECTOR

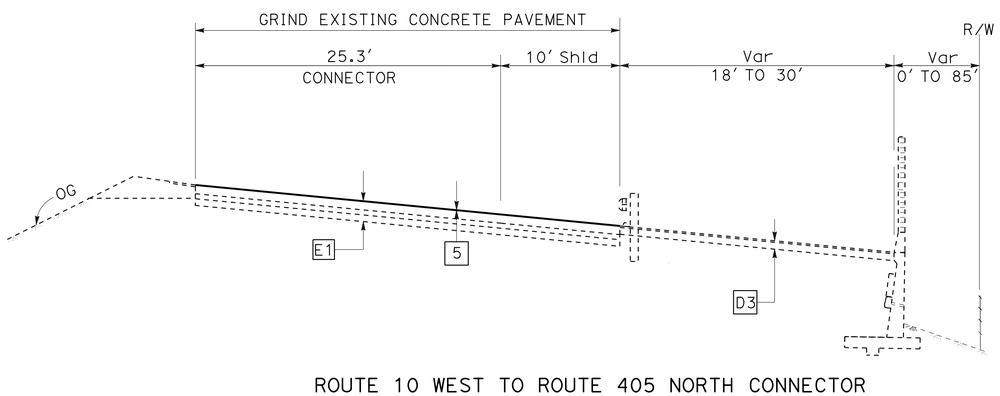

ROUTE 10 WEST TO ROUTE 405 NORTH CONNECTOR

TYPICAL CROSS SECTIONS

NO SCALE

X-25

STATE OF CALIFORNIA - DEPARTMENT OF TRANSPORTATION
Caltrans® OFFICE OF DESIGN A

FUNCTIONAL SUPERVISOR: MARIO GUTIERREZ
CALCULATED-DESIGNED BY: TIANQIANG GUO
CHECKED BY: WILFRIDO MORALES
REVISED BY
DATE REVISED

LAST REVISION 00-00-00
DATE PLOTTED => 04-MAR-2014
TIME PLOTTED => 13:33

Dist	COUNTY	ROUTE	POST MILES TOTAL PROJECT	SHEET No.	TOTAL SHEETS
07	LA	405	28.0/39.0	27	108

REGISTERED CIVIL ENGINEER 11-5-13 DATE

2-10-14
PLANS APPROVAL DATE

REGISTERED PROFESSIONAL ENGINEER
WILFRIDO MORALES
No. 67533
Exp. 6/30/15
CIVIL
STATE OF CALIFORNIA

THE STATE OF CALIFORNIA OR ITS OFFICERS OR AGENTS SHALL NOT BE RESPONSIBLE FOR THE ACCURACY OR COMPLETENESS OF SCANNED COPIES OF THIS PLAN SHEET.

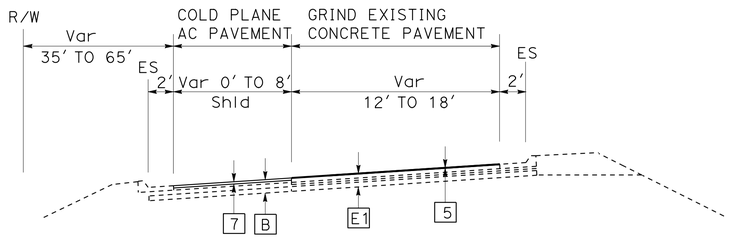

ROUTE 405 SOUTH TO ROUTE 10 WEST CONNECTOR

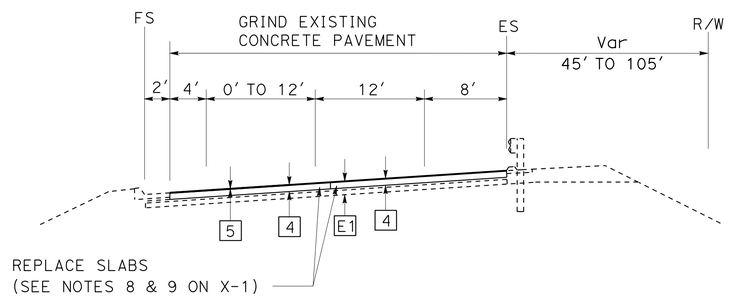

ROUTE 10 EAST TO ROUTE 405 NORTH CONNECTOR

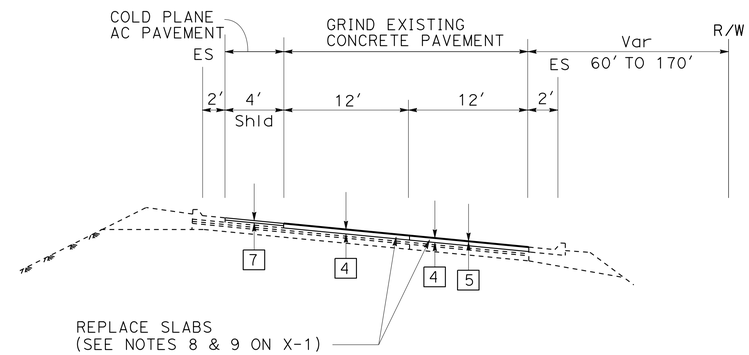

ROUTE 405 SOUTH TO ROUTE 10 EAST CONNECTOR

TYPICAL CROSS SECTIONS

NO SCALE

X-26

STATE OF CALIFORNIA - DEPARTMENT OF TRANSPORTATION
Caltrans® OFFICE OF DESIGN A

FUNCTIONAL SUPERVISOR: MARIO GUTIERREZ

CALCULATED-DESIGNED BY: TIANQIANG GUO
CHECKED BY: WILFRIDO MORALES

REVISED BY | DATE REVISED

LAST REVISION 00-00-00 | DATE PLOTTED => 04-MAR-2014 | TIME PLOTTED => 13:33

Dist	COUNTY	ROUTE	POST MILES TOTAL PROJECT	SHEET No.	TOTAL SHEETS
07	LA	405	28.0/39.0	28	108

REGISTERED CIVIL ENGINEER 11-5-13 DATE

2-10-14
PLANS APPROVAL DATE

REGISTERED PROFESSIONAL ENGINEER WILFRIDO MORALES No. 67533 Exp. 6/30/15 CIVIL STATE OF CALIFORNIA

THE STATE OF CALIFORNIA OR ITS OFFICERS OR AGENTS SHALL NOT BE RESPONSIBLE FOR THE ACCURACY OR COMPLETENESS OF SCANNED COPIES OF THIS PLAN SHEET.

NOTE:

1. FOR ACCURATE RIGHT OF WAY AND ACCESS DATA, CONTACT RIGHT OF WAY ENGINEERING AT THE DISTRICT OFFICE.

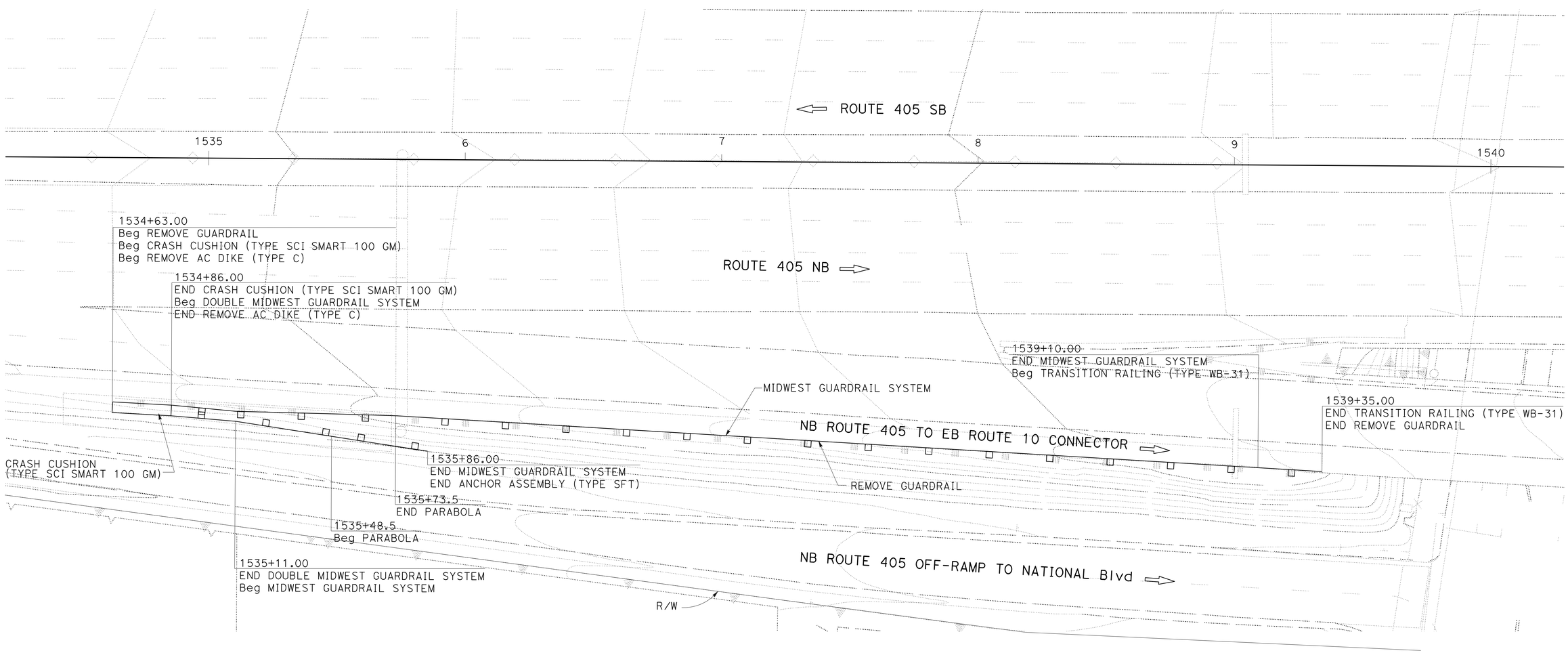

LAYOUT
SCALE: 1" = 20'

L-1

STATE OF CALIFORNIA - DEPARTMENT OF TRANSPORTATION
Caltrans® OFFICE OF DESIGN A

FUNCTIONAL SUPERVISOR: MARIO GUTIERREZ
CALCULATED-DESIGNED BY: WILFRIDO MORALES
CHECKED BY: JOSEPH REYNOZA
REVISED BY
DATE REVISED

LAST REVISION 00-00-00
DATE PLOTTED => 04-MAR-2014
TIME PLOTTED => 13:33

Dist	COUNTY	ROUTE	POST MILES TOTAL PROJECT	SHEET No.	TOTAL SHEETS
07	LA	405	28.0/39.0	29	108

REGISTERED CIVIL ENGINEER 11-5-13 DATE

2-10-14
PLANS APPROVAL DATE

REGISTERED PROFESSIONAL ENGINEER
WILFRIDO MORALES
No. 67533
Exp. 6/30/15
CIVIL
STATE OF CALIFORNIA

THE STATE OF CALIFORNIA OR ITS OFFICERS OR AGENTS SHALL NOT BE RESPONSIBLE FOR THE ACCURACY OR COMPLETENESS OF SCANNED COPIES OF THIS PLAN SHEET.

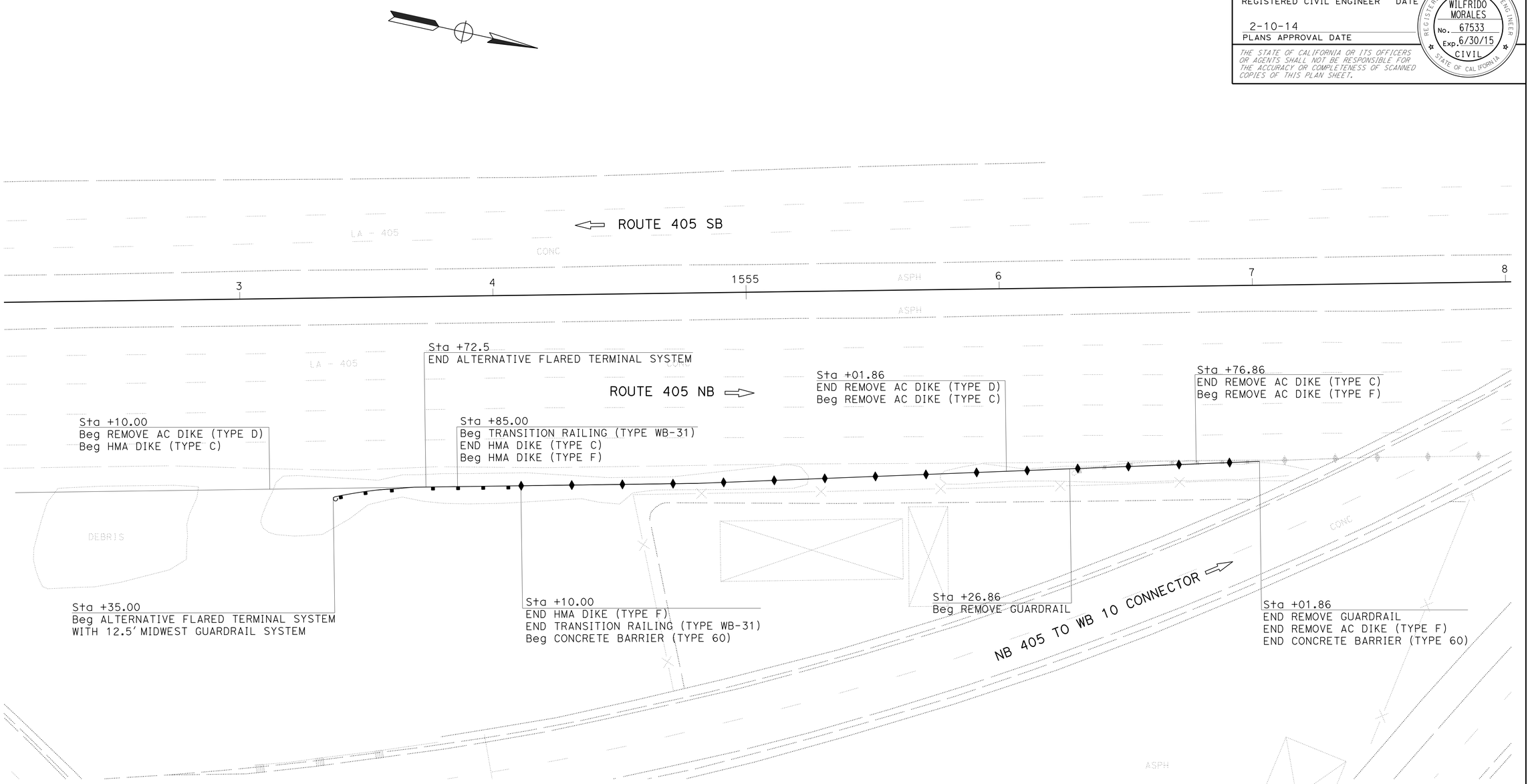

LAYOUT

SCALE: 1" = 20'

L-2

REVISED BY | DATE REVISED
WILFRIDO MORALES | JOSEPH REYNOZA
CALCULATED-DESIGNED BY | CHECKED BY
FUNCTIONAL SUPERVISOR | MARIO GUTIERREZ

STATE OF CALIFORNIA - DEPARTMENT OF TRANSPORTATION
Caltrans OFFICE OF DESIGN A

LAST REVISION 00-00-00 | DATE PLOTTED => 04-MAR-2014 | TIME PLOTTED => 13:33

Dist	COUNTY	ROUTE	POST MILES TOTAL PROJECT	SHEET No.	TOTAL SHEETS
07	LA	405	28.0/39.0	30	108

REGISTERED CIVIL ENGINEER 11-5-13 DATE

2-10-14
PLANS APPROVAL DATE

REGISTERED PROFESSIONAL ENGINEER WILFRIDO MORALES No. 67533 Exp 6/30/15 CIVIL STATE OF CALIFORNIA

THE STATE OF CALIFORNIA OR ITS OFFICERS OR AGENTS SHALL NOT BE RESPONSIBLE FOR THE ACCURACY OR COMPLETENESS OF SCANNED COPIES OF THIS PLAN SHEET.

NOTE:

1. FOR ACCURATE RIGHT OF WAY AND ACCESS DATA, CONTACT RIGHT OF WAY ENGINEERING AT THE DISTRICT OFFICE.

LEGEND:

ROADWAY EXCAVATION (TYPE Z-2) (AERIALLY DEPOSITED LEAD)

CURVE DATA

No. (#)	R	T	Δ	L
1	150.00	131.18	82° 20′ 30″	215.18

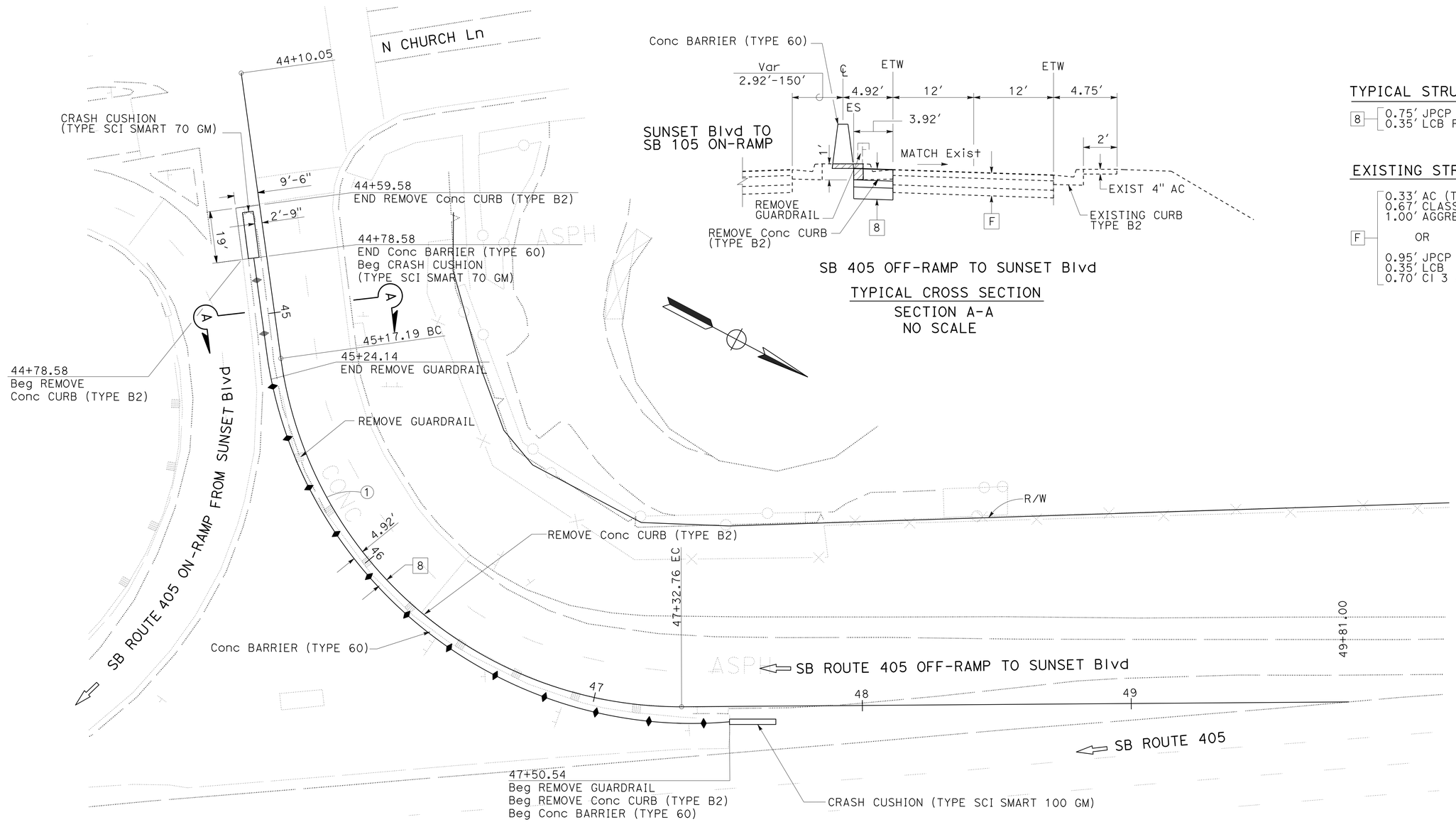

SB 405 OFF-RAMP TO SUNSET Blvd

TYPICAL CROSS SECTION

SECTION A-A
NO SCALE

TYPICAL STRUCTURAL SECTION

8 — 0.75′ JPCP (RSC)
0.35′ LCB RS

EXISTING STRUCTURAL SECTION

F —
0.33′ AC (TYPE A)
0.67′ CLASS 3 AB
1.00′ AGGREGATE SUBBASE

OR

0.95′ JPCP
0.35′ LCB
0.70′ Cl 3 AB

LAYOUT

SCALE: 1" = 20′

L-3

STATE OF CALIFORNIA - DEPARTMENT OF TRANSPORTATION
Caltrans® OFFICE OF DESIGN A

FUNCTIONAL SUPERVISOR: MARIO GUTIERREZ
CALCULATED-DESIGNED BY: WILFRIDO MORALES
CHECKED BY: JOSEPH REYNOZA
REVISED BY
DATE REVISED

LAST REVISION 00-00-00
DATE PLOTTED => 04-MAR-2014
TIME PLOTTED => 13:33

Dist	COUNTY	ROUTE	POST MILES TOTAL PROJECT	SHEET No.	TOTAL SHEETS
07	LA	405	28.0/39.0	31	108

11-5-13
REGISTERED CIVIL ENGINEER DATE

2-10-14
PLANS APPROVAL DATE

REGISTERED PROFESSIONAL ENGINEER
WILFRIDO MORALES
No. 67533
Exp 6/30/15
CIVIL
STATE OF CALIFORNIA

THE STATE OF CALIFORNIA OR ITS OFFICERS OR AGENTS SHALL NOT BE RESPONSIBLE FOR THE ACCURACY OR COMPLETENESS OF SCANNED COPIES OF THIS PLAN SHEET.

NOTE:

1. FOR ACCURATE RIGHT OF WAY AND ACCESS DATA, CONTACT RIGHT OF WAY ENGINEERING AT THE DISTRICT OFFICE.

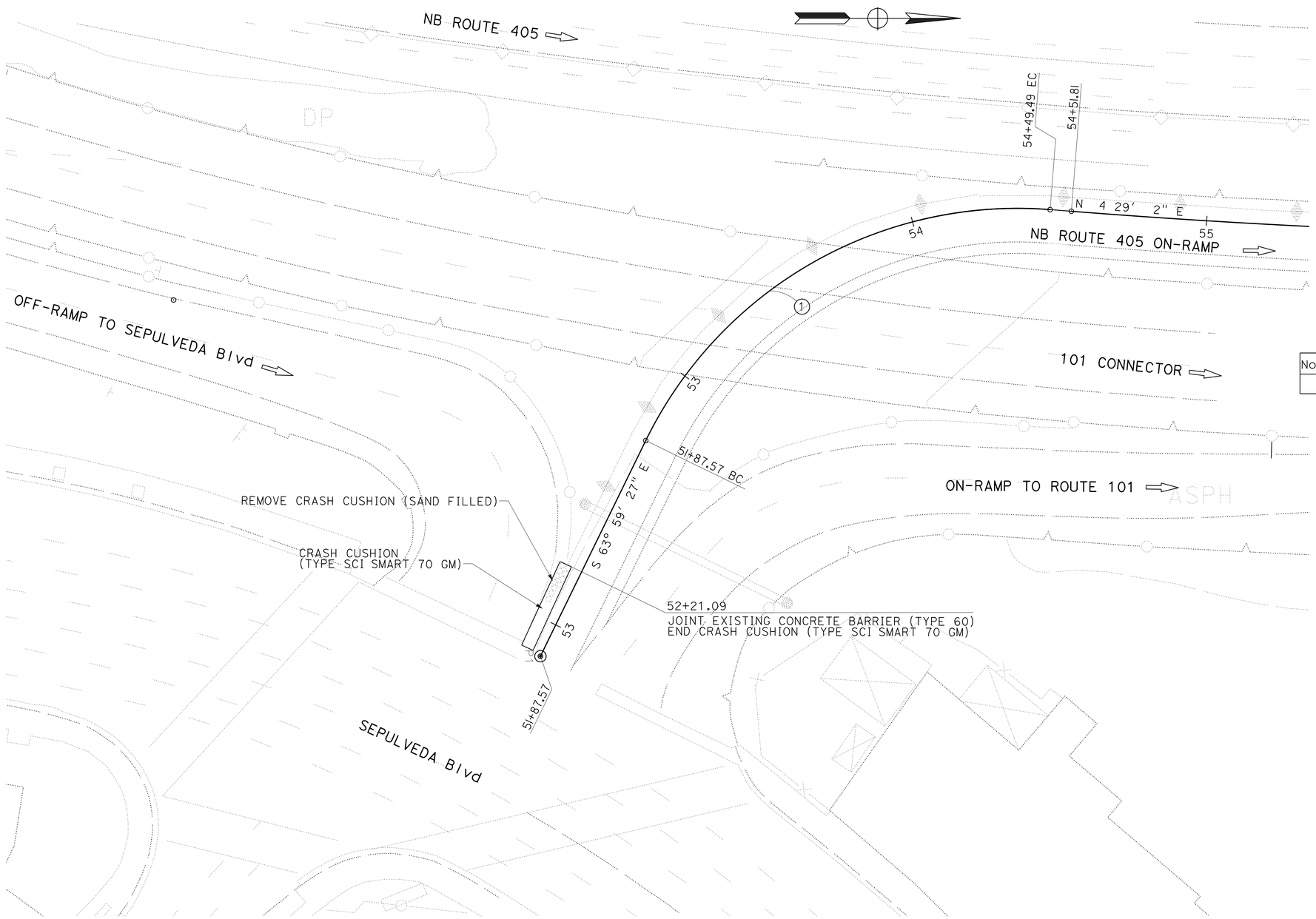

CURVE DATA

No. (#)	R	Δ	T	L
1	148.00	68 28'28"	100.47	176.44

LAYOUT

SCALE: 1" = 20'

L-4

REVISED BY	DATE REVISED

CALCULATED-DESIGNED BY	CHECKED BY
WILFRIDO MORALES	JOSEPH REYNOZA

FUNCTIONAL SUPERVISOR: MARIO GUTIERREZ

STATE OF CALIFORNIA - DEPARTMENT OF TRANSPORTATION
Caltrans® OFFICE OF DESIGN A

LAST REVISION 00-00-00
DATE PLOTTED => 04-MAR-2014
TIME PLOTTED => 13:33

Dist	COUNTY	ROUTE	POST MILES TOTAL PROJECT	SHEET No.	TOTAL SHEETS
07	LA	405	28.0/39.0	32	108

REGISTERED CIVIL ENGINEER 11-5-13 DATE

2-10-14
PLANS APPROVAL DATE

REGISTERED PROFESSIONAL ENGINEER WILFRIDO MORALES No. 67533 Exp. 6/30/15 CIVIL STATE OF CALIFORNIA

THE STATE OF CALIFORNIA OR ITS OFFICERS OR AGENTS SHALL NOT BE RESPONSIBLE FOR THE ACCURACY OR COMPLETENESS OF SCANNED COPIES OF THIS PLAN SHEET.

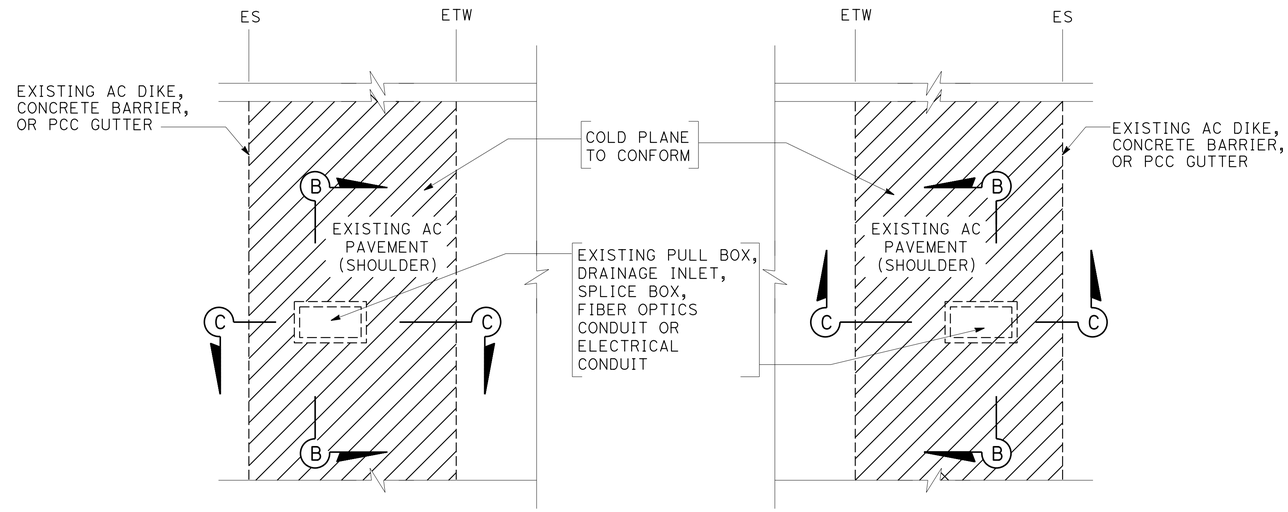

FIBER OPTIC
PULL BOX, DRAINAGE INLET OR SPLICE BOX
(VARIOUS LOCATIONS)

LEGEND:

COLD PLANE AC PAVEMENT HMA (TYPE A)

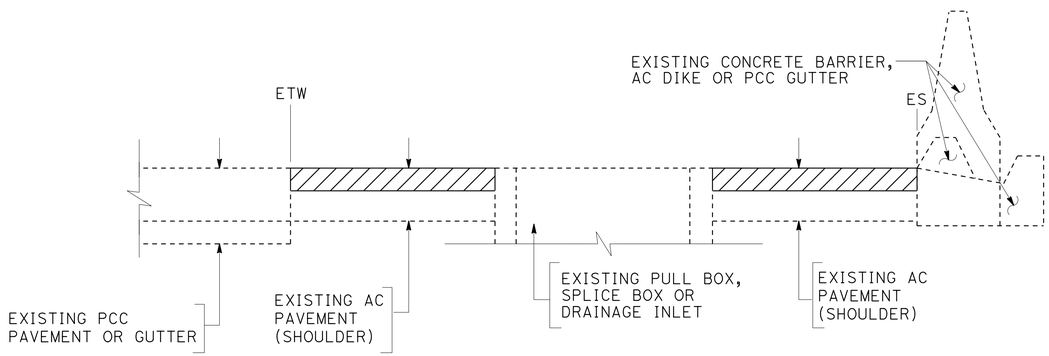

SECTION C-C

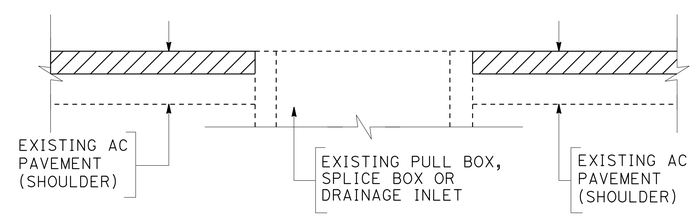

SECTION B-B

TYPICAL FIBER OPTIC PULL BOX, SPLICE BOX OR DRAINAGE INLET

CONSTRUCTION DETAILS

C-1

STATE OF CALIFORNIA - DEPARTMENT OF TRANSPORTATION
Caltrans® OFFICE OF DESIGN A

FUNCTIONAL SUPERVISOR: MARIO GUTIERREZ

CALCULATED-DESIGNED BY: WILFRIDO MORALES
CHECKED BY: JOSEPH REYNOZA

REVISED BY | DATE REVISED

LAST REVISION 00-00-00 | DATE PLOTTED => 04-MAR-2014 | TIME PLOTTED => 13:33

Dist	COUNTY	ROUTE	POST MILES TOTAL PROJECT	SHEET No.	TOTAL SHEETS
07	LA	405	28.0/39.0	33	108

REGISTERED CIVIL ENGINEER 11-5-13 DATE

2-10-14
PLANS APPROVAL DATE

REGISTERED PROFESSIONAL ENGINEER WILFRIDO MORALES No. 67533 Exp. 6/30/15 CIVIL STATE OF CALIFORNIA

THE STATE OF CALIFORNIA OR ITS OFFICERS OR AGENTS SHALL NOT BE RESPONSIBLE FOR THE ACCURACY OR COMPLETENESS OF SCANNED COPIES OF THIS PLAN SHEET.

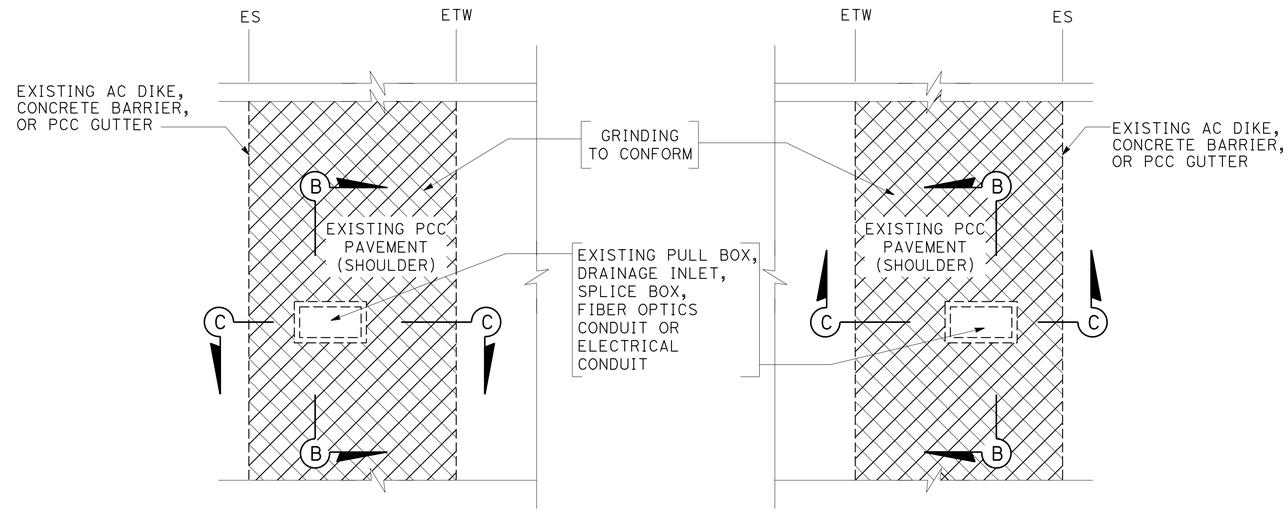

FIBER OPTIC
PULL BOX, DRAINAGE INLET OR SPLICE BOX
(VARIOUS LOCATIONS)

LEGEND:

GRIND EXISTING Conc Pvmt

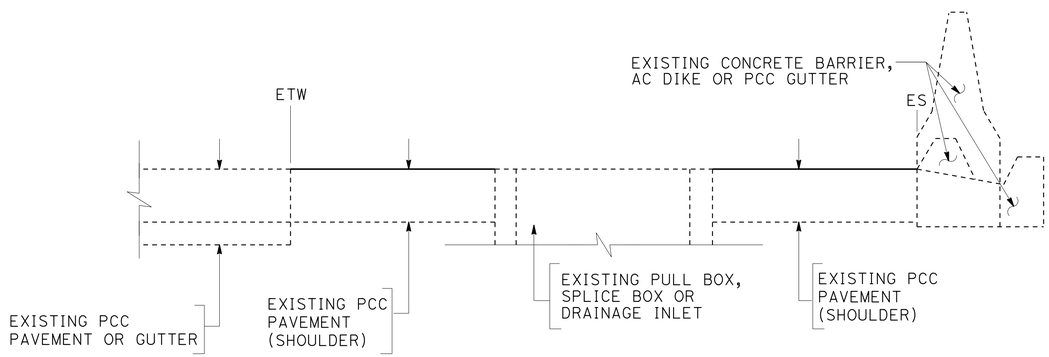

SECTION C-C

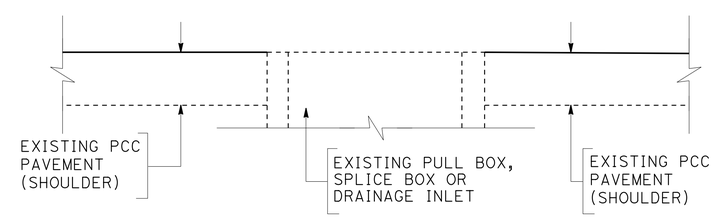

SECTION B-B

TYPICAL FIBER OPTIC PULL BOX, SPLICE BOX OR DRAINAGE INLET

CONSTRUCTION DETAILS

C-2

STATE OF CALIFORNIA - DEPARTMENT OF TRANSPORTATION
Caltrans® OFFICE OF DESIGN A

FUNCTIONAL SUPERVISOR: MARIO GUTIERREZ

CALCULATED-DESIGNED BY: WILFRIDO MORALES
CHECKED BY: JOSEPH REYNOZA

REVISED BY | DATE REVISED

LAST REVISION 00-00-00 | DATE PLOTTED => 04-MAR-2014 | TIME PLOTTED => 13:33

Dist	COUNTY	ROUTE	POST MILES TOTAL PROJECT	SHEET No.	TOTAL SHEETS
07	LA	405	28.0/39.0	34	108

REGISTERED CIVIL ENGINEER 11-5-13 DATE

2-10-14
PLANS APPROVAL DATE

REGISTERED PROFESSIONAL ENGINEER WILFRIDO MORALES No. 67533 Exp. 6/30/15 CIVIL STATE OF CALIFORNIA

THE STATE OF CALIFORNIA OR ITS OFFICERS OR AGENTS SHALL NOT BE RESPONSIBLE FOR THE ACCURACY OR COMPLETENESS OF SCANNED COPIES OF THIS PLAN SHEET.

ABBREVIATIONS:

ABCS - AGGREGATE BASE CEMENT SLURRY
ATB - ALTERNATE TREATED BASE
JPCP - JOINTED PLAIN CONCRETE PAVEMENT (RSC)
TW - TRAVELED WAY

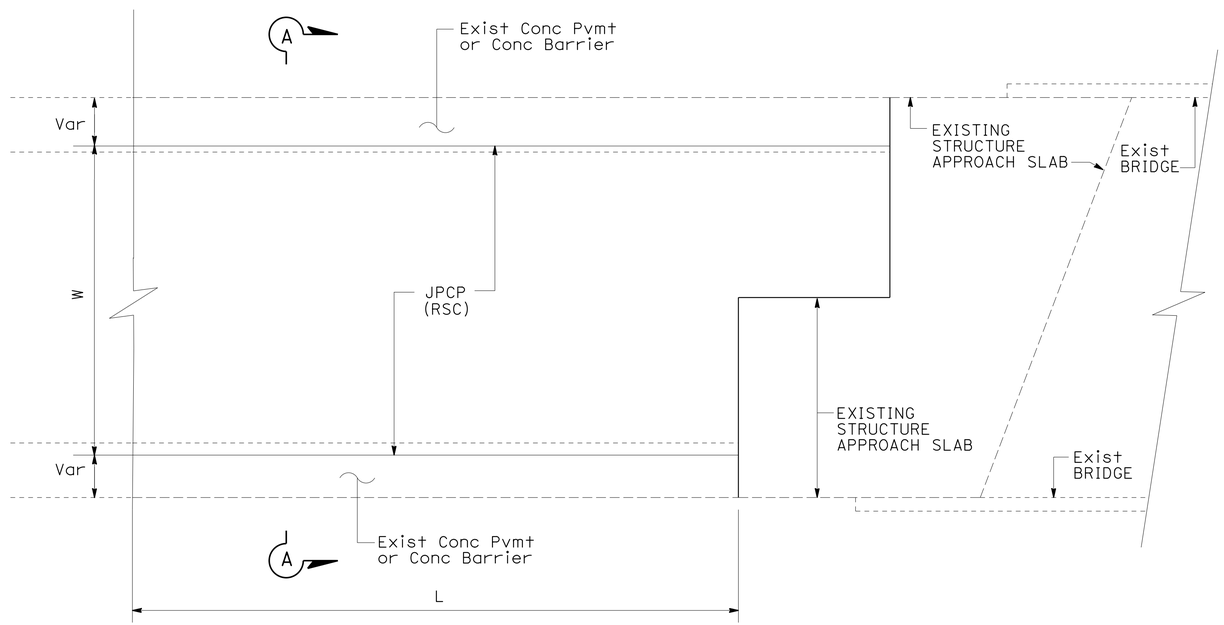

PLAN

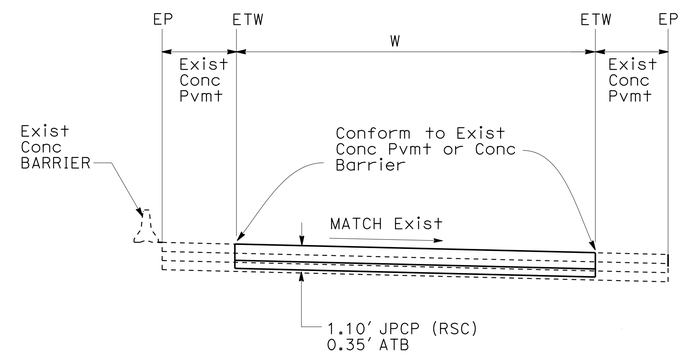

SECTION A-A

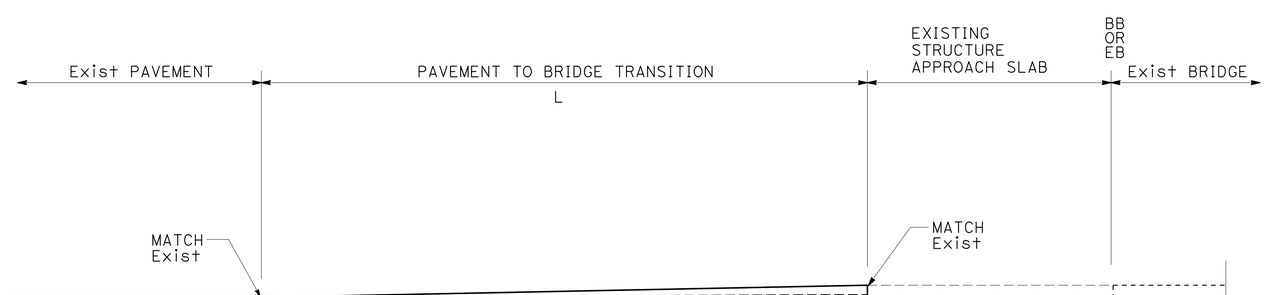

ELEVATION

LOCATION TABLE

Rte	PM	DIRECTION	DESCRIPTION	L	W
405	29.15	SB	SOUTH END OF NATIONAL UC (Br No. 53703)	50'	54'
405	29.19	SB	NORTH END OF NATIONAL UC (Br No. 53703)	45'	50'
405	29.83	NB	SOUTH END OF EXPOSITION UC (Br No. 53704)	45'	48'
405	29.83	SB	SOUTH END OF EXPOSITION UC (Br No. 53704)	100'	64'

CONSTRUCTION DETAIL

PAVEMENT TO BRIDGE TRANSITION

NO SCALE

C-3

REVISED BY | DATE REVISED
WILFRIDO MORALES | JOSEPH REYNOZA
CALCULATED-DESIGNED BY | CHECKED BY
FUNCTIONAL SUPERVISOR | MARIO GUTIERREZ
STATE OF CALIFORNIA - DEPARTMENT OF TRANSPORTATION
Caltrans® OFFICE OF DESIGN A

LAST REVISION 00-00-00
DATE PLOTTED => 04-MAR-2014
TIME PLOTTED => 13:33

Dist	COUNTY	ROUTE	POST MILES TOTAL PROJECT	SHEET No.	TOTAL SHEETS
07	LA	405	28.0/39.0	35	108

REGISTERED CIVIL ENGINEER 11-5-13 DATE

2-10-14
PLANS APPROVAL DATE

REGISTERED PROFESSIONAL ENGINEER WILFRIDO MORALES No. 67533 Exp. 6/30/15 CIVIL STATE OF CALIFORNIA

THE STATE OF CALIFORNIA OR ITS OFFICERS OR AGENTS SHALL NOT BE RESPONSIBLE FOR THE ACCURACY OR COMPLETENESS OF SCANNED COPIES OF THIS PLAN SHEET.

NOTE:

1. LOCATIONS OF CONSTRUCTION AREA SIGNS AS SHOWN ARE APPROXIMATE. EXACT LOCATIONS WILL BE DETERMINED BY THE ENGINEER.

ABBREVIATION:

CA - CALIFORNIA CODE

STATIONARY MOUNTED CONSTRUCTION AREA SIGNS

SIGN NUMBER (X)	SIGN CODE	PANEL SIZE (inch x inch)	SIGN MESSAGE	NUMBER OF POSTS AND SIZE	NUMBER OF SIGNS
1	C40(CA)	144 x 60	TRAFFIC FINES DOUBLED IN CONSTRUCTION ZONES	2-4" x 6"	2
2	W20-1	48 x 48	ROAD WORK AHEAD	2-4" x 6"	2
3	W20-1	48 x 48	ROAD WORK AHEAD	1-4" x 6"	20
4	G20-2	48 x 24	END ROAD WORK	1-4" x 6"	14

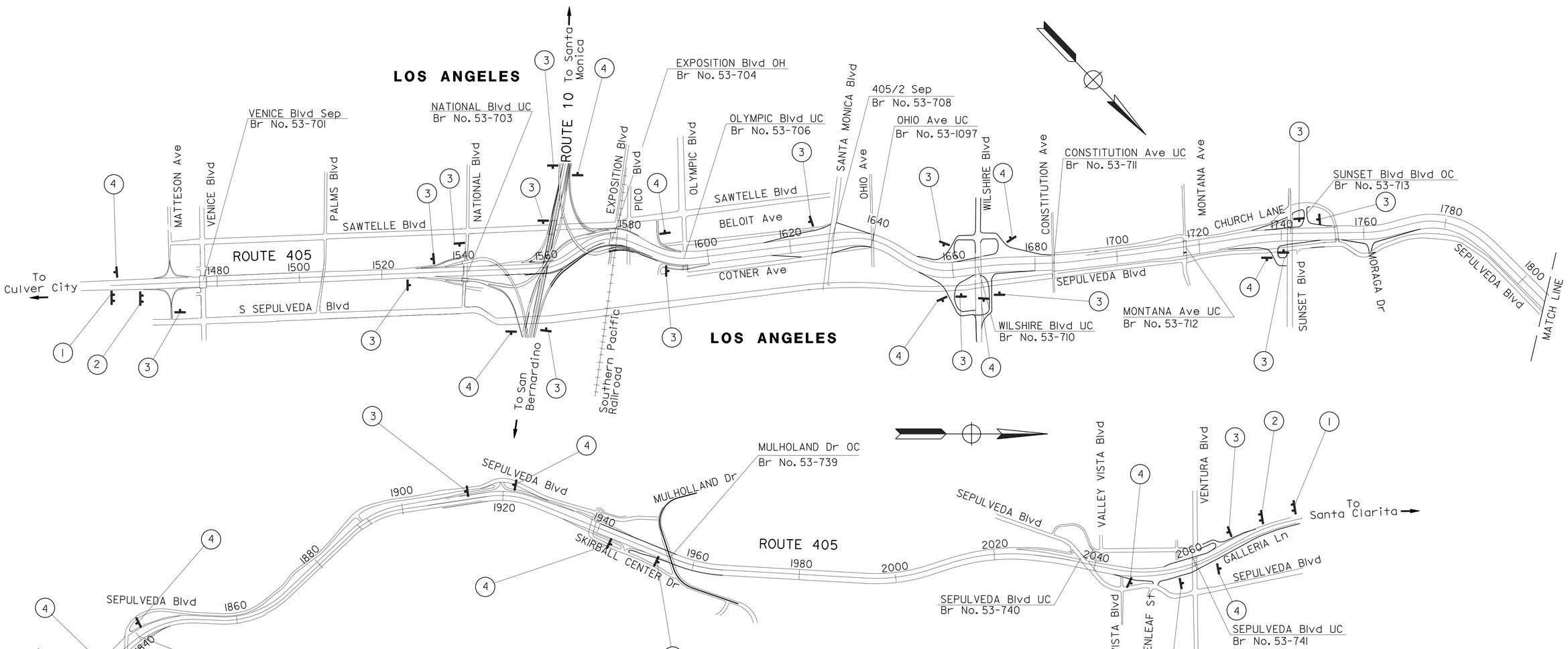

CONSTRUCTION AREA SIGNS

NO SCALE

CS-1

STATE OF CALIFORNIA - DEPARTMENT OF TRANSPORTATION
OFFICE OF DESIGN A

FUNCTIONAL SUPERVISOR: MARIO GUTIERREZ
CALCULATED-DESIGNED BY: WILFRIDO MORALES
CHECKED BY: JOSEPH REYNOZA
REVISED BY
DATE REVISED

LAST REVISION 00-00-00
DATE PLOTTED => 04-MAR-2014
TIME PLOTTED => 13:33

Dist	COUNTY	ROUTE	POST MILES TOTAL PROJECT	SHEET No.	TOTAL SHEETS
07	LA	405	28.0/39.0	36	108

REGISTERED CIVIL ENGINEER 11-5-13 DATE

2-10-14
PLANS APPROVAL DATE

REGISTERED PROFESSIONAL ENGINEER WILFRIDO MORALES No. 67533 Exp. 6/30/15 CIVIL STATE OF CALIFORNIA

THE STATE OF CALIFORNIA OR ITS OFFICERS OR AGENTS SHALL NOT BE RESPONSIBLE FOR THE ACCURACY OR COMPLETENESS OF SCANNED COPIES OF THIS PLAN SHEET.

LEGEND:

- TEMPORARY CRASH CUSHION ARRAY
- • CHANNELIZER (SURFACE MOUNTED)
- ⇨ TRAFFIC DIRECTION

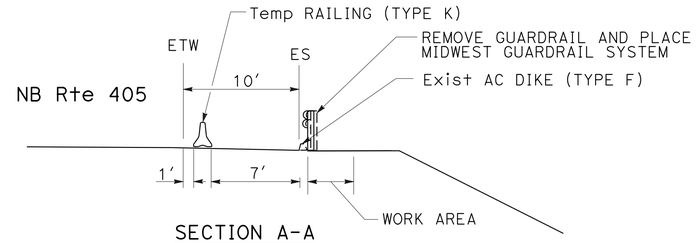

SECTION A-A
NO SCALE

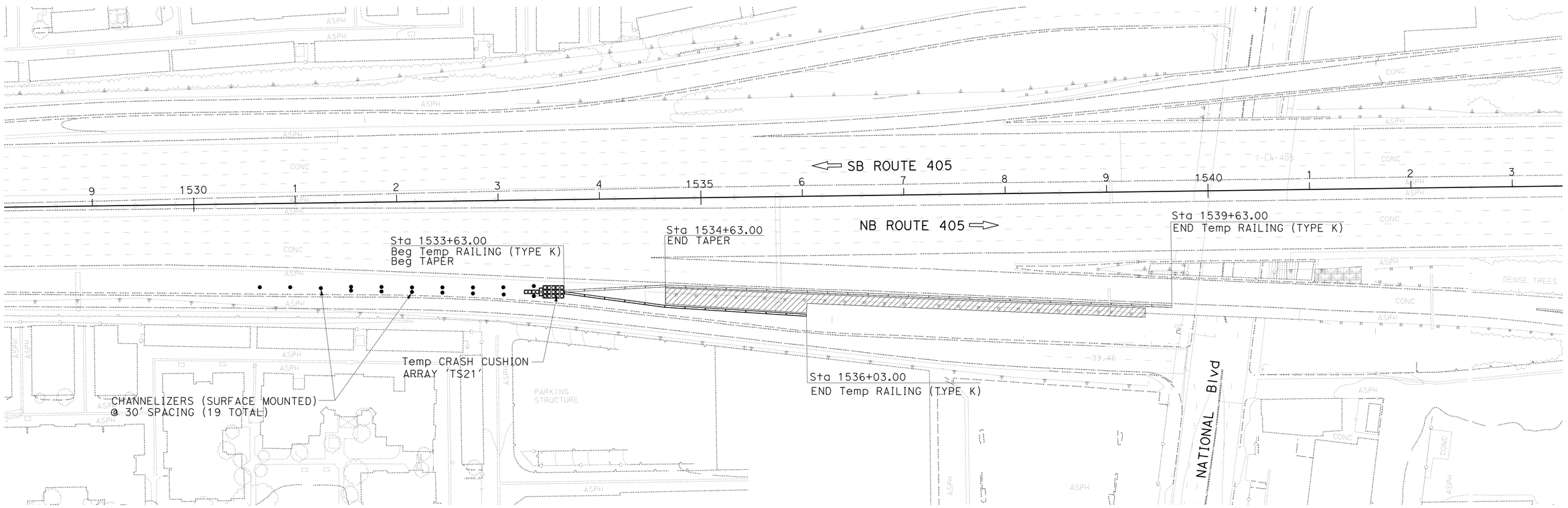

TRAFFIC HANDLING PLAN

SCALE: 1" = 50'

TH-1

STATE OF CALIFORNIA - DEPARTMENT OF TRANSPORTATION
Caltrans® OFFICE OF DESIGN A

FUNCTIONAL SUPERVISOR: MARIO GUTIERREZ

CALCULATED-DESIGNED BY: WILFRIDO MORALES
CHECKED BY: JOSEPH REYNOZA

REVISED BY
DATE REVISED

LAST REVISION 00-00-00
DATE PLOTTED => 04-MAR-2014
TIME PLOTTED => 13:33

Dist	COUNTY	ROUTE	POST MILES TOTAL PROJECT	SHEET No.	TOTAL SHEETS
07	LA	405	28.0/39.0	37	108

11-5-13
REGISTERED CIVIL ENGINEER DATE

2-10-14
PLANS APPROVAL DATE

REGISTERED PROFESSIONAL ENGINEER
WILFRIDO MORALES
No. 67533
Exp. 6/30/15
CIVIL
STATE OF CALIFORNIA

THE STATE OF CALIFORNIA OR ITS OFFICERS OR AGENTS SHALL NOT BE RESPONSIBLE FOR THE ACCURACY OR COMPLETENESS OF SCANNED COPIES OF THIS PLAN SHEET.

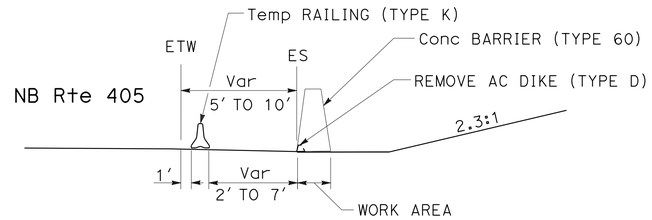

SECTION A-A
NO SCALE

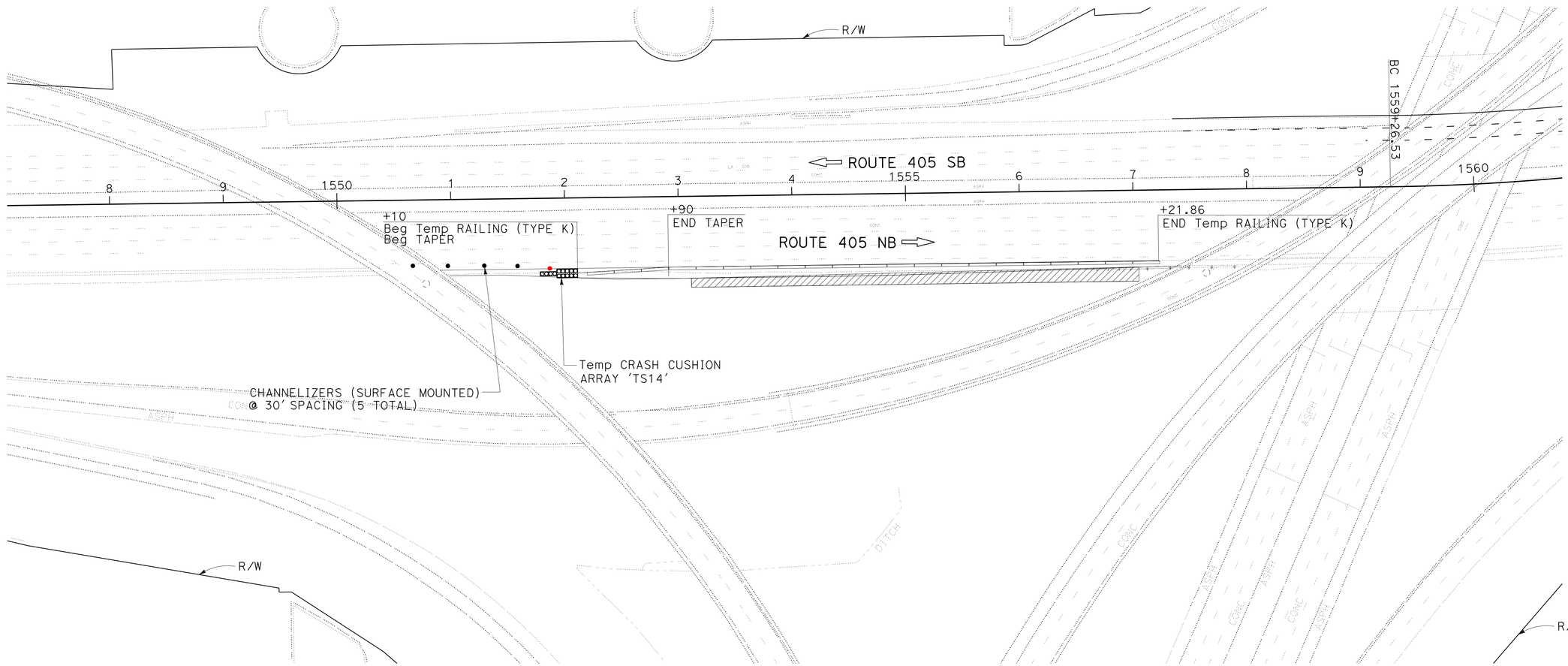

TRAFFIC HANDLING PLAN

SCALE: 1" = 50'

TH-2

STATE OF CALIFORNIA - DEPARTMENT OF TRANSPORTATION
Caltrans® OFFICE OF DESIGN A

FUNCTIONAL SUPERVISOR: MARIO GUTIERREZ

CALCULATED-DESIGNED BY: WILFRIDO MORALES
CHECKED BY: JOSEPH REYNOZA

REVISED BY
DATE REVISED

LAST REVISION 00-00-00
DATE PLOTTED => 04-MAR-2014
TIME PLOTTED => 13:33

Dist	COUNTY	ROUTE	POST MILES TOTAL PROJECT	SHEET No.	TOTAL SHEETS
07	LA	405	28.0/39.0	38	108

REGISTERED CIVIL ENGINEER 11-5-13 DATE

2-10-14
PLANS APPROVAL DATE

REGISTERED PROFESSIONAL ENGINEER
WILFRIDO MORALES
No. 67533
Exp. 6/30/15
CIVIL
STATE OF CALIFORNIA

THE STATE OF CALIFORNIA OR ITS OFFICERS OR AGENTS SHALL NOT BE RESPONSIBLE FOR THE ACCURACY OR COMPLETENESS OF SCANNED COPIES OF THIS PLAN SHEET.

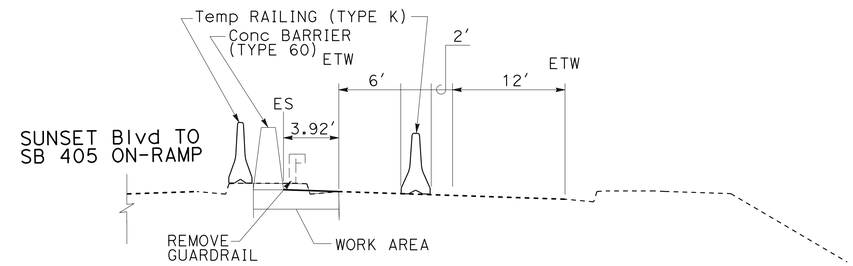

SB 405 OFF-RAMP TO SUNSET Blvd
TYPICAL CROSS SECTION
SECTION A-A
NO SCALE

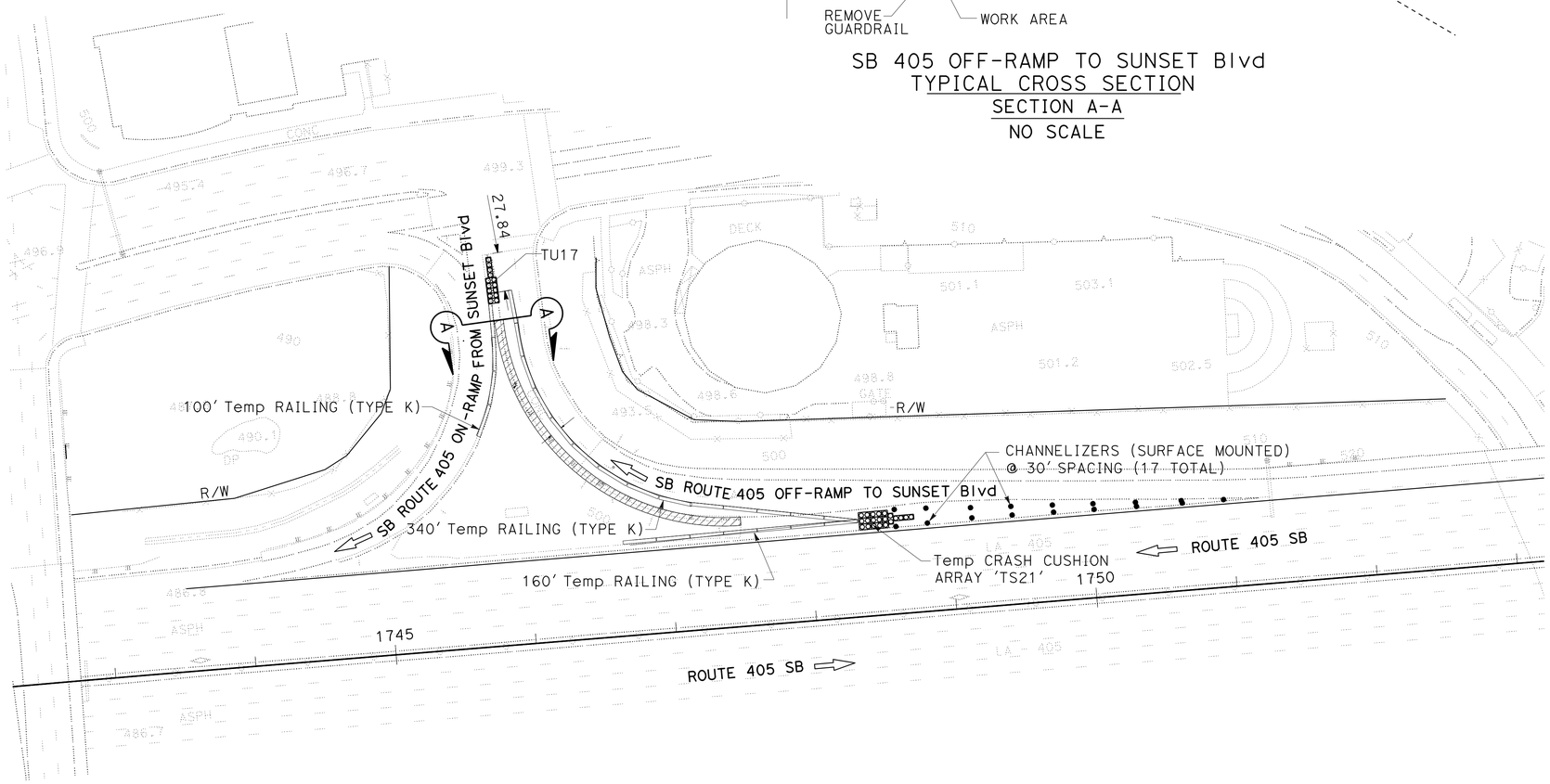

TRAFFIC HANDLING PLAN

SCALE: 1" = 50'

TH-3

STATE OF CALIFORNIA - DEPARTMENT OF TRANSPORTATION
Caltrans® OFFICE OF DESIGN A

FUNCTIONAL SUPERVISOR: MARIO GUTIERREZ
CALCULATED-DESIGNED BY: WILFRIDO MORALES
CHECKED BY: JOSEPH REYNOZA
REVISED BY
DATE REVISED

LAST REVISION 00-00-00
DATE PLOTTED => 04-MAR-2014
TIME PLOTTED => 13:33

Dist	COUNTY	ROUTE	POST MILES TOTAL PROJECT	SHEET No.	TOTAL SHEETS
07	LA	405	28.0/39.0	39	108

REGISTERED CIVIL ENGINEER 9-17-13 DATE

2-10-14
PLANS APPROVAL DATE

REGISTERED PROFESSIONAL ENGINEER SHANGJIA HORN No. 51846 Exp. 6-30-14 CIVIL STATE OF CALIFORNIA

THE STATE OF CALIFORNIA OR ITS OFFICERS OR AGENTS SHALL NOT BE RESPONSIBLE FOR THE ACCURACY OR COMPLETENESS OF SCANNED COPIES OF THIS PLAN SHEET.

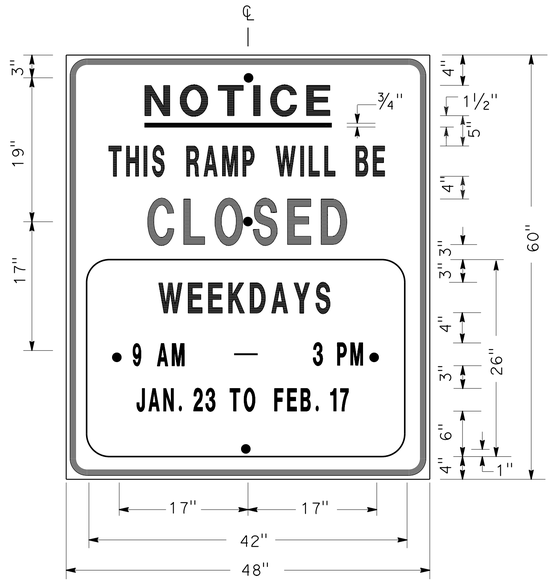

SIGN SP-1

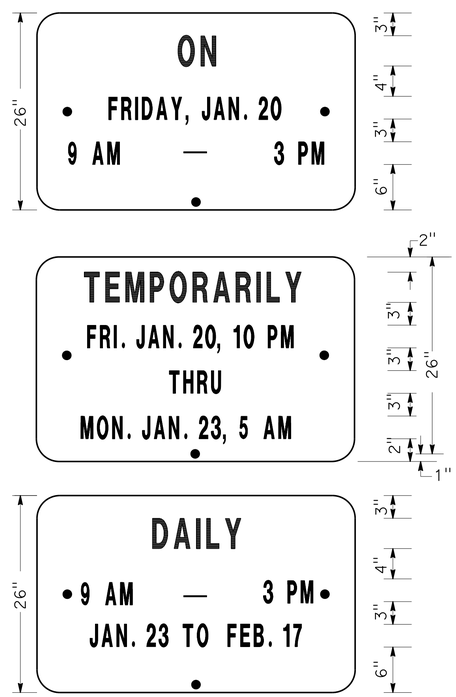

ALTERNATE OVERLAY PANELS (TYPICAL)

SPECIAL ADVANCE NOTICE PUBLICITY SIGN

NOTES: (SIGN SP-1)

1. LETTERS AND BORDER SHALL BE BLACK ON REFLECTORIZED ORANGE BACKGROUND.
2. BOLT HOLES SHALL BE 3/8" DIAMETER.
3. BASE MATERIAL SHALL BE ALUMINUM (MINIMUM 0.06").
4. SIGNS SHALL BE MOUNTED WITH BOTTOMS OF SIGNS A MINIMUM OF 7' ABOVE GROUND.

SIZE	BORDER WIDTH	MARGIN WIDTH	LETTER SIZE					CORNER RADIUS
			LINE 1	LINE 2*	LINE 3	LINE 4	LINE 5, 6, & 7*	
48"x60"	1 1/4"	3/4"	4E	4D	6E	4D		3"
42"x26"	OVERLAY						3D	1 1/2"
* CONDENSED SPACING IF NECESSARY								

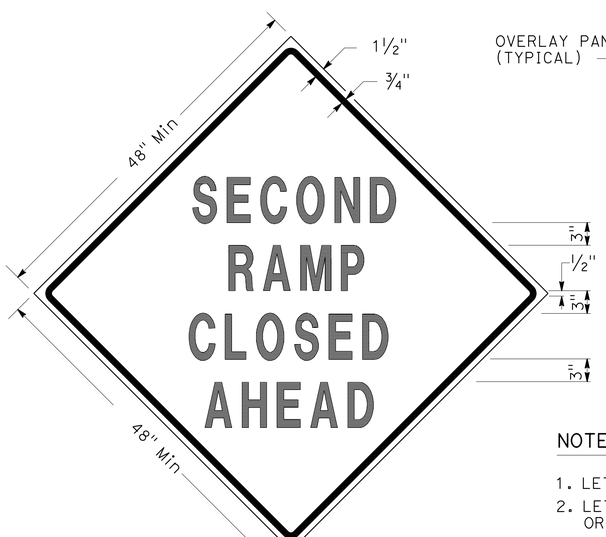

SIGN SP-3

SIGN SP-5

NOTES: (SIGNS SP-3 & SP-5)

1. LETTERS - 6" SERIES D.
2. LETTERS AND BORDER SHALL BE BLACK ON REFLECTORIZED ORANGE BACKGROUND.
3. BOLT HOLES SHALL BE 3/8" DIAMETER.
4. BASE MATERIAL SHALL BE ALUMINUM (MINIMUM 0.06").
5. SIGNS SHALL BE MOUNTED WITH BOTTOMS OF SIGNS A MINIMUM OF 7' ABOVE GROUND.
6. SIGN SP-5 SHALL BE USED IF THE OFF-RAMP TO BE CLOSED FOLLOWS A FREEWAY OFF-CONNECTOR.

SPECIAL SIGNS FOR EXIT RAMP CLOSURES

SIGN SP-4

NOTES: (SIGN SP-4)

1. LETTERS - 6" SERIES C.
2. LETTERS AND BORDER SHALL BE BLACK ON REFLECTORIZED WHITE BACKGROUND.
3. BOLT HOLES SHALL BE 3/8" DIAMETER.
4. BASE MATERIAL SHALL BE ALUMINUM (MINIMUM 0.06").
5. SIGNS SHALL BE PLACED AT RAMP ENTRANCES IN ADDITION TO SIGNS POSTED IN ACCORDANCE WITH RSP T14.

SPECIAL SIGN FOR ENTRANCE RAMP CLOSURES

TRAFFIC HANDLING DETAILS
TRAFFIC CONTROL SYSTEM FOR RAMP CLOSURES, DETOUR SIGNS, AND MISCELLANEOUS DETAILS
SHEET 1 OF 2

NO SCALE

THD-1

STATE OF CALIFORNIA - DEPARTMENT OF TRANSPORTATION
Caltrans DTM

FUNCTIONAL SUPERVISOR: ALBERT K. YU
CALCULATED-DESIGNED BY: SHANJUGJIA HORN
CHECKED BY: JOCELYN C CHIANG
REVISED BY: JC
DATE REVISED: 3/12

LAST REVISION: 00-00-00
DATE PLOTTED => 04-MAR-2014
TIME PLOTTED => 13:33

Dist	COUNTY	ROUTE	POST MILES TOTAL PROJECT	SHEET No.	TOTAL SHEETS
07	LA	405	28.0/39.0	40	108

REGISTERED CIVIL ENGINEER 9-16-13 DATE

2-10-14
PLANS APPROVAL DATE

REGISTERED PROFESSIONAL ENGINEER SHANGJIA HORN No. 51846 Exp. 6-30-14 CIVIL STATE OF CALIFORNIA

THE STATE OF CALIFORNIA OR ITS OFFICERS OR AGENTS SHALL NOT BE RESPONSIBLE FOR THE ACCURACY OR COMPLETENESS OF SCANNED COPIES OF THIS PLAN SHEET.

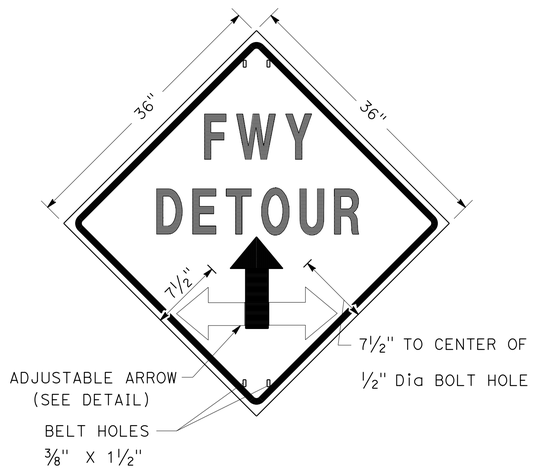

SIGN SP-2

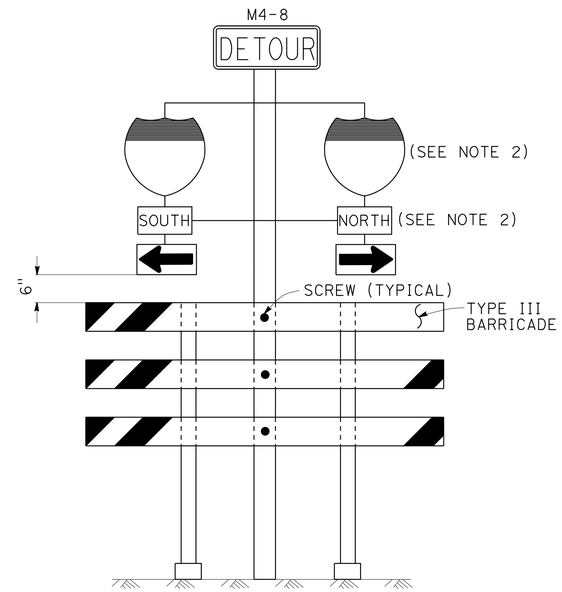

SIGN SP-6 (SEE NOTE 1)

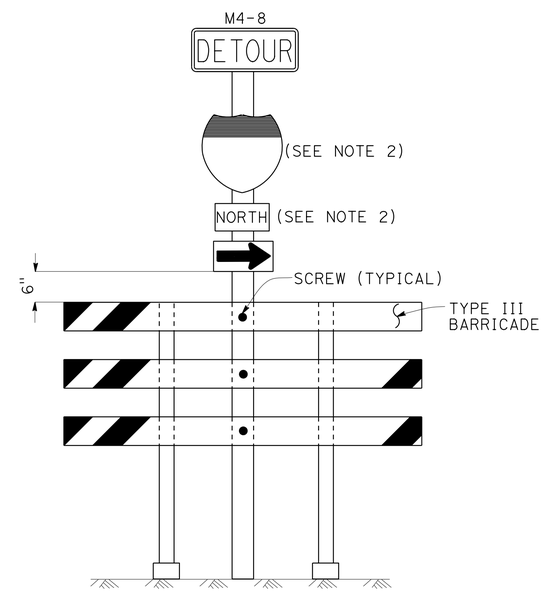

SIGN SP-7 (SEE NOTE 1)

NOTES: SIGN SP-2

1. LETTERS - 6" SERIES E.
2. LETTERS, BORDER AND ARROW - BLACK ON RETROREFLECTORIZED ORANGE BACKGROUND.
3. BASE MATERIAL FOR SIGNS AND ARROWS SHALL BE ALUMINUM (MINIMUM 0.06").
4. BELTS (LUGGAGE STRAPS) SHALL BE 1" WIDE BY 48" LONG, MADE OF COTTON OR POLYPROPYLENE WEB MATERIAL.
5. SIGNS SHALL BE MOUNTED WITH BOTTOMS OF SIGNS A MINIMUM OF 7' ABOVE GROUND EXCEPT AS OTHERWISE SHOWN ON OTHER TRAFFIC HANDLING DETAILS PLANS.

NOTES: (SIGNS SP-6 & SP-7)

1. IN LIEU OF PLACING SIGNS ON TYPE III BARRICADES, SIGNS, INCLUDING POSTS, MAY BE PLACED INTO THE GROUND OR FASTENED ONTO ELECTROLIERS.
2. USE APPROPRIATE ROUTE MARKER [G26-2(CA), G27-2(CA), G28-2(CA)] AND CARDINAL DIRECTION [NORTH (M3-1), SOUTH (M3-3), EAST (M3-2), WEST (M3-4)].

SPECIAL PORTABLE FREEWAY DETOUR SIGNS

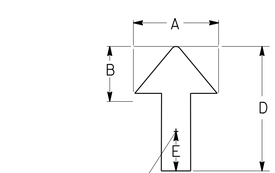

DIMENSIONS				
A	B	C	D	E
6"	3"	2"	8"	1"

ADJUSTABLE ARROW DETAIL

ABBREVIATION

(CA) CALIFORNIA CODE

TRAFFIC HANDLING DETAILS

TRAFFIC CONTROL SYSTEM FOR RAMP CLOSURES, DETOUR SIGNS, AND MISCELLANEOUS DETAILS

SHEET 2 OF 2

NO SCALE

THD-2

STATE OF CALIFORNIA - DEPARTMENT OF TRANSPORTATION
Caltrans® DTM

FUNCTIONAL SUPERVISOR: ALBERT K. YU
CALCULATED-DESIGNED BY: SHANGJIA HORN
CHECKED BY: JOCELYN C CHIANG
REVISED BY: JC
DATE REVISED: 3/12

LAST REVISION: DATE PLOTTED => 04-MAR-2014 TIME PLOTTED => 13:34
00-00-00

Dist	COUNTY	ROUTE	POST MILES TOTAL PROJECT	SHEET No.	TOTAL SHEETS
07	LA	405	28.0/39.0	41	108

REGISTERED CIVIL ENGINEER 9-16-13 DATE

2-10-14
PLANS APPROVAL DATE

REGISTERED PROFESSIONAL ENGINEER SHANGJIA HORN No. 51846 Exp. 6-30-14 CIVIL STATE OF CALIFORNIA

THE STATE OF CALIFORNIA OR ITS OFFICERS OR AGENTS SHALL NOT BE RESPONSIBLE FOR THE ACCURACY OR COMPLETENESS OF SCANNED COPIES OF THIS PLAN SHEET.

LEGEND

- SIGN SP-2
- AND/OR — DESIGNATED DETOUR ROUTE
- DETOUR DIRECTION
- CONTROLLED INTERSECTION

NOTES:

1. SP-2 SIGNS MAY BE STRAPPED ON EXISTING ELECTROLIER, SIGNAL POST OR SIGN POST.
2. SP-2 SIGNS SHALL NOT BE INSTALLED ON BARRICADES EXCEPT AS OTHERWISE SHOWN.
3. SIGN LOCATIONS ARE APPROXIMATE. EXACT LOCATIONS WILL BE DETERMINED BY THE ENGINEER.
4. SP-2 SIGNS SHALL BE POSTED AT EACH CONTROLLED INTERSECTION (EXCEPT AT COMMERCIAL PROPERTY, RESIDENTIAL COMPLEX OR T-INTERSECTION FROM ONE-WAY STREET) ALONG THE DESIGNATED DETOUR ROUTE.
5. UNLESS OTHERWISE SHOWN ON OTHER THD PLANS, WHEN CONTROLLED INTERSECTIONS ALONG THE DESIGNATED DETOUR ROUTE ARE CLOSELY SPACED, PLACE SP-2 SIGNS AT CONTROLLED INTERSECTIONS AT A DISTANCE NOT TO EXCEED 1/4 MILE FROM THE PRECEDING DETOUR SIGN.
6. EXCEPT AS OTHERWISE SHOWN ON OTHER PLANS OR SPECIFIED IN THE SPECIAL PROVISIONS, SP-2 SIGNS SHALL BE PLACED AS SHOWN ON THIS PLAN.

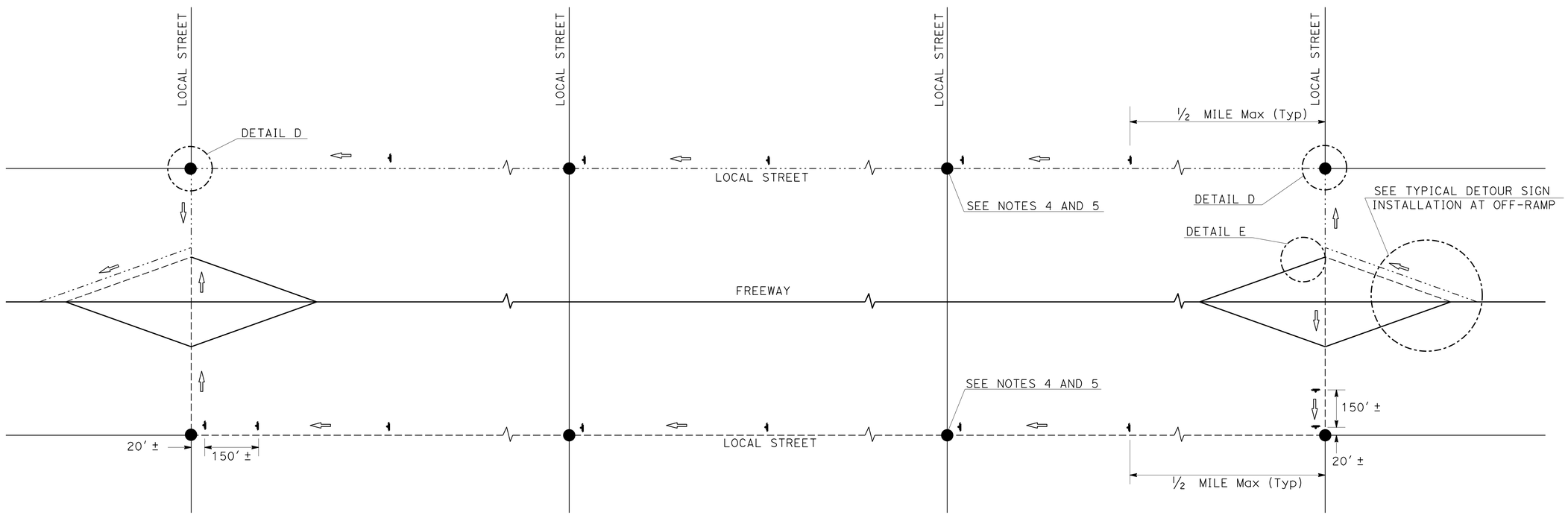

TYPICAL DETOUR SIGN INSTALLATION ALONG DESIGNATED DETOUR ROUTE

TRAFFIC HANDLING DETAILS

TRAFFIC CONTROL SYSTEM FOR DETOUR SIGN INSTALLATION ALONG DESIGNATED DETOUR ROUTE

SHEET 1 OF 3

NO SCALE

THD-3

STATE OF CALIFORNIA - DEPARTMENT OF TRANSPORTATION
Caltrans
DTM

FUNCTIONAL SUPERVISOR: ALBERT K. YU
CALCULATED-DESIGNED BY: SHANGJIA HORN
CHECKED BY: JOCELYN C CHIANG
REVISED BY: JC
DATE REVISED: 3/12

LAST REVISION 00-00-00
DATE PLOTTED => 04-MAR-2014
TIME PLOTTED => 13:34

Dist	COUNTY	ROUTE	POST MILES TOTAL PROJECT	SHEET No.	TOTAL SHEETS
07	LA	405	28.0/39.0	42	108

REGISTERED CIVIL ENGINEER 9-16-13 DATE

2-10-14
PLANS APPROVAL DATE

REGISTERED PROFESSIONAL ENGINEER SHANGJIA HORN No. 51846 Exp. 6-30-14 CIVIL STATE OF CALIFORNIA

THE STATE OF CALIFORNIA OR ITS OFFICERS OR AGENTS SHALL NOT BE RESPONSIBLE FOR THE ACCURACY OR COMPLETENESS OF SCANNED COPIES OF THIS PLAN SHEET.

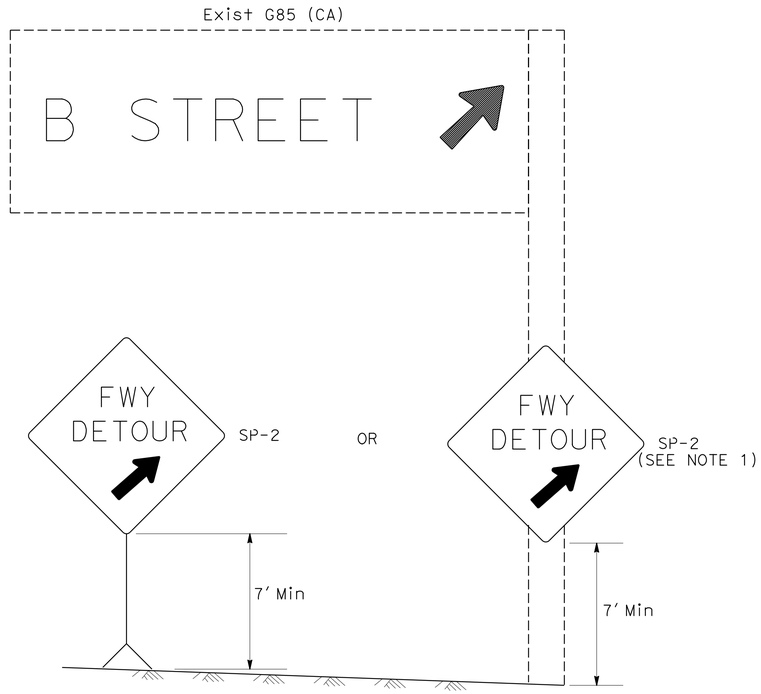

DETAIL A (SEE NOTE 3)

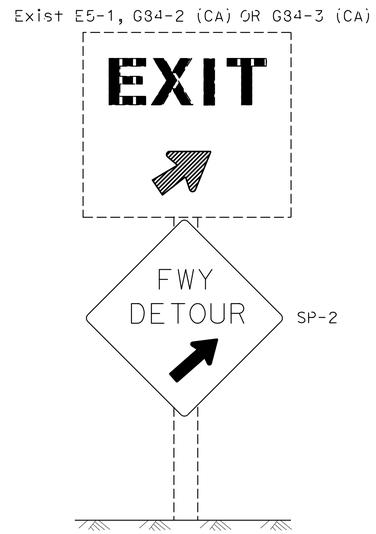

DETAIL B (SEE NOTE 3)

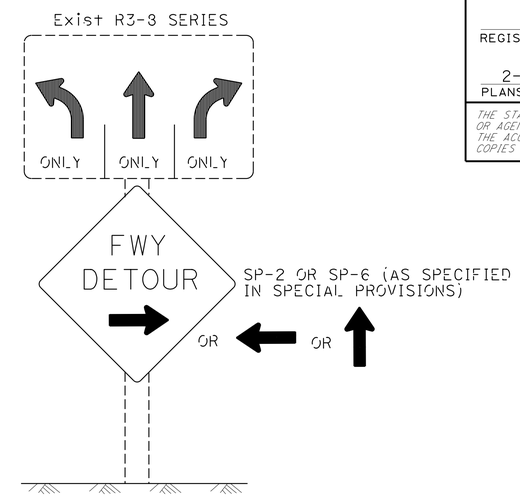

DETAIL C (SEE NOTES 4, 5, AND 6)

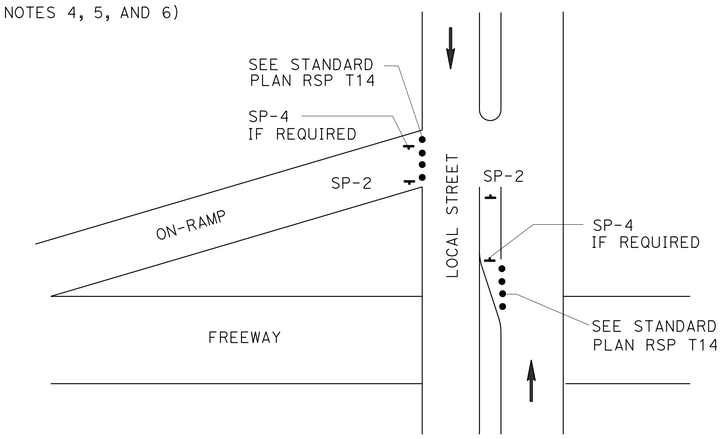

DETAIL E

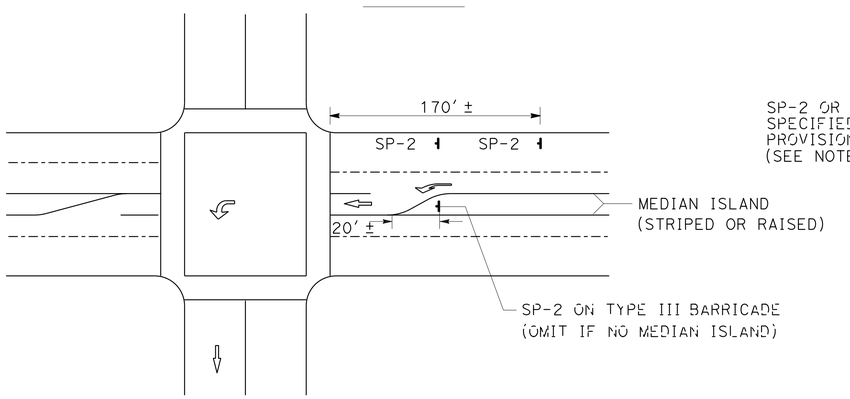

DETAIL D

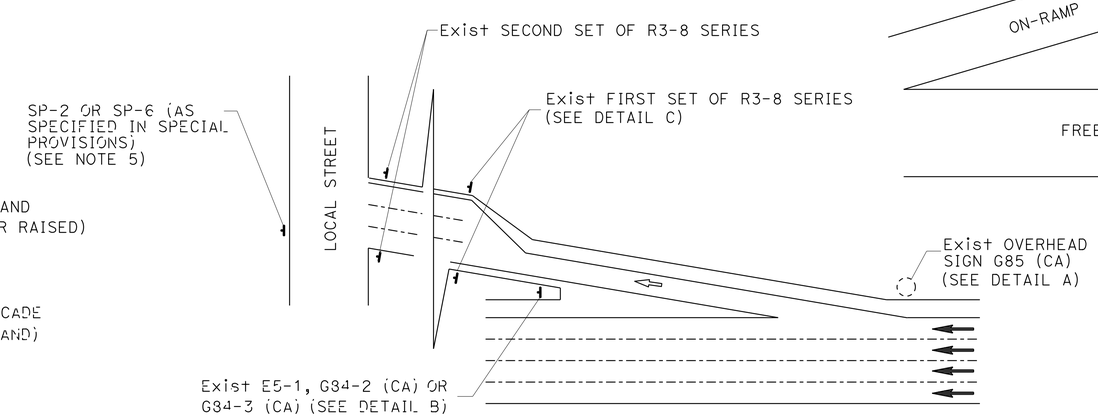

TYPICAL DETOUR SIGN INSTALLATION AT OFF-RAMP

LEGEND

- CONE
- PORTABLE SIGN
- DIRECTION OF TRAVEL
- DETOUR DIRECTION
- EXISTING OVERHEAD SIGN

NOTES: SIGN SP-2

1. SP-2 SIGNS MAY BE STRAPPED ON EXISTING ELECTROLIER, SIGNAL POST OR SIGN POST.
2. SP-2 SIGNS SHALL NOT BE INSTALLED ON BARRICADES EXCEPT AS OTHERWISE SHOWN.
3. OMIT DETAILS A AND B FOR FULL FREEWAY CLOSURES.
4. SEE TRAFFIC HANDLING DETAILS-TRAFFIC CONTROL SYSTEM FOR RAMP CLOSURES, DETOUR SIGNS, AND MISCELLANEOUS DETAILS PLAN SHEET 2 OF 2 FOR SP-6 SIGN DETAILS.
5. IF R3-8 SERIES SIGNS ARE NOT PRESENT AT THE OFF-RAMP, SP-2 OR SP-6 SIGNS SHALL BE FASTENED ONTO EXISTING ELECTROLIER, SIGNAL POST OR SIGN POST.
6. EXCEPT FOR DETAILS A & B, OMIT SP-2 SIGNS IF RAMP HAS MANDATORY SINGLE MOVE.

SIGN CODE LEGEND

XXYY-Y: FEDERAL SIGN CODE PER MANUAL ON UNIFORM TRAFFIC CONTROL DEVICES (MUTCD)

XXYY-Y (CA): CALIFORNIA SIGN CODE PER CALIFORNIA MUTCD

TRAFFIC HANDLING DETAILS
TRAFFIC CONTROL SYSTEM FOR DETOUR SIGN INSTALLATION ALONG DESIGNATED DETOUR ROUTE
SHEET 2 OF 3

NO SCALE

THD-4

STATE OF CALIFORNIA - DEPARTMENT OF TRANSPORTATION
Caltrans DTM

FUNCTIONAL SUPERVISOR: ALBERT K. YU
CALCULATED-DESIGNED BY: SHANGJIA HORN
CHECKED BY: JOCELYN C CHIANG
REVISED BY: JC
DATE REVISED: 3/12

LAST REVISION: DATE PLOTTED => 04-MAR-2014
00-00-00 TIME PLOTTED => 13:34

Dist	COUNTY	ROUTE	POST MILES TOTAL PROJECT	SHEET No.	TOTAL SHEETS
07	LA	405	28.0/39.0	43	108

REGISTERED CIVIL ENGINEER 9-16-13 DATE

2-10-14
PLANS APPROVAL DATE

REGISTERED PROFESSIONAL ENGINEER SHANGJIA HORN No. 51846 Exp. 6-30-14 CIVIL STATE OF CALIFORNIA

THE STATE OF CALIFORNIA OR ITS OFFICERS OR AGENTS SHALL NOT BE RESPONSIBLE FOR THE ACCURACY OR COMPLETENESS OF SCANNED COPIES OF THIS PLAN SHEET.

NOTES:

1. LANE CLOSURES SHALL NOT BE PLACED ON CREST VERTICAL CURVES OR ON HORIZONTAL CURVES.
2. PCMS SHALL BE ACTIVATED PRIOR TO TRAFFIC CONTROL ACTIVITIES ON THE HOV LANE.
3. A MINIMUM SIGHT DISTANCE OF 1500′ SHALL BE PROVIDED IN ADVANCE OF PCMS.
4. VEHICLE-MOUNTED SIGN PANELS SHALL BE TYPE III OR IV RETROREFLECTORIZED SHEETING, BLACK ON WHITE OR BLACK ON ORANGE WITH 8" MINIMUM SERIES D LETTERS PER CALTRANS SIGN SPECIFICATIONS.
5. PLACE PCMS ON THE MEDIAN SHOULDER WHERE SUFFICIENT ROOM (SUCH AS CHP ENFORCEMENT AREAS) EXISTS.
6. ADVANCE WARNING SIGN INSTALLATIONS SHALL BE EQUIPPED WITH FLAGS FOR DAYTIME CLOSURES. TYPE B HIGH INTENSITY FLASHING WARNING LIGHTS SHALL BE USED ON SP-16 SIGN DURING NIGHT LANE CLOSURES. FLAGS AND WARNING LIGHTS SHALL BE ATTACHED TO SIGNS AS APPROVED BY THE ENGINEER.

LEGEND

V1, V2	SHADOW VEHICLES
V3	WORK/APPLICATION VEHICLE
	PCMS
	DIRECTION OF TRAVEL
	HOV LANE
	FLASHING BEACON

ABBREVIATIONS

FAS	FLASHING ARROW SIGN
IAV	IMPACT ATTENUATOR VEHICLE
CMS	CHANGEABLE MESSAGE SIGN
(CA)	CALIFORNIA CODE
PCMS	PORTABLE CHANGEABLE MESSAGE SIGN
HOV	HIGH OCCUPANCY VEHICLE
CHP	CALIFORNIA HIGHWAY PATROL

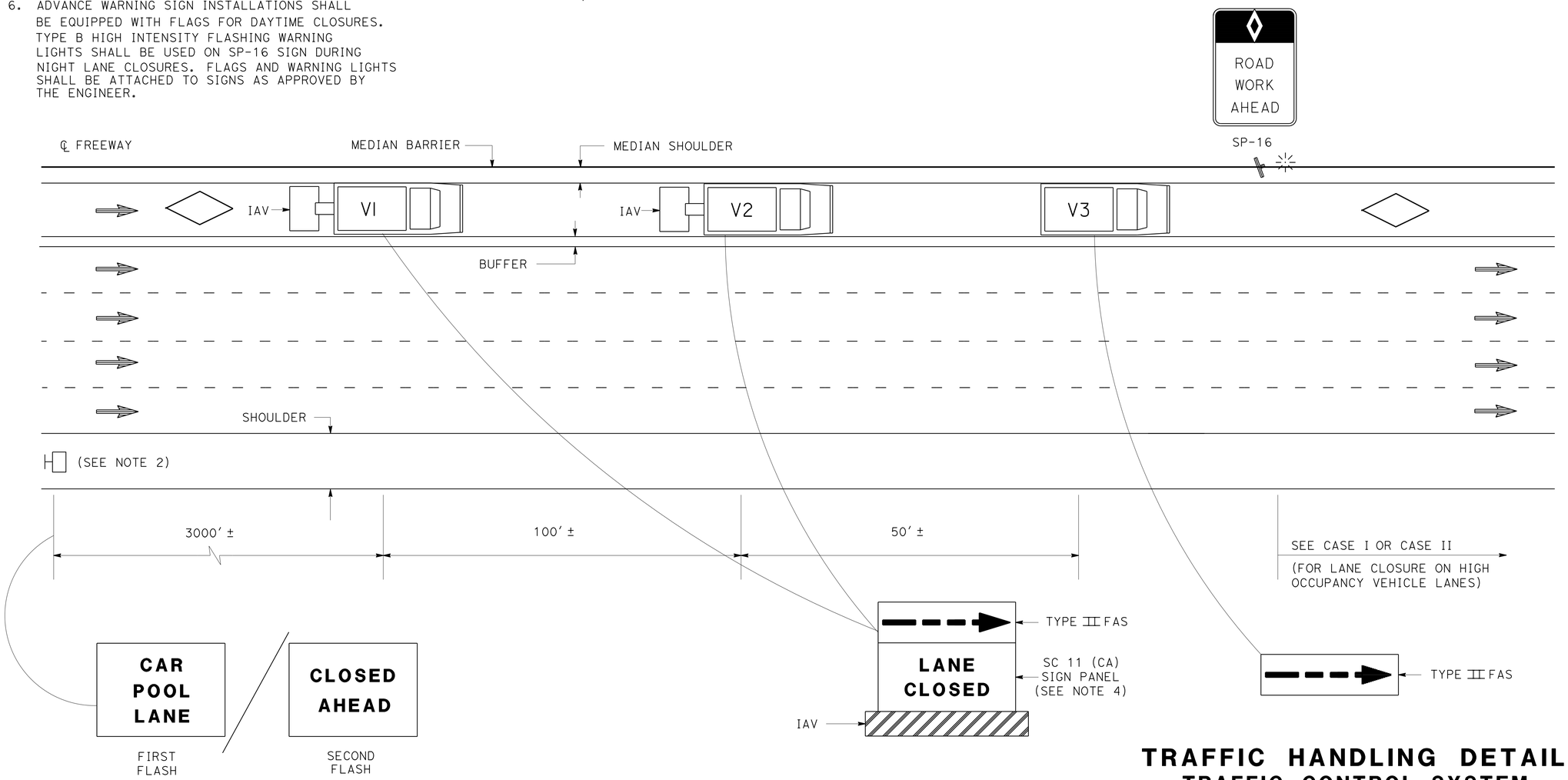

PCMS OR TRUCK MOUNTED CMS MESSAGE

(SEE NOTE 5)

TRAFFIC HANDLING DETAILS
TRAFFIC CONTROL SYSTEM FOR HIGH OCCUPANCY VEHICLE LANES WITH MEDIAN SHOULDERS LESS THAN 8 FEET

NO SCALE

THD-5

STATE OF CALIFORNIA - DEPARTMENT OF TRANSPORTATION
Caltrans® DTM

FUNCTIONAL SUPERVISOR: ALBERT K. YU
CALCULATED-DESIGNED BY: SHANGJIA HORN
CHECKED BY: JOCELYN C CHIANG
REVISED BY: JC
DATE REVISED: 3/12

LAST REVISION 00-00-00
DATE PLOTTED => 04-MAR-2014
TIME PLOTTED => 13:34

Dist	COUNTY	ROUTE	POST MILES TOTAL PROJECT	SHEET No.	TOTAL SHEETS
07	LA	405	28.0/39.0	44	108

REGISTERED CIVIL ENGINEER 9-16-13 DATE

2-10-14
PLANS APPROVAL DATE

REGISTERED PROFESSIONAL ENGINEER SHANGJIA HORN No. 51846 Exp. 6-30-14 CIVIL STATE OF CALIFORNIA

THE STATE OF CALIFORNIA OR ITS OFFICERS OR AGENTS SHALL NOT BE RESPONSIBLE FOR THE ACCURACY OR COMPLETENESS OF SCANNED COPIES OF THIS PLAN SHEET.

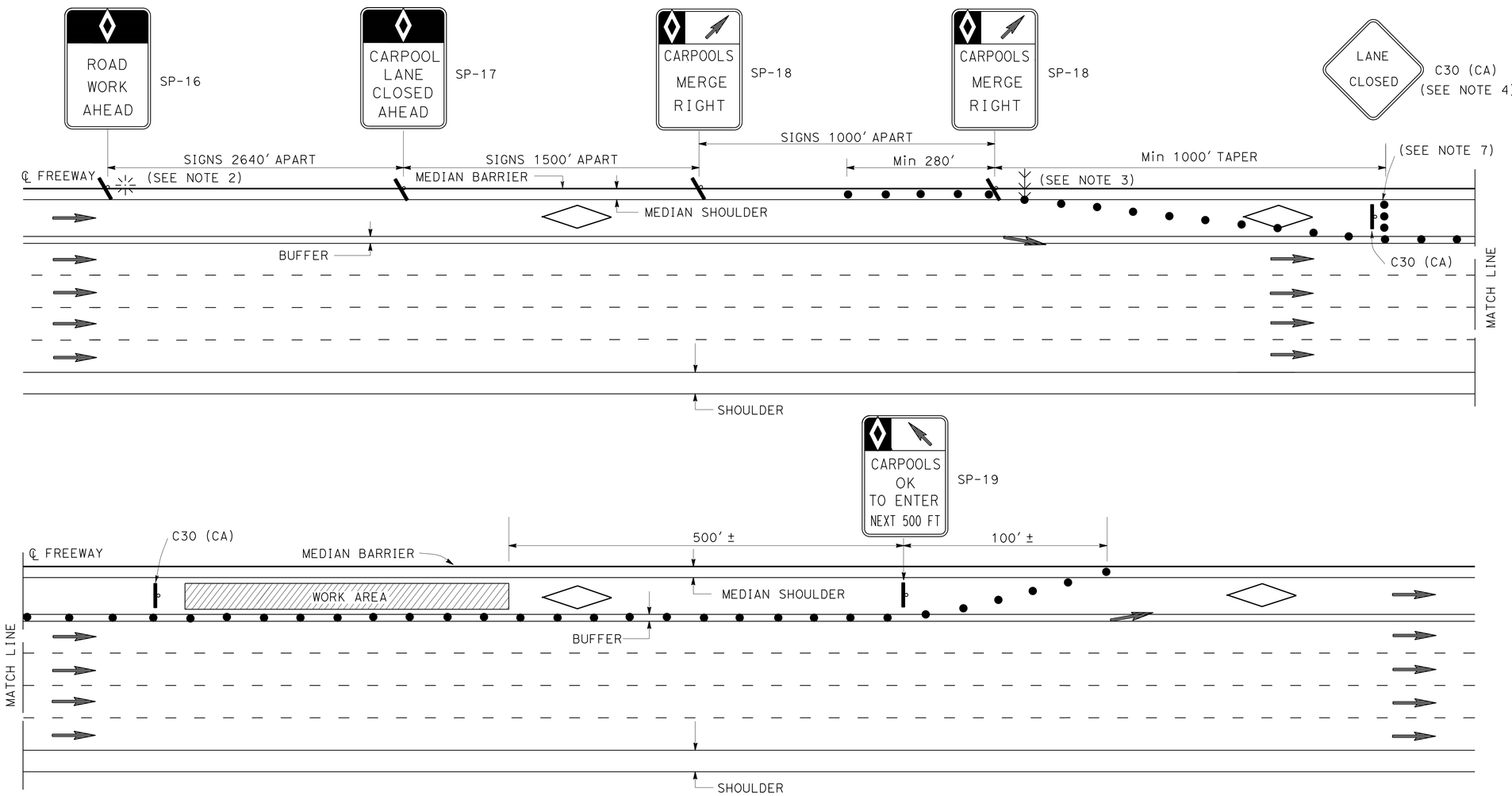

LEGEND

- CONE
- FLASHING BEACON
- HOV LANE
- FLASHING ARROW SIGN
- PORTABLE SIGN
- DIRECTION OF TRAVEL

ABBREVIATIONS

(CA)	CALIFORNIA CODE
HOV	HIGH OCCUPANCY VEHICLE

SIGN PANEL

	SIZE (MIN)
SP-16	36" X 54"
SP-17	36" X 54"
SP-18	36" X 48"
SP-19	36" X 60"
C30 (CA)	30" X 30"
G20-2	48" X 24"

NOTES: (FOR CASE I AND CASE II)

1. AT LEAST ONE PERSON SHALL BE ASSIGNED TO FULL TIME MAINTENANCE OF TRAFFIC CONTROL DEVICES ON NIGHT LANE CLOSURES OR DAY-TIME CLOSURES EXCEEDING 1 MILE LENGTH, INCLUDING TAPERS.
2. ADVANCE WARNING SIGN INSTALLATIONS SHALL BE EQUIPPED WITH FLAGS FOR DAYTIME CLOSURES. TYPE B HIGH INTENSITY FLASHING WARNING LIGHTS SHALL BE USED ON SP-16 SIGN DURING NIGHT LANE CLOSURES. FLAGS AND WARNING LIGHTS SHALL BE ATTACHED TO SIGNS AS APPROVED BY THE ENGINEER.
3. THE FLASHING ARROW SIGN SHALL BE TYPE I.
4. PLACE C30 (CA) SIGNS EVERY 2000' THROUGHOUT THE LENGTH OF LANE CLOSURE.
5. A MINIMUM 1500' OF SIGHT DISTANCE SHALL BE PROVIDED WHERE POSSIBLE FOR VEHICLES APPROACHING THE FLASHING ARROW SIGN. LANE CLOSURES SHALL NOT BE PLACED ON CREST VERTICAL CURVES OR ON HORIZONTAL CURVES.
6. PORTABLE DELINEATORS PLACED AT ONE-HALF THE SPACING INDICATED FOR TRAFFIC CONES MAY BE USED INSTEAD OF CONES FOR DAYTIME CLOSURES.
7. A MINIMUM OF 3 CONES SHALL BE PLACED TRANSVERSELY ACROSS CLOSED LANES WHERE TAPERS END AND EVERY 2000'. TWO TYPE II BARRICADES MAY BE USED INSTEAD OF 3 CONES. THE ALIGNMENT OF CONES OR BARRICADES MAY BE SHIFTED FROM THE TRANSVERSE ALIGNMENT TO PROVIDE ACCESS TO WORK.
8. IF AN INGRESS/EGRESS AREA IS WITHIN 5250' UPSTREAM OR DOWNSTREAM OF THE WORK AREA, LANE CLOSURES SHALL BE EXTENDED TO THAT AREA AS SHOWN IN CASE II.
9. SIGNS SP-16, 17, 18, AND 19 MAY BE OVERLAID ON EXISTING CARPOOL SIGNS IN MEDIANS AS APPROVED BY THE ENGINEER.
10. SIGNS SP-16, 17, 18, AND C30 (CA) SHALL BE BLACK ON ORANGE BACKGROUND. SIGN SP-19 SHALL BE BLACK ON WHITE BACKGROUND. DIAMONDS ON SIGNS SHALL BE WHITE.
11. FOR CLOSURE OF LANE(S) ADJACENT TO HOV LANES, SEE CASE II.
12. THE MAXIMUM SPACING BETWEEN CONES SHALL BE APPROXIMATELY 50' IN TAPERS AND 100' ON TANGENTS.

TRAFFIC HANDLING DETAILS
TRAFFIC CONTROL SYSTEM FOR HIGH OCCUPANCY VEHICLE LANES AT NON-INGRESS/EGRESS AREAS
CASE I

NO SCALE

THD-6

FUNCTIONAL SUPERVISOR	ALBERT K YU
CALCULATED-DESIGNED BY	SHANGJIA HORN
CHECKED BY	JOCELYN C CHIANG
REVISED BY	JC
DATE REVISED	3/12

STATE OF CALIFORNIA - DEPARTMENT OF TRANSPORTATION
Caltrans DTM

LAST REVISION 00-00-00 | DATE PLOTTED => 04-MAR-2014 | TIME PLOTTED => 13:34

Dist	COUNTY	ROUTE	POST MILES TOTAL PROJECT	SHEET No.	TOTAL SHEETS
07	LA	405	28.0/39.0	45	108

REGISTERED CIVIL ENGINEER 9-16-13 DATE

2-10-14
PLANS APPROVAL DATE

REGISTERED PROFESSIONAL ENGINEER SHANGJIA HORN No. 51846 Exp. 6-30-14 CIVIL STATE OF CALIFORNIA

THE STATE OF CALIFORNIA OR ITS OFFICERS OR AGENTS SHALL NOT BE RESPONSIBLE FOR THE ACCURACY OR COMPLETENESS OF SCANNED COPIES OF THIS PLAN SHEET.

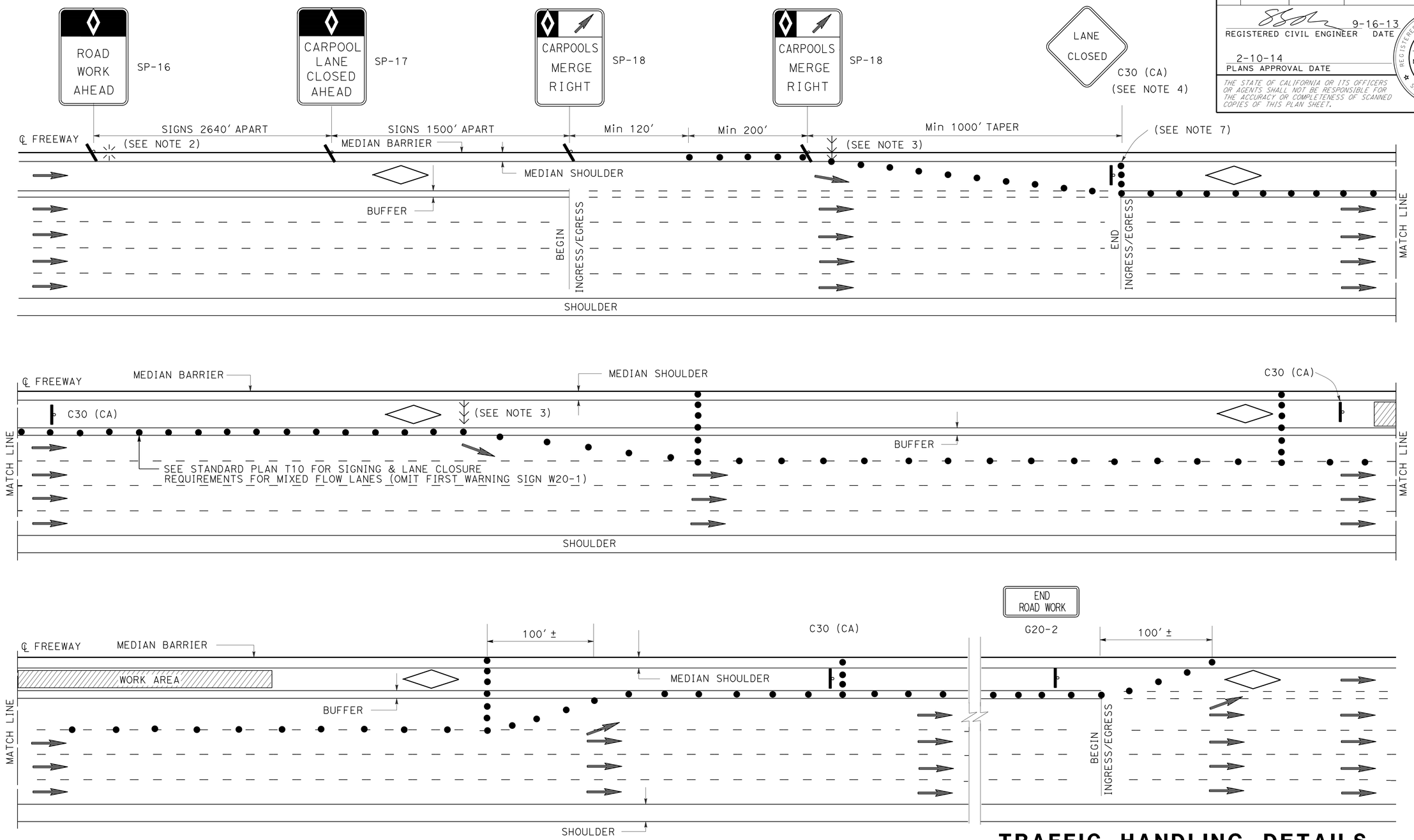

NOTES:

1. SEE CASE I FOR NOTES, LEGEND, SIGN PANEL, AND ABBREVIATIONS FOR THIS SHEET.
2. CLOSURES OF ONE MIXED FLOW TRAFFIC LANE ADJACENT TO HOV LANE SHOWN ON THIS SHEET. MULTIPLE MIXED FLOW LANE CLOSURES ARE SIMILAR.

TRAFFIC HANDLING DETAILS
TRAFFIC CONTROL SYSTEM FOR HIGH OCCUPANCY VEHICLE LANES AND ADJACENT FREEWAY LANES BETWEEN INGRESS/EGRESS AREAS
CASE II

NO SCALE

THD-7

REVISED BY	DATE REVISED
JC	3/12

CALCULATED-DESIGNED BY: SHANGJIA HORN
CHECKED BY: JOCELYN C CHIANG
FUNCTIONAL SUPERVISOR: ALBERT K YU

STATE OF CALIFORNIA - DEPARTMENT OF TRANSPORTATION
Caltrans
DTM

LAST REVISION 00-00-00 | DATE PLOTTED => 04-MAR-2014 | TIME PLOTTED => 13:34

Dist	COUNTY	ROUTE	POST MILES TOTAL PROJECT	SHEET No.	TOTAL SHEETS
07	LA	405	28.0/39.0	46	108

REGISTERED CIVIL ENGINEER 9-16-13 DATE

2-10-14
PLANS APPROVAL DATE

REGISTERED PROFESSIONAL ENGINEER SHANGJIA HORN No. 51846 Exp. 6/30/14 CIVIL STATE OF CALIFORNIA

THE STATE OF CALIFORNIA OR ITS OFFICERS OR AGENTS SHALL NOT BE RESPONSIBLE FOR THE ACCURACY OR COMPLETENESS OF SCANNED COPIES OF THIS PLAN SHEET.

NOTES:

1. EXACT LOCATION OF PCMS WILL BE DETERMINED BY THE ENGINEER TO PROVIDE ADEQUATE VISIBILITY.
2. PCMS MESSAGE DISPLAYED WILL BE APPROVED BY THE ENGINEER.
3. PCMS MESSAGE SHALL BE CHANGED AT THE BEGINNING OF CURE PERIOD TO REFLECT NUMBER OF CLOSED LANES.

ABBREVIATIONS

PCMS PORTABLE CHANGEABLE MESSAGE SIGN
(CA) CALIFORNIA CODE

LEGEND

- CONE
- PORTABLE SIGN
- DIRECTION OF TRAVEL
- PCMS

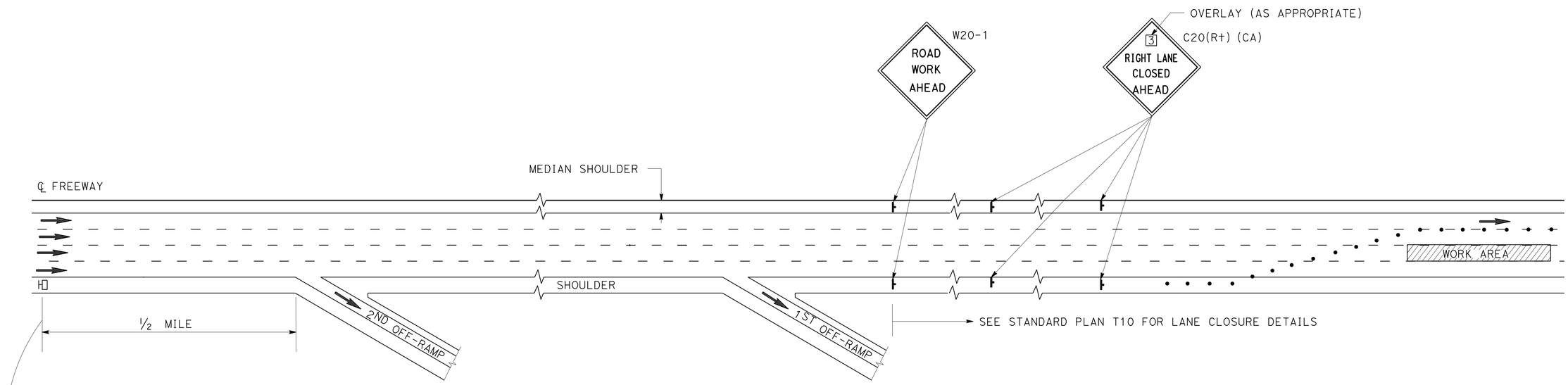

FIRST FLASH	X (NO OF LANES)RIGHT/LEFT	1ST LINE (TYPICAL)
	LANES	2ND LINE (TYPICAL)
	CLOSED	3RD LINE (TYPICAL)
SECOND FLASH	A ST	LIMIT OF CLOSURE (TYPICAL)
	TO	
	B DR	LIMIT OF CLOSURE (TYPICAL)

WORDING FORMAT FOR PCMS MESSAGE

TRAFFIC HANDLING DETAILS
TRAFFIC CONTROL SYSTEM FOR CONCRETE PAVEMENT AND APPROACH SLAB REPLACEMENT

NO SCALE

THD-8

REVISED BY	DATE REVISED
JC	3/12

CALCULATED-DESIGNED BY: SHANGJIA HORN
CHECKED BY: JOCELYN C CHIANG
FUNCTIONAL SUPERVISOR: ALBERT K YU

STATE OF CALIFORNIA - DEPARTMENT OF TRANSPORTATION
Caltrans® DTM

LAST REVISION 00-00-00 | DATE PLOTTED => 04-MAR-2014 | TIME PLOTTED => 13:34

Dist	COUNTY	ROUTE	POST MILES TOTAL PROJECT	SHEET No.	TOTAL SHEETS
07	LA	405	28.0/39.0	47	108

REGISTERED CIVIL ENGINEER 1-17-14 DATE

2-10-14
PLANS APPROVAL DATE

REGISTERED PROFESSIONAL ENGINEER MOHAMMED HAIDER No. 61335 Exp. 6/30/15 CIVIL STATE OF CALIFORNIA

THE STATE OF CALIFORNIA OR ITS OFFICERS OR AGENTS SHALL NOT BE RESPONSIBLE FOR THE ACCURACY OR COMPLETENESS OF SCANNED COPIES OF THIS PLAN SHEET.

PAVEMENT DELINEATION QUANTITIES

STATIONS	4" THERMOPLASTIC TRAFFIC STRIPE											8" THERMOPLASTIC TRAFFIC STRIPE							
	BROKEN WHITE					YELLOW SOLID		WHITE SOLID				WHITE SOLID						BROKEN	
	17'-7'		18'-12'	36'-12'															
	Det 8	Det 9	Det 12	Det 13M	Det 14M	Det 25A	Det 25M	Det 50 Mod	Det 27B	Det 36A	Det 36B	Det 36	Det 36A	Det 36B	Det 38	Det 38A	Det 38B	Det 37 12'-3'	Det C 36'-12'
	LF	LF	LF	LF	LF	LF	LF	LF	LF	LF	LF	LF	LF	LF	LF	LF	LF	LF	LF
1476+50 TO 1535+54	0	0	0	43,611	2,564	236	22,766	11,383	12,540	302	0	538	302	0	0	0	557	4,163	0
1535+54 TO 1549+00	0	477	0	19,578	0	346	8,581	3,254	4,681	302	0	788	302	0	50	0	0	0	0
1549+00 TO 1563+00	0	286	0	8,653	432	986	6,772	1,986	3,993	206	0	0	206	0	0	0	0	0	814
1563+00 TO 1577+50	0	0	0	10,150	0	487	6,593	1,847	3,750	0	467	0	0	467	0	0	0	0	1,054
1577+50 TO 1592+50	0	850	0	9,924	576	866	7,440	2,220	4,093	258	0	0	258	0	0	590	0	195	780
1592+50 TO 1607+00	0	189	0	9,718	432	209	8,700	2,900	3,511	539	0	274	402	0	0	0	300	3,035	0
1607+00 TO 1622+00	300	783	0	10,524	576	477	8,060	2,530	3,679	202	0	542	202	0	0	0	441	1,309	470
1622+00 to 1636+50	0	3,239	0	11,600	0	2,198	3,256	178	4,098	165	0	0	165	0	0	428	0	0	2,722
1636+50 TO 1651+00	191	416	0	10,448	1,152	145	8,408	2,754	3,499	183	0	1,084	183	0	0	0	773	1,334	146
1651+00 TO 1665+00	0	328	0	5,292	308	1,701	4,080	1,340	3,090	0	0	3,077	0	0	0	0	15	0	60
"W5","W6","W7",W8" LINE	0	1,249	0	0	0	1,732	0	0	1,372	0	0	0	0	0	0	0	0	0	0
1665+00 TO 1679+50	226	0	0	5,532	268	1,150	100	50	1,900	750	0	0	750	0	0	0	0	0	1,400
1679+50 TO 1694+00	300	0	0	5,224	576	0	4,350	1,450	1,636	186	0	0	186	0	0	0	0	0	0
1694+00 TO 1696+00	0	0	0	800	0	0	600	200	200	0	0	0	0	0	0	0	0	0	0
1651+00 TO 1665+00	0	0	0	6,337	0	1,096	4,200	1,400	3,011	175	516	0	175	516	0	0	0	0	0
1665+00 TO 1679+50	0	1,000	0	5,224	576	2,374	4,350	1,450	4,074	373	0	1,306	373	0	0	0	0	0	0
1679+50 TO 1694+00	0	0	0	5,224	576	0	4,350	1,450	1,450	0	0	1,071	0	0	0	0	300	694	0
1694+00 TO 1696+00	0	0	0	604	0	0	453	151	151	0	0	0	0	0	0	0	0	151	0
1696+00 TO 1708+50	0	0	0	5,000	0	0	3,750	1,250	1,250	0	0	0	0	0	0	0	0	0	0
1708+50 TO 1723+00	0	0	0	5,224	576	0	4,350	1,450	1,450	0	0	0	0	0	0	0	0	0	0
1723+00 TO 1737+50	0	300	0	6,480	0	668	4,350	1,450	2,168	50	0	864	50	0	0	0	0	0	0
1737+50 TO 1752+00	0	1,771	0	8,644	576	2,074	7,770	2,590	3,978	0	416	0	0	416	0	116	0	511	0
1752+00 TO 1766+50	0	694	0	5,800	0	903	4,350	1,450	1,783	0	526	564	0	0	0	0	0	295	0
1766+50 TO 1781+00	0	0	0	7,150	0	0	5,700	1,900	1,900	0	750	0	0	750	0	0	0	0	0
1781+00 TO 1795+00	0	0	0	9,151	649	0	6,680	1,940	2,800	0	0	0	0	0	0	0	0	0	661
1795+00 TO 1809+50	0	0	0	10,150	0	0	6,710	1,905	2,800	0	0	0	0	0	0	0	0	0	455
1809+50 TO 1824+50	312	0	0	9,924	576	0	9,000	3,000	3,147	147	0	300	147	0	0	0	0	0	0
1824+50 TO 1835+45.55	0	303	0	9,676	0	1,059	6,573	2,191	3,391	832	0	342	832	0	0	0	0	0	0
1835+45 to 1838+00	0	248	0	4,279	0	639	4,031	1,344	2,544	561	0	0	561	0	0	0	0	0	0
1838+00 TO 1852+50	0	0	0	5,800	0	0	4,350	1,450	1,450	0	0	0	0	0	0	0	0	0	0
1852+50 TO 1866+00	0	0	0	5,400	0	0	4,050	1,350	1,350	0	0	0	0	0	0	0	0	0	0
1866+00 TO 1880+00	0	0	0	5,024	576	0	4,200	1,400	1,400	0	0	0	0	0	0	0	0	0	0
1880+00 TO 1894+00	0	0	0	5,750	0	0	2,828	689	1,450	0	0	0	0	0	0	0	0	0	761
1894+00 TO 1907+50	150	0	0	8,874	576	0	5,450	1,400	2,700	0	0	0	0	0	0	0	0	0	1,300
1907+50 TO 1921+50	120	955	0	9,800	0	952	5,700	1,450	2,800	278	0	0	278	0	0	0	0	0	900
1921+50 TO 1935+00	0	352	0	8,874	576	1,350	8,100	2,700	3,770	0	0	360	0	0	0	0	0	0	0
1935+00 TO 1949+50	0	204	0	11,024	576	489	8,700	2,900	3,322	0	0	736	0	0	0	0	0	0	0
1949+50 TO 1963+50	0	0	0	13,058	0	144	8,400	2,800	3,222	0	720	511	0	720	0	0	0	0	0
1963+50 TO 1978+00	0	0	0	11,024	576	0	7,640	2,370	2,900	0	0	0	0	0	0	0	0	0	530
1928+00 TO 1935+00	0	0	0	0	0	0	0	0	669	0	0	867	0	0	0	0	0	0	0
1935+00 TO 1949+50	0	593	0	0	0	1,080	0	0	1,115	0	0	260	0	0	0	0	0	0	0
1978+00 TO 1993+00	0	0	0	12,780	720	0	7,388	2,194	3,000	0	0	0	0	0	0	0	0	0	806
1993+00 TO 2007+00	0	0	0	12,024	576	0	6,108	1,654	2,800	0	0	0	0	0	0	0	0	0	1,146
2007+00 TO 2021+50	0	0	0	13,232	720	0	7,780	2,440	3,425	0	525	0	0	525	0	0	0	548	460
2021+50 TO 2035+50	0	1054	0	11,200	0	1226	8,400	2,800	4,200	0	224	0	0	224	100	0	0	1,400	0
2035+50 TO 2049+50	0	0	430	9,922	576	796	8,400	2,800	2,898	0	0	1,512	0	0	96	0	300	691	0
2049+50 TO 2057+62	0	0	0	4,296	576	0	3,398	887	1,624	0	0	0	0	0	0	0	0	0	737
SUB TOTAL	1,599	1,5291	430	398,003	16,461	25,383	267,215	88,297	132,034	5,509	4,144	14,996	5,372	3,618	246	1,134	2,686	14,326	15,202
TOTAL	16,890		430	414,464		522,582						28,052						14,326	15,202

REMOVE PAVEMENT DELINEATION

STATIONS	DIRECTION	REMOVE YELLOW THERMOPLASTIC TRAFFIC STRIPE (HAZARDOUS WASTE)
		LF
1696+00 TO 1735+80	SB	3,980
1748+90 TO 1776+50	SB	2,760
1835+51 TO 1893+50	SB	5,799
2057+62 TO 2060+00	SB	238
2057+62 TO 2060+00	NB	238
TOTAL		13,015

PAVEMENT DELINEATION QUANTITIES
PDQ-1

STATE OF CALIFORNIA - DEPARTMENT OF TRANSPORTATION
Caltrans TRAFFIC DESIGN

FUNCTIONAL SUPERVISOR: MOHAMMED CHOWDHURY
CALCULATED-DESIGNED BY: MOHAMMED HAIDER
CHECKED BY: MOHAMMED CHOWDHURY
REVISED BY
DATE REVISED

LAST REVISION 00-00-00
DATE PLOTTED => 04-MAR-2014
TIME PLOTTED => 13:34

Dist	COUNTY	ROUTE	POST MILES TOTAL PROJECT	SHEET No.	TOTAL SHEETS
07	LA	405	28.0/39.0	48	108

REGISTERED CIVIL ENGINEER 1-17-14 DATE

2-10-14
PLANS APPROVAL DATE

REGISTERED PROFESSIONAL ENGINEER MOHAMMED HAIDER No. 61335 Exp. 6/30/15 CIVIL STATE OF CALIFORNIA

THE STATE OF CALIFORNIA OR ITS OFFICERS OR AGENTS SHALL NOT BE RESPONSIBLE FOR THE ACCURACY OR COMPLETENESS OF SCANNED COPIES OF THIS PLAN SHEET.

PAVEMENT DELINEATION QUANTITIES

STATIONS	PAVEMENT MARKER				PAVEMENT MARKING						DELINEATORS	
	RETROREFLECTIVE			NON-REFLECTIVE TYPE A								
	TYPE C	TYPE G	TYPE H		ARROWS	SYMBOLS & NUMBERS	WORDS	12" WHITE DIAGONAL/ LIMIT LINE	12" YELLOW DIAGONAL	12" WHITE CHEVRON	TYPE F	TYPE G
	EA	EA	EA	EA	SQFT	SQFT	SQFT	SQFT	SQFT	SQFT	EA	EA
1476+50 TO 1535+54	1,431	1,131	1,170	4,100	252	55	141	0	0	0	0	0
1535+54 TO 1549+00	0	466	414	1,632	285	11	62	0	0	0	0	0
1549+00 TO 1563+00	9	229	312	757	0	55	186	255	60	0	22	19
1563+00 TO 1577+50	0	275	284	846	0	44	124	165	20	0	12	3
1577+50 TO 1592+50	24	273	334	875	0	66	124	180	60	0	12	10
1592+50 TO 1607+00	189	349	379	846	0	22	124	129	0	75	8	2
1607+00 TO 1622+00	36	213	166	500	66	22	62	0	0	0	12	9
1622+00 TO 1636+50	0	429	222	967	324	99	270	0	0	60	10	6
1636+50 TO 1651+00	62	165	174	483	0	22	80	0	0	0	14	8
1651+00 TO 1665+00	6	249	71	467	33	22	22	30	0	0	19	21
"W5","W6","W7",W8" LINE	0	26	55	0	300	0	0	0	0	0	8	12
1665+00 TO 1679+50	6	205	50	483	75	55	186	0	0	0	23	29
1679+50 TO 1694+00	12	117	174	483	0	0	0	0	0	0	10	0
1694+00 TO 1696+00	0	17	24	67	0	0	0	0	0	0	1	0
1651+00 TO 1665+00	0	161	212	528	66	22	110	270	0	0	34	34
1665+00 TO 1679+50	12	200	269	483	167	0	0	24	90	0	36	36
1679+50 TO 1694+00	53	199	174	483	0	11	62	0	0	0	7	7
1694+00 TO 1696+00	9	17	18	50	0	11	0	0	0	0	0	0
1696+00 TO 1708+50	0	104	150	417	0	11	62	0	0	0	0	0
1708+50 TO 1723+00	12	109	174	483	0	11	0	0	0	0	0	0
1723+00 TO 1737+50	0	179	201	540	0	11	0	0	0	0	0	3
1737+50 TO 1752+00	42	249	397	768	176	11	62	55	0	0	11	25
1752+00 TO 1766+50	17	168	210	483	137	0	0	0	0	0	8	10
1766+50 TO 1781+00	0	180	228	596	0	22	62	270	0	0	0	0
1781+00 TO 1795+00	14	218	267	817	0	44	124	585	0	0	0	0
1795+00 TO 1809+50	0	230	268	846	0	33	79	638	0	0	0	0
1809+50 TO 1824+50	12	225	360	875	0	11	45	315	0	0	5	3
1824+50 TO 1835+45.55	0	257	305	806	93	0	0	195	100	0	10	36
1835+45 TO 1838+00	0	118	187	357	0	0	0	210	0	0	1	0
1838+00 TO 1852+50	0	121	174	483	84	22	62	375	0	0	10	0
1852+50 TO 1866+00	0	113	162	450	42	0	0	0	0	0	7	0
1866+00 TO 1880+00	12	105	168	467	0	11	62	0	0	0	7	0
1880+00 TO 1894+00	0	152	113	479	0	44	124	210	0	0	7	0
1894+00 TO 1907+50	12	239	218	788	0	66	186	180	0	0	6	0
1907+50 TO 1921+50	0	273	266	817	194	44	148	558	0	0	19	12
1921+50 TO 1935+00	12	207	378	788	192	11	62	420	0	0	20	14
1935+00 TO 1949+50	12	265	368	967	217	22	62	280	0	0	16	18
1949+50 TO 1963+50	0	323	342	1088	0	11	0	0	0	0	17	9
1963+50 TO 1978+00	12	252	306	967	0	33	124	0	0	0	14	7
1928+00 TO 1935+00	0	36	0	0	0	0	0	280	0	120	0	0
1935+00 TO 1949+50	0	23	43	0	340	0	0	250	0	0	0	0
1978+00 TO 1993+00	15	300	296	1125	0	44	124	0	0	0	4	2
1993+00 TO 2007+00	12	298	244	1050	42	77	248	0	0	0	5	3
2007+00 TO 2021+50	47	333	311	1163	84	33	62	210	0	0	7	4
2021+50 TO 2035+50	83	310	385	933	99	33	102	105	0	0	6	3
2035+50 TO 2049+50	53	319	368	875	159	11	88	120	0	0	8	8
2049+50 TO 2057+62	12	120	136	406	0	168	0	620	0	0	3	3
SUB TOTAL	2,228	10,547	11,527	33,884	3,427	1,301	3,441	6,929	330	255	419	356
TOTAL	24,302			33,884	15,683						775	

PAVEMENT DELINEATION QUANTITIES
PDQ-2

STATE OF CALIFORNIA - DEPARTMENT OF TRANSPORTATION
Caltrans® TRAFFIC DESIGN

FUNCTIONAL SUPERVISOR: MOHAMMED CHOWDHURY
CALCULATED-DESIGNED BY: MOHAMMED HAIDER
CHECKED BY: MOHAMMED CHOWDHURY
REVISED BY
DATE REVISED

LAST REVISION 00-00-00
DATE PLOTTED => 04-MAR-2014
TIME PLOTTED => 13:34

Dist	COUNTY	ROUTE	POST MILES TOTAL PROJECT	SHEET No.	TOTAL SHEETS
07	LA	405	28.0/39.0	49	108

11-5-13
REGISTERED CIVIL ENGINEER DATE

2-10-14
PLANS APPROVAL DATE

REGISTERED PROFESSIONAL ENGINEER
WILFRIDO MORALES
No. 67533
Exp. 6/30/15
CIVIL
STATE OF CALIFORNIA

THE STATE OF CALIFORNIA OR ITS OFFICERS OR AGENTS SHALL NOT BE RESPONSIBLE FOR THE ACCURACY OR COMPLETENESS OF SCANNED COPIES OF THIS PLAN SHEET.

ROADWAY QUANTITIES

DESCRIPTION	DIRECTION	LOCATION FROM PM	LOCATION TO PM	NUMBER OF SLABS (N) FREEWAY LANE No. HOV EA	1 EA	2 EA	3 EA	4 EA	5 EA	INDIVIDUAL SLAB REPLACEMENT (RSC) CY	GRIND EXISTING CONCRETE PAVEMENT SQYD	COLD PLANE AC PAVEMENT SQYD	RUBBERIZED HOT MIXED ASPHALT SUPERPAVE (GAP-GRADED) TON	HOT MIXED ASPPHALT SUPERPAVE (TYPE A) TON	TACK COAT TON	REPLACE BASE CY	DRILL AND BOND (DOWEL BAR) EA	REPAIR SPALLED SURFACE AREA SQFT
VENICE Blvd UC TO	NB	28.00	28.18								11,817	933	126		0.43			
0.2 MILE N OF VENICE Blvd	SB	28.00	28.18				1			5	11,501	1,178	159		0.54	1	16	
0.2 MILE N OF VENICE Blvd TO	NB	28.18	28.40								12,682	1,438	194		0.66			
0.1 MILE S OF PALMS Blvd OC	SB	28.18	28.40			9	15			120	12,630	886	120		0.41	24	192	
0.1 MILE S OF PALMS Blvd OC TO	NB	28.40	28.62			2	3			25	10,724	1,809	244		0.83	5	32	
WESTWOOD CHANNEL	SB	28.40	28.62				3			15	9,736	75	10		0.03	3	32	
WESTWOOD CHANNEL TO	NB	28.62	28.85				1			5	12,243					1	16	
0.2 MILE N OF WESTWOOD CHANNEL	SB	28.62	28.85								12,164	1,444	195		0.66			
0.2 MILE N OF WESTWOOD CHANNEL TO	NB	28.85	29.07								11,223	1,641	221		0.75			
0.1 MILE S OF NATIONAL Blvd UC	SB	28.85	29.07					2		10	9,973	2,218	321		1.02	2	16	2340
0.1 MILE S OF NATIONAL Blvd UC TO	NB	29.07	29.33								8,481	634	86		0.29			
0.2 MILE N OF NATIONAL Blvd UC	SB	29.07	29.33								8,572	428	58		0.20			
0.2 MILE N OF NATIONAL Blvd UC TO	NB	29.33	29.59								10,868							
ROUTE 10 INTERCHANGE	SB	29.33	29.59			5				25	11,115					5	40	
ROUTE 10 INTERCHANGE TO	NB	29.59	29.87								10,605							
EXPOSITION Blvd UC	SB	29.59	29.87		3		3	3		45	10,971					9	72	
EXPOSITION Blvd UC TO	NB	29.87	30.15			2	4	1		35	10,776					7	48	
0.05 MILE S OF OLYMPIC Blvd UC	SB	29.87	30.15								11,686							
0.05 MILE S OF OLYMPIC Blvd UC TO	NB	30.15	30.43								11,425							
0.2 MILE N OF OLYMPIC Blvd UC	SB	30.15	30.43					2	15	85	15,105					17	136	
0.2 MILE N OF OLYMPIC Blvd UC TO	NB	30.43	30.71								18,947							
0.1 MILE S OF SANTA MONICA Blvd UC	SB	30.43	30.71						1	5	16,884					1	16	
SUBTOTAL							75			375	260,128	12,684	1734	0	5.82	75	616	2340

(N) - NOT A SEPARATE PAY ITEM, FOR INFORMATION ONLY

SUMMARY OF QUANTITIES

Q-1

STATE OF CALIFORNIA - DEPARTMENT OF TRANSPORTATION
Caltrans® OFFICE OF DESIGN A

FUNCTIONAL SUPERVISOR: MARIO GUTIERREZ
CALCULATED-DESIGNED BY: TIANQIANG GUO
CHECKED BY: WILFRIDO MORALES
REVISED BY
DATE REVISED

LAST REVISION 00-00-00
DATE PLOTTED => 04-MAR-2014
TIME PLOTTED => 13:34

Dist	COUNTY	ROUTE	POST MILES TOTAL PROJECT	SHEET No.	TOTAL SHEETS
07	LA	405	28.0/39.0	50	108

REGISTERED CIVIL ENGINEER 11-5-13 DATE

2-10-14
PLANS APPROVAL DATE

REGISTERED PROFESSIONAL ENGINEER WILFRIDO MORALES No. 67533 Exp. 6/30/15 CIVIL STATE OF CALIFORNIA

THE STATE OF CALIFORNIA OR ITS OFFICERS OR AGENTS SHALL NOT BE RESPONSIBLE FOR THE ACCURACY OR COMPLETENESS OF SCANNED COPIES OF THIS PLAN SHEET.

ROADWAY QUANTITIES

DESCRIPTION	DIRECTION	LOCATION FROM PM	LOCATION TO PM	NUMBER OF SLABS (N) FREEWAY LANE No. HOV EA	1 EA	2 EA	3 EA	4 EA	5 EA	INDIVIDUAL SLAB REPLACEMENT (RSC) CY	GRIND EXISTING CONCRETE PAVEMENT SQYD	COLD PLANE AC PAVEMENT SQYD	RUBBERIZED HOT MIXED ASPHALT SUPERPAVE (GAP-GRADED) TON	HOT MIXED ASPPHALT SUPERPAVE (TYPE A) TON	TACK COAT TON	REPLACE BASE CY	DRILL AND BOND (DOWEL BAR) EA	REPAIR SPALLED SURFACE AREA SQFT
0.1 MILE S OF SANTA MONICA Blvd UC TO 0.1 MILE N OF SANTA MONICA Blvd UC	NB	30.71	30.99								12,656							
	SB	30.71	30.99						22	110	14,353					22	176	
0.1 MILE N OF SANTA MONICA Blvd UC TO 0.2 MILE S OF WILSHIRE Blvd INTERCHANGE	NB	30.99	31.26								16,036							
	SB	30.99	31.26						11	55	14,732					11	88	
0.2 MILE S OF WILSHIRE Blvd INTERCHANGE TO WILSHIRE Blvd INTERCHANGE	NB	31.26	31.53								18,692							
	SB	31.26	31.53								17,027							
WILSHIRE Blvd INTERCHANGE TO 0.1 MILE S OF CONSTITUTION Ave UC	NB	31.53	31.80								6,221	6,956	704	469	4.92			
	SB	31.53	31.80								3,498	9,502	961	641	6.72			
0.1 MILE S OF CONSTITUTION Ave UC TO 0.1 MILE N OF CONSTITUTION Ave UC	NB	31.80	32.15								7,825	8,486	859	573	3.89			
	SB	31.80	32.15								4,518	14,876	1,505	1,004	10.54			
SOUTHBOUND ROUTE 405 TO WESTBOUND ROUTE 10 CONNECTOR	S405	29.78									4,830	1,679	170		0.77			810
	W10		5.13															
SOUTHBOUND ROUTE 405 TO EASTBOUND ROUTE 10 CONNECTOR	S405	29.78			12					60	3,729	1,247	126		0.57	12	96	
	E10		5.80															
NORTHBOUND ROUTE 405 TO EASTBOUND ROUTE 10 CONNECTOR	N405	29.27			24					120	4,855	1,524	154		0.70	24	192	
	E10		5.80															
NORTHBOUND ROUTE 405 TO WESTBOUND ROUTE 10 CONNECTOR	N405	29.27			20					100	4,568	1,064	108		0.49	20	160	
	W10		5.13															
WESTBOUND ROUTE 10 TO SOUTHBOUND ROUTE 405 CONNECTOR	W10	5.90			11					55	4,225	1,864	189		0.85	11	88	
	S405		29.13															
WESTBOUND ROUTE 10 TO NORTHHBOUND ROUTE 405 CONNECTOR	W10	5.58									6,540	2,578	261		1.18			
	N405		28.62															
EASTBOUND ROUTE 10 TO SOUTHBOUND ROUTE 405 CONNECTOR	E10	5.31			6					30	3,349	1,462	148		0.67	6	48	
	S405		29.43															
EASTBOUND ROUTE 10 TO NORTHBOUND ROUTE 405 CONNECTOR	E10	5.05			2					10	2,830	1,250	127		0.57	2	16	
	N405		29.92															
SUBTOTAL				108						540	150,484	52,488	5,312	2,687	31.87	108	864	810

(N) - NOT A SEPARATE PAY ITEM, FOR INFORMATION ONLY

SUMMARY OF QUANTITIES

Q-2

STATE OF CALIFORNIA - DEPARTMENT OF TRANSPORTATION
OFFICE OF DESIGN A

FUNCTIONAL SUPERVISOR: MARIO GUTIERREZ
CALCULATED-DESIGNED BY: WILFRIDO MORALES
CHECKED BY: TIANQIANG GUO
REVISED BY
DATE REVISED

LAST REVISION 00-00-00
DATE PLOTTED => 04-MAR-2014
TIME PLOTTED => 13:34

Dist	COUNTY	ROUTE	POST MILES TOTAL PROJECT	SHEET No.	TOTAL SHEETS
07	LA	405	28.0/39.0	51	108

REGISTERED CIVIL ENGINEER 11-5-13 DATE

2-10-14
PLANS APPROVAL DATE

REGISTERED PROFESSIONAL ENGINEER WILFRIDO MORALES No. 67533 Exp. 6/30/15 CIVIL STATE OF CALIFORNIA

THE STATE OF CALIFORNIA OR ITS OFFICERS OR AGENTS SHALL NOT BE RESPONSIBLE FOR THE ACCURACY OR COMPLETENESS OF SCANNED COPIES OF THIS PLAN SHEET.

ROADWAY QUANTITIES

DESCRIPTION	DIRECTION	LOCATION FROM PM	LOCATION TO PM	NUMBER OF SLABS (N) FREEWAY LANE No. HOV EA	1 EA	2 EA	3 EA	4 EA	5 EA	6 EA	INDIVIDUAL SLAB REPLACEMENT (RSC) CY	GRIND EXISTING CONCRETE PAVEMENT SQYD	COLD PLANE AC PAVEMENT SQYD	RUBBERIZED HOT MIXED ASPHALT SUPERPAVE (GAP-GRADED) TON	HOT MIXED ASPPHALT SUPERPAVE (TYPE A) TON	TACK COAT TON	ASPHALT RUBBER BINDER TON	SCREENINGS TON	SLURRY SEAL TON	REPAIR SPALLED SURFACE AREA SQFT
0.21 MILE N OF CONSTITUTION Ave UC BRIDGE No. 53-0711	NB	32.11	32.35									6,389	6,667	540	360	4.72				
TO 0.15 MILE S OF MONTANA Ave UC BRIDGE No. 53-0712	SB	32.11	32.35									0	11,111	1,125	750	4.44	26.10	200		
0.15 MILE S OF MONTANA Ave UC BRIDGE No. 53-0712	NB	32.35	32.63									7,411	8,700	705	470	6.16				
TO 0.13 MILE N OF MONTANA Ave UC BRIDGE No. 53-0712	SB	32.35	32.63									0	12,889	1,305	870	5.91	29.55	226		
0.13 MILE N OF MONTANA Ave UC BRIDGE No. 53-0712	NB	32.63	32.90									7,411	8,700	705	470	6.16				
TO 0.27 MILE N OF MONTANA Ave UC BRIDGE No. 53-0712	SB	32.63	32.90									0	12,083	1,223	816	2.40	34.17	261		
0.27 MILE N OF MONTANA Ave UC BRIDGE No. 53-0712	NB	32.90	33.18									2,593	8,700	705	470	6.16				
TO 0.18 MILES N OF SUNSET Blvd OC BRIDGE No. 53-0713	SB	32.90	33.18									1,772	11,278	1,142	761	3.95	19.76	151		
0.18 MILES N OF SUNSET Blvd OC BRIDGE No. 53-0713	NB	33.18	33.46									6,584	8,700	705	470	6.16				
TO 0.74 MILES N OF SUNSET Blvd OC BRIDGE No. 53-0713	SB	33.18	33.46									0	11,278	1,142	761	10.55	52.78	403		756
0.74 MILES N OF SUNSET Blvd OC BRIDGE No. 53-0713	NB	33.46	33.73									7,949	8,700	705	470	6.16				
TO 1.304 MILES N OF SUNSET Blvd OC BRIDGE No. 53-0713	SB	33.46	33.73									0	11,278	1,142	761	10.49	52.50	400		
1.304 MILES N OF SUNSET Blvd OC BRIDGE No. 53-0713	NB	33.73	34.0									8,707	7,467	0	1008	3.42			0	
TO 1.57 MILES N OF SUNSET Blvd OC BRIDGE No. 53-0713	SB	33.73	34.0									1,228	10,978	664	1040	5.03			5.32	
0.228 MILES S OF GETTY CENTER UC BRIDGE No. 53-0738	NB	34.0	34.27									5,760	5,673	766	0	2.60			2.52	
TO 0.02 MILES N OF GETTY CENTER UC BRIDGE No. 53-0738	SB	34.0	34.27									5,138	7,087	957	0	3.25			5.27	
0.02 MILES N OF GETTY CENTER UC BRIDGE No. 53-0738	NB	34.27	34.55									7,389	3,817	516	0	1.75			24.07	
TO 0.33 MILES N OF GETTY CENTER UC BRIDGE No. 53-0738	SB	34.27	34.55									9,566	0	0	0	0			33.90	
0.33 MILES N OF GETTY CENTER UC BRIDGE No. 53-0738	NB	34.55	34.76									5,043	172	24	0	0.08			25.89	
TO 0.54 MILES N OF GETTY CENTER UC BRIDGE No. 53-0738	SB	34.55	34.76									6,649	2,250	304	0	1.03			8.86	
SUBTOTAL				0	0	0	0	0	0	0	0	89,589	157,528	14,375	9477	80.07	214.86	1641	105.83	756

SUMMARY OF QUANTITIES

Q-3

STATE OF CALIFORNIA - DEPARTMENT OF TRANSPORTATION
Caltrans® OFFICE OF DESIGN A

FUNCTIONAL SUPERVISOR: MARIO GUTIERERZ
CALCULATED-DESIGNED BY: WILFRIDO MORALES
CHECKED BY
REVISED BY
DATE REVISED

LAST REVISION 00-00-00
DATE PLOTTED => 04-MAR-2014
TIME PLOTTED => 13:34

Dist	COUNTY	ROUTE	POST MILES TOTAL PROJECT	SHEET No.	TOTAL SHEETS
07	LA	405	28.0/39.0	52	108

11-5-13
REGISTERED CIVIL ENGINEER DATE

2-10-14
PLANS APPROVAL DATE

REGISTERED PROFESSIONAL ENGINEER
WILFRIDO MORALES
No. 67533
Exp. 6/30/15
CIVIL
STATE OF CALIFORNIA

THE STATE OF CALIFORNIA OR ITS OFFICERS OR AGENTS SHALL NOT BE RESPONSIBLE FOR THE ACCURACY OR COMPLETENESS OF SCANNED COPIES OF THIS PLAN SHEET.

ROADWAY QUANTITIES

DESCRIPTION	DIRECTION	LOCATION FROM	LOCATION TO	NUMBER OF SLABS (N) FREEWAY LANE No. HOV	1	2	3	4	5	REMOVE ASPHALT CONCRETE SURFACING	INDIVIDUAL SLAB REPLACEMENT (RSC)	GRIND EXISTING CONCRETE PAVEMENT	COLD PLANE ASPHALT CONCRETE PAVEMENT	RUBBERIZED HOT MIX ASPHALT SUPERPAVE (GAP GRADED)	HOT MIXED ASPHALT SUPERPAVE (TYPE A)	TACK COAT	ASPHALT RUBBER BINDER	SCREENINGS	SLURRY SEAL	REPLACE BASE	DRILL AND BOND (DOWEL BAR)	REPAIR SPALLED SURFACE AREA
		PM	PM	EA	EA	EA	EA	EA	EA	SQYD	CY	SQYD	SQYD	TON	TON	TON	TON	TON	TON	CY	EA	SQFT
SEPULVEDA Blvd UC/GETTY Ctr Dr TO BEL AIR CREST Rd UC	NB	34.78	35.81									26,433	29,155	3,936		13.36			2.06			
	SB	34.78	35.81										42,336	4,346	2,897	19.40	97	741				
BEL AIR CREST Rd UC TO SKIRBALL Ctr Dr OC	NB	35.85	36.72									22,743	24,071	3,250		11.03						
	SB	35.85	36.72									11,831	30,819	4,161		14.13						
SKIRBALL Ctr Dr OC TO 0.1 MILE N OF SKIRBALL Ctr Dr OC	NB	36.72	36.84									3,610	3,851	520		1.76						
	SB	36.72	36.84									2,303	6,364	859		2.92						
0.1 MILE N OF SKIRBALL Ctr Dr OC TO MULHOLLAND Dr OC	NB	36.84	37.03			2	4				30	9,207								6	56	
	SB	36.84	37.03									8,174										
MULHOLLAND Dr OC TO 0.7 MILE N OF MULHOLLAND Dr OC	NB	37.03	37.71	9	20	9	15				265	40,231								53	440	2,340
MULHOLLAND Dr OC TO SEPULVEDA Blvd UC	SB	37.03	38.59	1		3	2	4			50	84,741								10	80	
0.7 MILE N OF MULHOLLAND Dr OC TO SEPULVEDA Blvd UC	NB	37.71	38.59							202,824		17,812	2,992	3,385	3,039	3.85			17.0			
SEPULVEDA Blvd UC TO VENTURA Blvd UC	NB	38.59	39.00			5	3				40	12,631							11.6	8	72	
	SB	38.59	39.00									18,292										
ROUTE 405 NORTHBOUND OFF RAMP TO GETTY Ctr Dr/SEPULVEDA Blvd 327' FROM RAMP NOSE	NB	34.56											1,550	211		0.71						
ROUTE 405 NORTHBOUND ON RAMP FROM GETTY Ctr Dr/SEPULVEDA Blvd 249' FROM RAMP NOSE	NB	34.73											1,880	253		0.86						
ROUTE 405 SOUTHBOUND OFF RAMP TO GETTY Ctr Dr/SEPULVEDA Blvd	SB	34.99											3,251	439		1.48						
SUBTOTAL (Q-4)				77						202,824	385	258,008	146,269	21,360	5,939	69.50	97	741	30.66	77	648	2,340
SUBTOTAL (Q-1, Q-2, & Q-3)				183						0	915	500,201	222,700	21,421	12,164	117.76	214.86	1641	105.83	183	1,480	3,906
TOTAL				260						287,982*	1,300	758,209	368,969	42,781	18,100	187.26	311.86	2,382	136.49	260	2,128	6,246

* SEE Q-5 FOR ADDITIONAL QUANTITIES

SUMMARY OF QUANTITIES

Q-4

STATE OF CALIFORNIA - DEPARTMENT OF TRANSPORTATION
Caltrans® OFFICE OF DESIGN A

WILFRIDO MORALES — REVISED BY
JOSEPH REYNOZA — DATE REVISED
CALCULATED-DESIGNED BY
CHECKED BY
FUNCTIONAL SUPERVISOR
MARIO GUTIERREZ

LAST REVISION 00-00-00 | DATE PLOTTED => 04-MAR-2014 | TIME PLOTTED => 13:34

Dist	COUNTY	ROUTE	POST MILES TOTAL PROJECT	SHEET No.	TOTAL SHEETS
07	LA	405	28.0/39.0	53	108

REGISTERED CIVIL ENGINEER 11-5-13 DATE

2-10-14
PLANS APPROVAL DATE

REGISTERED PROFESSIONAL ENGINEER WILFRIDO MORALES No. 67533 Exp. 6/30/15 CIVIL STATE OF CALIFORNIA

THE STATE OF CALIFORNIA OR ITS OFFICERS OR AGENTS SHALL NOT BE RESPONSIBLE FOR THE ACCURACY OR COMPLETENESS OF SCANNED COPIES OF THIS PLAN SHEET.

PAVEMENT STRUCTURE QUANTITIES

DESCRIPTION	DIRECTION	LOCATION FROM PM	LOCATION TO PM	REMOVE ASPHALT CONCRETE SURFACING SQFT	REMOVE CONCRETE PAVEMENT AND BASE CY	JOINTED PLAIN CONCRETE PAVEMENT (RSC) CY	CLASS 3 AGGREGATE BASE TON	ALTERNATE TREATED BASE CY	BASE BOND BREAKER SQYD
NORTH OF NATIONAL Blvd UC (NEXT TO APPROACH SLABS) ALL LANES	SB	29.19	29.20	2,700	195	95		70	300
SOUTH OF NATIONAL Blvd UC (NEXT TO APPROACH SLABS) ALL LANES	SB	29.15	29.16	2,250	163	80		59	250
SOUTH OF EXPOSITION Blvd UC (NEXT TO APPROACH SLABS) ALL LANES	SB	29.83	29.84	4,797	258	165		53	417
SB 405 TO EB WILSHIRE Blvd OFF-RAMP/GORE AREA (LANES 4 & 5)	SB	31.47	31.48	6,642	480	196	313	63	738
AC SECTION (LANES 3 & 4) MULHOLLAND Dr TO SEPULVEDA Blvd	SB	37.54	37.60	7,353	585	259	347	136	817
AC SECTION (LANE 4) MULHOLLAND Dr TO SEPULVEDA Blvd	SB	37.63	37.74	4563	349	232	312	122	733
AC SECTION (LANES 3 & 4) MULHOLLAND Dr TO SEPULVEDA Blvd	SB	37.71	37.77	7,353	585	259	347	136	817
AC SECTION (LANE 4) MULHOLLAND Dr TO SEPULVEDA Blvd	SB	37.83	37.86	3,600	287	127	170	67	400
AC SECTION (LANES 3 & 4) MULHOLLAND Dr TO SEPULVEDA Blvd	SB	37.92	38.03	17,640	1,311	647	866	340	2,042
6 CONSECUTIVE SLABS (LANE 4)	SB	38.39	38.40		86	38	51	20	120
SOUTH OF EXPOSITION Blvd UC (NEXT TO APPROACH SLABS) ALL LANES	NB	29.83	29.84	3,600	167	145		47	400
100' FEET NORTH OF OLYMPIC Blvd UC (AC PATCH)	NB	30.22	30.24	648	52	23	31	13	72
BETWEEN MULHOLLAND Dr AND SEPULVEDA Blvd (LANE 1)	NB	37.51	37.58		344	152	204	80	480
BETWEEN MULHOLLAND Dr AND SEPULVEDA Blvd (LANES 1,2 & 3)	NB	37.62	37.65		344	152	204	80	480
LANE #1 (FROM Rte 101 EXIT NOSE TO CARPOOL SIGN IN MEDIAN)	NB	38.82	38.85		406	180	241	95	567
NB OFF RAMP TO SEPULVEDA/GETTY CTR Dr. TO 34.7	NB	34.56	34.70	18,099	1,173	637	854	336	2,011
PM 34.7 TO SEPULVEDA UC BB	NB	34.70	34.75	5,913	384	208	279	110	657
			TOTAL	85,158 *	7,169	3,595**	4,219	1,827	11,301

* SEE Q-4 FOR ADDITIONAL QUANTITIES

** SEE Q-7 FOR ADDITIONAL QUANTITIES

SUMMARY OF QUANTITIES

Q-5

STATE OF CALIFORNIA - DEPARTMENT OF TRANSPORTATION
Caltrans® OFFICE OF DESIGN A

FUNCTIONAL SUPERVISOR: MARIO GUTIERREZ
CALCULATED-DESIGNED BY: WILFRIDO MORALES
CHECKED BY: JOSEPH REYNOZA
REVISED BY
DATE REVISED

LAST REVISION 00-00-00
DATE PLOTTED => 04-MAR-2014
TIME PLOTTED => 13:34

Dist	COUNTY	ROUTE	POST MILES TOTAL PROJECT	SHEET No.	TOTAL SHEETS
07	LA	405	28.0/39.0	54	108

REGISTERED CIVIL ENGINEER 11-5-13 DATE

2-10-14
PLANS APPROVAL DATE

REGISTERED PROFESSIONAL ENGINEER WILFRIDO MORALES No. 67533 Exp. 6/30/15 CIVIL STATE OF CALIFORNIA

THE STATE OF CALIFORNIA OR ITS OFFICERS OR AGENTS SHALL NOT BE RESPONSIBLE FOR THE ACCURACY OR COMPLETENESS OF SCANNED COPIES OF THIS PLAN SHEET.

ROADWAY QUANTITIES

LOCATION	PM	REMOVE GUARDRAIL	TRANSITION RAILING (TYPE WB-31)	MIDWEST GUARDRAIL SYSTEM (WOOD POST)	DOUBLE MIDWEST GUARDRAIL SYSTEM (WOOD POST)	ALTERNATIVE IN-LINE TERMINAL SYSTEM	ALTERNATIVE FLARED TERMINAL SYSTEM	END ANCHOR ASSEMBLY (TYPE SFT)	CONCRETE BARRIER (TYPE 60)	CRASH CUSHION (TYPE SCI SMART 70 GM)	CRASH CUSHION (TYPE SCI SMART 100 GM)	VEGETATION CONTROL (MINOR CONCRETE)	REMOVE AC DIKE	PLACE HMA DIKE (TYPE F)	PLACE HMA DIKE (TYPE C)	REMOVE CONCRETE CURB	ROADWAY EXCAVATION	JOINTED PLAIN CONCRETE PAVEMENT (RSC)	TREATED WOOD WASTE
		LF	EA	LF		EA	EA	EA	LF	EA	EA	SQYD	LF	LF	LF	LF	LF	CY	LB
LAYOUT 1	29.1	472	1	499	25			1			1	171	23						10,154
SOUTHBOUND Rte 405 ON-RAMP FROM EB NATIONAL Blvd	29.2	63	1	12.5			1					31	88	37.5	63				1,373
SOUTHBOUND Rte 405	30.1	87.5	1	62.5				1				21	113	87.5					1,906
LAYOUT 2	29.5	75	1	12.5			1		292			39	100	37.5	63			34	1,635
CONNECTOR FROM NB Rte 405 to EB Rte 10 (NORTH NATIONAL Blvd)	29.1	175	2	125								42	200	175					3,813
CONNECTOR FROM NB Rte 405 TO EB Rte 10 (MIDDLE-RIGHT SHOULDER)	29.4	188	1	162.5								54	213	187.5					4,085
CONNECTOR FROM NB Rte 405 TO EB Rte 10 (MIDDLE-LEFT SHOULDER)	29.4	500	1	437.5			1					173	525	462.5	63				10,895
CONNECTOR FROM NB Rte 405 TO EB Rte 10 (END-LEFT SHOULDER)	29.4	288	1	250				1				84	313	275					6,265
CONNECTOR FROM NB Rte 405 TO WB Rte 10 (MIDDLE-RIGHT SHOULDER)	29.4	213	1	150			1					77	238	175	63				4,630
CONNECTOR FROM NB Rte 405 TO WB Rte 10 (MIDDLE-LEFT SHOULDER)	29.4	75	1	12.5		1						31	100	25	63				1,634
CONNECTOR FROM NB Rte 405 TO WB Rte 10 (END-LEFT SHOULDER)	29.7	113	1	87.5				1				29	138	112.5					2,451
CONNECTOR FROM NB Rte 405 TO WB Rte 10 (END-RIGHT SHOULDER)	29.7	188	1	162.5				1				54	213	187.5					4,086
CONNECTOR SB Rte 405 TO WB Rte 10 (BEGINNING)	30.0	163	1	100			1					61	188	125	63				3,541
CONNECTOR SB Rte 405 TO WB Rte 10 (END-LEFT SHOULDER)	29.7	613	1	587.5				1				196	638	612.5					13,347
CONNECTOR SB Rte 405 TO EB Rte 10 (MIDDLE-RIGTH SHOULDER)	30.0	675	2	625								209	700	675					14,708
CONNECTOR SB Rte 405 TO EB Rte 10 (MIDDLE-LEFT SHOULDER)	30.0	75		37.5			1	1				39	100	37.5	63				1,634
CONNECTOR SB Rte 405 TO EB Rte 10 (MIDDLE-LEFT SHOULDER)	30.0	75	1	12.5		1						31	100	37.5	63				1,634
CONNECTOR SB Rte 405 TO EB Rte 10 (END-RIGHT SHOULDER)	29.4	113		75			1	1				52	138	75	63				2,451
CONNECTOR FROM WB Rte 10 TO SB Rte 405 (BEGINNING-RIGHT SHOULDER)	29.4	688	2	637.5								213	713	687.5					14,981
CONNECTOR FROM WB Rte 10 TO SB Rte 405 (BEGINNING-LEFT SHOULDER)	29.4	100	1	37.5		1						40	125	62.5	63				2,179
SUBTOTAL		4,939.5	21	4,086.5	25	3	7	8	292		1	1,647	4,966	4,075	630			34	107,402

SUMMARY OF QUANTITIES

Q-6

STATE OF CALIFORNIA - DEPARTMENT OF TRANSPORTATION
Caltrans® OFFICE OF DESIGN A

FUNCTIONAL SUPERVISOR: MARIO GUTIERREZ
CALCULATED-DESIGNED BY: WILFRIDO MORALES
CHECKED BY: JOSEPH REYNOZA
REVISED BY
DATE REVISED

LAST REVISION 00-00-00
DATE PLOTTED => 04-MAR-2014
TIME PLOTTED => 13:34

Dist	COUNTY	ROUTE	POST MILES TOTAL PROJECT	SHEET No.	TOTAL SHEETS
07	LA	405	28.0/39.0	55	108

REGISTERED CIVIL ENGINEER 11-5-13 DATE

2-10-14
PLANS APPROVAL DATE

REGISTERED PROFESSIONAL ENGINEER WILFRIDO MORALES No. 67533 Exp. 6/30/15 CIVIL STATE OF CALIFORNIA

THE STATE OF CALIFORNIA OR ITS OFFICERS OR AGENTS SHALL NOT BE RESPONSIBLE FOR THE ACCURACY OR COMPLETENESS OF SCANNED COPIES OF THIS PLAN SHEET.

ROADWAY QUANTITIES

LOCATION	PM	REMOVE GUARDRAIL	TRANSITION RAILING (TYPE WB-31)	MIDWEST GUARDRAIL SYSTEM (WOOD POST)	DOUBLE MIDWEST GUARDRAIL SYSTEM (WOOD POST)	ALTERNATIVE IN-LINE TERMINAL SYSTEM	ALTERNATIVE FLARED TERMINAL SYSTEM	END ANCHOR ASSEMBLY (TYPE SFT	CONCRETE BARRIER (TYPE 60)	CRASH CUSHION (TYPE SCI SMART 70 GM)	CRASH CUSHION (TYPE SCI SMART 100 GM)	REMOVE CRASH CUSHION (SAND FILLED)	VEGETATION CONTROL (MINOR CONCRETE)	REMOVE AC DIKE	PLACE HMA DIKE (TYPE F)	PLACE HMA DIKE (TYPE D)	PLACE HMA DIKE (TYPE C)	REMOVE CONCRETE CURB	ROADWAY EXCAVATION	LEAN CONCRETE BASE RAPID SETTING	JOINTED PLAIN Conc PAVEMENT (RSC)	ROADWAY EXCAVATION (TYPE Z-2) (AERIALLY DEPOSITED LEAD)	TREATED WOOD WASTE
		LF	EA	LF	LF	EA	EA	EA	LF	EA	EA	EA	SQYD	LF	LF	LF	LF	LF	CY	CY	CY	CY	TON
CONNECTOR FROM WB Rte 10 TO SB Rte 405 (END-RIGHT SHOULDER)	29.1	188	1	162.5									54	392	187.5								4,085
CONNECTOR FROM WB Rte 10 TO NB Rte 405 (BEGINNING-RIGHT SHOULDER)	29.4	75	1	12.5		1							31	100	37.5		63						1,634
CONNECTOR FROM EB Rte 10 TO SB Rte 405 (BEGINNING-RIGHT SHOULDER)	29.6	163	1	100		1							61	188	125		63						3,541
CONNECTOR FROM EB Rte 10 TO SB Rte 405 (BEGINNING-LEFT SHOULDER)	29.6	50	2										1	75	50								1,089
CONNECTOR FROM EB Rte 10 TO NB Rte 405 (BEGINNING-RIGHT SHOULDER)	29.6	518	1	875		1							319	543	900		63						11,276
CONNECTOR FROM EB Rte 10 TO NB Rte 405 (BEGINNING-LEFT SHOULDER)	29.6	75	1	12.5		1							31	100	37.5		63						1,634
SB Rte 405 OFF-RAMP TO OLYMPIC Blvd AND PICO Blvd (LEFT SHOULDER)	30.1	62.5	1	37.5				1					13	87.5	62.5								1,361
SB Rte 405 OFF-RAMP TO OLYMPIC Blvd AND PICO Blvd (RIGHT SHOULDER)	30.1	75		37.5			1	1					39	100	37.5		63						1,634
WB WILSHIRE Blvd TO ON-RAMP NB Rte 405	31.6	450	1	387.5									129	475	412.5								9,805
SB Rte 405 1400′ SOUTH SUNSET Blvd	32.7	557	2	506.25									169	582	556.25								12,137
LAYOUT 3	33.1	200						1	272	1	1			225				317	84	12	26	34	4,358
SB Rte 405 900′ NORTH SUNSET Blvd	33.2	77		59.5		1		1					47	102	59.5		63						1,677
SB Rte 405 NORTH OVADA PLACE UC	33.2	100	1	37.5			1						40	125	62.5		63						2,179
NB Rte 405 OFF-RAMP TO GETTY CENTER/SEPULVEDA Blvd	34.7	60	1	12.5			1						31	85	37.5		63						1,307
NB Rte 405 ON-RAMP FROM GETTY CENTER/SEPULVEDA Blvd	34.7	315		281.25			1	1					121	340	281.25		63						6,864
SB Rte 405 NORTH SEPULVEDA Blvd UC	34.9	694	1	631.25			1						238	719	656.25		63						15,122
SB Rte 405 (PM 35.07 TO 35.33)	35.1													1,370		1373							
SB Rte 405 NORTH SEPULVEDA Blvd UC	35.1	75		37.5		1		1					39	100	37.5		63						1,634
SB Rte 405 SOUTH BEL AIR CREST UC	35.8	2,369	1	2,343.8				1					782	2,394	2,368.8								5,1621
NB Rte 405 VENTURA OFF-RAMP-RAMP TERMINI	39.0									1		14											
SB Rte 405 ON-RAMP FROM WB VENTURA Blvd	39.0	225		187.5				1					62	250	187.5								4,903
SB Rte 405 NORTH VENTURA Blvd UC	39.0	87.5	1	25			1						36	113	50		63						1,907
SUBTOTAL		6,416	16	5,747.0		6	6	8	272	2	1	14	2,243	8,465.5	6,147.05	1,373	756	317	84	12	26	34	139,768
TOTAL		11,355.5	37	9,833.55	25	9	13	16	564	2	2	14	3,890	13,431	10,222	1,373	1,386	317	84	12	60**	34	247,170

** SEE Q-5 FOR ADDITIONAL QUANTITIES

SUMMARY OF QUANTITIES

Q-7

STATE OF CALIFORNIA - DEPARTMENT OF TRANSPORTATION
Caltrans® OFFICE OF DESIGN A

FUNCTIONAL SUPERVISOR: MARIO GUTIERREZ
CALCULATED-DESIGNED BY: WILFRIDO MORALES
CHECKED BY: JOSEPH REYNOZA
REVISED BY
DATE REVISED

LAST REVISION 00-00-00
DATE PLOTTED => 04-MAR-2014
TIME PLOTTED => 13:34

Dist	COUNTY	ROUTE	POST MILES TOTAL PROJECT	SHEET No.	TOTAL SHEETS
07	LA	405	28.0/39.0	56	108

REGISTERED CIVIL ENGINEER 11-5-13 DATE

2-10-14
PLANS APPROVAL DATE

REGISTERED PROFESSIONAL ENGINEER WILFRIDO MORALES No. 67533 Exp. 6/30/15 CIVIL STATE OF CALIFORNIA

THE STATE OF CALIFORNIA OR ITS OFFICERS OR AGENTS SHALL NOT BE RESPONSIBLE FOR THE ACCURACY OR COMPLETENESS OF SCANNED COPIES OF THIS PLAN SHEET.

TRAFFIC HANDLING QUANTITIES

SHEET No.	TEMPORARY RAILING (TYPE K)	CHANNELIZER (SURFACE MOUNTED)	TEMPORARY CRASH CUSHION MODULE
	LF	EA	EA
TH-1	960	19	21
TH-2	620	5	14
TH-3	600	17	38
TOTAL	2180	41	73

WATER POLLUTION CONTROL QUANTITIES

SHEET No.	TEMPORARY DRAINAGE INLET PROTECTION
	EA
TH-1	12
TH-2	8
TH-3	10
TOTAL	30

ROADWAY QUANTITIES

DESCRIPTION	DIRECTION	LOCATION FROM	LOCATION TO	CHAIN LINK FENCE (TYPE CL-6)	6' CHAIN LINK GATE (TYPE CL-6)	CHAIN LINK RAILING (TYPE 7)	WROUGHT IRON GATE	WROUGHT IRON FENCE
		PM	PM	LF	EA	LF	EA	LF
VENICE Blvd UC	NB	28.00	28.04			240		
108' SOUTH OF REGENT St	NB	28.13	28.13	20	1			
240' SOUTH OF REGENT St	SB	28.03	28.03	20	1			
ON OLYMPIC Blvd	SB	30.15	30.15				2	14
162' SOUTH OF OLYMPIC Blvd	SB	30.18	30.18					7
TOTAL				40	2	240	2	21

SUMMARY OF QUANTITIES

Q-8

STATE OF CALIFORNIA - DEPARTMENT OF TRANSPORTATION
Caltrans OFFICE OF DESIGN A

FUNCTIONAL SUPERVISOR: MARIO GUTIERREZ
CALCULATED-DESIGNED BY: WILFRIDO MORALES
CHECKED BY: JOSEPH REYNOZA
REVISED BY
DATE REVISED

LAST REVISION 00-00-00
DATE PLOTTED => 04-MAR-2014
TIME PLOTTED => 13:34

Dist	COUNTY	ROUTE	POST MILES TOTAL PROJECT	SHEET No.	TOTAL SHEETS
07	LA	405	28.0/39.0	57	108

REGISTERED ELECTRICAL ENGINEER 1-17-14 DATE

2-10-14
PLANS APPROVAL DATE

REGISTERED PROFESSIONAL ENGINEER OHANNES ANSERLIAN No. E16682 Exp. 6/30/14 ELECT STATE OF CALIFORNIA

THE STATE OF CALIFORNIA OR ITS OFFICERS OR AGENTS SHALL NOT BE RESPONSIBLE FOR THE ACCURACY OR COMPLETENESS OF SCANNED COPIES OF THIS PLAN SHEET.

INDUCTIVE LOOP DETECTOR (REPLACEMENT)

PM	LOCATION	No. OF LOOPS	SEE DETAIL "A", "B", "C" AND "D" ON THIS SHEET FOR TYPICAL LOCATION OF LOOP DETECTORS UNLESS OTHERWISE STATED																		No. OF STUBOUTS (REPLACE)
			1	2	3	4	5	6	7	8	9	10	11	12	13	14	15	16	17	18	
29.1	NB AND SB ROUTE 405 S OF NATIONAL Blvd (DETAIL "C")	10	X	X	X	X	X	X	X	X	X	X									2
29.1	BEGINNING OF CONNECTORS FROM NB Rte 405 TO EB AND WB Rte 10 (DETAIL "B")	2	X	X																	1
34.5	NB OFF RAMP TO SEPULVEDA Blvd (DETAIL "D")	9	X				X	X	XXXX	X X			XXXX	X X			XXXX	X X			3
34.7	NB ON RAMP FROM SEPULVEDA Blvd (DETAIL "A")	7	X	X			X		X		X					X	X				3
34.7	SB OFF RAMP TO SEPULVEDA Blvd (DETAIL "D")	4							XXXX	X X									XXX	XXX	2
	TOTAL	32																			11

X - ABANDON EXISTING INDUCTIVE LOOP DETECTOR, INSTALL TYPE E INDUCTIVE LOOP DETECTOR AT THE SAME LOCATION.
XX - ABANDON EXISTING INDUCTIVE LOOP DETECTOR, INSTALL TYPE D BICYCLE INDUCTIVE LOOP DETECTOR AT THE SAME LOCATION.
XXX - ABANDON EXISTING INDUCTIVE LOOP DETECTOR, INSTALL TYPE E SYSTEM INCUDTIVE LOOP DETECTOR PER LADOT STANDARDS AT THE SAME LOCATION.
XXXX- ABANDON EXISTING INDUCTIVE LOOP DETECTOR, INSTALL TYPE E INDUCTIVE LOOP DETECTOR PER LADOT STANDARDS AT THE SAME LOCATION.

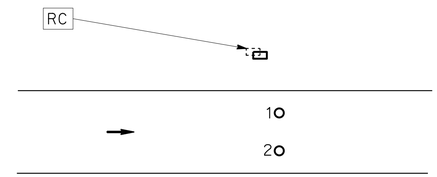

DETAIL "B"

DETAIL FOR TYPICAL TWO LANE CONNECTOR

LEGEND

- PROPOSED TYPE PB-3 PULLBOX.
- EXISTING TO BE REMOVED TYPE PB-3 PULLBOX.
- CITY OF LOS ANGELES BICYCLE DETECTOR.

GENERAL NOTES: (THIS SHEET ONLY)

1. INSTALL 2" STUBOUT FOR NEW INDUCTIVE LOOP DETECTORS. ABANDON EXISTING DETECTOR TERMINATION CONDUITS.
2. LOCATE ALL EXISTING INDUCTIVE LOOP DETECTORS, PRIOR TO CONSTRUCTION.
3. SPLICE NEW INDUCTIVE LOOP DETECTORS TO EXISTING DLC IN ADJACENT PULL BOX.
4. TAG EXISTING DLC IN ADJACENT PULL BOX AND AT CONTROLLER CABINET.

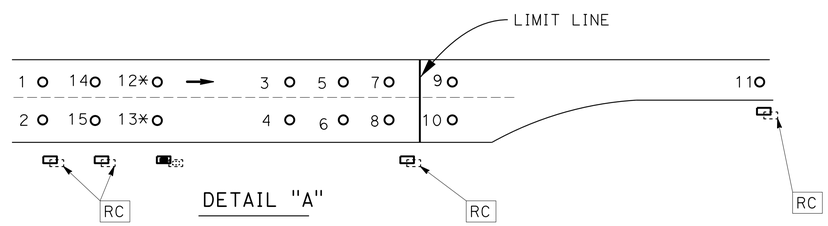

DETAIL "A"

DETAIL FOR TYPICAL TWO LANE ON RAMP LOOPS
"*" INDICATES FOR CITY SYSTEM LOOPS

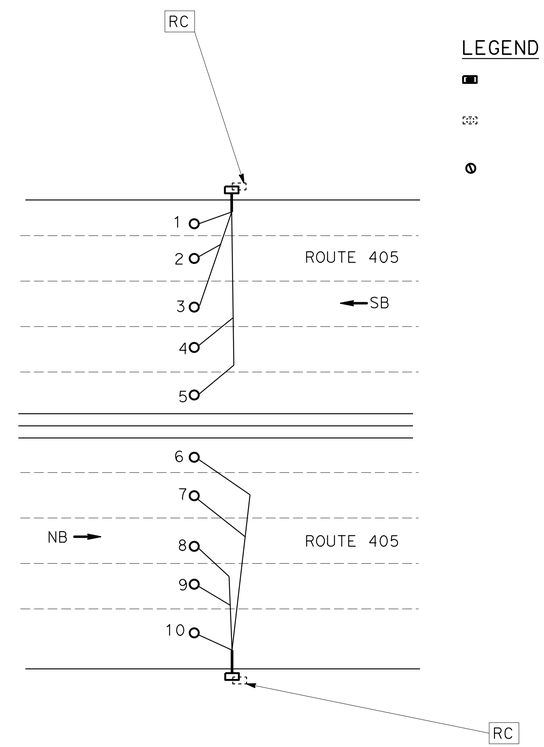

DETAIL "C"

DETAIL FOR TYPICAL LOOP DETECTOR INSTALLATION ON MAINLINE

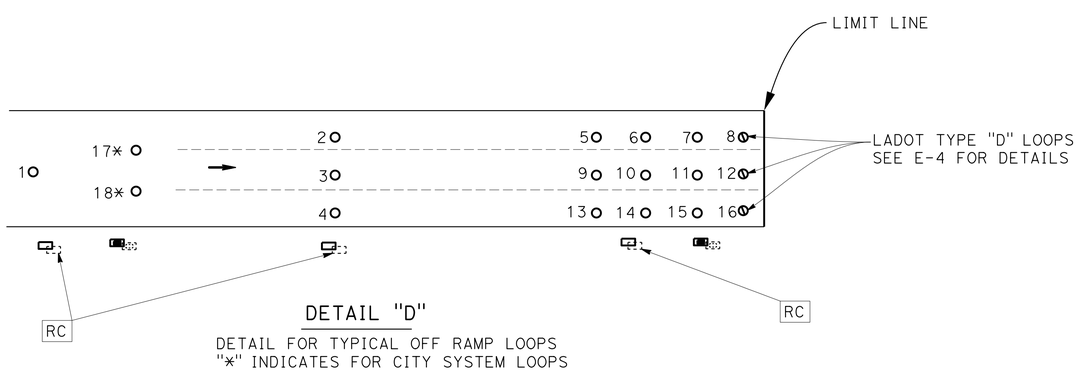

DETAIL "D"

DETAIL FOR TYPICAL OFF RAMP LOOPS
"*" INDICATES FOR CITY SYSTEM LOOPS

INDUCTIVE LOOP DETECTOR

NO SCALE

E-1

STATE OF CALIFORNIA - DEPARTMENT OF TRANSPORTATION
Caltrans TRAFFIC DESIGN

FUNCTIONAL SUPERVISOR: OSWALD ELIZONDO
CALCULATED-DESIGNED BY: OHANNES ANSERLIAN
CHECKED BY: OSWALD ELIZONDO
REVISED BY
DATE REVISED

LAST REVISION 00-00-00
DATE PLOTTED => 04-MAR-2014
TIME PLOTTED => 13:34

FOR ACCURATE RIGHT OF WAY DATA, CONTRACT
RIGHT OF WAY ENGINEERING AT THE DISTRICT OFFICE.

Dist	COUNTY	ROUTE	POST MILES TOTAL PROJECT	SHEET No.	TOTAL SHEETS
07	LA	405	28.0/39.0	58	108

Johannes O Anserlian 1-17-14
REGISTERED CIVIL ENGINEER DATE

2-10-14
PLANS APPROVAL DATE

REGISTERED PROFESSIONAL ENGINEER
JOHANNES ANSERLIAN
No. E16682
Exp. 6/30/14
ELECTRICAL
STATE OF CALIFORNIA

THE STATE OF CALIFORNIA OR ITS OFFICERS OR AGENTS SHALL NOT BE RESPONSIBLE FOR THE ACCURACY OR COMPLETENESS OF SCANNED COPIES OF THIS PLAN SHEET.

PROJECT NOTES: (THIS SHEET ONLY)

1. DISCONNECT THE Exist 5 DLC FROM THE Exist LOOPS AT THIS PULL BOX.
2. PULL THE Exist 5 DLC TROUGH THIS CONDUIT.
3. COIL THE Exist 5 DLC FROM THE Exist LOOPS AT THIS PULL BOX.
4. AFTER INSTALLATION OF THE NEW LOOPS, INSTALL THE Exist 5 DLC, 1#8(G) IN THE Exist 3"C.

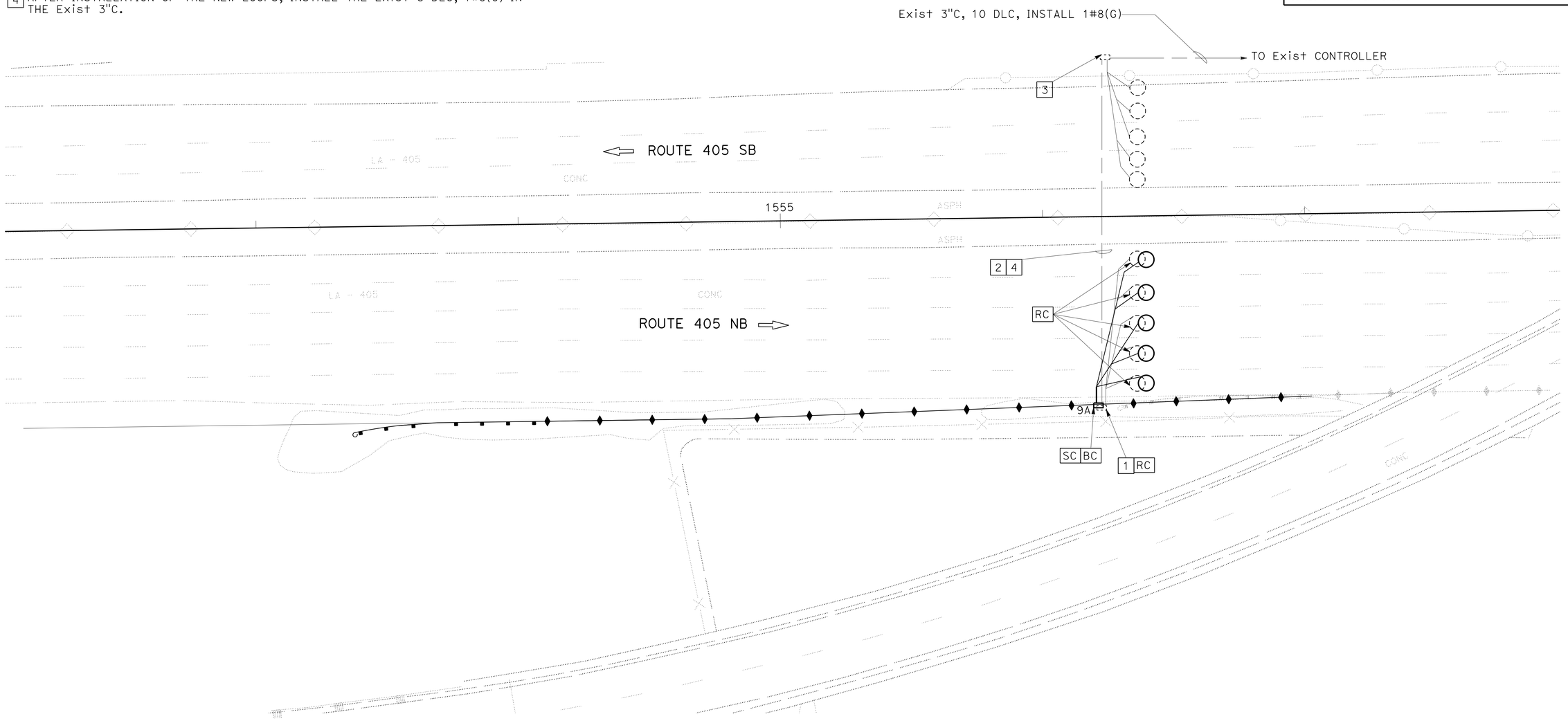

INDUCTIVE LOOP DETECTOR

SCALE: 1" = 20'

APPROVED FOR ELECTRICAL WORK ONLY

E-2

STATE OF CALIFORNIA - DEPARTMENT OF TRANSPORTATION
Caltrans OFFICE OF DESIGN A

FUNCTIONAL SUPERVISOR: OSWALD ELIZONDO

CALCULATED-DESIGNED BY: OHANNES ANSERLIAN
CHECKED BY: OSWALD ELIZONDO

REVISED BY
DATE REVISED

LAST REVISION 00-00-00
DATE PLOTTED => 04-MAR-2014
TIME PLOTTED => 13:34

Dist	COUNTY	ROUTE	POST MILES TOTAL PROJECT	SHEET No.	TOTAL SHEETS
07	LA	405	28.0/39.0	59	108

REGISTERED ELECTRICAL ENGINEER 1-17-14 DATE

2-10-14
PLANS APPROVAL DATE

REGISTERED PROFESSIONAL ENGINEER
OHANNES ANSERLIAN
No. E16682
Exp.6/30/14
ELECT
STATE OF CALIFORNIA

THE STATE OF CALIFORNIA OR ITS OFFICERS OR AGENTS SHALL NOT BE RESPONSIBLE FOR THE ACCURACY OR COMPLETENESS OF SCANNED COPIES OF THIS PLAN SHEET.

SHEET No.	(N) TYPE E INDUCTIVE LOOP DETECTOR	(N) TYPE E INDUCTIVE LOOP DETECTOR PER LADOT STANDARDS	(N) TYPE D BICYCLE INDUCTIVE LOOP DETECTOR PER LADOT STANDARDS	(N) TYPE E SYSTEM INDUCTIVE LOOP DETECTOR PER LADOT STANDARDS	(N) STUBOUTS	(N) No. 5 PULL BOX	(N) No. 9A PULL BOX	(N) PB-3 PULL BOX CITY OF LOS ANGELES
	EA	EA	EA	EA	EA	EA	EA	EA
E-1	22	4	4	2	8	3	-	3
E-2	5	-	-	-	1	-	1	-

(N)-NOT A SEPARATE PAY ITEM, FOR INFORMATION ONLY

ELECTRICAL QUANTITIES

E-3

STATE OF CALIFORNIA - DEPARTMENT OF TRANSPORTATION
Caltrans TRAFFIC DESIGN

FUNCTIONAL SUPERVISOR: OSWALD ELIZONDO
CALCULATED-DESIGNED BY: OHANNES ANSERLIAN
CHECKED BY: OSWALD ELIZONDO
REVISED BY
DATE REVISED

LAST REVISION 00-00-00
DATE PLOTTED => 04-MAR-2014
TIME PLOTTED => 13:34

Dist	COUNTY	ROUTE	POST MILES TOTAL PROJECT	SHEET No.	TOTAL SHEETS
07	LA	405	28.0/39.0	60	108

REGISTERED ELECTRICAL ENGINEER 1-17-14 DATE

2-10-14
PLANS APPROVAL DATE

REGISTERED PROFESSIONAL ENGINEER OHANNES ANSERLIAN No. E16682 Exp. 06/30/14 ELECT STATE OF CALIFORNIA

THE STATE OF CALIFORNIA OR ITS OFFICERS OR AGENTS SHALL NOT BE RESPONSIBLE FOR THE ACCURACY OR COMPLETENESS OF SCANNED COPIES OF THIS PLAN SHEET.

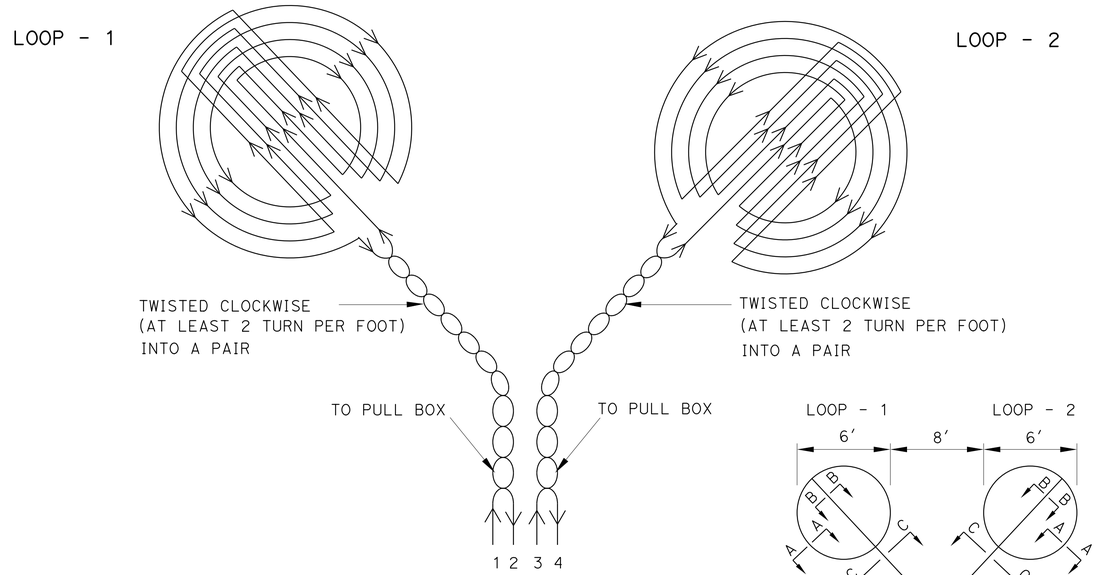

WINDING DETAIL
NOT TO SCALE

DIRECTION OF TRAFFIC FLOW

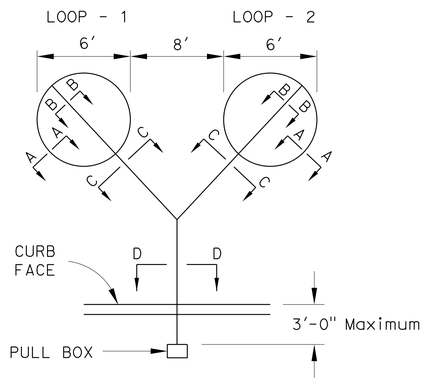

CASE II
(BICYCLE & VEHICLE)

NOTES: (THIS SHEET ONLY)

1. INSTALL FOUR (4) COMPLETE ALTERNATING TURNS OF LOOP CONDUCTORS, UNLESS OTHERWISE SPECIFIED.
2. USE CASE II LOOPS WHEN VEHICULAR LOOPS ARE INTENDED TO DETECT BICYCLES.
3. SAME WINDING PATTERN TO BE USED IN BOTH LOOPS WITH (1) PAIR FROM EACH LOOP LEADING TO THE PULL BOX.

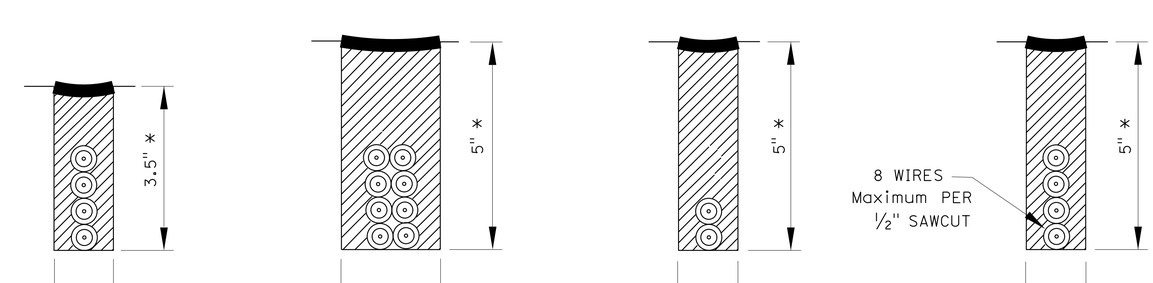

SECTION A-A SECTION B-B SECTION C-C SECTION D-D

* DEPTH OF SLOT NOT TO EXCEED DEPTH OF PAVEMENT

ELECTRICAL DETAILS
(CITY)
(BICYCLE LOOP DETECTOR DETAILS)

NO SCALE

E-4

STATE OF CALIFORNIA - DEPARTMENT OF TRANSPORTATION
Caltrans TRAFFIC DESIGN

FUNCTIONAL SUPERVISOR: OSWALD ELIZONDO
CALCULATED-DESIGNED BY: OHANNES ANSERLIAN
CHECKED BY: OSWALD ELIZONDO
REVISED BY
DATE REVISED

LAST REVISION 10-31-12
DATE PLOTTED => 04-MAR-2014
TIME PLOTTED => 13:34

Dist	COUNTY	ROUTE	POST MILES TOTAL PROJECT	SHEET No.	TOTAL SHEETS
07	LA	405	28.0/39.0	61	108

REGISTERED ELECTRICAL ENGINEER 1-17-14 DATE

2-10-14
PLANS APPROVAL DATE

REGISTERED PROFESSIONAL ENGINEER OHANNES ANSERLIAN No. E16682 Exp. 06/30/14 ELECT STATE OF CALIFORNIA

THE STATE OF CALIFORNIA OR ITS OFFICERS OR AGENTS SHALL NOT BE RESPONSIBLE FOR THE ACCURACY OR COMPLETENESS OF SCANNED COPIES OF THIS PLAN SHEET.

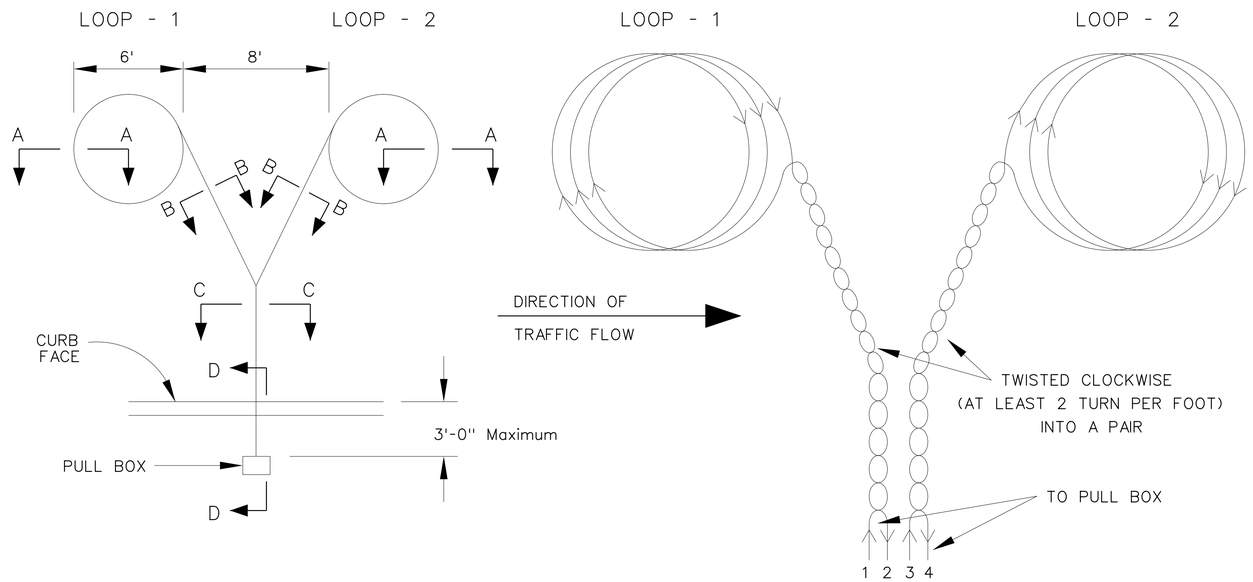

WINDING DETAILS
NOT TO SCALE

NOTES: (THIS SHEET ONLY)

1. INSTALL 3 CLOCKWISE TURNS OF LOOP WIRE FOR EACH DETECTOR, UNLESS OTHERWISE SHOWN ON SIGNAL PLAN.

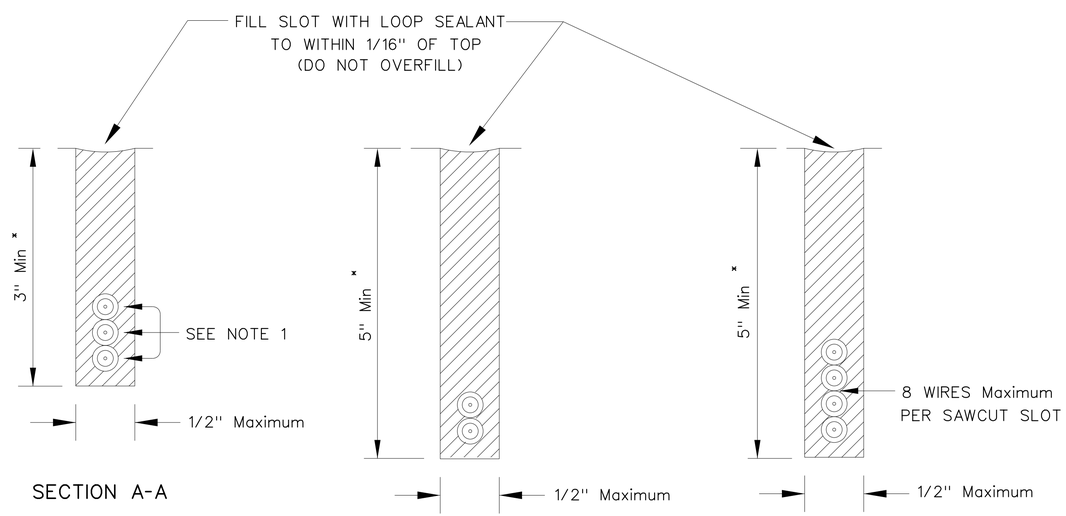

SECTION A-A SECTION B-B SECTION C-C

* DEPTH OF SLOT NOT TO EXCEED DEPTH OF PAVEMENT, FOR PCC (CONCRETE) SURFACES, THE MINIMUM COVER ABOVE LOOP WIRE SHALL BE 2.5" MINIMUM.

ELECTRICAL DETAILS
(CITY)
(INDUCTIVE LOOP INSTALLATION)
NO SCALE

E-5

STATE OF CALIFORNIA - DEPARTMENT OF TRANSPORTATION
Caltrans TRAFFIC DESIGN

FUNCTIONAL SUPERVISOR: OSWALD ELIZONDO
CALCULATED-DESIGNED BY: OHANNES ANSERLIAN
CHECKED BY: OSWALD ELIZONDO
REVISED BY
DATE REVISED

LAST REVISION 10-31-12
DATE PLOTTED => 04-MAR-2014
TIME PLOTTED => 13:34

Dist	COUNTY	ROUTE	POST MILES TOTAL PROJECT	SHEET No.	TOTAL SHEETS
07	LA	405	28.0/39.0	62	108

REGISTERED ELECTRICAL ENGINEER 1-17-14 DATE

2-10-14
PLANS APPROVAL DATE

REGISTERED PROFESSIONAL ENGINEER OHANNES ANSERLIAN No. E16682 Exp. 06/30/14 ELECT STATE OF CALIFORNIA

THE STATE OF CALIFORNIA OR ITS OFFICERS OR AGENTS SHALL NOT BE RESPONSIBLE FOR THE ACCURACY OR COMPLETENESS OF SCANNED COPIES OF THIS PLAN SHEET.

NOTES: (THIS SHEET ONLY)

1. THIS SHEET DESCRIBES A TWO, THREE OR FOUR PAIR LOOP DETECTOR LEAD-IN CABLE, INDIVIDUALLY SHIELDED AND JACKETED AND SUITABLE FOR INSTALLATION IN A PAVEMENT SAWCUT, CONDUIT, OR DIRECT BURIAL.
2. THE DETECTOR LEAD-IN CABLE CAN BE WIRED IN EITHER A SINGLE, DOUBLE, TRIPLE OR QUADRUPLE CHANNEL CONFIGURATION.
3. ELECTRICAL CONNECTIONS SHALL BE CAREFULLY SOLDERED AND WATERPROOFED.
4. LOOP NUMBERS SHOWN ARE TYPICAL.
5. SYSTEM LOOPS USE A SINGLE PAIR FOR EACH LOOP.

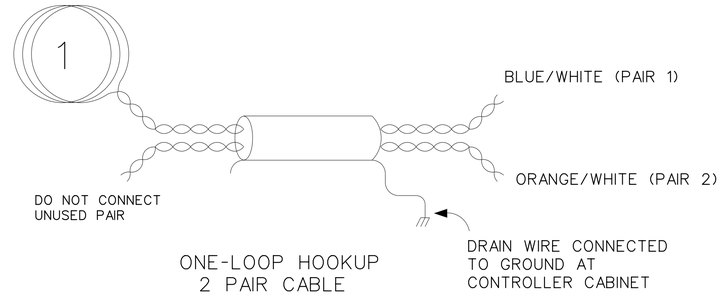

ONE-LOOP HOOKUP
2 PAIR CABLE

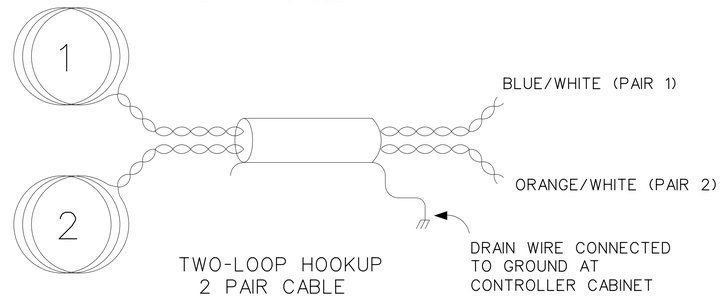

TWO-LOOP HOOKUP
2 PAIR CABLE

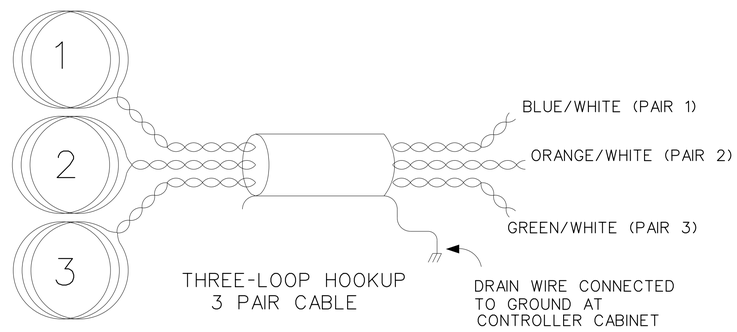

THREE-LOOP HOOKUP
3 PAIR CABLE

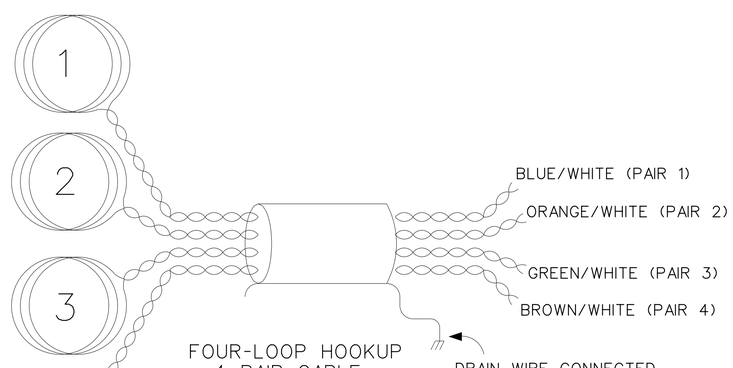

FOUR-LOOP HOOKUP
4 PAIR CABLE

ELECTRICAL DETAILS
(CITY)
SYSTEM DETECTOR LOOP LEAD-IN CABLE (2,3,4 PAIR)

NO SCALE

E-6

STATE OF CALIFORNIA - DEPARTMENT OF TRANSPORTATION
Caltrans® TRAFFIC DESIGN

FUNCTIONAL SUPERVISOR: OSWALD ELIZONDO
CALCULATED-DESIGNED BY: OHANNES ANSERLIAN
CHECKED BY: OSWALD ELIZONDO
REVISED BY
DATE REVISED

LAST REVISION 10-31-12
DATE PLOTTED => 04-MAR-2014
TIME PLOTTED => 13:34

Dist	COUNTY	ROUTE	POST MILES TOTAL PROJECT	SHEET No.	TOTAL SHEETS
07	LA	405	28.0/39.0	63	108

REGISTERED ELECTRICAL ENGINEER 1-17-14 DATE

2-10-14
PLANS APPROVAL DATE

REGISTERED PROFESSIONAL ENGINEER
OHANNES ANSERLIAN
No. E16682
Exp. 06/30/14
ELECT
STATE OF CALIFORNIA

THE STATE OF CALIFORNIA OR ITS OFFICERS OR AGENTS SHALL NOT BE RESPONSIBLE FOR THE ACCURACY OR COMPLETENESS OF SCANNED COPIES OF THIS PLAN SHEET.

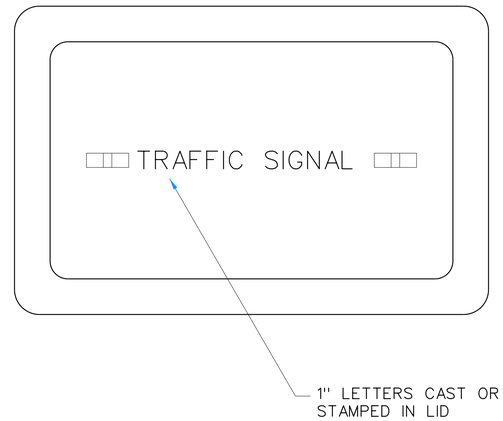

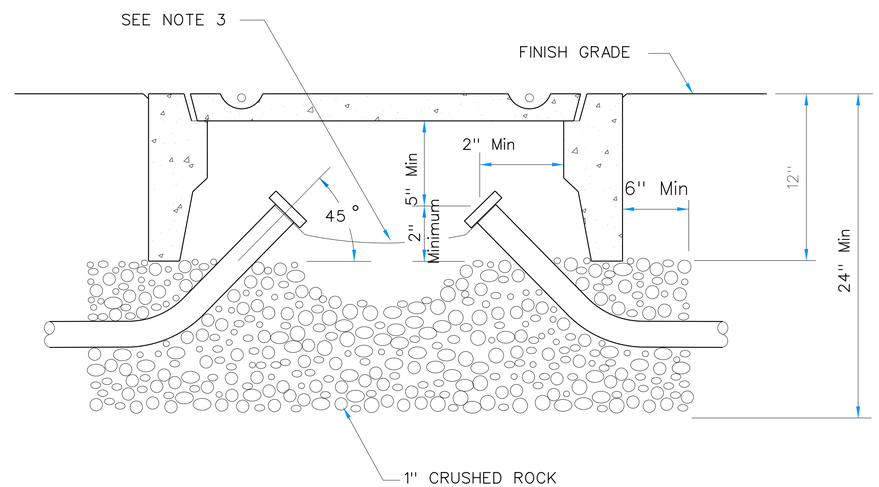

NOTES: (THIS SHEET ONLY)

1. OUTSIDE DIMENSION: TYPE PB2 - 15" X 25", TYPE PB3 - 22" X 34".
2. GALVANIZED CONDUITS MUST BE BONDED WITH COPPER GROUND STRAP AROUND THE NECK OF EACH CONDUIT. PVC CONDUITS MUST HAVE THEIR GROUND WIRES SPLICED TOGETHER.

ELECTRICAL DETAILS
(CITY)
PULL BOX
TYPES PB-2 & PB-3
NO SCALE

E-7

STATE OF CALIFORNIA - DEPARTMENT OF TRANSPORTATION
Caltrans® TRAFFIC DESIGN

FUNCTIONAL SUPERVISOR: OSWALD ELIZONDO
CALCULATED-DESIGNED BY: OHANNES ANSERLIAN
CHECKED BY: OSWALD ELIZONDO
REVISED BY
DATE REVISED

LAST REVISION 10-31-12
DATE PLOTTED => 04-MAR-2014
TIME PLOTTED => 13:34

M

Maint	MAINTENANCE
Max	MAXIMUM
MB	METAL BEAM
MBB	METAL BEAM BARRIER
MBGR	METAL BEAM GUARD RAILING
Med	MEDIAN
MGS	MIDWEST GUARDRAIL SYSTEM
MH	MANHOLE
Min	MINIMUM
Misc	MISCELLANEOUS
Misc I & S	MISCELLANEOUS IRON AND STEEL
Mkr	MARKER
Mod	MODIFIED,
	MODIFY
Mon	MONUMENT
MP	METAL PLATE
MPGR	METAL PLATE GUARD RAILING
MR	MOVEMENT RATING
MSE	MECHANICALLY STABILIZED EMBANKMENT
Mt	MOUNTAIN, MOUNT
Mtl	MATERIAL
MVP	MAINTENANCE VEHICLE PULLOUT

N

N	NORTH
NB	NORTHBOUND
No.	NUMBER (MUST HAVE PERIOD)
Nos.	NUMBERS (MUST HAVE PERIOD)
NPS	NOMINAL PIPE SIZE
NS	NEAR SIDE
NSP	NEW STANDARD PLAN
NTS	NOT TO SCALE

O

Oblr	OBLITERATE
OC	OVERCROSSING
OD	OUTSIDE DIAMETER
OF	OUTSIDE FACE
OG	ORIGINAL GROUND
OGAC	OPEN GRADED ASPHALT CONCRETE
OGFC	OPEN GRADED FRICTION COURSE
OH	OVERHEAD
OHWM	ORDINARY HIGH WATER MARK
O-O	OUT TO OUT
Opp	OPPOSITE
OSD	OVERSIDE DRAIN

P

p	PAGE
PAP	PERFORATED ALUMINUM PIPE
PB	PULL BOX
PC	POINT OF CURVATURE,
	PRECAST
PCC	POINT OF COMPOUND CURVE,
	PORTLAND CEMENT CONCRETE
PCMS	PORTABLE CHANGEABLE MESSAGE SIGN
PCP	PERFORATED CONCRETE PIPE,
	PRESTRESSED CONCRETE PIPE
PCVC	POINT OF COMPOUND VERTICAL CURVE
PEC	PERMIT TO ENTER AND CONSTRUCT
Ped	PEDESTRIAN
Ped OC	PEDESTRIAN OVERCROSSING
Ped UC	PEDESTRIAN UNDERCROSSING
Perm Mtl	PERMEABLE MATERIAL

P continued

PG	PROFILE GRADE
PI	POINT OF INTERSECTION
PJP	PARTIAL JOINT PENETRATION
Pkwy	PARKWAY
ℙ,PL	PLATE
P/L	PROPERTY LINE
PM	POST MILE,
	TIME FROM NOON TO MIDNIGHT
PN	PAVING NOTCH
POC	POINT OF HORIZONTAL CURVE
POT	POINT OF TANGENT
POVC	POINT OF VERTICAL CURVE
PP	PIPE PILE,
	PLASTIC PIPE,
	POWER POLE
PPL	PREFORMED PERMEABLE LINER
PPP	PERFORATED PLASTIC PIPE
PRC	POINT OF REVERSE CURVE
PRF	PAVEMENT REINFORCING FABRIC
PRVC	POINT OF REVERSE VERTICAL CURVE
PS&E	PLANS, SPECIFICATIONS AND ESTIMATES
PS, P/S	PRESTRESSED
PSP	PERFORATED STEEL PIPE
PT	POINT OF TANGENCY
PVC	POLYVINYL CHLORIDE
Pvmt	PAVEMENT

Q

Qty	QUANTITY

R

R	RADIUS
R & D	REMOVE AND DISPOSE
R & S	REMOVE AND SALVAGE
R/C	RATE OF CHANGE
RCA	REINFORCED CONCRETE ARCH
RCB	REINFORCED CONCRETE BOX
RCP	REINFORCED CONCRETE PIPE
RCPA	REINFORCED CONCRETE PIPE ARCH
Rd	ROAD
Reinf	REINFORCED,
	REINFORCEMENT,
	REINFORCING
Rel	RELOCATE
Repl	REPLACEMENT
Ret	RETAINING
Rev	REVISED, REVISION
Rdwy	ROADWAY
RHMA	RUBBERIZED HOT MIX ASPHALT
Riv	RIVER
RM	ROAD-MIXED
RP	RADIUS POINT,
	REFERENCE POINT
RR	RAILROAD
RSP	ROCK SLOPE PROTECTION,
	REVISED STANDARD PLAN
Rt	RIGHT
Rte	ROUTE
RW	REDWOOD,
	RETAINING WALL
R/W	RIGHT OF WAY
Rwy	RAILWAY

S

S	SOUTH,
	SUPPLEMENT
SAE	STRUCTURE APPROACH EMBANKMENT
Salv	SALVAGE
SAPP	STRUCTURAL ALUMINUM PLATE PIPE
SB	SOUTHBOUND
SC	SAND CUSHION
SCSP	SLOTTED CORRUGATED STEEL PIPE
SD	STORM DRAIN
Sec	SECOND,
	SECTION
Sep	SEPARATION
SG	SUBGRADE
Shld	SHOULDER
Sht	SHEET
Sim	SIMILAR
℄	STATION LINE
SM	SELECTED MATERIAL
Spec	SPECIAL,
	SPECIFICATIONS
SPP	SLOTTED PLASTIC PIPE
SS	SLOPE STAKE
SSBM	STRAP AND SADDLE BRACKET METHOD
SSD	STRUCTURAL SECTION DRAIN
SSPA	STRUCTURAL STEEL PLATE ARCH
SSPP	STRUCTURAL STEEL PLATE PIPE
SSPPA	STRUCTURAL STEEL PLATE PIPE ARCH
SSRP	STEEL SPIRAL RIB PIPE
St	STREET
Sta	STATION
STBB	SINGLE THRIE BEAM BARRIER
Std	STANDARD
Str	STRUCTURE
Surf	SURFACING
SW	SIDEWALK,
	SOUND WALL
Swr	SEWER
Sym	SYMMETRICAL
S4S	SURFACE 4 SIDES

T

T	SEMI-TANGENT
Tan	TANGENT
TBB	THRIE BEAM BARRIER
Tbr	TIMBER
TC	TOP OF CURB
TCB	TRAFFIC CONTROL BOX
TCE	TEMPORARY CONSTRUCTION EASEMENT
Tel	TELEPHONE
Temp	TEMPORARY
TG	TOP OF GRADE
Tot	TOTAL
TP	TELEPHONE POLE
TPB	TREATED PERMEABLE BASE
TPM	TREATED PERMEABLE MATERIAL
Trans	TRANSITION

T continued

TS	TRANSVERSE,
	TRAFFIC SIGNAL,
	TUBULAR STEEL
Typ	TYPICAL

U

UC	UNDERCROSSING
UD	UNDERDRAIN
UG	UNDERGROUND
UON	UNLESS OTHERWISE NOTED
UP	UNDERPASS

V

V	VALVE,
	DESIGN SPEED
Var	VARIABLE,
	VARIES
VC	VERTICAL CURVE
VCP	VITRIFIED CLAY PIPE
Vert	VERTICAL
Via	VIADUCT
Vol	VOLUME

W

W	WEST,
	WIDTH
WB	WESTBOUND
WH	WEEP HOLE
WM	WIRE MESH
WS	WATER SURFACE
WSP	WELDED STEEL PIPE
Wt	WEIGHT
WV	WATER VALVE
WW	WINGWALL
WWLOL	WINGWALL LAYOUT LINE

X

X Sec	CROSS SECTION
Xing	CROSSING

Y

Yr	YEAR
Yrs	YEARS

Dist	COUNTY	ROUTE	POST MILES TOTAL PROJECT	SHEET No.	TOTAL SHEETS
07	LA	405	28.0/39.0	64	108

Grace M. Tsushima
REGISTERED CIVIL ENGINEER

July 19, 2013
PLANS APPROVAL DATE

REGISTERED PROFESSIONAL ENGINEER Grace M. Tsushima No. C49814 Exp. 9-30-14 CIVIL STATE OF CALIFORNIA

THE STATE OF CALIFORNIA OR ITS OFFICERS OR AGENTS SHALL NOT BE RESPONSIBLE FOR THE ACCURACY OR COMPLETENESS OF SCANNED COPIES OF THIS PLAN SHEET.

TO ACCOMPANY PLANS DATED 2-10-14

UNIT OF MEASUREMENT SYMBOLS:

Some of the symbols used in the project plan quantity tables and in the Bid Item List are:

TABLE A

SYMBOL USED	DEFINITIONS
ACRE	ACRE
CF	CUBIC FOOT
CY	CUBIC YARD
EA	EACH
GAL	GALLON
LB	POUND
LF	LINEAR FOOT
SQFT	SQUARE FOOT
SQYD	SQUARE YARD
STA	100 FEET
TAB	TABLET
TON	2,000 POUNDS

Some of the symbols used in the plans other than in the project plan quantity tables are:

TABLE B

SYMBOL USED	DEFINITIONS
ksi	KIPS PER SQUARE INCH
ksf	KIPS PER SQUARE FOOT
psi	POUNDS PER SQUARE INCH
psf	POUNDS PER SQUARE FOOT
lb/ft^3, pcf	POUNDS PER CUBIC FOOT
tsf	TONS PER SQUARE FOOT
mph, MPH *	MILES PER HOUR
ø	NOMINAL DIAMETER
oz	OUNCE
lb	POUND
kip	1,000 POUNDS
cal	CALORIE
ft	FOOT OR FEET
gal	GALLON

* For use on a sign panel only

STATE OF CALIFORNIA
DEPARTMENT OF TRANSPORTATION

ABBREVIATIONS (SHEET 2 OF 2)

NO SCALE

RSP A10B DATED JULY 19, 2013 SUPERSEDES STANDARD PLAN A10B DATED MAY 20, 2011 - PAGE 2 OF THE STANDARD PLANS BOOK DATED 2010.

REVISED STANDARD PLAN RSP A10B

2010 REVISED STANDARD PLAN RSP A10B

6-7-13

Dist	COUNTY	ROUTE	POST MILES TOTAL PROJECT	SHEET No.	TOTAL SHEETS
07	LA	405	28.0/39.0	65	108

REGISTERED CIVIL ENGINEER

July 19, 2013
PLANS APPROVAL DATE

REGISTERED PROFESSIONAL ENGINEER Roberta L. McLaughlin No. C40375 Exp. 3-31-15 CIVIL STATE OF CALIFORNIA

THE STATE OF CALIFORNIA OR ITS OFFICERS OR AGENTS SHALL NOT BE RESPONSIBLE FOR THE ACCURACY OR COMPLETENESS OF SCANNED COPIES OF THIS PLAN SHEET.

TO ACCOMPANY PLANS DATED 2-10-14

EXIT RAMP NEUTRAL AREA (GORE) TREATMENT

DETAIL 36

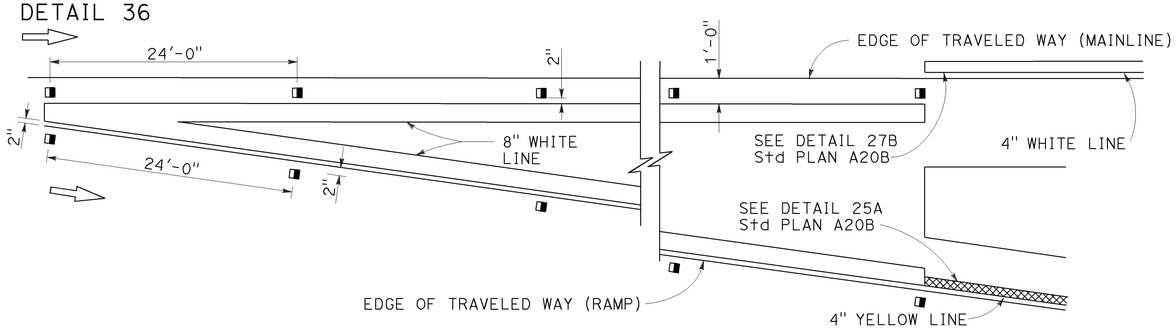

ENTRANCE RAMP NEUTRAL AREA (MERGE) TREATMENT

DETAIL 36A

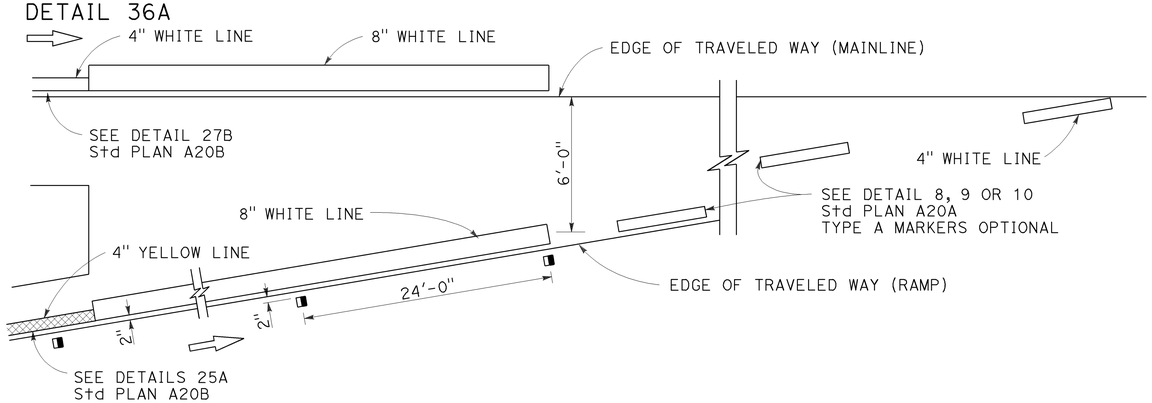

ENTRANCE RAMP NEUTRAL AREA (ACCELERATION LANE) TREATMENT

DETAIL 36B

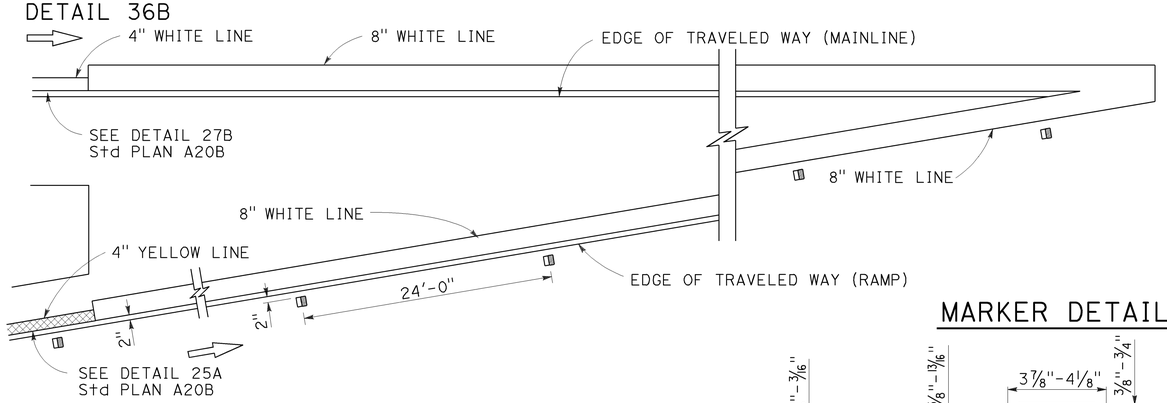

LANE DROP AT EXIT RAMPS

DETAIL 37

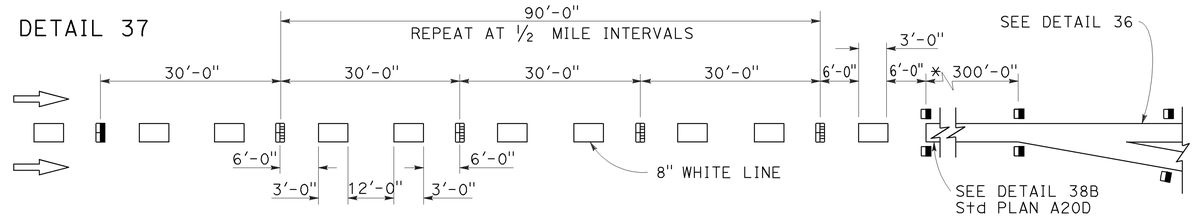

DETAIL 37A

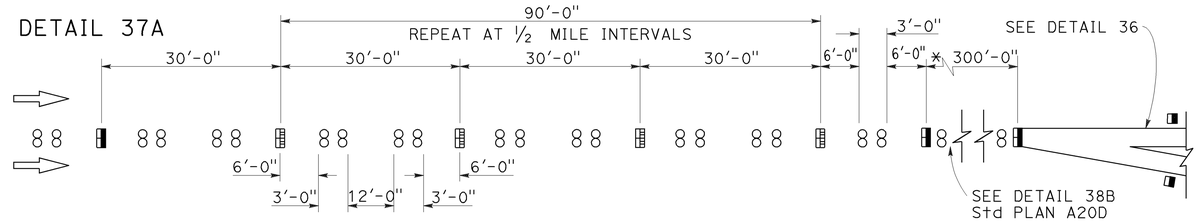

* The solid channelizing line shown may be omitted on short auxiliary lanes where weaving length is critical.

LANE DROP AT INTERSECTIONS

DETAIL 37B

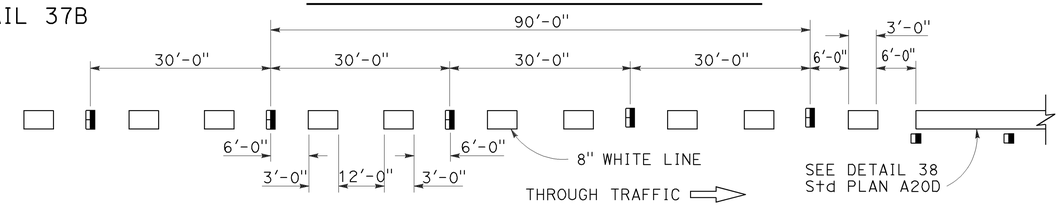

DETAIL 37C

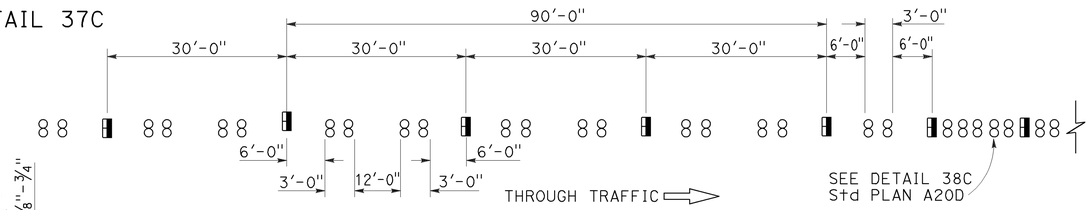

MARKER DETAILS

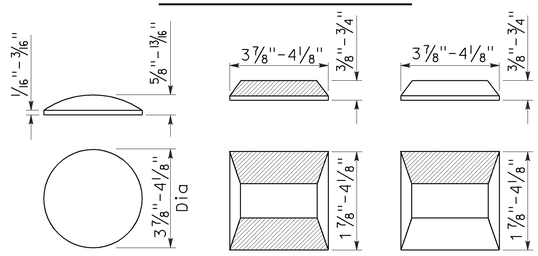

RETROREFLECTIVE FACE

LEGEND:

MARKERS

- ○ TYPE A WHITE NON-REFLECTIVE
- ⊟ TYPE C RED-CLEAR RETROREFLECTIVE
- ◨ TYPE G ONE-WAY CLEAR RETROREFLECTIVE

STATE OF CALIFORNIA
DEPARTMENT OF TRANSPORTATION

PAVEMENT MARKERS AND TRAFFIC LINE TYPICAL DETAILS

NO SCALE

RSP A20C DATED JULY 19, 2013 SUPERSEDES STANDARD PLAN A20C DATED MAY 20, 2011 - PAGE 11 OF THE STANDARD PLANS BOOK DATED 2010.

REVISED STANDARD PLAN RSP A20C

2010 REVISED STANDARD PLAN RSP A20C

4-29-13

Dist	COUNTY	ROUTE	POST MILES TOTAL PROJECT	SHEET No.	TOTAL SHEETS
07	LA	405	28.0/39.0	66	108

REGISTERED CIVIL ENGINEER

April 20, 2012
PLANS APPROVAL DATE

REGISTERED PROFESSIONAL ENGINEER
Roberta L. McLaughlin
No. C40375
Exp. 3-31-13
CIVIL
STATE OF CALIFORNIA

THE STATE OF CALIFORNIA OR ITS OFFICERS OR AGENTS SHALL NOT BE RESPONSIBLE FOR THE ACCURACY OR COMPLETENESS OF SCANNED COPIES OF THIS PLAN SHEET.

TO ACCOMPANY PLANS DATED 2-10-14

2010 REVISED STANDARD PLAN RSP A24A

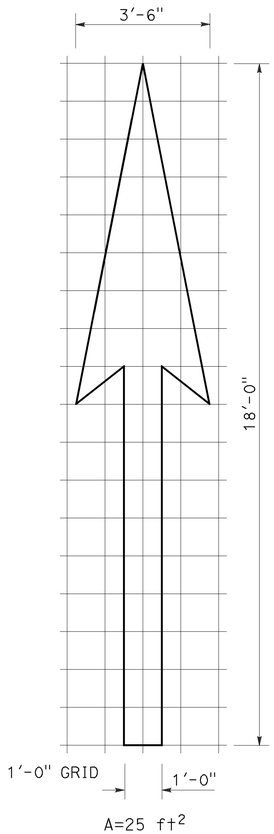

A=25 ft^2

TYPE I 18'-0" ARROW

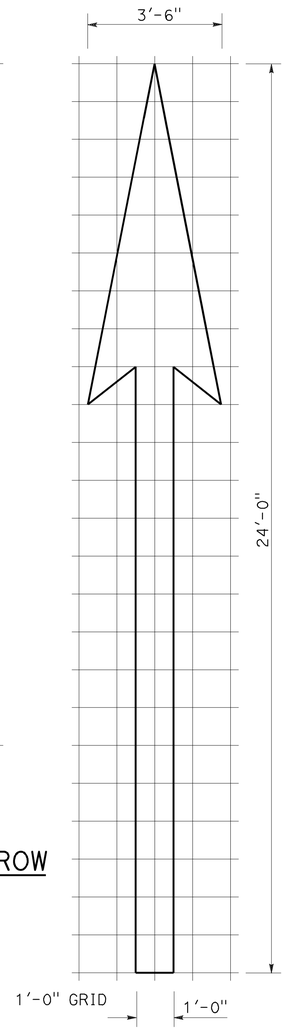

A=31 ft^2

TYPE I 24'-0" ARROW

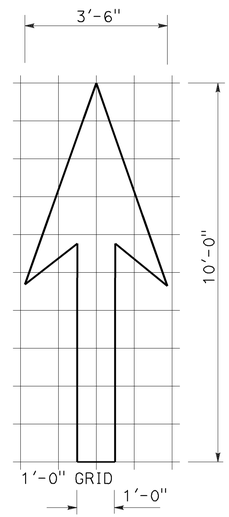

A=14 ft^2

TYPE I 10'-0" ARROW

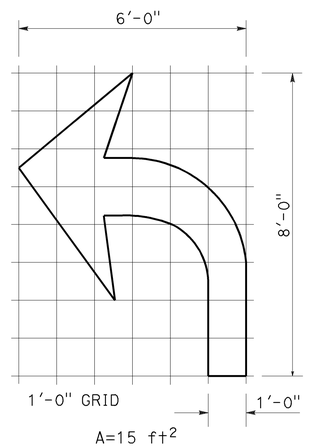

A=15 ft^2

TYPE IV (L) ARROW

(For Type IV (R) arrow, use mirror image)

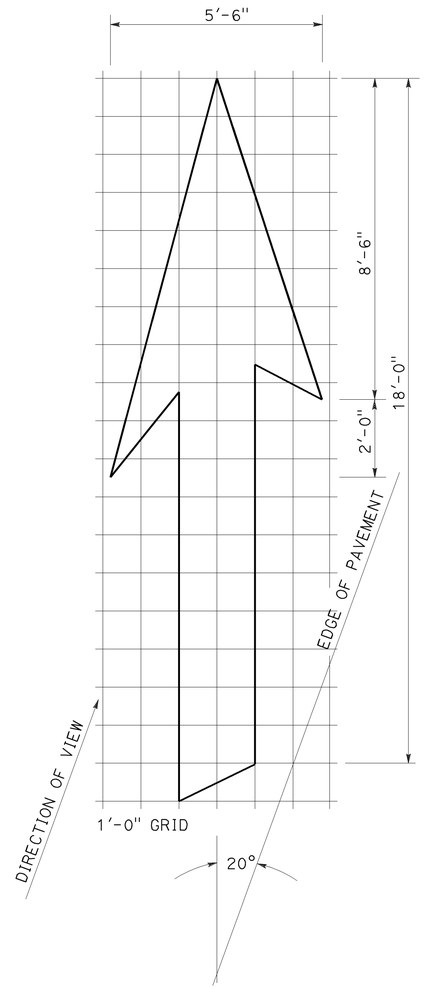

A=42 ft^2

TYPE VI ARROW

Right lane drop arrow
(For left lane, use mirror image)

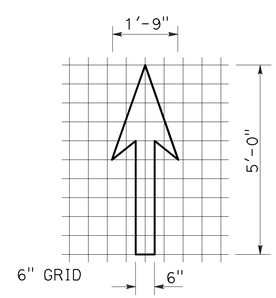

A=3.5 ft^2

BIKE LANE ARROW

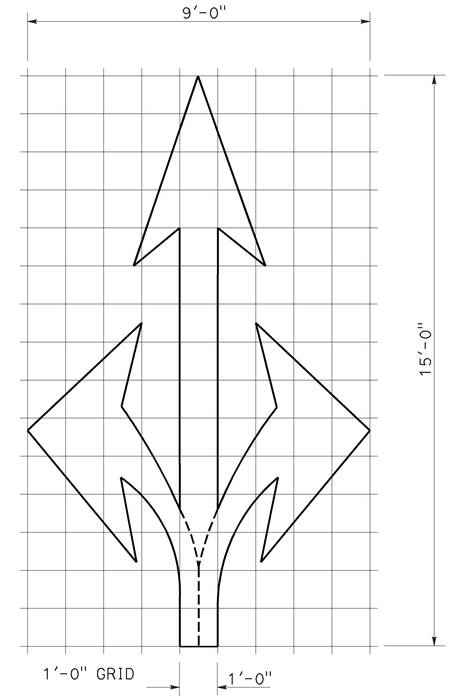

A=36 ft^2

TYPE VIII ARROW

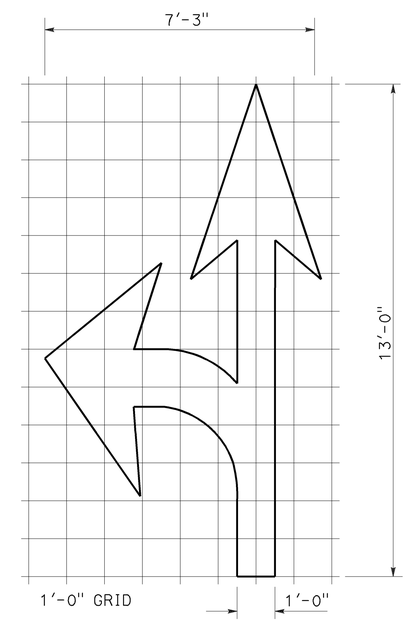

A=27 ft^2

TYPE VII (L) ARROW

(For Type VII (R) arrow, use mirror image)

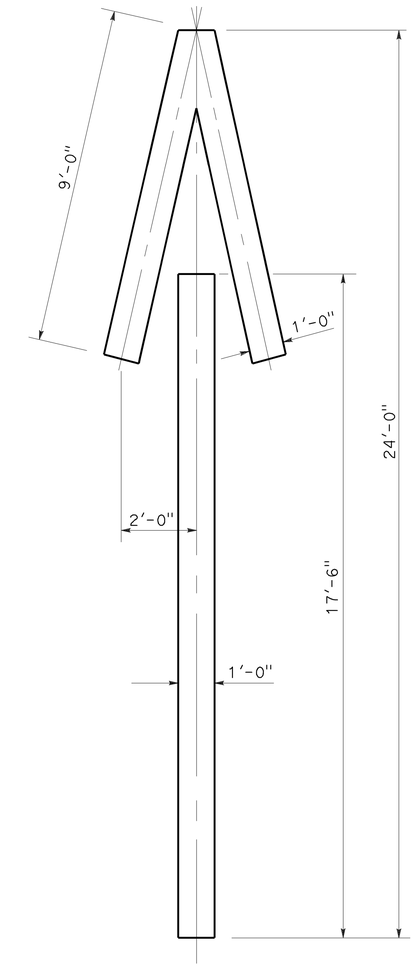

A=33 ft^2

TYPE V ARROW

NOTE:
Minor variations in dimensions may be accepted by the Engineer.

STATE OF CALIFORNIA
DEPARTMENT OF TRANSPORTATION

PAVEMENT MARKINGS ARROWS

NO SCALE

RSP A24A DATED APRIL 20, 2012 SUPERSEDES STANDARD PLAN A24A DATED MAY 20, 2011 - PAGE 13 OF THE STANDARD PLANS BOOK DATED 2010.

REVISED STANDARD PLAN RSP A24A

3-14-12

Dist	COUNTY	ROUTE	POST MILES TOTAL PROJECT	SHEET No.	TOTAL SHEETS
07	LA	405	28.0/39.0	67	108

Randell D. Hiatt
REGISTERED CIVIL ENGINEER

July 19, 2013
PLANS APPROVAL DATE

REGISTERED PROFESSIONAL ENGINEER
Randell D. Hiatt
No. C50200
Exp. 6-30-15
CIVIL
STATE OF CALIFORNIA

THE STATE OF CALIFORNIA OR ITS OFFICERS OR AGENTS SHALL NOT BE RESPONSIBLE FOR THE ACCURACY OR COMPLETENESS OF SCANNED COPIES OF THIS PLAN SHEET.

TO ACCOMPANY PLANS DATED 2-10-14

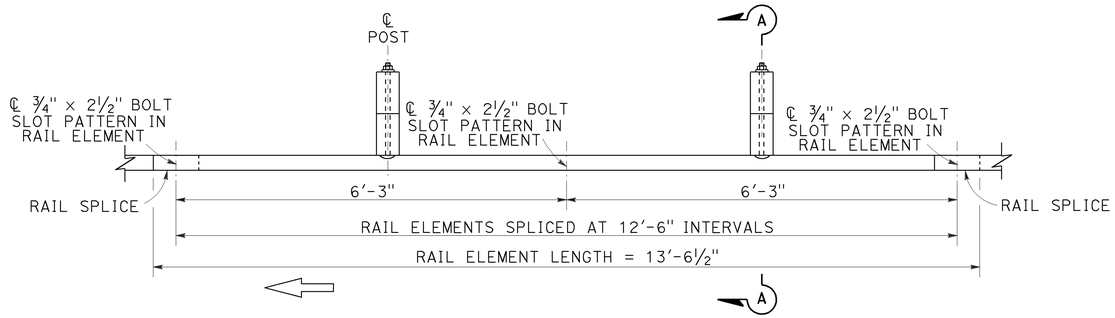

PLAN

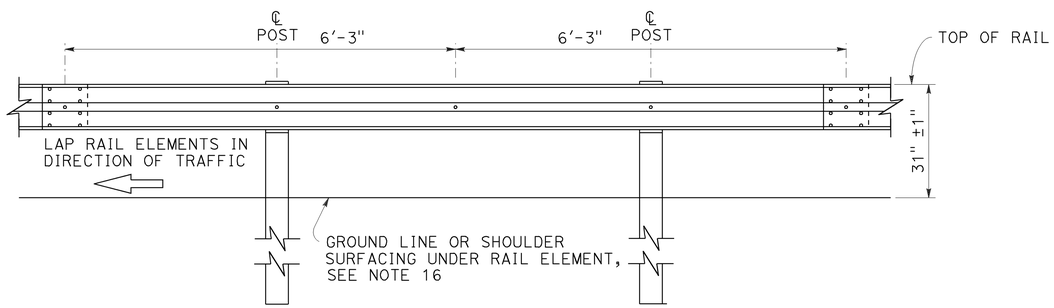

ELEVATION

MIDWEST GUARDRAIL SYSTEM WITH WOOD POST AND BLOCKS

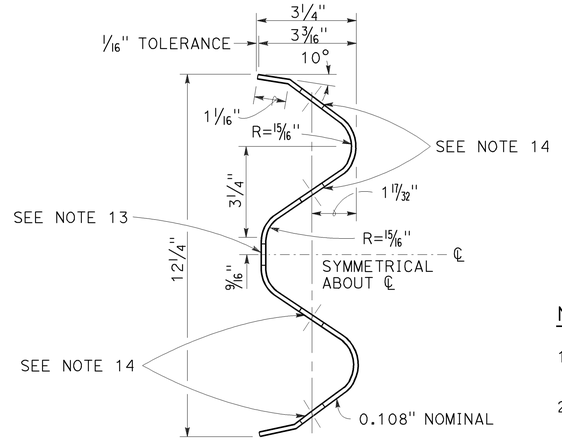

SECTION THRU RAIL ELEMENT

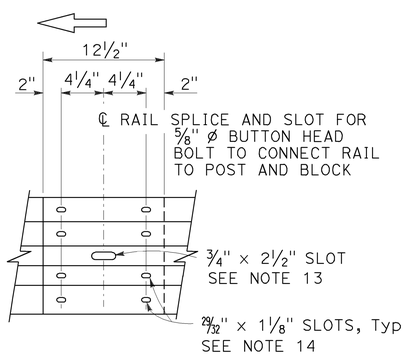

ELEVATION

RAIL ELEMENT SPLICE DETAIL

a) Connect the over lapped end of the rail elements with ⅝" ø × 1⅜" button head oval shoulder splice bolts inserted into the 29/32" × 1⅛" slots and bolted together with ⅝" ø recessed hex nuts. Recess of hex nut points toward rail element. A total of 8 bolts and nuts are to be used at each rail splice connection.

b) The ends of the rail elements are to be overlapped in the direction of traffic (see details).

c) Where end cap is to be attached to the end of a rail element, a total of 4 of the above described splice bolts and nuts are to be used.

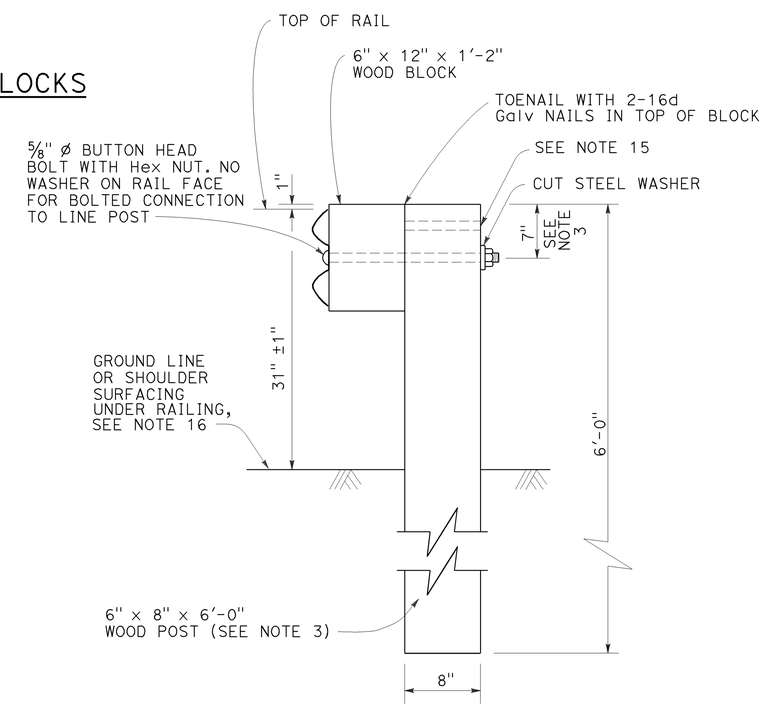

SECTION A-A

TYPICAL WOOD LINE POST INSTALLATION

See Note 4

NOTES:

1. For details of steel post installations, see Revised Standard Plan RSP A77L2.
2. For details of standard hardware used to construct MGS, see Revised Standard Plan RSP A77M1.
3. For details of wood posts and wood blocks used to construct MGS, see Revised Standard Plan RSP A77N1.
4. For additional installation details, see Revised Standard Plan RSP A77N3.
5. MGS post spacing to be 6'-3" center to center, except as otherwise noted.
6. For MGS typical layouts, see the A77P, A77Q and A77R Series of Standard Plans.
7. If railing is connected to terminal system end treatment, use 31" height terminal system end treatment.
8. For MGS end anchor details, see Revised Standard Plans RSP A77S1 and RSP A77T2.
9. For details of MGS transition to bridge railing, see Revised Standard Plan RSP A77U4.
10. For additional details of MSG connection to bridge railing, see Revised Standard Plans RSP A77U1, RSP A77U2 and RSP A77V1.
11. For MGS connection details to abutments and walls, see Revised Standard Plan RSP A77U3.
12. For typical MGS delineation and dike positioning details, see Revised Standard Plan RSP A77N4.
13. Slotted hole for bolted connection of rail element to block and post. See "Section Thru Rail Element".
14. Slotted holes for splice bolts to overlap ends of rail element. See "Section Thru Rail Element".
15. Additional hole in uppermost portion of line post is for potential future adjustments of railing height. See Revised Standard Plan RSP A77N1.
16. Install posts in soil.

STATE OF CALIFORNIA
DEPARTMENT OF TRANSPORTATION

MIDWEST GUARDRAIL SYSTEM STANDARD RAILING SECTION (WOOD POST WITH WOOD BLOCK)

NO SCALE

RSP A77L1 DATED JULY 19, 2013 SUPPLEMENTS STANDARD PLANS BOOK DATED 2010.

REVISED STANDARD PLAN RSP A77L1

2010 REVISED STANDARD PLAN RSP A77L1

7-3-13

Dist	COUNTY	ROUTE	POST MILES TOTAL PROJECT	SHEET No.	TOTAL SHEETS
07	LA	405	28.0/39.0	68	108

Randell D. Hiatt
REGISTERED CIVIL ENGINEER

July 19, 2013
PLANS APPROVAL DATE

REGISTERED PROFESSIONAL ENGINEER
Randell D. Hiatt
No. C50200
Exp. 6-30-15
CIVIL
STATE OF CALIFORNIA

THE STATE OF CALIFORNIA OR ITS OFFICERS OR AGENTS SHALL NOT BE RESPONSIBLE FOR THE ACCURACY OR COMPLETENESS OF SCANNED COPIES OF THIS PLAN SHEET.

TO ACCOMPANY PLANS DATED 2-10-14

2010 REVISED STANDARD PLAN RSP A77M1

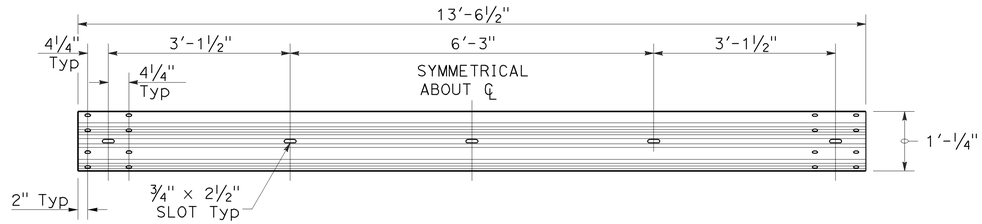

TYPICAL RAIL ELEMENT

NOTE:

1. Slotted holes for splice bolts to overlap ends of rail element.

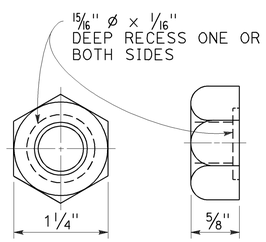

⅝" Ø RECESS NUT

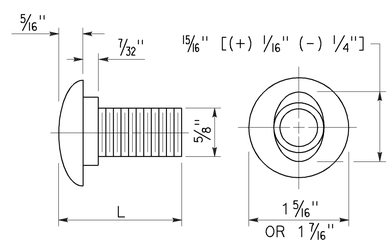

⅝" Ø BUTTON HEAD BOLT

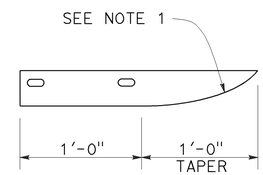

PLAN

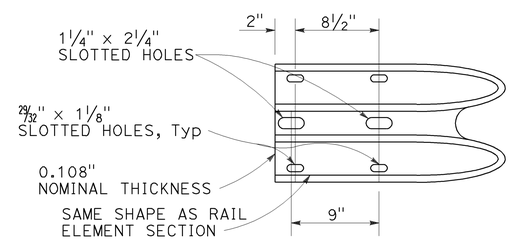

ELEVATION

END CAP (TYPE A)

BUTTON HEAD BOLT

L	THREAD LENGTH
1⅜"	FULL THREAD LENGTH
2"	FULL THREAD LENGTH
10"	4" Min THREAD LENGTH
18"	4" Min THREAD LENGTH
20"	4" Min THREAD LENGTH
22"	4" Min THREAD LENGTH
26"	4" Min THREAD LENGTH
36"	4" Min THREAD LENGTH
** 2¾"	2" Min THREAD LENGTH
** 19"	4" Min THREAD LENGTH

** For nested rail applications.

STATE OF CALIFORNIA
DEPARTMENT OF TRANSPORTATION

MIDWEST GUARDRAIL SYSTEM STANDARD HARDWARE

NO SCALE

RSP A77M1 DATED JULY 19, 2013 SUPPLEMENTS THE STANDARD PLANS BOOK DATED 2010.

REVISED STANDARD PLAN RSP A77M1

Dist	COUNTY	ROUTE	POST MILES TOTAL PROJECT	SHEET No.	TOTAL SHEETS
07	LA	405	28.0/39.0	69	108

Randell D. Hiatt
REGISTERED CIVIL ENGINEER

July 19, 2013
PLANS APPROVAL DATE

REGISTERED PROFESSIONAL ENGINEER
Randell D. Hiatt
No. C50200
Exp. 6-30-15
CIVIL
STATE OF CALIFORNIA

THE STATE OF CALIFORNIA OR ITS OFFICERS OR AGENTS SHALL NOT BE RESPONSIBLE FOR THE ACCURACY OR COMPLETENESS OF SCANNED COPIES OF THIS PLAN SHEET.

TO ACCOMPANY PLANS DATED 2-10-14

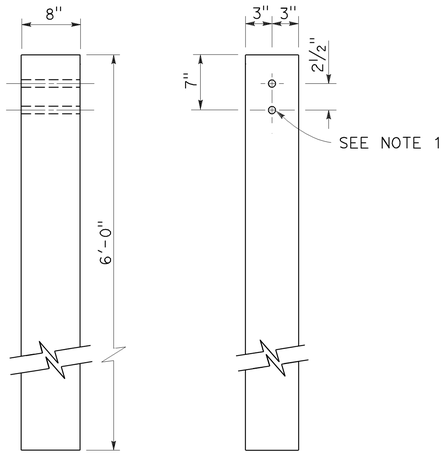

SIDE FRONT

6" x 8" WOOD POST
See Note 3

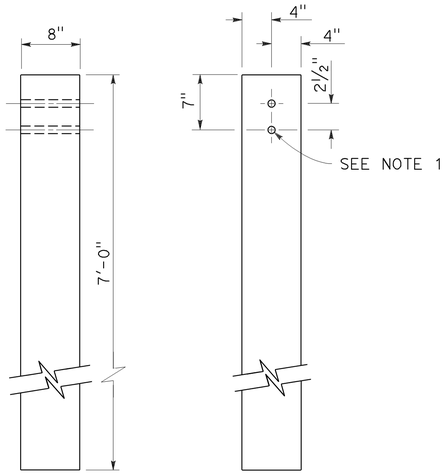

SIDE FRONT

8" x 8" WOOD POST
See Note 4

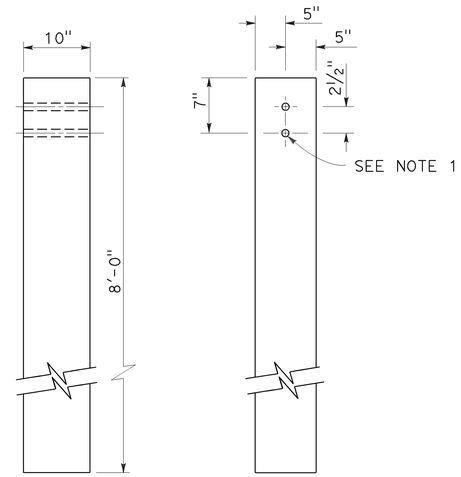

SIDE FRONT

10" x 10" WOOD POST
See Note 5

NOTES:

1. All holes in wood posts and blocks shall be 3/4" Dia ± 1/16".
2. Dimensions shown for wood post are nominal.
3. This post and block combination used for standard line post sections of MGS.
4. This post and 8" x 12" block combination used for line post sections of MGS on narrow roadways.
5. This post and 8" x 12" block combination is typically used where strengthened line post sections of MGS are warranted to shield fixed objects.
6. See Revised Standard Plan RSP A77L3 for use of 6" x 8" and 8" x 8" wood blocks.

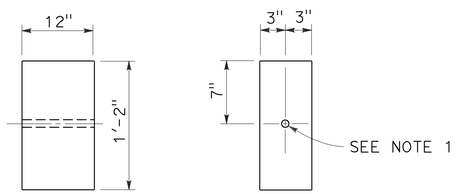

SIDE FRONT

6" x 12" WOOD BLOCK
See Note 3

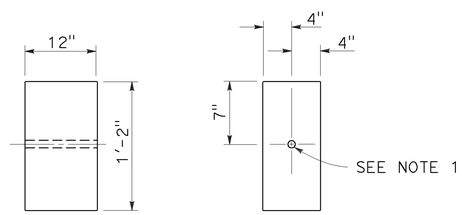

SIDE FRONT

8" x 12" WOOD BLOCK

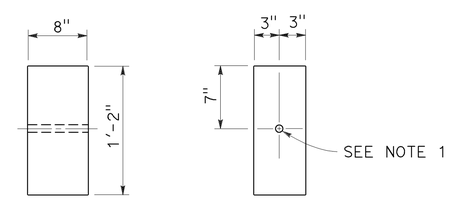

SIDE FRONT

6" x 8" WOOD BLOCK
Only for use with metal beam guard rail see Note 6

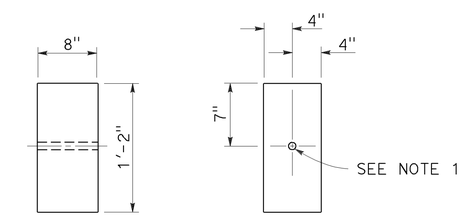

SIDE FRONT

8" x 8" WOOD BLOCK
Only for use with metal beam guard rail see Note 6

STATE OF CALIFORNIA
DEPARTMENT OF TRANSPORTATION

MIDWEST GUARDRAIL SYSTEM WOOD POST AND WOOD BLOCK DETAILS

NO SCALE

RSP A77N1 DATED JULY 19, 2013 SUPPLEMENTS THE STANDARD PLANS BOOK DATED 2010.

REVISED STANDARD PLAN RSP A77N1

2010 REVISED STANDARD PLAN RSP A77N1

7-3-13

Dist	COUNTY	ROUTE	POST MILES TOTAL PROJECT	SHEET No.	TOTAL SHEETS
07	LA	405	28.0/39.0	70	108

Randell D. Hiatt
REGISTERED CIVIL ENGINEER

November 15, 2013
PLANS APPROVAL DATE

REGISTERED PROFESSIONAL ENGINEER
Randell D. Hiatt
No. C50200
Exp. 6-30-15
CIVIL
STATE OF CALIFORNIA

THE STATE OF CALIFORNIA OR ITS OFFICERS OR AGENTS SHALL NOT BE RESPONSIBLE FOR THE ACCURACY OR COMPLETENESS OF SCANNED COPIES OF THIS PLAN SHEET.

TO ACCOMPANY PLANS DATED 2-10-14

2010 REVISED STANDARD PLAN RSP A77N3

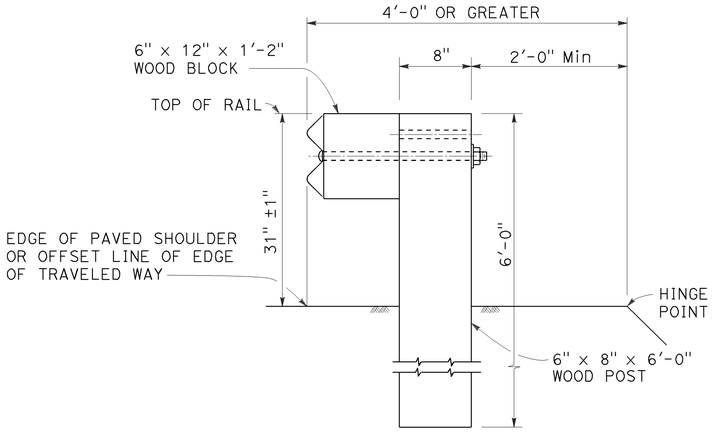

DETAIL A

TYPICAL ROADWAY INSTALLATION

See Note 1

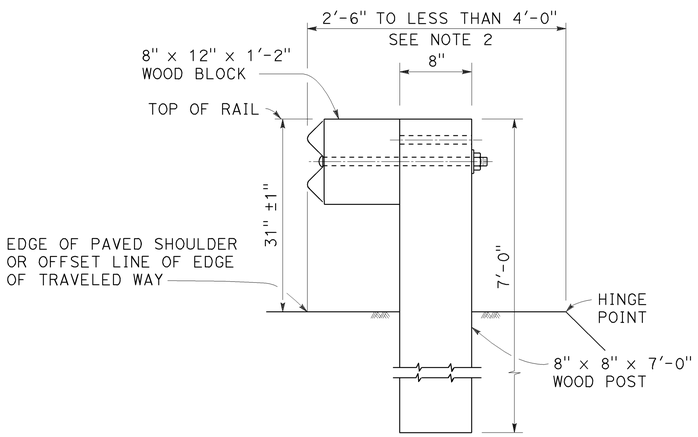

DETAIL B

NARROW ROADWAY INSTALLATION

See Note 1

POST EMBEDMENT

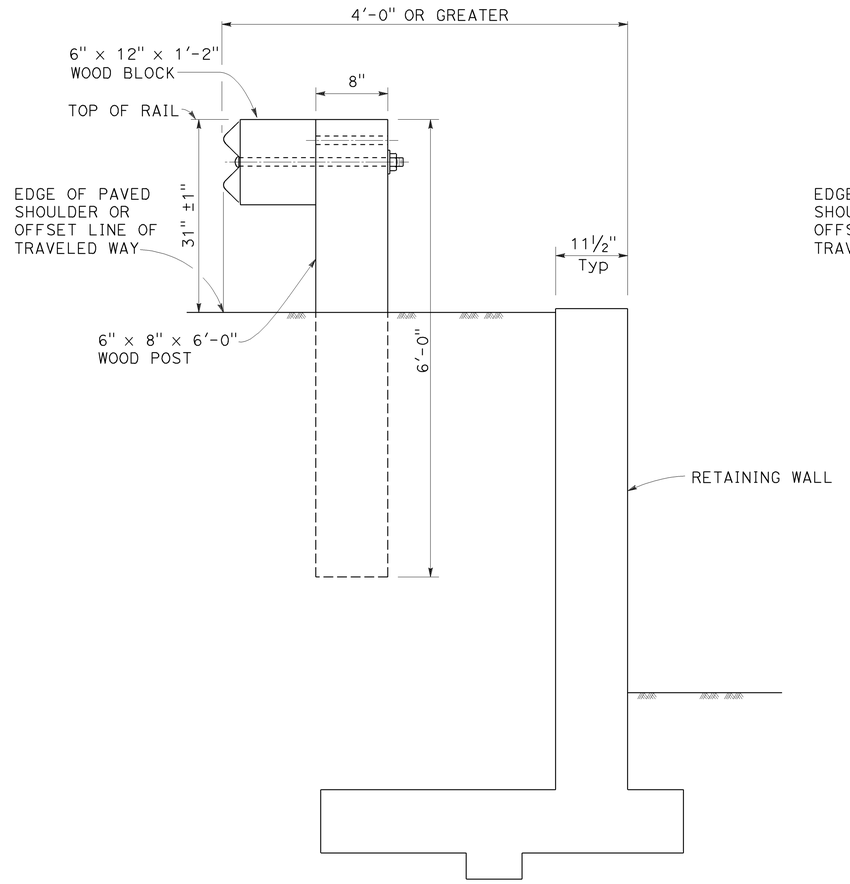

DETAIL C

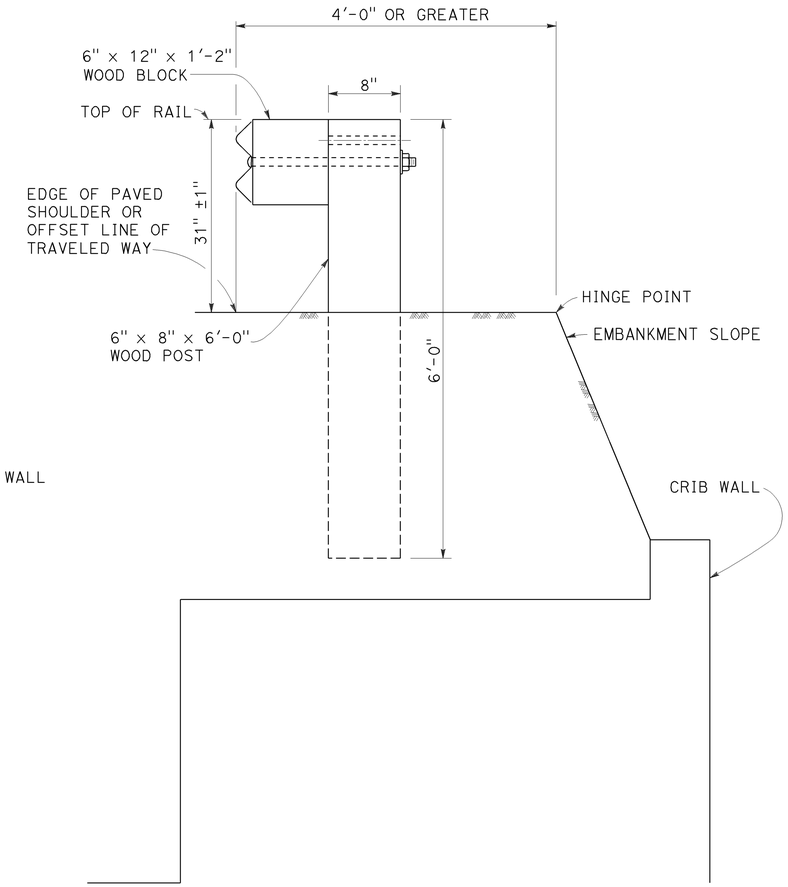

DETAIL D

INSTALLATION AT EARTH RETAINING WALLS

NOTES:

1. These installation details also applicable to steel line post installations. For Detail A, C, and D, where steel line post installations are constructed, W6 x 8.5 or W6 x 9 steel post, 6'-0" in length, with 6" x 12" x 1'-2" notched wood blocks or notched recycled plastic blocks are to be used in place of the size of wood post and wood block shown. For Detail B, where steel line post installations are constructed, W6 x 15 steel post, 8'-0" in length, with 8" x 12" x 1'-2" notched wood blocks or notched recycled plastic blocks are to be used in place of the size of wood post and wood block shown. For additional installation details, see Revised Standard Plan RSP A77L1 and RSP A77L2.
2. Where the distance between the face of the rail and the hinge point is less than 2'-6", see the Project Plans for special details.
3. For dike positioning with MGS installations, see Revised Standard Plan RSP A77N4.

STATE OF CALIFORNIA
DEPARTMENT OF TRANSPORTATION

MIDWEST GUARDRAIL SYSTEM TYPICAL LINE POST EMBEDMENT AND HINGE POINT OFFSET DETAILS

NO SCALE

RSP A77N3 DATED NOVEMBER 15, 2013 SUPERSEDES RSP A77N3
DATED JULY 19, 2013 THAT SUPPLEMENTS THE STANDARD PLANS BOOK DATED 2010.

REVISED STANDARD PLAN RSP A77N3

Dist	COUNTY	ROUTE	POST MILES TOTAL PROJECT	SHEET No.	TOTAL SHEETS
07	LA	405	28.0/39.0	71	108

Randell D. Hiatt
REGISTERED CIVIL ENGINEER

July 19, 2013
PLANS APPROVAL DATE

REGISTERED PROFESSIONAL ENGINEER
Randell D. Hiatt
No. C50200
Exp. 6-30-15
CIVIL
STATE OF CALIFORNIA

THE STATE OF CALIFORNIA OR ITS OFFICERS OR AGENTS SHALL NOT BE RESPONSIBLE FOR THE ACCURACY OR COMPLETENESS OF SCANNED COPIES OF THIS PLAN SHEET.

TO ACCOMPANY PLANS DATED 2-10-14

NOTES:

1. When necessary to place dike more than 7" in front of face of MGS, only Type C dike may be used. For dike details, see Revised Standard Plan RSP A87B.
2. For standard railing post embedment, see Revised Standard Plan RSP A77N3.
3. MGS delineation to be used where shown on the Project Plans.
4. When dike or curb is placed under MGS, the maximum height of the dike or curb shall be 6". Mountable dike should not be used. For dike and curb details, see Revised Standard Plans RSP A87A and RSP A87B.
5. For details of typical distance between the face of rail and hinge point, see Revised Standard Plan RSP A77N3.
6. For steel line posts, use 1/4 - 20 self-tapping screws in 0.22" diameter holes or 1/4" bolts in 9/32" diameter holes.

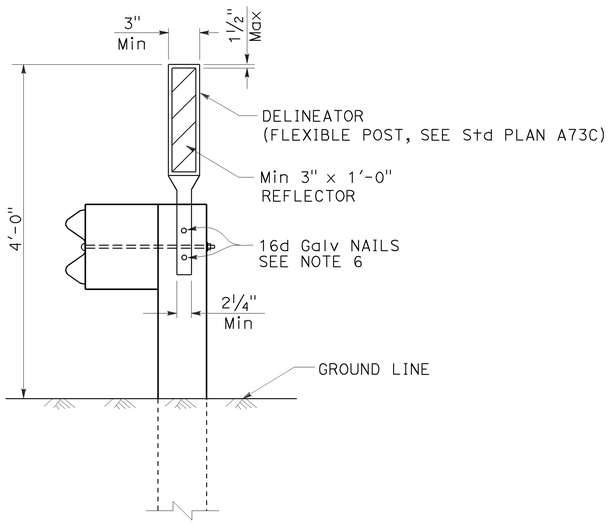

MGS DELINEATION

See Note 3

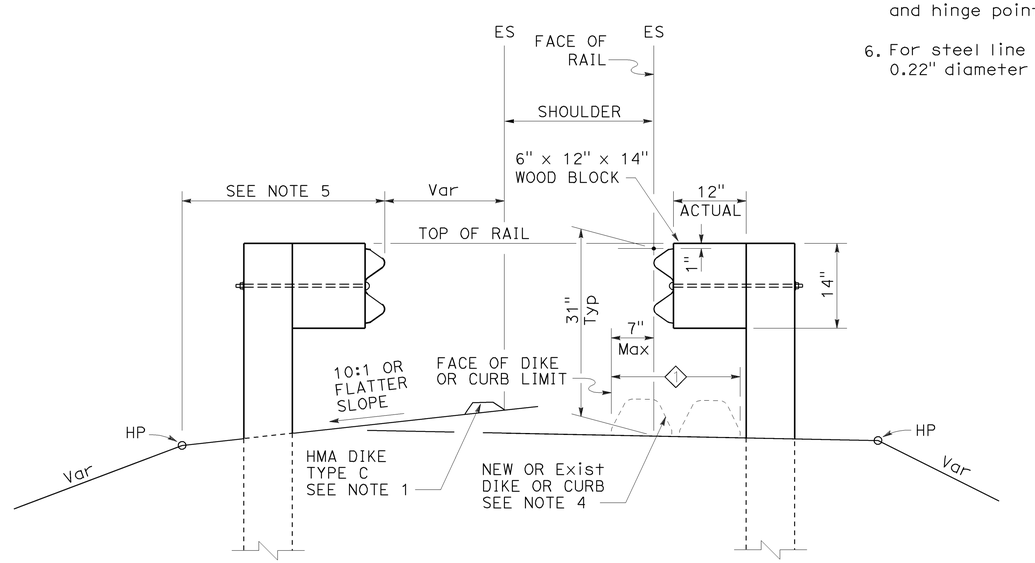

DIKE POSITIONING

See Note 1

1 PERMISSIBLE DIKE OR CURB PLACEMENT AREA

STATE OF CALIFORNIA
DEPARTMENT OF TRANSPORTATION

MIDWEST GUARDRAIL SYSTEM TYPICAL RAILING DELINEATION AND DIKE POSITIONING DETAILS

NO SCALE

RSP A77N4 DATED JULY 19, 2013 SUPPLEMENTS THE STANDARD PLANS BOOK DATED 2010.

REVISED STANDARD PLAN RSP A77N4

2010 REVISED STANDARD PLAN RSP A77N4

7-10-13

Dist	COUNTY	ROUTE	POST MILES TOTAL PROJECT	SHEET No.	TOTAL SHEETS
07	LA	405	28.0/39.0	72	108

Randell D. Hiatt
REGISTERED CIVIL ENGINEER

July 19, 2013
PLANS APPROVAL DATE

REGISTERED PROFESSIONAL ENGINEER
Randell D. Hiatt
No. C50200
Exp. 6-30-15
CIVIL
STATE OF CALIFORNIA

THE STATE OF CALIFORNIA OR ITS OFFICERS OR AGENTS SHALL NOT BE RESPONSIBLE FOR THE ACCURACY OR COMPLETENESS OF SCANNED COPIES OF THIS PLAN SHEET.

TO ACCOMPANY PLANS DATED 2-10-14

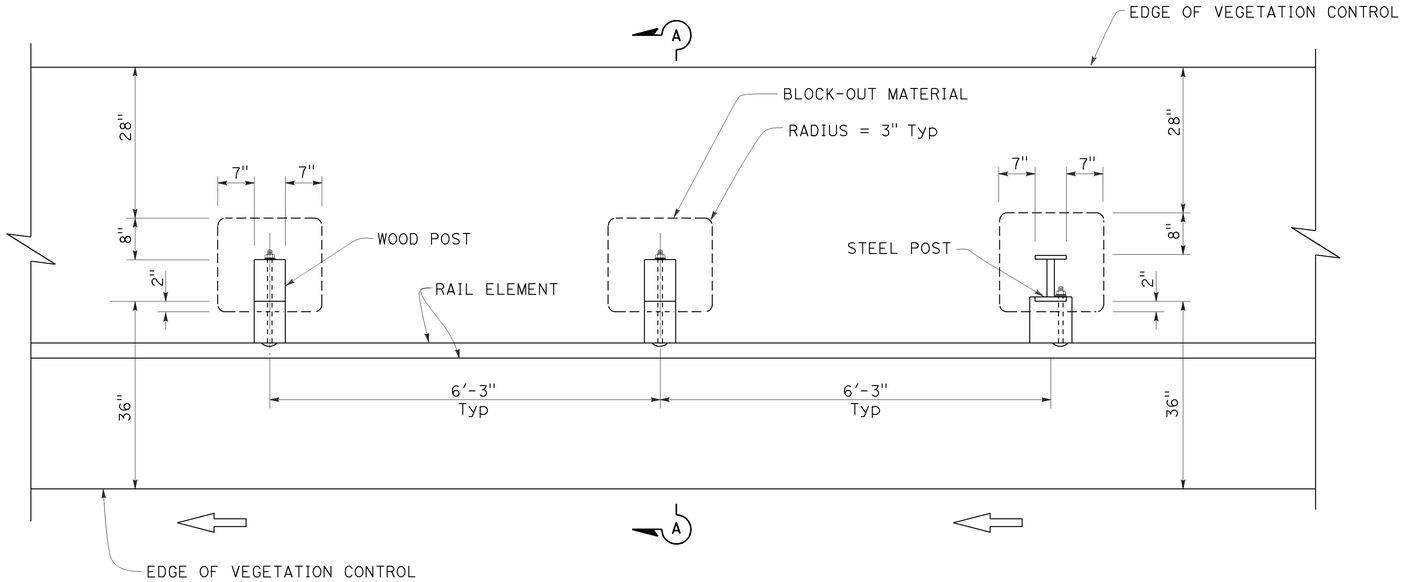

PLAN

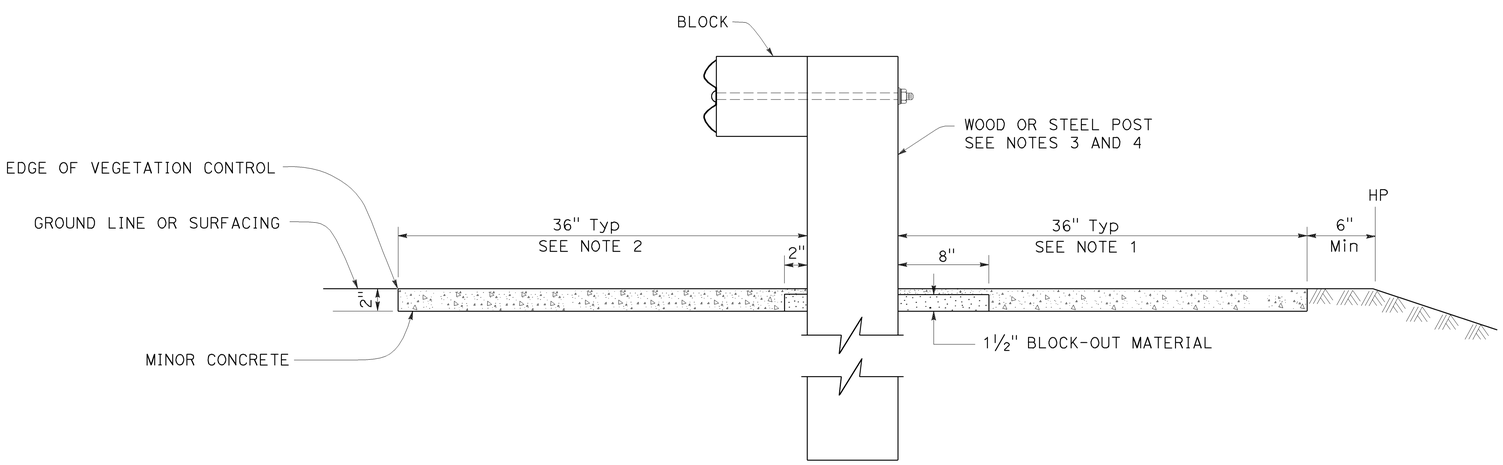

SECTION A-A

NOTES:

1. Where the distance between back of post and hinge point is less than 42", construct vegetation control to 6" from hinge point while maintaining the 8" block-out at back of post. If the 8" block-out at back of post can not be maintained, construct vegetation control flush with the back edge of post.
2. Where dike is constructed under railing, construct vegetation control to back edge of dike. Where paved shoulder is constructed within 36" in front of the post, construct vegetation control to the edge of paved shoulder.
3. For wood post sizes, see Revised Standard Plan RSP A77N1.
4. For steel post sizes, see Revised Standard Plan RSP A77N2.
5. For details not shown, see Revised Standard Plans RSP A77L1 and RSP A77L2.

STATE OF CALIFORNIA
DEPARTMENT OF TRANSPORTATION

MIDWEST GUARDRAIL SYSTEM TYPICAL VEGETATION CONTROL STANDARD RAILING SECTION

NO SCALE

RSP A77N5 DATED JULY 19, 2013 SUPPLEMENTS THE STANDARD PLANS BOOK DATED 2010.

REVISED STANDARD PLAN RSP A77N5

2010 REVISED STANDARD PLAN RSP A77N5

7-3-13

Dist	COUNTY	ROUTE	POST MILES TOTAL PROJECT	SHEET No.	TOTAL SHEETS
07	LA	405	28.0/39.0	73	108

Randell D. Hiatt
REGISTERED CIVIL ENGINEER

July 19, 2013
PLANS APPROVAL DATE

REGISTERED PROFESSIONAL ENGINEER
Randell D. Hiatt
No. C50200
Exp. 6-30-15
CIVIL
STATE OF CALIFORNIA

THE STATE OF CALIFORNIA OR ITS OFFICERS OR AGENTS SHALL NOT BE RESPONSIBLE FOR THE ACCURACY OR COMPLETENESS OF SCANNED COPIES OF THIS PLAN SHEET.

TO ACCOMPANY PLANS DATED 2-10-14

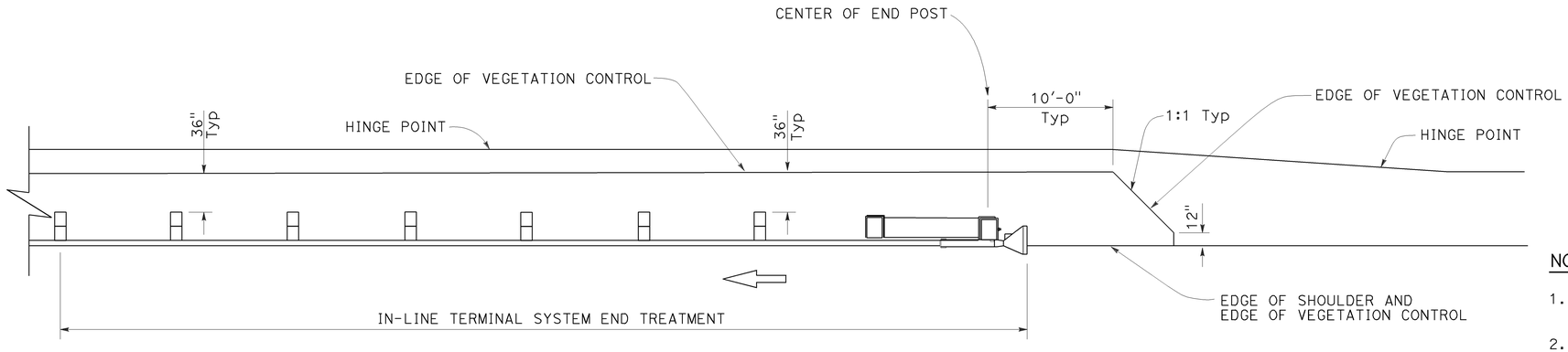

PLAN

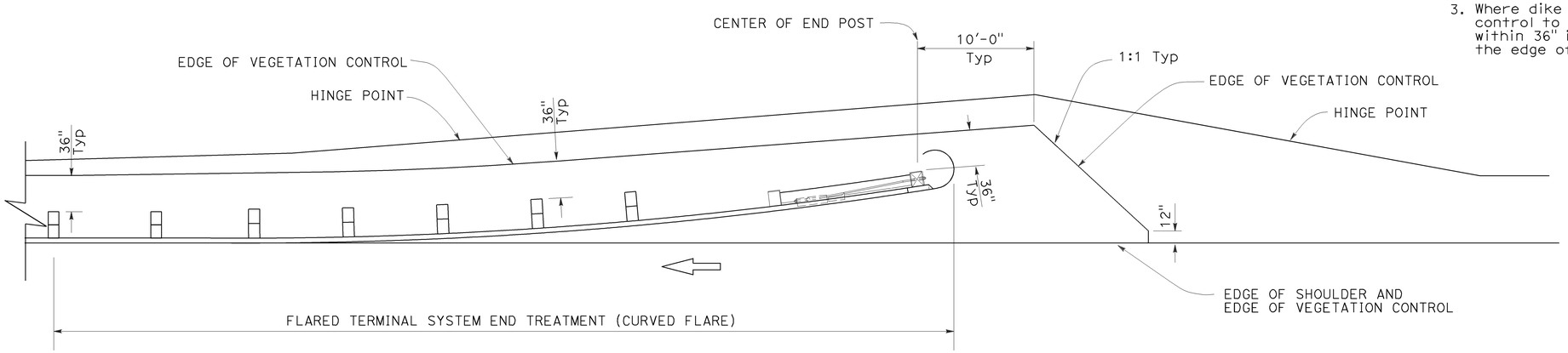

PLAN

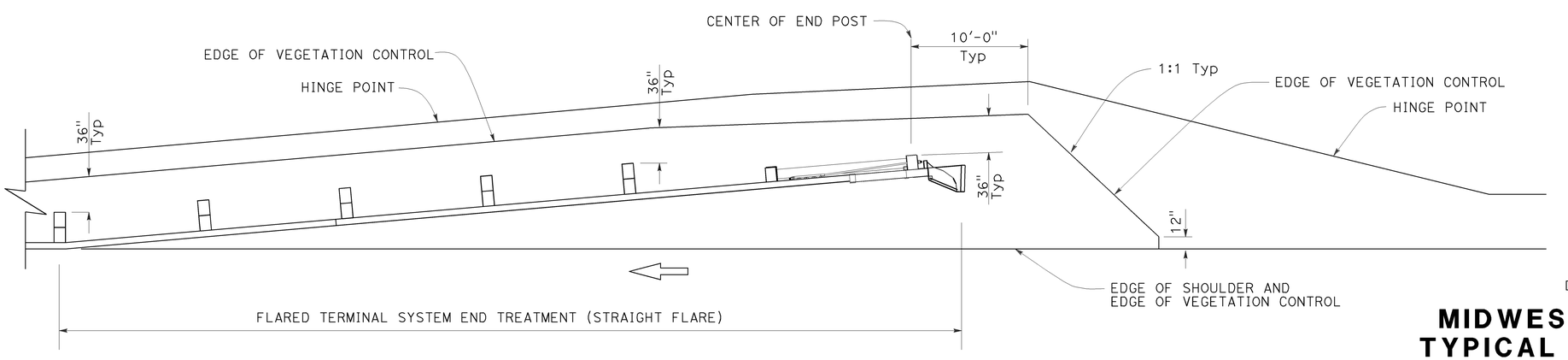

PLAN

NOTES:

1. See Revised Standard Plan RSP A77N5 for additional vegetation control details.
2. Where the distance between back of post and hinge point is less than 42", construct vegetation control to 6" from hinge point while maintaining the 8" block-out at back of post. If the 8" block-out at back of post can not be maintained, construct vegetation control flush with the back edge of post.
3. Where dike is constructed under railing, construct vegetation control to back edge of dike. Where paved shoulder is constructed within 36" in front of the post, construct vegetation control to the edge of paved shoulder.

STATE OF CALIFORNIA
DEPARTMENT OF TRANSPORTATION

MIDWEST GUARDRAIL SYSTEM TYPICAL VEGETATION CONTROL FOR TERMINAL SYSTEM END TREATMENTS

NO SCALE

RSP A77N6 DATED JULY 19, 2013 SUPPLEMENTS THE STANDARD PLANS BOOK DATED 2010.

REVISED STANDARD PLAN RSP A77N6

2010 REVISED STANDARD PLAN RSP A77N6

6-12-13

2-10-14

Dist	COUNTY	ROUTE	POST MILES TOTAL PROJECT	SHEET No.	TOTAL SHEETS
07	LA	405	28.0/39.0	74	108

Randell D. Hiatt
REGISTERED CIVIL ENGINEER

July 19, 2013
PLANS APPROVAL DATE

REGISTERED PROFESSIONAL ENGINEER
Randell D. Hiatt
No. C50200
Exp. 6-30-15
CIVIL
STATE OF CALIFORNIA

THE STATE OF CALIFORNIA OR ITS OFFICERS OR AGENTS SHALL NOT BE RESPONSIBLE FOR THE ACCURACY OR COMPLETENESS OF SCANNED COPIES OF THIS PLAN SHEET.

TO ACCOMPANY PLANS DATED 2-10-14

NOTES:

1. See Revised Standard Plan RSP A77N5 for additional vegetation control details.
2. Where the distance between back of post and hinge point is less than 42", construct vegetation control to 6" from hinge point while maintaining the 8" block-out at back of post. If the 8" block-out at back of post can not be maintained, construct vegetation control flush with the back edge of post.
3. Where dike is constructed under railing, construct vegetation control to back edge of dike. Where paved shoulder is constructed within 36" in front of the post, construct vegetation control to the edge of paved shoulder.

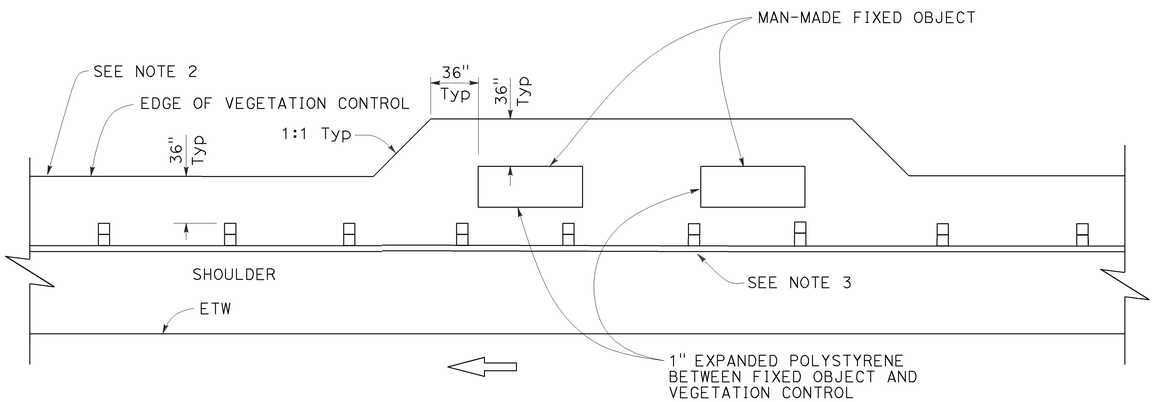

PLAN

Fixed object(s) on shoulder

STATE OF CALIFORNIA
DEPARTMENT OF TRANSPORTATION

MIDWEST GUARDRAIL SYSTEM TYPICAL VEGETATION CONTROL AT FIXED OBJECT

NO SCALE

RSP A77N8 DATED JULY 19, 2013 SUPPLEMENTS THE STANDARD PLANS BOOK DATED 2010.

REVISED STANDARD PLAN RSP A77N8

2010 REVISED STANDARD PLAN RSP A77N8

6-12-13

Dist	COUNTY	ROUTE	POST MILES TOTAL PROJECT	SHEET No.	TOTAL SHEETS
07	LA	405	28.0/39.0	75	108

Randell D. Hiatt
REGISTERED CIVIL ENGINEER

July 19, 2013
PLANS APPROVAL DATE

REGISTERED PROFESSIONAL ENGINEER
Randell D. Hiatt
No. C50200
Exp. 6-30-15
CIVIL
STATE OF CALIFORNIA

THE STATE OF CALIFORNIA OR ITS OFFICERS OR AGENTS SHALL NOT BE RESPONSIBLE FOR THE ACCURACY OR COMPLETENESS OF SCANNED COPIES OF THIS PLAN SHEET.

TO ACCOMPANY PLANS DATED 2-10-14

2010 REVISED STANDARD PLAN RSP A77N9

NOTES:

1. See Revised Standard Plan RSP A77N5 for additional vegetation control details.
2. Where dike is constructed under railing, construct vegetation control to back edge of dike. Where paved shoulder is constructed within 36" in front of the post, construct vegetation control to the edge of paved shoulder.

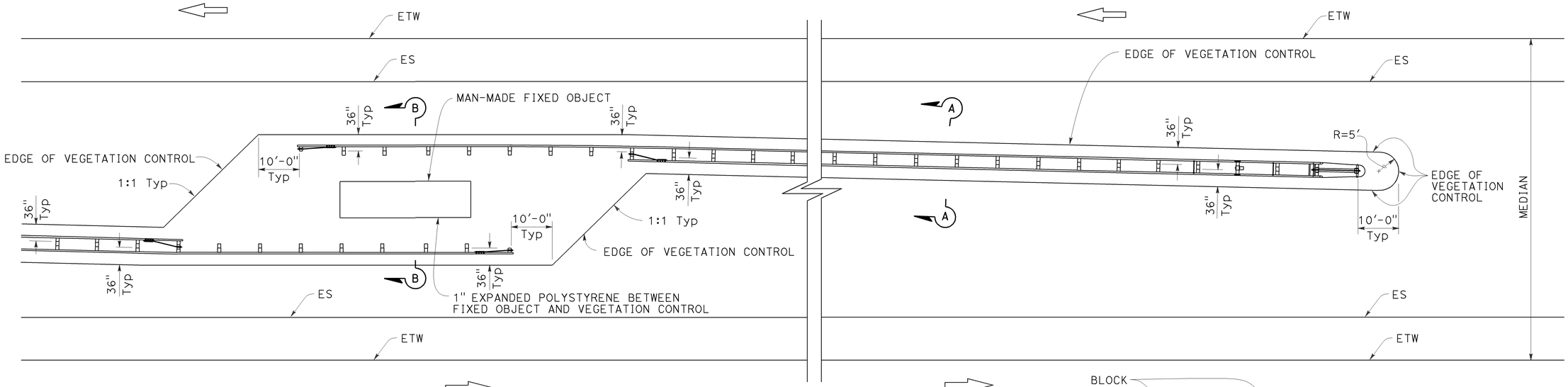

PLAN

Fixed object(s) in median

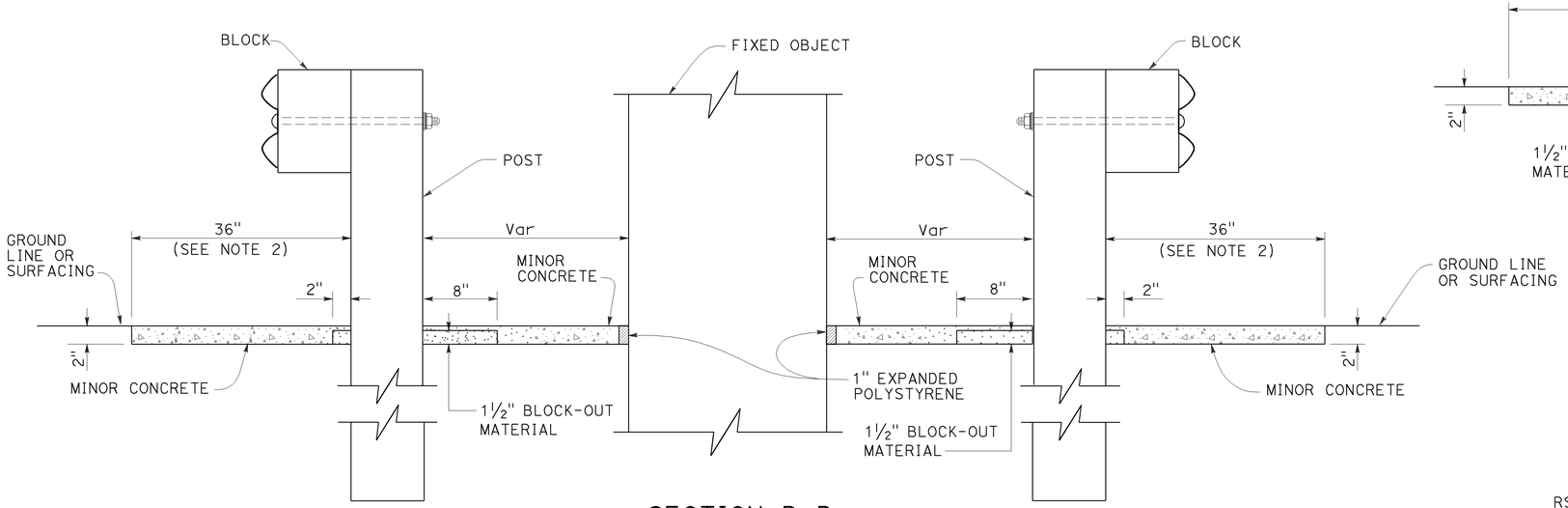

SECTION B-B

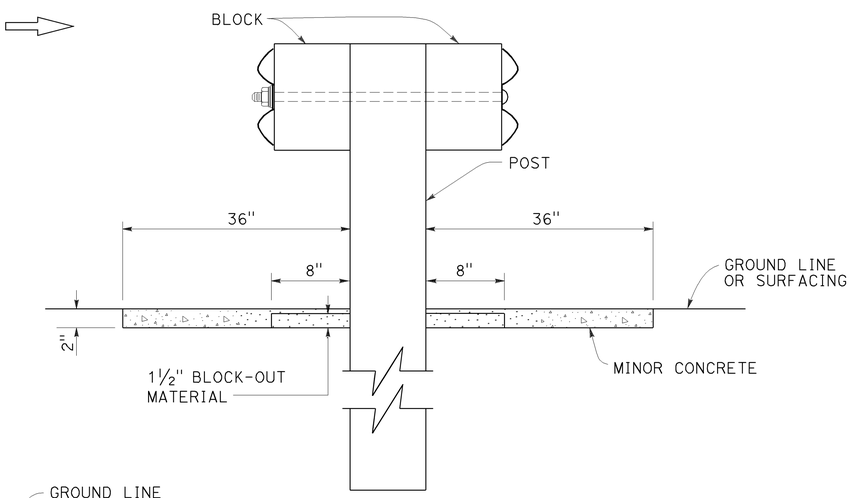

SECTION A-A

STATE OF CALIFORNIA
DEPARTMENT OF TRANSPORTATION

MIDWEST GUARDRAIL SYSTEM TYPICAL VEGETATION CONTROL AT FIXED OBJECT

NO SCALE

RSP A77N9 DATED JULY 19, 2013 SUPPLEMENTS THE STANDARD PLANS BOOK DATED 2010.

REVISED STANDARD PLAN RSP A77N9

6-12-13

Dist	COUNTY	ROUTE	POST MILES TOTAL PROJECT	SHEET No.	TOTAL SHEETS
07	LA	405	28.0/39.0	76	108

Randell D. Hiatt
REGISTERED CIVIL ENGINEER

July 19, 2013
PLANS APPROVAL DATE

REGISTERED PROFESSIONAL ENGINEER
Randell D. Hiatt
No. C50200
Exp. 6-30-15
CIVIL
STATE OF CALIFORNIA

THE STATE OF CALIFORNIA OR ITS OFFICERS OR AGENTS SHALL NOT BE RESPONSIBLE FOR THE ACCURACY OR COMPLETENESS OF SCANNED COPIES OF THIS PLAN SHEET.

TO ACCOMPANY PLANS DATED 2-10-14

2010 REVISED STANDARD PLAN RSP A77N10

NOTES:

1. See Revised Standard Plan RSP A77N5 for additional vegetation control details.
2. Where dike is constructed under railing, construct vegetation control to back edge of dike. Where paved shoulder is constructed within 36" in front of the post, construct vegetation control to the edge of paved shoulder.

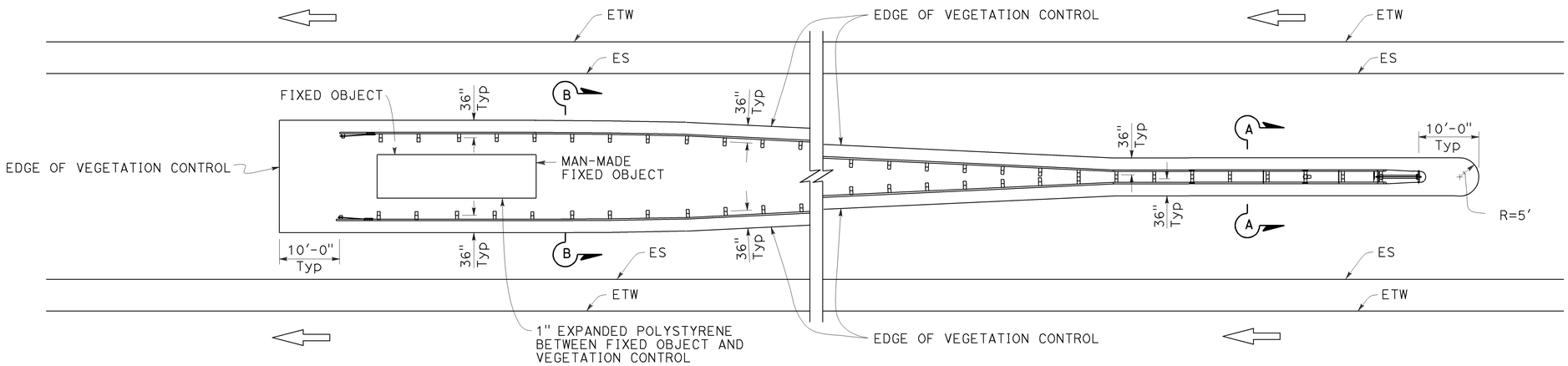

PLAN

Fixed object(s) between separate roadbeds
(One-Way Traffic)

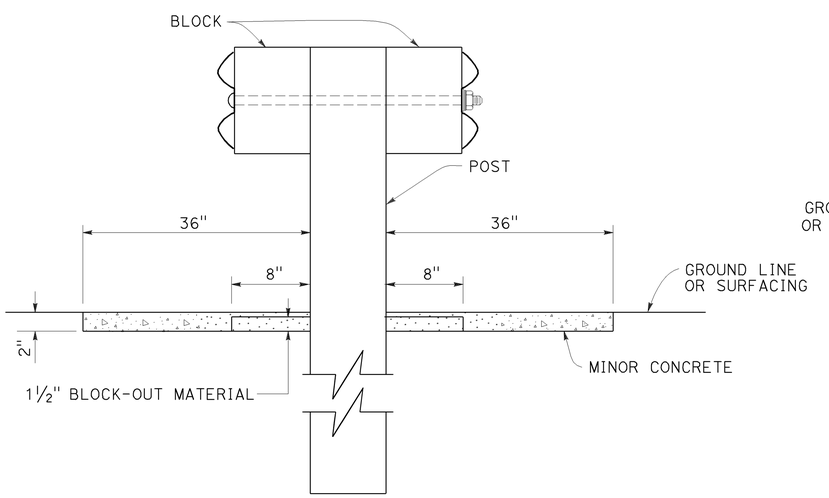

SECTION A-A

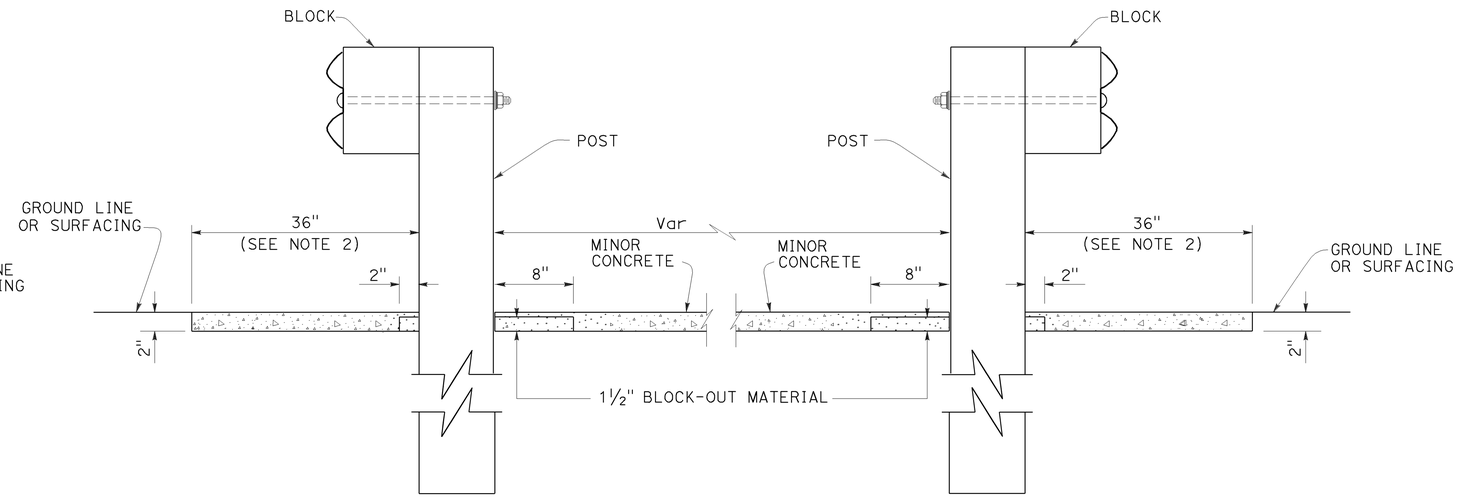

SECTION B-B

STATE OF CALIFORNIA
DEPARTMENT OF TRANSPORTATION

MIDWEST GUARDRAIL SYSTEM TYPICAL VEGETATION CONTROL AT FIXED OBJECT

NO SCALE

RSP A77N10 DATED JULY 19, 2013 SUPPLEMENTS THE STANDARD PLANS BOOK DATED 2010.

REVISED STANDARD PLAN RSP A77N10

6-12-13

Dist	COUNTY	ROUTE	POST MILES TOTAL PROJECT	SHEET No.	TOTAL SHEETS
07	LA	405	28.0/39.0	77	108

Randell D. Hiatt
REGISTERED CIVIL ENGINEER

November 15, 2013
PLANS APPROVAL DATE

REGISTERED PROFESSIONAL ENGINEER
Randell D. Hiatt
No. C50200
Exp. 6-30-15
CIVIL
STATE OF CALIFORNIA

THE STATE OF CALIFORNIA OR ITS OFFICERS OR AGENTS SHALL NOT BE RESPONSIBLE FOR THE ACCURACY OR COMPLETENESS OF SCANNED COPIES OF THIS PLAN SHEET.

TO ACCOMPANY PLANS DATED 2-10-14

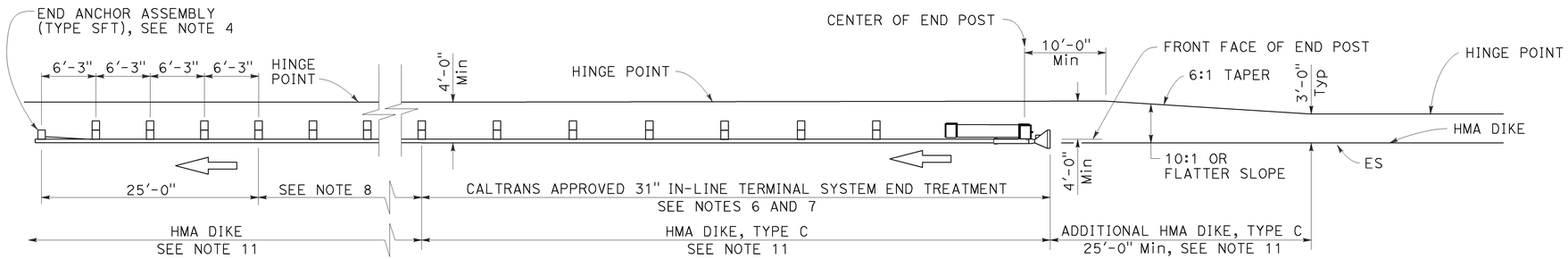

TYPE 11A LAYOUT

(Embankment MGS installation with 31" in-line end treatment at traffic approach end of railing) see Note 5

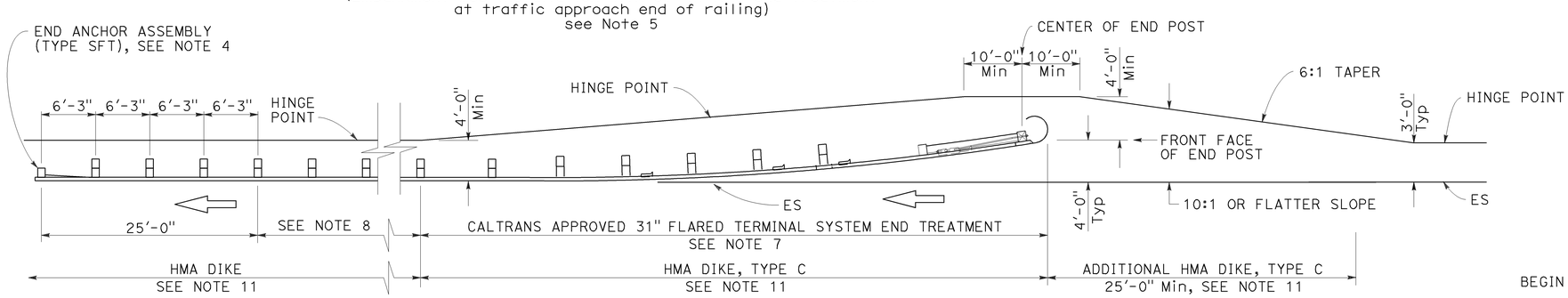

TYPE 11B LAYOUT

(Embankment MGS installation with 31" flared end treatment at traffic approach end of railing) see Note 5

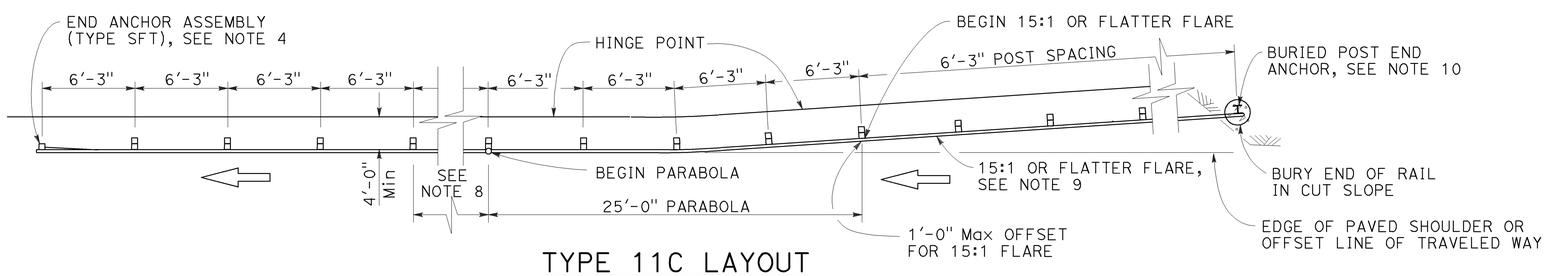

TYPE 11C LAYOUT

(Embankment MGS installation with buried end anchor treatment at traffic approach end of railing) see Notes 5 and 11

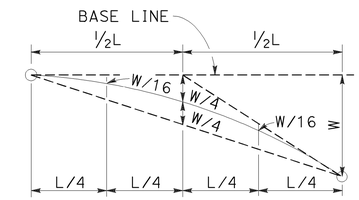

TYPICAL PARABOLIC LAYOUT

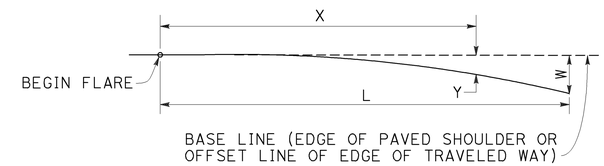

$$Y = \frac{WX^2}{L^2}$$

Y = OFFSET FROM BASE LINE
W = MAXIMUM OFFSET
X = DISTANCE ALONG BASE LINE
L = LENGTH OF FLARE

PARABOLIC FLARE OFFSETS

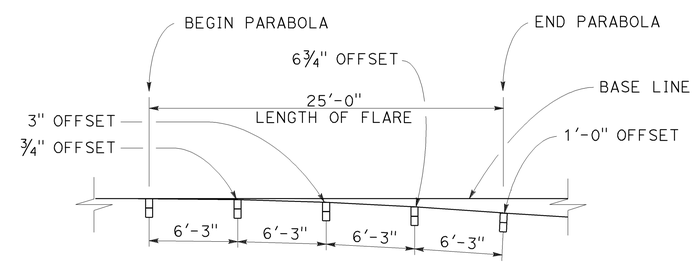

TYPICAL FLARE OFFSETS FOR 1 FOOT Max END OFFSET

NOTES:

1. Line post, blocks and hardware to be used are shown on Revised Standard Plans RSP A77L1, RSP A77L2, RSP A77M1, RSP A77N1 and RSP A77N2.
2. MGS post spacing to be 6'-3" center to center, except as otherwise noted.
3. Except as noted, line posts are 6" x 8" x 6'-0" wood with 6" x 12" x 1'-2" wood blocks. W6 x 8.5 or W6 x 9 steel posts, 6'-0" in length, with 6" x 12" x 1'-2" notched wood blocks or recycled plastic blocks may be used for 6" x 8" x 6'-0" wood post with 6" x 12" x 1'-2" wood blocks where applicable and when specified.
4. For End Anchor Assembly (Type SFT) details, see Revised Standard Plan RSP A77S1.
5. Layout Types 11A, 11B or 11C are typically used where MGS is recommended to shield embankment slopes and a crashworthy end treatment is required for only one direction of traffic.
6. 31" in-line terminal system end treatments are used where site conditions will not accommodate a flared end treatment.
7. The type of 31" terminal system end treatment to be used will be shown on the Project Plans.
8. Dependent on site conditions (embankment height and side slope), construction of additional MGS (length equal to multiples of 12'-6" with 6'-3" post spacing) may be advisable.
9. The 15:1 or flatter flare used with buried end anchors is based on the edge of the paved shoulder or offset line of edge of the traveled way. The length of MGS within the 15:1 or flatter flare is based on site conditions and should be a length equal to multiples of 12'-6".
10. For details of the buried post end anchor used with Type 11C Layout, see Revised Standard Plan RSP A77T2.
11. Where placement of dike is required with MGS installations, see Revised Standard Plan RSP A77N4 for dike positioning details.

STATE OF CALIFORNIA
DEPARTMENT OF TRANSPORTATION

MIDWEST GUARDRAIL SYSTEM TYPICAL LAYOUTS FOR EMBANKMENTS

NO SCALE

RSP A77P1 DATED NOVEMBER 15, 2013 SUPERSEDES RSP A77P1 DATED JULY 19, 2013 THAT SUPPLEMENTS THE STANDARD PLANS BOOK DATED 2010.

REVISED STANDARD PLAN RSP A77P1

2010 REVISED STANDARD PLAN RSP A77P1

10-4-13

Dist	COUNTY	ROUTE	POST MILES TOTAL PROJECT	SHEET No.	TOTAL SHEETS
07	LA	405	28.0/39.0	78	108

Randell D. Hiatt
REGISTERED CIVIL ENGINEER

July 19, 2013
PLANS APPROVAL DATE

REGISTERED PROFESSIONAL ENGINEER
Randell D. Hiatt
No. C50200
Exp. 6-30-15
CIVIL
STATE OF CALIFORNIA

THE STATE OF CALIFORNIA OR ITS OFFICERS OR AGENTS SHALL NOT BE RESPONSIBLE FOR THE ACCURACY OR COMPLETENESS OF SCANNED COPIES OF THIS PLAN SHEET.

TO ACCOMPANY PLANS DATED 2-10-14

2010 REVISED STANDARD PLAN RSP A77P2

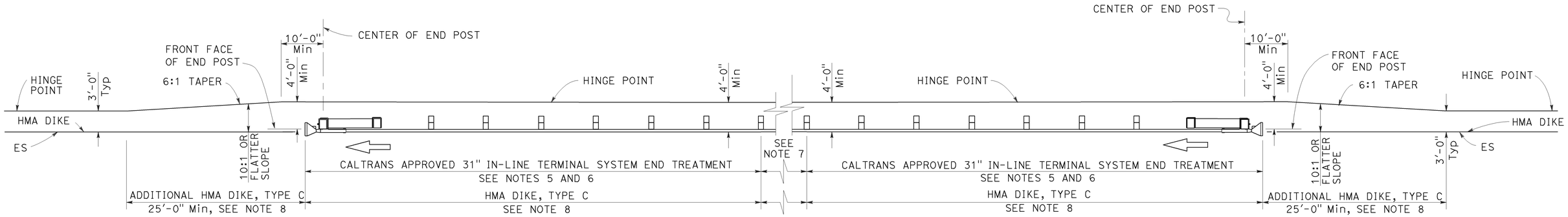

TYPE 11D LAYOUT

(Embankment MGS installation with
31" in-line end treatment at each end of railing)
See Note 4

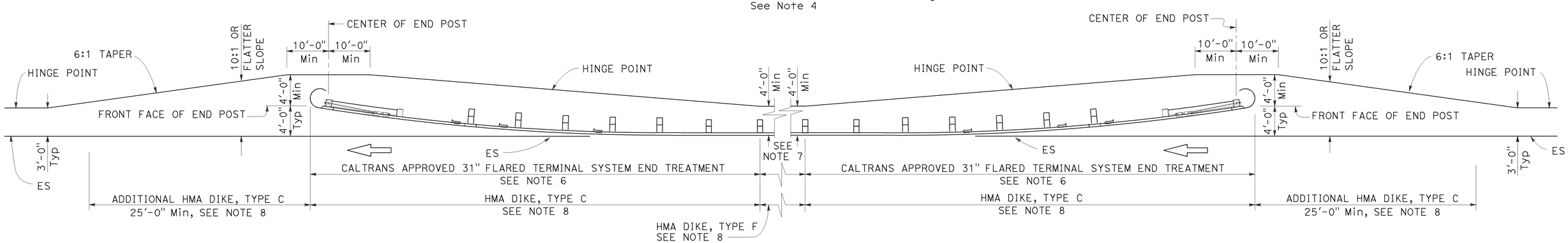

TYPE 11E LAYOUT

(Embankment MGS installation with
31" flared end treatment at each end of railing)
See Note 4

NOTES:

1. Line post, blocks and hardware to be used are shown on Revised Standard Plans RSP A77L1, RSP A77L2, RSP A77M1, RSP A77N1 and RSP A77N2.
2. MGS post spacing to be 6'-3" center to center, except as otherwise noted.
3. Except as noted, line posts are 6" x 8" x 6'-0" wood with 6" x 12" x 1'-2" wood blocks. W6 x 8.5 or W6 x 9 steel posts, 6'-0" in length, with 6" x 12" x 1'-2" notched wood blocks or plastic blocks may be used for 6" x 8" x 6'-0" wood post with 6" x 12" x 1'-2" wood blocks where applicable and when specified.
4. Layout Types 11D through 11L, shown on the A77P Series of Standard Plans, are typically used where MGS is recommended to shield embankment slopes and a crashworthy 31" end treatment is required for both directions of traffic.
5. 31" in-line terminal system end treatments are used where site conditions will not accommodate a flared end treatment.
6. The type of 31" terminal system end treatment to be used will be shown on the Project Plans.
7. Dependent on site conditions (embankment height and side slope), construction of additional MGS (length equal to multiples of 12'-6" with 6'-3" post spacing) may be advisable.
8. Where placement of dike is required with MGS installations, see Revised Standard Plan RSP A77N4 for dike positioning details.

STATE OF CALIFORNIA
DEPARTMENT OF TRANSPORTATION

MIDWEST GUARDRAIL SYSTEM TYPICAL LAYOUTS FOR EMBANKMENTS

NO SCALE

RSP A77P2 DATED JULY 19, 2013 SUPPLEMENTS THE STANDARD PLANS BOOK DATED 2010.

REVISED STANDARD PLAN RSP A77P2

Dist	COUNTY	ROUTE	POST MILES TOTAL PROJECT	SHEET No.	TOTAL SHEETS
07	LA	405	28.0/39.0	79	108

Randell D. Hiatt
REGISTERED CIVIL ENGINEER

July 19, 2013
PLANS APPROVAL DATE

REGISTERED PROFESSIONAL ENGINEER
Randell D. Hiatt
No. C50200
Exp. 6-30-15
CIVIL
STATE OF CALIFORNIA

THE STATE OF CALIFORNIA OR ITS OFFICERS OR AGENTS SHALL NOT BE RESPONSIBLE FOR THE ACCURACY OR COMPLETENESS OF SCANNED COPIES OF THIS PLAN SHEET.

TO ACCOMPANY PLANS DATED 2-10-14

2010 REVISED STANDARD PLAN RSP A77P3

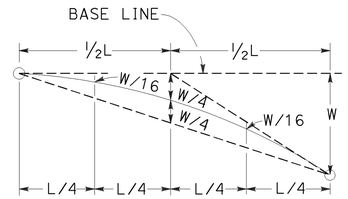

TYPICAL PARABOLIC LAYOUT

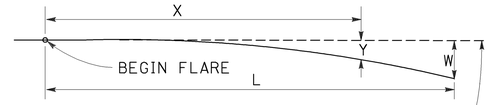

BASE LINE (EDGE OF PAVED SHOULDER OR OFFSET LINE OF EDGE OF TRAVELED WAY)

$$Y = \frac{WX^2}{L^2}$$

Y = OFFSET FROM BASE LINE
W = MAXIMUM OFFSET
X = DISTANCE ALONG BASE LINE
L = LENGTH OF FLARE

PARABOLIC FLARE OFFSETS

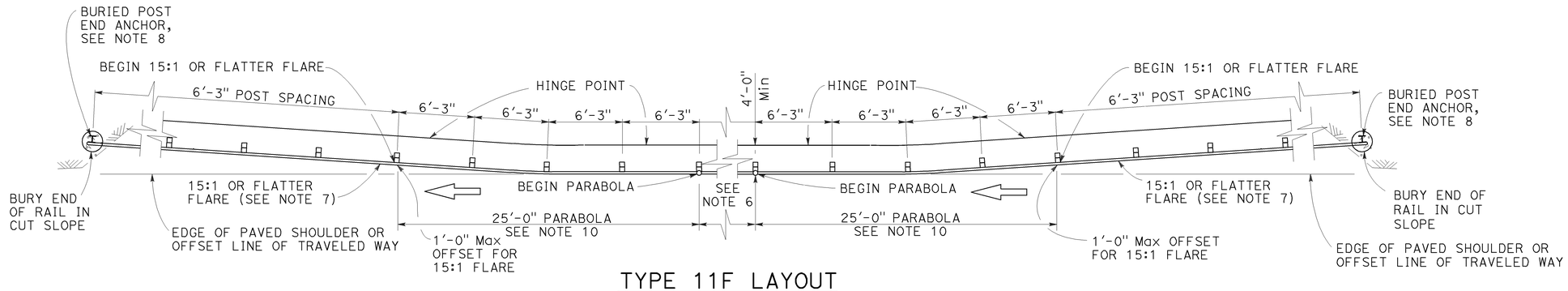

TYPE 11F LAYOUT

(Embankment MGS installation with a
buried end anchor treatment at each end of railing)
See Notes 4 and 9

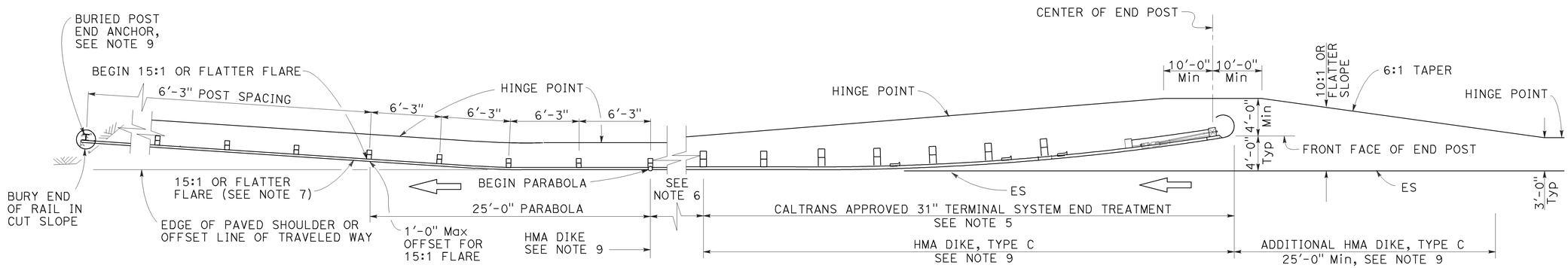

TYPE 11G LAYOUT

(Embankment MGS installation with 31" flared end treatment
and a buried end anchor treatment at the ends of railing)
See Notes 4 and 9

NOTES:

1. Line post, blocks and hardware to be used are shown on Revised Standard Plans RSP A77L1, RSP A77L2, RSP A77M1, RSP A77N1 and RSP A77N2.
2. MGS post spacing to be 6'-3" center to center, except as otherwise noted.
3. Except as noted, line posts are 6" x 8" x 6'-0" wood with 6" x 12" x 1'-2" wood blocks. W6 x 8.5 or W6 x 9 steel posts, 6'-0" in length, with 6" x 12" x 1'-2" notched wood blocks or plastic blocks may be used for 6" x 8" x 6'-0" wood post with 6" x 12" x 1'-2" wood blocks where applicable and when specified.
4. Layout Types 11D through 11L, shown on the A77P Series of Standard Plans, are typically used where MGS is recommended to shield embankment slopes and a crashworthy 31" end treatment is required for both directions of traffic.
5. The type of 31" terminal system end treatment to be used will be shown on the Project Plans.
6. Dependent on site conditions (embankment height and side slope), construction of additional MGS (length equal to multiples of 12'-6" with 6'-3" post spacing) may be advisable.
7. The 15:1 or flatter flare used with buried end anchors is based on the edge of the paved shoulder or offset line of edge of the traveled way. The length of MGS within the 15:1 or flatter flare is based on site conditions and should be a length equal to multiples of 12'-6".
8. For details of the buried post end anchor used with Type 11F and 11G Layouts, see Revised Standard Plan RSP A77T2.
9. Where placement of dike is required with MGS installations, see Revised Standard Plan RSP A77N4 for dike positioning details.
10. For typical flare offsets for 25'-0" length parabola with maximum offset of 1'-0", see Revised Standard Plan RSP A77P1.

STATE OF CALIFORNIA
DEPARTMENT OF TRANSPORTATION

MIDWEST GUARDRAIL SYSTEM TYPICAL LAYOUTS FOR EMBANKMENTS

NO SCALE

RSP A77P3 DATED JULY 19, 2013 SUPPLEMENTS THE STANDARD PLANS BOOK DATED 2010.

REVISED STANDARD PLAN RSP A77P3

6-19-13

Dist	COUNTY	ROUTE	POST MILES TOTAL PROJECT	SHEET No.	TOTAL SHEETS
07	LA	405	28.0/39.0	80	108

Randell D. Hiatt
REGISTERED CIVIL ENGINEER

July 19, 2013
PLANS APPROVAL DATE

REGISTERED PROFESSIONAL ENGINEER
Randell D. Hiatt
No. C50200
Exp. 6-30-15
CIVIL
STATE OF CALIFORNIA

THE STATE OF CALIFORNIA OR ITS OFFICERS OR AGENTS SHALL NOT BE RESPONSIBLE FOR THE ACCURACY OR COMPLETENESS OF SCANNED COPIES OF THIS PLAN SHEET.

TO ACCOMPANY PLANS DATED 2-10-14

2010 REVISED STANDARD PLAN RSP A77P4

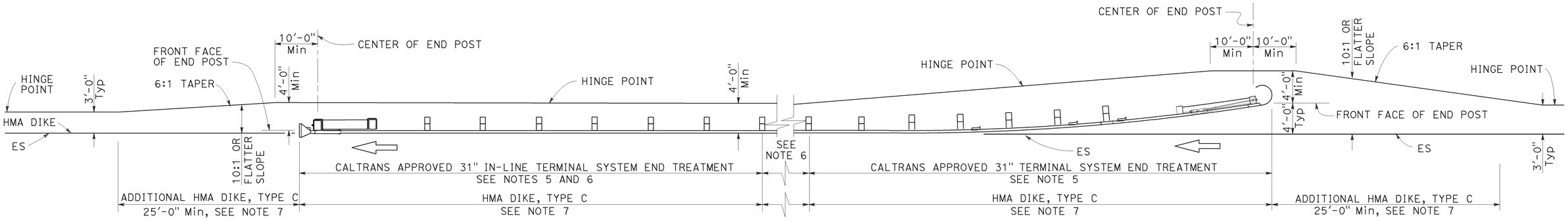

TYPE 11H LAYOUT

(Embankment MGS installation with 31" flared end treatment
and 31" in-line treatment at the ends of railing)
See Notes 4 and 7

NOTES:

1. Line post, blocks and hardware to be used are shown on Revised Standard Plans RSP A77L1, RSP A77L2, RSP A77M1, RSP A77N1 and RSP A77N2.
2. MGS post spacing to be 6'-3" center to center, except as otherwise noted.
3. Except as noted, line posts are 6" x 8" x 6'-0" wood with 6" x 12" x 1'-2" wood blocks. W6 x 8.5 or W6 x 9 steel posts, 6'-0" in length, with 6" x 12" x 1'-2" notched wood blocks or plastic blocks may be used for 6" x 8" x 6'-0" wood post with 6" x 12" x 1'-2" wood blocks where applicable and when specified.
4. Layout Types 11D through 11L, shown on the A77P Series of Standard Plans, are typically used where MGS is recommended to shield embankment slopes and a crashworthy 31" end treatment is required for both directions of traffic.
5. The type of 31" terminal system end treatment to be used will be shown on the Project Plans.
6. Dependent on site conditions (embankment height and side slope), construction of additional MGS (length equal to multiples of 12'-6" with 6'-3" post spacing) may be advisable.
7. Where placement of dike is required with MGS installations, see Revised Standard Plan RSP A77N4 for dike positioning details.

STATE OF CALIFORNIA
DEPARTMENT OF TRANSPORTATION

MIDWEST GUARDRAIL SYSTEM TYPICAL LAYOUTS FOR EMBANKMENTS

NO SCALE

RSP A77P4 DATED JULY 19, 2013 SUPPLEMENTS THE STANDARD PLANS BOOK DATED 2010.

REVISED STANDARD PLAN RSP A77P4

6-19-13

Dist	COUNTY	ROUTE	POST MILES TOTAL PROJECT	SHEET No.	TOTAL SHEETS
07	LA	405	28.0/39.0	81	108

Randell D. Hiatt
REGISTERED CIVIL ENGINEER

July 19, 2013
PLANS APPROVAL DATE

REGISTERED PROFESSIONAL ENGINEER
Randell D. Hiatt
No. C50200
Exp. 6-30-15
CIVIL
STATE OF CALIFORNIA

THE STATE OF CALIFORNIA OR ITS OFFICERS OR AGENTS SHALL NOT BE RESPONSIBLE FOR THE ACCURACY OR COMPLETENESS OF SCANNED COPIES OF THIS PLAN SHEET.

TO ACCOMPANY PLANS DATED 2-10-14

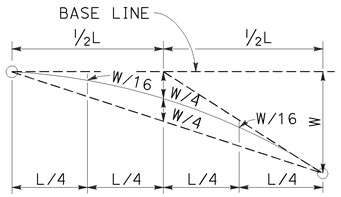

TYPICAL PARABOLIC LAYOUT

BASE LINE (EDGE OF PAVED SHOULDER OR OFFSET LINE OF EDGE OF TRAVELED WAY)

$$Y = \frac{WX^2}{L^2}$$

Y = OFFSET FROM BASE LINE
W = MAXIMUM OFFSET
X = DISTANCE ALONG BASE LINE
L = LENGTH OF FLARE

PARABOLIC FLARE OFFSETS

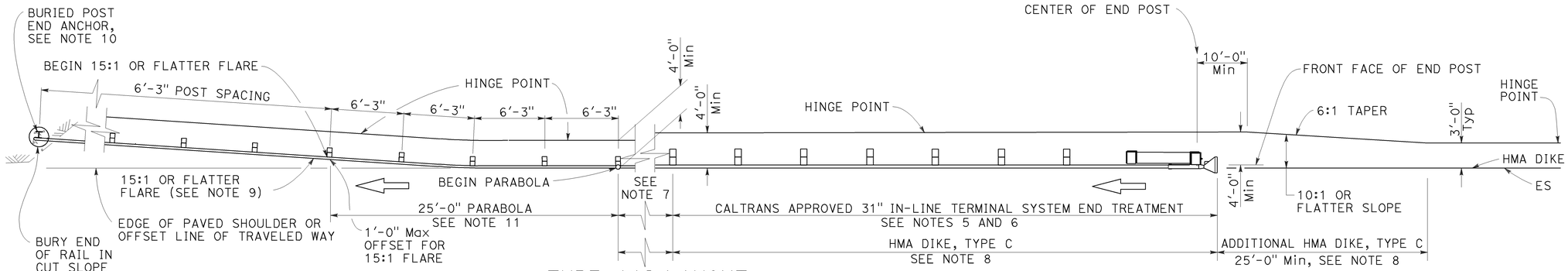

TYPE 11I LAYOUT

(Embankment MGS installation with 31" in-line end treatment and a buried end anchor treatment at the ends of railing)
See Note 4

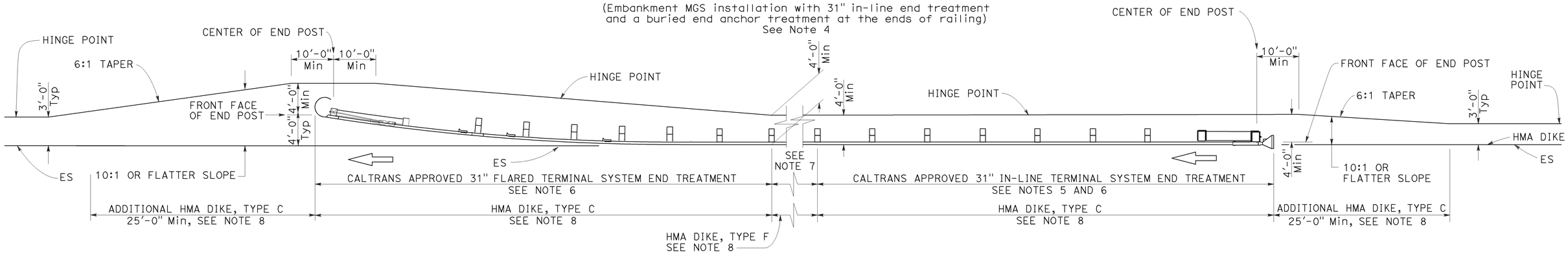

TYPE 11J LAYOUT

(Embankment MGS installation with 31" in-line end treatment and 31" flared end treatment at the ends of railing)
See Note 4

NOTES:

1. Line post, blocks and hardware to be used are shown on Revised Standard Plans RSP A77L1, RSP A77L2, RSP A77M1, RSP A77N1 and RSP A77N2.
2. MGS post spacing to be 6'-3" center to center, except as otherwise noted.
3. Except as noted, line posts are 6" x 8" x 6'-0" wood with 6" x 12" x 1'-2" wood blocks. W6 x 8.5 or W6 x 9 steel posts, 6'-0" in length, with 6" x 12" x 1'-2" notched wood blocks or plastic blocks may be used for 6" x 8" x 6'-0" wood post with 6" x 12" x 1'-2" wood blocks where applicable and when specified.
4. Layout Types 11D through 11L, shown on the A77P Series of Standard Plans, are typically used where MGS is recommended to shield embamkment slopes and a crashworthy 31" end treatment is required for both directions of traffic.
5. 31" in-line terminal system end treatments are used where site conditions will not accommodate a 31" flared end treatment.
6. The type of 31" terminal system end treatment to be used will be shown on the Project Plans.
7. Dependent on site conditions (embankment height and side slope), construction of additional MGS (length equal to multiples of 12'-6" with 6'-3" post spacing) may be advisable.
8. Where placement of dike is required with MGS installations, see Revised Standard Plan RSP A77N4 for dike positioning details.
9. The 15:1 or flatter flare used with buried end anchors is based on the edge of the paved shoulder or offset line of edge of the traveled way. The length of MGS within the 15:1 or flatter flare is based on site conditions and should be a length equal to multiples of 12'-6".
10. For details of the buried post end anchor used with Type 11I Layout, see Revised Standard Plan RSP A77T2.
11. For typical flare offsets for 25'-0" length parabola with maximum offset of 1'-0", see Revised Standard Plan RSP A77P1.

STATE OF CALIFORNIA
DEPARTMENT OF TRANSPORTATION

MIDWEST GUARDRAIL SYSTEM TYPICAL LAYOUTS FOR EMBANKMENTS

NO SCALE

RSP A77P5 DATED JULY 19, 2013 SUPPLEMENTS THE STANDARD PLANS BOOK DATED 2010.

REVISED STANDARD PLAN RSP A77P5

2010 REVISED STANDARD PLAN RSP A77P5

6-19-13

Dist	COUNTY	ROUTE	POST MILES TOTAL PROJECT	SHEET No.	TOTAL SHEETS
07	LA	405	28.0/39.0	82	108

Randell D. Hiatt
REGISTERED CIVIL ENGINEER

July 19, 2013
PLANS APPROVAL DATE

REGISTERED PROFESSIONAL ENGINEER
Randell D. Hiatt
No. C50200
Exp. 6-30-15
CIVIL
STATE OF CALIFORNIA

THE STATE OF CALIFORNIA OR ITS OFFICERS OR AGENTS SHALL NOT BE RESPONSIBLE FOR THE ACCURACY OR COMPLETENESS OF SCANNED COPIES OF THIS PLAN SHEET.

TO ACCOMPANY PLANS DATED 2-10-14

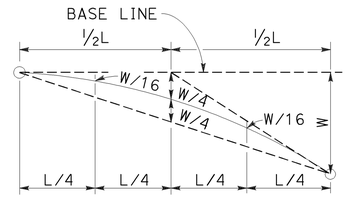

TYPICAL PARABOLIC LAYOUT

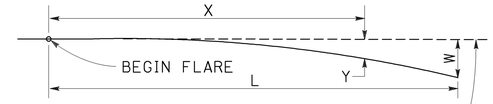

BASE LINE (EDGE OF PAVED SHOULDER OR OFFSET LINE OF EDGE OF TRAVELED WAY)

$$Y = \frac{WX^2}{L^2}$$

Y = OFFSET FROM BASE LINE
W = MAXIMUM OFFSET
X = DISTANCE ALONG BASE LINE
L = LENGTH OF FLARE

PARABOLIC FLARE OFFSETS

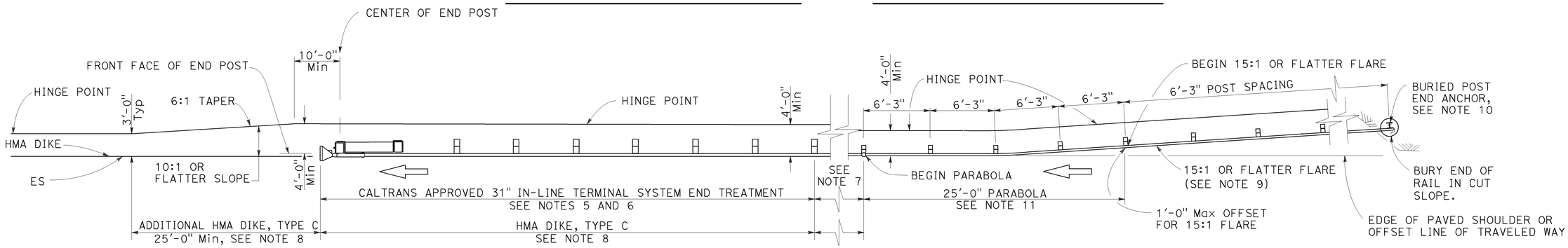

TYPE 11K LAYOUT

(Embankment MGS installation with a buried end anchor treatment
and a 31" in-line end treatment at the ends of railing)
See Note 4

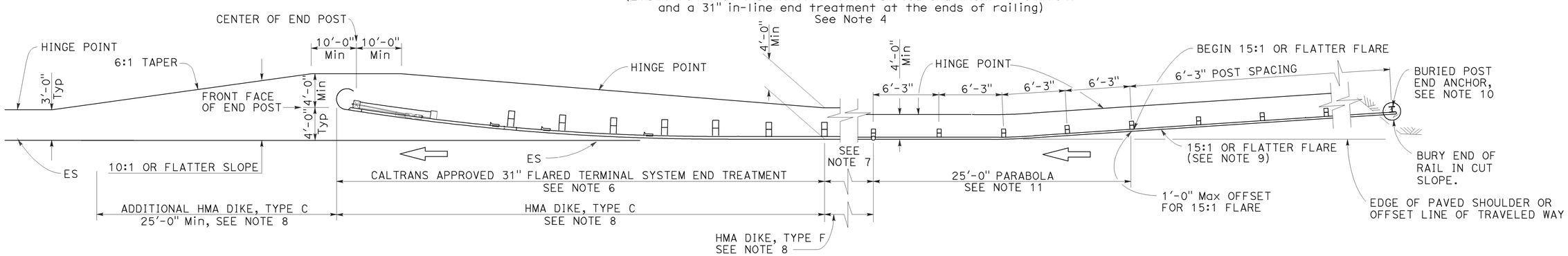

TYPE 11L LAYOUT

(Embankment MGS installation with a buried end anchor treatment
and a 31" flared end treatment at the ends of railing)
See Note 4

NOTES:

1. Line post, blocks and hardware to be used are shown on Revised Standard Plans RSP A77L1, RSP A77L2, RSP A77M1, RSP A77N1 and RSP A77N2.
2. MGS post spacing to be 6'-3" center to center, except as otherwise noted.
3. Except as noted, line posts are 6" x 8" x 6'-0" wood with 6" x 12" x 1'-2" wood blocks. W6 x 8.5 or W6 x 9 steel posts, 6'-0" in length, with 6" x 12" x 1'-2" notched wood blocks or plastic blocks may be used for 6" x 8" x 6'-0" wood post with 6" x 12" x 1'-2" wood blocks where applicable and when specified.
4. Layout Types 11D through 11L, shown on the A77P Series of Standard Plans, are typically used where MGS is recommended to shield embamkment slopes and a crashworthy 31" end treatment is required for both directions of traffic.
5. 31" in-line terminal system end treatments are used where site conditions will not accommodate a 31" flared end treatment.
6. The type of 31" terminal system end treatment to be used will be shown on the Project Plans.
7. Dependent on site conditions (embankment height and side slope), construction of additional MGS (length equal to multiples of 12'-6" with 6'-3" post spacing) may be advisable.
8. Where placement of dike is required with MGS installations, see Revised Standard Plan RSP A77N4 for dike positioning details.
9. The 15:1 or flatter flare used with buried end anchors is based on the edge of the paved shoulder or offset line of edge of the traveled way. The length of MGS within the 15:1 or flatter flare is based on site conditions and should be a length equal to multiples of 12'-6".
10. For details of the buried post end anchor used with Type 11K and 11L Layouts, see Revised Standard Plan RSP A77T2.
11. For typical flare offsets for 25'-0" length parabola with maximum offset of 1'-0", see Revised Standard Plan RSP A77P1.

STATE OF CALIFORNIA
DEPARTMENT OF TRANSPORTATION

MIDWEST GUARDRAIL SYSTEM TYPICAL LAYOUTS FOR EMBANKMENTS

NO SCALE

RSP A77P6 DATED JULY 19, 2013 SUPPLEMENTS THE STANDARD PLANS BOOK DATED 2010.

REVISED STANDARD PLAN RSP A77P6

2010 REVISED STANDARD PLAN RSP A77P6

6-19-13

Dist	COUNTY	ROUTE	POST MILES TOTAL PROJECT	SHEET No.	TOTAL SHEETS
	LA	405	28.0/39.0	83	108

Randell D. Hiatt
REGISTERED CIVIL ENGINEER

July 19, 2013
PLANS APPROVAL DATE

REGISTERED PROFESSIONAL ENGINEER
Randell D. Hiatt
No. C50200
Exp. 6-30-15
CIVIL
STATE OF CALIFORNIA

THE STATE OF CALIFORNIA OR ITS OFFICERS OR AGENTS SHALL NOT BE RESPONSIBLE FOR THE ACCURACY OR COMPLETENESS OF SCANNED COPIES OF THIS PLAN SHEET.

TO ACCOMPANY PLANS DATED 2-10-14

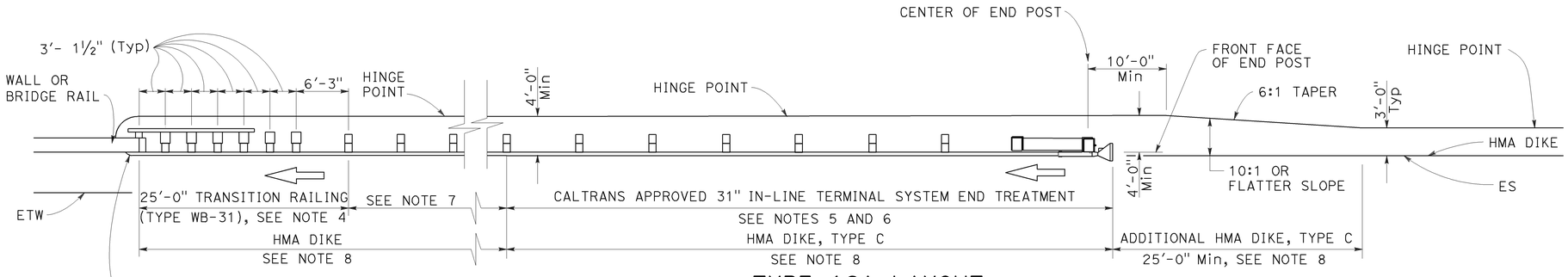

TYPE 12A LAYOUT

(MGS installation at structure approach with
31" In-line end treatment at traffic approach end of railing)
See Notes 9

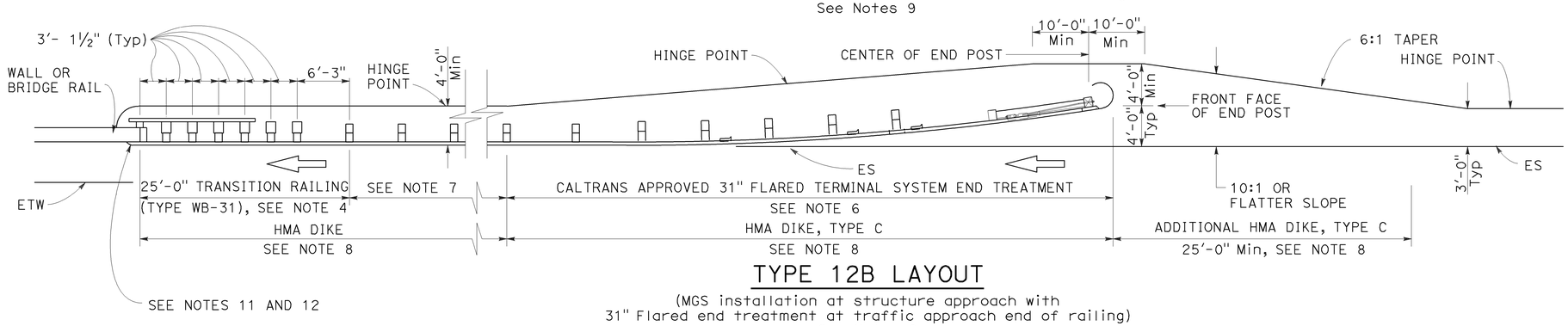

TYPE 12B LAYOUT

(MGS installation at structure approach with
31" Flared end treatment at traffic approach end of railing)
See Notes 9

NOTES:

1. Line post, blocks and hardware to be used are shown on Revised Standard Plans RSP A77L1, RSP A77L2, RSP A77M1, RSP A77N1 and RSP A77N2.
2. MGS post spacing to be 6'-3" center to center, except as otherwise noted.
3. Except as noted, line posts are 6" x 8" x 6'-0" wood with 6" x 12" x 1'-2" wood blocks. W6 x 8.5 or W6 x 9 steel posts, 6'-0" in length, with 6" x 12" x 1'-2" notched wood blocks or plastic blocks may be used for 6" x 8" x 6'-0" wood posts with 6" x 12" x 1'-2" wood blocks where applicable and when specified.
4. For Transition Railing (Type WB-31) details for Types 12A and 12B Layouts, see Revised Standard Plan RSP A77U4.
5. 31" in-line terminal system end treatments are used where site conditions will not accommodate a 31" flared end treatment.
6. The type 31" of terminal system end treatment to be used will be shown on the Project Plans.
7. Dependent on site conditions (embankment height, side slopes, or other fixed objects), it may be advisable to construct additional guard railing (a length equal to multiples of 12'-6" with 6'-3" post spacing) between the transition railing and end treatment. A 12.5 degree angle of departure can be drawn on the Project Plans from the edge of traveled way through the outer most point of the fixed object to determine the additional length of railing needed.
8. Where placement of dike is required with guard railing installations, see Revised Standard Plan RSP A77N4 for dike positioning details.
9. Type 12A or Type 12B Layouts are typically used:
   a. To the right of approaching traffic, at the end of a structure, on two-lane conventional highway where the roadbed width across the structure is less than 40 feet.
   b. To the left of approaching traffic, at the end of a structure, on two-lane conventional highway where the roadbed width across the structure is less than 40 feet.
   c. To the right of approaching traffic at the end of each structure on multilane freeways or expressways with separate adjacent or parallel bridges.
   d. To the right of approaching traffic at the end of the structure on multilane freeways or expressways with decked median on the bridge.
10. See Revised Standard Plan RSP A77Q3 for typical layout used left of approaching traffic at the ends of each structure on multilane freeways or expressways with separate adjacent or parallel bridges.
11. For additional details of typical connections to bridge rail, see Connection Detail AA on Revised Standard Plans RSP A77U1 and RSP A77U2 and Connection Detail FF on Revised Standard Plans RSP A77V1 and RSP A77V2.
12. For additional details of a typical connection to walls or abutments, see Revised Standard Plan RSP A77U3.

STATE OF CALIFORNIA
DEPARTMENT OF TRANSPORTATION

MIDWEST GUARDRAIL SYSTEM TYPICAL LAYOUTS FOR STRUCTURE APPROACH

NO SCALE

RSP A77Q1 DATED JULY 19, 2013 SUPPLEMENTS THE STANDARD PLANS BOOK DATED 2010.

REVISED STANDARD PLAN RSP A77Q1

2010 REVISED STANDARD PLAN RSP A77Q1

6-19-13

Dist	COUNTY	ROUTE	POST MILES TOTAL PROJECT	SHEET No.	TOTAL SHEETS
07	LA	405	28.0/39.0	84	108

Randell D. Hiatt
REGISTERED CIVIL ENGINEER

July 19, 2013
PLANS APPROVAL DATE

REGISTERED PROFESSIONAL ENGINEER
Randell D. Hiatt
No. C50200
Exp. 6-30-15
CIVIL
STATE OF CALIFORNIA

THE STATE OF CALIFORNIA OR ITS OFFICERS OR AGENTS SHALL NOT BE RESPONSIBLE FOR THE ACCURACY OR COMPLETENESS OF SCANNED COPIES OF THIS PLAN SHEET.

TO ACCOMPANY PLANS DATED 2-10-14

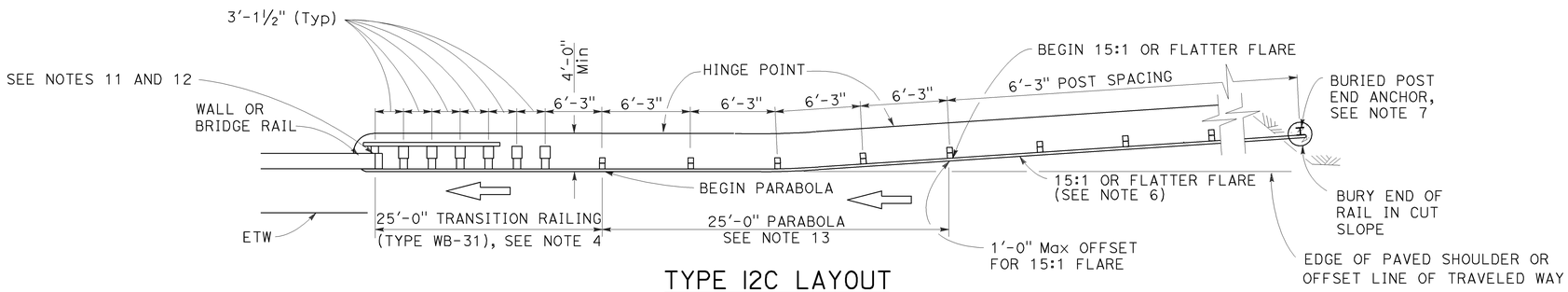

TYPE 12C LAYOUT

(MGS installation at structure approach with a Buried end anchor treatment at traffic approach end of railing)
See Notes 8 and 9

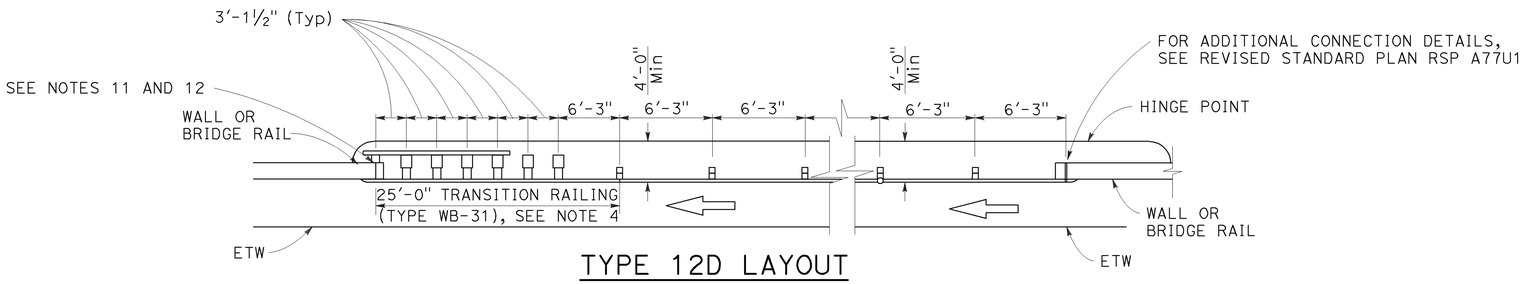

TYPE 12D LAYOUT

(Continuous MGS installation between structures)
See Notes 5 and 9

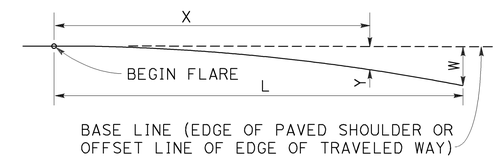

$$Y = \frac{WX^2}{L^2}$$

Y = OFFSET FROM BASE LINE
W = MAXIMUM OFFSET
X = DISTANCE ALONG BASE LINE
L = LENGTH OF FLARE

PARABOLIC FLARE OFFSETS

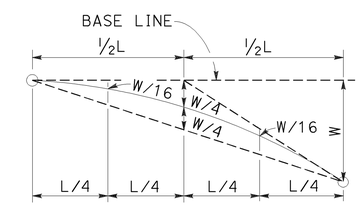

TYPICAL PARABOLIC LAYOUT

NOTES:

1. Line post, blocks and hardware to be used are shown on Revised Standard Plans RSP A77L1, RSP A77L2, RSP A77M1, RSP A77N1 and RSP A77N2.
2. MGS post spacing to be 6'-3" center to center, except as otherwise noted.
3. Except as noted, line posts are 6" x 8" x 6'-0" m wood with 6" x 12" x 1'-2" wood blocks. W6 x 8.5 or W6 x 9 steel posts, 6'-0" in length, with 6" x 12" x 1'-2" notched wood blocks or plastic blocks may be used for 6" x 8" x 6'-0" wood posts with 6" x 12" x 1'-2" wood blocks where applicable and when specified.
4. For Transition Railing (Type WB-31) details for Types 12C and 12D Layouts, see Revised Standard Plan RSP A77U4.
5. Type 12D layout is typically used where continous MGS is recommended between structures.
6. The 15:1 or flatter flare for Type 12C Layout is based on the edge of the paved shoulder or offset line of edge of the traveled way. The length of MGS with the 15:1 or flatter flare is based on site conditions and should be a length equal to multiples of 12'-6".
7. For details of the buried post end anchor used with Type 12C Layout, see Revised Standard Plan RSP A77T2.
8. Where placement of dike is required with MGS installations, see Revised Standard Plan RSP A77N4 for dike positioning details.
9. Type 12C Layout is typically used:
   a. To the right of approaching traffic, at the end of the structure, on two-lane conventional highway where the roadbed width across the structure is less than 40 feet.
   b. To the left of approaching traffic, at each of a structure, on two-lane conventional highway where the roadbed width across the structure is less than 40 feet.
   c. To the right of approaching traffic at the end of each structure on multilane freeways or expressways with separate adjacent or parallel bridges.
   d. To the right of approaching traffic at the end of the structure on multilane freeways or expressways with decked median on the bridge.
10. See Revised Standard Plan RSP A77Q3 for typical layout used left of approaching traffic at the ends of each structure on multilane freeways or expressways with separate adjacent or parallel bridges.
11. For additional details of typical connections to bridge rail, see Connection Detail AA on Revised Standard Plans RSP A77U1 and RSP A77U2 and Connection Detail FF on Revised Standard Plans RSP A77V1 and RSP A77V2.
12. For additional details of a typical connection to walls or abutments, see Revised Standard Plan RSP A77U3.
13. For typical flare offsets for 25'-0" length parabola with maximum offset of 1'-0", see Revised Standard Plan RSP A77P1.

STATE OF CALIFORNIA
DEPARTMENT OF TRANSPORTATION

MIDWEST GUARDRAIL SYSTEM TYPICAL LAYOUTS FOR STRUCTURE APPROACH AND BETWEEN STRUCTURES

NO SCALE

RSP A77Q2 DATED JULY 19, 2013 SUPPLEMENTS THE STANDARD PLANS BOOK DATED 2010.

REVISED STANDARD PLAN RSP A77Q2

2010 REVISED STANDARD PLAN RSP A77Q2

7-8-13

Dist	COUNTY	ROUTE	POST MILES TOTAL PROJECT	SHEET No.	TOTAL SHEETS
07	LA	405	28.0/39.0	85	108

Randell D. Hiatt
REGISTERED CIVIL ENGINEER

July 19, 2013
PLANS APPROVAL DATE

REGISTERED PROFESSIONAL ENGINEER
Randell D. Hiatt
No. C50200
Exp. 6-30-15
CIVIL
STATE OF CALIFORNIA

THE STATE OF CALIFORNIA OR ITS OFFICERS OR AGENTS SHALL NOT BE RESPONSIBLE FOR THE ACCURACY OR COMPLETENESS OF SCANNED COPIES OF THIS PLAN SHEET.

TO ACCOMPANY PLANS DATED 2-10-14

NOTES:

1. Line post, blocks and hardware to be used are shown on Revised Standard Plans RSP A77L1, RSP A77L2, RSP A77M1, RSP A77N1 and RSP A77N2.
2. MGS post spacing to be 6'-3" center to center, except as otherwise noted.
3. Except as noted, line posts are 6" x 8" x 6'-0" wood with 6" x 12" x 1'-2" wood blocks. W6 x 8.5 or W6 x 9 steel posts, 6'-0" in length, with 6" x 12" x 1'-2" notched wood blocks or notched recycled plastic blocks may be used for 6" x 8" x 6'-0" wood line posts with 6" x 12" x 1'-2" wood blocks where applicable and when specified.
4. A 4'-0" minimum clearance is required between the face of the railing and the face of a fixed object located directly behind MGS section with post spacing of 6'-3". Construct MGS as shown in the detail "Strengthened Midwest Guardrail System Sections for Fixed Object" on this plan, where the clearance between the face of the railing and the face of a fixed object is less than 4'-0", but not less than 3'-0". Where the clearance is less than 3'-0", a concrete wall or barrier should be constructed to shield the fixed object(s).
5. For End Anchor Assembly (Type SFT) details, see Standard Plan RSP A77S1.
6. Type of crash cushion to be used will be shown on the Project Plans.
7. Type 15A layout is typically used on multilane freeways or expressways to shield fixed objects in the area between separated one-way roadbeds.
8. For typical flare offsets for 25'-0" length parabola with maximum offset of 1'-0", see Revised Standard Plan RSP A77P1.
9. The 15:1 or flatter flare is measured off of the edge of the traveled way.
10. W6 x 15 steel post, 8'-0" in length, with 8" x 12" x 1'-2" notched wood block or notched recycled plastic blocks may be used in place of the 10" x 10" x 8'-0" wood post with 8" x 12" x 1'-2" wood block shown in the detail "Strengthened Midwest Guardrail System Sections for Fixed Object".

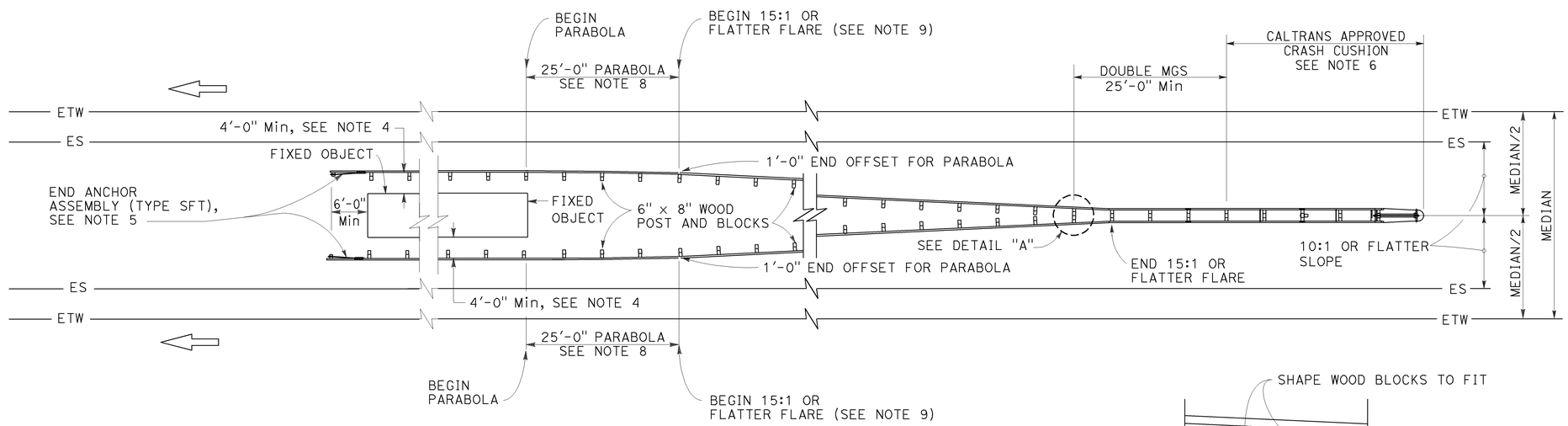

TYPE 15A LAYOUT

See Note 7

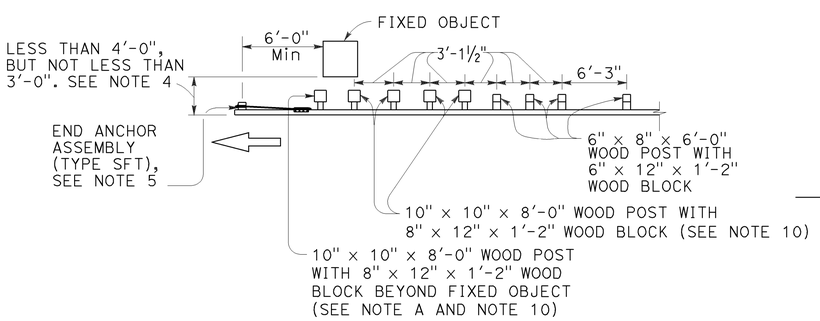

NOTE A: For a series of fixed objects (bridge columns, overhead sign supports, etc.) additional 10" x 10" x 8'-0" wood post with 8" x 12" x 1'-2" wood blocks at 3'-1½" center to center spacing are to be used between fixed objects.

STRENGTHENED MIDWEST GUARDRAIL SYSTEM SECTIONS FOR FIXED OBJECT

Use strengthened MGS sections with Type 15A layout where minimum clearance between the face of the MGS and the fixed object(s) is less than 4'-0", but not less than 3'-0". See Note 4.

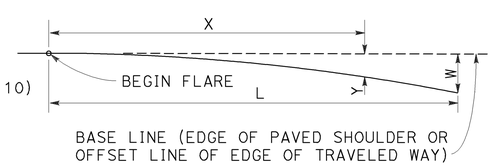

$$Y = \frac{WX^2}{L^2}$$

Y = OFFSET FROM BASE LINE
W = MAXIMUM OFFSET
X = DISTANCE ALONG BASE LINE
L = LENGTH OF FLARE

PARABOLIC FLARE OFFSETS

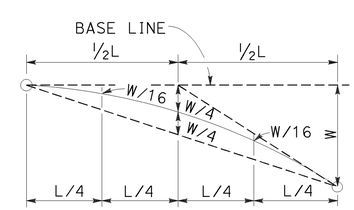

TYPICAL PARABOLIC LAYOUT

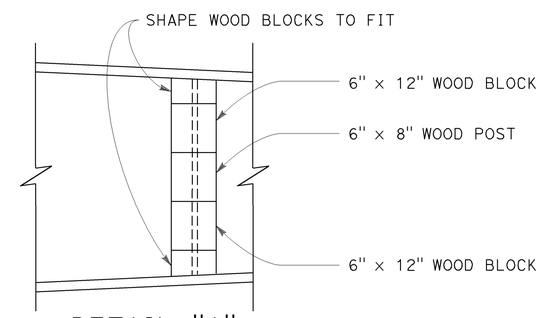

DETAIL "A"

STATE OF CALIFORNIA
DEPARTMENT OF TRANSPORTATION

MIDWEST GUARDRAIL SYSTEM TYPICAL LAYOUTS FOR FIXED OBJECTS BETWEEN SEPARATE ROADBEDS (ONE-WAY TRAFFIC)

NO SCALE

RSP A77R2 DATED JULY 19, 2013 SUPPLEMENTS THE STANDARD PLANS BOOK DATED 2010.

REVISED STANDARD PLAN RSP A77R2

2010 REVISED STANDARD PLAN RSP A77R2

6-20-13

Dist	COUNTY	ROUTE	POST MILES TOTAL PROJECT	SHEET No.	TOTAL SHEETS
07	LA	405	28.0/39.0	86	108

Randell D. Hiatt
REGISTERED CIVIL ENGINEER

July 19, 2013
PLANS APPROVAL DATE

REGISTERED PROFESSIONAL ENGINEER
Randell D. Hiatt
No. C50200
Exp. 6-30-15
CIVIL
STATE OF CALIFORNIA

THE STATE OF CALIFORNIA OR ITS OFFICERS OR AGENTS SHALL NOT BE RESPONSIBLE FOR THE ACCURACY OR COMPLETENESS OF SCANNED COPIES OF THIS PLAN SHEET.

TO ACCOMPANY PLANS DATED 2-10-14

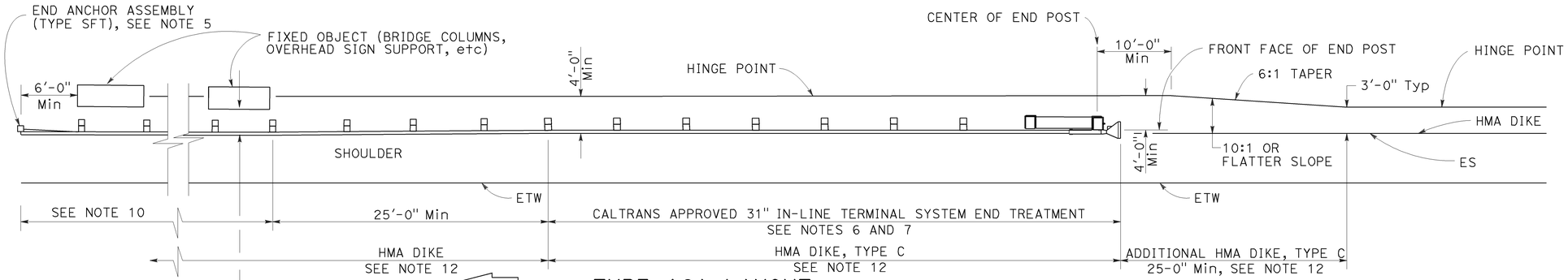

TYPE 16A LAYOUT

(MGS installation at roadside fixed object or objects with 31" in-line end treatment at traffic approach end of railing)
See Notes 11 and 12

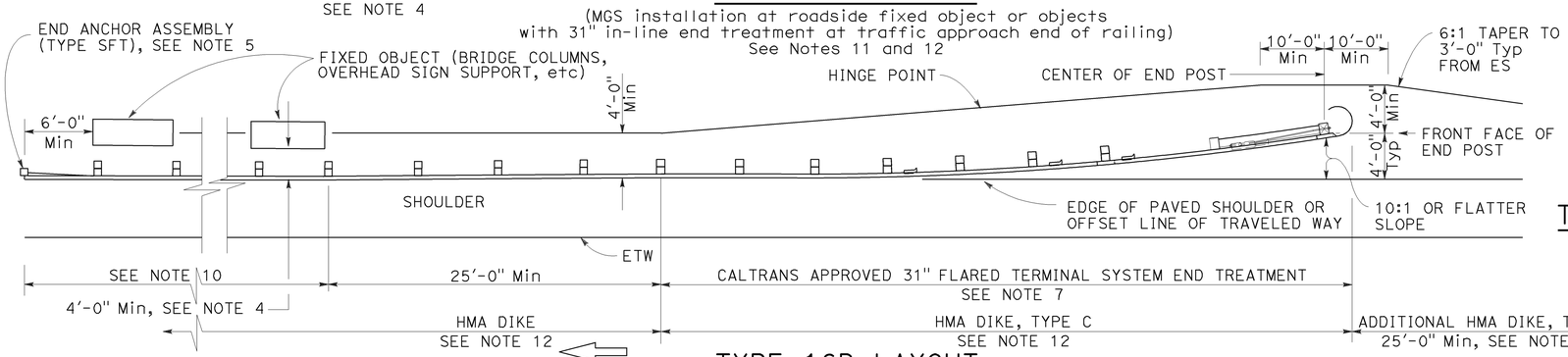

TYPE 16B LAYOUT

(MGS installation at roadside fixed object or objects with 31' flared end treatment at traffic approach end of railing)
See Notes 11 and 12

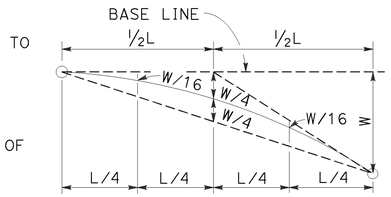

TYPIC AL PARABOLIC LAYOUT

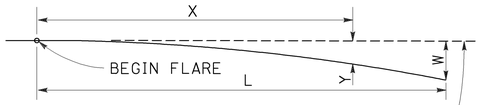

BASE LINE (EDGE OF PAVED SHOULDER OR OFFSET LINE OF EDGE OF TRAVELED WAY)

$$Y = \frac{WX^2}{L^2}$$

Y = OFFSET FROM BASE LINE
W = MAXIMUM OFFSET
X = DISTANCE ALONG BASE LINE
L = LENGTH OF FLARE

PARABOLIC FLARE OFFSETS

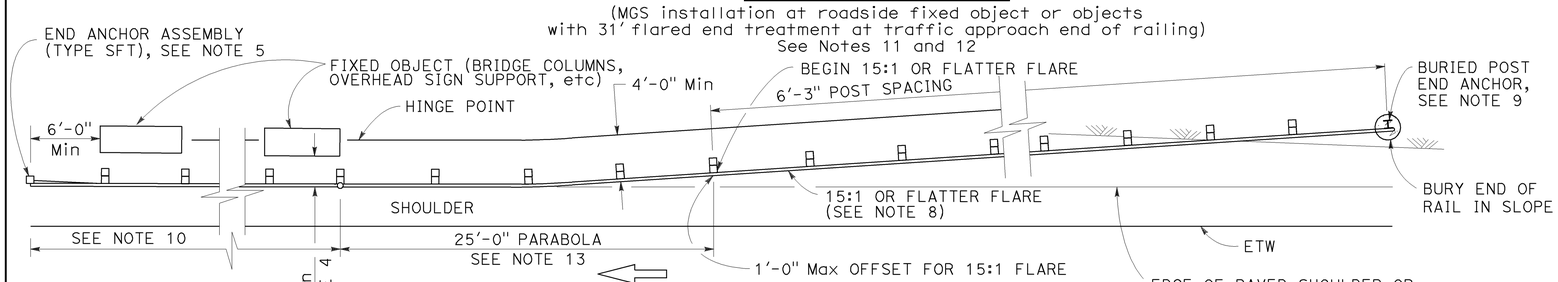

TYPE 16C LAYOUT

(MGS installation at roadside fixed object or objects with a buried end anchor treatment at traffic approach end of railing)
See Notes 11 and 12

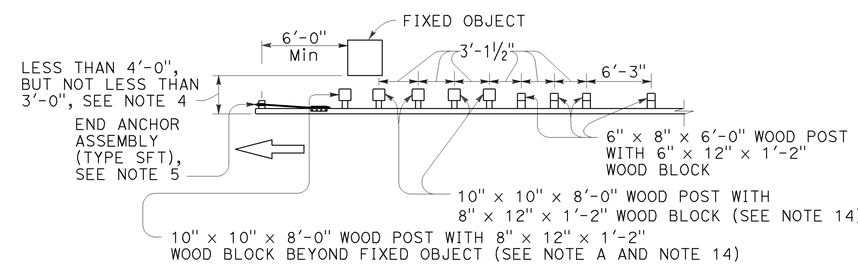

NOTE A: For a series of fixed objects (bridge columns, overhead sign supports, etc.) additional 10" x 10" x 8'-0" wood post with 8" x 12" x 1'-2" wood blocks at 3'-1½" center to center spacing are to be used between fixed objects.

STRENGTHENED MIDWEST GUARDRAIL SYSTEM SECTIONS FOR FIXED OBJECT

Use strengthened MGS sections with Types 16A, 16B or 16C layouts where minimum clearance between the face of the railing and fixed object(s) is less than 4'-0", but not less than 3'-0". See Note 4

NOTES:

1. Line post, blocks and hardware to be used are shown on Revised Standard Plans RSP A77L1, RSP A77L2, RSP A77M1, RSP A77N1 and RSP A77N2.
2. MGS post spacing to be 6'-3" center to center, except as otherwise noted.
3. Except as noted, line posts are 6" x 8" x 6'-0" wood with 6" x 12" x 1'-2" wood blocks. W6 x 8.5 or W6 x 9 steel posts, 6'-0" in length, with 6" x 12" x 1'-2" notched wood blocks or notched recycled plastic blocks may be used for 6" x 8" x 6'-0" wood line posts with 6" x 12" x 1'-2" wood blocks where applicable and when specified.
4. A 4'-0" minimum clearance is required between the face of the railing and the face of a fixed object located directly behind MGS sections with post spacing of 6'-3". Construct MGS as shown in the detail "Strengthened Midwest Guardrail System Sections for Fixed Object" on this plan, where the clearance between the face of the railing and the face of a fixed object is less than 4'-0", but not less than 3'-0". Where the clearance is less than 3'-0", a concrete wall or barrier should be constructed to shield the fixed object(s).
5. For End Anchor Assembly (Type SFT) details, see Revised Standard Plan RSP A77S1.
6. 31" in-line terminal system end treatments are used where site conditions will not accommodate a 31" flared end treatment.
7. The type of 31" terminal system to be used will be shown on the Project Plans.
8. The 15:1 or flatter flare used with Type 16C Layout is based on the edge of the paved shoulder or offset line of edge of the traveled way. The length of MGS within the 15:1 or flatter flare is based on site conditions and should be a length equal to multiples of 12'-6".
9. For details of the Buried Post End Anchor used with Type 16C Layout, see Revised Standard Plan RSP A77T2.
10. As site conditions dictate, construct additional MGS to shield fixed object(s). Additional MGS length equal to multiples of 12'-6". Post spacing at 6'-3" except as specified in Note 4.
11. Layout Types 16A, 16B or 16C are typically used where MGS is recommended to shield roadside fixed object(s) and a crashworthy 31" end treatment is required for only one direction of traffic.
12. Where placement of dike is required with MGS, see Revised Standard Plan RSP A77N4 for dike positioning details.
13. For typical flare offsets for 25'-0" length parabola with maximum offset of 1'-0", see Revised Standard Plan RSP A77P1.
14. W6 x 15 steel post, 8'-0" in length, with 8" x 12" x 1'-2" notched wood block or notched recycled plastic blocks may be used in place of the 10" x 10" x 8'-0" wood post with 8" x 12" x 1'-2" wood block shown in the detail "Strengthened Midwest Guardrail System Sections for Fixed Object".

STATE OF CALIFORNIA
DEPARTMENT OF TRANSPORTATION

MIDWEST GUARDRAIL SYSTEM TYPICAL LAYOUTS FOR ROADSIDE FIXED OBJECTS

NO SCALE

RSP A77R3 DATED JULY 19, 2013 SUPPLEMENTS THE STANDARD PLANS BOOK DATED 2010.

REVISED STANDARD PLAN RSP A77R3

2010 REVISED STANDARD PLAN RSP A77R3

6-20-13

Dist	COUNTY	ROUTE	POST MILES TOTAL PROJECT	SHEET No.	TOTAL SHEETS
07	LA	405	28.0/39.0	87	108

Randell D. Hiatt
REGISTERED CIVIL ENGINEER

July 19, 2013
PLANS APPROVAL DATE

REGISTERED PROFESSIONAL ENGINEER
Randell D. Hiatt
No. C50200
Exp. 6-30-15
CIVIL
STATE OF CALIFORNIA

THE STATE OF CALIFORNIA OR ITS OFFICERS OR AGENTS SHALL NOT BE RESPONSIBLE FOR THE ACCURACY OR COMPLETENESS OF SCANNED COPIES OF THIS PLAN SHEET.

TO ACCOMPANY PLANS DATED 2-10-14

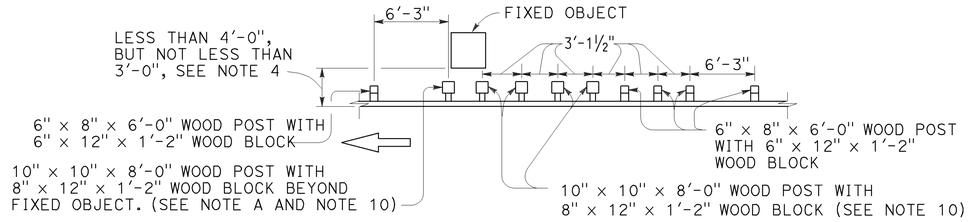

NOTE A: For a series of fixed objects (bridge columns, overhead sign supports, etc.) additional 10" x 10" x 8'-0" wood post with 8" x 12" x 1'-2" wood blocks at 3'-1½" center to center spacing are to be used between fixed object(s).

STRENGTHENED MIDWEST GUARDRAIL SYSTEM SECTIONS FOR FIXED OBJECT

Use strengthened MGS sections with layout Types 16D or 16E where minimum clearance between the face of the MGS and fixed object(s) is less than 4'-0", but not less than 3'-0". See Note 4.

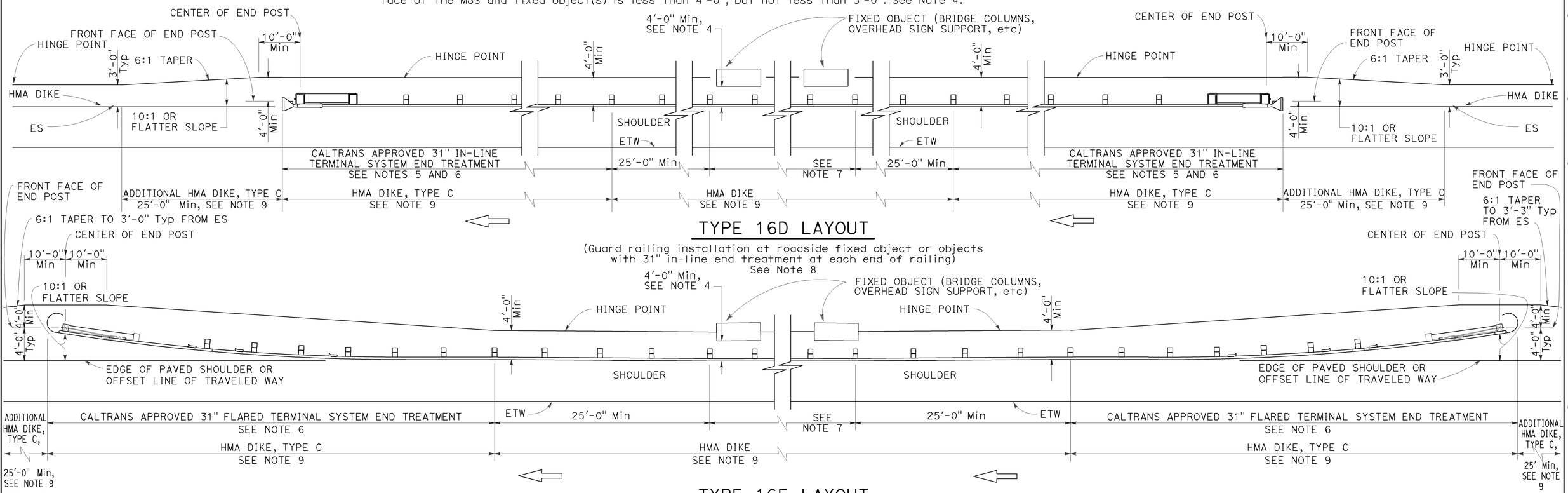

NOTES:

1. Line post, blocks and hardware to be used are shown on Revised Standard Plans RSP A77L1, RSP A77L2, RSP A77M1, RSP A77N1 and RSP A77N2.
2. MGS post spacing to be 6'-3" center to center, except as otherwise noted.
3. Except as noted, line posts are 6" x 8" x 6'-0" wood with 6" x 12" x 1'-2" wood blocks. W6 x 8.5 or W6 x 9 steel posts, 6'-0" in length, with 6" x 12" x 1'-2" notched wood blocks or notched recycled plastic blocks may be used for 6" x 8" x 6'-0" wood line posts with 6" x 12" x 1'-2" wood blocks where applicable and when specified.
4. A 4'-0" minimum clearance is required between the face of the railing and the face of a fixed object located directly behind MGS sections with post spacing at 6'-3". Construct MGS as shown in the detail "Strengthened Midwest Guardrail System Sections for Fixed Object". on this plan, where the clearance between the face of the railing and the face of a fixed object is less than 4'-0", but not less than 3'-0". Where the clearance is less than 3'-0", a concrete wall or barrier should be constructed to shield the fixed object(s).
5. 31" in-line terminal system end treatments are used where site conditions will not accommodate a 31" flared end treatment.
6. The type of 31" terminal system to be used will be shown on the Project Plans.
7. As site conditions dictate, construct additional MGS to shield fixed object(s). Additional MGS length equal to multiples of 12'-6". Post spacing at 6'-3", except as specified in Note 4.
8. Layout Types 16D through 16L, shown on the A77R Series of Standard Plans, are typically used where MGS is recommended to shield roadside fixed object(s) and a crashworthy 31" end treatment is required for both directions of traffic.
9. Where placement of dike is required with MGS, see Revised Standard Plan RSP A77N4 for dike positioning details.
10. W6 x 15 steel post, 8'-0" in length, with 8" x 12" x 1'-2" notched wood block or notched recycled plastic block may be used in place of the 10" x 10" x 8'-0" wood post with 8" x 12" x 1'-2" wood block shown in the detail "Strengthened Midwest Guardrail System Sections for Fixed Object".

STATE OF CALIFORNIA
DEPARTMENT OF TRANSPORTATION

MIDWEST GUARDRAIL SYSTEM TYPICAL LAYOUTS FOR ROADSIDE FIXED OBJECTS

NO SCALE

RSP A77R4 DATED JULY 19, 2013 SUPPLEMENTS THE STANDARD PLANS BOOK DATED 2010.

REVISED STANDARD PLAN RSP A77R4

2010 REVISED STANDARD PLAN RSP A77R4

6-12-13

Dist	COUNTY	ROUTE	POST MILES TOTAL PROJECT	SHEET No.	TOTAL SHEETS
07	LA	405	28.0/39.0	88	108

Randell D. Hiatt
REGISTERED CIVIL ENGINEER

November 15, 2013
PLANS APPROVAL DATE

REGISTERED PROFESSIONAL ENGINEER
Randell D. Hiatt
No. C50200
Exp. 6-30-15
CIVIL
STATE OF CALIFORNIA

THE STATE OF CALIFORNIA OR ITS OFFICERS OR AGENTS SHALL NOT BE RESPONSIBLE FOR THE ACCURACY OR COMPLETENESS OF SCANNED COPIES OF THIS PLAN SHEET.

TO ACCOMPANY PLANS DATED 2-10-14

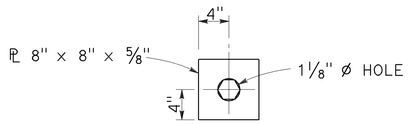

DETAIL "A"
CABLE CONNECTION
END PLATE

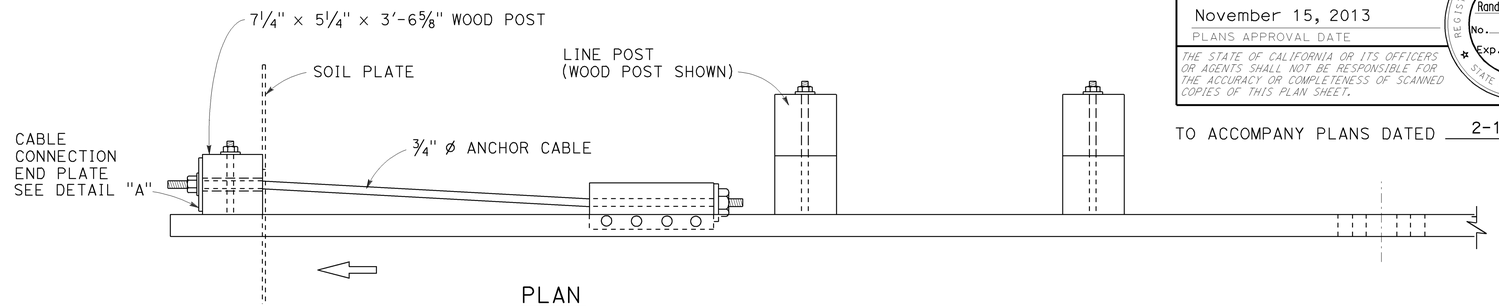

PLAN

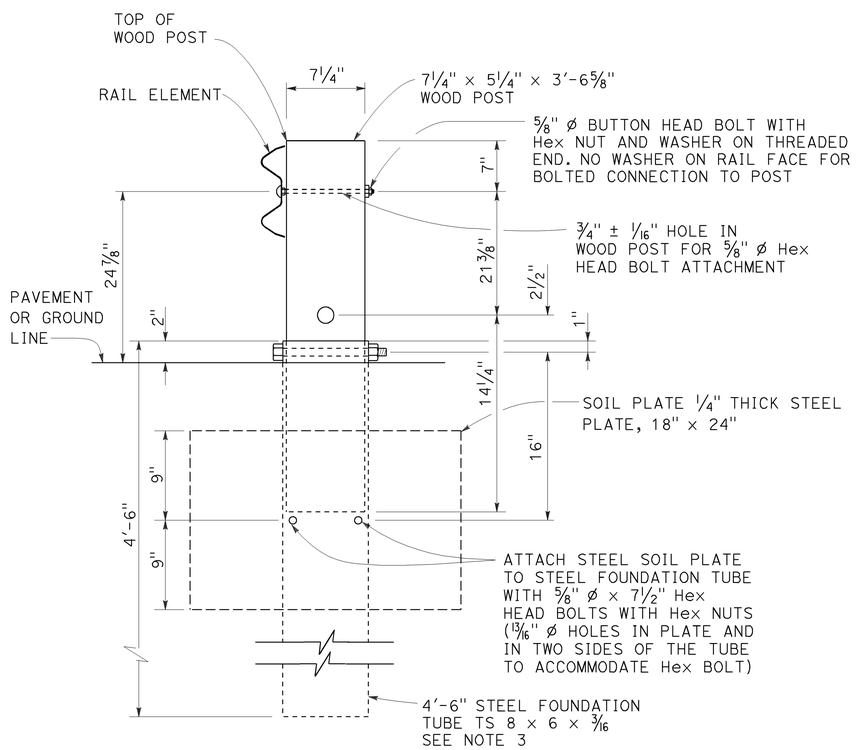

SECTION A-A

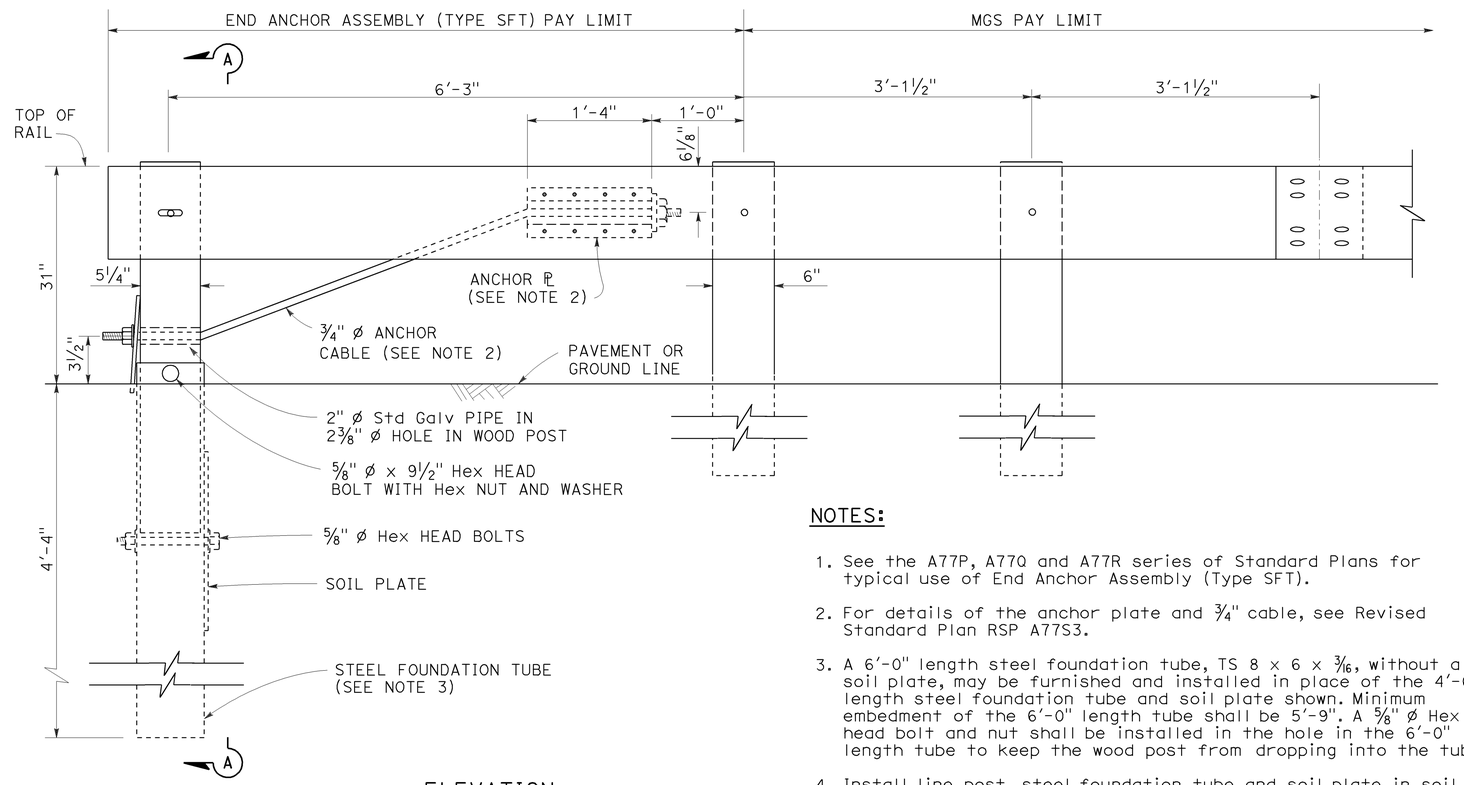

ELEVATION

END ANCHOR
ASSEMBLY (TYPE SFT)
See Note 1

NOTES:

1. See the A77P, A77Q and A77R series of Standard Plans for typical use of End Anchor Assembly (Type SFT).
2. For details of the anchor plate and 3/4" cable, see Revised Standard Plan RSP A77S3.
3. A 6'-0" length steel foundation tube, TS 8 x 6 x 3/16, without a soil plate, may be furnished and installed in place of the 4'-6" length steel foundation tube and soil plate shown. Minimum embedment of the 6'-0" length tube shall be 5'-9". A 5/8" ø Hex head bolt and nut shall be installed in the hole in the 6'-0" length tube to keep the wood post from dropping into the tube.
4. Install line post, steel foundation tube and soil plate in soil.

STATE OF CALIFORNIA
DEPARTMENT OF TRANSPORTATION

MIDWEST GUARDRAIL SYSTEM END ANCHOR ASSEMBLY (TYPE SFT)

NO SCALE

RSP A77S1 DATED NOVEMBER 15, 2013 SUPERSEDES RSP A77S1
DATED JULY 19, 2013 THAT SUPPLEMENTS THE STANDARD PLANS BOOK DATED 2010.

REVISED STANDARD PLAN RSP A77S1

2010 REVISED STANDARD PLAN RSP A77S1

10-4-13

Dist	COUNTY	ROUTE	POST MILES TOTAL PROJECT	SHEET No.	TOTAL SHEETS
07	LA	405	28.0/39.0	89	108

Randell D. Hiatt
REGISTERED CIVIL ENGINEER

July 19, 2013
PLANS APPROVAL DATE

REGISTERED PROFESSIONAL ENGINEER
Randell D. Hiatt
No. C50200
Exp. 6-30-15
CIVIL
STATE OF CALIFORNIA

THE STATE OF CALIFORNIA OR ITS OFFICERS OR AGENTS SHALL NOT BE RESPONSIBLE FOR THE ACCURACY OR COMPLETENESS OF SCANNED COPIES OF THIS PLAN SHEET.

TO ACCOMPANY PLANS DATED 2-10-14

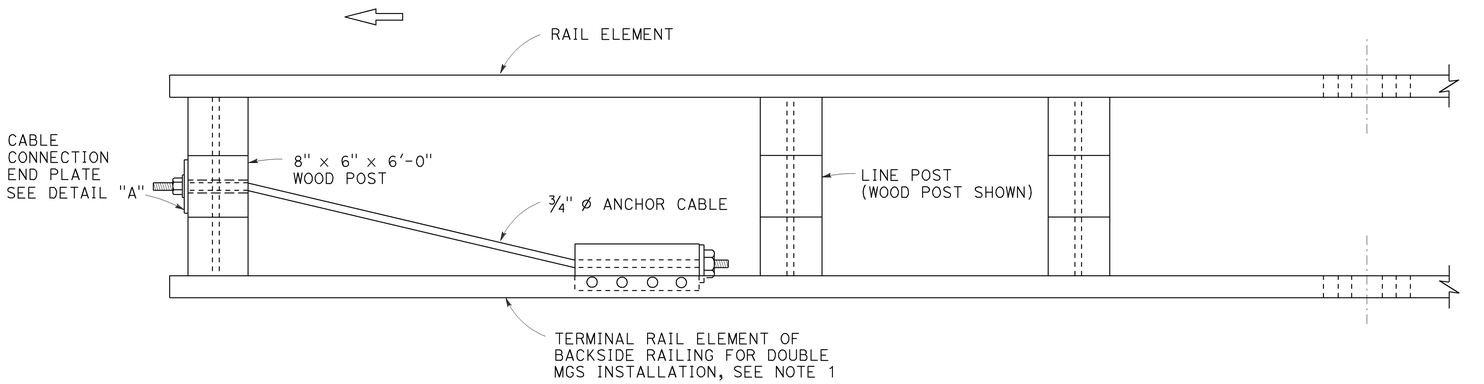

PLAN

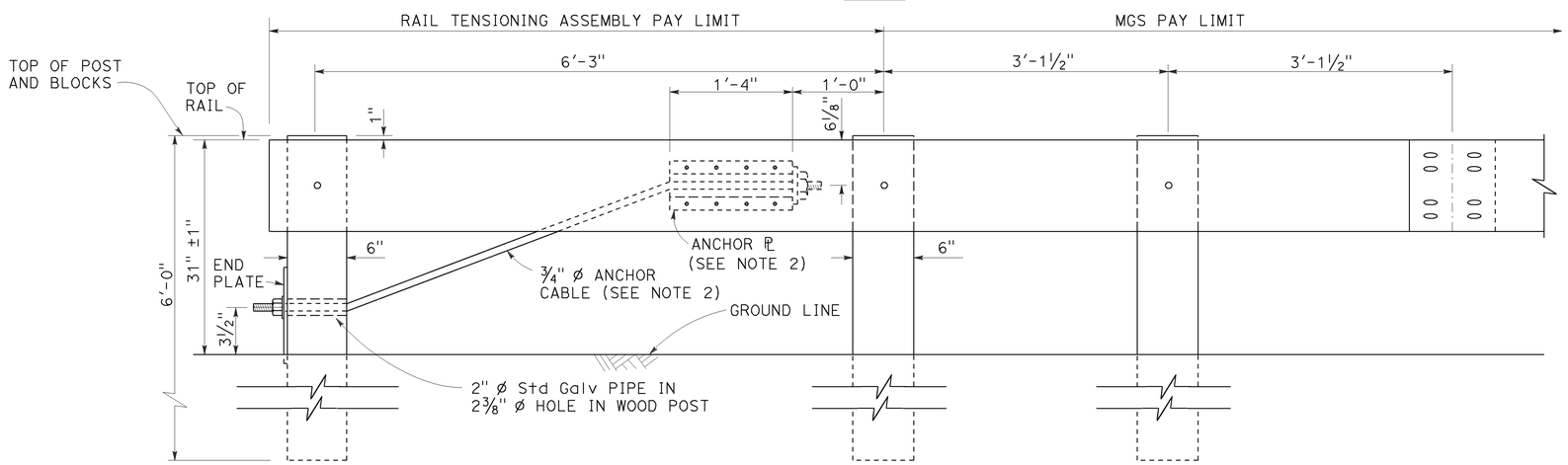

ELEVATION
RAIL TENSIONING ASSEMBLY
See Note 1

NOTES:

1. See Revised Standard Plans RSP A77Q3 and RSP A77R1 for typical use of rail tensioning assembly.
2. For details of the anchor plate and ¾" cable, see Revised Standard Plan RSP A77S3.

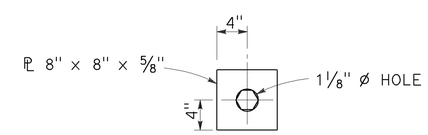

DETAIL "A"
CABLE CONNECTION END PLATE

STATE OF CALIFORNIA
DEPARTMENT OF TRANSPORTATION

MIDWEST GUARDRAIL SYSTEM RAIL TENSIONING ASSEMBLY

NO SCALE

RSP A77S2 DATED JULY 19, 2013 SUPPLEMENTS THE STANDARD PLANS BOOK DATED 2010.

REVISED STANDARD PLAN RSP A77S2

2010 REVISED STANDARD PLAN RSP A77S2

7-3-13

Dist	COUNTY	ROUTE	POST MILES TOTAL PROJECT	SHEET No.	TOTAL SHEETS
07	LA	405	28.0/39.0	90	108

Randell D. Hiatt
REGISTERED CIVIL ENGINEER

November 15, 2013
PLANS APPROVAL DATE

REGISTERED PROFESSIONAL ENGINEER
Randell D. Hiatt
No. C50200
Exp. 6-30-15
CIVIL
STATE OF CALIFORNIA

THE STATE OF CALIFORNIA OR ITS OFFICERS OR AGENTS SHALL NOT BE RESPONSIBLE FOR THE ACCURACY OR COMPLETENESS OF SCANNED COPIES OF THIS PLAN SHEET.

TO ACCOMPANY PLANS DATED 2-10-14

2010 REVISED STANDARD PLAN RSP A77S3

NOTE:

See Revised Standard Plans RSP A77S1, RSP A77S2 and RSP A77T1 for typical use of anchor cable and anchor plate.

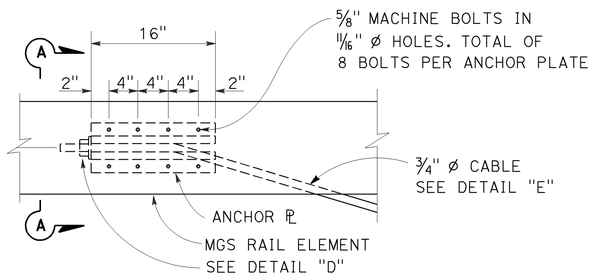

ANCHOR PLATE DETAIL
(MGS shown, TBB similar)

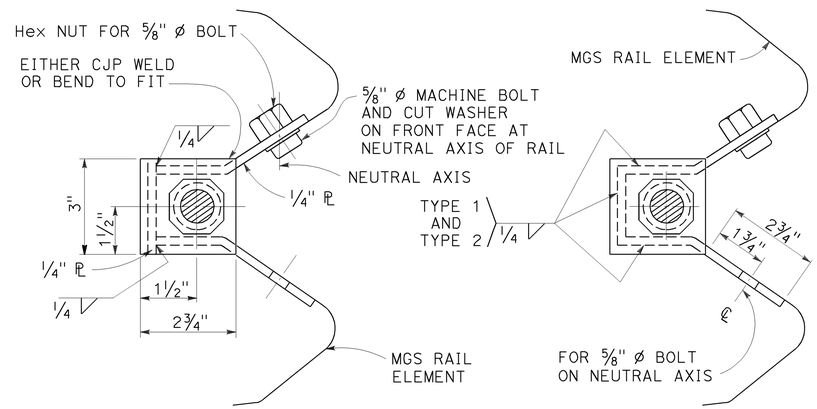

NOTE:
Dimensioning applies to both types.

SECTION A-A
(ALTERNATIVE TYPE 1)

SECTION A-A
(ALTERNATIVE TYPE 2)

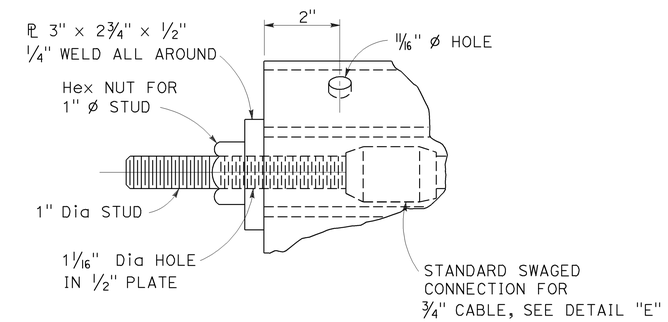

DETAIL "D"

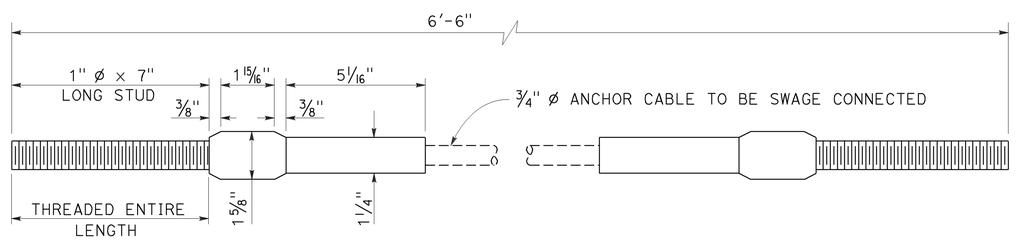

ANCHOR CABLE WITH
SWAGED FITTING AND STUD
DETAIL "E"

STATE OF CALIFORNIA
DEPARTMENT OF TRANSPORTATION

METAL RAILING ANCHOR CABLE AND ANCHOR PLATE DETAILS

NO SCALE

RSP A77S3 DATED NOVEMBER 15, 2013 SUPERSEDES RSP A77S3
DATED JULY 19, 2013 THAT SUPPLEMENTS THE STANDARD PLANS BOOK DATED 2010.

REVISED STANDARD PLAN RSP A77S3

10-4-13

Dist	COUNTY	ROUTE	POST MILES TOTAL PROJECT	SHEET No.	TOTAL SHEETS
07	LA	405	28.0/39.0	91	108

Randell D. Hiatt
REGISTERED CIVIL ENGINEER

November 15, 2013
PLANS APPROVAL DATE

REGISTERED PROFESSIONAL ENGINEER
Randell D. Hiatt
No. C50200
Exp. 6-30-15
CIVIL
STATE OF CALIFORNIA

THE STATE OF CALIFORNIA OR ITS OFFICERS OR AGENTS SHALL NOT BE RESPONSIBLE FOR THE ACCURACY OR COMPLETENESS OF SCANNED COPIES OF THIS PLAN SHEET.

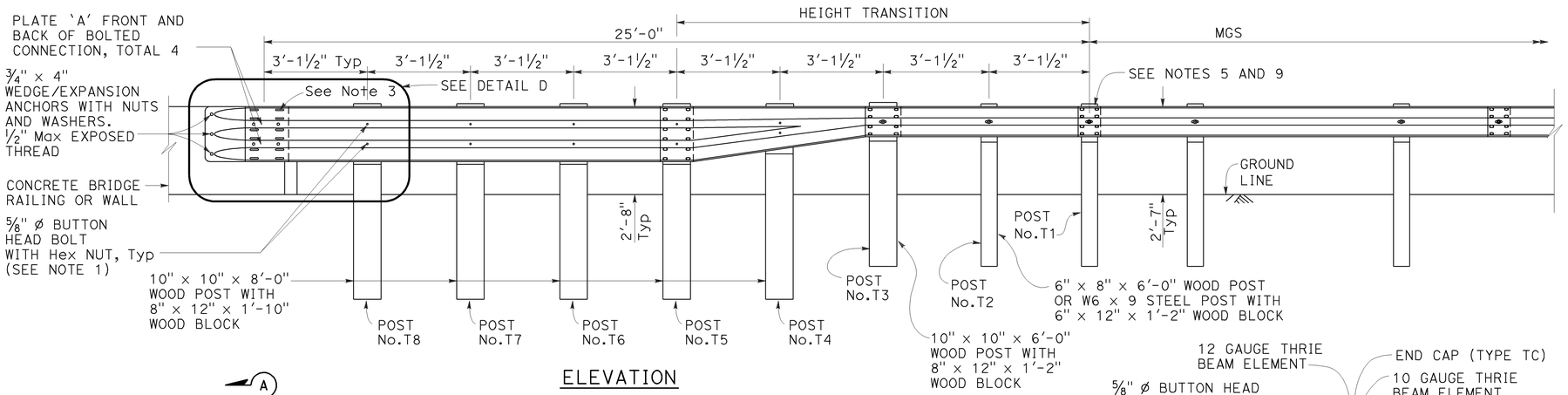

ELEVATION

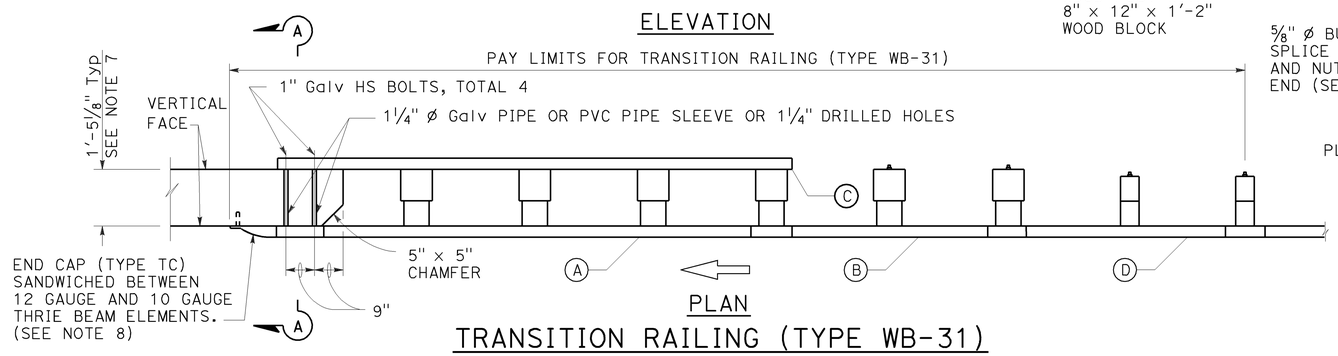

PLAN

TRANSITION RAILING (TYPE WB-31)

(No Blockout Attachment)

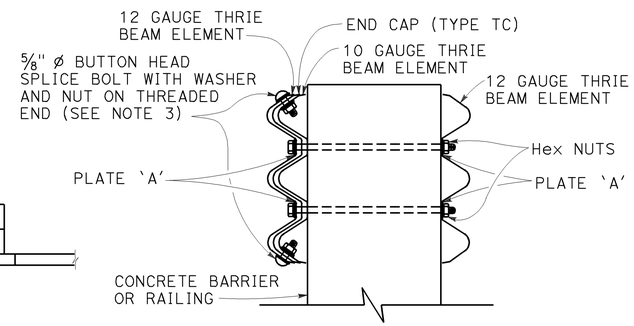

SECTION A-A

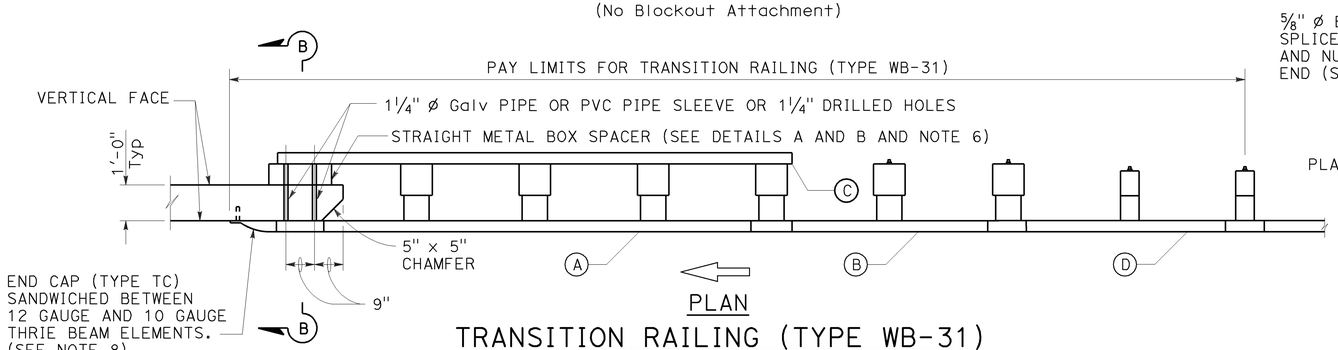

PLAN

TRANSITION RAILING (TYPE WB-31)

(Blockout Attachment)

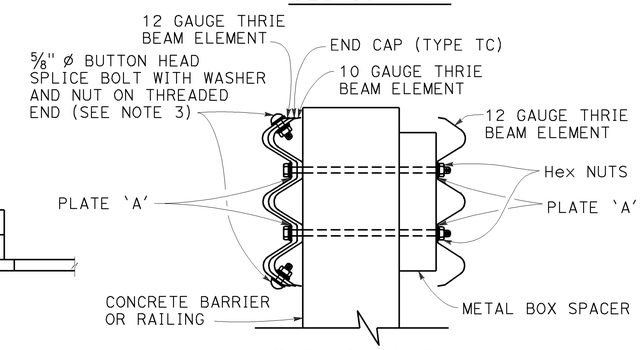

SECTION B-B

NOTES:

TO ACCOMPANY PLANS DATED 2-10-14

1. Use 5/8" ø Button head bolts and hex nuts for connections to posts. No washer on rail face for bolted connections to post.
2. The nested rail elements, end cap, and 'W' beam to thrie beam element may be spliced together prior to bolting the elements to the wood post and concrete barrier or railing.
3. Exterior splice bolt holes for rail element splices at Post No. T5 and the connection to the concrete barrier or railing shall be the standard 29/32" x 1 1/8" slot size. Interior splice bolt holes at these locations may be increased up to 1 1/4" ø. Only the top 4 and the bottom 4 splice bolts with washers and nuts are required for rail splices at Post No. T5 and the connection to the concrete barrier or railing.
4. The top elevation of Posts No. T2 through No. T7 shall not project more than 1" above the top elevation of the rail element.
5. Typically, the railing connected to Transition Railing (Type WB-31) will be either standard railing section of MGS with height transition ratio of 150:1 or a Caltrans approved 31" end treatment attached to Post No. T1.
6. The depth of the metal box spacer varies from the 9 1/8" to 1 1/2" and is dependent on the width of the concrete railing or wall. The combined dimension for the depth of the metal box spacer plus the width of railing or wall is typically 21 1/8". Where the space between the backside of the concrete railing or wall and the rear thrie beam element is less than 1 1/2", metal plates similar to Plate 'A' are to be used as spacers.
7. Where the width of the concrete railing or wall is greater than 17 1/8", wood blocks are to be used to fill the space created between the backside of Posts No. T5 through No. T8 and the rear thrie beam element. These wood blocks shall be 8" in width and 1'-2" in length. The dimension between the front thrie beam element and the rear thrie beam element is to match the width of the concrete railing or wall.
8. End cap may be installed over 12 gauge and 10 gauge thrie beam elements where transition railing is installed on the departure end of bridge railing.
9. Conform standard railing section height to 31" at Post No. T1 using height transition ratio of 150:1.

LEGEND:

(A) NESTED THRIE BEAM ELEMENTS (ONE 12 GAUGE ELEMENT NESTED OVER ONE 10 GAUGE ELEMENT).

(B) ONE ASYMMETRICAL 10 GAUGE "W" BEAM TO THRIE BEAM ELEMENT.

(C) ONE 12 GAUGE THRIE BEAM ELEMENT.

(D) ONE 10 GAUGE "W" BEAM RAIL ELEMENT (7'-3 1/2" LENGTH)

10 GAUGE = 0.138" THICK
12 GAUGE = 0.108" THICK

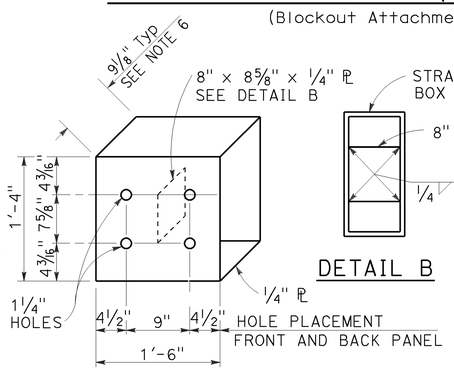

DETAIL A

STRAIGHT METAL BOX SPACER

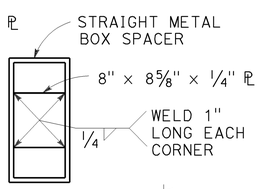

DETAIL B

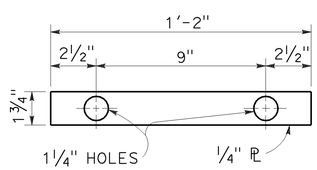

DETAIL C

PLATE 'A'

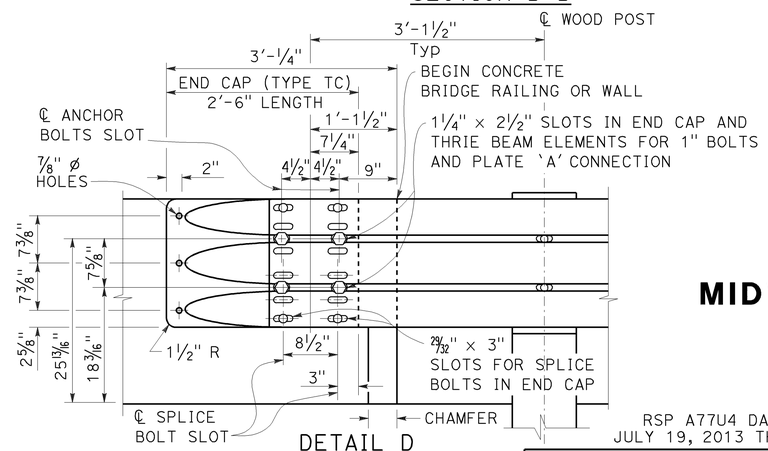

DETAIL D

STATE OF CALIFORNIA
DEPARTMENT OF TRANSPORTATION

MIDWEST GUARDRAIL SYSTEM TRANSITION RAILING (TYPE WB-31)

NO SCALE

RSP A77U4 DATED NOVEMBER 15, 2013 SUPERSEDES RSP A77U4 DATED JULY 19, 2013 THAT SUPPLEMENTS THE STANDARD PLANS BOOK DATED 2010.

REVISED STANDARD PLAN RSP A77U4

2010 REVISED STANDARD PLAN RSP A77U4

10-4-13

Dist	COUNTY	ROUTE	POST MILES TOTAL PROJECT	SHEET No.	TOTAL SHEETS
07	LA	405	28.0/39.0	92	108

REGISTERED CIVIL ENGINEER

July 19, 2013
PLANS APPROVAL DATE

REGISTERED PROFESSIONAL ENGINEER
Michael Janzen
No. 44788
Exp. 03-31-14
CIVIL
STATE OF CALIFORNIA

THE STATE OF CALIFORNIA OR ITS OFFICERS OR AGENTS SHALL NOT BE RESPONSIBLE FOR THE ACCURACY OR COMPLETENESS OF SCANNED COPIES OF THIS PLAN SHEET.

TO ACCOMPANY PLANS DATED 2-10-14

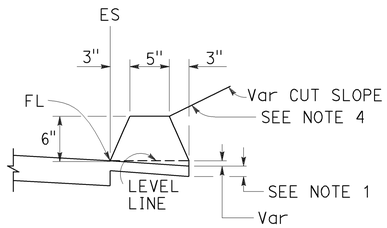

TYPE A
See Note 3

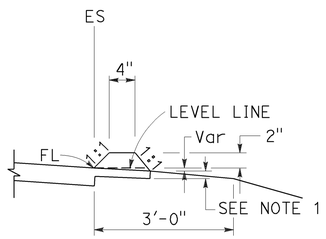

TYPE C

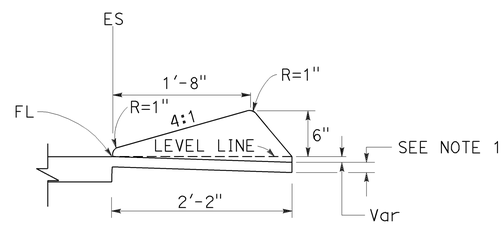

TYPE D

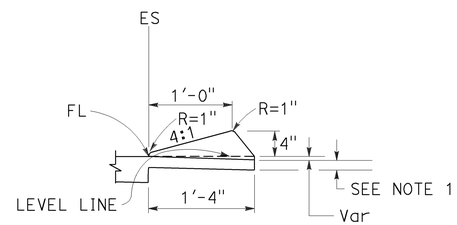

TYPE E

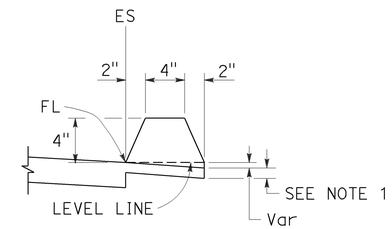

TYPE F
See Note 5

DIKES

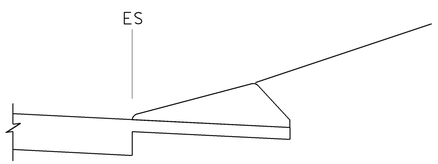

CASE C-1
Cut Slope

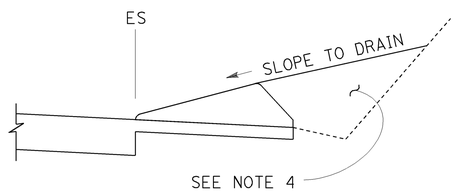

CASE C-2
Cut Slope

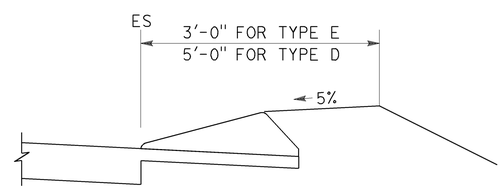

CASE F

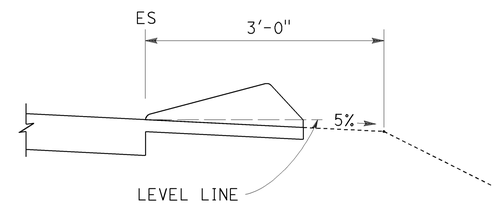

CASE R
See Note 2

TYPE D AND E BACKFILL DETAILS

NOTES:

1. For HMA shoulders only, extend top layer of HMA placed on the shoulder under dike with no joint at the ES. For projects with OGFC shoulders, do not extend OGFC under dike. See project plans for modified dike detail.
2. Case R applies to retrofit only projects where restrictive conditions do not provide enough width for Case F backfill.
3. Type A dike only to be used where restrictive slope conditions do not provide enough width to use Type D or Type E dike.
4. Fill and compact with excavated material to top of dike.
5. Use Type F dike, where dike is required with guard railing installations. See Revised Standard Plan RSP A77N4 for dike positioning details.

DIKE QUANTITIES

TYPE	CUBIC YARDS PER LINEAR FOOT
A	0.0135
C	0.0038
D	0.0293
E	0.0130
F	0.0066

Quantities based on 5% cross slope.

STATE OF CALIFORNIA
DEPARTMENT OF TRANSPORTATION

HOT MIX ASPHALT DIKES

NO SCALE

RSP A87B DATED JULY 19, 2013 SUPERSEDES STANDARD PLAN A87B
DATED MAY 20, 2011 - PAGE 120 OF THE STANDARD PLANS BOOK DATED 2010.

REVISED STANDARD PLAN RSP A87B

2010 REVISED STANDARD PLAN RSP A87B

6-27-13

Dist	COUNTY	ROUTE	POST MILES TOTAL PROJECT	SHEET No.	TOTAL SHEETS
07	LA	405	28.0/39.0	93	108

William K. Farnbach
REGISTERED CIVIL ENGINEER

July 19, 2013
PLANS APPROVAL DATE

REGISTERED PROFESSIONAL ENGINEER
William K. Farnbach
No. C49042
Exp. 9-30-14
CIVIL
STATE OF CALIFORNIA

THE STATE OF CALIFORNIA OR ITS OFFICERS OR AGENTS SHALL NOT BE RESPONSIBLE FOR THE ACCURACY OR COMPLETENESS OF SCANNED COPIES OF THIS PLAN SHEET.

TO ACCOMPANY PLANS DATED 2-10-14

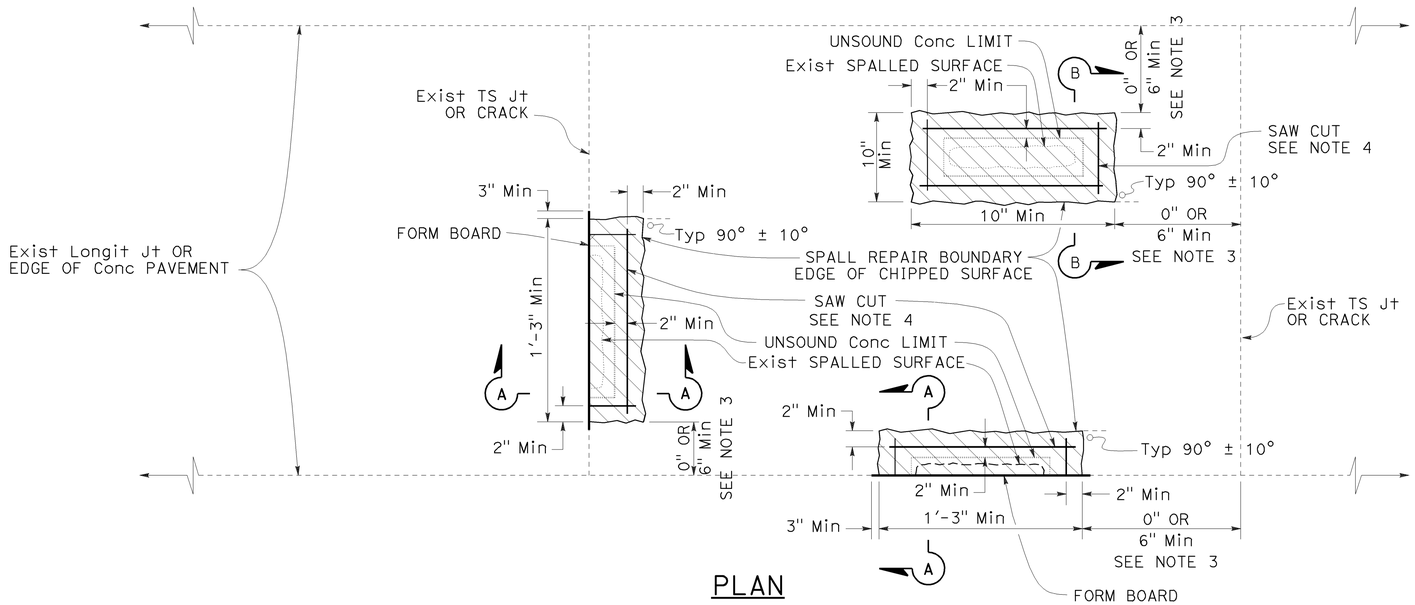

PLAN

LEGEND

SPALL REPAIR

NOTES:

1. See Project Plans for spall repair locations.
2. Combine spall repair areas closer than 2' apart.
3. If the spall repair area is less than 6" from a joint, extend the repair to the joint.
4. Cut at least 2" beyond the rectangular limits of unsound concrete determined by the Engineer. Determine the saw cut depth using the following table:

Conc MATERIAL	SAW CUT DEPTH	
	Min	Max
FAST-SETTING	2"	3½"
POLYESTER	1½"	3½"

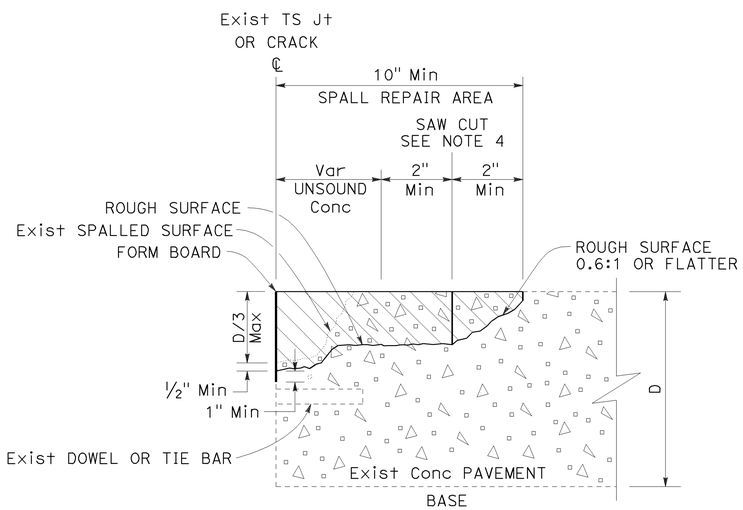

SECTION A-A

JOINT, CRACK, OR EDGE OF CONCRETE PAVEMENT REPAIR

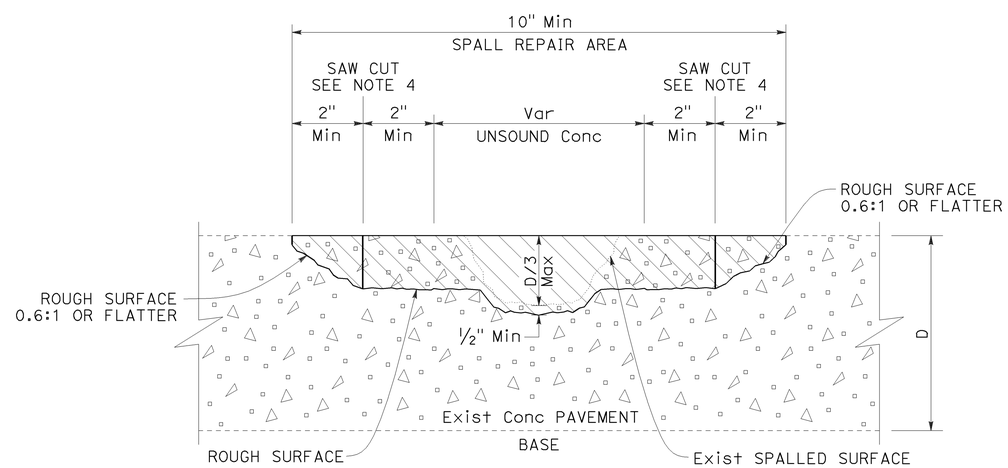

SECTION B-B

MISCELLANEOUS SPALL REPAIR

STATE OF CALIFORNIA
DEPARTMENT OF TRANSPORTATION

SPALL REPAIR

NO SCALE

RSP P6 DATED JULY 19, 2013 SUPPLEMENTS THE STANDARD PLANS BOOK DATED 2010.

REVISED STANDARD PLAN RSP P6

2010 REVISED STANDARD PLAN RSP P6

5-31-13

Dist	COUNTY	ROUTE	POST MILES TOTAL PROJECT	SHEET No.	TOTAL SHEETS
07	LA	405	28.0/39.0	94	108

William K. Farnbach
REGISTERED CIVIL ENGINEER

July 19, 2013
PLANS APPROVAL DATE

REGISTERED PROFESSIONAL ENGINEER William K. Farnbach No. C49042 Exp. 9-30-14 CIVIL STATE OF CALIFORNIA

THE STATE OF CALIFORNIA OR ITS OFFICERS OR AGENTS SHALL NOT BE RESPONSIBLE FOR THE ACCURACY OR COMPLETENESS OF SCANNED COPIES OF THIS PLAN SHEET.

TO ACCOMPANY PLANS DATED 2-10-14

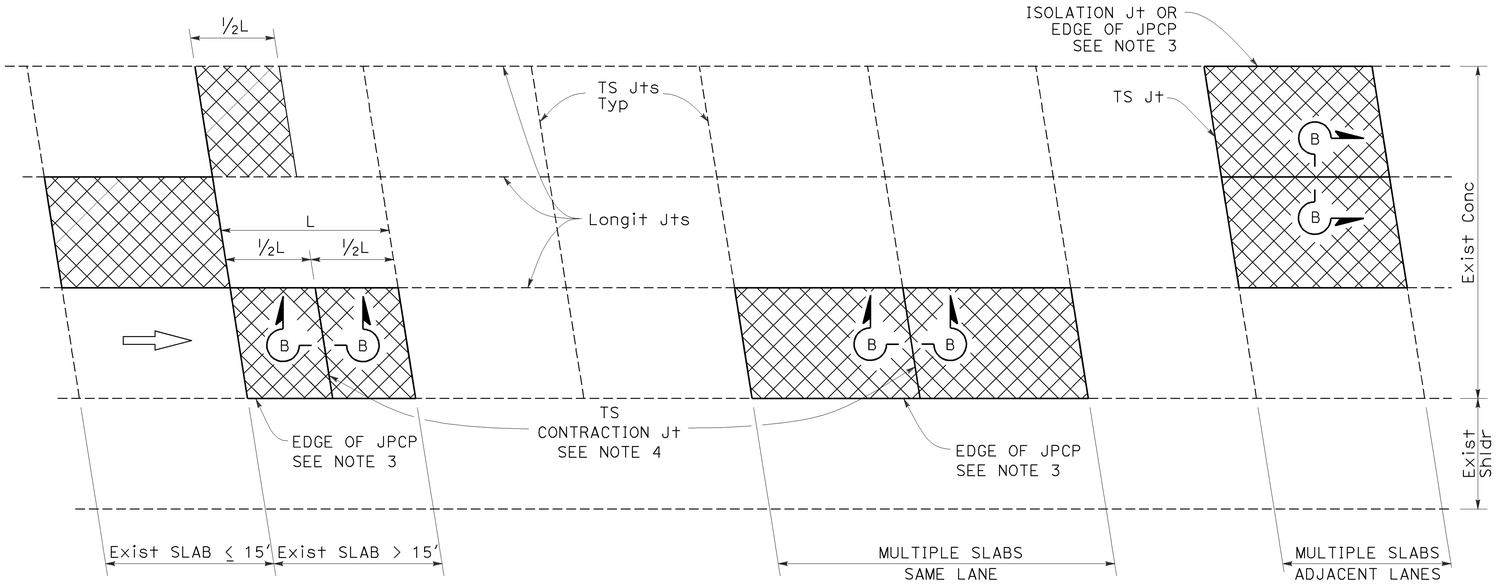

PLAN

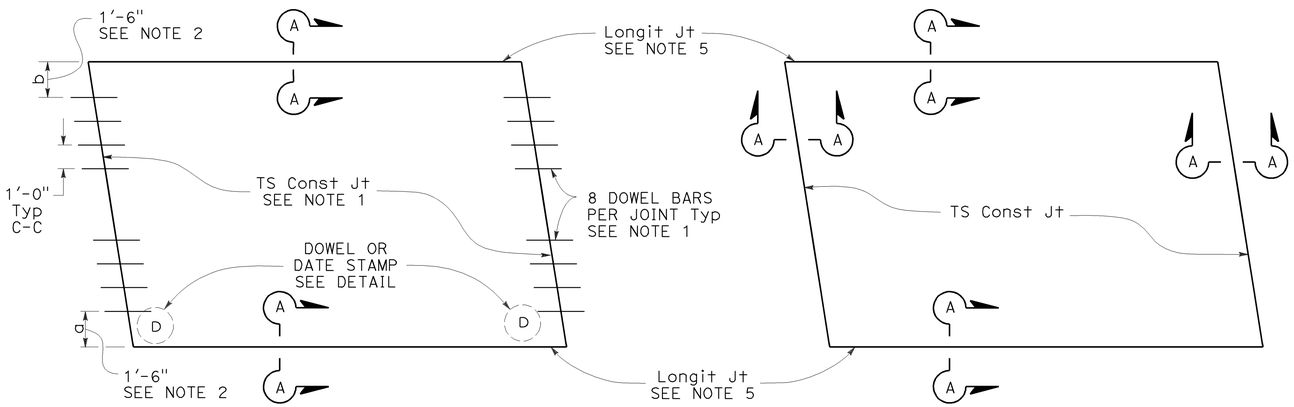

TYPE I
See Design Note 1

TYPE II
See Design Note 2

SLAB LAYOUT

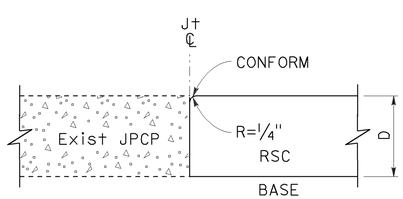

SECTION A-A

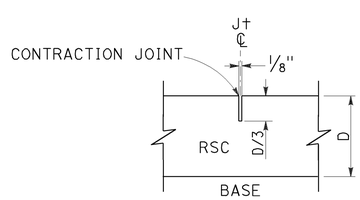

SECTION B-B

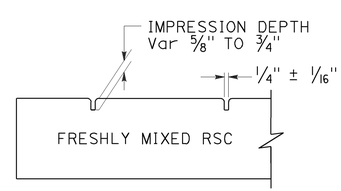

SECTION C-C

LEGEND:

RSC RAPID STRENGTH CONCRETE

INDIVIDUAL SLAB REPLACEMENT WITH RSC

NOTES:

1. For details not shown, see Revised Standard Plan RSP P10.
2. Where the existing outside shoulder is asphalt concrete pavement, "a" = 1'-0" and "b" = 2'-0".
3. Use side forms where edge of RSC pavement is adjacent to asphalt concrete.
4. Transverse contraction joint to match skew of existing joint. Omit dowel bars.
5. Do not place tie bars at longitudinal joints.

DESIGN NOTES:

1. For concrete slab repair with at least 5 years design life.
2. For short term repairs < 5 yrs design life or for slab replacements with cracking and seating.

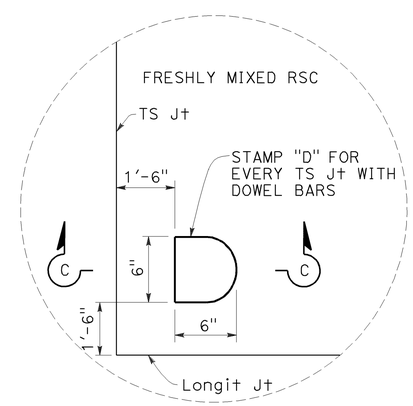

DOWEL STAMP DETAIL

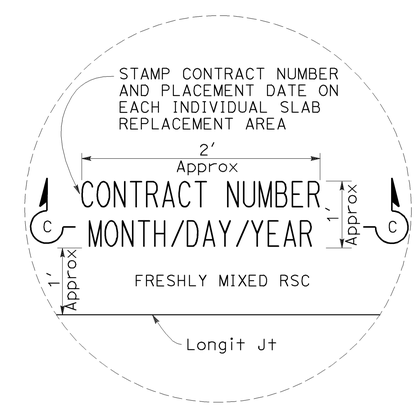

DATE STAMP DETAIL

STATE OF CALIFORNIA
DEPARTMENT OF TRANSPORTATION

INDIVIDUAL SLAB REPLACEMENT WITH RAPID STRENGTH CONCRETE

NO SCALE

RSP P8 DATED JULY 19, 2013 SUPERSEDES RSP P8 DATED APRIL 20, 2012 AND STANDARD PLAN P8 DATED MAY 20, 2011 - PAGE 130 OF THE STANDARD PLANS BOOK DATED 2010.

REVISED STANDARD PLAN RSP P8

2010 REVISED STANDARD PLAN RSP P8

5-31-13

Dist	COUNTY	ROUTE	POST MILES TOTAL PROJECT	SHEET No.	TOTAL SHEETS
07	LA	405	28.0/39.0	95	108

REGISTERED CIVIL ENGINEER

July 19, 2013
PLANS APPROVAL DATE

REGISTERED PROFESSIONAL ENGINEER William K. Farnbach No. C49042 Exp. 9-30-14 CIVIL STATE OF CALIFORNIA

THE STATE OF CALIFORNIA OR ITS OFFICERS OR AGENTS SHALL NOT BE RESPONSIBLE FOR THE ACCURACY OR COMPLETENESS OF SCANNED COPIES OF THIS PLAN SHEET.

TO ACCOMPANY PLANS DATED 2-10-14

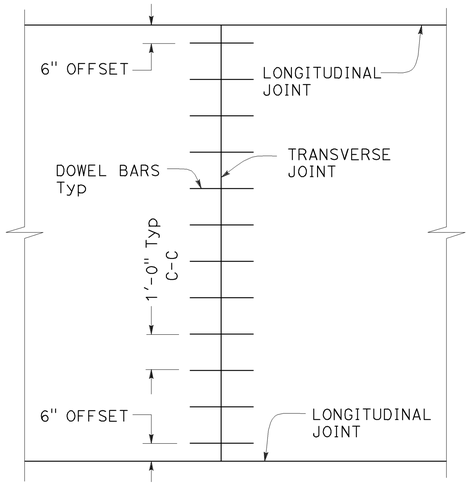

TRANSVERSE JOINT DOWEL BAR LAYOUT

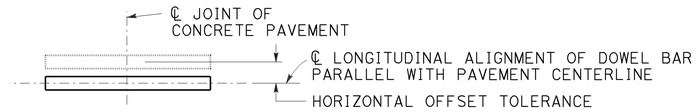

PLAN

HORIZONTAL OFFSET TOLERANCE

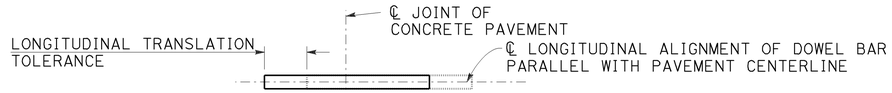

PLAN

LONGITUDINAL TRANSLATION TOLERANCE

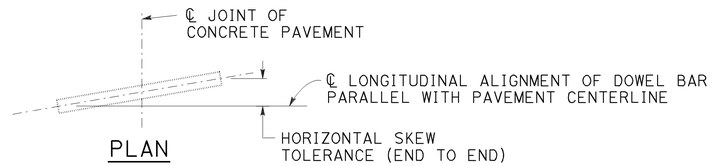

PLAN

HORIZONTAL SKEW TOLERANCE

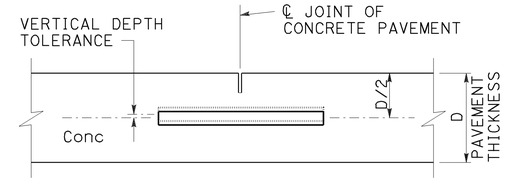

ELEVATION

VERTICAL DEPTH TOLERANCE

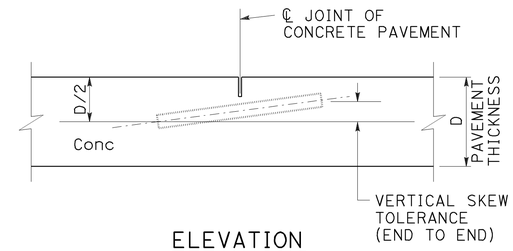

ELEVATION

VERTICAL SKEW TOLERANCE

NOTES:

1. See Revised Standard Plan RSP P1 for typical dowel bar placement and locations.
2. Where fresh concrete pavement is placed against new concrete or existing concrete pavement, rounding the corner of the existing concrete pavement is not required.
3. May also use ¾" Dia dowel bars 2'-4" ± ¼" in length. Center the length of dowel bars at the centerline of longitudinal joint.

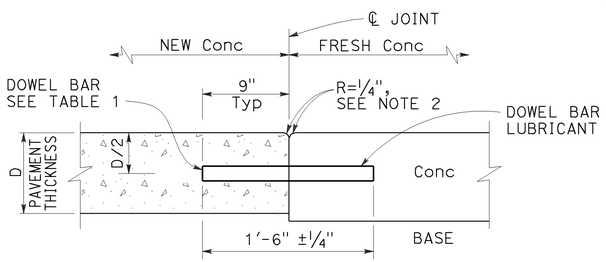

TRANSVERSE CONSTRUCTION JOINT DETAIL

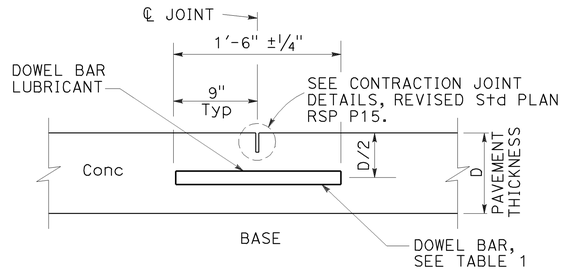

TRANSVERSE CONTRACTION JOINT

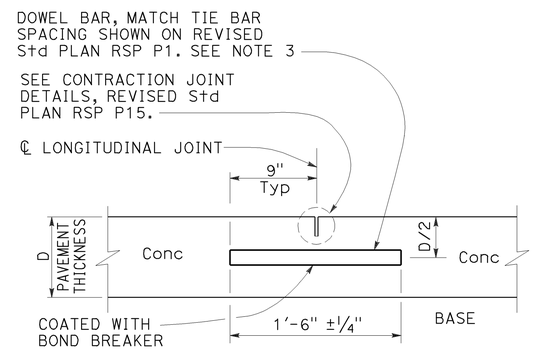

LONGITUDINAL CONTRACTION JOINT WITH DOWEL BARS

See Revised Std Plan RSP P18

TABLE 1

DOWEL BAR DIAMETER TABLE			
PAVEMENT THICKNESS	0.65'	> 0.65' - 0.85'	> 0.85'
MINIMUM DOWEL * BAR DIAMETER	1"	1¼"	1½"

* The drilled hole diameter must be ⅛" to 3/16" larger than the bar diameter.

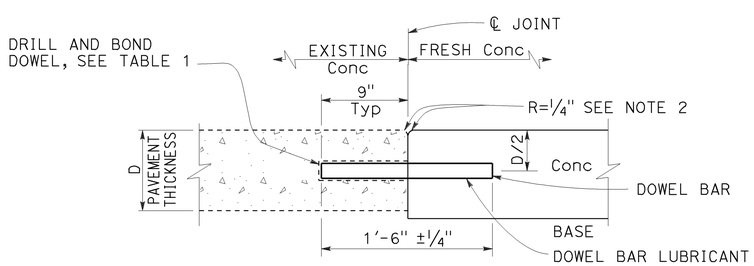

TRANSVERSE CONSTRUCTION JOINT FOR EXISTING CONCRETE PAVEMENT

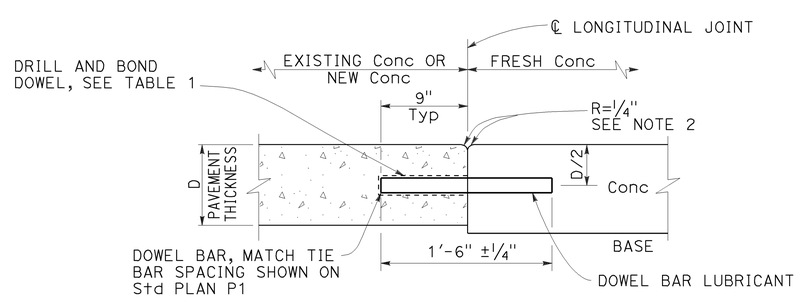

LONGITUDINAL CONSTRUCTION JOINT WITH DOWEL BARS

See Revised Std Plan RSP P18

STATE OF CALIFORNIA
DEPARTMENT OF TRANSPORTATION

CONCRETE PAVEMENT DOWEL BAR DETAILS

NO SCALE

RSP P10 DATED JULY 19, 2013 SUPERSEDES RSP P10 DATED APRIL 20, 2012 AND STANDARD PLAN P10 DATED MAY 20, 2011 - PAGE 131 OF THE STANDARD PLANS BOOK DATED 2010.

REVISED STANDARD PLAN RSP P10

2010 REVISED STANDARD PLAN RSP P10

5-31-13

Dist	COUNTY	ROUTE	POST MILES TOTAL PROJECT	SHEET No.	TOTAL SHEETS
07	LA	405	28.0/39.0	96	108

William K. Farnbach
REGISTERED CIVIL ENGINEER

July 19, 2013
PLANS APPROVAL DATE

REGISTERED PROFESSIONAL ENGINEER William K. Farnbach No. C49042 Exp. 9-30-14 CIVIL STATE OF CALIFORNIA

THE STATE OF CALIFORNIA OR ITS OFFICERS OR AGENTS SHALL NOT BE RESPONSIBLE FOR THE ACCURACY OR COMPLETENESS OF SCANNED COPIES OF THIS PLAN SHEET.

TO ACCOMPANY PLANS DATED 2-10-14

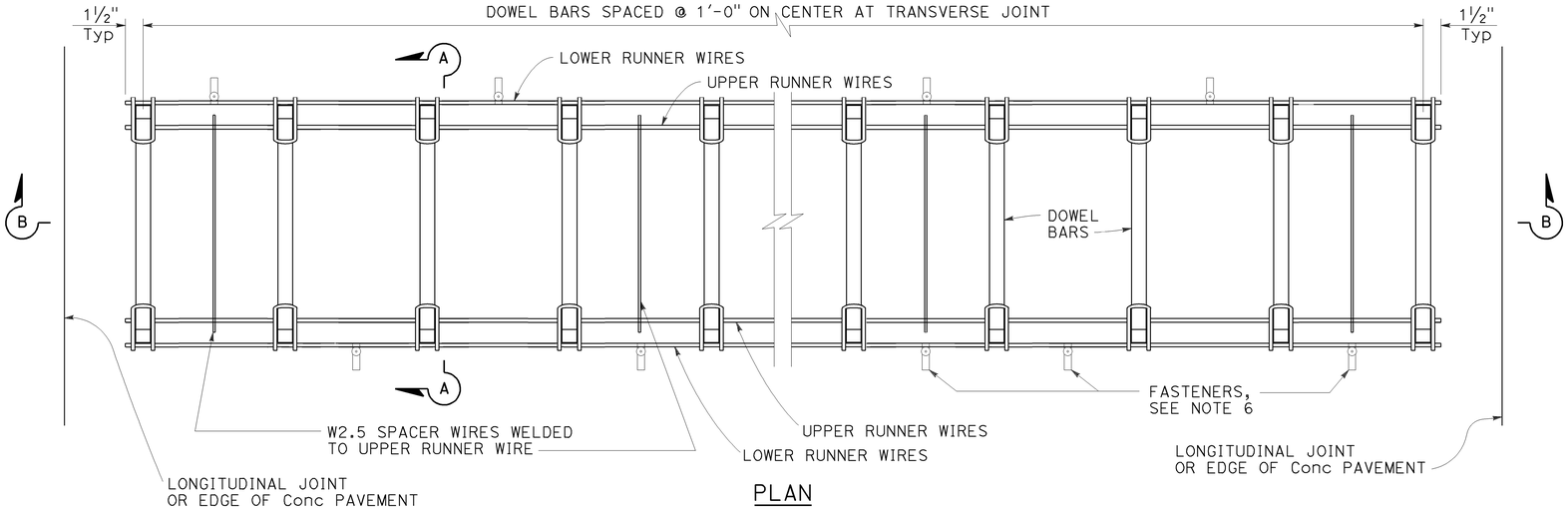

PLAN

DOWEL BAR BASKET (TRANSVERSE JOINT)

See Note 1

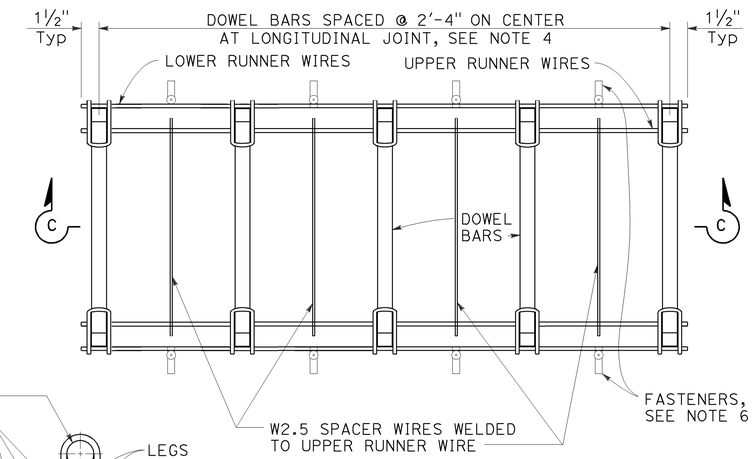

PLAN

DOWEL BAR BASKET (LONGITUDINAL JOINT)

See Note 1

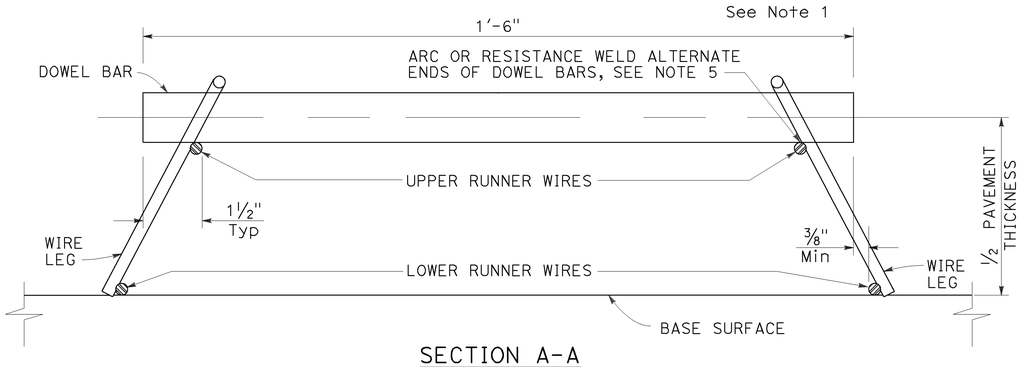

SECTION A-A

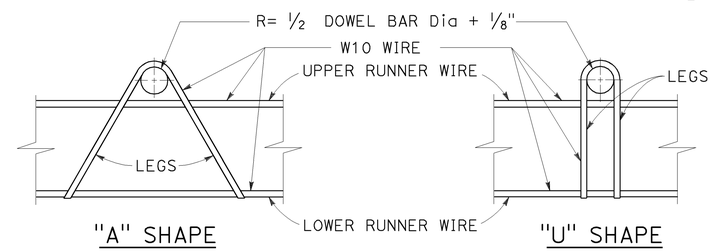

ASSEMBLY FRAME DETAILS

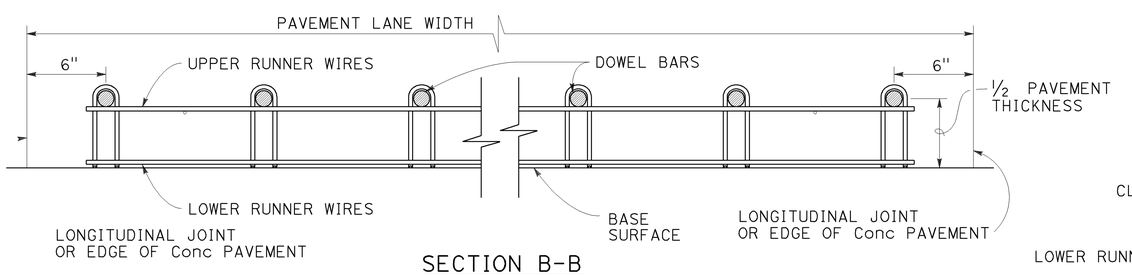

SECTION B-B

See Note 1

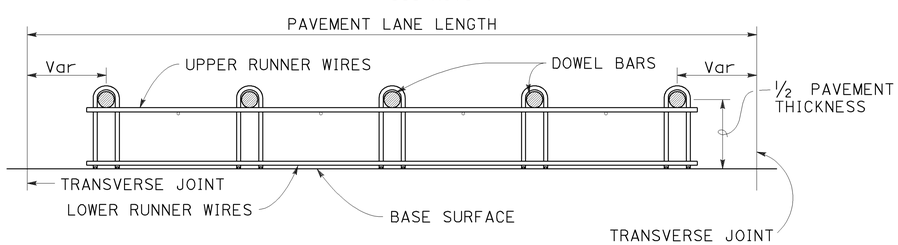

SECTION C-C

See Notes 1 and 4

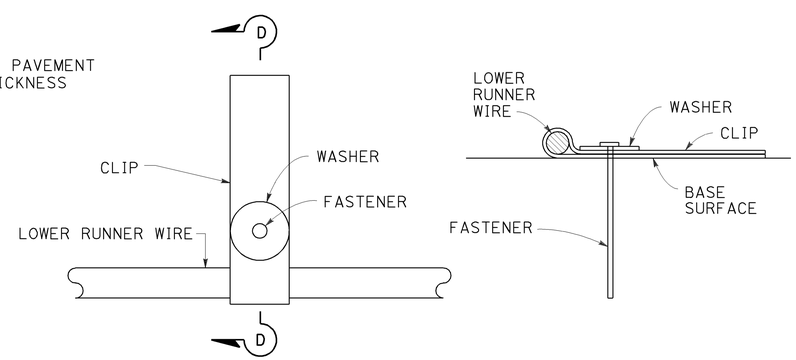

PLAN

SECTION D-D

FASTENER DETAIL

See Note 6

NOTES:

1. "U" frame shape assembly shown. Use either "U" frame shape or "A" frame shape.
2. Wire sizes shown are the minimum required.
3. All wire intersections must be resistance welded.
4. Use tie bar spacing for longitudinal dowel bar locations. See Revised Standard Plans RSP P1, RSP P2, RSP P3A, and RSP P3B for tie bar requirements.
5. Weld may be at the top or bottom of the dowel bar.
6. Use anchor pins where soil or granular base is used. See Revised Standard Plan RSP P17 for Anchor Pin Detail.

STATE OF CALIFORNIA
DEPARTMENT OF TRANSPORTATION

CONCRETE PAVEMENT DOWEL BAR BASKET DETAILS

NO SCALE

RSP P12 DATED JULY 19, 2013 SUPERSEDES STANDARD PLAN P12 DATED MAY 20, 2011 - PAGE 132 OF THE STANDARD PLANS BOOK DATED 2010.

REVISED STANDARD PLAN RSP P12

2010 REVISED STANDARD PLAN RSP P12

5-31-13

Dist	COUNTY	ROUTE	POST MILES TOTAL PROJECT	SHEET No.	TOTAL SHEETS
07	LA	405	28.0/39.0	97	108

William K. Farnbach
REGISTERED CIVIL ENGINEER

October 19, 2012
PLANS APPROVAL DATE

REGISTERED PROFESSIONAL ENGINEER
William K. Farnbach
No. C49042
Exp. 9-30-14
CIVIL
STATE OF CALIFORNIA

THE STATE OF CALIFORNIA OR ITS OFFICERS OR AGENTS SHALL NOT BE RESPONSIBLE FOR THE ACCURACY OR COMPLETENESS OF SCANNED COPIES OF THIS PLAN SHEET.

TO ACCOMPANY PLANS DATED 2-10-14

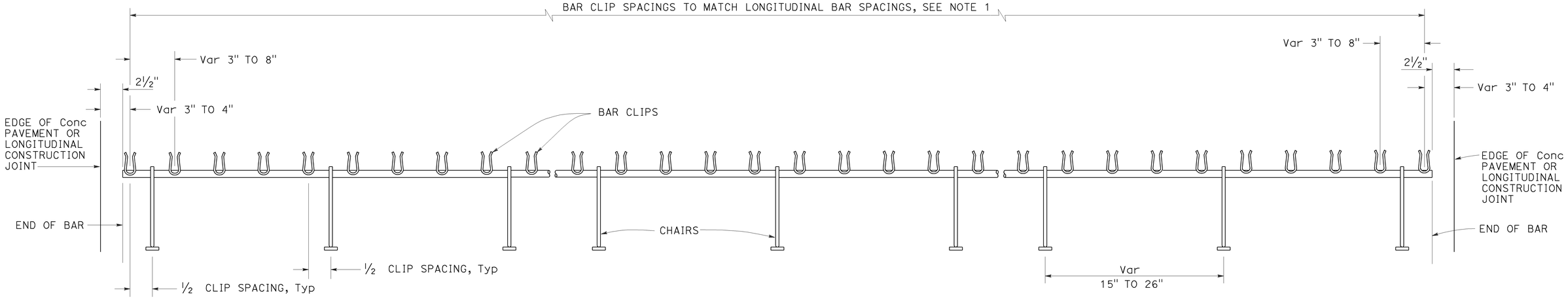

TRANSVERSE BAR ASSEMBLY

NOTES:

1. See Revised Standard Plan RSP P4 for spacing of longitudinal bars.
2. Tensile strength of chair shall be at least 50,000 psi.
3. Wire sizes shown are minimum required.
4. For concrete cover (X), see Table 1 in Revised Standard Plan RSP P4.

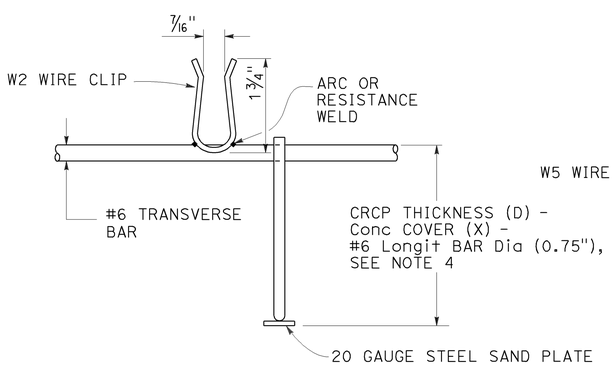

#6 BAR CLIP DETAIL

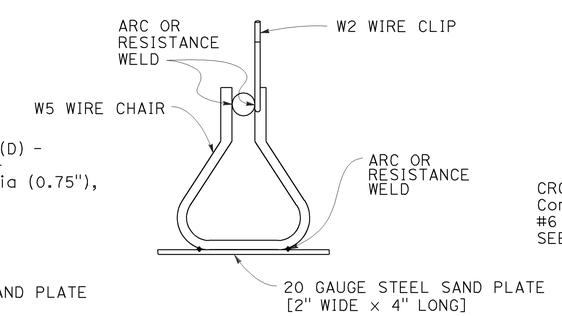

CHAIR DETAIL

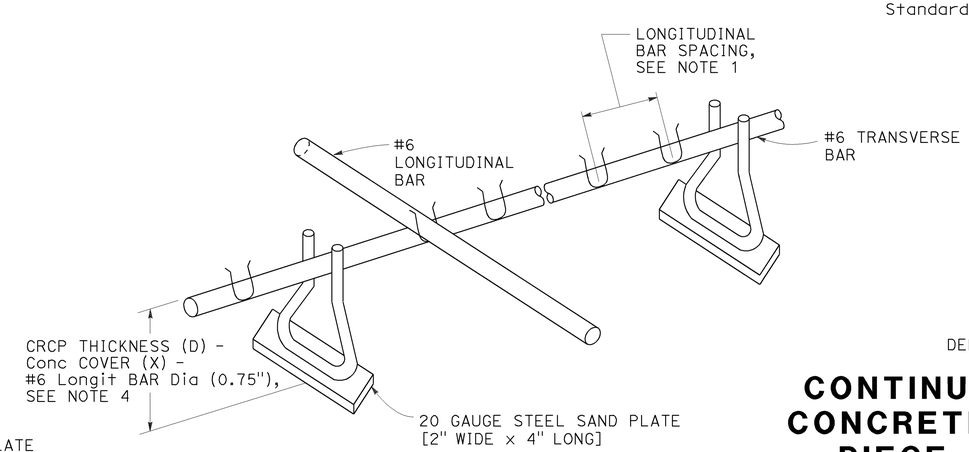

ISOMETRIC VIEW OF CHAIR ASSEMBLY

STATE OF CALIFORNIA
DEPARTMENT OF TRANSPORTATION

CONTINUOUSLY REINFORCED CONCRETE PAVEMENT-SINGLE PIECE TRANSVERSE BAR ASSEMBLY

NO SCALE

RSP P13 DATED OCTOBER 19, 2012 SUPERSEDES STANDARD PLAN P13 DATED MAY 20, 2011 - PAGE 133 OF THE STANDARD PLANS BOOK DATED 2010.

REVISED STANDARD PLAN RSP P13

2010 REVISED STANDARD PLAN RSP P13

8-28-12

Dist	COUNTY	ROUTE	POST MILES TOTAL PROJECT	SHEET No.	TOTAL SHEETS
07	LA	405	28.0/39.0	98	108

William K. Farnbach
REGISTERED CIVIL ENGINEER

July 19, 2013
PLANS APPROVAL DATE

REGISTERED PROFESSIONAL ENGINEER
William K. Farnbach
No. C49042
Exp. 9-30-14
CIVIL
STATE OF CALIFORNIA

THE STATE OF CALIFORNIA OR ITS OFFICERS OR AGENTS SHALL NOT BE RESPONSIBLE FOR THE ACCURACY OR COMPLETENESS OF SCANNED COPIES OF THIS PLAN SHEET.

TO ACCOMPANY PLANS DATED 2-10-14

2010 REVISED STANDARD PLAN RSP P15

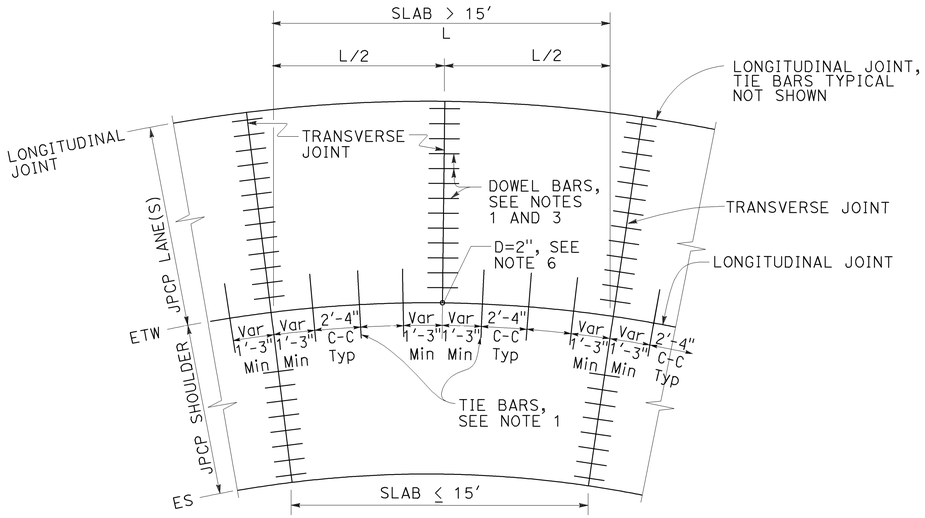

TIE BAR LAYOUT IN CURVED LANES

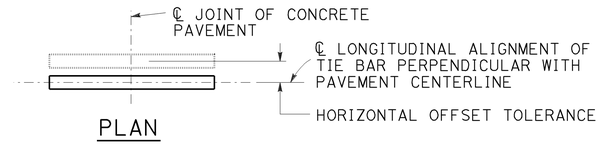

PLAN

HORIZONTAL OFFSET TOLERANCE

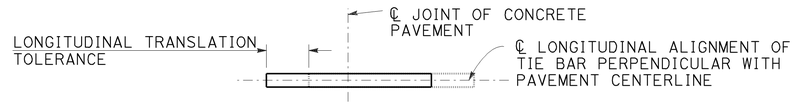

PLAN

LONGITUDINAL TRANSLATION TOLERANCE

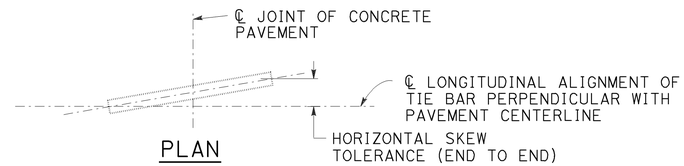

PLAN

HORIZONTAL SKEW TOLERANCE

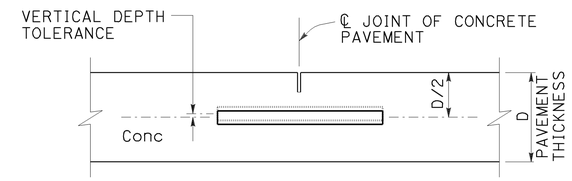

ELEVATION

VERTICAL DEPTH TOLERANCE

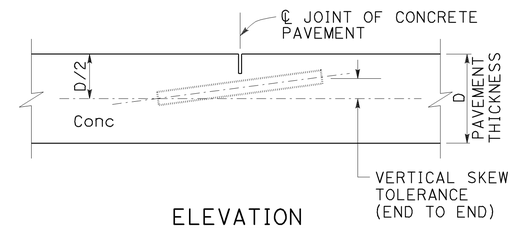

ELEVATION

VERTICAL SKEW TOLERANCE

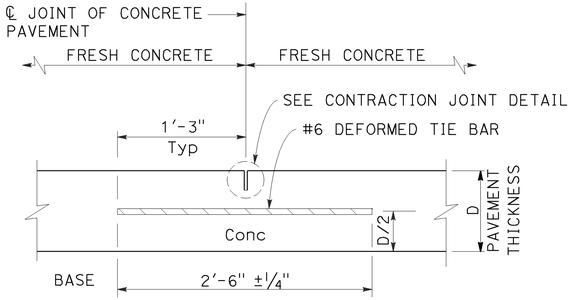

LONGITUDINAL CONTRACTION JOINT

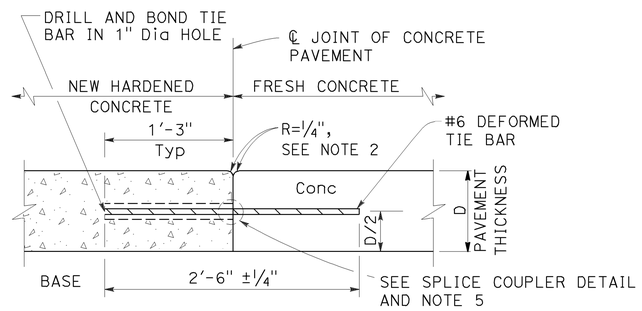

LONGITUDINAL CONSTRUCTION JOINT

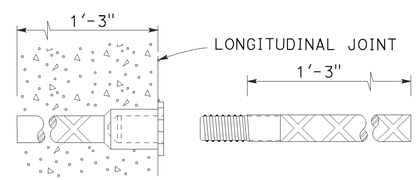

ALTERNATIVE SPLICE COUPLER

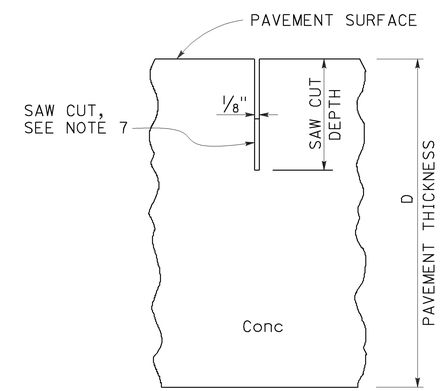

CONTRACTION JOINT DETAIL

NOTES:

1. See Revised Standard Plan RSP P1 for typical dowel bar and tie bar placement and locations.
2. Where new pavement is placed against existing concrete pavement, rounding the corner is not required.
3. For dowel bar sizes, See Revised Standard Plan RSP P10.
4. Tie bar details apply to inside widenings.
5. Use either drill and bond or splice couplers.
6. Full depth drilled hole. Fill hole with filler material.
7. The bottom of the saw cut must be at least 0.5" clear of any dowel bar, tie bar and bar reinforcement.

STATE OF CALIFORNIA
DEPARTMENT OF TRANSPORTATION

CONCRETE PAVEMENT-TIE BAR DETAILS

NO SCALE

RSP P15 DATED JULY 19, 2013 SUPPLEMENTS THE STANDARD PLANS BOOK DATED 2010.

REVISED STANDARD PLAN RSP P15

5-31-13

Dist	COUNTY	ROUTE	POST MILES TOTAL PROJECT	SHEET No.	TOTAL SHEETS
07	LA	405	28.0/39.0	99	108

William K. Farnbach
REGISTERED CIVIL ENGINEER

July 19, 2013
PLANS APPROVAL DATE

REGISTERED PROFESSIONAL ENGINEER William K. Farnbach No. C49042 Exp. 9-30-14 CIVIL STATE OF CALIFORNIA

THE STATE OF CALIFORNIA OR ITS OFFICERS OR AGENTS SHALL NOT BE RESPONSIBLE FOR THE ACCURACY OR COMPLETENESS OF SCANNED COPIES OF THIS PLAN SHEET.

TO ACCOMPANY PLANS DATED 2-10-14

2010 REVISED STANDARD PLAN RSP P18

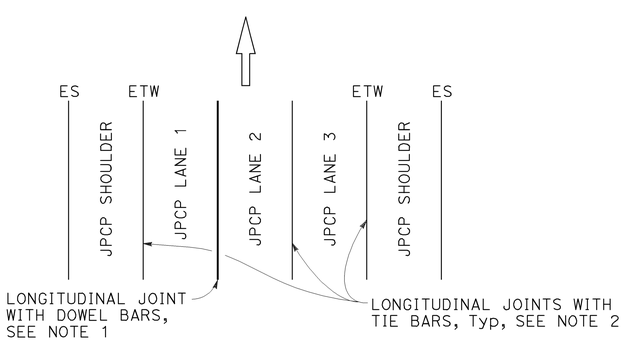

3 LANES WITH CONCRETE SHOULDERS
PLAN

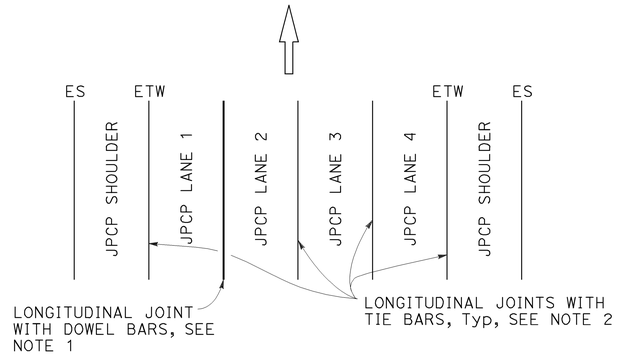

4 LANES WITH CONCRETE SHOULDERS
PLAN

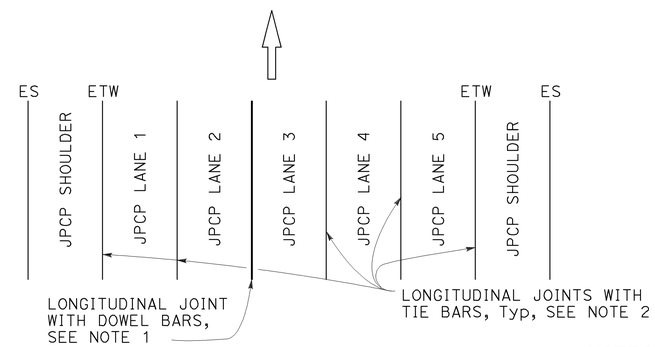

5 LANES WITH CONCRETE SHOULDERS
PLAN

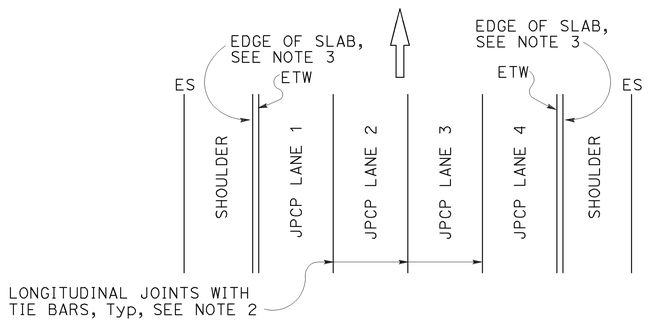

4 LANES OR LESS WITH AC SHOULDERS
PLAN

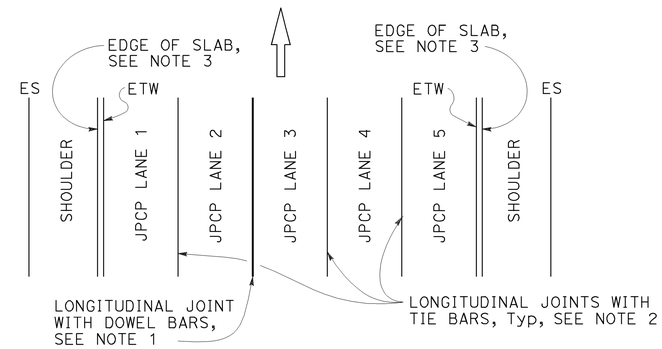

5 LANES WITH AC SHOULDERS
PLAN

NEW CONSTRUCTION

Location of Longitudinal Joints
For JPCP

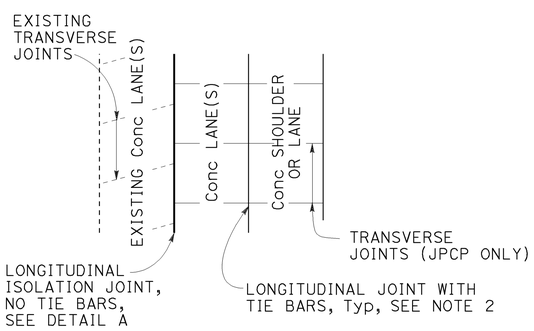

CASE 1
PLAN

Transverse Joints do not align between new and existing.

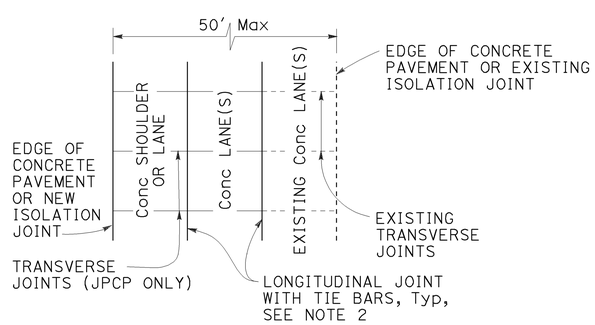

CASE 2
PLAN

Transverse Joints align between new and existing.
(For JPCP only)

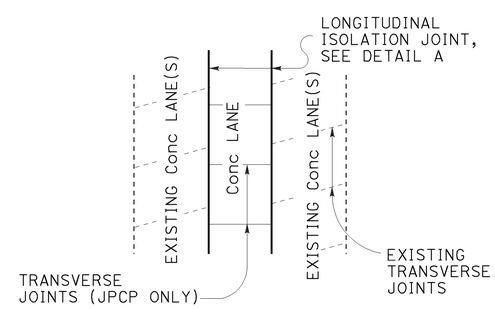

CASE 3 (INTERIOR LANE REPLACEMENT)
PLAN

Transverse Joints do not align between new and existing.

LANE/SHOULDER ADDITION OR RECONSTRUCTION

For JPCP and CRCP

NOTES:

1. See Revised Standard Plan RSP P10 for longitudinal joint with dowel bars.
2. See Revised Standard Plan RSP P15 for longitudinal joint with tie bars.
3. S= Reservoir depth.
   S= 7/8" ± 1/16" for asphalt rubber seals
   S= 9/16" ± 1/16" for silicone seals
   Preformed compression seals must be 13/16" wide and S= 1 11/16" ± 1/16"

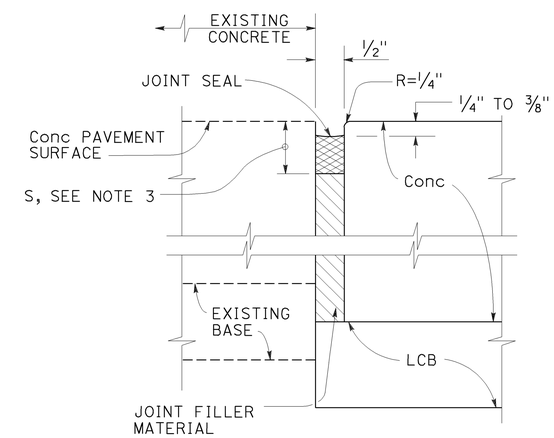

DETAIL "A"

ISOLATION JOINT

STATE OF CALIFORNIA
DEPARTMENT OF TRANSPORTATION

CONCRETE PAVEMENT LANE SCHEMATICS AND ISOLATION JOINT DETAIL

NO SCALE

RSP P18 DATED JULY 19, 2013 SUPERSEDES RSP P18 DATED APRIL 20, 2012 AND STANDARD PLAN P18 DATED MAY 20, 2011 - PAGE 135 OF THE STANDARD PLANS BOOK DATED 2010.

REVISED STANDARD PLAN RSP P18

5-31-13

Dist	COUNTY	ROUTE	POST MILES TOTAL PROJECT	SHEET No.	TOTAL SHEETS
07	LA	405	28.0/39.0	100	108

William K. Farnbach
REGISTERED CIVIL ENGINEER

July 19, 2013
PLANS APPROVAL DATE

REGISTERED PROFESSIONAL ENGINEER
William K. Farnbach
No. C49042
Exp. 9-30-14
CIVIL
STATE OF CALIFORNIA

THE STATE OF CALIFORNIA OR ITS OFFICERS OR AGENTS SHALL NOT BE RESPONSIBLE FOR THE ACCURACY OR COMPLETENESS OF SCANNED COPIES OF THIS PLAN SHEET.

TO ACCOMPANY PLANS DATED 2-10-14

2010 REVISED STANDARD PLAN RSP P20

NOTES:

1. Details do not apply to isolation joints and longitudinal construction joints.
2. Tie bars, dowel bars, and bar reinforcement are not shown.
3. Depths are measured from the final concrete pavement surface elevation after any grinding.

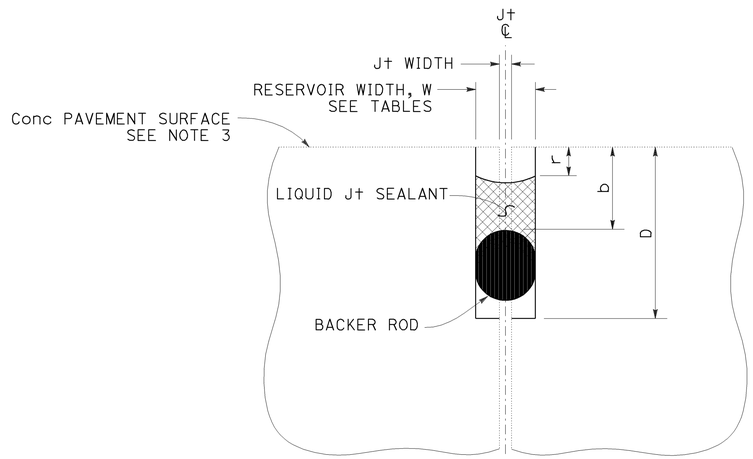

LIQUID JOINT SEALANT

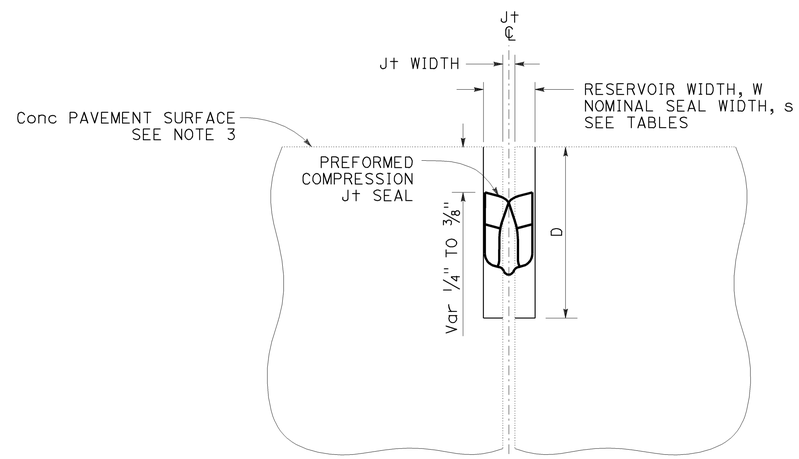

PREFORMED COMPRESSION JOINT SEAL

Const SEASON	Min RESERVOIR WIDTH * W ± 1/16"
WINTER	1/4"
SPRING	3/8"
SUMMER	3/8"
FALL	3/8"

* Minimum reservoir width for replace joint seal = existing joint width + 1/8"

RESERVOIR WIDTH W ±1/16"	LIQUID JOINT SEALANT DIMENSIONS					
	BACKER ROD NOMINAL Dia *	DEPTHS (ASPHALT RUBBER) **		DEPTHS (SILICONE)		
		RESERVOIR D ± 1/4"	BACKER ROD b ± 1/16"	RESERVOIR D ± 1/4"	BACKER ROD b ± 1/16"	RECESS r ± 1/16"
1/4"	3/8"	1 3/4"	7/8"	1 3/8"	1/2"	1/4"
3/8"	1/2"	1 7/8"	7/8"	1 1/2"	1/2"	1/4"
1/2"	3/4"	2"	7/8"	1 3/4"	9/16"	5/16"
5/8"	7/8"	2 1/4"	1"	2"	5/8"	5/16"
3/4"	1"	2 3/4"	1 1/8"	2 1/4"	3/4"	3/8"
7/8"	1 1/4"	3"	1 1/4"	2 1/2"	13/16"	3/8"
1"	1 1/2"	3 1/4"	1 3/8"	2 5/8"	7/8"	3/8"
1 1/8"	1 1/2"	3 1/2"	1 1/2"	2 13/16"	1"	1/2"

* Larger diameter backer rods may be substituted according to manufacturer recommendations if reservoir depth is increased equivalently.

** Asphalt rubber sealant recess depth "r" varies from 1/4" to 3/8"

RESERVOIR WIDTH W ±1/16"	PREFORMED COMPRESSION JOINT SEAL DIMENSIONS	
	NOMINAL SEAL WIDTH s	RESERVOIR DEPTH D ± 1/4"
1/4"	7/16"	1 1/4"
3/8"	11/16"	1 7/16"
1/2"	13/16"	1 11/16"
5/8"	1"	1 7/8"
3/4"	1 1/4"	2 1/8"
7/8"	1 5/8"	2 5/8"
1"	1 5/8"	2 5/8"
1 1/8"	2"	2 7/8"

STATE OF CALIFORNIA
DEPARTMENT OF TRANSPORTATION

JOINT SEALS

NO SCALE

RSP P20 DATED JULY 19, 2013 SUPERSEDES STANDARD PLAN P20
DATED MAY 20, 2011 - PAGE 136 OF THE STANDARD PLANS BOOK DATED 2010.

REVISED STANDARD PLAN RSP P20

6-17-13