Dist	COUNTY	ROUTE	POST MILES TOTAL PROJECT	SHEET No.	TOTAL SHEETS
07	LA	405	R12.6/R21.2	201	288

REGISTERED ELECTRICAL ENGINEER 4/21/15 DATE

6-15-15
PLANS APPROVAL DATE

REGISTERED PROFESSIONAL ENGINEER JACQUELINE C. TAN No. E015611 Exp. 12/31/15 ELECTRICAL STATE OF CALIFORNIA

THE STATE OF CALIFORNIA OR ITS OFFICERS OR AGENTS SHALL NOT BE RESPONSIBLE FOR THE ACCURACY OR COMPLETENESS OF SCANNED COPIES OF THIS PLAN SHEET.

NOTES: (THIS SHEET ONLY)

1. FOR ACCURATE RIGHT OF WAY DATA, CONTACT RIGHT OF WAY ENGINEERING AT THE DISTRICT OFFICE.
2. FOR LEGEND, ABBREVIATIONS AND NOTES SEE SHEET E-1.

CONDUCTOR SCHEDULE

CONDUCTOR TYPE	FUNCTION	RUN 7			RUN 11
75P22 CABLE	COMMUNICATION DATA	1+			
6P22 CABLE	CONTROLLER DATA	1			1
72SMFO	DATA/VIDEO NODE TO HUB			1*	
72SMFO	DATA/VIDEO DISTRIBUTION		1-		
12SMFO	CCTV TO VIDEO DISTRIBUTION				1&
	INNERDUCT		1 1/4"	1 1/4"	
	CONDUIT SIZE	4"			2"

ALL CONDUITS AND CONDUCTORS ARE EXISTING UNLESS OTHERWISE NOTED.

+ : REMOVE Exist. 75P22 CABLES AND INSTALL NEW 48SMFO SPARE CABLES IN A NEW INNERDUCT.
* : REMOVE Exist. 72SMFO TRUNK CABLES AND INSTALL NEW 72SMFO TRUNK CABLES.
- : INSTALL NEW 72SMFO CABLES FOR DATA/VIDEO DISTRIBUTION.
& : INSTALL NEW 12SMFO CABLES.

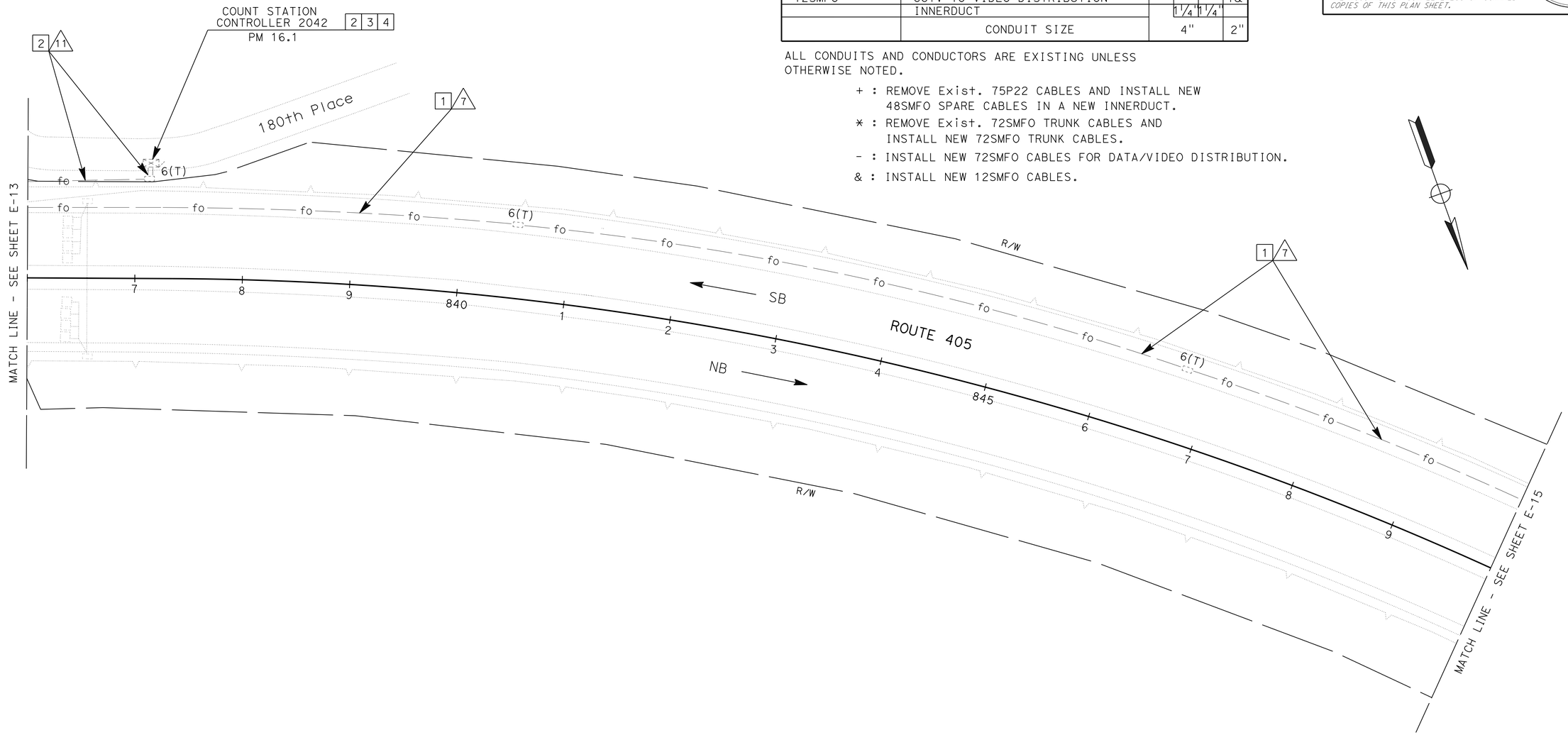

LEGEND: (THIS SHEET ONLY)

1 RC exist. 75P22 CABLES, 12SMFO AND 72SMFO CABLES.
INSTALL 2-72SMFO AND 1-48SMFO CABLES IN EXISTING 4" CONDUIT.
DISCONNECT/REMOVE CABLES ONLY AFTER TESTING ALL INSTALLED FACILITIES, VERIFYING THE INSTALLATION IS OPERATIONAL AND APPROVED BY THE ENGINNER.

2 RC exist. 6P22 CABLES. INSTALL NEW 12 SMFO CABLES AND TERMINATE IN CONTROLLER CABINET.

3 INSTALL TYPE 1 SWITCH WITH 2 SFP-LX MODULES, ETHERNET CARD AND A 12SMFO FDU INSIDE A MODEL 334 CONTROLLER CABINET.

4 INSTALL DEPARTMENT-FURNISHED 2070 CONTROLLER ASSEMBLY.

MODIFY COMMUNICATION SYSTEM

SCALE: 1" = 50'

E-14

APPROVED FOR ELECTRICAL WORK ONLY

STATE OF CALIFORNIA - DEPARTMENT OF TRANSPORTATION
Caltrans OFFICE OF ITS

FUNCTIONAL SUPERVISOR: JACQUELINE C. TAN
CALCULATED-DESIGNED BY: HENRY H. TRINH
CHECKED BY: JACQUELINE C. TAN
REVISED BY: HT
DATE REVISED: 05/15

LAST REVISION 05-06-15
DATE PLOTTED => 06-OCT-2015
TIME PLOTTED => 08:49

Dist	COUNTY	ROUTE	POST MILES TOTAL PROJECT	SHEET No.	TOTAL SHEETS
07	LA	405	R12.6/R21.2	202	288

Jacqueline C Tan 4/21/15
REGISTERED ELECTRICAL ENGINEER DATE

6-15-15
PLANS APPROVAL DATE

REGISTERED PROFESSIONAL ENGINEER JACQUELINE C. TAN No.E015611 Exp.12/31/15 ELECTRICAL STATE OF CALIFORNIA

THE STATE OF CALIFORNIA OR ITS OFFICERS OR AGENTS SHALL NOT BE RESPONSIBLE FOR THE ACCURACY OR COMPLETENESS OF SCANNED COPIES OF THIS PLAN SHEET.

NOTES: (THIS SHEET ONLY)

1. FOR ACCURATE RIGHT OF WAY DATA, CONTACT RIGHT OF WAY ENGINEERING AT THE DISTRICT OFFICE.
2. FOR LEGEND, ABBREVIATIONS AND NOTES SEE SHEET E-1.

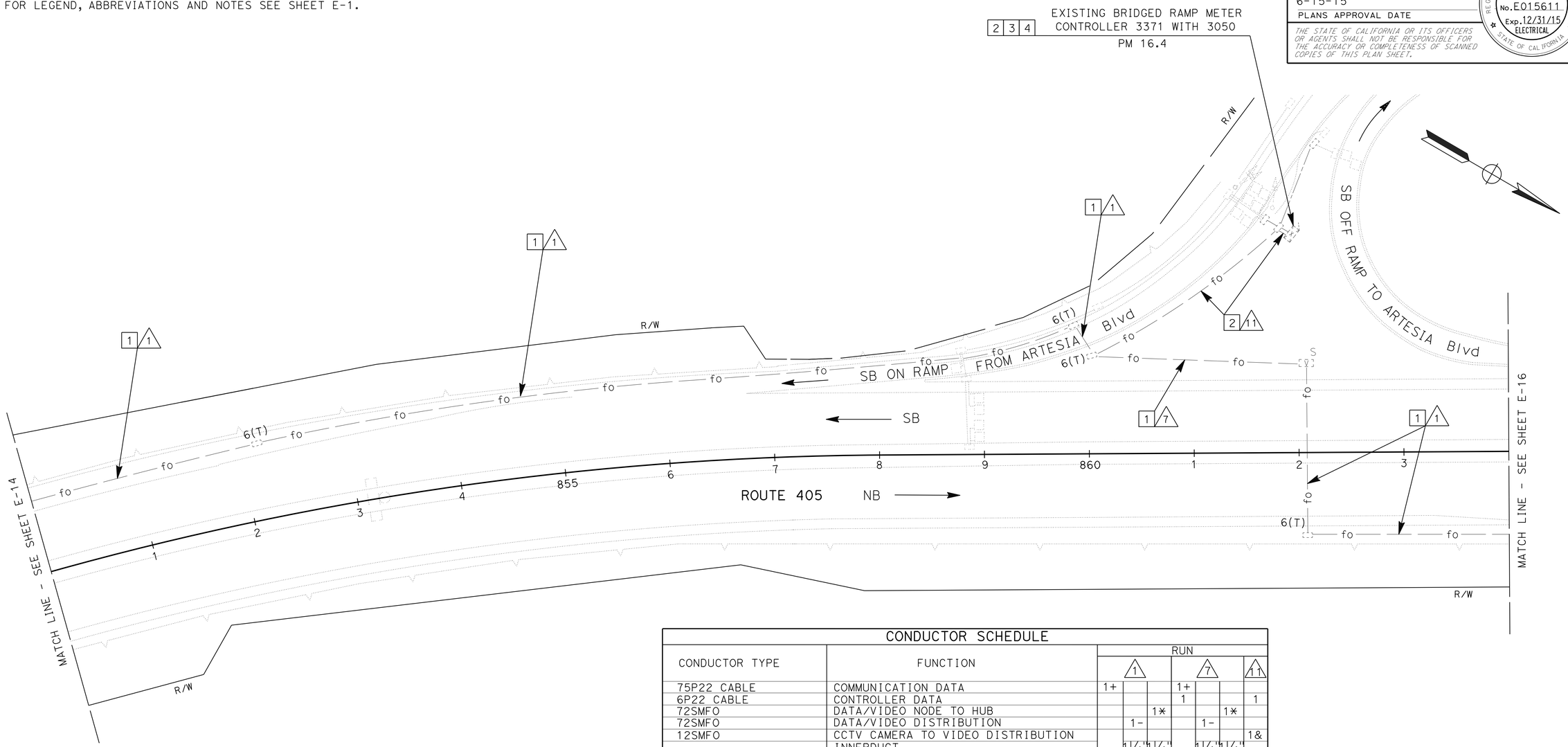

CONDUCTOR SCHEDULE								
CONDUCTOR TYPE	FUNCTION	RUN 1			RUN 7			RUN 11
75P22 CABLE	COMMUNICATION DATA	1+			1+			
6P22 CABLE	CONTROLLER DATA				1			1
72SMFO	DATA/VIDEO NODE TO HUB			1*			1*	
72SMFO	DATA/VIDEO DISTRIBUTION		1-			1-		
12SMFO	CCTV CAMERA TO VIDEO DISTRIBUTION							1&
	INNERDUCT		1¼"	1¼"		1¼"	1¼"	
	CONDUIT SIZE	4"			4"			2"

ALL CONDUITS AND CONDUCTORS ARE EXISTING UNLESS OTHERWISE NOTED.

+ : REMOVE Exist. 75P22 CABLES AND INSTALL NEW 48SMFO SPARE CABLES IN A NEW INNERDUCT.

* : REMOVE Exist. 72SMFO TRUNK CABLES AND INSTALL NEW 72SMFO TRUNK CABLES.

- : INSTALL NEW 72SMFO CABLES FOR DATA/VIDEO DISTRIBUTION.

& : INSTALL NEW 12SMFO CABLES.

LEGEND: (THIS SHEET ONLY)

1 RC exist. 75P22 CABLES, 12SMFO AND 72SMFO CABLES. INSTALL 2-72SMFO AND 1-48SMFO CABLES IN EXISTING 4" CONDUIT. DISCONNECT/REMOVE CABLES ONLY AFTER TESTING ALL INSTALLED FACILITIES, VERIFYING THE INSTALLATION IS OPERATIONAL AND APPROVED BY THE ENGINNER.

2 RC exist. 6P22 CABLES. INSTALL NEW 12SMFO B/O CABLES AND TERMINATE IN CONTROLLER CABINET.

3 INSTALL TYPE 1 SWITCH WITH 2 SFP-LX MODULES, ETHERNET CARD AND A 12SMFO FDU INSIDE A MODEL 334 CONTROLLER CABINET.

4 INSTALL DEPARTMENT-FURNISHED 2070 CONTROLLER ASSEMBLY.

MODIFY COMMUNICATION SYSTEM

SCALE: 1" = 50'

E-15

APPROVED FOR ELECTRICAL WORK ONLY

STATE OF CALIFORNIA - DEPARTMENT OF TRANSPORTATION
Caltrans® OFFICE OF ITS

FUNCTIONAL SUPERVISOR: JACQUELINE C. TAN
CALCULATED-DESIGNED BY: HENRY H. TRINH
CHECKED BY: JACQUELINE C. TAN
REVISED BY: HT
DATE REVISED: 05/15

LAST REVISION 05-06-15 | DATE PLOTTED => 06-OCT-2015 | TIME PLOTTED => 08:49

Dist	COUNTY	ROUTE	POST MILES TOTAL PROJECT	SHEET No.	TOTAL SHEETS
07	LA	405	R12.6/R21.2	203	288

REGISTERED ELECTRICAL ENGINEER 4/21/15 DATE

PLANS APPROVAL DATE 6-15-15

REGISTERED PROFESSIONAL ENGINEER JACQUELINE C. TAN No. E015611 Exp. 12/31/15 ELECTRICAL STATE OF CALIFORNIA

THE STATE OF CALIFORNIA OR ITS OFFICERS OR AGENTS SHALL NOT BE RESPONSIBLE FOR THE ACCURACY OR COMPLETENESS OF SCANNED COPIES OF THIS PLAN SHEET.

NOTES: (THIS SHEET ONLY)

1. FOR ACCURATE RIGHT OF WAY DATA, CONTACT RIGHT OF WAY ENGINEERING AT THE DISTRICT OFFICE.
2. FOR LEGEND, ABBREVIATIONS AND NOTES SEE SHEET E-1.

CONDUCTOR SCHEDULE

CONDUCTOR TYPE	FUNCTION	RUN 1			RUN 2		
75P22 CABLE	COMMUNICATION DATA	1+			1+		
6P22 CABLE	CONTROLLER DATA						
72SMFO	DATA/VIDEO NODE TO HUB			1*			1*
72SMFO	DATA/VIDEO DISTRIBUTION		1-				
12SMFO	CCTV CAMERA TO VIDEO DISTRIBUTION					1#	
	INNERDUCT	1 1/4"		1 1/4"	1 1/4"		1 1/4"
	CONDUIT SIZE	4"			4"		

ALL CONDUITS AND CONDUCTORS ARE EXISTING UNLESS OTHERWISE NOTED.

+ : REMOVE Exist. 75P22 CABLES AND INSTALL NEW 48SMFO SPARE CABLES IN A NEW INNERDUCT.

* : REMOVE Exist. 72SMFO TRUNK CABLES AND INSTALL NEW 72SMFO TRUNK CABLES.

- : INSTALL NEW 72SMFO CABLES FOR DATA/VIDEO DISTRIBUTION.

: REMOVE Exist. 12SMFO AND INSTALL NEW 72SMFO CABLES FOR DATA/VIDEO DISTRIBUTION.

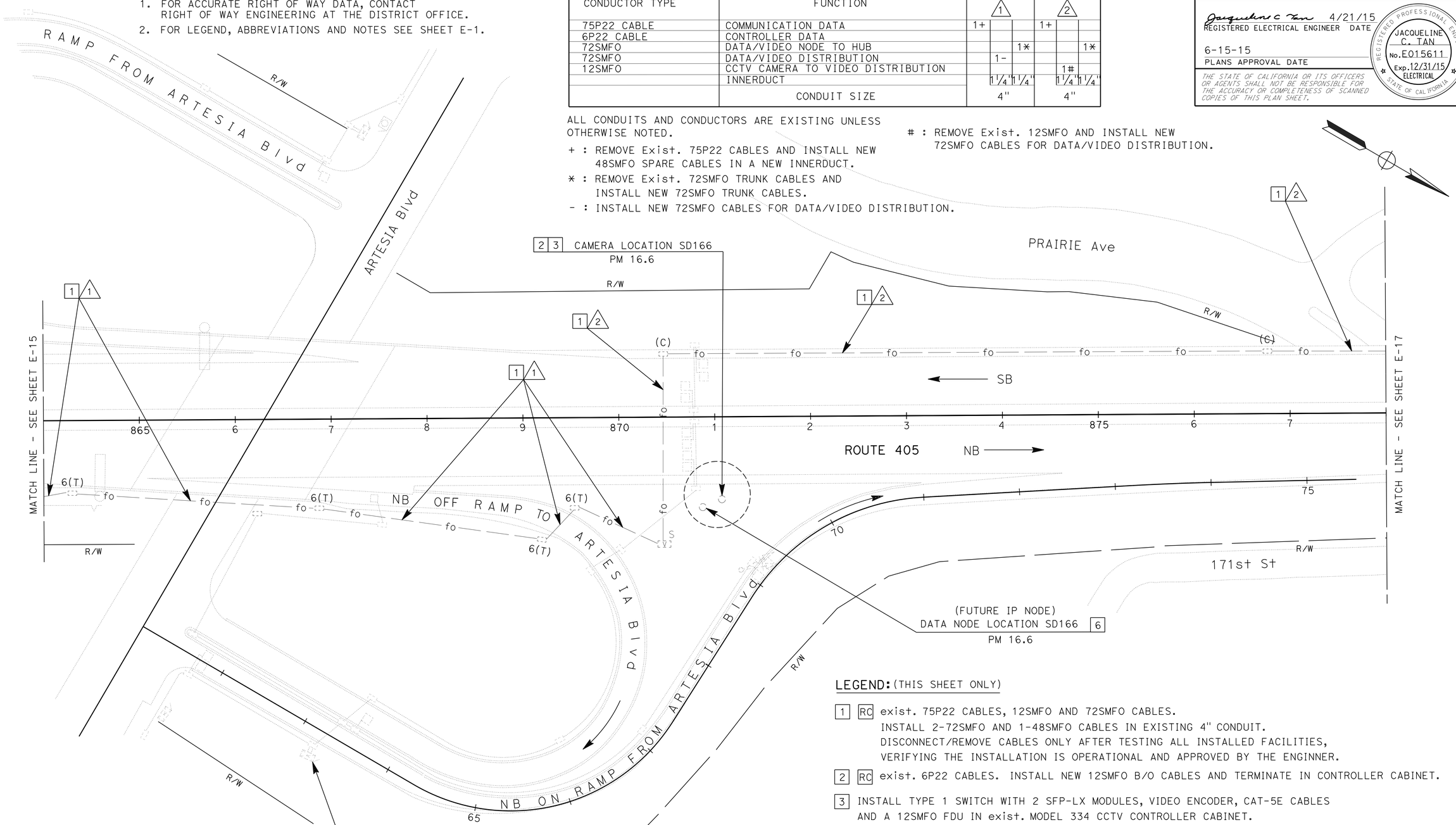

LEGEND: (THIS SHEET ONLY)

1 RC exist. 75P22 CABLES, 12SMFO AND 72SMFO CABLES.
INSTALL 2-72SMFO AND 1-48SMFO CABLES IN EXISTING 4" CONDUIT.
DISCONNECT/REMOVE CABLES ONLY AFTER TESTING ALL INSTALLED FACILITIES, VERIFYING THE INSTALLATION IS OPERATIONAL AND APPROVED BY THE ENGINNER.

2 RC exist. 6P22 CABLES. INSTALL NEW 12SMFO B/O CABLES AND TERMINATE IN CONTROLLER CABINET.

3 INSTALL TYPE 1 SWITCH WITH 2 SFP-LX MODULES, VIDEO ENCODER, CAT-5E CABLES AND A 12SMFO FDU IN exist. MODEL 334 CCTV CONTROLLER CABINET.

4 INSTALL TYPE 1 SWITCH WITH 2 SFP-LX MODULES, ETHERNET CARD AND A 12SMFO FDU INSIDE A MODEL 334 CONTROLLER CABINET.

5 INSTALL DEPARTMENT-FURNISHED 2070 CONTROLLER ASSEMBLY.

LEGEND: (THIS SHEET ONLY)-CONT.

6 INSTALL TYPE 2 SWITCH WITH 4 SFP-ZX MODULES AND TERMINATE THE PROPOSED 72SMFO DATA/VIDEO DISTRIBUTION CABLES ON A NEW 72SMFO FDU IN Exist. DATA NODE (FUTURE IP NODE) CONTROLLER CABINET.

MODIFY COMMUNICATION SYSTEM

SCALE: 1" = 50'

E-16

APPROVED FOR ELECTRICAL WORK ONLY

STATE OF CALIFORNIA - DEPARTMENT OF TRANSPORTATION
Caltrans
OFFICE OF ITS

FUNCTIONAL SUPERVISOR: JACQUELINE C. TAN
CALCULATED-DESIGNED BY: HENRY H. TRINH
CHECKED BY: JACQUELINE C. TAN
REVISED BY: HT
DATE REVISED: 05/15

LAST REVISION 05-06-15 | DATE PLOTTED => 06-OCT-2015 | TIME PLOTTED => 08:49

Dist	COUNTY	ROUTE	POST MILES TOTAL PROJECT	SHEET No.	TOTAL SHEETS
07	LA	405	R12.6/R21.2	204	288

Jacqueline C Tan 4/21/15
REGISTERED ELECTRICAL ENGINEER DATE

6-15-15
PLANS APPROVAL DATE

REGISTERED PROFESSIONAL ENGINEER JACQUELINE C. TAN No.E015611 Exp.12/31/15 ELECTRICAL STATE OF CALIFORNIA

THE STATE OF CALIFORNIA OR ITS OFFICERS OR AGENTS SHALL NOT BE RESPONSIBLE FOR THE ACCURACY OR COMPLETENESS OF SCANNED COPIES OF THIS PLAN SHEET.

NOTES: (THIS SHEET ONLY)

1. FOR ACCURATE RIGHT OF WAY DATA, CONTACT RIGHT OF WAY ENGINEERING AT THE DISTRICT OFFICE.
2. FOR LEGEND, ABBREVIATIONS AND NOTES SEE SHEET E-1.

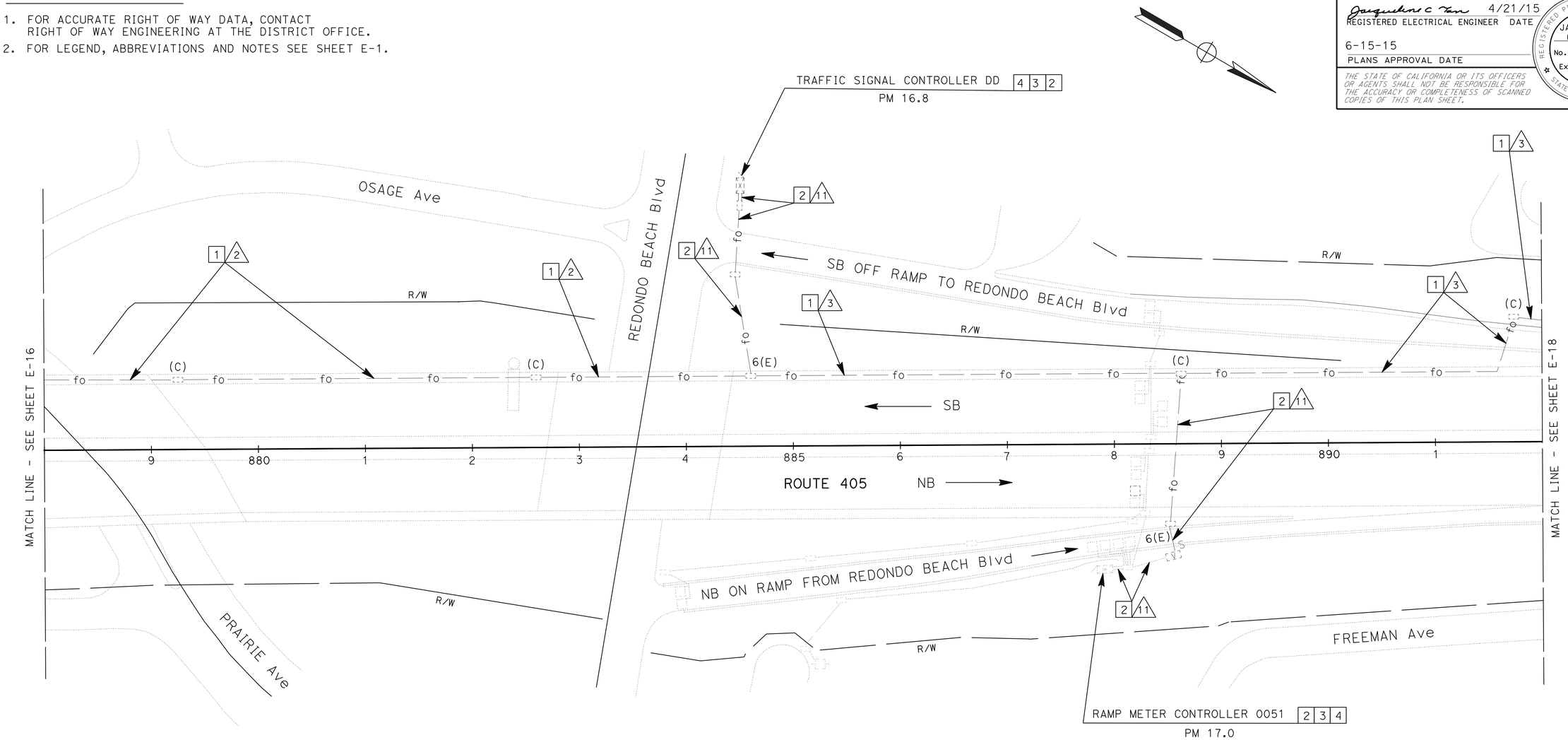

CONDUCTOR SCHEDULE							
CONDUCTOR TYPE	FUNCTION	RUN 2			RUN 3		RUN 11
75P22 CABLE	COMMUNICATION DATA	1+			1+		
6P22 CABLE	CONTROLLER DATA				1		1
72SMFO	DATA/VIDEO NODE TO HUB			1*		1*	
12SMFO	CCTV CAMERA TO VIDEO DISTRIBUTION		1#			1#	1&
	INNERDUCT		1¼"	1¼"		1¼"	1¼"
	CONDUIT SIZE		4"			4"	2"

ALL CONDUITS AND CONDUCTORS ARE EXISTING UNLESS OTHERWISE NOTED.

+ : REMOVE Exist. 75P22 CABLES AND INSTALL NEW 48SMFO SPARE CABLES IN A NEW INNERDUCT.

* : REMOVE Exist. 72SMFO TRUNK CABLES AND INSTALL NEW 72SMFO TRUNK CABLES.

: REMOVE Exist. 12SMFO AND INSTALL NEW 72SMFO CABLES FOR DATA/VIDEO DISTRIBUTION.

& : INSTALL NEW 12SMFO CABLES.

LEGEND: (THIS SHEET ONLY)

1 RC exist. 75P22 CABLES, 12SMFO AND 72SMFO CABLES.
INSTALL 2-72SMFO AND 1-48SMFO CABLES IN EXISTING 4" CONDUIT.
DISCONNECT/REMOVE CABLES ONLY AFTER TESTING ALL INSTALLED FACILITIES, VERIFYING THE INSTALLATION IS OPERATIONAL AND APPROVED BY THE ENGINNER.

2 RC exist. 6P22 CABLES. INSTALL NEW 12 SMFO CABLES AND TERMINATE IN CONTROLLER CABINET.

3 INSTALL TYPE 1 SWITCH WITH 2 SFP-LX MODULES, ETHERNET CARD AND A 12SMFO FDU INSIDE A MODEL 334 CONTROLLER CABINET.

4 INSTALL DEPARTMENT-FURNISHED 2070 CONTROLLER ASSEMBLY.

APPROVED FOR ELECTRICAL WORK ONLY

MODIFY COMMUNICATION SYSTEM

SCALE: 1" = 50'

E-17

STATE OF CALIFORNIA - DEPARTMENT OF TRANSPORTATION
Caltrans OFFICE OF ITS

FUNCTIONAL SUPERVISOR: JACQUELINE C. TAN
CALCULATED-DESIGNED BY: HENRY H. TRINH
CHECKED BY: JACQUELINE C. TAN
REVISED BY: HT
DATE REVISED: 05/15

LAST REVISION 05-06-15
DATE PLOTTED => 06-OCT-2015
TIME PLOTTED => 08:50

Dist	COUNTY	ROUTE	POST MILES TOTAL PROJECT	SHEET No.	TOTAL SHEETS
07	LA	405	R12.6/R21.2	205	288

REGISTERED ELECTRICAL ENGINEER 4/21/15 DATE

6-15-15
PLANS APPROVAL DATE

REGISTERED PROFESSIONAL ENGINEER JACQUELINE C. TAN No.E015611 Exp.12/31/15 ELECTRICAL STATE OF CALIFORNIA

THE STATE OF CALIFORNIA OR ITS OFFICERS OR AGENTS SHALL NOT BE RESPONSIBLE FOR THE ACCURACY OR COMPLETENESS OF SCANNED COPIES OF THIS PLAN SHEET.

NOTES: (THIS SHEET ONLY)

1. FOR ACCURATE RIGHT OF WAY DATA, CONTACT RIGHT OF WAY ENGINEERING AT THE DISTRICT OFFICE.
2. FOR LEGEND, ABBREVIATIONS AND NOTES SEE SHEET E-1.

CONDUCTOR SCHEDULE

CONDUCTOR TYPE	FUNCTION	RUN 2			RUN 3			RUN 11
75P22 CABLE	COMMUNICATION DATA	1+			1+			
6P22 CABLE	CONTROLLER DATA				1			1
72SMFO	DATA/VIDEO NODE TO HUB			1*			1*	
12SMFO	CCTV CAMERA TO VIDEO DISTRIBUTION		1#			1#		1&
	INNERDUCT		1 1/4"	1 1/4"		1 1/4"	1 1/4"	
	CONDUIT SIZE	4"			4"			2"

ALL CONDUITS AND CONDUCTORS ARE EXISTING UNLESS OTHERWISE NOTED.

+ : REMOVE Exist. 75P22 CABLES AND INSTALL NEW 48SMFO SPARE CABLES IN A NEW INNERDUCT.

* : REMOVE Exist. 72SMFO TRUNK CABLES AND INSTALL NEW 72SMFO TRUNK CABLES.

: REMOVE Exist. 12SMFO AND INSTALL NEW 72SMFO CABLES FOR DATA/VIDEO DISTRIBUTION.

& : INSTALL NEW 12SMFO CABLES.

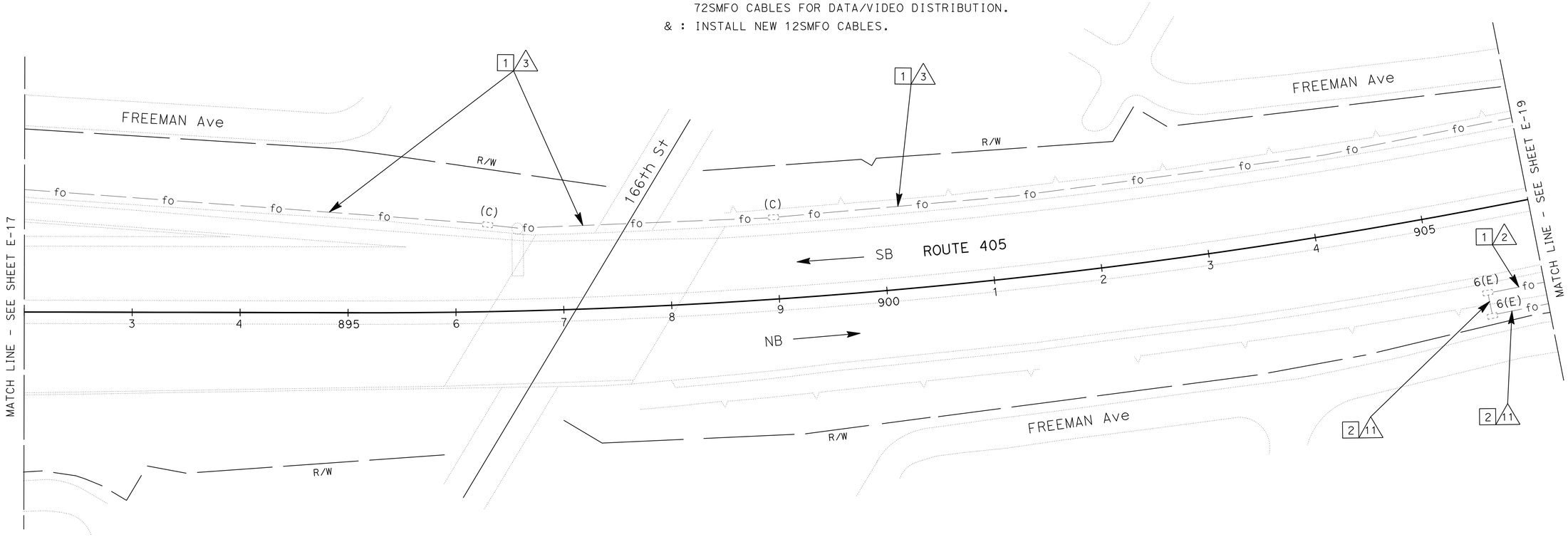

LEGEND: (THIS SHEET ONLY)

1 RC exist. 75P22 CABLES, 12SMFO AND 72SMFO CABLES.
INSTALL 2-72SMFO AND 1-48SMFO CABLES IN EXISTING 4" CONDUIT.
DISCONNECT/REMOVE CABLES ONLY AFTER TESTING ALL INSTALLED FACILITIES, VERIFYING THE INSTALLATION IS OPERATIONAL AND APPROVED BY THE ENGINNER.

2 RC exist. 6P22 CABLES. INSTALL NEW 12 SMFO CABLES IN EXISTING 2" CONDUIT.

MODIFY COMMUNICATION SYSTEM

SCALE: 1" = 50'

E-18

APPROVED FOR ELECTRICAL WORK ONLY

STATE OF CALIFORNIA - DEPARTMENT OF TRANSPORTATION
Caltrans OFFICE OF ITS

FUNCTIONAL SUPERVISOR: JACQUELINE C. TAN
CALCULATED-DESIGNED BY: HENRY H. TRINH
CHECKED BY: JACQUELINE C. TAN
REVISED BY: HT
DATE REVISED: 05/15

LAST REVISION DATE PLOTTED => 06-OCT-2015
05-06-15 TIME PLOTTED => 08:50

Dist	COUNTY	ROUTE	POST MILES TOTAL PROJECT	SHEET No.	TOTAL SHEETS
07	LA	405	R12.6/R21.2	206	288

REGISTERED ELECTRICAL ENGINEER 4/21/15 DATE

6-15-15
PLANS APPROVAL DATE

REGISTERED PROFESSIONAL ENGINEER JACQUELINE C. TAN No. E015611 Exp. 12/31/15 ELECTRICAL STATE OF CALIFORNIA

THE STATE OF CALIFORNIA OR ITS OFFICERS OR AGENTS SHALL NOT BE RESPONSIBLE FOR THE ACCURACY OR COMPLETENESS OF SCANNED COPIES OF THIS PLAN SHEET.

NOTES: (THIS SHEET ONLY)

1. FOR ACCURATE RIGHT OF WAY DATA, CONTACT RIGHT OF WAY ENGINEERING AT THE DISTRICT OFFICE.
2. FOR LEGEND, ABBREVIATIONS AND NOTES SEE SHEET E-1.

CONDUCTOR SCHEDULE

CONDUCTOR TYPE	FUNCTION	RUN 2			RUN 3			RUN 5			RUN 11	RUN 12
75P22 CABLE	COMMUNICATION DATA	1+			1+			1+				
6P22 CABLE	CONTROLLER DATA				1			3			1	2
72SMFO	DATA/VIDEO NODE TO HUB			1*			1*			1*		
12SMFO	CCTV CAMERA TO VIDEO DISTRIBUTION		1#			1#			1#		1&	1&
	INNERDUCT		1¼"	1¼"		1¼"	1¼"		1¼"	1¼"		
	CONDUIT SIZE	4"			4"			4"			2"	2"

ALL CONDUITS AND CONDUCTORS ARE EXISTING UNLESS OTHERWISE NOTED.

+ : REMOVE Exist. 75P22 CABLES AND INSTALL NEW 48SMFO SPARE CABLES IN A NEW INNERDUCT.

* : REMOVE Exist. 72SMFO TRUNK CABLES AND INSTALL NEW 72SMFO TRUNK CABLES.

: REMOVE Exist. 12SMFO AND INSTALL NEW 72SMFO CABLES FOR DATA/VIDEO DISTRIBUTION.

& : INSTALL NEW 12SMFO CABLES.

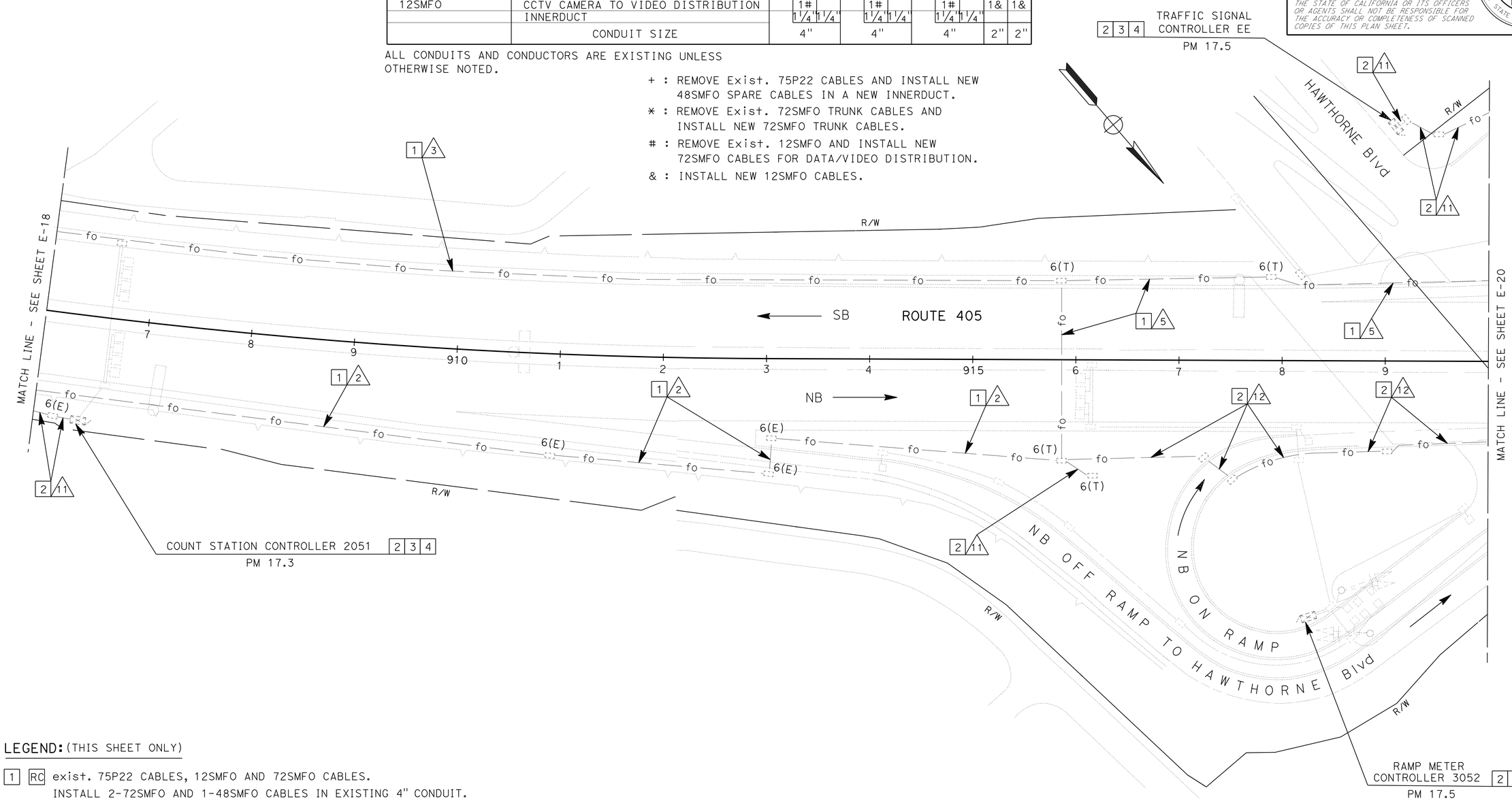

LEGEND: (THIS SHEET ONLY)

1 RC exist. 75P22 CABLES, 12SMFO AND 72SMFO CABLES.
INSTALL 2-72SMFO AND 1-48SMFO CABLES IN EXISTING 4" CONDUIT.
DISCONNECT/REMOVE CABLES ONLY AFTER TESTING ALL INSTALLED FACILITIES, VERIFYING THE INSTALLATION IS OPERATIONAL AND APPROVED BY THE ENGINNER.

2 RC exist. 6P22 CABLES. INSTALL NEW 12SMFO B/O CABLES AND TERMINATE IN CONTROLLER CABINET.

3 INSTALL TYPE 1 SWITCH WITH 2 SFP-LX MODULES, ETHERNET CARD AND A 12SMFO FDU INSIDE A MODEL 334 CONTROLLER CABINET.

4 INSTALL DEPARTMENT-FURNISHED 2070 CONTROLLER ASSEMBLY.

MODIFY COMMUNICATION SYSTEM

SCALE: 1" = 50'

APPROVED FOR ELECTRICAL WORK ONLY

E-19

STATE OF CALIFORNIA - DEPARTMENT OF TRANSPORTATION
Caltrans OFFICE OF ITS

FUNCTIONAL SUPERVISOR: JACQUELINE C. TAN
CALCULATED-DESIGNED BY: HENRY H. TRINH
CHECKED BY: JACQUELINE C. TAN
REVISED BY: HT
DATE REVISED: 05/15

LAST REVISION 05-06-15 | DATE PLOTTED => 06-OCT-2015 | TIME PLOTTED => 08:50

Dist	COUNTY	ROUTE	POST MILES TOTAL PROJECT	SHEET No.	TOTAL SHEETS
07	LA	405	R12.6/R21.2	207	288

Jacqueline C Tan 4/21/15
REGISTERED ELECTRICAL ENGINEER DATE

6-15-15
PLANS APPROVAL DATE

REGISTERED PROFESSIONAL ENGINEER JACQUELINE C. TAN No.E015611 Exp.12/31/15 ELECTRICAL STATE OF CALIFORNIA

THE STATE OF CALIFORNIA OR ITS OFFICERS OR AGENTS SHALL NOT BE RESPONSIBLE FOR THE ACCURACY OR COMPLETENESS OF SCANNED COPIES OF THIS PLAN SHEET.

NOTES: (THIS SHEET ONLY)

1. FOR ACCURATE RIGHT OF WAY DATA, CONTACT RIGHT OF WAY ENGINEERING AT THE DISTRICT OFFICE.
2. FOR LEGEND, ABBREVIATIONS AND NOTES SEE SHEET E-1.

LEGEND: (THIS SHEET ONLY)

[1] [RC] exist. 75P22 CABLES, 12SMFO AND 72SMFO CABLES. INSTALL 2-72SMFO AND 1-48SMFO CABLES IN EXISTING 4" CONDUIT. DISCONNECT/REMOVE CABLES ONLY AFTER TESTING ALL INSTALLED FACILITIES, VERIFYING THE INSTALLATION IS OPERATIONAL AND APPROVED BY THE ENGINNER.

[2] [RC] exist. 6P22 CABLES. INSTALL NEW 12SMFO B/O CABLES AND TERMINATE IN CONTROLLER CABINET.

[3] INSTALL TYPE 1 SWITCH WITH 2 SFP-LX MODULES, VIDEO ENCODER, CAT-5E CABLES AND A 12SMFO FDU IN exist. MODEL 334 CCTV CONTROLLER CABINET.

[4] INSTALL TYPE 1 SWITCH WITH 2 SFP-LX MODULES, ETHERNET CARD AND A 12SMFO FDU INSIDE A MODEL 334 CONTROLLER CABINET.

[5] INSTALL DEPARTMENT-FURNISHED 2070 CONTROLLER ASSEMBLY.

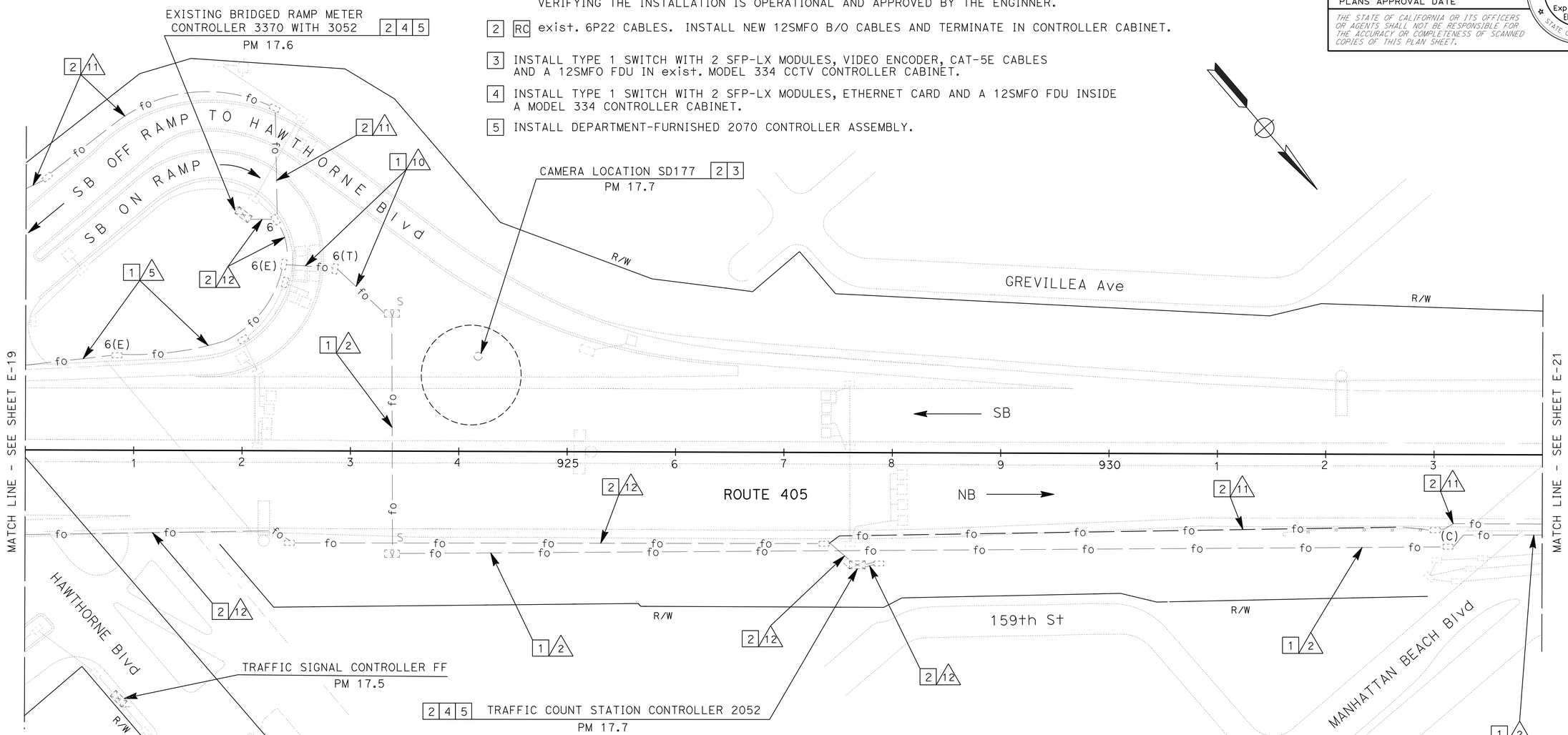

CONDUCTOR SCHEDULE

CONDUCTOR TYPE	FUNCTION	RUN [2]			RUN [5]			RUN [10]			[11]	[12]
75P22 CABLE	COMMUNICATION DATA	1+			1+			1+				
6P22 CABLE	CONTROLLER DATA				3			4			1	2
72SMFO	DATA/VIDEO NODE TO HUB			1*			1*			1*		
12SMFO	CCTV CAMERA TO VIDEO DISTRIBUTION		1#			1#			1#		1&	1&
	INNERDUCT		1 1/4"	1 1/4"		1 1/4"	1 1/4"		1 1/4"	1 1/4"		
	CONDUIT SIZE	4"			4"			4"			2"	2"

ALL CONDUITS AND CONDUCTORS ARE EXISTING UNLESS OTHERWISE NOTED.

+ : REMOVE Exist. 75P22 CABLES AND INSTALL NEW 48SMFO SPARE CABLES IN A NEW INNERDUCT.

* : REMOVE Exist. 72SMFO TRUNK CABLES AND INSTALL NEW 72SMFO TRUNK CABLES.

: REMOVE Exist. 12SMFO AND INSTALL NEW 72SMFO CABLES FOR DATA/VIDEO DISTRIBUTION.

& : INSTALL NEW 12SMFO CABLES.

MODIFY COMMUNICATION SYSTEM

SCALE: 1" = 50'

E-20

APPROVED FOR ELECTRICAL WORK ONLY

STATE OF CALIFORNIA - DEPARTMENT OF TRANSPORTATION
Caltrans® OFFICE OF ITS

FUNCTIONAL SUPERVISOR: JACQUELINE C. TAN
CALCULATED-DESIGNED BY: HENRY H. TRINH
CHECKED BY: JACQUELINE C. TAN
REVISED BY: HT
DATE REVISED: 05/15

LAST REVISION 05-06-15
DATE PLOTTED => 06-OCT-2015
TIME PLOTTED => 08:50

Dist	COUNTY	ROUTE	POST MILES TOTAL PROJECT	SHEET No.	TOTAL SHEETS
07	LA	405	R12.6/R21.2	208	288

Jacqueline C Tan 4/21/15
REGISTERED ELECTRICAL ENGINEER DATE

6-15-15
PLANS APPROVAL DATE

REGISTERED PROFESSIONAL ENGINEER JACQUELINE C. TAN No.E015611 Exp.12/31/15 ELECTRICAL STATE OF CALIFORNIA

THE STATE OF CALIFORNIA OR ITS OFFICERS OR AGENTS SHALL NOT BE RESPONSIBLE FOR THE ACCURACY OR COMPLETENESS OF SCANNED COPIES OF THIS PLAN SHEET.

NOTES: (THIS SHEET ONLY)

1. FOR ACCURATE RIGHT OF WAY DATA, CONTACT RIGHT OF WAY ENGINEERING AT THE DISTRICT OFFICE.
2. FOR LEGEND, ABBREVIATIONS AND NOTES SEE SHEET E-1.

CONDUCTOR SCHEDULE

CONDUCTOR TYPE	FUNCTION	RUN 2			RUN 11
75P22 CABLE	COMMUNICATION DATA	1+			
6P22 CABLE	CONTROLLER DATA				1
72SMFO	DATA/VIDEO NODE TO HUB			1*	
12SMFO	CCTV CAMERA TO VIDEO DISTRIBUTION		1#		1&
	INNERDUCT		1 1/4"	1 1/4"	
	CONDUIT SIZE	4"			2"

ALL CONDUITS AND CONDUCTORS ARE EXISTING UNLESS OTHERWISE NOTED.

+ : REMOVE Exist. 75P22 CABLES AND INSTALL NEW 48SMFO SPARE CABLES IN A NEW INNERDUCT.

* : REMOVE Exist. 72SMFO TRUNK CABLES AND INSTALL NEW 72SMFO TRUNK CABLES.

: REMOVE Exist. 12SMFO AND INSTALL NEW 72SMFO CABLES FOR DATA/VIDEO DISTRIBUTION.

& : INSTALL NEW 12SMFO CABLES.

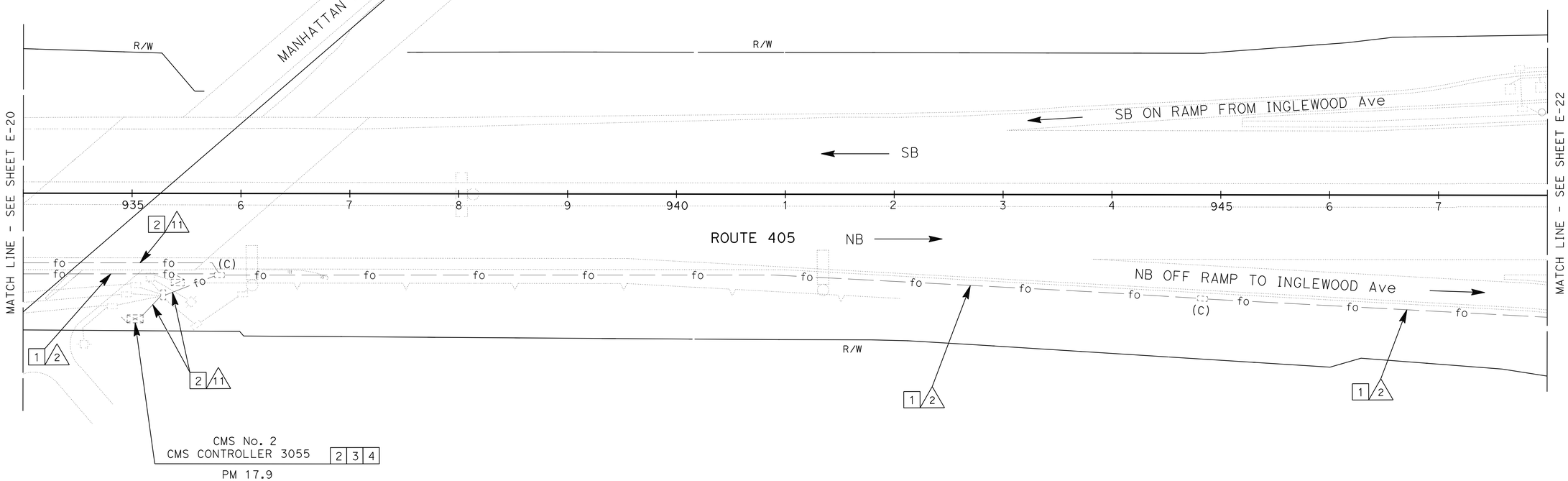

LEGEND: (THIS SHEET ONLY)

1 RC exist. 75P22 CABLES, 12SMFO AND 72SMFO CABLES.
INSTALL 2-72SMFO AND 1-48SMFO CABLES IN EXISTING 4" CONDUIT.
DISCONNECT/REMOVE CABLES ONLY AFTER TESTING ALL INSTALLED FACILITIES, VERIFYING THE INSTALLATION IS OPERATIONAL AND APPROVED BY THE ENGINNER.

2 RC exist. 6P22 CABLES. INSTALL NEW 12 SMFO CABLES AND TERMINATE IN CONTROLLER CABINET.

3 INSTALL TYPE 1 SWITCH WITH 2 SFP-LX MODULES, ETHERNET CARD AND A 12SMFO FDU INSIDE A MODEL 334 CONTROLLER CABINET.

4 INSTALL DEPARTMENT-FURNISHED 2070 CONTROLLER ASSEMBLY.

MODIFY COMMUNICATION SYSTEM

SCALE: 1" = 50'

E-21

APPROVED FOR ELECTRICAL WORK ONLY

STATE OF CALIFORNIA - DEPARTMENT OF TRANSPORTATION
Caltrans OFFICE OF ITS

FUNCTIONAL SUPERVISOR: JACQUELINE C. TAN

CALCULATED-DESIGNED BY: HENRY H. TRINH
CHECKED BY: JACQUELINE C. TAN

REVISED BY: HT
DATE REVISED: 05/15

LAST REVISION 05-06-15 | DATE PLOTTED => 06-OCT-2015 | TIME PLOTTED => 08:50

Dist	COUNTY	ROUTE	POST MILES TOTAL PROJECT	SHEET No.	TOTAL SHEETS
07	LA	405	R12.6/R21.2	209	288

REGISTERED ELECTRICAL ENGINEER — DATE 4/21/15

PLANS APPROVAL DATE 6-15-15

REGISTERED PROFESSIONAL ENGINEER — JACQUELINE C. TAN No. E015611 Exp. 12/31/15 ELECTRICAL — STATE OF CALIFORNIA

THE STATE OF CALIFORNIA OR ITS OFFICERS OR AGENTS SHALL NOT BE RESPONSIBLE FOR THE ACCURACY OR COMPLETENESS OF SCANNED COPIES OF THIS PLAN SHEET.

CONDUCTOR SCHEDULE

CONDUCTOR TYPE	FUNCTION	RUN 2			RUN 3			RUN 5		N	11
75P22 CABLE	COMMUNICATION DATA	1+			1+						
6P22 CABLE	CONTROLLER DATA				1						1
48SMFO	SPARE								1		
72SMFO	DATA/VIDEO NODE TO HUB			1*			1*	1		1	
12SMFO	CCTV CAMERA TO VIDEO DISTRIBUTION		1#			1#					1&
	INNERDUCT		1 1/4"	1 1/4"		1 1/4"	1 1/4"		1 1/4"	1 1/4"	
	CONDUIT SIZE	4"			4"			4"			2"

ALL CONDUITS AND CONDUCTORS ARE EXISTING UNLESS OTHERWISE NOTED.

+ : REMOVE Exist. 75P22 CABLES AND INSTALL NEW 48SMFO SPARE CABLES IN A NEW INNERDUCT.

* : REMOVE Exist. 72SMFO TRUNK CABLES AND INSTALL NEW 72SMFO TRUNK CABLES.

: REMOVE Exist. 12SMFO AND INSTALL NEW 72SMFO CABLES FOR DATA/VIDEO DISTRIBUTION.

& : INSTALL NEW 12SMFO CABLES.

N : NEW 4" CONDUIT WITH TWO (2) NEW 72SMFO AND ONE (1) NEW 1-48SMFO CABLES.

LEGEND: (THIS SHEET ONLY)

1 RC exist. 75P22 CABLES, 12SMFO AND 72SMFO CABLES. INSTALL 2-72SMFO AND 1-48SMFO CABLES IN EXISTING 4" CONDUIT. DISCONNECT/REMOVE CABLES ONLY AFTER TESTING ALL INSTALLED FACILITIES, VERIFYING THE INSTALLATION IS OPERATIONAL AND APPROVED BY THE ENGINNER.

2 RC exist. 6P22 CABLES. INSTALL NEW 12SMFO B/O CABLES AND TERMINATE IN CONTROLLER CABINET.

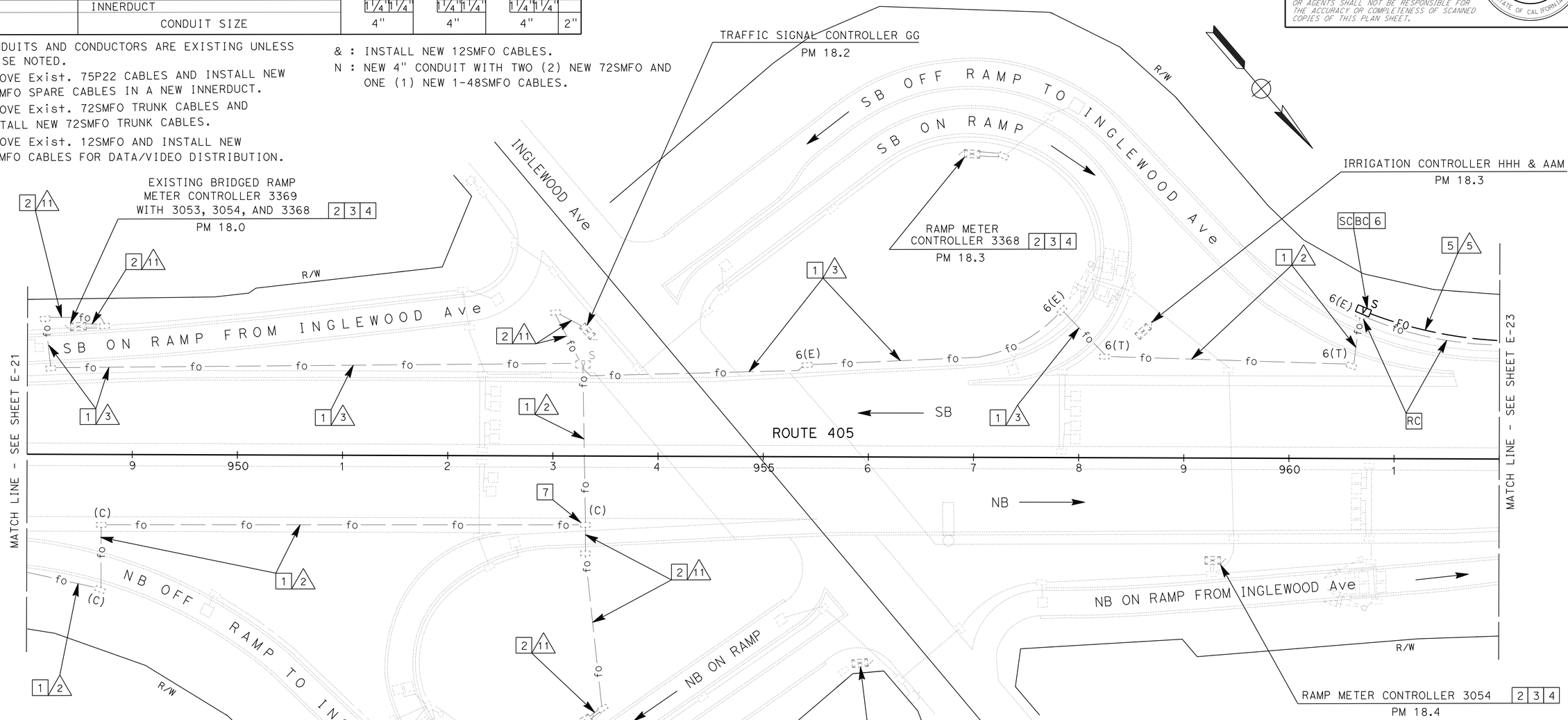

NOTES: (THIS SHEET ONLY)

1. FOR ACCURATE RIGHT OF WAY DATA, CONTACT RIGHT OF WAY ENGINEERING AT THE DISTRICT OFFICE.
2. FOR LEGEND, ABBREVIATIONS AND NOTES SEE SHEET E-1.

LEGEND: (THIS SHEET ONLY)-CONT.

3 INSTALL TYPE 1 SWITCH WITH 2 SFP-LX MODULES, ETHERNET CARD AND A 12SMFO FDU INSIDE MODEL 334 CONTROLLER CABINET.

4 INSTALL DEPARTMENT-FURNISHED 2070 CONTROLLER ASSEMBLY.

5 INSTALL NEW 4" CONDUIT IN NEW SHOUDER PAVEMENT. SEE SHEET E-53 FOR DETAILS.

LEGEND: (THIS SHEET ONLY)-CONT.

6 INSTALL NEW SPLICE VAULT WITH FIBER OPTIC SPLICE ENCLOSURE IN NEW SHOUDER PAVEMENT. SEE SHEET E-54 FOR SPLICE VAULT INSTALLATION DETAILS.

7 RC TWISTED PAIR SPLICE CLOURE. INSTALL FIBER OPTIC SPLICE ENCLOSURE.

MODIFY COMMUNICATION SYSTEM

SCALE: 1" = 50'

E-22

APPROVED FOR ELECTRICAL WORK ONLY

REVISED BY	DATE REVISED
HT	05/15

HENRY H. TRINH — CALCULATED-DESIGNED BY
JACQUELINE C. TAN — CHECKED BY
JACQUELINE C. TAN — FUNCTIONAL SUPERVISOR

STATE OF CALIFORNIA - DEPARTMENT OF TRANSPORTATION
Caltrans OFFICE OF ITS

LAST REVISION 05-06-15 | DATE PLOTTED => 06-OCT-2015 | TIME PLOTTED => 08:50

Dist	COUNTY	ROUTE	POST MILES TOTAL PROJECT	SHEET No.	TOTAL SHEETS
07	LA	405	R12.6/R21.2	210	288

Jacqueline C Tan 4/21/15
REGISTERED ELECTRICAL ENGINEER DATE

6-15-15
PLANS APPROVAL DATE

REGISTERED PROFESSIONAL ENGINEER JACQUELINE C. TAN No.E015611 Exp.12/31/15 ELECTRICAL STATE OF CALIFORNIA

THE STATE OF CALIFORNIA OR ITS OFFICERS OR AGENTS SHALL NOT BE RESPONSIBLE FOR THE ACCURACY OR COMPLETENESS OF SCANNED COPIES OF THIS PLAN SHEET.

NOTES: (THIS SHEET ONLY)

1. FOR ACCURATE RIGHT OF WAY DATA, CONTACT RIGHT OF WAY ENGINEERING AT THE DISTRICT OFFICE.
2. FOR LEGEND, ABBREVIATIONS AND NOTES SEE SHEET E-1.

CONDUCTOR SCHEDULE

CONDUCTOR TYPE	FUNCTION	RUN 4			RUN 5 N			RUN 12
75P22 CABLE	COMMUNICATION DATA	1+						
6P22 CABLE	CONTROLLER DATA	2						2
48SMFO	SPARE					1		
72SMFO	DATA/VIDEO NODE TO HUB			1*	1		1	
12SMFO	CCTV CAMERA TO VIDEO DISTRIBUTION		1#					1&
	INNERDUCT		1¼"	1¼"		1¼"	1¼"	
	CONDUIT SIZE	4"			4"			2"

ALL CONDUITS AND CONDUCTORS ARE EXISTING UNLESS OTHERWISE NOTED.

+ : REMOVE Exist. 75P22 CABLES AND INSTALL NEW 48SMFO SPARE CABLES IN A NEW INNERDUCT.

* : REMOVE Exist. 72SMFO TRUNK CABLES AND INSTALL NEW 72SMFO TRUNK CABLES.

: REMOVE Exist. 12SMFO AND INSTALL NEW 72SMFO CABLES FOR DATA/VIDEO DISTRIBUTION.

& : INSTALL NEW 12SMFO CABLES.

N : NEW 4" CONDUIT WITH TWO (2) NEW 72SMFO AND ONE (1) NEW 1-48SMFO CABLES.

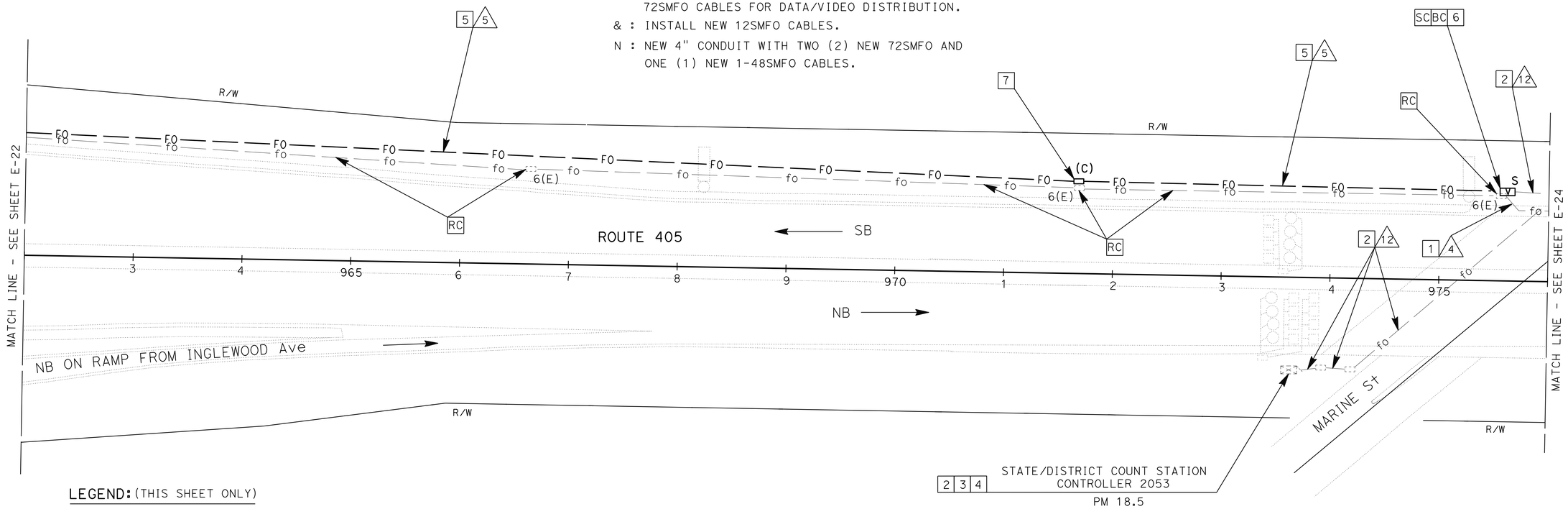

LEGEND: (THIS SHEET ONLY)

1 RC exist. 75P22 CABLES, 12SMFO AND 72SMFO CABLES.
INSTALL 2-72SMFO AND 1-48SMFO CABLES IN EXISTING 4" CONDUIT.
DISCONNECT/REMOVE CABLES ONLY AFTER TESTING ALL INSTALLED FACILITIES, VERIFYING THE INSTALLATION IS OPERATIONAL AND APPROVED BY THE ENGINNER.

2 RC exist. 6P22 CABLES. INSTALL NEW 12 SMFO CABLES AND TERMINATE IN CONTROLLER CABINET.

3 INSTALL TYPE 1 SWITCH WITH 2 SFP-LX MODULES, ETHERNET CARD AND A 12SMFO FDU INSIDE A MODEL 334 CONTROLLER CABINET.

4 INSTALL DEPARTMENT-FURNISHED 2070 CONTROLLER ASSEMBLY.

5 INSTALL NEW 4" CONDUIT IN NEW SHOULDER PAVEMENT. SEE SHEET E-53 FOR DETAILS.

6 INSTALL NEW SPLICE VAULT WITH FIBER OPTIC SPLICE ENCLOSURE IN NEW SHOULDER PAVEMENT. SEE SHEET E-54 FOR SPLICE VAULT INSTALLATION DETAILS.

7 INSTALL NEW COMMUNICATION PULL BOX. SEE SHEET E-55 FOR COMMUNICATION PULL BOX INSTALLATION DETAILS.

MODIFY COMMUNICATION SYSTEM

SCALE: 1" = 50'

E-23

APPROVED FOR ELECTRICAL WORK ONLY

REVISED BY	DATE REVISED
HT	05/15

HENRY H. TRINH — CALCULATED-DESIGNED BY
JACQUELINE C. TAN — CHECKED BY
JACQUELINE C. TAN — FUNCTIONAL SUPERVISOR

STATE OF CALIFORNIA - DEPARTMENT OF TRANSPORTATION
Caltrans
OFFICE OF ITS

LAST REVISION 05-06-15 | DATE PLOTTED => 06-OCT-2015 | TIME PLOTTED => 08:50

Dist	COUNTY	ROUTE	POST MILES TOTAL PROJECT	SHEET No.	TOTAL SHEETS
07	LA	405	R12.6/R21.2	211	288

REGISTERED ELECTRICAL ENGINEER 4/21/15 DATE

6-15-15
PLANS APPROVAL DATE

REGISTERED PROFESSIONAL ENGINEER JACQUELINE C. TAN No.E015611 Exp.12/31/15 ELECTRICAL STATE OF CALIFORNIA

THE STATE OF CALIFORNIA OR ITS OFFICERS OR AGENTS SHALL NOT BE RESPONSIBLE FOR THE ACCURACY OR COMPLETENESS OF SCANNED COPIES OF THIS PLAN SHEET.

NOTES: (THIS SHEET ONLY)

1. FOR ACCURATE RIGHT OF WAY DATA, CONTACT RIGHT OF WAY ENGINEERING AT THE DISTRICT OFFICE.
2. FOR LEGEND, ABBREVIATIONS AND NOTES SEE SHEET E-1.

CONDUCTOR SCHEDULE

CONDUCTOR TYPE	FUNCTION	RUN 4			RUN 5			RUN 12
75P22 CABLE	COMMUNICATION DATA	1+			1+			
6P22 CABLE	CONTROLLER DATA	2			3			2
72SMFO	DATA/VIDEO NODE TO HUB			1*			1*	
12SMFO	CCTV CAMERA TO VIDEO DISTRIBUTION		1#			1#		1&
	INNERDUCT		1 1/4"	1 1/4"		1 1/4"	1 1/4"	
	CONDUIT SIZE	4"			4"			2"

ALL CONDUITS AND CONDUCTORS ARE EXISTING UNLESS OTHERWISE NOTED.

+ : REMOVE Exist. 75P22 CABLES AND INSTALL NEW 48SMFO SPARE CABLES IN A NEW INNERDUCT.

* : REMOVE Exist. 72SMFO TRUNK CABLES AND INSTALL NEW 72SMFO TRUNK CABLES.

: REMOVE Exist. 12SMFO AND INSTALL NEW 72SMFO CABLES FOR DATA/VIDEO DISTRIBUTION.

& : INSTALL NEW 12SMFO CABLES.

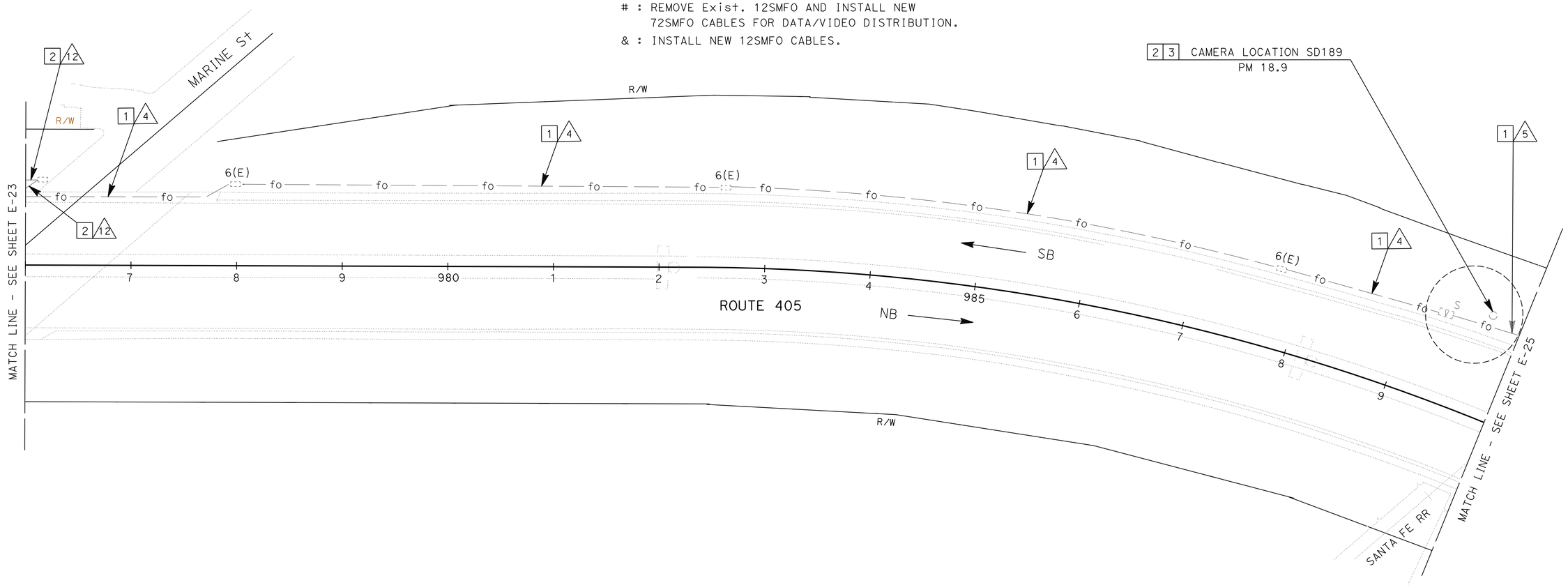

LEGEND: (THIS SHEET ONLY)

1 RC exist. 75P22 CABLES, 12SMFO AND 72SMFO CABLES.
INSTALL 2-72SMFO AND 1-48SMFO CABLES IN EXISTING 4" CONDUIT.
DISCONNECT/REMOVE CABLES ONLY AFTER TESTING ALL INSTALLED FACILITIES, VERIFYING THE INSTALLATION IS OPERATIONAL AND APPROVED BY THE ENGINNER.

2 RC exist. 6P22 CABLES. INSTALL NEW 12 SMFO CABLES.

3 INSTALL TYPE 1 SWITCH WITH 2 SFP-LX MODULES, VIDEO ENCODER, CAT-5E CABLES AND A 12SMFO FDU IN exist. MODEL 334 CCTV CONTROLLER CABINET.

MODIFY COMMUNICATION SYSTEM

SCALE: 1" = 50'

E-24

APPROVED FOR ELECTRICAL WORK ONLY

REVISED BY	HT
DATE REVISED	05/15
HENRY H. TRINH	
JACQUELINE C. TAN	
CALCULATED-DESIGNED BY	
CHECKED BY	
FUNCTIONAL SUPERVISOR	
JACQUELINE C. TAN	

STATE OF CALIFORNIA - DEPARTMENT OF TRANSPORTATION
Caltrans
OFFICE OF ITS

LAST REVISION 05-06-15 | DATE PLOTTED => 06-OCT-2015 | TIME PLOTTED => 08:50

Dist	COUNTY	ROUTE	POST MILES TOTAL PROJECT	SHEET No.	TOTAL SHEETS
07	LA	405	R12.6/R21.2	212	288

REGISTERED ELECTRICAL ENGINEER DATE 4/21/15

6-15-15
PLANS APPROVAL DATE

REGISTERED PROFESSIONAL ENGINEER JACQUELINE C. TAN No.E015611 Exp.12/31/15 ELECTRICAL STATE OF CALIFORNIA

THE STATE OF CALIFORNIA OR ITS OFFICERS OR AGENTS SHALL NOT BE RESPONSIBLE FOR THE ACCURACY OR COMPLETENESS OF SCANNED COPIES OF THIS PLAN SHEET.

NOTES: (THIS SHEET ONLY)

1. FOR ACCURATE RIGHT OF WAY DATA, CONTACT RIGHT OF WAY ENGINEERING AT THE DISTRICT OFFICE.
2. FOR LEGEND, ABBREVIATIONS AND NOTES SEE SHEET E-1.

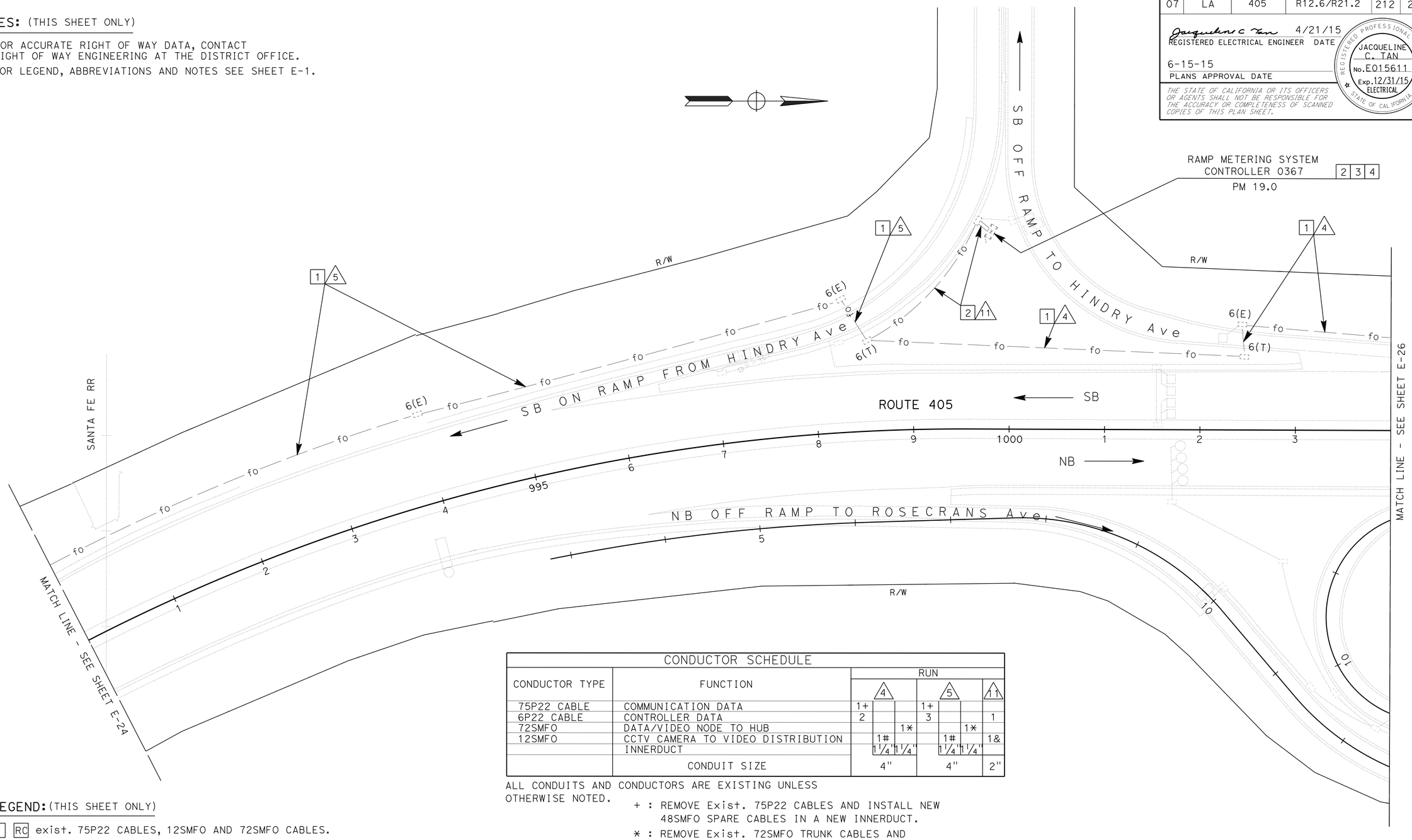

CONDUCTOR SCHEDULE							
CONDUCTOR TYPE	FUNCTION	RUN					
		4			5		11
75P22 CABLE	COMMUNICATION DATA	1+			1+		
6P22 CABLE	CONTROLLER DATA	2			3		1
72SMFO	DATA/VIDEO NODE TO HUB			1*			1*
12SMFO	CCTV CAMERA TO VIDEO DISTRIBUTION		1#			1#	1&
	INNERDUCT		1 1/4"	1 1/4"		1 1/4"	1 1/4"
	CONDUIT SIZE	4"			4"		2"

ALL CONDUITS AND CONDUCTORS ARE EXISTING UNLESS OTHERWISE NOTED.

+ : REMOVE Exist. 75P22 CABLES AND INSTALL NEW 48SMFO SPARE CABLES IN A NEW INNERDUCT.

* : REMOVE Exist. 72SMFO TRUNK CABLES AND INSTALL NEW 72SMFO TRUNK CABLES.

: REMOVE Exist. 12SMFO AND INSTALL NEW 72SMFO CABLES FOR DATA/VIDEO DISTRIBUTION.

& : INSTALL NEW 12SMFO CABLES.

LEGEND: (THIS SHEET ONLY)

1 RC exist. 75P22 CABLES, 12SMFO AND 72SMFO CABLES. INSTALL 2-72SMFO AND 1-48SMFO CABLES IN EXISTING 4" CONDUIT. DISCONNECT/REMOVE CABLES ONLY AFTER TESTING ALL INSTALLED FACILITIES, VERIFYING THE INSTALLATION IS OPERATIONAL AND APPROVED BY THE ENGINNER.

2 RC exist. 6P22 CABLES. INSTALL NEW 12 SMFO CABLES AND TERMINATE IN CONTROLLER CABINET.

3 INSTALL TYPE 1 SWITCH WITH 2 SFP-LX MODULES, ETHERNET CARD AND A 12SMFO FDU INSIDE A MODEL 334 CONTROLLER CABINET.

4 INSTALL DEPARTMENT-FURNISHED 2070 CONTROLLER ASSEMBLY.

MODIFY COMMUNICATION SYSTEM

SCALE: 1" = 50'

E-25

APPROVED FOR ELECTRICAL WORK ONLY

STATE OF CALIFORNIA - DEPARTMENT OF TRANSPORTATION
Caltrans® OFFICE OF ITS

FUNCTIONAL SUPERVISOR: JACQUELINE C. TAN
CALCULATED-DESIGNED BY: HENRY H. TRINH
CHECKED BY: JACQUELINE C. TAN
REVISED BY: HT
DATE REVISED: 05/15

LAST REVISION 05-06-15
DATE PLOTTED => 06-OCT-2015
TIME PLOTTED => 08:50

Dist	COUNTY	ROUTE	POST MILES TOTAL PROJECT	SHEET No.	TOTAL SHEETS
07	LA	405	R12.6/R21.2	213	288

Jacqueline C Tan 4/21/15
REGISTERED ELECTRICAL ENGINEER DATE

6-15-15
PLANS APPROVAL DATE

REGISTERED PROFESSIONAL ENGINEER JACQUELINE C. TAN No.E015611 Exp.12/31/15 ELECTRICAL STATE OF CALIFORNIA

THE STATE OF CALIFORNIA OR ITS OFFICERS OR AGENTS SHALL NOT BE RESPONSIBLE FOR THE ACCURACY OR COMPLETENESS OF SCANNED COPIES OF THIS PLAN SHEET.

NOTES: (THIS SHEET ONLY)

1. FOR ACCURATE RIGHT OF WAY DATA, CONTACT RIGHT OF WAY ENGINEERING AT THE DISTRICT OFFICE.
2. FOR LEGEND, ABBREVIATIONS AND NOTES SEE SHEET E-1.

CONDUCTOR SCHEDULE

CONDUCTOR TYPE	FUNCTION	RUN 2			RUN 4			RUN 11	RUN 12
75P22 CABLE	COMMUNICATION DATA	1+			1+				
6P22 CABLE	CONTROLLER DATA				2			1	2
72SMFO	DATA/VIDEO NODE TO HUB			1*			1*		
12SMFO	CCTV CAMERA TO VIDEO DISTRIBUTION		1#			1#		1&	1&
	INNERDUCT		1 1/4"	1 1/4"		1 1/4"	1 1/4"		
	CONDUIT SIZE		4"			4"		2"	2"

ALL CONDUITS AND CONDUCTORS ARE EXISTING UNLESS OTHERWISE NOTED.

\+ : REMOVE Exist. 75P22 CABLES AND INSTALL NEW 48SMFO SPARE CABLES IN A NEW INNERDUCT.

* : REMOVE Exist. 72SMFO TRUNK CABLES AND INSTALL NEW 72SMFO TRUNK CABLES.

\# : REMOVE Exist. 12SMFO AND INSTALL NEW 72SMFO CABLES FOR DATA/VIDEO DISTRIBUTION.

& : INSTALL NEW 12SMFO CABLES.

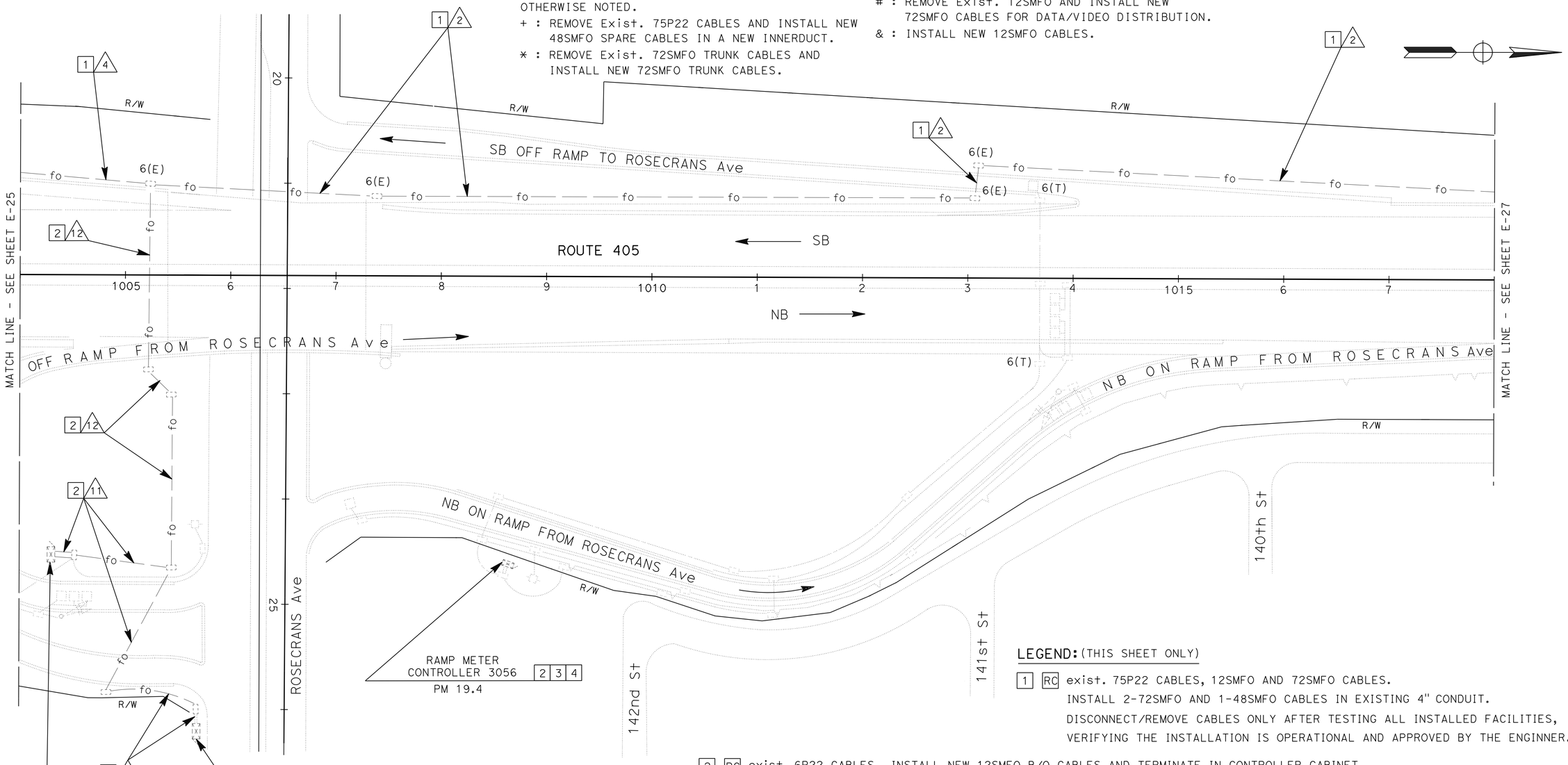

LEGEND: (THIS SHEET ONLY)

1 RC exist. 75P22 CABLES, 12SMFO AND 72SMFO CABLES. INSTALL 2-72SMFO AND 1-48SMFO CABLES IN EXISTING 4" CONDUIT. DISCONNECT/REMOVE CABLES ONLY AFTER TESTING ALL INSTALLED FACILITIES, VERIFYING THE INSTALLATION IS OPERATIONAL AND APPROVED BY THE ENGINNER.

2 RC exist. 6P22 CABLES. INSTALL NEW 12SMFO B/O CABLES AND TERMINATE IN CONTROLLER CABINET.

3 INSTALL TYPE 1 SWITCH WITH 2 SFP-LX MODULES, ETHERNET CARD AND A 12SMFO FDU INSIDE A MODEL 334 CONTROLLER CABINET.

4 INSTALL DEPARTMENT-FURNISHED 2070 CONTROLLER ASSEMBLY.

MODIFY COMMUNICATION SYSTEM

SCALE: 1" = 50'

E-26

APPROVED FOR ELECTRICAL WORK ONLY

STATE OF CALIFORNIA - DEPARTMENT OF TRANSPORTATION
Caltrans
OFFICE OF ITS

FUNCTIONAL SUPERVISOR: JACQUELINE C. TAN
CALCULATED-DESIGNED BY: HENRY H. TRINH
CHECKED BY: JACQUELINE C. TAN
REVISED BY: HT
DATE REVISED: 05/15

LAST REVISION 05-06-15 | DATE PLOTTED => 06-OCT-2015 | TIME PLOTTED => 08:50

Dist	COUNTY	ROUTE	POST MILES TOTAL PROJECT	SHEET No.	TOTAL SHEETS
07	LA	405	R12.6/R21.2	214	288

REGISTERED ELECTRICAL ENGINEER 4/21/15 DATE

6-15-15
PLANS APPROVAL DATE

REGISTERED PROFESSIONAL ENGINEER JACQUELINE C. TAN No.E015611 Exp.12/31/15 ELECTRICAL STATE OF CALIFORNIA

THE STATE OF CALIFORNIA OR ITS OFFICERS OR AGENTS SHALL NOT BE RESPONSIBLE FOR THE ACCURACY OR COMPLETENESS OF SCANNED COPIES OF THIS PLAN SHEET.

NOTES: (THIS SHEET ONLY)

1. FOR ACCURATE RIGHT OF WAY DATA, CONTACT RIGHT OF WAY ENGINEERING AT THE DISTRICT OFFICE.
2. FOR LEGEND, ABBREVIATIONS AND NOTES SEE SHEET E-1.

CONDUCTOR SCHEDULE

CONDUCTOR TYPE	FUNCTION	RUN 2			RUN 4			RUN 11	RUN 12
75P22 CABLE	COMMUNICATION DATA	1+			1+				
6P22 CABLE	CONTROLLER DATA				2			1	2
72SMFO	DATA/VIDEO NODE TO HUB			1*			1*		
12SMFO	CCTV CAMERA TO VIDEO DISTRIBUTION		1#			1#		1&	1&
	INNERDUCT		1 1/4"	1 1/4"		1 1/4"	1 1/4"		
	CONDUIT SIZE		4"			4"		2"	2"

ALL CONDUITS AND CONDUCTORS ARE EXISTING UNLESS OTHERWISE NOTED.

+ : REMOVE Exist. 75P22 CABLES AND INSTALL NEW 48SMFO SPARE CABLES IN A NEW INNERDUCT.

* : REMOVE Exist. 72SMFO TRUNK CABLES AND INSTALL NEW 72SMFO TRUNK CABLES.

: REMOVE Exist. 12SMFO AND INSTALL NEW 72SMFO CABLES FOR DATA/VIDEO DISTRIBUTION.

& : INSTALL NEW 12SMFO CABLES.

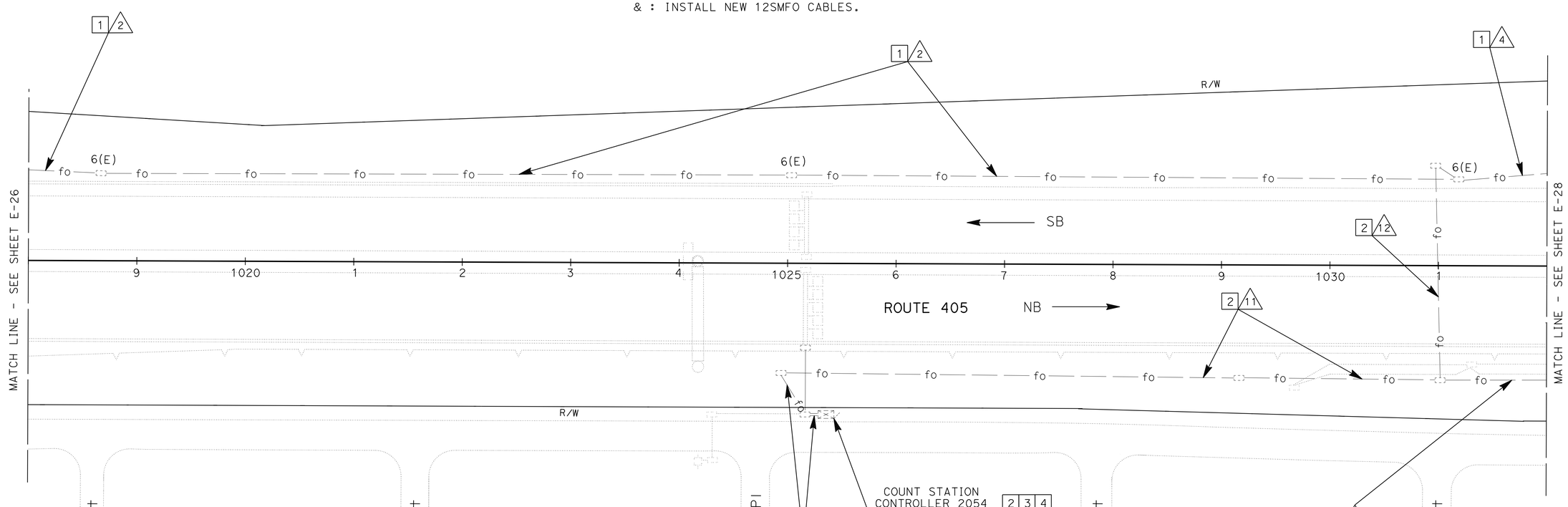

LEGEND: (THIS SHEET ONLY)

1 RC exist. 75P22 CABLES, 12SMFO AND 72SMFO CABLES.
INSTALL 2-72SMFO AND 1-48SMFO CABLES IN EXISTING 4" CONDUIT.
DISCONNECT/REMOVE CABLES ONLY AFTER TESTING ALL INSTALLED FACILITIES, VERIFYING THE INSTALLATION IS OPERATIONAL AND APPROVED BY THE ENGINNER.

2 RC exist. 6P22 CABLES. INSTALL NEW 12 SMFO CABLES AND TERMINATE IN CONTROLLER CABINET.

3 INSTALL TYPE 1 SWITCH WITH 2 SFP-LX MODULES, ETHERNET CARD AND A 12SMFO FDU INSIDE A MODEL 334 CONTROLLER CABINET.

4 INSTALL DEPARTMENT-FURNISHED 2070 CONTROLLER ASSEMBLY.

MODIFY COMMUNICATION SYSTEM

SCALE: 1" = 50'

E-27

APPROVED FOR ELECTRICAL WORK ONLY

STATE OF CALIFORNIA - DEPARTMENT OF TRANSPORTATION
Caltrans OFFICE OF ITS

FUNCTIONAL SUPERVISOR: JACQUELINE C. TAN
CALCULATED-DESIGNED BY: HENRY H. TRINH
CHECKED BY: JACQUELINE C. TAN
REVISED BY: HT
DATE REVISED: 05/15

LAST REVISION 05-06-15
DATE PLOTTED => 06-OCT-2015
TIME PLOTTED => 08:50

Dist	COUNTY	ROUTE	POST MILES TOTAL PROJECT	SHEET No.	TOTAL SHEETS
07	LA	405	R12.6/R21.2	215	288

REGISTERED ELECTRICAL ENGINEER 4/21/15 DATE

6-15-15
PLANS APPROVAL DATE

REGISTERED PROFESSIONAL ENGINEER JACQUELINE C. TAN No. E015611 Exp. 12/31/15 ELECTRICAL STATE OF CALIFORNIA

THE STATE OF CALIFORNIA OR ITS OFFICERS OR AGENTS SHALL NOT BE RESPONSIBLE FOR THE ACCURACY OR COMPLETENESS OF SCANNED COPIES OF THIS PLAN SHEET.

NOTES: (THIS SHEET ONLY)

1. FOR ACCURATE RIGHT OF WAY DATA, CONTACT RIGHT OF WAY ENGINEERING AT THE DISTRICT OFFICE.
2. FOR LEGEND, ABBREVIATIONS AND NOTES SEE SHEET E-1.

LEGEND: (THIS SHEET ONLY)

1 RC exist. 75P22 CABLES, 12SMFO AND 72SMFO CABLES.
INSTALL 2-72SMFO AND 1-48SMFO CABLES IN EXISTING 4" CONDUIT.
DISCONNECT/REMOVE CABLES ONLY AFTER TESTING ALL INSTALLED FACILITIES, VERIFYING THE INSTALLATION IS OPERATIONAL AND APPROVED BY THE ENGINNER.

2 RC exist. 6P22 CABLES. INSTALL NEW 12 SMFO CABLES AND TERMINATE IN CONTROLLER CABINET.

3 INSTALL TYPE 1 SWITCH WITH 2 SFP-LX MODULES, VIDEO ENCODER, CAT-5E CABLES AND A 12SMFO FDU IN exist. MODEL 334 CCTV CONTROLLER CABINET.

4 INSTALL TYPE 1 SWITCH WITH 2 SFP-LX MODULES, ETHERNET CARD AND A 12SMFO FDU INSIDE A MODEL 334 CONTROLLER CABINET.

CONDUCTOR SCHEDULE

CONDUCTOR TYPE	FUNCTION	RUN 2			RUN 4			RUN 11
75P22 CABLE	COMMUNICATION DATA	1+			1+			
6P22 CABLE	CONTROLLER DATA				2			1
72SMFO	DATA/VIDEO NODE TO HUB			1*			1*	
12SMFO	CCTV CAMERA TO VIDEO DISTRIBUTION		1#			1#		1&
	INNERDUCT		1 1/4"	1 1/4"		1 1/4"	1 1/4"	
	CONDUIT SIZE		4"			4"		2"

ALL CONDUITS AND CONDUCTORS ARE EXISTING UNLESS OTHERWISE NOTED.

+ : REMOVE Exist. 75P22 CABLES AND INSTALL NEW 48SMFO SPARE CABLES IN A NEW INNERDUCT.

* : REMOVE Exist. 72SMFO TRUNK CABLES AND INSTALL NEW 72SMFO TRUNK CABLES.

: REMOVE Exist. 12SMFO AND INSTALL NEW 72SMFO CABLES FOR DATA/VIDEO DISTRIBUTION.

& : INSTALL NEW 12SMFO CABLES.

LEGEND: (THIS SHEET ONLY)-CONT.

5 INSTALL DEPARTMENT-FURNISHED 2070 CONTROLLER ASSEMBLY.

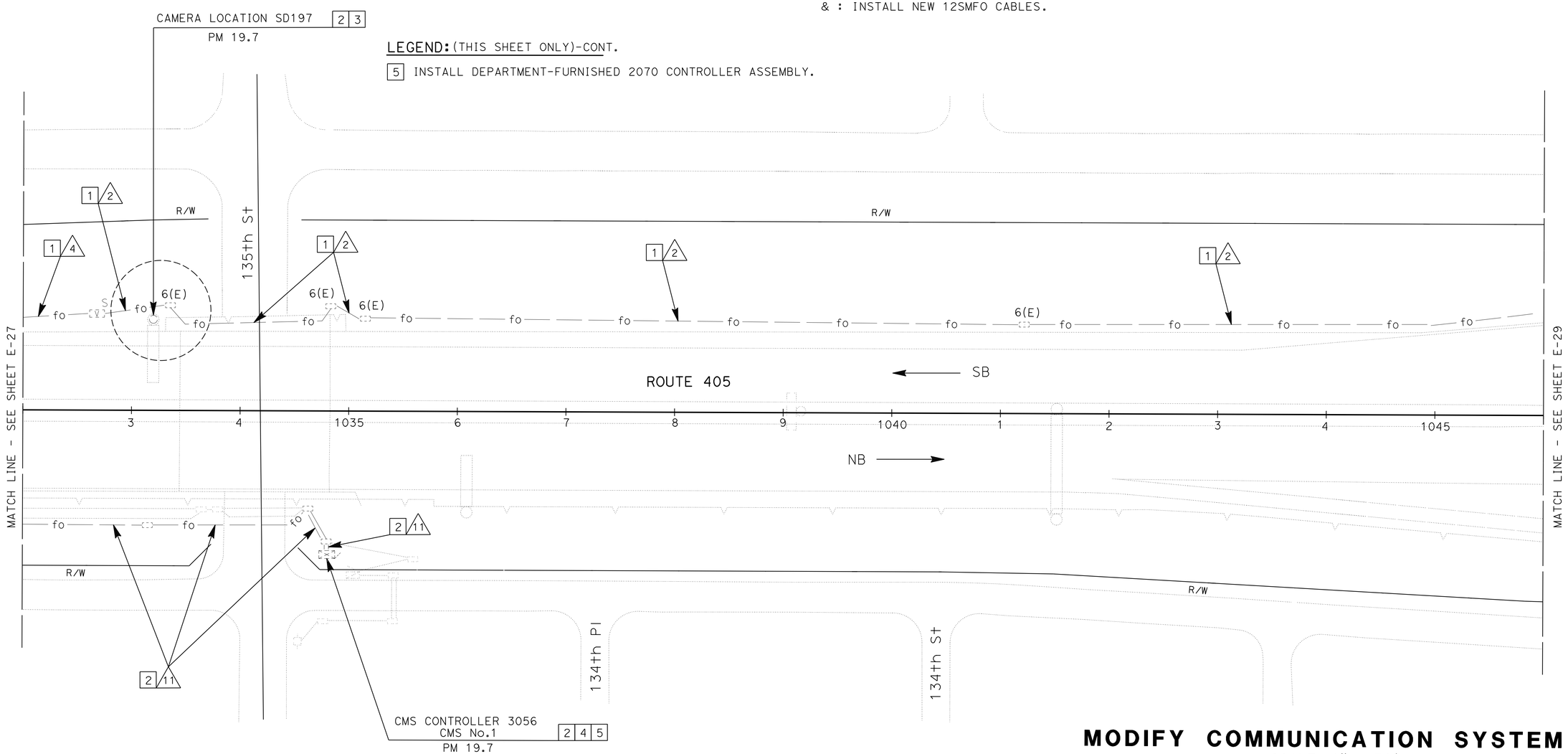

MODIFY COMMUNICATION SYSTEM

SCALE: 1" = 50'

E-28

APPROVED FOR ELECTRICAL WORK ONLY

STATE OF CALIFORNIA - DEPARTMENT OF TRANSPORTATION
Caltrans OFFICE OF ITS

FUNCTIONAL SUPERVISOR: JACQUELINE C. TAN
CALCULATED-DESIGNED BY: HENRY H. TRINH
CHECKED BY: JACQUELINE C. TAN
REVISED BY: HT
DATE REVISED: 05/15

LAST REVISION 05-06-15
DATE PLOTTED => 06-OCT-2015
TIME PLOTTED => 08:50

Dist	COUNTY	ROUTE	POST MILES TOTAL PROJECT	SHEET No.	TOTAL SHEETS
07	LA	405	R12.6/R21.2	216	288

REGISTERED ELECTRICAL ENGINEER — DATE 4/21/15

6-15-15
PLANS APPROVAL DATE

REGISTERED PROFESSIONAL ENGINEER — JACQUELINE C. TAN No. E015611 Exp. 12/31/15 ELECTRICAL — STATE OF CALIFORNIA

THE STATE OF CALIFORNIA OR ITS OFFICERS OR AGENTS SHALL NOT BE RESPONSIBLE FOR THE ACCURACY OR COMPLETENESS OF SCANNED COPIES OF THIS PLAN SHEET.

CONDUCTOR SCHEDULE

CONDUCTOR TYPE	FUNCTION	RUN 2			RUN 4			RUN 11	RUN 12	RUN 22			RUN 23		
75P22 CABLE	COMMUNICATION DATA	1+			1+					1+			1+		
6P22 CABLE	CONTROLLER DATA				2			1	2	3			4		
72SMFO	DATA/VIDEO NODE TO HUB			1*			1*					1*			1*
12SMFO	CCTV CAMERA TO VIDEO DISTRIBUTION		1#			1#		1&	1&		1#			1#	
	INNERDUCT		1¼"	1¼"		1¼"	1¼"				1¼"	1¼"		1¼"	1¼"
	CONDUIT SIZE	4"			4"			2"	2"	4"			4"		

ALL CONDUITS AND CONDUCTORS ARE EXISTING UNLESS OTHERWISE NOTED.

\+ : REMOVE Exist. 75P22 CABLES AND INSTALL NEW 48SMFO SPARE CABLES IN A NEW INNERDUCT.

* : REMOVE Exist. 72SMFO TRUNK CABLES AND INSTALL NEW 72SMFO TRUNK CABLES.

\# : REMOVE Exist. 12SMFO AND INSTALL NEW 72SMFO CABLES FOR DATA/VIDEO DISTRIBUTION.

& : INSTALL NEW 12SMFO CABLES.

NOTES: (THIS SHEET ONLY)

1. FOR ACCURATE RIGHT OF WAY DATA, CONTACT RIGHT OF WAY ENGINEERING AT THE DISTRICT OFFICE.
2. FOR LEGEND, ABBREVIATIONS AND NOTES SEE SHEET E-1.

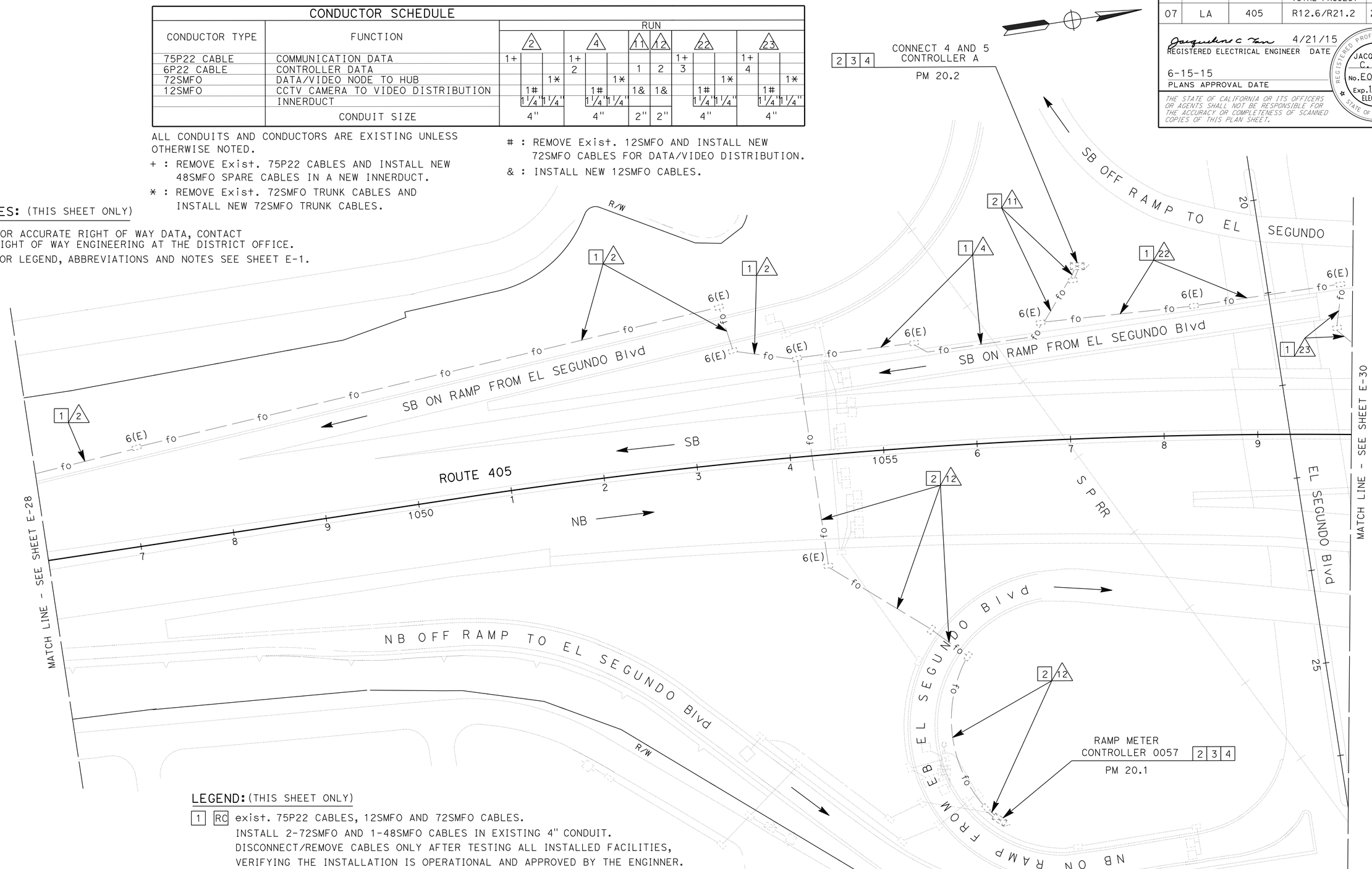

LEGEND: (THIS SHEET ONLY)

1 RC exist. 75P22 CABLES, 12SMFO AND 72SMFO CABLES.
INSTALL 2-72SMFO AND 1-48SMFO CABLES IN EXISTING 4" CONDUIT.
DISCONNECT/REMOVE CABLES ONLY AFTER TESTING ALL INSTALLED FACILITIES, VERIFYING THE INSTALLATION IS OPERATIONAL AND APPROVED BY THE ENGINNER.

2 RC exist. 6P22 CABLES. INSTALL NEW 12 SMFO CABLES AND TERMINATE IN CONTROLLER CABINET.

3 INSTALL TYPE 1 SWITCH WITH 2 SFP-LX MODULES, ETHERNET CARD AND A 12SMFO FDU INSIDE A MODEL 334 CONTROLLER CABINET.

4 INSTALL DEPARTMENT-FURNISHED 2070 CONTROLLER ASSEMBLY.

MODIFY COMMUNICATION SYSTEM

SCALE: 1" = 50'

E-29

APPROVED FOR ELECTRICAL WORK ONLY

STATE OF CALIFORNIA - DEPARTMENT OF TRANSPORTATION
Caltrans
OFFICE OF ITS

FUNCTIONAL SUPERVISOR: JACQUELINE C. TAN
CALCULATED-DESIGNED BY: HENRY H. TRINH
CHECKED BY: JACQUELINE C. TAN
REVISED BY: HT
DATE REVISED: 05/15

LAST REVISION 05-06-15 | DATE PLOTTED => 06-OCT-2015 | TIME PLOTTED => 08:50

Dist	COUNTY	ROUTE	POST MILES TOTAL PROJECT	SHEET No.	TOTAL SHEETS
07	LA	405	R12.6/R21.2	217	288

REGISTERED ELECTRICAL ENGINEER 4/21/15 DATE

6-15-15
PLANS APPROVAL DATE

REGISTERED PROFESSIONAL ENGINEER JACQUELINE C. TAN No. E015611 Exp. 12/31/15 ELECTRICAL STATE OF CALIFORNIA

THE STATE OF CALIFORNIA OR ITS OFFICERS OR AGENTS SHALL NOT BE RESPONSIBLE FOR THE ACCURACY OR COMPLETENESS OF SCANNED COPIES OF THIS PLAN SHEET.

NOTES: (THIS SHEET ONLY)

1. FOR ACCURATE RIGHT OF WAY DATA, CONTACT RIGHT OF WAY ENGINEERING AT THE DISTRICT OFFICE.
2. FOR LEGEND, ABBREVIATIONS AND NOTES SEE SHEET E-1.

CONDUCTOR SCHEDULE

CONDUCTOR TYPE	FUNCTION	RUN 2			RUN 4			RUN 11	RUN 12	RUN 23		
75P22 CABLE	COMMUNICATION DATA	1+			1+					1+		
6P22 CABLE	CONTROLLER DATA				2			1	2	4		
72SMFO	DATA/VIDEO NODE TO HUB			1*			1*					1*
12SMFO	CCTV CAMERA TO VIDEO DISTRIBUTION		1#			1#		1&	1&		1#	
	INNERDUCT		1 1/4"	1 1/4"		1 1/4"	1 1/4"				1 1/4"	1 1/4"
	CONDUIT SIZE	4"			4"			2"	2"	4"		

ALL CONDUITS AND CONDUCTORS ARE EXISTING UNLESS OTHERWISE NOTED.

+ : REMOVE Exist. 75P22 CABLES AND INSTALL NEW 48SMFO SPARE CABLES IN A NEW INNERDUCT.

* : REMOVE Exist. 72SMFO TRUNK CABLES AND INSTALL NEW 72SMFO TRUNK CABLES.

: REMOVE Exist. 12SMFO AND INSTALL NEW 72SMFO CABLES FOR DATA/VIDEO DISTRIBUTION.

& : INSTALL NEW 12SMFO CABLES.

LEGEND: (THIS SHEET ONLY)

1 RC exist. 75P22 CABLES, 12SMFO AND 72SMFO CABLES. INSTALL 2-72SMFO AND 1-48SMFO CABLES IN EXISTING 4" CONDUIT. DISCONNECT/REMOVE CABLES ONLY AFTER TESTING ALL INSTALLED FACILITIES, VERIFYING THE INSTALLATION IS OPERATIONAL AND APPROVED BY THE ENGINNER.

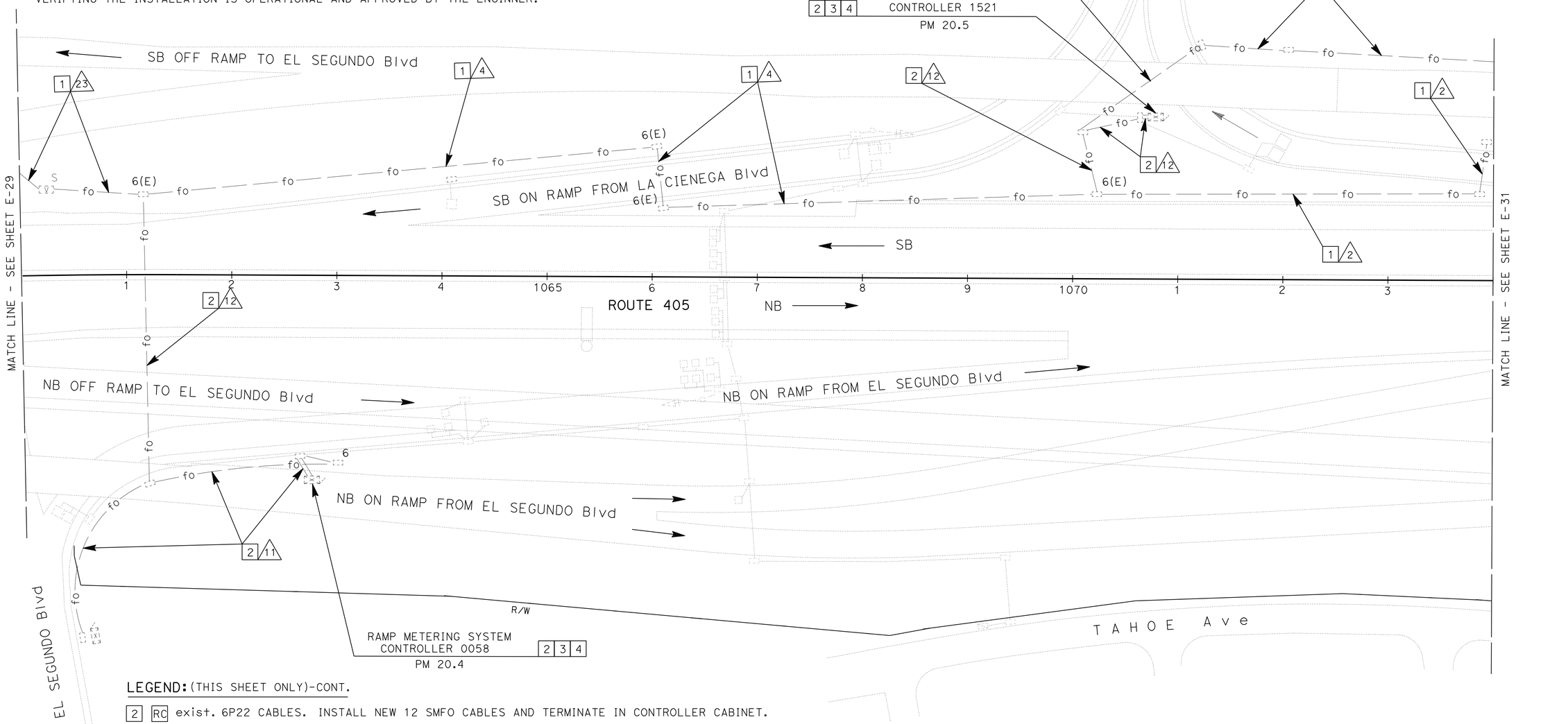

LEGEND: (THIS SHEET ONLY)-CONT.

2 RC exist. 6P22 CABLES. INSTALL NEW 12 SMFO CABLES AND TERMINATE IN CONTROLLER CABINET.

3 INSTALL TYPE 1 SWITCH WITH 2 SFP-LX MODULES, ETHERNET CARD AND A 12SMFO FDU INSIDE A MODEL 334 CONTROLLER CABINET.

4 INSTALL DEPARTMENT-FURNISHED 2070 CONTROLLER ASSEMBLY.

MODIFY COMMUNICATION SYSTEM

SCALE: 1" = 50'

APPROVED FOR ELECTRICAL WORK ONLY

E-30

STATE OF CALIFORNIA - DEPARTMENT OF TRANSPORTATION
Caltrans OFFICE OF ITS

FUNCTIONAL SUPERVISOR: JACQUELINE C. TAN
CALCULATED-DESIGNED BY: HENRY H. TRINH
CHECKED BY: JACQUELINE C. TAN
REVISED BY: HT
DATE REVISED: 05/15

LAST REVISION 05-06-15
DATE PLOTTED => 06-OCT-2015
TIME PLOTTED => 08:50

Dist	COUNTY	ROUTE	POST MILES TOTAL PROJECT	SHEET No.	TOTAL SHEETS
07	LA	405	R12.6/R21.2	218	288

Jacqueline C Tan 4/21/15
REGISTERED ELECTRICAL ENGINEER DATE

6-15-15
PLANS APPROVAL DATE

REGISTERED PROFESSIONAL ENGINEER JACQUELINE C. TAN No.E015611 Exp.12/31/15 ELECTRICAL STATE OF CALIFORNIA

THE STATE OF CALIFORNIA OR ITS OFFICERS OR AGENTS SHALL NOT BE RESPONSIBLE FOR THE ACCURACY OR COMPLETENESS OF SCANNED COPIES OF THIS PLAN SHEET.

NOTES: (THIS SHEET ONLY)

1. FOR ACCURATE RIGHT OF WAY DATA, CONTACT RIGHT OF WAY ENGINEERING AT THE DISTRICT OFFICE.
2. FOR LEGEND, ABBREVIATIONS AND NOTES SEE SHEET E-1.

LEGEND: (THIS SHEET ONLY)

1 RC exist. 75P22 CABLES, 12SMFO AND 72SMFO CABLES. INSTALL 2-72SMFO AND 1-48SMFO CABLES IN EXISTING 4" CONDUIT. DISCONNECT/REMOVE CABLES ONLY AFTER TESTING ALL INSTALLED FACILITIES, VERIFYING THE INSTALLATION IS OPERATIONAL AND APPROVED BY THE ENGINEER.

CONDUCTOR SCHEDULE

CONDUCTOR TYPE	FUNCTION	RUN 2			RUN 11	RUN 16
75P22 CABLE	COMMUNICATION DATA	1+				
6P22 CABLE	CONTROLLER DATA				1	2
72SMFO	DATA/VIDEO NODE TO HUB			1*		
12SMFO	TUNNEL CAMERA TRUNK LINE					
2SMFO	CONNECTOR 5 TUNNEL TRUNK LINE					
12SMFO	CCTV CAMERA TO VIDEO DISTRIBUTION		1#		1&	1&
2SMFO B/O CABLE	SHORT HAUL VIDEO					1
	INNERDUCT		1 1/4"	1 1/4"		
	CONDUIT SIZE	4"			2"	2"

ALL CONDUITS AND CONDUCTORS ARE EXISTING UNLESS OTHERWISE NOTED.

+ : REMOVE Exist. 75P22 CABLES AND INSTALL NEW 48SMFO SPARE CABLES IN A NEW INNERDUCT.

* : REMOVE Exist. 72SMFO TRUNK CABLES AND INSTALL NEW 72SMFO TRUNK CABLES.

: REMOVE Exist. 12SMFO AND INSTALL NEW 72SMFO CABLES FOR DATA/VIDEO DISTRIBUTION.

& : INSTALL NEW 12SMFO CABLES.

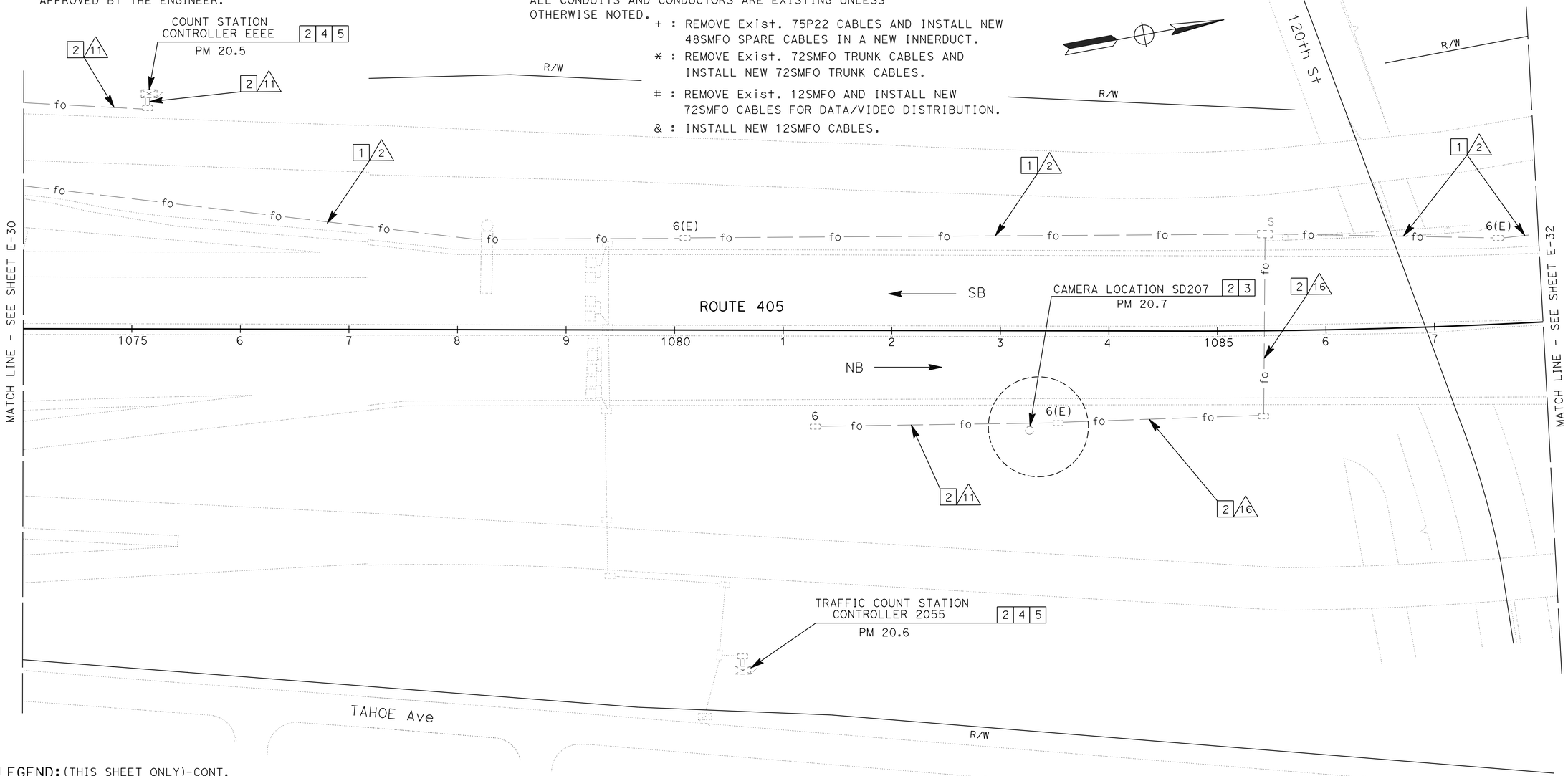

LEGEND: (THIS SHEET ONLY)-CONT.

2 RC exist. 6P22 CABLES. INSTALL NEW 12SMFO B/O CABLES AND TERMINATE IN CONTROLLER CABINET.

3 INSTALL TYPE 1 SWITCH WITH 2 SFP-LX MODULES, VIDEO ENCODER, CAT-5E CABLES AND A 12SMFO FDU IN exist. MODEL 334 CCTV CONTROLLER CABINET.

4 INSTALL TYPE 1 SWITCH WITH 2 SFP-LX MODULES, ETHERNET CARD AND A 12SMFO FDU INSIDE A MODEL 334 CONTROLLER CABINET.

5 INSTALL DEPARTMENT-FURNISHED 2070 CONTROLLER ASSEMBLY.

MODIFY COMMUNICATION SYSTEM

SCALE: 1" = 50'

E-31

APPROVED FOR ELECTRICAL WORK ONLY

STATE OF CALIFORNIA - DEPARTMENT OF TRANSPORTATION
Caltrans
OFFICE OF ITS

FUNCTIONAL SUPERVISOR: JACQUELINE C. TAN
CALCULATED-DESIGNED BY: HENRY H. TRINH
CHECKED BY: JACQUELINE C. TAN
REVISED BY: HT
DATE REVISED: 05/15

LAST REVISION 05-06-15
DATE PLOTTED => 06-OCT-2015
TIME PLOTTED => 08:50

Dist	COUNTY	ROUTE	POST MILES TOTAL PROJECT	SHEET No.	TOTAL SHEETS
07	LA	405	R12.6/R21.2	219	288

Jacqueline C Tan 4/21/15
REGISTERED ELECTRICAL ENGINEER DATE

6-15-15
PLANS APPROVAL DATE

REGISTERED PROFESSIONAL ENGINEER JACQUELINE C. TAN No.E015611 Exp.12/31/15 ELECTRICAL STATE OF CALIFORNIA

THE STATE OF CALIFORNIA OR ITS OFFICERS OR AGENTS SHALL NOT BE RESPONSIBLE FOR THE ACCURACY OR COMPLETENESS OF SCANNED COPIES OF THIS PLAN SHEET.

NOTES: (THIS SHEET ONLY)

1. FOR ACCURATE RIGHT OF WAY DATA, CONTACT RIGHT OF WAY ENGINEERING AT THE DISTRICT OFFICE.
2. FOR LEGEND, ABBREVIATIONS AND NOTES SEE SHEET E-1.

CONDUCTOR SCHEDULE

CONDUCTOR TYPE	FUNCTION	RUN 2			RUN 27		
75P22 CABLE	COMMUNICATION DATA	1+			1		
6P22 CABLE	CONTROLLER DATA				4		
72SMFO	DATA/VIDEO NODE TO HUB			1*			1*
12SMFO	TUNNEL CAMERA TRUNK LINE					1	
2SMFO	CONNECTOR 5 TUNNEL TRUNK LINE					1	
12SMFO	CCTV CAMERA TO VIDEO DISTRIBUTION		1#			1#	
2SMFO CABLE	SHORT HAUL VIDEO						
	INNERDUCT		1¼"	1¼"		1¼"	1¼"
	CONDUIT SIZE	4"			4"		

ALL CONDUITS AND CONDUCTORS ARE EXISTING UNLESS OTHERWISE NOTED.

+ : REMOVE Exist. 75P22 CABLES AND INSTALL NEW 48SMFO SPARE CABLES IN A NEW INNERDUCT.

* : REMOVE Exist. 72SMFO TRUNK CABLES AND INSTALL NEW 72SMFO TRUNK CABLES.

: REMOVE Exist. 12SMFO AND INSTALL NEW 72SMFO CABLES FOR DATA/VIDEO DISTRIBUTION.

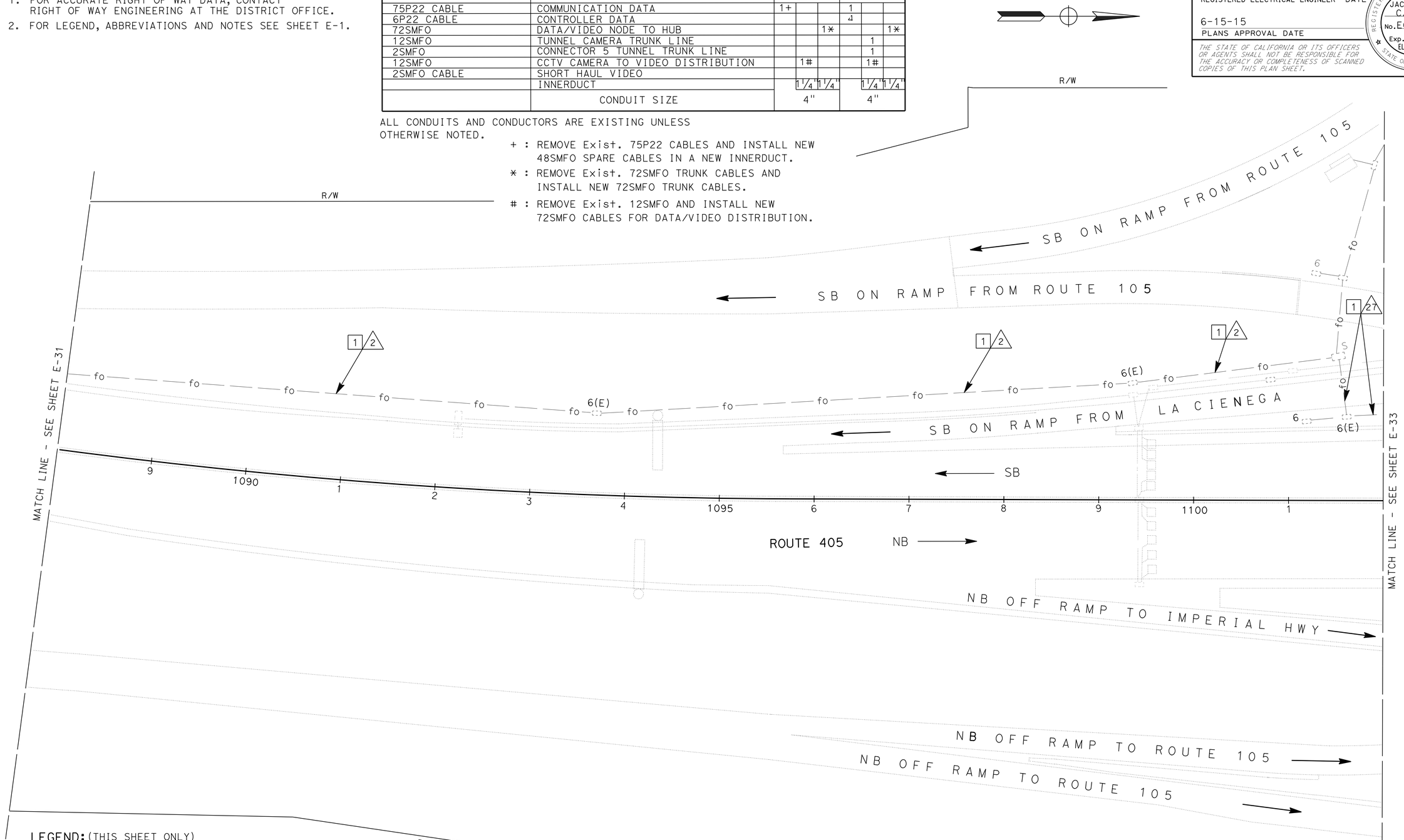

LEGEND: (THIS SHEET ONLY)

1 RC exist. 75P22 CABLES, 12SMFO AND 72SMFO CABLES.
INSTALL 2-72SMFO AND 1-48SMFO CABLES IN EXISTING 4" CONDUIT.
DISCONNECT/REMOVE CABLES ONLY AFTER TESTING ALL INSTALLED FACILITIES, VERIFYING THE INSTALLATION IS OPERATIONAL AND APPROVED BY THE ENGINNER.

MODIFY COMMUNICATION SYSTEM

SCALE: 1" = 50'

E-32

APPROVED FOR ELECTRICAL WORK ONLY

STATE OF CALIFORNIA - DEPARTMENT OF TRANSPORTATION
Caltrans
OFFICE OF ITS

FUNCTIONAL SUPERVISOR: JACQUELINE C. TAN
CALCULATED-DESIGNED BY: HENRY H. TRINH
CHECKED BY: JACQUELINE C. TAN
REVISED BY: HT
DATE REVISED: 05/15

LAST REVISION 05-06-15 | DATE PLOTTED => 06-OCT-2015 | TIME PLOTTED => 08:50

Dist	COUNTY	ROUTE	POST MILES TOTAL PROJECT	SHEET No.	TOTAL SHEETS
07	LA	405	R12.6/R21.2	220	288

Jacqueline C Tan 4/21/15
REGISTERED ELECTRICAL ENGINEER DATE

6-15-15
PLANS APPROVAL DATE

REGISTERED PROFESSIONAL ENGINEER JACQUELINE C. TAN No.E015611 Exp.12/31/15 ELECTRICAL STATE OF CALIFORNIA

THE STATE OF CALIFORNIA OR ITS OFFICERS OR AGENTS SHALL NOT BE RESPONSIBLE FOR THE ACCURACY OR COMPLETENESS OF SCANNED COPIES OF THIS PLAN SHEET.

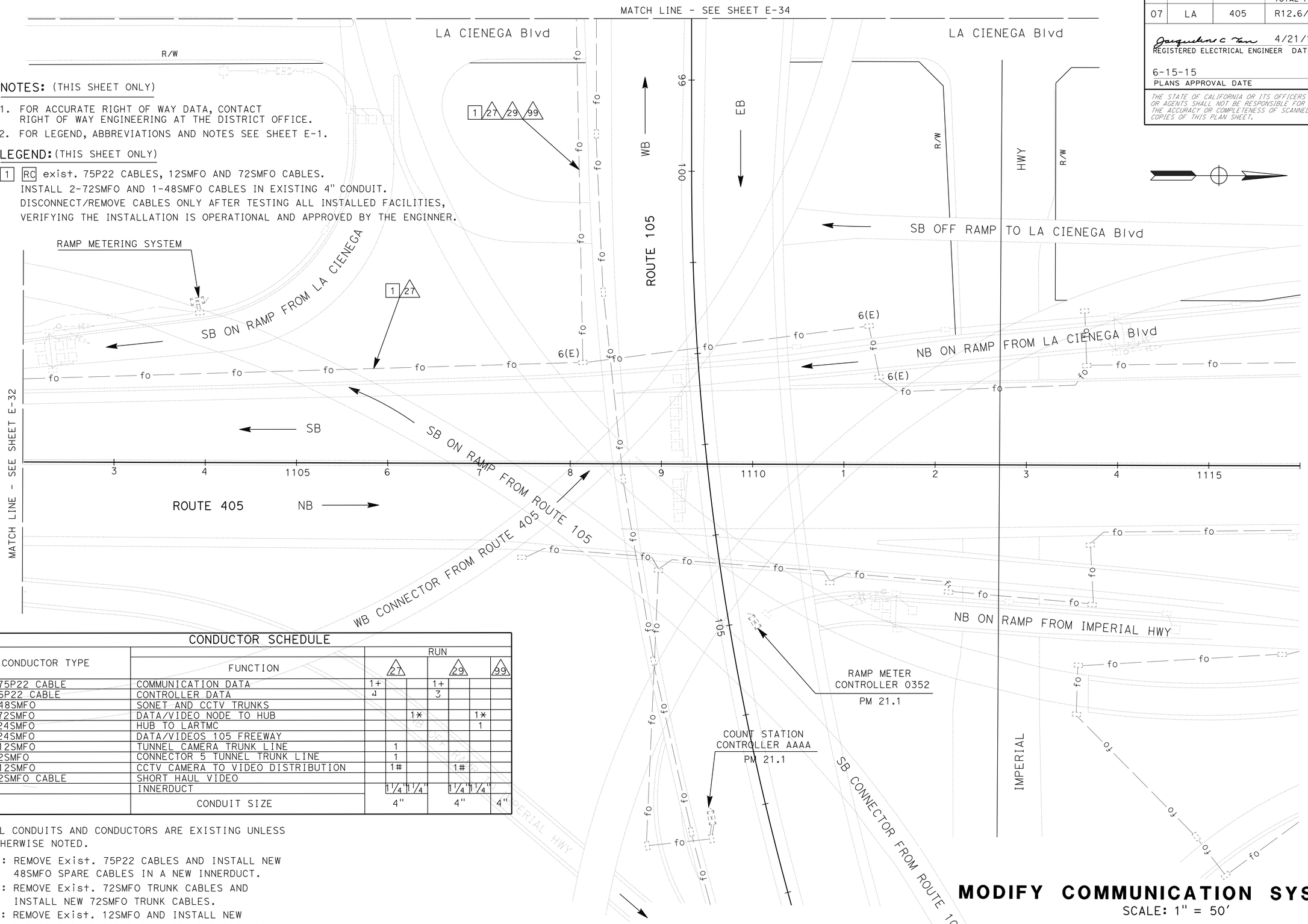

CONDUCTOR SCHEDULE

CONDUCTOR TYPE	FUNCTION	RUN 27		RUN 29		RUN 99
75P22 CABLE	COMMUNICATION DATA	1+		1+		
6P22 CABLE	CONTROLLER DATA	4		3		
48SMFO	SONET AND CCTV TRUNKS					
72SMFO	DATA/VIDEO NODE TO HUB		1*		1*	
24SMFO	HUB TO LARTMC				1	
24SMFO	DATA/VIDEOS 105 FREEWAY					
12SMFO	TUNNEL CAMERA TRUNK LINE	1				
2SMFO	CONNECTOR 5 TUNNEL TRUNK LINE	1				
12SMFO	CCTV CAMERA TO VIDEO DISTRIBUTION	1#		1#		
2SMFO CABLE	SHORT HAUL VIDEO					
	INNERDUCT	1¼"	1¼"	1¼"	1¼"	
	CONDUIT SIZE	4"		4"		4"

ALL CONDUITS AND CONDUCTORS ARE EXISTING UNLESS OTHERWISE NOTED.

+ : REMOVE Exist. 75P22 CABLES AND INSTALL NEW 48SMFO SPARE CABLES IN A NEW INNERDUCT.

* : REMOVE Exist. 72SMFO TRUNK CABLES AND INSTALL NEW 72SMFO TRUNK CABLES.

: REMOVE Exist. 12SMFO AND INSTALL NEW 72SMFO CABLES FOR DATA/VIDEO DISTRIBUTION.

APPROVED FOR ELECTRICAL WORK ONLY

MODIFY COMMUNICATION SYSTEM

SCALE: 1" = 50'

E-33

STATE OF CALIFORNIA - DEPARTMENT OF TRANSPORTATION
Caltrans®
OFFICE OF ITS

FUNCTIONAL SUPERVISOR: JACQUELINE C. TAN
CALCULATED-DESIGNED BY: HENRY H. TRINH
CHECKED BY: JACQUELINE C. TAN
REVISED BY: HT
DATE REVISED: 05/15

LAST REVISION 05-06-15 | DATE PLOTTED => 06-OCT-2015 | TIME PLOTTED => 08:50

Dist	COUNTY	ROUTE	POST MILES TOTAL PROJECT	SHEET No.	TOTAL SHEETS
07	LA	405	R12.6/R21.2	221	288

Jacqueline C Tan 4/21/15
REGISTERED ELECTRICAL ENGINEER DATE

6-15-15
PLANS APPROVAL DATE

REGISTERED PROFESSIONAL ENGINEER JACQUELINE C. TAN No. E015611 Exp. 12/31/15 ELECTRICAL STATE OF CALIFORNIA

THE STATE OF CALIFORNIA OR ITS OFFICERS OR AGENTS SHALL NOT BE RESPONSIBLE FOR THE ACCURACY OR COMPLETENESS OF SCANNED COPIES OF THIS PLAN SHEET.

NOTES: (THIS SHEET ONLY)

1. FOR ACCURATE RIGHT OF WAY DATA, CONTACT RIGHT OF WAY ENGINEERING AT THE DISTRICT OFFICE.
2. FOR LEGEND, ABBREVIATIONS AND NOTES SEE SHEET E-1.

CONDUCTOR SCHEDULE

CONDUCTOR TYPE	FUNCTION	RUN 27			RUN 29			RUN 99
75P22 CABLE	COMMUNICATION DATA	1+			1+			
6P22 CABLE	CONTROLLER DATA	4			3			
48SMFO	SONET AND CCTV TRUNKS							
72SMFO	DATA/VIDEO NODE TO HUB			1*			1*	
24SMFO	HUB TO LARTMC						1	
24SMFO	DATA/VIDEOS 105 FREEWAY							
12SMFO	TUNNEL CAMERA TRUNK LINE		1					
2SMFO	CONNECTOR 5 TUNNEL TRUNK LINE		1					
12SMFO	CCTV CAMERA TO VIDEO DISTRIBUTION		1#			1#		
2SMFO CABLE	SHORT HAUL VIDEO							
	INNERDUCT	1 1/4"		1 1/4"	1 1/4"		1 1/4"	
	CONDUIT SIZE	4"			4"			4"

ALL CONDUITS AND CONDUCTORS ARE EXISTING UNLESS OTHERWISE NOTED.

+ : REMOVE Exist. 75P22 CABLES AND INSTALL NEW 48SMFO SPARE CABLES IN A NEW INNERDUCT.

* : REMOVE Exist. 72SMFO TRUNK CABLES AND INSTALL NEW 72SMFO TRUNK CABLES.

: REMOVE Exist. 12SMFO AND INSTALL NEW 72SMFO CABLES FOR DATA/VIDEO DISTRIBUTION.

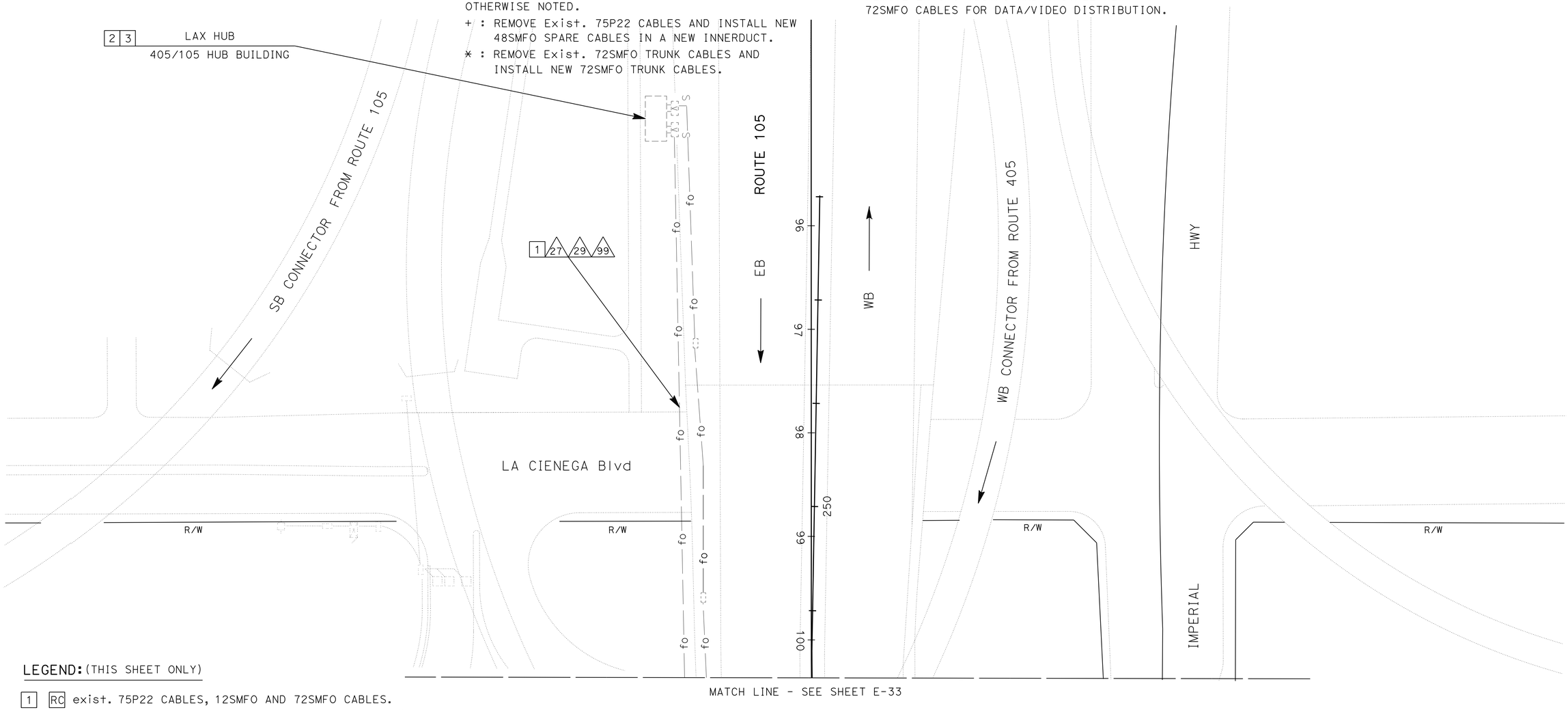

LEGEND: (THIS SHEET ONLY)

1. RC exist. 75P22 CABLES, 12SMFO AND 72SMFO CABLES.
   INSTALL 2-72SMFO AND 1-48SMFO CABLES IN EXISTING 4" CONDUIT.
   DISCONNECT/REMOVE CABLES ONLY AFTER TESTING ALL INSTALLED FACILITIES, VERIFYING THE INSTALLATION IS OPERATIONAL AND APPROVED BY THE ENGINNER.
2. INSTALL TYPE 2 SWITCH WITH 4 SFP-ZX MODULES.
   TERMINATE THE PROPOSED 72SMFO TRUNK CABLES ON A NEW 72SMFO FDU IN exist. LAX HUB BUILDING.
3. TERMINATE THE PROPOSED 48SMFO & 72SMFO DATA/VIDEO DISTRIBUTION CABLES ON A NEW 48SMFO FDU & 72SMFO FDU RESPECTIVELY IN exist. LAX HUB BUILDING.

MODIFY COMMUNICATION SYSTEM

SCALE: 1" = 50'

E-34

APPROVED FOR ELECTRICAL WORK ONLY

STATE OF CALIFORNIA - DEPARTMENT OF TRANSPORTATION
Caltrans
OFFICE OF ITS

FUNCTIONAL SUPERVISOR: JACQUELINE C. TAN
CALCULATED-DESIGNED BY: HENRY H. TRINH
CHECKED BY: JACQUELINE C. TAN
REVISED BY: HT
DATE REVISED: 05/15

LAST REVISION 05-06-15 | DATE PLOTTED => 06-OCT-2015 | TIME PLOTTED => 08:50

Dist	COUNTY	ROUTE	POST MILES TOTAL PROJECT	SHEET No.	TOTAL SHEETS
07	LA	405	R12.6/R21.2	222	288

Jacqueline C Tan 4/21/15
REGISTERED ELECTRICAL ENGINEER DATE

6-15-15
PLANS APPROVAL DATE

REGISTERED PROFESSIONAL ENGINEER
JACQUELINE C. TAN
No. E015611
Exp. 12/31/15
ELECTRICAL
STATE OF CALIFORNIA

THE STATE OF CALIFORNIA OR ITS OFFICERS OR AGENTS SHALL NOT BE RESPONSIBLE FOR THE ACCURACY OR COMPLETENESS OF SCANNED COPIES OF THIS PLAN SHEET.

NOTES: (THIS SHEET ONLY)

1. FOR ACCURATE RIGHT OF WAY DATA, CONTACT RIGHT OF WAY ENGINEERING AT THE DISTRICT OFFICE.
2. FOR LEGEND, ABBREVIATIONS AND NOTES SEE SHEET E-1.

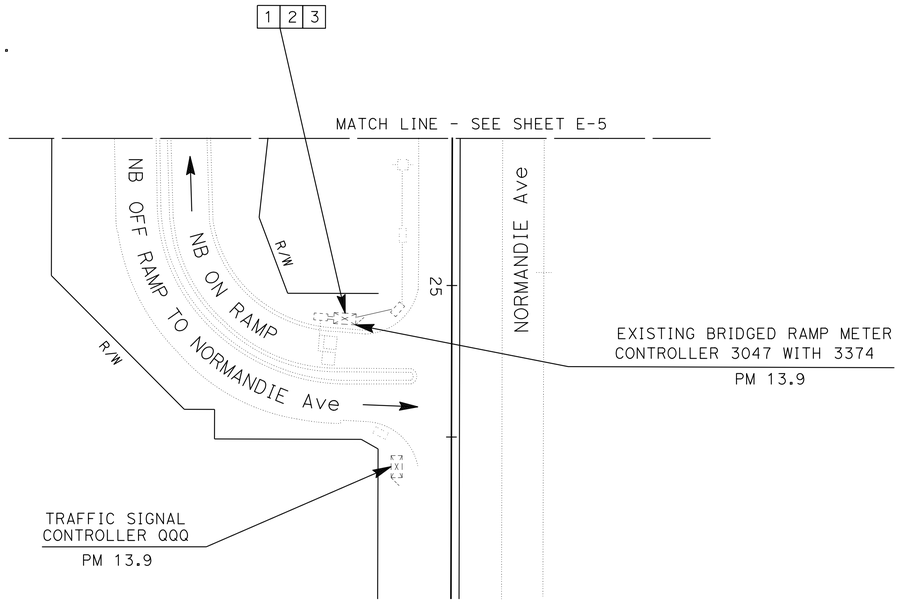

LEGEND: (THIS SHEET ONLY)

1 RC exist. 6P22 CABLES. INSTALL NEW 12SMFO B/O CABLES AND TERMINATE IN CONTROLLER CABINET. 2SMFO B/O CABLES TO REMAIN.

2 INSTALL TYPE 1 SWITCH WITH 2 SFP-LX MODULES, ETHERNET CARD AND A 12SMFO FDU INSIDE Exist. MODEL 334 CONTROLLER CABINET.

3 INSTALL DEPARTMENT-FURNISHED 2070 CONTROLLER ASSEMBLY.

MODIFY COMMUNICATION SYSTEM

SCALE: 1" = 50'

E-35

APPROVED FOR ELECTRICAL WORK ONLY

STATE OF CALIFORNIA - DEPARTMENT OF TRANSPORTATION
Caltrans® OFFICE OF ITS

FUNCTIONAL SUPERVISOR: JACQUELINE C. TAN

CALCULATED-DESIGNED BY: HENRY H. TRINH
CHECKED BY: JACQUELINE C. TAN

REVISED BY: HT
DATE REVISED: 05/15

LAST REVISION 05-06-15
DATE PLOTTED => 06-OCT-2015
TIME PLOTTED => 08:50

Dist	COUNTY	ROUTE	POST MILES TOTAL PROJECT	SHEET No.	TOTAL SHEETS
07	LA	405	R12.6/R21.2	223	288

Kenny Nguyen 4/21/15
REGISTERED ELECTRICAL ENGINEER DATE

6-15-15
PLANS APPROVAL DATE

REGISTERED PROFESSIONAL ENGINEER
KENNY NGUYEN
No. 17759
Exp. 6/30/16
ELECTRICAL
STATE OF CALIFORNIA

THE STATE OF CALIFORNIA OR ITS OFFICERS OR AGENTS SHALL NOT BE RESPONSIBLE FOR THE ACCURACY OR COMPLETENESS OF SCANNED COPIES OF THIS PLAN SHEET.

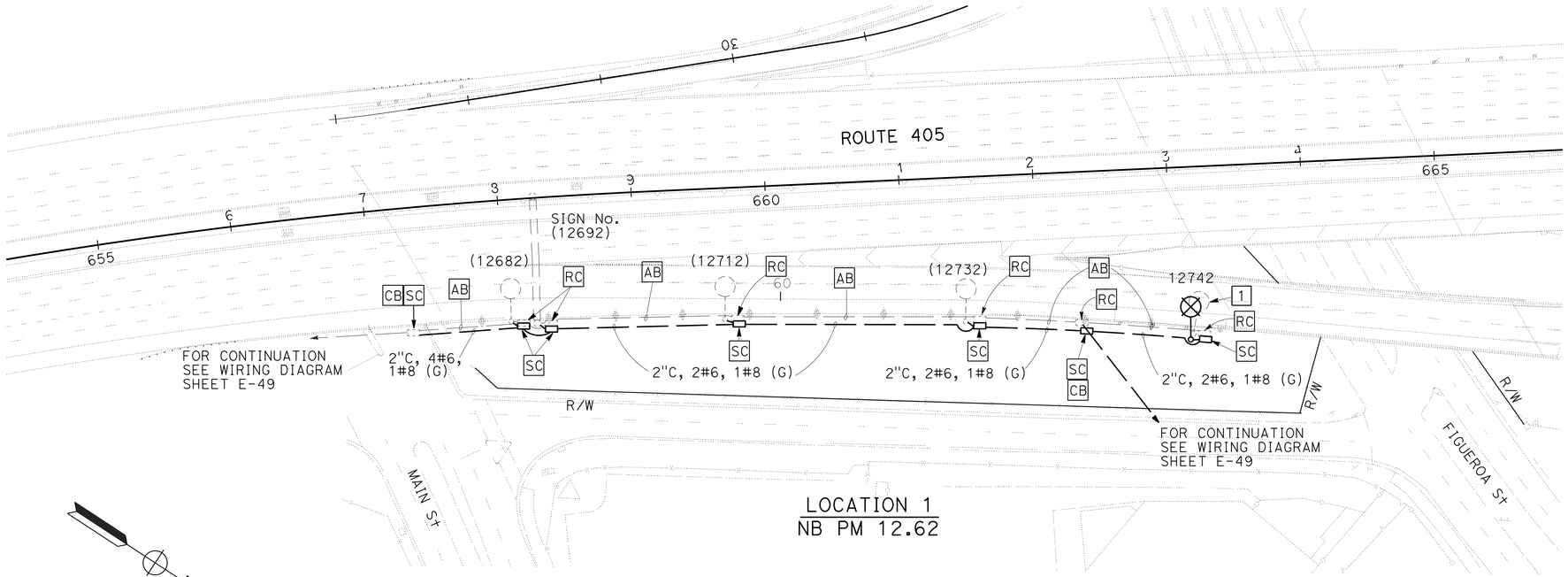

LOCATION 1
NB PM 12.62

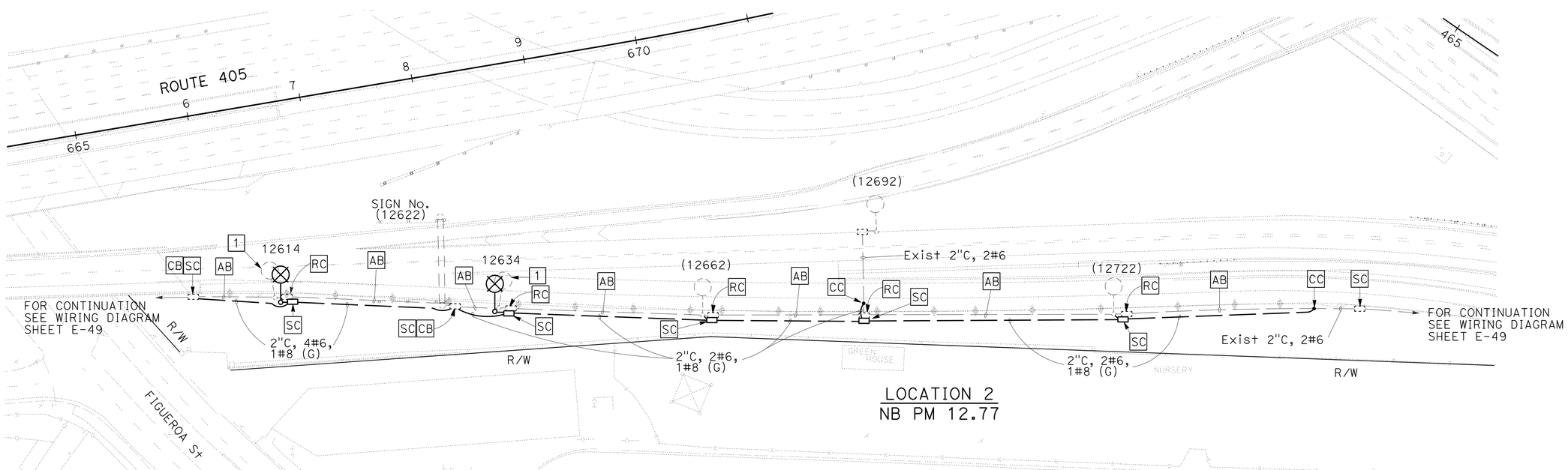

LOCATION 2
NB PM 12.77

NOTES: (THIS SHEET ONLY)

1. FOR ACCURATE RIGHT OF WAY DATA, CONTACT RIGHT OF WAY ENGINEERING AT THE DISTTIC OFFICE.
2. INSTALL TAMPER RESISTANT COVERS ON ALL PULL BOX, AS SHOWN ON THE PLANS. SEE SHEET E-52.

LEGEND: (THIS SHEET ONLY)

1 RC ELECTROLIER AND FOUNDATION.

MODIFY LIGHTING AND SIGN ILLUMINATION

SCALE 1"=50'

APPROVED FOR ELECTRICAL WORK ONLY

E-36

STATE OF CALIFORNIA - DEPARTMENT OF TRANSPORTATION
Caltrans
TRAFFIC DESIGN

FUNCTIONAL SUPERVISOR: OSWALD ELIZONDO
CALCULATED-DESIGNED BY: XOCHILT NARANJO
CHECKED BY: KENNY NGUYEN
REVISED BY
DATE REVISED

LAST REVISION 00-00-00
DATE PLOTTED => 06-OCT-2015
TIME PLOTTED => 08:50

Dist	COUNTY	ROUTE	POST MILES TOTAL PROJECT	SHEET No.	TOTAL SHEETS
07	LA	405	R12.6/R21.2	224	288

Kenny Nguyen 4/21/15
REGISTERED ELECTRICAL ENGINEER DATE

6-15-15
PLANS APPROVAL DATE

REGISTERED PROFESSIONAL ENGINEER
KENNY NGUYEN
No. 17759
Exp. 6/30/16
ELECTRICAL
STATE OF CALIFORNIA

THE STATE OF CALIFORNIA OR ITS OFFICERS OR AGENTS SHALL NOT BE RESPONSIBLE FOR THE ACCURACY OR COMPLETENESS OF SCANNED COPIES OF THIS PLAN SHEET.

NOTES: (THIS SHEET ONLY)

1. FOR ACCURATE RIGHT OF WAY DATA, CONTACT RIGHT OF WAY ENGINEERING AT THE DISTTIC OFFICE.
2. INSTALL TAMPER RESISTANT COVERS ON ALL PULL BOX, AS SHOWN ON THE PLANS. SEE SHEET E-52.

LEGEND: (THIS SHEET ONLY)

1 RC ELECTROLIER AND FOUNDATION.

LOCATION 5
SB PM 13.7

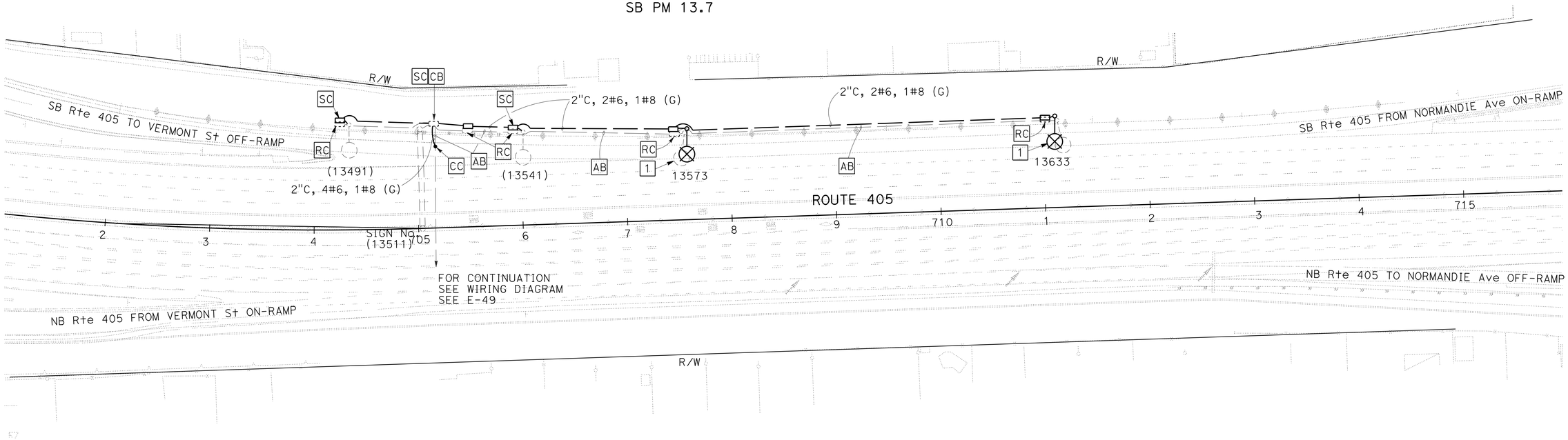

MODIFY LIGHTING AND SIGN ILLUMINATION

SCALE 1"=50'

APPROVED FOR ELECTRICAL WORK ONLY

E-37

REVISED BY | DATE REVISED
XOCHILT NARANJO | KENNY NGUYEN
CALCULATED-DESIGNED BY | CHECKED BY
FUNCTIONAL SUPERVISOR
OSWALD ELIZONDO
STATE OF CALIFORNIA - DEPARTMENT OF TRANSPORTATION
Caltrans
TRAFFIC DESIGN

LAST REVISION 00-00-00 | DATE PLOTTED => 06-OCT-2015 | TIME PLOTTED => 08:50

Dist	COUNTY	ROUTE	POST MILES TOTAL PROJECT	SHEET No.	TOTAL SHEETS
07	LA	405	R12.6/R21.2	225	288

Kenny Nguyen 4/21/15
REGISTERED ELECTRICAL ENGINEER DATE

6-15-15
PLANS APPROVAL DATE

REGISTERED PROFESSIONAL ENGINEER KENNY NGUYEN No. 17759 Exp. 6/30/16 ELECTRICAL STATE OF CALIFORNIA

THE STATE OF CALIFORNIA OR ITS OFFICERS OR AGENTS SHALL NOT BE RESPONSIBLE FOR THE ACCURACY OR COMPLETENESS OF SCANNED COPIES OF THIS PLAN SHEET.

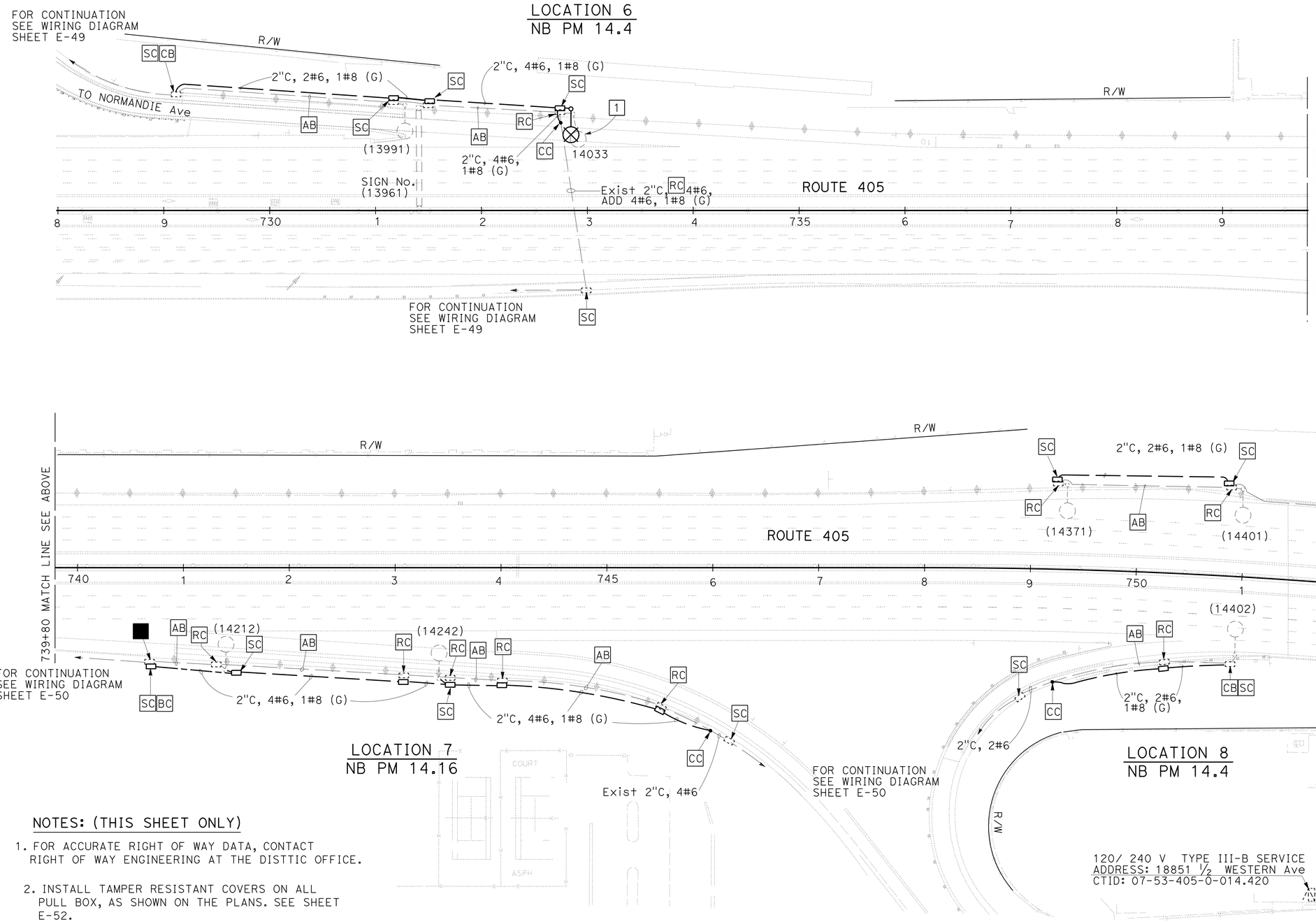

NOTES: (THIS SHEET ONLY)

1. FOR ACCURATE RIGHT OF WAY DATA, CONTACT RIGHT OF WAY ENGINEERING AT THE DISTTIC OFFICE.
2. INSTALL TAMPER RESISTANT COVERS ON ALL PULL BOX, AS SHOWN ON THE PLANS. SEE SHEET E-52.

LEGEND: (THIS SHEET ONLY)

1 RC ELECTROLIER AND FOUNDATION.

2 RS EXISTING PULL BOX LID

APPROVED FOR ELECTRICAL WORK ONLY

MODIFY LIGHTING AND SIGN ILLUMINATION

SCALE 1"=50'

E-38

STATE OF CALIFORNIA - DEPARTMENT OF TRANSPORTATION
Caltrans® TRAFFIC DESIGN

FUNCTIONAL SUPERVISOR: OSWALD ELIZONDO
CALCULATED-DESIGNED BY: XOCHILT NARANJO
CHECKED BY: KENNY NGUYEN
REVISED BY / DATE REVISED

LAST REVISION 00-00-00 | DATE PLOTTED => 06-OCT-2015 | TIME PLOTTED => 08:50

Dist	COUNTY	ROUTE	POST MILES TOTAL PROJECT	SHEET No.	TOTAL SHEETS
07	LA	405	R12.6/R21.2	226	288

Kenny Nguyen 4/21/15
REGISTERED ELECTRICAL ENGINEER DATE

6-15-15
PLANS APPROVAL DATE

REGISTERED PROFESSIONAL ENGINEER
KENNY NGUYEN
No. 17759
Exp. 6/30/16
ELECTRICAL
STATE OF CALIFORNIA

THE STATE OF CALIFORNIA OR ITS OFFICERS OR AGENTS SHALL NOT BE RESPONSIBLE FOR THE ACCURACY OR COMPLETENESS OF SCANNED COPIES OF THIS PLAN SHEET.

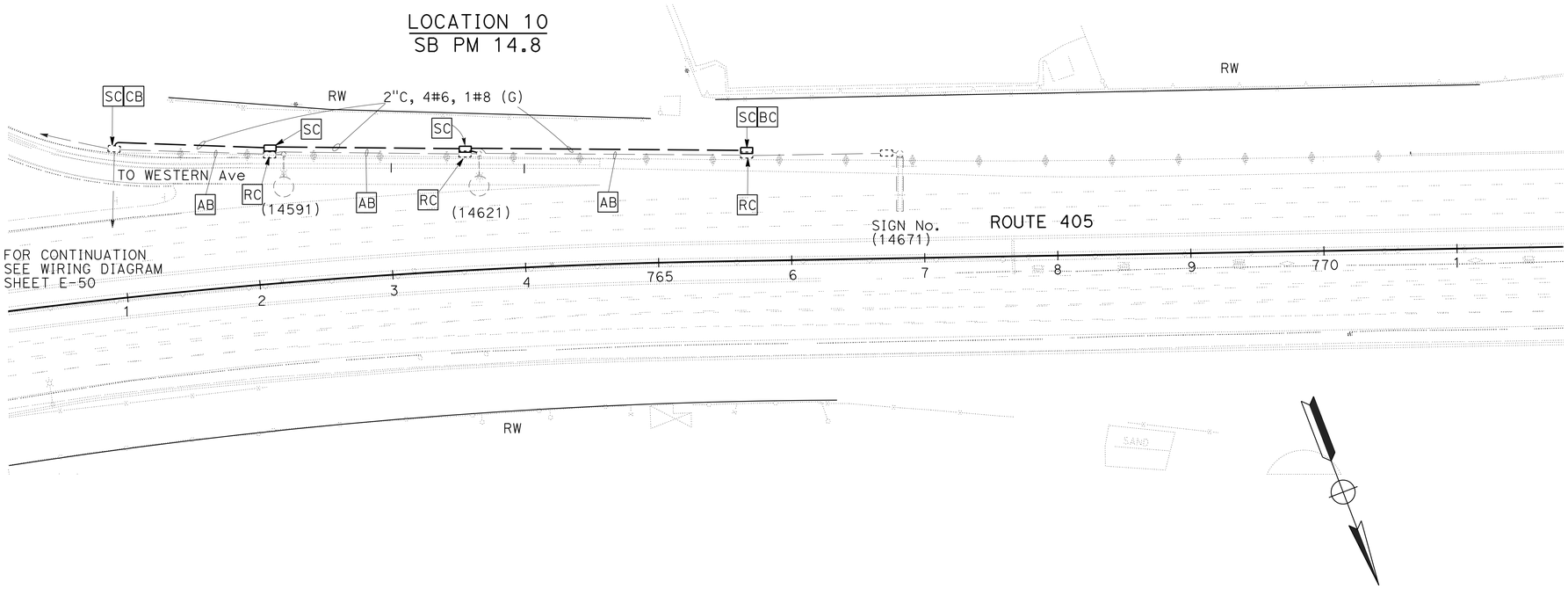

NOTES: (THIS SHEET ONLY)

1. FOR ACCURATE RIGHT OF WAY DATA, CONTACT RIGHT OF WAY ENGINEERING AT THE DISTTIC OFFICE.
2. INSTALL TAMPER RESISTANT COVERS ON ALL PULL BOX, AS SHOWN ON THE PLANS. SEE SHEET E-52.

LEGEND: (THIS SHEET ONLY)

1 RC ELECTROLIER AND FOUNDATION.

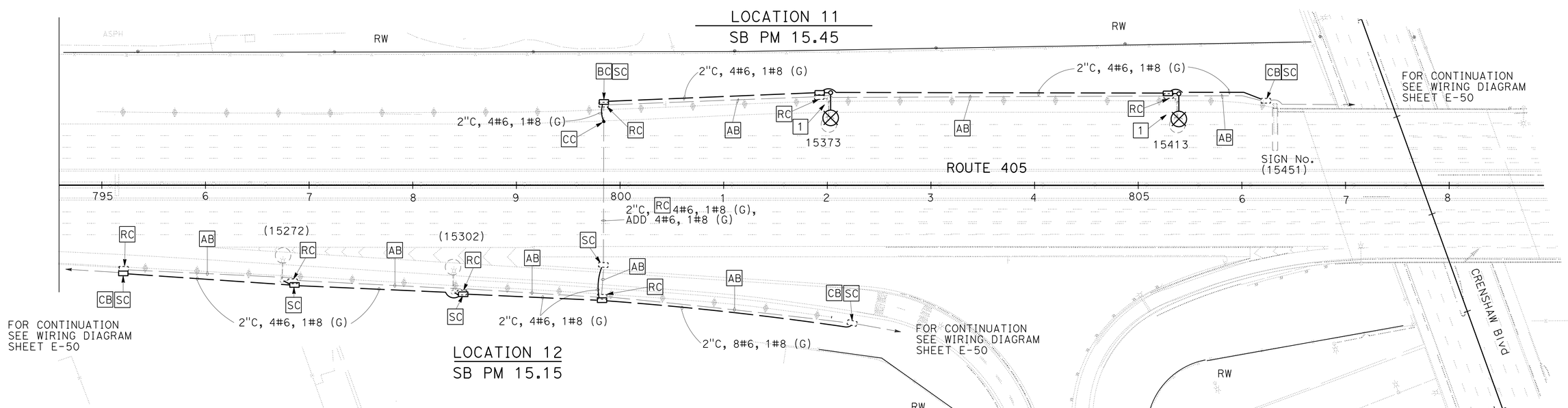

MODIFY LIGHTING AND SIGN ILLUMINATION

SCALE 1"=50'

APPROVED FOR ELECTRICAL WORK ONLY

E-39

STATE OF CALIFORNIA - DEPARTMENT OF TRANSPORTATION
Caltrans®
TRAFFIC DESIGN

FUNCTIONAL SUPERVISOR: OSWALD ELIZONDO
CALCULATED-DESIGNED BY: XOCHILT NARANJO
CHECKED BY: KENNY NGUYEN
REVISED BY
DATE REVISED

LAST REVISION 00-00-00
DATE PLOTTED => 06-OCT-2015
TIME PLOTTED => 08:50

Dist	COUNTY	ROUTE	POST MILES TOTAL PROJECT	SHEET No.	TOTAL SHEETS
07	LA	405	R12.6/R21.2	227	288

Kenny Nguyen 4/21/15
REGISTERED ELECTRICAL ENGINEER DATE

6-15-15
PLANS APPROVAL DATE

REGISTERED PROFESSIONAL ENGINEER KENNY NGUYEN No. 17759 Exp. 6/30/16 ELECTRICAL STATE OF CALIFORNIA

THE STATE OF CALIFORNIA OR ITS OFFICERS OR AGENTS SHALL NOT BE RESPONSIBLE FOR THE ACCURACY OR COMPLETENESS OF SCANNED COPIES OF THIS PLAN SHEET.

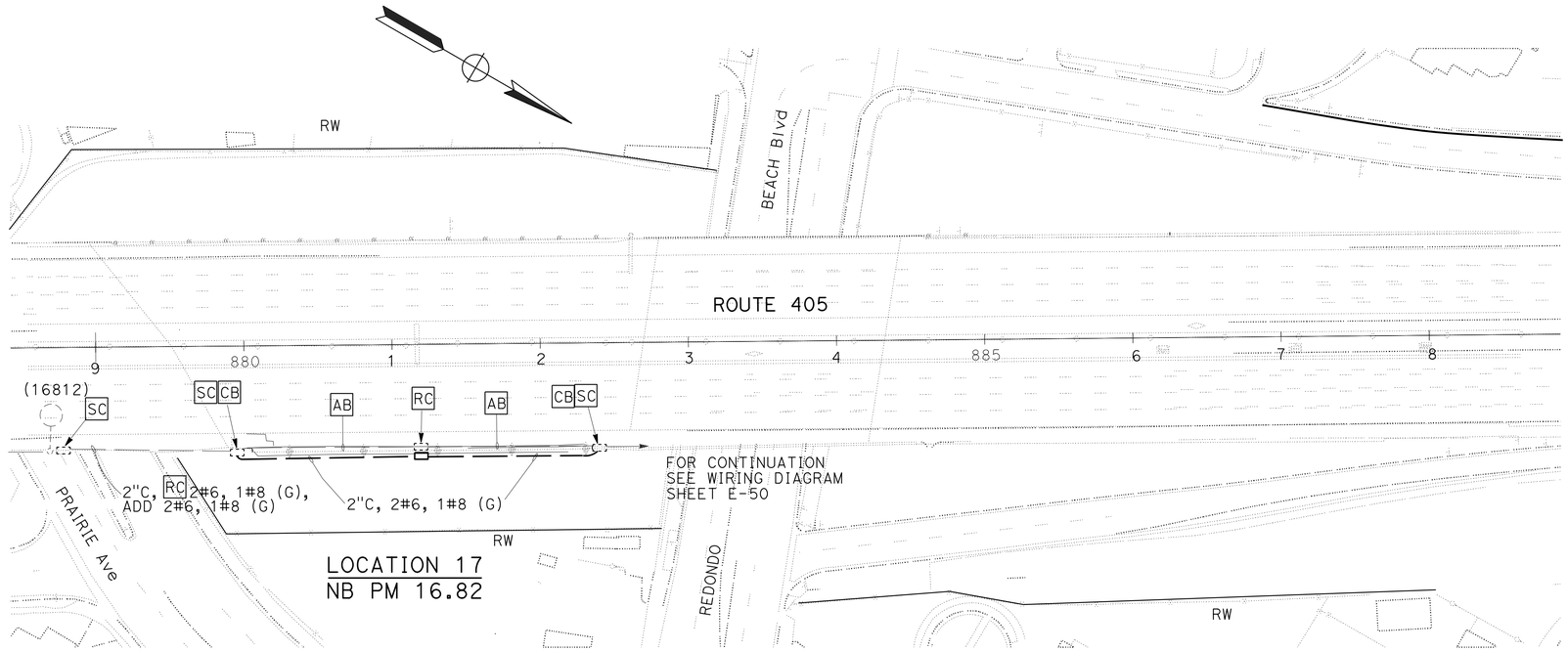

LOCATION 17
NB PM 16.82

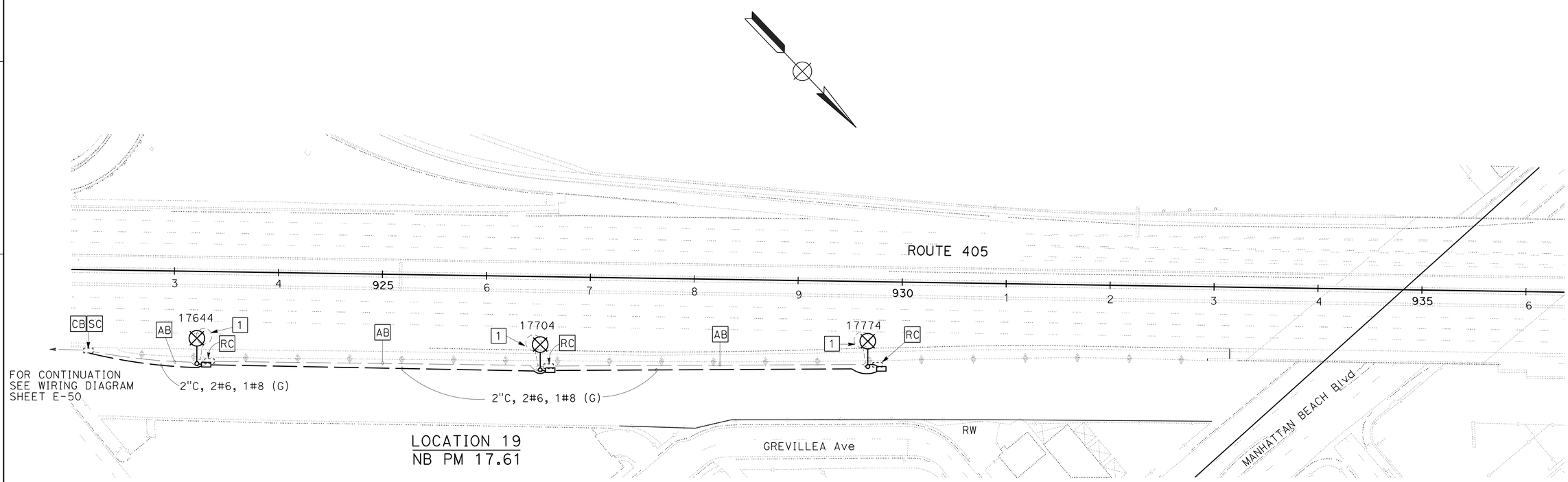

LOCATION 19
NB PM 17.61

NOTES: (THIS SHEET ONLY)

1. FOR ACCURATE RIGHT OF WAY DATA, CONTACT RIGHT OF WAY ENGINEERING AT THE DISTTIC OFFICE.
2. INSTALL TAMPER RESISTANT COVERS ON ALL PULL BOX, AS SHOWN ON THE PLANS. SEE SHEET E-52.

LEGEND: (THIS SHEET ONLY)

1 RC ELECTROLIER AND FOUNDATION.

MODIFY LIGHTING AND SIGN ILLUMINATION

SCALE 1"=50'

APPROVED FOR ELECTRICAL WORK ONLY

E-40

REVISED BY | DATE REVISED
XOCHILT NARANJO | KENNY NGUYEN
CALCULATED-DESIGNED BY | CHECKED BY
FUNCTIONAL SUPERVISOR | OSWALD ELIZONDO

STATE OF CALIFORNIA - DEPARTMENT OF TRANSPORTATION
Caltrans
TRAFFIC DESIGN

LAST REVISION 00-00-00 | DATE PLOTTED => 06-OCT-2015 | TIME PLOTTED => 08:50

Dist	COUNTY	ROUTE	POST MILES TOTAL PROJECT	SHEET No.	TOTAL SHEETS
07	LA	405	R12.6/R21.2	228	288

Kenny Nguyen 4/21/15
REGISTERED ELECTRICAL ENGINEER DATE

6-15-15
PLANS APPROVAL DATE

REGISTERED PROFESSIONAL ENGINEER KENNY NGUYEN No. 17759 Exp. 6/30/16 ELECTRICAL STATE OF CALIFORNIA

THE STATE OF CALIFORNIA OR ITS OFFICERS OR AGENTS SHALL NOT BE RESPONSIBLE FOR THE ACCURACY OR COMPLETENESS OF SCANNED COPIES OF THIS PLAN SHEET.

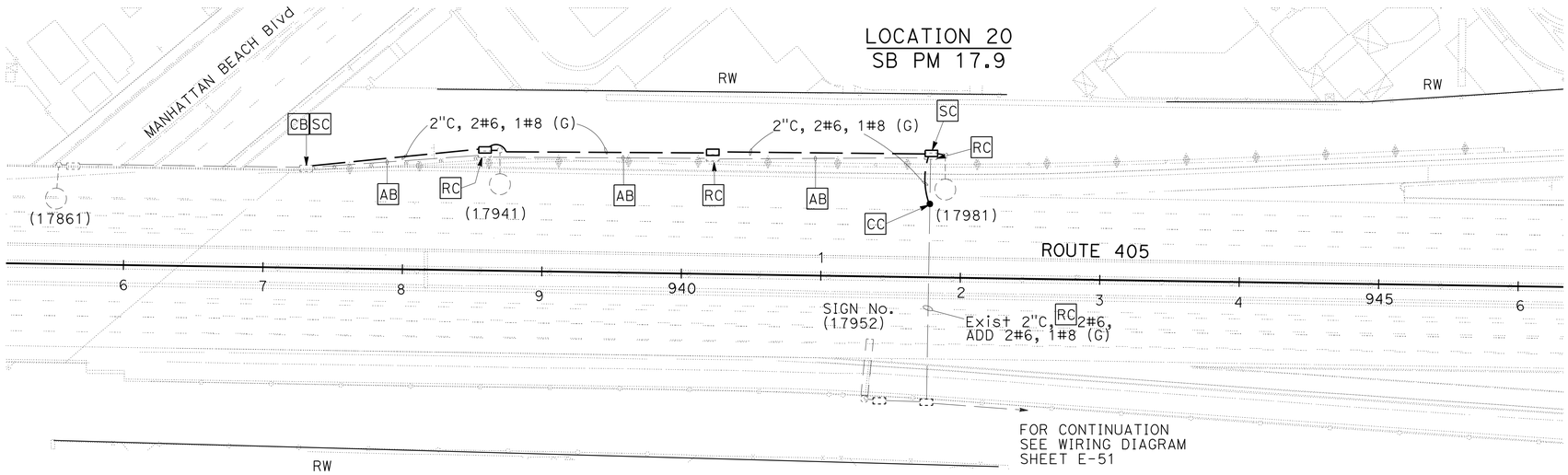

NOTES: (THIS SHEET ONLY)

1. FOR ACCURATE RIGHT OF WAY DATA, CONTACT RIGHT OF WAY ENGINEERING AT THE DISTTIC OFFICE.
2. INSTALL TAMPER RESISTANT COVERS ON ALL PULL BOX, AS SHOWN ON THE PLANS. SEE SHEET E-52.

LEGEND: (THIS SHEET ONLY)

1 RC ELECTROLIER AND FOUNDATION.

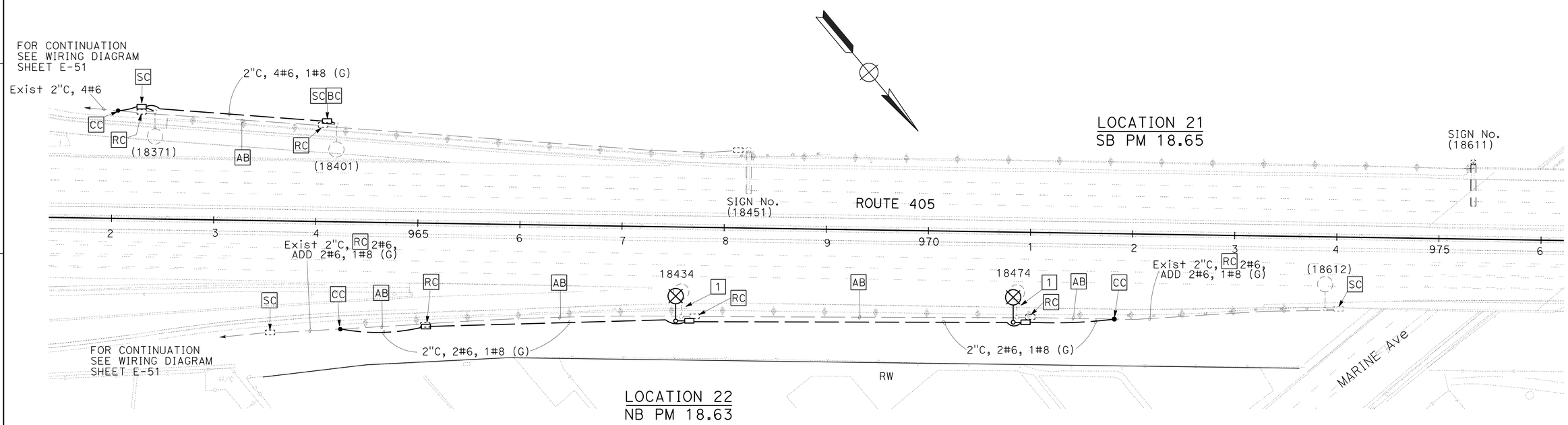

MODIFY LIGHTING AND SIGN ILLUMINATION

SCALE 1"=50'

APPROVED FOR ELECTRICAL WORK ONLY

E-41

STATE OF CALIFORNIA - DEPARTMENT OF TRANSPORTATION
Caltrans®
TRAFFIC DESIGN

FUNCTIONAL SUPERVISOR: OSWALD ELIZONDO
CALCULATED-DESIGNED BY: XOCHILT NARANJO
CHECKED BY: KENNY NGUYEN
REVISED BY
DATE REVISED

LAST REVISION 00-00-00
DATE PLOTTED => 06-OCT-2015
TIME PLOTTED => 08:50

Dist	COUNTY	ROUTE	POST MILES TOTAL PROJECT	SHEET No.	TOTAL SHEETS
07	LA	405	R12.6/R21.2	229	288

Kenny Nguyen 4/21/15
REGISTERED ELECTRICAL ENGINEER DATE

6-15-15
PLANS APPROVAL DATE

REGISTERED PROFESSIONAL ENGINEER KENNY NGUYEN No. 17759 Exp. 6/30/16 ELECTRICAL STATE OF CALIFORNIA

THE STATE OF CALIFORNIA OR ITS OFFICERS OR AGENTS SHALL NOT BE RESPONSIBLE FOR THE ACCURACY OR COMPLETENESS OF SCANNED COPIES OF THIS PLAN SHEET.

NOTES: (THIS SHEET ONLY)

1. FOR ACCURATE RIGHT OF WAY DATA, CONTACT RIGHT OF WAY ENGINEERING AT THE DISTTIC OFFICE.
2. INSTALL TAMPER RESISTANT COVERS ON ALL PULL BOX, AS SHOWN ON THE PLANS. SEE SHEET E-52.

LEGEND: (THIS SHEET ONLY)

[1] [RC] ELECTROLIER AND FOUNDATION.

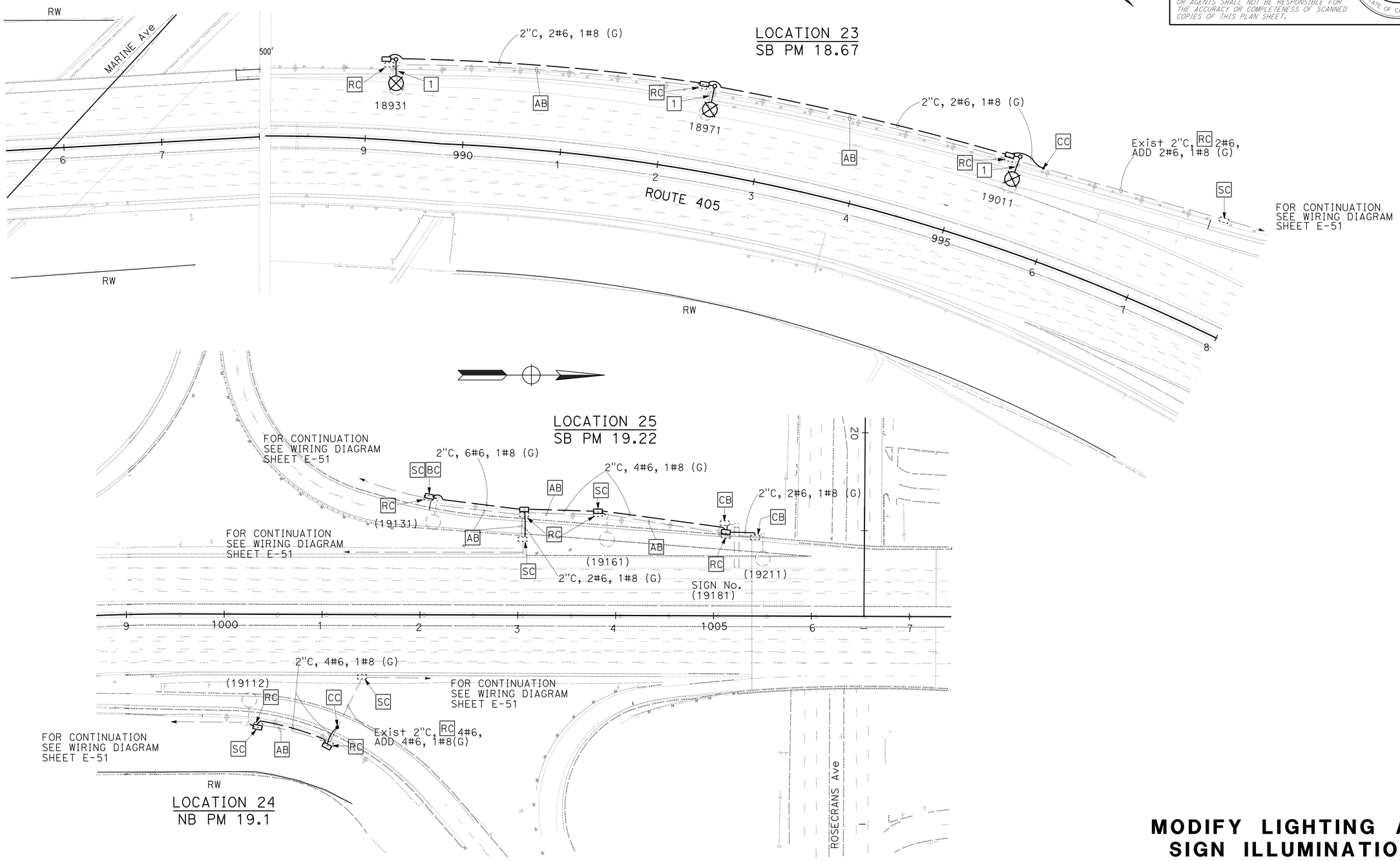

MODIFY LIGHTING AND SIGN ILLUMINATION

SCALE 1"=50'

E-42

APPROVED FOR ELECTRICAL WORK ONLY

STATE OF CALIFORNIA - DEPARTMENT OF TRANSPORTATION
Caltrans®
TRAFFIC DESIGN

FUNCTIONAL SUPERVISOR: OSWALD ELIZONDO
CALCULATED-DESIGNED BY: XOCHILT NARANJO
CHECKED BY: KENNY NGUYEN
REVISED BY / DATE REVISED

LAST REVISION 00-00-00 | DATE PLOTTED => 06-OCT-2015 | TIME PLOTTED => 08:50

Dist	COUNTY	ROUTE	POST MILES TOTAL PROJECT	SHEET No.	TOTAL SHEETS
07	LA	405	R12.6/R21.2	230	288

Kenny Nguyen 4/21/15
REGISTERED ELECTRICAL ENGINEER DATE

6-15-15
PLANS APPROVAL DATE

REGISTERED PROFESSIONAL ENGINEER
KENNY NGUYEN
No. 17759
Exp. 6/30/16
ELECTRICAL
STATE OF CALIFORNIA

THE STATE OF CALIFORNIA OR ITS OFFICERS OR AGENTS SHALL NOT BE RESPONSIBLE FOR THE ACCURACY OR COMPLETENESS OF SCANNED COPIES OF THIS PLAN SHEET.

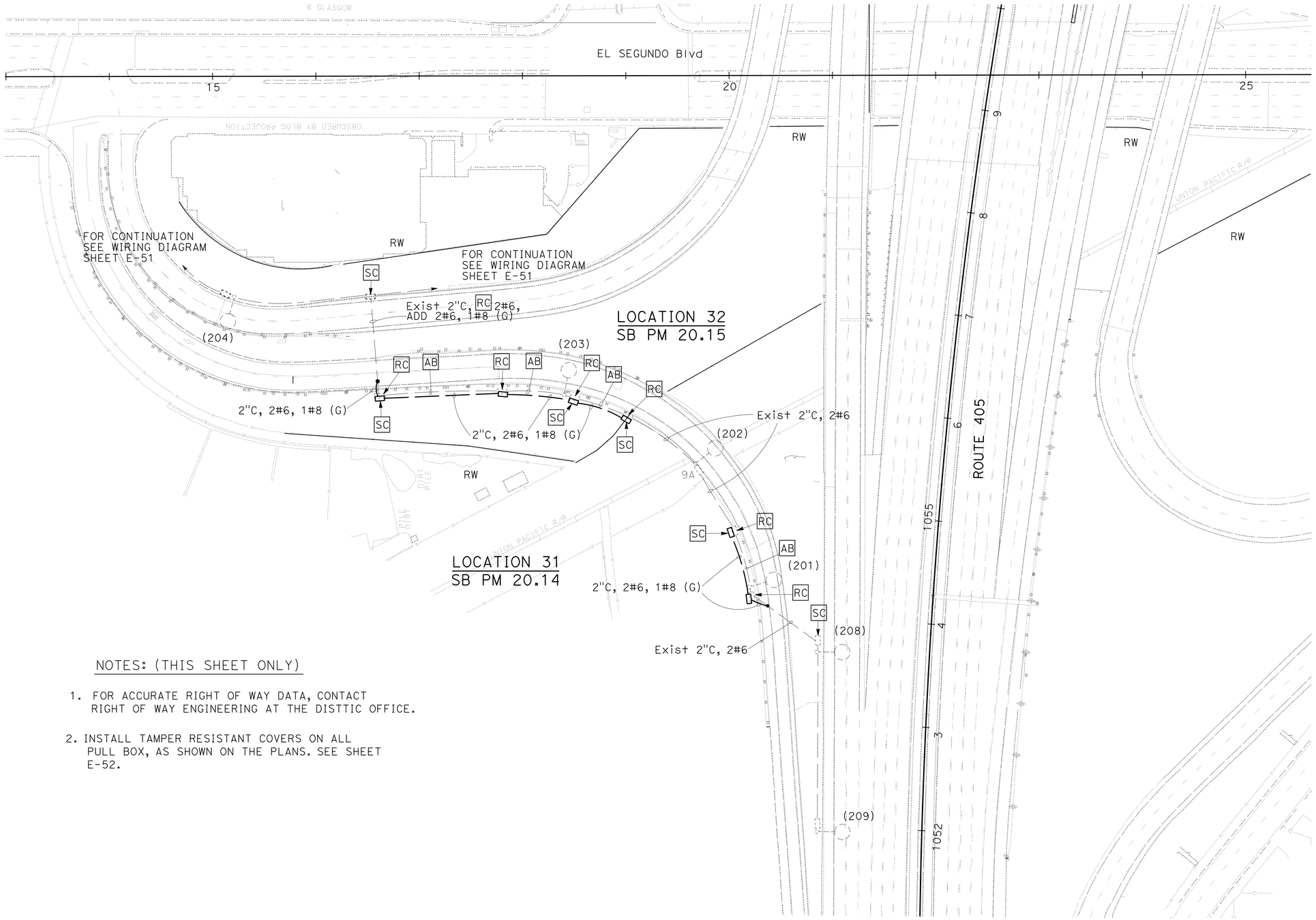

NOTES: (THIS SHEET ONLY)

1. FOR ACCURATE RIGHT OF WAY DATA, CONTACT RIGHT OF WAY ENGINEERING AT THE DISTTIC OFFICE.

2. INSTALL TAMPER RESISTANT COVERS ON ALL PULL BOX, AS SHOWN ON THE PLANS. SEE SHEET E-52.

MODIFY LIGHTING AND SIGN ILLUMINATION

SCALE 1"=50'

APPROVED FOR ELECTRICAL WORK ONLY

E-43

STATE OF CALIFORNIA - DEPARTMENT OF TRANSPORTATION
Caltrans
TRAFFIC DESIGN

FUNCTIONAL SUPERVISOR: OSWALD ELIZONDO
CALCULATED-DESIGNED BY: XOCHILT NARANJO
CHECKED BY: KENNY NGUYEN
REVISED BY
DATE REVISED

LAST REVISION 00-00-00
DATE PLOTTED => 06-OCT-2015
TIME PLOTTED => 08:50

Dist	COUNTY	ROUTE	POST MILES TOTAL PROJECT	SHEET No.	TOTAL SHEETS
07	LA	405	R12.6/R21.2	231	288

Kenny Nguyen 4/21/15
REGISTERED ELECTRICAL ENGINEER DATE

6-15-15
PLANS APPROVAL DATE

REGISTERED PROFESSIONAL ENGINEER
KENNY NGUYEN
No. 17759
Exp. 6/30/16
ELECTRICAL
STATE OF CALIFORNIA

THE STATE OF CALIFORNIA OR ITS OFFICERS OR AGENTS SHALL NOT BE RESPONSIBLE FOR THE ACCURACY OR COMPLETENESS OF SCANNED COPIES OF THIS PLAN SHEET.

NOTES: (THIS SHEET ONLY)

1. FOR ACCURATE RIGHT OF WAY DATA, CONTACT RIGHT OF WAY ENGINEERING AT THE DISTTIC OFFICE.
2. INSTALL TAMPER RESISTANT COVERS ON ALL PULL BOX, AS SHOWN ON THE PLANS. SEE SHEET E-52.

LOCATION 6 (Cont)
NB PM 14.4

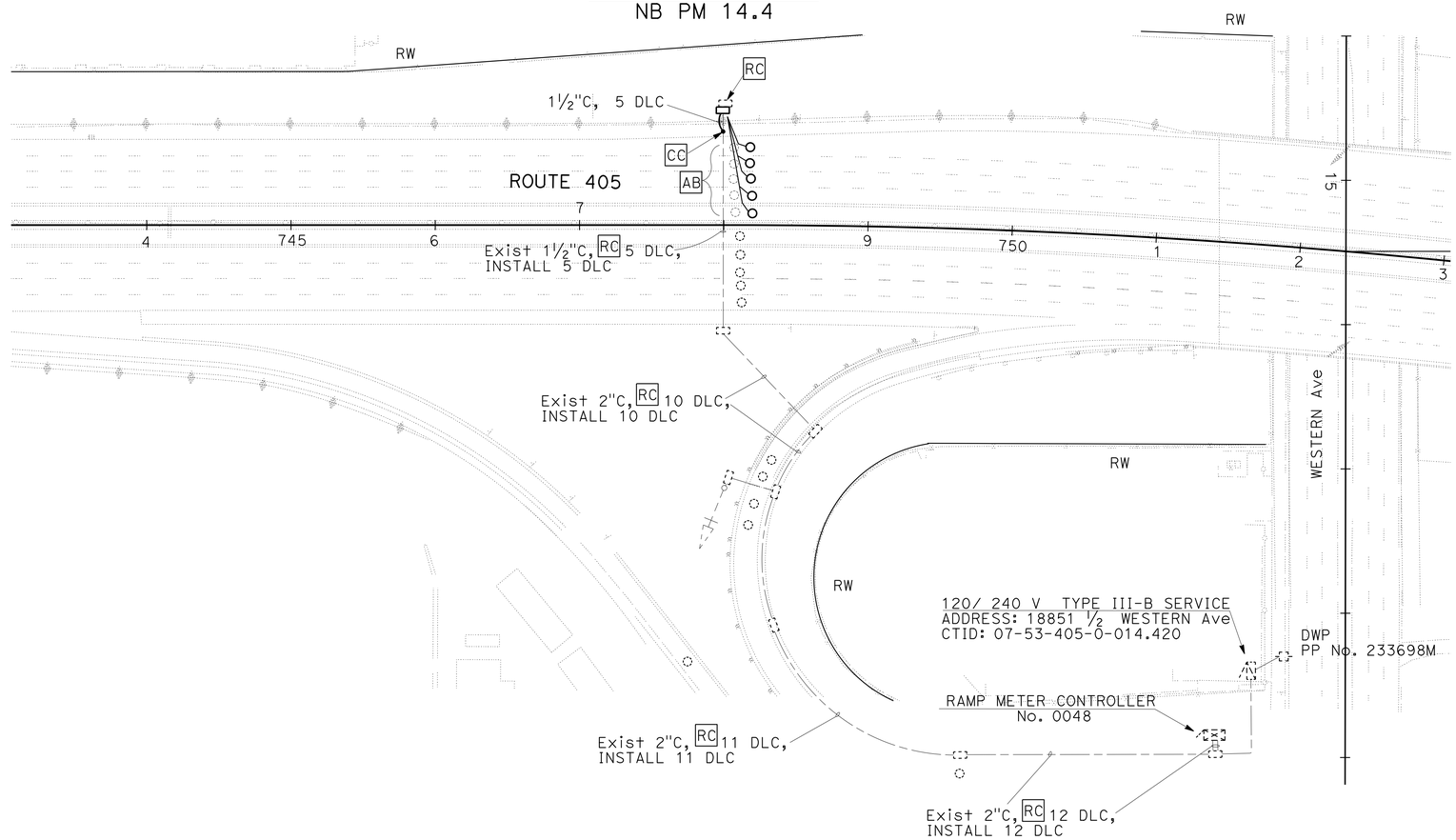

APPROVED FOR ELECTRICAL WORK ONLY

MODIFY RAMP METERING SYSTEM

SCALE 1"=50'

E-44

STATE OF CALIFORNIA - DEPARTMENT OF TRANSPORTATION
Caltrans
TRAFFIC DESIGN

FUNCTIONAL SUPERVISOR: OSWALD ELIZONDO
CALCULATED-DESIGNED BY: XOCHILT NARANJO
CHECKED BY: KENNY NGUYEN
REVISED BY
DATE REVISED

LAST REVISION 00-00-00
DATE PLOTTED => 06-OCT-2015
TIME PLOTTED => 08:50

Dist	COUNTY	ROUTE	POST MILES TOTAL PROJECT	SHEET No.	TOTAL SHEETS
07	LA	405	R12.6/R21.2	232	288

Kenny Nguyen 4/21/15
REGISTERED ELECTRICAL ENGINEER DATE

6-15-15
PLANS APPROVAL DATE

REGISTERED PROFESSIONAL ENGINEER KENNY NGUYEN No. 17759 Exp. 6/30/16 ELECTRICAL STATE OF CALIFORNIA

THE STATE OF CALIFORNIA OR ITS OFFICERS OR AGENTS SHALL NOT BE RESPONSIBLE FOR THE ACCURACY OR COMPLETENESS OF SCANNED COPIES OF THIS PLAN SHEET.

NOTES: (THIS SHEET ONLY)

1. FOR ACCURATE RIGHT OF WAY DATA, CONTACT RIGHT OF WAY ENGINEERING AT THE DISTTIC OFFICE.
2. INSTALL TAMPER RESISTANT COVERS ON ALL PULL BOX, AS SHOWN ON THE PLANS. SEE SHEET E-52.

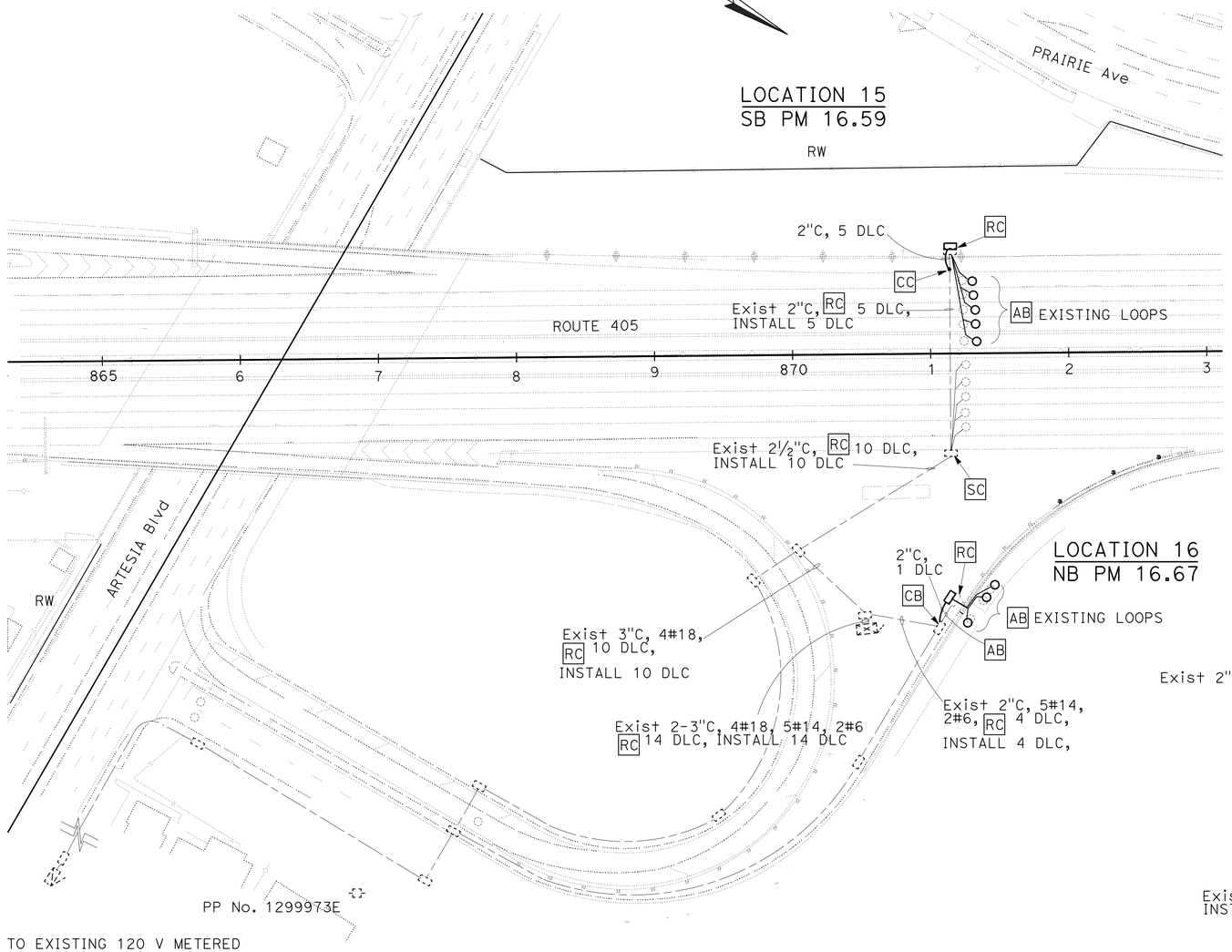

215' TO EXISTING 120 V METERED
TYPE III SERVICE CABINET
CTID: 07-53-405-0-016.602
ADDRESS: 3819 ½ ARTESIA Blvd

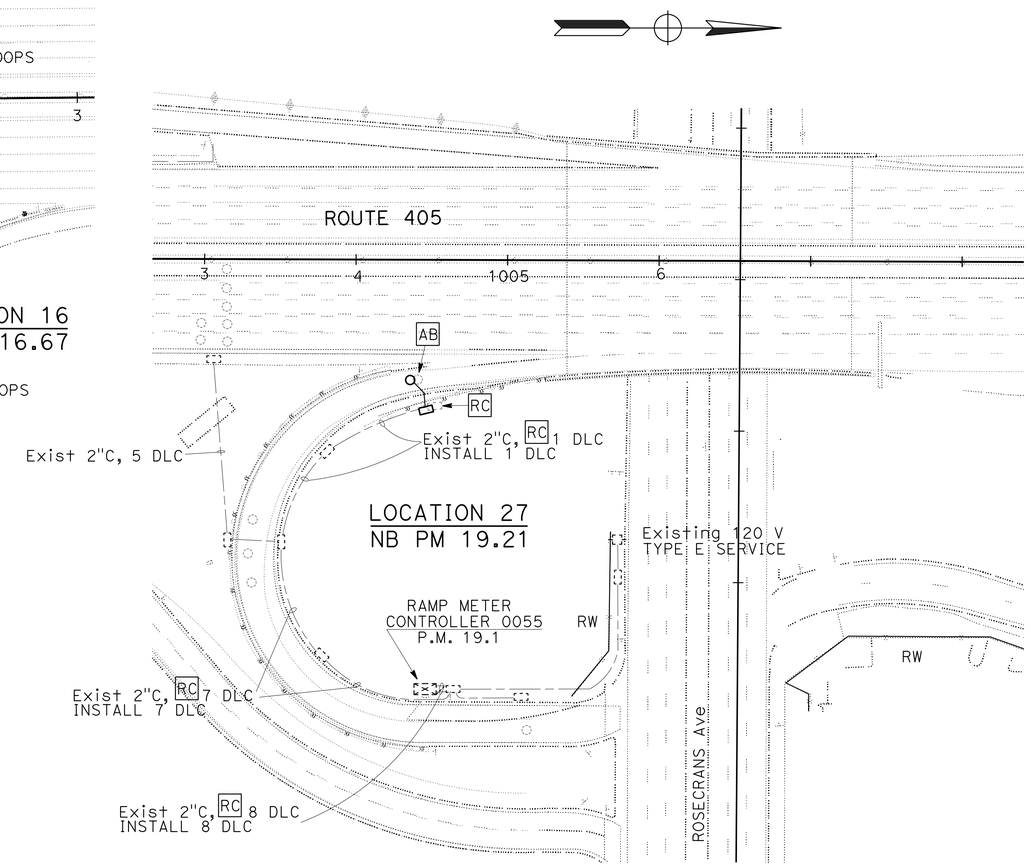

MODIFY RAMP METERING SYSTEM

SCALE 1"=50'

APPROVED FOR ELECTRICAL WORK ONLY

E-45

STATE OF CALIFORNIA - DEPARTMENT OF TRANSPORTATION
Caltrans
TRAFFIC DESIGN

FUNCTIONAL SUPERVISOR: OSWALD ELIZONDO
CALCULATED-DESIGNED BY: XOCHILT NARANJO
CHECKED BY: KENNY NGUYEN
REVISED BY
DATE REVISED

LAST REVISION 00-00-00
DATE PLOTTED => 06-OCT-2015
TIME PLOTTED => 08:50

Dist	COUNTY	ROUTE	POST MILES TOTAL PROJECT	SHEET No.	TOTAL SHEETS
07	LA	405	R12.6/R21.2	233	288

Kenny Nguyen 4/21/15
REGISTERED ELECTRICAL ENGINEER DATE

6-15-15
PLANS APPROVAL DATE

REGISTERED PROFESSIONAL ENGINEER
KENNY NGUYEN
No. 17759
Exp. 6/30/16
ELECTRICAL
STATE OF CALIFORNIA

THE STATE OF CALIFORNIA OR ITS OFFICERS OR AGENTS SHALL NOT BE RESPONSIBLE FOR THE ACCURACY OR COMPLETENESS OF SCANNED COPIES OF THIS PLAN SHEET.

NOTES: (THIS SHEET ONLY)

1. FOR ACCURATE RIGHT OF WAY DATA, CONTACT RIGHT OF WAY ENGINEERING AT THE DISTTIC OFFICE.
2. INSTALL TAMPER RESISTANT COVERS ON ALL PULL BOX, AS SHOWN ON THE PLANS. SEE SHEET E-52.

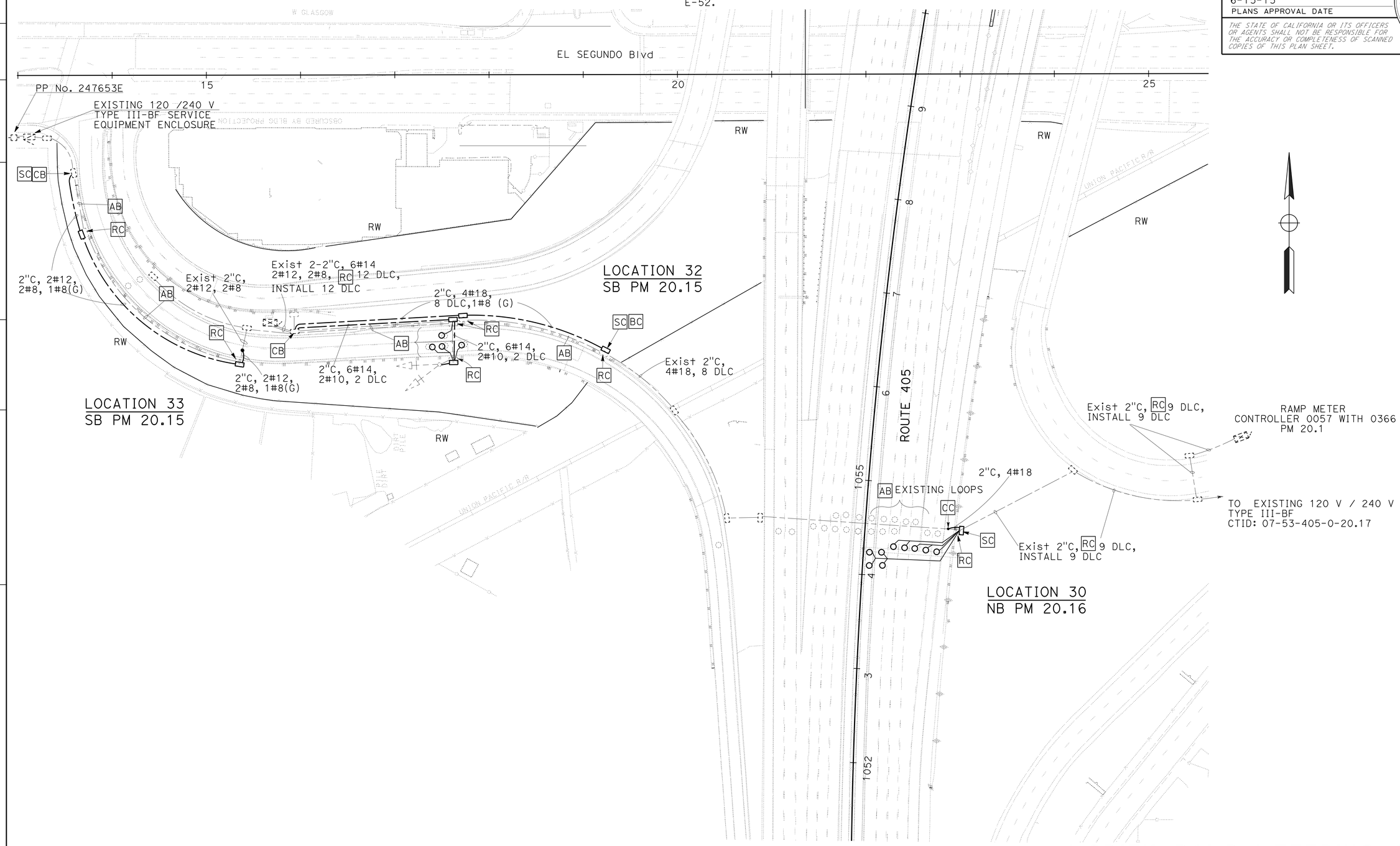

APPROVED FOR ELECTRICAL WORK ONLY

MODIFY RAMP METERING SYSTEM

SCALE 1"=50'

E-46

REVISED BY	DATE REVISED

CALCULATED-DESIGNED BY	CHECKED BY
XOCHILT NARANJO	KENNY NGUYEN

FUNCTIONAL SUPERVISOR: OSWALD ELIZONDO

STATE OF CALIFORNIA - DEPARTMENT OF TRANSPORTATION
Caltrans® **TRAFFIC DESIGN**

LAST REVISION 00-00-00 | DATE PLOTTED => 06-OCT-2015 | TIME PLOTTED => 08:50

Dist	COUNTY	ROUTE	POST MILES TOTAL PROJECT	SHEET No.	TOTAL SHEETS
07	LA	405	R12.6/R21.2	234	288

Kenny Nguyen 4/21/15
REGISTERED ELECTRICAL ENGINEER DATE

6-15-15
PLANS APPROVAL DATE

REGISTERED PROFESSIONAL ENGINEER
KENNY NGUYEN
No. 17759
Exp. 6/30/16
ELECTRICAL
STATE OF CALIFORNIA

THE STATE OF CALIFORNIA OR ITS OFFICERS OR AGENTS SHALL NOT BE RESPONSIBLE FOR THE ACCURACY OR COMPLETENESS OF SCANNED COPIES OF THIS PLAN SHEET.

NOTES: (THIS SHEET ONLY)

1. FOR ACCURATE RIGHT OF WAY DATA, CONTACT RIGHT OF WAY ENGINEERING AT THE DISTTIC OFFICE.

2. INSTALL TAMPER RESISTANT COVERS ON ALL PULL BOX, AS SHOWN ON THE PLANS. SEE SHEET E-52.

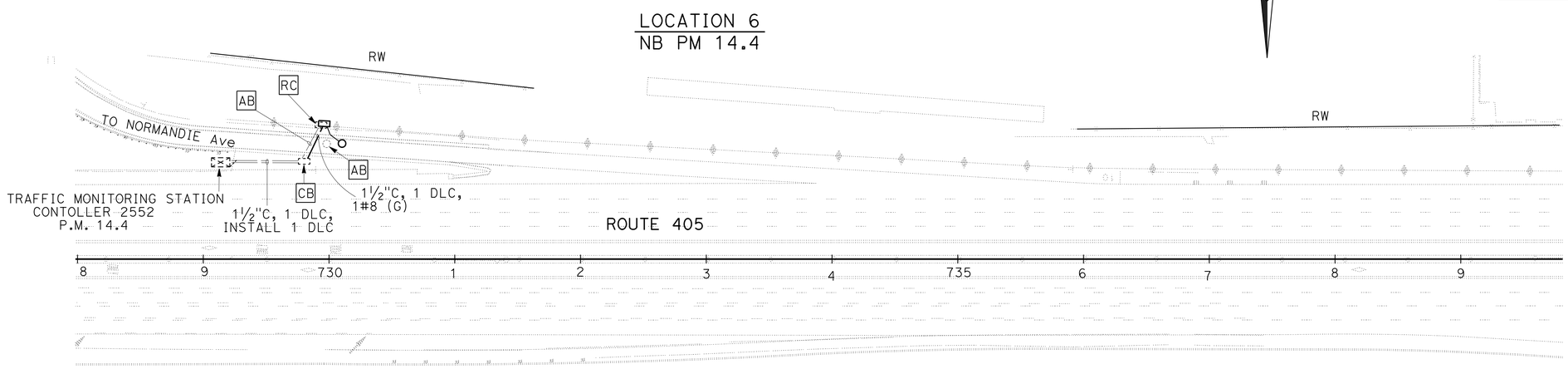

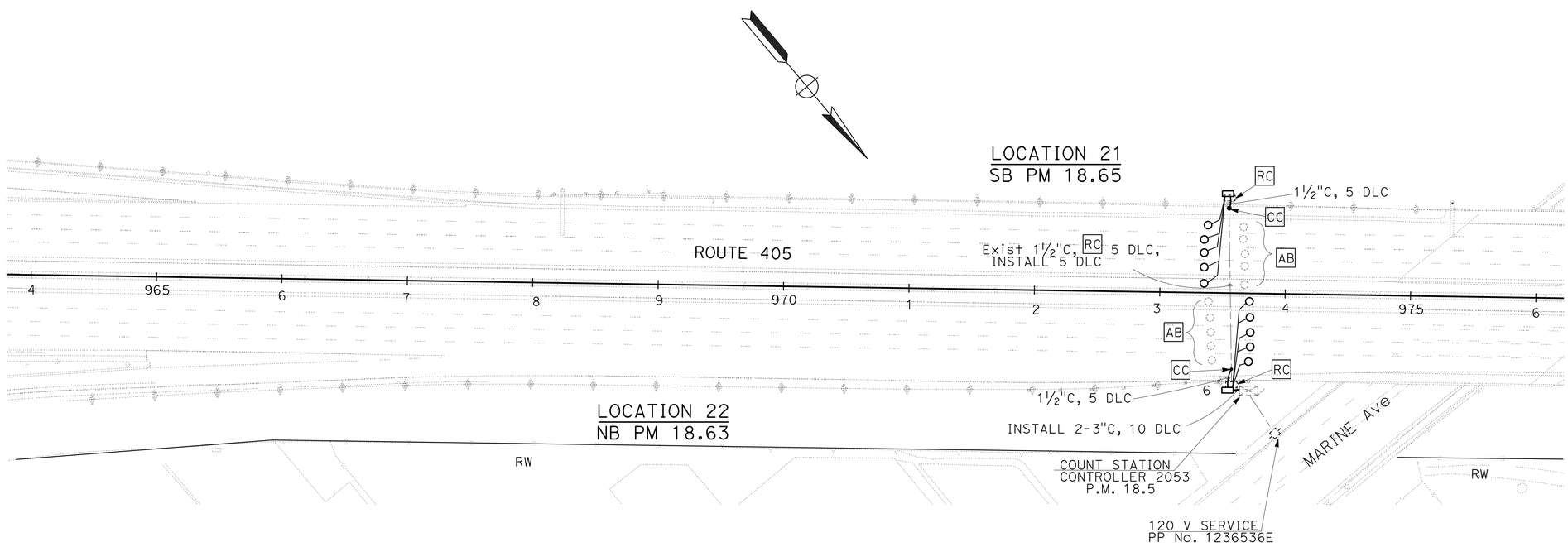

MODIFY TRAFFIC MONITORING STATION

SCALE 1"=50'

E-47

APPROVED FOR ELECTRICAL WORK ONLY

STATE OF CALIFORNIA - DEPARTMENT OF TRANSPORTATION
Caltrans
TRAFFIC DESIGN

FUNCTIONAL SUPERVISOR: OSWALD ELIZONDO
CALCULATED-DESIGNED BY: XOCHILT NARANJO
CHECKED BY: KENNY NGUYEN
REVISED BY
DATE REVISED

LAST REVISION 00-00-00
DATE PLOTTED => 06-OCT-2015
TIME PLOTTED => 08:50

Dist	COUNTY	ROUTE	POST MILES TOTAL PROJECT	SHEET No.	TOTAL SHEETS
07	LA	405	R12.6/R21.2	235	288

Kenny Nguyen 4/21/15
REGISTERED ELECTRICAL ENGINEER DATE

6-15-15
PLANS APPROVAL DATE

REGISTERED PROFESSIONAL ENGINEER
KENNY NGUYEN
No. 17759
Exp. 6/30/16
ELECTRICAL
STATE OF CALIFORNIA

THE STATE OF CALIFORNIA OR ITS OFFICERS OR AGENTS SHALL NOT BE RESPONSIBLE FOR THE ACCURACY OR COMPLETENESS OF SCANNED COPIES OF THIS PLAN SHEET.

NOTES: (THIS SHEET ONLY)

1. FOR ACCURATE RIGHT OF WAY DATA, CONTACT RIGHT OF WAY ENGINEERING AT THE DISTTIC OFFICE.

2. INSTALL TAMPER RESISTANT COVERS ON ALL PULL BOX, AS SHOWN ON THE PLANS. SEE SHEET E-52.

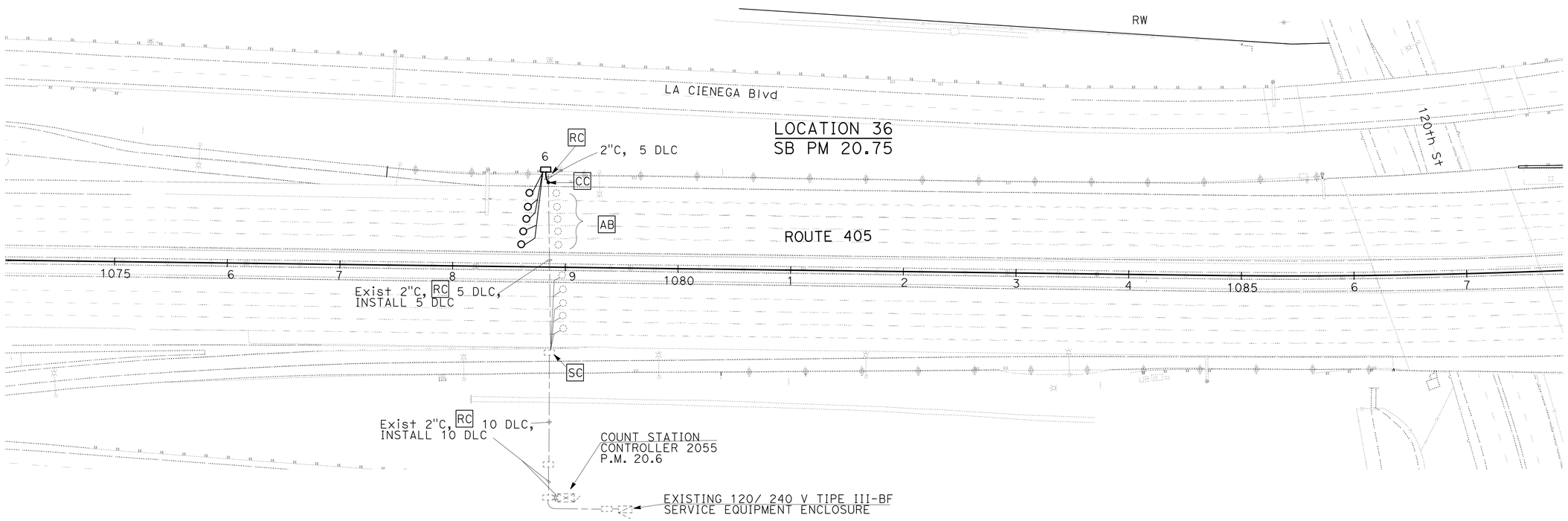

MODIFY TRAFFIC MONITORING STATION

SCALE 1"=50'

APPROVED FOR ELECTRICAL WORK ONLY

E-48

STATE OF CALIFORNIA - DEPARTMENT OF TRANSPORTATION
Caltrans® **TRAFFIC DESIGN**

FUNCTIONAL SUPERVISOR: OSWALD ELIZONDO
CALCULATED-DESIGNED BY: XOCHILT NARANJO
CHECKED BY: KENNY NGUYEN
REVISED BY
DATE REVISED

LAST REVISION 00-00-00
DATE PLOTTED => 06-OCT-2015
TIME PLOTTED => 08:50

Dist	COUNTY	ROUTE	POST MILES TOTAL PROJECT	SHEET No.	TOTAL SHEETS
07	LA	405	R12.6/R21.2	236	288

Kenny Nguyen 4/21/15
REGISTERED ELECTRICAL ENGINEER DATE

6-15-15
PLANS APPROVAL DATE

REGISTERED PROFESSIONAL ENGINEER
KENNY NGUYEN
No. 17759
Exp. 6/30/16
ELECTRICAL
STATE OF CALIFORNIA

THE STATE OF CALIFORNIA OR ITS OFFICERS OR AGENTS SHALL NOT BE RESPONSIBLE FOR THE ACCURACY OR COMPLETENESS OF SCANNED COPIES OF THIS PLAN SHEET.

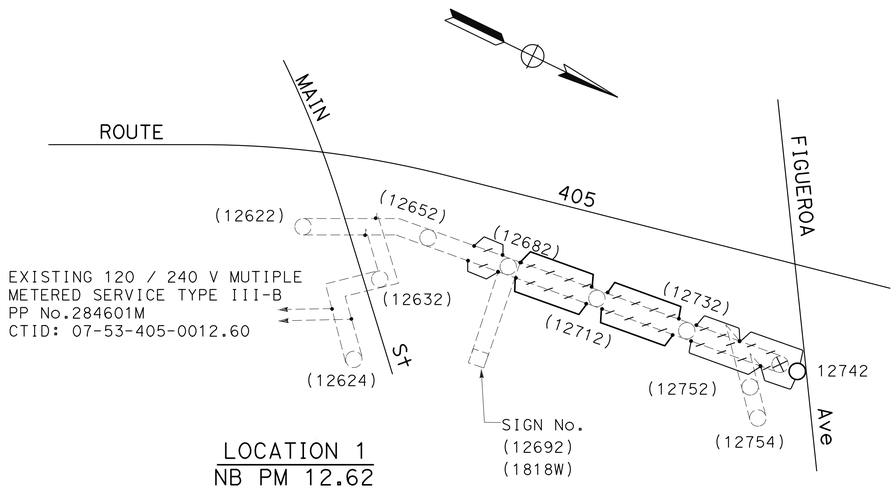

LOCATION 1
NB PM 12.62

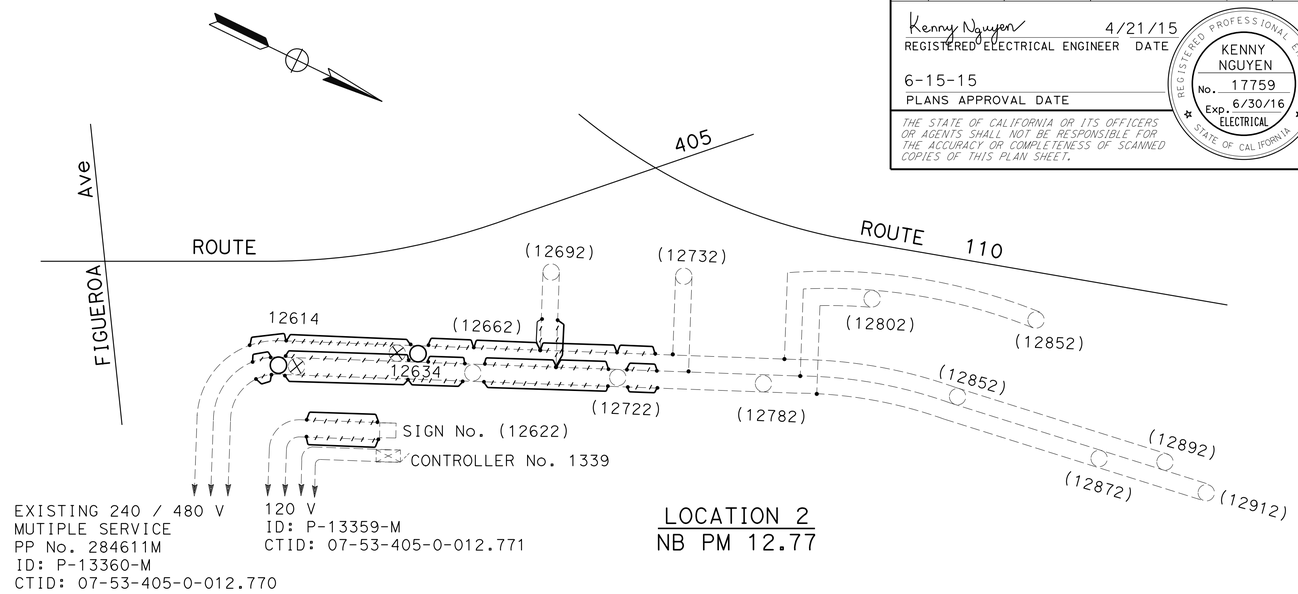

LOCATION 2
NB PM 12.77

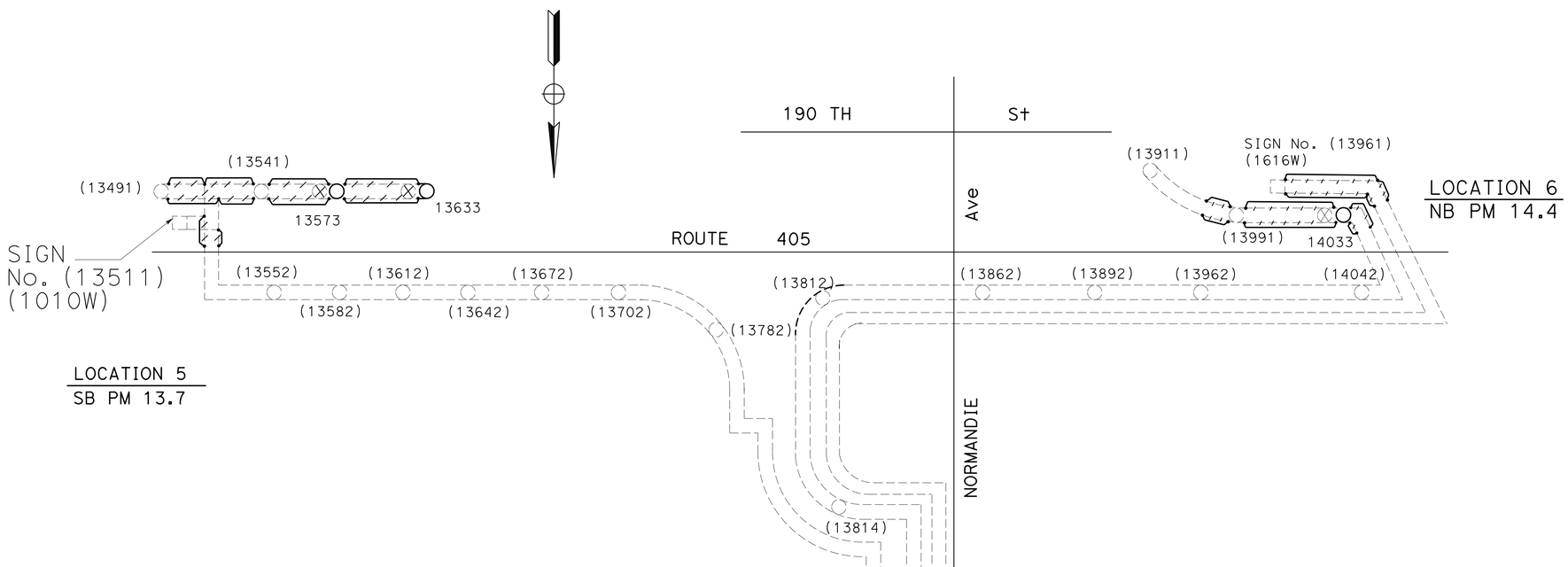

LOCATION 5
SB PM 13.7

LOCATION 6
NB PM 14.4

WIRING DIAGRAM LEGEND: (SHEETS E-49 TO E-51)

- INSTALL 235 W LED Lum.
- INSTALL CONDUCTOR.
- RC Exist LAMP AND BALLAST.
- SPLICE CONDUCTOR.
- Exist SPLICE.
- Exist LAMP TO REMAIN.
- Exist CONDUCTOR TO REMAIN.
- Exist SIGN Ltg TO REMAIN.
- RC Exist CONDUCTOR.

MODIFY LIGHTING AND SIGN ILLUMINATION

NO SCALE

APPROVED FOR ELECTRICAL WORK ONLY

E-49

STATE OF CALIFORNIA - DEPARTMENT OF TRANSPORTATION
Caltrans® TRAFFIC DESIGN

FUNCTIONAL SUPERVISOR: OSWALD ELIZONDO
CALCULATED-DESIGNED BY: XOCHILT NARANJO
CHECKED BY: KENNY NGUYEN
REVISED BY
DATE REVISED

LAST REVISION 00-00-00
DATE PLOTTED => 06-OCT-2015
TIME PLOTTED => 08:50

Dist	COUNTY	ROUTE	POST MILES TOTAL PROJECT	SHEET No.	TOTAL SHEETS
07	LA	405	R12.6/R21.2	237	288

Kenny Nguyen 4/21/15
REGISTERED ELECTRICAL ENGINEER DATE

6-15-15
PLANS APPROVAL DATE

REGISTERED PROFESSIONAL ENGINEER
KENNY NGUYEN
No. 17759
Exp. 6/30/16
ELECTRICAL
STATE OF CALIFORNIA

THE STATE OF CALIFORNIA OR ITS OFFICERS OR AGENTS SHALL NOT BE RESPONSIBLE FOR THE ACCURACY OR COMPLETENESS OF SCANNED COPIES OF THIS PLAN SHEET.

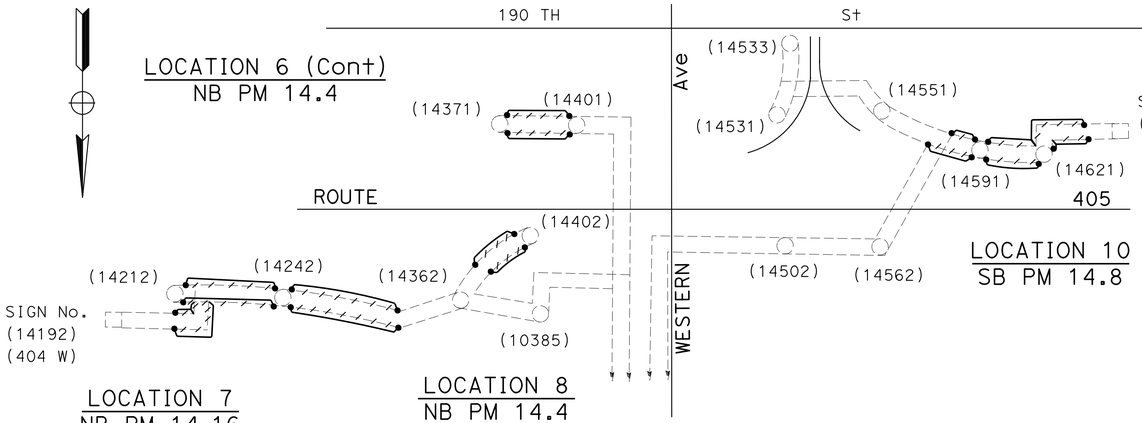

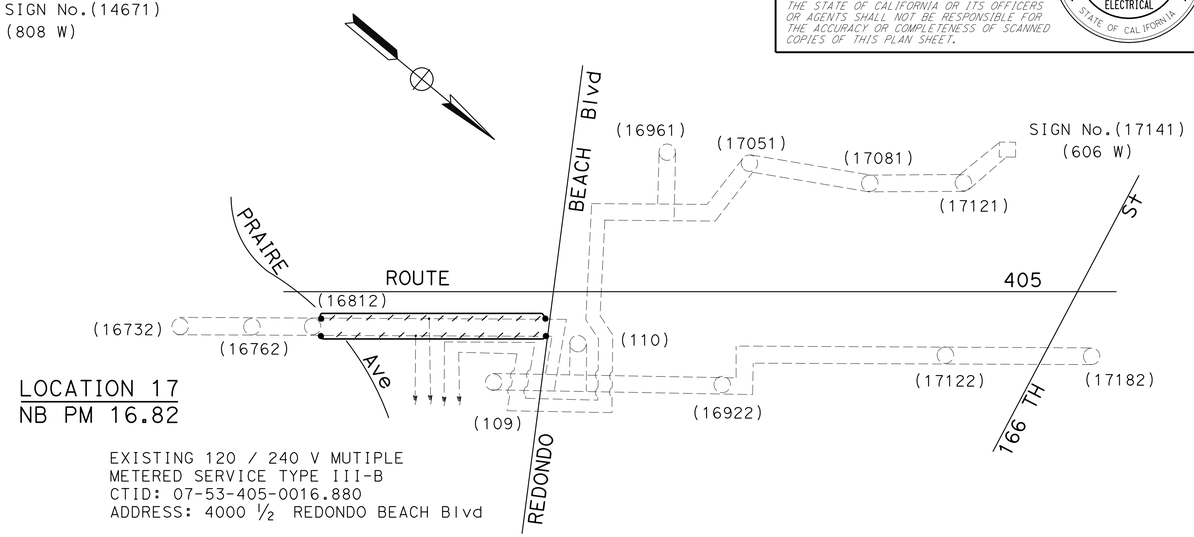

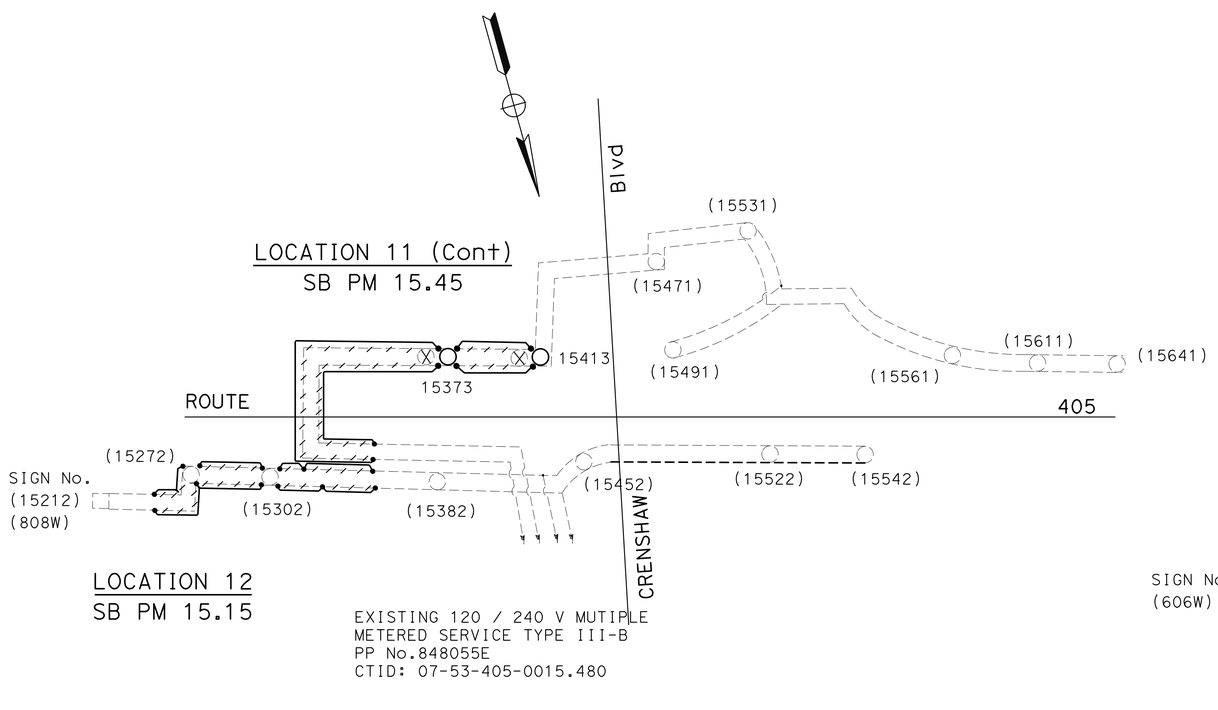

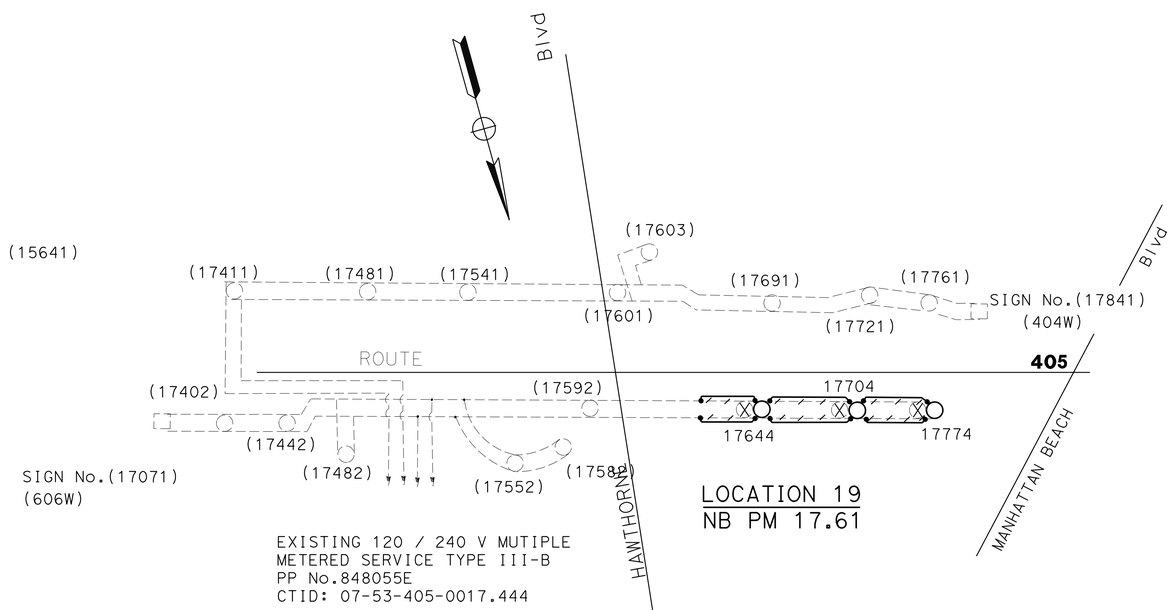

MODIFY LIGHTING AND SIGN ILLUMINATION

SCALE 1"=50'

APPROVED FOR ELECTRICAL WORK ONLY

E-50

STATE OF CALIFORNIA - DEPARTMENT OF TRANSPORTATION
Caltrans® **TRAFFIC DESIGN**

FUNCTIONAL SUPERVISOR: OSWALD ELIZONDO
CALCULATED-DESIGNED BY: XOCHILT NARANJO
CHECKED BY: KENNY NGUYEN
REVISED BY / DATE REVISED

LAST REVISION 00-00-00
DATE PLOTTED => 06-OCT-2015
TIME PLOTTED => 08:50

Dist	COUNTY	ROUTE	POST MILES TOTAL PROJECT	SHEET No.	TOTAL SHEETS
07	LA	405	R12.6/R21.2	238	288

Kenny Nguyen 4/21/15
REGISTERED ELECTRICAL ENGINEER DATE

6-15-15
PLANS APPROVAL DATE

REGISTERED PROFESSIONAL ENGINEER KENNY NGUYEN No. 17759 Exp. 6/30/16 ELECTRICAL STATE OF CALIFORNIA

THE STATE OF CALIFORNIA OR ITS OFFICERS OR AGENTS SHALL NOT BE RESPONSIBLE FOR THE ACCURACY OR COMPLETENESS OF SCANNED COPIES OF THIS PLAN SHEET.

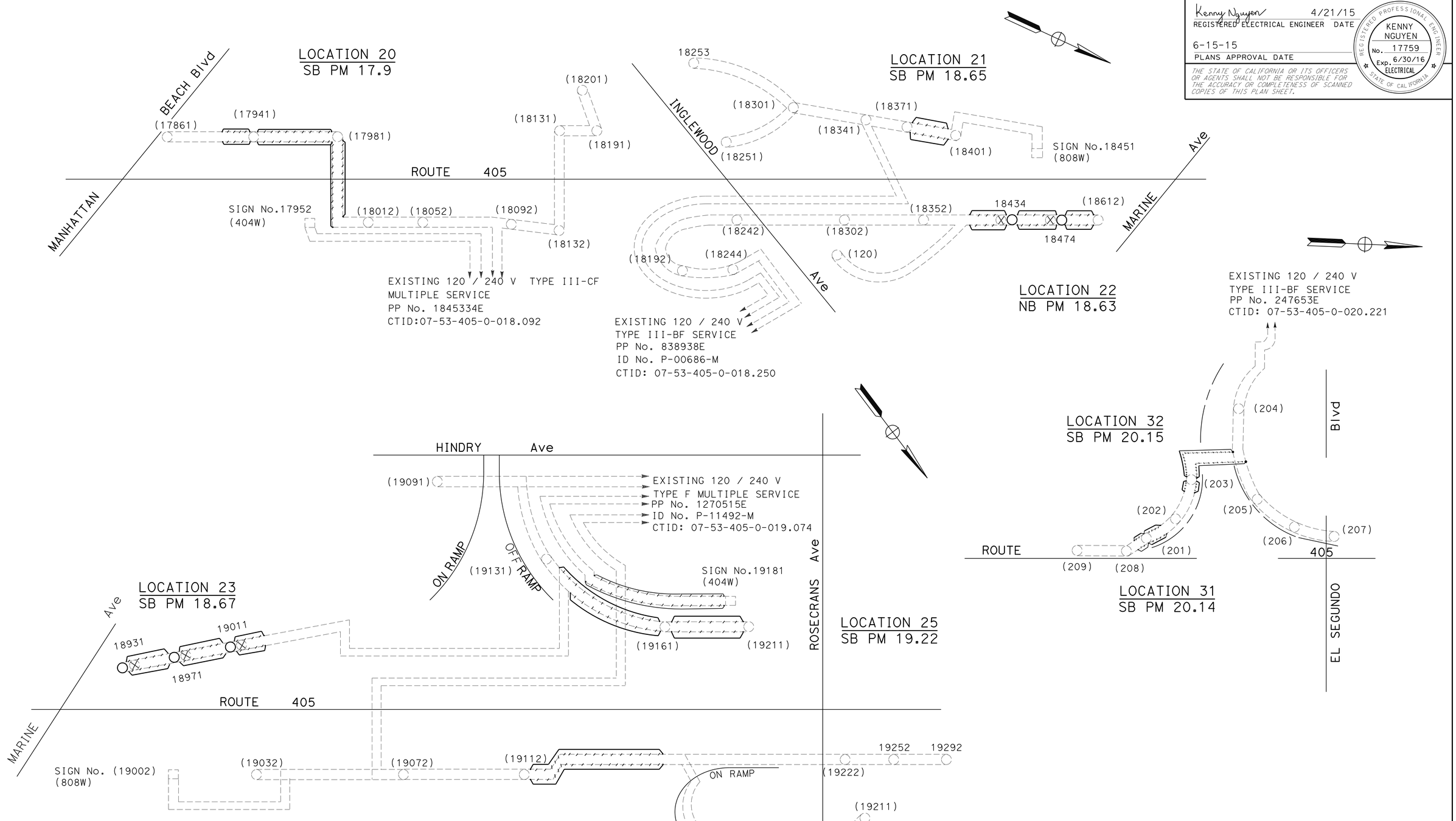

MODIFY LIGHTING AND SIGN ILLUMINATION

NO SCALE

APPROVED FOR ELECTRICAL WORK ONLY

E-51

REVISED BY	DATE REVISED

CALCULATED-DESIGNED BY	CHECKED BY
XOCHILT NARANJO	KENNY NGUYEN

FUNCTIONAL SUPERVISOR: OSWALD ELIZONDO

STATE OF CALIFORNIA - DEPARTMENT OF TRANSPORTATION
Caltrans
TRAFFIC DESIGN

LAST REVISION 00-00-00 | DATE PLOTTED => 06-OCT-2015 | TIME PLOTTED => 08:50

Dist	COUNTY	ROUTE	POST MILES TOTAL PROJECT	SHEET No.	TOTAL SHEETS
07	LA	405	R12.6/R21.2	239	288

Kenny Nguyen 4/21/15
REGISTERED ELECTRICAL ENGINEER DATE

6-15-15
PLANS APPROVAL DATE

REGISTERED PROFESSIONAL ENGINEER
KENNY NGUYEN
No. 17759
Exp. 6/30/16
ELECTRICAL
STATE OF CALIFORNIA

THE STATE OF CALIFORNIA OR ITS OFFICERS OR AGENTS SHALL NOT BE RESPONSIBLE FOR THE ACCURACY OR COMPLETENESS OF SCANNED COPIES OF THIS PLAN SHEET.

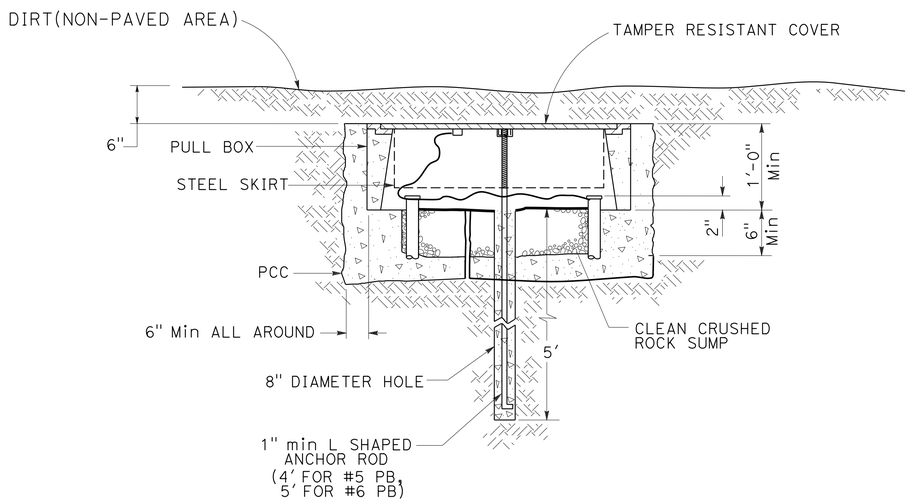

PULL BOX DETAILS (NON-PAVED AREAS)

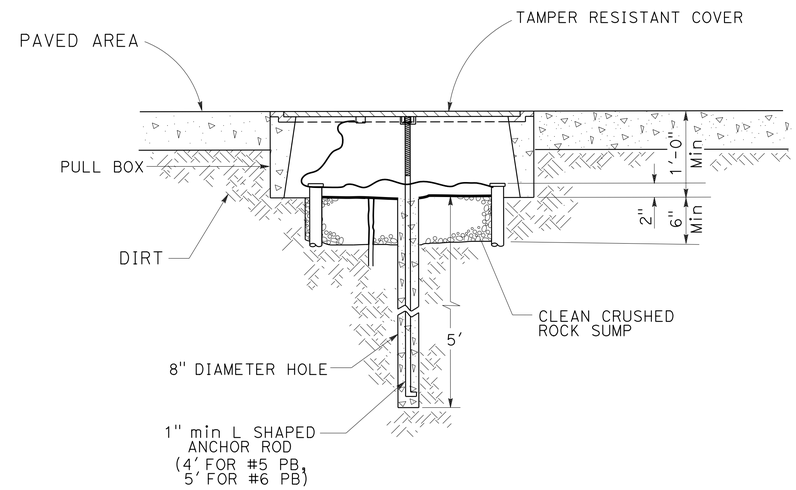

PULL BOX DETAILS (PAVED AREAS)

ELECTRICAL SYSTEMS (TAMPER RESISTANT PULL BOX INSTALLATION DETAILS)

NO SCALE

E-52

STATE OF CALIFORNIA - DEPARTMENT OF TRANSPORTATION
Caltrans
TRAFFIC DESIGN

FUNCTIONAL SUPERVISOR: OSWALD ELIZONDO
CALCULATED-DESIGNED BY: XOCHILT NARANJO
CHECKED BY: KENNY NGUYEN
REVISED BY
DATE REVISED

LAST REVISION 00-00-00
DATE PLOTTED => 06-OCT-2015
TIME PLOTTED => 08:50

Dist	COUNTY	ROUTE	POST MILES TOTAL PROJECT	SHEET No.	TOTAL SHEETS
07	LA	405	R12.6/R21.2	240	288

Jacqueline C Tan 4/21/15
REGISTERED ELECTRICAL ENGINEER DATE

6-15-15
PLANS APPROVAL DATE

REGISTERED PROFESSIONAL ENGINEER JACQUELINE C. TAN No. E015611 Exp. 12/31/15 ELECTRICAL STATE OF CALIFORNIA

THE STATE OF CALIFORNIA OR ITS OFFICERS OR AGENTS SHALL NOT BE RESPONSIBLE FOR THE ACCURACY OR COMPLETENESS OF SCANNED COPIES OF THIS PLAN SHEET.

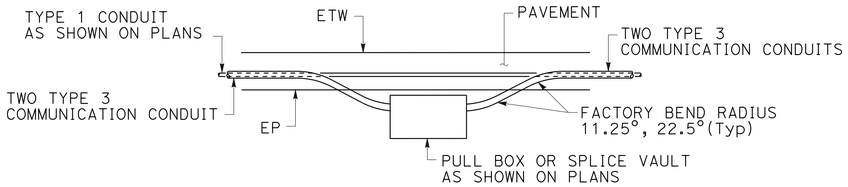

OUTSIDE SHOULDER PULL BOX INSTALLATION (TOP VIEW)

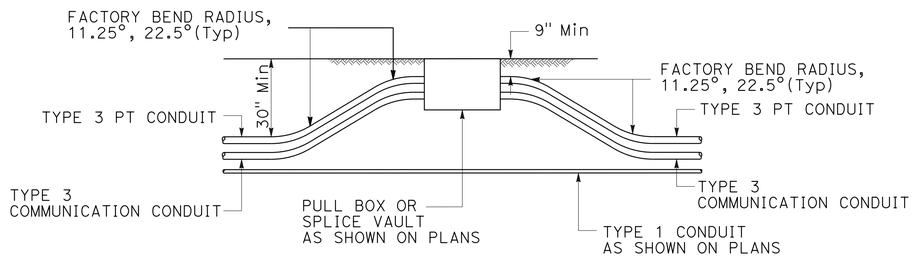

PULL BOX FOR SOIL AREA TRENCHING (ELEVATION)

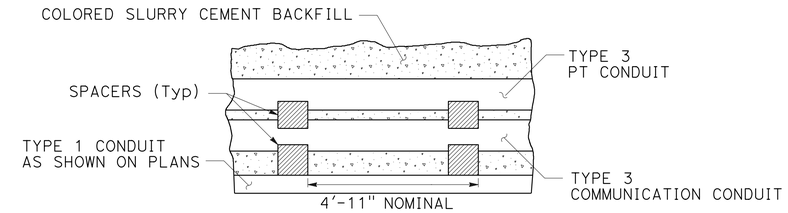

CONDUIT SPACER PLACEMENT (SIDE VIEW)

NOTES: (THIS SHEET ONLY)

1. REPLACE AC DIKE IN KIND, AS NECESSARY.
2. TRENCH TO BE CENTERED IN SHOULDER OR AS DIRECTED BY ENGINEER.
3. MAINTAIN 24" MINIMUM COVER AND BACKFILL TRENCH WITH SLURRY CEMENT BETWEEN PULL BOX AND PAVED SHOULDER.
4. WHERE TRENCH TRANSITIONS FROM ASPHALT TO UNPAVED AREA, EXCEPT AT PULL BOXES, CONDUIT TO GRADUALLY TRANSITION FROM 24" MINIMUM DEPTH TO 30" MINIMUM DEPTH WITHIN THE ASPHALT AREA.
5. 24" MINIMUM COVER MAY BE REDUCED TO 9" MINIMUM COVER IF NEEDED TO CLEAR A STORM DRAIN OR OTHER FIXED OBJECT AS DIRECTED BY RESIDENT ENGINEER.
6. PROVIDE MINIMUM 4'-11" CLEARANCE BETWEEN ANY CONDUIT AND EXISTING STRUCTURE FOUNDATIONS.
7. ANCHOR/RESTRAIN TOP CONDUIT FROM FLOATING DURING SLURRY CEMENT BACKFILL.
8. CONDUITS MUST BE INSTALLED IN NEW ASPHALT PAVEMENT AFTER AGGREGATE BASE IS PLACED AND COMPACTED. CONDUIT INSTALLATION MUST PRECLUDE ROADWAY PAVING.

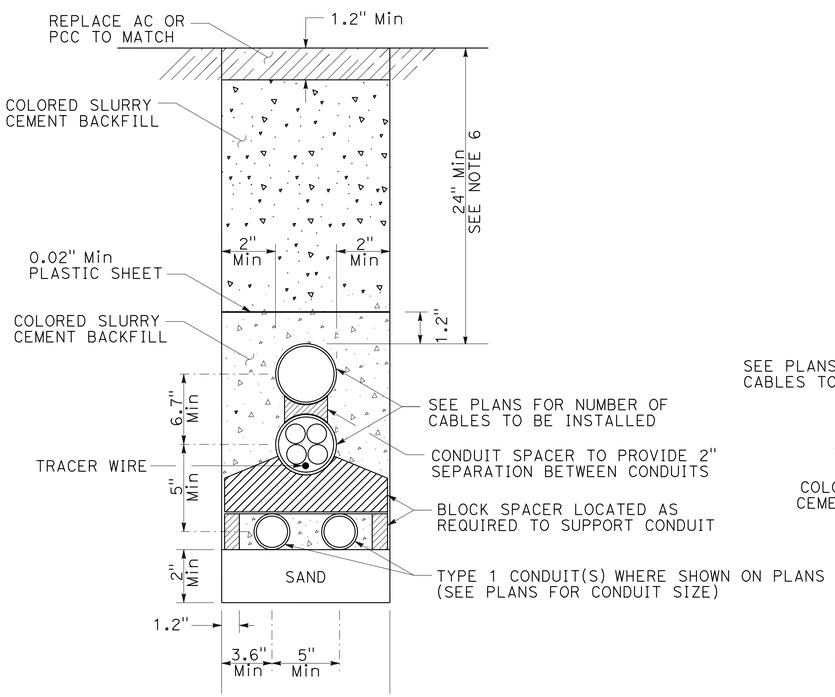

TRENCH IN PAVEMENT (CONCRETE OR ASPHALT)
WITH TYPE 3 COMMUNICATION CONDUIT(S)
AND TYPE 1 CONDUIT(S)

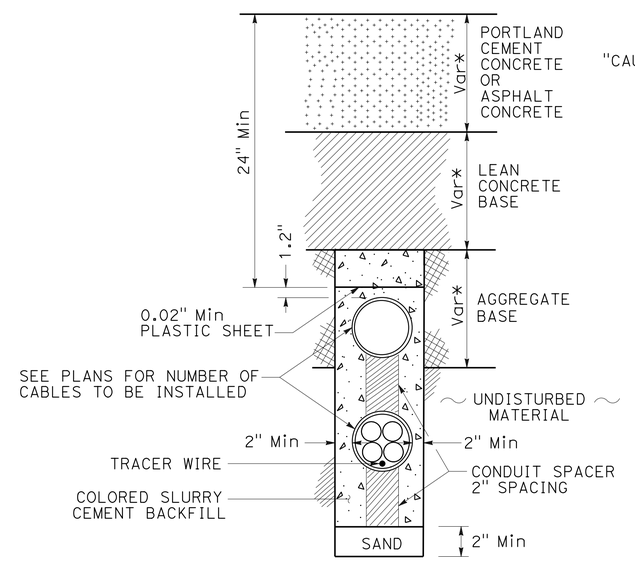

NEW PAVEMENT (PCC or ASPHALT)
WITH TYPE 3 COMMUNICATION CONDUIT(S)

(* PAVEMENT THICKNESS, SEE TYPICAL CROSS SECTION PLANS)

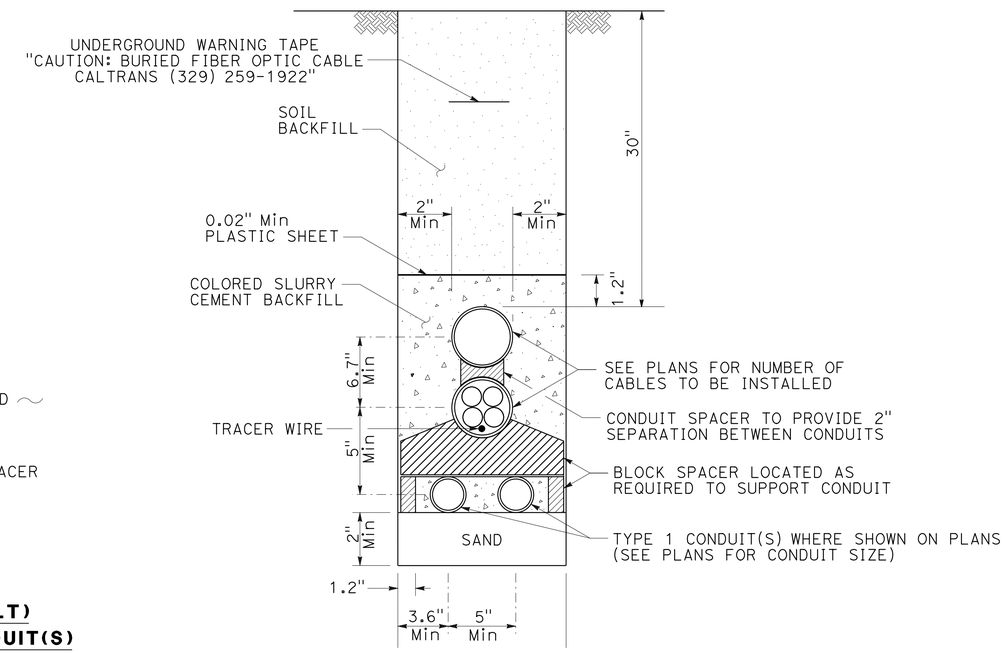

TRENCH IN SOIL
WITH TYPE 3 COMMUNICATION CONDUIT(S)
AND TYPE 1 CONDUIT(S)

ELECTRICAL DETAILS

NO SCALE

(TYPICAL COMMUNICATION CONDUIT AND PULL BOX INSTALLATION DETAILS)

E-53

HENRY H. TRINH	HT
JACQUELINE C. TAN	05/15
REVISED BY	DATE REVISED
CALCULATED-DESIGNED BY	
CHECKED BY	
FUNCTIONAL SUPERVISOR	JACQUELINE C. TAN

STATE OF CALIFORNIA - DEPARTMENT OF TRANSPORTATION
Caltrans® OFFICE OF ITS

LAST REVISION 05-06-15 | DATE PLOTTED => 06-OCT-2015 | TIME PLOTTED => 08:50

Dist	COUNTY	ROUTE	POST MILES TOTAL PROJECT	SHEET No.	TOTAL SHEETS
07	LA	405	R12.6/R21.2	241	288

Jacqueline C Tan 4/21/15
REGISTERED ELECTRICAL ENGINEER DATE

6-15-15
PLANS APPROVAL DATE

REGISTERED PROFESSIONAL ENGINEER JACQUELINE C. TAN No. E015611 Exp. 12/31/15 ELECTRICAL STATE OF CALIFORNIA

THE STATE OF CALIFORNIA OR ITS OFFICERS OR AGENTS SHALL NOT BE RESPONSIBLE FOR THE ACCURACY OR COMPLETENESS OF SCANNED COPIES OF THIS PLAN SHEET.

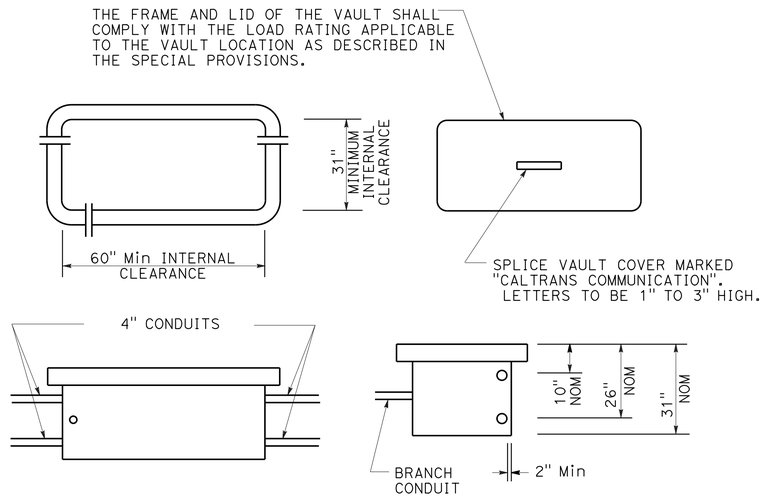

SPLICE VAULT DIMENSIONS

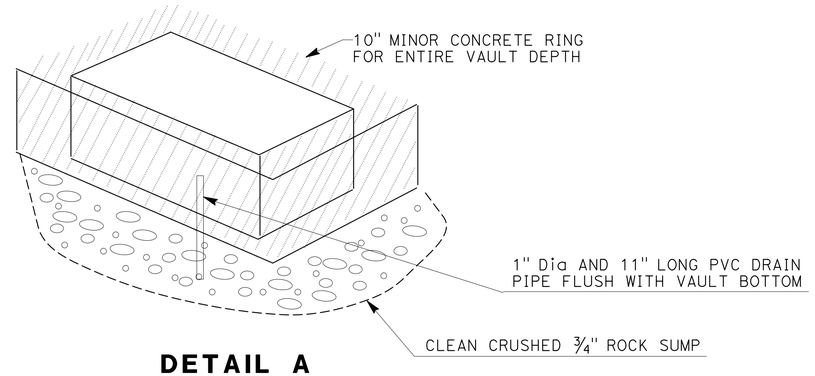

DETAIL A

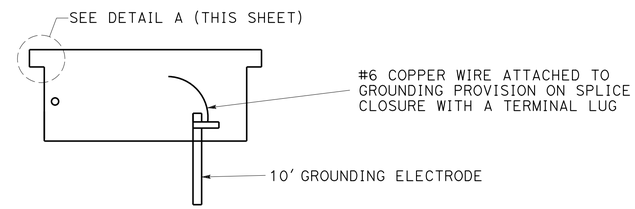

SPLICE VAULT INSTALLATION

INSTALLATION NOTES

1. CONCRETE ENCASEMENT AROUND SPLICE VAULT MUST BE MINOR CONCRETE.
2. PAVEMENT AND SUBGRADE TO BE AS DIRECTED BY THE ENGINEER.
3. LONGER SIDE OF THE SPLICE VAULT MUST BE PARALLEL TO THE DIRECTION OF TRAVEL.

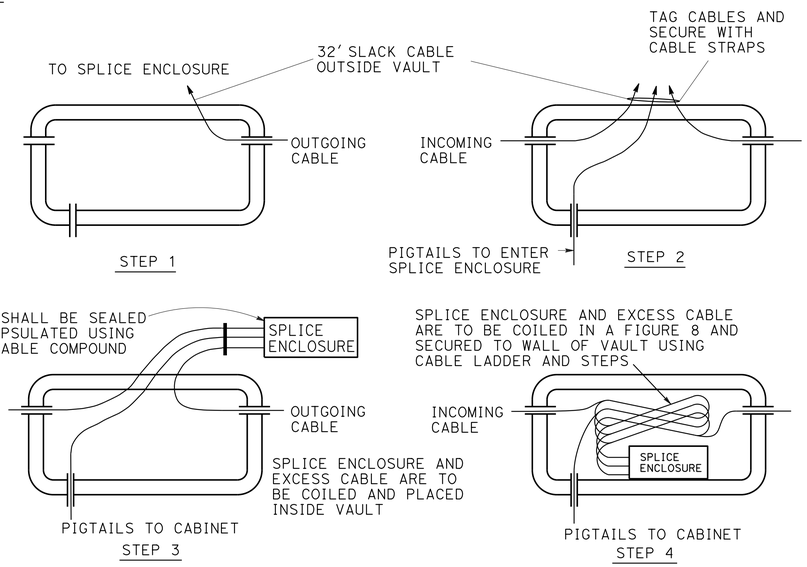

SPLICE PROCEDURE

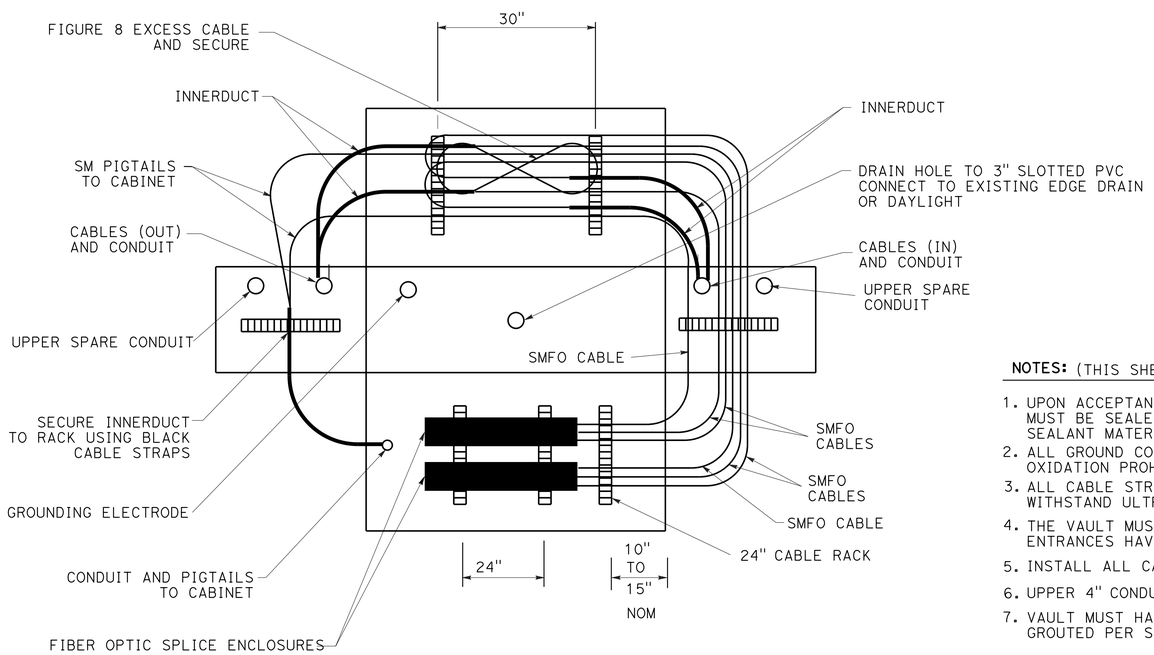

CABLE INSTALLATION

TOP VIEW - WALLS FOLDED DOWN FOR CLARITY

NOTES: (THIS SHEET ONLY)

1. UPON ACCEPTANCE OF THE WORK ALL CONDUITS MUST BE SEALED WITH COMPATIBLE SEALANT MATERIAL
2. ALL GROUND CONNECTIONS MUST BE COATED WITH OXIDATION PROHIBITING COMPOUND.
3. ALL CABLE STRAPS MUST BE DESIGNED TO WITHSTAND ULTRA-VIOLET EXPOSURE.
4. THE VAULT MUST BE CAULKED AFTER ALL KNOWN ENTRANCES HAVE BEEN MADE.
5. INSTALL ALL CABLES IN LOWER 4" CONDUIT.
6. UPPER 4" CONDUIT IS SPARE ONLY.
7. VAULT MUST HAVE INTEGRAL BASE OR MUST BE GROUTED PER STANDARD SPECIFICATION OF PULL BOXES.
8. NUMBER OF SPLICE ENCLOSURES MAY VARY.
9. SPLICE VAULTS MUST BE STEEL PLATED.
10. ADDITIONAL KNOCKOUTS ARE NEEDED ON THE LONGER SIDE OF THE SPLICE VAULT.

ELECTRICAL DETAILS

NO SCALE

E-54

(SPLICE VAULT DETAILS)

REVISED BY	DATE REVISED
HT	05/15

HENRY H. TRINH — JACQUELINE C. TAN — CALCULATED-DESIGNED BY — CHECKED BY

FUNCTIONAL SUPERVISOR: JACQUELINE C. TAN

STATE OF CALIFORNIA - DEPARTMENT OF TRANSPORTATION — OFFICE OF ITS — Caltrans

LAST REVISION 05-06-15 — DATE PLOTTED => 06-OCT-2015 — TIME PLOTTED => 08:50

Dist	COUNTY	ROUTE	POST MILES TOTAL PROJECT	SHEET No.	TOTAL SHEETS
07	LA	405	R12.6/R21.2	242	288

Jacqueline C Tan 4/21/15
REGISTERED ELECTRICAL ENGINEER DATE

6-15-15
PLANS APPROVAL DATE

REGISTERED PROFESSIONAL ENGINEER JACQUELINE C. TAN No. E015611 Exp. 12/31/15 ELECTRICAL STATE OF CALIFORNIA

THE STATE OF CALIFORNIA OR ITS OFFICERS OR AGENTS SHALL NOT BE RESPONSIBLE FOR THE ACCURACY OR COMPLETENESS OF SCANNED COPIES OF THIS PLAN SHEET.

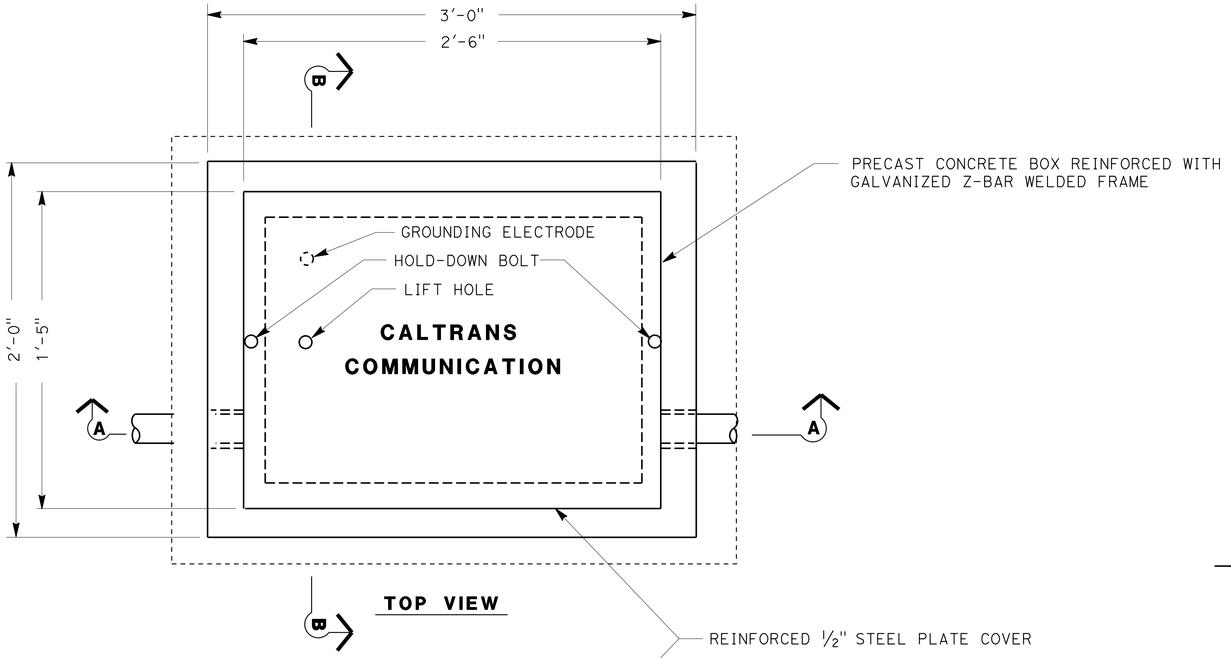

TOP VIEW

NOTES: (THIS SHEET ONLY)

1. FOR DETAILS NOT SHOWN SEE Std PLAN RSP ES-8B.
2. CONDUITS SHOWN ARE FOR EXAMPLE ONLY. ADDITIONAL CONDUITS MAY BE REQUIRED AS SHOWN ON THE PLAN SHEETS.
3. SEE SPECIAL PROVISIONS REGARDING HOLDDOWN BOLTS FOR TRAFFIC RATE COVERS.

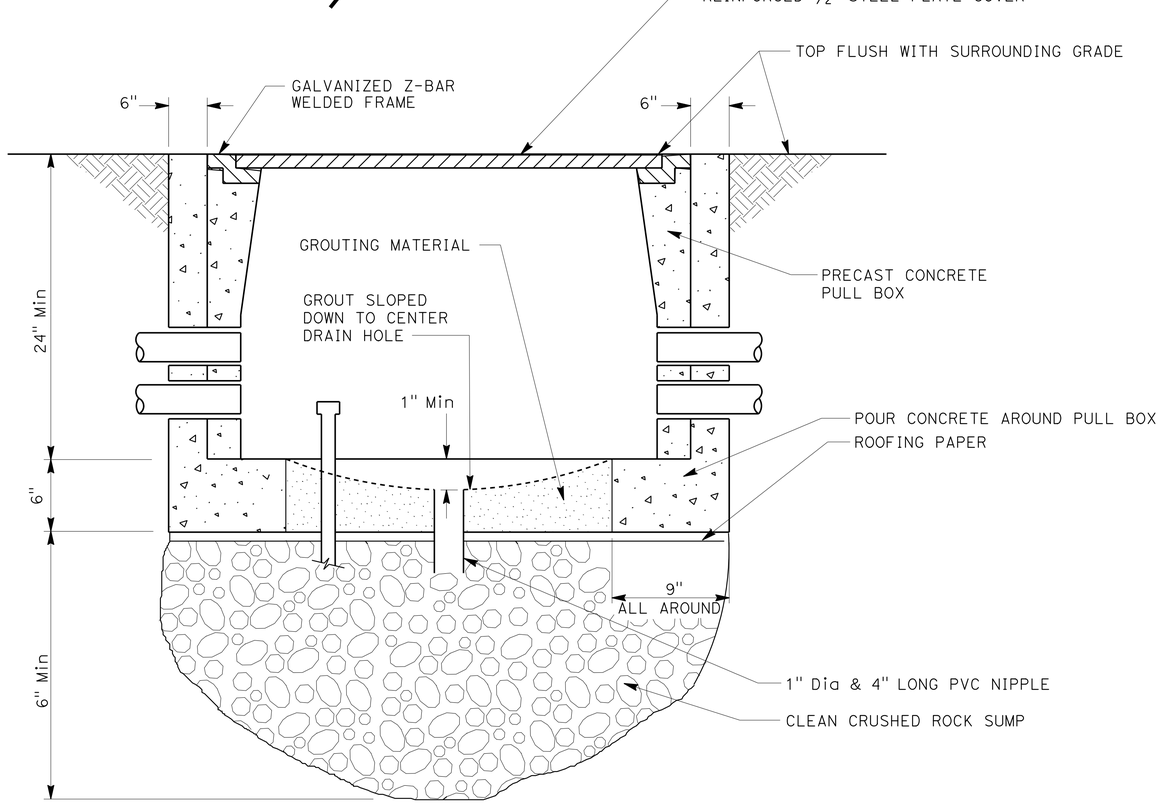

SECTION A-A

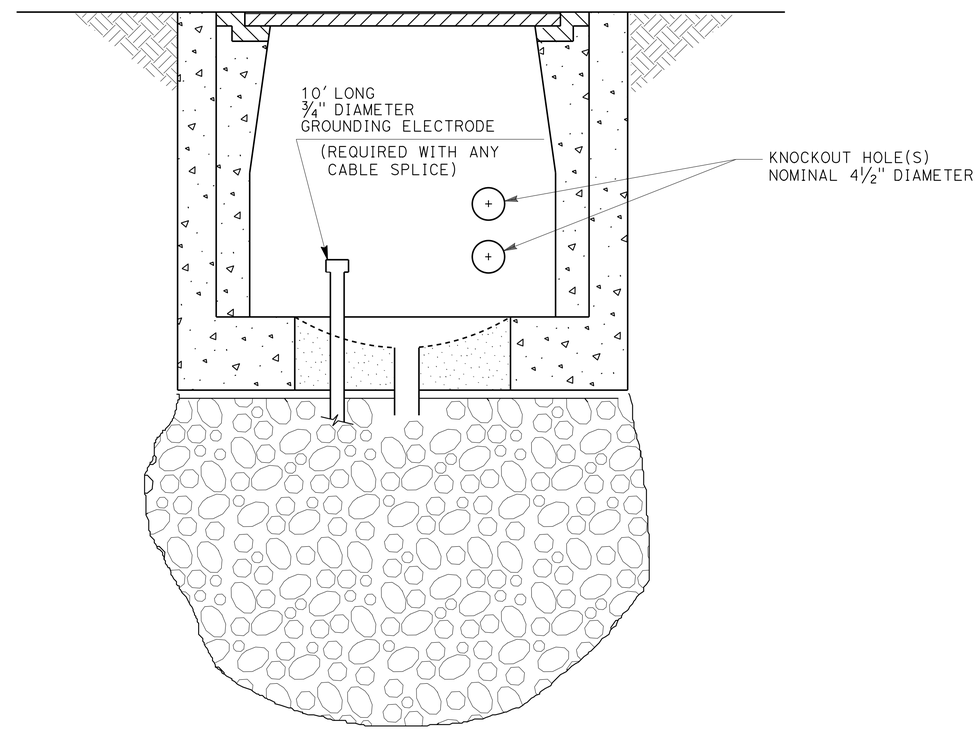

SECTION B-B

ELECTRICAL DETAILS

NO SCALE

E-55

(COMMUNICATION PULL BOX DETAILS)

STATE OF CALIFORNIA - DEPARTMENT OF TRANSPORTATION
Caltrans
OFFICE OF ITS

FUNCTIONAL SUPERVISOR: JACQUELINE C. TAN
CALCULATED-DESIGNED BY: HENRY H. TRINH
CHECKED BY: JACQUELINE C. TAN
REVISED BY: HT
DATE REVISED: 05/15

LAST REVISION 05-06-15
DATE PLOTTED => 06-OCT-2015
TIME PLOTTED => 08:50

Dist	COUNTY	ROUTE	POST MILES TOTAL PROJECT	SHEET No.	TOTAL SHEETS
07	LA	405	R12.6/R21.2	243	288

REGISTERED ELECTRICAL ENGINEER DATE 4/21/15

6-15-15
PLANS APPROVAL DATE

REGISTERED PROFESSIONAL ENGINEER JACQUELINE C. TAN No. E015611 Exp. 12/31/15 ELECTRICAL STATE OF CALIFORNIA

THE STATE OF CALIFORNIA OR ITS OFFICERS OR AGENTS SHALL NOT BE RESPONSIBLE FOR THE ACCURACY OR COMPLETENESS OF SCANNED COPIES OF THIS PLAN SHEET.

NOTE: (THIS SHEET ONLY)

ITEMS SHOWN IN THE TABLE ARE NOT A SEPARATE BID ITEMS, FOR REFERENCE ONLY.

MODIFY COMMUNICATION SYSTEM ROUTING

SHEET No.	4" C TYPE 1 (N)	1" INNER DUCTS (N)	TRACER WIRE (N)	72 SMFO (N)	12 SMFO (N)	72 SMFO FDU (N)	12 SMFO FDU (N)	COMMUNICATION PULL BOX (N)	SPLICE VAULT (N)	TYPE 1 SWITCH (N)	TYPE 2 SWITCH (N)	SFP-LX MODULE (N)	SFP-ZX MODULE (N)	FIBER OPTIC SPLICE ENCLOSURE (N)	CAT 5E CABLE (N)	VIDEO ENCODER (N)	ETHERNET CARD (N)	DEPARTMENT-FURNISHED 2070 CONTROLLER ASSEMBLY INCLUDING THE ETHERNET CARD (N)
	LF	LF	LF	LF	LF	EA	EA	EA	EA	EA	EA	EA	EA	EA	EA	EA	EA	EA
E-2	X	X	X	950	1000	2	1	X	X	1	X	2	X	X	1	1	X	X
E-3	X	X	X	1500	269	X	2	X	X	2	X	4	X	X	1	1	1	1
E-4	X	X	X	1400	759	X	2	X	X	2	X	4	X	1	X	X	2	2
E-5	X	X	X	1450	264	X	2	X	X	2	X	4	X	X	1	1	1	1
E-6	X	X	X	1385	60	X	1	X	X	1	X	2	X	X	X	X	1	1
E-7	X	X	X	2728	730	X	1	X	X	1	X	2	X	X	X	X	1	1
E-8	X	X	X	2914	424	X	4	X	X	4	X	8	X	X	1	1	3	3
E-9	X	X	X	2692	X	X	X	X	X	X	X	X	X	X	X	X	X	X
E-10	X	X	X	2724	210	X	1	X	X	1	X	2	X	X	X	X	1	1
E-11	X	X	X	2752	X	X	1	X	X	1	X	2	X	X	X	X	1	1
E-12	X	X	X	2720	148	X	2	X	X	2	X	4	X	X	1	1	1	1
E-13	X	X	X	2706	45	X	X	X	X	X	X	X	X	X	X	X	X	X
E-14	X	X	X	2820	110	X	X	X	X	X	X	X	X	X	X	X	X	X
E-15	X	X	X	3058	220	X	1	X	X	1	X	2	X	X	X	X	1	1
E-16	X	X	X	2766	870	1	2	X	X	1	1	2	4	X	1	1	1	1
E-17	X	X	X	2768	310	X	2	X	X	2	X	4	X	X	X	X	2	2
E-18	X	X	X	2750	76	X	X	X	X	X	X	X	X	X	X	X	X	X
E-19	X	X	X	3172	461	X	3	X	X	3	X	6	X	X	X	X	3	3
E-20	X	X	X	2864	1750	X	3	X	X	3	X	6	X	X	1	1	2	2
E-21	X	X	X	2734	250	X	1	X	X	1	X	2	X	X	X	X	1	1
E-22	126	252	126	3060	857	X	4	X	1	4	X	8	X	1	X	X	4	4
E-23	1338	2676	1338	3376	315	X	1	1	1	1	X	2	X	1	X	X	1	1
E-24	X	X	X	2772	30	X	1	X	X	1	X	2	X	X	1	1	X	X
E-25	X	X	X	2938	185	X	1	X	X	1	X	2	X	X	X	X	1	1
E-26	X	X	X	2804	663	X	3	X	X	3	X	6	X	X	X	X	3	3
E-27	X	X	X	2744	891	X	1	X	X	1	X	2	X	X	X	X	1	1
E-28	X	X	X	2690	284	X	2	X	X	2	X	4	X	X	1	1	1	1
E-29	X	X	X	2968	545	X	2	X	X	2	X	4	X	X	X	X	2	2
E-30	X	X	X	2890	1125	X	2	X	X	2	X	4	X	X	X	X	2	2
E-31	X	X	X	2700	665	X	2	X	X	2	X	4	X	X	1	1	1	1
E-32	X	X	X	2626	X	X	X	X	X	X	X	X	X	X	X	X	X	X
E-33	X	X	X	1962	X	X	X	X	X	X	X	X	X	X	X	X	X	X
E-34	X	X	X	1044	X	1	X	X	X	X	1	X	4	X	X	X	X	X
E-35	X	X	X	X	X	X	1	X	X	1	X	2	X	X	X	X	1	1

ELECTRICAL QUANTITIES

E-56

STATE OF CALIFORNIA - DEPARTMENT OF TRANSPORTATION
Caltrans® OFFICE OF ITS

FUNCTIONAL SUPERVISOR: JACQUELINE C. TAN
CALCULATED-DESIGNED BY: HENRY H. TRINH
CHECKED BY: JACQUELINE C. TAN
REVISED BY: HT
DATE REVISED: 05/15

LAST REVISION 05-06-15 | DATE PLOTTED => 06-OCT-2015 | TIME PLOTTED => 08:50

Dist	COUNTY	ROUTE	POST MILES TOTAL PROJECT	SHEET No.	TOTAL SHEETS
07	LA	405	R12.6/R21.2	244	288

Jacqueline C Tan 4/21/15
REGISTERED ELECTRICAL ENGINEER DATE

6-15-15
PLANS APPROVAL DATE

REGISTERED PROFESSIONAL ENGINEER JACQUELINE C. TAN No. E015611 Exp. 12/31/15 ELECTRICAL STATE OF CALIFORNIA

THE STATE OF CALIFORNIA OR ITS OFFICERS OR AGENTS SHALL NOT BE RESPONSIBLE FOR THE ACCURACY OR COMPLETENESS OF SCANNED COPIES OF THIS PLAN SHEET.

NOTE: (THIS SHEET ONLY)

ITEMS SHOWN IN THE TABLE ARE NOT A SEPARATE BID ITEMS, FOR REFERENCE ONLY.

WORK AT LARTMC

SHEET No.	VIDEO DECODER (N) AT LARTMC	48SMFO FDU (N)	72SMFO FDU (N)	TYPE 2 SWITCH (N)	SFP-ZX MODULE (N)
	EA	EA	EA	EA	EA
E-2	1	X	2	X	X
E-3	1	X	X	X	X
E-4	X	X	X	X	X
E-5	1	X	X	X	X
E-6	X	X	X	X	X
E-7	X	X	X	X	X
E-8	1	X	X	X	X
E-9	X	X	X	X	X
E-10	X	X	X	X	X
E-11	X	X	X	X	X
E-12	1	X	X	X	X
E-13	X	X	X	X	X
E-14	X	X	X	X	X
E-15	X	X	X	X	X
E-16	1	X	1	1	4
E-17	X	X	X	X	X
E-18	X	X	X	X	X
E-19	X	X	X	X	X
E-20	1	X	X	X	X
E-21	X	X	X	X	X
E-22	X	X	X	X	X
E-23	X	X	X	X	X
E-24	1	X	X	X	X
E-25	X	X	X	X	X
E-26	X	X	X	X	X
E-27	X	X	X	X	X
E-28	1	X	X	X	X
E-29	X	X	X	X	X
E-30	X	X	X	X	X
E-31	1	X	X	X	X
E-32	X	X	X	X	X
E-33	X	X	X	X	X
E-34	X	1	2	1	4
E-35	X	X	X	X	X

ELECTRICAL QUANTITIES

E-57

STATE OF CALIFORNIA - DEPARTMENT OF TRANSPORTATION
Caltrans
OFFICE OF ITS

FUNCTIONAL SUPERVISOR: JACQUELINE C. TAN
CALCULATED-DESIGNED BY: HENRY H. TRINH
CHECKED BY: JACQUELINE C. TAN
REVISED BY: HT
DATE REVISED: 05/15

LAST REVISION 05-06-15 | DATE PLOTTED => 06-OCT-2015 | TIME PLOTTED => 08:50

Dist	COUNTY	ROUTE	POST MILES TOTAL PROJECT	SHEET No.	TOTAL SHEETS
07	LA	405	R12.6/R21.2	245	288

REGISTERED ELECTRICAL ENGINEER 4/21/15 DATE

6-15-15
PLANS APPROVAL DATE

REGISTERED PROFESSIONAL ENGINEER JACQUELINE C. TAN No.E015611 Exp.12/31/15 ELECTRICAL STATE OF CALIFORNIA

THE STATE OF CALIFORNIA OR ITS OFFICERS OR AGENTS SHALL NOT BE RESPONSIBLE FOR THE ACCURACY OR COMPLETENESS OF SCANNED COPIES OF THIS PLAN SHEET.

NOTE: (THIS SHEET ONLY)

1. FIBER NUMBERS MAY BE RE-ASSIGNED BY THE ENGINEER DURING CONSTRUCTION.

DATA DISTRIBUTION FIBER OPTIC CABLE (72SMFO) ASSIGNMENT TABLE (PM 12.6 to PM 21.2)

FIBER	USE	Rte 405 \ Rte 110 INTERCHANGE NEW IP NODE	Rte 110 SB CAMERA LOCATION HA089	Rte 405 NB CAMERA LOCATION SD132	Rte 405 NB TMS 2480	Rte 405 SB TS PPP	Rte 405 NB RMS 0046	Rte 405 SB RMS 3374	Rte 405 NB CAMERA LOCATION SD138	Rte 405 SB TMS 2552	Rte 405 NB RMS 0048	Rte 405 SB TS SSS	Rte 405 SB RMS 0373	Rte 405 SB CMS No. 39	Rte 405 SB CAMERA LOCATION SD145	Rte 405 NB TMS 2043	Rte 405 NB RMS 3049	Rte 405 SB RMS 0372	Rte 405 SB CAMERA LOCATION SD159	Rte 405 SB TMS 2042	Rte 405 SB RMS 3371	Rte 405 NB RMS 3050	Rte 405 NB CAMERA LOCATION SD166	Rte 405 NB DATA NODE LOCATION 166 (FUTURE IP NODE)	Rte 405 SB TS DD	Rte 405 NB RMS 0051	Rte 405 NB TMS 2051	Rte 405 SB TS EE	Rte 405 NB RMS 3052	Rte 405 SB RMS 3370	Rte 405 SB CAMERA LOCATION SD177	Rte 405 NB TMS 2052	Rte 405 NB CMS No. 2	FIBER
	PM	12.6	8.9	13.2	13.2	13.3	13.5	13.6	13.8	14.0	14.3	14.4	14.4	14.5	14.5	15.0	15.4	15.5	15.9	16.1	16.4	16.7	16.6	16.6	16.8	17.0	17.3	17.5	17.5	17.6	17.7	17.7	17.9	
1	RMS 1 - Tx	X					X						X								X			X					X					1
2	RMS 1 - Rx	X					X						X								X			X					X					2
3	RMS 2 - Tx	X						X									X					X		X						X				3
4	RMS 2 - Rx	X						X									X					X		X						X				4
5	RMS 3 - Tx	X									X							X						X		X								5
6	RMS 3 - Rx	X									X							X						X		X								6
7		X																						X										7
8		X																						X										8
9	TMS 1 - Tx	X			X											X								X			X							9
10	TMS 1 - Rx	X			X											X								X			X							10
11	TMS 2 - Tx	X								X										X				X								X		11
12	TMS 2 - Rx	X								X										X				X								X		12
13		X																						X										13
14		X																						X										14
15	CMS 1 - Tx	X												X										X										15
16	CMS 1 - Rx	X												X										X										16
17	CMS 2 - Tx	X																						X									X	17
18	CMS 2 - Rx	X																						X									X	18
19		X																						X										19
20		X																						X										20
21	CCTV 1 - Tx	X	X						X										X					X							X			21
22	CCTV 1 - Rx	X	X						X										X					X							X			22
23	CCTV 2 - Tx	X		X											X								X	X										23
24	CCTV 2 - Rx	X		X											X								X	X										24
25		X																						X										25
26		X																						X										26
27	TS 1 - Tx	X				X																		X	X									27
28	TS 1 - Rx	X				X																		X	X									28
29	TS 2 - Tx	X										X												X				X						29
30	TS 2 - Rx	X										X												X				X						30
31		X																						X										31
32		X																						X										32
33		X																						X										33
34		X																						X										34
35		X																						X										35
•		X																						X										•
•		X																						X										•
72		X																						X										72

LEGEND: (THIS SHEET ONLY)

X - TERMINATED ACTIVE ON FDU

O - TERMINATED SPARE WITH F/O PIGTAIL IN CABINET

FIBER ASSIGNMENT TABLE (DATA DISTRIBUTION)

E-58

REVISED BY HT | DATE REVISED 05/15

HENRY H. TRINH | JACQUELINE C. TAN

CALCULATED-DESIGNED BY | CHECKED BY

FUNCTIONAL SUPERVISOR JACQUELINE C. TAN

STATE OF CALIFORNIA - DEPARTMENT OF TRANSPORTATION

Caltrans OFFICE OF ITS

LAST REVISION 05-06-15 | DATE PLOTTED => 06-OCT-2015 | TIME PLOTTED => 08:50

Dist	COUNTY	ROUTE	POST MILES TOTAL PROJECT	SHEET No.	TOTAL SHEETS
07	LA	405	R12.6/R21.2	246	288

Jacqueline C Tan 4/21/15
REGISTERED ELECTRICAL ENGINEER DATE

6-15-15
PLANS APPROVAL DATE

REGISTERED PROFESSIONAL ENGINEER JACQUELINE C. TAN No.E015611 Exp.12/31/15 ELECTRICAL STATE OF CALIFORNIA

THE STATE OF CALIFORNIA OR ITS OFFICERS OR AGENTS SHALL NOT BE RESPONSIBLE FOR THE ACCURACY OR COMPLETENESS OF SCANNED COPIES OF THIS PLAN SHEET.

NOTE: (THIS SHEET ONLY)

1. FIBER NUMBERS MAY BE RE-ASSIGNED BY THE ENGINEER DURING CONSTRUCTION.

DATA DISTRIBUTION FIBER OPTIC CABLE (72SMFO) ASSIGNMENT TABLE (PM 12.6 to PM 21.2)

FIBER	USE	Rte 405 SB RMS 3369	Rte 405 NB RMS 3053	Rte 405 SB RMS 3368	Rte 405 NB RMS 3054	Rte 405 NB TMS 2053	Rte 405 SB CAMERA LOCATION SD189	Rte 405 SB RMS 0367	Rte 405 NB RMS 3055	Rte 405 NB TS 11	Rte 405 NB RMS 3056	Rte 405 NB TMS 2054	Rte 405 SB CAMERA LOCATION SD197	Rte 405 NB CMS No.1	Rte 405 SB RMS A	Rte 405 NB RMS 0057	Rte 405 NB RMS 0058	Rte 405 SB RMS 1521	Rte 405 NB TMS 2055	Rte 405 NB CAMERA LOCATION SD207	Rte 405 SB LAX HUB - IP NODE	FIBER
	PM	18.0	18.2	18.3	18.4	18.5	18.9	19.0	19.1	19.4	19.4	19.5	19.7	19.7	20.2	20.1	20.4	20.5	20.6	20.7	21.2	
1	RMS 1 - Tx		X					X							X			X			X	1
2	RMS 1 - Rx		X					X							X			X			X	2
3	RMS 2 - Tx			X					X							X					X	3
4	RMS 2 - Rx			X					X							X					X	4
5	RMS 3 - Tx	X			X						X						X				X	5
6	RMS 3 - Rx	X			X						X						X				X	6
7																					X	7
8																					X	8
9	TMS 1 - Tx					X															X	9
10	TMS 1 - Rx					X															X	10
11	TMS 2 - Tx											X									X	11
12	TMS 2 - Rx											X									X	12
13																					X	13
14																					X	14
15	CMS 1 - Tx													X							X	15
16	CMS 1 - Rx													X							X	16
17	CMS 2 - Tx																				X	17
18	CMS 2 - Rx																				X	18
19																					X	19
20																					X	20
21	CCTV 1 - Tx												X								X	21
22	CCTV 1 - Rx												X								X	22
23	CCTV 2 - Tx						X													X	X	23
24	CCTV 2 - Rx						X													X	X	24
25																					X	25
26																					X	26
27	TS 1 - Tx									X											X	27
28	TS 1 - Rx									X											X	28
29	TS 2 - Tx																		X		X	29
30	TS 2 - Rx																		X		X	30
31																					X	31
32																					X	32
33																					X	33
34																					X	34
35																					X	35
•																					X	•
•																					X	•
72																					X	72

LEGEND: (THIS SHEET ONLY)

X - TERMINATED ACTIVE ON FDU

O - TERMINATED SPARE WITH F/O PIGTAIL IN CABINET

FIBER ASSIGNMENT TABLE (DATA DISTRIBUTION)

E-59

REVISED BY	DATE REVISED
HT	05/15

HENRY H. TRINH — JACQUELINE C. TAN — CALCULATED-DESIGNED BY — CHECKED BY — FUNCTIONAL SUPERVISOR: JACQUELINE C. TAN

STATE OF CALIFORNIA - DEPARTMENT OF TRANSPORTATION
Caltrans OFFICE OF ITS

LAST REVISION 05-06-15 | DATE PLOTTED => 06-OCT-2015 | TIME PLOTTED => 08:50

Dist	COUNTY	ROUTE	POST MILES TOTAL PROJECT	SHEET No.	TOTAL SHEETS
07	LA	405	R12.6/R21.2	247	288

Kenny Nguyen 4/21/15
REGISTERED ELECTRICAL ENGINEER DATE

6-15-15
PLANS APPROVAL DATE

REGISTERED PROFESSIONAL ENGINEER KENNY NGUYEN No. 17759 Exp. 6/30/16 ELECTRICAL STATE OF CALIFORNIA

THE STATE OF CALIFORNIA OR ITS OFFICERS OR AGENTS SHALL NOT BE RESPONSIBLE FOR THE ACCURACY OR COMPLETENESS OF SCANNED COPIES OF THIS PLAN SHEET.

MODIFY LIGHTING AND SIGN ILLUMINATION

SHEET No.	(N) No. 5 PB	(N) TYPE 30 ELECTROLLIER	(N) SIZE 2"C CONDUIT	(N) 1#8 (G)	(N) No. 6 CONDUCTOR	(N) TAMPER RESISTANT COVER
	EA	EA	LF	LF	LF	EA
E-36	11	3	1700	1700	4100	11
E-37	5	2	680	680	1360	5
E-38	12	1	1055	1225	4190	12
E-39	10	2	2000	2136	10264	10
E-40	4	3	1070	1185	2370	4
E-41	8	2	1500	1927	4284	8
E-42	9	3	1200	1450	3820	9
E-43	6	-	390	470	780	6

MODIFY RAMP METERING SYSTEM

	(N) No. 5 PB	(N) No. 8 CONDUCTOR	(N) No. 10 CONDUCTOR	(N) No. 12 CONDUCTOR	(N) No. 14 CONDUCTOR	(N) No. 18 CONDUCTOR	(N) SIZE 2"C CONDUIT	(N) SIZE 1½"C CONDUIT	(N) LOOPS	(N) DLC	(N) STUBOUT	(N) TAMPER RESISTANT COVER
	EA	LF	LF	LF	LF	LF	LF	LF	EA	LF	EA	EA
E-44	1			40				20	5	760	1	1
E-45	3			20			10		9	760	3	3
E-46	7	650	440	650	1320	1440	20		13	1340	3	7

MODIFY TRAFFIC MONITORING STATION

	(N) No. 5 PB	(N) No. 6 PB	(N) No. 12 CONDUCTOR	(N) SIZE 2"C CONDUIT	(N) SIZE 1½"C CONDUIT	(N) LOOPS	(N) DLC	(N) STUBOUT	(N) TAMPER RESISTANT COVER
	EA	EA	LF	LF	LF	EA	LF	EA	EA
E-47	2	1	155		40	11	230	3	3
E-48		1	20	10		5	290	1	1

(N) - NOT A SEPARATE PAY ITEM, FOR INFORMATION ONLY

APPROVED FOR ELECTRICAL WORK ONLY

ELECTRICAL QUANTITIES

E-60

REVISED BY | DATE REVISED
XOCHILT NARANJO | KENNY NGUYEN
CALCULATED-DESIGNED BY | CHECKED BY
FUNCTIONAL SUPERVISOR
OSWALD ELIZONDO

STATE OF CALIFORNIA - DEPARTMENT OF TRANSPORTATION
Caltrans
TRAFFIC DESIGN

LAST REVISION 00-00-00 | DATE PLOTTED => 06-OCT-2015 | TIME PLOTTED => 08:50

M

Maint	MAINTENANCE
Max	MAXIMUM
MB	METAL BEAM
MBB	METAL BEAM BARRIER
MBGR	METAL BEAM GUARD RAILING
Med	MEDIAN
MGS	MIDWEST GUARDRAIL SYSTEM
MH	MANHOLE
Min	MINIMUM
Misc	MISCELLANEOUS
Misc I & S	MISCELLANEOUS IRON AND STEEL
Mkr	MARKER
Mod	MODIFIED,
	MODIFY
Mon	MONUMENT
MP	METAL PLATE
MPGR	METAL PLATE GUARD RAILING
MR	MOVEMENT RATING
MSE	MECHANICALLY STABILIZED EMBANKMENT
Mt	MOUNTAIN, MOUNT
Mtl	MATERIAL
MVP	MAINTENANCE VEHICLE PULLOUT

N

N	NORTH
NB	NORTHBOUND
No.	NUMBER (MUST HAVE PERIOD)
Nos.	NUMBERS (MUST HAVE PERIOD)
NPS	NOMINAL PIPE SIZE
NS	NEAR SIDE
NSP	NEW STANDARD PLAN
NTS	NOT TO SCALE

O

Oblr	OBLITERATE
OC	OVERCROSSING
OD	OUTSIDE DIAMETER
OF	OUTSIDE FACE
OG	ORIGINAL GROUND
OGAC	OPEN GRADED ASPHALT CONCRETE
OGFC	OPEN GRADED FRICTION COURSE
OH	OVERHEAD
OHWM	ORDINARY HIGH WATER MARK
O-O	OUT TO OUT
Opp	OPPOSITE
OSD	OVERSIDE DRAIN

P

p	PAGE
PAP	PERFORATED ALUMINUM PIPE
PB	PULL BOX
PC	POINT OF CURVATURE,
	PRECAST
PCC	POINT OF COMPOUND CURVE,
	PORTLAND CEMENT CONCRETE
PCMS	PORTABLE CHANGEABLE MESSAGE SIGN
PCP	PERFORATED CONCRETE PIPE,
	PRESTRESSED CONCRETE PIPE
PCVC	POINT OF COMPOUND VERTICAL CURVE
PEC	PERMIT TO ENTER AND CONSTRUCT
Ped	PEDESTRIAN
Ped OC	PEDESTRIAN OVERCROSSING
Ped UC	PEDESTRIAN UNDERCROSSING
Perm Mtl	PERMEABLE MATERIAL

P continued

PG	PROFILE GRADE
PI	POINT OF INTERSECTION
PJP	PARTIAL JOINT PENETRATION
Pkwy	PARKWAY
ℙ,PL	PLATE
P/L	PROPERTY LINE
PM	POST MILE,
	TIME FROM NOON TO MIDNIGHT
PN	PAVING NOTCH
POC	POINT OF HORIZONTAL CURVE
POT	POINT OF TANGENT
POVC	POINT OF VERTICAL CURVE
PP	PIPE PILE,
	PLASTIC PIPE,
	POWER POLE
PPL	PREFORMED PERMEABLE LINER
PPP	PERFORATED PLASTIC PIPE
PRC	POINT OF REVERSE CURVE
PRF	PAVEMENT REINFORCING FABRIC
PRVC	POINT OF REVERSE VERTICAL CURVE
PS&E	PLANS, SPECIFICATIONS AND ESTIMATES
PS, P/S	PRESTRESSED
PSP	PERFORATED STEEL PIPE
PT	POINT OF TANGENCY
PVC	POLYVINYL CHLORIDE
Pvmt	PAVEMENT

Q

Qty	QUANTITY

R

R	RADIUS
R & D	REMOVE AND DISPOSE
R & S	REMOVE AND SALVAGE
R/C	RATE OF CHANGE
RCA	REINFORCED CONCRETE ARCH
RCB	REINFORCED CONCRETE BOX
RCP	REINFORCED CONCRETE PIPE
RCPA	REINFORCED CONCRETE PIPE ARCH
Rd	ROAD
Reinf	REINFORCED,
	REINFORCEMENT,
	REINFORCING
Rel	RELOCATE
Repl	REPLACEMENT
Ret	RETAINING
Rev	REVISED, REVISION
Rdwy	ROADWAY
RHMA	RUBBERIZED HOT MIX ASPHALT
Riv	RIVER
RM	ROAD-MIXED
RP	RADIUS POINT,
	REFERENCE POINT
RR	RAILROAD
RSP	ROCK SLOPE PROTECTION,
	REVISED STANDARD PLAN
Rt	RIGHT
Rte	ROUTE
RW	REDWOOD,
	RETAINING WALL
R/W	RIGHT OF WAY
Rwy	RAILWAY

S

S	SOUTH,
	SUPPLEMENT
SAE	STRUCTURE APPROACH EMBANKMENT
Salv	SALVAGE
SAPP	STRUCTURAL ALUMINUM PLATE PIPE
SB	SOUTHBOUND
SC	SAND CUSHION
SCSP	SLOTTED CORRUGATED STEEL PIPE
SD	STORM DRAIN
Sec	SECOND,
	SECTION
Sep	SEPARATION
SG	SUBGRADE
Shld	SHOULDER
Sht	SHEET
Sim	SIMILAR
℄	STATION LINE
SM	SELECTED MATERIAL
Spec	SPECIAL,
	SPECIFICATIONS
SPP	SLOTTED PLASTIC PIPE
SS	SLOPE STAKE
SSBM	STRAP AND SADDLE BRACKET METHOD
SSD	STRUCTURAL SECTION DRAIN
SSPA	STRUCTURAL STEEL PLATE ARCH
SSPP	STRUCTURAL STEEL PLATE PIPE
SSPPA	STRUCTURAL STEEL PLATE PIPE ARCH
SSRP	STEEL SPIRAL RIB PIPE
St	STREET
Sta	STATION
STBB	SINGLE THRIE BEAM BARRIER
Std	STANDARD
Str	STRUCTURE
Surf	SURFACING
SW	SIDEWALK,
	SOUND WALL
Swr	SEWER
Sym	SYMMETRICAL
S4S	SURFACE 4 SIDES

T

T	SEMI-TANGENT
Tan	TANGENT
TBB	THRIE BEAM BARRIER
Tbr	TIMBER
TC	TOP OF CURB
TCB	TRAFFIC CONTROL BOX
TCE	TEMPORARY CONSTRUCTION EASEMENT
Tel	TELEPHONE
Temp	TEMPORARY
TG	TOP OF GRADE
Tot	TOTAL
TP	TELEPHONE POLE
TPB	TREATED PERMEABLE BASE
TPM	TREATED PERMEABLE MATERIAL
Trans	TRANSITION

T continued

TS	TRANSVERSE,
	TRAFFIC SIGNAL,
	TUBULAR STEEL
Typ	TYPICAL

U

UC	UNDERCROSSING
UD	UNDERDRAIN
UG	UNDERGROUND
UON	UNLESS OTHERWISE NOTED
UP	UNDERPASS

V

V	VALVE,
	DESIGN SPEED
Var	VARIABLE,
	VARIES
VC	VERTICAL CURVE
VCP	VITRIFIED CLAY PIPE
Vert	VERTICAL
Via	VIADUCT
Vol	VOLUME

W

W	WEST,
	WIDTH
WB	WESTBOUND
WH	WEEP HOLE
WM	WIRE MESH
WS	WATER SURFACE
WSP	WELDED STEEL PIPE
Wt	WEIGHT
WV	WATER VALVE
WW	WINGWALL
WWLOL	WINGWALL LAYOUT LINE

X

X Sec	CROSS SECTION
Xing	CROSSING

Y

Yr	YEAR
Yrs	YEARS

Dist	COUNTY	ROUTE	POST MILES TOTAL PROJECT	SHEET No.	TOTAL SHEETS
07	LA	405	R12.6/R21.2	248	288

Grace M. Tsushima
REGISTERED CIVIL ENGINEER

July 19, 2013
PLANS APPROVAL DATE

REGISTERED PROFESSIONAL ENGINEER Grace M. Tsushima No. C49814 Exp. 9-30-14 CIVIL STATE OF CALIFORNIA

THE STATE OF CALIFORNIA OR ITS OFFICERS OR AGENTS SHALL NOT BE RESPONSIBLE FOR THE ACCURACY OR COMPLETENESS OF SCANNED COPIES OF THIS PLAN SHEET.

TO ACCOMPANY PLANS DATED 6-15-15

UNIT OF MEASUREMENT SYMBOLS:

Some of the symbols used in the project plan quantity tables and in the Bid Item List are:

TABLE A

SYMBOL USED	DEFINITIONS
ACRE	ACRE
CF	CUBIC FOOT
CY	CUBIC YARD
EA	EACH
GAL	GALLON
LB	POUND
LF	LINEAR FOOT
SQFT	SQUARE FOOT
SQYD	SQUARE YARD
STA	100 FEET
TAB	TABLET
TON	2,000 POUNDS

Some of the symbols used in the plans other than in the project plan quantity tables are:

TABLE B

SYMBOL USED	DEFINITIONS
ksi	KIPS PER SQUARE INCH
ksf	KIPS PER SQUARE FOOT
psi	POUNDS PER SQUARE INCH
psf	POUNDS PER SQUARE FOOT
lb/ft^3, pcf	POUNDS PER CUBIC FOOT
tsf	TONS PER SQUARE FOOT
mph, MPH *	MILES PER HOUR
ø	NOMINAL DIAMETER
oz	OUNCE
lb	POUND
kip	1,000 POUNDS
cal	CALORIE
ft	FOOT OR FEET
gal	GALLON

* For use on a sign panel only

STATE OF CALIFORNIA
DEPARTMENT OF TRANSPORTATION

ABBREVIATIONS (SHEET 2 OF 2)

NO SCALE

RSP A10B DATED JULY 19, 2013 SUPERSEDES STANDARD PLAN A10B DATED MAY 20, 2011 - PAGE 2 OF THE STANDARD PLANS BOOK DATED 2010.

REVISED STANDARD PLAN RSP A10B

2010 REVISED STANDARD PLAN RSP A10B

6-7-13

Dist	COUNTY	ROUTE	POST MILES TOTAL PROJECT	SHEET No.	TOTAL SHEETS
07	LA	405	R12.6/R21.2	249	288

Randell D. Hiatt
REGISTERED CIVIL ENGINEER

July 19, 2013
PLANS APPROVAL DATE

REGISTERED PROFESSIONAL ENGINEER
Randell D. Hiatt
No. C50200
Exp. 6-30-15
CIVIL
STATE OF CALIFORNIA

THE STATE OF CALIFORNIA OR ITS OFFICERS OR AGENTS SHALL NOT BE RESPONSIBLE FOR THE ACCURACY OR COMPLETENESS OF SCANNED COPIES OF THIS PLAN SHEET.

TO ACCOMPANY PLANS DATED 6-15-15

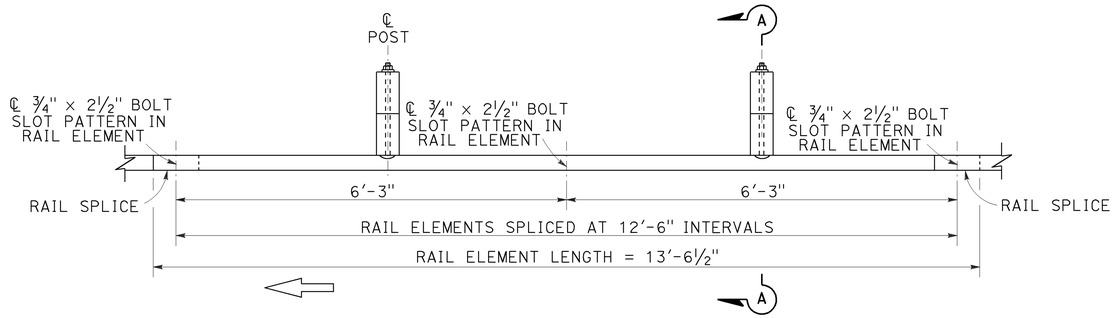

PLAN

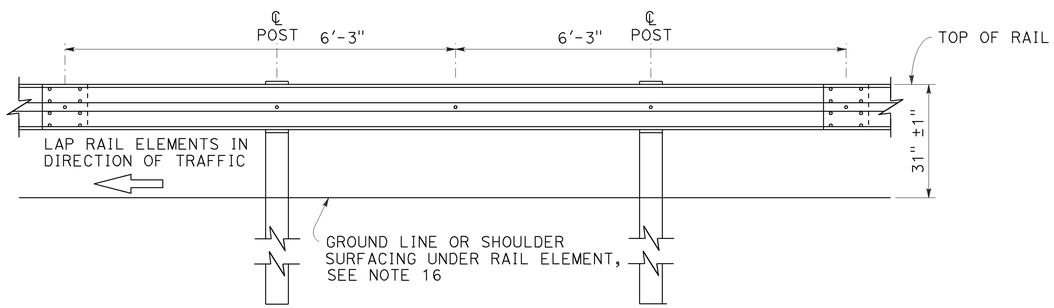

ELEVATION

MIDWEST GUARDRAIL SYSTEM WITH WOOD POST AND BLOCKS

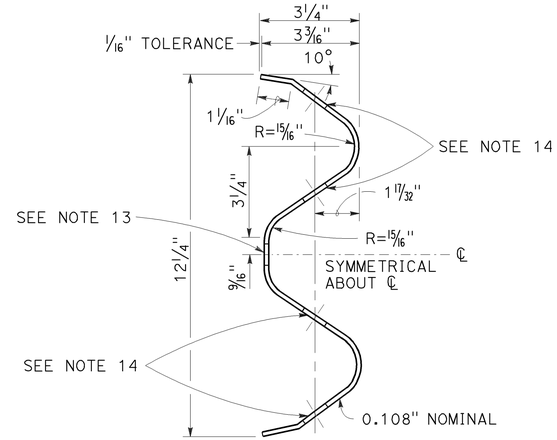

SECTION THRU RAIL ELEMENT

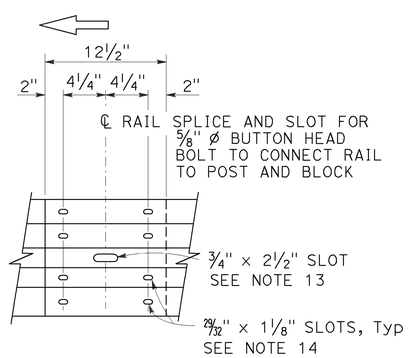

ELEVATION

RAIL ELEMENT SPLICE DETAIL

a) Connect the over lapped end of the rail elements with ⅝" ø × 1⅜" button head oval shoulder splice bolts inserted into the 29⁄32" × 1⅛" slots and bolted together with ⅝" ø recessed hex nuts. Recess of hex nut points toward rail element. A total of 8 bolts and nuts are to be used at each rail splice connection.

b) The ends of the rail elements are to be overlapped in the direction of traffic (see details).

c) Where end cap is to be attached to the end of a rail element, a total of 4 of the above described splice bolts and nuts are to be used.

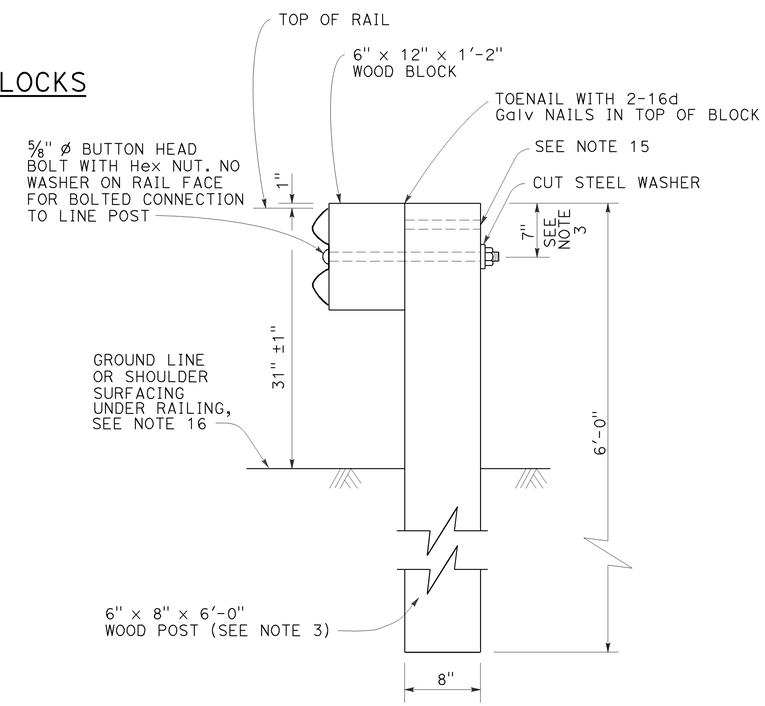

SECTION A-A

TYPICAL WOOD LINE POST INSTALLATION

See Note 4

NOTES:

1. For details of steel post installations, see Revised Standard Plan RSP A77L2.
2. For details of standard hardware used to construct MGS, see Revised Standard Plan RSP A77M1.
3. For details of wood posts and wood blocks used to construct MGS, see Revised Standard Plan RSP A77N1.
4. For additional installation details, see Revised Standard Plan RSP A77N3.
5. MGS post spacing to be 6'-3" center to center, except as otherwise noted.
6. For MGS typical layouts, see the A77P, A77Q and A77R Series of Standard Plans.
7. If railing is connected to terminal system end treatment, use 31" height terminal system end treatment.
8. For MGS end anchor details, see Revised Standard Plans RSP A77S1 and RSP A77T2.
9. For details of MGS transition to bridge railing, see Revised Standard Plan RSP A77U4.
10. For additional details of MSG connection to bridge railing, see Revised Standard Plans RSP A77U1, RSP A77U2 and RSP A77V1.
11. For MGS connection details to abutments and walls, see Revised Standard Plan RSP A77U3.
12. For typical MGS delineation and dike positioning details, see Revised Standard Plan RSP A77N4.
13. Slotted hole for bolted connection of rail element to block and post. See "Section Thru Rail Element".
14. Slotted holes for splice bolts to overlap ends of rail element. See "Section Thru Rail Element".
15. Additional hole in uppermost portion of line post is for potential future adjustments of railing height. See Revised Standard Plan RSP A77N1.
16. Install posts in soil.

STATE OF CALIFORNIA
DEPARTMENT OF TRANSPORTATION

MIDWEST GUARDRAIL SYSTEM STANDARD RAILING SECTION (WOOD POST WITH WOOD BLOCK)

NO SCALE

RSP A77L1 DATED JULY 19, 2013 SUPPLEMENTS STANDARD PLANS BOOK DATED 2010.

REVISED STANDARD PLAN RSP A77L1

2010 REVISED STANDARD PLAN RSP A77L1

7-3-13

Dist	COUNTY	ROUTE	POST MILES TOTAL PROJECT	SHEET No.	TOTAL SHEETS
07	LA	405	R12.6/R21.2	250	288

Randell D. Hiatt
REGISTERED CIVIL ENGINEER

July 19, 2013
PLANS APPROVAL DATE

REGISTERED PROFESSIONAL ENGINEER
Randell D. Hiatt
No. C50200
Exp. 6-30-15
CIVIL
STATE OF CALIFORNIA

THE STATE OF CALIFORNIA OR ITS OFFICERS OR AGENTS SHALL NOT BE RESPONSIBLE FOR THE ACCURACY OR COMPLETENESS OF SCANNED COPIES OF THIS PLAN SHEET.

TO ACCOMPANY PLANS DATED 6-15-15

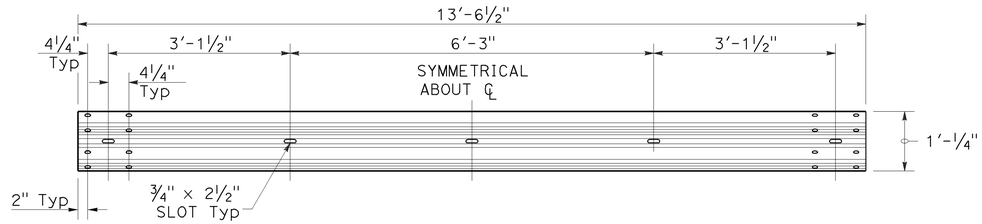

TYPICAL RAIL ELEMENT

NOTE:

1. Slotted holes for splice bolts to overlap ends of rail element.

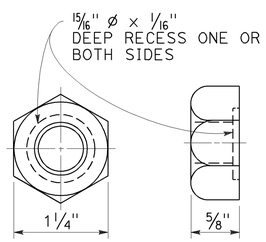

⅝" ø RECESS NUT

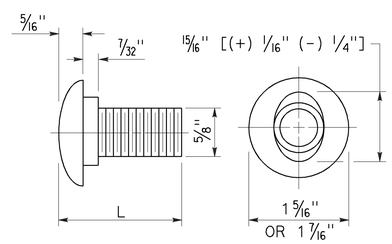

⅝" ø BUTTON HEAD BOLT

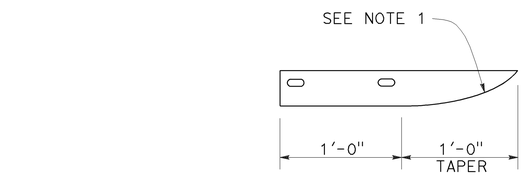

PLAN

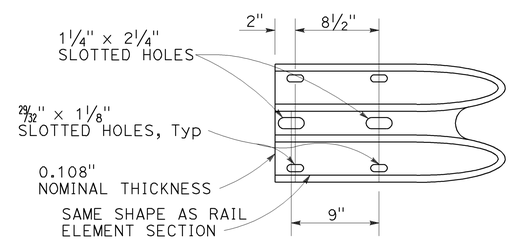

ELEVATION

END CAP
(TYPE A)

BUTTON HEAD BOLT

L	THREAD LENGTH
1⅜"	FULL THREAD LENGTH
2"	FULL THREAD LENGTH
10"	4" Min THREAD LENGTH
18"	4" Min THREAD LENGTH
20"	4" Min THREAD LENGTH
22"	4" Min THREAD LENGTH
26"	4" Min THREAD LENGTH
36"	4" Min THREAD LENGTH
** 2¾"	2" Min THREAD LENGTH
** 19"	4" Min THREAD LENGTH

** For nested rail applications.

STATE OF CALIFORNIA
DEPARTMENT OF TRANSPORTATION

MIDWEST GUARDRAIL SYSTEM STANDARD HARDWARE

NO SCALE

RSP A77M1 DATED JULY 19, 2013 SUPPLEMENTS THE STANDARD PLANS BOOK DATED 2010.

REVISED STANDARD PLAN RSP A77M1

2010 REVISED STANDARD PLAN RSP A77M1

7-3-13

Dist	COUNTY	ROUTE	POST MILES TOTAL PROJECT	SHEET No.	TOTAL SHEETS
07	LA	405	R12.6/R21.2	251	288

Randell D. Hiatt
REGISTERED CIVIL ENGINEER

July 19, 2013
PLANS APPROVAL DATE

REGISTERED PROFESSIONAL ENGINEER
Randell D. Hiatt
No. C50200
Exp. 6-30-15
CIVIL
STATE OF CALIFORNIA

THE STATE OF CALIFORNIA OR ITS OFFICERS OR AGENTS SHALL NOT BE RESPONSIBLE FOR THE ACCURACY OR COMPLETENESS OF SCANNED COPIES OF THIS PLAN SHEET.

TO ACCOMPANY PLANS DATED 6-15-15

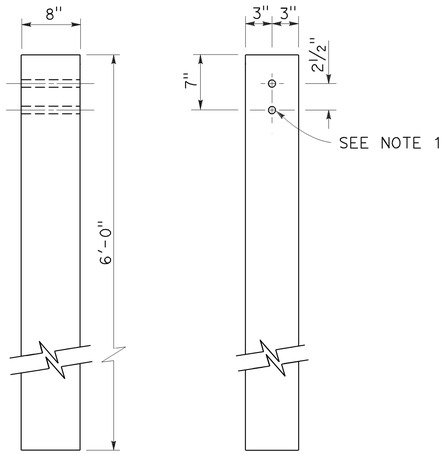

SIDE FRONT

6" x 8" WOOD POST
See Note 3

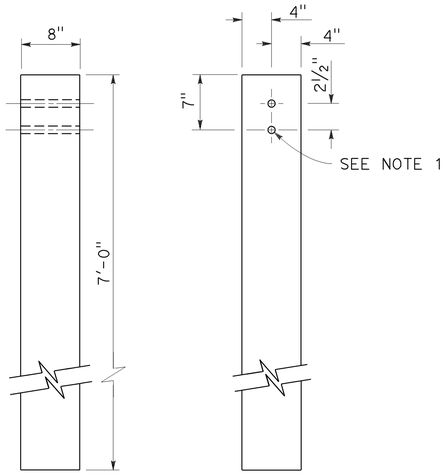

SIDE FRONT

8" x 8" WOOD POST
See Note 4

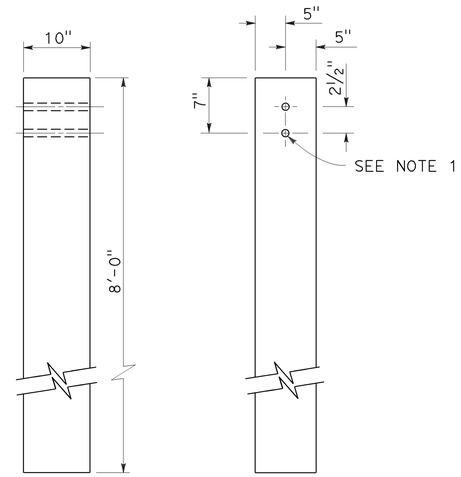

SIDE FRONT

10" x 10" WOOD POST
See Note 5

NOTES:

1. All holes in wood posts and blocks shall be 3/4" Dia ± 1/16".
2. Dimensions shown for wood post are nominal.
3. This post and block combination used for standard line post sections of MGS.
4. This post and 8" x 12" block combination used for line post sections of MGS on narrow roadways.
5. This post and 8" x 12" block combination is typically used where strengthened line post sections of MGS are warranted to shield fixed objects.
6. See Revised Standard Plan RSP A77L3 for use of 6" x 8" and 8" x 8" wood blocks.

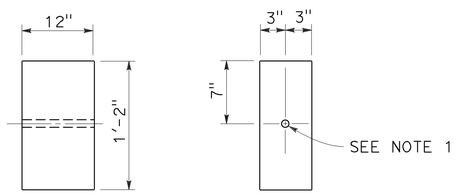

SIDE FRONT

6" x 12" WOOD BLOCK
See Note 3

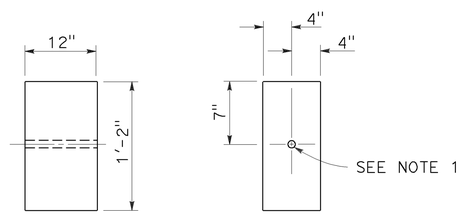

SIDE FRONT

8" x 12" WOOD BLOCK

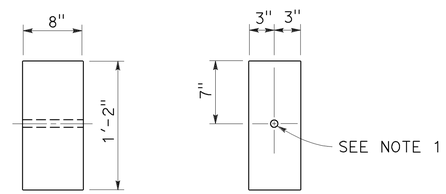

SIDE FRONT

6" x 8" WOOD BLOCK
Only for use with metal beam guard rail see Note 6

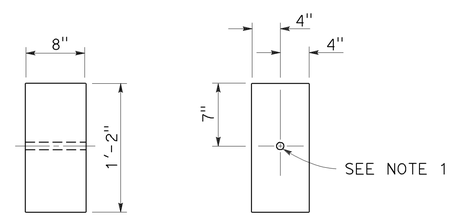

SIDE FRONT

8" x 8" WOOD BLOCK
Only for use with metal beam guard rail see Note 6

STATE OF CALIFORNIA
DEPARTMENT OF TRANSPORTATION

MIDWEST GUARDRAIL SYSTEM WOOD POST AND WOOD BLOCK DETAILS

NO SCALE

RSP A77N1 DATED JULY 19, 2013 SUPPLEMENTS THE STANDARD PLANS BOOK DATED 2010.

REVISED STANDARD PLAN RSP A77N1

2010 REVISED STANDARD PLAN RSP A77N1

7-3-13

Dist	COUNTY	ROUTE	POST MILES TOTAL PROJECT	SHEET No.	TOTAL SHEETS
07	LA	405	R12.6/R21.2	252	288

Randell D. Hiatt
REGISTERED CIVIL ENGINEER

November 15, 2013
PLANS APPROVAL DATE

REGISTERED PROFESSIONAL ENGINEER
Randell D. Hiatt
No. C50200
Exp. 6-30-15
CIVIL
STATE OF CALIFORNIA

THE STATE OF CALIFORNIA OR ITS OFFICERS OR AGENTS SHALL NOT BE RESPONSIBLE FOR THE ACCURACY OR COMPLETENESS OF SCANNED COPIES OF THIS PLAN SHEET.

TO ACCOMPANY PLANS DATED 6-15-15

2010 REVISED STANDARD PLAN RSP A77N3

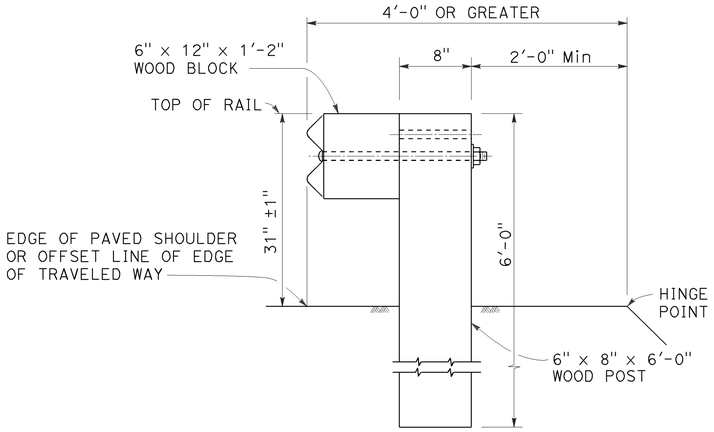

DETAIL A

TYPICAL ROADWAY INSTALLATION

See Note 1

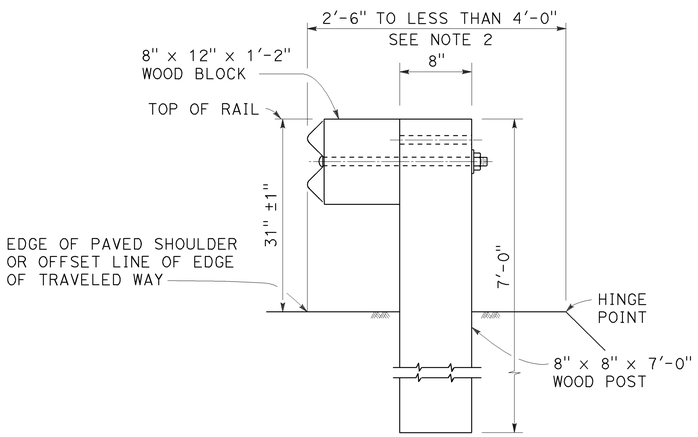

DETAIL B

NARROW ROADWAY INSTALLATION

See Note 1

POST EMBEDMENT

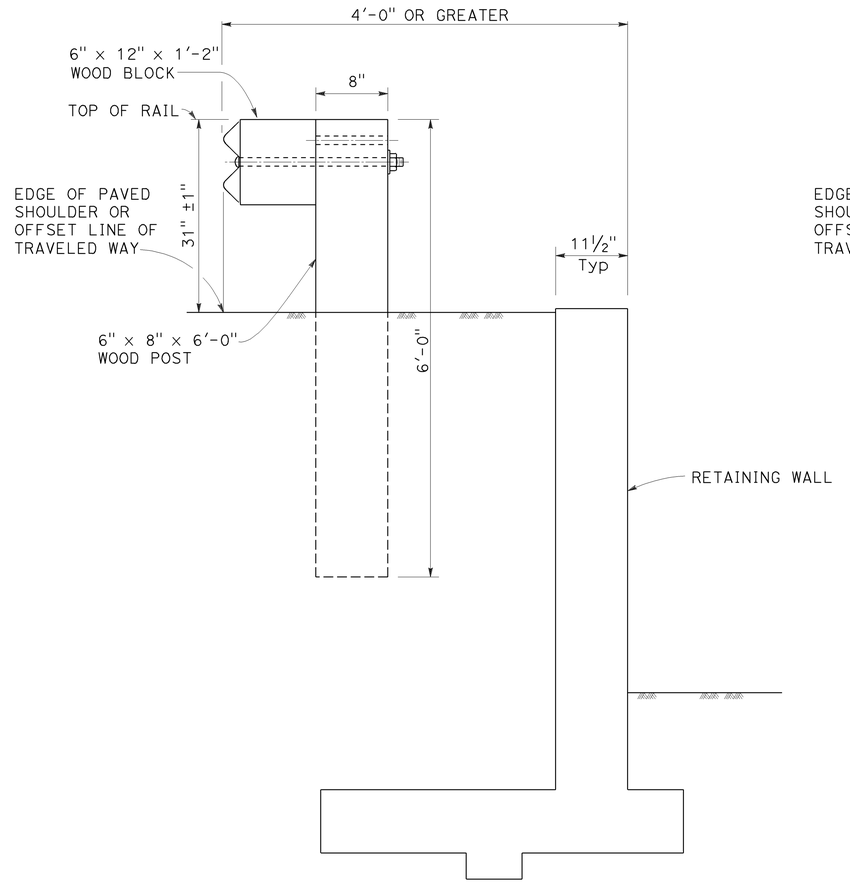

DETAIL C

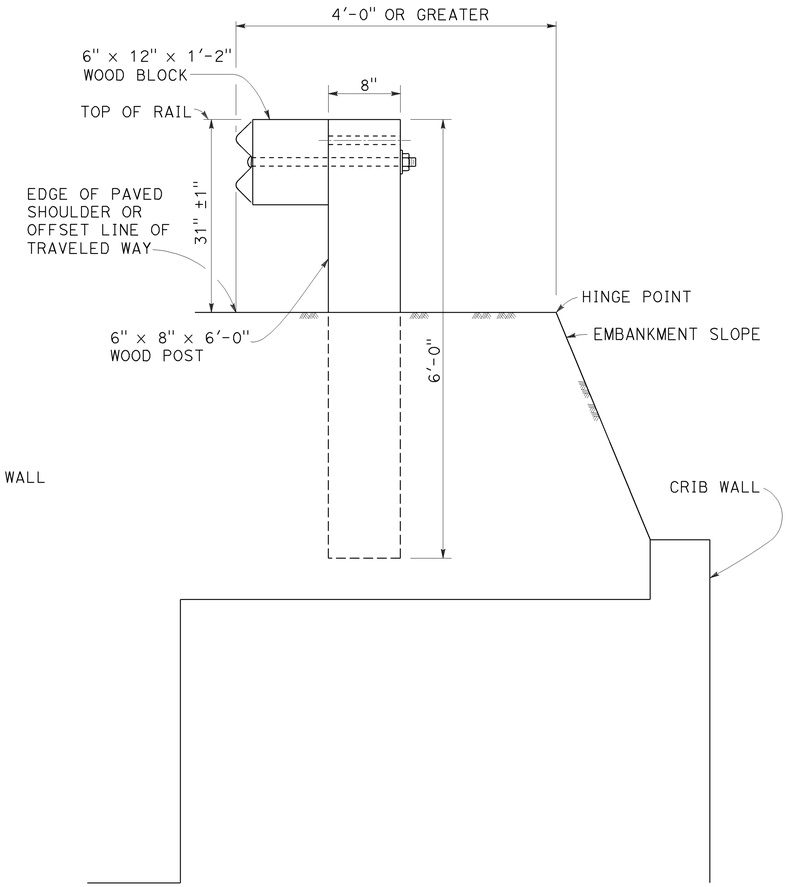

DETAIL D

INSTALLATION AT EARTH RETAINING WALLS

NOTES:

1. These installation details also applicable to steel line post installations. For Detail A, C, and D, where steel line post installations are constructed, W6 x 8.5 or W6 x 9 steel post, 6'-0" in length, with 6" x 12" x 1'-2" notched wood blocks or notched recycled plastic blocks are to be used in place of the size of wood post and wood block shown. For Detail B, where steel line post installations are constructed, W6 x 15 steel post, 8'-0" in length, with 8" x 12" x 1'-2" notched wood blocks or notched recycled plastic blocks are to be used in place of the size of wood post and wood block shown. For additional installation details, see Revised Standard Plan RSP A77L1 and RSP A77L2.
2. Where the distance between the face of the rail and the hinge point is less than 2'-6", see the Project Plans for special details.
3. For dike positioning with MGS installations, see Revised Standard Plan RSP A77N4.

STATE OF CALIFORNIA
DEPARTMENT OF TRANSPORTATION

MIDWEST GUARDRAIL SYSTEM TYPICAL LINE POST EMBEDMENT AND HINGE POINT OFFSET DETAILS

NO SCALE

RSP A77N3 DATED NOVEMBER 15, 2013 SUPERSEDES RSP A77N3
DATED JULY 19, 2013 THAT SUPPLEMENTS THE STANDARD PLANS BOOK DATED 2010.

REVISED STANDARD PLAN RSP A77N3

Dist	COUNTY	ROUTE	POST MILES TOTAL PROJECT	SHEET No.	TOTAL SHEETS
07	LA	405	R12.6/R21.2	253	288

Randell D. Hiatt
REGISTERED CIVIL ENGINEER

July 19, 2013
PLANS APPROVAL DATE

REGISTERED PROFESSIONAL ENGINEER
Randell D. Hiatt
No. C50200
Exp. 6-30-15
CIVIL
STATE OF CALIFORNIA

THE STATE OF CALIFORNIA OR ITS OFFICERS OR AGENTS SHALL NOT BE RESPONSIBLE FOR THE ACCURACY OR COMPLETENESS OF SCANNED COPIES OF THIS PLAN SHEET.

TO ACCOMPANY PLANS DATED 6-15-15

NOTES:

1. When necessary to place dike more than 7" in front of face of MGS, only Type C dike may be used. For dike details, see Revised Standard Plan RSP A87B.
2. For standard railing post embedment, see Revised Standard Plan RSP A77N3.
3. MGS delineation to be used where shown on the Project Plans.
4. When dike or curb is placed under MGS, the maximum height of the dike or curb shall be 6". Mountable dike should not be used. For dike and curb details, see Revised Standard Plans RSP A87A and RSP A87B.
5. For details of typical distance between the face of rail and hinge point, see Revised Standard Plan RSP A77N3.
6. For steel line posts, use 1/4 - 20 self-tapping screws in 0.22" diameter holes or 1/4" bolts in 9/32" diameter holes.

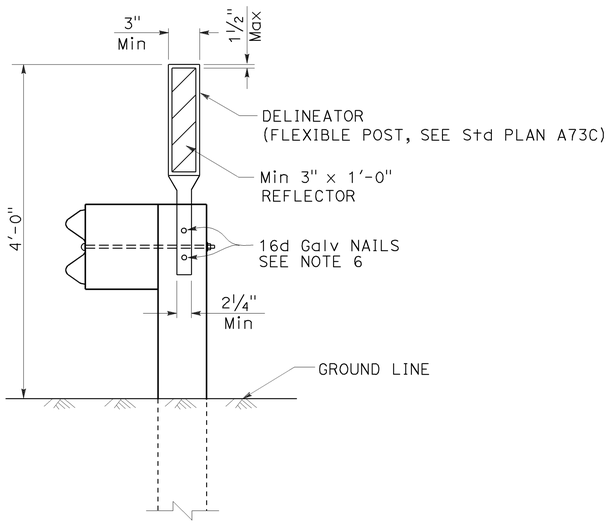

MGS DELINEATION
See Note 3

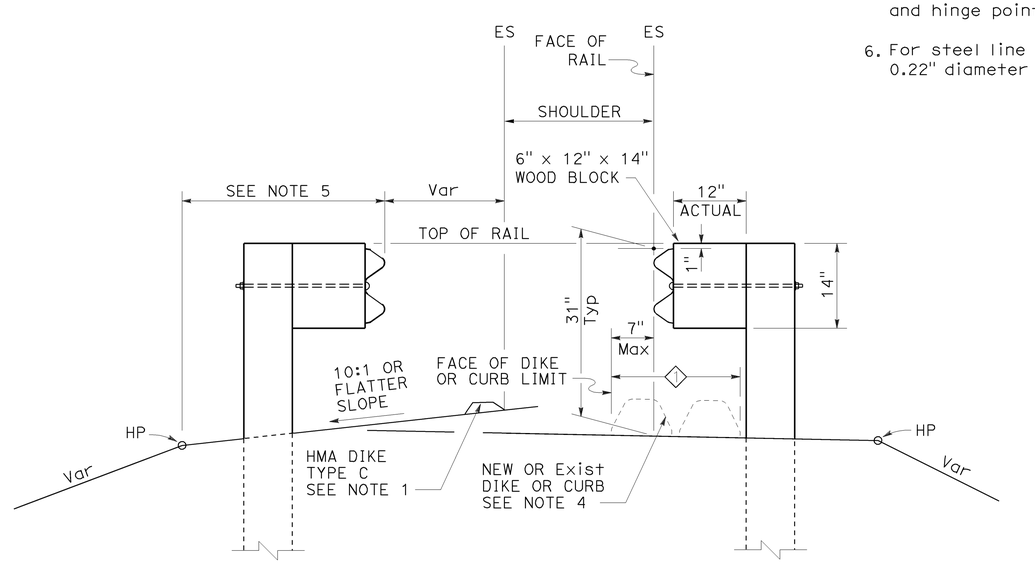

DIKE POSITIONING
See Note 1

1 PERMISSIBLE DIKE OR CURB PLACEMENT AREA

STATE OF CALIFORNIA
DEPARTMENT OF TRANSPORTATION

MIDWEST GUARDRAIL SYSTEM TYPICAL RAILING DELINEATION AND DIKE POSITIONING DETAILS

NO SCALE

RSP A77N4 DATED JULY 19, 2013 SUPPLEMENTS THE STANDARD PLANS BOOK DATED 2010.

REVISED STANDARD PLAN RSP A77N4

2010 REVISED STANDARD PLAN RSP A77N4

Dist	COUNTY	ROUTE	POST MILES TOTAL PROJECT	SHEET No.	TOTAL SHEETS
07	LA	405	R12.6/R21.2	254	288

Randell D. Hiatt
REGISTERED CIVIL ENGINEER

July 19, 2013
PLANS APPROVAL DATE

REGISTERED PROFESSIONAL ENGINEER
Randell D. Hiatt
No. C50200
Exp. 6-30-15
CIVIL
STATE OF CALIFORNIA

THE STATE OF CALIFORNIA OR ITS OFFICERS OR AGENTS SHALL NOT BE RESPONSIBLE FOR THE ACCURACY OR COMPLETENESS OF SCANNED COPIES OF THIS PLAN SHEET.

TO ACCOMPANY PLANS DATED 6-15-15

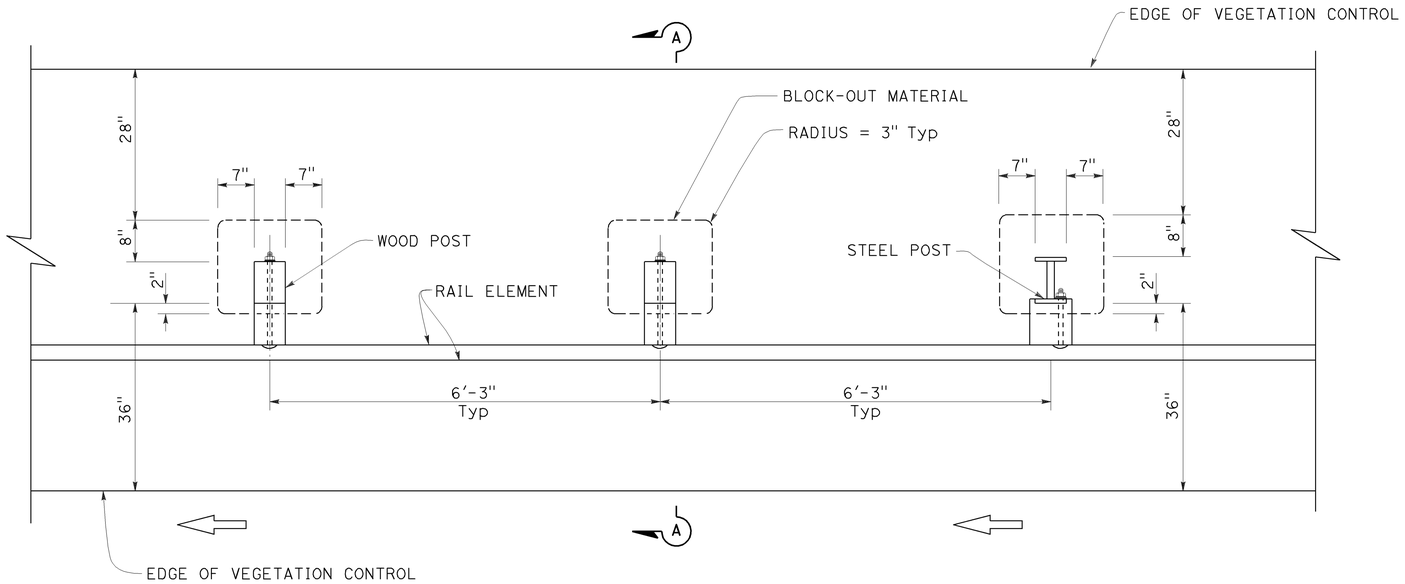

PLAN

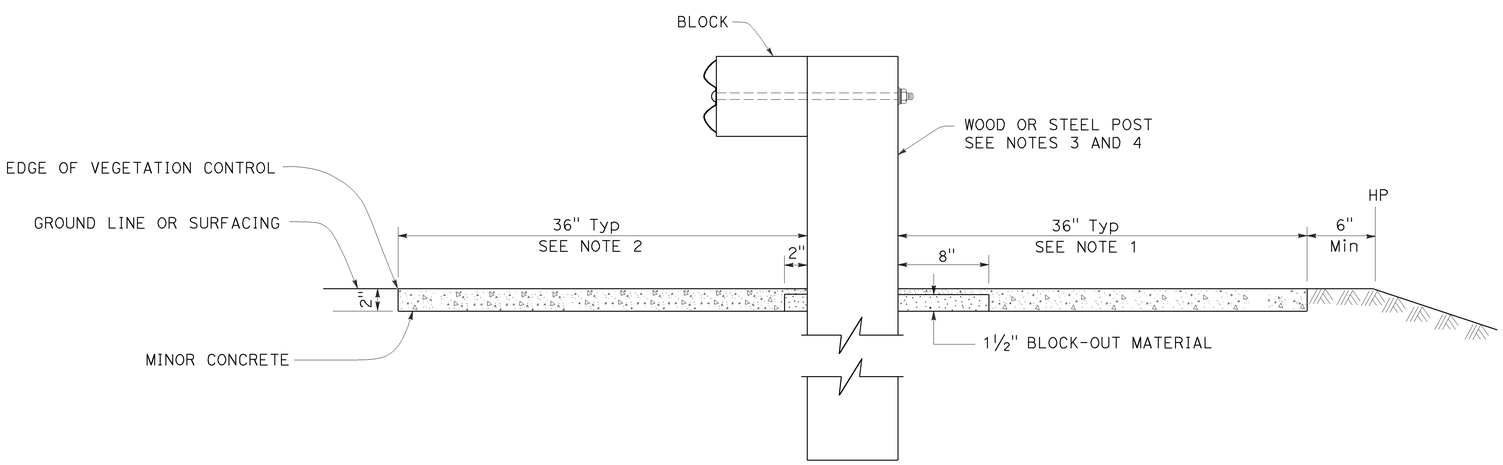

SECTION A-A

NOTES:

1. Where the distance between back of post and hinge point is less than 42", construct vegetation control to 6" from hinge point while maintaining the 8" block-out at back of post. If the 8" block-out at back of post can not be maintained, construct vegetation control flush with the back edge of post.
2. Where dike is constructed under railing, construct vegetation control to back edge of dike. Where paved shoulder is constructed within 36" in front of the post, construct vegetation control to the edge of paved shoulder.
3. For wood post sizes, see Revised Standard Plan RSP A77N1.
4. For steel post sizes, see Revised Standard Plan RSP A77N2.
5. For details not shown, see Revised Standard Plans RSP A77L1 and RSP A77L2.

STATE OF CALIFORNIA
DEPARTMENT OF TRANSPORTATION

MIDWEST GUARDRAIL SYSTEM TYPICAL VEGETATION CONTROL STANDARD RAILING SECTION

NO SCALE

RSP A77N5 DATED JULY 19, 2013 SUPPLEMENTS THE STANDARD PLANS BOOK DATED 2010.

REVISED STANDARD PLAN RSP A77N5

2010 REVISED STANDARD PLAN RSP A77N5

7-3-13

Dist	COUNTY	ROUTE	POST MILES TOTAL PROJECT	SHEET No.	TOTAL SHEETS
07	LA	405	R12.6/R21.2	255	288

Randell D. Hiatt
REGISTERED CIVIL ENGINEER

July 19, 2013
PLANS APPROVAL DATE

REGISTERED PROFESSIONAL ENGINEER
Randell D. Hiatt
No. C50200
Exp. 6-30-15
CIVIL
STATE OF CALIFORNIA

THE STATE OF CALIFORNIA OR ITS OFFICERS OR AGENTS SHALL NOT BE RESPONSIBLE FOR THE ACCURACY OR COMPLETENESS OF SCANNED COPIES OF THIS PLAN SHEET.

TO ACCOMPANY PLANS DATED 6-15-15

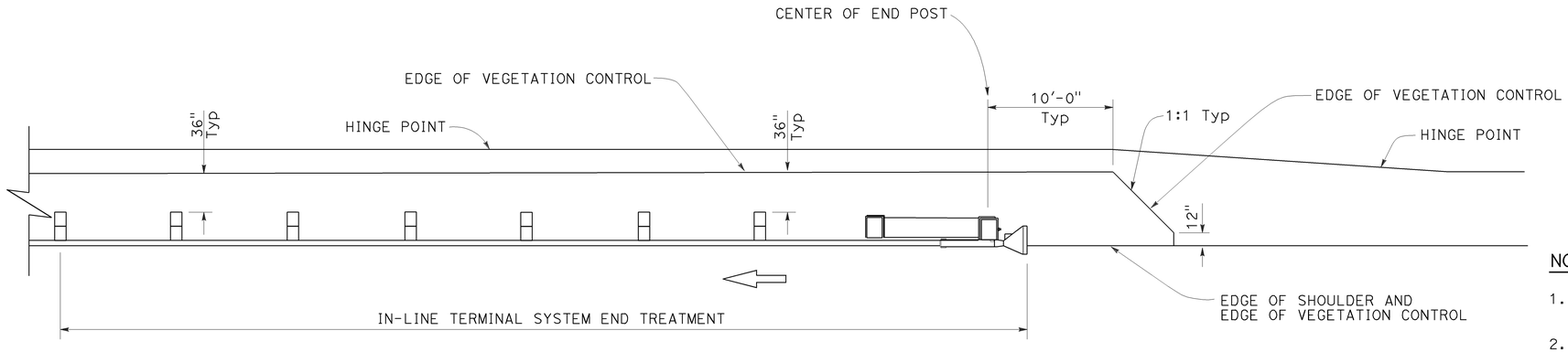

PLAN

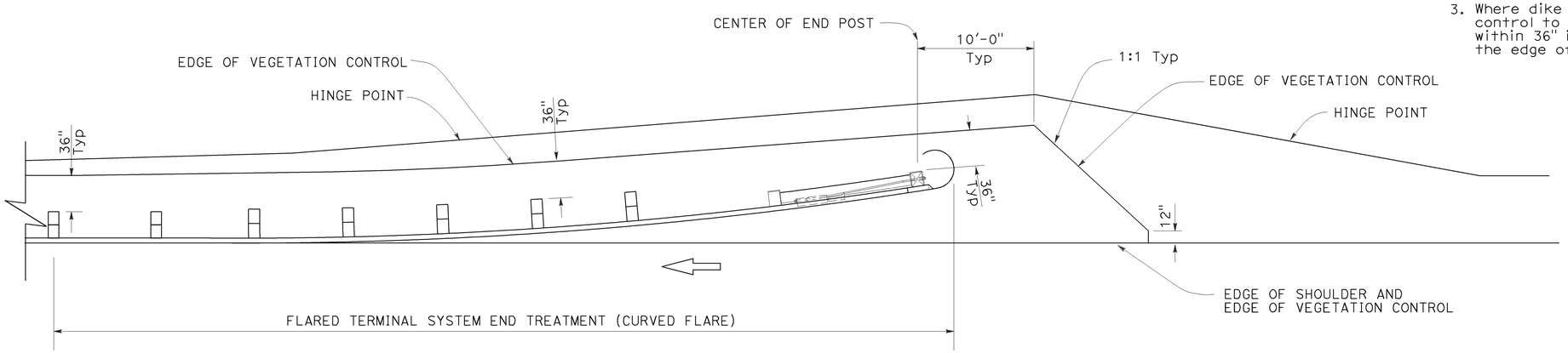

PLAN

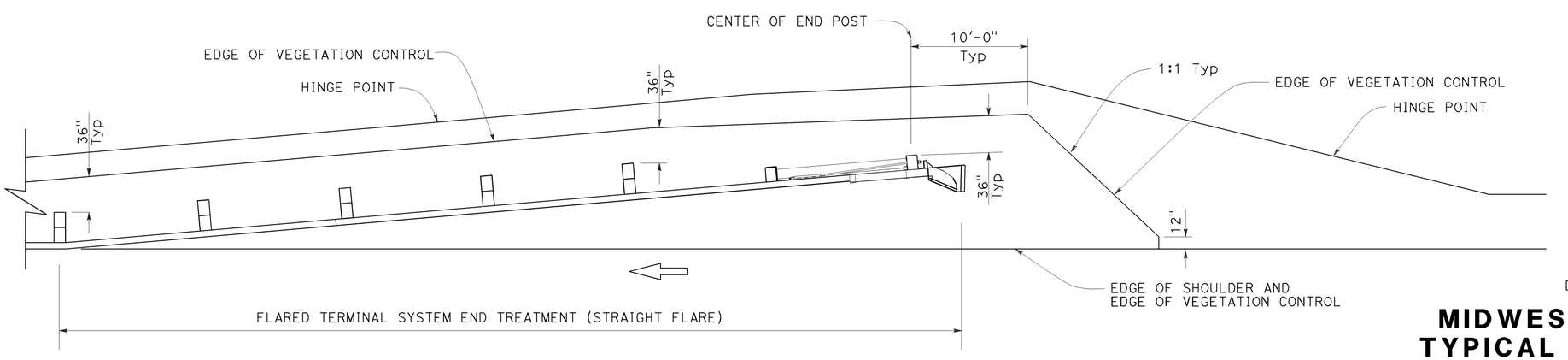

PLAN

NOTES:

1. See Revised Standard Plan RSP A77N5 for additional vegetation control details.
2. Where the distance between back of post and hinge point is less than 42", construct vegetation control to 6" from hinge point while maintaining the 8" block-out at back of post. If the 8" block-out at back of post can not be maintained, construct vegetation control flush with the back edge of post.
3. Where dike is constructed under railing, construct vegetation control to back edge of dike. Where paved shoulder is constructed within 36" in front of the post, construct vegetation control to the edge of paved shoulder.

STATE OF CALIFORNIA
DEPARTMENT OF TRANSPORTATION

MIDWEST GUARDRAIL SYSTEM TYPICAL VEGETATION CONTROL FOR TERMINAL SYSTEM END TREATMENTS

NO SCALE

RSP A77N6 DATED JULY 19, 2013 SUPPLEMENTS THE STANDARD PLANS BOOK DATED 2010.

REVISED STANDARD PLAN RSP A77N6

2010 REVISED STANDARD PLAN RSP A77N6

6-12-13

Dist	COUNTY	ROUTE	POST MILES TOTAL PROJECT	SHEET No.	TOTAL SHEETS
07	LA	405	R12.6/R21.2	256	288

Randell D. Hiatt
REGISTERED CIVIL ENGINEER

November 15, 2013
PLANS APPROVAL DATE

REGISTERED PROFESSIONAL ENGINEER
Randell D. Hiatt
No. C50200
Exp. 6-30-15
CIVIL
STATE OF CALIFORNIA

THE STATE OF CALIFORNIA OR ITS OFFICERS OR AGENTS SHALL NOT BE RESPONSIBLE FOR THE ACCURACY OR COMPLETENESS OF SCANNED COPIES OF THIS PLAN SHEET.

TO ACCOMPANY PLANS DATED 6-15-15

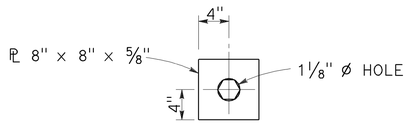

DETAIL "A"
CABLE CONNECTION
END PLATE

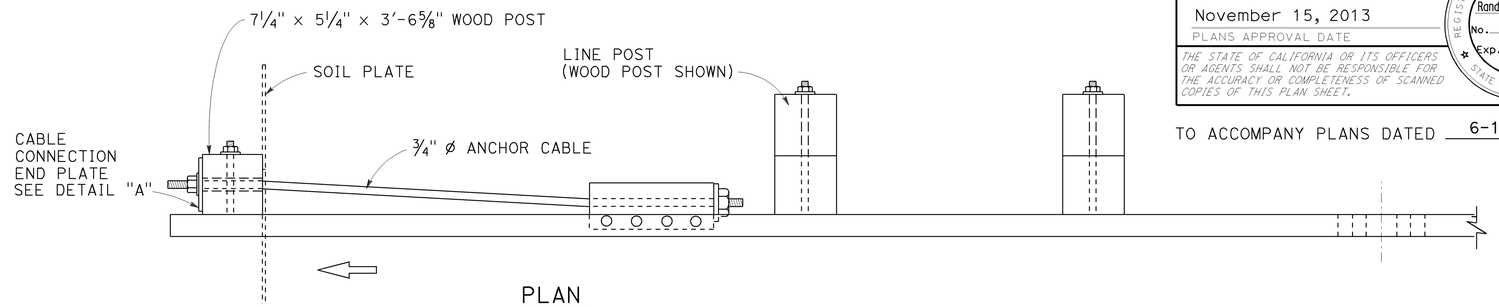

PLAN

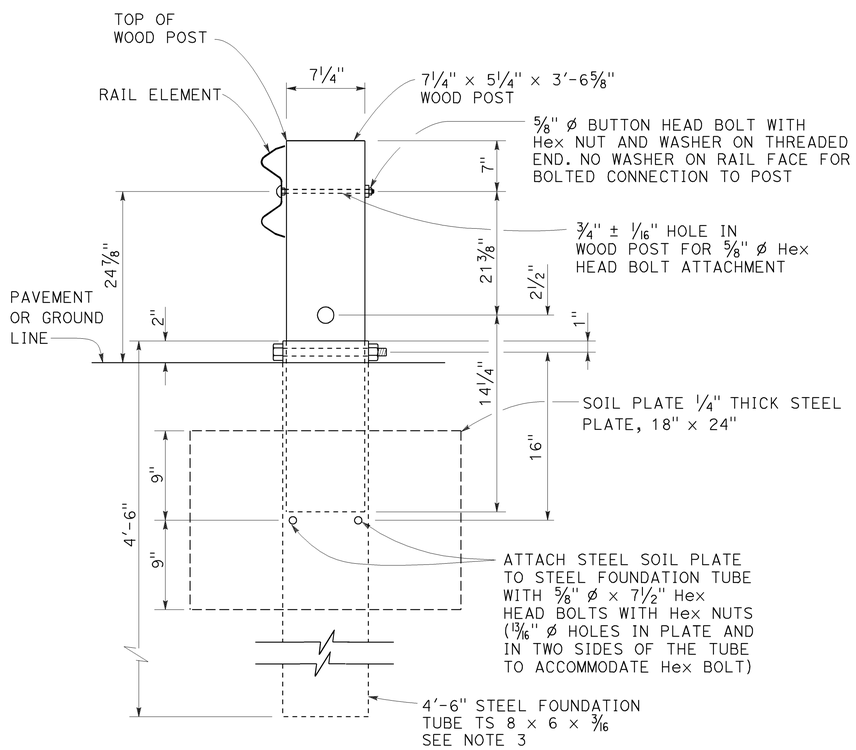

SECTION A-A

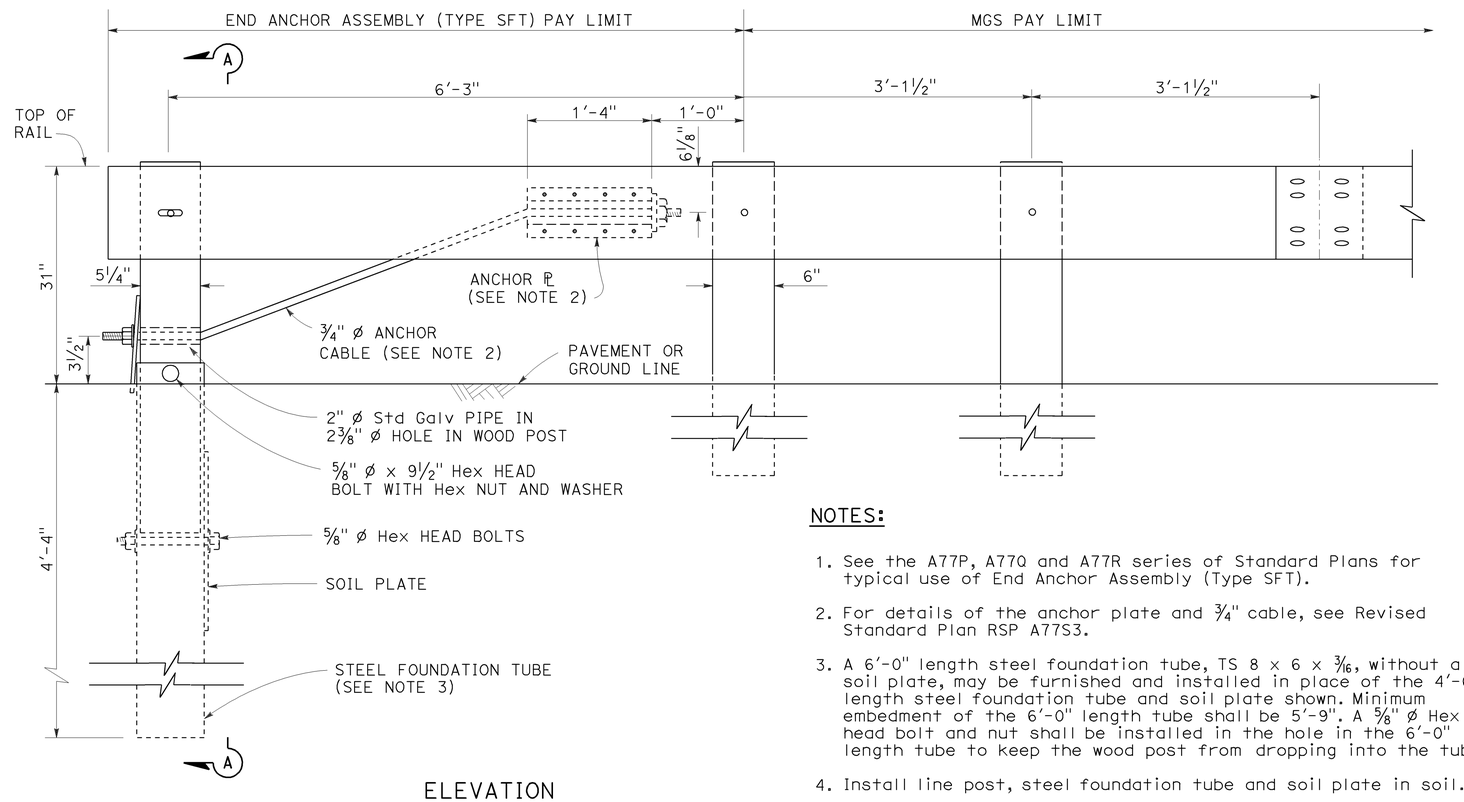

ELEVATION

END ANCHOR
ASSEMBLY (TYPE SFT)
See Note 1

NOTES:

1. See the A77P, A77Q and A77R series of Standard Plans for typical use of End Anchor Assembly (Type SFT).
2. For details of the anchor plate and 3/4" cable, see Revised Standard Plan RSP A77S3.
3. A 6'-0" length steel foundation tube, TS 8 × 6 × 3/16, without a soil plate, may be furnished and installed in place of the 4'-6" length steel foundation tube and soil plate shown. Minimum embedment of the 6'-0" length tube shall be 5'-9". A 5/8" ø Hex head bolt and nut shall be installed in the hole in the 6'-0" length tube to keep the wood post from dropping into the tube.
4. Install line post, steel foundation tube and soil plate in soil.

STATE OF CALIFORNIA
DEPARTMENT OF TRANSPORTATION

MIDWEST GUARDRAIL SYSTEM END ANCHOR ASSEMBLY (TYPE SFT)

NO SCALE

RSP A77S1 DATED NOVEMBER 15, 2013 SUPERSEDES RSP A77S1
DATED JULY 19, 2013 THAT SUPPLEMENTS THE STANDARD PLANS BOOK DATED 2010.

REVISED STANDARD PLAN RSP A77S1

2010 REVISED STANDARD PLAN RSP A77S1

10-4-13

Dist	COUNTY	ROUTE	POST MILES TOTAL PROJECT	SHEET No.	TOTAL SHEETS
07	LA	405	R12.6/R21.2	257	288

Randell D. Hiatt
REGISTERED CIVIL ENGINEER

July 19, 2013
PLANS APPROVAL DATE

REGISTERED PROFESSIONAL ENGINEER
Randell D. Hiatt
No. C50200
Exp. 6-30-15
CIVIL
STATE OF CALIFORNIA

THE STATE OF CALIFORNIA OR ITS OFFICERS OR AGENTS SHALL NOT BE RESPONSIBLE FOR THE ACCURACY OR COMPLETENESS OF SCANNED COPIES OF THIS PLAN SHEET.

TO ACCOMPANY PLANS DATED 6-15-15

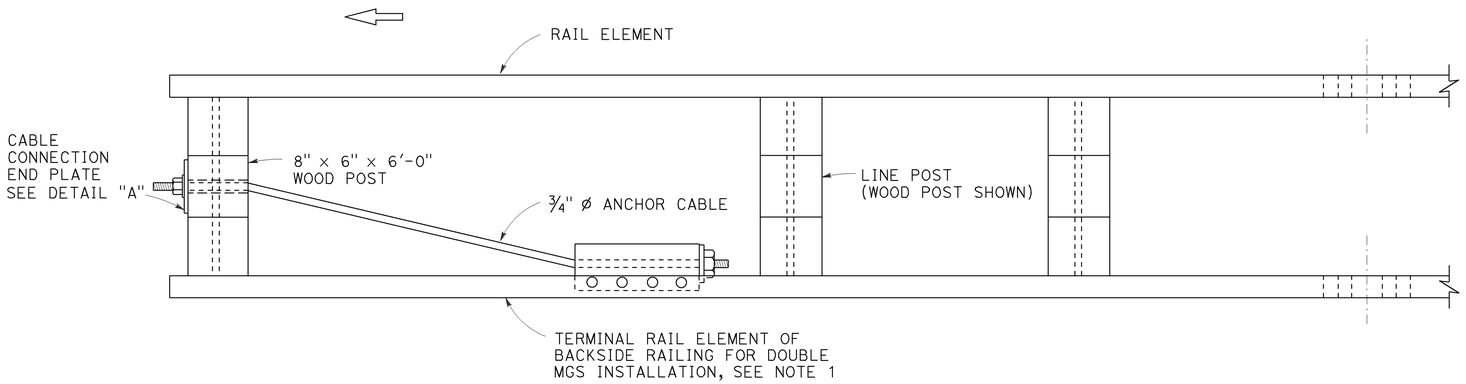

PLAN

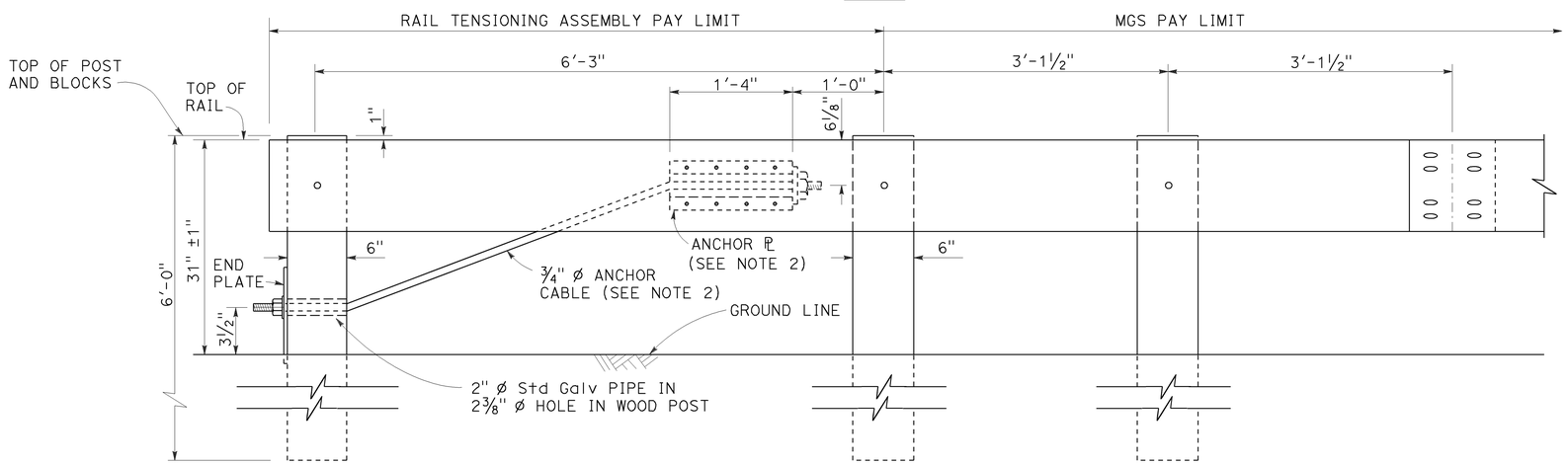

ELEVATION
RAIL TENSIONING ASSEMBLY
See Note 1

NOTES:

1. See Revised Standard Plans RSP A77Q3 and RSP A77R1 for typical use of rail tensioning assembly.
2. For details of the anchor plate and ¾" cable, see Revised Standard Plan RSP A77S3.

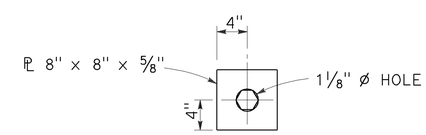

DETAIL "A"
CABLE CONNECTION END PLATE

STATE OF CALIFORNIA
DEPARTMENT OF TRANSPORTATION

MIDWEST GUARDRAIL SYSTEM RAIL TENSIONING ASSEMBLY

NO SCALE

RSP A77S2 DATED JULY 19, 2013 SUPPLEMENTS THE STANDARD PLANS BOOK DATED 2010.

REVISED STANDARD PLAN RSP A77S2

2010 REVISED STANDARD PLAN RSP A77S2

7-3-13

Dist	COUNTY	ROUTE	POST MILES TOTAL PROJECT	SHEET No.	TOTAL SHEETS
07	LA	405	R12.6/R21.2	258	288

Randell D. Hiatt
REGISTERED CIVIL ENGINEER

November 15, 2013
PLANS APPROVAL DATE

REGISTERED PROFESSIONAL ENGINEER
Randell D. Hiatt
No. C50200
Exp. 6-30-15
CIVIL
STATE OF CALIFORNIA

THE STATE OF CALIFORNIA OR ITS OFFICERS OR AGENTS SHALL NOT BE RESPONSIBLE FOR THE ACCURACY OR COMPLETENESS OF SCANNED COPIES OF THIS PLAN SHEET.

TO ACCOMPANY PLANS DATED 6-15-15

2010 REVISED STANDARD PLAN RSP A77S3

NOTE:

See Revised Standard Plans RSP A77S1, RSP A77S2 and RSP A77T1 for typical use of anchor cable and anchor plate.

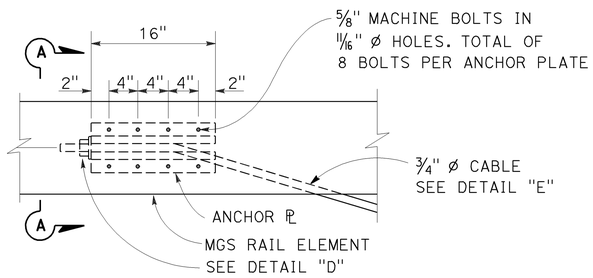

ANCHOR PLATE DETAIL
(MGS shown, TBB similar)

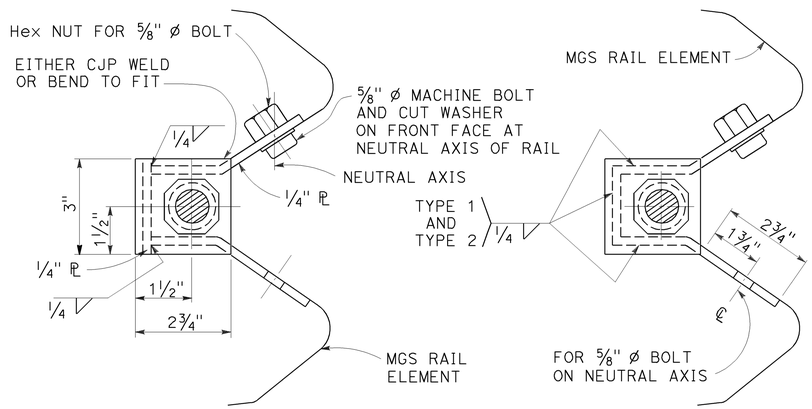

NOTE:
Dimensioning applies to both types.

SECTION A-A
(ALTERNATIVE TYPE 1)

SECTION A-A
(ALTERNATIVE TYPE 2)

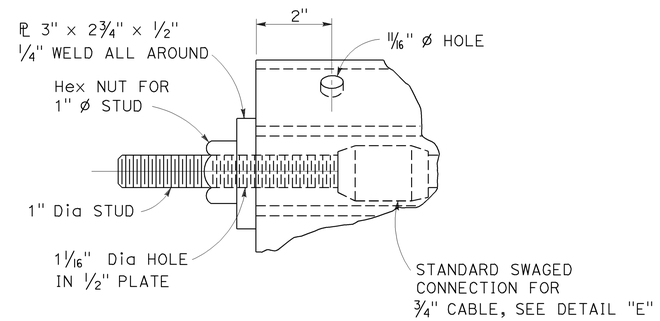

DETAIL "D"

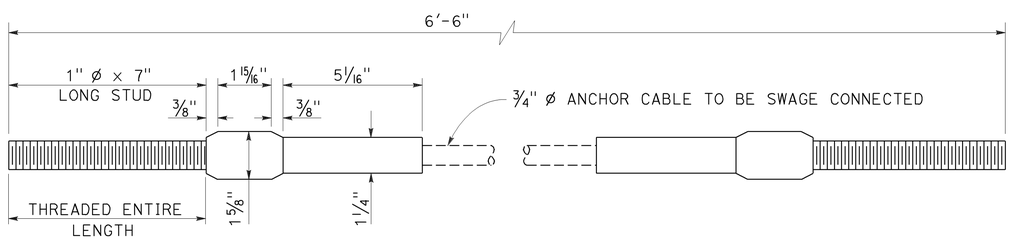

ANCHOR CABLE WITH
SWAGED FITTING AND STUD
DETAIL "E"

STATE OF CALIFORNIA
DEPARTMENT OF TRANSPORTATION

METAL RAILING ANCHOR CABLE AND ANCHOR PLATE DETAILS

NO SCALE

RSP A77S3 DATED NOVEMBER 15, 2013 SUPERSEDES RSP A77S3
DATED JULY 19, 2013 THAT SUPPLEMENTS THE STANDARD PLANS BOOK DATED 2010.

REVISED STANDARD PLAN RSP A77S3

10-4-13

Dist	COUNTY	ROUTE	POST MILES TOTAL PROJECT	SHEET No.	TOTAL SHEETS
07	LA	405	R12.6/R21.2	259	288

Randell D. Hiatt
REGISTERED CIVIL ENGINEER

November 15, 2013
PLANS APPROVAL DATE

REGISTERED PROFESSIONAL ENGINEER
Randell D. Hiatt
No. C50200
Exp. 6-30-15
CIVIL
STATE OF CALIFORNIA

THE STATE OF CALIFORNIA OR ITS OFFICERS OR AGENTS SHALL NOT BE RESPONSIBLE FOR THE ACCURACY OR COMPLETENESS OF SCANNED COPIES OF THIS PLAN SHEET.

TO ACCOMPANY PLANS DATED 6-15-15

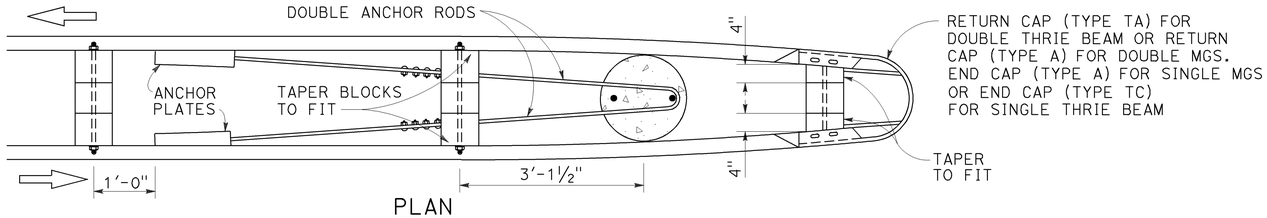

PLAN
See Note 4

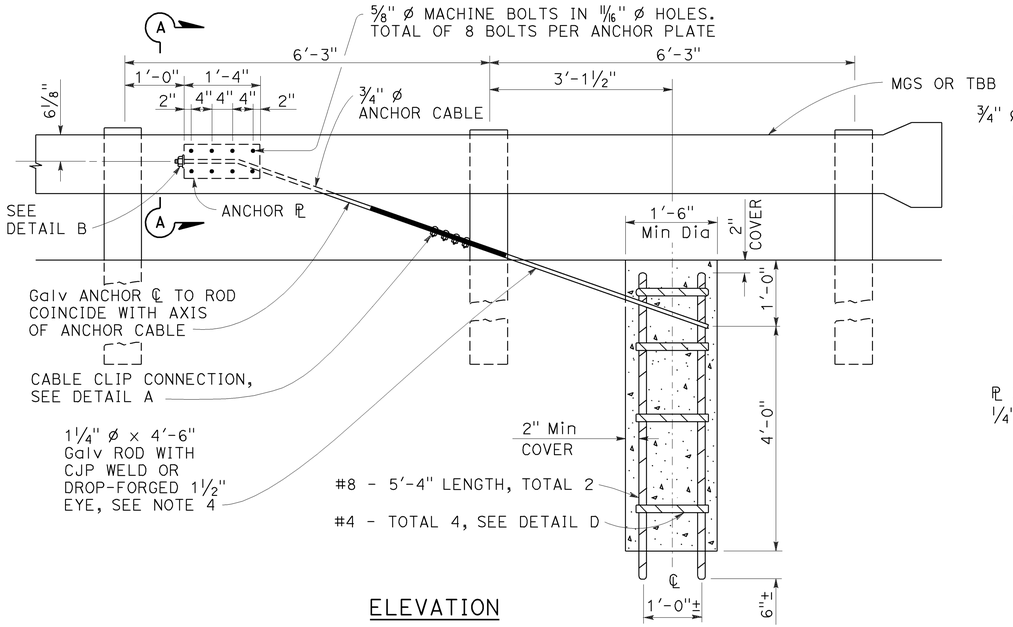

ELEVATION
END ANCHOR ASSEMBLY
(TYPE CA)
(Wood post, MGS shown, details similar for Thrie Beam Barrier.)

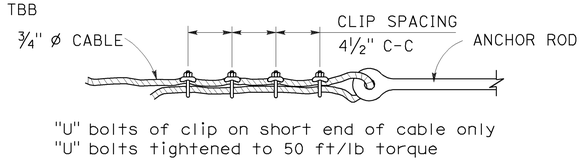

DETAIL A
CABLE CLIP CONNECTION

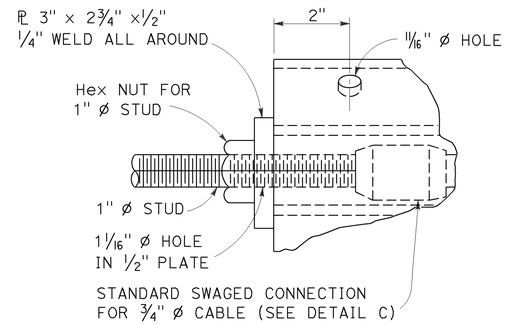

DETAIL B

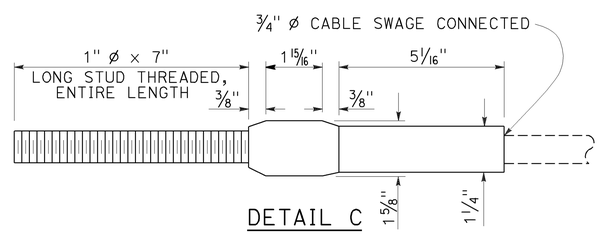

DETAIL C

ANCHOR CABLE WITH
SWAGED FITTING AND STUD

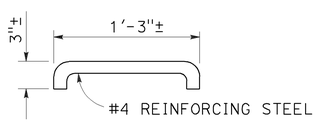

DETAIL D

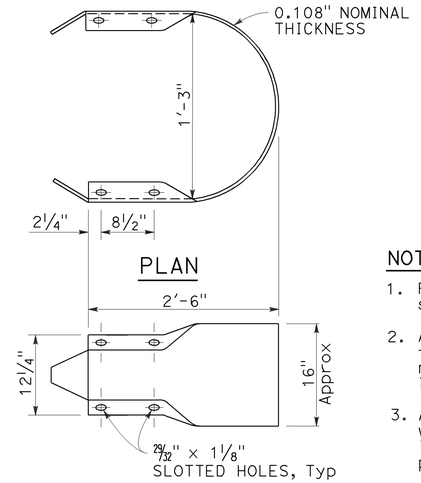

ELEVATION
RETURN CAP
(TYPE A)

NOTES:

1. For typical use of this type of end anchor, see Revised Standard Plan RSP A78E2.
2. Anchor cable to be parallel to railing for straight runs of rail. Anchor cable may have angle point at anchor plate if railing is curved.
3. Anchor rod hooks to be in contact with anchor reinforcement when concrete is placed. Wire ties may be used to position anchor rods.
4. Single sided railing installations require only one anchor plate, anchor rod and anchor cable. Single sided railing will not have a rail element or blockouts on backside of line posts as shown in the plan view.

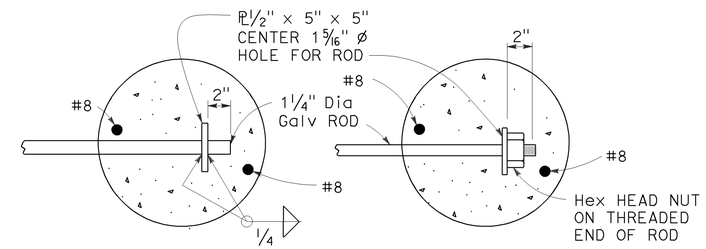

OPTIONAL ENDS ON SINGLE ANCHOR ROD
(Not to be used for double anchors)

NOTE:
Use two 1¼" Ø Galv rods with hook and eye for double MGS anchor.

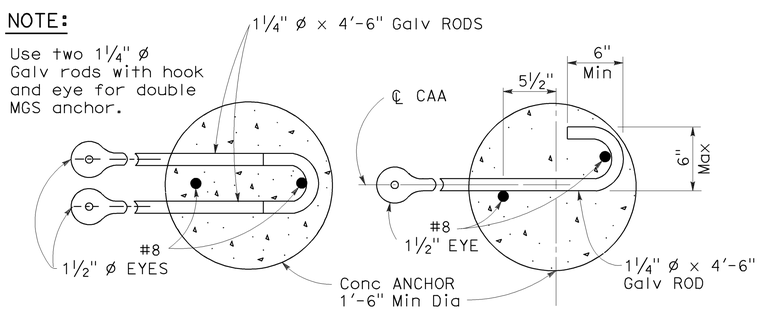

DOUBLE ANCHOR SINGLE ANCHOR
ANCHOR RODS

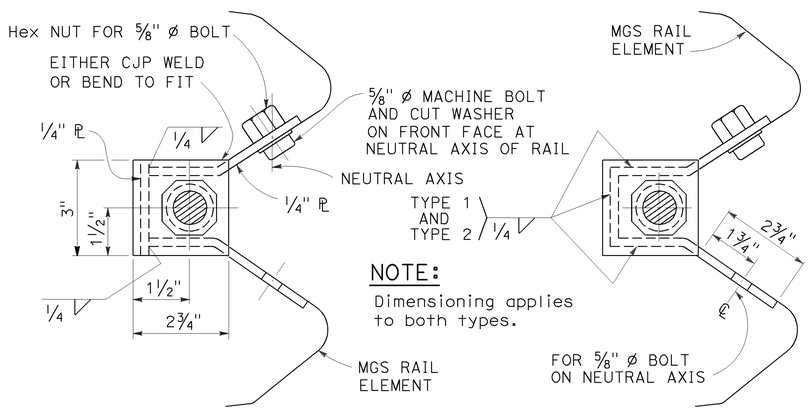

NOTE:
Dimensioning applies to both types.

SECTION A-A
(Alternative Type 1)

SECTION A-A
(Alternative Type 2)

ANCHOR PLATE DETAILS

STATE OF CALIFORNIA
DEPARTMENT OF TRANSPORTATION

METAL RAILING END ANCHOR ASSEMBLY (TYPE CA)

NO SCALE

RSP A77T1 DATED NOVEMBER 15, 2013 SUPERSEDES RSP A77T1 DATED JULY 19, 2013 THAT SUPPLEMENTS THE STANDARD PLANS BOOK DATED 2010.

REVISED STANDARD PLAN RSP A77T1

2010 REVISED STANDARD PLAN RSP A77T1

10-22-13

Dist	COUNTY	ROUTE	POST MILES TOTAL PROJECT	SHEET No.	TOTAL SHEETS
07	LA	405	R12.6/R21.2	260	288

Randell D. Hiatt
REGISTERED CIVIL ENGINEER

July 19, 2013
PLANS APPROVAL DATE

REGISTERED PROFESSIONAL ENGINEER
Randell D. Hiatt
No. C50200
Exp. 6-30-15
CIVIL
STATE OF CALIFORNIA

THE STATE OF CALIFORNIA OR ITS OFFICERS OR AGENTS SHALL NOT BE RESPONSIBLE FOR THE ACCURACY OR COMPLETENESS OF SCANNED COPIES OF THIS PLAN SHEET.

TO ACCOMPANY PLANS DATED 6-15-15

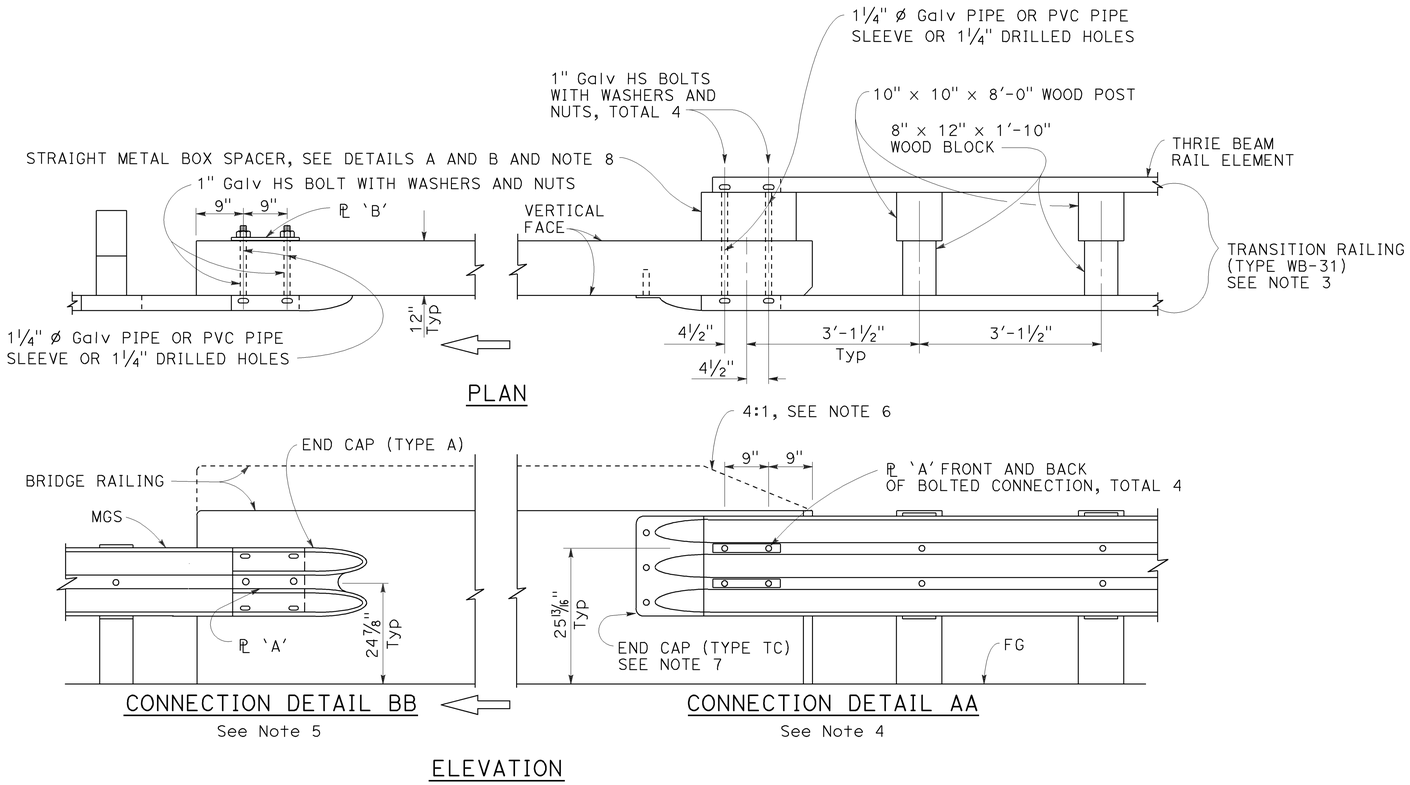

MIDWEST GUARDRAIL SYSTEM CONNECTION TO BRIDGE RAILING WITHOUT SIDEWALK

NOTES:

1. See Revised Standard Plan RSP A77U2 for additional connection details to bridges without sidewalks.
2. Additional details of posts, blocks and hardware are shown on Revised Standard Plans RSP A77M1, RSP A77N1 and RSP A77N2.
3. For additional details of Transition Railing (Type WB-31), see Revised Standard Plan RSP A77U4. Transition Railing (Type WB-31) transitions the 12 gauge MGS railing section to a heavier gage nested thrie beam railing section which is connected to the concrete bridge railing.
4. For typical use of Connection Detail AA, see Layout Types 12A and 12B on Revised Standard Plan RSP A77Q1, Layout Types 12C and 12D on Revised Standard Plan RSP A77Q2, and Layout Type 12E on Revised Standard Plan RSP A77Q3.
5. For typical use of Connection Detail BB, see Layout Type 12D (structure departure railing connection) on Revised Standard Plan RSP A77Q2 and Layout Type 12DD on Revised Standard Plan RSP A77Q5.
6. Where the height of the bridge railing exceeds the height of the thrie beam railing by more than 1" at Connection Detail AA, taper the top of the end of the bridge railing at 4:1 to match the top elevation of the thrie beam rail.
7. For details of End Cap (Type TC), see Revised Standard Plan RSP A77U4.
8. See Revised Standard Plan RSP A77U4 for additional details regarding depth dimension for straight metal box spacer.

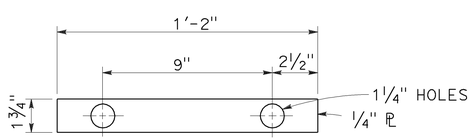

PLATE 'A'

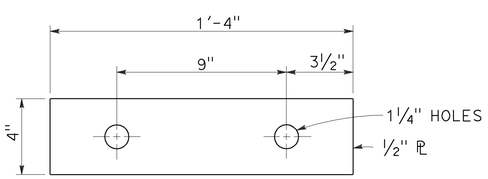

PLATE 'B'
(For backside of connection BB)

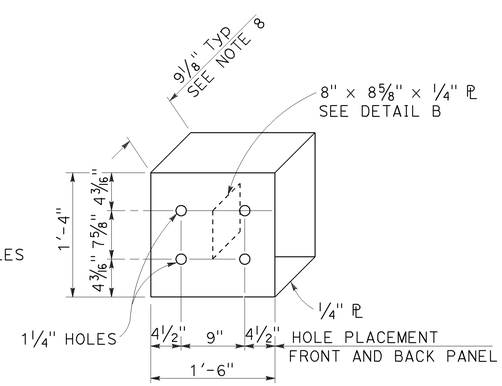

DETAIL A

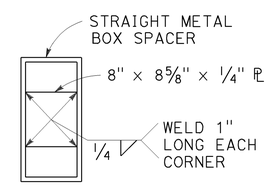

DETAIL B

STRAIGHT METAL BOX SPACER

STATE OF CALIFORNIA
DEPARTMENT OF TRANSPORTATION

MIDWEST GUARDRAIL SYSTEM CONNECTIONS TO BRIDGE RAILINGS WITHOUT SIDEWALKS DETAILS No. 1

NO SCALE

RSP A77U1 DATED JULY 19, 2013 SUPPLEMENTS THE STANDARD PLANS BOOK DATED 2010.

REVISED STANDARD PLAN RSP A77U1

2010 REVISED STANDARD PLAN RSP A77U1

7-8-13

Dist	COUNTY	ROUTE	POST MILES TOTAL PROJECT	SHEET No.	TOTAL SHEETS
07	LA	405	R12.6/R21.2	261	288

Randell D. Hiatt
REGISTERED CIVIL ENGINEER

July 19, 2013
PLANS APPROVAL DATE

REGISTERED PROFESSIONAL ENGINEER
Randell D. Hiatt
No. C50200
Exp. 6-30-15
CIVIL
STATE OF CALIFORNIA

THE STATE OF CALIFORNIA OR ITS OFFICERS OR AGENTS SHALL NOT BE RESPONSIBLE FOR THE ACCURACY OR COMPLETENESS OF SCANNED COPIES OF THIS PLAN SHEET.

TO ACCOMPANY PLANS DATED 6-15-15

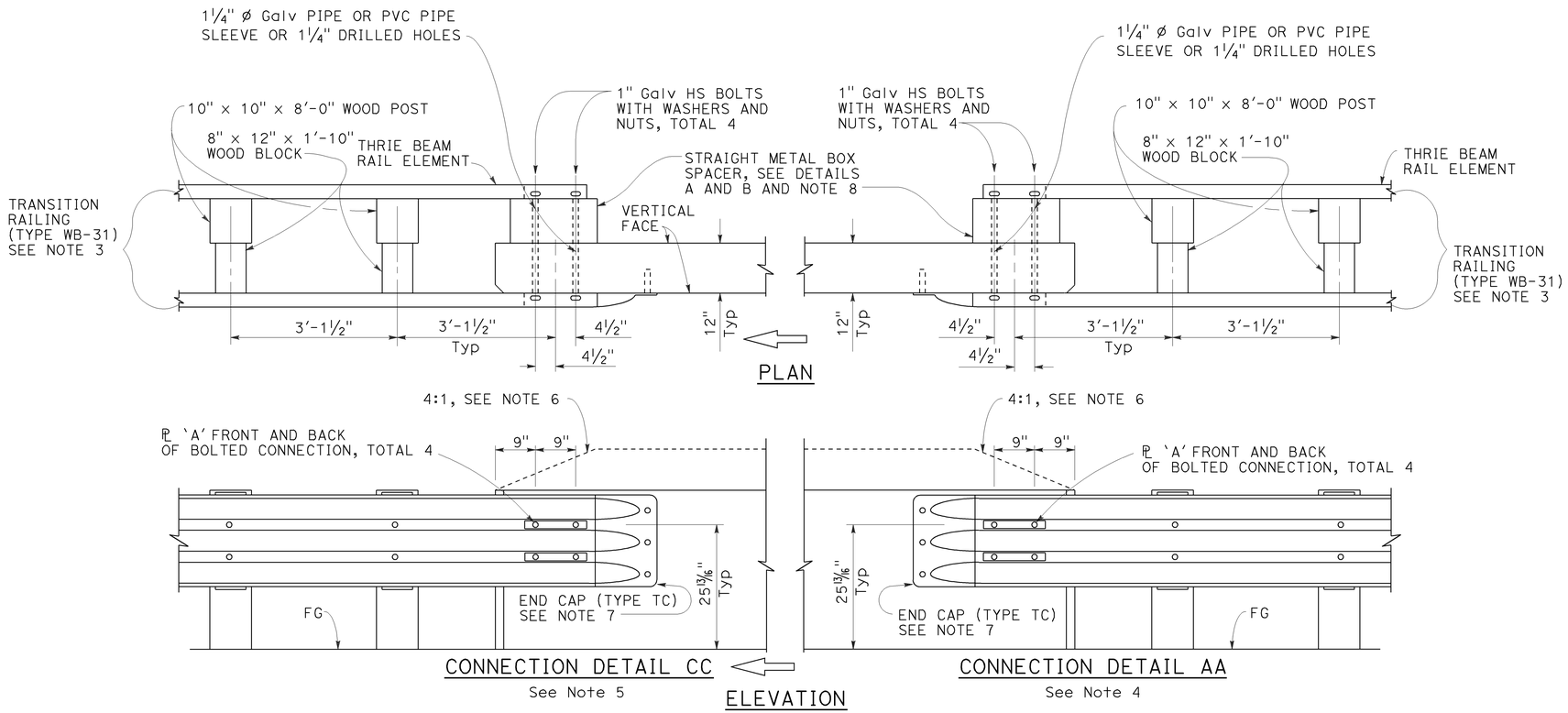

MIDWEST GUARDRAIL SYSTEM CONNECTION TO BRIDGE RAILING WITHOUT SIDEWALK

NOTES:

1. See Revised Standard Plan RSP A77U1 for additional connection details to bridges without sidewalks.
2. Additional details of posts, blocks and hardware are shown on Revised Standard Plans RSP A77M1, RSP A77N1 and RSP A77N2.
3. For additional details of Transition Railing (Type WB-31), see Revised Standard Plan RSP A77U4. Transition Railing (Type WB-31) transitions the 12 gauge MGS railing section to a heavier gage nested thrie beam railing section which is connected to the concrete bridge railing.
4. For typical use of Connection Detail AA, see Layout Types 12A and 12B on Revised Standard Plan RSP A77Q1, Layout Types 12C and 12D on Revised Standard Plan RSP A77Q2, and Layout Type 12E on Revised Standard Plan RSP A77Q3.
5. For typical use of Connection Detail CC, see Layout Types 12AA and 12BB on Revised Standard Plan RSP A77Q4 and Layout Type 12CC on Revised Standard Plan RSP A77Q5.
6. Where the height of the bridge railing exceeds the height of the thrie beam railing by more than 1" at Connection Detail AA and connection Detail CC, taper the top of the end of the bridge railing at 4:1 to match the top elevation of the thrie beam railing.
7. For details of End Cap (Type TC), see Revised Standard Plan RSP A77U4.
8. See Revised Standard Plan RSP A77U4 for additional details regarding depth dimension for straight metal box spacer.

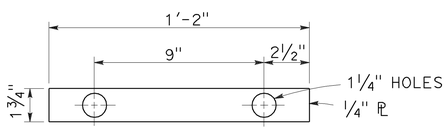

PLATE 'A'

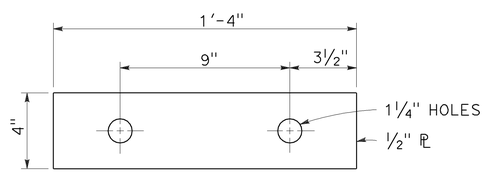

PLATE 'B'
(For backside of connection BB)

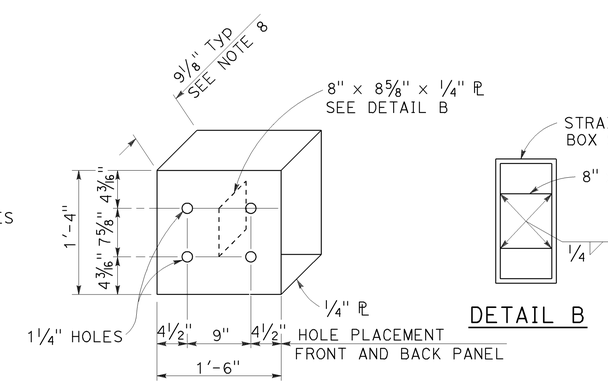

DETAIL A

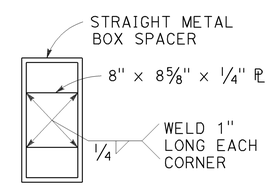

DETAIL B

STRAIGHT METAL BOX SPACER

STATE OF CALIFORNIA
DEPARTMENT OF TRANSPORTATION

MIDWEST GUARDRAIL SYSTEM CONNECTIONS TO BRIDGE RAILINGS WITHOUT SIDEWALKS DETAILS No. 2

NO SCALE

RSP A77U2 DATED JULY 19, 2013 SUPPLEMENTS THE STANDARD PLANS BOOK DATED 2010.

REVISED STANDARD PLAN RSP A77U2

2010 REVISED STANDARD PLAN RSP A77U2

6-20-13

Dist	COUNTY	ROUTE	POST MILES TOTAL PROJECT	SHEET No.	TOTAL SHEETS
07	LA	405	R12.6/R21.2	262	288

Randell D. Hiatt
REGISTERED CIVIL ENGINEER

July 19, 2013
PLANS APPROVAL DATE

REGISTERED PROFESSIONAL ENGINEER
Randell D. Hiatt
No. C50200
Exp. 6-30-15
CIVIL
STATE OF CALIFORNIA

THE STATE OF CALIFORNIA OR ITS OFFICERS OR AGENTS SHALL NOT BE RESPONSIBLE FOR THE ACCURACY OR COMPLETENESS OF SCANNED COPIES OF THIS PLAN SHEET.

TO ACCOMPANY PLANS DATED 6-15-15

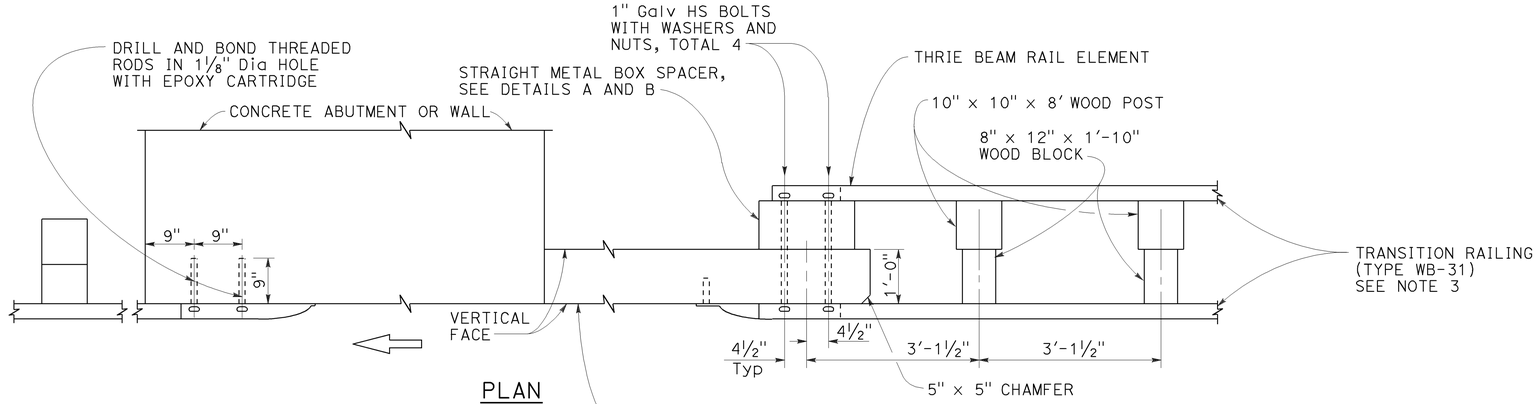

PLAN

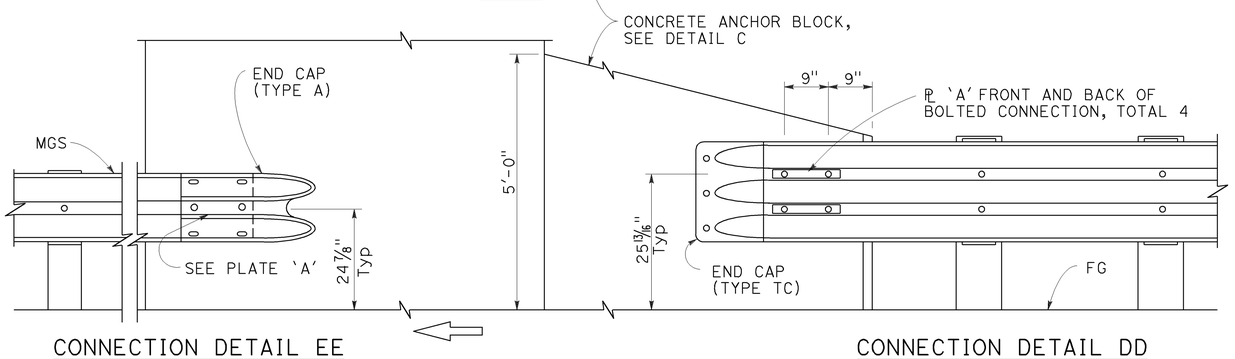

CONNECTION DETAIL EE
See Note 5

ELEVATION

CONNECTION DETAIL DD
See Note 4

MIDWEST GUARDRAIL SYSTEM CONNECTION TO ABUTMENT OR WALL

NOTES:

1. These connection details apply to abutments and walls.
2. Additional details of posts, blocks and hardware are shown on Revised Standard Plans RSP A77M1, RSP A77N1 and RSP A77N2.
3. For additional details of Transition Railing (Type WB-31), see Revised Standard Plan RSP A77U4. Transition Railing (Type WB-31) transitions the 12 gauge MGS railing section to a heavier gage nested thrie beam railingsection which is connected to the concrete anchor block.
4. For typical use of Connection Details DD, see Layout Types 12A and 12B on Revised Standard Plan RSP A77Q1 and Layout Types 12C and 12D on Revised Standard Plan RSP A77Q2.
5. For typical use of Connection Detail EE, see Layout Type 12D on Revised Standard Plan RSP A77Q2 and Layout Type 12DD on Revised Standard Plan RSP A77Q5.

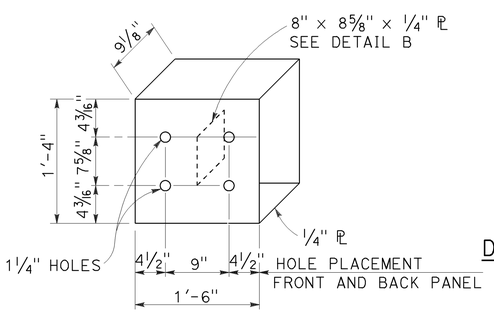

DETAIL A

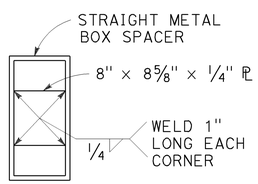

DETAIL B

STRAIGHT METAL BOX SPACER

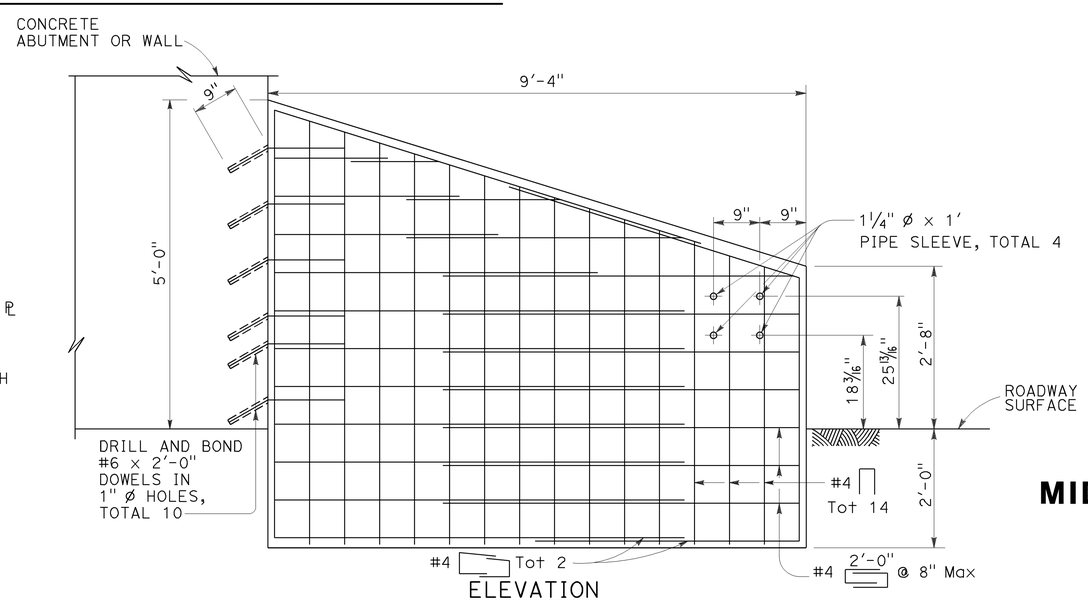

ELEVATION

ANCHOR BLOCK FOR TRANSITION RAILING CONNECTION

DETAIL C

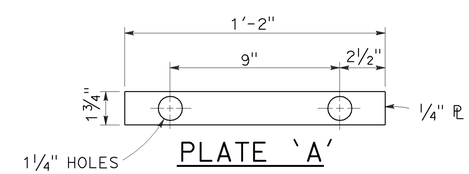

PLATE 'A'

STATE OF CALIFORNIA
DEPARTMENT OF TRANSPORTATION

MIDWEST GUARDRAIL SYSTEM CONNECTIONS TO ABUTMENTS AND WALLS

NO SCALE

RSP A77U3 DATED JULY 19, 2013 SUPPLEMENTS THE STANDARD PLANS BOOK DATED 2010.

REVISED STANDARD PLAN RSP A77U3

2010 REVISED STANDARD PLAN RSP A77U3

7-8-13

Dist	COUNTY	ROUTE	POST MILES TOTAL PROJECT	SHEET No.	TOTAL SHEETS
07	LA	405	R12.6/R21.2	263	288

Randell D. Hiatt
REGISTERED CIVIL ENGINEER

January 23, 2015
PLANS APPROVAL DATE

REGISTERED PROFESSIONAL ENGINEER Randell D. Hiatt No. C50200 Exp. 6-30-15 CIVIL STATE OF CALIFORNIA

THE STATE OF CALIFORNIA OR ITS OFFICERS OR AGENTS SHALL NOT BE RESPONSIBLE FOR THE ACCURACY OR COMPLETENESS OF SCANNED COPIES OF THIS PLAN SHEET.

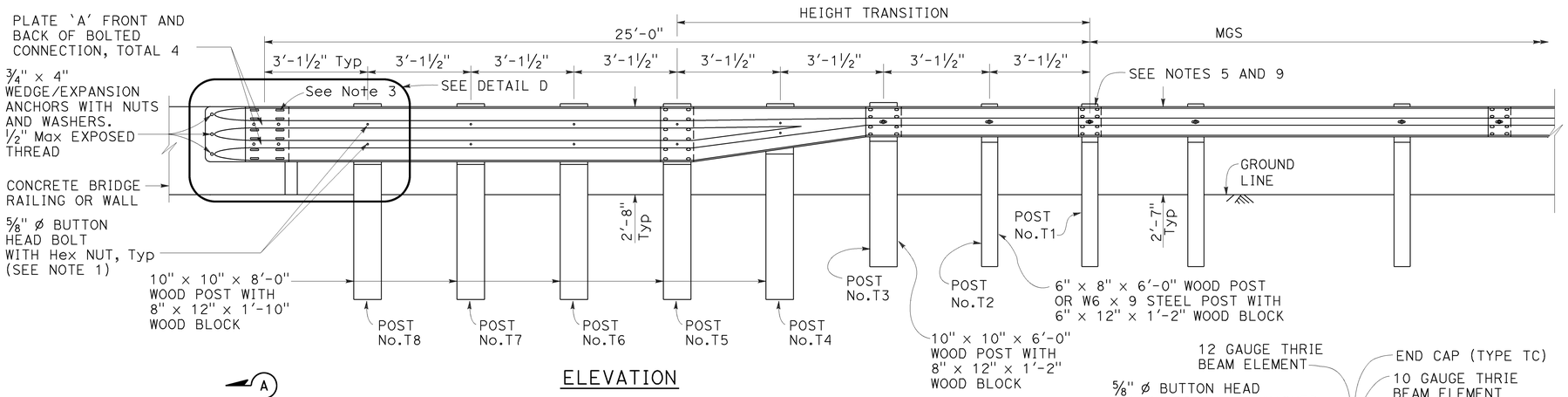

ELEVATION

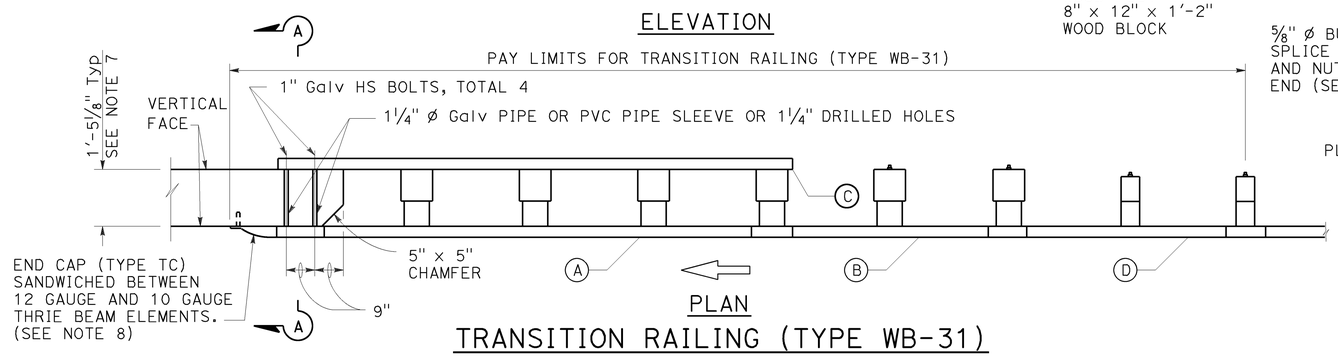

PLAN

TRANSITION RAILING (TYPE WB-31)

(No Blockout Attachment)

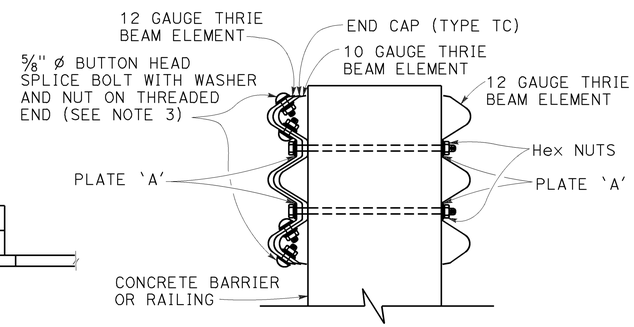

SECTION A-A

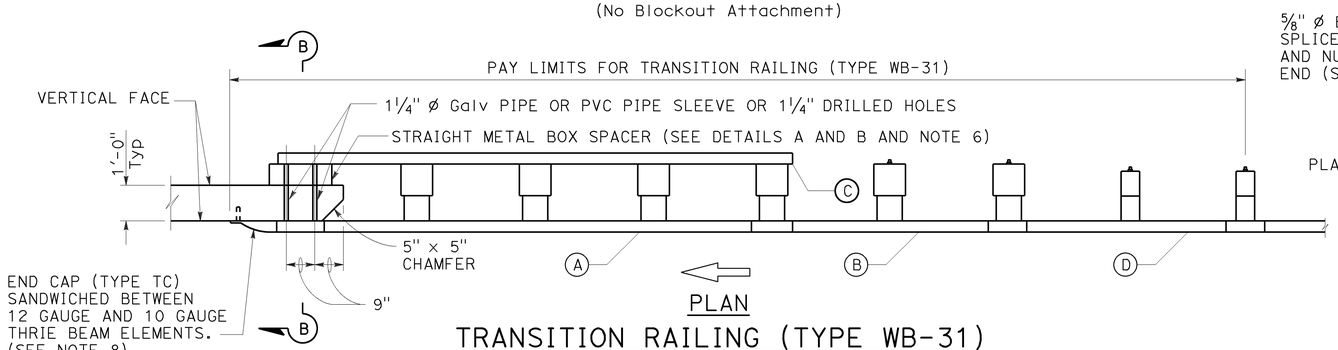

PLAN

TRANSITION RAILING (TYPE WB-31)

(Blockout Attachment)

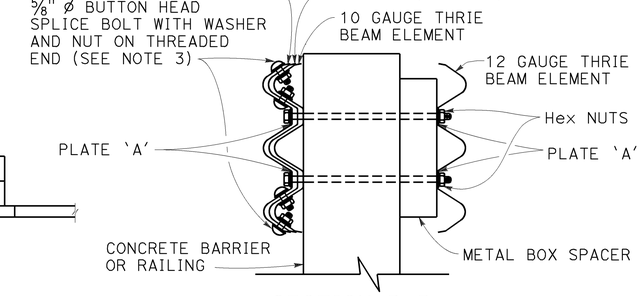

SECTION B-B

NOTES:

TO ACCOMPANY PLANS DATED 6-15-15

1. Use 5/8" ø Button head bolts and hex nuts for connections to posts. No washer on rail face for bolted connections to post.
2. The nested rail elements, end cap, and 'W' beam to thrie beam element may be spliced together prior to bolting the elements to the wood post and concrete barrier or railing.
3. Exterior splice bolt holes for rail element splices at Post No. T5 and the connection to the concrete barrier or railing shall be the standard 29/32" x 1 1/8" slot size. Interior splice bolt holes at these locations may be increased up to 1 1/4" ø. Only the top 4 and the bottom 4 splice bolts with washers and nuts are required for rail splices at Post No. T5 and the connection to the concrete barrier or railing.
4. The top elevation of Posts No. T2 through No. T7 shall not project more than 1" above the top elevation of the rail element.
5. Typically, the railing connected to Transition Railing (Type WB-31) will be either standard railing section of MGS with height transition ratio of 150:1 or a Caltrans approved 31" end treatment attached to Post No. T1.
6. The depth of the metal box spacer varies from the 9 1/8" to 1 1/2" and is dependent on the width of the concrete railing or wall. The combined dimension for the depth of the metal box spacer plus the width of railing or wall is typically 21 1/8". Where the space between the backside of the concrete railing or wall and the rear thrie beam element is less than 1 1/2", metal plates similar to Plate 'A' are to be used as spacers.
7. Where the width of the concrete railing or wall is greater than 17 1/8", wood blocks are to be used to fill the space created between the backside of Posts No. T5 through No. T8 and the rear thrie beam element. These wood blocks shall be 8" in width and 1'-2" in length. The dimension between the front thrie beam element and the rear thrie beam element is to match the width of the concrete railing or wall.
8. End cap may be installed over 12 gauge and 10 gauge thrie beam elements where transition railing is installed on the departure end of bridge railing.
9. Conform standard railing section height to 31" at Post No. T1 using height transition ratio of 150:1.

LEGEND:

(A) NESTED THRIE BEAM ELEMENTS (ONE 12 GAUGE ELEMENT NESTED OVER ONE 10 GAUGE ELEMENT).

(B) ONE ASYMMETRICAL 10 GAUGE "W" BEAM TO THRIE BEAM ELEMENT.

(C) ONE 12 GAUGE THRIE BEAM ELEMENT.

(D) ONE 10 GAUGE "W" BEAM RAIL ELEMENT (7'-3 1/2"LENGTH)

10 GAUGE = 0.138" THICK
12 GAUGE = 0.108" THICK

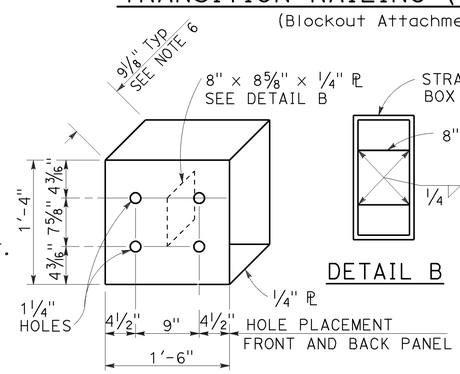

DETAIL A

STRAIGHT METAL BOX SPACER

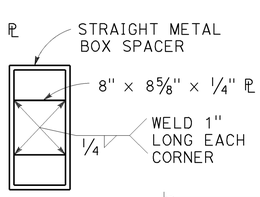

DETAIL B

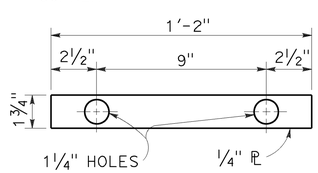

DETAIL C

PLATE 'A'

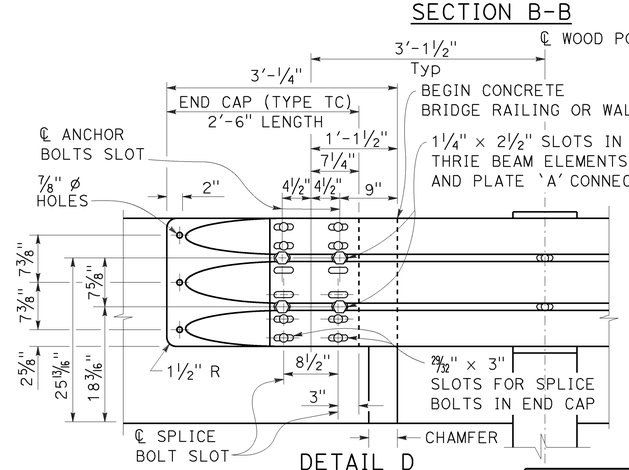

DETAIL D

STATE OF CALIFORNIA
DEPARTMENT OF TRANSPORTATION

MIDWEST GUARDRAIL SYSTEM TRANSITION RAILING (TYPE WB-31)

NO SCALE

RSP A77U4 DATED JANUARY 23, 2015 SUPERSEDES RSP A77U4 DATED NOVEMBER 15, 2013 AND RSP A77U4 DATED JULY 19, 2013 THAT SUPPLEMENTS THE STANDARD PLANS BOOK DATED 2010.

REVISED STANDARD PLAN RSP A77U4

2010 REVISED STANDARD PLAN RSP A77U4

1-8-15

Dist	COUNTY	ROUTE	POST MILES TOTAL PROJECT	SHEET No.	TOTAL SHEETS
07	LA	405	R12.6/R21.2	264	288

William K. Farnbach
REGISTERED CIVIL ENGINEER

July 19, 2013
PLANS APPROVAL DATE

REGISTERED PROFESSIONAL ENGINEER
William K. Farnbach
No. C49042
Exp. 9-30-14
CIVIL
STATE OF CALIFORNIA

THE STATE OF CALIFORNIA OR ITS OFFICERS OR AGENTS SHALL NOT BE RESPONSIBLE FOR THE ACCURACY OR COMPLETENESS OF SCANNED COPIES OF THIS PLAN SHEET.

TO ACCOMPANY PLANS DATED 6-15-15

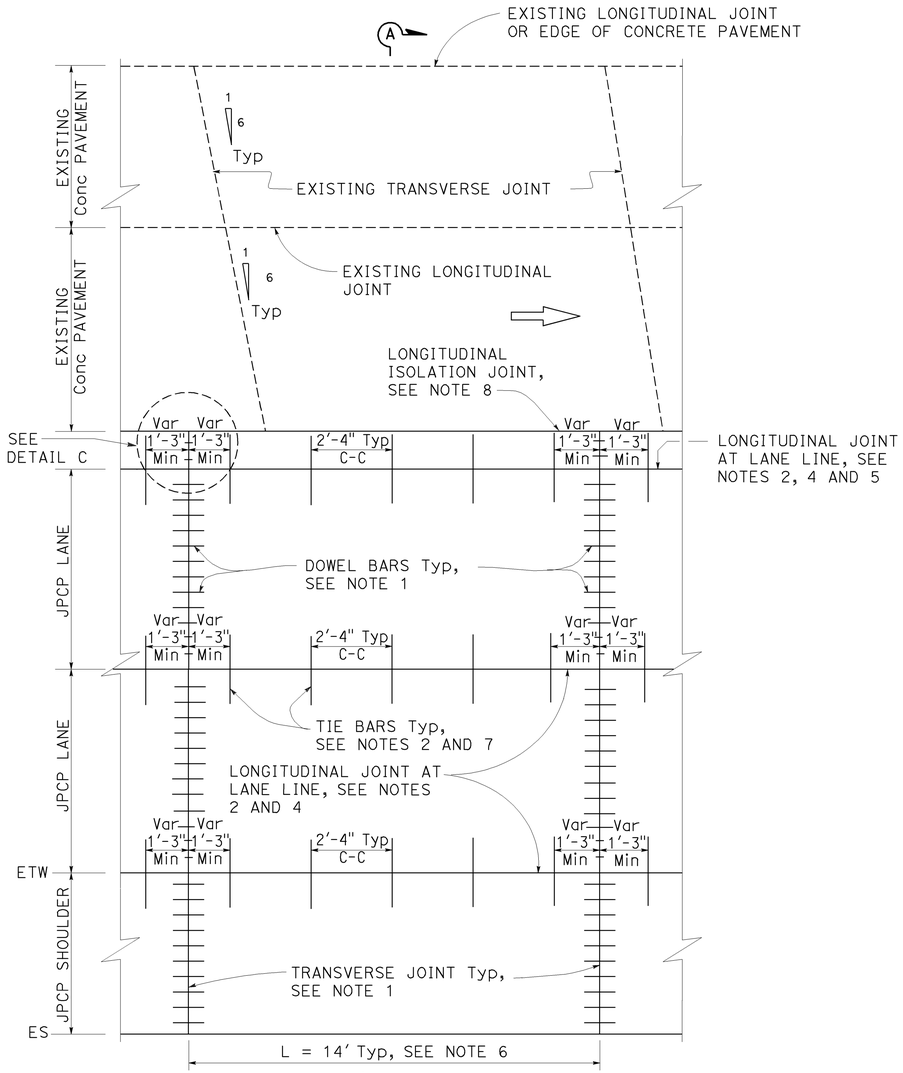

A
PLAN
ISOLATED
See Note 3

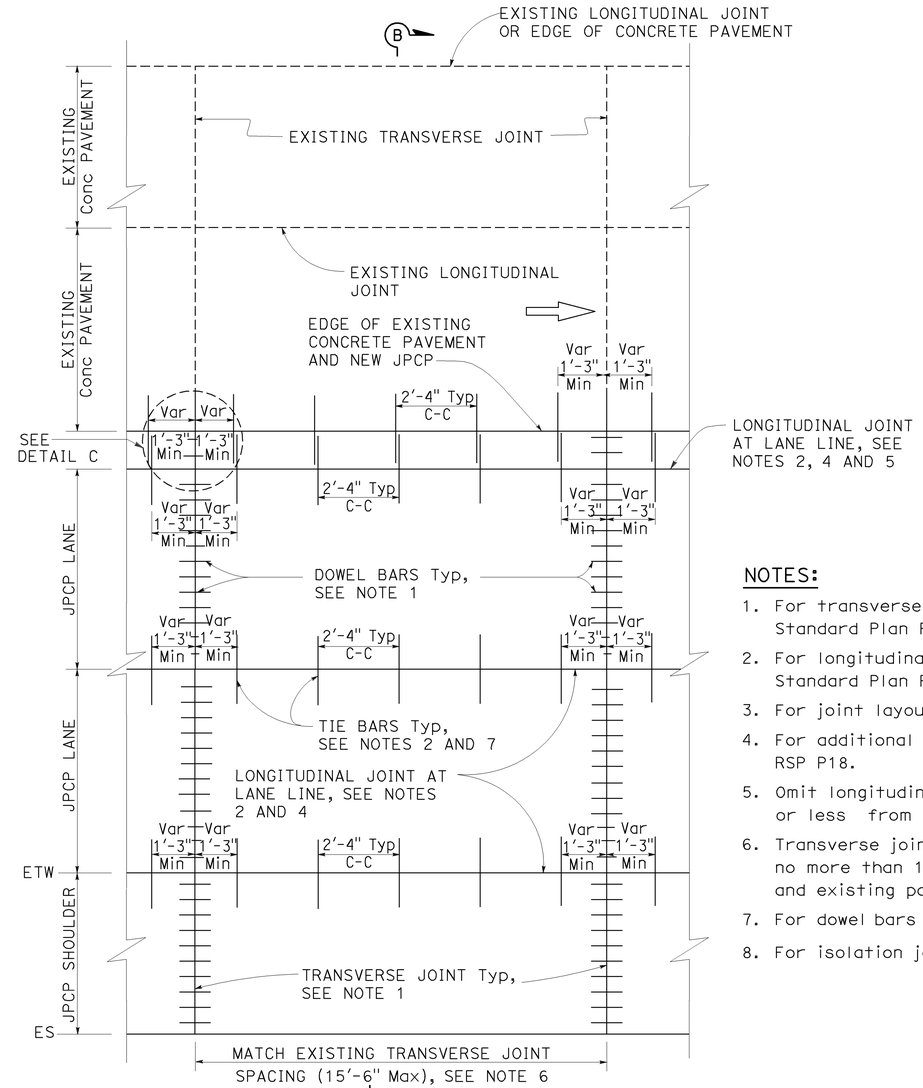

B
PLAN
TIED
See Note 3

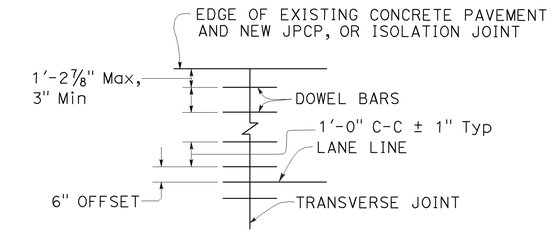

DETAIL C

NOTES:

1. For transverse joint and dowel bar details not shown, see Revised Standard Plan RSP P10.
2. For longitudinal joint and tie bar details not shown, see Revised Standard Plan RSP P15.
3. For joint layout at intersections, see Project Plans.
4. For additional longitudinal joint details, see Revised Standard Plan RSP P18.
5. Omit longitudinal joint when edge of new concrete pavement is 3'-3" or less from JPCP lane line.
6. Transverse joint spacing may be adjusted to no less than 10' and no more than 15'-6" to conform to bridges, change in pavement type and existing pavement.
7. For dowel bars at longitudinal joint. see Revised Standard Plan RSP P18.
8. For isolation joints, see Detail A on Revised Standard Plan RSP P18.

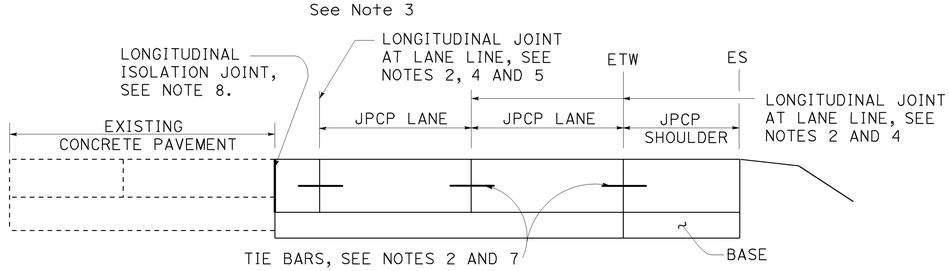

SECTION A-A

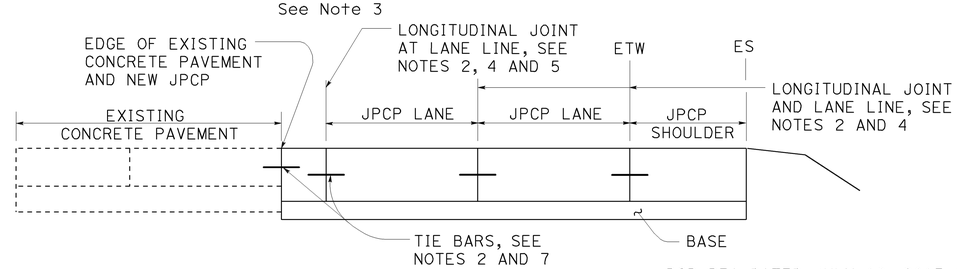

SECTION B-B

STATE OF CALIFORNIA
DEPARTMENT OF TRANSPORTATION

JOINTED PLAIN CONCRETE PAVEMENT LANE & SHOULDER ADDITION OR REPLACEMENT

NO SCALE

RSP P3A DATED JULY 19, 2013 SUPPLEMENTS THE STANDARD PLANS BOOK DATED 2010.

REVISED STANDARD PLAN RSP P3A

2010 REVISED STANDARD PLAN RSP P3A

5-31-13

Dist	COUNTY	ROUTE	POST MILES TOTAL PROJECT	SHEET No.	TOTAL SHEETS
07	LA	405	R12.6/R21.2	265	288

William K. Farnbach
REGISTERED CIVIL ENGINEER

July 19, 2013
PLANS APPROVAL DATE

REGISTERED PROFESSIONAL ENGINEER William K. Farnbach No. C49042 Exp. 9-30-14 CIVIL STATE OF CALIFORNIA

THE STATE OF CALIFORNIA OR ITS OFFICERS OR AGENTS SHALL NOT BE RESPONSIBLE FOR THE ACCURACY OR COMPLETENESS OF SCANNED COPIES OF THIS PLAN SHEET.

TO ACCOMPANY PLANS DATED 6-15-15

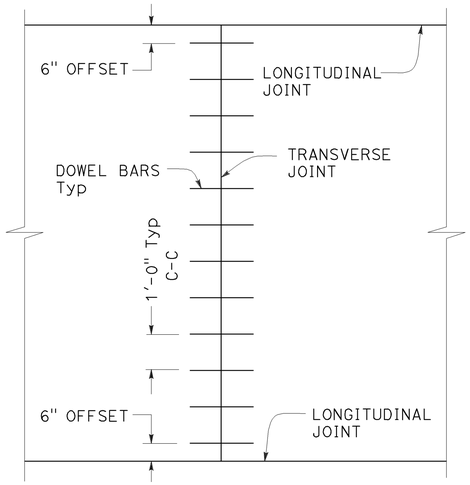

TRANSVERSE JOINT DOWEL BAR LAYOUT

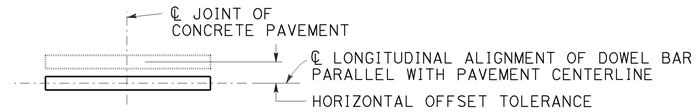

PLAN

HORIZONTAL OFFSET TOLERANCE

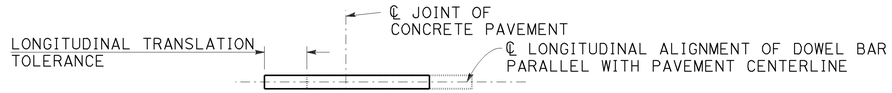

PLAN

LONGITUDINAL TRANSLATION TOLERANCE

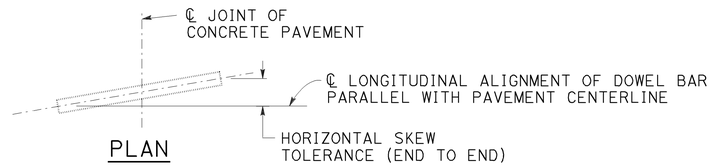

PLAN

HORIZONTAL SKEW TOLERANCE

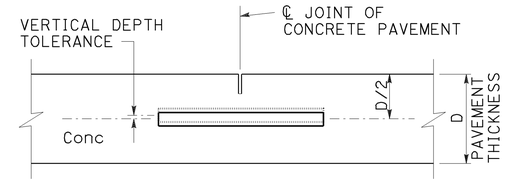

ELEVATION

VERTICAL DEPTH TOLERANCE

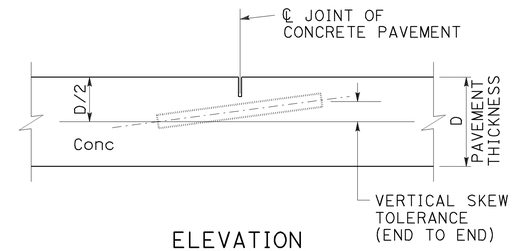

ELEVATION

VERTICAL SKEW TOLERANCE

NOTES:

1. See Revised Standard Plan RSP P1 for typical dowel bar placement and locations.
2. Where fresh concrete pavement is placed against new concrete or existing concrete pavement, rounding the corner of the existing concrete pavement is not required.
3. May also use ¾" Dia dowel bars 2'-4" ± ¼" in length. Center the length of dowel bars at the centerline of longitudinal joint.

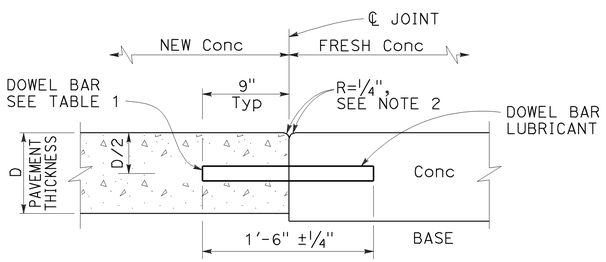

TRANSVERSE CONSTRUCTION JOINT DETAIL

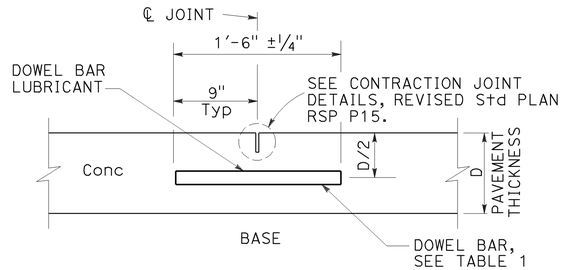

TRANSVERSE CONTRACTION JOINT

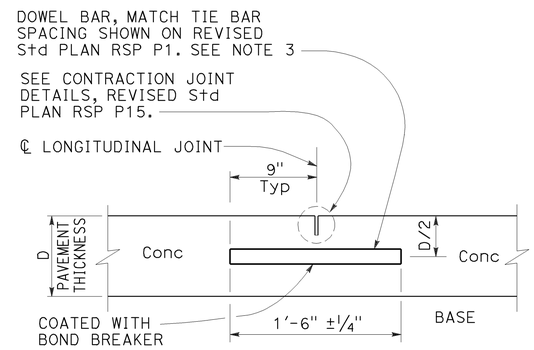

LONGITUDINAL CONTRACTION JOINT WITH DOWEL BARS

See Revised Std Plan RSP P18

TABLE 1

DOWEL BAR DIAMETER TABLE			
PAVEMENT THICKNESS	0.65'	> 0.65' - 0.85'	> 0.85'
MINIMUM DOWEL * BAR DIAMETER	1"	1¼"	1½"

* The drilled hole diameter must be ⅛" to 3/16" larger than the bar diameter.

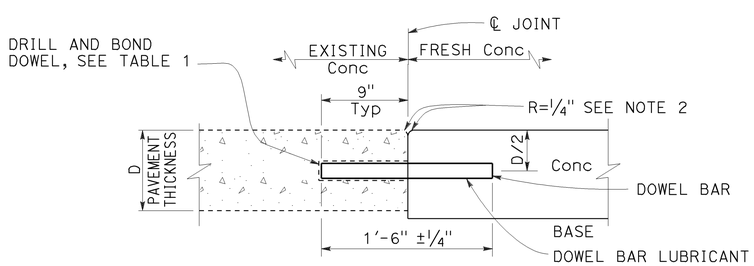

TRANSVERSE CONSTRUCTION JOINT FOR EXISTING CONCRETE PAVEMENT

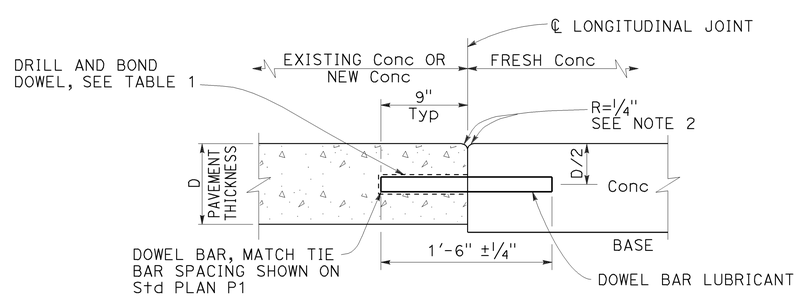

LONGITUDINAL CONSTRUCTION JOINT WITH DOWEL BARS

See Revised Std Plan RSP P18

STATE OF CALIFORNIA
DEPARTMENT OF TRANSPORTATION

CONCRETE PAVEMENT DOWEL BAR DETAILS

NO SCALE

RSP P10 DATED JULY 19, 2013 SUPERSEDES RSP P10 DATED APRIL 20, 2012 AND STANDARD PLAN P10 DATED MAY 20, 2011 - PAGE 131 OF THE STANDARD PLANS BOOK DATED 2010.

REVISED STANDARD PLAN RSP P10

2010 REVISED STANDARD PLAN RSP P10

5-31-13

Dist	COUNTY	ROUTE	POST MILES TOTAL PROJECT	SHEET No.	TOTAL SHEETS
07	LA	405	R12.6/R21.2	266	288

William K. Farnbach
REGISTERED CIVIL ENGINEER

July 19, 2013
PLANS APPROVAL DATE

REGISTERED PROFESSIONAL ENGINEER
William K. Farnbach
No. C49042
Exp. 9-30-14
CIVIL
STATE OF CALIFORNIA

THE STATE OF CALIFORNIA OR ITS OFFICERS OR AGENTS SHALL NOT BE RESPONSIBLE FOR THE ACCURACY OR COMPLETENESS OF SCANNED COPIES OF THIS PLAN SHEET.

TO ACCOMPANY PLANS DATED 6-15-15

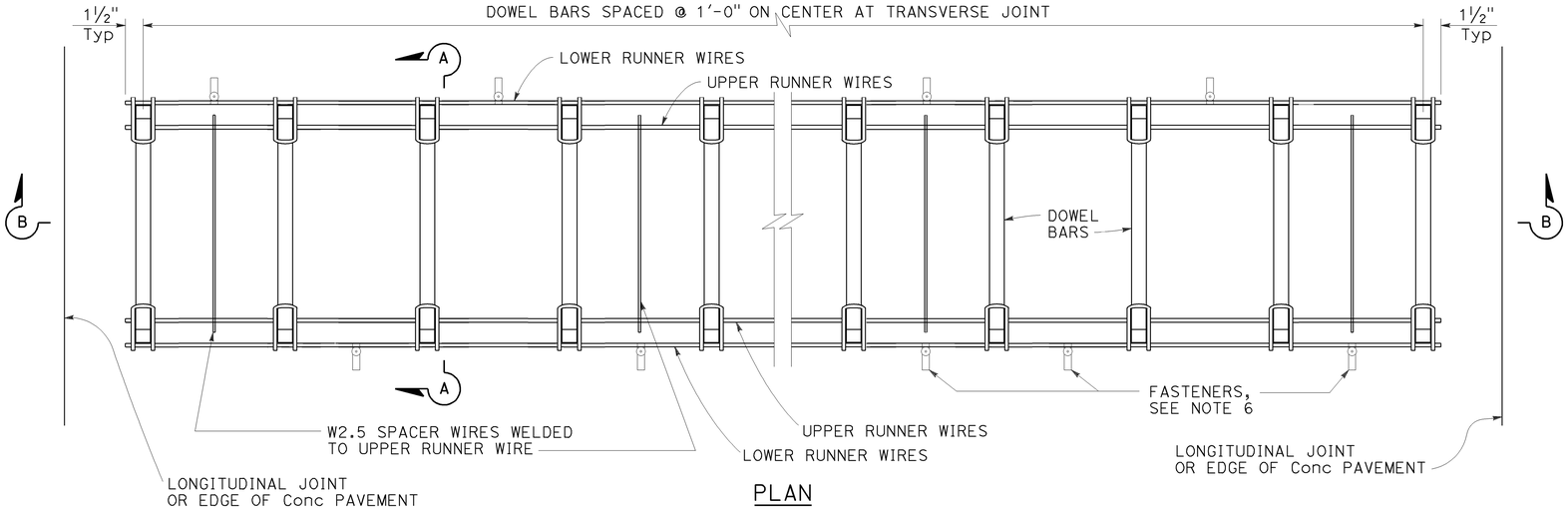

PLAN

DOWEL BAR BASKET (TRANSVERSE JOINT)

See Note 1

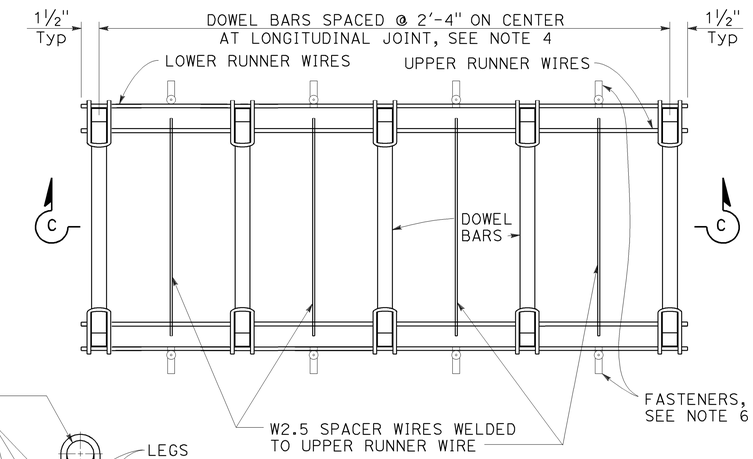

PLAN

DOWEL BAR BASKET (LONGITUDINAL JOINT)

See Note 1

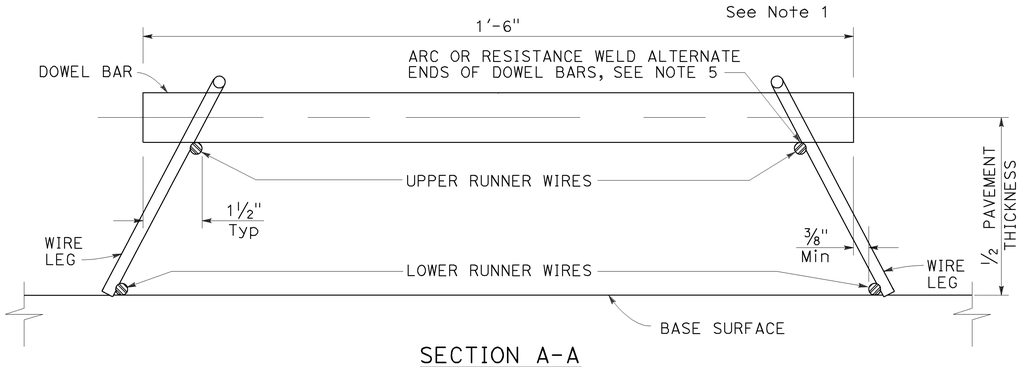

SECTION A-A

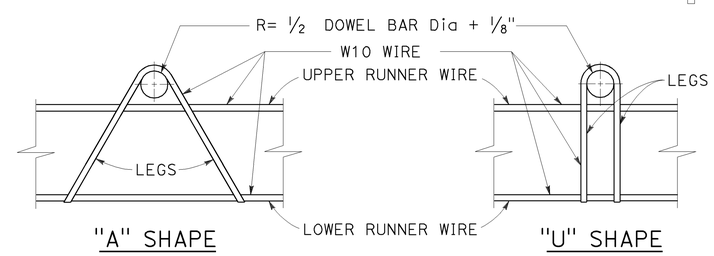

ASSEMBLY FRAME DETAILS

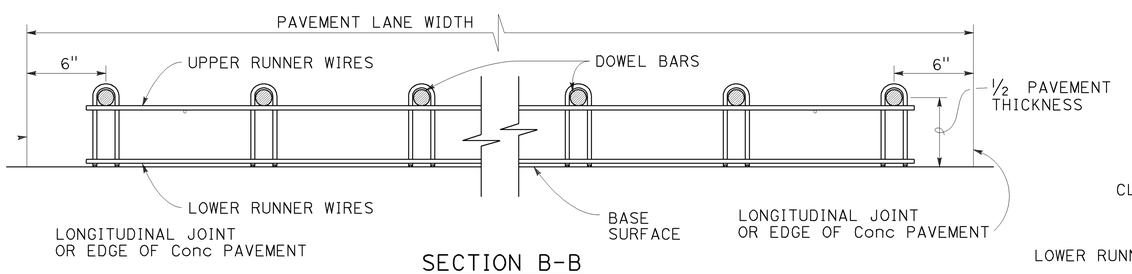

SECTION B-B

See Note 1

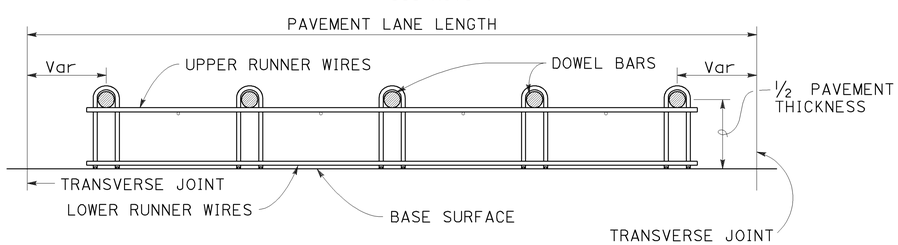

SECTION C-C

See Notes 1 and 4

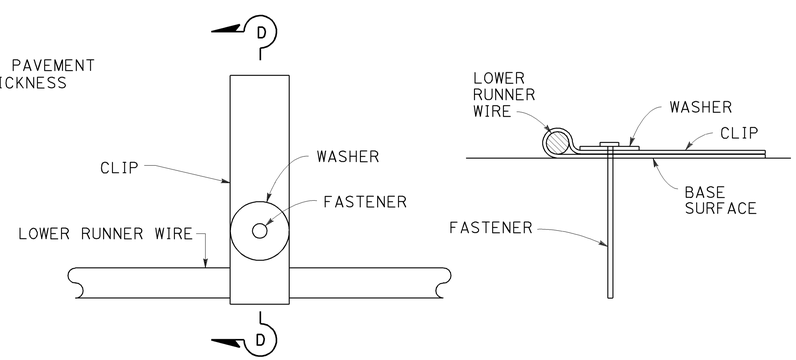

PLAN

SECTION D-D

FASTENER DETAIL

See Note 6

NOTES:

1. "U" frame shape assembly shown. Use either "U" frame shape or "A" frame shape.
2. Wire sizes shown are the minimum required.
3. All wire intersections must be resistance welded.
4. Use tie bar spacing for longitudinal dowel bar locations. See Revised Standard Plans RSP P1, RSP P2, RSP P3A, and RSP P3B for tie bar requirements.
5. Weld may be at the top or bottom of the dowel bar.
6. Use anchor pins where soil or granular base is used. See Revised Standard Plan RSP P17 for Anchor Pin Detail.

STATE OF CALIFORNIA
DEPARTMENT OF TRANSPORTATION

CONCRETE PAVEMENT DOWEL BAR BASKET DETAILS

NO SCALE

RSP P12 DATED JULY 19, 2013 SUPERSEDES STANDARD PLAN P12 DATED MAY 20, 2011 - PAGE 132 OF THE STANDARD PLANS BOOK DATED 2010.

REVISED STANDARD PLAN RSP P12

2010 REVISED STANDARD PLAN RSP P12

5-31-13

Dist	COUNTY	ROUTE	POST MILES TOTAL PROJECT	SHEET No.	TOTAL SHEETS
07	LA	405	R12.6/R21.2	267	288

William K. Farnbach
REGISTERED CIVIL ENGINEER

July 19, 2013
PLANS APPROVAL DATE

REGISTERED PROFESSIONAL ENGINEER
William K. Farnbach
No. C49042
Exp. 9-30-14
CIVIL
STATE OF CALIFORNIA

THE STATE OF CALIFORNIA OR ITS OFFICERS OR AGENTS SHALL NOT BE RESPONSIBLE FOR THE ACCURACY OR COMPLETENESS OF SCANNED COPIES OF THIS PLAN SHEET.

TO ACCOMPANY PLANS DATED 6-15-15

2010 REVISED STANDARD PLAN RSP P15

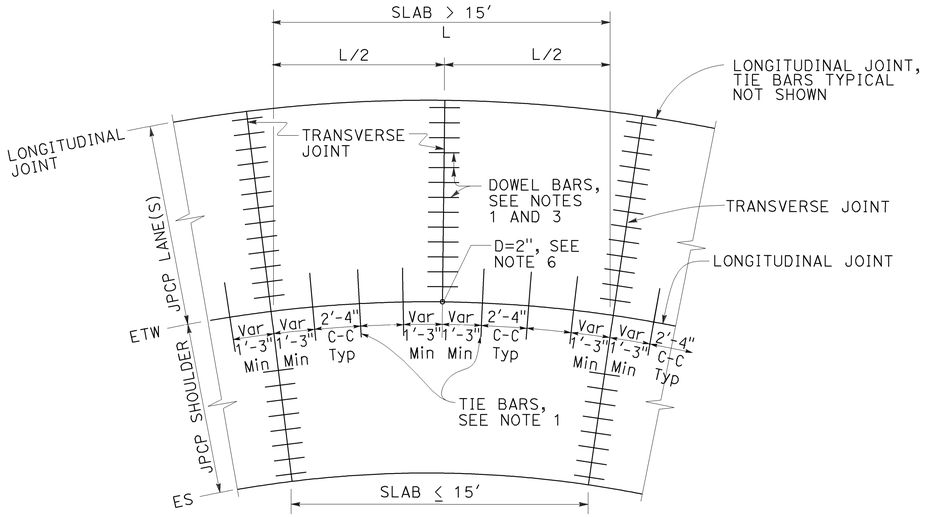

TIE BAR LAYOUT IN CURVED LANES

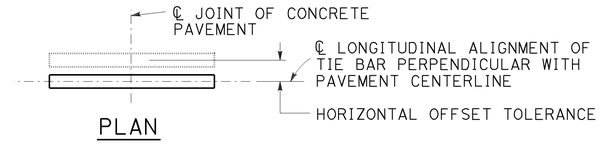

PLAN

HORIZONTAL OFFSET TOLERANCE

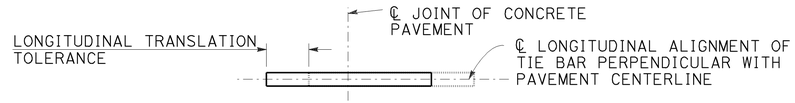

PLAN

LONGITUDINAL TRANSLATION TOLERANCE

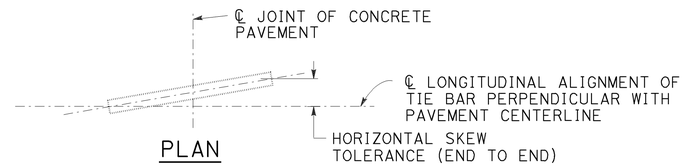

PLAN

HORIZONTAL SKEW TOLERANCE

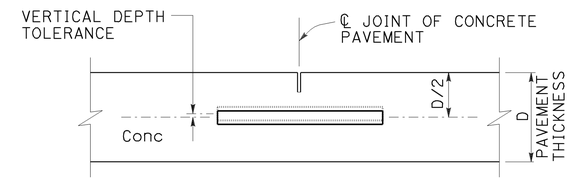

ELEVATION

VERTICAL DEPTH TOLERANCE

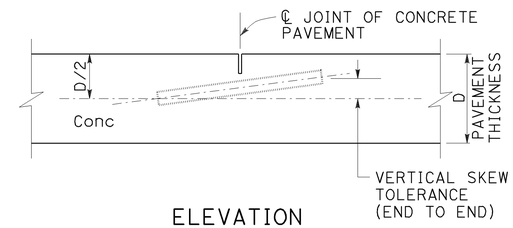

ELEVATION

VERTICAL SKEW TOLERANCE

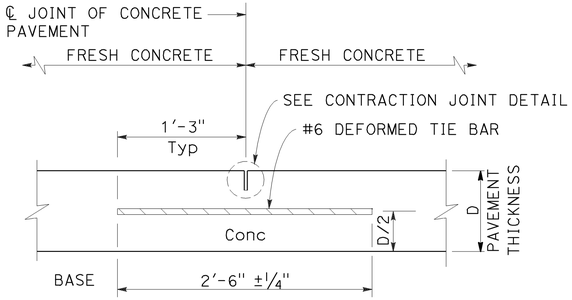

LONGITUDINAL CONTRACTION JOINT

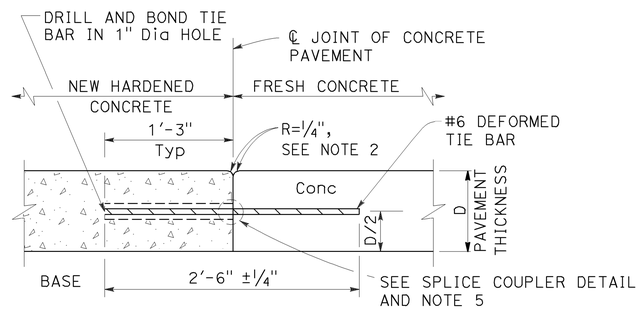

LONGITUDINAL CONSTRUCTION JOINT

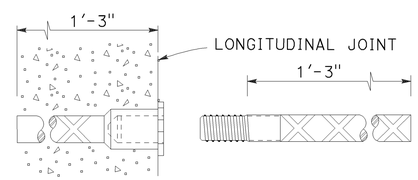

ALTERNATIVE SPLICE COUPLER

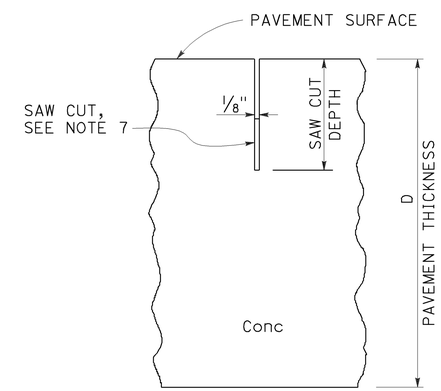

CONTRACTION JOINT DETAIL

NOTES:

1. See Revised Standard Plan RSP P1 for typical dowel bar and tie bar placement and locations.
2. Where new pavement is placed against existing concrete pavement, rounding the corner is not required.
3. For dowel bar sizes, See Revised Standard Plan RSP P10.
4. Tie bar details apply to inside widenings.
5. Use either drill and bond or splice couplers.
6. Full depth drilled hole. Fill hole with filler material.
7. The bottom of the saw cut must be at least 0.5" clear of any dowel bar, tie bar and bar reinforcement.

STATE OF CALIFORNIA
DEPARTMENT OF TRANSPORTATION

CONCRETE PAVEMENT-TIE BAR DETAILS

NO SCALE

RSP P15 DATED JULY 19, 2013 SUPPLEMENTS THE STANDARD PLANS BOOK DATED 2010.

REVISED STANDARD PLAN RSP P15

5-31-13

TO ACCOMPANY PLANS DATED 6-15-15

Dist	COUNTY	ROUTE	POST MILES TOTAL PROJECT	SHEET No.	TOTAL SHEETS
07	LA	405	R12.6/R21.2	268	288

REGISTERED CIVIL ENGINEER

October 19, 2012
PLANS APPROVAL DATE

REGISTERED PROFESSIONAL ENGINEER Glenn DeCou No. C34547 Exp. 9-30-13 CIVIL STATE OF CALIFORNIA

THE STATE OF CALIFORNIA OR ITS OFFICERS OR AGENTS SHALL NOT BE RESPONSIBLE FOR THE ACCURACY OR COMPLETENESS OF SCANNED COPIES OF THIS PLAN SHEET.

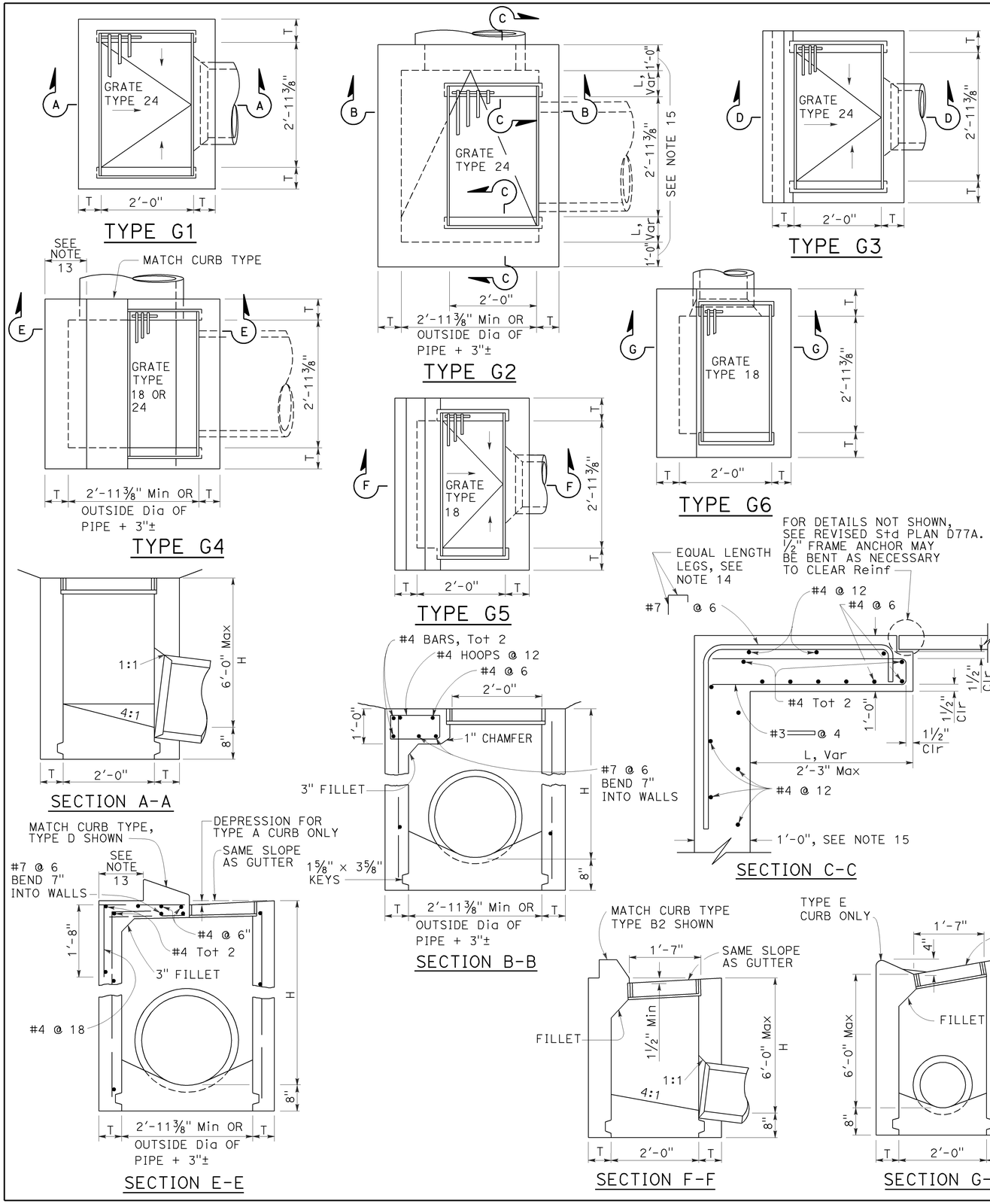

NOTES:

1. "H" is the difference in elevation between the outlet pipe flow line and the normal gutter grade line undepressed.
2. For "T" wall thickness, see Table A below.
3. Wall reinforcing not required when "H" is 8'-0" or less and the unsupported width or length is 7'-0" or less. Walls exceeding these limits shall be reinforced with #4 bars @ 1'-6" ± centers placed 1½" clear to inside of box unless otherwise shown.
4. Inlet bottom reinforcing not required. See Standard Plan D74C for alternative reinforced bottom and alternative half round bottom.
5. Steps-None required where "H" is less than 2'-6". Where "H" is 2'-6" or more, install steps with lowest rung 1'-0" above the floor and highest rung not more than 6" below top of inlet. The distance between steps shall not exceed 1'-0" and shall be uniform throughout the length of the wall. Place steps in the wall without an opening. Steps inserts may be substituted for the bar steps. Step inserts shall comply with State Industrial Safety requirements. See Standard Plan D74C for step details.
6. Details shown apply to both metal and concrete pipe.
7. Pipe(s) can be placed in any wall.
8. Curb section shall match adjacent curb.
9. Basin floors shall have wood trowel finish and a minimum slope of 12:3 from all directions toward outlet pipe.
10. Set inlet so that grate bars are parallel to direction of principal surface flow.
11. See Revised Standard Plans D77A and D77B for grate and frame details and weights of miscellaneous iron and steel.
12. See Standard Plan D78A for gutter depression details.
13. This dimenison will vary with different grates, curbs types, box width and wall thickness.
14. Bar may be rotated as necessary to clear opening. Where "L" is 6" or less, bar may be omitted.
15. Where "L" is 6" or less, wall thickness shall be as shown in Table A.
16. Cast-in-place inlets to be formed around all pipes/stubs intersecting the inlet, and concrete poured in one continuous operation. Precast inlets shall have mortared connections conforming to details for Type GCP Inlet shown on Standard Plan D75B. See Standard Specifications for mortar composition.

TABLE A

CONCRETE QUANTITIES				
TYPE	H=3'-0" TO 8'-0" (T=6")		H=8'-1" TO 20'-0" (T=8")	
	H=3'-0" (CY)	ADDITIONAL PCC PER FOOT (CY)	H=8'-1" (CY)	ADDITIONAL PCC PER FOOT (CY)
G-1	0.95	0.220	See Note A	SEE NOTE A
G-2*	1.31	0.255	3.50	0.357
G-3	1.03	0.220	See Note A	SEE NOTE A
G-4* (TYPE 24)	1.27	0.255	3.48	0.357
G-4* (TYPE 18)	1.30	0.255	3.50	0.357
G-5	1.02	0.220	SEE NOTE A	SEE NOTE A
G-6	1.04	0.220	SEE NOTE A	SEE NOTE A

TABLE BASED ON 8" FLOOR SLAB. NO DEDUCTIONS ARE TO BE MADE TO THESE QUANTITIES BECAUSE OF PIPE OPENINGS, DIFFERENT FLOOR ALTERNATIVES OR DIFFERENT CURB TYPES. * QUANTITIES FOR TYPE G-2 AND G-4 INLETS BASED ON THE MINIMUM INTERIOR DIMENSIONS.

NOTE A:

Maximum allowable height 6'-0".

STATE OF CALIFORNIA
DEPARTMENT OF TRANSPORTATION

DRAINAGE INLETS

NO SCALE

RSP D73 DATED OCTOBER 19, 2012 SUPERSEDES STANDARD PLAN D73 DATED MAY 20, 2011 - PAGE 156 OF THE STANDARD PLANS BOOK DATED 2010.

REVISED STANDARD PLAN RSP D73

2010 REVISED STANDARD PLAN RSP D73

7-19-12

Dist	COUNTY	ROUTE	POST MILES TOTAL PROJECT	SHEET No.	TOTAL SHEETS
07	LA	405	R12.6/R21.2	269	288

REGISTERED CIVIL ENGINEER

April 19, 2013
PLANS APPROVAL DATE

Raymond Don Tsztoo No. C37332 Exp. 6-30-14 CIVIL — REGISTERED PROFESSIONAL ENGINEER — STATE OF CALIFORNIA

THE STATE OF CALIFORNIA OR ITS OFFICERS OR AGENTS SHALL NOT BE RESPONSIBLE FOR THE ACCURACY OR COMPLETENESS OF SCANNED COPIES OF THIS PLAN SHEET.

TO ACCOMPANY PLANS DATED 6-15-15

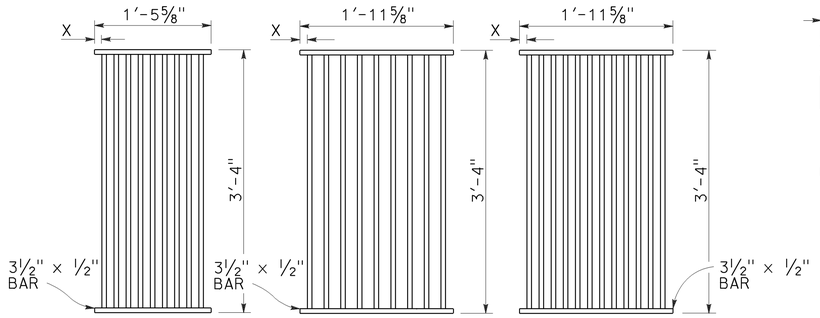

TYPE 18-9
1⅜" Clear spacing. Use within the roadbed on highways where bicycles and pedestrians are excluded.

TYPE 24-9
2" Clear spacing. Use in locations off the roadbed on all types of highways.

TYPE 24-12
1⅜" Clear spacing. Use within the roadbed on highways where bicycles and pedestrians are excluded.

RECTANGULAR GRATE DETAILS
(See table below)

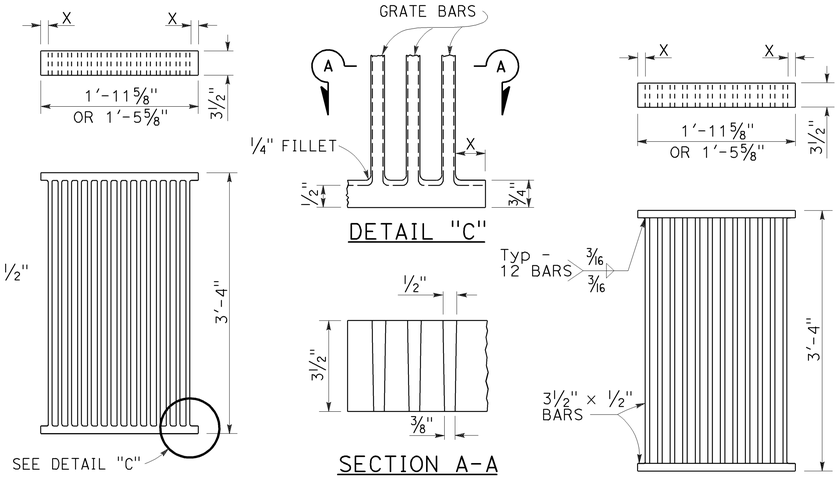

ALTERNATIVE CAST DUCTILE IRON GRATE OR CAST CARBON STEEL GRATE

ALTERNATIVE WELDED GRATE

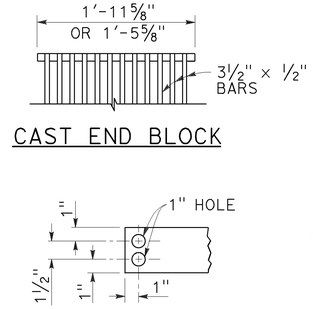

CAST END BLOCK

END OF BAR

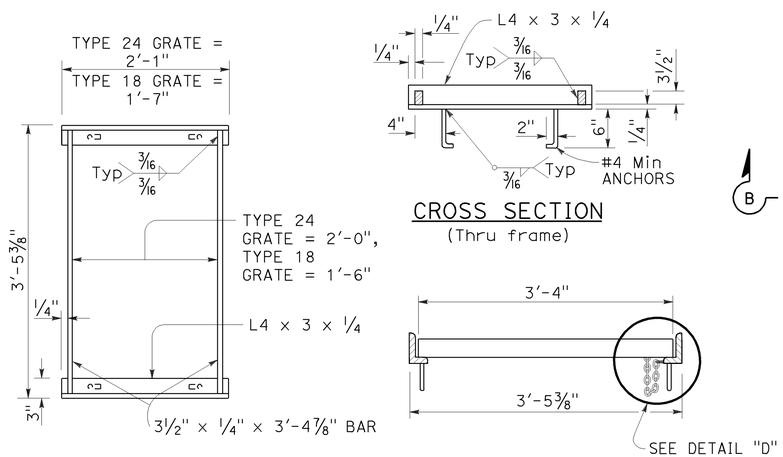

TYPICAL FRAME

CROSS SECTION
(Thru frame)

LONGITUDINAL SECTION
(Thru frame and grate)

RECTANGULAR FRAME DETAILS
(For all rectangular grates)

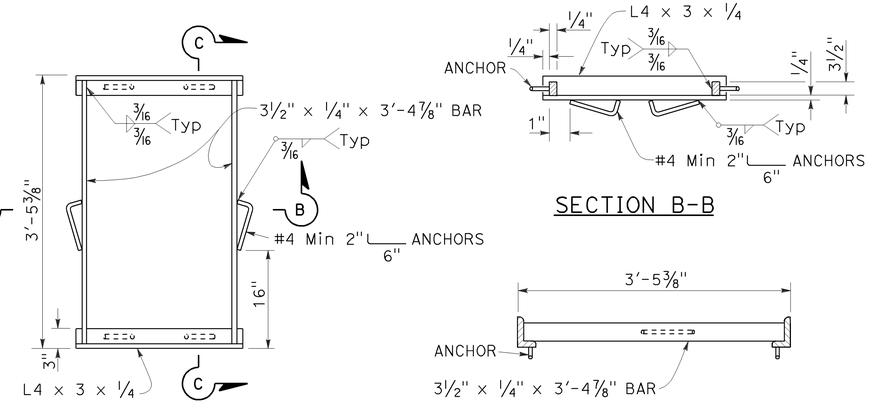

TYPICAL FRAME

SECTION B-B

SECTION C-C

ALTERNATIVE ANCHOR FOR RECTANGULAR FRAME
(For details not shown, See Rectangular Frame Details)

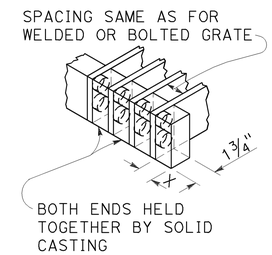

ALTERNATIVE CAST DUCTILE IRON OR CAST CARBON STEEL END BLOCK GRATE

NOTES:

1. Grate type numbers refer to approximate width of grate in inches and number of bars, respectively.
2. Contractor has the option of using cast ductile iron, cast carbon steel, welded, bolted, or cast end block grate.
3. Rounded top of bars optional on all grates.
4. Pipe inlets with a grate shall be placed so that bars parallel direction of principle surface flow.
5. Complete joint penetration butt welds may be substituted for the fillet welds on all anchors.
6. Standard square, hexagon, round or equivalent headed anchors may be substituted for the right angle hooks on the anchors shown on this plan.
7. Grate and frame weights are based on welded grates (weights of face angles, steps, protection bars, etc. are not included).
8. Connect chain to grate and frame only at locations shown on the plans. When chain is required, do not use cast ductile iron grates.

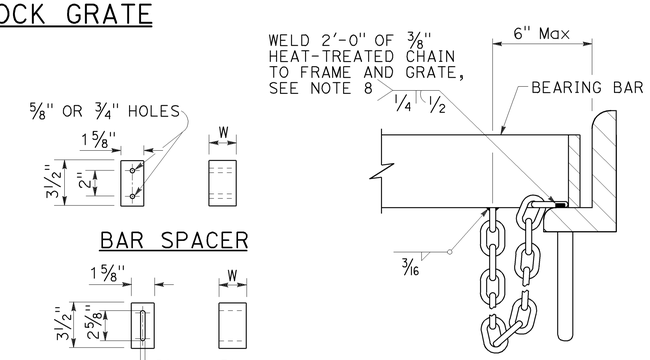

ALTERNATIVE BOLTED GRATE

GRATE BAR SPACING TABLE

TYPE	No. OF BARS	CLEAR BAR SPACING	X
18-9	9	1⅜"	1 1/16"
24-9	9	2"	1 9/16"
24-12	12	1⅜"	1¼"

INLET TYPE	COVER TYPE	WEIGHT LB
OS	PLATE	174
OL-7	PLATE	170
OL-10	PLATE	170
OL-14	PLATE	170
OL-21	PLATE	170
OCP	PLATE	112
OCPI	PLATE	112
OCPI	REDWOOD	42
OMP	PLATE	177
OMPI	PLATE	177

INLET TYPE	GRATE TYPE	No. OF GRATES	WEIGHT LB
GDO	24-12	2	634
GOL-7	24-12	1	326
GOL-10	24-12	1	326
GO,G1,G2,G3,G4 (TYPE 24)	24-9	1	263
	24-12	1	326
G4 (TYPE 18),G5,G6	18-9	1	249
GT1	18-9	2	498
GT2	18-9	2	498
GT3	24-12	2	652
GT4	24-12	2	652
TRASH RACK			22
GRATE CHAIN			3

BASIS FOR Misc IRON & STEEL FINAL PAY WEIGHTS FOR DRAINAGE INLETS
(See Note 7)

STATE OF CALIFORNIA
DEPARTMENT OF TRANSPORTATION

GRATE DETAILS No. 1

NO SCALE

RSP D77A DATED APRIL 19, 2013 SUPERSEDES RSP D77A DATED JULY 20, 2012 AND STANDARD PLAN D77A DATED MAY 20, 2011 - PAGE 164 OF THE STANDARD PLANS BOOK DATED 2010.

REVISED STANDARD PLAN RSP D77A

2010 REVISED STANDARD PLAN RSP D77A

4-4-13

Dist	COUNTY	ROUTE	POST MILES TOTAL PROJECT	SHEET No.	TOTAL SHEETS
07	LA	405	R12.6/R21.2	270	288

Raymond Don Tsztoo
REGISTERED CIVIL ENGINEER

April 19, 2013
PLANS APPROVAL DATE

REGISTERED PROFESSIONAL ENGINEER Raymond Don Tsztoo No. C37332 Exp. 6-30-14 CIVIL STATE OF CALIFORNIA

THE STATE OF CALIFORNIA OR ITS OFFICERS OR AGENTS SHALL NOT BE RESPONSIBLE FOR THE ACCURACY OR COMPLETENESS OF SCANNED COPIES OF THIS PLAN SHEET.

TO ACCOMPANY PLANS DATED 6-15-15

2010 REVISED STANDARD PLAN RSP D77B

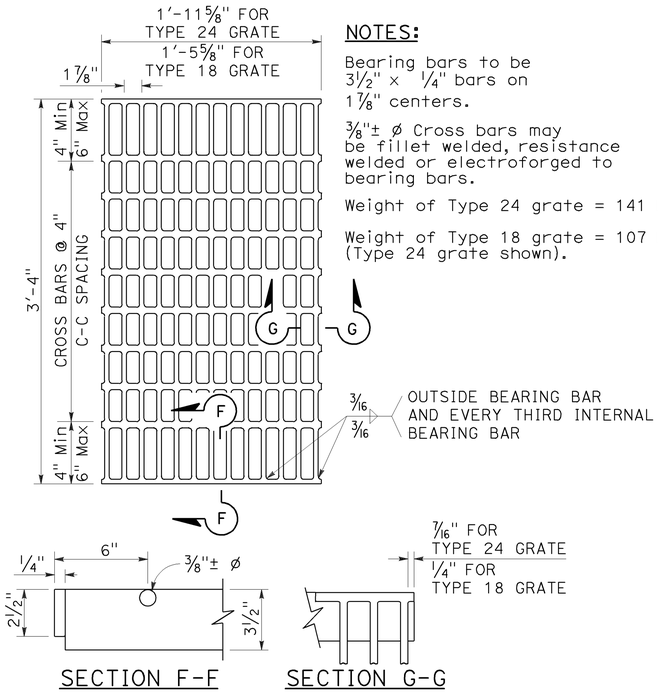

SECTION F-F SECTION G-G

TYPE 18-10 AND 24-13 GRATE

(Welded Steel)

NOTES:

Bearing bars to be 3½" × ¼" bars on 1⅞" centers.

⅜"± ø Cross bars may be fillet welded, resistance welded or electroforged to bearing bars.

Weight of Type 24 grate = 141 LBS.

Weight of Type 18 grate = 107 LBS. (Type 24 grate shown).

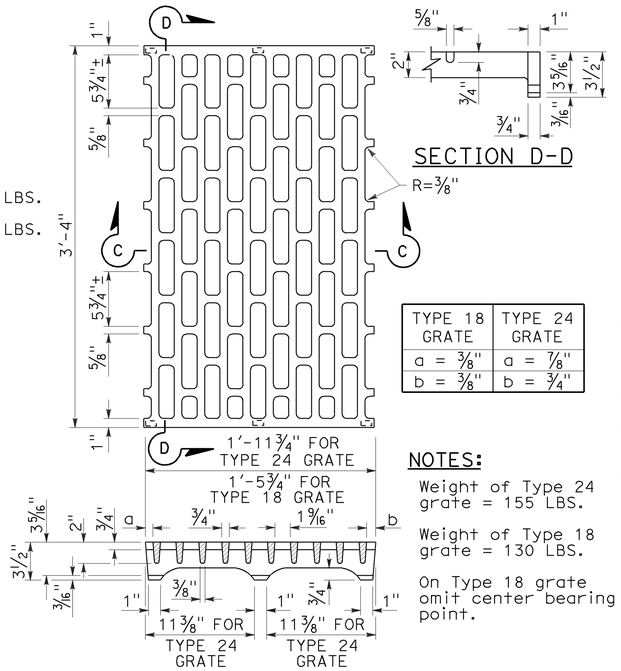

TYPE 18 GRATE	TYPE 24 GRATE
a = ⅜"	a = ⅞"
b = ⅜"	b = ¾"

SECTION D-D

SECTION C-C

NOTES:

Weight of Type 24 grate = 155 LBS.

Weight of Type 18 grate = 130 LBS.

On Type 18 grate omit center bearing point.

TYPE 18-8C AND 24-10C GRATE

(Cast ductile iron)

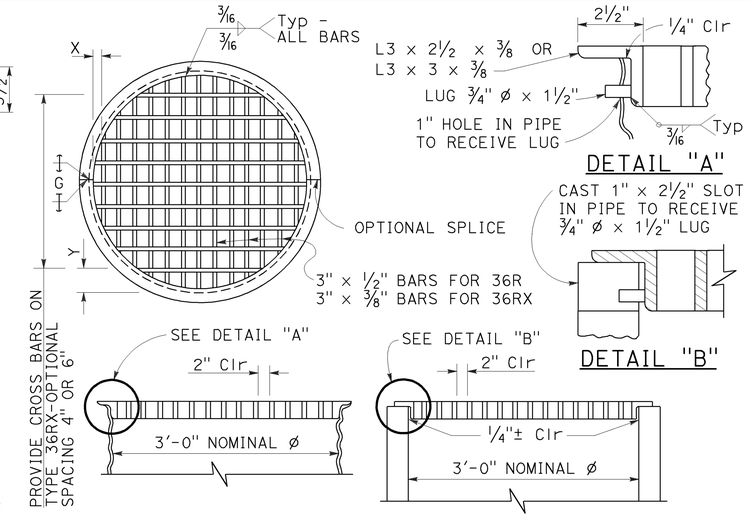

DETAIL "A"

DETAIL "B"

TYPE 36R AND 36RX GRATE DETAILS

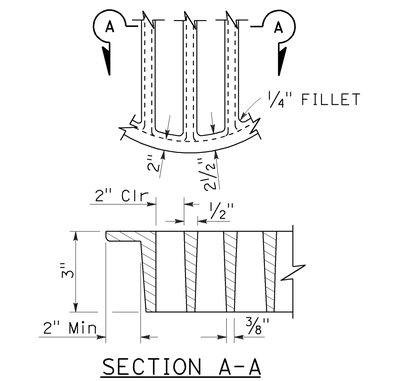

SECTION A-A

ALTERNATIVE CAST DUCTILE IRON GRATE OR CAST CARBON STEEL GRATE TYPE 36R AND 36RX

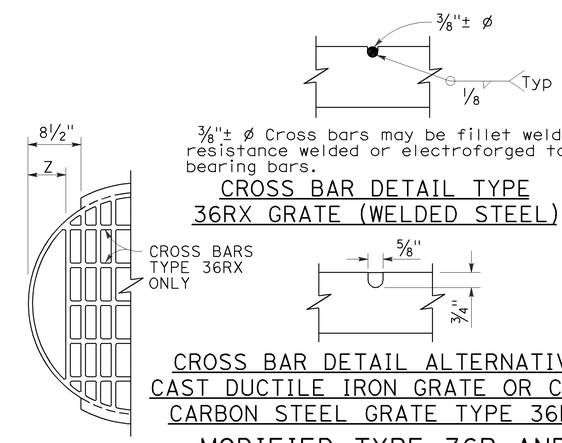

⅜"± ø Cross bars may be fillet welded, resistance welded or electroforged to bearing bars.

CROSS BAR DETAIL TYPE 36RX GRATE (WELDED STEEL)

CROSS BAR DETAIL ALTERNATIVE CAST DUCTILE IRON GRATE OR CAST CARBON STEEL GRATE TYPE 36RX

MODIFIED TYPE 36R AND 36RX GRATE FOR ODI INLET

NOTES:

1. When alternative grates are allowed - Final pay based on alternative with the lesser weight.
2. Use frame shown on Standard Plan D74A, D74B or RSP D77A as appropriate.
3. When Type 24-10S, 24-12X or 24-13 grates are used with GDO Inlets, a ¼" × 3½" × 3'-4⅞" steel bar shall be welded across the center of inlet frame to separate the individual grates.
4. See Revised Standard Plan RSP D77A for connecting chain to welded grate and frame. When chain is required, do not use cast ductile iron grate.

BASIS FOR Misc IRON AND STEEL FINAL PAY WEIGHTS FOR DRAINAGE INLETS

INLET TYPE	GRATE TYPE	No. OF GRATES	WEIGHT LB
GDO (SEE NOTE 4)	24-10C	2	391
	24-10S	2	456
	24-12X	2	473
	24-13	2	374
G0,G0L,G1,G2, G3,G4 (TYPE 24)	24-10C	1	202
	24-10S	1	229
	24-12X	1	239
	24-13	1	188
G4 (TYPE 18) G5,G6	18-8S	1	187
	18-9X	1	187
	18-10	1	149
GT1,GT2	18-8S	2	374
	18-9X	2	374
	18-10	2	298
GT3,GT4	24-10C	2	404
	24-10S	2	458
	24-12X	2	478
	24-13	2	376
ODI	36RX (Mod)	1	196
GMP,GCP,GCPI	36RX	1	215
ODI	36R (Mod)	1	220
GMP,GCP,GCPI	36R	1	236
TRASH RACK			22
GRATE CHAIN			3

GRATE BAR SPACING TABLE

TYPE	No. OF BARS	CLEAR BAR SPACING	X	Y 4" SPACING	Y 6" SPACING	Z
36R	13	2"	2⅛"	-	-	-
36RX (STEEL)	15	2"	9/16"	3¾"	5¾"	-
36RX (CAST)	13	2"	2⅛"	3¾"	5¾"	-
36R Mod	12	2"	2⅛"	-	-	5"
36RX Mod (STEEL)	13	2"	9/16"	3¾"	5¾"	5 11/16"
36RX Mod (CAST)	12	2"	2⅛"	3¾"	5¾"	5"

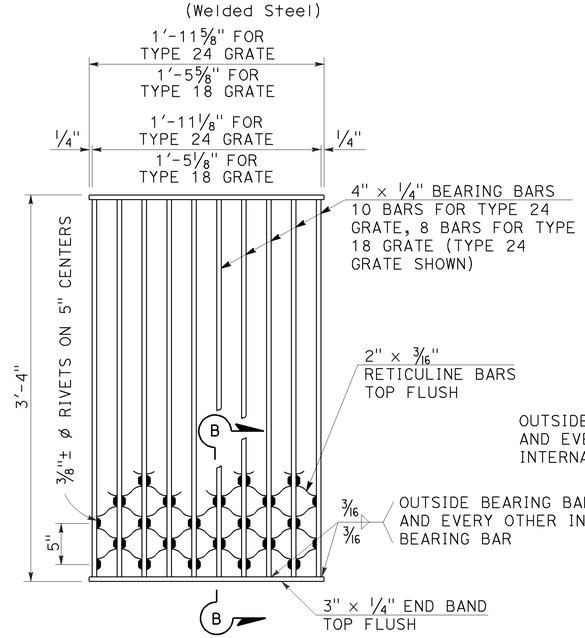

SECTION B-B

NOTES:

Weight of Type 24 grate = 182 LBS.
Weight of Type 18 grate = 145 LBS.

TYPE 18-8S AND 24-10S GRATE

(Welded Steel) Reticuline type

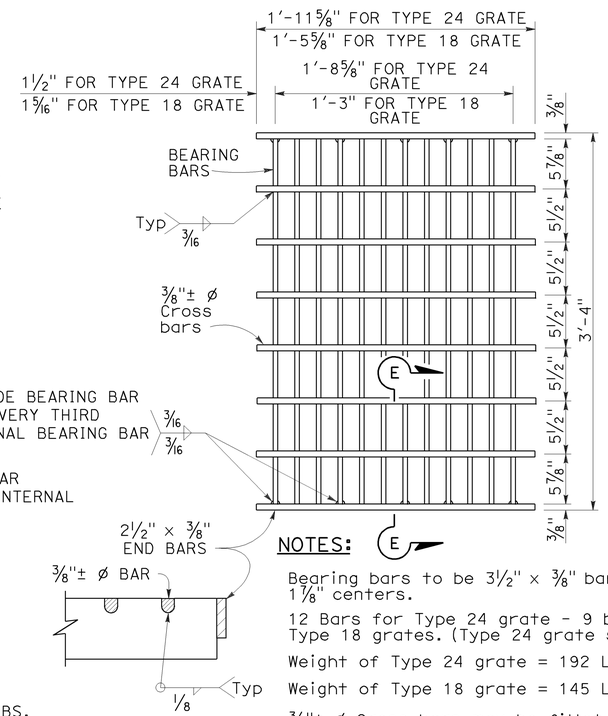

SECTION E-E

NOTES:

Bearing bars to be 3½" × ⅜" bars on 1⅞" centers.

12 Bars for Type 24 grate - 9 bars for Type 18 grates. (Type 24 grate shown).

Weight of Type 24 grate = 192 LBS.

Weight of Type 18 grate = 145 LBS.

⅜"± ø Cross bars may be fillet welded, resistance welded or electroforged to bearing bars.

TYPE 18-9X AND 24-12X GRATE

(Welded Steel)

STATE OF CALIFORNIA
DEPARTMENT OF TRANSPORTATION

GRATE DETAILS No. 2

NO SCALE

RSP D77B DATED APRIL 19, 2013 SUPERSEDES RSP D77B DATED JULY 20, 2012 AND STANDARD PLAN D77B DATED MAY 20, 2011 - PAGE 165 OF THE STANDARD PLANS BOOK DATED 2010.

REVISED STANDARD PLAN RSP D77B

4-4-13

Dist	COUNTY	ROUTE	POST MILES TOTAL PROJECT	SHEET No.	TOTAL SHEETS
07	LA	405	R12.6/R21.2	271	288

Gregory A. Balzer
LICENSED LANDSCAPE ARCHITECT

July 19, 2013
PLANS APPROVAL DATE

LICENSED LANDSCAPE ARCHITECT
Gregory A. Balzer 2576
07-19-13
Renewal Date
7-19-13
Date
STATE OF CALIFORNIA

THE STATE OF CALIFORNIA OR ITS OFFICERS OR AGENTS SHALL NOT BE RESPONSIBLE FOR THE ACCURACY OR COMPLETENESS OF SCANNED COPIES OF THIS PLAN SHEET.

TO ACCOMPANY PLANS DATED 6-15-15

A

AB	AGGREGATE BASE
ABS	ACRYLONITRILE-BUTADIENE-STYRENE
AC	ASPHALT CONCRETE
ACC	ARMOR-CLAD CONDUCTORS
Adj	ADJACENT/ADJUSTABLE
AIC	AUXILIARY IRRIGATION CONTROLLER
Alt	ALTERNATIVE
AMEND	AMENDMENT
ARV	AIR RELEASE VALVE
AUTO	AUTOMATIC
AUX	AUXILIARY
AVB	ATMOSPHERIC VACUUM BREAKER

B

B&B	BALLED AND BURLAPPED
B/B	BRASS/BRONZE
B/B/PL	BRASS/BRONZE/PLASTIC
B/PL	BRASS/PLASTIC
BFM	BONDED FIBER MATRIX
Bit Ctd	BITUMINOUS COATED
BP	BOOSTER PUMP
BPA	BACKFLOW PREVENTER ASSEMBLY
BPE	BACKFLOW PREVENTER ENCLOSURE
BV	BALL VALVE

C

C	CONDUIT
CAP	CORRUGATED ALUMINUM PIPE
CARV	COMBINATION AIR RELEASE VALVE
CB	COUPLING BAND
CCA	CAM COUPLER ASSEMBLY
CEC	CONTROLLER ENCLOSURE CABINET
CHDPE	CORRUGATED HIGH DENSITY POLYETHYLENE
CL	CHAIN LINK
CNC	CONTROL AND NEUTRAL CONDUCTORS
Conc	CONCRETE
CP	COPPER PIPE
CS	COMPOST SOCK
CSP	CORRUGATED STEEL PIPE
CST	CENTER STRIP
CV	CHECK VALVE

D

Dia	DIAMETER
DIP	DUCTILE IRON PIPE
DIT	DRIP IRRIGATION TUBING
DG	DECOMPOSED GRANITE
DN	DIAMETER NOMINAL
DVA	DRIP VALVE ASSEMBLY

E

EC	EROSION CONTROL
ECTC	EROSION CONTROL TECHNOLOGY COUNCIL
Elect	ELECTRIC/ELECTRICAL
Elev	ELEVATION
ELL	ELBOW
ENCL	ENCLOSURE
EP	EDGE OF PAVEMENT
ES	EDGE OF SHOULDER
EST	END STRIP
ESTB	ESTABLISHMENT
ETW	EDGE OF TRAVELED WAY

F

F	FULL CIRCLE
F/P	FULL/PART CIRCLE
FCV	FLOW CONTROL VALVE
FERT	FERTILIZER
FG	FINISHED GRADE
FH	FLEXIBLE HOSE
FIPT	FEMALE IRON PIPE THREAD
FIS	FERTILIZER INJECTOR SYSTEM
FL	FLOW LINE
FR	FIBER ROLL
FS	FLOW SENSOR
FSC	FLOW SENSOR CABLE
FV	FLUSH VALVE

G

Galv	GALVANIZED
GARV	GARDEN VALVE
GARVA	GARDEN VALVE ASSEMBLY
GM	GRAVEL MULCH
GPH	GALLONS PER HOUR
GPM	GALLONS PER MINUTE
GSP	GALVANIZED STEEL PIPE
GV	GATE VALVE

H

H	HALF CIRCLE
HDPE	HIGH DENSITY POLYETHYLENE
HP	HORSEPOWER/HINGE POINT
HPL	HIGH PRESSURE LINE
Hwy	HIGHWAY

I

IC	IRRIGATION CONTROLLER
ICC	IRRIGATION CONTROLLER(S) IN CONTROLLER ENCLOSURE CABINET
ID	INSIDE DIAMETER
IFS	IRRIGATION FILTRATION SYSTEM
IPS	IRON PIPE SIZE
IPT	IRON PIPE THREAD
Irr	IRRIGATION

L

L	LENGTH

M

Max	MAXIMUM
MBGR	METAL BEAM GUARD RAILING
MCV	MANUAL CONTROL VALVE
MIC	MASTER IRRIGATION CONTROLLER
Min	MINIMUM
MIPT	MALE IRON PIPE THREAD
Misc	MISCELLANEOUS
Mtl	MATERIAL
MVP	MAINTENANCE VEHICLE PULLOUT

N

NCN	NO COMMON NAME
NL	NOZZLE LINE
No.	NUMBER
NPT	NATIONAL PIPE THREAD

O

O/C	ON CENTER
OD	OUTSIDE DIAMETER
OL	OVERLAP

P

P	PART CIRCLE
PB	PULL BOX
PCC	PORTLAND CEMENT CONCRETE
PE	POLYETHYLENE
Pkt	PACKET
PL	PLASTIC
PLS	PURE LIVE SEED
PLT	PLANT/PLANTING
PLT ESTB	PLANT ESTABLISHMENT
PM	POST MILE
PR	PRESSURE RATED
PRLV	PRESSURE RELIEF VALVE
PRV	PRESSURE REGULATING VALVE
PVC	POLYVINYL CHLORIDE
Pvmt	PAVEMENT

Q

Q	QUARTER CIRCLE
QCV	QUICK COUPLING VALVE

R

R	RADIUS
RCP	REINFORCED CONCRETE PIPE
RCV	REMOTE CONTROL VALVE
RCVM	REMOTE CONTROL VALVE (MASTER)
RCVMF	REMOTE CONTROL VALVE (MASTER) W/FLOW SENSOR
RCVP	REMOTE CONTROL VALVE W/PRESSURE REGULATOR
RCW	RECYCLED WATER
RECP	ROLLED EROSION CONTROL PRODUCT
REQ	REQUIRED
RICS	REMOTE IRRIGATION CONTROL SYSTEM
R/W	RIGHT OF WAY

S

S	SLIP
SCH	SCHEDULE
SF	STATE-FURNISHED
Shld	SHOULDER
Sq	SQUARE
SST	SIDE STRIP
Sta	STATION
Std	STANDARD
SW	SIDEWALK/SOUND WALL

T

T	THIRD CIRCLE/THREAD
TLS	TRUCK LOADING STANDPIPE
TQ	THREE QUARTER CIRCLE
TRM	TURF REINFORCEMENT MAT
TT	TWO-THIRDS CIRCLE
TWSA	TREE WELL SPRINKLER ASSEMBLY
Typ	TYPICAL

U

UG	UNDERGROUND

W

W	WIDTH
W/	WITH
WM	WATER METER
WS	WYE STRAINER
WSA	WYE STRAINER ASSEMBLY
WSP	WELDED STEEL PIPE
WWM	WELDED WIRE MESH

NOTE:

For additional abbreviations, see Standard Plans A10A and A10B.

STATE OF CALIFORNIA
DEPARTMENT OF TRANSPORTATION

LANDSCAPE AND EROSION CONTROL ABBREVIATIONS

NO SCALE

RSP H1 DATED JULY 19, 2013 SUPERSEDES STANDARD PLAN H1 DATED MAY 20, 2011 - PAGE 218 OF THE STANDARD PLANS BOOK DATED 2010.

REVISED STANDARD PLAN RSP H1

2010 REVISED STANDARD PLAN RSP H1

Dist	COUNTY	ROUTE	POST MILES TOTAL PROJECT	SHEET No.	TOTAL SHEETS
07	LA	405	R12.6/R21.2	272	288

LICENSED LANDSCAPE ARCHITECT

November 15, 2013
PLANS APPROVAL DATE

THE STATE OF CALIFORNIA OR ITS OFFICERS OR AGENTS SHALL NOT BE RESPONSIBLE FOR THE ACCURACY OR COMPLETENESS OF SCANNED COPIES OF THIS PLAN SHEET.

Gregory A. Balzer 2516
02-28-15
Renewal Date
11-15-13
Date
LICENSED LANDSCAPE ARCHITECT
STATE OF CALIFORNIA

TO ACCOMPANY PLANS DATED 6-15-15

EXISTING	NEW	ITEM DESCRIPTION
		WATER METER (WM)
		BACKFLOW PREVENTER ASSEMBLY (BPA)
		BACKFLOW PREVENTER ENCLOSURE (BPE)
		BOOSTER PUMP (BP)
		TRUCK LOADING STANDPIPE (TLS)
	FS	FLOW SENSOR (FS)
X	X	MASTER IRRIGATION CONTROLLER (MIC)
		AUXILIARY IRRIGATION CONTROLLER (AIC)
		IRRIGATION CONTROLLER (IC) IRRIGATION CONTROLLER (IC) (BATTERY) IRRIGATION CONTROLLER (IC) (SOLAR) IRRIGATION CONTROLLER (IC) (TWO WIRE)
		IRRIGATION CONTROLLER(S) IN CONTROLLER ENCLOSURE CABINET (ICC)
acc	ACC	ARMOR-CLAD CONDUCTORS (ACC)
cnc	CNC	CONTROL AND NEUTRAL CONDUCTORS (CNC)
		IRRIGATION CONDUIT
		EXTEND IRRIGATION CONDUIT
dip	DIP	DUCTILE IRON PIPE (SUPPLY LINE) (MAIN) (DIP)
		GALVANIZED STEEL PIPE (SUPPLY LINE) (MAIN) (GSP)
		GALVANIZED STEEL PIPE (SUPPLY LINE) (LATERAL) (GSP)
		PLASTIC PIPE (SUPPLY LINE) (MAIN)
		PLASTIC PIPE (SUPPLY LINE) (LATERAL)
cp	CP	COPPER PIPE (SUPPLY LINE)
dit	DIT	DRIP IRRIGATION TUBING
		REMOTE CONTROL VALVE (RCV) REMOTE CONTROL VALVE (MASTER) (RCVM) REMOTE CONTROL VALVE (MASTER) W/FLOW METER (RCVMF)
P	P	REMOTE CONTROL VALVE W/PRESSURE REGULATOR (RCVP)
		EXISTING MANUAL CONTROL VALVE (MCV)
V	V	DRIP VALVE ASSEMBLY (DVA)
Y	Y	WYE STRAINER ASSEMBLY (WSA)

EXISTING	NEW	ITEM DESCRIPTION
		GATE VALVE (GV)
		BALL VALVE (BV)
		QUICK COUPLING VALVE (QCV)
		CAM COUPLER ASSEMBLY (CCA)
		GARDEN VALVE ASSEMBLY (GARVA)
		PRESSURE REGULATING VALVE (PRV)
		PRESSURE RELIEF VALVE (PRLV)
		FLOW CONTROL VALVE (FCV)
		COMBINATION AIR RELEASE VALVE (CARV)
		CHECK VALVE (CV)
		FLUSH VALVE (FV)
		EXISTING NOZZLE LINE W/TURNING UNION
		EXISTING IRRIGATION SYSTEM
		EXISTING IRRIGATION SYSTEM TO BE REMOVED
		CHAIN LINK GATE
		QUICK COUPLING VALVE W/SPRINKLER PROTECTOR
3	3	SPRINKLER W/SPRINKLER PROTECTOR
	C	CONNECT TO EXISTING SYSTEM
		CAP
		CAP EXISTING
	\\\FR\\\	FIBER ROLL
	\\\CS\\\	COMPOST SOCK

RCV SIZE
IRRIGATION CONTROLLER
CONTROLLER STATION
VALVE IN PARALLEL (IF APPLICABLE)
GPM
QUANTITY OF SPRINKLERS (WHEN SHOWN)

* 2½"-A-2b-40-60

VALVE CODE

* VALVE CODES FOR EXISTING VALVES ARE SHOWN IN A DASHED ENCLOSURE.

STATE OF CALIFORNIA
DEPARTMENT OF TRANSPORTATION

LANDSCAPE AND EROSION CONTROL SYMBOLS

NO SCALE

RSP H2 DATED NOVEMBER 15, 2013 SUPERSEDES RSP H2 DATED JULY 19, 2013 AND STANDARD PLAN H2 DATED MAY 20, 2011 - PAGE 219 OF THE STANDARD PLANS BOOK DATED 2010.

REVISED STANDARD PLAN RSP H2

2010 REVISED STANDARD PLAN RSP H2

10-9-13

Dist	COUNTY	ROUTE	POST MILES TOTAL PROJECT	SHEET No.	TOTAL SHEETS
07	LA	405	R12.6/R21.2	273	288

Gregory A. Balzer
LICENSED LANDSCAPE ARCHITECT

July 19, 2013
PLANS APPROVAL DATE

LICENSED LANDSCAPE ARCHITECT Gregory A. Balzer 2576 STATE OF CALIFORNIA
Original Date 2-28-15
Renewal Date 7-19-13
Date

THE STATE OF CALIFORNIA OR ITS OFFICERS OR AGENTS SHALL NOT BE RESPONSIBLE FOR THE ACCURACY OR COMPLETENESS OF SCANNED COPIES OF THIS PLAN SHEET.

TO ACCOMPANY PLANS DATED 6-15-15

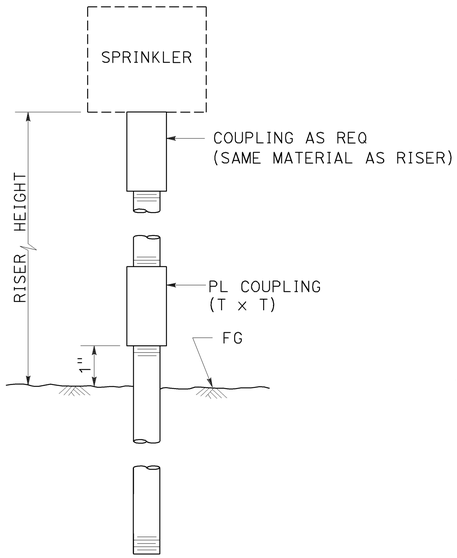

ELEVATION

RISER SPRINKLER ASSEMBLY TYPE I

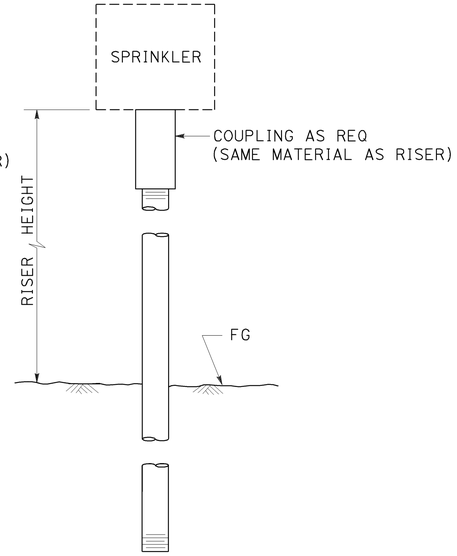

ELEVATION

RISER SPRINKLER ASSEMBLY TYPE II

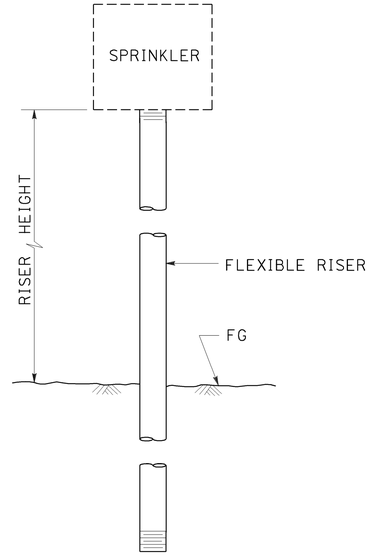

ELEVATION

RISER SPRINKLER ASSEMBLY TYPE III

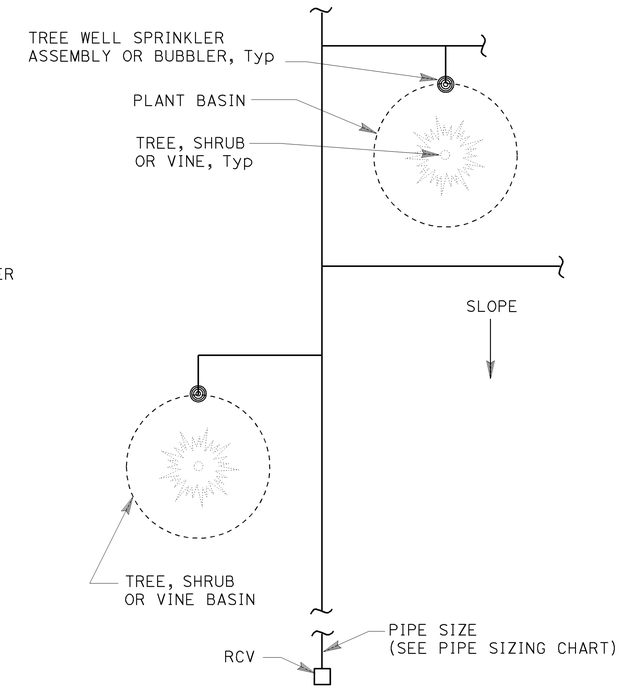

PLAN

NOTES:

1. Install tree well sprinkler assembly on up-hill side of plant when on slope.
2. Install bubbler within basin.

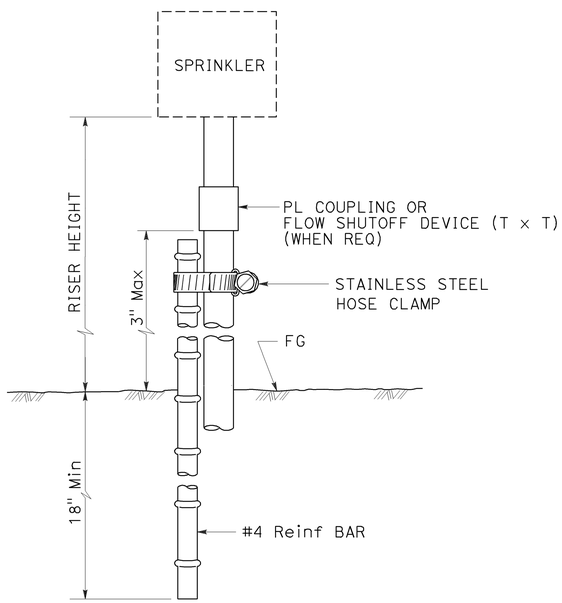

ELEVATION

RISER SPRINKLER ASSEMBLY TYPE IV

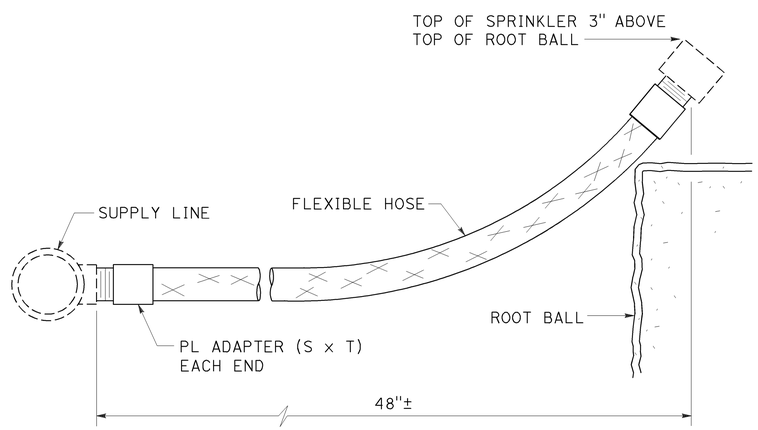

ELEVATION

RISER SPRINKLER ASSEMBLY TYPE V

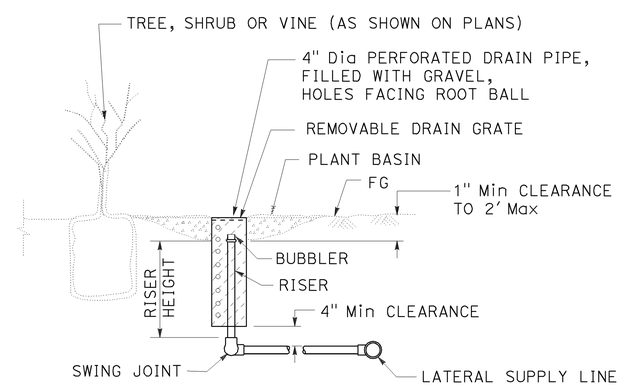

SECTION

TREE WELL SPRINKLER ASSEMBLY

STATE OF CALIFORNIA
DEPARTMENT OF TRANSPORTATION

LANDSCAPE DETAILS

NO SCALE

RSP H5 DATED JULY 19, 2013 SUPERSEDES STANDARD PLAN H5
DATED MAY 20, 2011 - PAGE 222 OF THE STANDARD PLANS BOOK DATED 2010.

REVISED STANDARD PLAN RSP H5

2010 REVISED STANDARD PLAN RSP H5

6-28-13

Dist	COUNTY	ROUTE	POST MILES TOTAL PROJECT	SHEET No.	TOTAL SHEETS
07	LA	405	R12.6/R21.2	274	288

LICENSED LANDSCAPE ARCHITECT

July 19, 2013
PLANS APPROVAL DATE

LICENSED LANDSCAPE ARCHITECT Gregory A. Balzer 2576 STATE OF CALIFORNIA
Renewal Date 2-28-15
Date 7-19-13

THE STATE OF CALIFORNIA OR ITS OFFICERS OR AGENTS SHALL NOT BE RESPONSIBLE FOR THE ACCURACY OR COMPLETENESS OF SCANNED COPIES OF THIS PLAN SHEET.

TO ACCOMPANY PLANS DATED 6-15-15

2010 REVISED STANDARD PLAN RSP H7

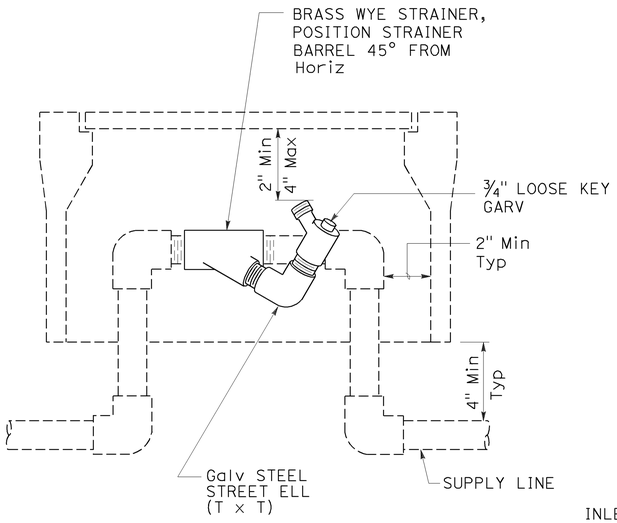

ELEVATION
WYE STRAINER ASSEMBLY

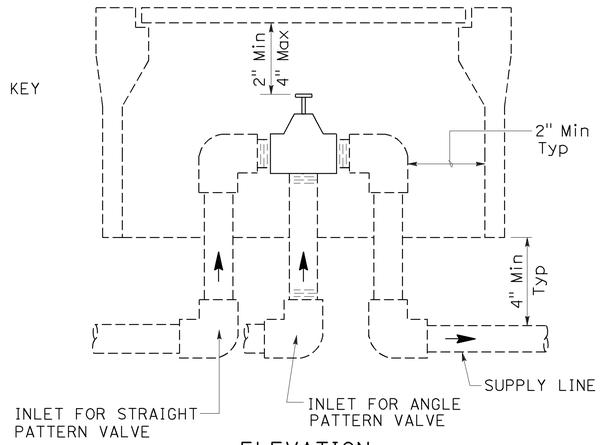

ELEVATION
VALVE

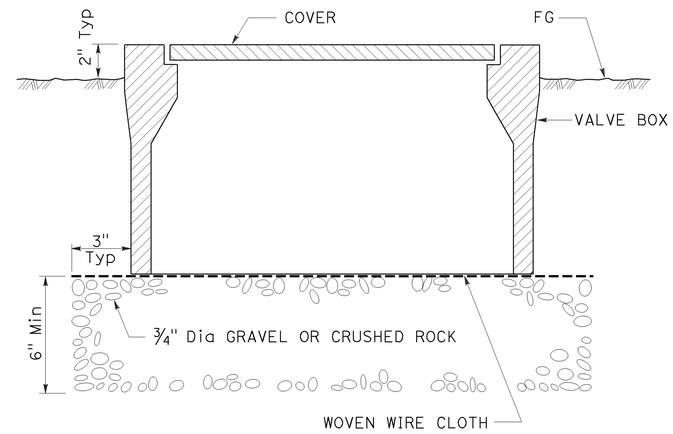

SECTION
VALVE BOX

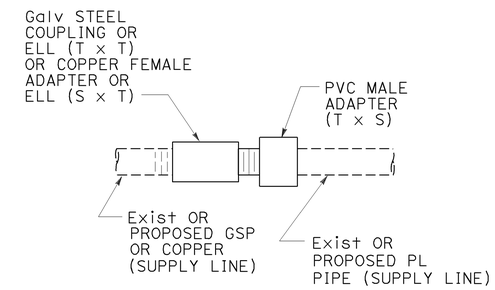

GALVANIZED OR COPPER PIPE CONNECTION TO PLASTIC PIPE

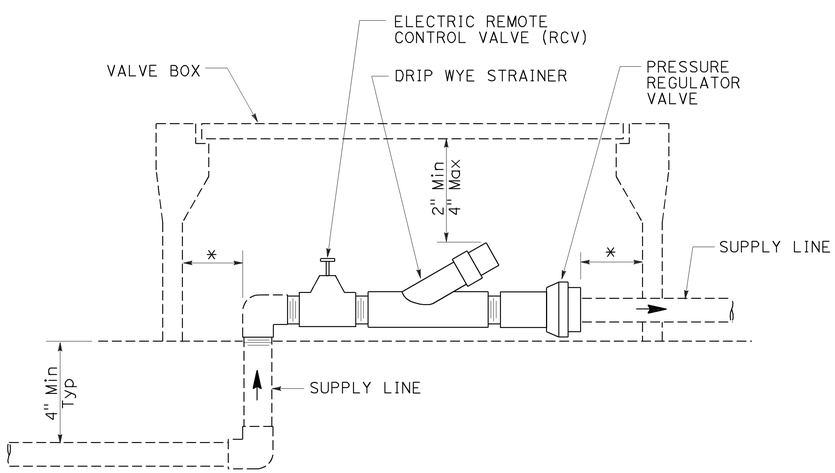

ELEVATION
DRIP VALVE ASSEMBLY

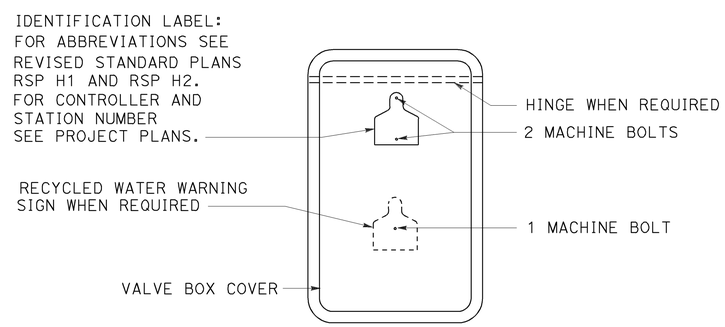

PLAN

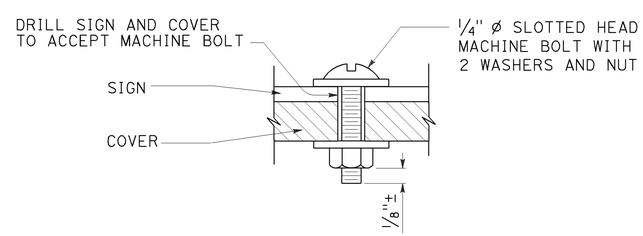

SECTION
VALVE BOX IDENTIFICATION

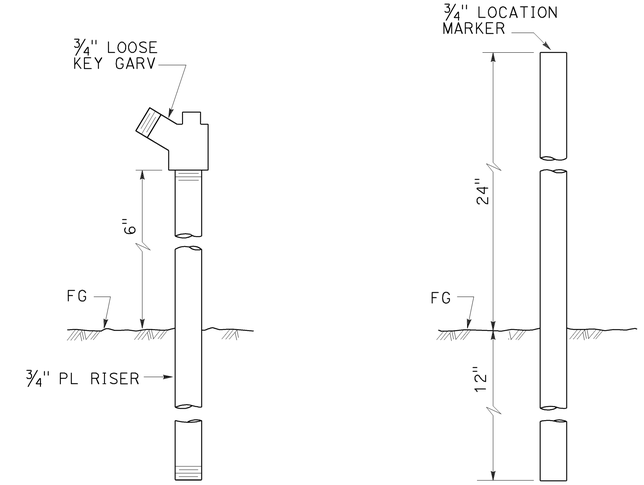

ELEVATION
GARDEN VALVE ASSEMBLY

ELEVATION
LOCATION MARKER

GARDEN VALVE ASSEMBLY

STATE OF CALIFORNIA
DEPARTMENT OF TRANSPORTATION

LANDSCAPE DETAILS

NO SCALE

RSP H7 DATED JULY 19, 2013 SUPERSEDES STANDARD PLAN H7
DATED MAY 20, 2011 - PAGE 224 OF THE STANDARD PLANS BOOK DATED 2010.

REVISED STANDARD PLAN RSP H7

Dist	COUNTY	ROUTE	POST MILES TOTAL PROJECT	SHEET No.	TOTAL SHEETS
07	LA	405	R12.6/R21.2	275	288

REGISTERED CIVIL ENGINEER

July 19, 2013
PLANS APPROVAL DATE

REGISTERED PROFESSIONAL ENGINEER
Gurinderpal Bhullar
No. C48815
Exp. 9-30-14
CIVIL
STATE OF CALIFORNIA

THE STATE OF CALIFORNIA OR ITS OFFICERS OR AGENTS SHALL NOT BE RESPONSIBLE FOR THE ACCURACY OR COMPLETENESS OF SCANNED COPIES OF THIS PLAN SHEET.

TO ACCOMPANY PLANS DATED 6-15-15

2010 REVISED STANDARD PLAN RSP T9

TABLE 1

TAPER LENGTH CRITERIA AND CHANNELIZING DEVICE SPACING

SPEED (S)	MINIMUM TAPER LENGTH * FOR WIDTH OF OFFSET 12 FEET (W)				MAXIMUM CHANNELIZING DEVICE SPACING		
					X	Y	Z **
	TANGENT 2L	MERGING L	SHIFTING L/2	SHOULDER L/3	TAPER	TANGENT	CONFLICT
mph	ft	ft	ft	ft	ft	ft	ft
20	160	80	40	27	20	40	10
25	250	125	63	42	25	50	12
30	360	180	90	60	30	60	15
35	490	245	123	82	35	70	17
40	640	320	160	107	40	80	20
45	1080	540	270	180	45	90	22
50	1200	600	300	200	50	100	25
55	1320	660	330	220	55	110	27
60	1440	720	360	240	60	120	30
65	1560	780	390	260	65	130	32
70	1680	840	420	280	70	140	35

* - For other offsets, use the following merging taper length formula for L:
For speed of 40 mph or less, $L = WS^2/60$
For speed of 45 mph or more, $L = WS$

Where: L = Taper length in feet
W = Width of offset in feet
S = Posted speed limit, off-peak 85th-percentile speed prior to work starting, or the anticipated operating speed in mph

** - Use for taper and tangent sections where there are no pavement markings or where there is a conflict between existing pavement markings and channelizers (CA).

TABLE 2

LONGITUDINAL BUFFER SPACE AND FLAGGER STATION SPACING

SPEED *	Min D **	DOWNGRADE Min D ***		
		-3%	-6%	-9%
mph	ft	ft	ft	ft
20	115	116	120	126
25	155	158	165	173
30	200	205	215	227
35	250	257	271	287
40	305	315	333	354
45	360	378	400	427
50	425	446	474	507
55	495	520	553	593
60	570	598	638	686
65	645	682	728	785
70	730	771	825	891

* - Speed is posted speed limit, off-peak 85th-percentile speed prior to work starting, or the anticipated operating speed in mph

** - Longitudinal buffer space or flagger station spacing

*** - Use on sustained downgrade steeper than -3 percent and longer than 1 mile.

TABLE 3

ADVANCE WARNING SIGN SPACING

ROAD TYPE	DISTANCE BETWEEN SIGNS *		
	A	B	C
	ft	ft	ft
URBAN - 25 mph OR LESS	100	100	100
URBAN - MORE THAN 25 mph TO 40 mph	250	250	250
URBAN - MORE THAN 40 mph	350	350	350
RURAL	500	500	500
EXPRESSWAY / FREEWAY	1000	1500	2640

* - The distances are approximate, are intended for guidance purposes only, and should be applied with engineering judgment. These distances should be adjusted by the Engineer for field conditions, if necessary, by increasing or decreasing the recommmended distances.

STATE OF CALIFORNIA
DEPARTMENT OF TRANSPORTATION

TRAFFIC CONTROL SYSTEM TABLES FOR LANE AND RAMP CLOSURES

NO SCALE

RSP T9 DATED JULY 19, 2013 SUPERSEDES RSP T9 DATED APRIL 19, 2013 THAT SUPPLEMENTS THE STANDARD PLANS BOOK DATED 2010.

REVISED STANDARD PLAN RSP T9

Dist	COUNTY	ROUTE	POST MILES TOTAL PROJECT	SHEET No.	TOTAL SHEETS
07	LA	405	R12.6/R21.2	276	288

REGISTERED CIVIL ENGINEER

April 19, 2013
PLANS APPROVAL DATE

REGISTERED PROFESSIONAL ENGINEER Gurinderpal Bhullar No. C48815 Exp. 9-30-14 CIVIL STATE OF CALIFORNIA

THE STATE OF CALIFORNIA OR ITS OFFICERS OR AGENTS SHALL NOT BE RESPONSIBLE FOR THE ACCURACY OR COMPLETENESS OF SCANNED COPIES OF THIS PLAN SHEET.

TO ACCOMPANY PLANS DATED 6-15-15

NOTES:

See Revised Standard Plan RSP T9 for tables.

Use cone spacing X for taper segment, Y for tangent segment or Z for conflict situations, as approriate, per Table 1, unless X, Y, or Z cone spacing is shown on this sheet.

Unless otherwise specified in the special provisions, all temporary warning signs shall have black legend on fluorescent orange background.

California codes are designated by (CA). Otherwise, Federal (MUTCD) codes are shown.

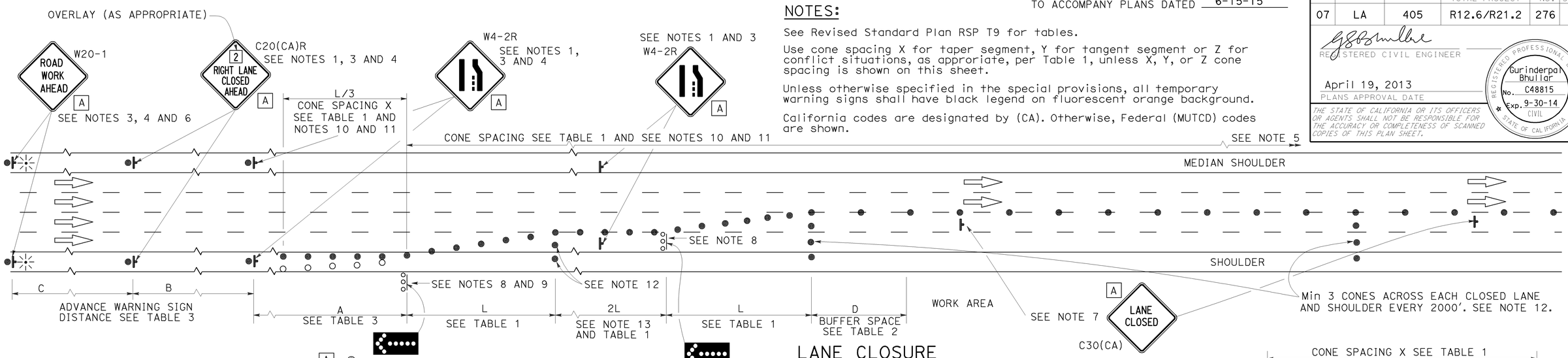

LANE CLOSURE

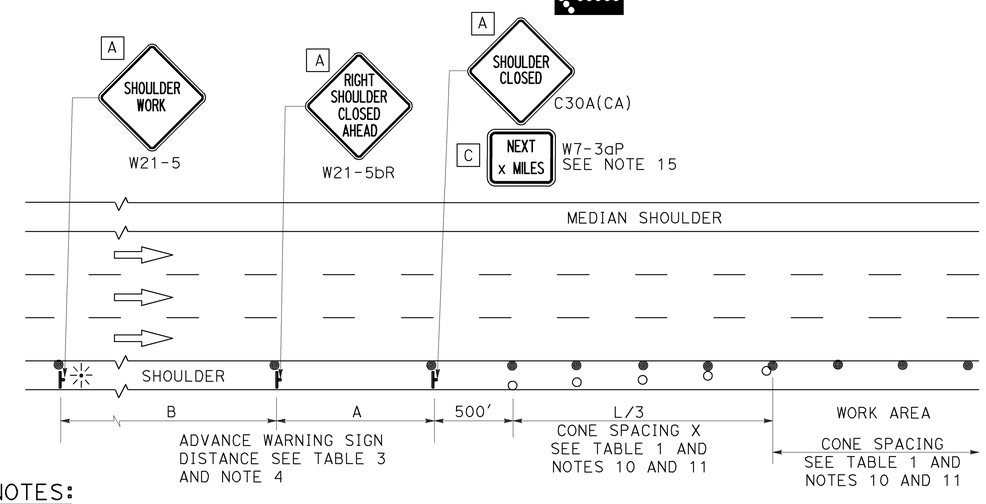

SHOULDER CLOSURE

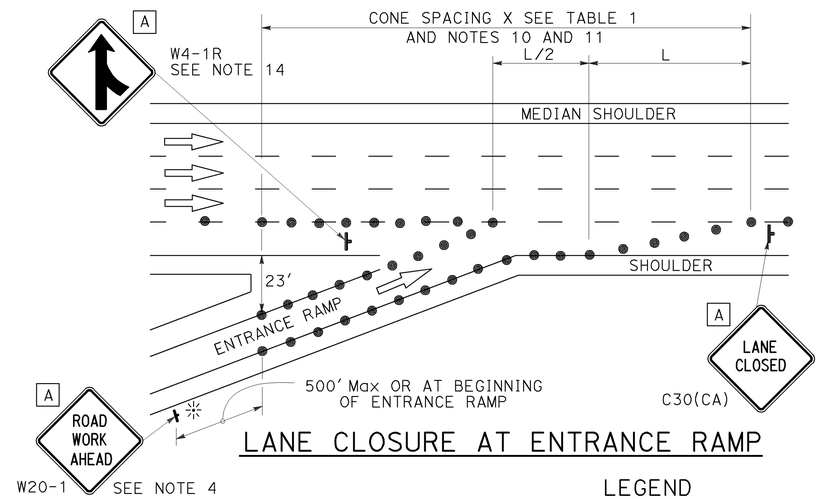

LANE CLOSURE AT ENTRANCE RAMP

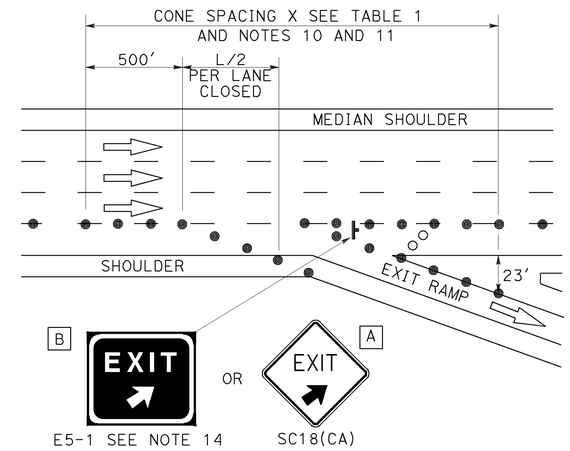

LANE CLOSURE AT EXIT RAMP

NOTES:

1. Median lane closures shall conform to the details as shown except that C20(CA)L and W4-2L signs shall be used.
2. At least one person shall be assigned to provide full time maintenance of traffic control devices for lane closures.
3. Duplicate sign installations are not required:
   a) On opposite shoulder if at least one-half of the available lanes remain open to traffic.
   b) In the median if the width of the median shoulder is less than 8' and the outside lanes are to be closed.
4. Each advance warning sign on each side of the roadway shall be equipped with at least two flags for daytime closure. Each flag shall be at least 16" x 16" in size and shall be orange or fluorescent red-orange in color. Flashing beacons shall be placed at the locations indicated for lane closure during hours of darkness.
5. A G20-2 "END ROAD WORK" sign, with minimum size of 48" x 24" as appropriate, shall be placed at the end of the lane closure unless the end of work area is obvious or ends within a larger project's limits.
6. If the W20-1 sign would follow within 2000' of a stationary W20-1 or G20-1 "ROAD WORK NEXT _____ MILES", use a C20(CA) sign for the first advance warning sign.
7. Place a C30(CA) sign every 2000' throughout length of lane closure.
8. One flashing arrow sign for each lane closed. The flashing arrow signs shall be Type I.
9. A minimum 1500' of sight distance shall be provided where possible for vehicles approaching the first flashing arrow sign. Lane closures shall not begin at top of crest vertical curve or on a horizontal curve.
10. All cones used for lane closures during the hours of darkness shall be fitted with retroreflective bands (or sleeves) as specified in the specifications.
11. Portable delineators, placed at one-half the spacing indicated for traffic cones may be used instead of cones for daytime closures only.
12. Unless otherwise specified in the special provisions, a minimum of 3 cones shall be placed transversely across each closed lane and shoulder at each location where a taper across a traffic lane ends and every 2000' as shown on the "Lane Closure" detail. Two Type II barricades may be used instead of the 3 cones. The transverse alignment of the cones or barricades on the closed shoulder may be shifted from the transverse alignment to provide access to the work.
13. Unless otherwise specified in the special provisions, the 2L tangent shown along lane lines shall be used between the L tapers required for each closed traffic lane.
14. Unless otherwise specified in the special provisions, the E5-1 or SC18(CA) and W4-1 signs shall be used as shown.
15. A W7-3aP "NEXT____ MILES" plaque must be used if theshoulder closure extends beyond the distance that can be perceived by road users.

LEGEND

- TRAFFIC CONE
- TRAFFIC CONE (OPTIONAL TAPER)
- TEMPORARY TRAFFIC CONTROL SIGN
- FLASHING ARROW SIGN (FAS)
- FAS SUPPORT OR TRAILER
- PORTABLE FLASHING BEACON

SIGN PANEL SIZE (Min)

A	48" x 48"
B	72" x 60"
C	36" x 30"

STATE OF CALIFORNIA
DEPARTMENT OF TRANSPORTATION

TRAFFIC CONTROL SYSTEM FOR LANE CLOSURE ON FREEWAYS AND EXPRESSWAYS

NO SCALE

RSP T10 DATED APRIL 19, 2013 SUPERSEDES STANDARD PLAN T10 DATED MAY 20, 2011 - PAGE 237 OF THE STANDARD PLANS BOOK DATED 2010.

REVISED STANDARD PLAN RSP T10

2010 REVISED STANDARD PLAN RSP T10

12-18-12

TO ACCOMPANY PLANS DATED 6-15-15

Dist	COUNTY	ROUTE	POST MILES TOTAL PROJECT	SHEET No.	TOTAL SHEETS
07	LA	405	R12.6/R21.2	277	288

REGISTERED CIVIL ENGINEER

April 19, 2013
PLANS APPROVAL DATE

REGISTERED PROFESSIONAL ENGINEER Gurinderpal Bhullar No. C48815 Exp. 9-30-14 CIVIL STATE OF CALIFORNIA

THE STATE OF CALIFORNIA OR ITS OFFICERS OR AGENTS SHALL NOT BE RESPONSIBLE FOR THE ACCURACY OR COMPLETENESS OF SCANNED COPIES OF THIS PLAN SHEET.

6-15-15

NOTES: See Revised Standard Plan RSP T9 for tables.

Use cone spacing X for taper segment, Y for tangent segment or Z for conflict situations, as approriate, per Table 1, unless X, Y, or Z cone spacing is shown on this sheet.

Unless otherwise specified in the special provisions, all temporary warning signs shall have black legend on fluorescent orange background.

California codes are designated by (CA). Otherwise, Federal (MUTCD) codes are shown.

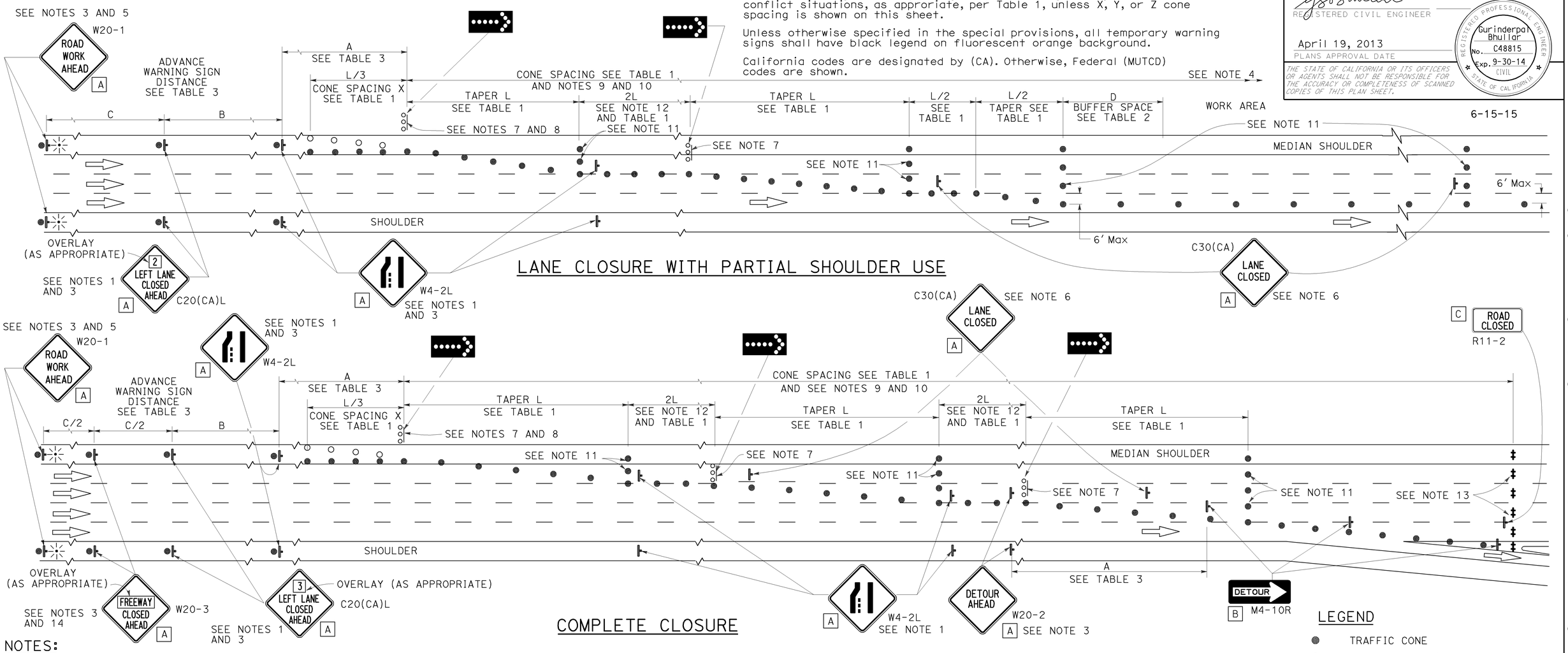

LANE CLOSURE WITH PARTIAL SHOULDER USE

COMPLETE CLOSURE

NOTES:

1. Lane closures on the right side using partial median shoulder as a traffic lane shall conform to the details as shown except that C20(CA)R and W4-2R signs shall be used.
2. At least one person shall be assigned to provide full time maintenance of traffic control devices for lane closures.
3. Each advance warning sign on each side of the roadway shall be equipped with at least two flags for daytime closure. Each flag shall be at least 16" X 16" in size and shall be orange or fluorescent red-orange in color. Flashing beacons shall be placed at the locations indicated for lane closure during hours of darkness.
4. A G20-2 "END ROAD WORK" sign, with minimum size of 48" x 24" as appropriate, shall be placed at the end of the lane closure unless the end of work area is obvious or ends within a larger project's limits.
5. If the W20-1 sign would follow within 2000' of a stationary W20-1 or G20-1 "ROAD WORK NEXT ___ MILES", use a C20(CA) sign for the first advance warning sign.
6. Place a C30(CA) sign every 2000' throughout length of lane closure.
7. One flashing arrow sign for each lane closed. The flashing arrow signs shall be Type I.
8. A minimum 1500' of sight distance shall be provided where possible for vehicles approaching the first flashing arrow sign. Lane closures shall not begin at the top of crest vertical curve or on a horizontal curve.
9. All cones used for lane closures during the hours of darkness shall be fitted with retroreflective bands (or sleeves) as specified in the specifications.
10. Portable delineators, placed at one-half the spacing indicated for traffic cones, may be used instead of cones for daytime closures only.
11. Unless otherwise specified in the special provisions, a minimum of 3 cones shall be placed transversely across each closed lane and shoulder at each location where a taper across a traffic lane ends and every 2000' as shown on the "Lane Closure With Partial Shoulder Use" detail. Two Type II barricades may be used instead of the 3 cones. The transverse alignment of the cones or barricades on the closed shoulder may be shifted from the transverse alignment to provide access to the work.
12. Unless otherwise specified in the special provisions, the 2L tangent shown along lane lines shall be used between the L tapers required for each closed traffic lane.
13. A minimum of Two Type II or III barricades shall be placed across each closed lane and shoulder at the location shown and every 2000' within the complete closure area. Within the complete closure area, the transverse alignment of the barricades on the closed shoulder may be shifted from the transverse alignment to provide access to the work.
14. When specified in the special provisions, a W20-2 "DETOUR AHEAD" sign is to be used in place of the W20-3 "FREEWAY CLOSED AHEAD" sign.

SIGN PANEL SIZE (Min)

A	48" x 48"
B	48" x 18"
C	48" x 30"

LEGEND

- TRAFFIC CONE
- TRAFFIC CONE (OPTIONAL TAPER)
- TEMPORARY TRAFFIC CONTROL SIGN
- FLASHING ARROW SIGN (FAS)
- FAS SUPPORT OR TRAILER
- PORTABLE FLASHING BEACON

STATE OF CALIFORNIA
DEPARTMENT OF TRANSPORTATION

TRAFFIC CONTROL SYSTEM FOR LANE CLOSURES ON FREEWAYS AND EXPRESSWAYS

NO SCALE

RSP T10A DATED APRIL 19, 2013 SUPERSEDES STANDARD PLAN T10A DATED MAY 20, 2011 - PAGE 238 OF THE STANDARD PLANS BOOK DATED 2010.

REVISED STANDARD PLAN RSP T10A

2010 REVISED STANDARD PLAN RSP T10A

12-18-12

Dist	COUNTY	ROUTE	POST MILES TOTAL PROJECT	SHEET No.	TOTAL SHEETS
07	LA	405	R12.6/R21.2	278	288

REGISTERED CIVIL ENGINEER

April 19, 2013
PLANS APPROVAL DATE

REGISTERED PROFESSIONAL ENGINEER Gurinderpal Bhullar No. C48815 Exp. 9-30-14 CIVIL STATE OF CALIFORNIA

THE STATE OF CALIFORNIA OR ITS OFFICERS OR AGENTS SHALL NOT BE RESPONSIBLE FOR THE ACCURACY OR COMPLETENESS OF SCANNED COPIES OF THIS PLAN SHEET.

TO ACCOMPANY PLANS DATED 6-15-15

TYPICAL RAMP CLOSURES

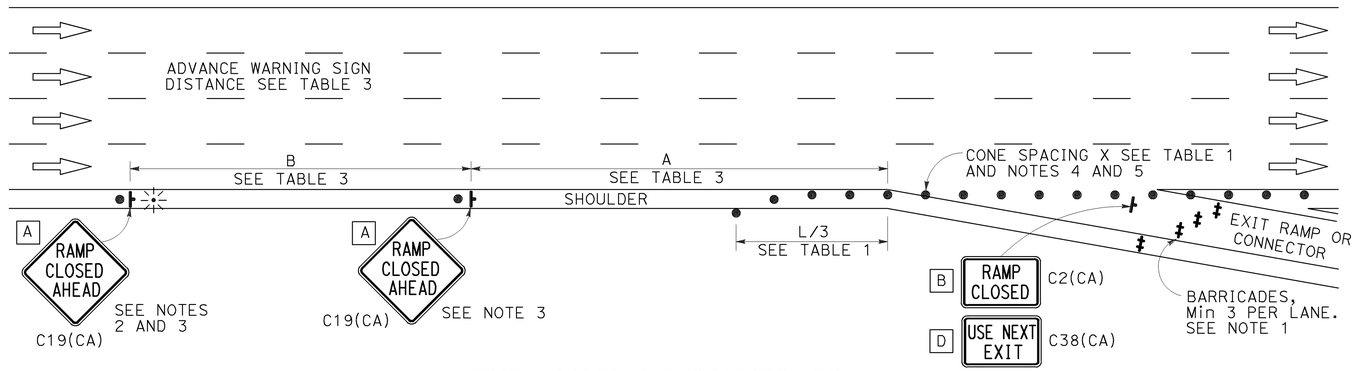

EXIT RAMP OR CONNECTOR

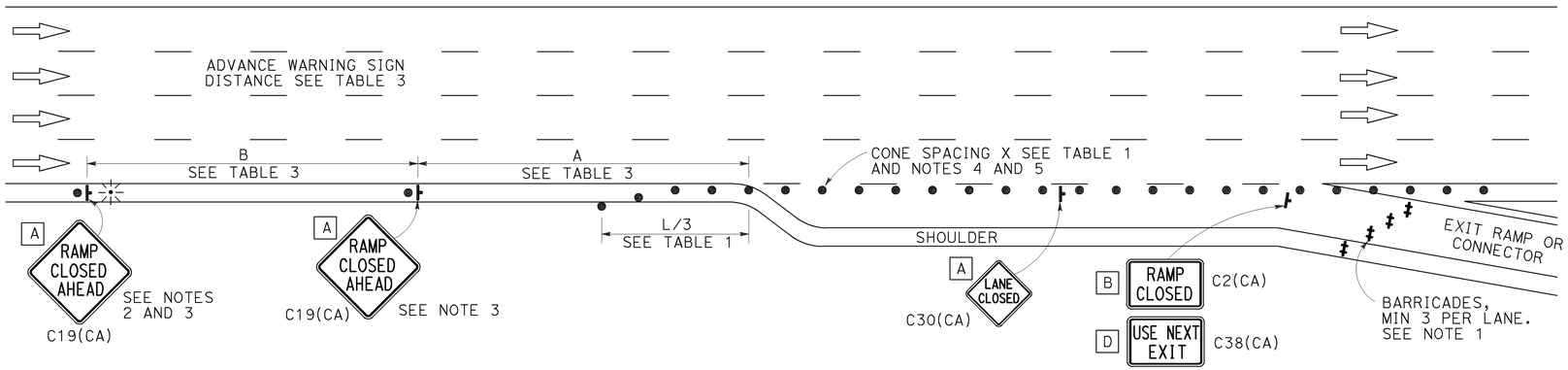

EXIT RAMP OR CONNECTOR WITH ADDITIONAL LANE

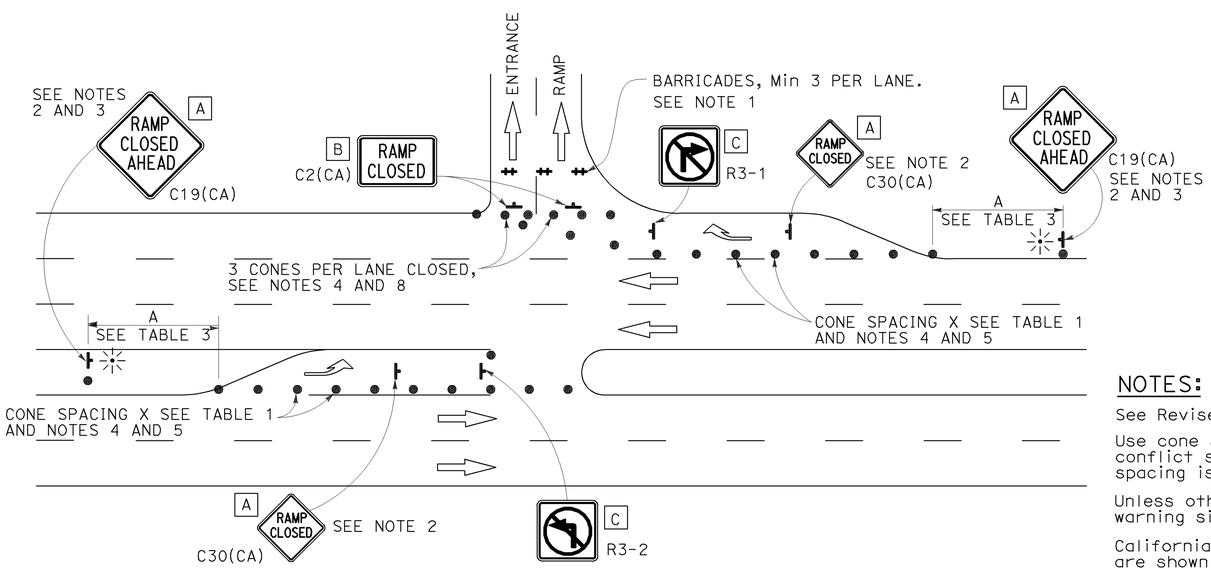

ENTRANCE RAMP WITH TURNING POCKETS

SIGN PANEL SIZE (Min)

- A 48" × 48"
- B 48" × 30"
- C 36" × 36"
- D 48" × 36"

LEGEND

- TRAFFIC CONE
- TEMPORARY TRAFFIC CONTROL SIGN
- BARRICADES
- PORTABLE FLASHING BEACON

NOTES:

1. Barricades shall be Type I, II, or III for closures lasting one week or less and Type III for closures lasting longer than one week.
2. In addition to placing the C19(CA) "RAMP CLOSED AHEAD" and C30(CA) "RAMP CLOSED" signs, black on orange overlay plates with the word "CLOSED" may be mounted, as directed by the Engineer, on all guide signs that refer to the closed ramp. The letter size on the overlay shall be the same as the guide sign.
3. Each advance C19(CA) "RAMP CLOSED AHEAD" sign shall be equipped with at least two flags for daytime closure. Each flag shall be at least 16" × 16" in size and shall be orange or fluorescent red-orange in color. A flashing beacon shall be placed on top of the first C19(CA) sign during hours of darkness.
4. All cones used for ramp closures during the hours of darkness shall be fitted with retroreflective bands (or sleeves) as specified in the specifications.
5. Portable delineators, placed at one-half the spacing indicated for traffic cones, may be used instead of cones for daytime ramp closures only.
6. At least one person shall be assigned to provide full time maintenance of traffic control devices, unless otherwise directed by the Engineer.
7. The existing "EXIT" signs shall be covered during ramp closures.
8. A minimum of 3 cones shall be placed transversely across each closed lane and shoulder.

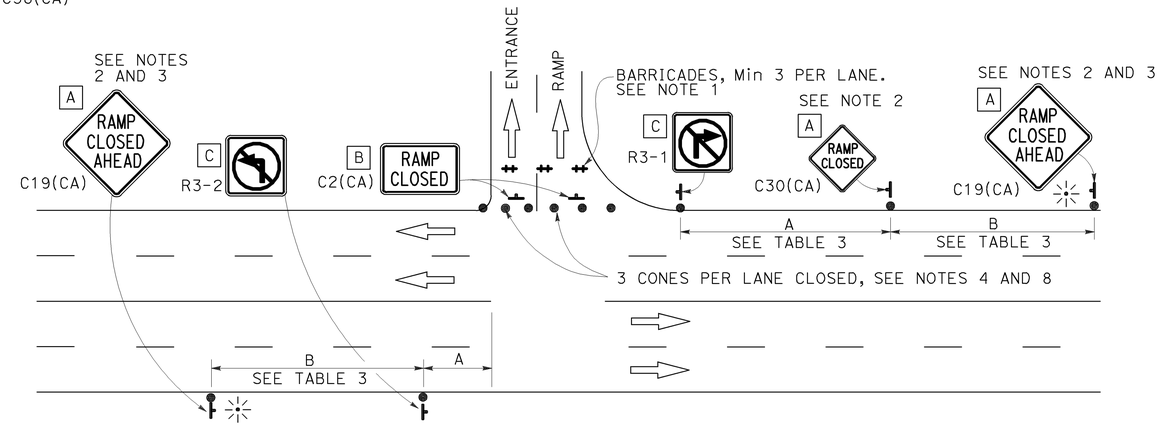

ENTRANCE RAMP WITHOUT TURNING POCKETS

NOTES:

See Revised Standard Plan RSP T9 for tables.

Use cone spacing X for taper segment, Y for tangent segment or Z for conflict situations, as approriate, per Table 1, unless X, Y, or Z cone spacing is shown on this sheet.

Unless otherwise specified in the special provisions, all temporary warning signs shall have black legend on fluorescent orange background.

California codes are designated by (CA). Otherwise, Federal (MUTCD) codes are shown.

STATE OF CALIFORNIA
DEPARTMENT OF TRANSPORTATION

TRAFFIC CONTROL SYSTEM FOR RAMP CLOSURE

NO SCALE

RSP T14 DATED APRIL 19, 2013 SUPERSEDES STANDARD PLAN T14
DATED MAY 20, 2011 - PAGE 242 OF THE STANDARD PLANS BOOK DATED 2010.

REVISED STANDARD PLAN RSP T14

2010 REVISED STANDARD PLAN RSP T14

12-18-12

Dist	COUNTY	ROUTE	POST MILES TOTAL PROJECT	SHEET No.	TOTAL SHEETS
07	LA	405	R12.6/R21.2	279	288

REGISTERED CIVIL ENGINEER

November 15, 2013
PLANS APPROVAL DATE

REGISTERED PROFESSIONAL ENGINEER
Tillat Satter
No. C42892
Exp. 3-31-14
CIVIL
STATE OF CALIFORNIA

THE STATE OF CALIFORNIA OR ITS OFFICERS OR AGENTS SHALL NOT BE RESPONSIBLE FOR THE ACCURACY OR COMPLETENESS OF SCANNED COPIES OF THIS PLAN SHEET.

TO ACCOMPANY PLANS DATED 6-15-15

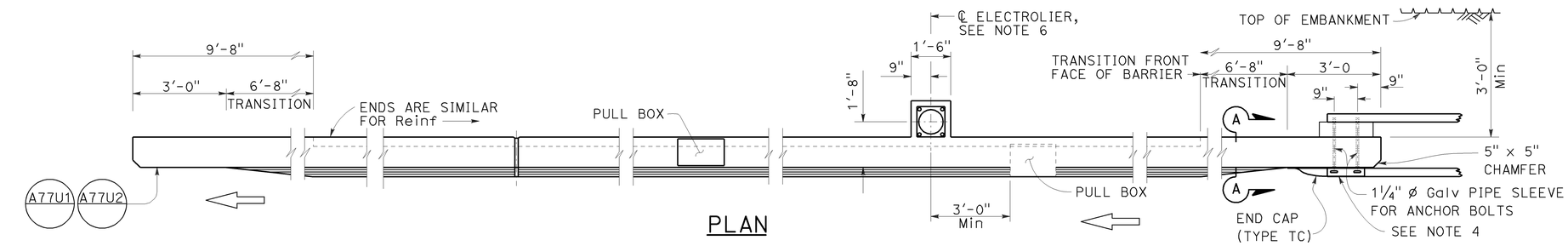

PLAN

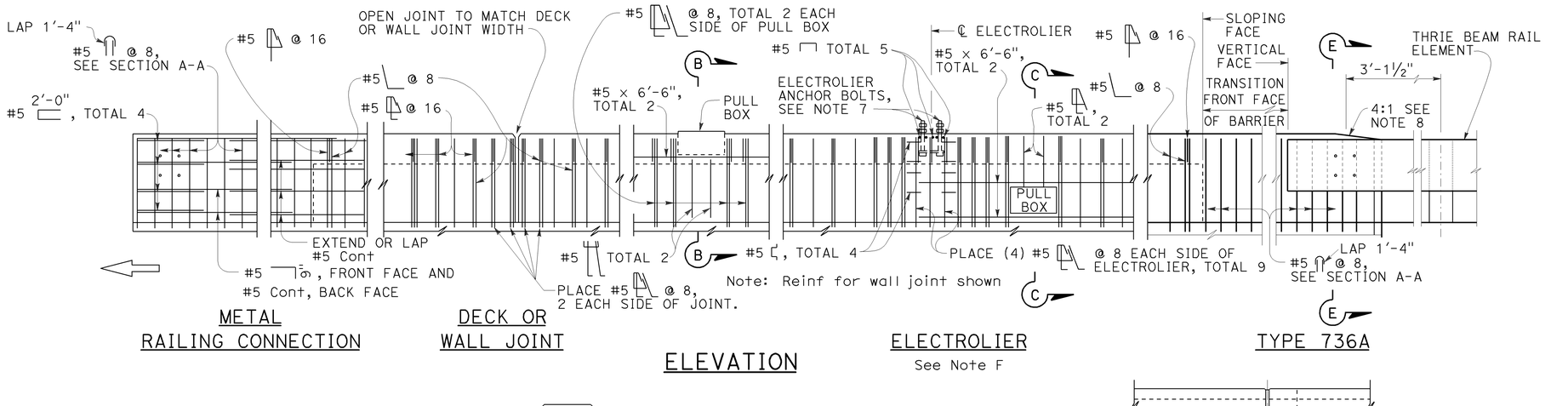

ELEVATION

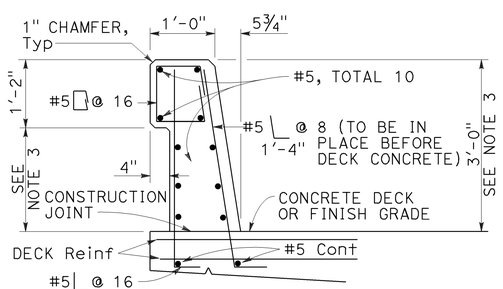

TYPE 736

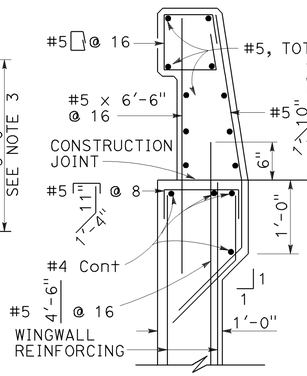

TYPE 736A

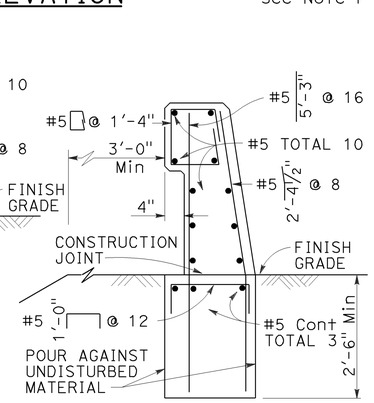

TYPE 736B

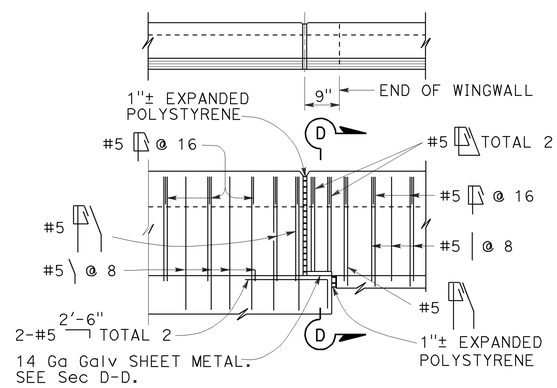

TYPE 736A TYPE 736B

Note: Types 736A & 736B are similar to Type 736 except as noted

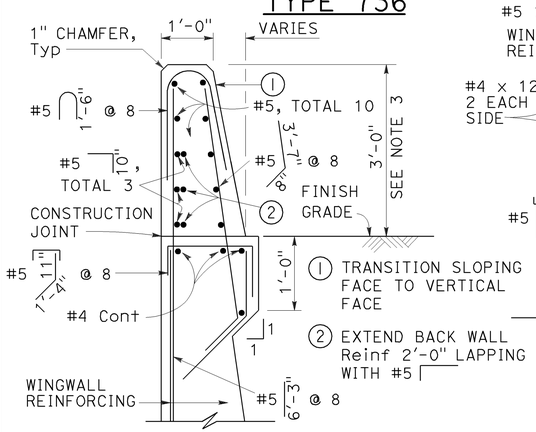

SECTION A-A

Details shown for barrier anchorage to Type 736A. Anchorgae for barrier Types 736 and 736B are similar to their respective details.

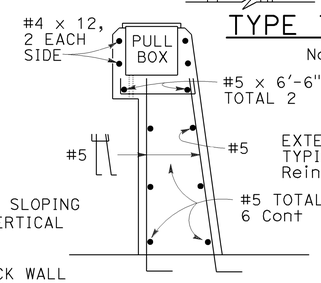

SECTION B-B

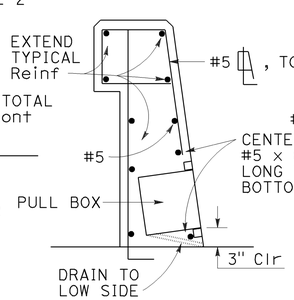

SECTION C-C

See Notes

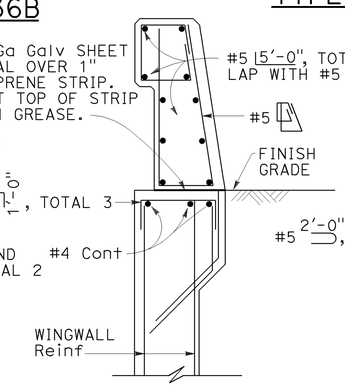

SECTION D-D

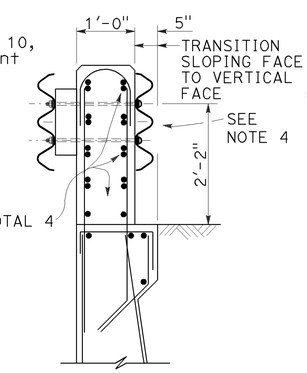

SECTION E-E

See Notes

NOTES:

1. Walls are to be backfilled before barrier is placed.
2. Clearance to reinforcing steel in barrier to be 1", except as noted. Longitudinal reinforcement to stop at all expansion joints.
3. Dimensions may vary with roadway cross slope and with certain thickness of surfacing. See Project Plans.
4. For typical metal railing connection details not shown, see Revised Standard Plans RSP A77U1 and RSP A77U2.
5. See Standard Plans ES-9A, ES-9B, ES-9C, ES-9D and ES-9E for electrical details. The maximum number of conduits in the barrier is limited to two 2" conduits along with one 3" conduit. When a 3" conduit is used, it is restricted to the base of the barrier.
6. For electrolier mounting details, See Standard Plans ES-6A and ES-6B.
7. Minimum concrete edge distance, to the reinforcing shown, shall be maintained. Edge distance may be adjusted to accommodate increase in concrete cover for architectual treatment.
8. Taper the top of the end of the bridge railing at 4:1 to match the top elevation of the thrie beam rail element.

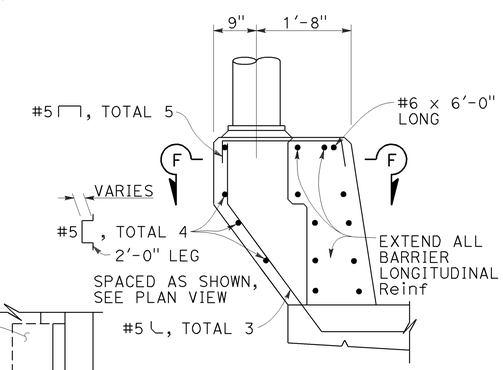

PEDESTAL ELEVATION

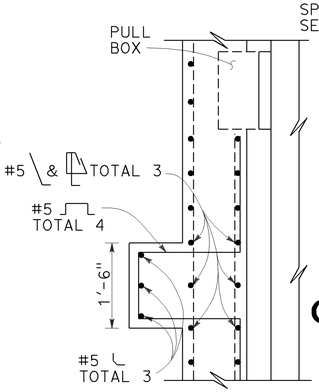

SECTION F-F

STATE OF CALIFORNIA
DEPARTMENT OF TRANSPORTATION

CONCRETE BARRIER TYPE 736

NO SCALE

RSP B11-56 DATED NOVEMBER 15, 2013 SUPERSEDES RSP B11-56 DATED JULY 19, 2013 AND STANDARD PLAN B11-56 DATED MAY 20, 2011 - PAGE 298 OF THE STANDARD PLANS BOOK DATED 2010.

REVISED STANDARD PLAN RSP B11-56

2010 REVISED STANDARD PLAN RSP B11-56

10-4-13

Dist	COUNTY	ROUTE	POST MILES TOTAL PROJECT	SHEET No.	TOTAL SHEETS
07	LA	405	R12.6/R21.2	280	288

Theresa Gabriel
REGISTERED ELECTRICAL ENGINEER

July 19, 2013
PLANS APPROVAL DATE

REGISTERED PROFESSIONAL ENGINEER Theresa Aziz Gabriel No. E15129 Exp. 6-30-14 ELECTRICAL STATE OF CALIFORNIA

THE STATE OF CALIFORNIA OR ITS OFFICERS OR AGENTS SHALL NOT BE RESPONSIBLE FOR THE ACCURACY OR COMPLETENESS OF SCANNED COPIES OF THIS PLAN SHEET.

TO ACCOMPANY PLANS DATED 6-15-15

2010 REVISED STANDARD PLAN RSP ES-1A

LEGEND:

AB	ABANDON. IF APPLIED TO CONDUIT, REMOVE CONDUCTORS
BC	INSTALL PULL BOX IN EXISTING CONDUIT RUN
BP	PEDESTRIAN BARRICADE, TYPE AS INDICATED ON PLAN
CB	INSTALL CONDUIT INTO EXISTING PULL BOX
CC	CONNECT NEW AND EXISTING CONDUIT. REMOVE EXISTING CONDUCTORS AND INSTALL CONDUCTORS AS INDICATED
CF	CONDUIT TO REMAIN FOR FUTURE USE. REMOVE CONDUCTORS. INSTALL PULL TAPE
DH	DETECTOR HANDHOLE
FA	FOUNDATION TO BE ABANDONED
IS	INSTALL SIGN ON SIGNAL MAST ARM
NS	NO SLIP BASE ON STANDARD
PEC	PHOTOELECTRIC CONTROL
PEU	PHOTOELECTRIC UNIT
RC	EQUIPMENT OR MATERIAL TO BE REMOVED AND BECOME THE PROPERTY OF THE CONTRACTOR
RE	REMOVE ELECTROLIER, FUSES AND BALLAST. TAPE ENDS OF CONDUCTORS
RL	RELOCATE EQUIPMENT
RR	REMOVE AND REUSE EQUIPMENT
RS	REMOVE AND SALVAGE EQUIPMENT
SC	SPLICE NEW TO EXISTING CONDUCTORS
SD	SERVICE DISCONNECT
TSP	TELEPHONE SERVICE POINT

ABBREVIATIONS

APS	ACCESSIBLE PEDESTRIAN SIGNAL
BBS	BATTERY BACKUP SYSTEM
BC	BOLT CIRCLE
BPB	BICYCLE PUSH BUTTON
C	CONDUIT
CB	CIRCUIT BREAKER
CCTV	CLOSED CIRCUIT TELEVISION
Ckt	CIRCUIT
CMS	CHANGEABLE MESSAGE SIGN
Ctid	CALTRANS IDENTIFICATION
Comm	COMMUNICATION
DLC	LOOP DETECTOR LEAD-IN CABLE
EMS	EXTINGUISHABLE MESSAGE SIGN
EVUC	EMERGENCY VEHICLE UNIT CABLE
EVUD	EMERGENCY VEHICLE UNIT DETECTOR
FB	FLASHING BEACON
FBCA	FLASHING BEACON CONTROL ASSEMBLY
FBS	FLASHING BEACON WITH SLIP BASE
FO	FIBER OPTIC
G	EQUIPMENT GROUNDING CONDUCTOR
GB	GROUND BUS
GFCI	GROUND FAULT CIRCUIT INTERRUPTER
HAR	HIGHWAY ADVISORY RADIO
Hex	HEXAGONAL
HPS	HIGH PRESSURE SODIUM
IISNS	INTERNALLY ILLUMINATED STREET NAME SIGN
ISL	INDUCTION SIGN LIGHTING
LED	LIGHT EMITTING DIODE
LMA	LUMINAIRE MAST ARM
LPS	LOW PRESSURE SODIUM
Ltg	LIGHTING
Lum	LUMINAIRE
M	METERED
MAT	MAST ARM MOUNTING TOP ATTACHMENT
MAS	MAST ARM MOUNTING SIDE ATTACHMENT
M/M	MULTIPLE TO MULTIPLE TRANSFORMER
Mtg	MOUNTING
MV	MERCURY VAPOR LIGHTING FIXTURE
MVDS	MICROWAVE VEHICLE DETECTION SYSTEM
N	NEUTRAL (GROUNDED CONDUCTOR)
NB	NEUTRAL BUS
NC	NORMALLY CLOSE
NO	NORMALLY OPEN
P	CIRCUIT BREAKER'S POLE
PB	PULL BOX
PBA	PUSH BUTTON ASSEMBLY
PEC	PHOTOELECTRIC CONTROL
Ped	PEDESTRIAN
PEU	PHOTOELECTRIC UNIT
PT	CONDUIT WITH PULL TAPE
RE	RELOCATED EQUIPMENT
RM	RAMP METERING
RWIS	ROADSIDE WEATHER INFORMATION SYSTEM
SB	SLIP BASE
SIC	SIGNAL INTERCONNECT CABLE
Sig	SIGNAL
SMA	SIGNAL MAST ARM
SNS	STREET NAME SIGN
SP	SERVICE POINT
TDC	TELEPHONE DEMARCATION CABINET
TMS	TRAFFIC MONITORING STATION
TOS	TRAFFIC OPERATIONS SYSTEM
Veh	VEHICLE
VIVDS	VIDEO IMAGE VEHICLE DETECTION SYSTEM
WIM	WEIGH-IN-MOTION
Xfmr	TRANSFORMER

SOFFIT AND WALL MOUNTED LUMINAIRES

PENDANT, 70 W HPS UNLESS OTHERWISE SPECIFIED

FLUSH, 70 W HPS UNLESS OTHERWISE SPECIFIED

WALL SURFACE, 70 W HPS UNLESS OTHERWISE SPECIFIED

EXISTING SOFFIT OR WALL LUMINAIRE TO REMAIN UNMODIFIED

EXISTING SOFFIT OR WALL LUMINAIRE TO BE MODIFIED AS SPECIFIED

NOTE:

Arrow indicates "street side" of luminaire.

COMMONLY USED SYMBOLS FOR UNITED STATES CUSTOMARY UNITS OF MEASUREMENT:

SYMBOL USED	DEFINITIONS
Ω	OHMS
min	MINUTE
s	SECOND
bps	BITS PER SECOND
Bps	BYTES PER SECOND
A	AMPERE
V	VOLT
V(dc)	VOLT (DIRECT CURRENT)
V(ac)	VOLT (ALTERNATING CURRENT)
FC	FOOT - CANDLE
W	WATTS
VA	VOLT-AMPERE
M	MEGA
k	KILO
m	MILLI
μ	MICRO
P	PICO
Hz	HERTZ

MISCELLANEOUS ELECTROLIERS

NEW	EXISTING	
		LUMINAIRE ON WOOD POLE
		NON-STANDARD ELECTROLIER (SEE PROJECT NOTES OR PROJECT PLANS)
		CITY ELECTROLIER
		ELECTROLIER FOUNDATION (FUTURE INSTALLATION)

NOTES:

1. HPS luminaires shall be 310 W HPS when installed on Type 21, 21D, 30, 31 and 32 Standards, unless otherwise specified. HPS luminaires shall be 200 W when installed on other type standards or poles, unless otherwise specified.
2. LED luminaires shall be 235 W when installed on Type 21, 21D, 30, 31 and 32 Standards, unless otherwise specified. LED luminaires shall be 165 W when installed on other type standards or poles, unless otherwise specified.
3. Luminaires shall be the cutoff type, ANSI Type III medium cutoff lighting distribution, unless otherwise specified.

STANDARD ELECTROLIER

NEW	EXISTING	STANDARD TYPE
		15
		15D
		15 STRUCTURE
		15D STRUCTURE
		21
		21D
		21 STRUCTURE
		21D STRUCTURE
		30
		31
		32

STATE OF CALIFORNIA
DEPARTMENT OF TRANSPORTATION

ELECTRICAL SYSTEMS (LEGEND AND ABBREVIATIONS)

NO SCALE

RSP ES-1A DATED JULY 19, 2013 SUPERSEDES STANDARD PLAN ES-1A DATED MAY 20, 2011 - PAGE 425 OF THE STANDARD PLANS BOOK DATED 2010.

REVISED STANDARD PLAN RSP ES-1A

Dist	COUNTY	ROUTE	POST MILES TOTAL PROJECT	SHEET No.	TOTAL SHEETS
07	LA	405	R12.6/R21.2	281	288

Theresa Gabriel
REGISTERED ELECTRICAL ENGINEER

July 19, 2013
PLANS APPROVAL DATE

REGISTERED PROFESSIONAL ENGINEER
Theresa Aziz Gabriel
No. E15129
Exp. 6-30-14
ELECTRICAL
STATE OF CALIFORNIA

THE STATE OF CALIFORNIA OR ITS OFFICERS OR AGENTS SHALL NOT BE RESPONSIBLE FOR THE ACCURACY OR COMPLETENESS OF SCANNED COPIES OF THIS PLAN SHEET.

TO ACCOMPANY PLANS DATED 6-15-15

CONDUIT

NEW	EXISTING	
		LIGHTING CONDUIT, UNLESS OTHERWISE INDICATED OR NOTED
		TRAFFIC SIGNAL CONDUIT
C	c	COMMUNICATION CONDUIT
T	t	TELEPHONE CONDUIT
F	f	FIRE ALARM CONDUIT
FO	fo	FIBER OPTIC CONDUIT
		CONDUIT TERMINATION
R	r	CONDUIT RISER ATTACHED TO THE STRUCTURE OR SERVICE POLE

SERVICE EQUIPMENT

NEW	EXISTING	
OH	oh	OVERHEAD LINES
U	U	WOOD POLE, "U" INDICATES UTILITY OWNED
		POLE GUY WITH ANCHOR
		UTILITY TRANSFORMER - GROUND MOUNTED
III	III	SERVICE EQUIPMENT ENCLOSURE TYPE. DOOR INDICATES FRONT OF ENCLOSURE
T	t	TELEPHONE DEMARCATION CABINET

POLE-MOUNTED SERVICE DESIGNATION

TYPE H SERVICE, 28'-10" — TYPE OF INSTALLATION AND POLE HEIGHT ABOVE GRADE

FLASHING BEACON

NEW	EXISTING	
R	R	FLASHING BEACON (ONE VEHICLE SIGNAL HEAD WITH BACKPLATE AND VISOR) "R" INDICATES RED INDICATION, "Y" INDICATES YELLOW INDICATION
Y Y	Y Y	FLASHING BEACON WITH TYPE 15-FBS STANDARD AND A SIGN.
R R	R R	FLASHING BEACON WITH TYPES 9, 9A OR 9B SIGN UNLESS OTHERWISE SPECIFIED OR INDICATED

SIGNAL EQUIPMENT

NEW	EXISTING	
C	C	PEDESTRIAN SIGNAL HEAD "C" INDICATES COUNTDOWN PEDESTRIAN HEAD
		PUSH BUTTON ASSEMBLY POST
		PEDESTRIAN BARRICADE
		VEHICLE SIGNAL HEAD (WITH BACKPLATE AND 3-SECTIONS: RED, YELLOW AND GREEN)
		VEHICLE SIGNAL HEAD WITH ANGLE VISOR
PV	PV	MODIFICATIONS OF BASIC SYMBOL: "L" INDICATES ALL NON-ARROW SECTIONS LOUVERED "LG" INDICATES LOUVERED GREEN SECTION ONLY "PV" INDICATES ALL 12" SECTIONS PROGRAMMED VISIBILITY "8" INDICATES ALL 8" SECTIONS (ONLY WHEN SPECIFIED)
		VEHICLE SIGNAL HEAD CONSISTING OF RED, YELLOW AND GREEN LEFT ARROW SECTIONS
		VEHICLE SIGNAL HEAD CONSISTING OF RED AND YELLOW SECTIONS WITH AN UP GREEN ARROW SECTION
		VEHICLE SIGNAL HEAD (5 SECTION) CONSISTING OF RED, YELLOW AND GREEN SECTIONS WITH YELLOW AND GREEN RIGHT ARROW SECTIONS
		TYPE 15TS STANDARD WITH VEHICLE SIGNAL HEAD AND LUMINAIRE
		TYPE 21TS STANDARD WITH VEHICLE SIGNAL HEAD AND LUMINAIRE
		STANDARD WITH LUMINAIRE AND SIGNAL MAST ARMS AND ATTACHED VEHICLE SIGNAL HEADS
		TYPE 1 STANDARD WITH ATTACHED VEHICLE SIGNAL HEADS
		STANDARD WITH A SIGNAL MAST ARM, ATTACHED VEHICLE SIGNAL HEADS AND INTERNALLY ILLUMINATED STREET NAME SIGN
		CONTROLLER ASSEMBLY. DOOR INDICATES FRONT OF CABINET

SIGNAL EQUIPMENT Cont

NEW	EXISTING	
		GUARD POST
		TYPE 1 STANDARD WITH RAMP METERING SIGN
		OPTICAL DETECTOR FOR THE EMERGENCY VEHICLE DETECTION SYSTEM

NOTES:

1. All signal sections shall be 12" unless shown otherwise.
2. Signal heads shall be provided with backplates unless shown otherwise.

ILLUMINATED OVERHEAD SIGN

NEW	EXISTING	
		SINGLE POST, SINGLE ILLUMINATED SIGN, BALANCED BUTTERFLY
		SINGLE POST, DOUBLE ILLUMINATED SIGN, BALANCED BUTTERFLY
		SINGLE POST, SINGLE ILLUMINATED SIGN, FULL CANTILEVER
		DOUBLE POST, SINGLE ILLUMINATED SIGN
		SINGLE ILLUMINATED SIGN MOUNTED ON STRUCTURE
		DOUBLE POST, SINGLE ILLUMINATED SIGN WITH ELECTROLIER

STATE OF CALIFORNIA
DEPARTMENT OF TRANSPORTATION

ELECTRICAL SYSTEMS (LEGEND AND ABBREVIATIONS)

NO SCALE

RSP ES-1B DATED JULY 19, 2013 SUPERSEDES STANDARD PLAN ES-1B DATED MAY 20, 2011 - PAGE 426 OF THE STANDARD PLANS BOOK DATED 2010.

REVISED STANDARD PLAN RSP ES-1B

2010 REVISED STANDARD PLAN RSP ES-1B

7-15-13

Dist	COUNTY	ROUTE	POST MILES TOTAL PROJECT	SHEET No.	TOTAL SHEETS
07	LA	405	R12.6/R21.2	282	288

Theresa Gabriel
REGISTERED ELECTRICAL ENGINEER

July 19, 2013
PLANS APPROVAL DATE

REGISTERED PROFESSIONAL ENGINEER
Theresa Aziz Gabriel
No. E15129
Exp. 6-30-14
ELECTRICAL
STATE OF CALIFORNIA

THE STATE OF CALIFORNIA OR ITS OFFICERS OR AGENTS SHALL NOT BE RESPONSIBLE FOR THE ACCURACY OR COMPLETENESS OF SCANNED COPIES OF THIS PLAN SHEET.

TO ACCOMPANY PLANS DATED 6-15-15

EQUIPMENT IDENTIFICATION

ILLUMINATED SIGN IDENTIFICATION NUMBER:

SIGN No. 12345
10 ISL SCI 1.0

- SIGN NUMBER - PLACE ON POST OR STRUCTURE
- TRANSFORMER RATING (kVA)
- LIGHTING CONTROL TYPE
- NUMBER AND TYPE OF FIXTURES

} DO NOT PLACE ON STANDARD OR STRUCTURE

ELECTROLIER OR EQUIPMENT IDENTIFICATION NUMBER:

12345 - 15'-0"

- MAST ARM LENGTH, IF SHOWN. DO NOT PLACE ON STANDARD OR STRUCTURE
- EQUIPMENT NUMBER - PLACE ON STANDARD OR STRUCTURE. EXISTING EQUIPMENT NUMBERS ARE SHOWN IN PARENTHESIS

CONDUIT AND CONDUCTOR IDENTIFICATION:

1½"C, 2#10, 15#14, 2 DLC, 12P#18 (PAIR)

- NUMBER AND SIZE OF CONDUCTORS AND CABLES
- SIZE OF CONDUIT IN INCHES

ø1, ø2, ø2P, etc.	TRAFFIC PHASE IDENTIFICATION FOR SIGNAL FACES, DETECTORS AND PHASE DIAGRAMS
1 2 3	LEGEND NUMBERS
A B C	EQUIPMENT, SIGNAL POLES, INSTALLATION OR ITEMS
1 2 3	CONDUIT RUN NUMBERS

SIGNAL AND LIGHTING STANDARD (TYPICAL DESIGNATION):

19A - 3 - 100

- WIND VELOCITY = 100 mph
- CASE 3 ARM LOADING
- STANDARD TYPE
- STANDARD PLAN SHEET NUMBER
- DETAIL, NUMBER, SECTION, TYPE OR ELEVATION

MISCELLANEOUS EQUIPMENT

NEW	EXISTING	
CMS	cms	CHANGEABLE MESSAGE SIGN
		CLOSED CIRCUIT TELEVISION CAMERA
		HIGHWAY ADVISORY RADIO POLE AND ANTENNA
EMS	ems	EXTINGUISHABLE MESSAGE SIGN
M V	m v	DETECTION DEVICE M = MICROWAVE SENSOR V = VIDEO IMAGE SENSOR

WIRING DIAGRAM LEGEND

- EXTERNAL CONDUCTOR
- CONDUCTOR OR BUS
- TIE POINT
- CONTACTOR COIL
- CONTACTOR, NO CONTACT
- TERMINAL BLOCKS
- CONTACTOR, NC CONTACT
- ENCLOSURE BOND
- GROUNDING ELECTRODE
- CIRCUIT BREAKER
- RECEPTACLE

PULL BOXES

NEW	EXISTING	
		PULL BOX, No. 5 UNLESS OTHERWISE INDICATED OR NOTED
3	9A(21)	PULL BOX, ADDITIONAL DESIGNATIONS OR DESCRIPTIONS

3 No. 3½ PULL BOX
5 No. 5 PULL BOX
6 No. 6 PULL BOX
7 No. 7 (CEILING PULL BOX)
8 No. 8 (PENDANT SOFFIT PULL BOX)
9 No. 9 PULL BOX
9A No. 9A PULL BOX

(C) COMMUNICATIONS PULL BOX
(E) PULL BOX WITH EXTENSION
(S) SPRINKLER CONTROL PULL BOX
(21) ANCHOR BOLTS AND CONDUIT FOR FUTURE INSTALLATION OF TYPE 21 STANDARD
(T) TRAFFIC PULL BOX

VEHICLE DETECTORS

5 J 9 U

- VEHICLE DETECTOR DESIGNATION
- U = UPPER
  L = LOWER
- SLOT NUMBER IN INPUT FILE
- INPUT FILE (I OR J)
- PHASE

NEW	EXISTING	
		TYPE A DETECTOR LOOP. OUTLINE OF SAWCUT SHOWN
		TYPE B DETECTOR LOOP. OUTLINE OF SAWCUT SHOWN
		TYPE C DETECTOR LOOP. OUTLINE OF SAWCUT SHOWN
		TYPE D DETECTOR LOOP. OUTLINE OF SAWCUT SHOWN
		TYPE E DETECTOR LOOP. OUTLINE OF SAWCUT SHOWN
		TYPE Q DETECTOR LOOP. OUTLINE OF SAWCUT SHOWN
		MAGNETIC DETECTOR
DH	dh	DETECTOR HANDHOLE
		MICROWAVE OR VIDEO DETECTION ZONE

STATE OF CALIFORNIA
DEPARTMENT OF TRANSPORTATION

ELECTRICAL SYSTEMS (LEGEND AND ABBREVIATIONS)

NO SCALE

RSP ES-1C DATED JULY 19, 2013 SUPERSEDES STANDARD PLAN ES-1C DATED MAY 20, 2011 - PAGE 427 OF THE STANDARD PLANS BOOK DATED 2010.

REVISED STANDARD PLAN RSP ES-1C

2010 REVISED STANDARD PLAN RSP ES-1C

7-11-13

Dist	COUNTY	ROUTE	POST MILES TOTAL PROJECT	SHEET No.	TOTAL SHEETS
07	LA	405	R12.6/R21.2	283	288

Theresa Gabriel
REGISTERED ELECTRICAL ENGINEER

July 19, 2013
PLANS APPROVAL DATE

REGISTERED PROFESSIONAL ENGINEER
Theresa Aziz Gabriel
No. E15129
Exp. 6-30-14
ELECTRICAL
STATE OF CALIFORNIA

THE STATE OF CALIFORNIA OR ITS OFFICERS OR AGENTS SHALL NOT BE RESPONSIBLE FOR THE ACCURACY OR COMPLETENESS OF SCANNED COPIES OF THIS PLAN SHEET.

TO ACCOMPANY PLANS DATED 6-15-15

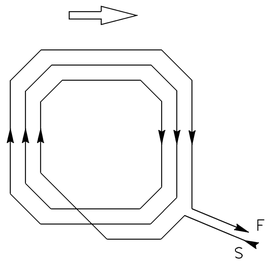

WINDING DETAIL

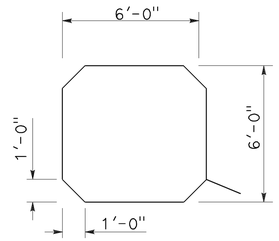

SAWCUT DETAIL

TYPE A LOOP DETECTOR CONFIGURATION

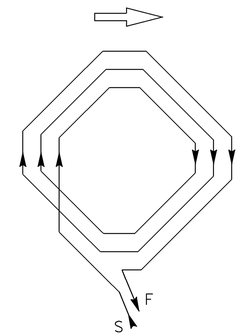

WINDING DETAIL

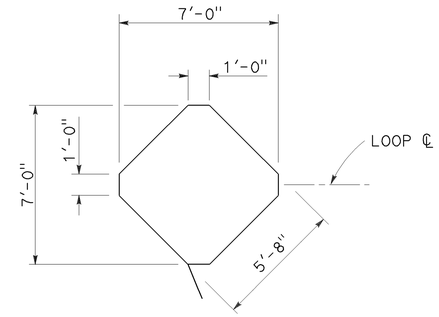

SAWCUT DETAIL

TYPE B LOOP DETECTOR CONFIGURATION

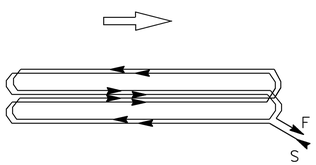

WINDING DETAIL

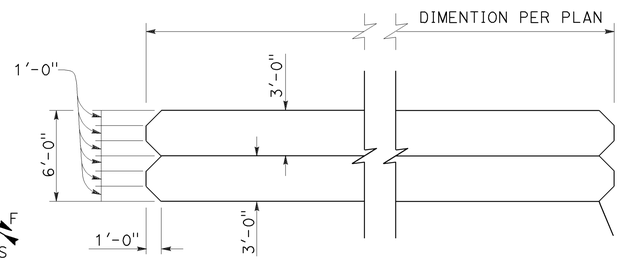

SAWCUT DETAIL

TYPE C LOOP DETECTOR CONFIGURATION

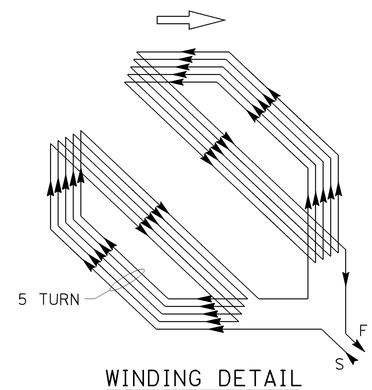

WINDING DETAIL

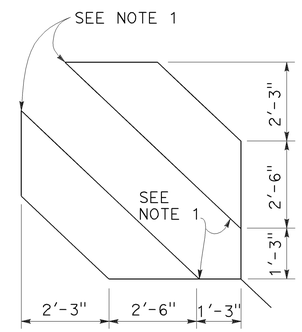

SAWCUT DETAIL

TYPE D LOOP DETECTOR CONFIGURATION

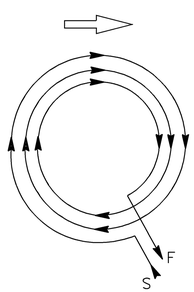

WINDING DETAIL

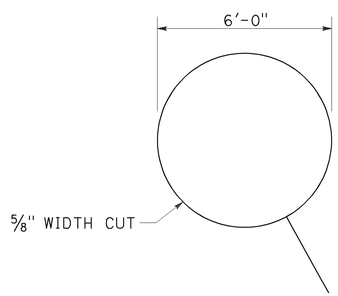

SAWCUT DETAIL

TYPE E LOOP DETECTOR CONFIGURATION

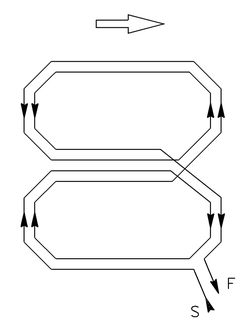

WINDING DETAIL

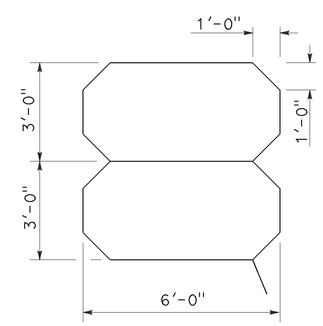

SAWCUT DETAIL

TYPE Q LOOP DETECTOR CONFIGURATION

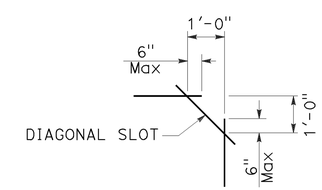

PLAN VIEW OF DIAGONAL SLOT AT CORNERS

NOTES:

1. Round corners of acute angle sawcuts to prevent damage to conductors.
2. Typical distance separating loops from edge to edge is 10' for Type A, B, D and E installation in single lane.

STATE OF CALIFORNIA
DEPARTMENT OF TRANSPORTATION

ELECTRICAL SYSTEMS (DETECTORS)

NO SCALE

RSP ES-5B DATED JULY 19, 2013 SUPERSEDES STANDARD PLAN ES-5B DATED MAY 20, 2011 - PAGE 449 OF THE STANDARD PLANS BOOK DATED 2010.

REVISED STANDARD PLAN RSP ES-5B

2010 REVISED STANDARD PLAN RSP ES-5B

7-9-13

Dist	COUNTY	ROUTE	POST MILES TOTAL PROJECT	SHEET No.	TOTAL SHEETS
07	LA	405	R12.6/R21.2	284	288

Theresa Gabriel
REGISTERED ELECTRICAL ENGINEER

July 19, 2013
PLANS APPROVAL DATE

REGISTERED PROFESSIONAL ENGINEER Theresa Aziz Gabriel No. E15129 Exp. 6-30-14 ELECTRICAL STATE OF CALIFORNIA

THE STATE OF CALIFORNIA OR ITS OFFICERS OR AGENTS SHALL NOT BE RESPONSIBLE FOR THE ACCURACY OR COMPLETENESS OF SCANNED COPIES OF THIS PLAN SHEET.

TO ACCOMPANY PLANS DATED 6-15-15

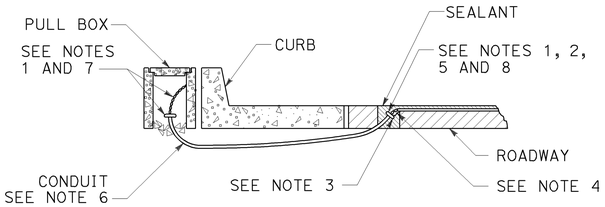

TYPE A
CURB TERMINATION DETAIL

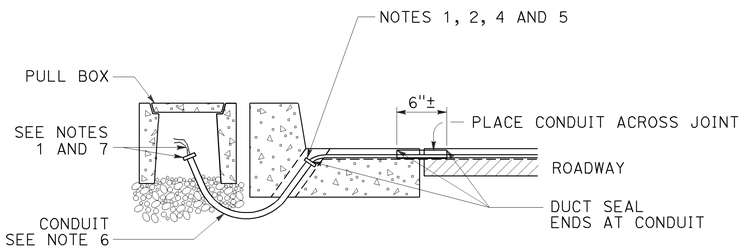

CROSS SECTION

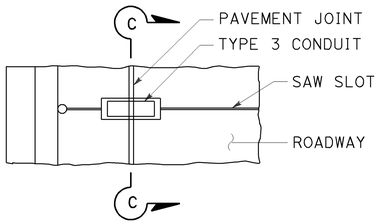

PLAN VIEW

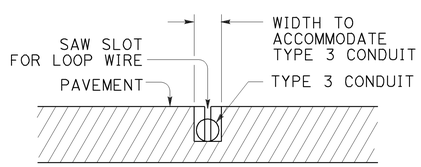

SECTION C-C

TYPE B
CURB TERMINATION DETAIL

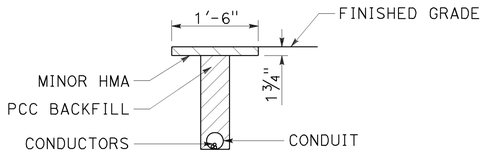

"T" TRENCH
DETAIL T

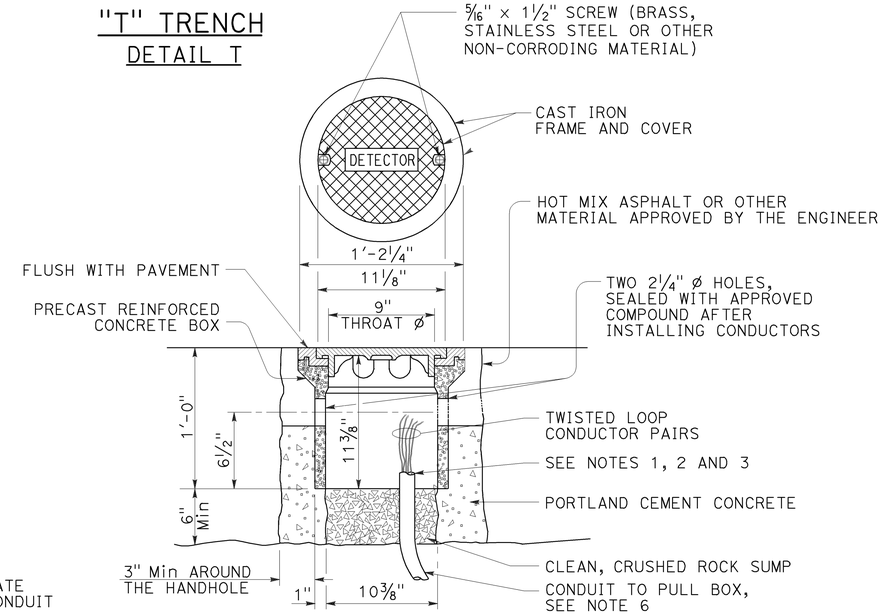

DETECTOR HANDHOLE DETAIL

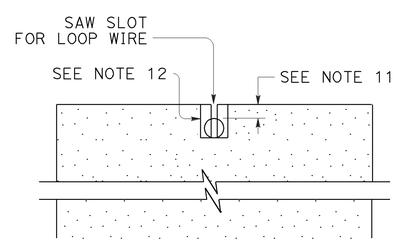

SECTION A-A

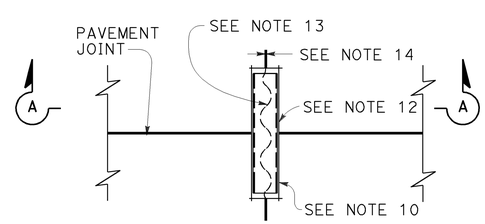

PLAN VIEW
TYPICAL LOOP LEAD-IN DETAIL AT PAVEMENT JOINT

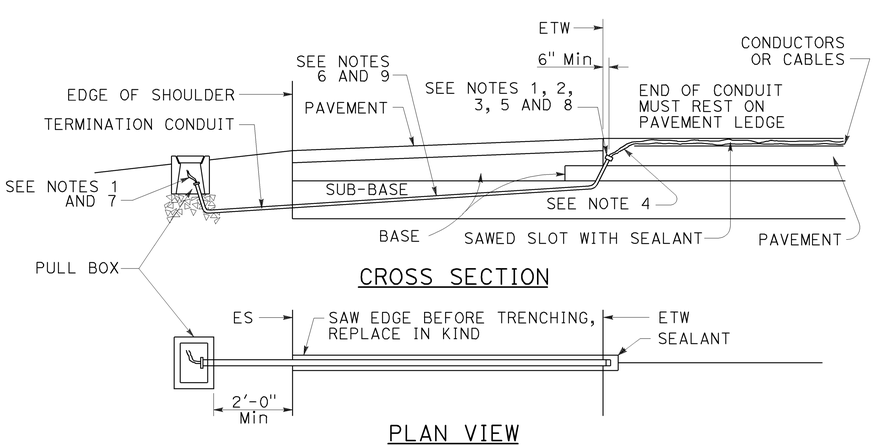

CROSS SECTION

PLAN VIEW
SHOULDER TERMINATION DETAILS

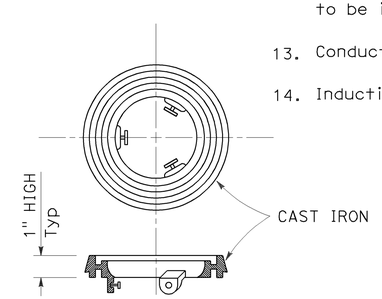

LOCKING GRADE RING

NOTES:

1. Bushing shall be used at end of conduit.
2. Tape detector conductors or cables 3" each side of bushings.
3. Install duct seal compound to each end of termination conduit before installing sealant.
4. Round all sharp edges where detector conductors or cables have to pass.
5. End of conduit shall be 3⅛" below roadway surface.
6. Conduit size / Loop conductors
   - 1"C minimum — 1 to 2 pairs
   - 1½"C minimum — 3 to 4 pairs
   - 2"C minimum — 5 or more pairs
7. Splice detector conductors or cables to detector lead-in-cable.
8. Location of detector handhole when shown on plans.
9. When the shoulder and traveled way are paved with the same material and there is no joint between them, the conduit shall extend only 2'-0" into the shoulder pavement.
10. ¾"C, Type 3 conduit 6" long minimum, plug both ends with duct compound to keep out sealant.
11. ½" Minimum between top of conduit and pavement surface.
12. Sawcut shall not exceed 1" in width and ⅛" longer than conduit to be installed.
13. Conductors with ½" minimum slack inside conduit.
14. Inductive loop detector saw slot.

STATE OF CALIFORNIA
DEPARTMENT OF TRANSPORTATION

ELECTRICAL SYSTEMS (CURB TERMINATION AND HANDHOLE)

NO SCALE

RSP ES-5D DATED JULY 19, 2013 SUPERSEDES STANDARD PLAN ES-5D DATED MAY 20, 2011 - PAGE 451 OF THE STANDARD PLANS BOOK DATED 2010.

REVISED STANDARD PLAN RSP ES-5D

2010 REVISED STANDARD PLAN RSP ES-5D

7-9-13

DIST	COUNTY	ROUTE	POST MILES TOTAL PROJECT	SHEET NO.	TOTAL SHEETS
07	LA	405	R12.6/R21.2	285	288

Theresa Gabriel
REGISTERED ELECTRICAL ENGINEER

July 19, 2013
PLANS APPROVAL DATE

REGISTERED PROFESSIONAL ENGINEER Theresa Aziz Gabriel No. E15129 Exp. 6-30-14 ELECTRICAL STATE OF CALIFORNIA

THE STATE OF CALIFORNIA OR ITS OFFICERS OR AGENTS SHALL NOT BE RESPONSIBLE FOR THE ACCURACY OR COMPLETENESS OF SCANNED COPIES OF THIS PLAN SHEET.

TO ACCOMPANY PLANS DATED 6-15-15

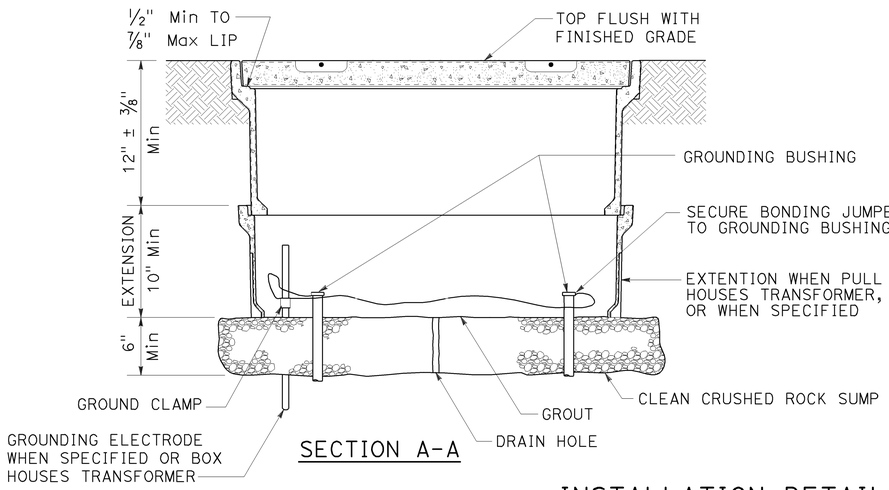

SECTION A-A

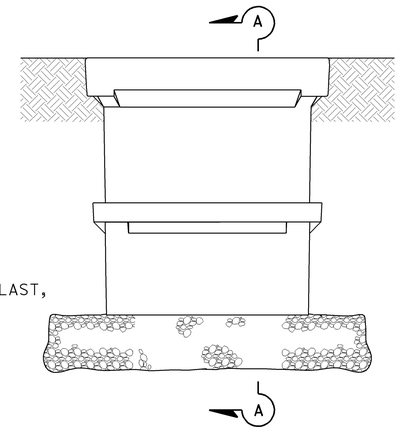

SIDE VIEW

INSTALLATION DETAILS

DETAIL A

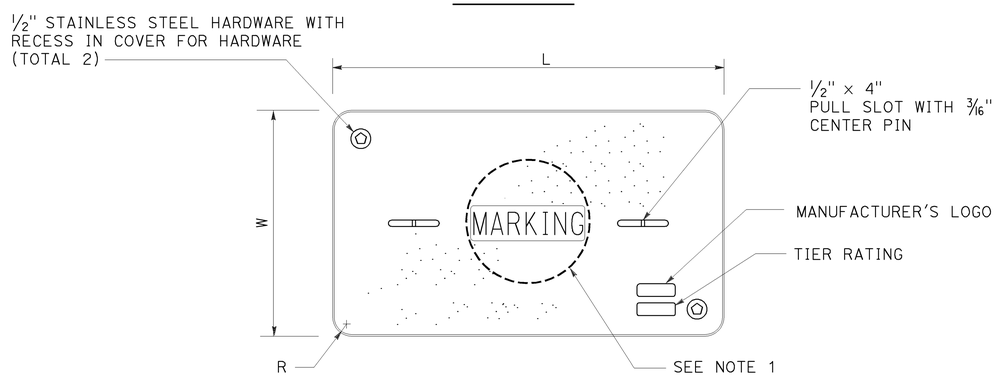

COVER TOP VIEW

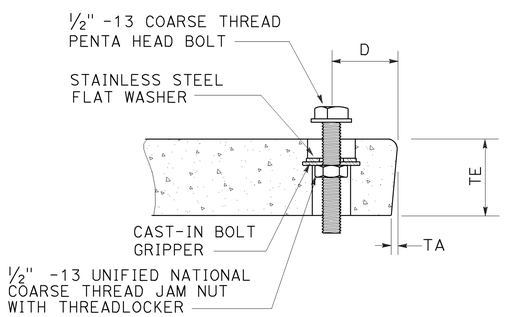

TYPICAL COVER CAPTIVE BOLT

OR SIMILAR

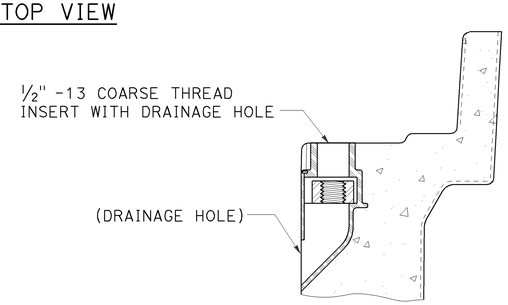

TYPICAL THREADED INSERT

OR SIMILAR

DIMENSION TABLE

PULL BOX	PULL BOX			COVER						
	MINIMUM DEPTH BOX	MINIMUM DEPTH EXTENSION	MAXIMUM WEIGHT	L	W	R	TE	TA	D	MAXIMUM WEIGHT
No. 3½	12"	N/A	40 lb	1′ - 3⅜"	10⅛"	1⅜"	2"	⅛"	1¾"	30 lb
No. 5	12"	10"	55 lb	1′ - 11¼"	1′ - 1¾"	1⅜"	2"	⅛"	1¾"	60 lb
No. 6	12"	10"	70 lb	2′ - 6½"	1′ - 5½"	1⅜"	2"	⅛"	2"	85 lb

NOTES:

1. Pull box covers shall be marked as follows: "SERVICE" Service circuits between service point and service disconnect; "SPRINKLER-CONTROL" sprinkler control circuits, 50 V or less; "CALTRANS" on all pull boxes, except pull boxes marked "SPRINKLER-CONTROL"; and "TELEPHONE" Telephone service;

   A) No. 3½ pull box.
      1) "SIGNAL" - Traffic signal circuits with or without lighting or sign lighting circuits.
      2) "LIGHTING" - Lighting or sign lighting circuits where voltage is under 600 V.

   B) No. 5, 6, 9 or 9A pull box.
      1) "TRAFFIC SIGNAL" - Traffic signal circuits with or without lighting or sign lighting circuits.
      2) "LIGHTING" - Lighting or sign lighting circuits where voltage is under 600 V.
      3) "LIGHTING-HIGH VOLTAGE" - Lighting or sign lighting circuits where voltage is above 600 V.
      4) "IRRIGATION" - Circuits to irrigation controller 120 V or more.
      5) "RAMP METER" - Ramp meter circuits.
      6) "COUNT STATION" - Count or speed monitor circuits.
      7) "COMMUNICATIONS" - Communication circuits.
      8) "TOS COMMUNICATIONS" - TOS communication line.
      9) "TOS POWER" - TOS power.
      10) "TDC POWER" - Telephone demarcation cabinet power.
      11) "CCTV" - Closed circuit television circuits.
      12) "TMS" - Traffic monitoring station circuits.
      13) "CMS" - Changeable message sign circuits.
      14) "HAR" - Highway advisory radio circuits.
      15) "BOOSTER PUMP" - Booster pump circuit.

2. The nominal dimensions of the opening in which the cover sets shall be the same as the cover dimensions except the length and width dimensions shall be ⅛" greater.

3. Covers and boxes shall be interchangeable with California standard male and female gages. When interchanged with a standard male or female gage, the top surfaces shall be flush within ⅛". Top outside radius of covers and pull boxes shall have a ⅛" radius.

4. Pull box extension may be another pull box as long as the bottom edge of the pull box can fit into the cover opening.

5. All dimensions for the cover for non-traffic pull box are nominal values.

STATE OF CALIFORNIA
DEPARTMENT OF TRANSPORTATION

ELECTRICAL SYSTEMS (NON-TRAFFIC PULL BOX)

NO SCALE

RSP ES-8A DATED JULY 19, 2013 SUPERSEDES RSP ES-8A DATED JANUARY 20, 2012 THAT SUPPLEMENTS THE STANDARD PLANS BOOK DATED 2010.

REVISED STANDARD PLAN RSP ES-8A

2010 REVISED STANDARD PLAN RSP ES-8A

7-15-13

DIST	COUNTY	ROUTE	POST MILES TOTAL PROJECT	SHEET NO.	TOTAL SHEETS
07	LA	405	R12.6/R21.2	286	288

Theresa Gabriel
REGISTERED ELECTRICAL ENGINEER

July 19, 2013
PLANS APPROVAL DATE

REGISTERED PROFESSIONAL ENGINEER
Theresa Aziz Gabriel
No. E15129
Exp. 6-30-14
ELECTRICAL
STATE OF CALIFORNIA

THE STATE OF CALIFORNIA OR ITS OFFICERS OR AGENTS SHALL NOT BE RESPONSIBLE FOR THE ACCURACY OR COMPLETENESS OF SCANNED COPIES OF THIS PLAN SHEET.

TO ACCOMPANY PLANS DATED 6-15-15

2010 REVISED STANDARD PLAN RSP ES-8B

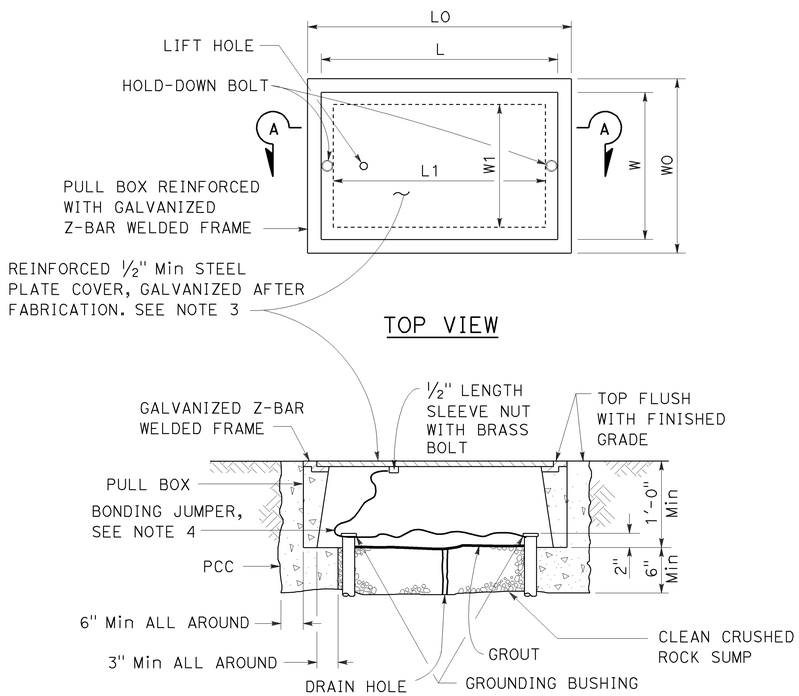

SECTION A-A

No. 3½(T), No. 5(T) AND No. 6(T) TRAFFIC PULL BOX

NOTES:

1. Traffic pull box shall be provided with steel cover and special concrete footing. Steel cover shall have embossed non-skid pattern.
2. Steel reinforcing shall be as regularly used in the standard products of the respective manufacturer.
3. Pull box covers shall be marked as follows: "SERVICE" Service circuits between service point and service disconnect; "SPRINKLER-CONTROL" Sprinkler control circuits, 50 V or less; "CALTRANS" On all pull boxes, except pull boxes marked "SPRINKLER-CONTROL"; and "TELEPHONE" Telephone service.
   - A) No. 3½(T) pull box.
     - 1) "SIGNAL" - Traffic signal circuits with or without lighting or sign lighting circuits.
     - 2) "LIGHTING" - Lighting or sign lighting circuits where voltage is under 600 V.
   - B) No. 5(T) or 6(T) pull box.
     - 1) "TRAFFIC SIGNAL" - Traffic signal circuits with or without lighting or sign lighting circuits.
     - 2) "LIGHTING" - Lighting or sign lighting circuits where voltage is under 600 V.
     - 3) "LIGHTING-HIGH VOLTAGE" - Lighting or sign lighting circuits where voltage is above 600 V.
     - 4) "IRRIGATION" - Circuits to irrigation controller 120 V or more.
     - 5) "RAMP METER" - Ramp meter circuits.
     - 6) "COUNT STATION" - Count or speed monitor circuits.
     - 7) "COMMUNICATION" - Communication circuits.
     - 8) "TOS COMMUNICATIONS" - TOS communications line.
     - 9) "TOS POWER" - TOS power.
     - 10) "TDC POWER" - Telephone demarcation cabinet power.
     - 11) "CCTV" - Closed circuit television circuits.
     - 12) "TMS" - Traffic monitoring station circuits.
     - 13) "CMS" - Changeable message sign circuits.
     - 14) "HAR" - Highway advisory radio circuits.
     - 15) "BOOSTER PUMP" - Booster pump circuit.
4. Bonding jumper for metal covers shall be 3' long, minimum.
5. The nominal dimensions of the opening in which the cover sets shall be the same as the cover dimensions except the length and width dimensions shall be ⅛" greater.
6. Covers and boxes shall be interchangeable with California standard male and female gages. When interchanged with a standard male or female gage, the top surfaces shall be flush within ⅛".

DIMENSION TABLE

PULL BOX	PULL BOX						COVER				
	MINIMUM * THICKNESS	MINIMUM DEPTH BOX AND EXTENSION	WO	LO	L1	W1	L **	W **	R	EDGE THICKNESS	EDGE TAPER
No. 3½(T)	1½"	1'-0"	1'-5"± 1"	1'-8⅞"±	1'-2½"±	10⅝"± 1"	1'-8"±	1'-1¾"±	0"	½"	NONE
No. 5(T)	1¾"	1'-0"	1'-11½"± 1"	2'-5½"±	1'-7"±	1'-1"± 1"	2'-3"±	1'-4"±	0"	½"	NONE
No. 6(T)	2"	1'-0"	2'-6"± 1"	2'-11½"±	1'-11½"±	1'-5"± 1"	2'-9"±	1'-8"±	0"	½"	NONE

* EXCLUDING CONDUIT WEB ** TOP DIMENSION

STATE OF CALIFORNIA
DEPARTMENT OF TRANSPORTATION

ELECTRICAL SYSTEMS (TRAFFIC PULL BOX)

NO SCALE

RSP ES-8B DATED JULY 19, 2013 SUPERSEDES RSP ES-8B DATED JANUARY 20, 2012 THAT SUPPLEMENTS THE STANDARD PLANS BOOK DATED 2010.

REVISED STANDARD PLAN RSP ES-8B

7-15-13

Dist	COUNTY	ROUTE	POST MILES TOTAL PROJECT	SHEET No.	TOTAL SHEETS
07	LA	405	R12.6/R21.2	287	288

Theresa Gabriel
REGISTERED ELECTRICAL ENGINEER

July 19, 2013
PLANS APPROVAL DATE

REGISTERED PROFESSIONAL ENGINEER
Theresa Aziz Gabriel
No. E15129
Exp. 6-30-14
ELECTRICAL
STATE OF CALIFORNIA

THE STATE OF CALIFORNIA OR ITS OFFICERS OR AGENTS SHALL NOT BE RESPONSIBLE FOR THE ACCURACY OR COMPLETENESS OF SCANNED COPIES OF THIS PLAN SHEET.

TO ACCOMPANY PLANS DATED 6-15-15

ISOFOOTCANDLE CURVE - MINIMUM

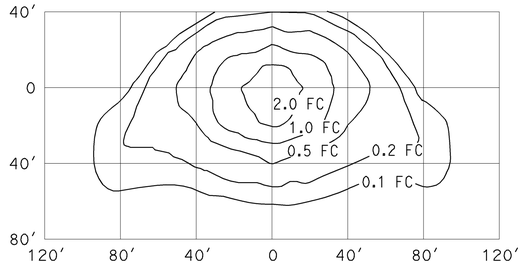

TYPE III MEDIUM CUTOFF

Cutoff Luminaire
34′ Mounting Height
Lamp operated at 22,000 lm
200-W high pressure sodium lamp
ANSI Designation S66

ISOFOOTCANDLE CURVE - MINIMUM

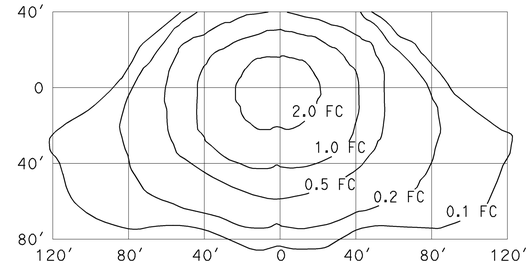

TYPE III MEDIUM CUTOFF

Cutoff Luminaire
40′ Mounting Height
Lamp operated at 37,000 lm
310-W high pressure sodium lamp
ANSI Designation S67

ISOFOOTCANDLE CURVE - MINIMUM

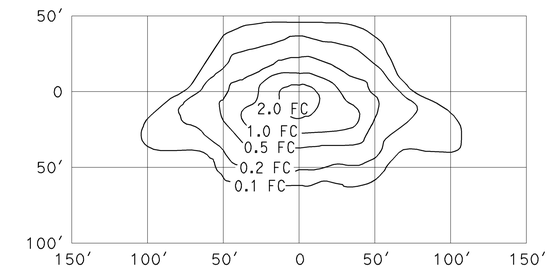

TYPE III MEDIUM CUTOFF

Cutoff Luminaire
30′ Mounting Height
Lamp operated at 16,000 lm
150-W high pressure sodium lamp
ANSI Designation S55

ISOFOOTCANDLE CURVE - MINIMUM

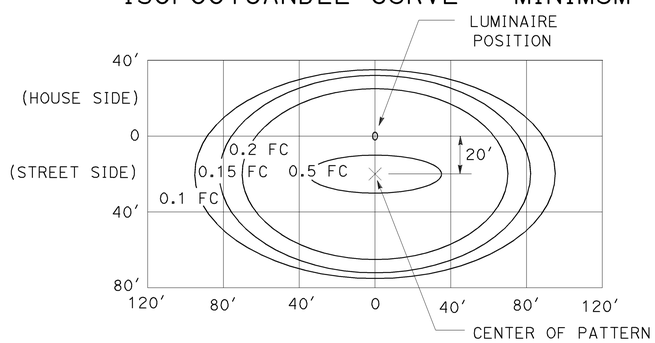

LED LUMINAIRE ROADWAY 1

165-W at 34′ Mounting Height

ISOFOOTCANDLE CURVE - MINIMUM

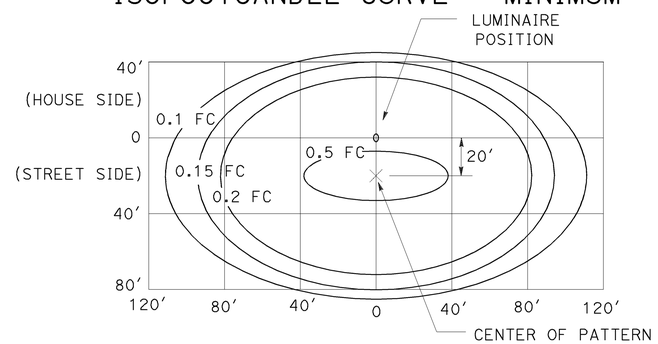

LED LUMINAIRE ROADWAY 2

235-W at 40′ Mounting Height

ISOFOOTCANDLE CURVE - MINIMUM

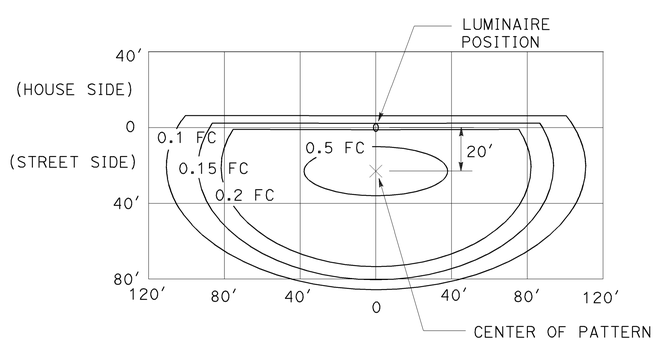

LED LUMINAIRE ROADWAY 3

235-W at 40′ Mounting Height
with back side control

ISOFOOTCANDLE CURVE - MINIMUM

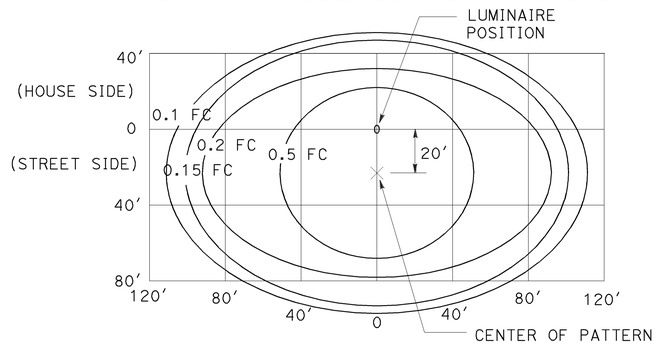

LED LUMINAIRE ROADWAY 4

300-W at 40′ Mounting Height

ISOFOOTCANDLE CURVE - MINIMUM

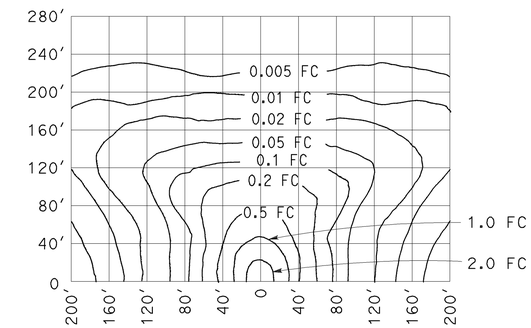

LOW PRESSURE SODIUM LUMINAIRE

40′ Mounting Height
Lamp operated at 33,000 lm
180-W low pressure sodium lamp

STATE OF CALIFORNIA
DEPARTMENT OF TRANSPORTATION

ELECTRICAL SYSTEMS (ISOFOOTCANDLE DIAGRAMS)

NO SCALE

RSP ES-10A DATED JULY 19, 2013 SUPERSEDES RSP ES-10A DATED JULY 20, 2012 THAT SUPPLEMENTS THE STANDARD PLANS BOOK DATED 2010.

REVISED STANDARD PLAN RSP ES-10A

2010 REVISED STANDARD PLAN RSP ES-10A

Dist	COUNTY	ROUTE	POST MILES TOTAL PROJECT	SHEET No.	TOTAL SHEETS
07	LA	405	R12.6/R21.2	288	288

REGISTERED CIVIL ENGINEER

July 19, 2013
PLANS APPROVAL DATE

REGISTERED PROFESSIONAL ENGINEER
Stanley P. Johnson
No. C57793
Exp. 3-31-14
CIVIL
STATE OF CALIFORNIA

THE STATE OF CALIFORNIA OR ITS OFFICERS OR AGENTS SHALL NOT BE RESPONSIBLE FOR THE ACCURACY OR COMPLETENESS OF SCANNED COPIES OF THIS PLAN SHEET.

TO ACCOMPANY PLANS DATED 6-15-15

STANDARD TYPE	SETBACK (DIMENSION A)
32	30'-0" (Min)
31	20'-0" (Min)
15, 15D, 15-SB, 21, 21D, 30	ARM LENGTH (Min)

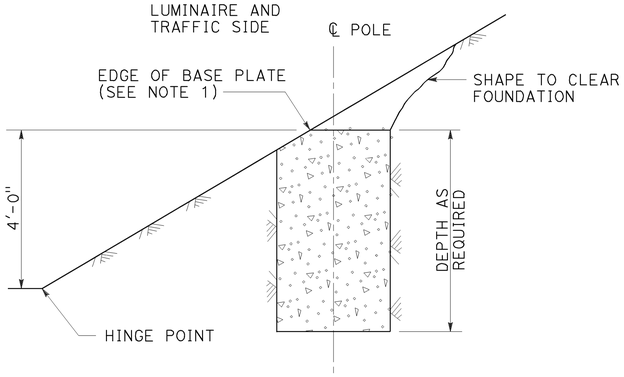

CUT SLOPES
STEEPER THAN 4:1,
LESS THAN 2:1
DETAIL A-1
See Note 2 and 3

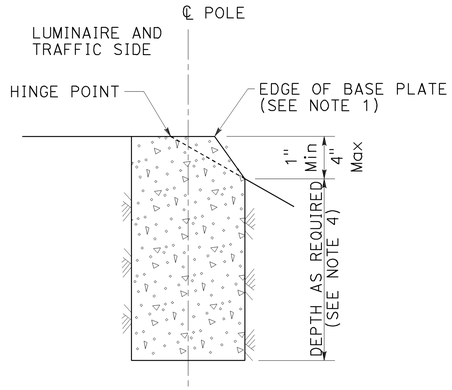

FILL SLOPES
STEEPER THAN 4:1,
LESS THAN 2:1
DETAIL A-2
See Note 2 and 3

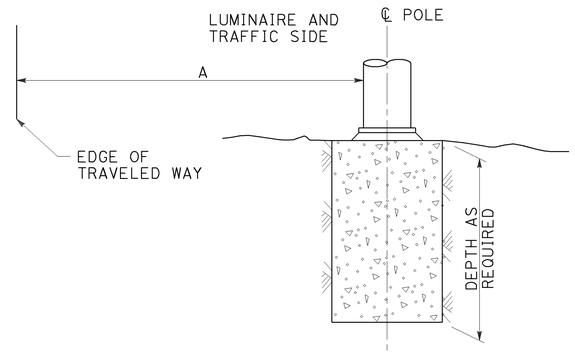

FLAT SECTIONS, CUT OR FILL SLOPES
4:1 OR FLATTER
DETAIL A-3
See Note 2

FOUNDATIONS ADJACENT TO ALL ROADWAYS EXCEPT
IN SIDEWALK, MEDIAN AND ISLAND AREAS
DETAIL A

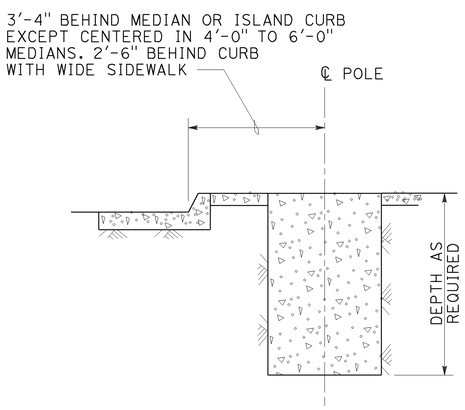

MEDIAN, ISLAND
OR WIDE SIDEWALK
DETAIL B-1
7' Wide and wider

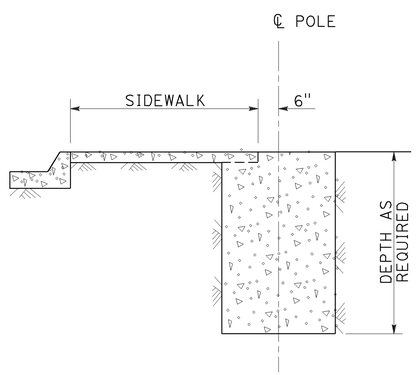

NARROW SIDEWALK
DETAIL B-2
Less than 7' wide

FOUNDATIONS IN SIDEWALK, MEDIAN AND ISLAND AREAS
DETAIL B

NOTES:

1. Where a portion of the foundation is above grade, the top edges shall have a 1" chamfer.
2. Slopes shall be horizontal to vertical ratio (Horizontal : Vertical).
3. Horizontal setbacks on cut and fill slopes steeper than 4:1 shall not exceed the distance shown for flat sections.
4. CIDH embedment depth shall be increased beyond standard depths by the diameter of the CIDH.

STATE OF CALIFORNIA
DEPARTMENT OF TRANSPORTATION

ELECTRICAL SYSTEMS (FOUNDATION INSTALLATIONS)

NO SCALE

RSP ES-11 DATED JULY 19, 2013 SUPERSEDES STANDARD PLAN ES-11
DATED MAY 20, 2011 - PAGE 488 OF THE STANDARD PLANS BOOK DATED 2010.

REVISED STANDARD PLAN RSP ES-11

2010 REVISED STANDARD PLAN RSP ES-11

7-9-13