Dist	COUNTY	ROUTE	POST MILES TOTAL PROJECT	SHEET No.	TOTAL SHEETS
07	LA	210	R16.1/R25.8	901	927

Jaswinder S Sandhu 04-25-14
REGISTERED ELECTRICAL ENGINEER DATE

5-12-14
PLANS APPROVAL DATE

REGISTERED PROFESSIONAL ENGINEER Jaswinder Sandhu No. 11803 Exp. 9-30-14 ELEC STATE OF CALIFORNIA

The State of California or its officers or agents shall not be responsible for the accuracy or completeness of scanned copies of this plan sheet.

CALIFORNIA STATE FIRE MARSHAL APPROVED
Approval of this plan does not authorize or approve any omission or deviation from applicable regulations. Final approval is subject to field inspection. One set of approved plans shall be available on the project site at all times.
Reviewed by: FRANCIS (SONNY) SOLICH
Approval date: March 27, 2014

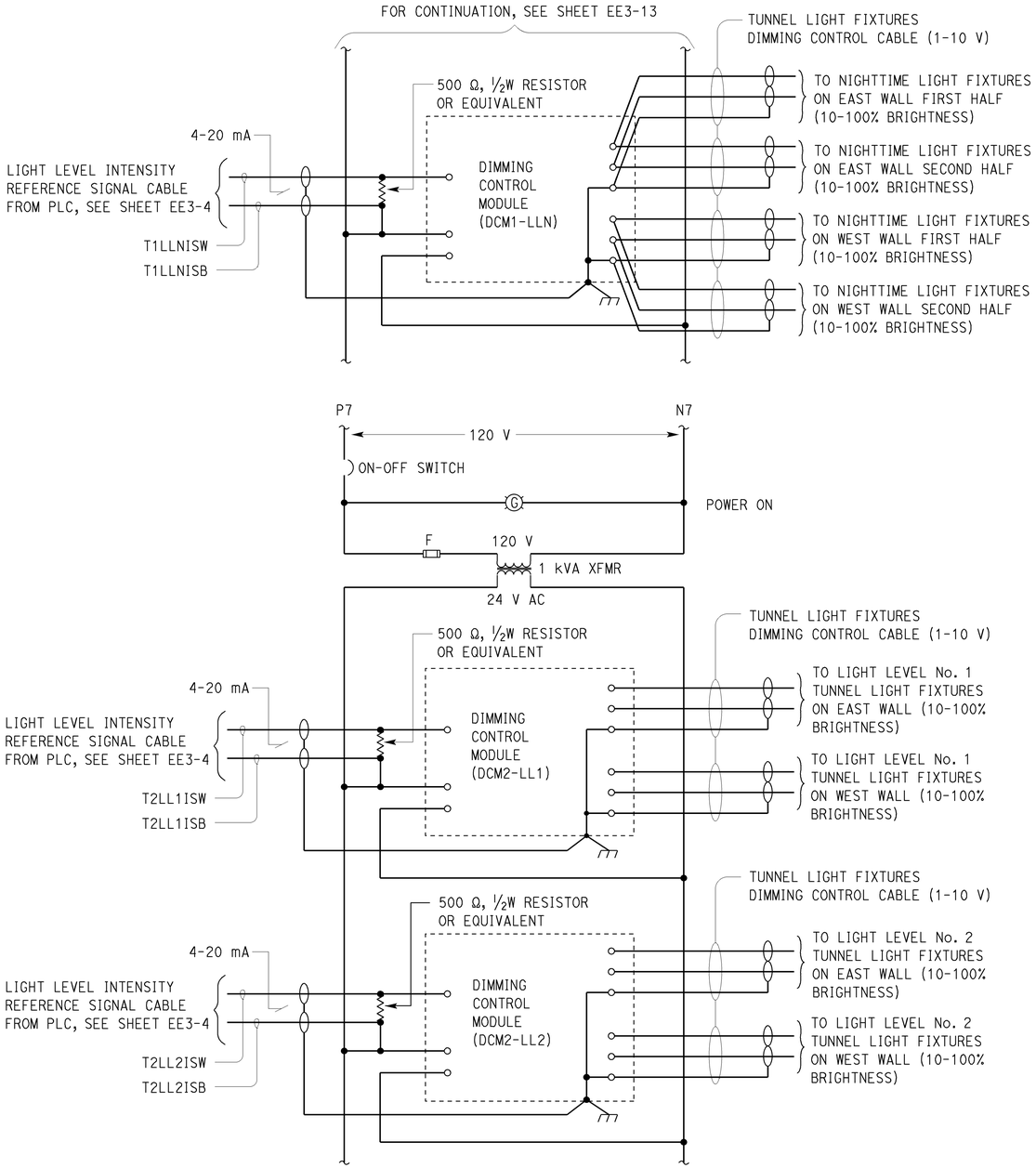

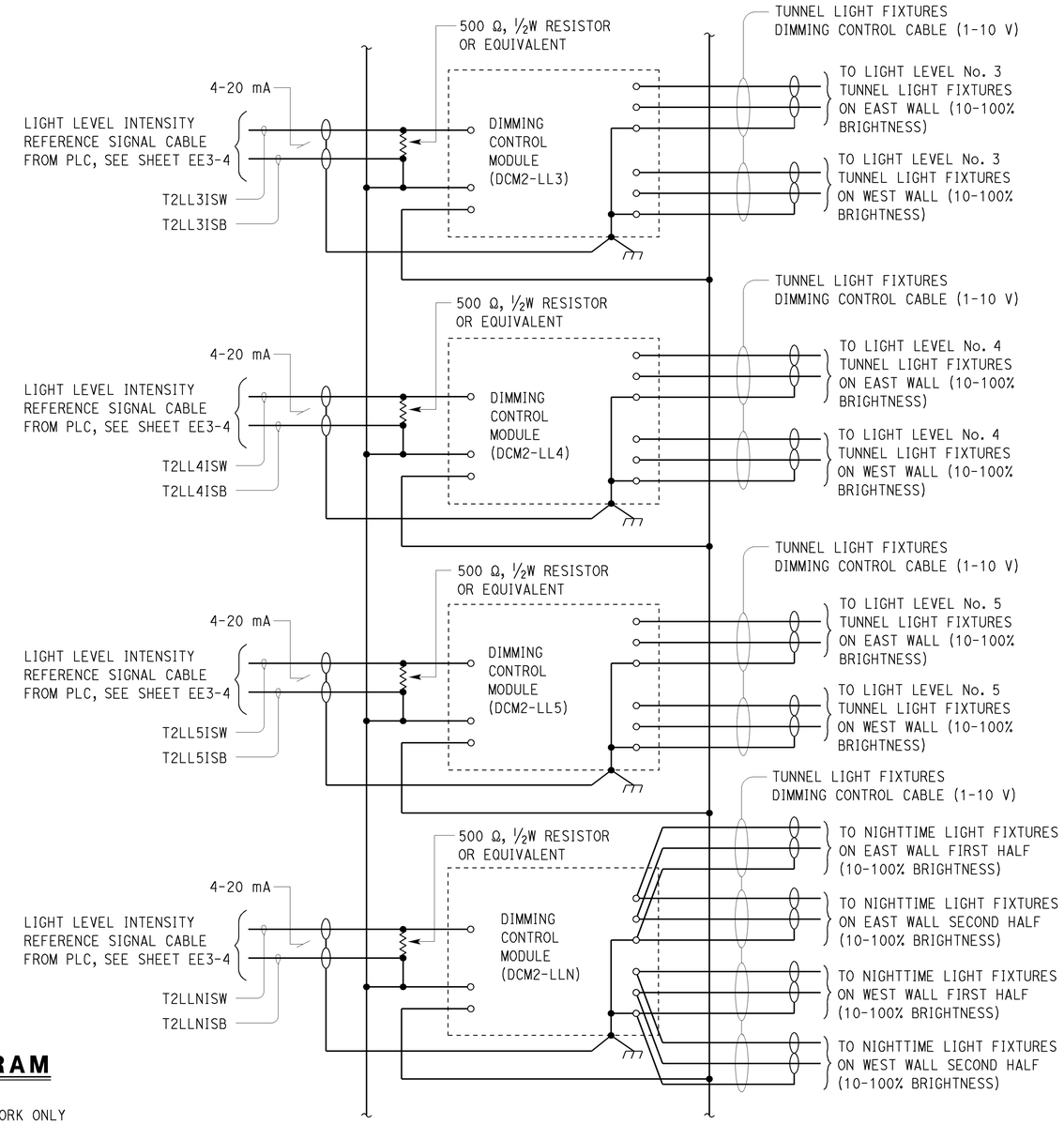

TUNNEL No. 2 DIMMING CONTROL SCHEMATIC DIAGRAM

APPROVED FOR ELECTRICAL WORK ONLY

	BY	CHECKED
DESIGN	Jaswinder Sandhu	Jaswinder Gill
DETAILS	Dali Zhou/Ed Tapalla	Jaswinder Sandhu
QUANTITIES	Jaswinder Sandhu	Jaswinder Gill

STATE OF CALIFORNIA
DEPARTMENT OF TRANSPORTATION

DIVISION OF ENGINEERING SERVICES
ELECTRICAL-MECHANICAL-WATER AND WASTEWATER DESIGN

BRIDGE No. 53-2268
POST MILE R24.92

PASADENA 210/134
TUNNEL CONTROL BUILDING
TUNNEL No. 2 DIMMING CONTROL SCHEMATIC

SHEET EE3-14

TAEMWW Imperial - CCSC Rev. 01/13

ORIGINAL SCALE IN INCHES FOR REDUCED PLANS 0 1 2 3

UNIT: 3597 CONTRACT No.: 2881U4
PROJECT NUMBER & PHASE: 07140000851

DISREGARD PRINTS BEARING EARLIER REVISION DATES
REVISION DATES (PRELIMINARY STAGE ONLY) 12-18-13 1-8-14 2-28-14 4-25-14
SHEET OF

EA 2881U1

P:\dist_07\0700020994_la_210_interchange_building\expedite\ee3_14.dgn
18-JUN-2014 10:19

Dist	COUNTY	ROUTE	POST MILES TOTAL PROJECT	SHEET No.	TOTAL SHEETS
07	LA	210	R16.1/R25.8	902	927

Jaswinder S Sandhu 04-25-14
REGISTERED ELECTRICAL ENGINEER DATE

5-12-14
PLANS APPROVAL DATE

REGISTERED PROFESSIONAL ENGINEER Jaswinder Sandhu No. 11803 Exp. 9-30-14 ELEC STATE OF CALIFORNIA

The State of California or its officers or agents shall not be responsible for the accuracy or completeness of scanned copies of this plan sheet.

CALIFORNIA STATE FIRE MARSHAL APPROVED
Approval of this plan does not authorize or approve any omission or deviation from applicable regulations. Final approval is subject to field inspection. One set of approved plans shall be available on the project site at all times.
Reviewed by: FRANCIS (SONNY) SOLICH
Approval date: March 27, 2014

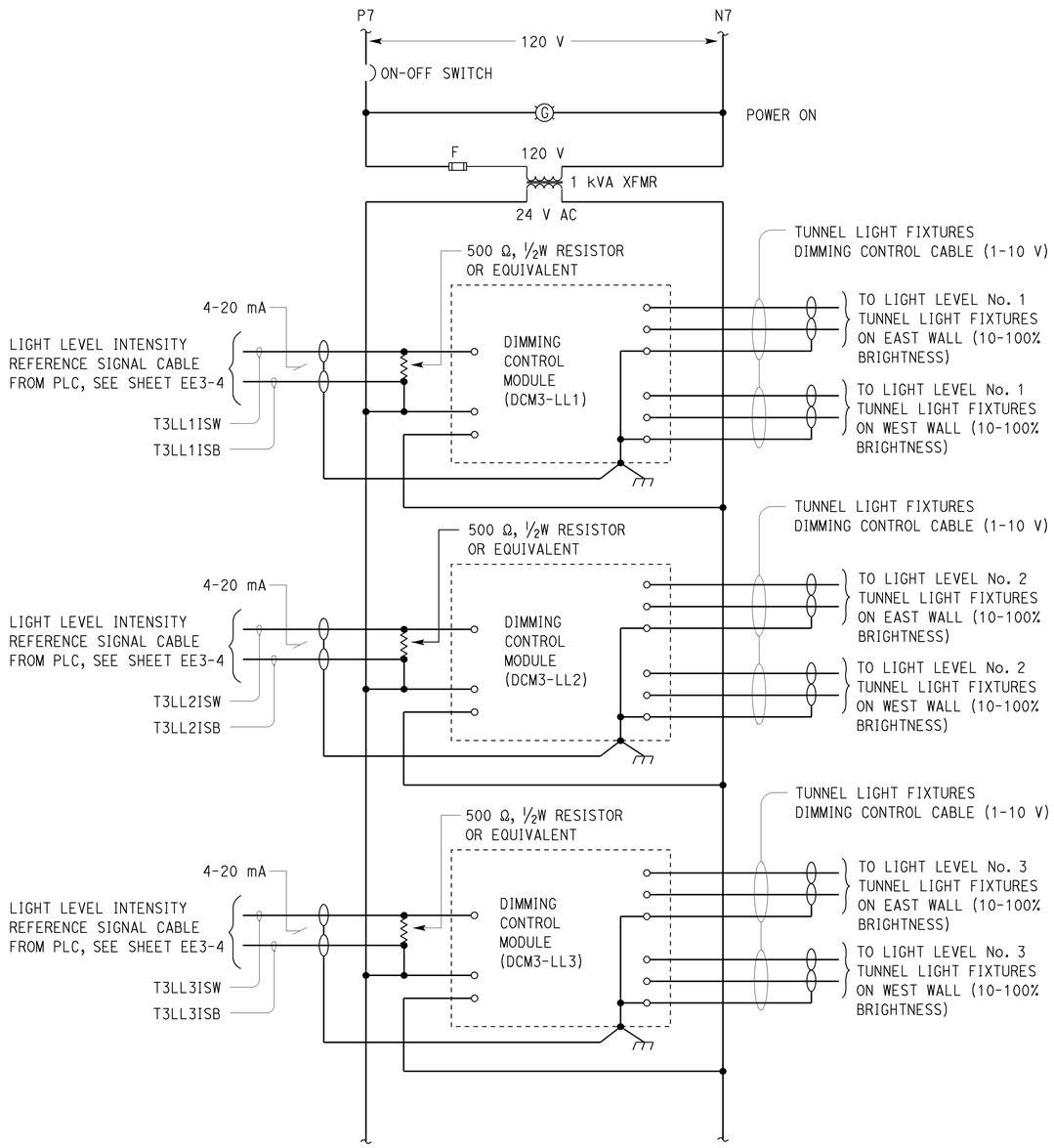

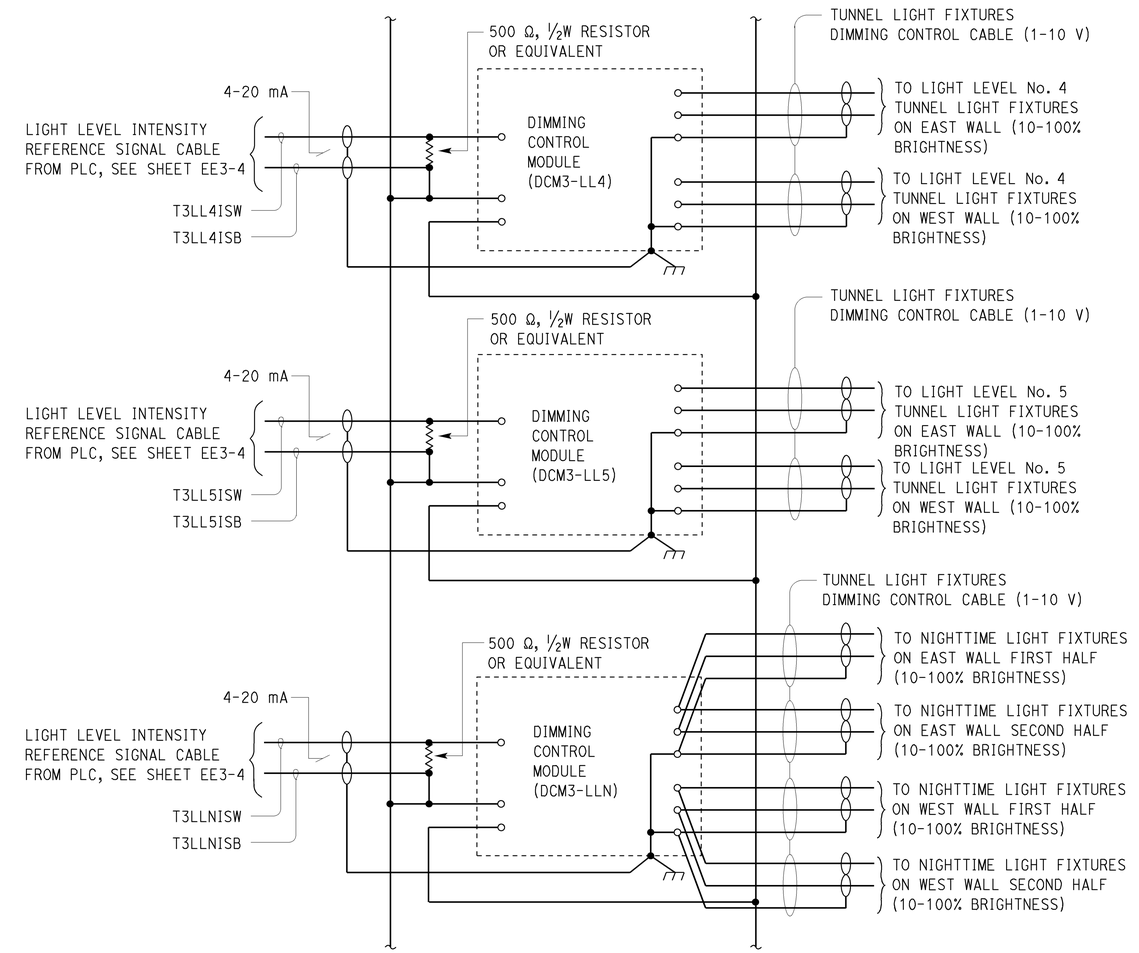

TUNNEL No. 3 DIMMING CONTROL SCHEMATIC DIAGRAM

APPROVED FOR ELECTRICAL WORK ONLY

	BY	CHECKED
DESIGN	Jaswinder Sandhu	Jaswinder Gill
DETAILS	Dali Zhou/Ed Tapalla	Jaswinder Sandhu
QUANTITIES	Jaswinder Sandhu	Jaswinder Gill

STATE OF CALIFORNIA
DEPARTMENT OF TRANSPORTATION

DIVISION OF ENGINEERING SERVICES
ELECTRICAL-MECHANICAL-WATER AND WASTEWATER DESIGN

BRIDGE No. 53-2256
POST MILE R25.13

PASADENA 210/134
TUNNEL CONTROL BUILDING
TUNNEL No. 3 DIMMING CONTROL SCHEMATIC

SHEET EE3-15

TAEMWW Imperial - CCSC Rev. 01/13

ORIGINAL SCALE IN INCHES FOR REDUCED PLANS 0 1 2 3

UNIT: 3597 CONTRACT No.: 2881U4
PROJECT NUMBER & PHASE: 07140000851

DISREGARD PRINTS BEARING EARLIER REVISION DATES
REVISION DATES (PRELIMINARY STAGE ONLY) 12-18-13 1-8-14 2-28-14 4-25-14
SHEET OF

EA 2881U1

P:\dist_07\0700020994_la_210_interchange_building\expedite\ee3_15.dgn
18-JUN-2014 10:19

Dist	COUNTY	ROUTE	POST MILES TOTAL PROJECT	SHEET No.	TOTAL SHEETS
07	LA	210	R16.1/R25.8	903	927

Jaswinder S Sandhu 04-25-14
REGISTERED ELECTRICAL ENGINEER DATE

5-12-14
PLANS APPROVAL DATE

REGISTERED PROFESSIONAL ENGINEER Jaswinder Sandhu No. 11803 Exp. 9-30-14 ELEC STATE OF CALIFORNIA

The State of California or its officers or agents shall not be responsible for the accuracy or completeness of scanned copies of this plan sheet.

CALIFORNIA STATE FIRE MARSHAL APPROVED
Approval of this plan does not authorize or approve any omission or deviation from applicable regulations. Final approval is subject to field inspection. One set of approved plans shall be available on the project site at all times.
Reviewed by: FRANCIS(SONNY)SOLICH
Approval date: March 27,2014

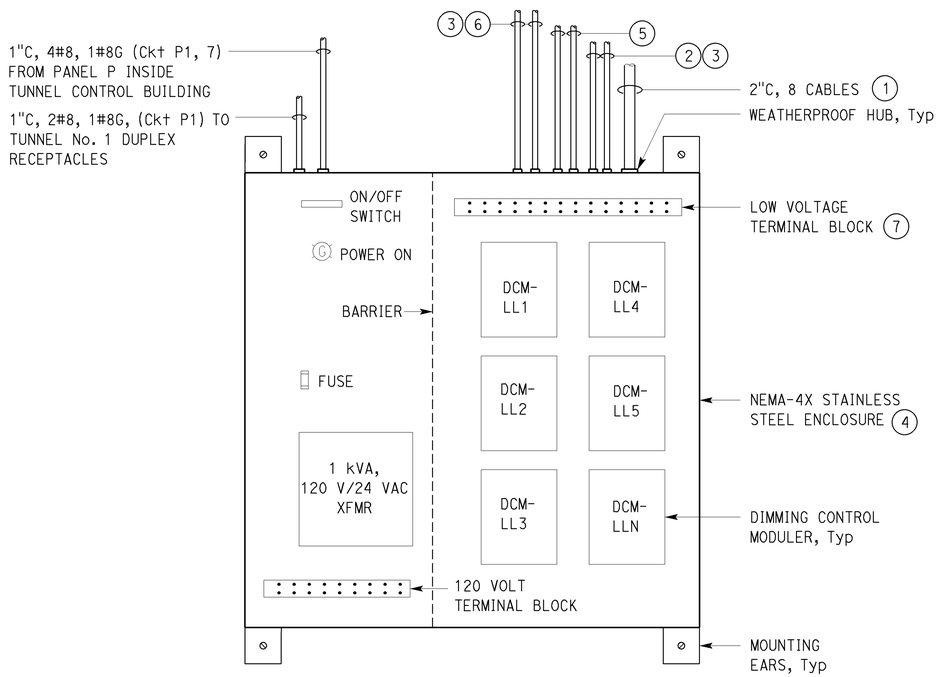

TUNNEL DIMMING CONTROL PANEL

NO SCALE

(EXTERIOR DOUBLE HINGED DOOR NOT SHOWN)

GENERAL NOTES:

A. Tunnel No. 1 Dimming Control Panel shown. Dimming Control Panel for Tunnel No. 2 and 3 arel similar. Dimming Control Panel No. 2 and 3 are supplied by circuit No. P9 and P11.

B. Secure enclosure to Tunnel No. 1 with (4) ⅜"x4" mechanical expansion anchor.

C. Install identification on all Dimming Control Panels and all control cables.

D. Install arc flash hazard warning label. For arc flash warning labels and hasp, see Details on sheet EE4-4.

E. Paint panel enclosure and all conduits to match tunnel wall.

F. Size dimming cable conductors in a manner to maintain light fixtures intensity, within 2% througout the tunnel.

G. Size light level intensity reference cables in a manner to have signal strength within acceptable limits of the dimming control modules.

NOTES:

1. 2"C, 6 Light level intensity reference signal cables, (2) tunnel interior light sensor/photodiode cables to Tunnel Control Building.

2. 1½"C, 6 Light fixtures dimming control cables to the tunnel east wall first and second half light fixtures.

3. This conduit has not been indicated on plan sheet EE1-3 thru EE1-5, but is required. For location of this conduit, see sheet EE4-3.

4. Factory assembled, 12 gage, NEMA-4X, and dual hinged door type stainless steel enclosure, of the size suitable for housing electrical equipment as shown. For hasp details, see sheet EE4-4. Install the following electrical equipment on the back mounting panel:

   - 20 Amperes rated power on-off switch.
   - Power on LED type pilot light.
   - 120/277 Volts barrier type fuse block.
   - 1 kVA Tansformer.
   - Dimming control modules.
   - Power and control terminal blocks.

5. 1"C, Tunnel No. 1 cable interior light sensor/photodide cable to tunnel interior light sensor/photodiode.

6. 1½"C, 6 Light fixtures dimming control cables to west tunnel wall first and second half tunnel light fixtures.

7. Terminate all field wires on terminal blocks. Install factory made jumper as required.

APPROVED FOR ELECTRICAL WORK ONLY

	BY	CHECKED
DESIGN	Jaswinder Sandhu	Jaswinder Gill
DETAILS	Dali Zhou	Jaswinder Sandhu
QUANTITIES	Jaswinder Sandhu	Jaswinder Gill

STATE OF CALIFORNIA
DEPARTMENT OF TRANSPORTATION

DIVISION OF ENGINEERING SERVICES
ELECTRICAL-MECHANICAL-WATER AND WASTEWATER DESIGN

BRIDGE No. L5724
POST MILE

PASADENA 210/134
TUNNEL CONTROL BUILDING
TYPICAL TUNNEL DIMMING CONTROL PANEL

SHEET EE3-16

TAEMWW Imperial - CCSC Rev. 01/13

ORIGINAL SCALE IN INCHES FOR REDUCED PLANS 0 1 2 3

UNIT: 3597 CONTRACT No.: 2881U4
PROJECT NUMBER & PHASE: 07140000851

DISREGARD PRINTS BEARING EARLIER REVISION DATES

REVISION DATES (PRELIMINARY STAGE ONLY) 12-18-13 1-18-14 2-28-14 4-25-14 SHEET OF

EA 2881U1

P:\dist_07\0700020994_la_210_interchange_building\expedite\ee3_16.dgn

18-JUN-2014 10:19

Dist	COUNTY	ROUTE	POST MILES TOTAL PROJECT	SHEET No.	TOTAL SHEETS
07	LA	210	R16.1/R25.8	904	927

Jaswinder S Sandhu 04-25-14
REGISTERED ELECTRICAL ENGINEER DATE

5-12-14
PLANS APPROVAL DATE

REGISTERED PROFESSIONAL ENGINEER Jaswinder Sandhu No. 11803 Exp. 9-30-14 ELEC STATE OF CALIFORNIA

The State of California or its officers or agents shall not be responsible for the accuracy or completeness of scanned copies of this plan sheet.

CALIFORNIA STATE FIRE MARSHAL APPROVED
Approval of this plan does not authorize or approve any omission or deviation from applicable regulations. Final approval is subject to field inspection. One set of approved plans shall be available on the project site at all times.
Reviewed by: FRANCIS (SONNY) SOLICH
Approval date: March 27, 2014

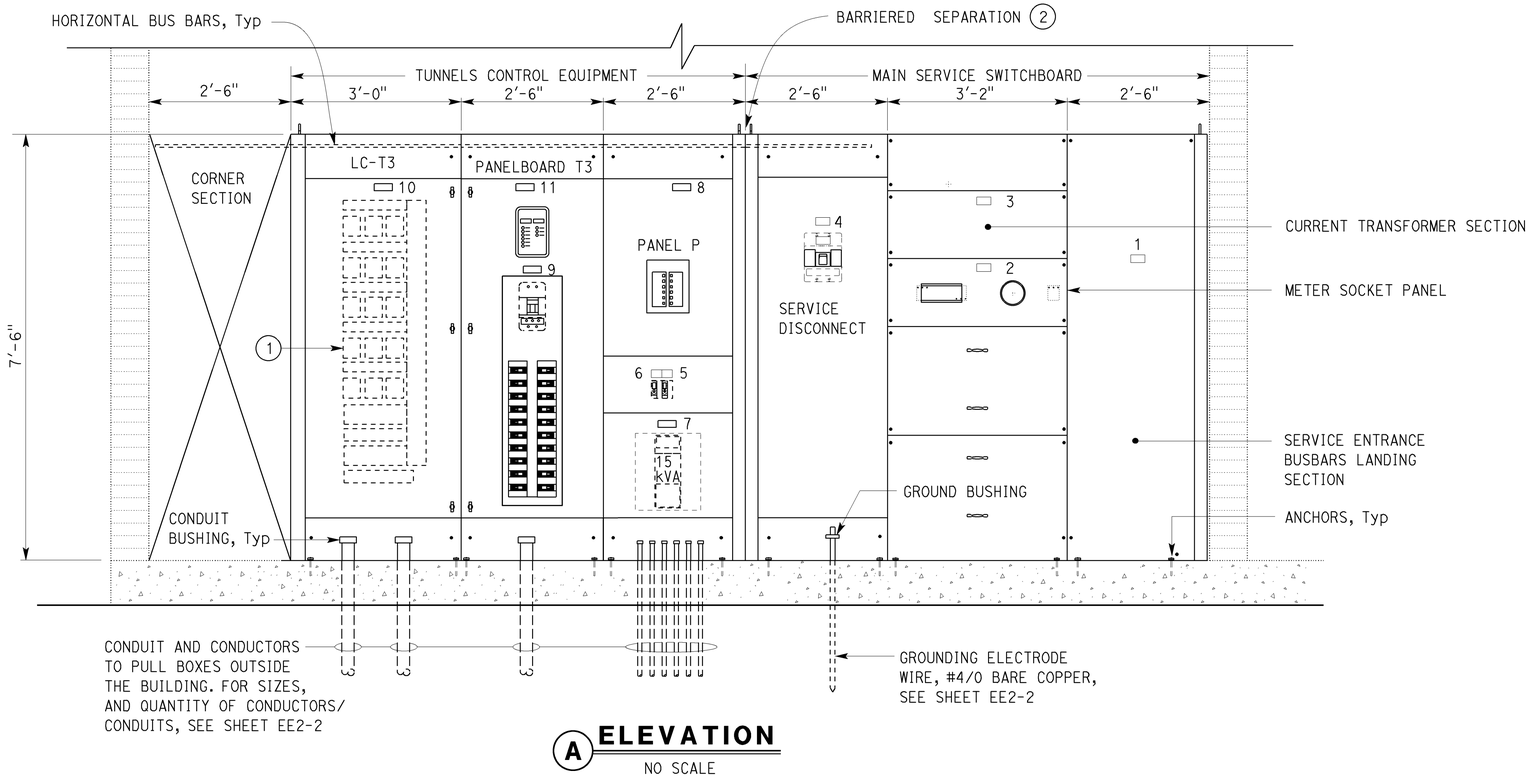

(A) ELEVATION
NO SCALE

NAMEPLATE SCHEDULE		
ITEM No.	INSCRIPTION	LETTER HEIGHT
1	SERVICE ENTRANCE LANDING SECTION	1/2"
2	UTILITY METERING	1/2"
3	UTILITY CT	1/2"
4	SERVICE DISCONNECT 480 V, 3-PHASE, 1200 A	1/2"
5	TRANSFORMER PD 480 V, 3-POLE, 40 A	1/2"
6	TRANSFORMER SD, 50 A	1/4"
7	15 kVA TRANSFORMER	1/4"
8	PANEL P 120/208 V, 3-PHASE, 4-WIRE	1/4"
9	PANEL T3 480/277 V, 3-PHASE, 4-WIRE	1/2"
10	LIGHTING CONTACTORS TUNNEL No. 3	1/2"
11	DIGITAL MULTI-METER TUNNEL No. 3	1/2"

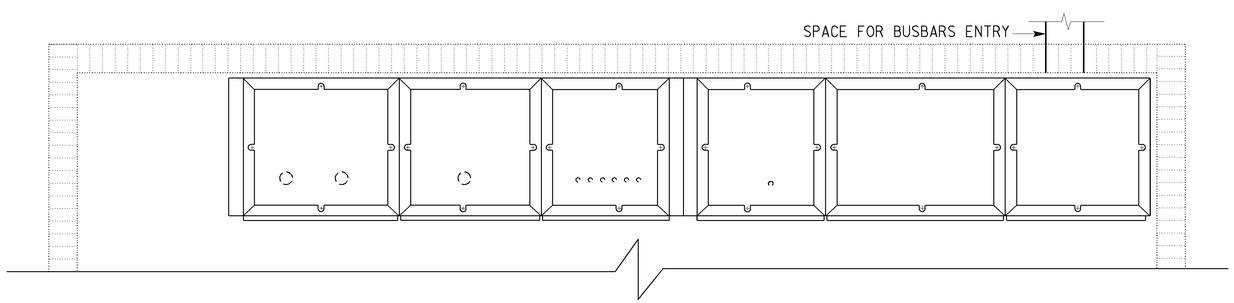

PLAN
NO SCALE

NOTES:

(1) Install nameplate above each of the lighting contactor. Nameplate inscription must be the same as lighting contactors identifier shown on sheet EE3-8. Letter height must be 5/16".

(2) Seal horizontal busbar opening tight to prevent propagation of hot plasma generated during electric blast.

APPROVED FOR ELECTRICAL WORK ONLY

	BY	CHECKED
DESIGN	Jaswinder Sandhu	Jaswinder Gill
DETAILS	Ed D. Tapalla	Jaswinder Sandhu
QUANTITIES	Jaswinder Sandhu	Jaswinder Gill

STATE OF CALIFORNIA
DEPARTMENT OF TRANSPORTATION

DIVISION OF ENGINEERING SERVICES
ELECTRICAL-MECHANICAL-WATER AND WASTEWATER DESIGN

BRIDGE No. L5724
POST MILE

PASADENA 210/134
TUNNEL CONTROL BUILDING
MAIN SERVICE SWITCHBOARD

SHEET EE4-1

TAEMWW Imperial - CCSC Rev. 01/13

ORIGINAL SCALE IN INCHES FOR REDUCED PLANS 0 1 2 3

UNIT: 3597 CONTRACT No.: 2881U4
PROJECT NUMBER & PHASE: 07140000851

DISREGARD PRINTS BEARING EARLIER REVISION DATES
REVISION DATES (PRELIMINARY STAGE ONLY) 12-17-13 1-17-14 2-28-14 4-25-14 SHEET OF

EA 2881U1

P:\dist_07\0700020994_la_210_interchange_building\expedite\ee4_01.dgn 18-JUN-2014 10:19

Dist	COUNTY	ROUTE	POST MILES TOTAL PROJECT	SHEET No.	TOTAL SHEETS
07	LA	210	R16.1/R25.8	905	927

Jaswinder S Sandhu 04-25-14
REGISTERED ELECTRICAL ENGINEER DATE

5-12-14
PLANS APPROVAL DATE

REGISTERED PROFESSIONAL ENGINEER Jaswinder Sandhu No. 11803 Exp. 9-30-14 ELEC STATE OF CALIFORNIA

The State of California or its officers or agents shall not be responsible for the accuracy or completeness of scanned copies of this plan sheet.

CALIFORNIA STATE FIRE MARSHAL APPROVED
Approval of this plan does not authorize or approve any omission or deviation from applicable regulations. Final approval is subject to field inspection. One set of approved plans shall be available on the project site at all times.
Reviewed by: FRANCIS (SONNY) SOLICH
Approval date: March 27, 2014

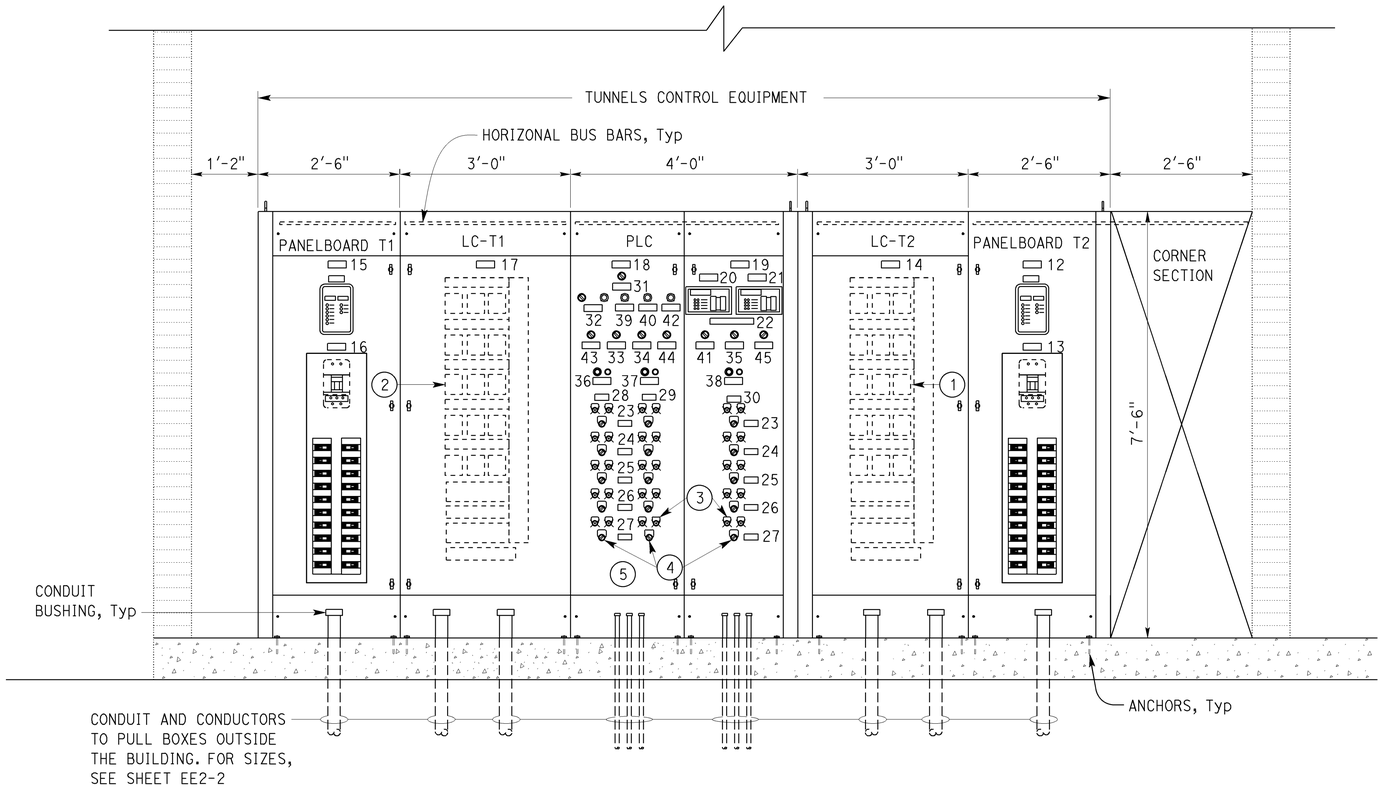

A ELEVATION
NO SCALE

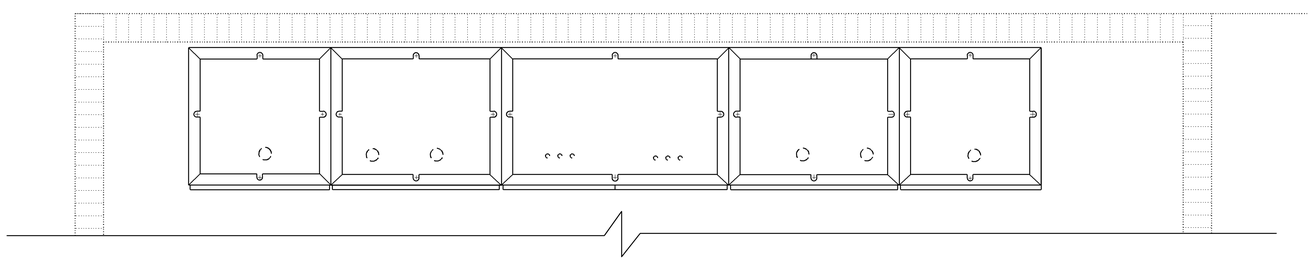

PLAN
NO SCALE

NAMEPLATE SCHEDULE

ITEM No.	INSCRIPTION	LETTER HEIGHT
12	PANELBOARD T2 480/277 V, 3-PHASE, 4-WIRE	1/2"
13	DIGITAL MULTI-METER TUNNEL No. 2	1/2"
14	LIGHTING CONTACTORS TUNNEL No. 2	1/2"
15	PANELBOARD T1 480/277 V, 3-PHASE, 4-WIRE	1/2"
16	DIGITAL MULTI-METER TUNNEL No. 1	1/2"
17	LIGHTING CONTACTORS TUNNEL No. 1	1/2"
18	TUNNELS	1"
19	CONTROL	1"
20	PLC1	1/2"
21	PLC2	1/2"
22	HOT STANDBY PLC	1/2"
23	LIGHTING LEVEL 1	1/4"
24	LIGHTING LEVEL 2	1/4"
25	LIGHTING LEVEL 3	1/4"
26	LIGHTING LEVEL 4	1/4"
27	LIGHTING LEVEL 5	1/4"
28	TUNNEL No. 1	1/2"
29	TUNNEL No. 2	1/2"

ITEM No.	INSCRIPTION	LETTER HEIGHT
30	TUNNEL No. 3	1/2"
31	POWER	1/4"
32	STANDBY PLC	1/4"
33	SST1	1/4"
34	SST2	1/4"
35	SST3	1/4"
36	TUNNEL No. 1 MANUAL DIMMING	1/4"
37	TUNNEL No. 2 MANUAL DIMMING	1/4"
38	TUNNEL No. 3 MANUAL DIMMING	1/4"
39	PLC1 FAIL	
40	PLC2 FAIL	
41	SSPEU	
42	DCPS FAIL	
43	SSNT1	
44	SSNT2	
45	SSNT3	

NOTES:

1. Install nameplate above each of the lighting contactor. Nameplate inscription must be the same as lighting contactors identifier shown on sheet EE3-7. Letter height must be 5/16".
2. Install nameplate above each of the lighting contactor. Nameplate inscription must be the same as lighting contactors identifier shown on sheet EE3-6. Letter height must be 5/16".
3. LED type pilot lights, typical. Install ring type nameplate on all pilot lights. Nameplate identifier must be the same as shown on sheets EE3-2 thru and EE3-8.
4. Selector switches, typical. Install ring type nameplate on all selector switches. Nameplate identifier must be the same as shown on sheets EE3-2 thru EE3-8.
5. Install interphasing relays in between the PLC and other control as required. Nameplate identifier must be the same as shown on the approved shop submittals/working drawings.

APPROVED FOR ELECTRICAL WORK ONLY

	BY	CHECKED
DESIGN	Jaswinder Sandhu	Jaswinder Gill
DETAILS	Ed D. Tapalla	Jaswinder Sandhu
QUANTITIES	Jaswinder Sandhu	Jaswinder Gill

STATE OF CALIFORNIA
DEPARTMENT OF TRANSPORTATION

DIVISION OF ENGINEERING SERVICES
ELECTRICAL-MECHANICAL-WATER AND WASTEWATER DESIGN

BRIDGE No. L5724
POST MILE

PASADENA 210/134
TUNNEL CONTROL BUILDING
TUNNELS CONTROL EQUIPMENT

SHEET **EE4-2**

TAEMWW Imperial - CCSC Rev. 01/13

ORIGINAL SCALE IN INCHES FOR REDUCED PLANS 0 1 2 3

UNIT: 3597 CONTRACT No.: 2881U4
PROJECT NUMBER & PHASE: 07140000851

DISREGARD PRINTS BEARING EARLIER REVISION DATES → 12-18-13 1-16-14 2-28-14 4-25-14

REVISION DATES (PRELIMINARY STAGE ONLY) SHEET OF

EA 2881U1

P:\dist_07\0700020994_la_210_interchange_building\expedite\ee4_02.dgn

18-JUN-2014 10:19

Dist	COUNTY	ROUTE	POST MILES TOTAL PROJECT	SHEET No.	TOTAL SHEETS
07	LA	210	R16.1/R25.8	906	927

Jaswinder S Sandhu 04-25-14
REGISTERED ELECTRICAL ENGINEER DATE

5-12-14
PLANS APPROVAL DATE

REGISTERED PROFESSIONAL ENGINEER Jaswinder Sandhu No. 11803 Exp. 9-30-14 ELEC STATE OF CALIFORNIA

The State of California or its officers or agents shall not be responsible for the accuracy or completeness of scanned copies of this plan sheet.

CALIFORNIA STATE FIRE MARSHAL APPROVED
Approval of this plan does not authorize or approve any omission or deviation from applicable regulations. Final approval is subject to field inspection. One set of approved plans shall be available on the project site at all times.
Reviewed by: FRANCIS(SONNY)SOLICH
Approval date: March 27,2014

NOTES:

1. Distribution type, 50 Amperes, 480-Volt rated terminal block suitable for accepting up to #4 AWG conductors. Perform the following inside NEMA-4X stainless steel junction box:
   - Terminate all conductors for all five lighting levels and for nighttime light entering and leaving the junction box on terminal block.
   - Supply the corresponding tunnel light fixtures from the respective terminals representing the lighting level of that fixture.
   - Install arc flash and shock hazard warning label on all light fixture and junction box. See "WARNING LABEL" Detail 4 and 5, on sheet EE4-4.
2. Weatherproof type hubs, typical all tunnel lighting fixtures and at junction boxes.
3. Support conduit at interval of 5′, typical.
4. ½"C, 2#12, 1#12 ground.
5. 2"C, 10#6 (Daytime lighting), 2#6 (Nighttime lighting), 2#6 spares, 1#6 ground, to adjacent NEMA-4X stainless steel junction box.
6. 2½"C, 10#4 (Daytime lighting), 2#4 (Nighttime lighting), 2#4 spares, 1#4 ground, from Tunnel Light Circuit Divider Control Panel as required.
7. Miscellaneous conduits and conductors/cables to and from Tunnel Control Building. For information, see Electrical Plans.
8. Miscellaneous conduits and conductors to various control panel inside tunnel. For information, see Electrical Plans.
9. For tunnel light fixture photometrics refer to plan sheet EE1-12.

GENERAL NOTES:

A. Each tunnel connector has expansion joints. At each expansion joint, perform the following:
   - Install expansion fitting, for detail refer to Standard Plan sheet ES-9B detail.
   - At each expansion joint, provide discontinuity in the construction channel supporting the light fixtures.
   - In the event a light fixture happen to be located at the expansion joint, extend construction channel over from one side to the other side. Do not anchor construction channel for the portion of length extending over the other side.

B. Use of 90 degree short conduit elbows or 90 degree raintight corner pulling ells will be allowed for connecting tunnel light fixtures to the NEMA-4X junction box.

C. Prior to painting rinse with suitable solution and paint all conduits, supporting devices, and NEMA-4X stainless steel junction boxes to match tunnel walls.

D. Use of galvanized rigid steel conduit (Type 1) only allowed inside the tunnels.

E. Conduit and conductors size to and from NEMA-4X junction box are shown as an example only. For exact conduit and conduit size to and from NEMA-4X junction box, see plan sheet EE1-3 thru EE1-5.

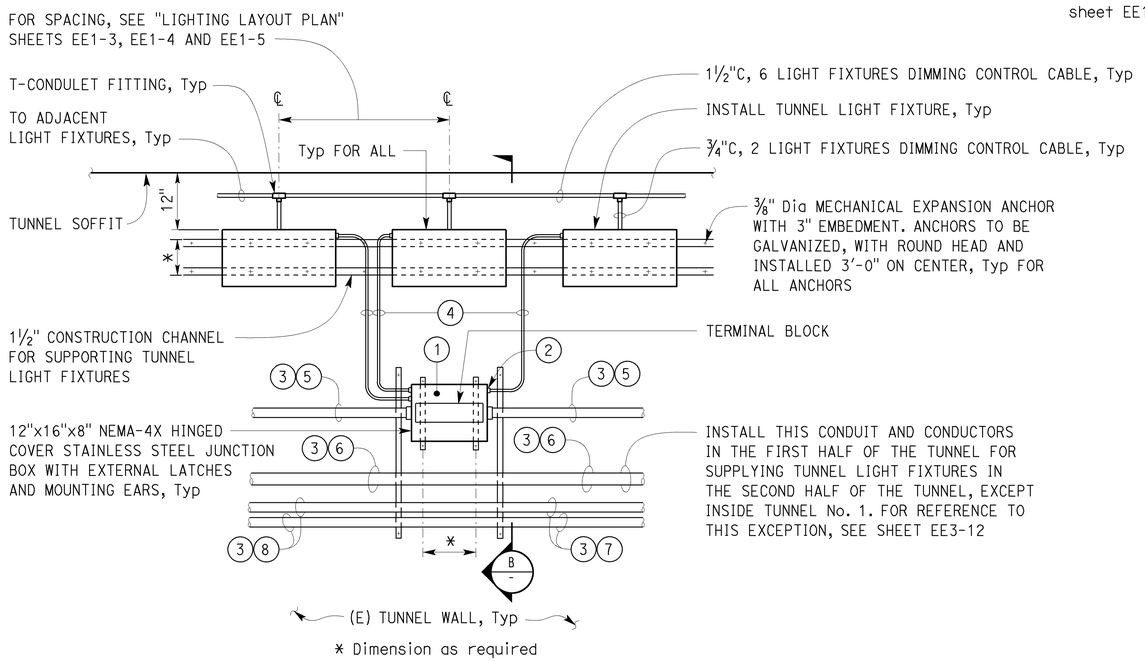

A ELEVATION

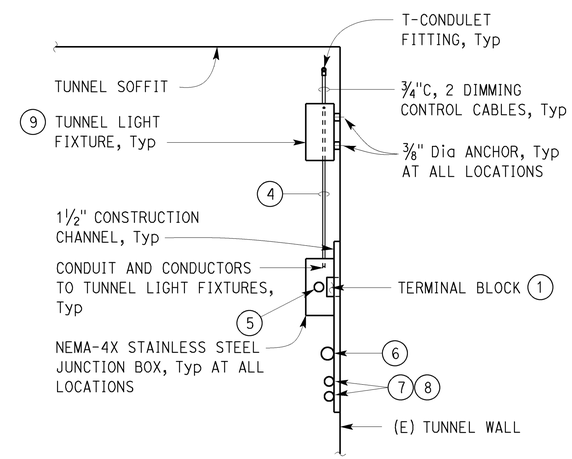

B SECTION
NO SCALE

TUNNEL LIGHT FIXTURES
NO SCALE

APPROVED FOR ELECTRICAL WORK ONLY

	BY	CHECKED
DESIGN	Jaswinder Sandhu	Jaswinder Gill
DETAILS	Ed Tapalla/D. Zhou	Jaswinder Sandhu
QUANTITIES	Jaswinder Sandhu	Jaswinder Gill

STATE OF CALIFORNIA DEPARTMENT OF TRANSPORTATION

DIVISION OF ENGINEERING SERVICES ELECTRICAL-MECHANICAL-WATER AND WASTEWATER DESIGN

BRIDGE No. L5724
POST MILE

PASADENA 210/134
TUNNEL CONTROL BUILDING
LIGHT FIXTURE AND NEMA 4X JUNCTION BOX MOUNTING DETAIL

SHEET EE4-3

TAEMWW Imperial - CCSC Rev. 01/13

ORIGINAL SCALE IN INCHES FOR REDUCED PLANS 0 1 2 3

UNIT: 3597 CONTRACT No.: 2881U4
PROJECT NUMBER & PHASE: 07140000851

DISREGARD PRINTS BEARING EARLIER REVISION DATES
REVISION DATES (PRELIMINARY STAGE ONLY) 12-17-13 1-13-14 2-28-14 4-25-14 SHEET OF

EA 2881U1

P:\dist_07\0700020994_la_210_interchange_building\expedite\ee4_03.dgn 18-JUN-2014 10:19

Dist	COUNTY	ROUTE	POST MILES TOTAL PROJECT	SHEET No.	TOTAL SHEETS
07	LA	210	R16.1/R25.8	907	927

Jaswinder S Sandhu 04-25-14
REGISTERED ELECTRICAL ENGINEER DATE

5-12-14
PLANS APPROVAL DATE

REGISTERED PROFESSIONAL ENGINEER Jaswinder Sandhu No. 11803 Exp. 9-30-14 ELEC STATE OF CALIFORNIA

The State of California or its officers or agents shall not be responsible for the accuracy or completeness of scanned copies of this plan sheet.

CALIFORNIA STATE FIRE MARSHAL APPROVED
Approval of this plan does not authorize or approve any omission or deviation from applicable regulations. Final approval is subject to field inspection. One set of approved plans shall be available on the project site at all times.
Reviewed by: FRANCIS (SONNY) SOLICH
Approval date: March 27, 2014

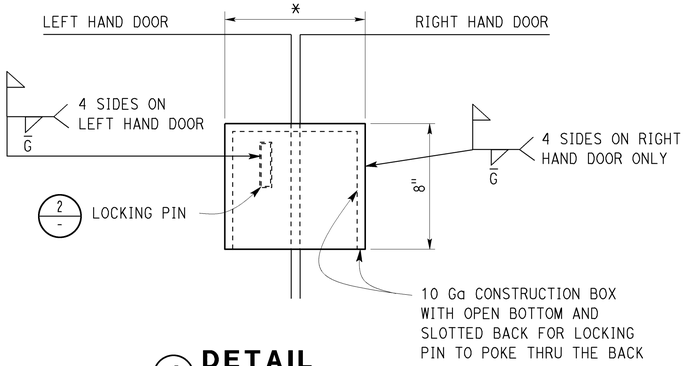

1 DETAIL
NO SCALE

(TYPICAL TOP AND BOTTOM)

* DIMENSION TO SUIT DEPARTMENT FURNISHED AMERICAN 2500 "HOCKEY PUCK" LOCK

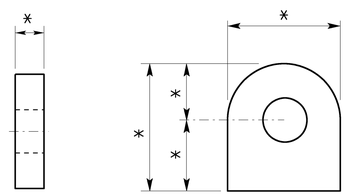

PLAN SIDE VIEW

2 LOCKING PIN
NO SCALE

* DIMENSION TO SUIT DEPARTMENT FURNISHED AMERICAN 2500 "HOCKEY PUCK" LOCK

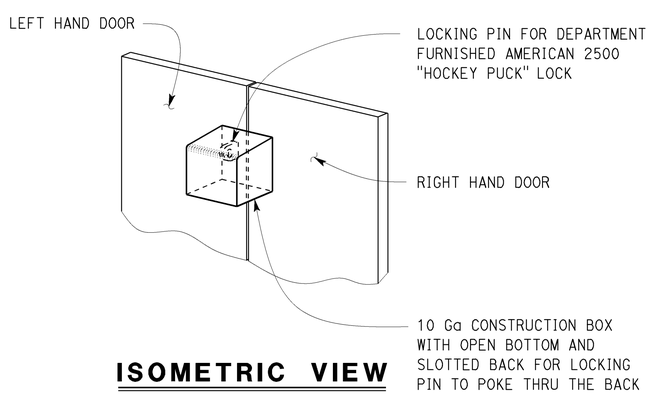

ISOMETRIC VIEW

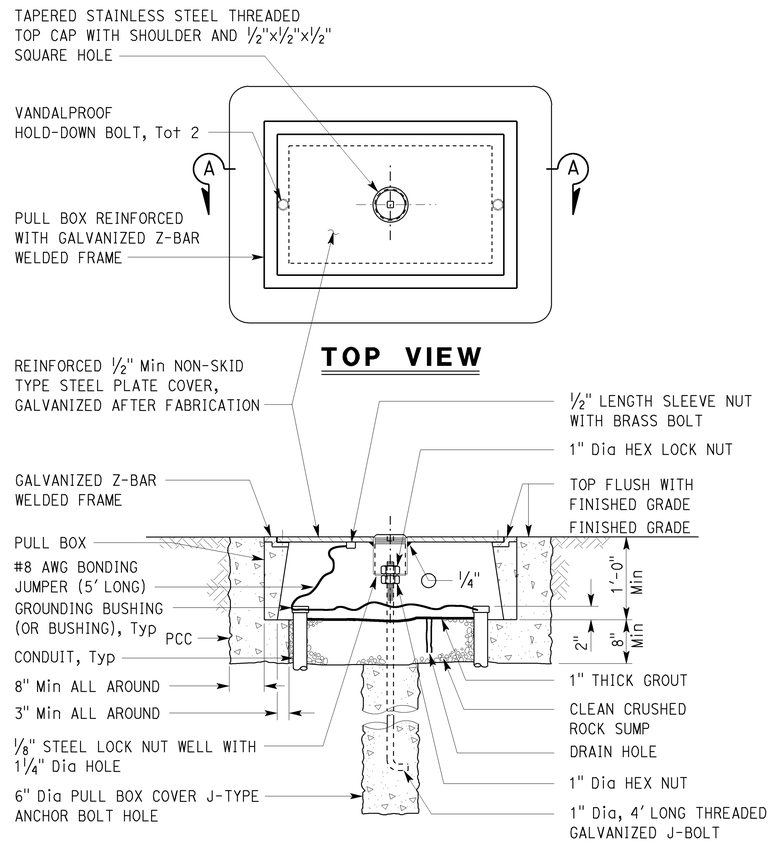

SECTION A-A

3 No. 3 1/2(T), No. 5(T) AND No. 6(T) TRAFFIC PULL BOX

ORANGE BACKGROUND
BLACK LETTERING, Typ

WARNING

ARC FLASH AND SHOCK HAZARD

Appropriate PPE and Tools Required when working on this equipment.

Available Fault Current:
*

Installation Date:
*

4 WARNING LABEL

Note: Main switchboard must be legibly marked in the field with the available fault current to comply with NEC 110.24(A).

ORANGE BACKGROUND
BLACK LETTERING, Typ
WHITE BACKGROUND

WARNING

ARC FLASH AND SHOCK HAZARD

Appropriate PPE and Tools Required when working on this equipment.

5 WARNING LABEL*
NO SCALE

* Warning label must be constructed with high degree of chemical abrasion, heat resistance and UL recognized material.

APPROVED FOR ELECTRICAL WORK ONLY

	BY	CHECKED
DESIGN	Jaswinder Sandhu	Jaswinder Gill
DETAILS	Ed D. Tapalla	Jaswinder Sandhu
QUANTITIES	Jaswinder Sandhu	Jaswinder Gill

STATE OF CALIFORNIA
DEPARTMENT OF TRANSPORTATION

DIVISION OF ENGINEERING SERVICES
ELECTRICAL-MECHANICAL-WATER AND WASTEWATER DESIGN

BRIDGE No. L5724
POST MILE

PASADENA 210/134
TUNNEL CONTROL BUILDING

MISCELLANEOUS ELECTRICAL DETAILS

SHEET EE4-4

TAEMWW Imperial - CCSC Rev. 01/13

ORIGINAL SCALE IN INCHES FOR REDUCED PLANS 0 1 2 3

UNIT: 3597 CONTRACT No.: 2881U4
PROJECT NUMBER & PHASE: 07140000851

DISREGARD PRINTS BEARING EARLIER REVISION DATES
REVISION DATES (PRELIMINARY STAGE ONLY) 1-28-14 2-28-14 4-25-14
SHEET OF

EA 2881U1

P:\dist_07\0700020994_la_210_interchange_building\expedite\ee4_04.dgn
18-JUN-2014 10:19

Dist	COUNTY	ROUTE	POST MILES TOTAL PROJECT	SHEET No.	TOTAL SHEETS
07	LA	210	R16.1/R25.8	908	927

Jaswinder S Sandhu 04-25-14
REGISTERED ELECTRICAL ENGINEER DATE

5-12-14
PLANS APPROVAL DATE

REGISTERED PROFESSIONAL ENGINEER Jaswinder Sandhu No. 11803 Exp. 9-30-14 ELEC STATE OF CALIFORNIA

The State of California or its officers or agents shall not be responsible for the accuracy or completeness of scanned copies of this plan sheet.

CALIFORNIA STATE FIRE MARSHAL APPROVED
Approval of this plan does not authorize or approve any omission or deviation from applicable regulations. Final approval is subject to field inspection. One set of approved plans shall be available on the project site at all times.
Reviewed by: FRANCIS(SONNY)SOLICH
Approval date: March 27,2014

GENERAL NOTES:

A. Existing lighting loads to remain on this equipment are 30 kVA loads rated at 240/480 Volts, 1-phase and 3-wire. The entire work for modifying the electrical equipment must be performed between the hours of 8:00 am to 4:00 pm. Install temporary power spources sized to serve the existing loads 24/7 during the Electrical Service Equipment modification duration. Perform the following:

- Submit wiring diagram and layout of temporary power system for approval to the Engineer, prior to beginning modification work of the Electrical Service Equipment.
- Upon approval of the temporary power equipment, complete installation and make certain that the existing Electrical System is operational.
- Install all cables, connectors and incidental equipment that may be required for the operation.

B. Make arrangement and contact the City of Pasadena Power and Lighting Department for turning OFF the power to the existing Service Equipment if required, while performing modification work.

C. Do not perform work on more than one Service Equipment at a time.

D. Tunnel No. 1 existing Electrical Service Equipment modification shown, existing Electrical Service Equipment modification for Tunnel No. 2 and Tunnel No. 3 are similar.

NOTES:

1. Existing Utility side underground pull box.
2. Remove existing conduit and conductors. Abandon underground conduits where applicable. Plug all unused openings.
3. Existing ground rod.
4. Existing Electrical Equipment or conduit and conductors to remain.
5. Existing Power Panel is GE Type NHB, 1-phase, 3-wire, 240/480-Volt rated panelboard. Perform the following:
   - Disconnect existing conductors that used to supply existing Tunnel No. 1 lighting and mark them as "spares".
   - Install 100 A/2P type TED circuit breaker to supply existing lighting panel.
   - Install 15 A/2P type TED circuit breaker to supply 5 kVA transformer.
6. 2" Flex conduit, 3#1, 1#1 ground. Terminate conductors on the panelboard main breaker, neutral bus and ground bus.
7. 1"C, 3#10, 1#10 ground.
8. 120/240 Volts, 1-phase, 3-wire panelboard with 30-Ampere, 2-pole Main Circuit Breaker, two 20 A/1P and one GFCI, 20 A/1P branch circuit breakers. Secure panel to back mounting panel.
9. ¾"C, 2#12, 1#12 ground.
10. Fourplex receptacle outlet inside cast iron junction box with weatherproof cover.
11. Enclosed and dry type transformer. Secure transformer to back mounting panel.
12. Extend existing concrete foundation as shown. Pad in front to match existing dimensions.
13. 90-inch high NEMA-3R type, 12-gage steel enclosure with hinged door, 3-point lock mechanism door hasp and back mounting panel. Secure enclosure to the concrete foundation.

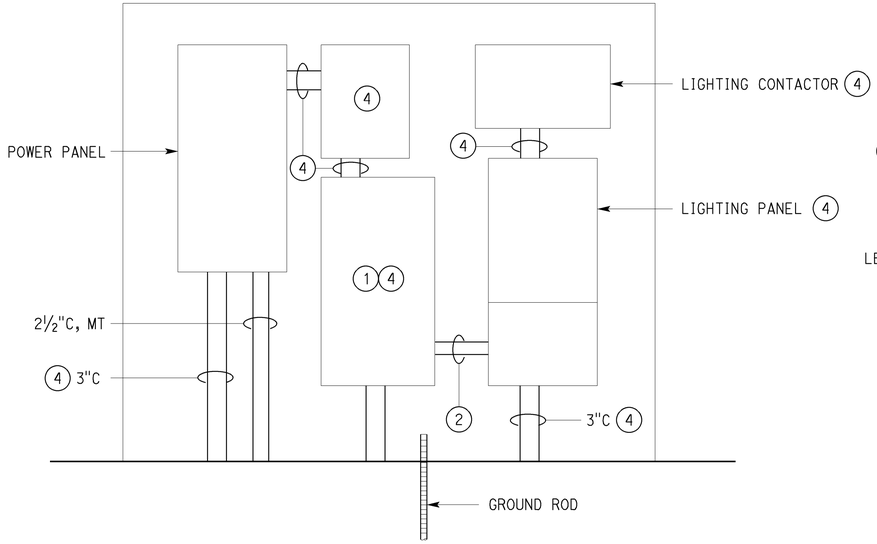

EXISTING

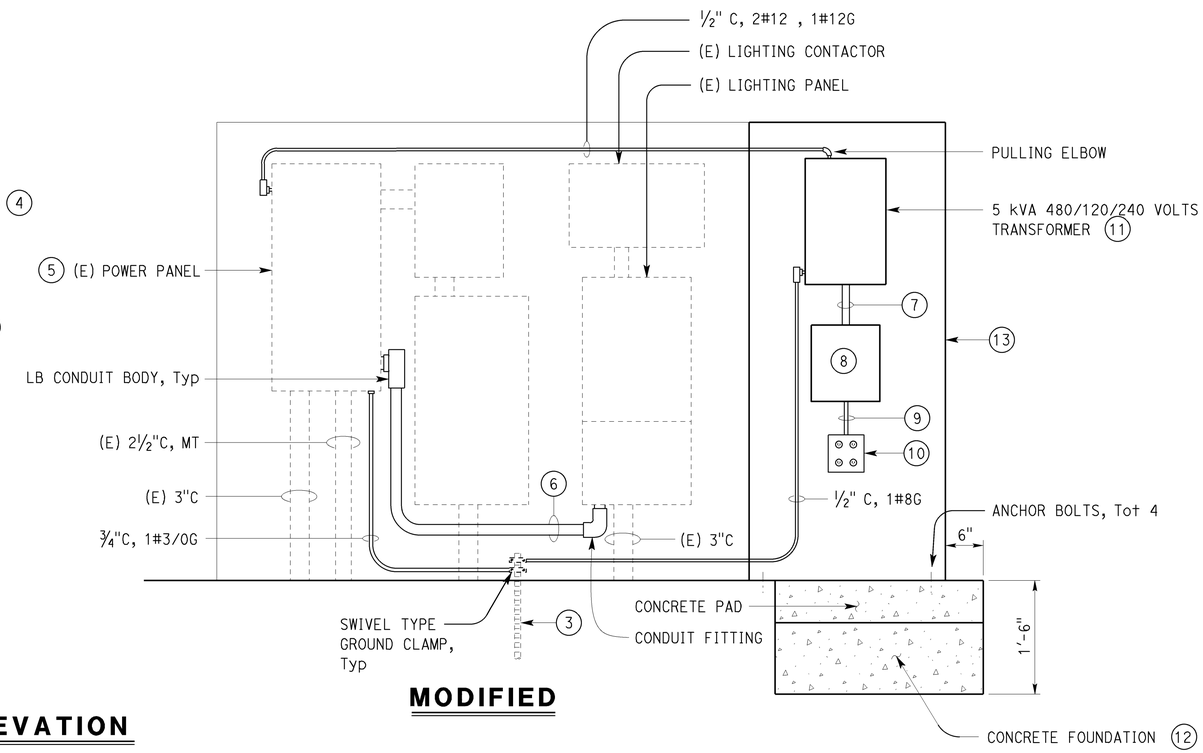

MODIFIED

(A) ELEVATION

NO SCALE

(EQUIPMENT SHOWN WITH EXTERIOR DOOR OPEN)

APPROVED FOR ELECTRICAL WORK ONLY

	BY	CHECKED
DESIGN	Jaswinder Sandhu	Jaswinder Gill
DETAILS	Ed D. Tapalla	Jaswinder Sandhu
QUANTITIES	Jaswinder Sandhu	Jaswinder Gill

STATE OF CALIFORNIA DEPARTMENT OF TRANSPORTATION

DIVISION OF ENGINEERING SERVICES ELECTRICAL-MECHANICAL-WATER AND WASTEWATER DESIGN

BRIDGE No. L5724
POST MILE

PASADENA 210/134 TUNNEL CONTROL BUILDING

EXISTING SERVICES EQUIPMENT

SHEET **EE4-5**

TAEMWW Imperial - CCSC Rev. 01/13

ORIGINAL SCALE IN INCHES FOR REDUCED PLANS 0 1 2 3

UNIT: 3597 CONTRACT No.: 2881U4
PROJECT NUMBER & PHASE: 07140000851

DISREGARD PRINTS BEARING EARLIER REVISION DATES

REVISION DATES (PRELIMINARY STAGE ONLY) 12-24-13 1-13-14 2-28-14 4-25-14 SHEET OF

EA 2881U1

P:\dist_07\0700020994_la_210_interchange_building\expedite\ee4_05.dgn

18-JUN-2014 10:19

DIST.	COUNTY	ROUTE	POST MILES TOTAL PROJECT	SHEET NO.	TOTAL SHEETS
07	LA	210	R16.1/R25.8	909	927

REGISTERED CIVIL ENGINEER — 3-28-14 DATE

REGISTERED PROFESSIONAL ENGINEER Sean R. Samuel No. 54569 Exp. 12-31-15 CIVIL STATE OF CALIFORNIA

5-12-14
PLANS APPROVAL DATE

The State of California or its officers or agents shall not be responsible for the accuracy or completeness of scanned copies of this plan sheet.

ABBREVIATIONS

AAD	ADHESIVE ANCHORAGE DEVICE
AB	ANCHOR BOLT
AC	ASPHALT CONCRETE
Alt	ALTERNATE
APA	AMERICAN PLYWOOD ASSOCIATION
APC	ALTERNATIVE PIPE CULVERT
Bldg	BUILDING
Blkg	BLOCKING
BN	BOUNDARY NAILING
Btm	BOTTOM
CB	CARRIAGE BOLT
CIDH	CAST IN DRILLED HOLE
CJ	CONTROL JOINT
Clr	CLEAR
CMU	CONCRETE MASONRY UNIT
Conc	CONCRETE
Const	CONSTRUCTION
Cont	CONTINUOUS
CP	COMPLETE PENETRATION WELD
Dbl	DOUBLE
DF	DOUGLAS FIR
Dia	DIAMETER
DIP	DUSTILE IRON PIPE
DN	DIAMETER NOMINAL
do	DITTO
(E)	EXISTING
Ea	EACH
EL	ELEVATION
Elec	ELECTRICAL
Embed	EMBEDMENT
EN	EDGE NAIL
Eq	EQUAL
Exp	EXPANSION
FDGM	FREE DRAINING GRANULAR MATERIAL
FG	FINISH GRADE
FL	FLOW LINE
Flr	FLOOR
FN	FACE (FIELD) NAIL
FOC	FACE OF CONCRETE
FOM	FACE OF MASONRY
FOS	FACE OF STUD
Ftg	FOOTING
Ga	GAGE
Galv	GALVANIZED
GLM	GLUE LAMINATED MEMBER
Gyp Bd	GYPSUM BOARD
HD	HOLDOWN
Hex	HEXAGON
Horiz	HORIZONTAL
HSB	HIGH STRENGTH BOLT
HSS	HOLLOW STRUCTURAL SECTION
Jt	JOINT
LOL	LAYOUT LINE
LVL	LAMINATED VENEER LUMBER
m	METER
Max	MAXIMUM
MEA	MECHANICAL EXPANSION ANCHOR
Mech	MECHANICAL
Mfr	MANUFACTURER
mm	MILLIMETER
Min	MINIMUM
MIW	MALLEABLE IRON WASHER
OC	ON CENTER
OG	ORIGINAL GRADE
OH	OPPOSITE HAND
Opt	OPTIONAL
P	PITCH
PDF	POWER DRIVEN FASTENER
Plwd	PLYWOOD
PT	PRESSURE TREATED
PW	PUDDLE WELD
PWB	PREFABRICATED WOOD I BEAM
RCP	REINFORCED CONCRETE PIPE
Reinf	REINFORCED, REINFORCING
Req'd	REQUIRED
SDSTS	SELF DRILL, SELF TAP SCREW
Sim	SIMILAR
SPS	STRUCTURAL PLYWOOD SHEATHING
Sq	SQUARE
Stagg	STAGGERED
Std	STANDARD
SW	STUD WELD
Sym	SYMMETRICAL
T&G	TONGUE-AND-GROOVE
TN	TOE NAIL
TS	TUBE STEEL
Typ	TYPICAL
UON	UNLESS OTHERWISE NOTED
Vert	VERTICAL

SYMBOLS

- BLOCKING IN SECTION OR ELEVATION
- CONTINUOUS MEMBER IN SECTION
- END OF MEMBER
- BEARING WALL
- SHEAR WALL
- X XXXX — LENGTH; SHEARWALL SCHEDULE SYMBOL; REFERENCE
- GLUE LAMINATED MEMBER SECTION
- NORTH ARROW
- X STX-X — PARTIAL SECTION CUT
- X STX-X — FULL SECTION CUT
- X — REVISION CALLOUT
- A — GRID LINE INDICATOR
- ℄ — CENTER LINE
- ⅊ — STATION LINE
- ℙ — STEEL PLATE
- ø — DIAMETER
- ⌑ — SQUARE
- CMU WALL ON PLAN VIEWS
- DROPPED SLAB ON PLAN VIEWS
- REINFORCED CONCRETE
- SAND
- STRUCTURE BACKFILL
- STRUCTURE EXCAVATION
- ORIGINAL GROUND
- LIMITS OF STRUCTURE BACKFILL (SHOWN ON PLAN VIEWS)
- FREE DRAINING GRANULAR MATERIAL
- X — BOTTOM OF FOOTING
- ELEVATION OR WORKING POINT
- EXISTING FEATURES
- HOLDOWN, Typ: Simpson / USP / Equal (MANUFACTURERS ARE THOSE NOTED IN THE ORDER SHOWN)
- FRAME CONNECTOR: Simpson / USP / Equal (MANUFACTURERS ARE THOSE NOTED IN THE ORDER SHOWN)
- 3 5b ST-1 — DETAIL NUMBER OR NOTE NUMBER; ADDITIONAL REFERENCE (IF REQUIRED); SHEET NUMBER

NOTE: SPECIFIC DETAILS OR NOTES ON OTHER SHEETS SHALL PREVAIL OVER STANDARD DETAILS AND NOTES ON THIS SHEET

STANDARD DRAWING

FILE NO. XS-25-0	DESIGN BY Sean Samuel	CHECKED Joe Schmidt	APPROVED R E Travis
DRAWING DATE 1-04	DETAILS BY Peter F. von Sauvage, II	CHECKED Sean Samuel	DESIGN SUPERVISOR
	SUBMITTED BY Sean Samuel	, DESIGN ENGINEER	

TAEMWW Imperial Rev. 7/10

ORIGINAL SCALE IN INCHES FOR REDUCED PLANS 0 1 2 3

STATE OF CALIFORNIA DEPARTMENT OF TRANSPORTATION

DIVISION OF ENGINEERING SERVICES ARCHITECTURAL AND STRUCTURAL DESIGN

UNIT 3599
PROJECT NUMBER & PHASE 07140000851
EA 2881U1

BRIDGE NO. L5724
POST MILE

PASADENA 210/134 TUNNEL CONTROL BUILDING

LEGEND

SHEET **ST-1**

DISREGARD PRINTS BEARING EARLIER REVISION DATES → REVISION DATES (PRELIMINARY STAGE ONLY) 1-16-04 04-27-12 08-24-12 SHEET OF

18-JUN-2014 10:19

st_01.dgn

DIST.	COUNTY	ROUTE	POST MILES TOTAL PROJECT	SHEET NO.	TOTAL SHEETS
07	LA	210	R16.1/R25.8	910	927

REGISTERED CIVIL ENGINEER — 3-28-14 DATE

REGISTERED PROFESSIONAL ENGINEER — Sean R. Samuel No. 54569 Exp. 12-31-15 CIVIL — STATE OF CALIFORNIA

5-12-14
PLANS APPROVAL DATE

The State of California or its officers or agents shall not be responsible for the accuracy or completeness of scanned copies of this plan sheet.

A FRAMING NOTES

1. Dimensions are typically shown to face of stud for exterior walls, to centerline of stud at interior walls, and to centerline of openings. Vertical dimensions are typically shown from rough floor or slab to top of plate or to underside of lintels. Dimensions shown as "clear" are from surface to surface.
2. Bearing, shear and exterior walls shall be sheathed with 3/8" structural plywood sheathing.
3. All roofs shall be sheathed with 5/8" structural plywood sheathing.
4. Plywood for floors and roofs shall be placed face grain perpendicular to supports. Where possible, plywood shall be placed in full sheets and staggered one-half sheet length. Any partial plywood sheet shall not be less than 2'-0" in length or width unless fully blocked. Plywood for wainscots, siding and wall sheathing may be placed parallel to framing and with the C-C plugged face exposed. See Detail 2, sheet ST-1B.
5. All wood members shall be Douglas Fir-Larch (DF) quality grade stamped. Grade stamps shall indicate compliance with the grading requirements of WWPA, WCLIB or other approved lumber inspection agency.
6. Structural plywood sheathing shall be APA grade stamped plywood conforming to Voluntary Product Standard PSI, Grade C-D, Exposure 1. Thickness and span rating shall be as shown on the plans.
7. Wood grades (unless otherwise noted):
   - A. For horizontal members:
     - Joists & Rafters — Grade #2
     - Beams & Stringers — Grade #1
     - Ledgers — Grade #1
   - B. For vertical members:
     - 2x4 Studs — Construction Grade
     - 2x6 & larger studs — Grade #2
     - Posts & Timbers — Grade #1
   - C. Glue laminated beams:
     - Simple spans — 24F-V4 DF/DF
     - Cantilevers & Continuous — 24F-V8 DF/DF
8. Glue laminated members shall be engineered, stress rated and factory laminated with adhesive for wet use.
9. Exposed members shall be "architectural appearance" grade and non-exposed members shall be "industrial appearance" grade.
10. All wood in direct contact with concrete or masonry shall be pressure treated Douglas Fir-Larch.
11. Joists framed into the side of wood girders shall be supported by joist hangers.
12. Joists shall be supported laterally at the ends and at each support by solid blocking or other approved means except where the ends of joists are nailed to a header, band or rim joist or to an adjoining stud. Solid blocking shall not be less than 2x in thickness and the full depth of the joist.
13. Joists and roof rafters 1'-0" or deeper shall have full depth 2x thick solid blocking at 8'-0" maximum spacing.
14. Provide 2x blocking to secure fixtures shown on the project plans.
15. Joists under and parallel to bearing walls shall be doubled.
16. When there are multiple holes and notches in one structural element or when there are holes and notches occurring in more than two consecutive structural elements, the Engineers approval is required, unless the details are shown on plans.
17. Notches or cuts in bearing or shear wall studs may be to a depth not exceeding 25% of its width. Wood studs in non-bearing and non-shear walls supporting only their weight may be notched or cut to a depth not greater than 40% (See note 16 above).
18. Bored hole diameters shall not exceed 40% of the stud width in bearing walls and 60% in non-bearing walls. The top plates may not be bored or cut, without the Engineer's approval. Neither bearing nor shear wall top plates may be bored greater than 40%, unless detailed on the plans. Holes shall not be closer than 5/8" to the edge of the stud. (See note 16 above)
19. When it is necessary to cut the sole plate, sill plate or wood stud for plumbing, heating or other pipes, a 1/16" thick x 1 1/2" wide galvanized metal stud shoe plate shall be fastened w/6-16d to the plate across the opening.
20. Equivalent metal bridging or ties may be submitted to the Engineer for approval.

B MINIMUM NAILING SCHEDULE

1. All structural nailing shall be common wire. Alternate fasteners may be substituted as approved by the Engineer.
2. For wood to wood joints, the spacing of nails shall not be less than the required nail penetration. Edge or end distances shall not be less than 1/2 the required nail penetration. Where pre-drilling is required to avoid splitting of the wood, the hole diameter shall not exceed three-fourths of the nail diameter.
3. Nailing not noted below or on the project plans shall be a minimum of 2 nails at each contact, 8d for 1x members and 16d for 2x members.
4. Joists or Rafters:
   - a. Bearing (sill, girder, top plate) Toe Nail — 3-8d
   - b. Laps (parallel members over walls or beams) Face Nail — 4-16d
     - For each additional 3" member depth beyond 6" member add — 2-16d
   - c. Rim joist to floor joist, End Nail — 2-16d
     - For each additional 4" member depth beyond 8" member add — 1-16d
   - d. Rim joist to top plate, Toe Nail — 8d @ 6" OC
   - e. Double joists under bearing walls, staggered Face Nail. — 16d @ 1'-0" OC
5. Studs:
   - a. Double studs, Face Nail — 16d @ 2'-0" OC
   - b. Top plate to stud, End Nail — 2-16d
   - c. Stud to sole plate, Toe Nail — 3-16d or 4-8d
   - d. Sole plate to stud, End Nail — 2-16d
   - e. Stud to continous header, Toe Nail — 3-16d or 4-8d
   - f. Built-up corner studs, Face Nail — 16d @ 2'-0" OC
6. Plates:
   - a. Top plate doubled, Face Nail — 16d @ 1'-4" OC
   - b. Top plate intersection, Face Nail — 2-16d
   - c. Sole plate to rim joist or blocking, Face Nail — 16d @ 1'-4" OC
   - d. Sole plate to floor framing, Face Nail — 16d @ 1'-4" OC
7. Blocking:
   - a. To studs, joists or rafters, Toe Nail — 3-16d or 4-8d
     - or End Nail — 2-16d
     - For each additional 4" member depth beyond 8" member add, Toe Nail — 2-8d
     - or End Nail — 1-16d
   - b. To plates, Toe Nail — 16d @ 1'-0" OC
8. 2" Subfloor to each joist or girder one blind and one Face Nail. — 2-16d
9. Structural Plywood Nailing:
   - a. Spacing at subflooring, decking, roof and wall structural plywood sheathing to framing:

LOCATION	3/8" Plwd	7/16" - 1" Plwd
At supported edges (edge nailing) & over bearing (beams, girders, walls, etc.)	8d @ 6" OC	10d @ 6" OC
At intermediate supports (field nailing)	8d @ 6" OC	10d @ 1'-0" OC
Where bearing is 4'-0" or greater (field nailing)	————	10d @ 6" OC

   - b. Structural plywood edge nailing shall be staggered at supports, Detail 2, Sheet ST-1B; at double plates. Detail 3, Sheet ST-1B; and at double studs located at wall intersections and corners, Details 3A and 3B, Sheet ST-1C.
   - c. Decking and Underlayment: — Use deformed shank nail (see Sheet ST-1B for nail size and spacing)
   - d. Panel siding to framing: — Use zinc coated nail (see Sheet ST-1B for nail size and spacing)
10. Finish Plywood Nailing (non-structural):
    - a. Finish plywood to framing where the thickness is 1/2" or less:
      - 1) Finish nail at supported edges (edge nailing) — 6d @ 6" OC
      - 2) Finish nail at Intermediate supports (field nailing) — 6d @ 1'-0" OC
11. Gypsum Sheathing (Structural):
    - a. Wall structural gypsum board sheathing to framing where the thickness 5/8" or less:
      - 1) Cooler nail, parker nail or wallboard nail with a flat or concave head and diamond point at all edges and intermediate supports (field nailing) — 6d @ 4" OC

C MECHANICAL FASTENER NOTES

1. The clearance holes for lag screw shanks shall be the same diameter and depth as the unthreaded shank. The lead hole for the threaded portion shall be of a diameter equal to 60% of the shank diameter for screws up to 1/2" diameter, and 75% of the shank diameter for larger lag screws. The lead hole shall be at least the length of the threaded portion.
2. Lag screws shall be turned into pre-drilled holes and not be driven.
3. All bolts and lag screws shall be tightened and retightened before closing in, or at completion of job.
4. All bolts and lag screws shall be provided with metal washers under heads and nuts which bear on wood.

MINIMUM WASHER FOR BOLTS & LAG SCREWS

Size	Malleable Iron Washer	Steel Plate Washer
1/2" Ø	2 1/2" Ø x 5/16"	2" x 2" x 1/4"
5/8" Ø	2 3/4" Ø x 5/16"	2" x 2" x 1/4"
3/4" Ø	3" Ø x 7/16"	2" x 2" x 1/4"
7/8" Ø	3 5/16" Ø x 3/8"	3" x 3" x 1/4"
1" Ø	4" Ø x 1/2"	3" x 3" x 1/4"

Place under Bolt Heads & Nuts bearing on Wood

5. Fastener alternatives for non-bearing and non-shear walls: Two minimum per member and at 9" from ends.
   - a. 1/8" Ø Powder driven anchor with 1" penetration @ 2'-0" OC.
   - b. 1/4" Ø expansion anchorage device embedded 1 1/2" minimum at 2'-0" OC.
   - c. 1/2" Ø anchor bolt with 2 1/2" embedment @ 4'-0" OC.
6. Equivalent mechanical fasteners may be submitted to the Engineer for approval.

NOTE: SPECIFIC DETAILS OR NOTES ON OTHER SHEETS SHALL PREVAIL OVER STANDARD DETAILS AND NOTES ON THIS SHEET

FILE NO. XS-25-5	DESIGN BY Sean Samuel	CHECKED	APPROVED R.E. Travis
DRAWING DATE 1-04	DETAILS BY Peter F. von Sauvage, II	CHECKED	DESIGN SUPERVISOR
	SUBMITTED BY Sean Samuel, DESIGN ENGINEER		

STANDARD DRAWING

STATE OF CALIFORNIA DEPARTMENT OF TRANSPORTATION

DIVISION OF ENGINEERING SERVICES ARCHITECTURAL AND STRUCTURAL DESIGN

BRIDGE NO. L5724 POST MILE

PASADENA 210/134 TUNNEL CONTROL BUILDING

WOOD FRAMING STANDARD - NOTES

SHEET **ST-1A**

TAEMWW Imperial Rev. 7/10

ORIGINAL SCALE IN INCHES FOR REDUCED PLANS 0 1 2 3

UNIT 3599
PROJECT NUMBER & PHASE 07140000851
EA 2881U0

DISREGARD PRINTS BEARING EARLIER REVISION DATES → REVISION DATES (PRELIMINARY STAGE ONLY) 1-16-04 11-14-05 08-24-12 SHEET OF

18-JUN-2014 10:19

st0_01a.dgn

DIST.	COUNTY	ROUTE	POST MILES TOTAL PROJECT	SHEET NO.	TOTAL SHEETS
07	LA	210	R16.1/R25.8	911	927

REGISTERED CIVIL ENGINEER — DATE 3-28-14

REGISTERED PROFESSIONAL ENGINEER Sean R. Samuel No. 54569 Exp. 12-31-15 CIVIL STATE OF CALIFORNIA

5-12-14
PLANS APPROVAL DATE

The State of California or its officers or agents shall not be responsible for the accuracy or completeness of scanned copies of this plan sheet.

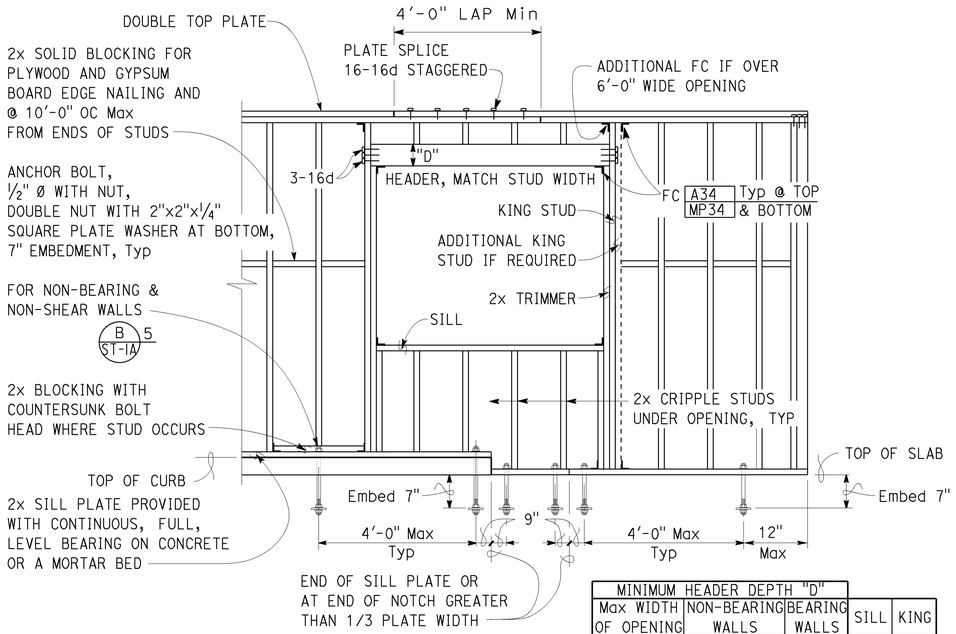

MINIMUM HEADER DEPTH "D"				
Max WIDTH OF OPENING	NON-BEARING WALLS	BEARING WALLS	SILL	KING
4'-0"	4"	6"	2x	2x
8'-0"	6"	8"	2-2x	2-2x
10'-0"	8"	10"	2-2x	2-2x
12'-0"	10"	12"	3-2x	2-2x

1 TYPICAL WALL AND OPENING FRAMING
No Scale

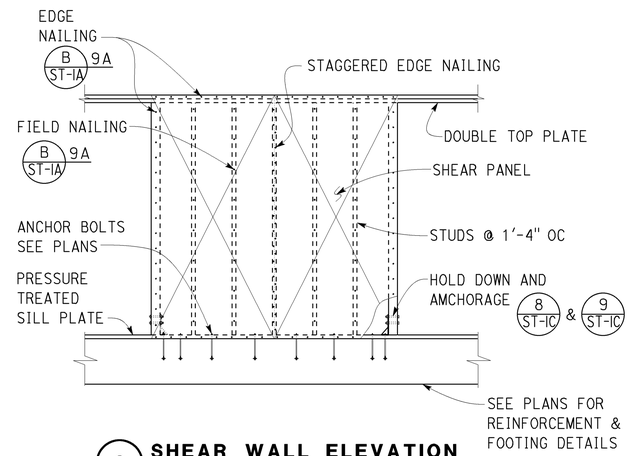

3 SHEAR WALL ELEVATION
No Scale

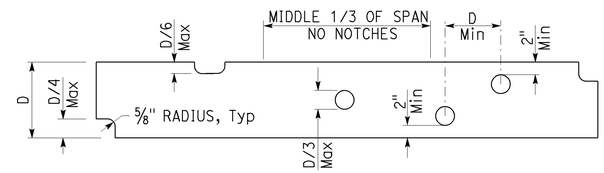

5 NOTCH LIMITS FOR JOISTS AND HEADERS
No Scale

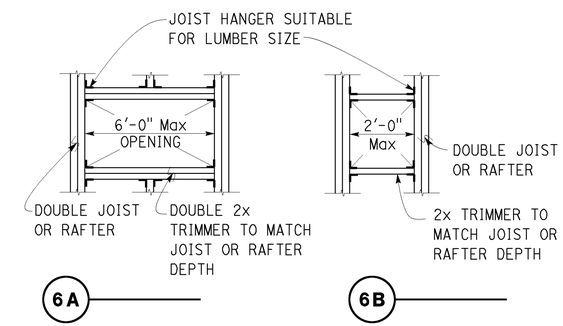

6 FRAMING AT OPENINGS
No Scale

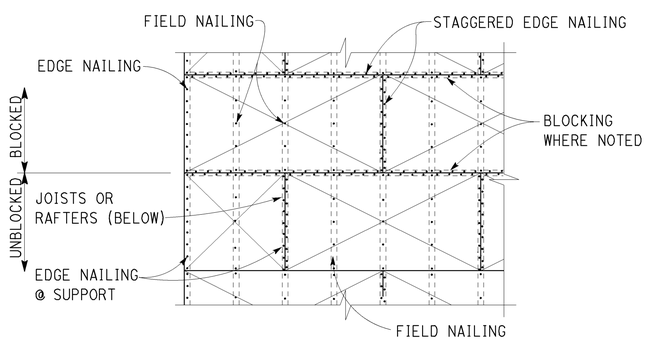

2 STRUCTURAL PLYWOOD LAYOUT
No Scale

NOTCH RAFTER IF SLOPE EXCEEDS 1:15

PLATE SIZE	"X"
2x4	2"
2x6	3"
2x8	4"

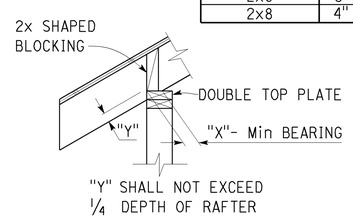

4A RAFTER BEARING

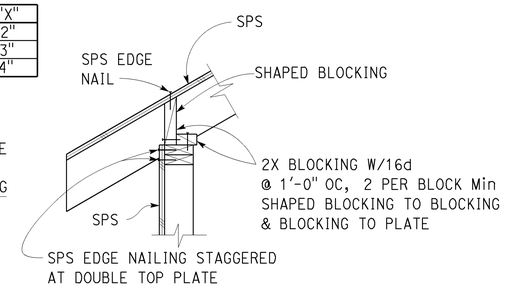

4B SHEAR TRANSFER

4 EXTERIOR WALL TOP PLATE DETAIL
No Scale

NOTE: SPECIFIC DETAILS OR NOTES ON OTHER SHEETS SHALL PREVAIL OVER STANDARD DETAILS AND NOTES ON THIS SHEET

STANDARD DRAWING

FILE NO. XS-25-5.1 | DESIGN BY Sean Samuel | CHECKED Lee Flanders | APPROVED R E Travis
DRAWING DATE 1-04 | DETAILS BY Peter Fuson Savage, II | CHECKED [illegible] | DESIGN SUPERVISOR
SUBMITTED BY Sean Samuel, DESIGN ENGINEER

TAEMWW Imperial Rev. 7/10

SCALE: ALL DIMENSIONS ARE IN MILLIMETERS UNLESS OTHERWISE NOTED.

ORIGINAL SCALE IN INCHES FOR REDUCED PLANS 0 1 2 3

STATE OF CALIFORNIA DEPARTMENT OF TRANSPORTATION

DIVISION OF ENGINEERING SERVICES ARCHITECTURAL AND STRUCTURAL DESIGN

UNIT 3599
PROJECT NUMBER & PHASE 07140000851
EA 2881U1

BRIDGE NO. L5724
POST MILE

PASADENA 210/134 TUNNEL CONTROL BUILDING

WOOD FRAMING STANDARD - DETAILS

SHEET **ST-1B**

DISREGARD PRINTS BEARING EARLIER REVISION DATES → REVISION DATES (PRELIMINARY STAGE ONLY) 10-16-03 11-14-05 11-02-06 01-15-08 08-24-12 | SHEET | OF

st0_01b.dgn 18-JUN-2014 10:19

DIST.	COUNTY	ROUTE	POST MILES TOTAL PROJECT	SHEET NO.	TOTAL SHEETS
07	LA	210	R16.1/R25.8	912	927

REGISTERED CIVIL ENGINEER — 3-28-14 DATE

REGISTERED PROFESSIONAL ENGINEER Sean R. Samuel No. 54569 Exp. 12-31-15 CIVIL STATE OF CALIFORNIA

5-12-14
PLANS APPROVAL DATE

The State of California or its officers or agents shall not be responsible for the accuracy or completeness of scanned copies of this plan sheet.

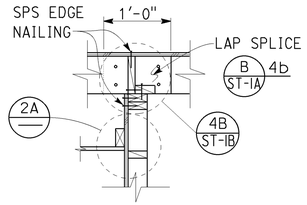

1A LAP SPLICE ACROSS JOISTS

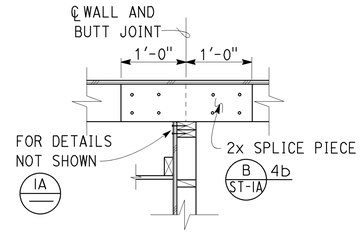

1B BUTT SPLICE ACROSS JOISTS

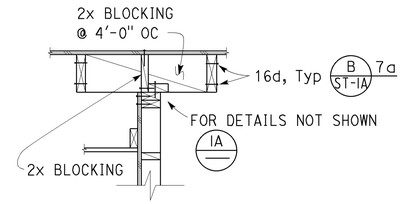

1C JOISTS PARALLEL TO WALL

1 JOIST LAYOUT AT TOP OF BEARING AND SHEAR WALL
No Scale

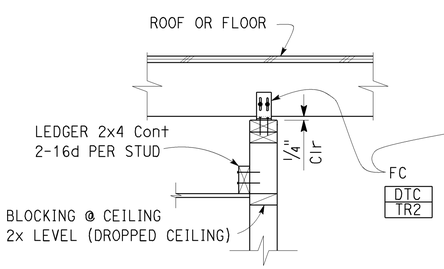

2A ACROSS JOISTS

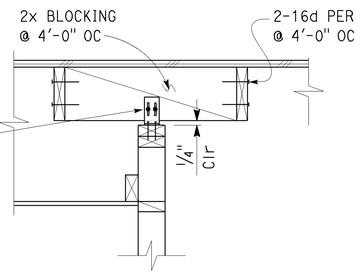

2B PARALLEL TO JOISTS

2 NON-BEARING WALL TOP PLATE CONNECTION
No Scale

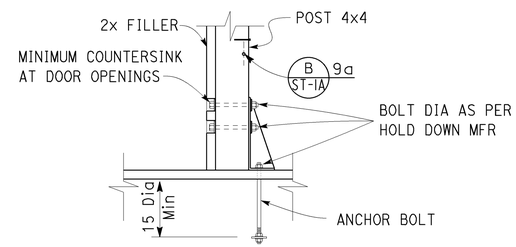

NOTE:
Provide additional 2x studs as required for grip noted on plans.

4 INTERIOR HOLD DOWN
No Scale

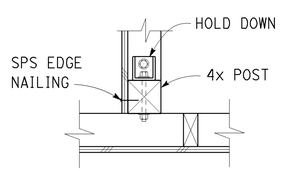

3A INTERSECTION

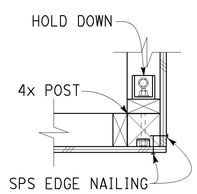

3B CORNER

NOTE:
Interior sheathing and attachment not shown for clarity.

3 INTERIOR AND CORNER WALL FRAMING DETAILS
No Scale

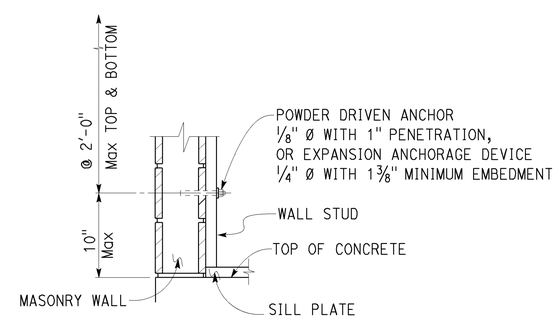

5 STUD ANCHORAGE TO MASONRY
No Scale

NOTE: SPECIFIC DETAILS OR NOTES ON OTHER SHEETS SHALL PREVAIL OVER STANDARD DETAILS AND NOTES ON THIS SHEET

STANDARD DRAWING

FILE NO. XS-25-5.1 | DRAWING DATE 1-04 | DESIGN BY Sean Samuel | DETAILS BY Peter F. von Sauzye, III | SUBMITTED BY Sean Samuel, DESIGN ENGINEER | CHECKED | CHECKED | APPROVED R.E. Travis DESIGN SUPERVISOR

STATE OF CALIFORNIA DEPARTMENT OF TRANSPORTATION

DIVISION OF ENGINEERING SERVICES ARCHITECTURAL AND STRUCTURAL DESIGN

BRIDGE NO. L5724 | POST MILE

PASADENA 210/134 TUNNEL CONTROL BUILDING

WOOD FRAMING STANDARD - DETAILS

SHEET **ST-1C**

TAEMWW Imperial Rev. 7/10

SCALE: ALL DIMENSIONS ARE IN MILLIMETERS UNLESS OTHERWISE NOTED.

ORIGINAL SCALE IN INCHES FOR REDUCED PLANS 0 1 2 3

UNIT 3599
PROJECT NUMBER & PHASE 07140000851
EA 2881U1

DISREGARD PRINTS BEARING EARLIER REVISION DATES → REVISION DATES (PRELIMINARY STAGE ONLY) 10-16-03 11-14-05 11-02-06 01-15-08 08-24-12 | SHEET | OF

18-JUN-2014 10:19

st0_01c.dgn

DIST.	COUNTY	ROUTE	POST MILES TOTAL PROJECT	SHEET NO.	TOTAL SHEETS
07	LA	210	R16.1/R25.8	913	927

REGISTERED CIVIL ENGINEER — 3-28-14 DATE

REGISTERED PROFESSIONAL ENGINEER Sean R. Samuel No. 54569 Exp. 12-31-15 CIVIL STATE OF CALIFORNIA

5-12-14
PLANS APPROVAL DATE

The State of California or its officers or agents shall not be responsible for the accuracy or completeness of scanned copies of this plan sheet.

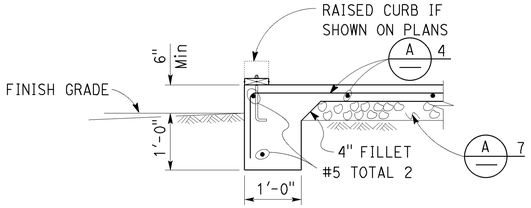

1 EXTERIOR FOOTING
NO SCALE

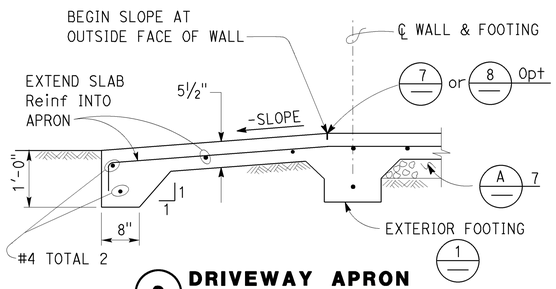

2 DRIVEWAY APRON
NO SCALE

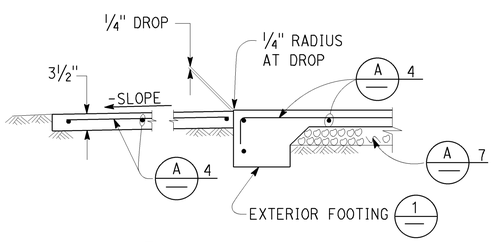

3 WALKWAY APRON
NO SCALE

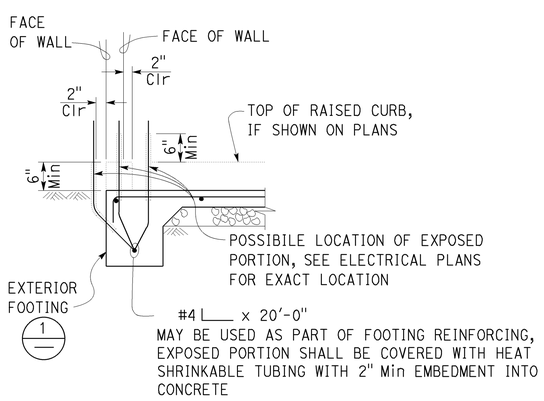

4 GROUND BAR DETAIL
NO SCALE

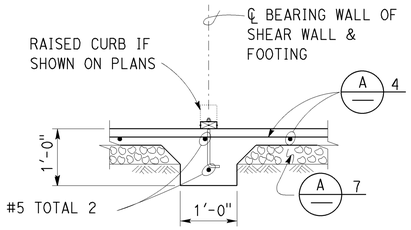

5 INTERIOR FOOTING
NO SCALE

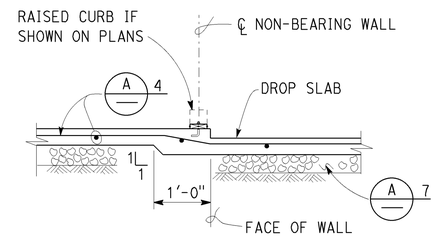

6 DROP SLAB AT NON-BEARING WALL
NO SCALE

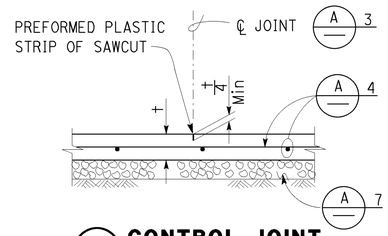

7 CONTROL JOINT
NO SCALE

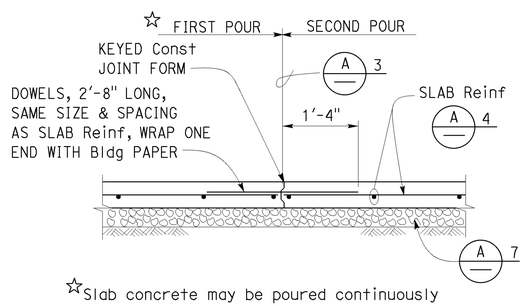

☆Slab concrete may be poured continuously across the Control Joint, to cover as large an area as practical.

8 CONTRACTION JOINT
NO SCALE

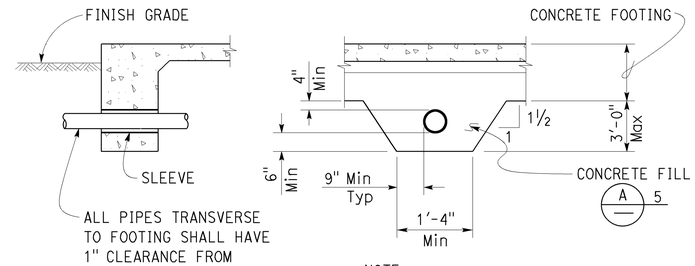

NOTE:
No Pipes Permitted beneath Interior or Exterior Isolated Footing.

9 PIPE DETAILS THROUGH FOOTING
NO SCALE

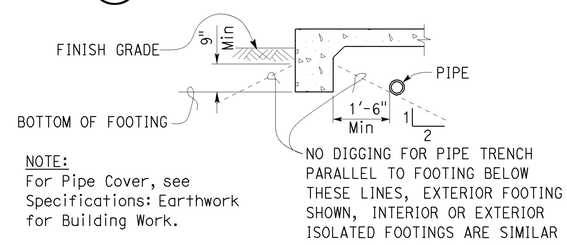

NOTE:
For Pipe Cover, see Specifications: Earthwork for Building Work.

10 PIPE DETAILS PARALLEL TO FOOTING
NO SCALE

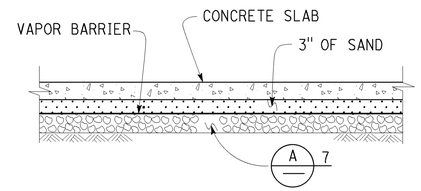

11 MOISTURE BARRIER
NO SCALE

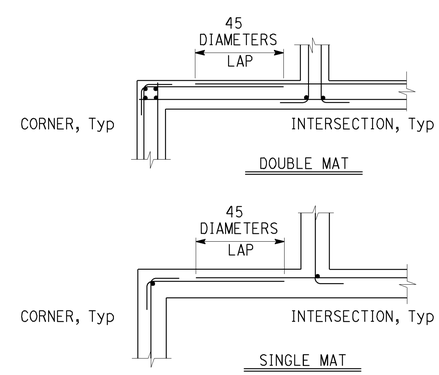

12 CORNER/INTERSECTION REINF SPLICE
NO SCALE

A CONCRETE NOTES

1. The following minimum concrete cover shall be provided for reinforcement.

	Minimum Cover
a. Concrete cast against and permanently exposed to earth	3"
b. Concrete exposed to earth or weather but cast in forms:	
#6 thru #18 bars	2"
#5 bar and smaller, W31 or D31 Wire, and smaller	1½"
c. Concrete not exposed to weather or in contact with ground: Slabs, Walls and Joists:	
#14 and #18 Bar	1½"
#11 Bar and smaller	¾"
Beams and Columns: Primary Reinforcement, Ties, Stirrups and Spirals	1½"

2. Splices in continuous reinforcement as in Walls, Wall Footings, etc. #8 or smaller shall have a lap of 45 diameters and the splices in adjacent bars shall not be less than 5'-0" apart.

   Continuous Bars in spandrels, Wall Beams, etc. shall lap Top Bars at center of span and Bottom Bars at supports.

3. Contraction Joints and Control Joints shall divide slab into areas not exceeding 25 square yards without reentrant corners and with length to width ratios not exceeding 1.5 to 1. Joint spacing shall not exceed 15'-0".

4.

Slab Thickness (t)	Reinforcement
3½"	#3 @ 18 Each way, place in center of Slab
5½"	#4 @ 18 Each way, place in center of Slab

5. Concrete fill is to be placed before Footing is poured. Make the same width as the Footing and the full width of the Pipe trench. Concrete fill not required for pipes less than 2" diameter for pipes more than 3'-0" below bottom of footing.

6. See Mechanical and Architectural Plans for size and locations of pipe, vents, ducts and other similar openings. See Electrical Plans for conduits and outlet boxes in floors, walls, etc.

7. Place 4" of free draining granular material under slabs.

NOTE: SPECIFIC DETAILS OR NOTES ON OTHER SHEETS SHALL PREVAIL OVER STANDARD DETAILS AND NOTES ON THIS SHEET

STANDARD DRAWING

FILE NO. XS-25-1 | DRAWING DATE 1-04 | DESIGN BY Sean Samuel | DETAILS BY Peter T. von Sauvage, III | SUBMITTED BY Sean Samuel, DESIGN ENGINEER | CHECKED Lee Sanders | CHECKED Sean Samuel | APPROVED RE Travis, DESIGN SUPERVISOR

STATE OF CALIFORNIA DEPARTMENT OF TRANSPORTATION

DIVISION OF ENGINEERING SERVICES ARCHITECTURAL AND STRUCTURAL DESIGN

BRIDGE NO. L5724 | POST MILE

PASADENA 210/134 TUNNEL CONTROL BUILDING

CONCRETE STANDARD

SHEET ST-2

TAEMWW Imperial Rev. 7/10

SCALE: ALL DIMENSIONS ARE IN MILLIMETERS UNLESS OTHERWISE NOTED.

ORIGINAL SCALE IN INCHES FOR REDUCED PLANS 0 1 2 3

UNIT 3599
PROJECT NUMBER & PHASE 07140000851
EA 2881U1

DISREGARD PRINTS BEARING EARLIER REVISION DATES → 1-16-04 11-14-05 04-27-12 08-24-12

REVISION DATES (PRELIMINARY STAGE ONLY) SHEET OF

18-JUN-2014 10:19

st0_02.dgn

DIST.	COUNTY	ROUTE	POST MILES TOTAL PROJECT	SHEET NO.	TOTAL SHEETS
07	LA	210	R16.1/R25.8	914	927

REGISTERED CIVIL ENGINEER — 3-28-14 DATE

REGISTERED PROFESSIONAL ENGINEER Sean R. Samuel No. 54569 Exp. 12-31-15 CIVIL STATE OF CALIFORNIA

5-12-14
PLANS APPROVAL DATE

The State of California or its officers or agents shall not be responsible for the accuracy or completeness of scanned copies of this plan sheet.

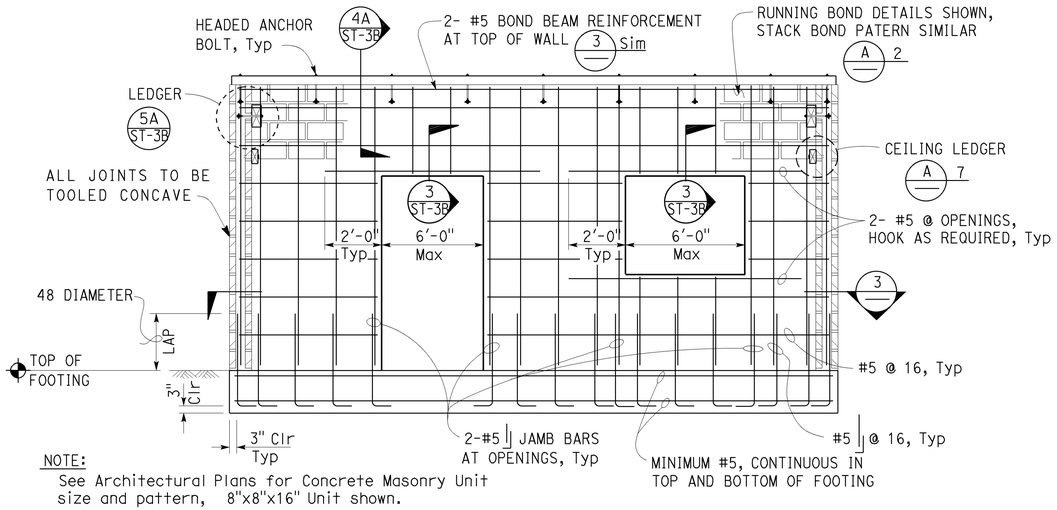

NOTE:
See Architectural Plans for Concrete Masonry Unit size and pattern, 8"x8"x16" Unit shown.

1 WALL ELEVATION
No Scale

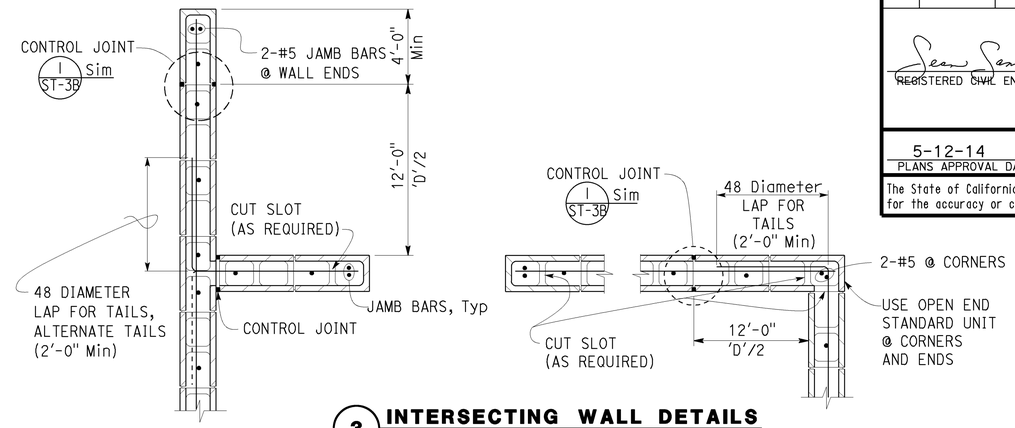

3 INTERSECTING WALL DETAILS
No Scale

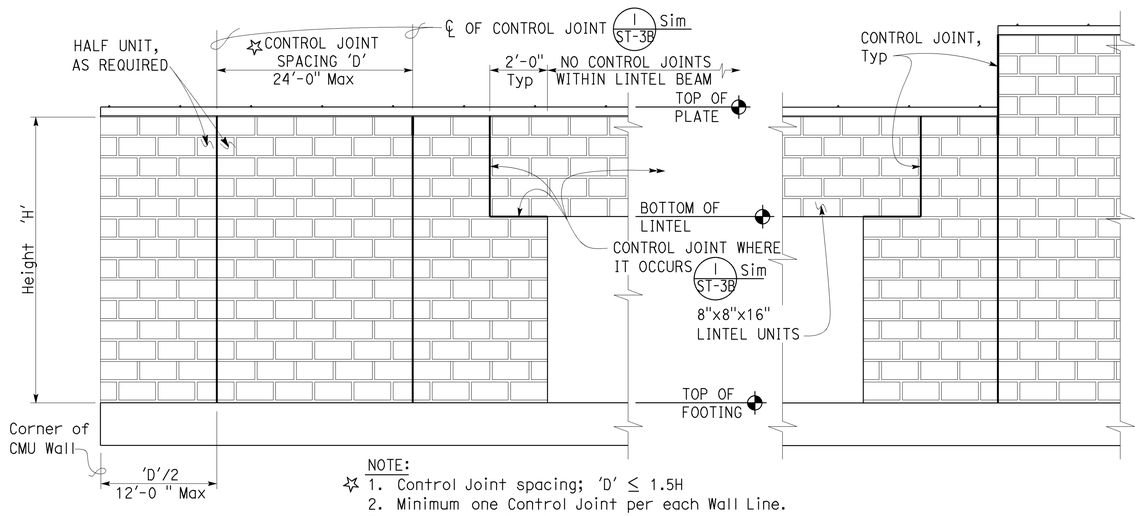

NOTE:
1. Control Joint spacing; 'D' ≤ 1.5H
2. Minimum one Control Joint per each Wall Line.
3. Location of the Control Joints to be approved by the Engineer.

2 WALL ELEVATION
No Scale

A REINFORCED CONCRETE MASONRY UNIT NOTES

1. All Walls shown on plans shall be solid grout, open end units, UON.
2. Stack Bond requires open end Bond Beam Units throughout.
3. All vertical reinforcement shall be centered in cell, UON. The minimum coverage of other reinforcement from the exposed surface of Concrete Masonry Unit shall be 2".
4. Reinforcement splices shall be as follows:
   a. Length of lap splice for a #7 or smaller bar shall be 48 diameters.
   b. Lintel lap splices, if necessary, shall be at midspan for top bars and beyond support for bottom bars.
5. There shall be a minimum 8" return at any Jamb adjacent to corner.
6. Dowels shall be at least the same size and spacing as wall reinforcement.
7. Ceiling Ledger shall be anchored with ¼" Ø Expansion Anchors installed at 2'-8" OC maximum spacing. Expansion Anchors shall have 1½" minimum distance to any edge of the masonry unit. Minimum embedment measured from the outside face of the unit shall be 2".
8. Pipes shall not be embedded in any Masonry Wall except when shown on plans or as approved by the Engineer.
9. Electrical Conduit, Panels or Fixtures may be placed in cells with the following restrictions:
   a. The Conduits shall not interfere with or displace the reinforcing steel.
   b. Conduits shall not be placed in such a congested manner as to prevent the complete filling of the cells with grout.
   c. Horizontal run of ¾" maximum size conduit may be placed in a bond beam unit course that does not have horizontal reinforcing steel.
   d. Recesses more than 1" deep for Electrical Panels or Fixtures shall be framed and have similar reinforcement as doors and windows.
10. Steel washers shall be provided for all anchor bolts, over-sized holes and high strength bolts.
11. See Architectural and Mechanical Plans for offsets, sizes and locations of ducts, wall openings, vents and other details not shown on Structural sheets.

8" CMU

NOTE: SPECIFIC DETAILS OR NOTES ON OTHER SHEETS SHALL PREVAIL OVER STANDARD DETAILS AND NOTES ON THIS SHEET

STANDARD DRAWING

FILE NO. XS-25-2	DESIGN BY Sean Samuel	CHECKED	APPROVED R.E. Travis
DRAWING DATE 1-04	DETAILS BY Peter Fivon Dawoye, II	CHECKED	DESIGN SUPERVISOR
	SUBMITTED BY Sean Samuel, DESIGN ENGINEER		

STATE OF CALIFORNIA DEPARTMENT OF TRANSPORTATION

DIVISION OF ENGINEERING SERVICES ARCHITECTURAL AND STRUCTURAL DESIGN

BRIDGE NO. L5724 POST MILE

PASADENA 210/134 TUNNEL CONTROL BUILDING

CONCRETE MASONRY UNIT STANDARD

SHEET ST-3A

TAEMWW Imperial Rev. 7/10

SCALE: ALL DIMENSIONS ARE IN MILLIMETERS UNLESS OTHERWISE NOTED.

ORIGINAL SCALE IN INCHES FOR REDUCED PLANS 0 1 2 3

UNIT 3599
PROJECT NUMBER & PHASE 07140000851
EA 2881U1

DISREGARD PRINTS BEARING EARLIER REVISION DATES → 1-16-04 11-14-05 8-3-06 08-24-12

REVISION DATES (PRELIMINARY STAGE ONLY) SHEET OF

18-JUN-2014 10:19

st0_03a.dgn

DIST.	COUNTY	ROUTE	POST MILES TOTAL PROJECT	SHEET NO.	TOTAL SHEETS
07	LA	210	R16.1/R25.8	915	927

REGISTERED CIVIL ENGINEER — 3-28-14 DATE

REGISTERED PROFESSIONAL ENGINEER Sean R. Samuel No. 54569 Exp. 12-31-15 CIVIL STATE OF CALIFORNIA

5-12-14
PLANS APPROVAL DATE

The State of California or its officers or agents shall not be responsible for the accuracy or completeness of scanned copies of this plan sheet.

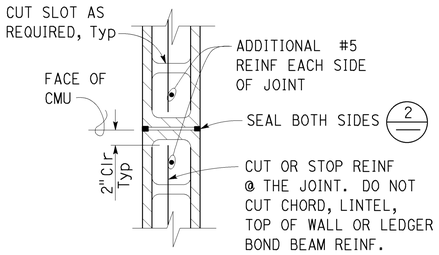

1 CONTROL JOINT DETAIL
No Scale

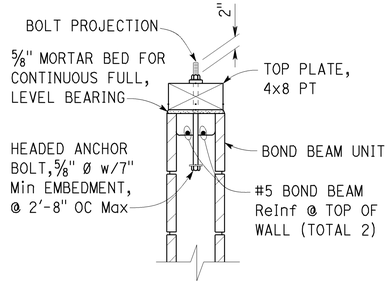

4A WOOD TOP PLATE DETAIL
No Scale

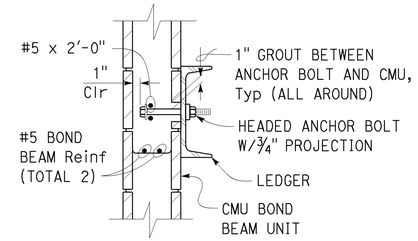

5B STEEL LEDGER DETAIL
No Scale

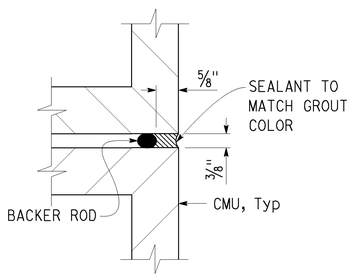

2 JOINT SEAL DETAIL
No Scale

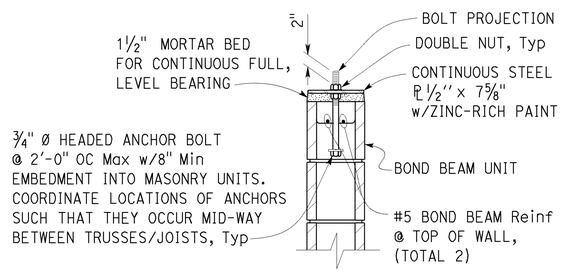

4B STEEL TOP PLATE DETAIL
No Scale

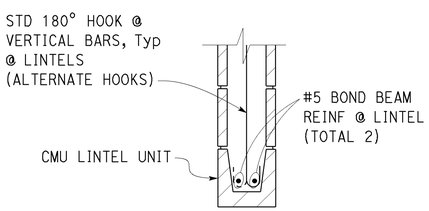

3 LINTEL DETAIL
No Scale

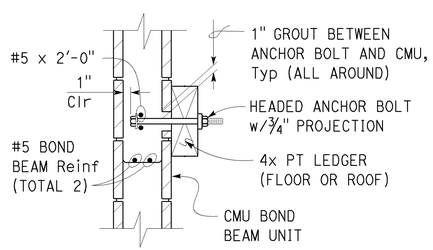

5A WOOD LEDGER DETAIL
No Scale

8" CMU

NOTE: SPECIFIC DETAILS OR NOTES ON OTHER SHEETS SHALL PREVAIL OVER STANDARD DETAILS AND NOTES ON THIS SHEET

STANDARD DRAWING

FILE NO. XS-25-2	DESIGN BY Sean Samuel	CHECKED Joe Sandoz	APPROVED R E Travis
DRAWING DATE 1-04	DETAILS BY Peter Fyvon Sawyer, II	CHECKED Dale Wood	DESIGN SUPERVISOR
	SUBMITTED BY Sean Samuel, DESIGN ENGINEER		

STATE OF CALIFORNIA DEPARTMENT OF TRANSPORTATION

DIVISION OF ENGINEERING SERVICES ARCHITECTURAL AND STRUCTURAL DESIGN

BRIDGE NO. L5724
POST MILE

PASADENA 210/134 TUNNEL CONTROL BUILDING

CONCRETE MASONRY UNIT STANDARD

SHEET **ST-3B**

TAEMWW Imperial Rev. 7/10

SCALE: ALL DIMENSIONS ARE IN MILLIMETERS UNLESS OTHERWISE NOTED.

ORIGINAL SCALE IN INCHES FOR REDUCED PLANS 0 1 2 3

UNIT 3599
PROJECT NUMBER & PHASE 07140000851
EA 2881U1

DISREGARD PRINTS BEARING EARLIER REVISION DATES → REVISION DATES (PRELIMINARY STAGE ONLY) 1-16-04 11-14-05 8-3-06 08-24-12

SHEET OF

18-JUN-2014 10:19

st0_03b.dgn

Dist	COUNTY	ROUTE	POST MILES TOTAL PROJECT	SHEET No.	TOTAL SHEETS
07	LA	210	R16.1/R25.8	916	927

Sean Samuel 3-28-14
REGISTERED CIVIL ENGINEER DATE

5-12-14
PLANS APPROVAL DATE

REGISTERED PROFESSIONAL ENGINEER Sean R. Samuel No. 54569 Exp. 12-31-15 CIVIL STATE OF CALIFORNIA

The State of California or its officers or agents shall not be responsible for the accuracy or completeness of scanned copies of this plan sheet.

PROJECT DESIGN CRITERIA

The building work on this project has been designed to conform to the 2013 California Building Code (2012 IBC)

LOADS

Seismic: Occupancy category = II
Importance factor I = 1.0
Site soil class = E
S_S = 2.879 S_{DS} = 1.919
S_1 = 0.9971 S_{D1} = 0.997
Seismic design category = D

Seismic force-resisting system:

North - South

R = 5.00 C_S = 0.3839

East - West

R = 5.00 C_S = 0.3839

Wind: Importance factor = 1.0
Basic wind speed = 110 mph
Exposure C
Internal pressure coefficient GC_{pi} = ± 0.55

Live load: Roof = 20 psf

MATERIALS

Reinforced concrete: (Ultimate strength design)
f'c = 3,600 psi
fy = 60,000 psi

Foundation:

Allowable soil pressure = 1,000 psf (assumed)

Miscellaneous Metals:

All Miscellaneous Metals must be Hot Dipped Galvanized A

WOOD STRUCTURAL PANEL NOTES

1. Panels must be conform to the Requirements for their Type in Voluntary Product Standard PS 1-07 or PS 2-04. Panels must be Factory-Marked indicating Compliance with Grade Requirements. The Durability Classification shall be Exposure 1.
2. All roof panels must be sheathed with 1⅛" CDX Exposure 1 plywood with 60/32 Span Rating unless otherwise noted on the plan sheets.
3. Roof must be placed face grain perpendicular to supports. Where possible, plywood must be placed in full sheets and staggered one half sheet length. Any partial plywood sheet must not be less than 2'-0'' in length or width unless fully blocked.
4. Prior to Installation, Panels must be protected from Exposure to Weather and Moisture. Provide Air Circulation around Tarp- Covered Stacks.

	BY	CHECKED
DESIGN	JUSTIN UYEHARA	ROBERT DU PLAINE
DETAILS	JANICE FUJII	ROBERT DU PLAINE
QUANTITIES		

STATE OF CALIFORNIA
DEPARTMENT OF TRANSPORTATION

DIVISION OF ENGINEERING SERVICES
ARCHITECTURAL AND STRUCTURAL DESIGN

BRIDGE No. L5724
POST MILE

PASADENA 210/134
TUNNEL CONTROL BUILDING

DESIGN CRITERIA AND DETAIL NOTES

SHEET ST1-0

TAEMWW Imperial - CCSC Rev. 02/13

ORIGINAL SCALE IN INCHES FOR REDUCED PLANS 0 1 2 3

UNIT: 3599 CONTRACT No.: 2881U1
PROJECT NUMBER & PHASE: 07140000851

DISREGARD PRINTS BEARING EARLIER REVISION DATES → 05-24-13 07-05-13 07-17-13 01-29-14 02-07-14

REVISION DATES (PRELIMINARY STAGE ONLY) SHEET OF

P:\dist_07\0700020994_la_210_interchange_building\expedite\st01_00.dgn

18-JUN-2014 10:19

Dist	COUNTY	ROUTE	POST MILES TOTAL PROJECT	SHEET No.	TOTAL SHEETS
07	LA	210	R16.1/R25.8	917	927

REGISTERED CIVIL ENGINEER — DATE 3-28-14

PLANS APPROVAL DATE 5-12-14

REGISTERED PROFESSIONAL ENGINEER Sean R. Samuel No. 54569 Exp. 12-31-15 CIVIL STATE OF CALIFORNIA

The State of California or its officers or agents shall not be responsible for the accuracy or completeness of scanned copies of this plan sheet.

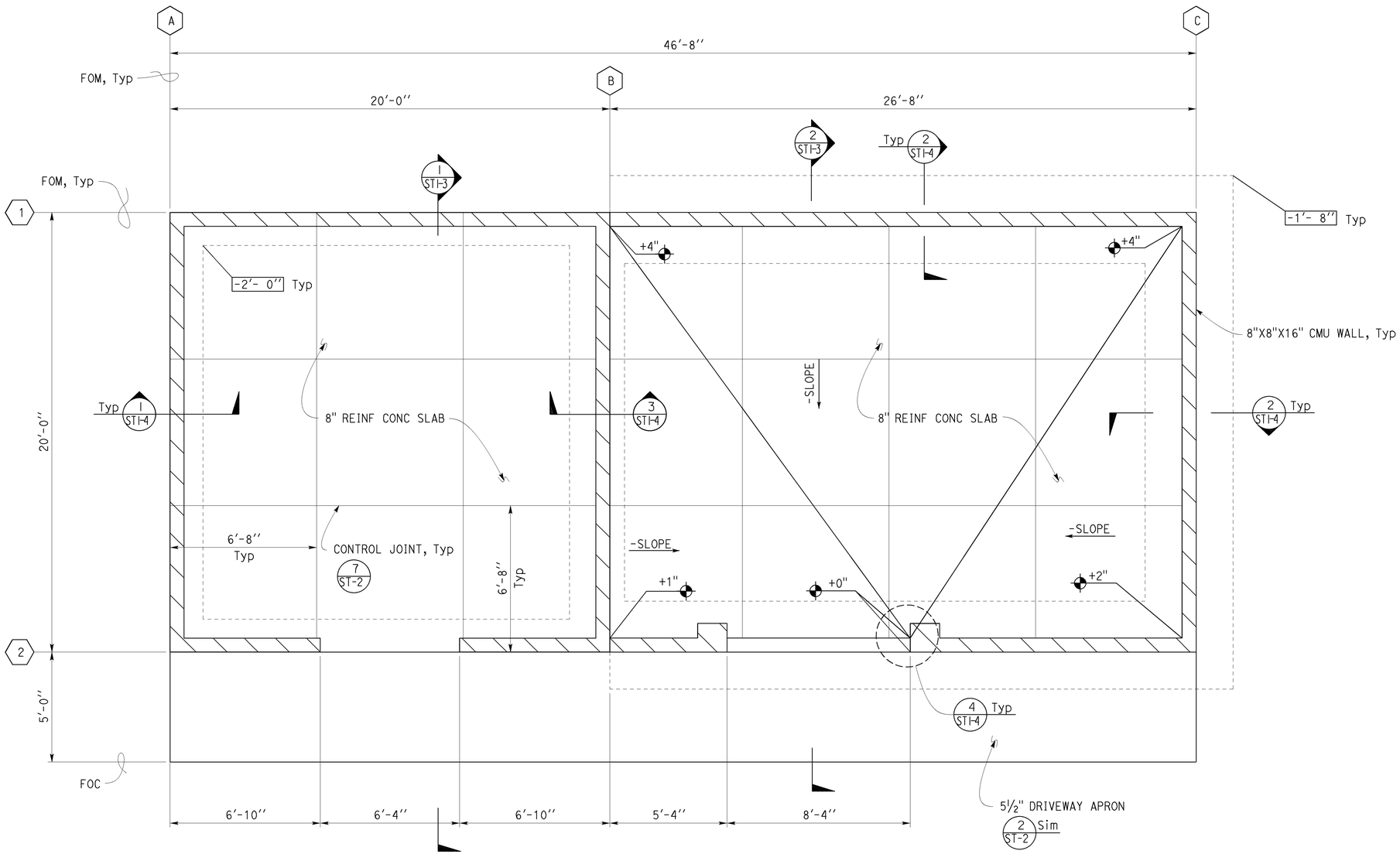

1 FOUNDATION PLAN

Scale ⅜''= 1' - 0''

Note:

1. See Electrical sheets for Ground Bar locations and 4 / ST-2
2. For Driveway Apron Expansion Joint location, see Architectural sheets.

	BY	CHECKED
DESIGN	JUSTIN UYEHARA	ROBERT DU PLAINE
DETAILS	JANICE FUJII	ROBERT DU PLAINE
QUANTITIES		

STATE OF CALIFORNIA DEPARTMENT OF TRANSPORTATION

DIVISION OF ENGINEERING SERVICES ARCHITECTURAL AND STRUCTURAL DESIGN

BRIDGE No. L5724

POST MILE

PASADENA 210/134 TUNNEL CONTROL BUILDING

FOUNDATION PLAN

SHEET ST1-1

TAEMWW Imperial - CCSC Rev. 02/13

ORIGINAL SCALE IN INCHES FOR REDUCED PLANS 0 1 2 3

UNIT: 3599 CONTRACT No.: 2881U1

PROJECT NUMBER & PHASE: 07140000851

DISREGARD PRINTS BEARING EARLIER REVISION DATES

REVISION DATES (PRELIMINARY STAGE ONLY) 12-19-13 01-22-14 01-31-14 02-07-14 02-13-14 03-26-14 03-27-14 04-17-14

SHEET OF

P:\dist_07\0700020994_la_210_interchange_building\expedite\st01_01.dgn

18-JUN-2014 10:19

Dist	COUNTY	ROUTE	POST MILES TOTAL PROJECT	SHEET No.	TOTAL SHEETS
07	LA	210	R16.1/R25.8	918	927

REGISTERED CIVIL ENGINEER — DATE 3-28-14

5-12-14
PLANS APPROVAL DATE

REGISTERED PROFESSIONAL ENGINEER Sean R. Samuel No. 54569 Exp. 12-31-15 CIVIL STATE OF CALIFORNIA

The State of California or its officers or agents shall not be responsible for the accuracy or completeness of scanned copies of this plan sheet.

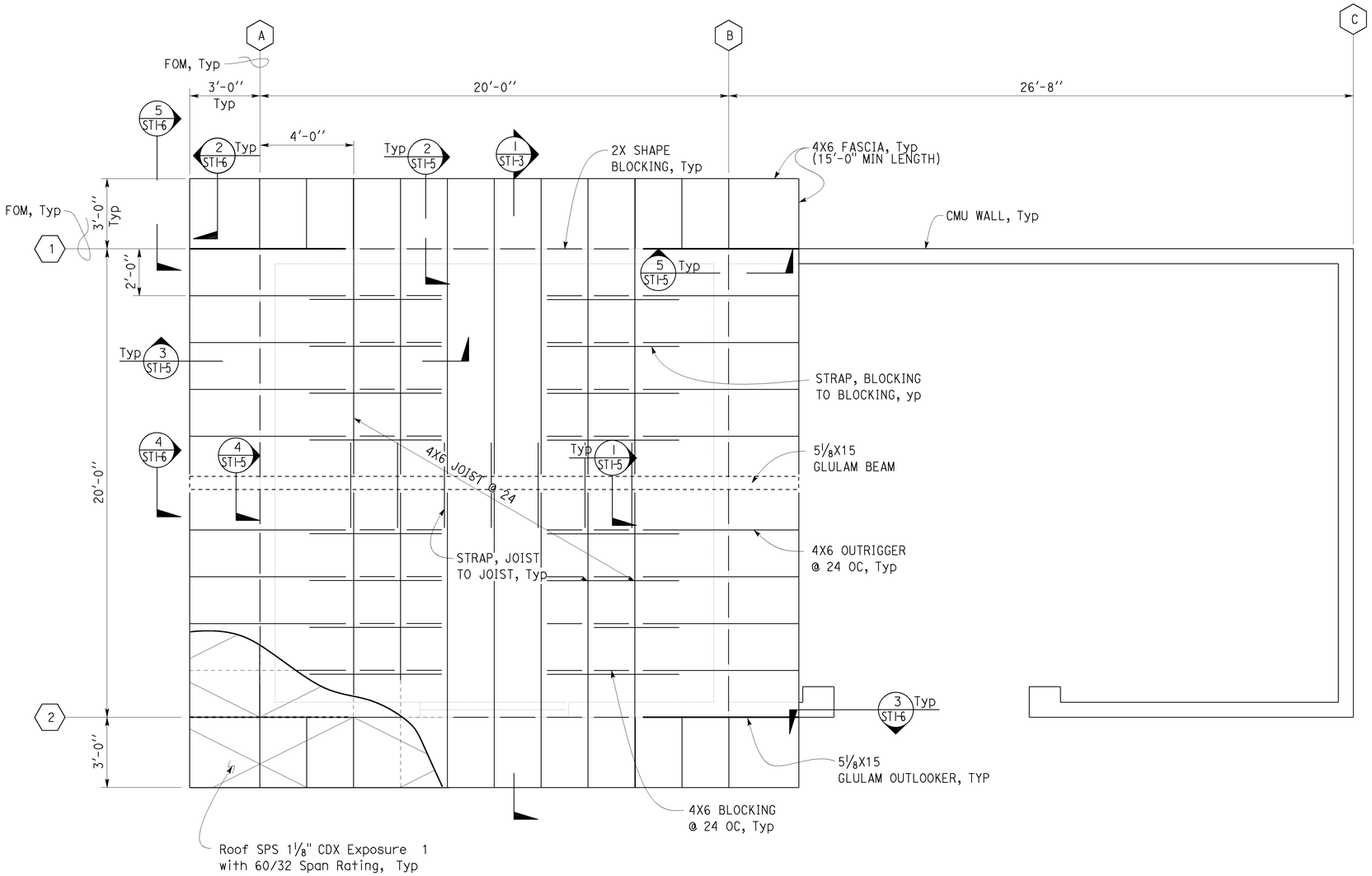

1 ROOF FRAMING PLAN

Scale 3/8''= 1' - 0''

A ROOF DIAPHRAGM SCREW SCHEDULE

Location	
Edge Nail	10d @ 4 OC
Field Nail	10d @ 12 OC

DESIGN	BY JUSTIN UYEHARA	CHECKED ROBERT DU PLAINE	
DETAILS	BY JANICE FUJII	CHECKED ROBERT DU PLAINE	
QUANTITIES	BY	CHECKED	

STATE OF CALIFORNIA DEPARTMENT OF TRANSPORTATION

DIVISION OF ENGINEERING SERVICES ARCHITECTURAL AND STRUCTURAL DESIGN

BRIDGE No. L5724 POST MILE

PASADENA 210/134 TUNNEL CONTROL BUILDING

ROOF FRAMING PLAN

SHEET ST1-2

TAEMWW Imperial - CCSC Rev. 02/13

ORIGINAL SCALE IN INCHES FOR REDUCED PLANS 0 1 2 3

UNIT: 3599 CONTRACT No.: 2881U1
PROJECT NUMBER & PHASE: 07140000851

DISREGARD PRINTS BEARING EARLIER REVISION DATES → REVISION DATES (PRELIMINARY STAGE ONLY) 01-22-14 01-24-14 01-31-14 02-04-14 02-05-14 02-13-14 03-04-14 03-18-14 03-27-14 SHEET OF

18-JUN-2014 10:19

P:\dist_07\0700020994_la_210_interchange_building\expedite\st01_02.dgn

Dist	COUNTY	ROUTE	POST MILES TOTAL PROJECT	SHEET No.	TOTAL SHEETS
07	LA	210	R16.1/R25.8	919	927

REGISTERED CIVIL ENGINEER — DATE 3-28-14

5-12-14
PLANS APPROVAL DATE

REGISTERED PROFESSIONAL ENGINEER
Sean R. Samuel
No. 54569
Exp. 12-31-15
CIVIL
STATE OF CALIFORNIA

The State of California or its officers or agents shall not be responsible for the accuracy or completeness of scanned copies of this plan sheet.

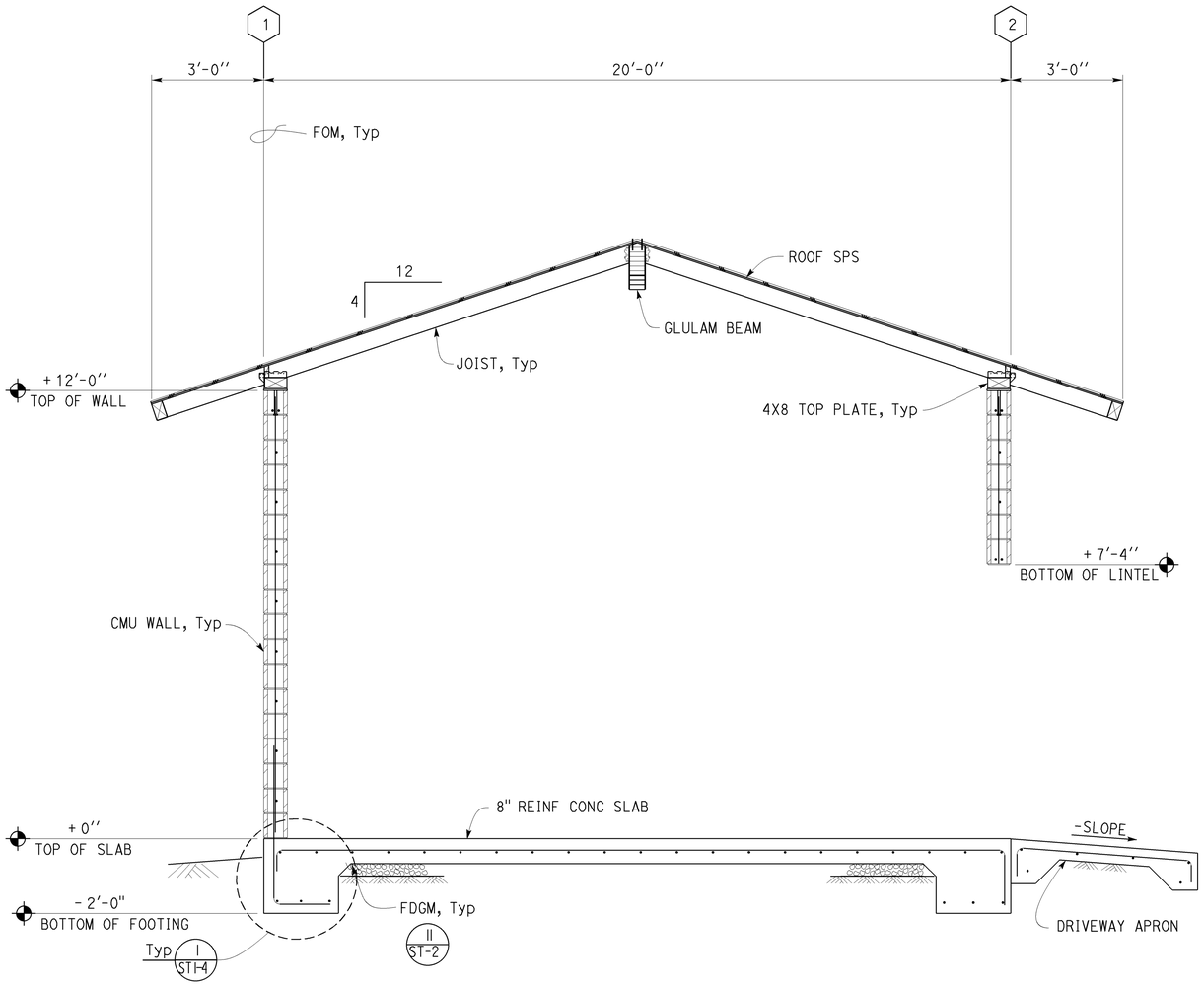

1 BUILDING SECTION
Scale 1/2''= 1' - 0''

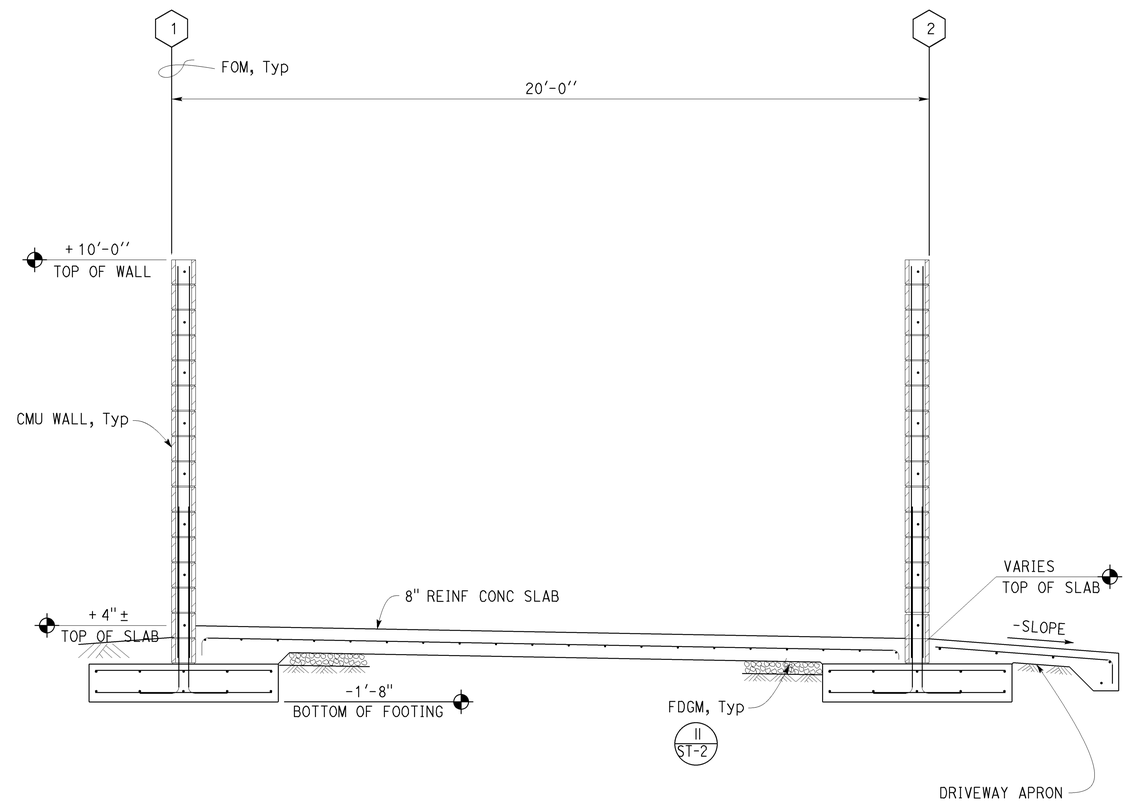

2 BUILDING SECTION
Scale 1/2''= 1' - 0''

DESIGN	BY JUSTIN UYEHARA	CHECKED ROBERT DU PLAINE	
DETAILS	BY JANICE FUJII	CHECKED ROBERT DU PLAINE	
QUANTITIES	BY	CHECKED	

STATE OF CALIFORNIA
DEPARTMENT OF TRANSPORTATION

DIVISION OF ENGINEERING SERVICES
ARCHITECTURAL AND STRUCTURAL DESIGN

BRIDGE No. L5724
POST MILE

PASADENA 210/134
TUNNEL CONTROL BUILDING

BUILDING SECTIONS

SHEET ST1-3

TAEMWW Imperial - CCSC Rev. 02/13

ORIGINAL SCALE IN INCHES FOR REDUCED PLANS 0 1 2 3

UNIT: 3599 CONTRACT No.: 2881U1
PROJECT NUMBER & PHASE: 07140000851

DISREGARD PRINTS BEARING EARLIER REVISION DATES → 12-28-13 01-22-14 01-31-14 02-05-14 02-13-14 03-03-14 03-27-14

REVISION DATES (PRELIMINARY STAGE ONLY) SHEET OF

P:\dist_07\0700020994_la_210_interchange_building\expedite\st01_03.dgn

18-JUN-2014 10:19

Dist	COUNTY	ROUTE	POST MILES TOTAL PROJECT	SHEET No.	TOTAL SHEETS
07	LA	210	R16.1/R25.8	920	927

REGISTERED CIVIL ENGINEER — DATE 3-28-14

5-12-14
PLANS APPROVAL DATE

REGISTERED PROFESSIONAL ENGINEER Sean R. Samuel No. 54569 Exp. 12-31-15 CIVIL STATE OF CALIFORNIA

The State of California or its officers or agents shall not be responsible for the accuracy or completeness of scanned copies of this plan sheet.

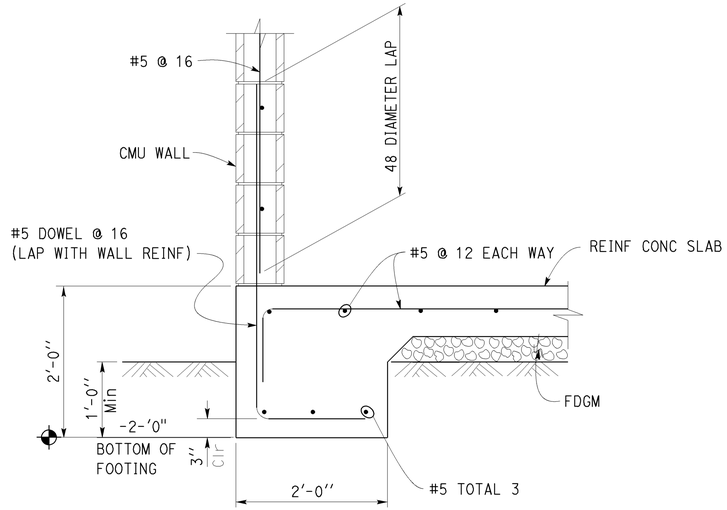

1 FOOTING DETAIL
Scale 1'' = 1'- 0''

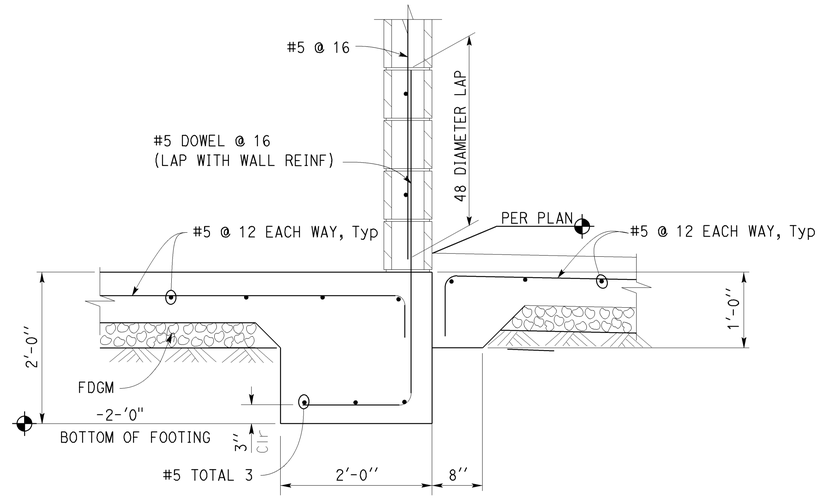

3 FOOTING DETAIL
Scale 1'' = 1'- 0''

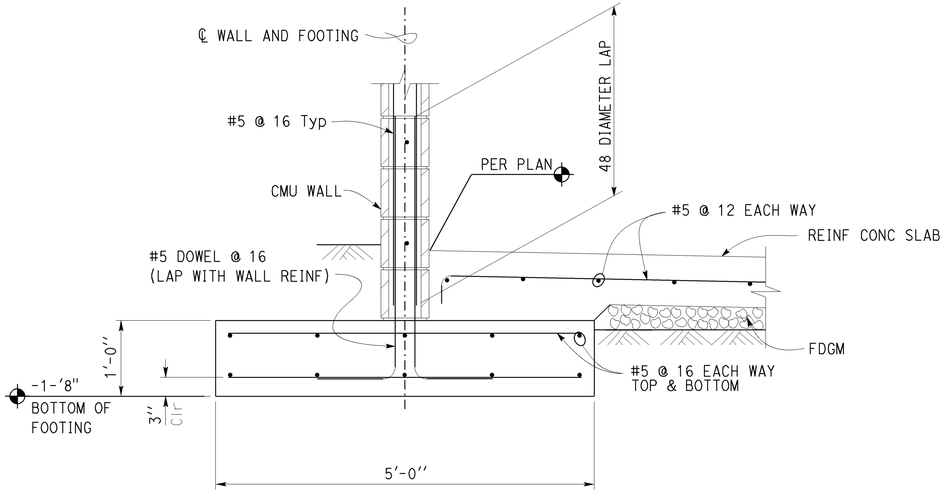

2 FOOTING DETAIL
Scale 1'' = 1'- 0''

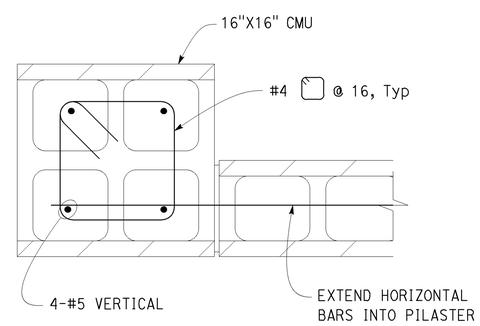

4 PILASTER DETAIL
Scale 1'' = 1'- 0''

	BY	CHECKED
DESIGN	JUSTIN UYEHARA	ROBERT DU PLAINE
DETAILS	JANICE FUJII	ROBERT DU PLAINE
QUANTITIES		

STATE OF CALIFORNIA
DEPARTMENT OF TRANSPORTATION

DIVISION OF ENGINEERING SERVICES
ARCHITECTURAL AND STRUCTURAL DESIGN

BRIDGE No. L5724
POST MILE

PASADENA 210/134
TUNNEL CONTROL BUILDING

FOOTING DETAILS

SHEET ST1-4

TAEMWW Imperial - CCSC Rev. 02/13

ORIGINAL SCALE IN INCHES FOR REDUCED PLANS 0 1 2 3

UNIT: 3599 CONTRACT No.: 2881U1
PROJECT NUMBER & PHASE: 07140000851

DISREGARD PRINTS BEARING EARLIER REVISION DATES

REVISION DATES (PRELIMINARY STAGE ONLY) 01-11-14 01-22-14 01-31-14 02-06-14 02-13-14 03-27-14 03-28-14 04-17-14 SHEET OF

P:\dist_07\0700020994_la_210_interchange_building\expedite\st01_04.dgn

18-JUN-2014 10:19

Dist	COUNTY	ROUTE	POST MILES TOTAL PROJECT	SHEET No.	TOTAL SHEETS
07	LA	210	R16.1/R25.8	921	927

REGISTERED CIVIL ENGINEER — DATE 3-28-14

5-12-14
PLANS APPROVAL DATE

REGISTERED PROFESSIONAL ENGINEER — Sean R. Samuel — No. 54569 — Exp. 12-31-15 — CIVIL — STATE OF CALIFORNIA

The State of California or its officers or agents shall not be responsible for the accuracy or completeness of scanned copies of this plan sheet.

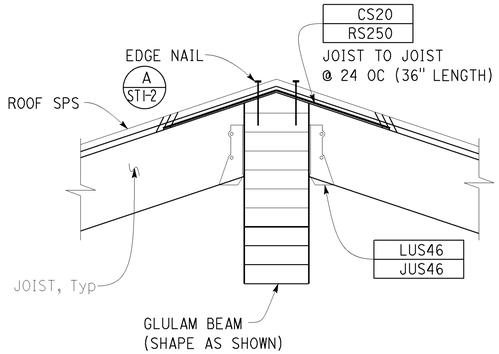

1 RIDGE DETAIL
Scale 2'' = 1' - 0''

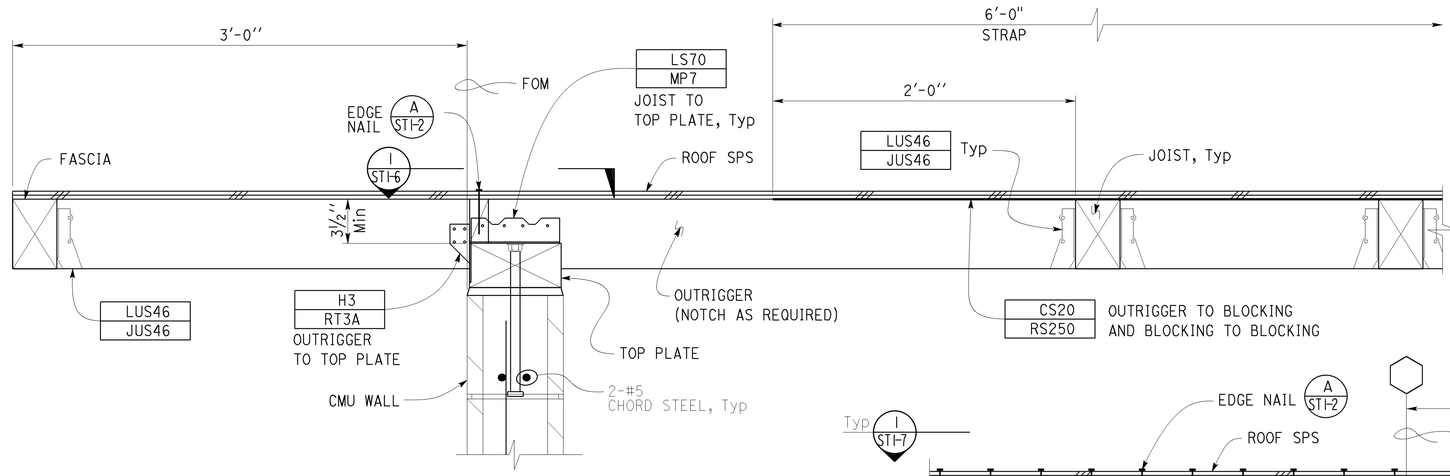

3 OUTRIGGER CONNECTION
Scale 2'' = 1' - 0''

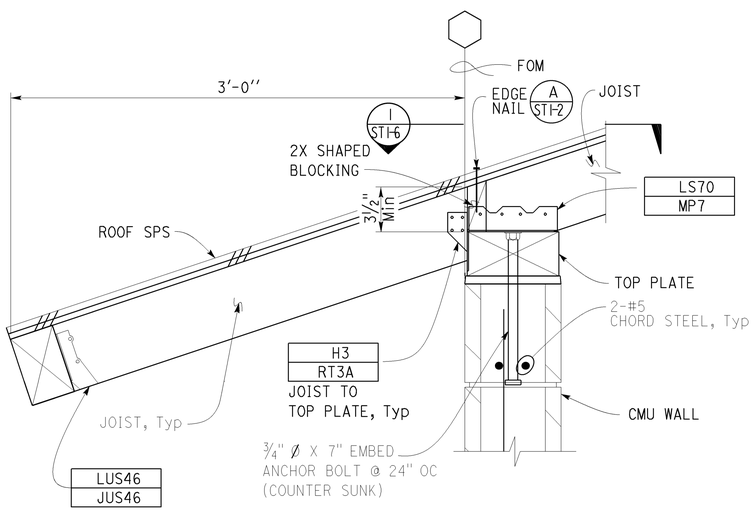

2 ROOF SECTION
Scale 2'' = 1' - 0''

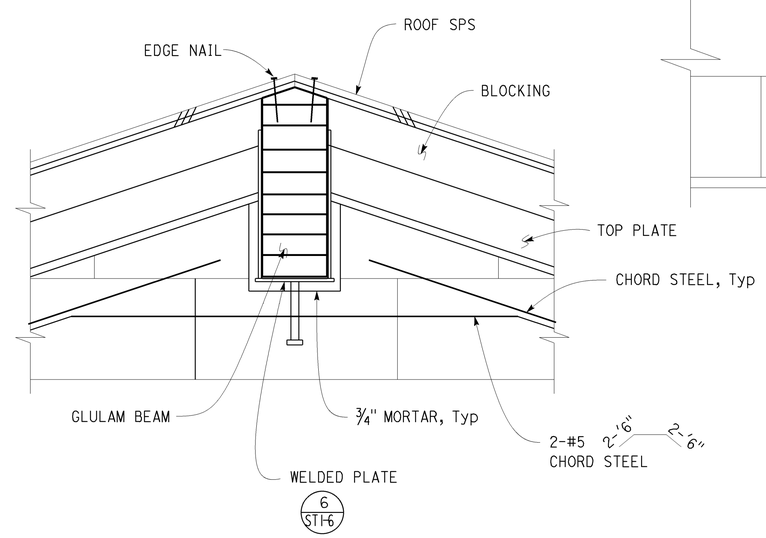

4 RIDGE DETAIL @ CMU
Scale 2'' = 1' - 0''

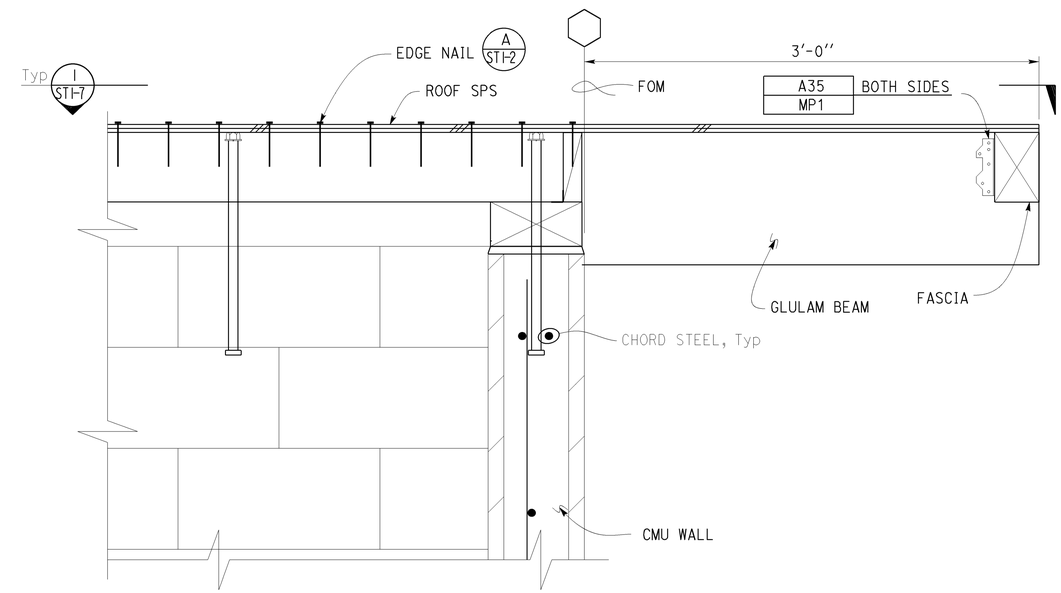

5 GLULAM TO TOP PLATE
Scale 2'' = 1' - 0''

DESIGN	BY JUSTIN UYEHARA	CHECKED ROBERT DU PLAINE	
DETAILS	BY JANICE FUJII	CHECKED ROBERT DU PLAINE	
QUANTITIES	BY	CHECKED	

STATE OF CALIFORNIA
DEPARTMENT OF TRANSPORTATION

DIVISION OF ENGINEERING SERVICES
ARCHITECTURAL AND STRUCTURAL DESIGN

BRIDGE No. L5724
POST MILE

PASADENA 210/134
TUNNEL CONTROL BUILDING

ROOF FRAMING DETAILS

SHEET ST1-5

TAEMWW Imperial - CCSC Rev. 02/13

ORIGINAL SCALE IN INCHES FOR REDUCED PLANS 0 1 2 3

UNIT: 3599 CONTRACT No.: 2881U1
PROJECT NUMBER & PHASE: 07140000851

DISREGARD PRINTS BEARING EARLIER REVISION DATES → 12-27-13 01-22-14 02-06-14 02-12-14 02-13-14 03-04-14 03-28-14

REVISION DATES (PRELIMINARY STAGE ONLY) — SHEET — OF

P:\dist_07\0700020994_la_210_interchange_building\expedite\st01_05.dgn

18-JUN-2014 10:19

Dist	COUNTY	ROUTE	POST MILES TOTAL PROJECT	SHEET No.	TOTAL SHEETS
07	LA	210	R16.1/R25.8	922	927

REGISTERED CIVIL ENGINEER — DATE 3-28-14

5-12-14
PLANS APPROVAL DATE

REGISTERED PROFESSIONAL ENGINEER Sean R. Samuel No. 54569 Exp. 12-31-15 CIVIL STATE OF CALIFORNIA

The State of California or its officers or agents shall not be responsible for the accuracy or completeness of scanned copies of this plan sheet.

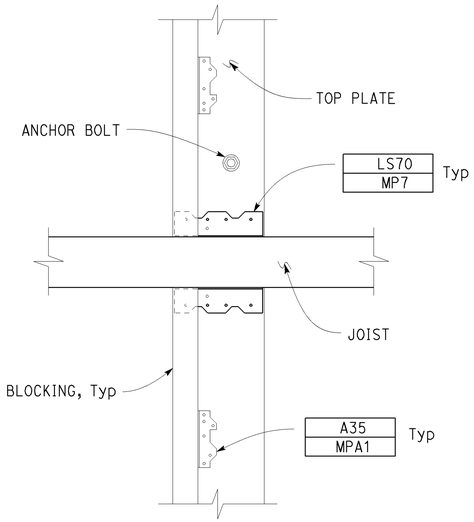

1 JOIST TO TOP PLATE
Scale 2'' = 1' - 0''

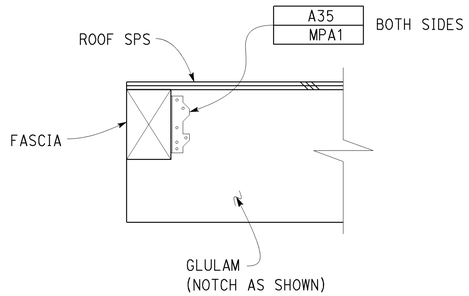

3 FASCIA TO GLULAM
Scale 2'' = 1' - 0''

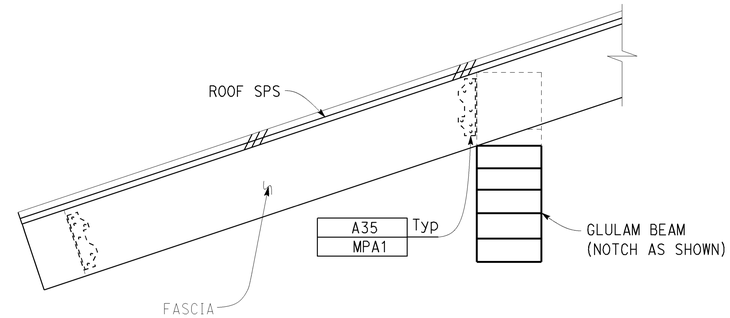

5 FASCIA TO GLULAM
Scale 2'' = 1' - 0''

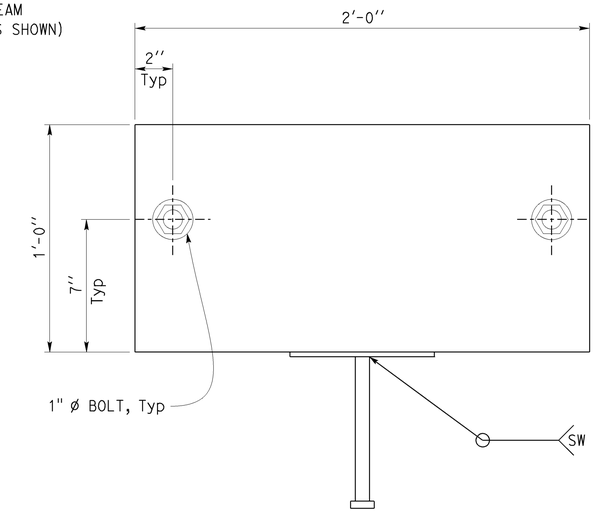

7 PLATE DETAIL
Scale 3'' = 1' - 0''

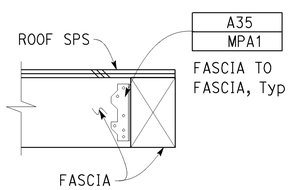

2 FASCIA TO FASCIA
Scale 2'' = 1' - 0''

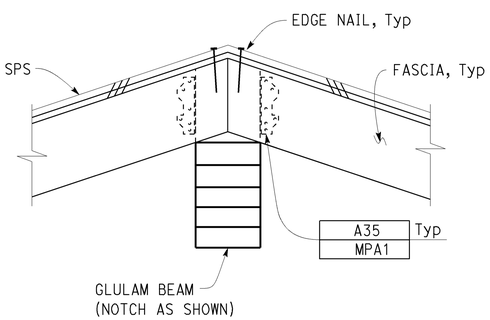

4 FASCIA TO GLULAM
Scale 2'' = 1' - 0''

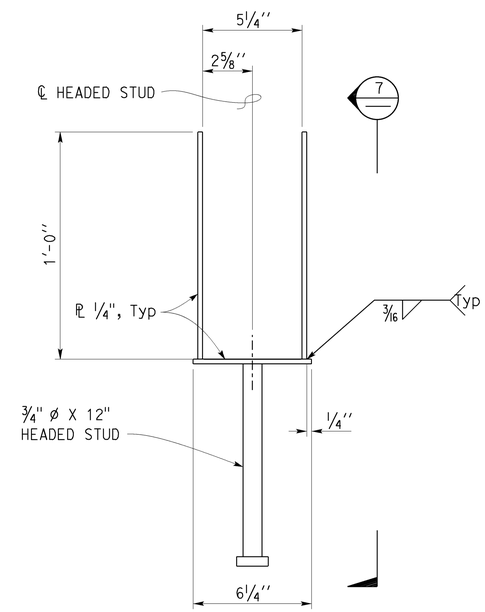

6 WELDED PLATE DETAIL
Scale 4'' = 1' - 0''

DESIGN	BY JUSTIN UYEHARA	CHECKED ROBERT DU PLAINE	
DETAILS	BY JANICE FUJII	CHECKED ROBERT DU PLAINE	
QUANTITIES	BY	CHECKED	

STATE OF CALIFORNIA
DEPARTMENT OF TRANSPORTATION

DIVISION OF ENGINEERING SERVICES
ARCHITECTURAL AND STRUCTURAL DESIGN

BRIDGE No. L5724
POST MILE

PASADENA 210/134
TUNNEL CONTROL BUILDING

ROOF FRAMING DETAILS

SHEET ST1-6

TAEMWW Imperial - CCSC Rev. 02/13

ORIGINAL SCALE IN INCHES FOR REDUCED PLANS 0 1 2 3

UNIT: 3599 CONTRACT No.: 2881U1
PROJECT NUMBER & PHASE: 07140000851

DISREGARD PRINTS BEARING EARLIER REVISION DATES → 02-06-14 02-12-14 03-04-14

REVISION DATES (PRELIMINARY STAGE ONLY) SHEET OF

P:\dist_07\0700020994_la_210_interchange_building\expedite\st01_06.dgn

18-JUN-2014 10:19

Dist	COUNTY	ROUTE	POST MILES TOTAL PROJECT	SHEET No.	TOTAL SHEETS
07	LA	210	R16.1/R25.8	923	927

REGISTERED CIVIL ENGINEER — DATE 3-28-14

5-12-14
PLANS APPROVAL DATE

REGISTERED PROFESSIONAL ENGINEER Sean R. Samuel No. 54569 Exp. 12-31-15 CIVIL STATE OF CALIFORNIA

The State of California or its officers or agents shall not be responsible for the accuracy or completeness of scanned copies of this plan sheet.

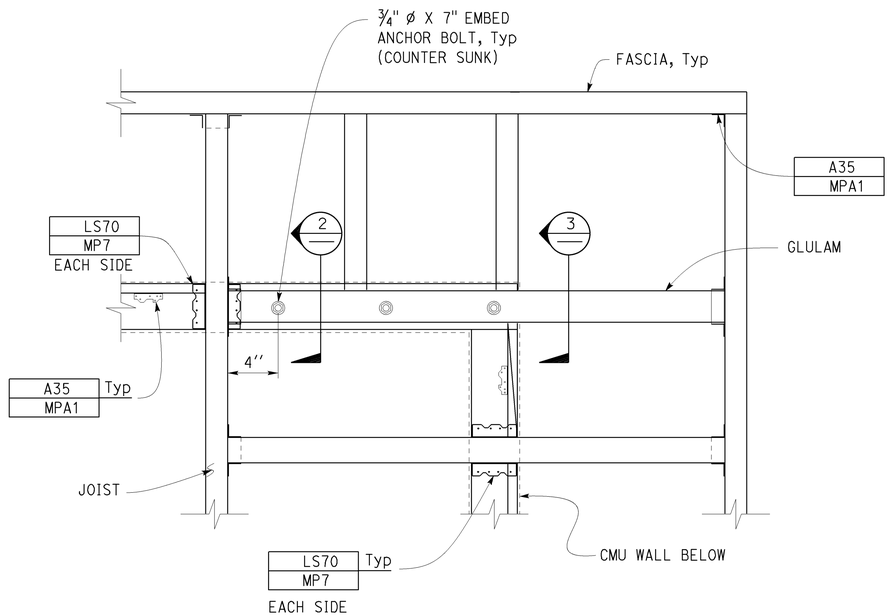

1 TYPICAL ROOF CORNER PLAN
Scale 2'' = 1' - 0''

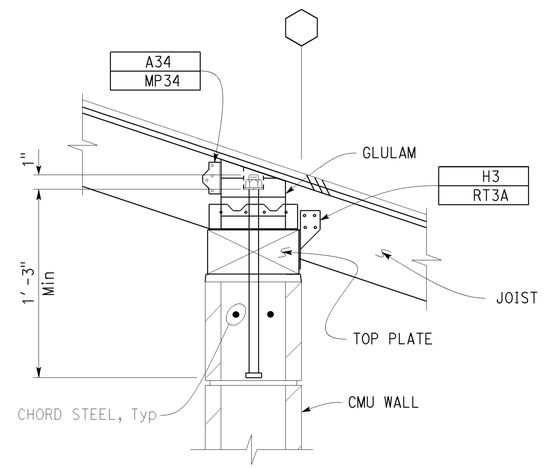

2 EAVE SECTION
Scale 2'' = 1' - 0''

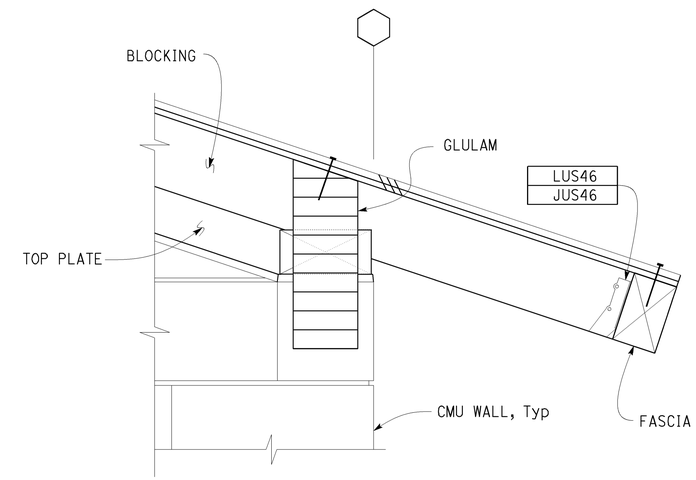

3 EAVE SECTION
Scale 2'' = 1' - 0''

DESIGN	BY JUSTIN UYEHARA	CHECKED ROBERT DU PLAINE	
DETAILS	BY JANICE FUJII	CHECKED ROBERT DU PLAINE	
QUANTITIES	BY	CHECKED	

STATE OF CALIFORNIA
DEPARTMENT OF TRANSPORTATION

DIVISION OF ENGINEERING SERVICES
ARCHITECTURAL AND STRUCTURAL DESIGN

BRIDGE No. L5724
POST MILE

PASADENA 210/134
TUNNEL CONTROL BUILDING

ROOF FRAMING DETAILS

SHEET ST1-7

TAEMWW Imperial - CCSC Rev. 02/13

ORIGINAL SCALE IN INCHES FOR REDUCED PLANS 0 1 2 3

UNIT: 3599 CONTRACT No.: 2881U1
PROJECT NUMBER & PHASE: 07140000851

DISREGARD PRINTS BEARING EARLIER REVISION DATES → 02-13-14 03-04-14 03-28-14

REVISION DATES (PRELIMINARY STAGE ONLY) SHEET OF

18-JUN-2014 10:19

P:\dist_07\0700020994_la_210_interchange_building\expedite\st01_07.dgn

DIST	COUNTY	ROUTE	POST MILES TOTAL PROJECT	SHEET No.	TOTAL SHEETS
07	LA	210	R16.1/R25.8	924	927

REGISTERED CIVIL ENGINEER 04/28/14 DATE

5-12-14
PLANS APPROVAL DATE

REGISTERED PROFESSIONAL ENGINEER EDWARD J. NAHM No. C66900 Exp. 09/30/14 CIVIL STATE OF CALIFORNIA

The State of California or its officers or agents shall not be responsible for the accuracy or completeness of electronic copies of this plan sheet.

INDEX TO PLANS

	TITLE
1	GENERAL PLAN NO. 1
2	GENERAL PLAN NO. 2
3	GENERAL PLAN NO. 3
4	MISCELLANEOUS DETAILS

STANDARD PLANS DATED 2010

SHEET NO.	TITLE
A10A	ABBREVIATIONS (SHEET 1 OF 2)
RSP A10B	ABBREVIATIONS (SHEET 2 OF 2)
A10C	LINES AND SYMBOLS (SHEET 1 OF 3)
A10D	LINES AND SYMBOLS (SHEET 2 OF 3)
A10E	LINES AND SYMBOLS (SHEET 3 OF 3)

STANDARD PLAN SHEET No.

DETAIL No.

LEGEND:

Indicates existing.

Indicates limits of prepare and clean concrete surfaces, paint concrete surfaces, and Anti-Graffiti coating.

Indicates direction of traffic.

Indicates lighting system removal.

Indicates existing metal 1½ × 1½ unistrut to remain.

Indicates repair spalled surface area, see "SOFFIT SPALL REPAIR DETAIL" on "MISCELLANEOUS DETAILS" sheet.

ROUTE 210-710/E210 SEPARATION (53-2341)

QUANTITIES

LEAD COMPLIANCE PLAN	LUMP	SUM
WORK AREA MONITORING (BRIDGE)	LUMP	SUM
REPAIR SPALLED SURFACE AREA	12	SQFT
PREPARE AND CLEAN CONCRETE SURFACES	52,072	SQFT
PAINT CONCRETE SURFACES	52,072	SQFT
ANTI-GRAFFITI COATING	52,072	SQFT

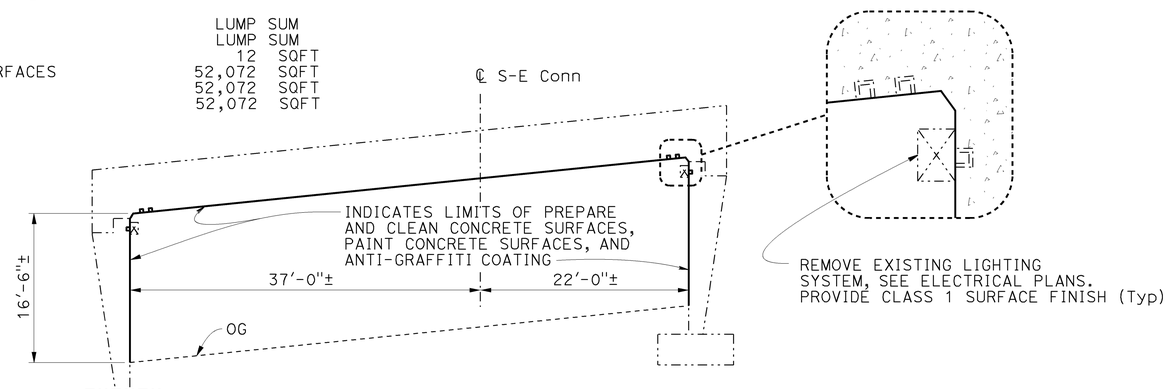

TYPICAL SECTION

NO SCALE

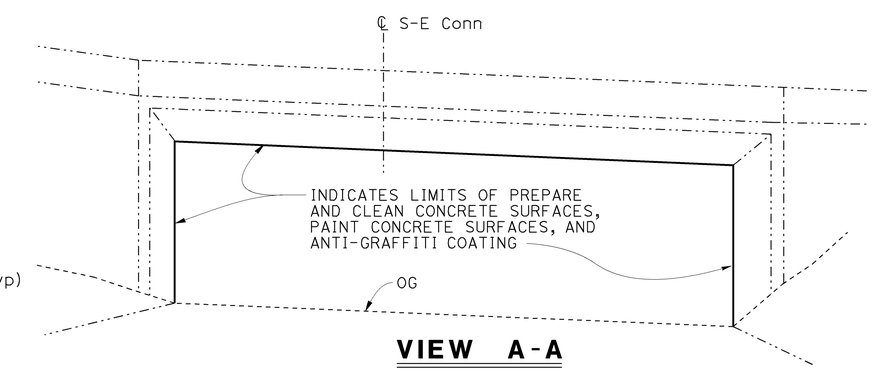

VIEW A-A

NO SCALE
(EB SHOWN, BB SIMILAR)

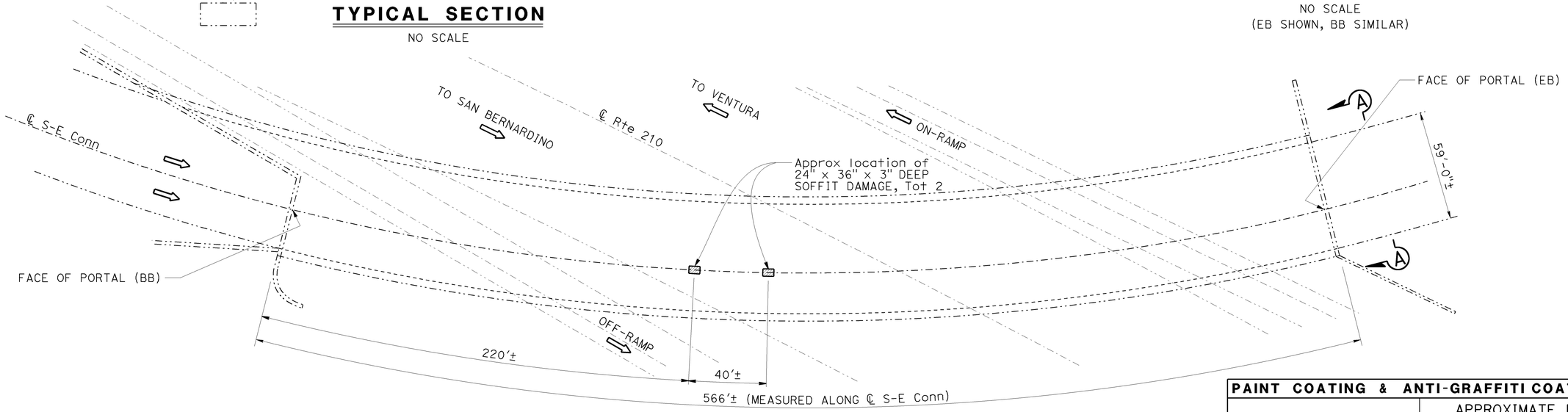

ROUTE 210-710/E210 SEPARATION

Br No. 53-2341, Rte 210, PM R24.77
NO SCALE

PAINT COATING & ANTI-GRAFFITI COATING TABLE	
LOCATION	APPROXIMATE PAINT AREA (SQFT)
WALLS	18,678
SOFFIT	33,394

NOTE:
THE CONTRACTOR SHALL VERIFY ALL CONTROLLING FIELD DIMENSIONS BEFORE ORDERING OR FABRICATING ANY MATERIAL. EXISTING UTILITY FACILITIES HAVE NOT BEEN PLOTTED ON THESE PLANS.

TONY D. BRAKE
DESIGN ENGINEER

	BY	CHECKED		BY	CHECKED
DESIGN	Edward Nahm	Tony Brake	LOAD FACTOR DESIGN	LIVE LOADING: HS20-44 AND ALTERNATIVE AND PERMIT DESIGN LOAD	
DETAILS	Tom Dang	Edward Nahm	LAYOUT	Tom Dang	Edward Nahm
QUANTITIES	Edward Nahm	Tony Brake	SPECIFICATIONS	Karen Doll	PLANS AND SPECS COMPARED Karen Doll

STATE OF CALIFORNIA
DEPARTMENT OF TRANSPORTATION

DIVISION OF MAINTENANCE
STRUCTURE MAINTENANCE DESIGN

BRIDGE NO. 53-2341
POST MILE R24.77

ROUTE 210 BRIDGES
GENERAL PLAN NO. 1

STRUCTURES MAINTENANCE GENERAL PLAN SHEET (ENGLISH) (REV. 09-01-10)

ORIGINAL SCALE IN INCHES FOR REDUCED PLANS 0 1 2 3

UNIT: 3489
PROJECT NUMBER & PHASE: 0714000085-1
CONTRACT NO.: 07-2881U4

DISREGARD PRINTS BEARING EARLIER REVISION DATES

REVISION DATES 07-01-13

SHEET 01 OF 04

FILE => 07-2881u1-a-gp01.dgn

USERNAME => s129239 DATE PLOTTED => 30-APR-2014 TIME PLOTTED => 09:36

DIST	COUNTY	ROUTE	POST MILES TOTAL PROJECT	SHEET No.	TOTAL SHEETS
07	LA	210	R16.1/R25.8	925	927

REGISTERED CIVIL ENGINEER 04/28/14 DATE

5-12-14
PLANS APPROVAL DATE

REGISTERED PROFESSIONAL ENGINEER EDWARD J. NAHM No. C66900 Exp. 09/30/14 CIVIL STATE OF CALIFORNIA

The State of California or its officers or agents shall not be responsible for the accuracy or completeness of electronic copies of this plan sheet.

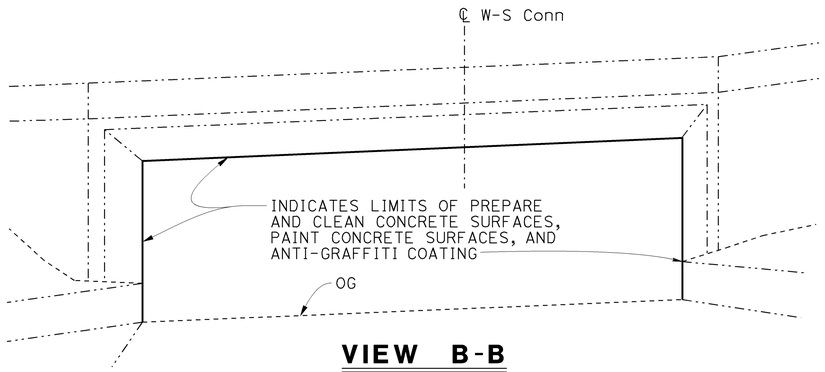

VIEW B-B

NO SCALE
(BB SHOWN, EB SIMILAR)

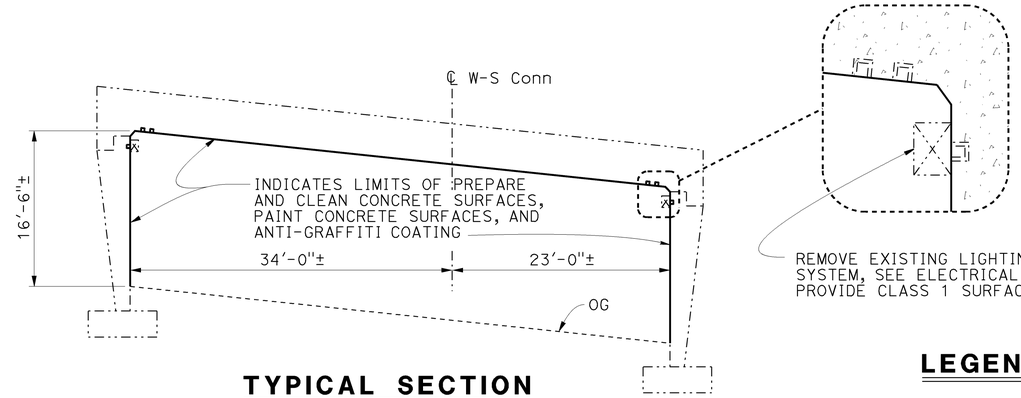

TYPICAL SECTION

NO SCALE

ROUTE 210-710/W210-S710 SEPARATION (53-2268)

QUANTITIES

LEAD COMPLIANCE PLAN	LUMP	SUM
WORK AREA MONITORING (BRIDGE)	LUMP	SUM
REPAIR SPALLED SURFACE AREA	4	SQFT
PREPARE AND CLEAN CONCRETE SURFACES	50,445	SQFT
PAINT CONCRETE SURFACES	50,445	SQFT
ANTI-GRAFFITI COATING	50,445	SQFT

LEGEND:

- Indicates existing.
- Indicates limits of prepare and clean concrete surfaces, paint concrete surfaces, and Anti-Graffiti coating.
- Indicates direction of traffic.
- Indicates lighting system removal.
- Indicates existing metal 1½ × 1½ unistrut to remain.
- Indicates repair spalled surface area, see "SOFFIT SPALL REPAIR DETAIL" on "MISCELLANEOUS DETAILS" sheet.

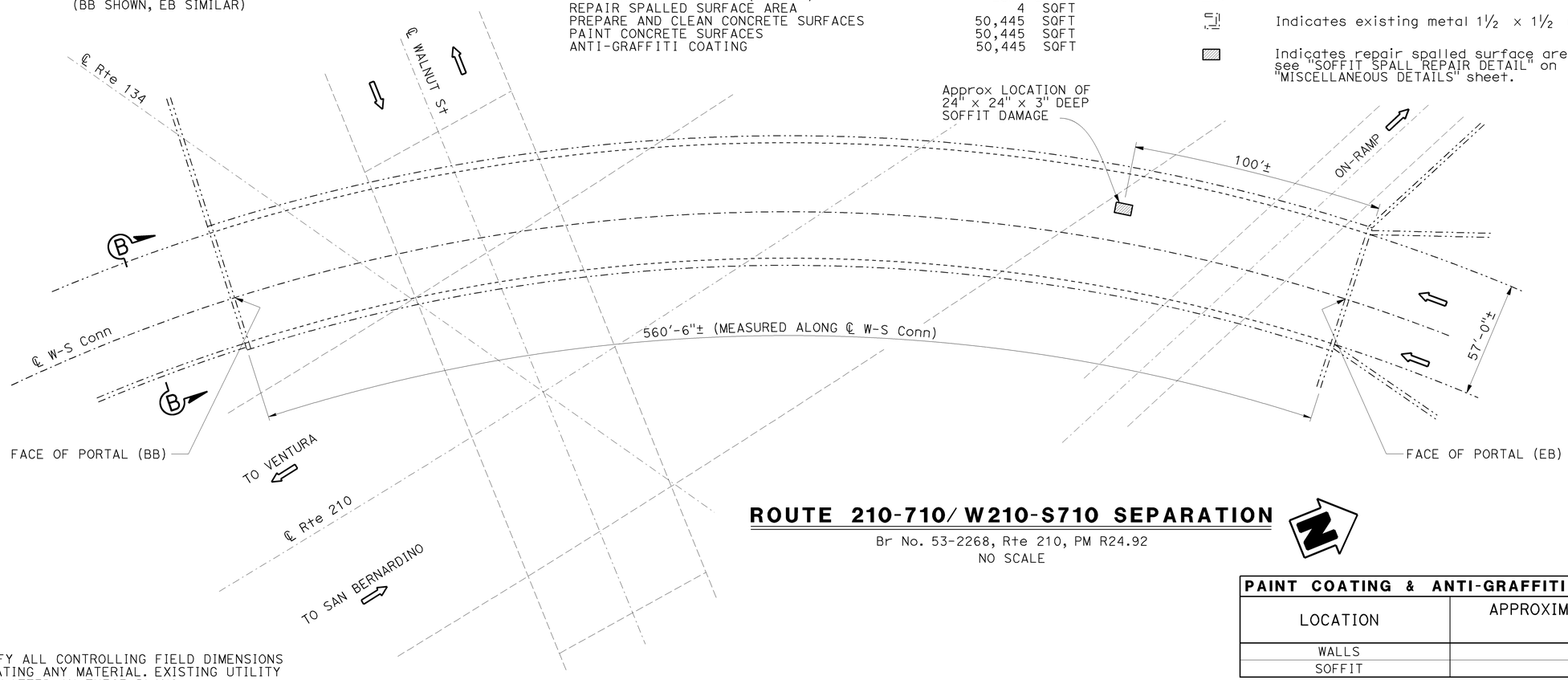

ROUTE 210-710/ W210-S710 SEPARATION

Br No. 53-2268, Rte 210, PM R24.92
NO SCALE

PAINT COATING & ANTI-GRAFFITI COATING TABLE	
LOCATION	APPROXIMATE PAINT AREA (SQFT)
WALLS	18,497
SOFFIT	31,948

NOTE:
THE CONTRACTOR SHALL VERIFY ALL CONTROLLING FIELD DIMENSIONS BEFORE ORDERING OR FABRICATING ANY MATERIAL. EXISTING UTILITY FACILITIES HAVE NOT BEEN PLOTTED ON THESE PLANS.

TONY D. BRAKE
DESIGN ENGINEER

	BY	CHECKED			
DESIGN	Edward Nahm	Tony Brake	LOAD FACTOR DESIGN	LIVE LOADING: HS20-44 AND ALTERNATIVE AND PERMIT DESIGN LOAD	
DETAILS	Tom Dang	Edward Nahm	LAYOUT	Tom Dang	Edward Nahm
QUANTITIES	Edward Nahm	Tony Brake	SPECIFICATIONS	Karen Doll	PLANS AND SPECS COMPARED Karen Doll

STATE OF CALIFORNIA
DEPARTMENT OF TRANSPORTATION

DIVISION OF MAINTENANCE
STRUCTURE MAINTENANCE DESIGN

BRIDGE NO. 53-2268
POST MILE R24.92

ROUTE 210 BRIDGES
GENERAL PLAN NO. 2

STRUCTURES MAINTENANCE GENERAL PLAN SHEET (ENGLISH) (REV. 09-01-10)

ORIGINAL SCALE IN INCHES FOR REDUCED PLANS 0 1 2 3

UNIT: 3489
PROJECT NUMBER & PHASE: 0714000085-1 CONTRACT NO.: 07-2881U4

DISREGARD PRINTS BEARING EARLIER REVISION DATES

REVISION DATES 07-01-13 | SHEET 02 | OF 04

FILE => 07-2881u1-a-gp02.dgn

USERNAME => s129239 DATE PLOTTED => 30-APR-2014 TIME PLOTTED => 09:36

DIST	COUNTY	ROUTE	POST MILES TOTAL PROJECT	SHEET No.	TOTAL SHEETS
07	LA	210	R16.1/R25.8	926	927

REGISTERED CIVIL ENGINEER 04/28/14 DATE

5-12-14
PLANS APPROVAL DATE

REGISTERED PROFESSIONAL ENGINEER EDWARD J. NAHM No. C66900 Exp. 09/30/14 CIVIL STATE OF CALIFORNIA

The State of California or its officers or agents shall not be responsible for the accuracy or completeness of electronic copies of this plan sheet.

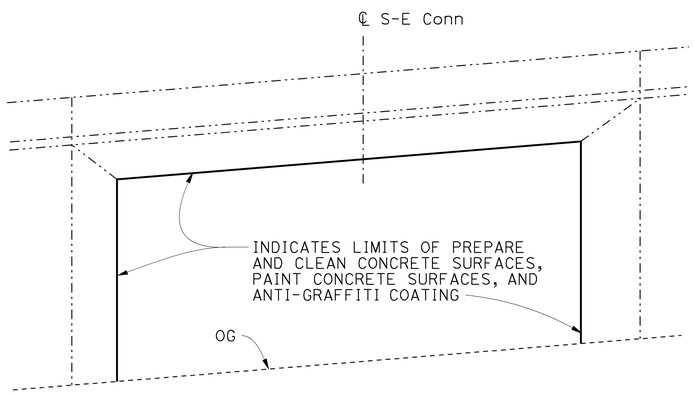

VIEW C-C

NO SCALE
(BB SHOWN, EB SIMILAR)

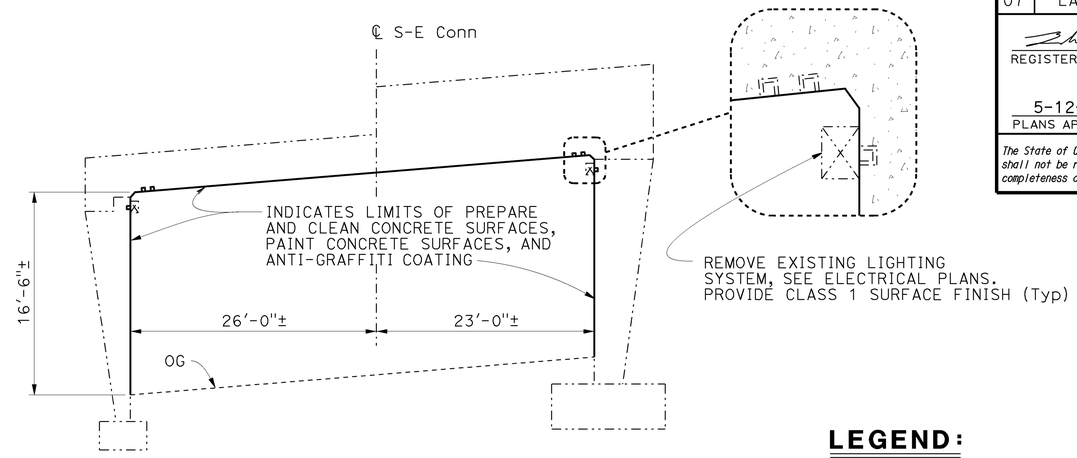

TYPICAL SECTION

NO SCALE

ROUTE 210-134/E210 SEPARATION (53-2256)

QUANTITIES

LEAD COMPLIANCE PLAN	LUMP	SUM
WORK AREA MONITORING (BRIDGE)	LUMP	SUM
REPAIR SPALLED SURFACE AREA	2	SQFT
PREPARE AND CLEAN CONCRETE SURFACES	61,582	SQFT
PAINT CONCRETE SURFACES	61,582	SQFT
ANTI-GRAFFITI COATING	61,582	SQFT

LEGEND:

- Indicates existing.
- Indicates limits of prepare and clean concrete surfaces, paint concrete surfaces, and Anti-Graffiti coating.
- Indicates direction of traffic.
- Indicates lighting system removal.
- Indicates existing metal 1½ x 1½ unistrut to remain.
- Indicates repair spalled surface area, see "SOFFIT SPALL REPAIR DETAIL" on "MISCELLANEOUS DETAILS" sheet.

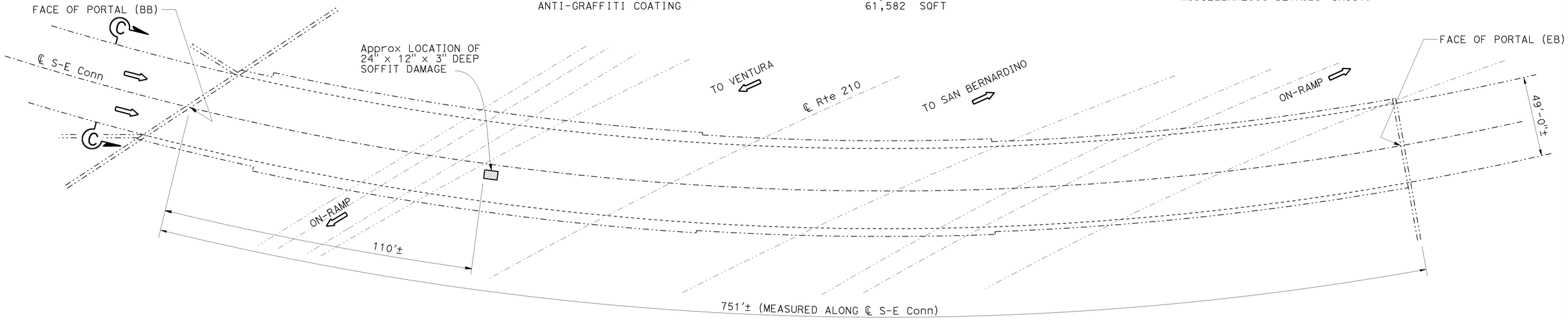

210-134/E210 SEPARATION

Br No. 53-2256, Rte 210, PM R25.13
NO SCALE

NOTE:
THE CONTRACTOR SHALL VERIFY ALL CONTROLLING FIELD DIMENSIONS BEFORE ORDERING OR FABRICATING ANY MATERIAL. EXISTING UTILITY FACILITIES HAVE NOT BEEN PLOTTED ON THESE PLANS.

PAINT COATING & ANTI-GRAFFITI COATING TABLE	
LOCATION	APPROXIMATE PAINT AREA (SQFT)
WALLS	24,783
SOFFIT	36,799

TONY D. BRAKE
DESIGN ENGINEER

	BY	CHECKED			
DESIGN	Edward Nahm	Tony Brake	LOAD FACTOR DESIGN	LIVE LOADING: HS20-44 AND ALTERNATIVE AND PERMIT DESIGN LOAD	
DETAILS	Tom Dang	Edward Nahm	LAYOUT	Tom Dang	Edward Nahm
QUANTITIES	Edward Nahm	Tony Brake	SPECIFICATIONS	Karen Doll	PLANS AND SPECS COMPARED Karen Doll

STATE OF CALIFORNIA
DEPARTMENT OF TRANSPORTATION

DIVISION OF MAINTENANCE
STRUCTURE MAINTENANCE DESIGN

BRIDGE NO. 53-2256
POST MILE R25.13

ROUTE 210 BRIDGES
GENERAL PLAN NO. 3

STRUCTURES MAINTENANCE GENERAL PLAN SHEET (ENGLISH) (REV. 09-01-10)

ORIGINAL SCALE IN INCHES FOR REDUCED PLANS 0 1 2 3

UNIT: 3489
PROJECT NUMBER & PHASE: 0714000085-1
CONTRACT NO.: 07-2881U4

DISREGARD PRINTS BEARING EARLIER REVISION DATES

REVISION DATES 07-01-13

SHEET 03 OF 04

FILE => 07-2881u1-a-gp03.dgn

USERNAME = s129239 DATE PLOTTED => 30-APR-2014 TIME PLOTTED => 09:36

DIST	COUNTY	ROUTE	POST MILES TOTAL PROJECT	SHEET No.	TOTAL SHEETS
07	LA	210	R16.1/R25.8	927	927

REGISTERED CIVIL ENGINEER 04/28/14 DATE

5-12-14
PLANS APPROVAL DATE

REGISTERED PROFESSIONAL ENGINEER EDWARD J. NAHM No. C66900 Exp. 09/30/14 CIVIL STATE OF CALIFORNIA

The State of California or its officers or agents shall not be responsible for the accuracy or completeness of electronic copies of this plan sheet.

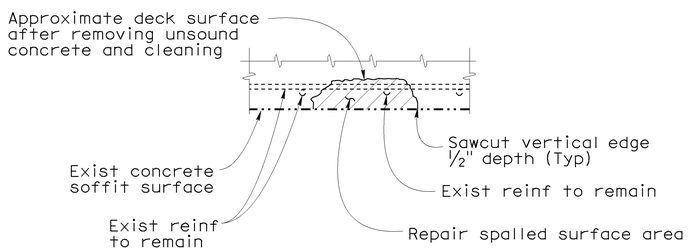

SOFFIT REPAIR DETAIL

Location will be determined by the Engineer. Reinforcement may be encountered during deck concrete removal and is to remain undamaged.

CONSTRUCTION NOTES:

1. Existing reinforcement shall be protected in place during unsound concrete removal and patching operations.
2. It is responsibility of the Contractor to repair any reinforcement that is accidently cut by saw cutting operations.
3. When existing transverse reinforcement is exposed in the deck surface, saw cutting may be waived with the approval of the Engineer.
4. The saw cut depth shall not exceed ½ inch or the concrete cover over the top steel reinforcing bars, whichever is less.
5. Remove unsound Portland Cement concrete and unsound concrete patches to expose sound, hard concrete substrate. Replace original deck surface with rapid setting concrete patch.

NOTE:
THE CONTRACTOR SHALL VERIFY ALL CONTROLLING FIELD DIMENSIONS BEFORE ORDERING OR FABRICATING ANY MATERIAL. EXISTING UTILITY FACILITIES HAVE NOT BEEN PLOTTED ON THESE PLANS.

	BY	CHECKED
DESIGN	Edward Nahm	Tony Brake
DETAILS	Tom Dang	Edward Nahm
QUANTITIES	Edward Nahm	Tony Brake

STATE OF CALIFORNIA
DEPARTMENT OF TRANSPORTATION

DIVISION OF MAINTENANCE
STRUCTURE MAINTENANCE DESIGN

BRIDGE NO. Various
POST MILE Varies

ROUTE 210 BRIDGES
MISCELLANEOUS DETAILS

STRUCTURES MAINTENANCE DETAIL SHEET (ENGLISH) (REV. 09-01-10)

ORIGINAL SCALE IN INCHES FOR REDUCED PLANS 0 1 2 3

UNIT: 3489
PROJECT NUMBER & PHASE: 0714000085-1
CONTRACT NO.: 07-2881U4

DISREGARD PRINTS BEARING EARLIER REVISION DATES

REVISION DATES: 07-01-13

SHEET 04 OF 04

FILE => 07-2881u1-b-miscdtl.dgn

USERNAME => s129239 DATE PLOTTED => 30-APR-2014 TIME PLOTTED => 09:36