Dist	COUNTY	ROUTE	POST MILES TOTAL PROJECT	SHEET No.	TOTAL SHEETS
07	LA	5, 101	16.4, S0.0/25.9	1	459

ACNHP-X037(192)E

STATE OF CALIFORNIA

DEPARTMENT OF TRANSPORTATION

PROJECT PLANS FOR CONSTRUCTION ON

STATE HIGHWAY

IN LOS ANGELES COUNTY
IN LOS ANGELES AT VARIOUS LOCATIONS
FROM ROUTE 5/60 SEPARATION TO 0.1 MILE
WEST OF VENTURA BOULEVARD OVERCROSSING

TO BE SUPPLEMENTED BY STANDARD PLANS DATED 2010

INDEX OF PLANS

SHEET No.	DESCRIPTION
1	TITLE AND LOCATION MAP
2	LOCATIONS OF CONSTRUCTION
3-5	TYPICAL CROSS SECTIONS
6-46	LAYOUTS
47-67	PROFILES
68-89	CONSTRUCTION DETAILS
90-92	WATER POLLUTION CONTROL PLANS, PROFILES AND QUANTITIES
93-116	DRAINAGE PLANS, PROFILES, DETAILS AND QUANTITIES
117-157	UTILITY PLANS
158	CONSTRUCTION AREA SIGNS
159-197	TRAFFIC HANDLING PLANS, DETAILS AND QUANTITIES
198	PAVEMENT DELINEATION QUANTITIES
199-222	SIGN PLANS, DETAILS AND QUANTITIES
223-227	SUMMARY OF QUANTITIES
228-276	LANDSCAPE PLANS
277-372	ELECTRICAL PLANS
373-381	SPECIAL ELECTRICAL STRUCTURE PLANS
382-453	REVISED STANDARD PLANS

STRUCTURE PLANS

454-459	BROADWAY OFF-RAMP RAIL UPGRADE

NOTES:

1. THE STANDARD PLANS LIST APPLICABLE TO THIS CONTRACT IS INCLUDED IN THE NOTICE TO BIDDERS AND SPECIAL PROVISIONS BOOK.
2. THE TABLE OF LOCATIONS OF CONSTRUCTION IS SHOWN ON THE LOCATIONS OF CONSTRUCTION SHEET.

LOCATION MAP

LOCATION OF CONSTRUCTION
Rte 5 PM 16.4 Sta 16+53.05

BEGIN CONSTRUCTION
ROUTE 5 PM 16.9 =
ROUTE 101 PM S0.0

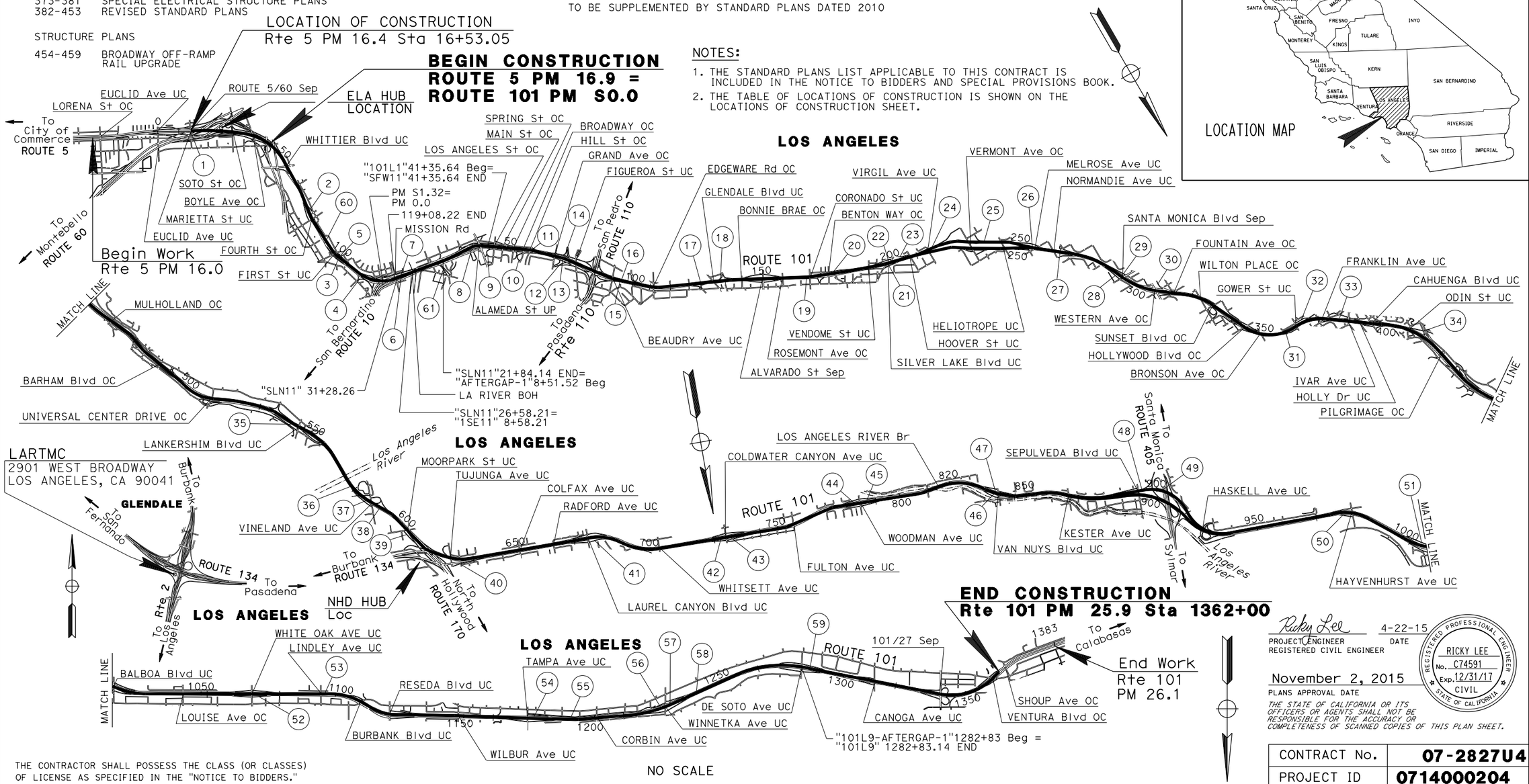

THE CONTRACTOR SHALL POSSESS THE CLASS (OR CLASSES) OF LICENSE AS SPECIFIED IN THE "NOTICE TO BIDDERS."

Ricky Lee 4-22-15
PROJECT ENGINEER DATE
REGISTERED CIVIL ENGINEER

November 2, 2015
PLANS APPROVAL DATE

REGISTERED PROFESSIONAL ENGINEER RICKY LEE No. C74591 Exp. 12/31/17 CIVIL STATE OF CALIFORNIA

THE STATE OF CALIFORNIA OR ITS OFFICERS OR AGENTS SHALL NOT BE RESPONSIBLE FOR THE ACCURACY OR COMPLETENESS OF SCANNED COPIES OF THIS PLAN SHEET.

CONTRACT No.	07-2827U4
PROJECT ID	0714000204

PROJECT MANAGER JAVAD RAHIMZADEH
DESIGN MANAGER DEREK HIGA

LAST REVISION 03-03-15
DATE PLOTTED => 15-JAN-2016
TIME PLOTTED => 06:13

Dist	COUNTY	ROUTE	POST MILES TOTAL PROJECT	SHEET No.	TOTAL SHEETS
07	LA	5, 101	16.4, S0.0/25.9	2	459

Ricky Lee 4-22-15
REGISTERED CIVIL ENGINEER DATE

11-2-15
PLANS APPROVAL DATE

REGISTERED PROFESSIONAL ENGINEER RICKY LEE No. C74591 Exp. 12/31/17 CIVIL STATE OF CALIFORNIA

THE STATE OF CALIFORNIA OR ITS OFFICERS OR AGENTS SHALL NOT BE RESPONSIBLE FOR THE ACCURACY OR COMPLETENESS OF SCANNED COPIES OF THIS PLAN SHEET.

LOCATIONS OF CONSTRUCTION

Loc	DIRECTION	ROUTE	PM	SHEET	DESCRIPTION
1	NB	5	16.4	L-1	ON-RAMP FROM ATLANTIC St/EUCLID Ave AT Rte 5/60 Sep, Rt Shld
2	SB	101	S0.5	L-2	ON-RAMP FROM 4TH St/PECAN St, Rt Shld
3	NB	101	S1.0	L-3	ON-RAMP FROM 1ST St, Rt Shld
4	NB	101	S1.2	L-3	ON-RAMP FROM KEARNEY St/PLEASANT Ave TO EB Rte 10, Rt Shld
5	SB	101	S1.0	L-3	OFF-RAMP TO 1ST St, Rt Shld
6	NB	101	0.2	L-4	ON-RAMP FROM MISSION Rd, Rt Shld
7	SB	101	0.2	L-4	OFF-RAMP TO MISSION Rd, Lt Shld
8	NB	101	0.6	L-5	OFF-RAMP TO ALAMEDA St, Lt Shld
9	NB	101	0.91	L-5	ON-RAMP FROM LOS ANGELES St, Lt Shld
10	NB	101	1.04	L-6	ON-RAMP FROM BROADWAY, Lt Shld
11	SB	101	1.2	L-6	OFF-RAMP TO BROADWAY, BRIDGE RAILING ON Lt Shld
12	NB	101	1.5	L-7	ON-RAMP FROM GRAND Ave, Lt Shld
13	NB	101	1.3	L-7	MAINLINE Rt Shld NORTH OF GRAND Ave OC
14	SB	101	1.3	L-7	ON-RAMP FROM TEMPLE St, Rt Shld
15	NB	101	1.8	L-8	MAINLINE Rt Shld BETWEEN BEAUDRY Ave AND BOYLSTON St
16	SB	101	1.7	L-8	MAINLINE Rt Shld BETWEEN BEAUDRY Ave AND BOYLSTON St
17	SB	101	2.2	L-9	MAINLINE Rt Shld SOUTH OF GLENDALE Blvd UC
18	SB	101	2.5	L-9	ON-RAMP FROM GLENDALE Blvd/BELMONT Ave, Rt Shld
19	NB	101	3.2	L-10	MAINLINE Rt Shld SOUTH OF CORONADO St UC
20	SB	101	3.4	L-11	OFF-RAMP TO BENTON WAY, Lt Shld
21	NB	101	3.9	L-12	ON-RAMP FROM SILVER LAKE Blvd, Rt Shld
22	SB	101	3.8	L-12	MAINLINE Rt Shld NORTH OF SILVER LAKE Blvd UC
23	SB	101	3.9	L-12	OFF-RAMP TO SILVER LAKE Blvd, Rt Shld
24	SB	101	4.1	L-13	ON-RAMP FROM VERMONT Ave, Rt Shld
25	SB	101	4.58	L-14	MAINLINE Rt Shld SOUTH OF HELIOTROPE Dr UC
26	SB	101	4.9	L-15	MAINLINE Rt Shld SOUTH OF MELROSE Ave UC
27	NB	101	5.1	L-16	ON-RAMP FROM NORMANDIE Ave, Rt Shld
28	NB	101	5.4	L-17	OFF-RAMP TO SANTA MONICA Blvd, Lt Shld
29	SB	101	5.5	L-17	ON-RAMP FROM SANTA MONICA Blvd, Lt Shld
30	SB	101	5.9	L-18	OFF-RAMP TO WESTERN Ave, Lt Shld
31	NB	101	6.8	L-19	OFF-RAMP TO GOWER St, Rt Shld
32	SB	101	7.1	L-19	OFF-RAMP TO GOWER St, Rt Shld
33	SB	101	7.28	L-20	ON-RAMP FROM CAHUENGA Blvd, Rt Shld
34	SB	101	7.75	L-21	ON-RAMP FROM HIGHLAND Ave, Rt Shld
35	NB	101	10.3	L-22	MAINLINE Rt Shld SOUTH OF LANKERSHIM Blvd UC
36	NB	101	10.9	L-23	MAINLINE Rt Shld NORTH OF LOS ANGELES RIVER Br
37	NB	101	11.1	L-24	MAINLINE Rt Shld SOUTH OF VINELAND Ave UC
38	NB	101	11.1	L-24,25	MAINLINE Rt Shld BETWEEN VINELAND Ave UC AND MOORPARK St UC
39	NB	101	11.5	L-26	ON-RAMP FROM MOORPARK St, Rt Shld
40	NB	101	12.0	L-27	ON-RAMP FROM TUJUNGA Ave, Rt Shld
41	NB	101	13.0	L-28	ON-RAMP FROM LAUREL CANYON Blvd, Rt Shld
42	NB	101	13.9	L-29	MAINLINE Rt Shld SOUTH OF COLDWATER CANYON Ave UC
43	NB	101	13.9	L-29	MAINLINE Rt Shld NORTH OF COLDWATER CANYON Ave UC
44	SB	101	14.9	L-30	MAINLINE Rt Shld SOUTH OF WOODMAN Ave UC
45	SB	101	14.9	L-30	MAINLINE Rt Shld NORTH OF WOODMAN Ave UC
46	NB	101	15.9	L-31	MAINLINE Rt Shld SOUTH OF VAN NUYS Blvd UC
47	SB	101	15.9	L-31	MAINLINE Rt Shld SOUTH OF VAN NUYS Blvd UC
48	SB	101	16.9	L-32	MAINLINE Lt Shld NORTH OF SEPULVEDA Blvd UC
49	SB	101	17.1	L-32	MAINLINE Lt Shld SOUTH OF Rte 101/405 Sep
50	NB	101	18.5	L-33	OFF-RAMP TO HAYVENHURST Ave, Rt Shld
51	SB	101	19.1	L-34	ON-RAMP FROM BALBOA Blvd, Rt Shld
52	NB	101	20.4	L-35	ON-RAMP FROM WHITE OAK Ave, Rt Shld
53	SB	101	20.7	L-36	MAINLINE Rt Shld NORTH OF LINDLEY Ave UC
54	SB	101	22.35	L-37	MAINLINE Rt Shld NORTH OF TAMPA Ave UC
55	SB	101	22.4	L-37	OFF-RAMP TO TAMPA Ave, Rt Shld
55	SB	101	22.4	L-38	OFF-RAMP TO TAMPA Ave, Rt Shld
56	SB	101	23.5	L-39	MAINLINE Rt Shld SOUTH OF WINNETKA Ave UC
57	SB	101	23.6	L-39	MAINLINE Rt Shld NORTH OF WINNETKA Ave UC
58	SB	101	23.7	L-40	OFF-RAMP TO WINNETKA Ave, Rt Shld
59	SB	101	24.3	L-41	MAINLINE Rt Shld NORTH OF DE SOTO Ave UC
60	NB	101	S0.8	C-10	OFF-RAMP TO 1ST St, GORE AREA
61	NB	101	0.4	C-10	ON-RAMP FROM VIGNES St, Lt Shld

LOCATIONS OF CONSTRUCTION

LC-1

STATE OF CALIFORNIA - DEPARTMENT OF TRANSPORTATION
Caltrans® DESIGN

FUNCTIONAL SUPERVISOR: DEREK HIGA
CALCULATED-DESIGNED BY: MARIA RODRIGUEZ
CHECKED BY: RICKY LEE
REVISED BY
DATE REVISED

LAST REVISION 03-02-15
DATE PLOTTED => 15-JAN-2016
TIME PLOTTED => 06:13

Dist	COUNTY	ROUTE	POST MILES TOTAL PROJECT	SHEET No.	TOTAL SHEETS
07	LA	5, 101	16.4, S0.0/25.9	3	459

Ricky Lee 4-22-15
REGISTERED CIVIL ENGINEER DATE

11-2-15
PLANS APPROVAL DATE

REGISTERED PROFESSIONAL ENGINEER RICKY LEE No. C74591 Exp. 12/31/17 CIVIL STATE OF CALIFORNIA

THE STATE OF CALIFORNIA OR ITS OFFICERS OR AGENTS SHALL NOT BE RESPONSIBLE FOR THE ACCURACY OR COMPLETENESS OF SCANNED COPIES OF THIS PLAN SHEET.

NOTES:

1. DIMENSIONS OF THE PAVEMENT STRUCTURES (STRUCTURAL SECTIONS) ARE SUBJECT TO TOLERANCES SPECIFIED IN THE STANDARD SPECIFICATIONS.
2. EXACT LOCATIONS AND TYPES OF DIKES, CURBS, GUARD RAILING, AND CONCRETE BARRIER ARE SHOWN ON THE LAYOUTS AND THE SUMMARY OF QUANTITIES SHEETS.

DESIGN DESIGNATION

ADT (2013)	314,000	D	66%
DHV	35,000	T	6%
ESAL	12,000,000	V	70 mph
		TI_{20}	12

PAVEMENT CLIMATE REGION: INLAND VALLEY, SOUTH COAST

TYPICAL PAVEMENT STRUCTURE SECTIONS

1
- 0.60′ HOT MIX ASPHALT (TYPE A)
- 0.60′ LEAN CONCRETE BASE
- 1.15′ CLASS 3 AGGREGATE BASE

2
- 0.75′ SHOULDER CONCRETE PAVEMENT
- 1.00′ CLASS 3 AGGREGATE BASE (ENCAPSULATED)

3
- 0.75′ SHOULDER CONCRETE PAVEMENT
- 1.20′ CLASS 3 AGGREGATE BASE (ENCAPSULATED)

4
- 0.40′ HOT MIX ASPHALT (TYPE A)
- 0.40′ LEAN CONCRETE BASE
- 0.65′ CLASS 3 AGGREGATE BASE

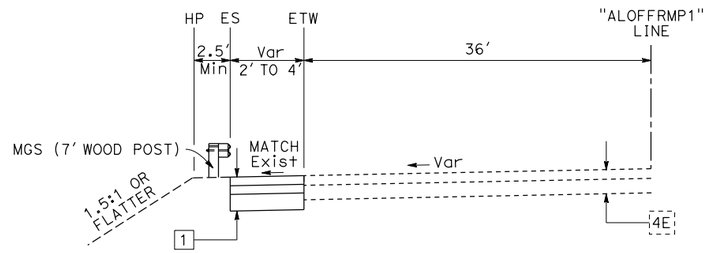

ROUTE 101
Loc 8 "ALOFFRMP1" 31+79.36 TO 36+80.82

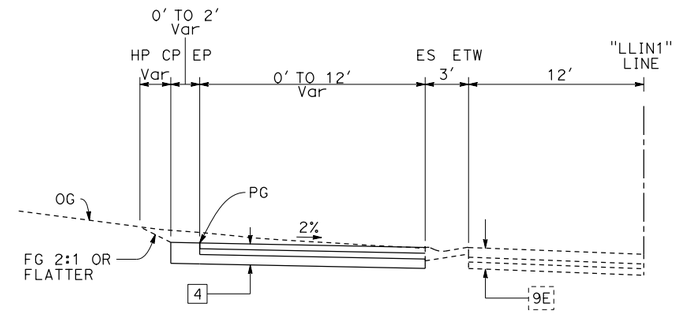

ROUTE 101
Loc 14 "LLIN1" 13+15.18 TO 14+00.00

EXISTING PAVEMENT STRUCTURE SECTIONS

1E
- 0.33′ ASPHALT CONCRETE
- 0.50′ CEMENT TREATED BASE
- 0.17′ IMPORTED BASE MATERIAL
- 1.00′ IMPORTED SUBBASE MATERIAL

2E
- 0.80′ ASPHALT CONCRETE
- 0.20′ CEMENT TREATED BASE (CLASS A)
- 0.25′ CLASS 2 AGGREGATE BASE
- 0.75′ CLASS 2 AGGREGATE SUBBASE

3E
- 0.50′ ASPHALT CONCRETE
- 0.67′ UNTREATED ROCK BASE
- 0.83′ IMPORTED SUBBASE MATERIAL

4E
- 0.67′ & Var ASPHALT CONCRETE
- 1.00′ IMPORTED BASE MATERIAL

5E
- 0.33′ ASPHALT CONCRETE
- 0.67′ UNTREATED OR CEMENT TREATED BASE (CLASS A)
- 1.00′ IMPORTED SUBBASE MATERIAL

6E
- 0.67′ PORTLAND CEMENT CONCRETE
- 0.33′ CEMENT TREATED SUBGRADE
- 0.33′ IMPORTED BASE MATERIAL
- 0.67′ OR 1.00′ IMPORTED SUBBASE MATERIAL

7E
- 0.35′ ASPHALT CONCRETE
- 0.67′ CEMENT TREATED BASE (CLASS A)
- 0.25′ CLASS 3 AGGREGATE BASE
- 0.85′ CLASS 4 AGGREGATE SUBBASE

8E
- 0.35′ ASPHALT CONCRETE
- 0.75′ PORTLAND CEMENT CONCRETE
- 0.33′ CEMENT TREATED SUBGRADE
- 0.58′ IMPORTED BASE MATERIAL
- 0.67′ IMPORTED SUBBASE MATERIAL

9E
- 0.67′ PORTLAND CEMENT CONCRETE
- 0.33′ CEMENT TREATED SUBGRADE
- Var SELECTED SUBGRADE MATERIAL

10E
- 0.33′ ASPHALT CONCRETE
- 0.50′ CEMENT TREATED BASE
- 0.67′ IMPORTED BASE MATERIAL
- 1.00′ IMPORTED SUBBASE MATERIAL

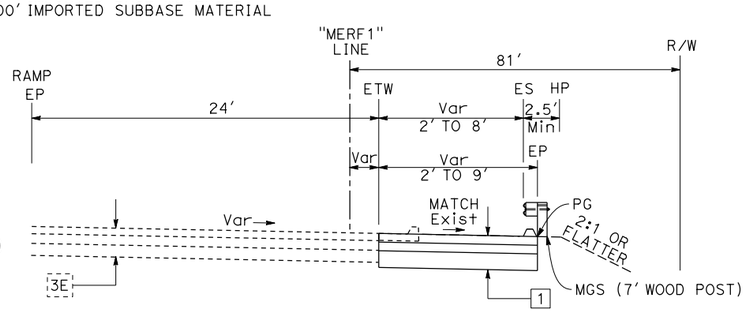

ROUTE 101
Loc 6 "MERF1" 4+42.61 TO 6+75.15

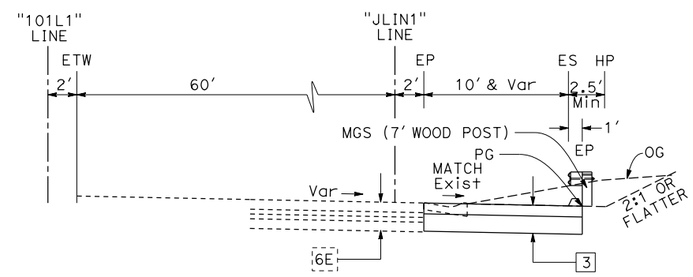

ROUTE 101
Loc 13 "101L1" 71+03.50 TO 72+79.41
Loc 15 "JLIN1" 61+84.63 TO "101L1" 97+63.82

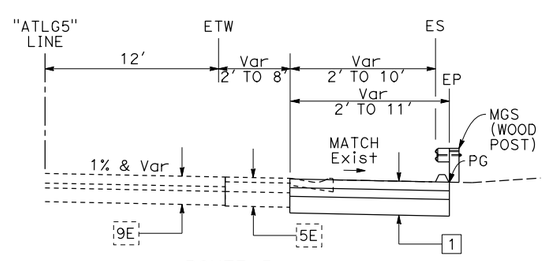

ROUTE 5
Loc 1 "ATLG5" 16+53.05 TO 19+17.41

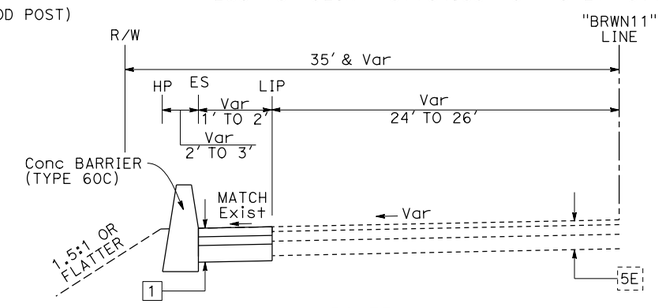

ROUTE 101
Loc 10 "BRWN11" 52+28.97 TO 53+88.02

TYPICAL CROSS SECTIONS

NO SCALE

X-1

STATE OF CALIFORNIA - DEPARTMENT OF TRANSPORTATION
Caltrans DESIGN

FUNCTIONAL SUPERVISOR: DEREK HIGA
CALCULATED-DESIGNED BY: ANTOINE NADER
CHECKED BY: RICKY LEE
REVISED BY
DATE REVISED

LAST REVISION 03-09-15
DATE PLOTTED => 15-JAN-2016
TIME PLOTTED => 06:13

Dist	COUNTY	ROUTE	POST MILES TOTAL PROJECT	SHEET No.	TOTAL SHEETS
07	LA	5, 101	16.4, S0.0/25.9	4	459

Ricky Lee 4-22-15
REGISTERED CIVIL ENGINEER DATE

11-2-15
PLANS APPROVAL DATE

REGISTERED PROFESSIONAL ENGINEER RICKY LEE No. C74591 Exp. 12/31/17 CIVIL STATE OF CALIFORNIA

THE STATE OF CALIFORNIA OR ITS OFFICERS OR AGENTS SHALL NOT BE RESPONSIBLE FOR THE ACCURACY OR COMPLETENESS OF SCANNED COPIES OF THIS PLAN SHEET.

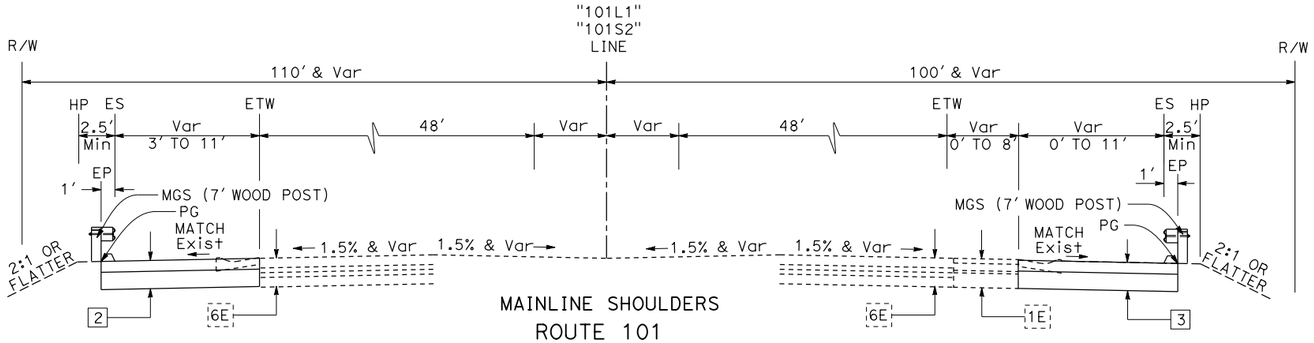

MAINLINE SHOULDERS
ROUTE 101

Loc 22 "101L1" 200+98.64 TO 204+58.68
Loc 26 "101S2" 252+12.86 TO 255+62.13

Loc 19 "101L1" 163+96.95 TO 166+79.24

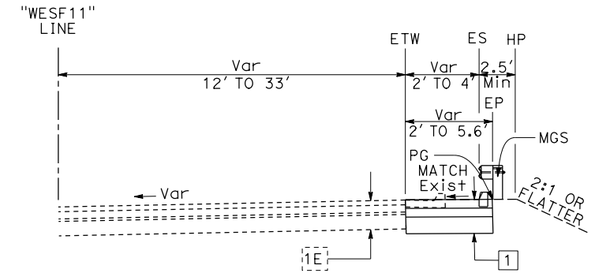

Loc 30 "WESF11" 6+12.97 TO 7+44.15

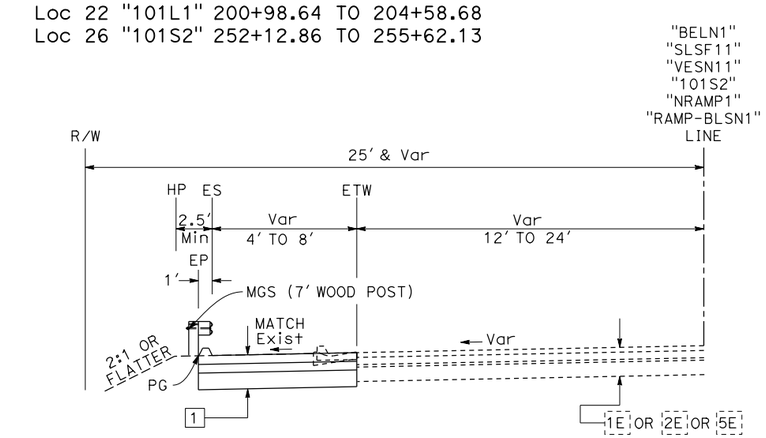

Loc 18 "101L1" 131+36.04 TO 131+97.22, "BELN1" 31+97.23 TO 34+55.79
Loc 23 "SLSF11 AFTERGAP-1" 2+86.62 TO 5+77.86
Loc 24 "VESN11" 15+34.35 TO 17+74.42, 19+31.06 TO 22+74.09
Loc 27 "NRAMP1" 65+38.44 TO 67+49.09
Loc 51 "RAMP-BLSN1" 18+63.53 TO 20+00.30

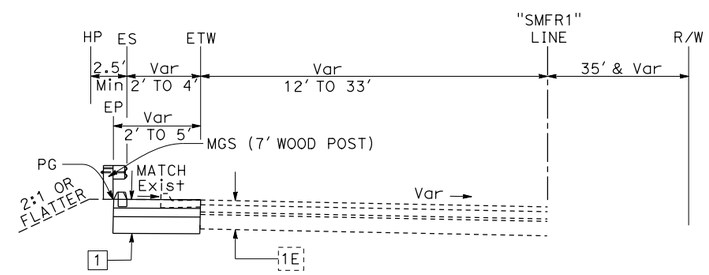

Loc 28 "SMFR1" 87+31.43 TO 90+87.53

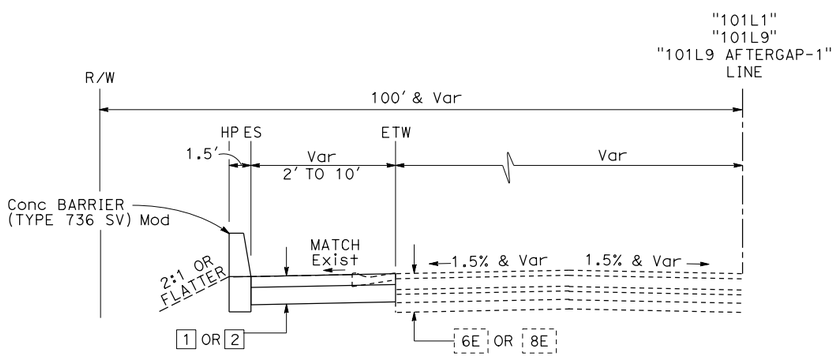

Loc 17 "101L1" 121+48.75 TO 128+92.60
Loc 57 "101L9" 1228+83.94 TO 1234+44.04
Loc 59 "101L9_AFTERGAP-1" 1283+57.89 TO 1289+15.70

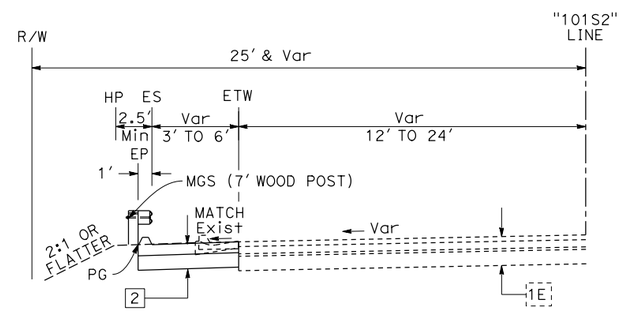

Loc 25 "101S2" 235+94.90 TO 236+72.85

ROUTE 101

TYPICAL CROSS SECTIONS

NO SCALE

X-2

STATE OF CALIFORNIA - DEPARTMENT OF TRANSPORTATION
Caltrans® **DESIGN**

FUNCTIONAL SUPERVISOR: DEREK HIGA
CALCULATED-DESIGNED BY: ANTOINE NADER
CHECKED BY: RICKY LEE
REVISED BY
DATE REVISED

LAST REVISION 03-03-15
DATE PLOTTED => 15-JAN-2016
TIME PLOTTED => 06:13

Dist	COUNTY	ROUTE	POST MILES TOTAL PROJECT	SHEET No.	TOTAL SHEETS
07	LA	5, 101	16.4, S0.0/25.9	5	459

Ricky Lee — REGISTERED CIVIL ENGINEER — 4-22-15 DATE

11-2-15 — PLANS APPROVAL DATE

REGISTERED PROFESSIONAL ENGINEER — RICKY LEE No. C74591 Exp 12/31/17 CIVIL — STATE OF CALIFORNIA

THE STATE OF CALIFORNIA OR ITS OFFICERS OR AGENTS SHALL NOT BE RESPONSIBLE FOR THE ACCURACY OR COMPLETENESS OF SCANNED COPIES OF THIS PLAN SHEET.

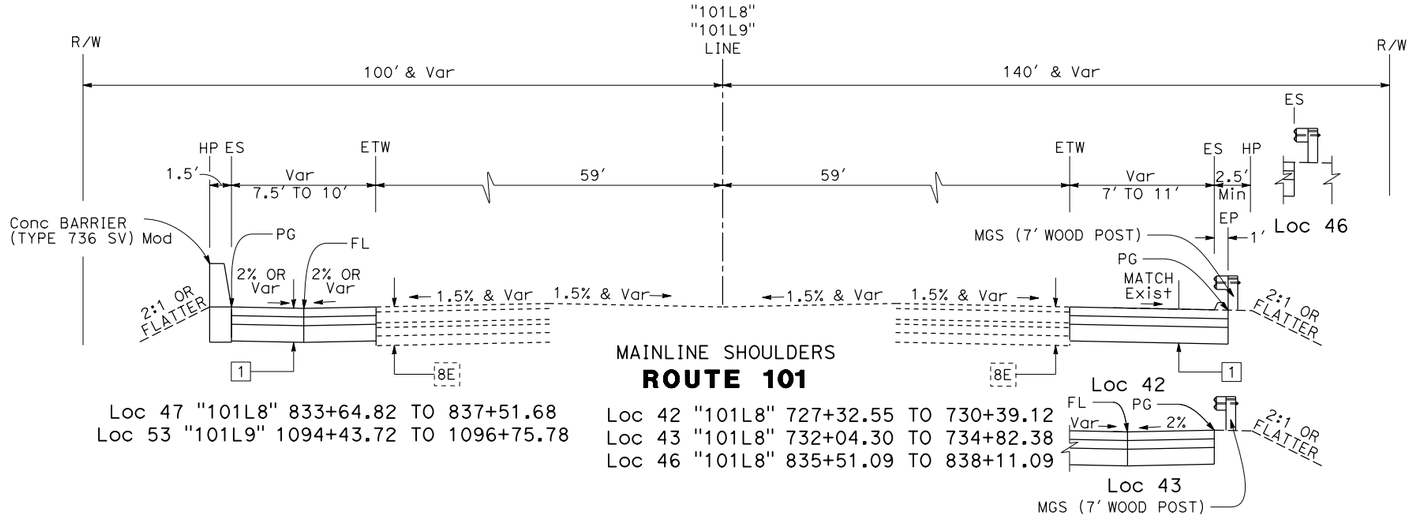

Loc 47 "101L8" 833+64.82 TO 837+51.68
Loc 53 "101L9" 1094+43.72 TO 1096+75.78

Loc 42 "101L8" 727+32.55 TO 730+39.12
Loc 43 "101L8" 732+04.30 TO 734+82.38
Loc 46 "101L8" 835+51.09 TO 838+11.09

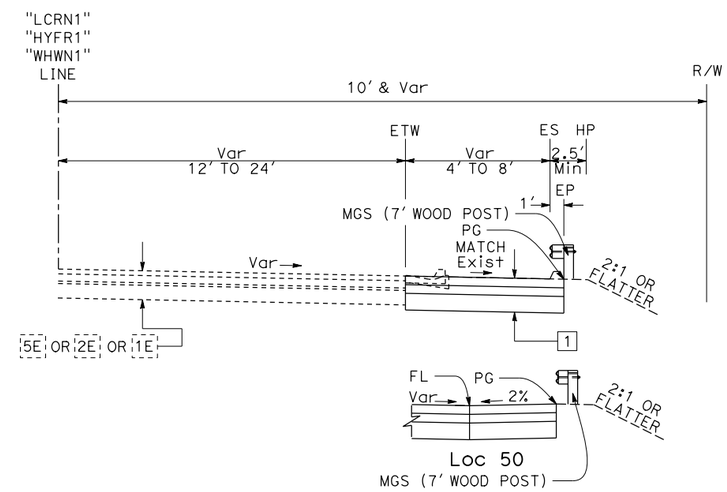

Loc 41 "LCRN1" 8+51.97 TO 11+29.75
Loc 50 "HYFR1" 975+58.07 TO 978+40.53
Loc 52 "WHWN1" 70+23.2 TO 74+62.79

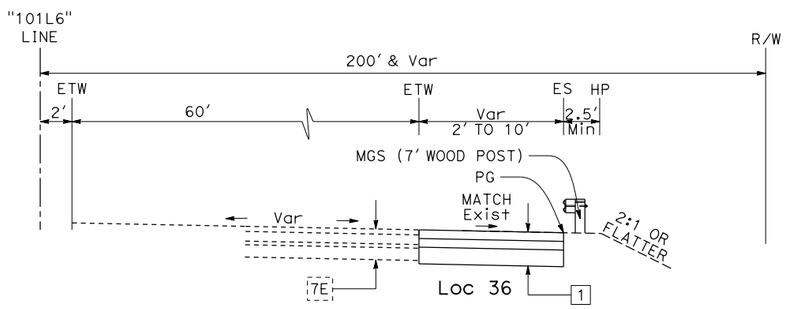

Loc 36 "101L6" 573+08.82 TO 576+36.51
Loc 38 "101L6" 588+81.03 TO 602+98.07

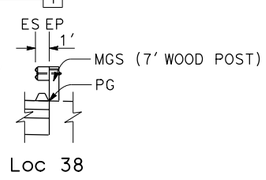

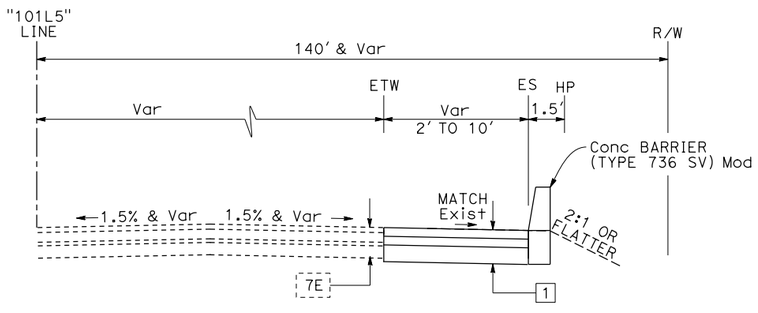

Loc 35 "101L5" 541+73.77 TO 545+47.82

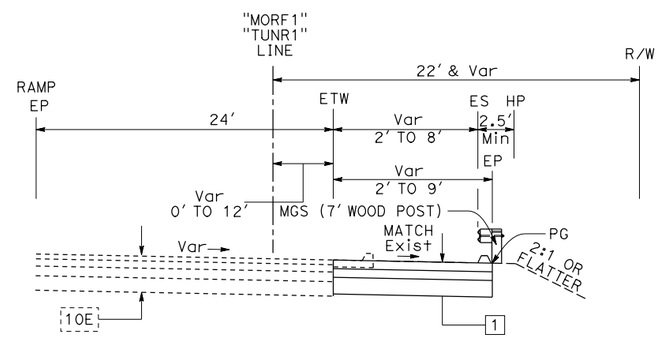

Loc 39 "MORF1" 28+50 TO 35+58.92
Loc 40 "TUNR1" 26+60.43 TO 29+66.54

ROUTE 101

TYPICAL CROSS SECTIONS

NO SCALE

X-3

REVISED BY	DATE REVISED
ANTOINE NADER	RICKY LEE
CALCULATED-DESIGNED BY	CHECKED BY
FUNCTIONAL SUPERVISOR	DEREK HIGA

STATE OF CALIFORNIA - DEPARTMENT OF TRANSPORTATION — Caltrans® — **DESIGN**

LAST REVISION 03-03-15 — DATE PLOTTED => 15-JAN-2016 — TIME PLOTTED => 06:13

Dist	COUNTY	ROUTE	POST MILES TOTAL PROJECT	SHEET No.	TOTAL SHEETS
07	LA	5, 101	16.4, S0.0/25.9	6	459

Ricky Lee 4-22-15
REGISTERED CIVIL ENGINEER DATE

11-2-15
PLANS APPROVAL DATE

REGISTERED PROFESSIONAL ENGINEER
RICKY LEE
No. C74591
Exp. 12/31/17
CIVIL
STATE OF CALIFORNIA

THE STATE OF CALIFORNIA OR ITS OFFICERS OR AGENTS SHALL NOT BE RESPONSIBLE FOR THE ACCURACY OR COMPLETENESS OF SCANNED COPIES OF THIS PLAN SHEET.

NOTE:

FOR ACCURATE RIGHT OF WAY DATA, CONTACT
RIGHT OF WAY ENGINEERING AT THE DISTRICT OFFICE.

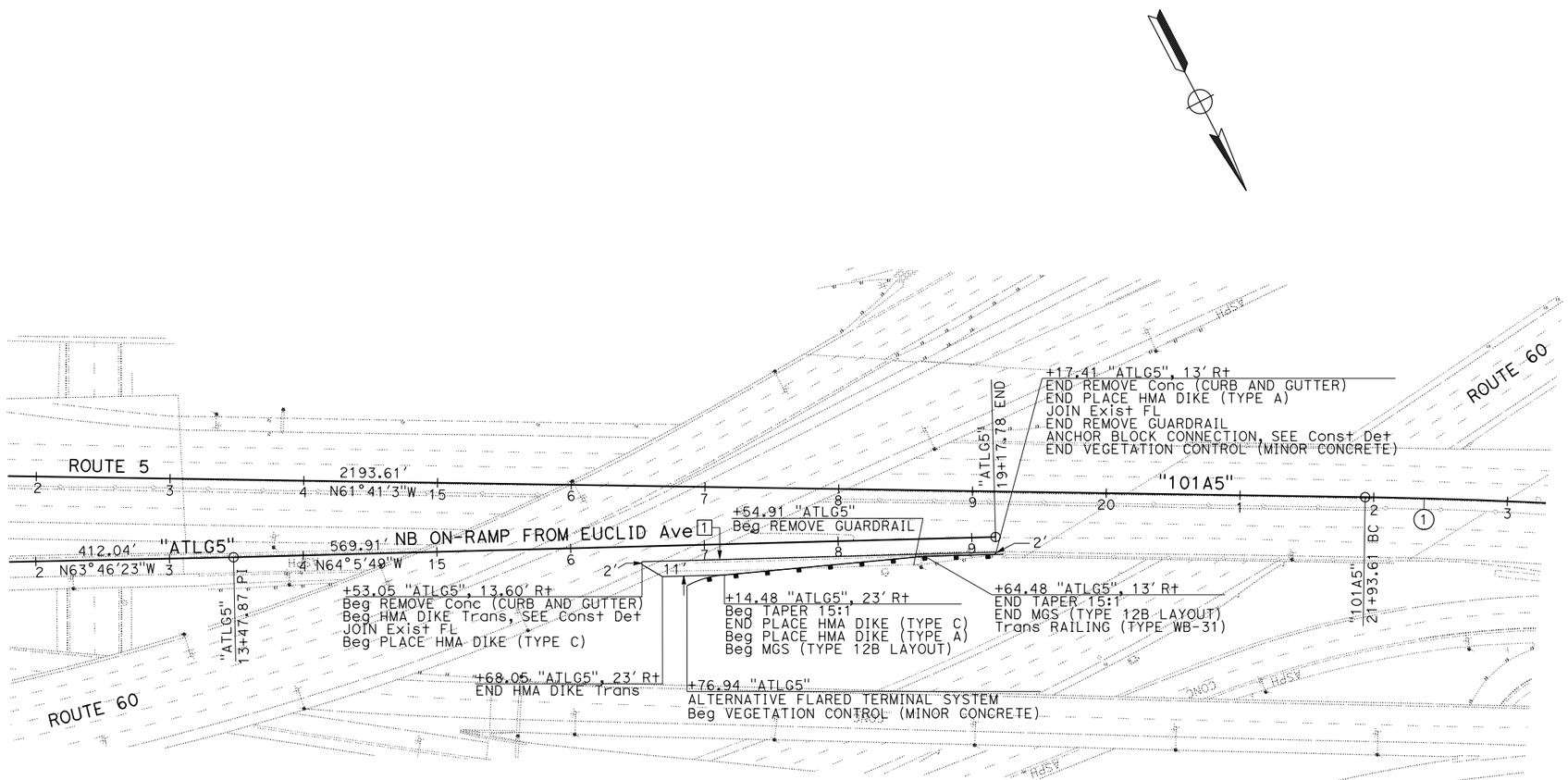

Loc 1 - ROUTE 5 PM 16.4

CURVE DATA

No. ⊕	R	Δ	T	L
1	4000'	27°05'50"	963.90'	1891.74'

LAYOUT

SCALE: 1" = 50'

L-1

STATE OF CALIFORNIA - DEPARTMENT OF TRANSPORTATION
Caltrans®
DESIGN

FUNCTIONAL SUPERVISOR: DEREK HIGA
CALCULATED-DESIGNED BY: RICKY LEE
CHECKED BY: MYLY NGUYEN
REVISED BY
DATE REVISED

LAST REVISION 03-02-15
DATE PLOTTED => 15-JAN-2016
TIME PLOTTED => 06:13

BORDER LAST REVISED 7/2/2010
USERNAME => s112049
DGN FILE => 72827uea001.dgn
RELATIVE BORDER SCALE IS IN INCHES 0 1 2 3
UNIT 1811
PROJECT NUMBER & PHASE 07140002041

Dist	COUNTY	ROUTE	POST MILES TOTAL PROJECT	SHEET No.	TOTAL SHEETS
07	LA	5, 101	16.4, S0.0/25.9	7	459

Ricky Lee
REGISTERED CIVIL ENGINEER — 4-22-15 DATE

11-2-15
PLANS APPROVAL DATE

REGISTERED PROFESSIONAL ENGINEER — RICKY LEE — No. C74591 — Exp. 12/31/17 — CIVIL — STATE OF CALIFORNIA

THE STATE OF CALIFORNIA OR ITS OFFICERS OR AGENTS SHALL NOT BE RESPONSIBLE FOR THE ACCURACY OR COMPLETENESS OF SCANNED COPIES OF THIS PLAN SHEET.

NOTE:

FOR ACCURATE RIGHT OF WAY DATA, CONTACT
RIGHT OF WAY ENGINEERING AT THE DISTRICT OFFICE.

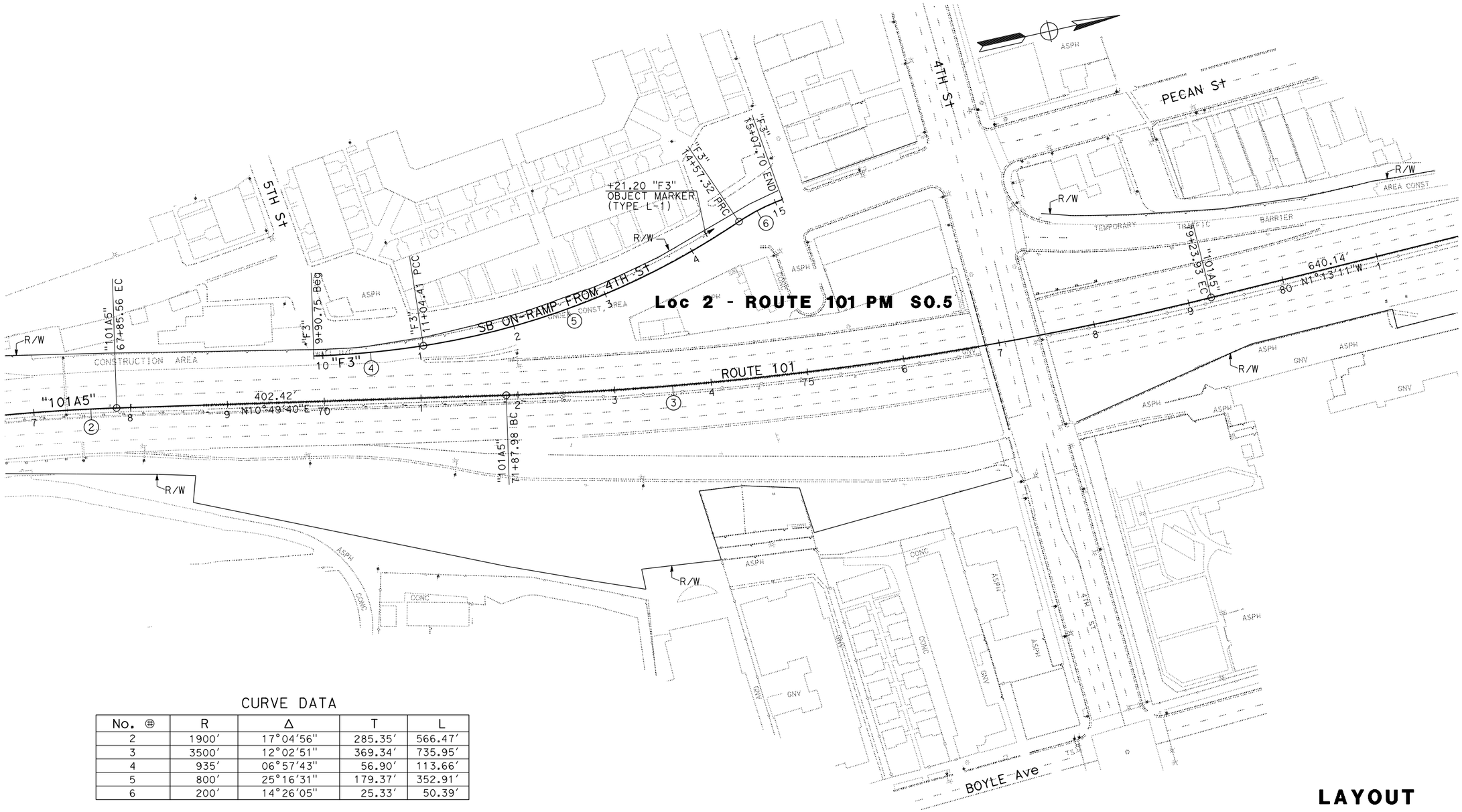

CURVE DATA

No. ⊕	R	Δ	T	L
2	1900′	17°04′56"	285.35′	566.47′
3	3500′	12°02′51"	369.34′	735.95′
4	935′	06°57′43"	56.90′	113.66′
5	800′	25°16′31"	179.37′	352.91′
6	200′	14°26′05"	25.33′	50.39′

LAYOUT

SCALE: 1" = 50′

L-2

STATE OF CALIFORNIA - DEPARTMENT OF TRANSPORTATION
Caltrans®
DESIGN

FUNCTIONAL SUPERVISOR: DEREK HIGA
CALCULATED-DESIGNED BY: RICKY LEE
CHECKED BY: MYLY NGUYEN
REVISED BY
DATE REVISED

LAST REVISION 03-02-15
DATE PLOTTED => 15-JAN-2016
TIME PLOTTED => 06:13

Dist	COUNTY	ROUTE	POST MILES TOTAL PROJECT	SHEET No.	TOTAL SHEETS
07	LA	5, 101	16.4, S0.0/25.9	8	459

Ricky Lee 4-22-15
REGISTERED CIVIL ENGINEER DATE

11-2-15
PLANS APPROVAL DATE

REGISTERED PROFESSIONAL ENGINEER RICKY LEE No. C74591 Exp. 12/31/17 CIVIL STATE OF CALIFORNIA

THE STATE OF CALIFORNIA OR ITS OFFICERS OR AGENTS SHALL NOT BE RESPONSIBLE FOR THE ACCURACY OR COMPLETENESS OF SCANNED COPIES OF THIS PLAN SHEET.

NOTE:

FOR ACCURATE RIGHT OF WAY DATA, CONTACT RIGHT OF WAY ENGINEERING AT THE DISTRICT OFFICE.

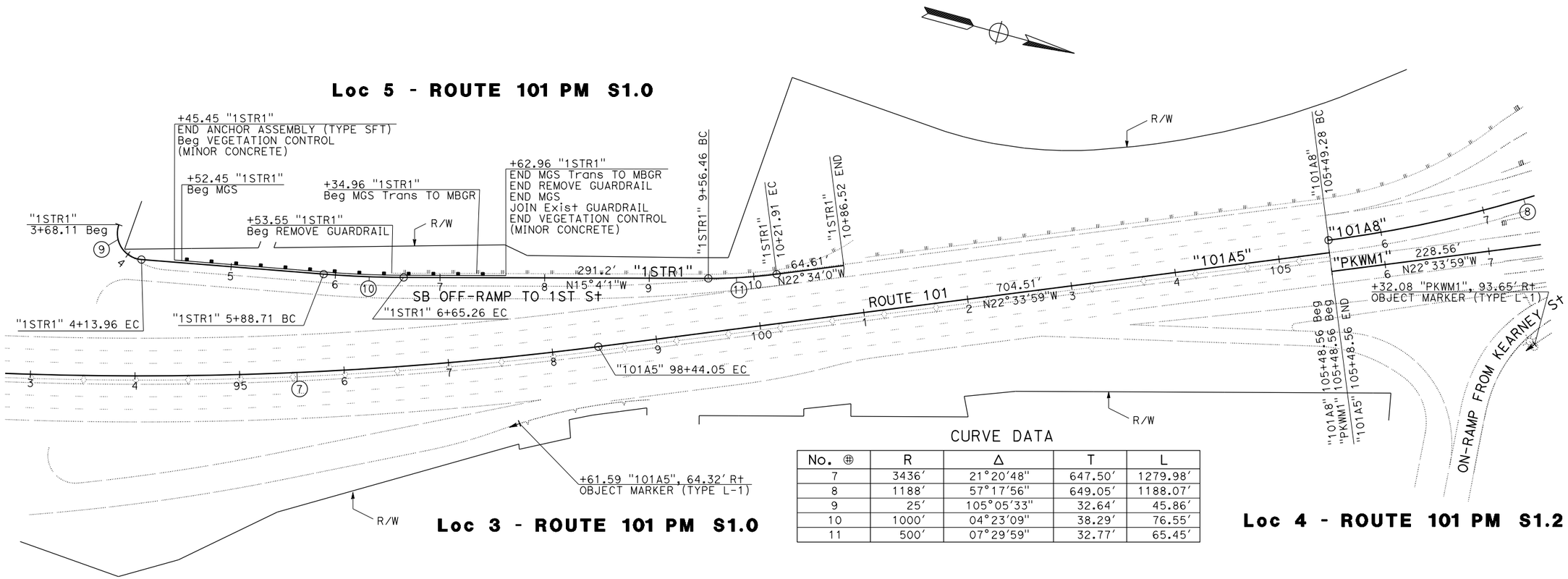

CURVE DATA

No. ⊕	R	Δ	T	L
7	3436'	21°20'48"	647.50'	1279.98'
8	1188'	57°17'56"	649.05'	1188.07'
9	25'	105°05'33"	32.64'	45.86'
10	1000'	04°23'09"	38.29'	76.55'
11	500'	07°29'59"	32.77'	65.45'

LAYOUT

SCALE: 1" = 50'

L-3

REVISED BY	DATE REVISED
RICKY LEE	MYLY NGUYEN

CALCULATED-DESIGNED BY / CHECKED BY

FUNCTIONAL SUPERVISOR: DEREK HIGA

STATE OF CALIFORNIA - DEPARTMENT OF TRANSPORTATION

Caltrans® **DESIGN**

LAST REVISION 03-02-15 | DATE PLOTTED => 15-JAN-2016 | TIME PLOTTED => 06:13

Dist	COUNTY	ROUTE	POST MILES TOTAL PROJECT	SHEET No.	TOTAL SHEETS
07	LA	5, 101	16.4, S0.0/25.9	9	459

Ricky Lee 4-22-15
REGISTERED CIVIL ENGINEER DATE

11-2-15
PLANS APPROVAL DATE

REGISTERED PROFESSIONAL ENGINEER RICKY LEE No. C74591 Exp. 12/31/17 CIVIL STATE OF CALIFORNIA

THE STATE OF CALIFORNIA OR ITS OFFICERS OR AGENTS SHALL NOT BE RESPONSIBLE FOR THE ACCURACY OR COMPLETENESS OF SCANNED COPIES OF THIS PLAN SHEET.

NOTE:

FOR ACCURATE RIGHT OF WAY DATA, CONTACT RIGHT OF WAY ENGINEERING AT THE DISTRICT OFFICE.

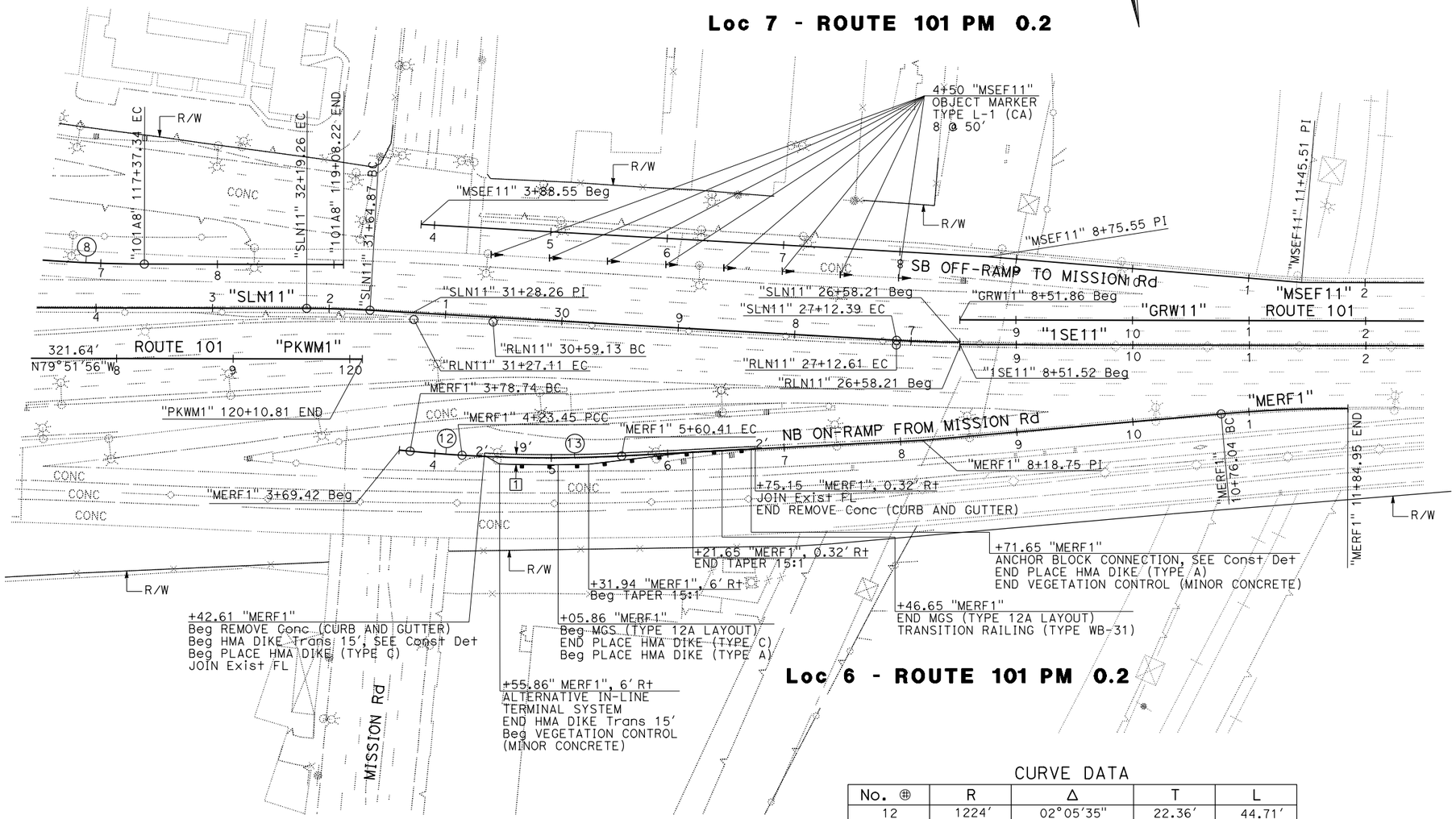

CURVE DATA

No. ⊕	R	Δ	T	L
12	1224'	02°05'35"	22.36'	44.71'
13	1224'	06°24'40"	68.55'	136.96'

LAYOUT

SCALE: 1" = 50'

L-4

REVISED BY	DATE REVISED

TRIEU NGUYEN	RICKY LEE
CALCULATED-DESIGNED BY	CHECKED BY

FUNCTIONAL SUPERVISOR: DEREK HIGA

STATE OF CALIFORNIA - DEPARTMENT OF TRANSPORTATION

Caltrans® **DESIGN**

LAST REVISION 03-02-15 | DATE PLOTTED => 15-JAN-2016 | TIME PLOTTED => 06:13

Dist	COUNTY	ROUTE	POST MILES TOTAL PROJECT	SHEET No.	TOTAL SHEETS
07	LA	5, 101	16.4, S0.0/25.9	10	459

Ricky Lee 4-22-15
REGISTERED CIVIL ENGINEER DATE

11-2-15
PLANS APPROVAL DATE

REGISTERED PROFESSIONAL ENGINEER RICKY LEE No. C74591 Exp. 12/31/17 CIVIL STATE OF CALIFORNIA

THE STATE OF CALIFORNIA OR ITS OFFICERS OR AGENTS SHALL NOT BE RESPONSIBLE FOR THE ACCURACY OR COMPLETENESS OF SCANNED COPIES OF THIS PLAN SHEET.

NOTE:

FOR ACCURATE RIGHT OF WAY DATA, CONTACT RIGHT OF WAY ENGINEERING AT THE DISTRICT OFFICE.

CURVE DATA

No. ⊕	R	Δ	T	L
14	996′	32°06′03"	286.55′	558.02′
15	2048′	09°43′14"	174.15′	347.46′
16	960′	37°37′03"	326.97′	630.29′
17	3000′	05°31′23"	144.71′	289.19′
18	1500′	20°40′00"	273.50′	541.05′
19	30′	99°05′38"	35.18′	51.89′
20	112′	59°27′30"	63.96′	116.23′
21	114′	103°02′30"	143.99′	205.83′

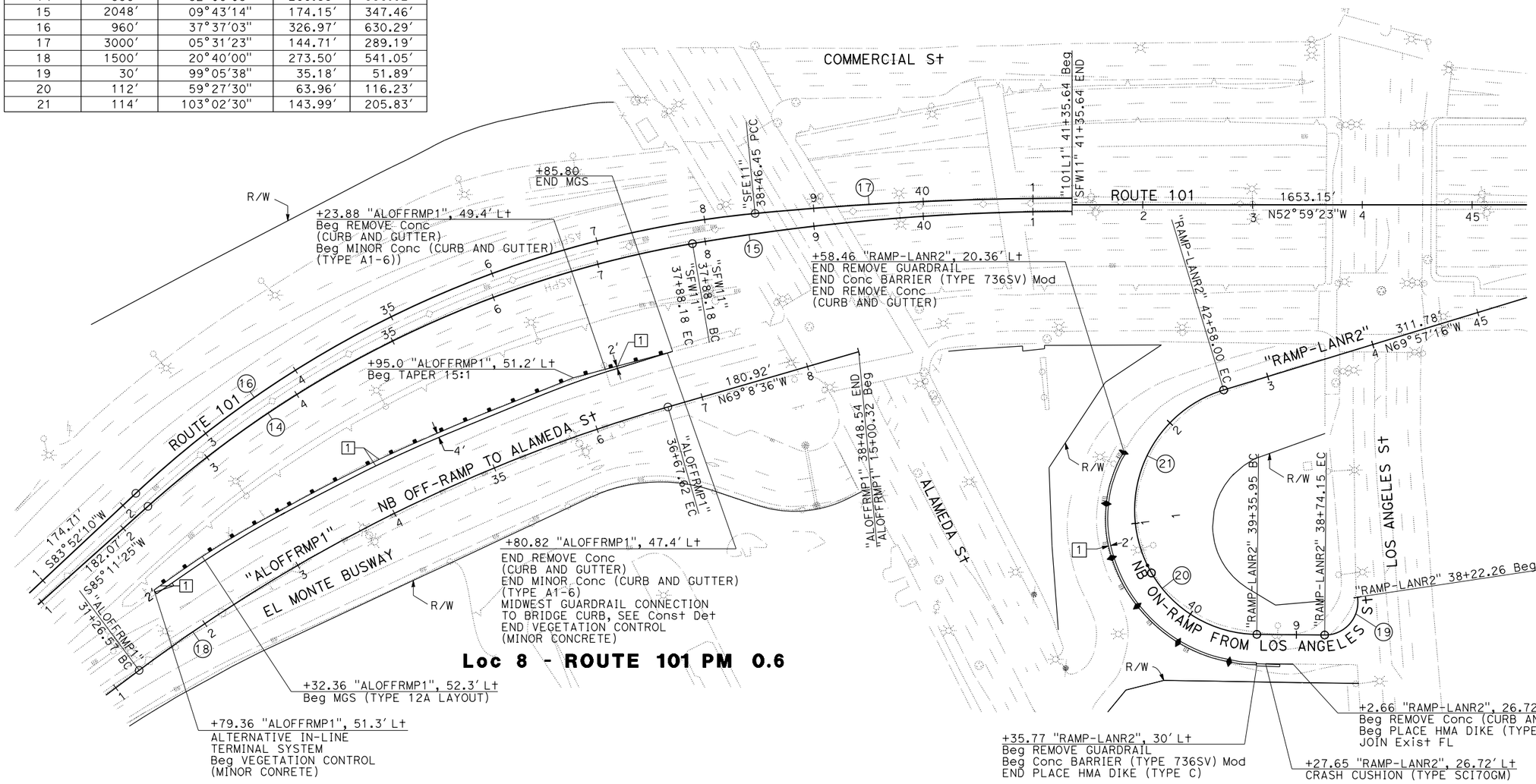

LAYOUT

SCALE: 1" = 50′

L-5

REVISED BY	DATE REVISED

CALCULATED-DESIGNED BY	CHECKED BY
MARIA RODRIGUEZ	RICKY LEE

FUNCTIONAL SUPERVISOR: DEREK HIGA

STATE OF CALIFORNIA - DEPARTMENT OF TRANSPORTATION

Caltrans® **DESIGN**

LAST REVISION 03-02-15 | DATE PLOTTED => 15-JAN-2016 | TIME PLOTTED => 06:13

Dist	COUNTY	ROUTE	POST MILES TOTAL PROJECT	SHEET No.	TOTAL SHEETS
07	LA	5, 101	16.4, S0.0/25.9	11	459

Ricky Lee 4-22-15
REGISTERED CIVIL ENGINEER DATE

11-2-15
PLANS APPROVAL DATE

REGISTERED PROFESSIONAL ENGINEER RICKY LEE No. C74591 Exp. 12/31/17 CIVIL STATE OF CALIFORNIA

THE STATE OF CALIFORNIA OR ITS OFFICERS OR AGENTS SHALL NOT BE RESPONSIBLE FOR THE ACCURACY OR COMPLETENESS OF SCANNED COPIES OF THIS PLAN SHEET.

NOTE:

FOR ACCURATE RIGHT OF WAY DATA, CONTACT RIGHT OF WAY ENGINEERING AT THE DISTRICT OFFICE.

Loc 11 - ROUTE 101 PM 1.2

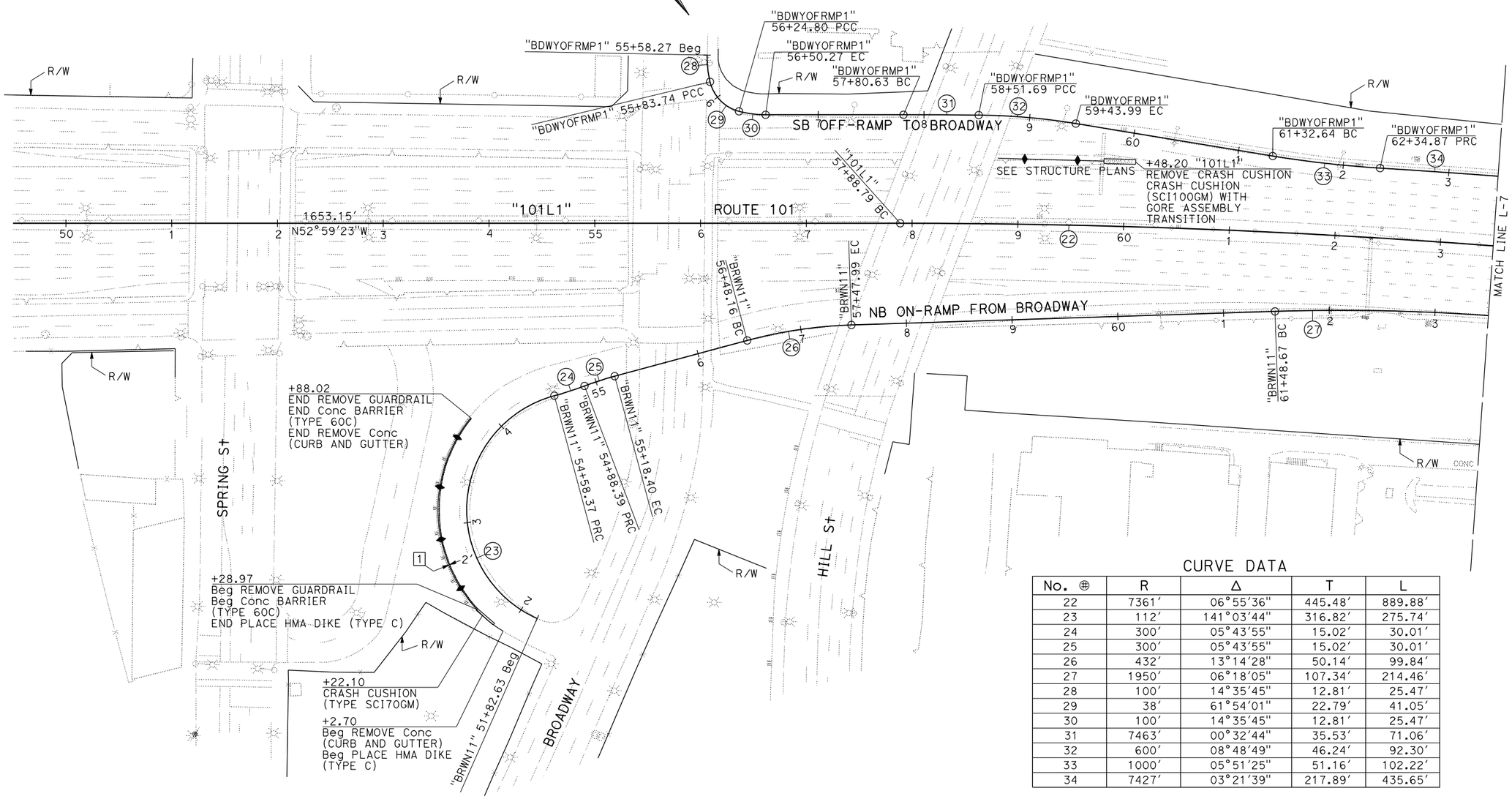

Loc 10 - ROUTE 101 PM 1.04

CURVE DATA

No. ⊕	R	Δ	T	L
22	7361′	06°55′36"	445.48′	889.88′
23	112′	141°03′44"	316.82′	275.74′
24	300′	05°43′55"	15.02′	30.01′
25	300′	05°43′55"	15.02′	30.01′
26	432′	13°14′28"	50.14′	99.84′
27	1950′	06°18′05"	107.34′	214.46′
28	100′	14°35′45"	12.81′	25.47′
29	38′	61°54′01"	22.79′	41.05′
30	100′	14°35′45"	12.81′	25.47′
31	7463′	00°32′44"	35.53′	71.06′
32	600′	08°48′49"	46.24′	92.30′
33	1000′	05°51′25"	51.16′	102.22′
34	7427′	03°21′39"	217.89′	435.65′

LAYOUT

SCALE: 1" = 50′

L-6

REVISED BY	DATE REVISED
RICKY LEE	MYLY NGUYEN
CALCULATED-DESIGNED BY	CHECKED BY
FUNCTIONAL SUPERVISOR	DEREK HIGA

STATE OF CALIFORNIA - DEPARTMENT OF TRANSPORTATION
Caltrans DESIGN

LAST REVISION 03-06-15 | DATE PLOTTED => 15-JAN-2016 TIME PLOTTED => 06:13

Dist	COUNTY	ROUTE	POST MILES TOTAL PROJECT	SHEET No.	TOTAL SHEETS
07	LA	5, 101	16.4, S0.0/25.9	12	459

REGISTERED CIVIL ENGINEER — DATE: 4-22-15

11-2-15
PLANS APPROVAL DATE

REGISTERED PROFESSIONAL ENGINEER — RICKY LEE — No. C74591 — Exp. 12/31/17 — CIVIL — STATE OF CALIFORNIA

THE STATE OF CALIFORNIA OR ITS OFFICERS OR AGENTS SHALL NOT BE RESPONSIBLE FOR THE ACCURACY OR COMPLETENESS OF SCANNED COPIES OF THIS PLAN SHEET.

NOTE:

FOR ACCURATE RIGHT OF WAY DATA, CONTACT RIGHT OF WAY ENGINEERING AT THE DISTRICT OFFICE.

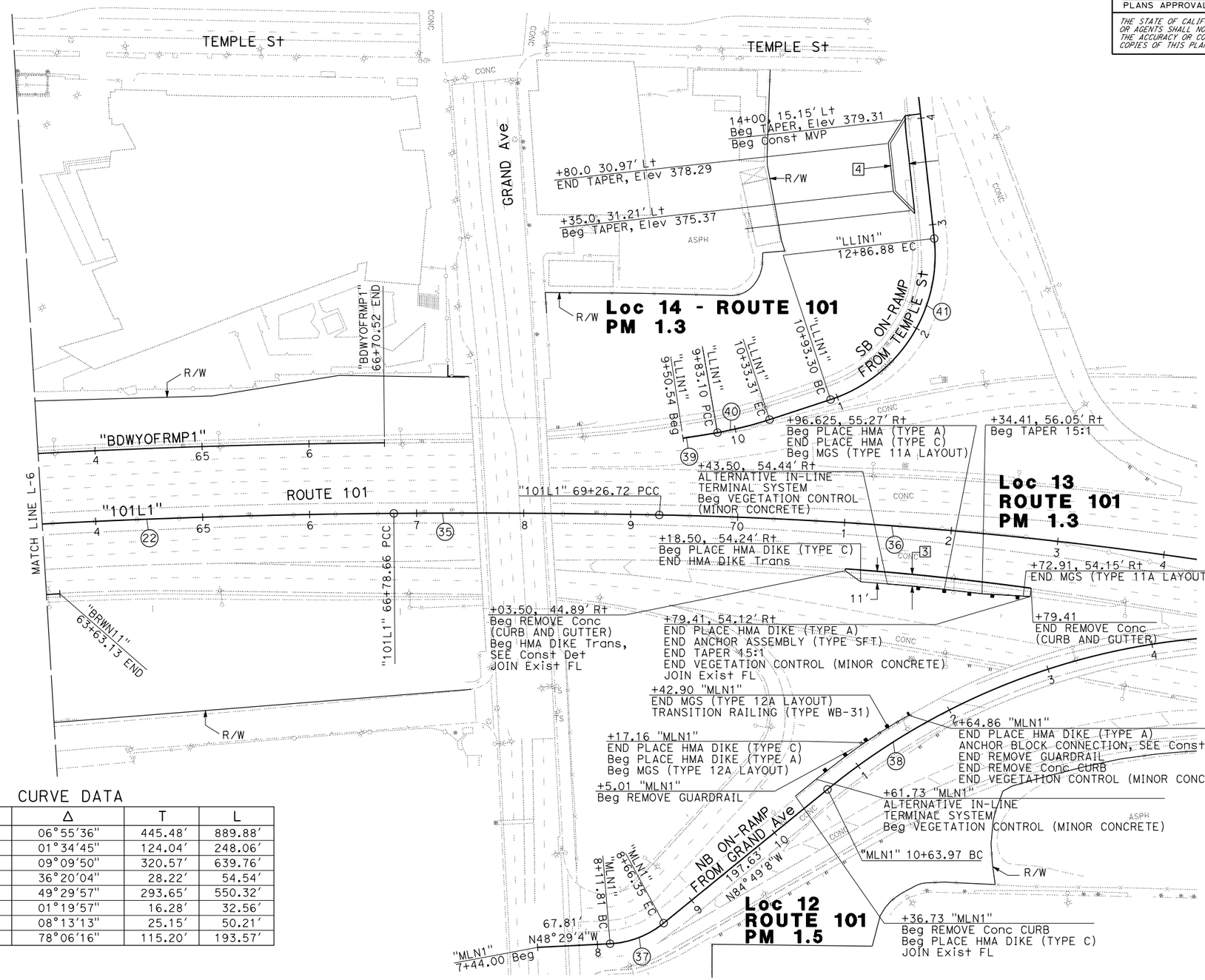

CURVE DATA

No. ⊕	R	Δ	T	L
22	7361′	06°55′36"	445.48′	889.88′
35	9000′	01°34′45"	124.04′	248.06′
36	4000′	09°09′50"	320.57′	639.76′
37	86′	36°20′04"	28.22′	54.54′
38	637′	49°29′57"	293.65′	550.32′
39	1400′	01°19′57"	16.28′	32.56′
40	350′	08°13′13"	25.15′	50.21′
41	142′	78°06′16"	115.20′	193.57′

LAYOUT

SCALE: 1" = 50′

L-7

STATE OF CALIFORNIA - DEPARTMENT OF TRANSPORTATION — Caltrans® — DESIGN

FUNCTIONAL SUPERVISOR: DEREK HIGA

CALCULATED-DESIGNED BY: MYLY NGUYEN — CHECKED BY: RICKY LEE — REVISED BY — DATE REVISED

LAST REVISION 03-02-15 — DATE PLOTTED => 15-JAN-2016 — TIME PLOTTED => 06:13

Dist	COUNTY	ROUTE	POST MILES TOTAL PROJECT	SHEET No.	TOTAL SHEETS
07	LA	5, 101	16.4, S0.0/25.9	13	459

Ricky Lee 4-22-15
REGISTERED CIVIL ENGINEER DATE

11-2-15
PLANS APPROVAL DATE

REGISTERED PROFESSIONAL ENGINEER RICKY LEE No. C74591 Exp. 12/31/17 CIVIL STATE OF CALIFORNIA

THE STATE OF CALIFORNIA OR ITS OFFICERS OR AGENTS SHALL NOT BE RESPONSIBLE FOR THE ACCURACY OR COMPLETENESS OF SCANNED COPIES OF THIS PLAN SHEET.

NOTE:

FOR ACCURATE RIGHT OF WAY DATA, CONTACT RIGHT OF WAY ENGINEERING AT THE DISTRICT OFFICE.

CURVE DATA

No. ⊕	R	Δ	T	L
42	2500′	13°42′16"	300.42′	597.97′
43	3500′	17°51′41"	550.00′	1091.09′
44	1000′	14°02′00"	123.08′	244.93′
45	1012′	06°55′13"	61.19′	122.23′
46	1500′	12°30′02"	164.28′	327.27′
47	2512′	02°19′08"	50.84′	101.67′
48	1512′	14°07′54"	187.41′	372.93′

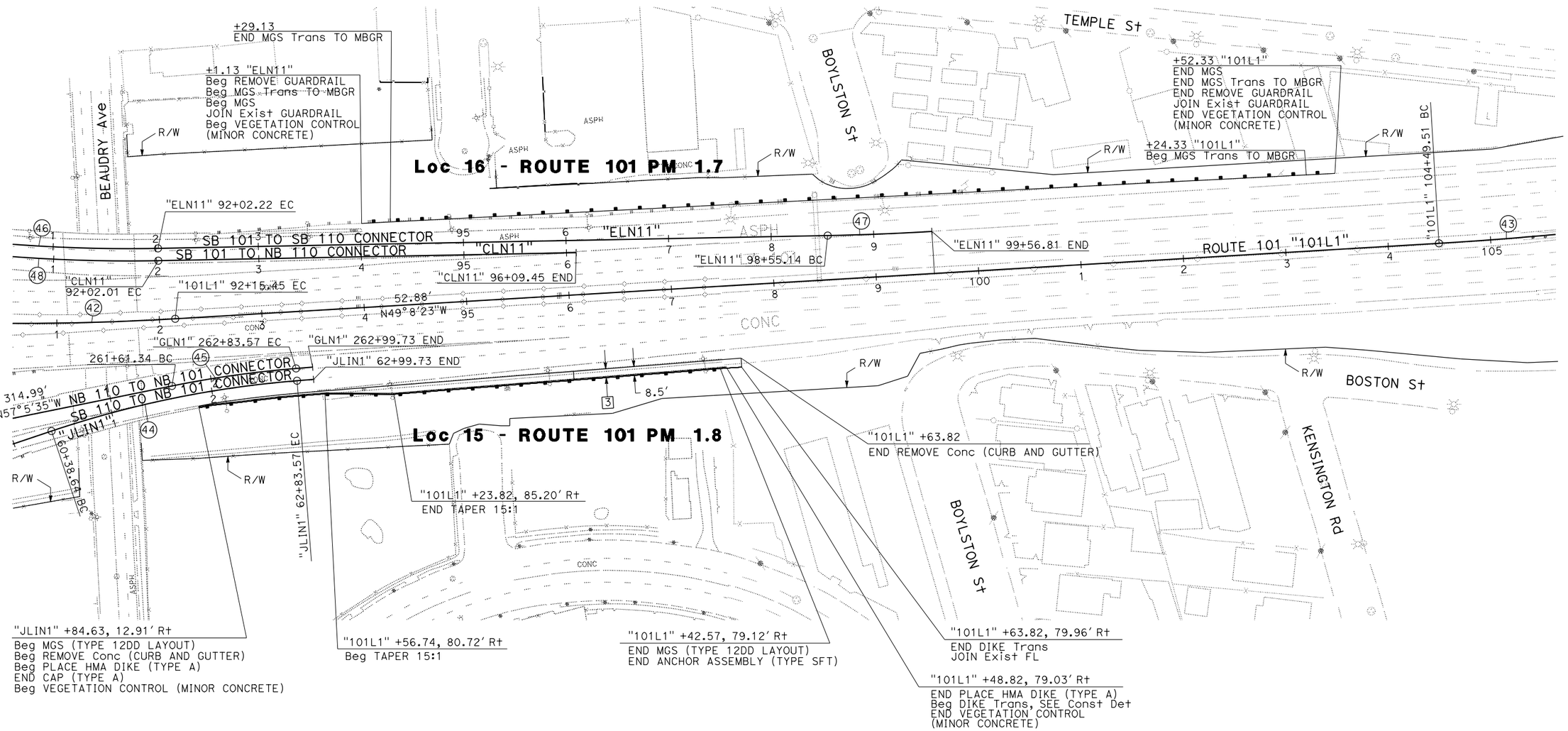

LAYOUT

SCALE: 1" = 50′

L-8

STATE OF CALIFORNIA - DEPARTMENT OF TRANSPORTATION
Caltrans
DESIGN

FUNCTIONAL SUPERVISOR: DEREK HIGA
CALCULATED-DESIGNED BY: ANTOINE NADER
CHECKED BY: RICKY LEE
REVISED BY
DATE REVISED

LAST REVISION 03-02-15
DATE PLOTTED => 15-JAN-2016
TIME PLOTTED => 06:13

Dist	COUNTY	ROUTE	POST MILES TOTAL PROJECT	SHEET No.	TOTAL SHEETS
07	LA	5, 101	16.4, S0.0/25.9	14	459

Ricky Lee 4-22-15
REGISTERED CIVIL ENGINEER DATE

11-2-15
PLANS APPROVAL DATE

REGISTERED PROFESSIONAL ENGINEER RICKY LEE No. C74591 Exp. 12/31/17 CIVIL STATE OF CALIFORNIA

THE STATE OF CALIFORNIA OR ITS OFFICERS OR AGENTS SHALL NOT BE RESPONSIBLE FOR THE ACCURACY OR COMPLETENESS OF SCANNED COPIES OF THIS PLAN SHEET.

NOTE:

FOR ACCURATE RIGHT OF WAY DATA, CONTACT RIGHT OF WAY ENGINEERING AT THE DISTRICT OFFICE.

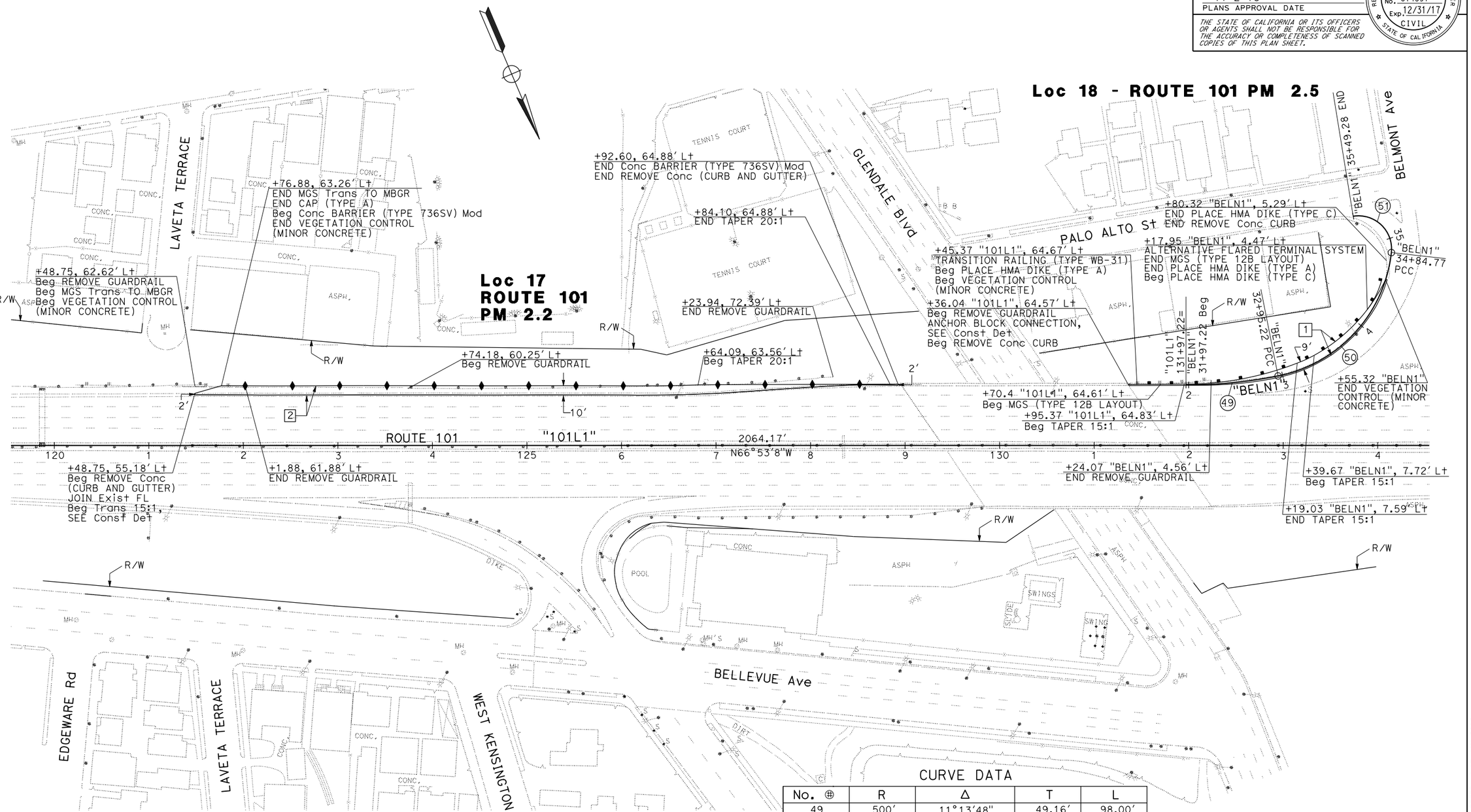

CURVE DATA

No. ⊕	R	Δ	T	L
49	500'	11°13'48"	49.16'	98.00'
50	150'	72°24'10"	109.79'	189.55'
51	35'	105°36'19"	46.12'	64.51'

LAYOUT

SCALE: 1" = 50'

L-9

REVISED BY	DATE REVISED

MARIA RODRIGUEZ	RICKY LEE
CALCULATED-DESIGNED BY	CHECKED BY

FUNCTIONAL SUPERVISOR: DEREK HIGA

STATE OF CALIFORNIA - DEPARTMENT OF TRANSPORTATION

Caltrans® DESIGN

LAST REVISION 03-09-15 | DATE PLOTTED => 15-JAN-2016 TIME PLOTTED => 06:13

Dist	COUNTY	ROUTE	POST MILES TOTAL PROJECT	SHEET No.	TOTAL SHEETS
07	LA	5, 101	16.4, S0.0/25.9	15	459

Ricky Lee 4-22-15
REGISTERED CIVIL ENGINEER DATE

11-2-15
PLANS APPROVAL DATE

REGISTERED PROFESSIONAL ENGINEER RICKY LEE No. C74591 Exp. 12/31/17 CIVIL STATE OF CALIFORNIA

THE STATE OF CALIFORNIA OR ITS OFFICERS OR AGENTS SHALL NOT BE RESPONSIBLE FOR THE ACCURACY OR COMPLETENESS OF SCANNED COPIES OF THIS PLAN SHEET.

NOTE:

FOR ACCURATE RIGHT OF WAY DATA, CONTACT RIGHT OF WAY ENGINEERING AT THE DISTRICT OFFICE.

CURVE DATA

No. ⊕	R	Δ	T	L
52	5000′	12°50′40″	562.81′	1120.89′

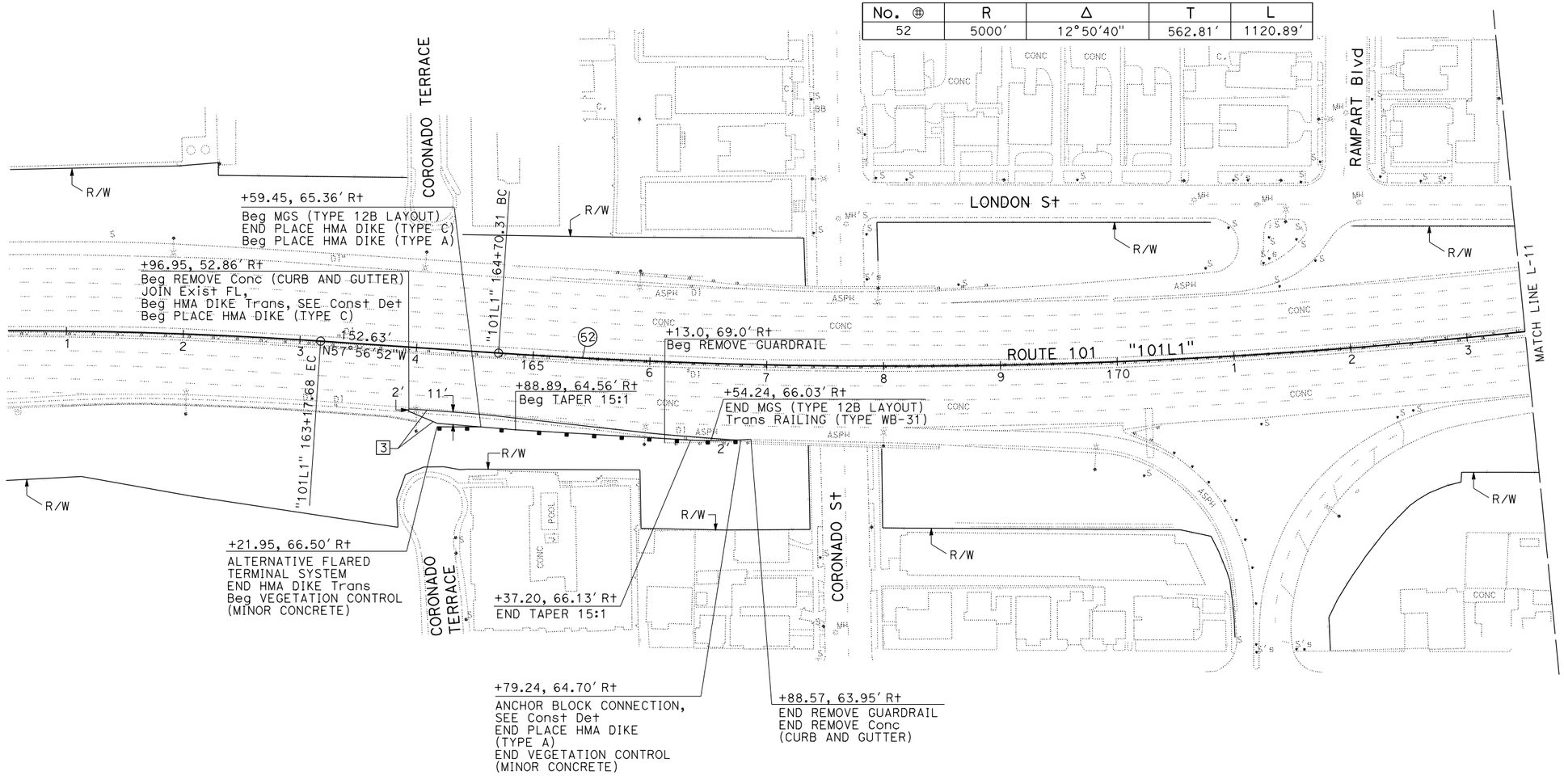

Loc 19 - ROUTE 101 PM 3.2

LAYOUT

SCALE: 1" = 50′

L-10

REVISED BY	DATE REVISED

CALCULATED-DESIGNED BY	MARIA RODRIGUEZ
CHECKED BY	RICKY LEE
FUNCTIONAL SUPERVISOR	DEREK HIGA

STATE OF CALIFORNIA - DEPARTMENT OF TRANSPORTATION
Caltrans
DESIGN

LAST REVISION 03-02-15
DATE PLOTTED => 15-JAN-2016
TIME PLOTTED => 06:13

Dist	COUNTY	ROUTE	POST MILES TOTAL PROJECT	SHEET No.	TOTAL SHEETS
07	LA	5, 101	16.4, S0.0/25.9	16	459

Ricky Lee 4-22-15
REGISTERED CIVIL ENGINEER DATE

11-2-15
PLANS APPROVAL DATE

REGISTERED PROFESSIONAL ENGINEER RICKY LEE No. C74591 Exp. 12/31/17 CIVIL STATE OF CALIFORNIA

THE STATE OF CALIFORNIA OR ITS OFFICERS OR AGENTS SHALL NOT BE RESPONSIBLE FOR THE ACCURACY OR COMPLETENESS OF SCANNED COPIES OF THIS PLAN SHEET.

NOTE:

FOR ACCURATE RIGHT OF WAY DATA, CONTACT RIGHT OF WAY ENGINEERING AT THE DISTRICT OFFICE.

CURVE DATA

No. ⊕	R	Δ	T	L
52	5000′	12°50′40"	562.81′	1120.89′

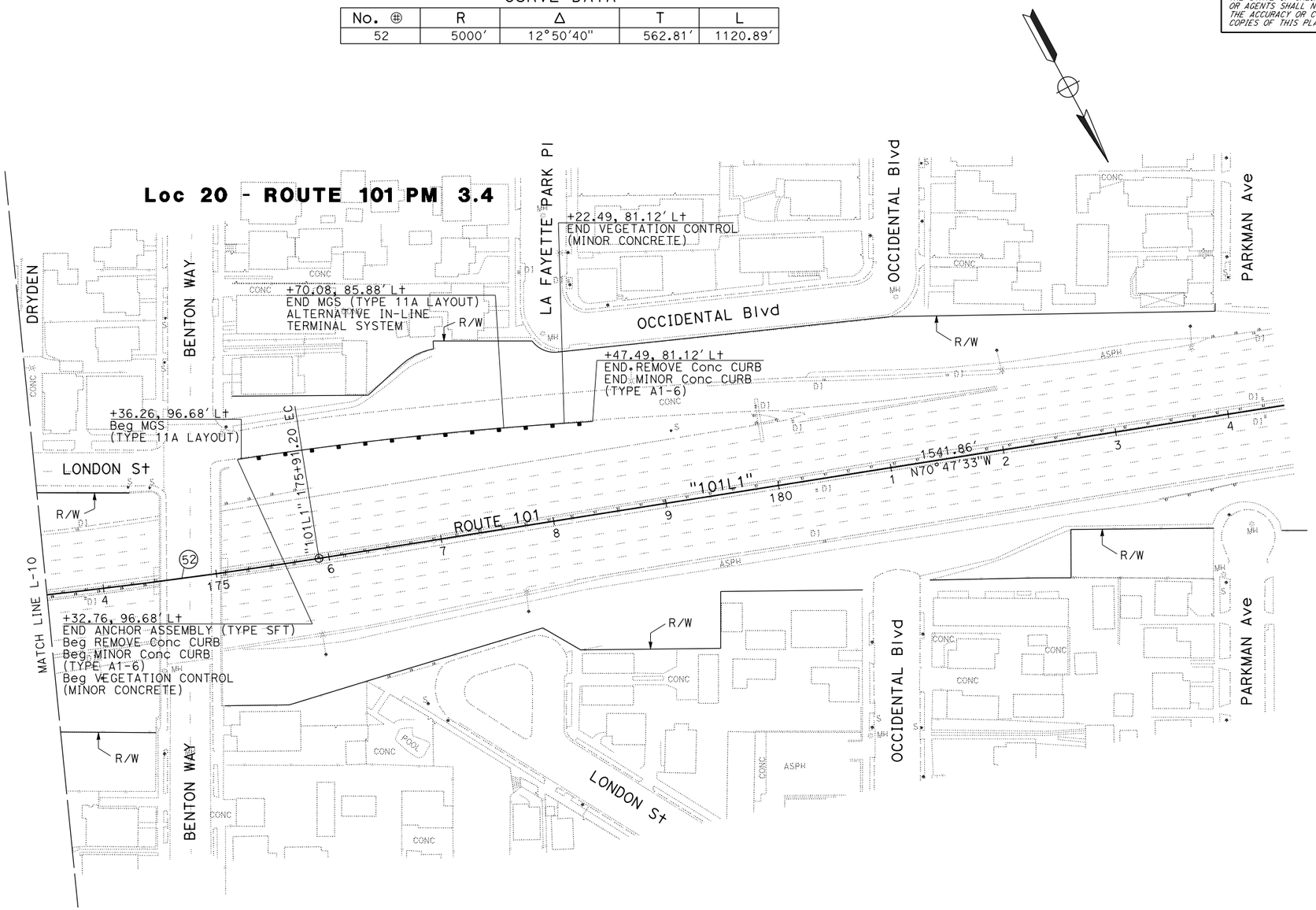

LAYOUT

SCALE: 1" = 50′

L-11

STATE OF CALIFORNIA - DEPARTMENT OF TRANSPORTATION	FUNCTIONAL SUPERVISOR	CALCULATED-DESIGNED BY	CHECKED BY	REVISED BY	DATE REVISED
Caltrans DESIGN	DEREK HIGA	MARIA RODRIGUEZ	RICKY LEE		

LAST REVISION 03-02-15 | DATE PLOTTED => 15-JAN-2016 TIME PLOTTED => 06:13

Dist	COUNTY	ROUTE	POST MILES TOTAL PROJECT	SHEET No.	TOTAL SHEETS
07	LA	5, 101	16.4, S0.0/25.9	17	459

Ricky Lee 4-22-15
REGISTERED CIVIL ENGINEER DATE

11-2-15
PLANS APPROVAL DATE

REGISTERED PROFESSIONAL ENGINEER RICKY LEE No. C74591 Exp. 12/31/17 CIVIL STATE OF CALIFORNIA

THE STATE OF CALIFORNIA OR ITS OFFICERS OR AGENTS SHALL NOT BE RESPONSIBLE FOR THE ACCURACY OR COMPLETENESS OF SCANNED COPIES OF THIS PLAN SHEET.

NOTE:

FOR ACCURATE RIGHT OF WAY DATA, CONTACT RIGHT OF WAY ENGINEERING AT THE DISTRICT OFFICE.

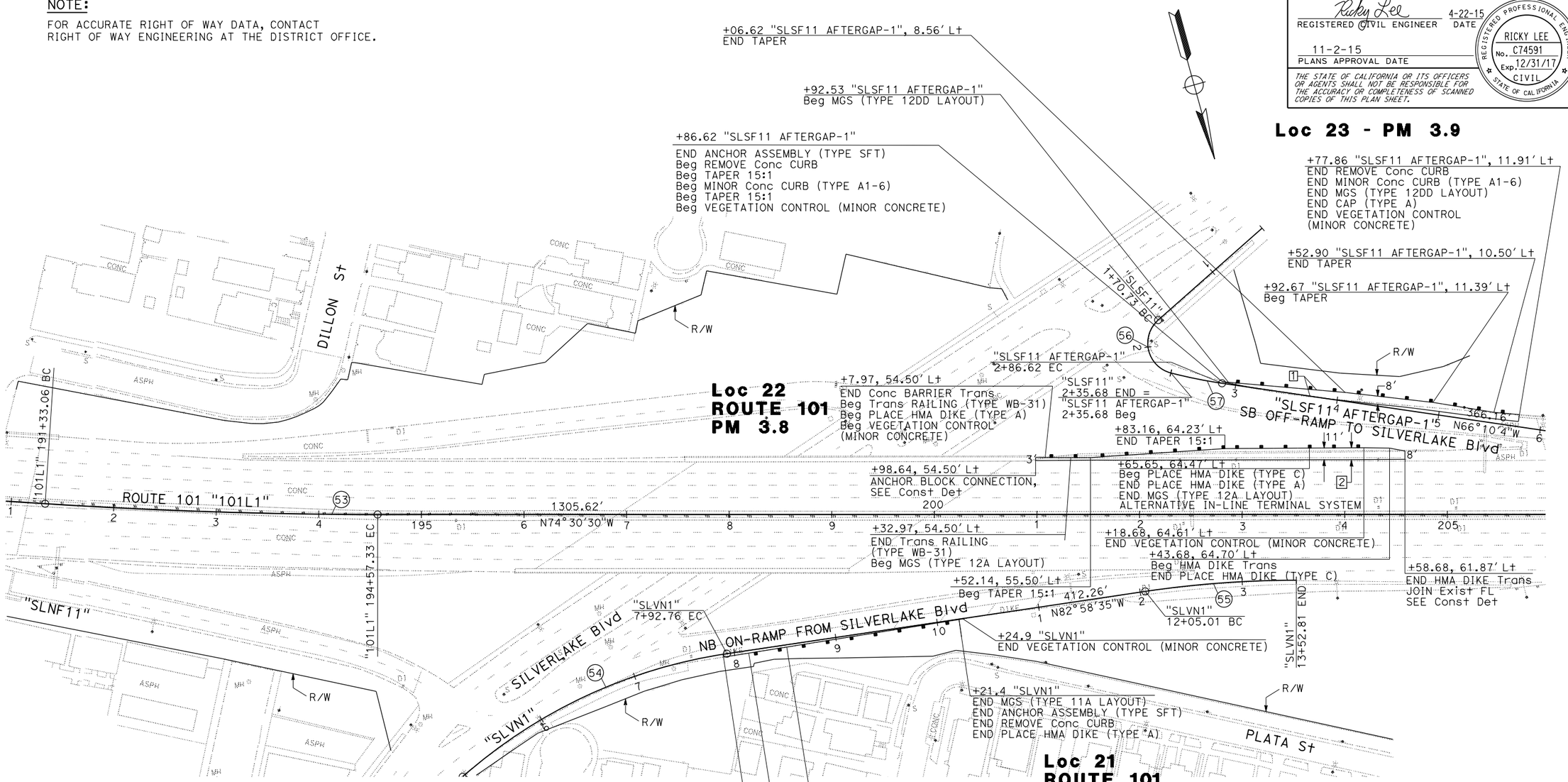

CURVE DATA

No. ⊕	R	Δ	T	L
53	5000'	03°42'57"	162.19'	324.27'
54	500'	33°00'48"	148.17'	288.10'
55	1000'	08°28'06"	74.03'	147.80'
56	30'	124°03'10"	56.48'	64.95'
57	476'	06°07'51"	25.49'	50.93'

LAYOUT

SCALE: 1" = 50'

L-12

STATE OF CALIFORNIA - DEPARTMENT OF TRANSPORTATION
Caltrans®
DESIGN

FUNCTIONAL SUPERVISOR: DEREK HIGA
CALCULATED-DESIGNED BY: ANTOINE NADER
CHECKED BY: RICKY LEE
REVISED BY
DATE REVISED

LAST REVISION 03-02-15
DATE PLOTTED => 15-JAN-2016
TIME PLOTTED => 06:13

Dist	COUNTY	ROUTE	POST MILES TOTAL PROJECT	SHEET No.	TOTAL SHEETS
07	LA	5, 101	16.4, S0.0/25.9	18	459

Ricky Lee 4-22-15
REGISTERED CIVIL ENGINEER DATE

11-2-15
PLANS APPROVAL DATE

REGISTERED PROFESSIONAL ENGINEER RICKY LEE No. C74591 Exp. 12/31/17 CIVIL STATE OF CALIFORNIA

THE STATE OF CALIFORNIA OR ITS OFFICERS OR AGENTS SHALL NOT BE RESPONSIBLE FOR THE ACCURACY OR COMPLETENESS OF SCANNED COPIES OF THIS PLAN SHEET.

NOTE:

FOR ACCURATE RIGHT OF WAY DATA, CONTACT RIGHT OF WAY ENGINEERING AT THE DISTRICT OFFICE.

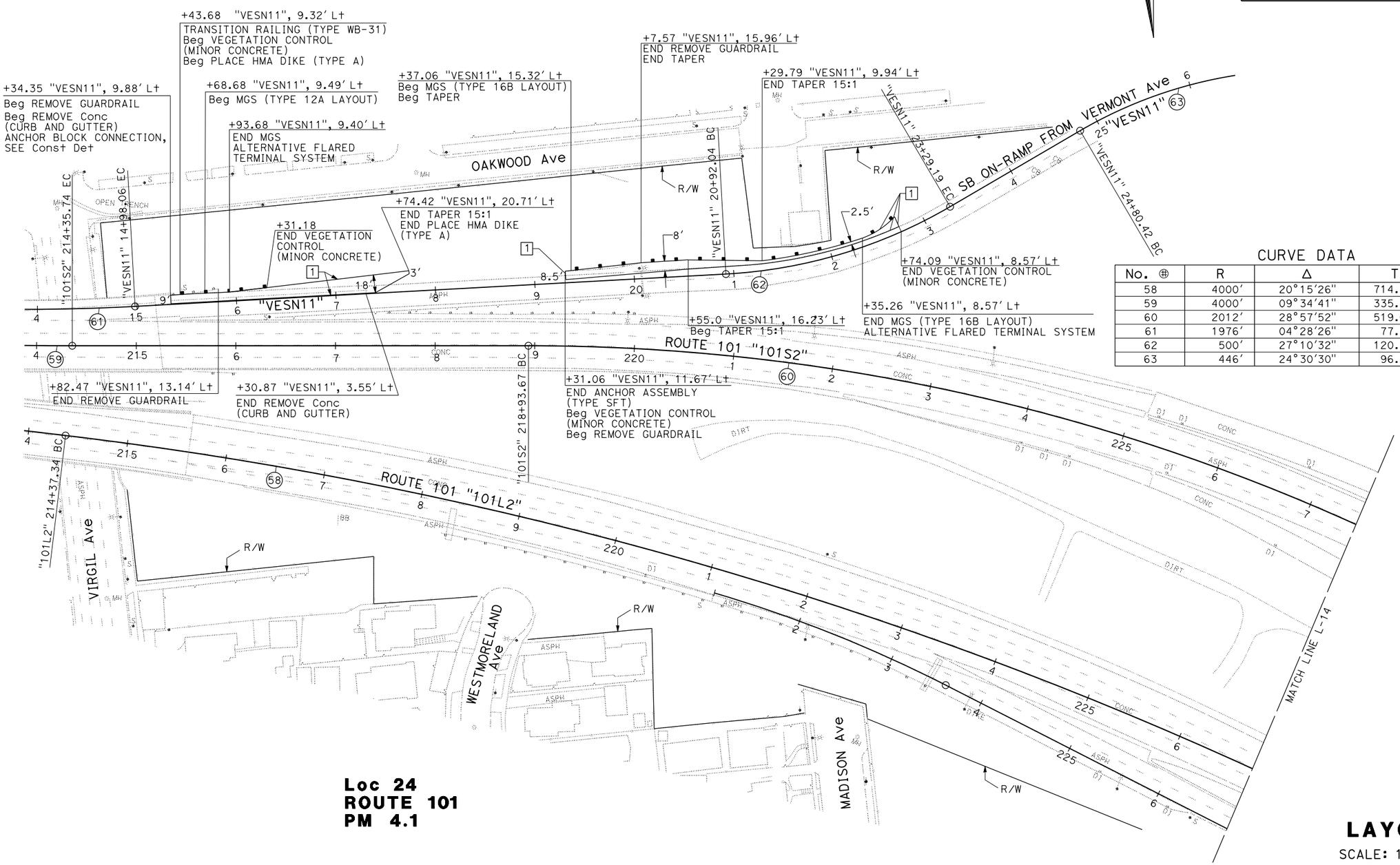

CURVE DATA

No. ⊕	R	Δ	T	L
58	4000'	20°15'26"	714.57'	1414.23'
59	4000'	09°34'41"	335.11'	668.67'
60	2012'	28°57'52"	519.67'	1017.12'
61	1976'	04°28'26"	77.19'	154.30'
62	500'	27°10'32"	120.85'	237.15'
63	446'	24°30'30"	96.87'	190.78'

LAYOUT

SCALE: 1" = 50'

L-13

STATE OF CALIFORNIA - DEPARTMENT OF TRANSPORTATION
Caltrans
DESIGN

FUNCTIONAL SUPERVISOR: DEREK HIGA
CALCULATED-DESIGNED BY: MARIA RODRIGUEZ
CHECKED BY: RICKY LEE
REVISED BY
DATE REVISED

LAST REVISION 03-02-15
DATE PLOTTED => 15-JAN-2016
TIME PLOTTED => 06:13

Dist	COUNTY	ROUTE	POST MILES TOTAL PROJECT	SHEET No.	TOTAL SHEETS
07	LA	5, 101	16.4, S0.0/25.9	19	459

Ricky Lee 4-22-15
REGISTERED CIVIL ENGINEER DATE

11-2-15
PLANS APPROVAL DATE

REGISTERED PROFESSIONAL ENGINEER RICKY LEE No. C74591 Exp. 12/31/17 CIVIL STATE OF CALIFORNIA

THE STATE OF CALIFORNIA OR ITS OFFICERS OR AGENTS SHALL NOT BE RESPONSIBLE FOR THE ACCURACY OR COMPLETENESS OF SCANNED COPIES OF THIS PLAN SHEET.

NOTE:

FOR ACCURATE RIGHT OF WAY DATA, CONTACT RIGHT OF WAY ENGINEERING AT THE DISTRICT OFFICE.

CURVE DATA

No. ⊕	R	Δ	T	L
58	4000′	20°15′26"	714.57′	1414.23′
60	2012′	28°57′52"	519.67′	1017.12′
64	8000′	03°36′01"	251.44′	502.71′
65	5024′	06°06′56"	268.38′	536.24′
66	350′	16°16′05"	50.02′	99.38′
67	150′	28°03′41"	37.48′	73.46′

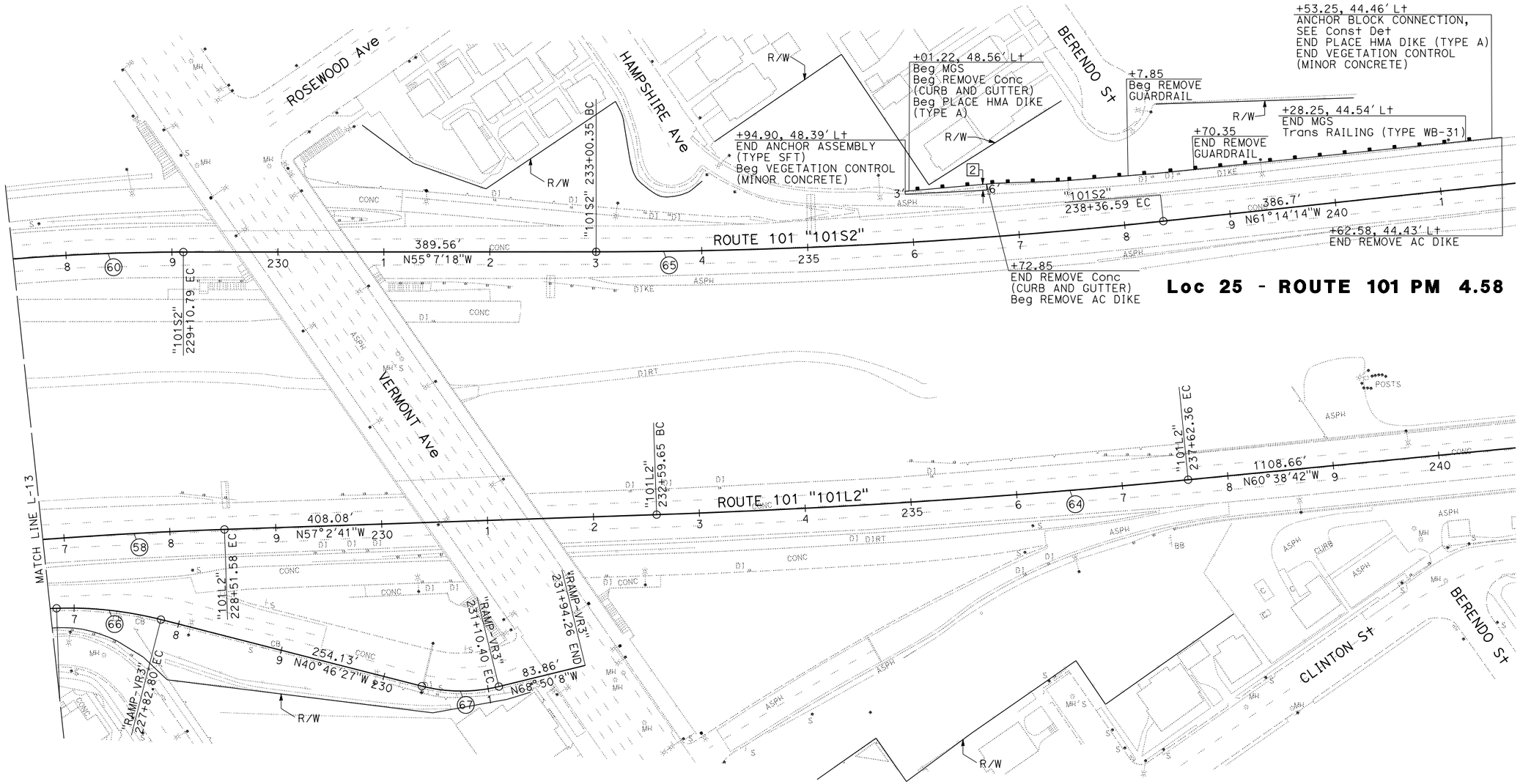

Loc 25 - ROUTE 101 PM 4.58

LAYOUT

SCALE: 1" = 50′

L-14

STATE OF CALIFORNIA - DEPARTMENT OF TRANSPORTATION

Caltrans

DESIGN

FUNCTIONAL SUPERVISOR: DEREK HIGA

CALCULATED-DESIGNED BY: MARIA RODRIGUEZ

CHECKED BY: RICKY LEE

REVISED BY

DATE REVISED

LAST REVISION 03-02-15

DATE PLOTTED => 15-JAN-2016
TIME PLOTTED => 06:13

Dist	COUNTY	ROUTE	POST MILES TOTAL PROJECT	SHEET No.	TOTAL SHEETS
07	LA	5, 101	16.4, S0.0/25.9	20	459

Ricky Lee 4-22-15
REGISTERED CIVIL ENGINEER DATE

11-2-15
PLANS APPROVAL DATE

REGISTERED PROFESSIONAL ENGINEER RICKY LEE No. C74591 Exp. 12/31/17 CIVIL STATE OF CALIFORNIA

THE STATE OF CALIFORNIA OR ITS OFFICERS OR AGENTS SHALL NOT BE RESPONSIBLE FOR THE ACCURACY OR COMPLETENESS OF SCANNED COPIES OF THIS PLAN SHEET.

NOTE:

FOR ACCURATE RIGHT OF WAY DATA, CONTACT RIGHT OF WAY ENGINEERING AT THE DISTRICT OFFICE.

CURVE DATA

No. ⊕	R	Δ	T	L
68	4970′	10°22′24"	451.14′	899.81′
69	3000′	13°51′10"	364.44′	725.33′
70	8000′	02°53′14"	201.60′	403.12′

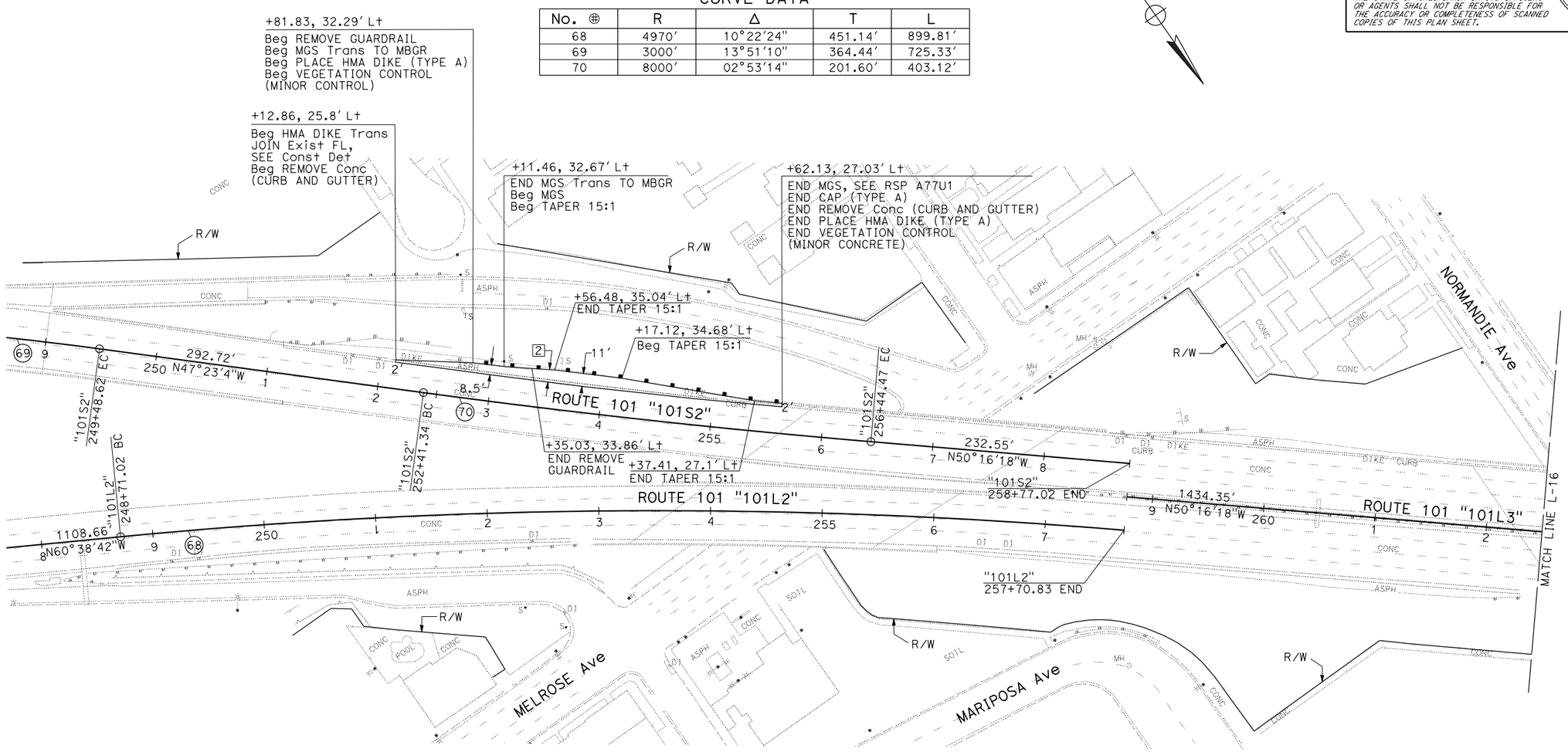

Loc 26 - ROUTE 101 PM 4.9

LAYOUT

SCALE: 1" = 50′

L-15

REVISED BY	DATE REVISED
MARIA RODRIGUEZ	RICKY LEE
CALCULATED-DESIGNED BY	CHECKED BY
FUNCTIONAL SUPERVISOR	DEREK HIGA

STATE OF CALIFORNIA - DEPARTMENT OF TRANSPORTATION

Caltrans®

DESIGN

LAST REVISION 03-02-15 | DATE PLOTTED => 15-JAN-2016 | TIME PLOTTED => 06:13

Dist	COUNTY	ROUTE	POST MILES TOTAL PROJECT	SHEET No.	TOTAL SHEETS
07	LA	5, 101	16.4, S0.0/25.9	21	459

Ricky Lee 4-22-15
REGISTERED CIVIL ENGINEER DATE

11-2-15
PLANS APPROVAL DATE

REGISTERED PROFESSIONAL ENGINEER RICKY LEE No. C74591 Exp. 12/31/17 CIVIL STATE OF CALIFORNIA

THE STATE OF CALIFORNIA OR ITS OFFICERS OR AGENTS SHALL NOT BE RESPONSIBLE FOR THE ACCURACY OR COMPLETENESS OF SCANNED COPIES OF THIS PLAN SHEET.

NOTE:

FOR ACCURATE RIGHT OF WAY DATA, CONTACT RIGHT OF WAY ENGINEERING AT THE DISTRICT OFFICE.

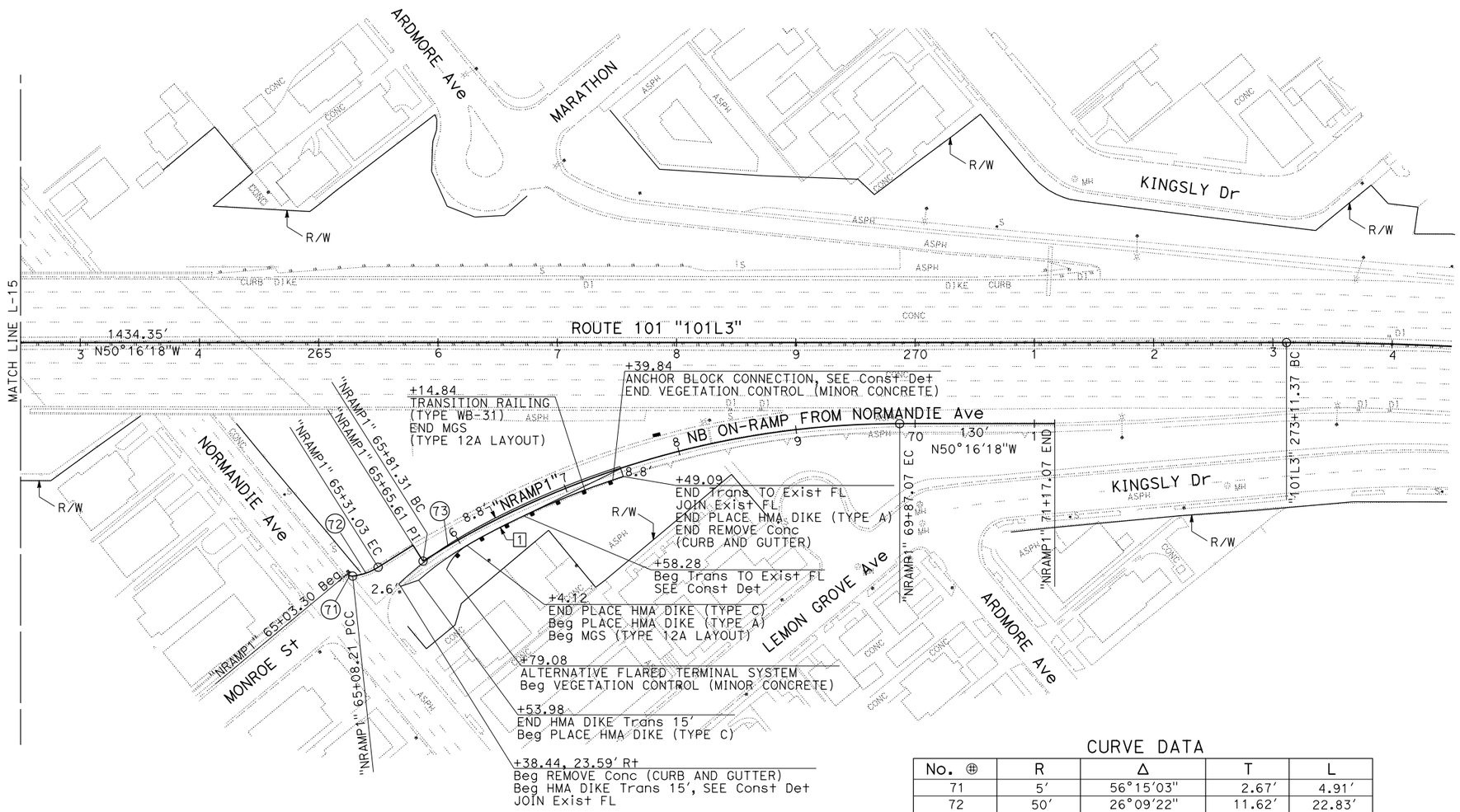

CURVE DATA

No. ⊕	R	Δ	T	L
71	5'	56°15'03"	2.67'	4.91'
72	50'	26°09'22"	11.62'	22.83'
73	750'	32°11'50"	216.46'	421.46'

Loc 27 - ROUTE 101 PM 5.1

LAYOUT

SCALE: 1" = 50'

L-16

STATE OF CALIFORNIA - DEPARTMENT OF TRANSPORTATION
Caltrans
DESIGN

FUNCTIONAL SUPERVISOR: DEREK HIGA
CALCULATED-DESIGNED BY: RICKY LEE
CHECKED BY: KAZ KAYODA
REVISED BY
DATE REVISED

LAST REVISION 03-02-15
DATE PLOTTED => 15-JAN-2016
TIME PLOTTED => 06:13

Dist	COUNTY	ROUTE	POST MILES TOTAL PROJECT	SHEET No.	TOTAL SHEETS
07	LA	5, 101	16.4, S0.0/25.9	22	459

Ricky Lee — REGISTERED CIVIL ENGINEER — 4-22-15 DATE

11-2-15 — PLANS APPROVAL DATE

REGISTERED PROFESSIONAL ENGINEER — RICKY LEE — No. C74591 — Exp. 12/31/17 — CIVIL — STATE OF CALIFORNIA

THE STATE OF CALIFORNIA OR ITS OFFICERS OR AGENTS SHALL NOT BE RESPONSIBLE FOR THE ACCURACY OR COMPLETENESS OF SCANNED COPIES OF THIS PLAN SHEET.

NOTE:

FOR ACCURATE RIGHT OF WAY DATA, CONTACT RIGHT OF WAY ENGINEERING AT THE DISTRICT OFFICE.

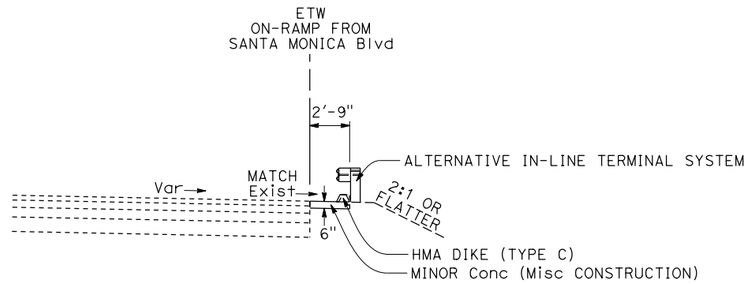

"101L3"
Sta 291+10.89 TO 291+64.02

CURVE DATA

No. ⊕	R	Δ	T	L
74	3000′	23°36′37"	627.01′	1236.23′
75	2000′	26°02′44"	462.57′	909.16′
76	3000′	02°36′57"	68.49′	136.96′
77	32′	109°39′23"	45.41′	61.24′

Loc 29 - ROUTE 101 PM 5.5

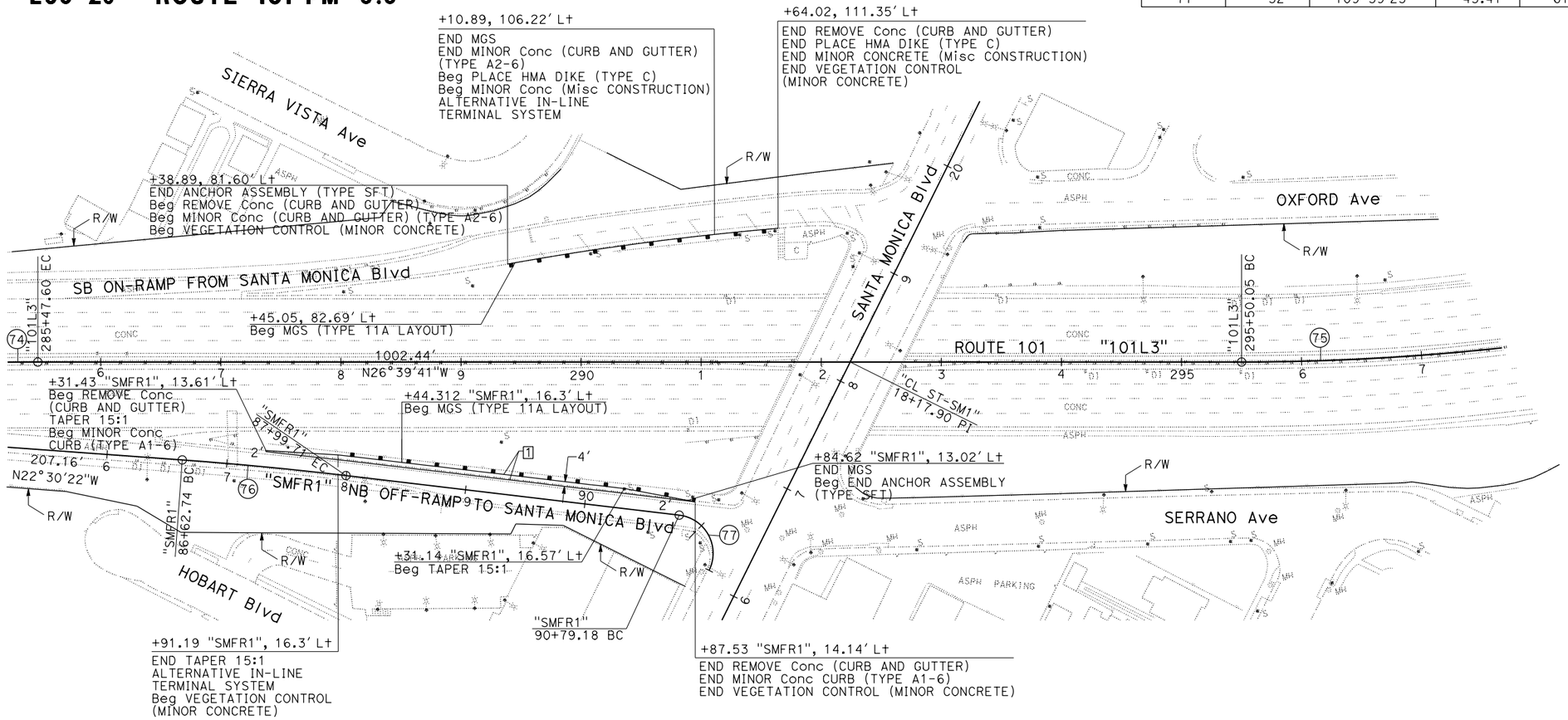

Loc 28 - ROUTE 101 PM 5.4

LAYOUT

SCALE: 1" = 50′

L-17

REVISED BY	DATE REVISED
MARIA RODRIGUEZ	RICKY LEE
CALCULATED-DESIGNED BY	CHECKED BY
FUNCTIONAL SUPERVISOR	DEREK HIGA

STATE OF CALIFORNIA - DEPARTMENT OF TRANSPORTATION — Caltrans® — **DESIGN**

LAST REVISION 03-02-15 — DATE PLOTTED => 15-JAN-2016 — TIME PLOTTED => 06:13

Dist	COUNTY	ROUTE	POST MILES TOTAL PROJECT	SHEET No.	TOTAL SHEETS
07	LA	5, 101	16.4, S0.0/25.9	23	459

Ricky Lee 4-22-15
REGISTERED CIVIL ENGINEER DATE

11-2-15
PLANS APPROVAL DATE

REGISTERED PROFESSIONAL ENGINEER RICKY LEE No. C74591 Exp. 12/31/17 CIVIL STATE OF CALIFORNIA

THE STATE OF CALIFORNIA OR ITS OFFICERS OR AGENTS SHALL NOT BE RESPONSIBLE FOR THE ACCURACY OR COMPLETENESS OF SCANNED COPIES OF THIS PLAN SHEET.

NOTE:

FOR ACCURATE RIGHT OF WAY DATA, CONTACT RIGHT OF WAY ENGINEERING AT THE DISTRICT OFFICE.

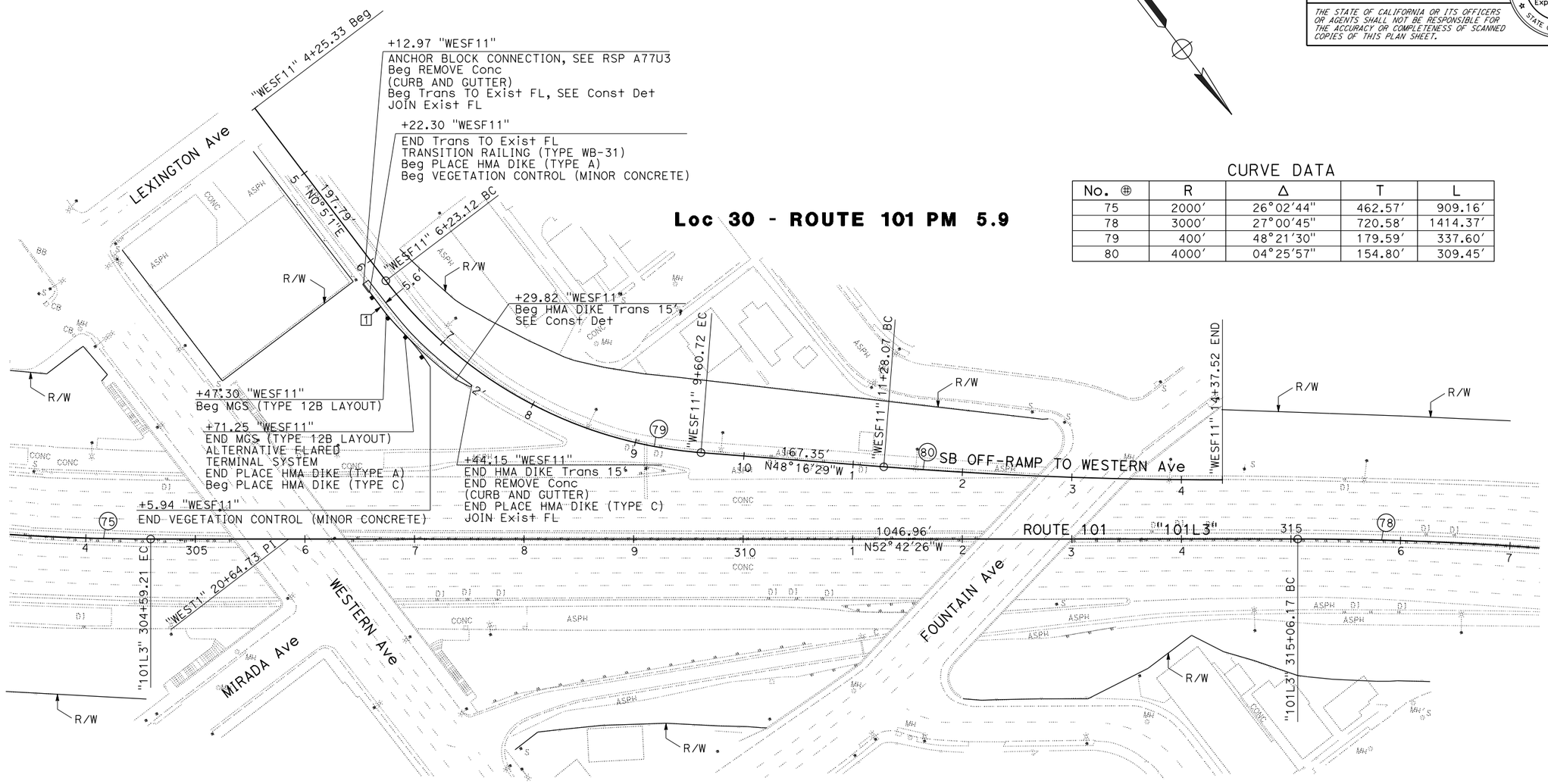

CURVE DATA

No. ⊕	R	Δ	T	L
75	2000′	26°02′44"	462.57′	909.16′
78	3000′	27°00′45"	720.58′	1414.37′
79	400′	48°21′30"	179.59′	337.60′
80	4000′	04°25′57"	154.80′	309.45′

LAYOUT

SCALE: 1" = 50′

L-18

STATE OF CALIFORNIA - DEPARTMENT OF TRANSPORTATION
Caltrans® **DESIGN**

FUNCTIONAL SUPERVISOR: DEREK HIGA
CALCULATED-DESIGNED BY: RICKY LEE
CHECKED BY: KAZ KAYODA
REVISED BY
DATE REVISED

LAST REVISION 03-02-15 | DATE PLOTTED => 15-JAN-2016 | TIME PLOTTED => 06:13

Dist	COUNTY	ROUTE	POST MILES TOTAL PROJECT	SHEET No.	TOTAL SHEETS
07	LA	5, 101	16.4, S0.0/25.9	24	459

Ricky Lee — REGISTERED CIVIL ENGINEER — 4-22-15 DATE

11-2-15 — PLANS APPROVAL DATE

REGISTERED PROFESSIONAL ENGINEER — RICKY LEE — No. C74591 — Exp. 12/31/17 — CIVIL — STATE OF CALIFORNIA

THE STATE OF CALIFORNIA OR ITS OFFICERS OR AGENTS SHALL NOT BE RESPONSIBLE FOR THE ACCURACY OR COMPLETENESS OF SCANNED COPIES OF THIS PLAN SHEET.

NOTE:

FOR ACCURATE RIGHT OF WAY DATA, CONTACT RIGHT OF WAY ENGINEERING AT THE DISTRICT OFFICE.

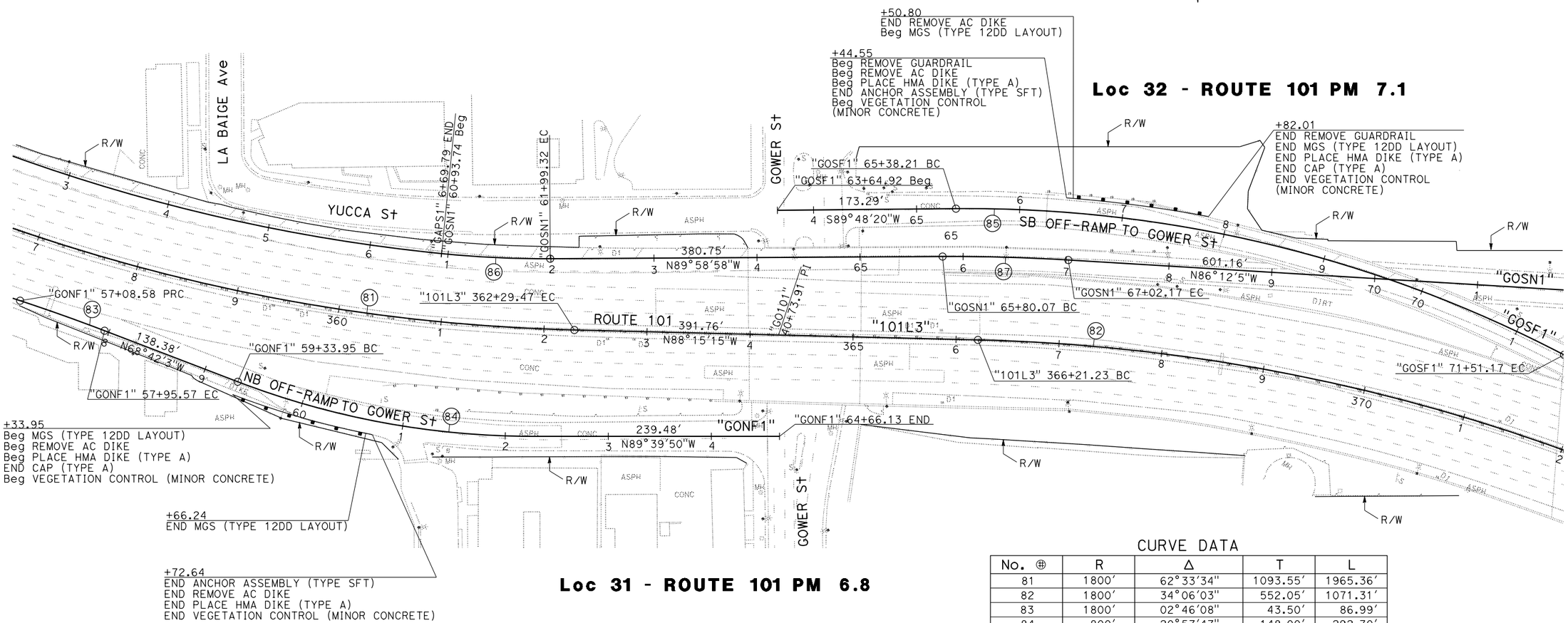

CURVE DATA

No. ⊕	R	Δ	T	L
81	1800′	62°33′34"	1093.55′	1965.36′
82	1800′	34°06′03"	552.05′	1071.31′
83	1800′	02°46′08"	43.50′	86.99′
84	800′	20°57′47"	148.00′	292.70′
85	1250′	28°05′47"	312.78′	612.97′
86	1000′	06°02′58"	52.84′	105.58′
87	1850′	03°46′53"	61.07′	122.10′

LAYOUT

SCALE: 1" = 50′

L-19

REVISED BY	DATE REVISED

CALCULATED-DESIGNED BY	CHECKED BY
RICKY LEE	KAZ KAYODA

FUNCTIONAL SUPERVISOR: DEREK HIGA

STATE OF CALIFORNIA - DEPARTMENT OF TRANSPORTATION — Caltrans — DESIGN

LAST REVISION 03-02-15 — DATE PLOTTED => 15-JAN-2016 — TIME PLOTTED => 06:13

Dist	COUNTY	ROUTE	POST MILES TOTAL PROJECT	SHEET No.	TOTAL SHEETS
07	LA	5, 101	16.4, S0.0/25.9	25	459

Ricky Lee 4-22-15
REGISTERED CIVIL ENGINEER DATE

11-2-15
PLANS APPROVAL DATE

REGISTERED PROFESSIONAL ENGINEER RICKY LEE No. C74591 Exp. 12/31/17 CIVIL STATE OF CALIFORNIA

THE STATE OF CALIFORNIA OR ITS OFFICERS OR AGENTS SHALL NOT BE RESPONSIBLE FOR THE ACCURACY OR COMPLETENESS OF SCANNED COPIES OF THIS PLAN SHEET.

NOTE:

FOR ACCURATE RIGHT OF WAY DATA, CONTACT
RIGHT OF WAY ENGINEERING AT THE DISTRICT OFFICE.

Loc 33 - ROUTE 101 PM 7.28

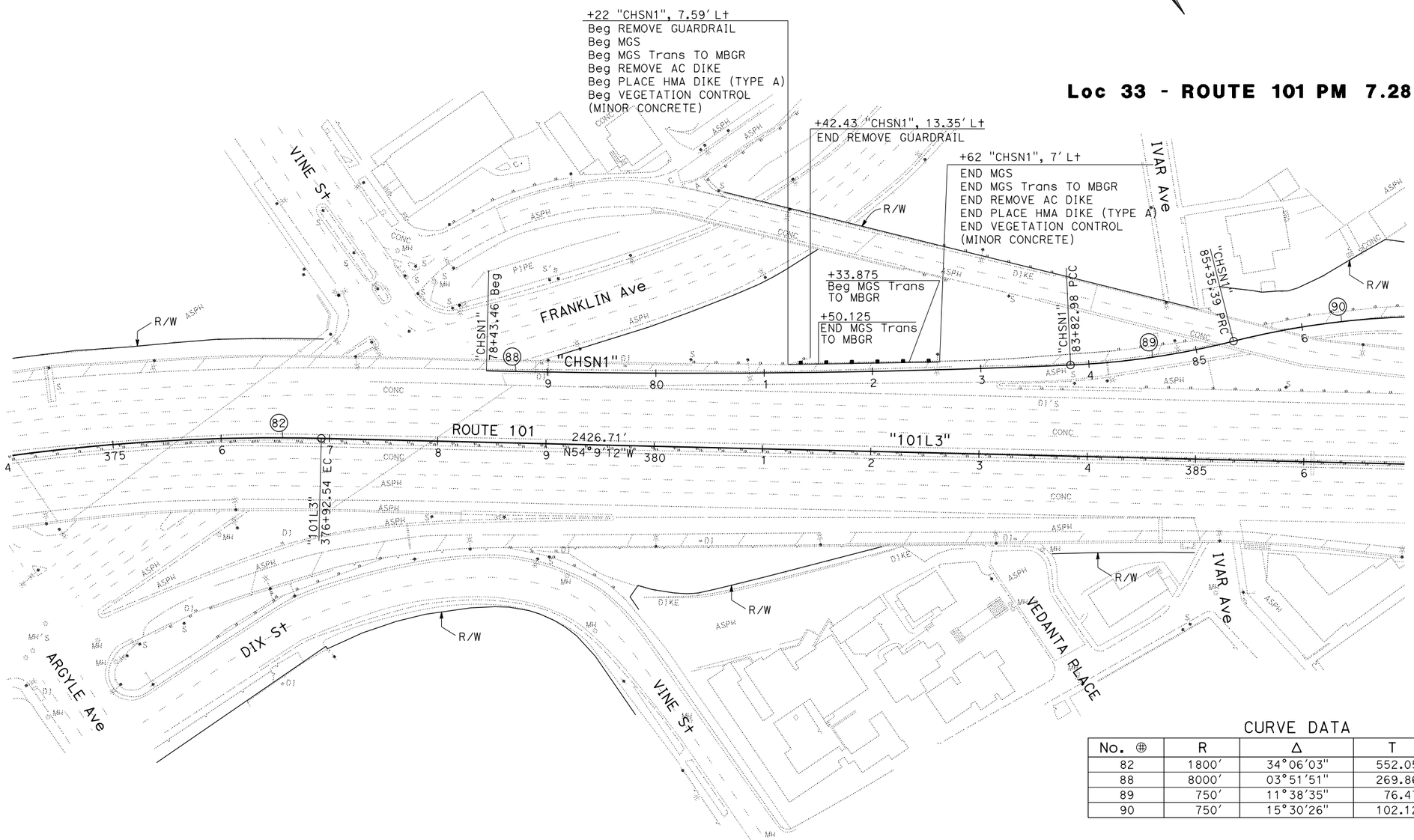

CURVE DATA

No. ⊕	R	Δ	T	L
82	1800'	34°06'03"	552.05'	1071.31'
88	8000'	03°51'51"	269.86'	539.52'
89	750'	11°38'35"	76.47'	152.41'
90	750'	15°30'26"	102.12'	202.99'

LAYOUT

SCALE: 1" = 50'

L-20

STATE OF CALIFORNIA - DEPARTMENT OF TRANSPORTATION
Caltrans® DESIGN

FUNCTIONAL SUPERVISOR: DEREK HIGA
CALCULATED-DESIGNED BY: AINSLEY C KUNG
CHECKED BY: RICKY LEE
REVISED BY
DATE REVISED

LAST REVISION 03-02-15
DATE PLOTTED => 15-JAN-2016
TIME PLOTTED => 06:13

Dist	COUNTY	ROUTE	POST MILES TOTAL PROJECT	SHEET No.	TOTAL SHEETS
07	LA	5, 101	16.4, S0.0/25.9	26	459

Ricky Lee 4-22-15
REGISTERED CIVIL ENGINEER DATE

11-2-15
PLANS APPROVAL DATE

REGISTERED PROFESSIONAL ENGINEER RICKY LEE No. C74591 Exp. 12/31/17 CIVIL STATE OF CALIFORNIA

THE STATE OF CALIFORNIA OR ITS OFFICERS OR AGENTS SHALL NOT BE RESPONSIBLE FOR THE ACCURACY OR COMPLETENESS OF SCANNED COPIES OF THIS PLAN SHEET.

NOTE:

FOR ACCURATE RIGHT OF WAY DATA, CONTACT RIGHT OF WAY ENGINEERING AT THE DISTRICT OFFICE.

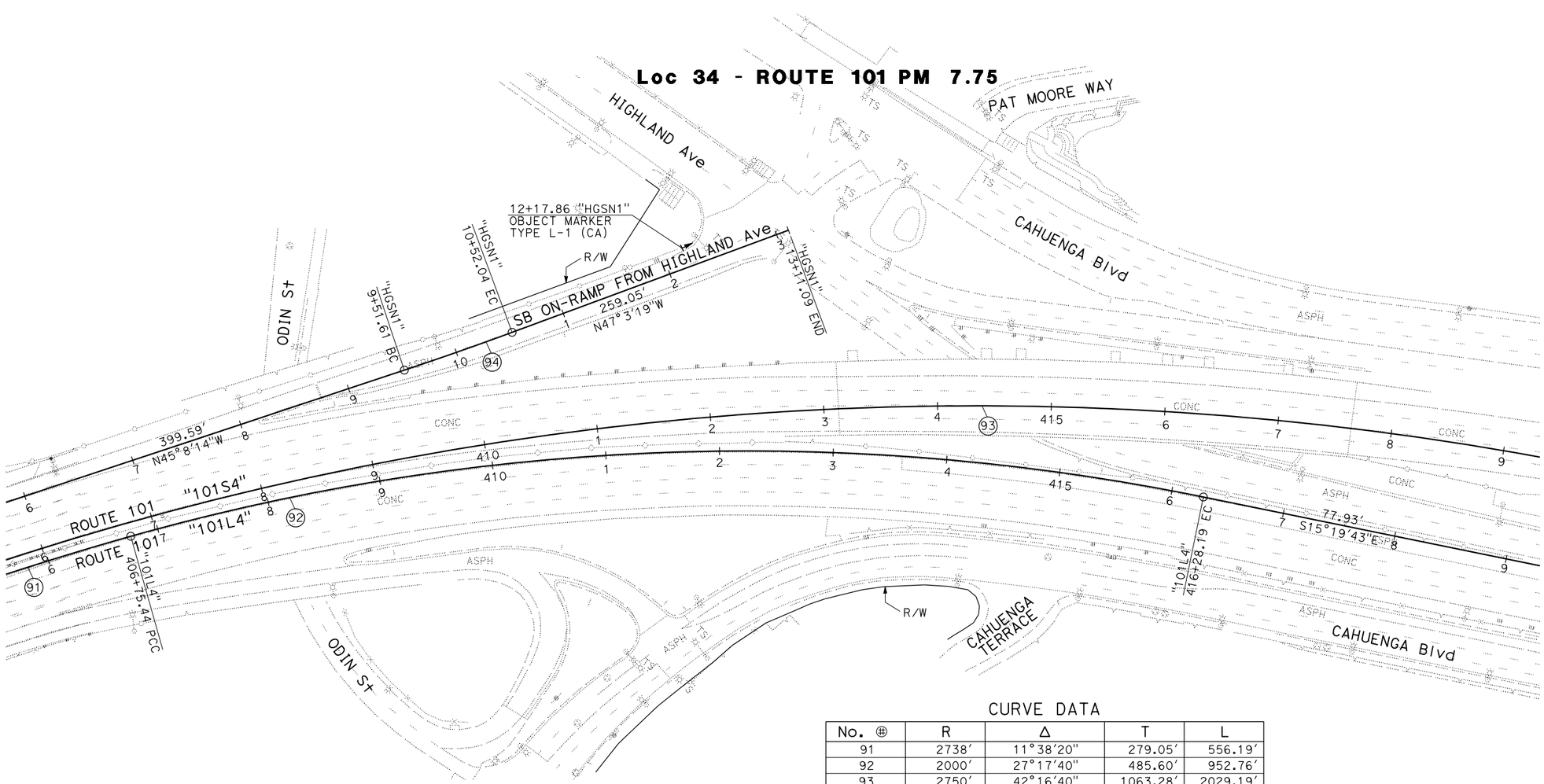

CURVE DATA

No. ⊕	R	Δ	T	L
91	2738′	11°38′20"	279.05′	556.19′
92	2000′	27°17′40"	485.60′	952.76′
93	2750′	42°16′40"	1063.28′	2029.19′
94	3000′	01°55′05"	50.22′	100.43′

LAYOUT

SCALE: 1" = 50′

L-21

STATE OF CALIFORNIA - DEPARTMENT OF TRANSPORTATION
Caltrans® DESIGN

FUNCTIONAL SUPERVISOR: DEREK HIGA
CALCULATED-DESIGNED BY: RICKY LEE
CHECKED BY: KAZ KAYODA
REVISED BY
DATE REVISED

LAST REVISION 03-02-15
DATE PLOTTED => 15-JAN-2016
TIME PLOTTED => 06:13

Dist	COUNTY	ROUTE	POST MILES TOTAL PROJECT	SHEET No.	TOTAL SHEETS
07	LA	5, 101	16.4, S0.0/25.9	27	459

Ricky Lee 4-22-15
REGISTERED CIVIL ENGINEER DATE

11-2-15
PLANS APPROVAL DATE

REGISTERED PROFESSIONAL ENGINEER
RICKY LEE
No. C74591
Exp. 12/31/17
CIVIL
STATE OF CALIFORNIA

THE STATE OF CALIFORNIA OR ITS OFFICERS OR AGENTS SHALL NOT BE RESPONSIBLE FOR THE ACCURACY OR COMPLETENESS OF SCANNED COPIES OF THIS PLAN SHEET.

NOTE:

FOR ACCURATE RIGHT OF WAY DATA, CONTACT RIGHT OF WAY ENGINEERING AT THE DISTRICT OFFICE.

CURVE DATA

No. ⊕	R	Δ	T	L
95	2988′	05°32′11″	144.47′	288.73′

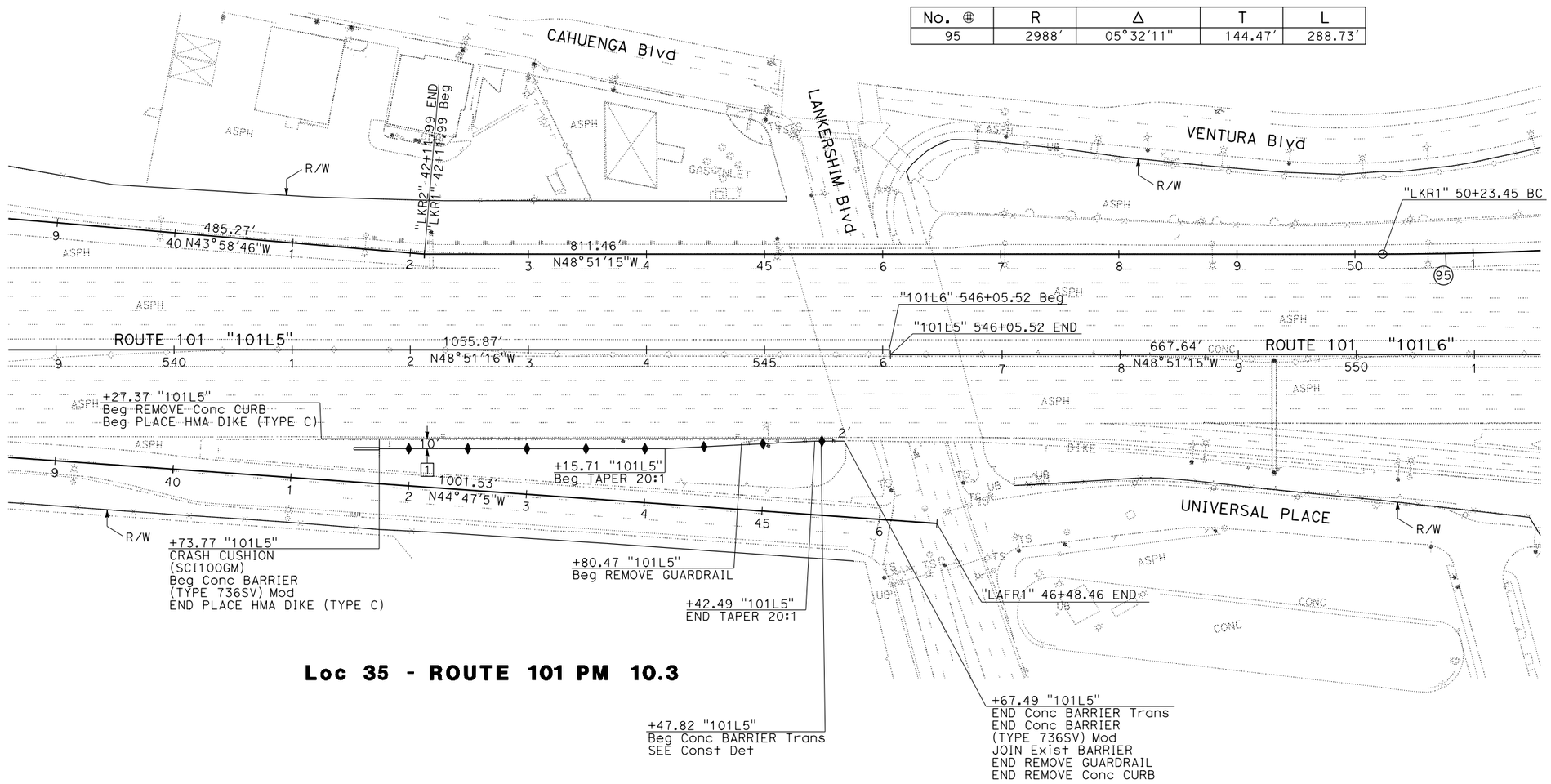

Loc 35 - ROUTE 101 PM 10.3

LAYOUT

SCALE: 1" = 50′

L-22

STATE OF CALIFORNIA - DEPARTMENT OF TRANSPORTATION
Caltrans®
DESIGN

FUNCTIONAL SUPERVISOR: DEREK HIGA
CALCULATED-DESIGNED BY: RICKY LEE
CHECKED BY: KAZ KAYODA
REVISED BY
DATE REVISED

LAST REVISION 03-02-15
DATE PLOTTED => 15-JAN-2016
TIME PLOTTED => 06:13

Dist	COUNTY	ROUTE	POST MILES TOTAL PROJECT	SHEET No.	TOTAL SHEETS
07	LA	5, 101	16.4, S0.0/25.9	28	459

Ricky Lee 4-22-15
REGISTERED CIVIL ENGINEER DATE

11-2-15
PLANS APPROVAL DATE

REGISTERED PROFESSIONAL ENGINEER RICKY LEE No. C74591 Exp. 12/31/17 CIVIL STATE OF CALIFORNIA

THE STATE OF CALIFORNIA OR ITS OFFICERS OR AGENTS SHALL NOT BE RESPONSIBLE FOR THE ACCURACY OR COMPLETENESS OF SCANNED COPIES OF THIS PLAN SHEET.

NOTE:

FOR ACCURATE RIGHT OF WAY DATA, CONTACT RIGHT OF WAY ENGINEERING AT THE DISTRICT OFFICE.

CURVE DATA

No. ⊕	R	Δ	T	L
96	2000′	29°14′29"	521.73′	1020.72′

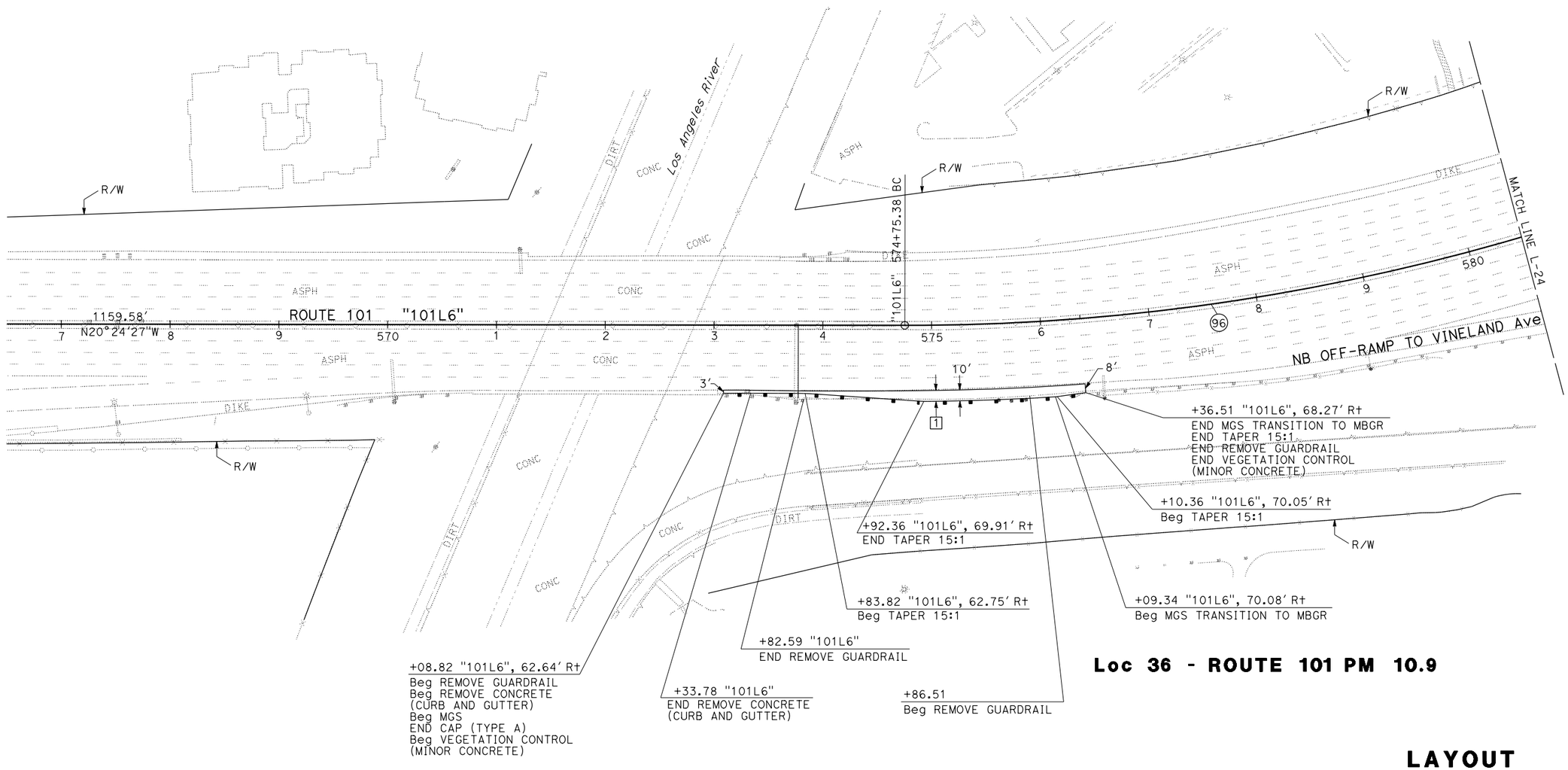

Loc 36 - ROUTE 101 PM 10.9

LAYOUT

SCALE: 1" = 50′

L-23

STATE OF CALIFORNIA - DEPARTMENT OF TRANSPORTATION
Caltrans®
DESIGN

FUNCTIONAL SUPERVISOR: DEREK HIGA
CALCULATED-DESIGNED BY: ANTOINE NADER
CHECKED BY: RICKY LEE
REVISED BY
DATE REVISED

LAST REVISION 03-02-15
DATE PLOTTED => 15-JAN-2016
TIME PLOTTED => 06:13

Dist	COUNTY	ROUTE	POST MILES TOTAL PROJECT	SHEET No.	TOTAL SHEETS
07	LA	5, 101	16.4, S0.0/25.9	29	459

Ricky Lee — REGISTERED CIVIL ENGINEER — 4-22-15 DATE

11-2-15
PLANS APPROVAL DATE

REGISTERED PROFESSIONAL ENGINEER — RICKY LEE — No. C74591 — Exp. 12/31/17 — CIVIL — STATE OF CALIFORNIA

THE STATE OF CALIFORNIA OR ITS OFFICERS OR AGENTS SHALL NOT BE RESPONSIBLE FOR THE ACCURACY OR COMPLETENESS OF SCANNED COPIES OF THIS PLAN SHEET.

NOTE:

FOR ACCURATE RIGHT OF WAY DATA, CONTACT RIGHT OF WAY ENGINEERING AT THE DISTRICT OFFICE.

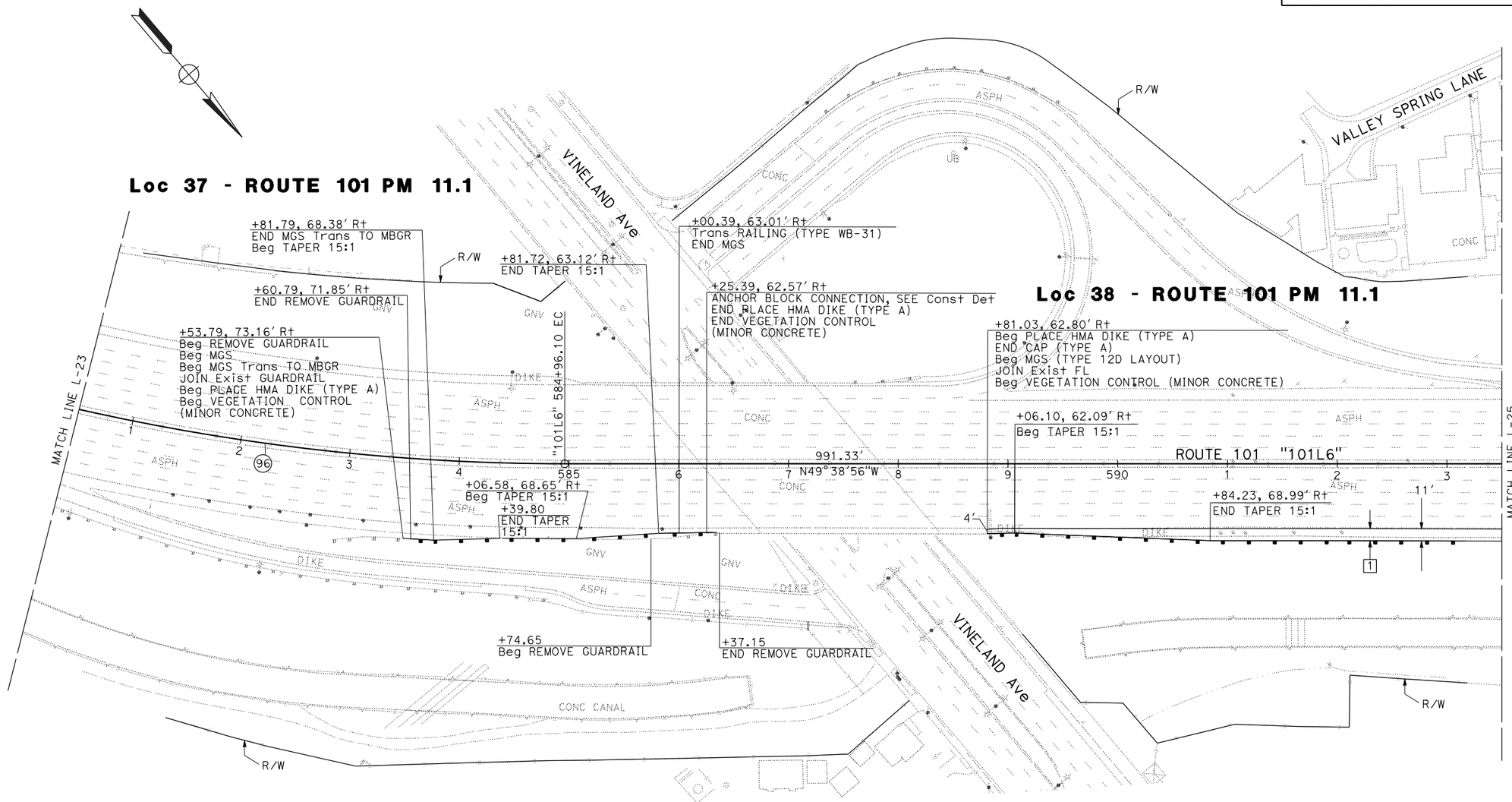

CURVE DATA

No. ⊕	R	Δ	T	L
96	2000'	29°14'29"	521.73'	1020.72'

LAYOUT

SCALE: 1" = 50'

L-24

STATE OF CALIFORNIA - DEPARTMENT OF TRANSPORTATION
Caltrans®
DESIGN

FUNCTIONAL SUPERVISOR: DEREK HIGA
CALCULATED-DESIGNED BY: MYLY NGUYEN
CHECKED BY: RICKY LEE
REVISED BY
DATE REVISED

LAST REVISION 03-02-15
DATE PLOTTED => 15-JAN-2016
TIME PLOTTED => 06:14

Dist	COUNTY	ROUTE	POST MILES TOTAL PROJECT	SHEET No.	TOTAL SHEETS
07	LA	5, 101	16.4, S0.0/25.9	30	459

Ricky Lee 4-22-15
REGISTERED CIVIL ENGINEER DATE

11-2-15
PLANS APPROVAL DATE

REGISTERED PROFESSIONAL ENGINEER RICKY LEE No. C74591 Exp. 12/31/17 CIVIL STATE OF CALIFORNIA

THE STATE OF CALIFORNIA OR ITS OFFICERS OR AGENTS SHALL NOT BE RESPONSIBLE FOR THE ACCURACY OR COMPLETENESS OF SCANNED COPIES OF THIS PLAN SHEET.

NOTE:

FOR ACCURATE RIGHT OF WAY DATA, CONTACT RIGHT OF WAY ENGINEERING AT THE DISTRICT OFFICE.

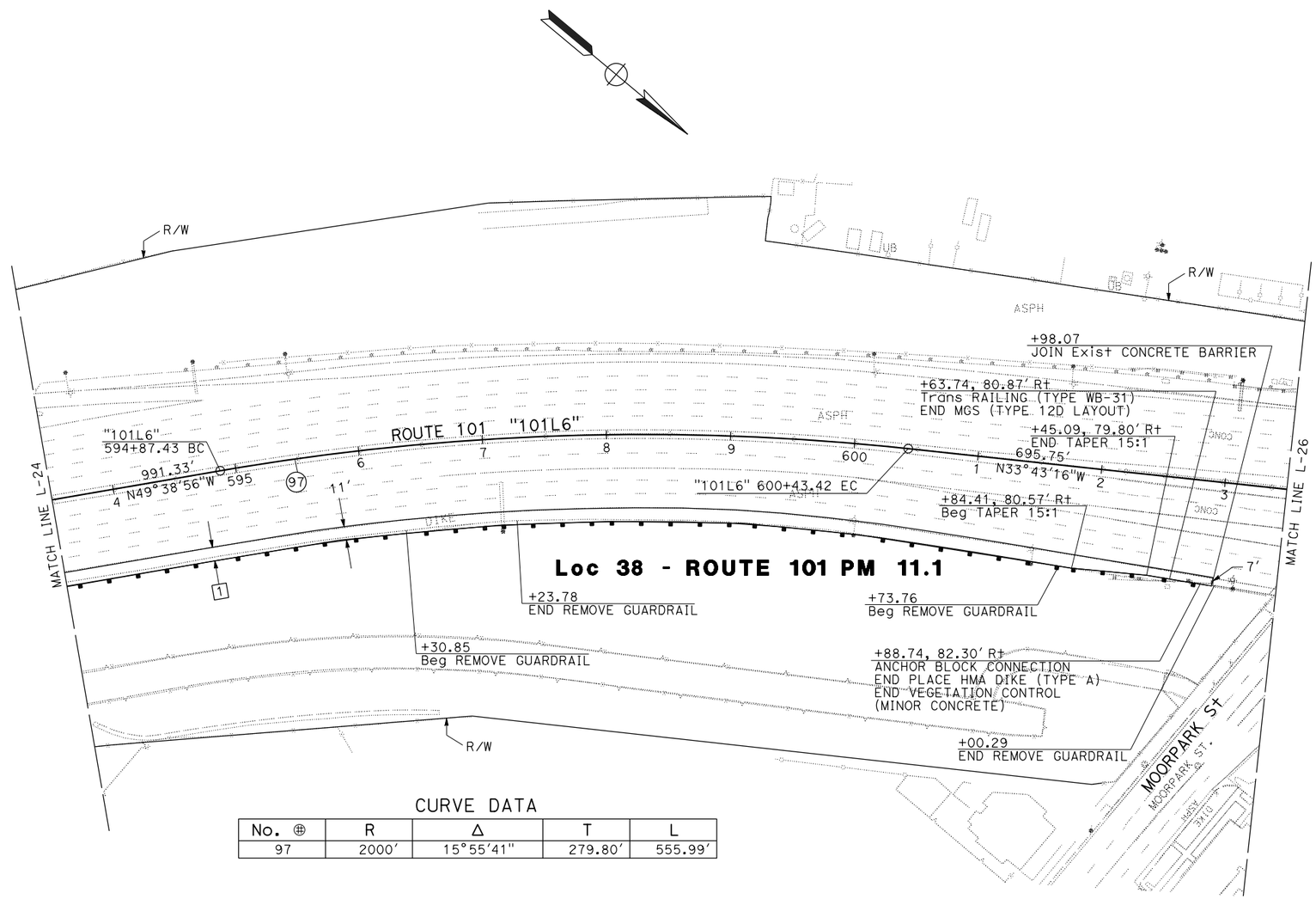

CURVE DATA

No. ⊕	R	Δ	T	L
97	2000'	15°55'41"	279.80'	555.99'

LAYOUT

SCALE: 1" = 50'

L-25

STATE OF CALIFORNIA - DEPARTMENT OF TRANSPORTATION

Caltrans

DESIGN

FUNCTIONAL SUPERVISOR: DEREK HIGA

CALCULATED-DESIGNED BY: MYLY NGUYEN

CHECKED BY: RICKY LEE

REVISED BY

DATE REVISED

LAST REVISION 03-02-15

DATE PLOTTED => 15-JAN-2016

TIME PLOTTED => 06:14

Dist	COUNTY	ROUTE	POST MILES TOTAL PROJECT	SHEET No.	TOTAL SHEETS
07	LA	5, 101	16.4, S0.0/25.9	31	459

Ricky Lee 4-22-15
REGISTERED CIVIL ENGINEER DATE

11-2-15
PLANS APPROVAL DATE

REGISTERED PROFESSIONAL ENGINEER RICKY LEE No. C74591 Exp. 12/31/17 CIVIL STATE OF CALIFORNIA

THE STATE OF CALIFORNIA OR ITS OFFICERS OR AGENTS SHALL NOT BE RESPONSIBLE FOR THE ACCURACY OR COMPLETENESS OF SCANNED COPIES OF THIS PLAN SHEET.

NOTE:

FOR ACCURATE RIGHT OF WAY DATA, CONTACT RIGHT OF WAY ENGINEERING AT THE DISTRICT OFFICE.

CURVE DATA

No. ⊕	R	Δ	T	L
98	4500′	05°15′00"	206.32′	412.34′
99	3000′	07°55′18"	207.72′	414.78′
100	4000′	01°57′44"	68.50′	136.99′
101	1700′	21°17′17"	319.50′	631.63′
102	1150′	64°35′32"	726.89′	1296.45′

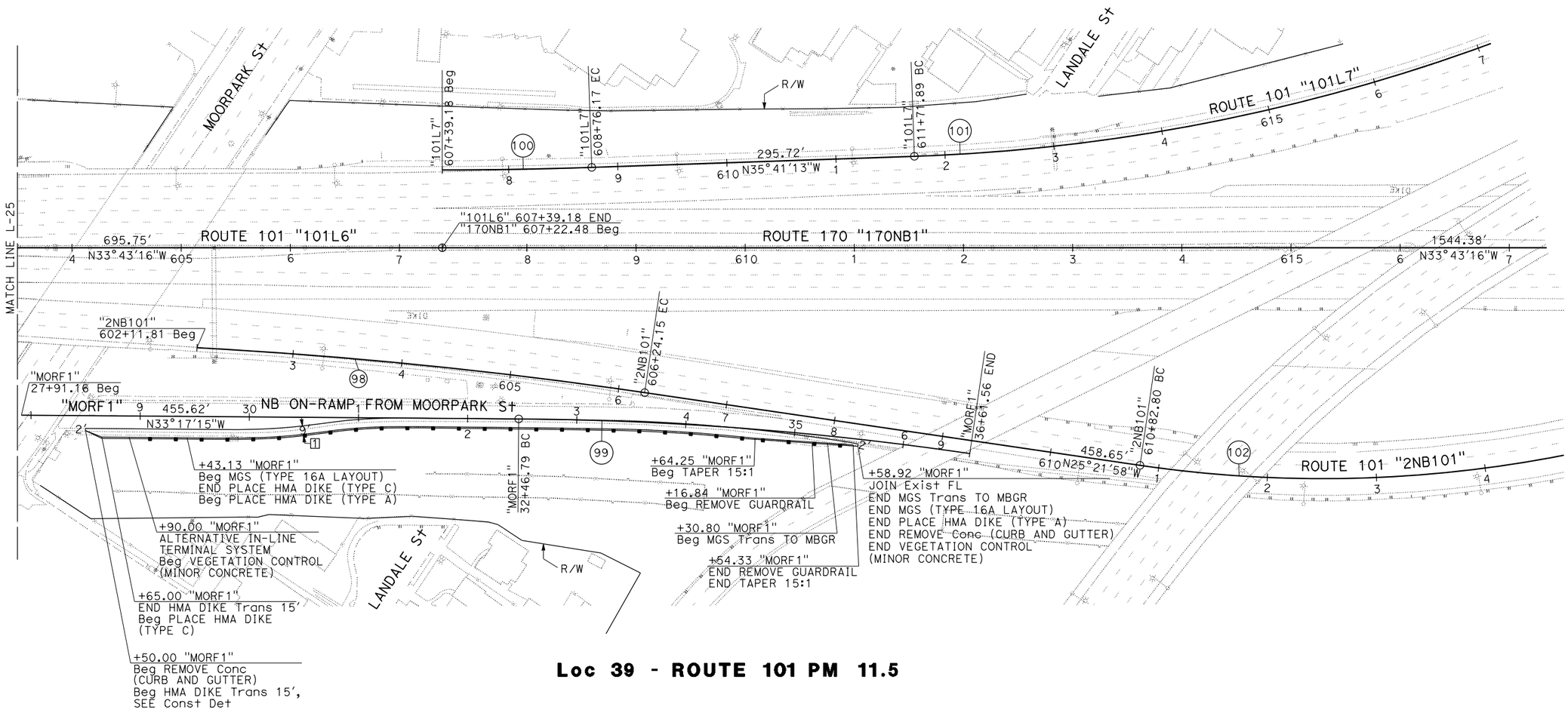

Loc 39 - ROUTE 101 PM 11.5

LAYOUT

SCALE: 1" = 50′

L-26

STATE OF CALIFORNIA - DEPARTMENT OF TRANSPORTATION
Caltrans
DESIGN

FUNCTIONAL SUPERVISOR: DEREK HIGA
CALCULATED-DESIGNED BY: RICKY LEE
CHECKED BY: KAZ KAYODA
REVISED BY
DATE REVISED

LAST REVISION 03-02-15
DATE PLOTTED => 15-JAN-2016
TIME PLOTTED => 06:14

Dist	COUNTY	ROUTE	POST MILES TOTAL PROJECT	SHEET No.	TOTAL SHEETS
07	LA	5, 101	16.4, S0.0/25.9	32	459

Ricky Lee 4-22-15
REGISTERED CIVIL ENGINEER DATE

11-2-15
PLANS APPROVAL DATE

REGISTERED PROFESSIONAL ENGINEER RICKY LEE No. C74591 Exp. 12/31/17 CIVIL STATE OF CALIFORNIA

THE STATE OF CALIFORNIA OR ITS OFFICERS OR AGENTS SHALL NOT BE RESPONSIBLE FOR THE ACCURACY OR COMPLETENESS OF SCANNED COPIES OF THIS PLAN SHEET.

NOTE:

FOR ACCURATE RIGHT OF WAY DATA, CONTACT RIGHT OF WAY ENGINEERING AT THE DISTRICT OFFICE.

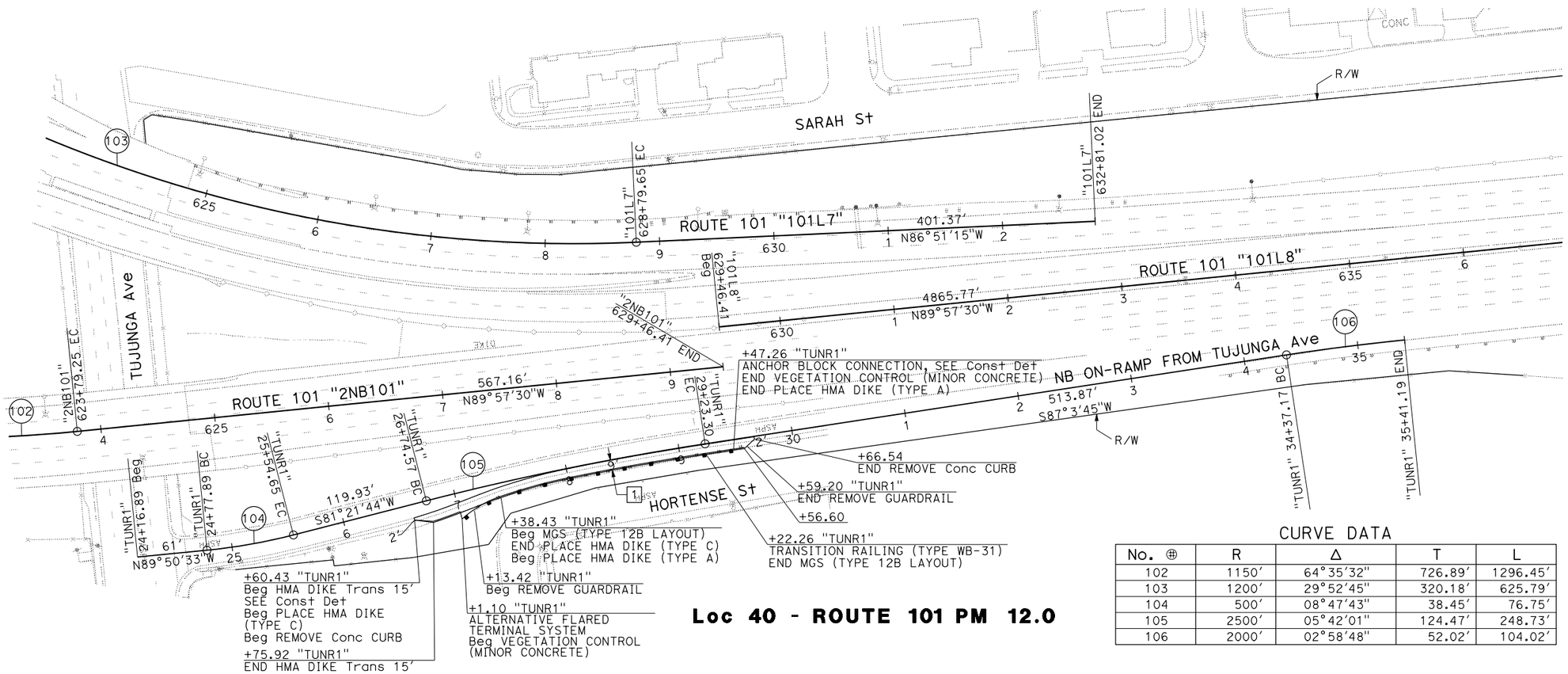

Loc 40 - ROUTE 101 PM 12.0

CURVE DATA

No. ⊕	R	Δ	T	L
102	1150′	64°35′32"	726.89′	1296.45′
103	1200′	29°52′45"	320.18′	625.79′
104	500′	08°47′43"	38.45′	76.75′
105	2500′	05°42′01"	124.47′	248.73′
106	2000′	02°58′48"	52.02′	104.02′

LAYOUT

SCALE: 1" = 50′

L-27

STATE OF CALIFORNIA - DEPARTMENT OF TRANSPORTATION
Caltrans® **DESIGN**

FUNCTIONAL SUPERVISOR: DEREK HIGA
CALCULATED-DESIGNED BY: RICKY LEE
CHECKED BY: KAZ KAYODA
REVISED BY
DATE REVISED

LAST REVISION 03-02-15
DATE PLOTTED => 15-JAN-2016
TIME PLOTTED => 06:14

Dist	COUNTY	ROUTE	POST MILES TOTAL PROJECT	SHEET No.	TOTAL SHEETS
07	LA	5, 101	16.4, S0.0/25.9	33	459

Ricky Lee — REGISTERED CIVIL ENGINEER — 4-22-15 DATE

11-2-15 — PLANS APPROVAL DATE

REGISTERED PROFESSIONAL ENGINEER — RICKY LEE — No. C74591 — Exp. 12/31/17 — CIVIL — STATE OF CALIFORNIA

THE STATE OF CALIFORNIA OR ITS OFFICERS OR AGENTS SHALL NOT BE RESPONSIBLE FOR THE ACCURACY OR COMPLETENESS OF SCANNED COPIES OF THIS PLAN SHEET.

NOTE:

FOR ACCURATE RIGHT OF WAY DATA, CONTACT RIGHT OF WAY ENGINEERING AT THE DISTRICT OFFICE.

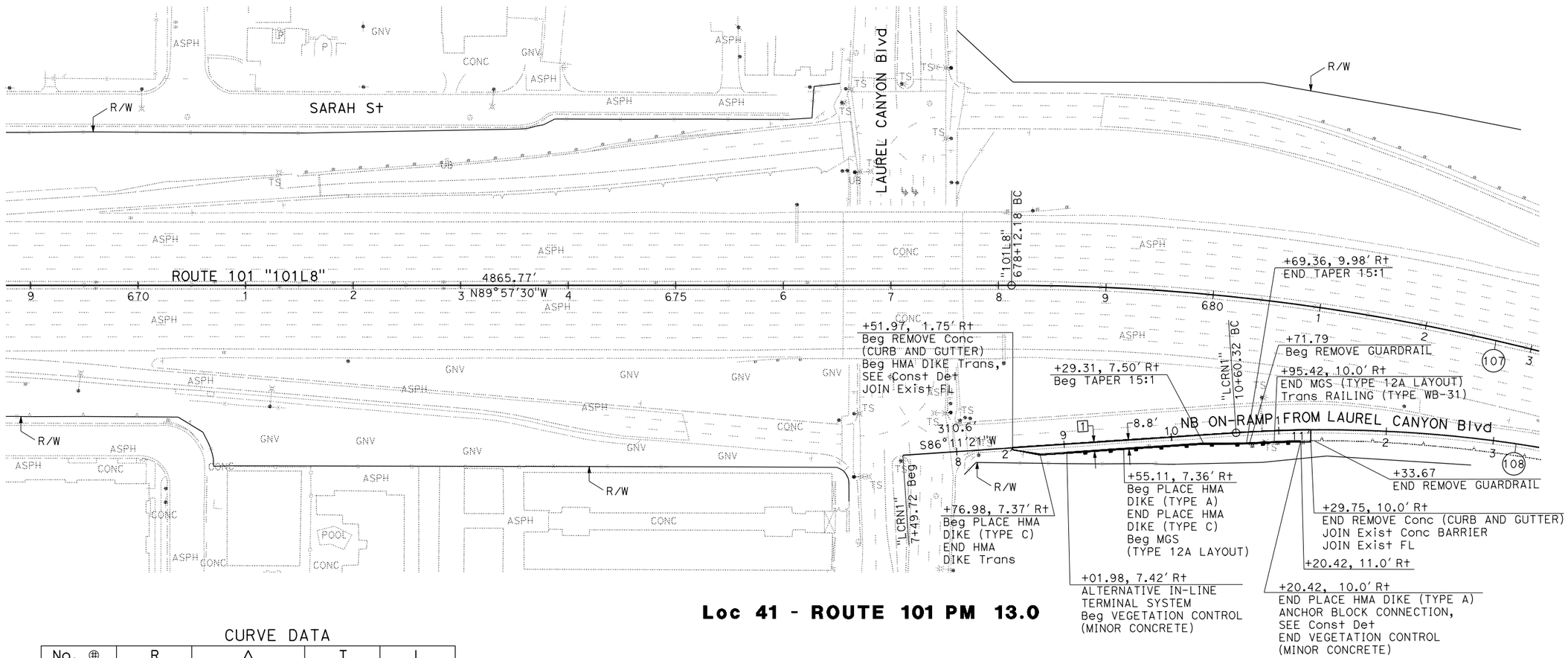

Loc 41 - ROUTE 101 PM 13.0

CURVE DATA

No. ⊕	R	Δ	T	L
107	2000'	31°29'15"	563.82'	1099.12'
108	1226'	28°20'03"	309.48'	606.29'

LAYOUT

SCALE: 1" = 50'

L-28

REVISED BY	DATE REVISED

CALCULATED-DESIGNED BY	MYLY NGUYEN
CHECKED BY	RICKY LEE
FUNCTIONAL SUPERVISOR	DEREK HIGA

STATE OF CALIFORNIA - DEPARTMENT OF TRANSPORTATION

Caltrans® **DESIGN**

LAST REVISION 03-02-15 | DATE PLOTTED => 15-JAN-2016 | TIME PLOTTED => 06:14

Dist	COUNTY	ROUTE	POST MILES TOTAL PROJECT	SHEET No.	TOTAL SHEETS
07	LA	5, 101	16.4, S0.0/25.9	34	459

Ricky Lee 4-22-15
REGISTERED CIVIL ENGINEER DATE

11-2-15
PLANS APPROVAL DATE

REGISTERED PROFESSIONAL ENGINEER RICKY LEE No. C74591 Exp. 12/31/17 CIVIL STATE OF CALIFORNIA

THE STATE OF CALIFORNIA OR ITS OFFICERS OR AGENTS SHALL NOT BE RESPONSIBLE FOR THE ACCURACY OR COMPLETENESS OF SCANNED COPIES OF THIS PLAN SHEET.

NOTE:

FOR ACCURATE RIGHT OF WAY DATA, CONTACT RIGHT OF WAY ENGINEERING AT THE DISTRICT OFFICE.

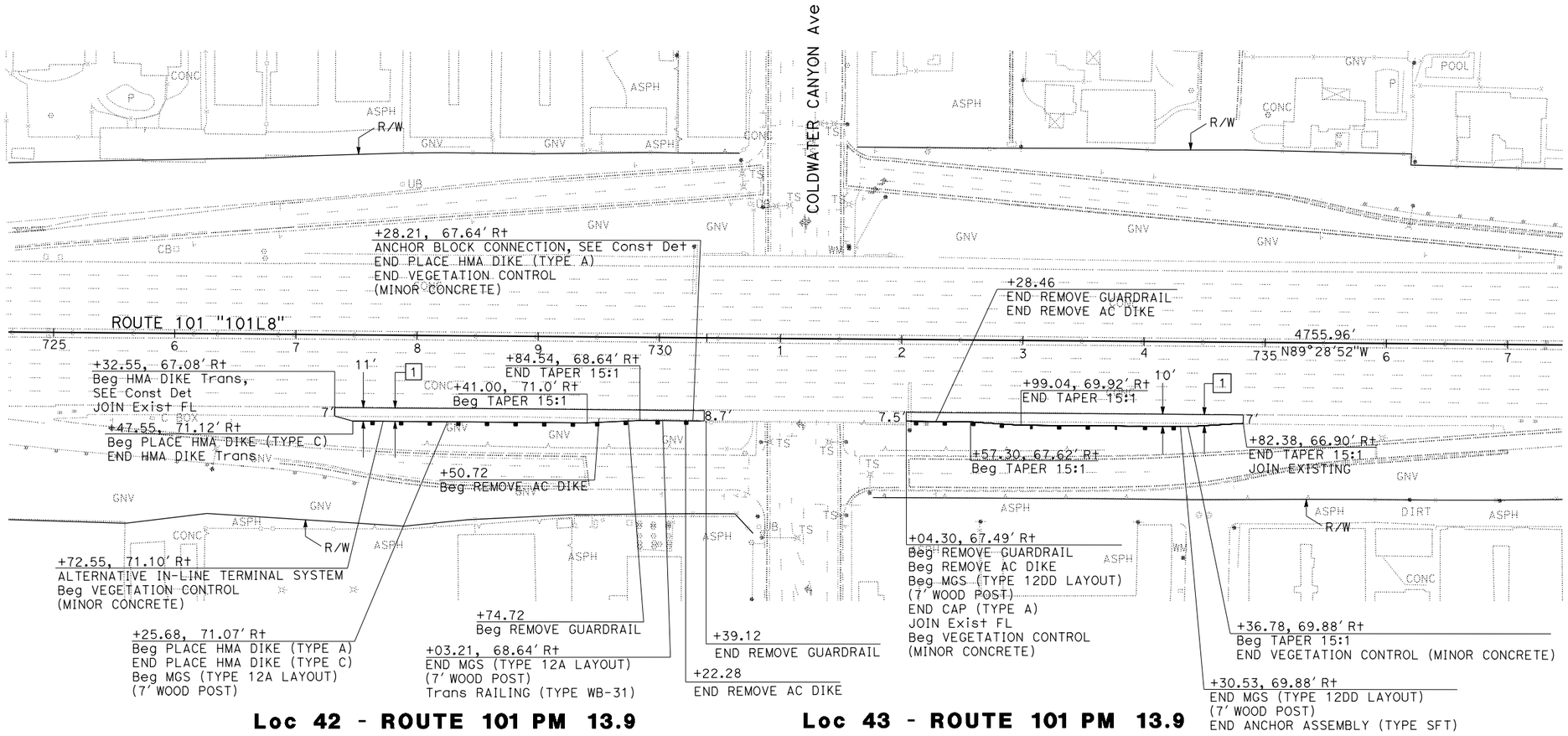

Loc 42 - ROUTE 101 PM 13.9

Loc 43 - ROUTE 101 PM 13.9

LAYOUT

SCALE: 1" = 50'

L-29

STATE OF CALIFORNIA - DEPARTMENT OF TRANSPORTATION

Caltrans

DESIGN

FUNCTIONAL SUPERVISOR: DEREK HIGA

CALCULATED-DESIGNED BY: MYLY NGUYEN

CHECKED BY: RICKY LEE

REVISED BY

DATE REVISED

LAST REVISION 03-02-15

DATE PLOTTED => 15-JAN-2016
TIME PLOTTED => 06:14

BORDER LAST REVISED 7/2/2010

USERNAME => s112049
DGN FILE => 72827uea029.dgn

RELATIVE BORDER SCALE IS IN INCHES 0 1 2 3

UNIT 1811

PROJECT NUMBER & PHASE 07140002041

Dist	COUNTY	ROUTE	POST MILES TOTAL PROJECT	SHEET No.	TOTAL SHEETS
07	LA	5, 101	16.4, S0.0/25.9	35	459

Ricky Lee 4-22-15
REGISTERED CIVIL ENGINEER DATE

11-2-15
PLANS APPROVAL DATE

REGISTERED PROFESSIONAL ENGINEER RICKY LEE No. C74591 Exp. 12/31/17 CIVIL STATE OF CALIFORNIA

THE STATE OF CALIFORNIA OR ITS OFFICERS OR AGENTS SHALL NOT BE RESPONSIBLE FOR THE ACCURACY OR COMPLETENESS OF SCANNED COPIES OF THIS PLAN SHEET.

NOTE:

FOR ACCURATE RIGHT OF WAY DATA, CONTACT RIGHT OF WAY ENGINEERING AT THE DISTRICT OFFICE.

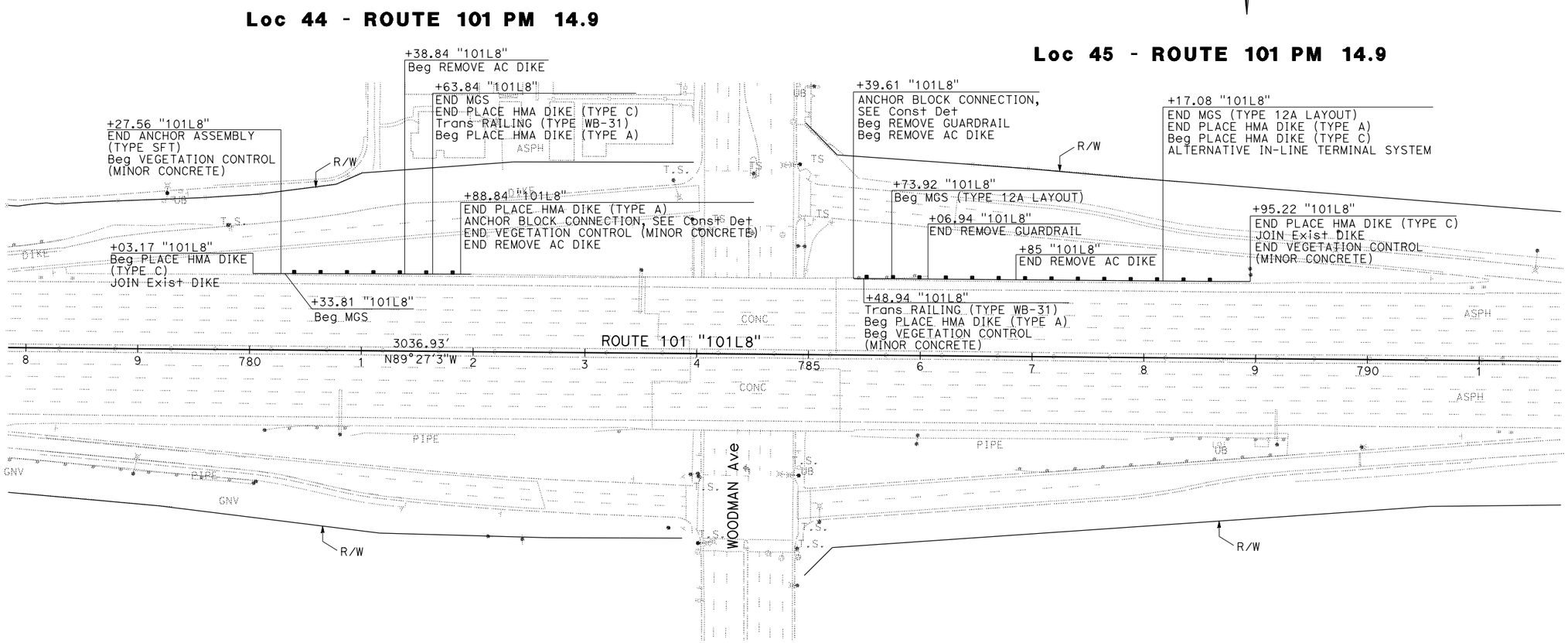

LAYOUT

SCALE: 1" = 50'

L-30

STATE OF CALIFORNIA - DEPARTMENT OF TRANSPORTATION
Caltrans
DESIGN

FUNCTIONAL SUPERVISOR: DEREK HIGA
CALCULATED-DESIGNED BY: AINSLEY C KUNG
CHECKED BY: RICKY LEE
REVISED BY
DATE REVISED

LAST REVISION 03-02-15
DATE PLOTTED => 15-JAN-2016
TIME PLOTTED => 06:14

BORDER LAST REVISED 7/2/2010
USERNAME => s112049
DGN FILE => 72827uea030.dgn
RELATIVE BORDER SCALE IS IN INCHES 0 1 2 3
UNIT 1811
PROJECT NUMBER & PHASE 07140002041

Dist	COUNTY	ROUTE	POST MILES TOTAL PROJECT	SHEET No.	TOTAL SHEETS
07	LA	5, 101	16.4, S0.0/25.9	36	459

Ricky Lee 4-22-15
REGISTERED CIVIL ENGINEER DATE

11-2-15
PLANS APPROVAL DATE

REGISTERED PROFESSIONAL ENGINEER RICKY LEE No. C74591 Exp. 12/31/17 CIVIL STATE OF CALIFORNIA

THE STATE OF CALIFORNIA OR ITS OFFICERS OR AGENTS SHALL NOT BE RESPONSIBLE FOR THE ACCURACY OR COMPLETENESS OF SCANNED COPIES OF THIS PLAN SHEET.

NOTE:

FOR ACCURATE RIGHT OF WAY DATA, CONTACT RIGHT OF WAY ENGINEERING AT THE DISTRICT OFFICE.

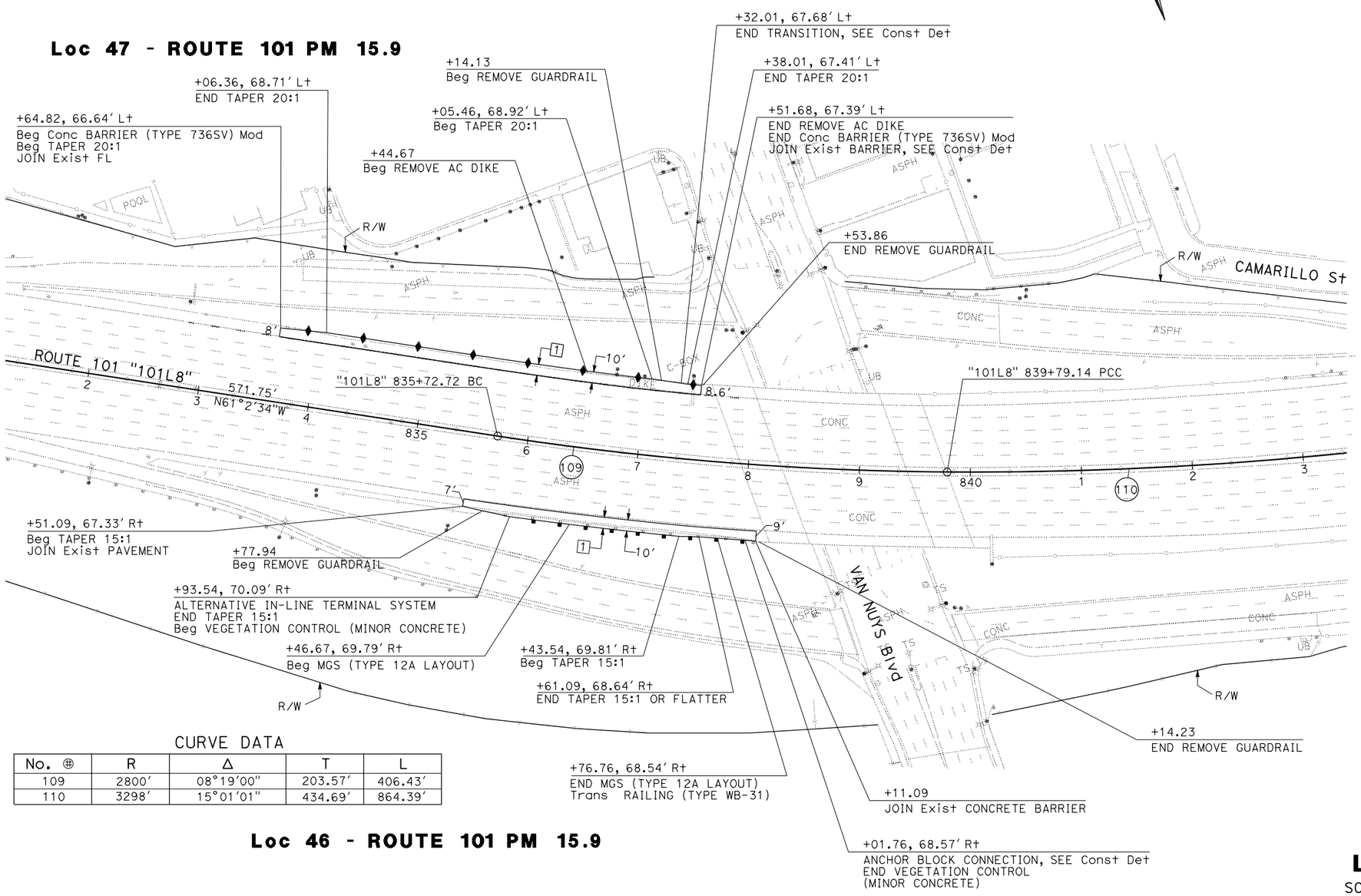

CURVE DATA

No. ⊕	R	Δ	T	L
109	2800′	08°19′00"	203.57′	406.43′
110	3298′	15°01′01"	434.69′	864.39′

Loc 46 - ROUTE 101 PM 15.9

LAYOUT

SCALE: 1" = 50′

L-31

STATE OF CALIFORNIA - DEPARTMENT OF TRANSPORTATION
Caltrans
DESIGN

FUNCTIONAL SUPERVISOR: DEREK HIGA
CALCULATED-DESIGNED BY: ANTOINE NADER
CHECKED BY: RICKY LEE
REVISED BY
DATE REVISED

LAST REVISION 03-02-15
DATE PLOTTED => 15-JAN-2016
TIME PLOTTED => 06:14

Dist	COUNTY	ROUTE	POST MILES TOTAL PROJECT	SHEET No.	TOTAL SHEETS
07	LA	5, 101	16.4, S0.0/25.9	37	459

Ricky Lee 4-22-15
REGISTERED CIVIL ENGINEER DATE

11-2-15
PLANS APPROVAL DATE

REGISTERED PROFESSIONAL ENGINEER RICKY LEE No. C74591 Exp. 12/31/17 CIVIL STATE OF CALIFORNIA

THE STATE OF CALIFORNIA OR ITS OFFICERS OR AGENTS SHALL NOT BE RESPONSIBLE FOR THE ACCURACY OR COMPLETENESS OF SCANNED COPIES OF THIS PLAN SHEET.

NOTE:

FOR ACCURATE RIGHT OF WAY DATA, CONTACT RIGHT OF WAY ENGINEERING AT THE DISTRICT OFFICE.

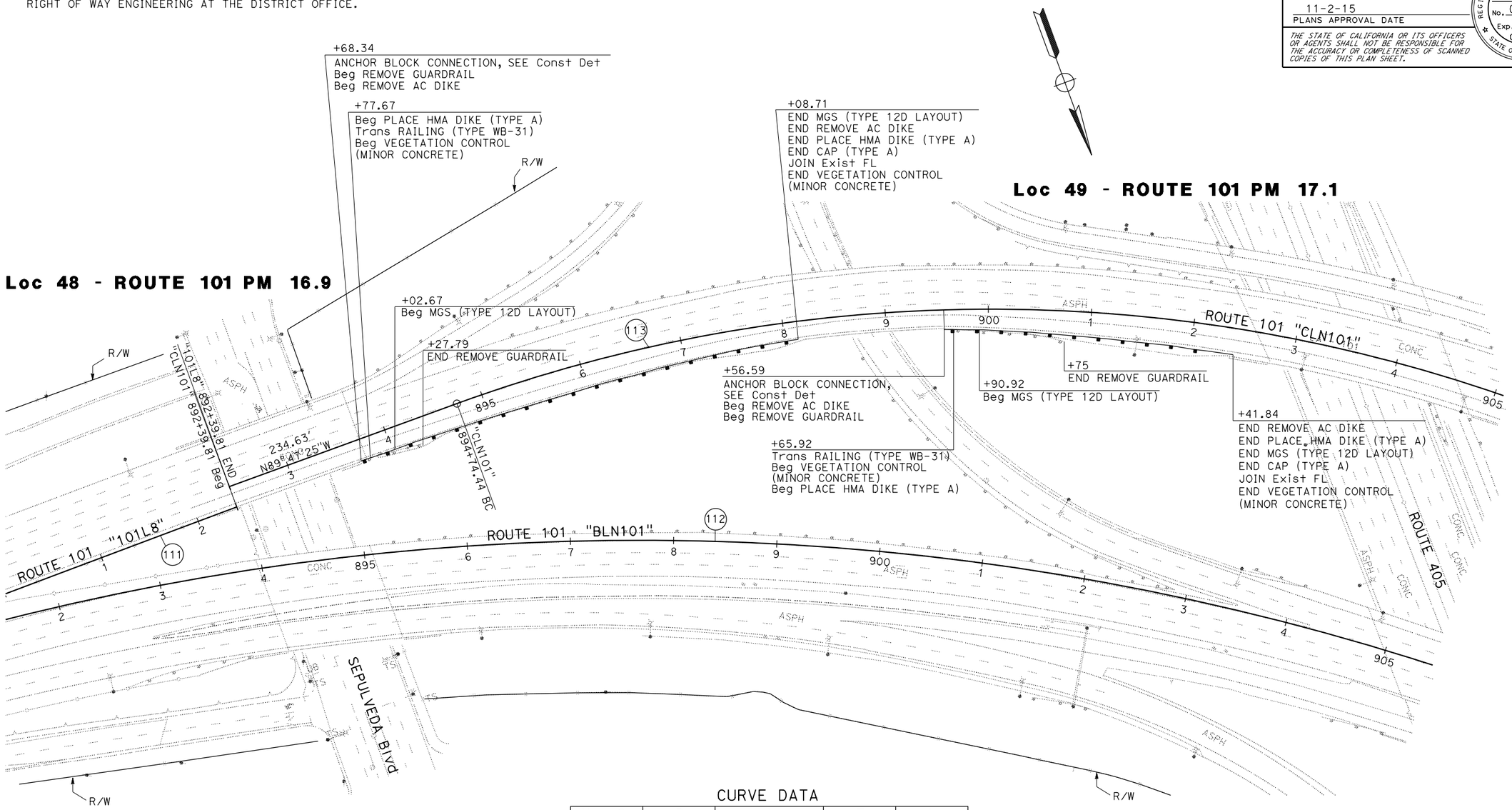

CURVE DATA

No. ⊕	R	Δ	T	L
111	63000′	00°43′58″	402.82′	805.63′
112	2500′	55°34′56″	1317.60′	2425.23′
113	1512′	62°18′58″	914.19′	1644.48′

LAYOUT

SCALE: 1" = 50′

L-32

REVISED BY	DATE REVISED

CALCULATED-DESIGNED BY	CHECKED BY
AINSLEY C KUNG	RICKY LEE

FUNCTIONAL SUPERVISOR: DEREK HIGA

STATE OF CALIFORNIA - DEPARTMENT OF TRANSPORTATION

Caltrans® **DESIGN**

LAST REVISION 03-02-15 | DATE PLOTTED => 15-JAN-2016 | TIME PLOTTED => 06:14

Dist	COUNTY	ROUTE	POST MILES TOTAL PROJECT	SHEET No.	TOTAL SHEETS
07	LA	5, 101	16.4, S0.0/25.9	38	459

Ricky Lee 4-22-15
REGISTERED CIVIL ENGINEER DATE

11-2-15
PLANS APPROVAL DATE

REGISTERED PROFESSIONAL ENGINEER
RICKY LEE
No. C74591
Exp. 12/31/17
CIVIL
STATE OF CALIFORNIA

THE STATE OF CALIFORNIA OR ITS OFFICERS OR AGENTS SHALL NOT BE RESPONSIBLE FOR THE ACCURACY OR COMPLETENESS OF SCANNED COPIES OF THIS PLAN SHEET.

NOTE:

FOR ACCURATE RIGHT OF WAY DATA, CONTACT RIGHT OF WAY ENGINEERING AT THE DISTRICT OFFICE.

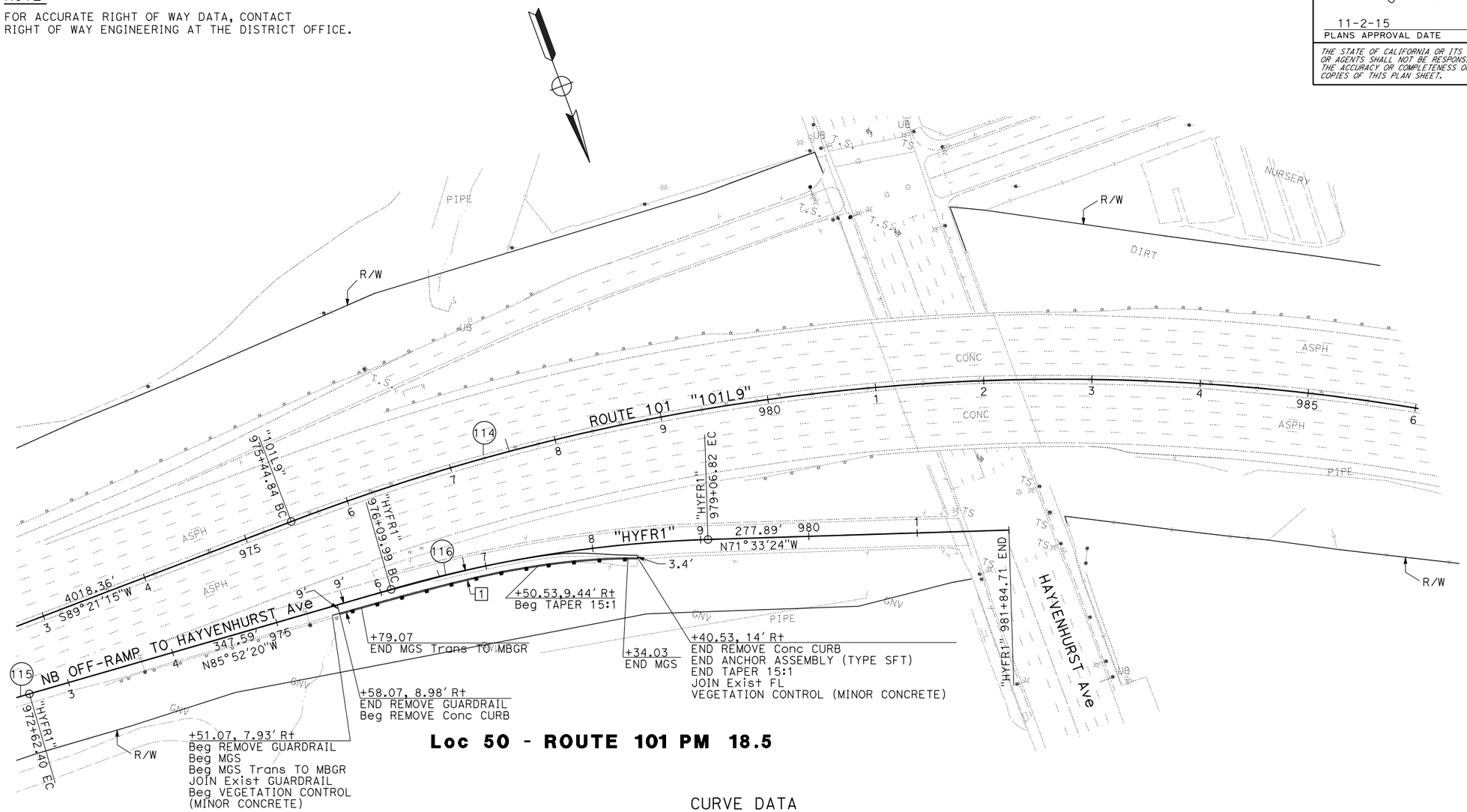

Loc 50 - ROUTE 101 PM 18.5

CURVE DATA

No. ⊕	R	Δ	T	L
114	2000′	38°48′51"	704.59′	1354.87′
115	1000′	04°46′25"	41.68′	83.32′
116	1188′	14°18′56"	149.19′	296.83′

LAYOUT

SCALE: 1" = 50′

L-33

STATE OF CALIFORNIA - DEPARTMENT OF TRANSPORTATION
Caltrans® **DESIGN**

FUNCTIONAL SUPERVISOR: DEREK HIGA
CALCULATED-DESIGNED BY: RICKY LEE
CHECKED BY: KAZ KAYODA
REVISED BY
DATE REVISED

LAST REVISION 03-02-15
DATE PLOTTED => 15-JAN-2016
TIME PLOTTED => 06:14

Dist	COUNTY	ROUTE	POST MILES TOTAL PROJECT	SHEET No.	TOTAL SHEETS
07	LA	5, 101	16.4, S0.0/25.9	39	459

Ricky Lee 4-22-15
REGISTERED CIVIL ENGINEER DATE

11-2-15
PLANS APPROVAL DATE

REGISTERED PROFESSIONAL ENGINEER RICKY LEE No. C74591 Exp. 12/31/17 CIVIL STATE OF CALIFORNIA

THE STATE OF CALIFORNIA OR ITS OFFICERS OR AGENTS SHALL NOT BE RESPONSIBLE FOR THE ACCURACY OR COMPLETENESS OF SCANNED COPIES OF THIS PLAN SHEET.

NOTE:

FOR ACCURATE RIGHT OF WAY DATA, CONTACT RIGHT OF WAY ENGINEERING AT THE DISTRICT OFFICE.

Loc 51 - ROUTE 101 PM 19.1

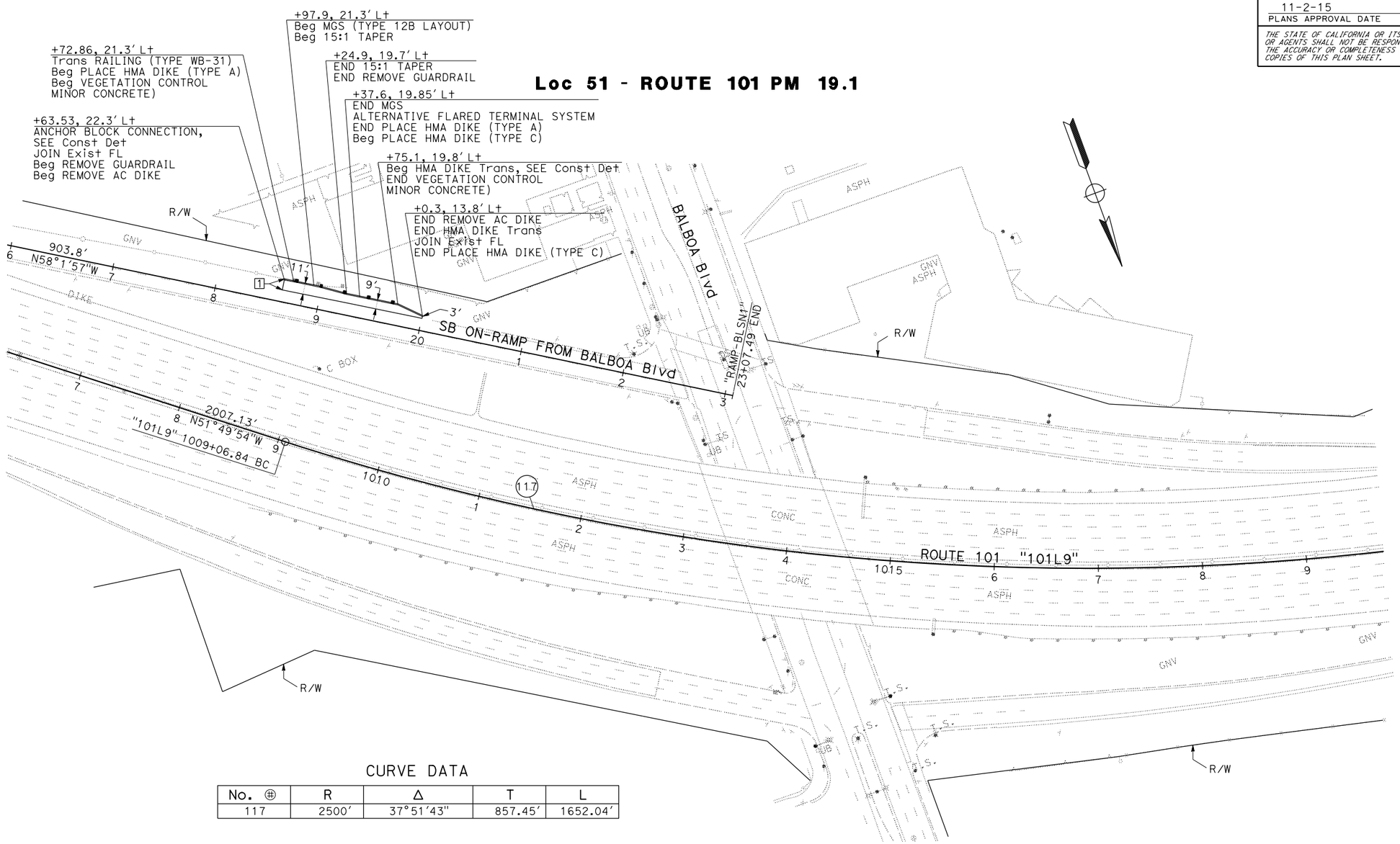

CURVE DATA

No. ⊕	R	Δ	T	L
117	2500′	37°51′43″	857.45′	1652.04′

LAYOUT

SCALE: 1" = 50′

L-34

STATE OF CALIFORNIA - DEPARTMENT OF TRANSPORTATION
Caltrans
DESIGN

FUNCTIONAL SUPERVISOR: DEREK HIGA
CALCULATED-DESIGNED BY: RICKY LEE
CHECKED BY: ANTOINE NADER
REVISED BY
DATE REVISED

LAST REVISION 03-02-15
DATE PLOTTED => 15-JAN-2016
TIME PLOTTED => 06:14

Dist	COUNTY	ROUTE	POST MILES TOTAL PROJECT	SHEET No.	TOTAL SHEETS
07	LA	5, 101	16.4, S0.0/25.9	40	459

Ricky Lee
REGISTERED CIVIL ENGINEER 4-22-15 DATE

11-2-15
PLANS APPROVAL DATE

REGISTERED PROFESSIONAL ENGINEER
RICKY LEE
No. C74591
Exp. 12/31/17
CIVIL
STATE OF CALIFORNIA

THE STATE OF CALIFORNIA OR ITS OFFICERS OR AGENTS SHALL NOT BE RESPONSIBLE FOR THE ACCURACY OR COMPLETENESS OF SCANNED COPIES OF THIS PLAN SHEET.

NOTE:

FOR ACCURATE RIGHT OF WAY DATA, CONTACT RIGHT OF WAY ENGINEERING AT THE DISTRICT OFFICE.

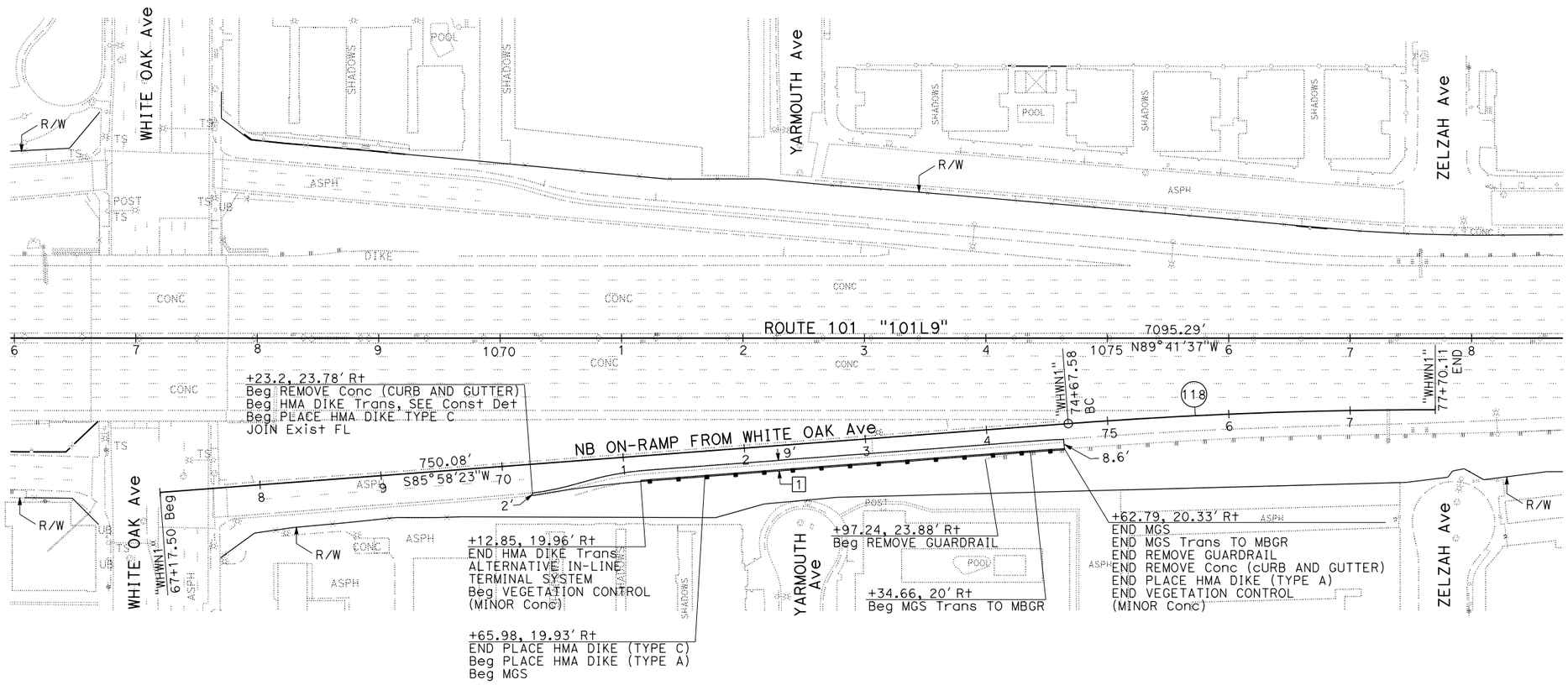

Loc 52 - ROUTE 101 PM 20.4

CURVE DATA

No. ⊕	R	Δ	T	L
118	4000'	04°20'00"	151.33'	302.52'

LAYOUT

SCALE: 1" = 50'

L-35

REVISED BY	DATE REVISED
MARIA RODRIGUEZ	RICKY LEE

CALCULATED-DESIGNED BY / CHECKED BY

FUNCTIONAL SUPERVISOR: DEREK HIGA

STATE OF CALIFORNIA - DEPARTMENT OF TRANSPORTATION

Caltrans® **DESIGN**

LAST REVISION 03-02-15 | DATE PLOTTED => 15-JAN-2016 | TIME PLOTTED => 06:14

Dist	COUNTY	ROUTE	POST MILES TOTAL PROJECT	SHEET No.	TOTAL SHEETS
07	LA	5, 101	16.4, S0.0/25.9	41	459

Ricky Lee 4-22-15
REGISTERED CIVIL ENGINEER DATE

11-2-15
PLANS APPROVAL DATE

REGISTERED PROFESSIONAL ENGINEER RICKY LEE No. C74591 Exp. 12/31/17 CIVIL STATE OF CALIFORNIA

THE STATE OF CALIFORNIA OR ITS OFFICERS OR AGENTS SHALL NOT BE RESPONSIBLE FOR THE ACCURACY OR COMPLETENESS OF SCANNED COPIES OF THIS PLAN SHEET.

NOTE:

FOR ACCURATE RIGHT OF WAY DATA, CONTACT RIGHT OF WAY ENGINEERING AT THE DISTRICT OFFICE.

Loc 53 - ROUTE 101 PM 20.7

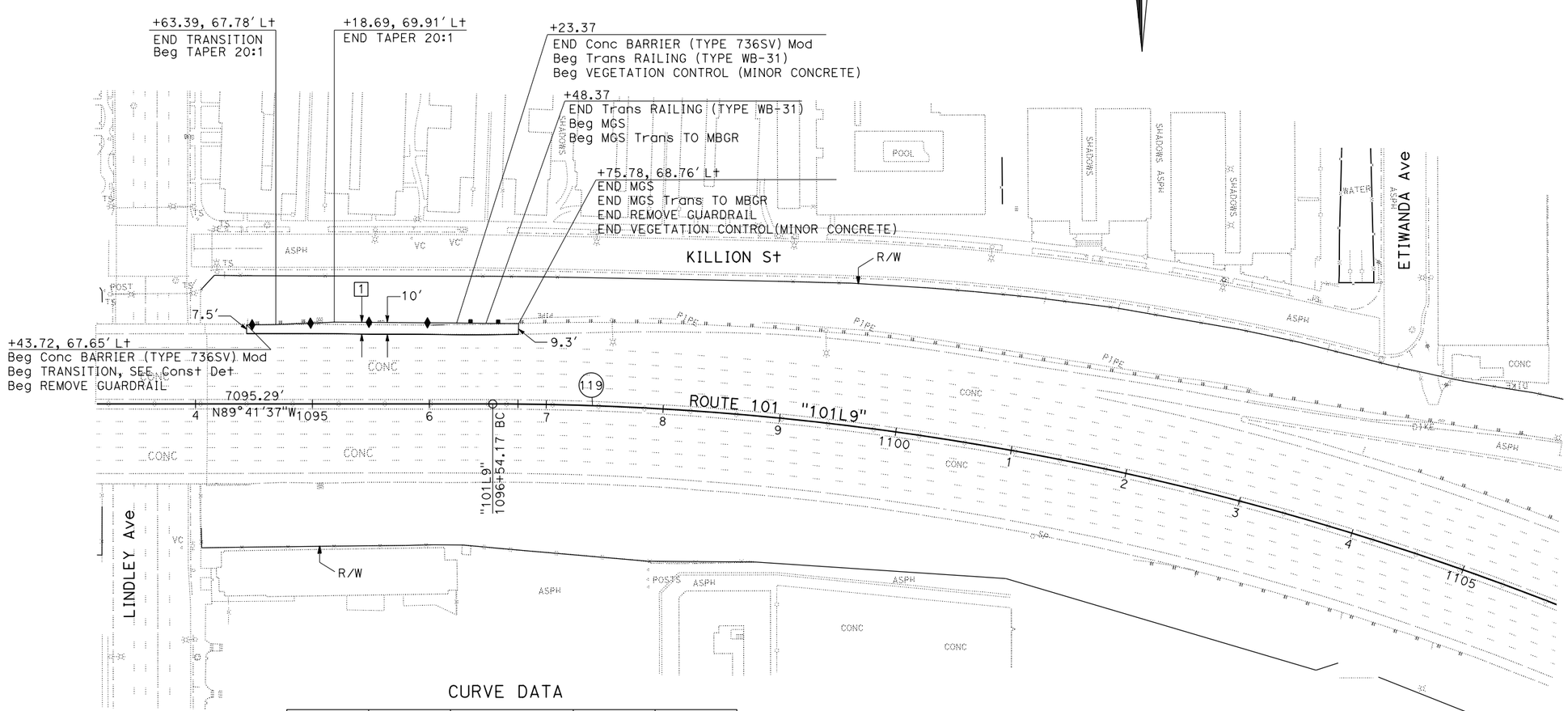

CURVE DATA

No. ⊕	R	Δ	T	L
119	2500'	26°59'13"	599.90'	1177.53'

LAYOUT

SCALE: 1" = 50'

L-36

STATE OF CALIFORNIA - DEPARTMENT OF TRANSPORTATION
Caltrans
DESIGN
FUNCTIONAL SUPERVISOR: DEREK HIGA
CALCULATED-DESIGNED BY: AINSLEY C KUNG
CHECKED BY: RICKY LEE
REVISED BY
DATE REVISED

LAST REVISION 03-02-15
DATE PLOTTED => 15-JAN-2016
TIME PLOTTED => 06:14

Dist	COUNTY	ROUTE	POST MILES TOTAL PROJECT	SHEET No.	TOTAL SHEETS
07	LA	5, 101	16.4, S0.0/25.9	42	459

Ricky Lee 4-22-15
REGISTERED CIVIL ENGINEER DATE

11-2-15
PLANS APPROVAL DATE

REGISTERED PROFESSIONAL ENGINEER RICKY LEE No. C74591 Exp. 12/31/17 CIVIL STATE OF CALIFORNIA

THE STATE OF CALIFORNIA OR ITS OFFICERS OR AGENTS SHALL NOT BE RESPONSIBLE FOR THE ACCURACY OR COMPLETENESS OF SCANNED COPIES OF THIS PLAN SHEET.

NOTE:

FOR ACCURATE RIGHT OF WAY DATA, CONTACT RIGHT OF WAY ENGINEERING AT THE DISTRICT OFFICE.

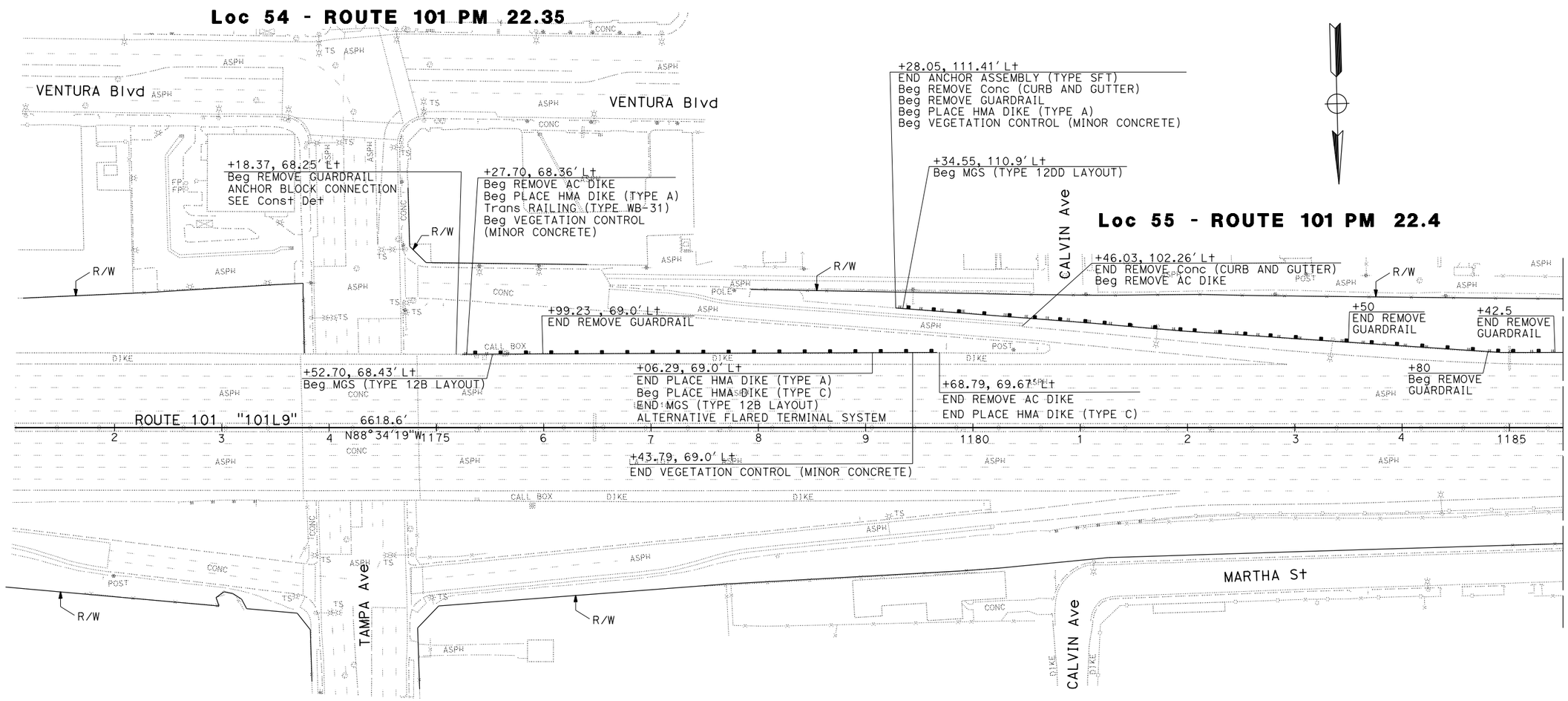

LAYOUT

SCALE: 1" = 50'

L-37

STATE OF CALIFORNIA - DEPARTMENT OF TRANSPORTATION
Caltrans® **DESIGN**

FUNCTIONAL SUPERVISOR: DEREK HIGA
CALCULATED-DESIGNED BY: MARIA RODRIGUEZ
CHECKED BY: RICKY LEE
REVISED BY
DATE REVISED

LAST REVISION 03-02-15
DATE PLOTTED => 15-JAN-2016
TIME PLOTTED => 06:14

Dist	COUNTY	ROUTE	POST MILES TOTAL PROJECT	SHEET No.	TOTAL SHEETS
07	LA	5, 101	16.4, S0.0/25.9	43	459

Ricky Lee 4-22-15
REGISTERED CIVIL ENGINEER DATE

11-2-15
PLANS APPROVAL DATE

REGISTERED PROFESSIONAL ENGINEER RICKY LEE No. C74591 Exp. 12/31/17 CIVIL STATE OF CALIFORNIA

THE STATE OF CALIFORNIA OR ITS OFFICERS OR AGENTS SHALL NOT BE RESPONSIBLE FOR THE ACCURACY OR COMPLETENESS OF SCANNED COPIES OF THIS PLAN SHEET.

NOTE:

FOR ACCURATE RIGHT OF WAY DATA, CONTACT RIGHT OF WAY ENGINEERING AT THE DISTRICT OFFICE.

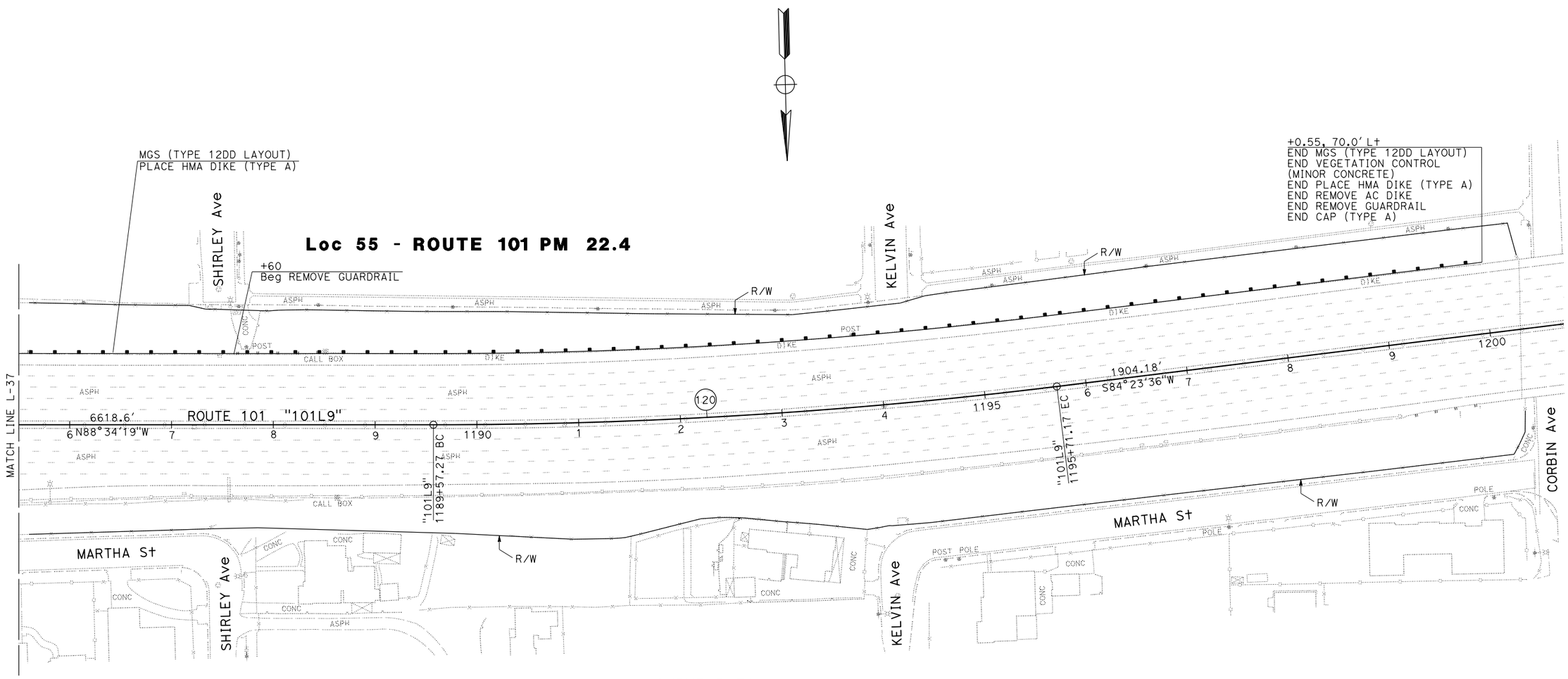

CURVE DATA

No. ⊕	R	Δ	T	L
120	5000'	07°02'05"	307.33'	613.90'

LAYOUT

SCALE: 1" = 50'

L-38

STATE OF CALIFORNIA - DEPARTMENT OF TRANSPORTATION

Caltrans® **DESIGN**

FUNCTIONAL SUPERVISOR: DEREK HIGA

CALCULATED-DESIGNED BY: MARIA RODRIGUEZ

CHECKED BY: RICKY LEE

REVISED BY

DATE REVISED

LAST REVISION 03-02-15

DATE PLOTTED => 15-JAN-2016
TIME PLOTTED => 06:14

Dist	COUNTY	ROUTE	POST MILES TOTAL PROJECT	SHEET No.	TOTAL SHEETS
07	LA	5, 101	16.4, S0.0/25.9	44	459

Ricky Lee 4-22-15
REGISTERED CIVIL ENGINEER DATE

11-2-15
PLANS APPROVAL DATE

REGISTERED PROFESSIONAL ENGINEER RICKY LEE No. C74591 Exp. 12/31/17 CIVIL STATE OF CALIFORNIA

THE STATE OF CALIFORNIA OR ITS OFFICERS OR AGENTS SHALL NOT BE RESPONSIBLE FOR THE ACCURACY OR COMPLETENESS OF SCANNED COPIES OF THIS PLAN SHEET.

NOTE:

FOR ACCURATE RIGHT OF WAY DATA, CONTACT RIGHT OF WAY ENGINEERING AT THE DISTRICT OFFICE.

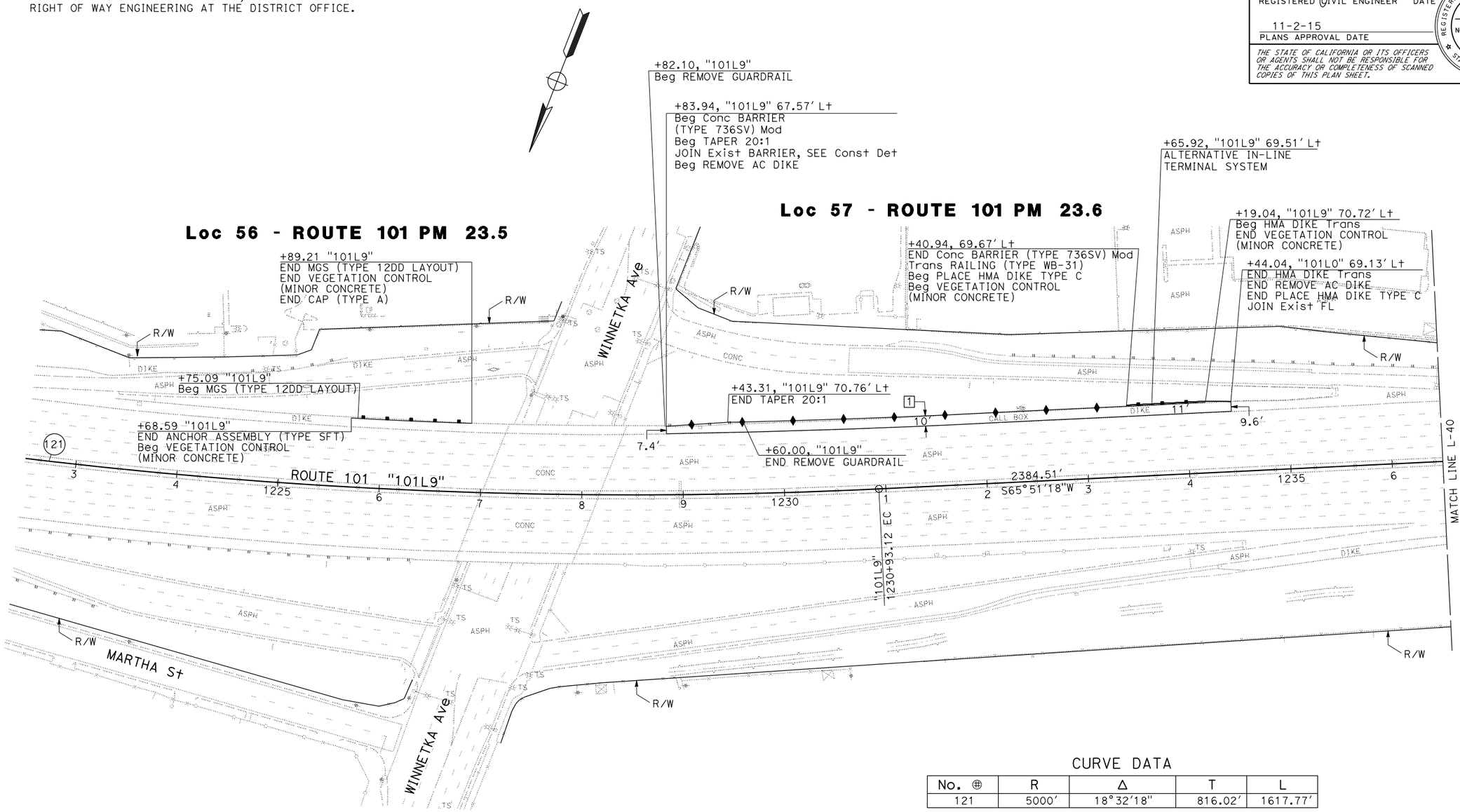

CURVE DATA

No. ⊕	R	Δ	T	L
121	5000'	18°32'18"	816.02'	1617.77'

LAYOUT

SCALE: 1" = 50'

L-39

REVISED BY	DATE REVISED

CALCULATED-DESIGNED BY	CHECKED BY
RICKY LEE	KAZ KAYODA

FUNCTIONAL SUPERVISOR: DEREK HIGA

STATE OF CALIFORNIA - DEPARTMENT OF TRANSPORTATION

Caltrans® **DESIGN**

LAST REVISION 03-02-15 | DATE PLOTTED => 15-JAN-2016 | TIME PLOTTED => 06:14

Dist	COUNTY	ROUTE	POST MILES TOTAL PROJECT	SHEET No.	TOTAL SHEETS
07	LA	5, 101	16.4, S0.0/25.9	45	459

Ricky Lee 4-22-15
REGISTERED CIVIL ENGINEER DATE

11-2-15
PLANS APPROVAL DATE

REGISTERED PROFESSIONAL ENGINEER RICKY LEE No. C74591 Exp. 12/31/17 CIVIL STATE OF CALIFORNIA

THE STATE OF CALIFORNIA OR ITS OFFICERS OR AGENTS SHALL NOT BE RESPONSIBLE FOR THE ACCURACY OR COMPLETENESS OF SCANNED COPIES OF THIS PLAN SHEET.

NOTE:

FOR ACCURATE RIGHT OF WAY DATA, CONTACT RIGHT OF WAY ENGINEERING AT THE DISTRICT OFFICE.

Loc 58 - ROUTE 101 PM 23.7

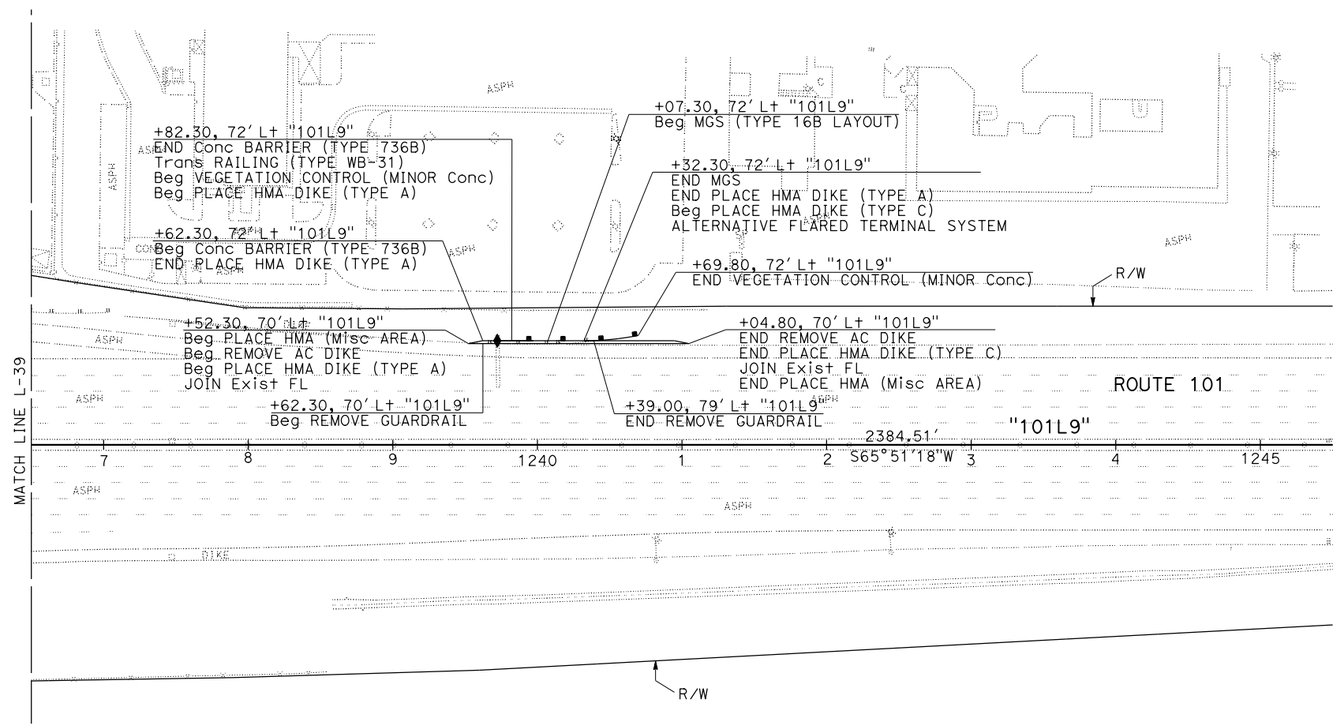

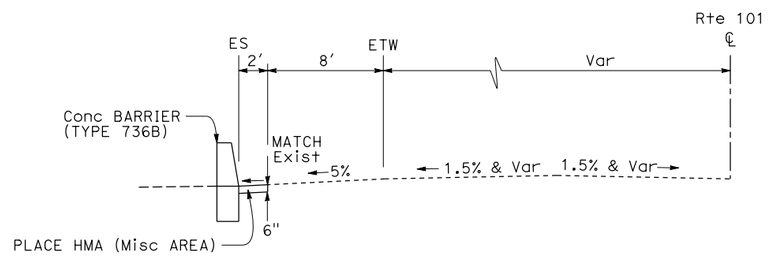

"101L9"
Sta 1239+52.30 TO 1241+04.80

LAYOUT

SCALE: 1" = 50'

L-40

REVISED BY	DATE REVISED

CALCULATED-DESIGNED BY	MYLY NGUYEN
CHECKED BY	RICKY LEE
FUNCTIONAL SUPERVISOR	DEREK HIGA

STATE OF CALIFORNIA - DEPARTMENT OF TRANSPORTATION
Caltrans
DESIGN

LAST REVISION 03-02-15
DATE PLOTTED => 15-JAN-2016
TIME PLOTTED => 06:14

Dist	COUNTY	ROUTE	POST MILES TOTAL PROJECT	SHEET No.	TOTAL SHEETS
07	LA	5, 101	16.4, S0.0/25.9	46	459

Ricky Lee 4-22-15
REGISTERED CIVIL ENGINEER DATE

11-2-15
PLANS APPROVAL DATE

REGISTERED PROFESSIONAL ENGINEER RICKY LEE No. C74591 Exp. 12/31/17 CIVIL STATE OF CALIFORNIA

THE STATE OF CALIFORNIA OR ITS OFFICERS OR AGENTS SHALL NOT BE RESPONSIBLE FOR THE ACCURACY OR COMPLETENESS OF SCANNED COPIES OF THIS PLAN SHEET.

NOTE:

FOR ACCURATE RIGHT OF WAY DATA, CONTACT RIGHT OF WAY ENGINEERING AT THE DISTRICT OFFICE.

CURVE DATA

No. ⊕	R	Δ	T	L
122	5000′	32°08′56″	1440.76′	2805.52′
123	5000′	02°49′59″	123.64′	247.23′

Loc 59 - ROUTE 101 PM 24.3

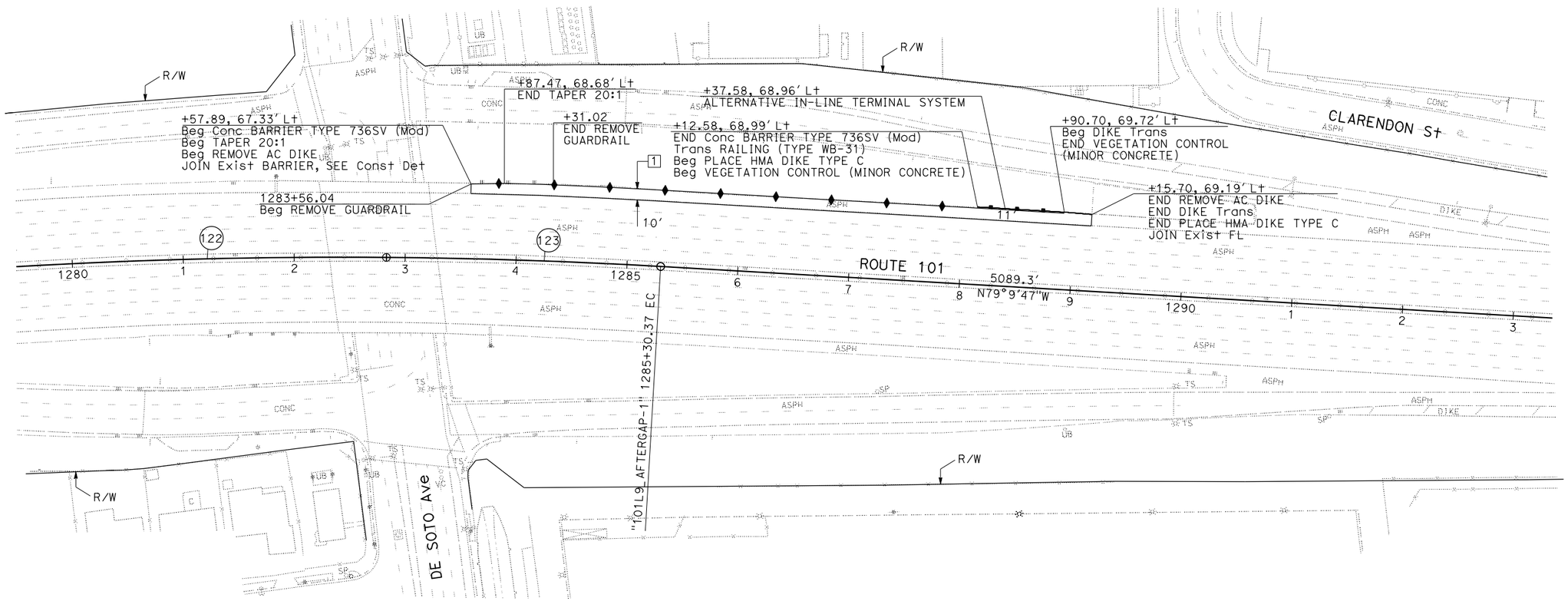

LAYOUT

SCALE: 1" = 50′

L-41

STATE OF CALIFORNIA - DEPARTMENT OF TRANSPORTATION
Caltrans
DESIGN

FUNCTIONAL SUPERVISOR: DEREK HIGA
CALCULATED-DESIGNED BY: MYLY NGUYEN
CHECKED BY: RICKY LEE
REVISED BY
DATE REVISED

LAST REVISION 03-02-15
DATE PLOTTED => 15-JAN-2016
TIME PLOTTED => 06:14

Dist	COUNTY	ROUTE	POST MILES TOTAL PROJECT	SHEET No.	TOTAL SHEETS
07	LA	5, 101	16.4, S0.0/25.9	47	459

Ricky Lee 4-22-15
REGISTERED CIVIL ENGINEER DATE

11-2-15
PLANS APPROVAL DATE

REGISTERED PROFESSIONAL ENGINEER RICKY LEE No. C74591 Exp. 12-31-17 CIVIL STATE OF CALIFORNIA

THE STATE OF CALIFORNIA OR ITS OFFICERS OR AGENTS SHALL NOT BE RESPONSIBLE FOR THE ACCURACY OR COMPLETENESS OF SCANNED COPIES OF THIS PLAN SHEET.

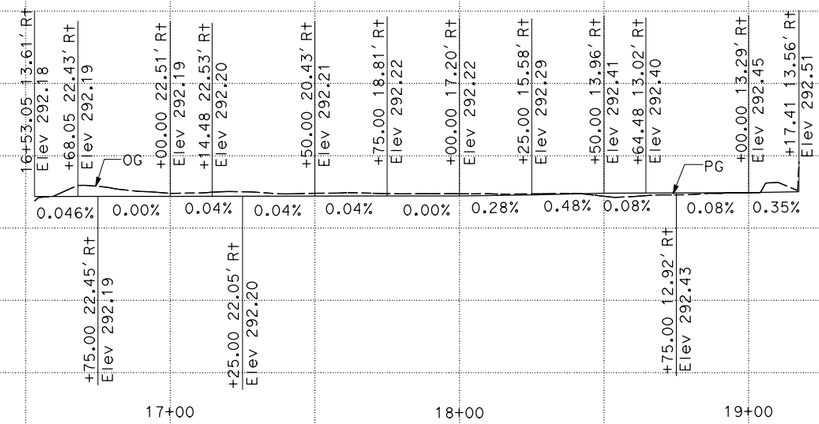

Loc 1 - Rt EP PROFILE
"ATLG5" LINE

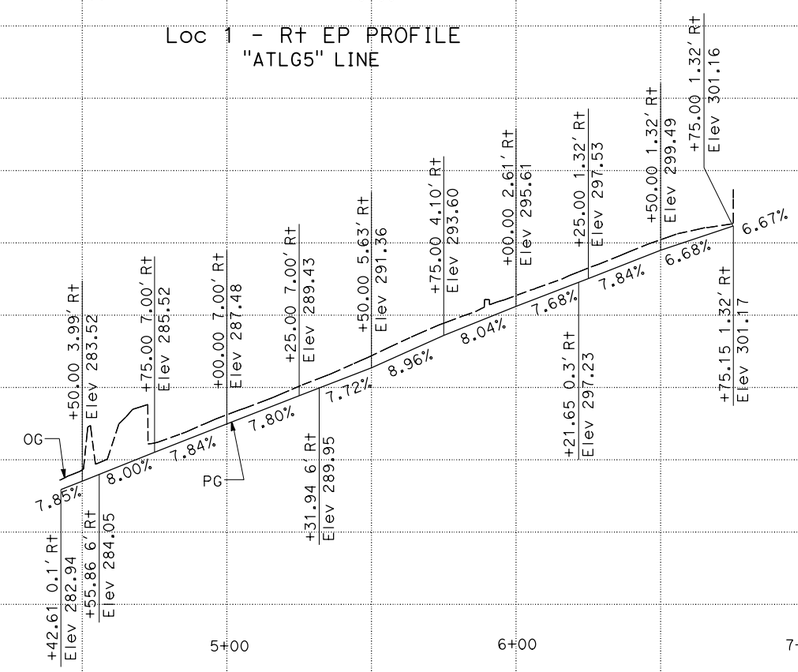

Loc 6 - Rt EP PROFILE
"MERF1" LINE

PROFILE

SCALE: Horiz: 1" = 25'
Vert: 1" = 5'

P-1

STATION		TOTAL
CY	Exc	
	Emb	

STATE OF CALIFORNIA - DEPARTMENT OF TRANSPORTATION
Caltrans® **DESIGN**

FUNCTIONAL SUPERVISOR: DEREK HIGA
CALCULATED-DESIGNED BY: MARIA RODRIGUEZ
CHECKED BY: RICKY LEE
REVISED BY
DATE REVISED

LAST REVISION 03-10-15
DATE PLOTTED => 15-JAN-2016
TIME PLOTTED => 06:14

Dist	COUNTY	ROUTE	POST MILES TOTAL PROJECT	SHEET No.	TOTAL SHEETS
07	LA	5, 101	16.4, S0.0/25.9	48	459

Ricky Lee 4-22-15
REGISTERED CIVIL ENGINEER DATE

11-2-15
PLANS APPROVAL DATE

REGISTERED PROFESSIONAL ENGINEER
RICKY LEE
No. C74591
Exp. 12-31-17
CIVIL
STATE OF CALIFORNIA

THE STATE OF CALIFORNIA OR ITS OFFICERS OR AGENTS SHALL NOT BE RESPONSIBLE FOR THE ACCURACY OR COMPLETENESS OF SCANNED COPIES OF THIS PLAN SHEET.

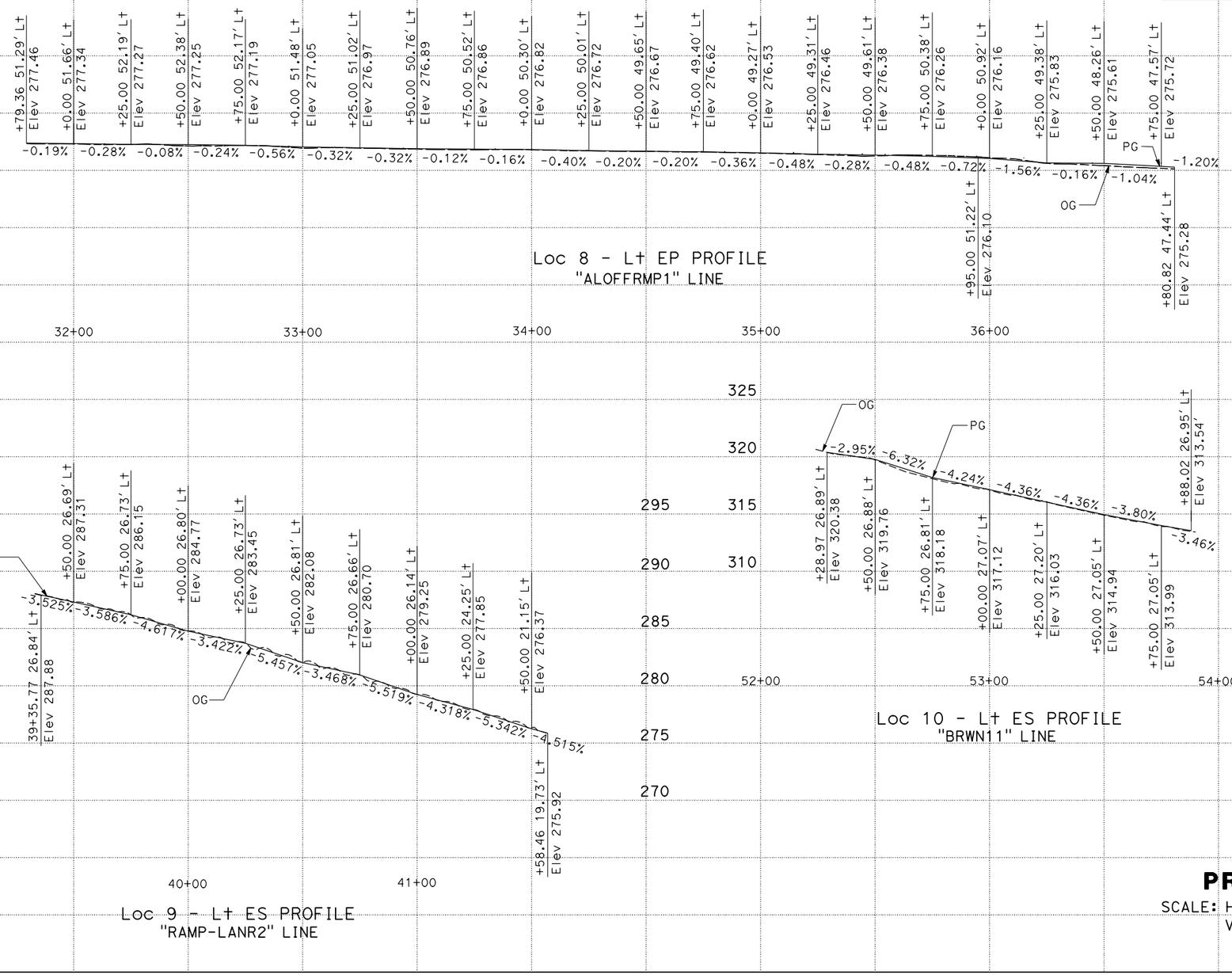

PROFILE

SCALE: Horiz: 1" = 25'
Vert: 1" = 5'

P-2

STATION		TOTAL
CY	Exc	
	Emb	

STATE OF CALIFORNIA - DEPARTMENT OF TRANSPORTATION
Caltrans® **DESIGN**

FUNCTIONAL SUPERVISOR: DEREK HIGA
CALCULATED-DESIGNED BY: MARIA RODRIGUEZ
CHECKED BY: RICKY LEE
REVISED BY
DATE REVISED

LAST REVISION 04-01-15
DATE PLOTTED => 15-JAN-2016
TIME PLOTTED => 06:14

Dist	COUNTY	ROUTE	POST MILES TOTAL PROJECT	SHEET No.	TOTAL SHEETS
07	LA	5, 101	16.4, S0.0/25.9	49	459

REGISTERED CIVIL ENGINEER — DATE: 4-22-15

11-2-15
PLANS APPROVAL DATE

REGISTERED PROFESSIONAL ENGINEER — RICKY LEE — No. C74591 — Exp. 12-31-17 — CIVIL — STATE OF CALIFORNIA

THE STATE OF CALIFORNIA OR ITS OFFICERS OR AGENTS SHALL NOT BE RESPONSIBLE FOR THE ACCURACY OR COMPLETENESS OF SCANNED COPIES OF THIS PLAN SHEET.

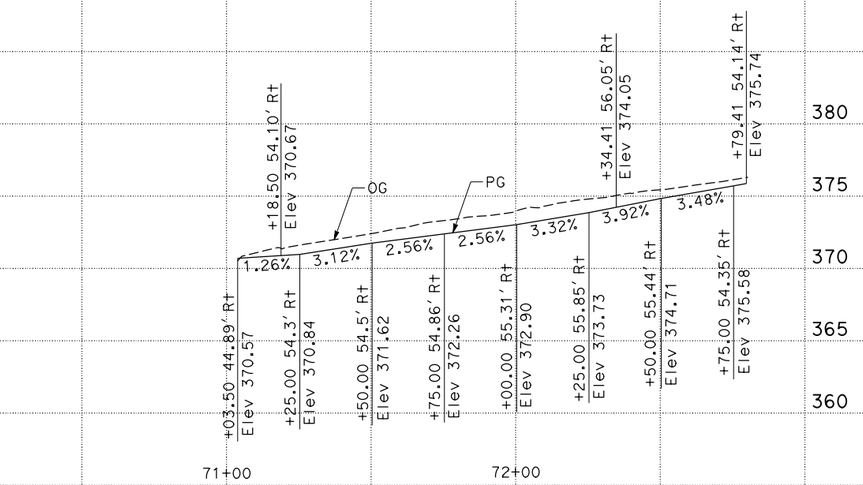

Loc 13 - R+ EP PROFILE
"101L1" LINE

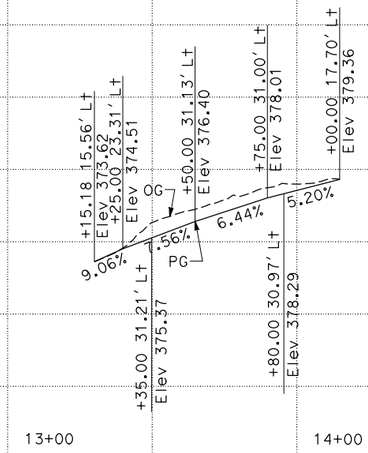

Loc 14 - R+ EP PROFILE
"LLIN1" LINE

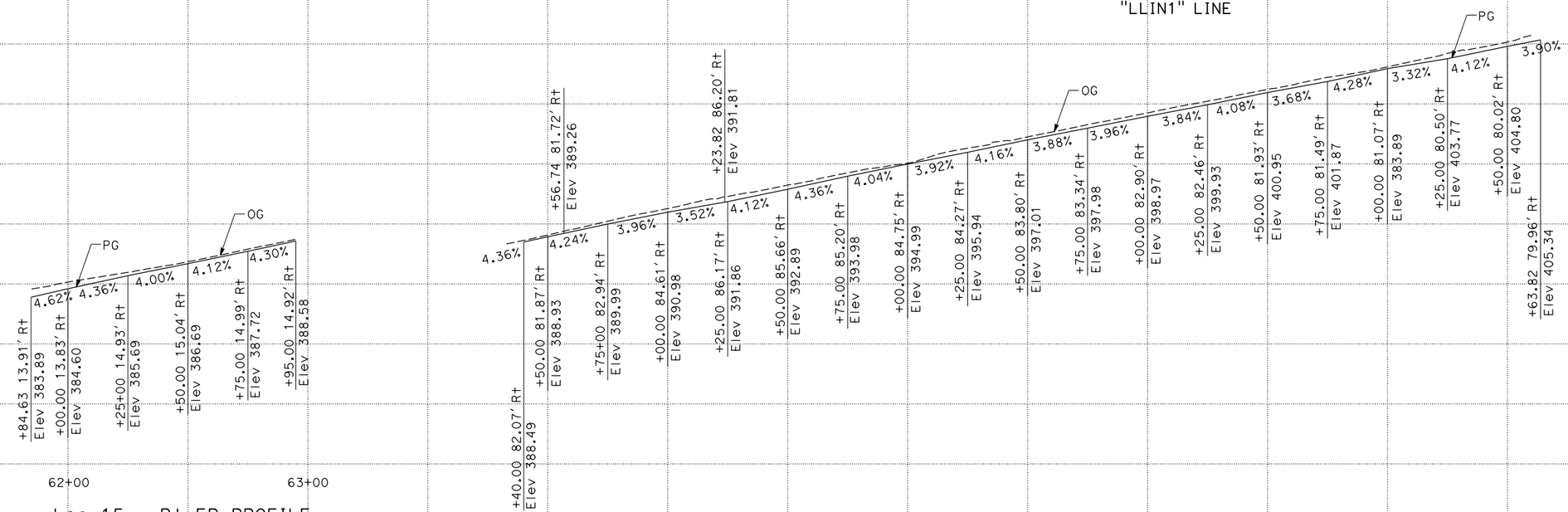

Loc 15 - R+ EP PROFILE
"JLIN1" LINE

Loc 15 - R+ EP PROFILE
"101L1" LINE

PROFILE

SCALE: Horiz: 1" = 25'
Vert: 1" = 5'

P-3

STATION		TOTAL
CY	Exc	
	Emb	

STATE OF CALIFORNIA - DEPARTMENT OF TRANSPORTATION
Caltrans® DESIGN

FUNCTIONAL SUPERVISOR: DEREK HIGA
CALCULATED-DESIGNED BY: MARIA RODRIGUEZ
CHECKED BY: RICKY LEE
REVISED BY
DATE REVISED

LAST REVISION 03-03-15
DATE PLOTTED => 15-JAN-2016
TIME PLOTTED => 06:14

Dist	COUNTY	ROUTE	POST MILES TOTAL PROJECT	SHEET No.	TOTAL SHEETS
07	LA	5, 101	16.4, S0.0/25.9	50	459

Ricky Lee 4-22-15
REGISTERED CIVIL ENGINEER DATE

11-2-15
PLANS APPROVAL DATE

REGISTERED PROFESSIONAL ENGINEER RICKY LEE No. C74591 Exp. 12-31-17 CIVIL STATE OF CALIFORNIA

THE STATE OF CALIFORNIA OR ITS OFFICERS OR AGENTS SHALL NOT BE RESPONSIBLE FOR THE ACCURACY OR COMPLETENESS OF SCANNED COPIES OF THIS PLAN SHEET.

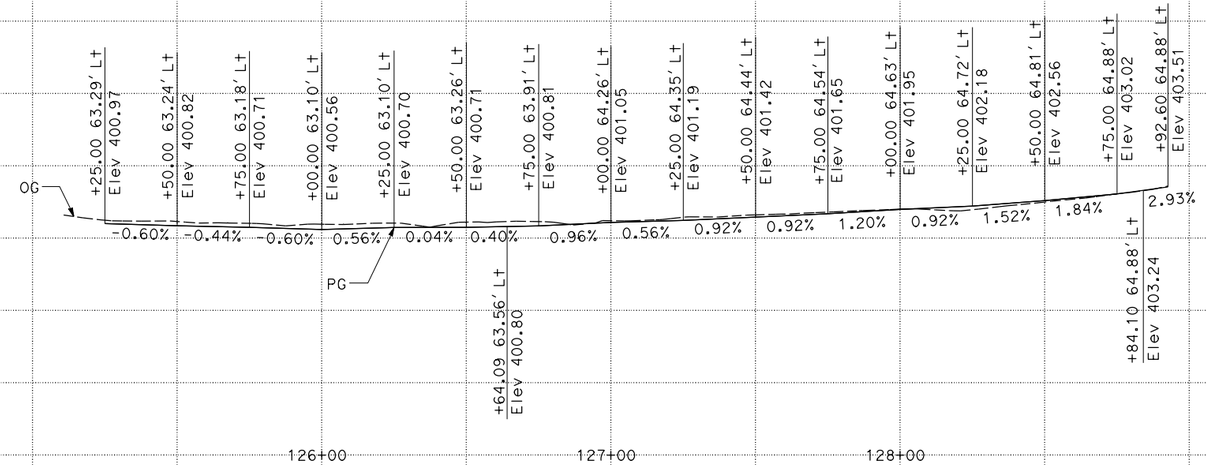

Loc 17 - Rt EP PROFILE
"101L1" LINE

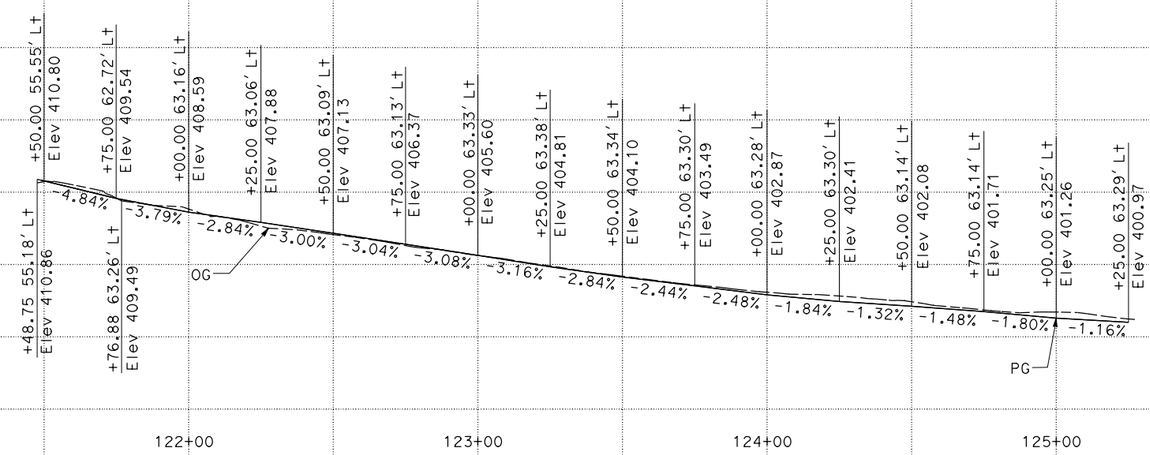

Loc 17 - Rt EP PROFILE
"101L1" LINE

PROFILE

SCALE: Horiz: 1" = 25'
Vert: 1" = 5'

P-4

STATION		TOTAL
CY	Exc	
	Emb	

STATE OF CALIFORNIA - DEPARTMENT OF TRANSPORTATION
Caltrans® **DESIGN**

FUNCTIONAL SUPERVISOR: DEREK HIGA
CALCULATED-DESIGNED BY: MARIA RODRIGUEZ
CHECKED BY: RICKY LEE
REVISED BY
DATE REVISED

LAST REVISION 03-09-15
DATE PLOTTED => 15-JAN-2016
TIME PLOTTED => 06:14

Dist	COUNTY	ROUTE	POST MILES TOTAL PROJECT	SHEET No.	TOTAL SHEETS
07	LA	5, 101	16.4, S0.0/25.9	51	459

Ricky Lee 4-22-15
REGISTERED CIVIL ENGINEER DATE

11-2-15
PLANS APPROVAL DATE

REGISTERED PROFESSIONAL ENGINEER
RICKY LEE
No. C74591
Exp. 12-31-17
CIVIL
STATE OF CALIFORNIA

THE STATE OF CALIFORNIA OR ITS OFFICERS OR AGENTS SHALL NOT BE RESPONSIBLE FOR THE ACCURACY OR COMPLETENESS OF SCANNED COPIES OF THIS PLAN SHEET.

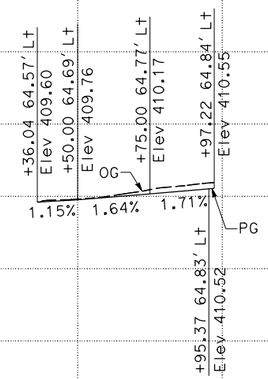

Loc 18 - Rt EP PROFILE
"101L1" LINE

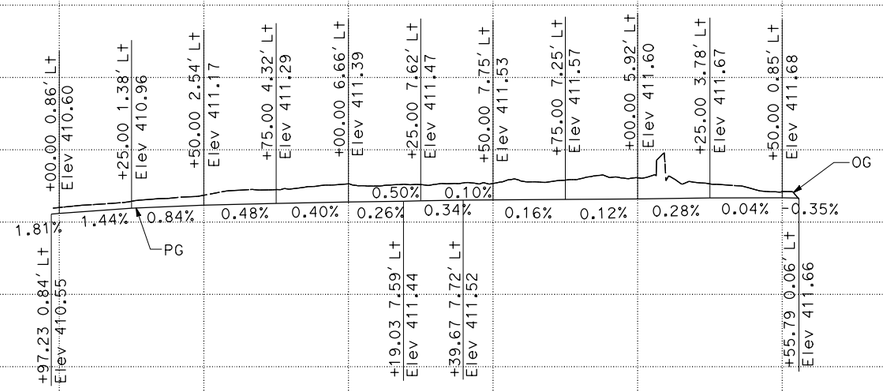

Loc 18 - Rt EP PROFILE
"BELN1" LINE

PROFILE

SCALE: Horiz: 1" = 25'
Vert: 1" = 5'

P-5

STATION	31+00	32+00	33+00	34+00	35+00	TOTAL
CY Exc						
CY Emb						

STATE OF CALIFORNIA - DEPARTMENT OF TRANSPORTATION
Caltrans®
DESIGN

FUNCTIONAL SUPERVISOR: DEREK HIGA
CALCULATED-DESIGNED BY: ANTOINE NADER
CHECKED BY: RICKY LEE
REVISED BY
DATE REVISED

LAST REVISION 03-03-15
DATE PLOTTED => 15-JAN-2016
TIME PLOTTED => 06:14

Dist	COUNTY	ROUTE	POST MILES TOTAL PROJECT	SHEET No.	TOTAL SHEETS
07	LA	5, 101	16.4, S0.0/25.9	52	459

Ricky Lee 4-22-15
REGISTERED CIVIL ENGINEER DATE

11-2-15
PLANS APPROVAL DATE

REGISTERED PROFESSIONAL ENGINEER
RICKY LEE
No. C74591
Exp. 12-31-17
CIVIL
STATE OF CALIFORNIA

THE STATE OF CALIFORNIA OR ITS OFFICERS OR AGENTS SHALL NOT BE RESPONSIBLE FOR THE ACCURACY OR COMPLETENESS OF SCANNED COPIES OF THIS PLAN SHEET.

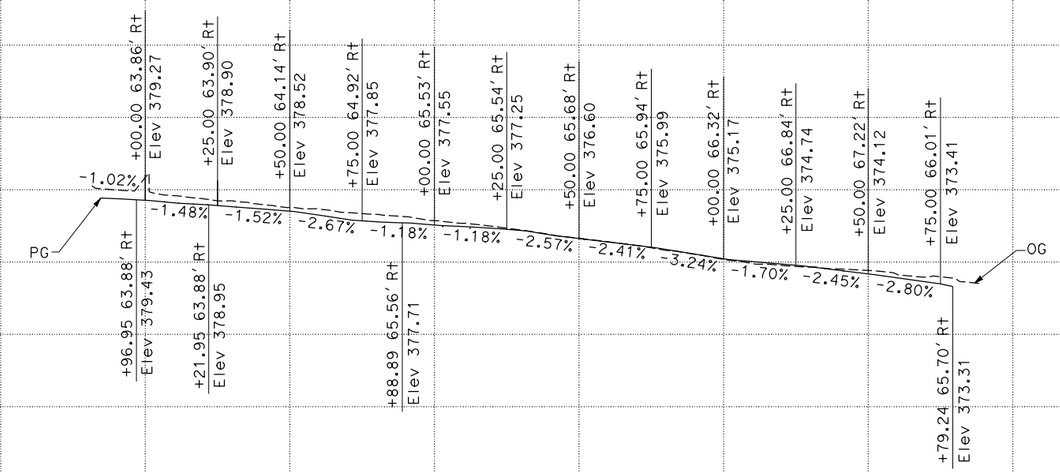

Loc 19 - Rt EP PROFILE
"101L1" LINE

PROFILE

SCALE: Horiz: 1" = 25'
Vert: 1" = 5'

P-6

STATION			TOTAL
CY	Exc		
	Emb		

REVISED BY | DATE REVISED

MARIA RODRIGUEZ | RICKY LEE

CALCULATED-DESIGNED BY | CHECKED BY

FUNCTIONAL SUPERVISOR: DEREK HIGA

STATE OF CALIFORNIA - DEPARTMENT OF TRANSPORTATION
Caltrans
DESIGN

LAST REVISION 03-03-15 | DATE PLOTTED => 15-JAN-2016 | TIME PLOTTED => 06:14

Dist	COUNTY	ROUTE	POST MILES TOTAL PROJECT	SHEET No.	TOTAL SHEETS
07	LA	5, 101	16.4, S0.0/25.9	53	459

Ricky Lee 4-22-15
REGISTERED CIVIL ENGINEER DATE

11-2-15
PLANS APPROVAL DATE

REGISTERED PROFESSIONAL ENGINEER
RICKY LEE
No. C74591
Exp. 12-31-17
CIVIL
STATE OF CALIFORNIA

THE STATE OF CALIFORNIA OR ITS OFFICERS OR AGENTS SHALL NOT BE RESPONSIBLE FOR THE ACCURACY OR COMPLETENESS OF SCANNED COPIES OF THIS PLAN SHEET.

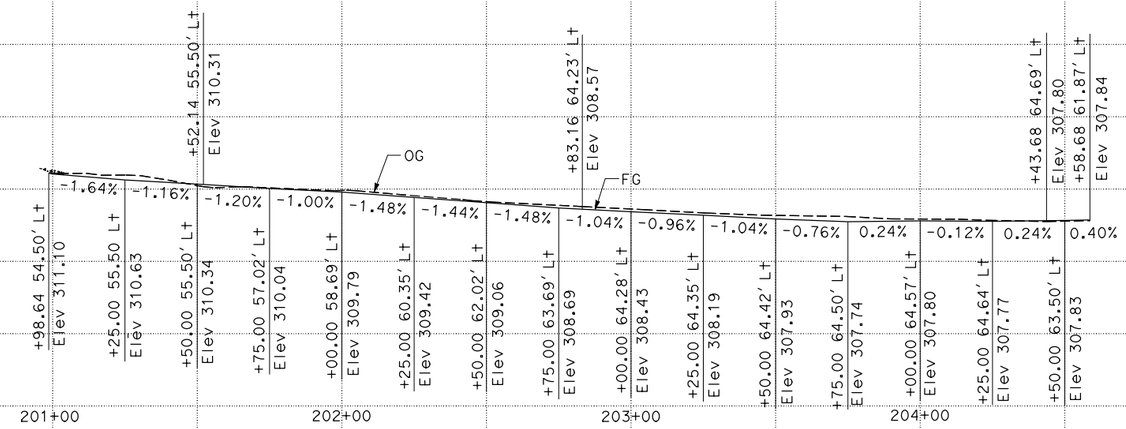

Loc 22 - Rt EP PROFILE
"101L1" LINE

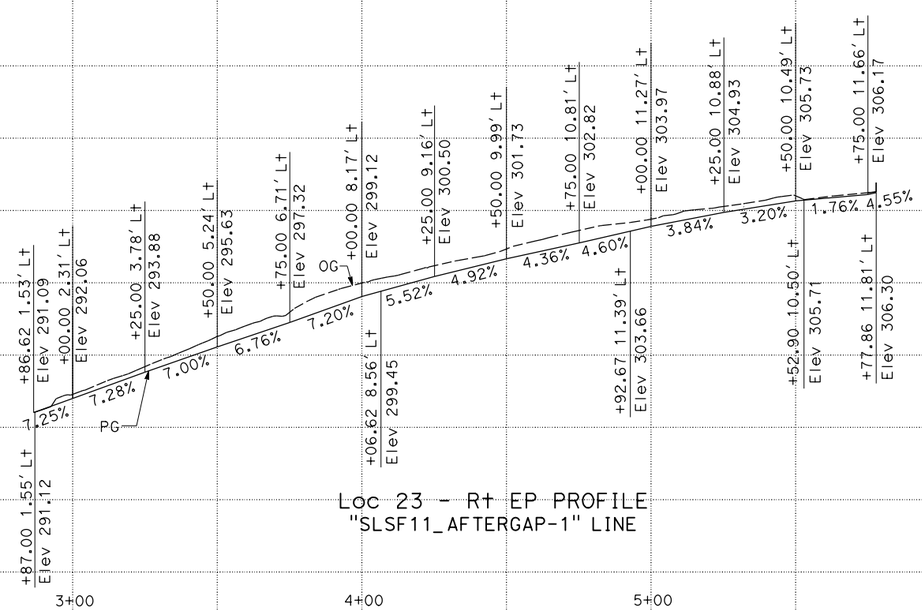

Loc 23 - Rt EP PROFILE
"SLSF11_AFTERGAP-1" LINE

PROFILE

SCALE: Horiz: 1" = 25'
Vert: 1" = 5'

P-7

STATION		TOTAL
CY	Exc	
	Emb	

STATE OF CALIFORNIA - DEPARTMENT OF TRANSPORTATION
Caltrans®
DESIGN

FUNCTIONAL SUPERVISOR: DEREK HIGA
CALCULATED-DESIGNED BY: MYLY NGUYEN
CHECKED BY: RICKY LEE
REVISED BY
DATE REVISED

LAST REVISION 03-03-15
DATE PLOTTED => 15-JAN-2016
TIME PLOTTED => 06:14

Dist	COUNTY	ROUTE	POST MILES TOTAL PROJECT	SHEET No.	TOTAL SHEETS
07	LA	5, 101	16.4, S0.0/25.9	54	459

Ricky Lee 4-22-15
REGISTERED CIVIL ENGINEER DATE

11-2-15
PLANS APPROVAL DATE

REGISTERED PROFESSIONAL ENGINEER RICKY LEE No. C74591 Exp. 12-31-17 CIVIL STATE OF CALIFORNIA

THE STATE OF CALIFORNIA OR ITS OFFICERS OR AGENTS SHALL NOT BE RESPONSIBLE FOR THE ACCURACY OR COMPLETENESS OF SCANNED COPIES OF THIS PLAN SHEET.

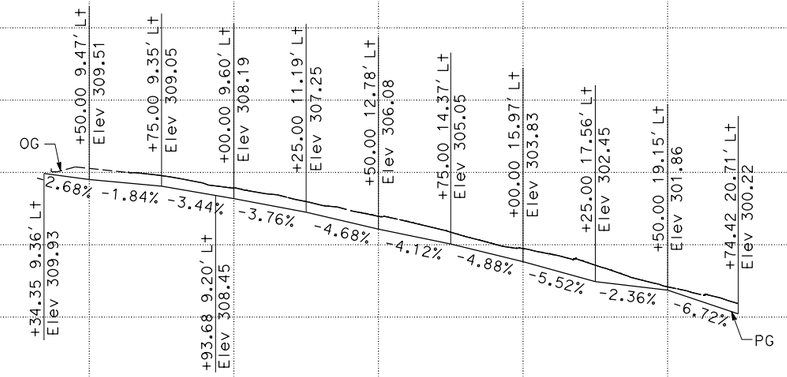

Loc 24 - Rt EP PROFILE
"VESN11" LINE

STATION	15+00	16+00	17+00	18+00	TOTAL
CY Exc					
CY Emb					

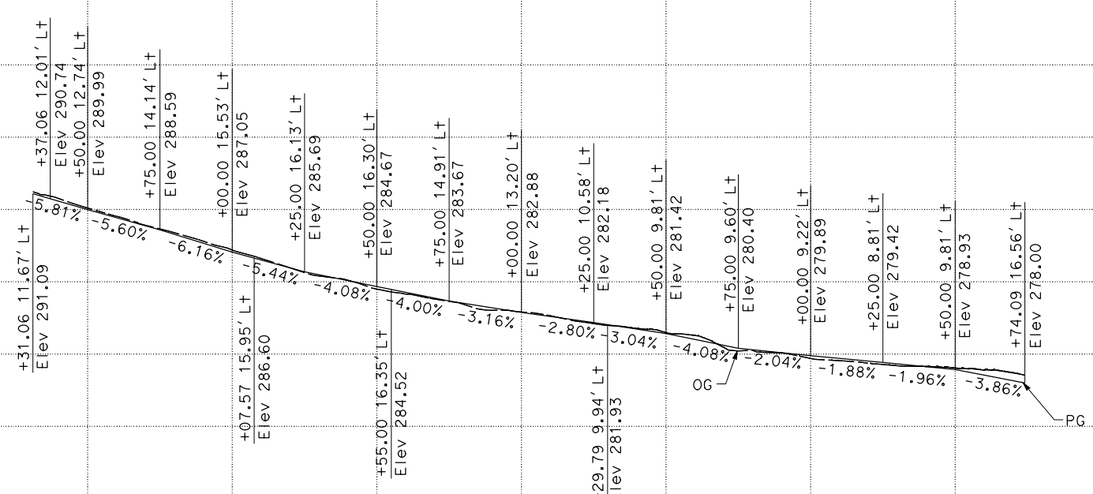

Loc 24 - Rt EP PROFILE
"VESN11" LINE

PROFILE

SCALE: Horiz: 1" = 25'
Vert: 1" = 5'

P-8

STATION	19+00	20+00	21+00	22+00	23+00	TOTAL
CY Exc						
CY Emb						

REVISED BY | DATE REVISED
MARIA RODRIGUEZ | RICKY LEE
CALCULATED-DESIGNED BY | CHECKED BY
FUNCTIONAL SUPERVISOR: DEREK HIGA

STATE OF CALIFORNIA - DEPARTMENT OF TRANSPORTATION
Caltrans® DESIGN

LAST REVISION 03-03-15 | DATE PLOTTED => 15-JAN-2016 | TIME PLOTTED => 06:14

Dist	COUNTY	ROUTE	POST MILES TOTAL PROJECT	SHEET No.	TOTAL SHEETS
07	LA	5, 101	16.4, S0.0/25.9	55	459

Ricky Lee 4-22-15
REGISTERED CIVIL ENGINEER DATE

11-2-15
PLANS APPROVAL DATE

REGISTERED PROFESSIONAL ENGINEER
RICKY LEE
No. C74591
Exp. 12-31-17
CIVIL
STATE OF CALIFORNIA

THE STATE OF CALIFORNIA OR ITS OFFICERS OR AGENTS SHALL NOT BE RESPONSIBLE FOR THE ACCURACY OR COMPLETENESS OF SCANNED COPIES OF THIS PLAN SHEET.

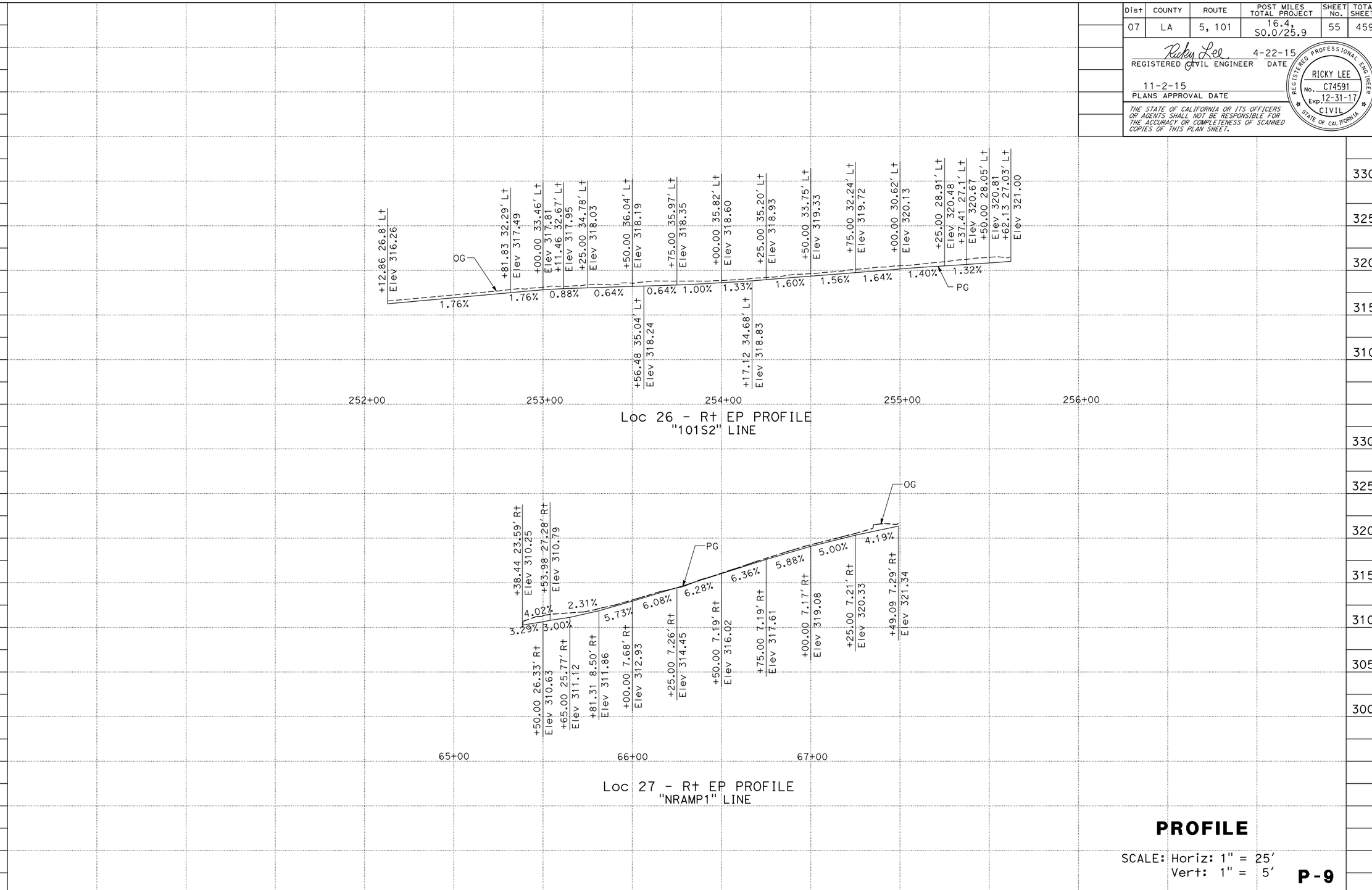

PROFILE

SCALE: Horiz: 1" = 25'
Vert: 1" = 5'

P-9

STATION		TOTAL
CY	Exc	
	Emb	

REVISED BY | DATE REVISED
MARIA RODRIGUEZ | RICKY LEE
CALCULATED-DESIGNED BY | CHECKED BY
FUNCTIONAL SUPERVISOR | DEREK HIGA

STATE OF CALIFORNIA - DEPARTMENT OF TRANSPORTATION
Caltrans®
DESIGN

LAST REVISION 03-03-15 | DATE PLOTTED => 15-JAN-2016 | TIME PLOTTED => 06:14

Dist	COUNTY	ROUTE	POST MILES TOTAL PROJECT	SHEET No.	TOTAL SHEETS
07	LA	5, 101	16.4, S0.0/25.9	56	459

Ricky Lee 4-22-15
REGISTERED CIVIL ENGINEER DATE

11-2-15
PLANS APPROVAL DATE

REGISTERED PROFESSIONAL ENGINEER
RICKY LEE
No. C74591
Exp. 12-31-17
CIVIL
STATE OF CALIFORNIA

THE STATE OF CALIFORNIA OR ITS OFFICERS OR AGENTS SHALL NOT BE RESPONSIBLE FOR THE ACCURACY OR COMPLETENESS OF SCANNED COPIES OF THIS PLAN SHEET.

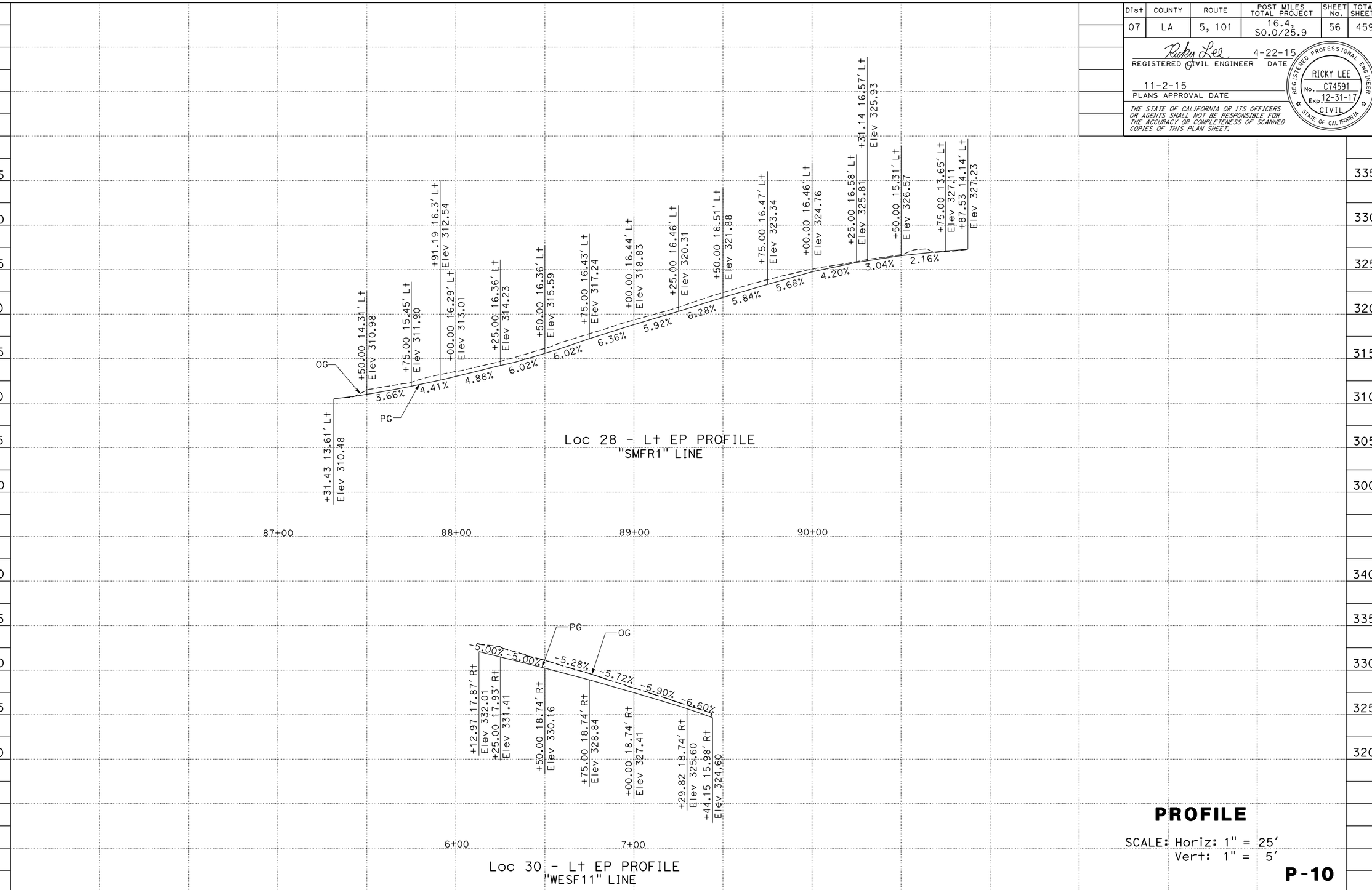

PROFILE

SCALE: Horiz: 1" = 25'
Vert: 1" = 5'

P-10

STATION		TOTAL
CY	Exc	
	Emb	

REVISED BY: MARIA RODRIGUEZ
DATE REVISED: RICKY LEE
CALCULATED-DESIGNED BY: CHECKED BY
FUNCTIONAL SUPERVISOR: DEREK HIGA

STATE OF CALIFORNIA - DEPARTMENT OF TRANSPORTATION
Caltrans®
DESIGN

LAST REVISION: 03-03-15
DATE PLOTTED => 15-JAN-2016
TIME PLOTTED => 06:14

Dist	COUNTY	ROUTE	POST MILES TOTAL PROJECT	SHEET No.	TOTAL SHEETS
07	LA	5, 101	16.4, S0.0/25.9	57	459

Ricky Lee 4-22-15
REGISTERED CIVIL ENGINEER DATE

11-2-15
PLANS APPROVAL DATE

REGISTERED PROFESSIONAL ENGINEER RICKY LEE No. C74591 Exp. 12-31-17 CIVIL STATE OF CALIFORNIA

THE STATE OF CALIFORNIA OR ITS OFFICERS OR AGENTS SHALL NOT BE RESPONSIBLE FOR THE ACCURACY OR COMPLETENESS OF SCANNED COPIES OF THIS PLAN SHEET.

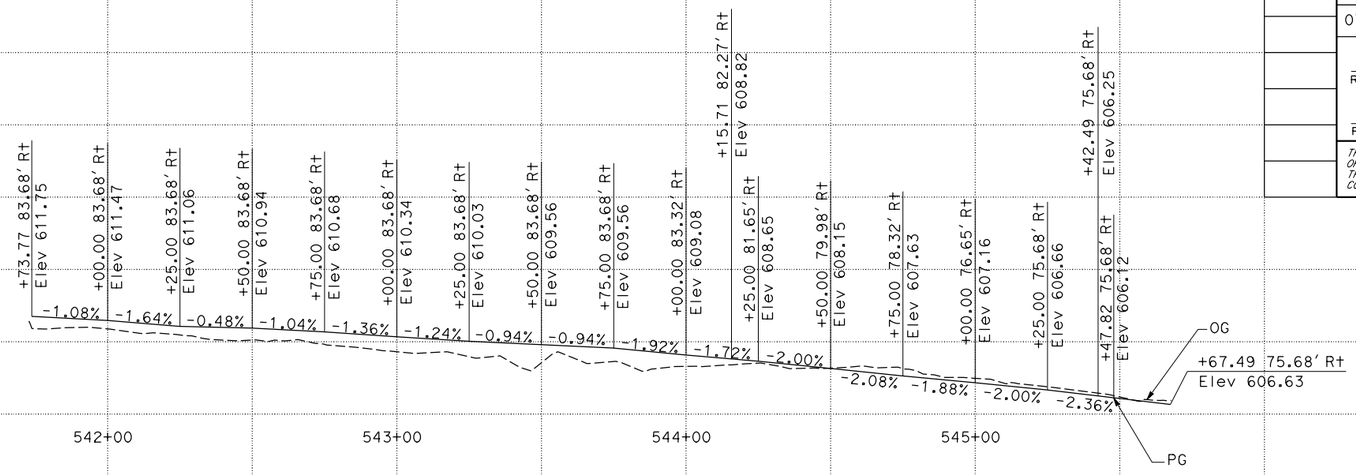

Loc 35 - Rt EP PROFILE
"101L5" LINE

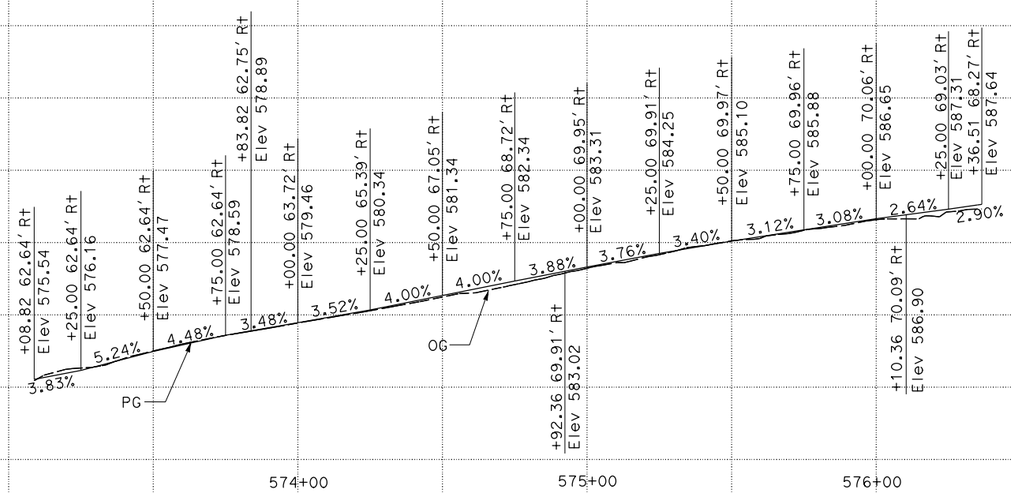

Loc 36 - Rt ES PROFILE
"101L6" LINE

PROFILE

SCALE: Horiz: 1" = 25'
Vert: 1" = 5'

P-11

STATION		TOTAL
CY	Exc	
	Emb	

STATE OF CALIFORNIA - DEPARTMENT OF TRANSPORTATION
Caltrans® **DESIGN**

FUNCTIONAL SUPERVISOR: DEREK HIGA
CALCULATED-DESIGNED BY: MARIA RODRIGUEZ
CHECKED BY: RICKY LEE
REVISED BY
DATE REVISED

LAST REVISION 03-03-15
DATE PLOTTED => 15-JAN-2016
TIME PLOTTED => 06:14

Dist	COUNTY	ROUTE	POST MILES TOTAL PROJECT	SHEET No.	TOTAL SHEETS
07	LA	5, 101	16.4, S0.0/25.9	58	459

Ricky Lee 4-22-15
REGISTERED CIVIL ENGINEER DATE

11-2-15
PLANS APPROVAL DATE

REGISTERED PROFESSIONAL ENGINEER
RICKY LEE
No. C74591
Exp. 12-31-17
CIVIL
STATE OF CALIFORNIA

THE STATE OF CALIFORNIA OR ITS OFFICERS OR AGENTS SHALL NOT BE RESPONSIBLE FOR THE ACCURACY OR COMPLETENESS OF SCANNED COPIES OF THIS PLAN SHEET.

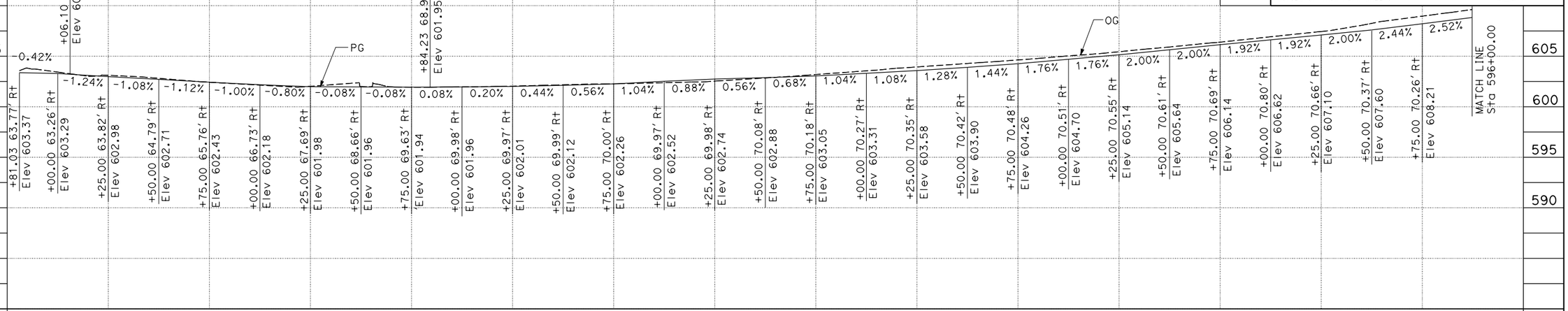

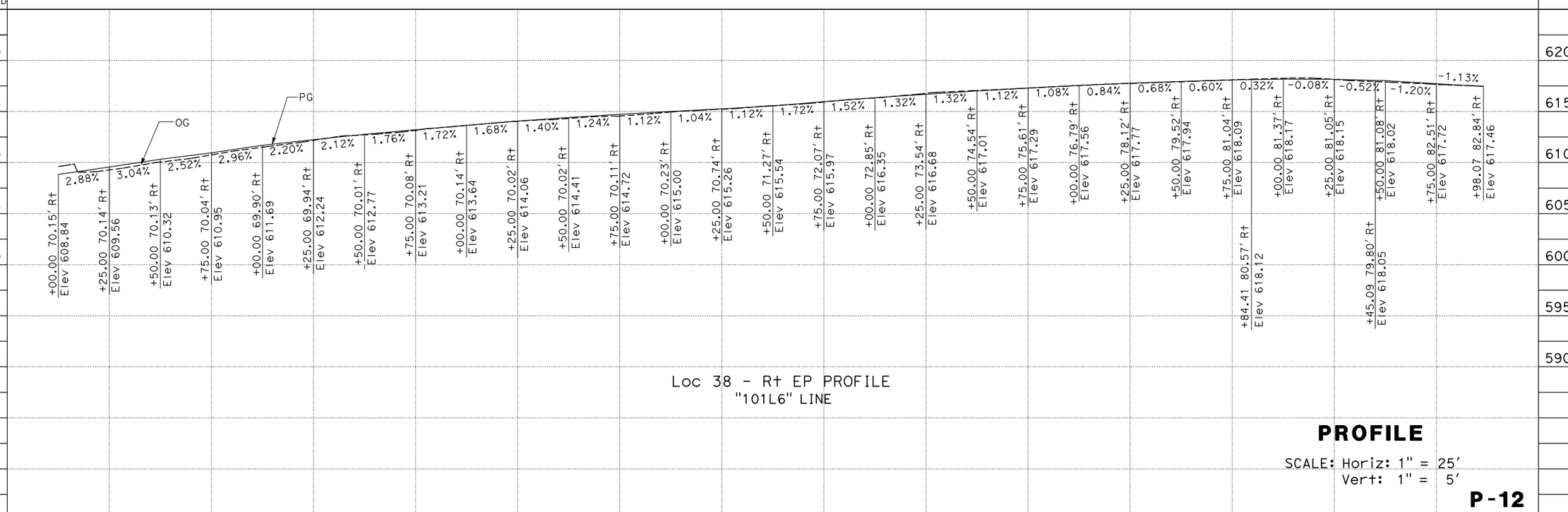

Loc 38 - Rt EP PROFILE
"101L6" LINE

PROFILE

SCALE: Horiz: 1" = 25'
Vert: 1" = 5'

P-12

REVISED BY	DATE REVISED
MYLY NGUYEN	RICKY LEE

CALCULATED-DESIGNED BY	CHECKED BY

FUNCTIONAL SUPERVISOR: DEREK HIGA

STATE OF CALIFORNIA - DEPARTMENT OF TRANSPORTATION
Caltrans® **DESIGN**

LAST REVISION 03-03-15
DATE PLOTTED => 15-JAN-2016
TIME PLOTTED => 06:14

Dist	COUNTY	ROUTE	POST MILES TOTAL PROJECT	SHEET No.	TOTAL SHEETS
07	LA	5, 101	16.4, S0.0/25.9	59	459

Ricky Lee 4-22-15
REGISTERED CIVIL ENGINEER DATE

11-2-15
PLANS APPROVAL DATE

REGISTERED PROFESSIONAL ENGINEER
RICKY LEE
No. C74591
Exp. 12-31-17
CIVIL
STATE OF CALIFORNIA

THE STATE OF CALIFORNIA OR ITS OFFICERS OR AGENTS SHALL NOT BE RESPONSIBLE FOR THE ACCURACY OR COMPLETENESS OF SCANNED COPIES OF THIS PLAN SHEET.

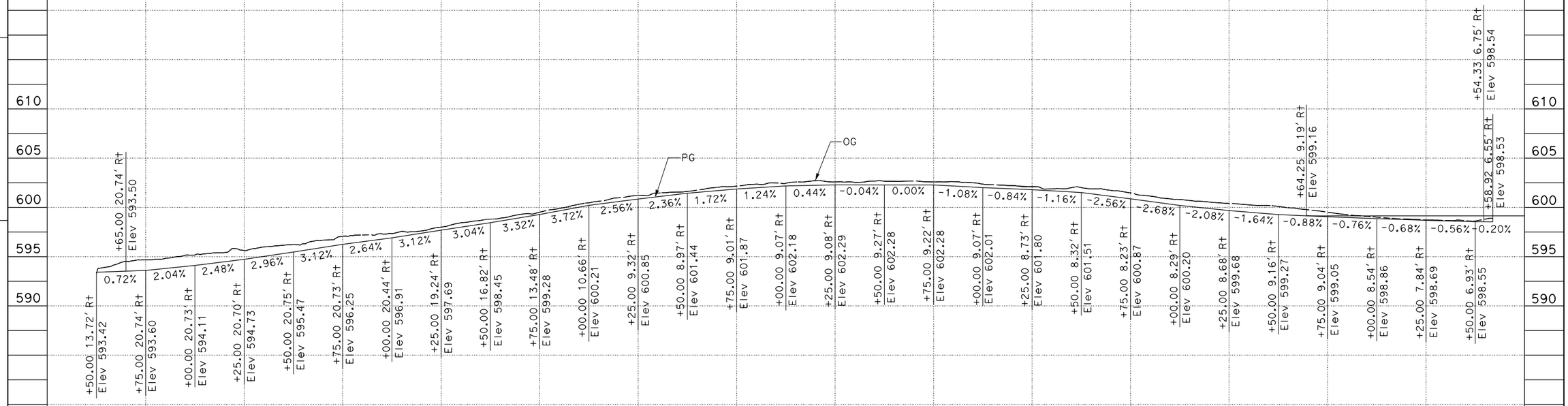

Loc 39 - R+ EP PROFILE
"MORF1" LINE

PROFILE

SCALE: Horiz: 1" = 25'
Vert: 1" = 5'

P-13

STATION		TOTAL
CY	Exc	
	Emb	

STATE OF CALIFORNIA - DEPARTMENT OF TRANSPORTATION
Caltrans® **DESIGN**

FUNCTIONAL SUPERVISOR: DEREK HIGA
CALCULATED-DESIGNED BY: MYLY NGUYEN
CHECKED BY: RICKY LEE
REVISED BY
DATE REVISED

LAST REVISION 03-03-15
DATE PLOTTED => 15-JAN-2016
TIME PLOTTED => 06:14

Dist	COUNTY	ROUTE	POST MILES TOTAL PROJECT	SHEET No.	TOTAL SHEETS
07	LA	5, 101	16.4, S0.0/25.9	60	459

Ricky Lee 4-22-15
REGISTERED CIVIL ENGINEER DATE

11-2-15
PLANS APPROVAL DATE

REGISTERED PROFESSIONAL ENGINEER
RICKY LEE
No. C74591
Exp. 12-31-17
CIVIL
STATE OF CALIFORNIA

THE STATE OF CALIFORNIA OR ITS OFFICERS OR AGENTS SHALL NOT BE RESPONSIBLE FOR THE ACCURACY OR COMPLETENESS OF SCANNED COPIES OF THIS PLAN SHEET.

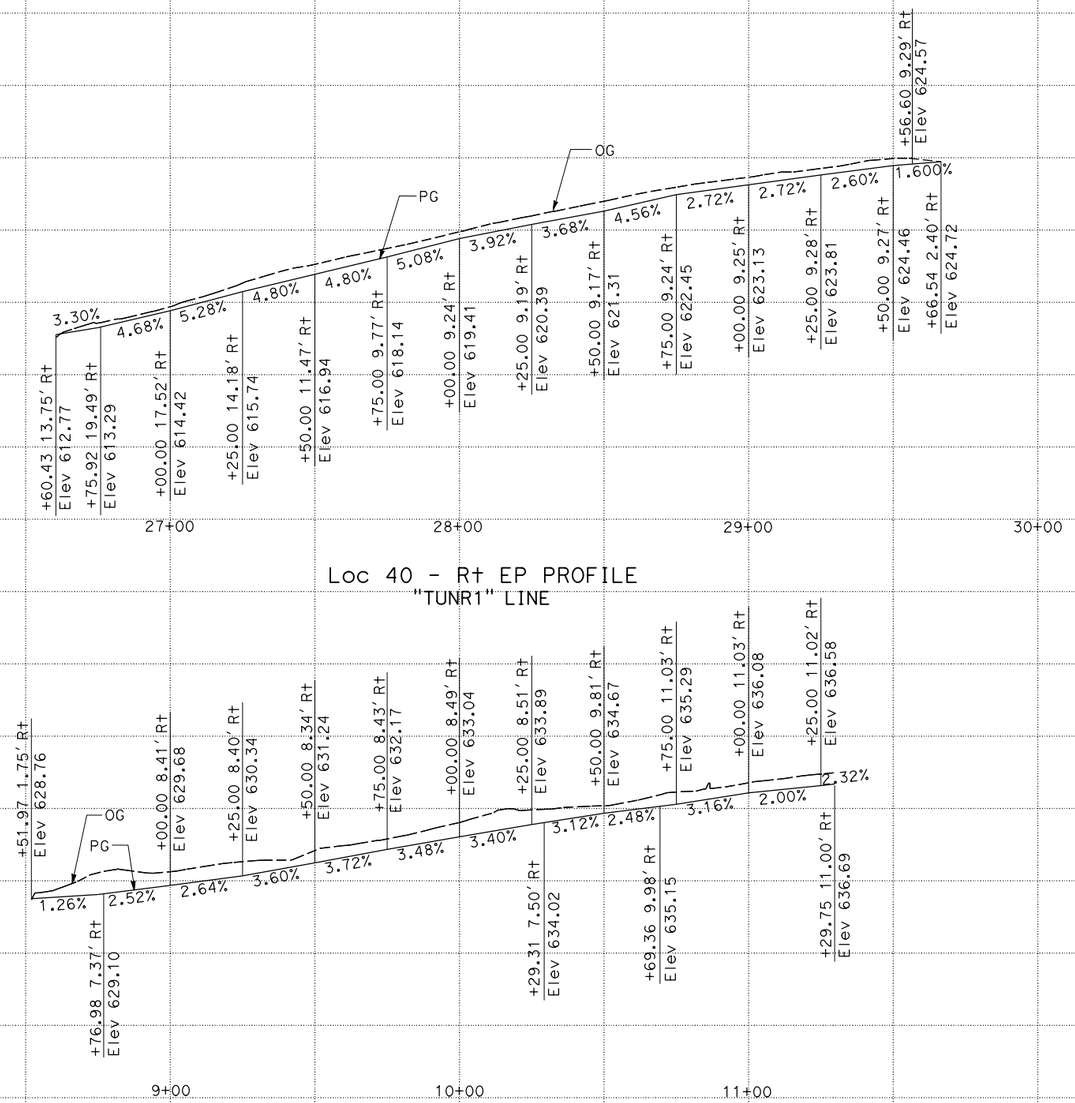

Loc 40 - R+ EP PROFILE
"TUNR1" LINE

Loc 41 - RT EP PROFILE
"LCRN1" LINE

PROFILE

SCALE: Horiz: 1" = 25'
Vert: 1" = 5'

P-14

STATION		TOTAL
CY	Exc	
	Emb	

REVISED BY | DATE REVISED
MYLY NGUYEN | RICKY LEE
CALCULATED-DESIGNED BY | CHECKED BY
FUNCTIONAL SUPERVISOR: DEREK HIGA

STATE OF CALIFORNIA - DEPARTMENT OF TRANSPORTATION
Caltrans® DESIGN

LAST REVISION 03-03-15 | DATE PLOTTED => 15-JAN-2016 | TIME PLOTTED => 06:14

Dist	COUNTY	ROUTE	POST MILES TOTAL PROJECT	SHEET No.	TOTAL SHEETS
07	LA	5, 101	16.4, S0.0/25.9	61	459

Ricky Lee 4-22-15
REGISTERED CIVIL ENGINEER DATE

11-2-15
PLANS APPROVAL DATE

REGISTERED PROFESSIONAL ENGINEER RICKY LEE No. C74591 Exp. 12-31-17 CIVIL STATE OF CALIFORNIA

THE STATE OF CALIFORNIA OR ITS OFFICERS OR AGENTS SHALL NOT BE RESPONSIBLE FOR THE ACCURACY OR COMPLETENESS OF SCANNED COPIES OF THIS PLAN SHEET.

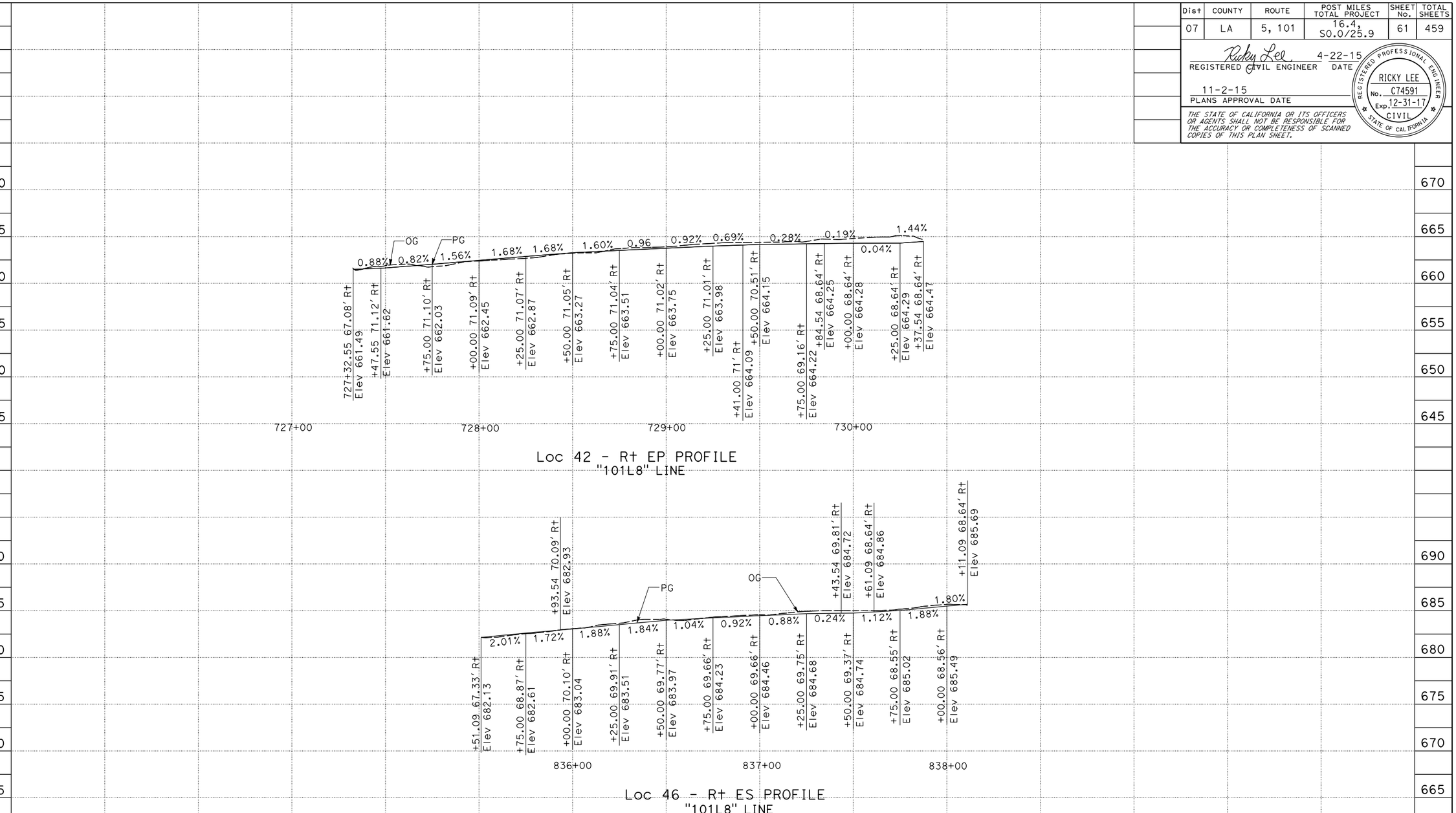

PROFILE

SCALE: Horiz: 1" = 25'
Vert: 1" = 5'

P-15

STATION		TOTAL
CY	Exc	
	Emb	

STATE OF CALIFORNIA - DEPARTMENT OF TRANSPORTATION
Caltrans® **DESIGN**

FUNCTIONAL SUPERVISOR: DEREK HIGA
CALCULATED-DESIGNED BY: MYLY NGUYEN
CHECKED BY: RICKY LEE
REVISED BY
DATE REVISED

LAST REVISION 03-03-15
DATE PLOTTED => 15-JAN-2016
TIME PLOTTED => 06:14

Dist	COUNTY	ROUTE	POST MILES TOTAL PROJECT	SHEET No.	TOTAL SHEETS
07	LA	5, 101	16.4, S0.0/25.9	62	459

Ricky Lee 4-22-15
REGISTERED CIVIL ENGINEER DATE

11-2-15
PLANS APPROVAL DATE

REGISTERED PROFESSIONAL ENGINEER
RICKY LEE
No. C74591
Exp. 12-31-17
CIVIL
STATE OF CALIFORNIA

THE STATE OF CALIFORNIA OR ITS OFFICERS OR AGENTS SHALL NOT BE RESPONSIBLE FOR THE ACCURACY OR COMPLETENESS OF SCANNED COPIES OF THIS PLAN SHEET.

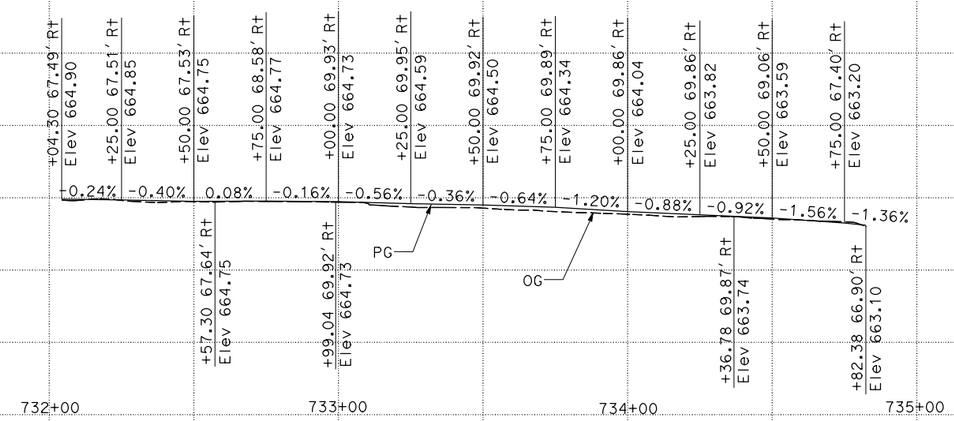

Loc 43 - Rt EP PROFILE
"101L8" LINE

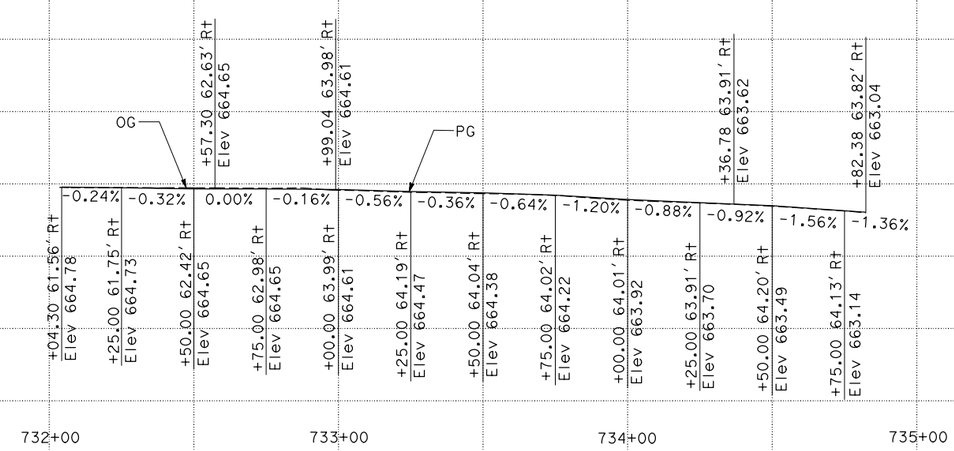

Loc 43 - Rt FL PROFILE
"101L8" LINE

PROFILE

SCALE: Horiz: 1" = 25'
Vert: 1" = 5'

P-16

STATION		TOTAL
CY	Exc	
	Emb	

STATE OF CALIFORNIA - DEPARTMENT OF TRANSPORTATION
Caltrans® DESIGN

FUNCTIONAL SUPERVISOR: DEREK HIGA
CALCULATED-DESIGNED BY: MYLY NGUYEN
CHECKED BY: RICKY LEE
REVISED BY
DATE REVISED

LAST REVISION 03-03-15
DATE PLOTTED => 15-JAN-2016
TIME PLOTTED => 06:14

Dist	COUNTY	ROUTE	POST MILES TOTAL PROJECT	SHEET No.	TOTAL SHEETS
07	LA	5, 101	16.4, S0.0/25.9	63	459

Ricky Lee 4-22-15
REGISTERED CIVIL ENGINEER DATE

11-2-15
PLANS APPROVAL DATE

REGISTERED PROFESSIONAL ENGINEER
RICKY LEE
No. C74591
Exp. 12-31-17
CIVIL
STATE OF CALIFORNIA

THE STATE OF CALIFORNIA OR ITS OFFICERS OR AGENTS SHALL NOT BE RESPONSIBLE FOR THE ACCURACY OR COMPLETENESS OF SCANNED COPIES OF THIS PLAN SHEET.

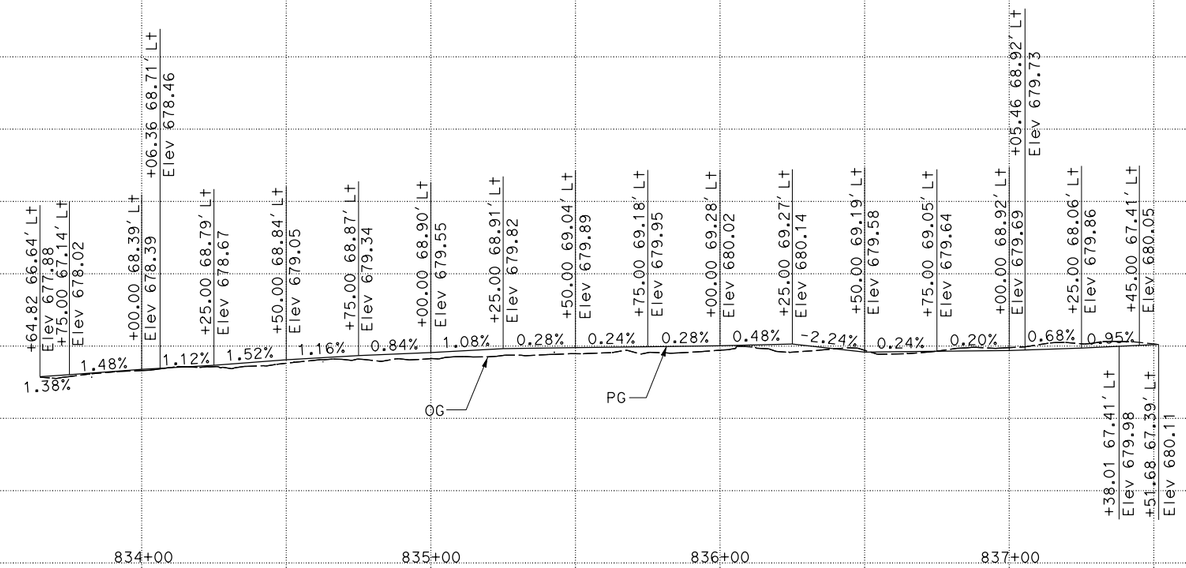

Loc 47 - Rt ES PROFILE
"101L8" LINE

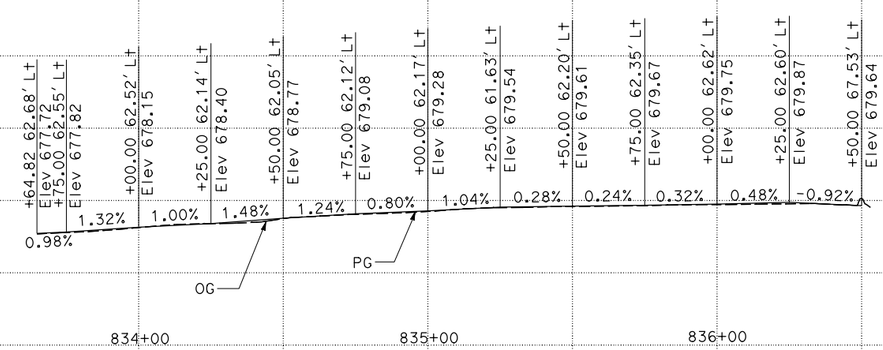

Loc 47 - Rt FL PROFILE
"101L8" LINE

PROFILE

SCALE: Horiz: 1" = 25'
Vert: 1" = 5'

P-17

STATION		TOTAL
CY	Exc	
	Emb	

STATE OF CALIFORNIA - DEPARTMENT OF TRANSPORTATION
Caltrans
DESIGN

FUNCTIONAL SUPERVISOR: DEREK HIGA
CALCULATED-DESIGNED BY: MYLY NGUYEN
CHECKED BY: RICKY LEE
REVISED BY
DATE REVISED

LAST REVISION 03-03-15
DATE PLOTTED => 15-JAN-2016
TIME PLOTTED => 06:14

Dist	COUNTY	ROUTE	POST MILES TOTAL PROJECT	SHEET No.	TOTAL SHEETS
07	LA	5, 101	16.4, S0.0/25.9	64	459

Ricky Lee 4-22-15
REGISTERED CIVIL ENGINEER DATE

11-2-15
PLANS APPROVAL DATE

REGISTERED PROFESSIONAL ENGINEER RICKY LEE No. C74591 Exp. 12-31-17 CIVIL STATE OF CALIFORNIA

THE STATE OF CALIFORNIA OR ITS OFFICERS OR AGENTS SHALL NOT BE RESPONSIBLE FOR THE ACCURACY OR COMPLETENESS OF SCANNED COPIES OF THIS PLAN SHEET.

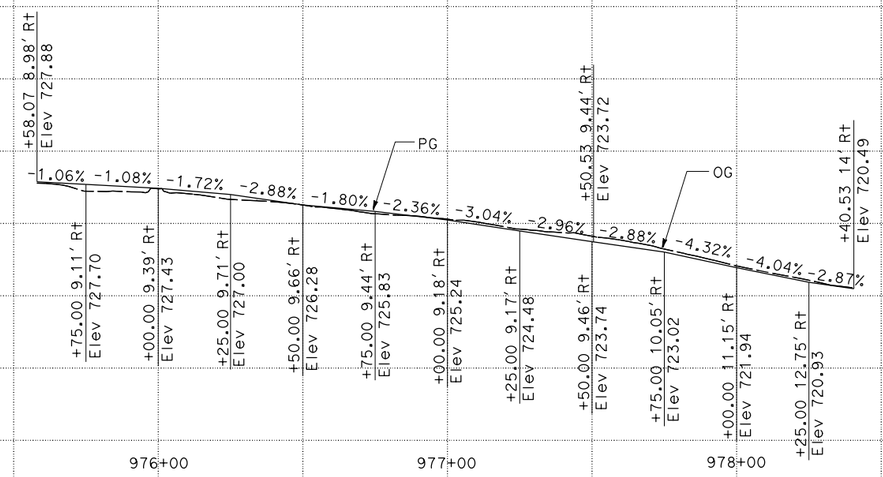

Loc 50 - Rt EP PROFILE
"HYFR1" LINE

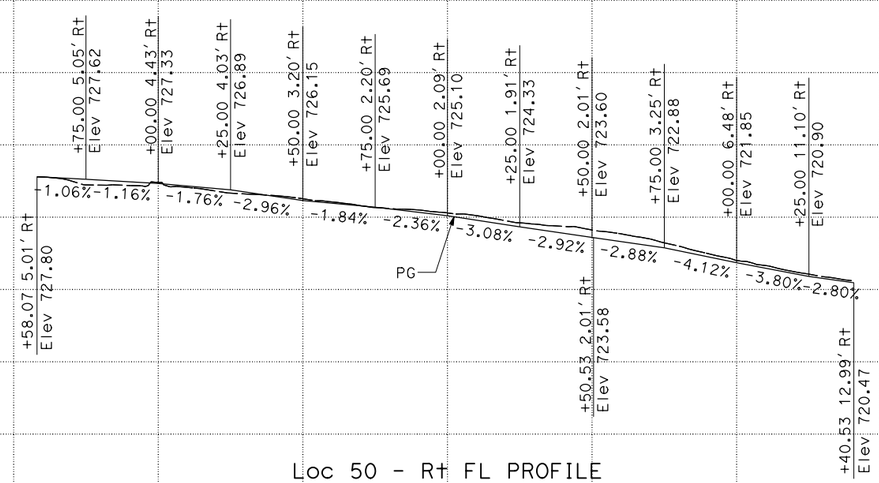

Loc 50 - Rt FL PROFILE
"HYFR1" LINE

PROFILE

SCALE: Horiz: 1" = 25'
Vert: 1" = 5'

P-18

STATION		TOTAL
CY	Exc	
	Emb	

STATE OF CALIFORNIA - DEPARTMENT OF TRANSPORTATION
Caltrans® DESIGN

FUNCTIONAL SUPERVISOR: DEREK HIGA
CALCULATED-DESIGNED BY: MYLY NGUYEN
CHECKED BY: RICKY LEE
REVISED BY
DATE REVISED

LAST REVISION 03-03-15
DATE PLOTTED => 15-JAN-2016
TIME PLOTTED => 06:14

Dist	COUNTY	ROUTE	POST MILES TOTAL PROJECT	SHEET No.	TOTAL SHEETS
07	LA	5, 101	16.4, S0.0/25.9	65	459

Ricky Lee 4-22-15
REGISTERED CIVIL ENGINEER DATE

11-2-15
PLANS APPROVAL DATE

REGISTERED PROFESSIONAL ENGINEER
RICKY LEE
No. C74591
Exp. 12-31-17
CIVIL
STATE OF CALIFORNIA

THE STATE OF CALIFORNIA OR ITS OFFICERS OR AGENTS SHALL NOT BE RESPONSIBLE FOR THE ACCURACY OR COMPLETENESS OF SCANNED COPIES OF THIS PLAN SHEET.

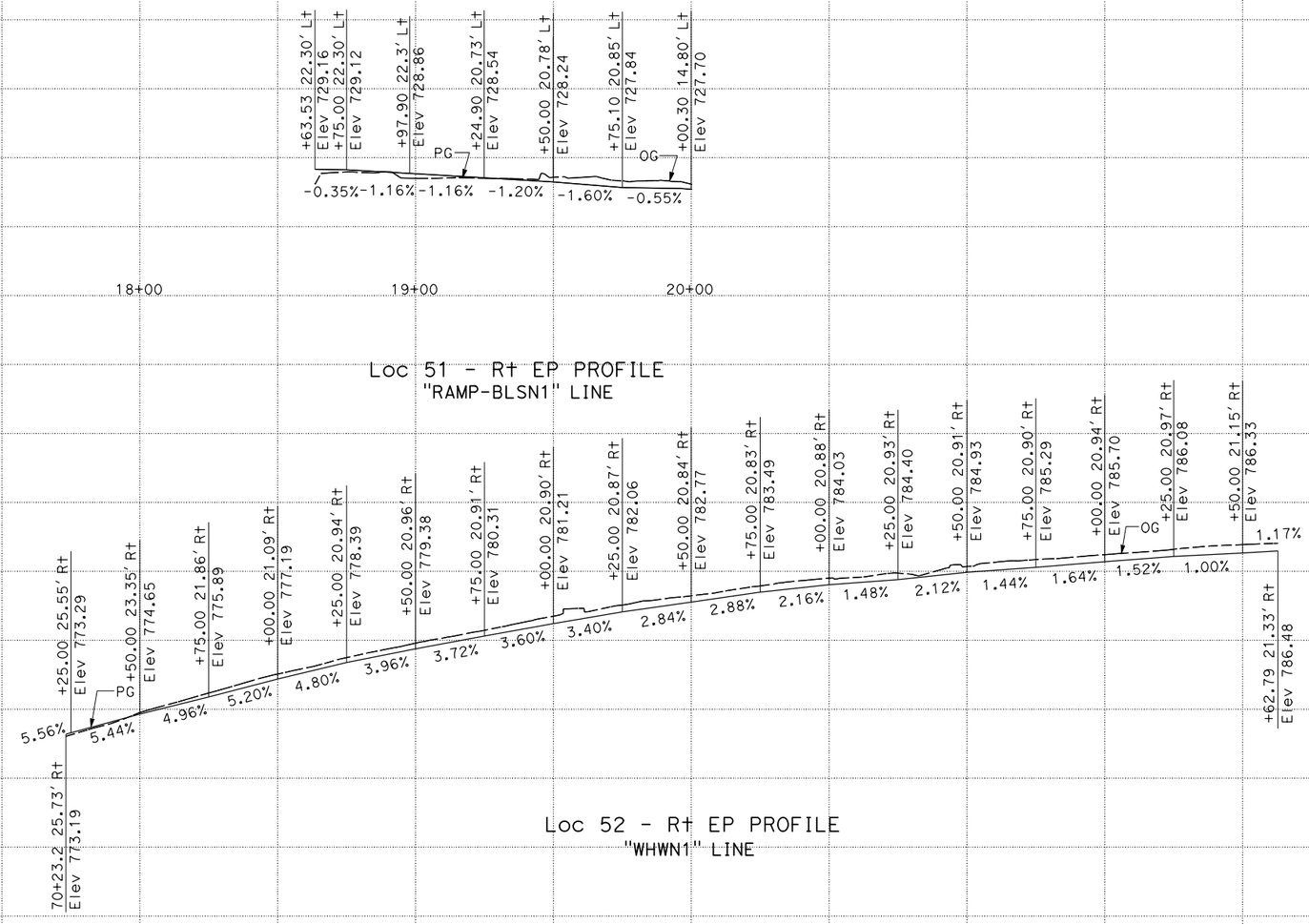

PROFILE

SCALE: Horiz: 1" = 25'
Vert: 1" = 5'

P-19

STATION		TOTAL
CY	Exc	
	Emb	

REVISED BY / DATE REVISED

MYLY NGUYEN / RICKY LEE

CALCULATED-DESIGNED BY / CHECKED BY

FUNCTIONAL SUPERVISOR: DEREK HIGA

STATE OF CALIFORNIA - DEPARTMENT OF TRANSPORTATION
Caltrans
DESIGN

LAST REVISION 03-03-15
DATE PLOTTED => 15-JAN-2016
TIME PLOTTED => 06:14

Dist	COUNTY	ROUTE	POST MILES TOTAL PROJECT	SHEET No.	TOTAL SHEETS
07	LA	5, 101	16.4, S0.0/25.9	66	459

Ricky Lee 4-22-15
REGISTERED CIVIL ENGINEER DATE

11-2-15
PLANS APPROVAL DATE

REGISTERED PROFESSIONAL ENGINEER
RICKY LEE
No. C74591
Exp. 12-31-17
CIVIL
STATE OF CALIFORNIA

THE STATE OF CALIFORNIA OR ITS OFFICERS OR AGENTS SHALL NOT BE RESPONSIBLE FOR THE ACCURACY OR COMPLETENESS OF SCANNED COPIES OF THIS PLAN SHEET.

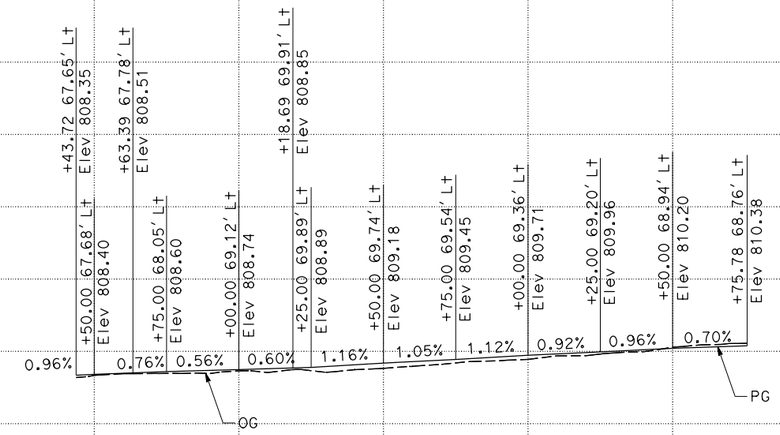

Loc 53 - Rt ES PROFILE
"101L9" LINE

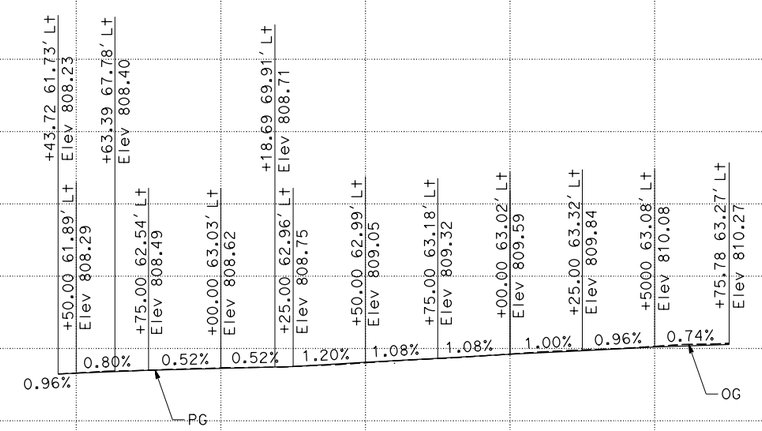

Loc 53 - Rt FL PROFILE
"101L9" LINE

PROFILE

SCALE: Horiz: 1" = 25'
Vert: 1" = 5'

P-20

STATION	1094+00	1095+00	1096+00	1097+00	TOTAL
CY Exc					
CY Emb					

STATE OF CALIFORNIA - DEPARTMENT OF TRANSPORTATION
Caltrans® DESIGN

FUNCTIONAL SUPERVISOR: DEREK HIGA
CALCULATED-DESIGNED BY: ANTOINE NADER
CHECKED BY: RICKY LEE
REVISED BY
DATE REVISED

LAST REVISION 03-03-15
DATE PLOTTED => 15-JAN-2016
TIME PLOTTED => 06:14

Dist	COUNTY	ROUTE	POST MILES TOTAL PROJECT	SHEET No.	TOTAL SHEETS
07	LA	5, 101	16.4, S0.0/25.9	67	459

Ricky Lee 4-22-15
REGISTERED CIVIL ENGINEER DATE

11-2-15
PLANS APPROVAL DATE

REGISTERED PROFESSIONAL ENGINEER
RICKY LEE
No. C74591
Exp. 12-31-17
CIVIL
STATE OF CALIFORNIA

THE STATE OF CALIFORNIA OR ITS OFFICERS OR AGENTS SHALL NOT BE RESPONSIBLE FOR THE ACCURACY OR COMPLETENESS OF SCANNED COPIES OF THIS PLAN SHEET.

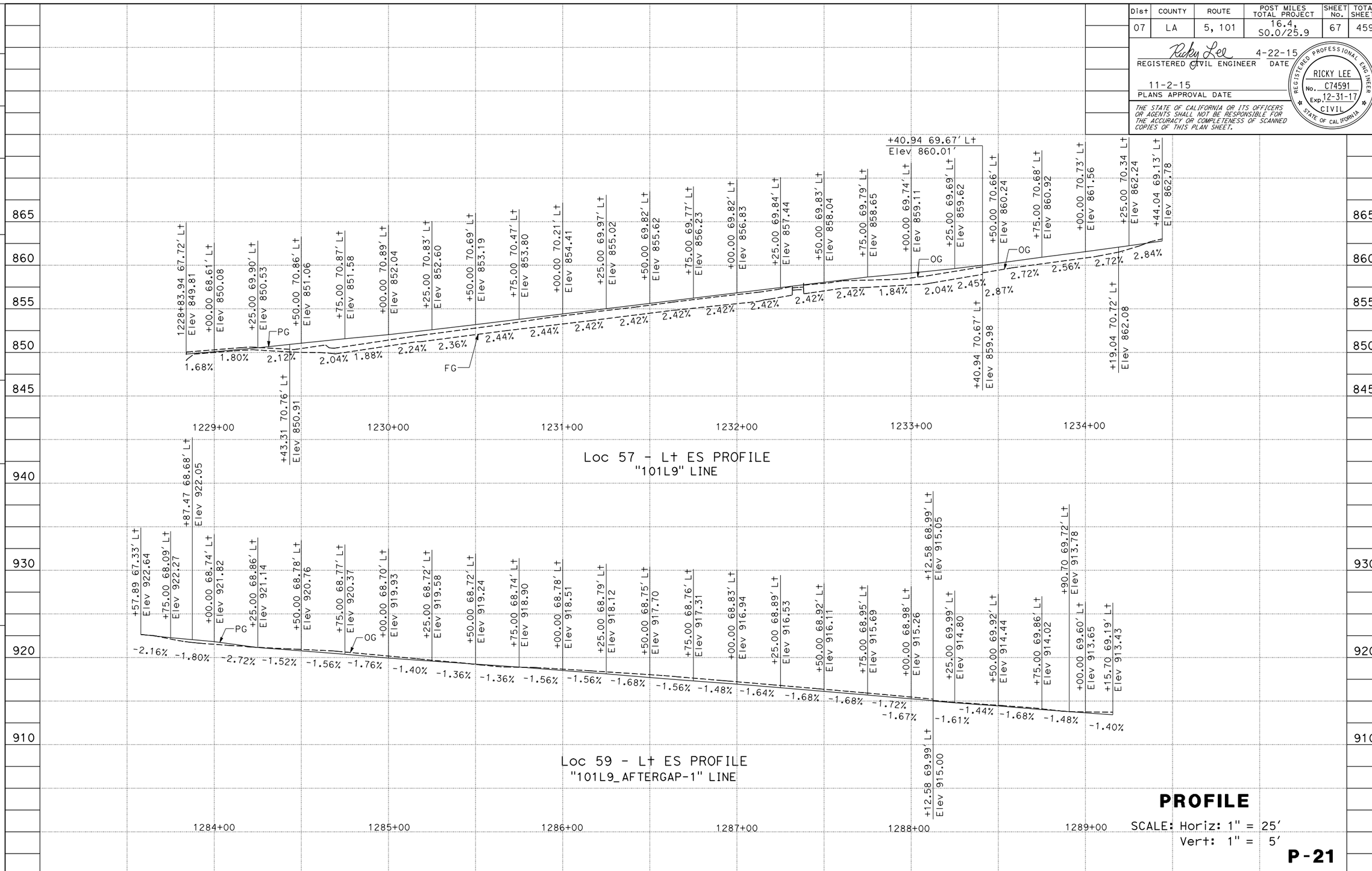

PROFILE

SCALE: Horiz: 1" = 25'
Vert: 1" = 5'

P-21

STATION		TOTAL
CY	Exc	
	Emb	

REVISED BY | DATE REVISED
MYLY NGUYEN | RICKY LEE
CALCULATED-DESIGNED BY | CHECKED BY
FUNCTIONAL SUPERVISOR: DEREK HIGA

STATE OF CALIFORNIA - DEPARTMENT OF TRANSPORTATION
Caltrans® DESIGN

LAST REVISION 03-25-15
DATE PLOTTED => 15-JAN-2016
TIME PLOTTED => 06:14

Dist	COUNTY	ROUTE	POST MILES TOTAL PROJECT	SHEET No.	TOTAL SHEETS
07	LA	5, 101	16.4, S0.0/25.9	68	459

Ricky Lee 4-22-15
REGISTERED CIVIL ENGINEER DATE

11-2-15
PLANS APPROVAL DATE

REGISTERED PROFESSIONAL ENGINEER RICKY LEE No. C74591 Exp. 12-31-17 CIVIL STATE OF CALIFORNIA

THE STATE OF CALIFORNIA OR ITS OFFICERS OR AGENTS SHALL NOT BE RESPONSIBLE FOR THE ACCURACY OR COMPLETENESS OF SCANNED COPIES OF THIS PLAN SHEET.

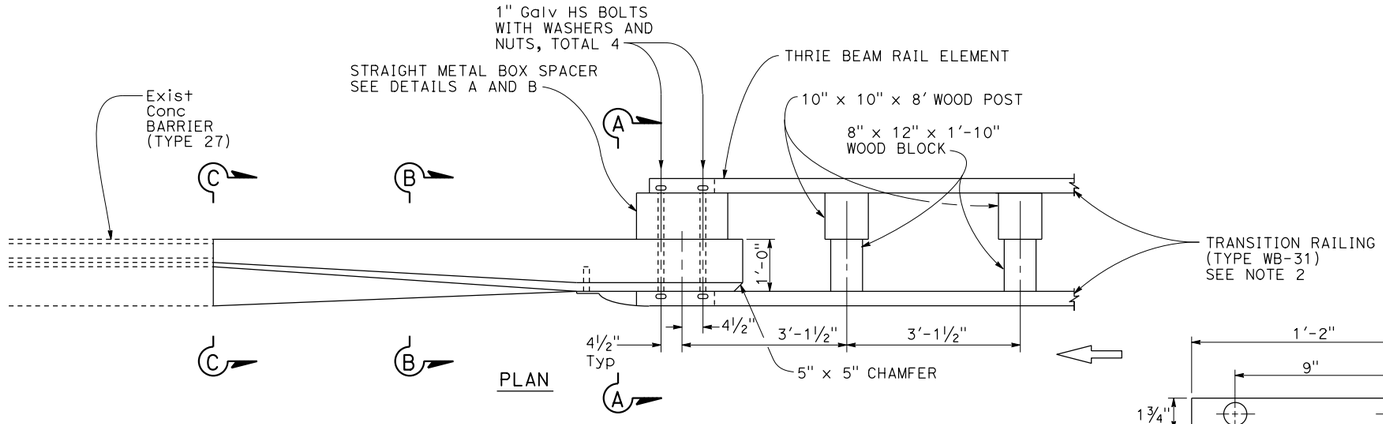

PLAN

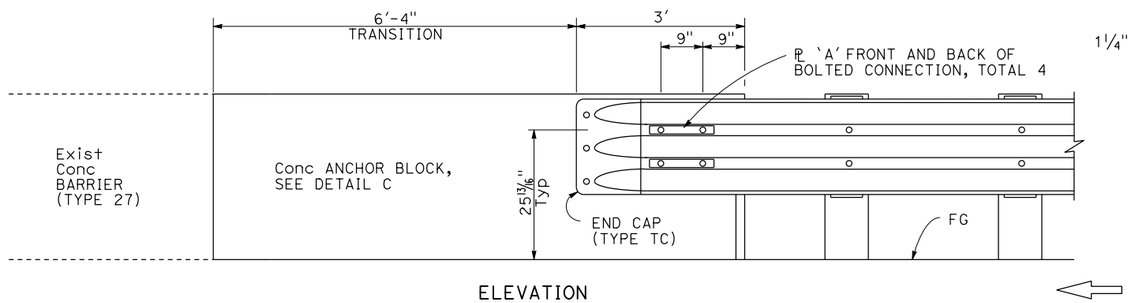

ELEVATION

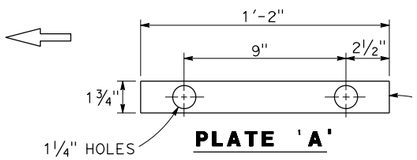

PLATE 'A'

NOTES:

1. ADDITIONAL DETAILS OF POSTS, BLOCKS AND HARDWARE ARE SHOWN. ON REVISED STANDARD PLANS RSP A77M1, RSP A77N1 AND RSP A77N2.
2. FOR ADDITIONAL DETAILS OF TRANSITION RAILING (TYPE WB-31), SEE REVISED STANDARD PLAN RSP A77U4. TRANSITION RAILING (TYPE WB-31) TRANSITIONS THE 12 GAUGE MGS RAILING SECTION TO A HEAVIER GAGE NESTED THRIE BEAM RAILING SECTION WHICH IS CONNECTED TO THE CONCRETE ANCHOR BLOCK.

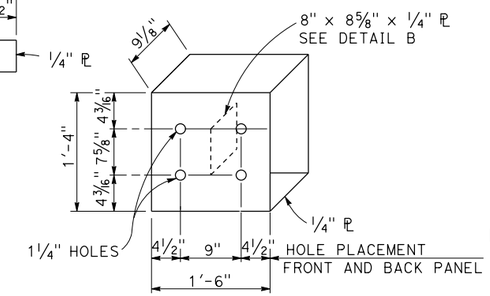

DETAIL A

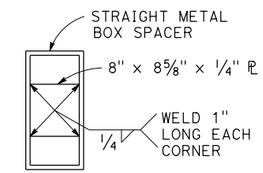

DETAIL B

STRAIGHT METAL BOX SPACER

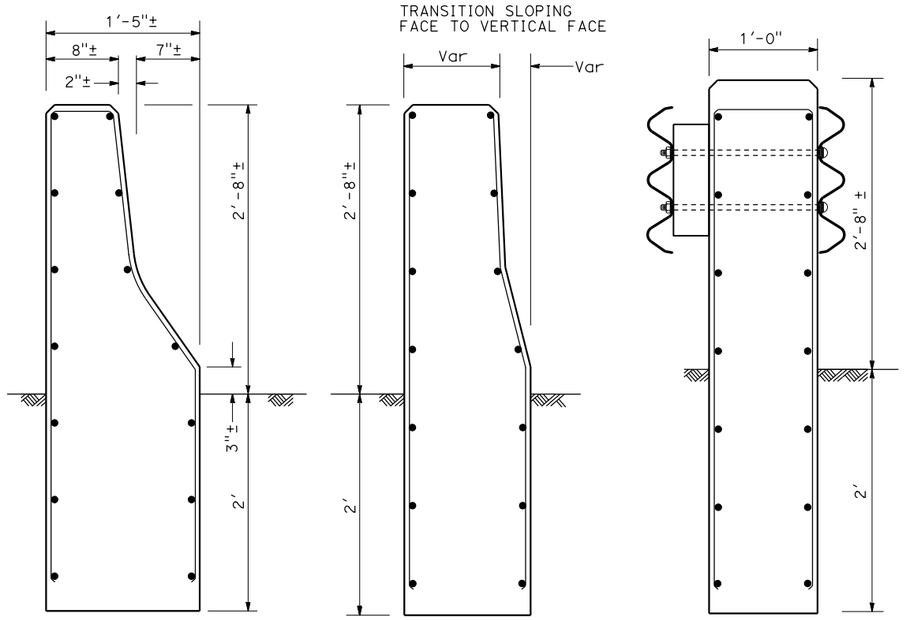

SECTION C-C SECTION B-B SECTION A-A

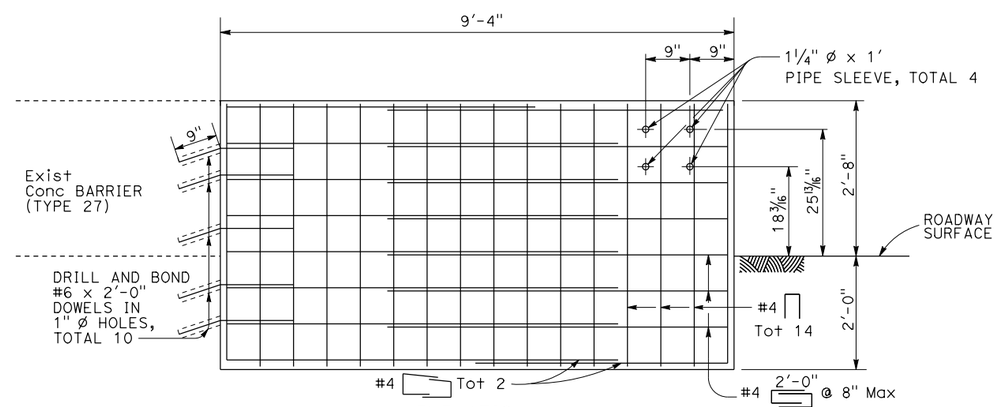

ELEVATION

ANCHOR BLOCK FOR TRANSITION RAILING CONNECTION

DETAIL C

CONSTRUCTION DETAILS

ANCHOR BLOCK FOR TRANSITION RAILING (TYPE WB-31) CONNECTION - TYPE 27

NO SCALE

C-1

STATE OF CALIFORNIA - DEPARTMENT OF TRANSPORTATION
Caltrans® DESIGN
FUNCTIONAL SUPERVISOR DEREK HIGA
CALCULATED-DESIGNED BY MYLY NGUYEN
CHECKED BY RICKY LEE
REVISED BY
DATE REVISED

LAST REVISION 03-02-15
DATE PLOTTED => 15-JAN-2016
TIME PLOTTED => 06:14

Dist	COUNTY	ROUTE	POST MILES TOTAL PROJECT	SHEET No.	TOTAL SHEETS
07	LA	5, 101	16.4, S0.0/25.9	69	459

Ricky Lee 4-22-15
REGISTERED CIVIL ENGINEER DATE

11-2-15
PLANS APPROVAL DATE

REGISTERED PROFESSIONAL ENGINEER
RICKY LEE
No. C74591
Exp. 12-31-17
CIVIL
STATE OF CALIFORNIA

THE STATE OF CALIFORNIA OR ITS OFFICERS OR AGENTS SHALL NOT BE RESPONSIBLE FOR THE ACCURACY OR COMPLETENESS OF SCANNED COPIES OF THIS PLAN SHEET.

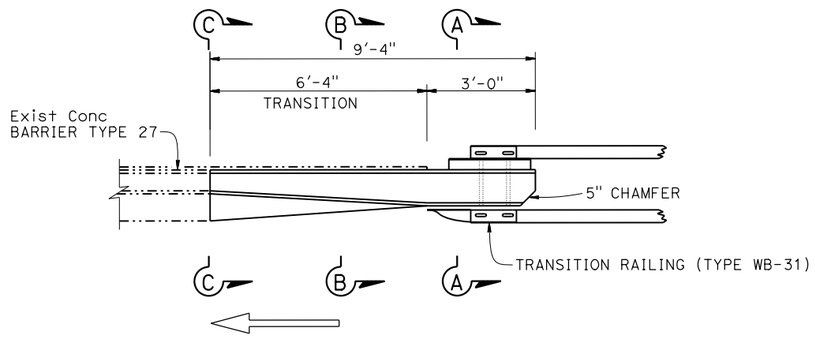

PLAN
½" = 1'-0"

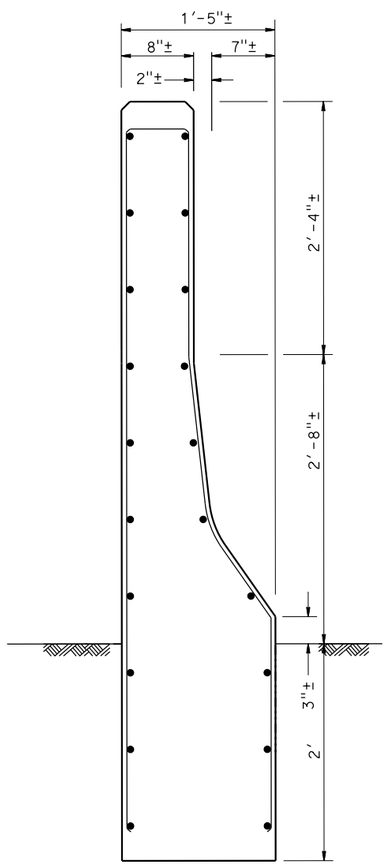

SECTION C-C
1½" = 1'-0"

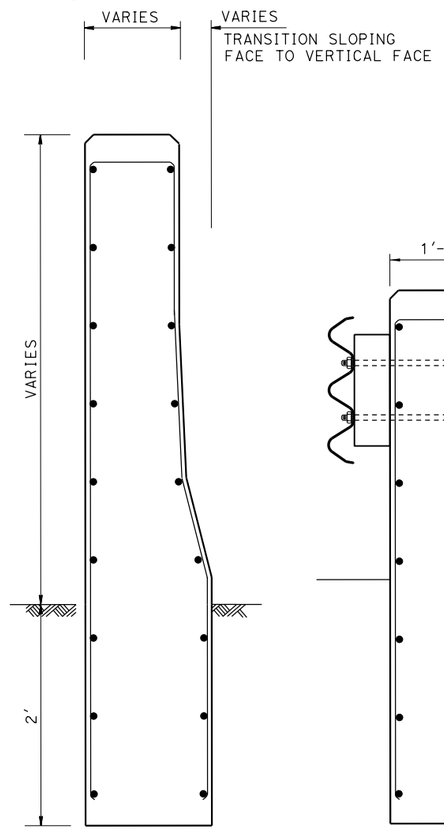

SECTION B-B
1½" = 1'-0"

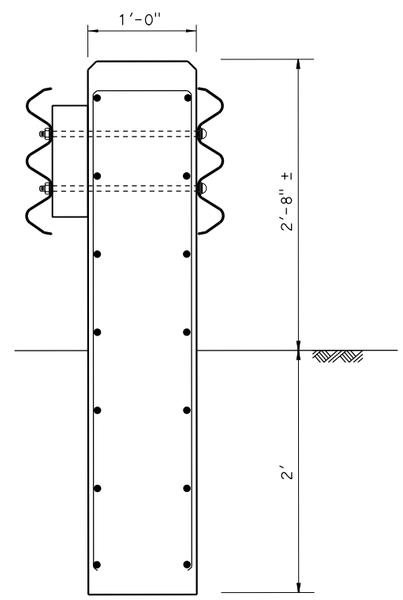

SECTION A-A
1½" = 1'-0"

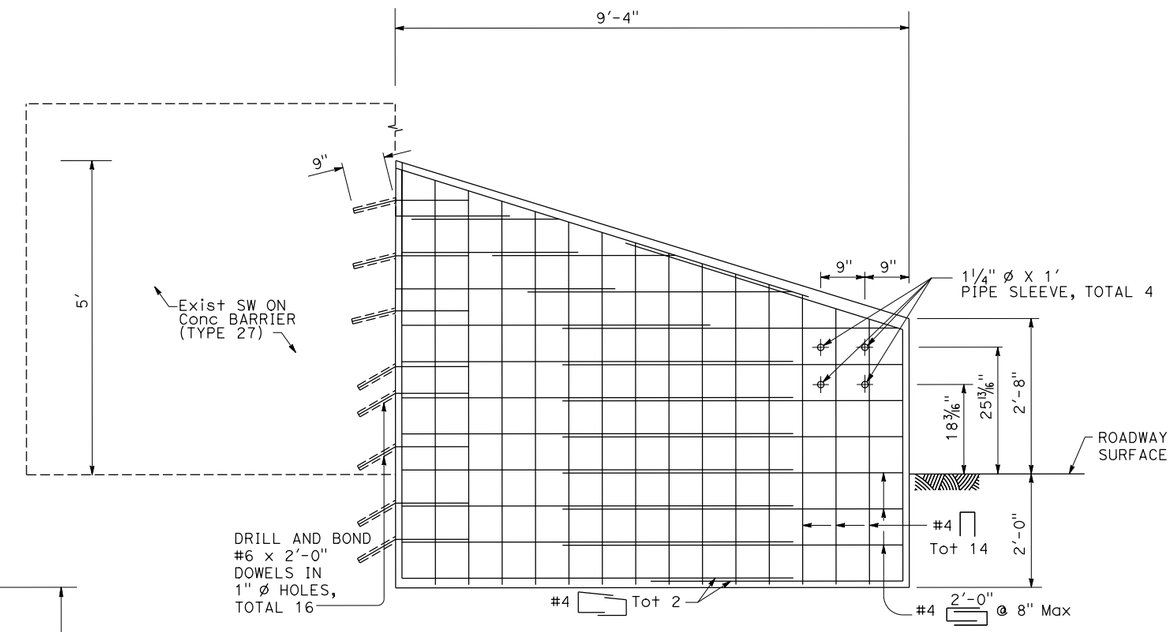

ELEVATION

ANCHOR BLOCK FOR TRANSITION RAILING CONNECTION

FOR DETAILS AND NOTES NOT SHOWN,
SEE REVISED STANDARD PLAN RSP A77U3
NO SCALE

CONSTRUCTION DETAILS
ANCHOR BLOCK FOR TRANSITION RAILING (TYPE WB-31) CONNECTION TO WALLS - TYPE 27

SCALE AS SHOWN

C-2

REVISED BY	DATE REVISED

CALCULATED-DESIGNED BY	MYLY NGUYEN
CHECKED BY	RICKY LEE
FUNCTIONAL SUPERVISOR	DEREK HIGA

STATE OF CALIFORNIA - DEPARTMENT OF TRANSPORTATION
Caltrans
DESIGN

LAST REVISION 03-02-15
DATE PLOTTED => 15-JAN-2016
TIME PLOTTED => 06:14

Dist	COUNTY	ROUTE	POST MILES TOTAL PROJECT	SHEET No.	TOTAL SHEETS
07	LA	5, 101	16.4, S0.0/25.9	70	459

Ricky Lee 4-22-15
REGISTERED CIVIL ENGINEER DATE

11-2-15
PLANS APPROVAL DATE

REGISTERED PROFESSIONAL ENGINEER RICKY LEE No. C74591 Exp. 12-31-17 CIVIL STATE OF CALIFORNIA

THE STATE OF CALIFORNIA OR ITS OFFICERS OR AGENTS SHALL NOT BE RESPONSIBLE FOR THE ACCURACY OR COMPLETENESS OF SCANNED COPIES OF THIS PLAN SHEET.

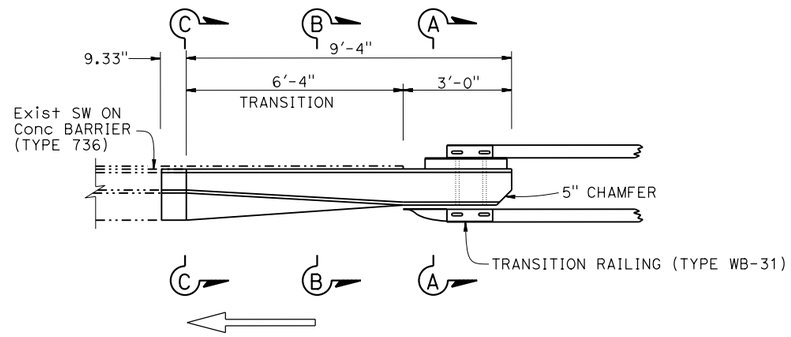

PLAN
1/2" = 1'-0"

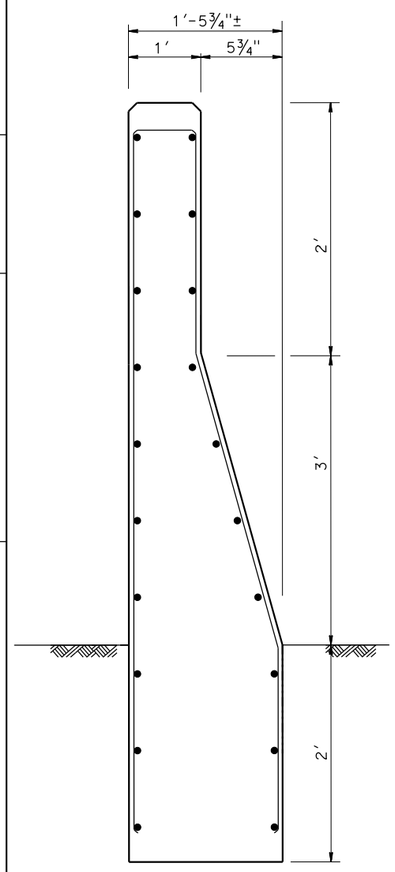

SECTION C-C
1½" = 1'-0"

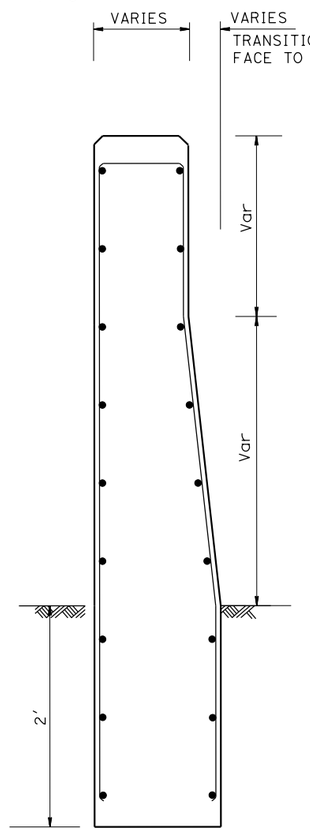

SECTION B-B
1½" = 1'-0"

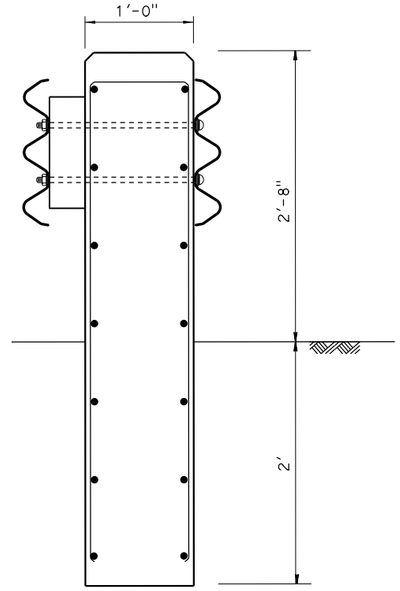

SECTION A-A
1½" = 1'-0"

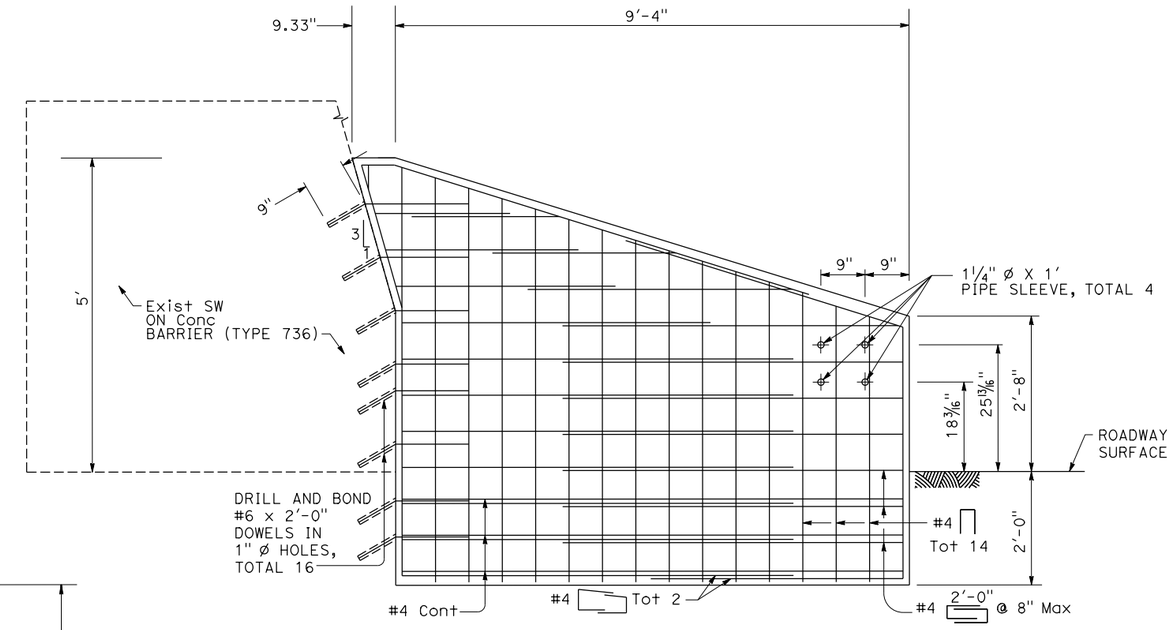

ELEVATION

ANCHOR BLOCK FOR TRANSITION RAILING CONNECTION

FOR DETAILS AND NOTES NOT SHOWN,
SEE REVISED STANDARD PLAN RSP A77U3

NO SCALE

CONSTRUCTION DETAILS

ANCHOR BLOCK FOR TRANSITION RAILING (TYPE WB-31) CONNECTION TO WALLS - TYPE 736

SCALE AS SHOWN

C-3

STATE OF CALIFORNIA - DEPARTMENT OF TRANSPORTATION
Caltrans® DESIGN

FUNCTIONAL SUPERVISOR: DEREK HIGA
CALCULATED-DESIGNED BY: MYLY NGUYEN
CHECKED BY: RICKY LEE
REVISED BY
DATE REVISED

LAST REVISION 03-02-15
DATE PLOTTED => 15-JAN-2016
TIME PLOTTED => 06:14

Dist	COUNTY	ROUTE	POST MILES TOTAL PROJECT	SHEET No.	TOTAL SHEETS
07	LA	5, 101	16.4, S0.0/25.9	71	459

Ricky Lee 4-22-15
REGISTERED CIVIL ENGINEER DATE

11-2-15
PLANS APPROVAL DATE

REGISTERED PROFESSIONAL ENGINEER RICKY LEE No. C74591 Exp. 12-31-17 CIVIL STATE OF CALIFORNIA

THE STATE OF CALIFORNIA OR ITS OFFICERS OR AGENTS SHALL NOT BE RESPONSIBLE FOR THE ACCURACY OR COMPLETENESS OF SCANNED COPIES OF THIS PLAN SHEET.

NOTE:

THE CONTRACTOR MUST VERIFY ALL CONTROLLING FIELD DIMENSIONS BEFORE ORDERING OR FABRICATING ANY MATERIAL.

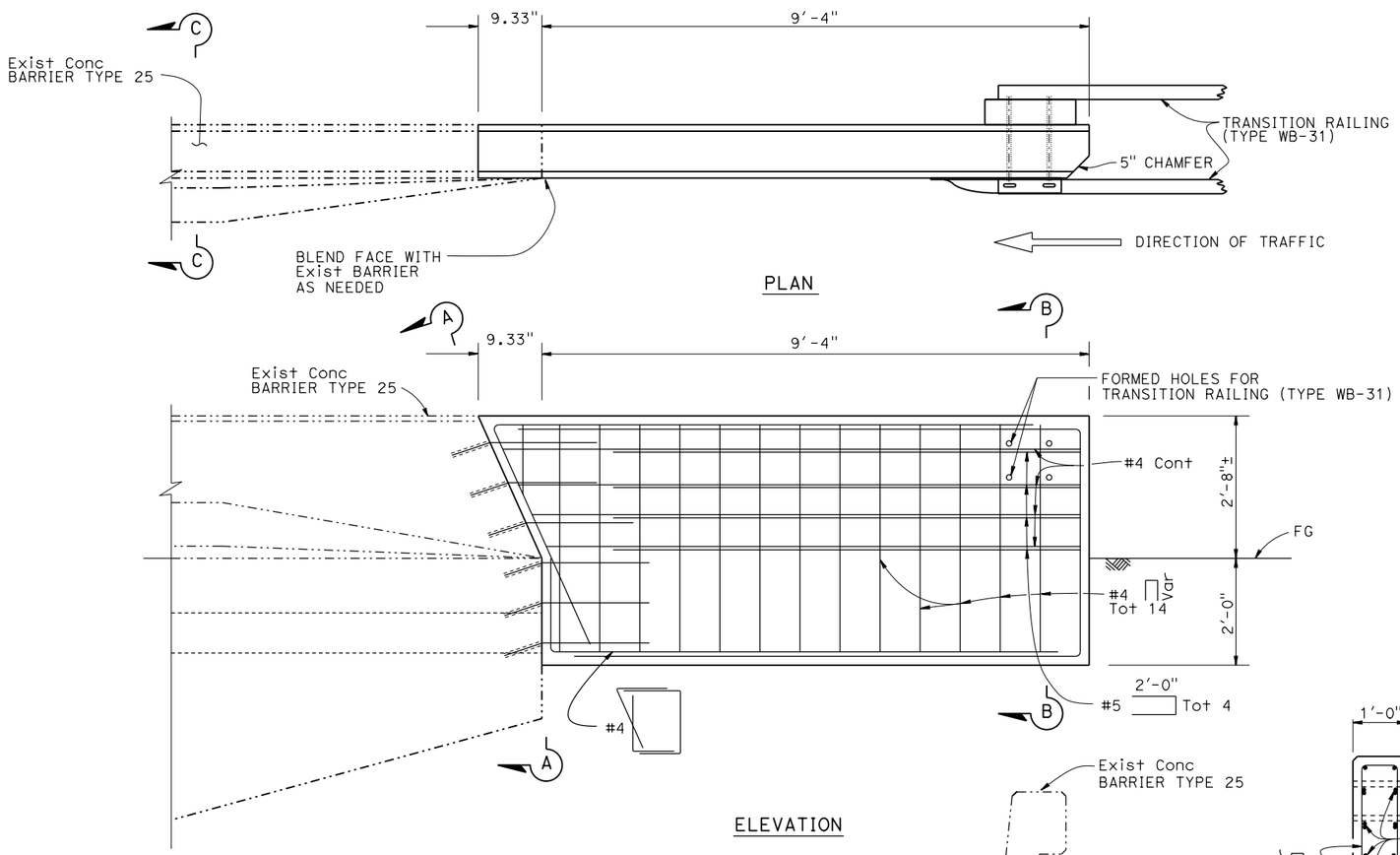

LEGEND:

-·-·-·- INDICATES Exist STRUCTURE

——— INDICATES NEW CONSTRUCTION

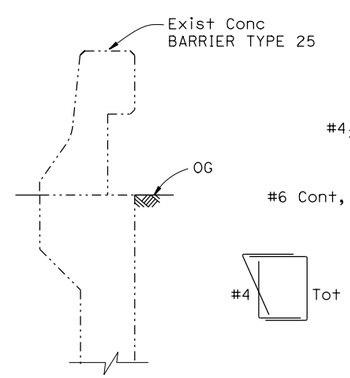

SECTION C-C

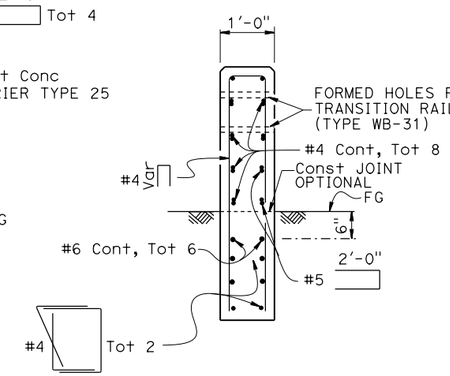

SECTION B-B

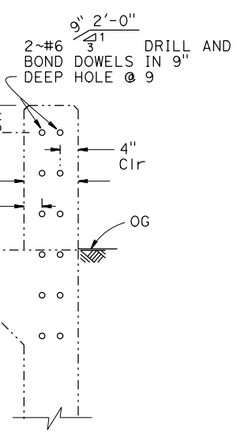

SECTION A-A

CONSTRUCTION DETAILS

ANCHOR BLOCK FOR TRANSITION RAILING (TYPE WB-31) CONNECTION - TYPE 25

NO SCALE

C-4

STATE OF CALIFORNIA - DEPARTMENT OF TRANSPORTATION
Caltrans® DESIGN

FUNCTIONAL SUPERVISOR: DEREK HIGA
CALCULATED-DESIGNED BY: MYLY NGUYEN
CHECKED BY: RICKY LEE
REVISED BY
DATE REVISED

LAST REVISION 03-02-15
DATE PLOTTED => 15-JAN-2016
TIME PLOTTED => 06:14

Dist	COUNTY	ROUTE	POST MILES TOTAL PROJECT	SHEET No.	TOTAL SHEETS
07	LA	5, 101	16.4, S0.0/25.9	72	459

Ricky Lee 4-22-15
REGISTERED CIVIL ENGINEER DATE

11-2-15
PLANS APPROVAL DATE

REGISTERED PROFESSIONAL ENGINEER RICKY LEE No. C74591 Exp. 12-31-17 CIVIL STATE OF CALIFORNIA

THE STATE OF CALIFORNIA OR ITS OFFICERS OR AGENTS SHALL NOT BE RESPONSIBLE FOR THE ACCURACY OR COMPLETENESS OF SCANNED COPIES OF THIS PLAN SHEET.

NOTE:
THE CONTRACTOR MUST VERIFY ALL CONTROLLING FIELD DIMENSIONS BEFORE ORDERING OR FABRICATING ANY MATERIAL.

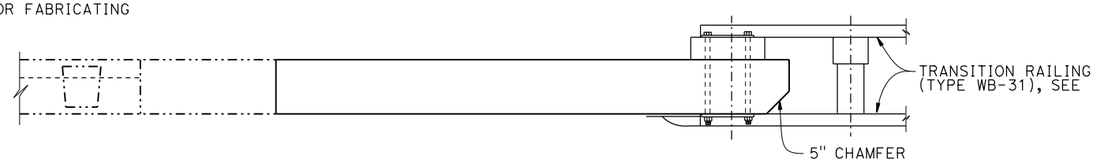

PLAN

⇦ DIRECTION OF TRAFFIC

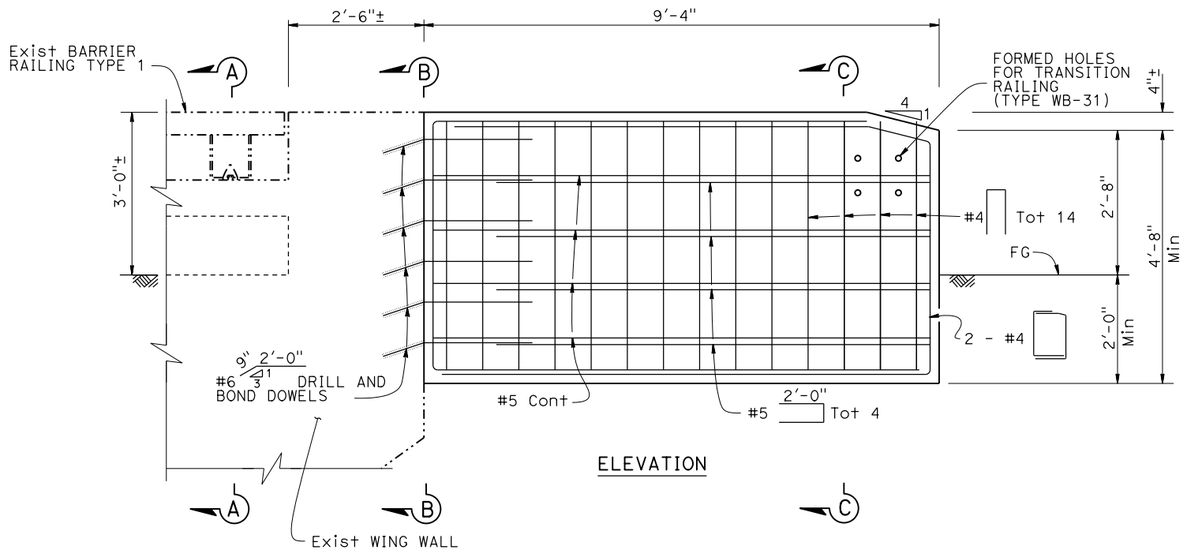

ELEVATION

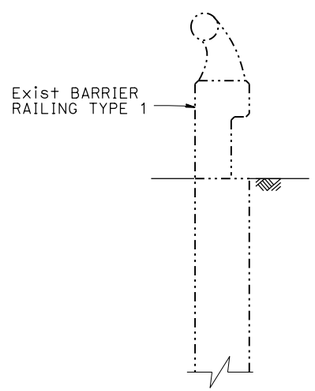

SECTION A-A

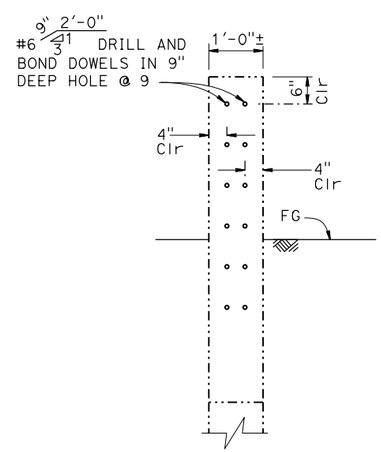

SECTION B-B

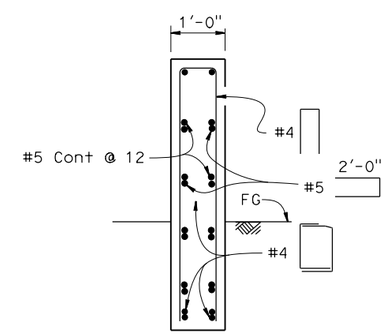

NOTE:
DRILL AND BOND DOWELS NOT SHOWN

SECTION C-C

NOTE:
CUT AND REMOVE PORTION OF TYPE 1 AS REQUIRED

LEGEND:
-·-·- INDICATES Exist STRUCTURE
——— INDICATES NEW STRUCTURE

CONSTRUCTION DETAILS
ANCHOR BLOCK FOR TRANSITION RAILING (TYPE WB-31) CONNECTION - TYPE 1
NO SCALE

C-5

STATE OF CALIFORNIA - DEPARTMENT OF TRANSPORTATION
Caltrans® DESIGN

FUNCTIONAL SUPERVISOR: DEREK HIGA
CALCULATED-DESIGNED BY: MYLY NGUYEN
CHECKED BY: RICKY LEE
REVISED BY
DATE REVISED

LAST REVISION 03-02-15
DATE PLOTTED => 15-JAN-2016
TIME PLOTTED => 06:14

Dist	COUNTY	ROUTE	POST MILES TOTAL PROJECT	SHEET No.	TOTAL SHEETS
07	LA	5, 101	16.4, S0.0/25.9	73	459

Ricky Lee 4-22-15
REGISTERED CIVIL ENGINEER DATE

11-2-15
PLANS APPROVAL DATE

REGISTERED PROFESSIONAL ENGINEER RICKY LEE No. C74591 Exp. 12-31-17 CIVIL STATE OF CALIFORNIA

THE STATE OF CALIFORNIA OR ITS OFFICERS OR AGENTS SHALL NOT BE RESPONSIBLE FOR THE ACCURACY OR COMPLETENESS OF SCANNED COPIES OF THIS PLAN SHEET.

LEGEND:

ROADWAY EXCAVATION (TYPE Z-2) (AERIALLY DEPOSITED LEAD)

ROADWAY EXCAVATION (TYPE Z-3) (AERIALLY DEPOSITED LEAD)

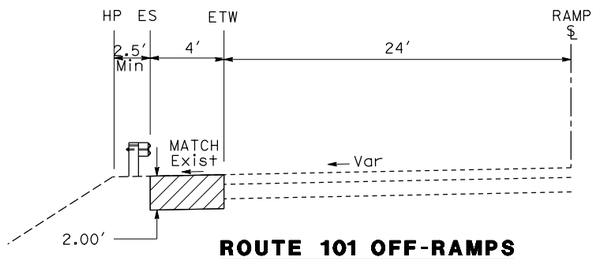

ROUTE 101 OFF-RAMPS

Loc 8 "ALOFFRMP1" 31+79.26 TO 36+85.80
Loc 28 "SMFR1" 87+91.19 TO 90+87.53
Loc 30 "WESF11" 6+12.97 TO 7+44.15

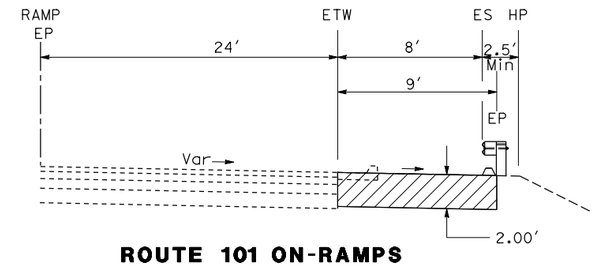

ROUTE 101 ON-RAMPS

Loc 1 "ATLG5" 16+53.05 TO 19+17.41
Loc 6 "MERF1" 4+42.61 TO 6+77.65
Loc 18 "BELN1" 31+97.22 TO 34+55.04
Loc 23 "SLSF11" 1+3.92 TO 3+27.45
Loc 24 "VESN11" 15+34.35 TO 17+74.42, 19+31.06 TO 22+74.09
Loc 41 "LCNF1" 8+51.97 TO 11+20.42
Loc 50 "HYFR1" 975+51.07 TO 978+40.53
Loc 51 "RAMP-BLSN1" 18+63.5 TO 20+00.30

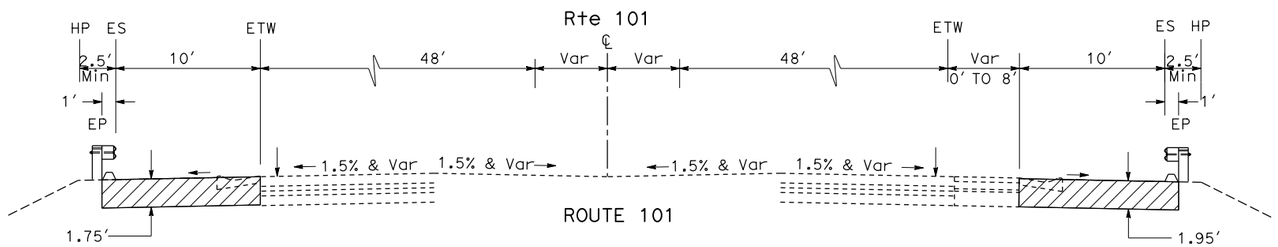

MAINLINE SHOULDERS

SOUTHBOUND

Loc 17 "101L1" 121+48.75 TO 128+84.09
Loc 22 "101L1" 201+98.64 TO 204+58.68
Loc 26 "101S2" 252+12.86 TO 255+62.13

NORTHBOUND

Loc 19 "101L1" 163+96.95 to 166+88.57

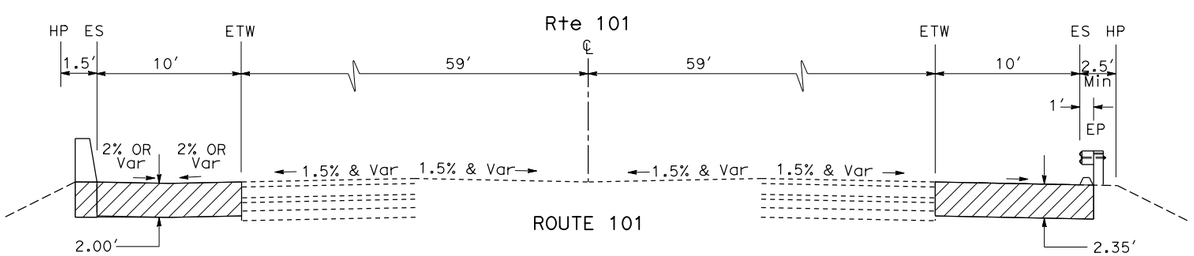

MAINLINE SHOULDERS

SOUTHBOUND

Loc 47 "101L8" 833+64.82 TO 837+53.86

NORTHBOUND

Loc 35 "101L6" 541+73.77 TO 545+47.82
Loc 36 "101L6" 573+08.82 TO 576+36.51
Loc 42 "101L8" 727+67.08 TO 730+39.12
Loc 43 "101L8" 732+04.30 TO 734+82.38
Loc 46 "101L8" 835+51.09 TO 838+11.09

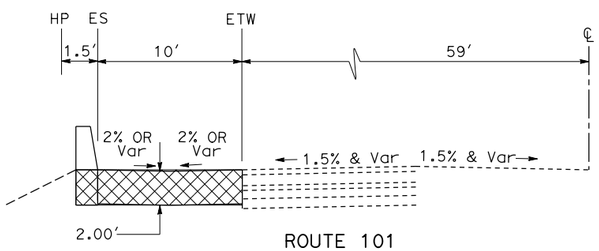

SOUTHBOUND

Loc 53 "101L9" 1094+43.72 TO 1096+76.50

CONSTRUCTION DETAILS
(AERIALLY DEPOSITED LEAD)

NO SCALE

C-6

REVISED BY	DATE REVISED
MYLY NGUYEN	RICKY LEE
CALCULATED-DESIGNED BY	CHECKED BY
FUNCTIONAL SUPERVISOR	DEREK HIGA

STATE OF CALIFORNIA - DEPARTMENT OF TRANSPORTATION
Caltrans® DESIGN

LAST REVISION 03-03-15 | DATE PLOTTED => 15-JAN-2016 TIME PLOTTED => 06:14

Dist	COUNTY	ROUTE	POST MILES TOTAL PROJECT	SHEET No.	TOTAL SHEETS
07	LA	5, 101	16.4, S0.0/25.9	74	459

Ricky Lee 4-22-15
REGISTERED CIVIL ENGINEER DATE

11-2-15
PLANS APPROVAL DATE

REGISTERED PROFESSIONAL ENGINEER
RICKY LEE
No. C74591
Exp. 12-31-17
CIVIL
STATE OF CALIFORNIA

THE STATE OF CALIFORNIA OR ITS OFFICERS OR AGENTS SHALL NOT BE RESPONSIBLE FOR THE ACCURACY OR COMPLETENESS OF SCANNED COPIES OF THIS PLAN SHEET.

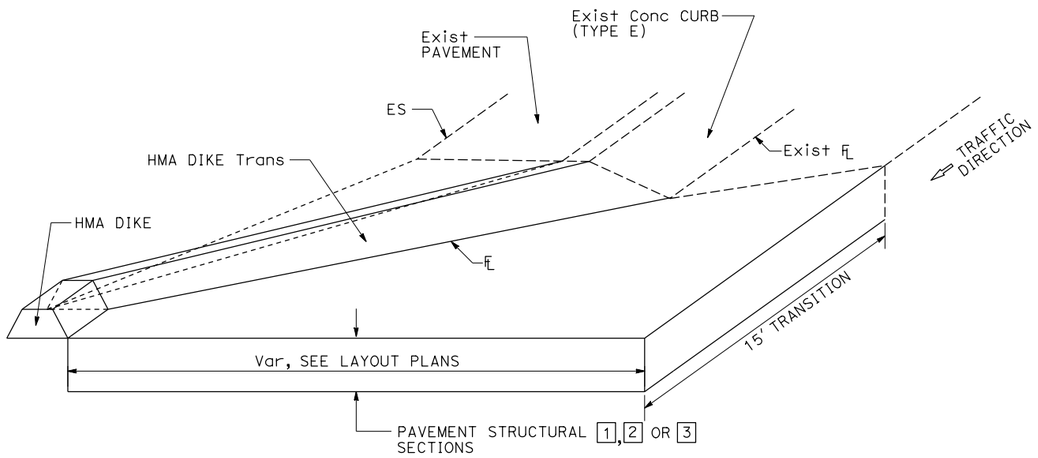

TRANSITION FROM Exist TYPE E CURB TO HMA DIKE

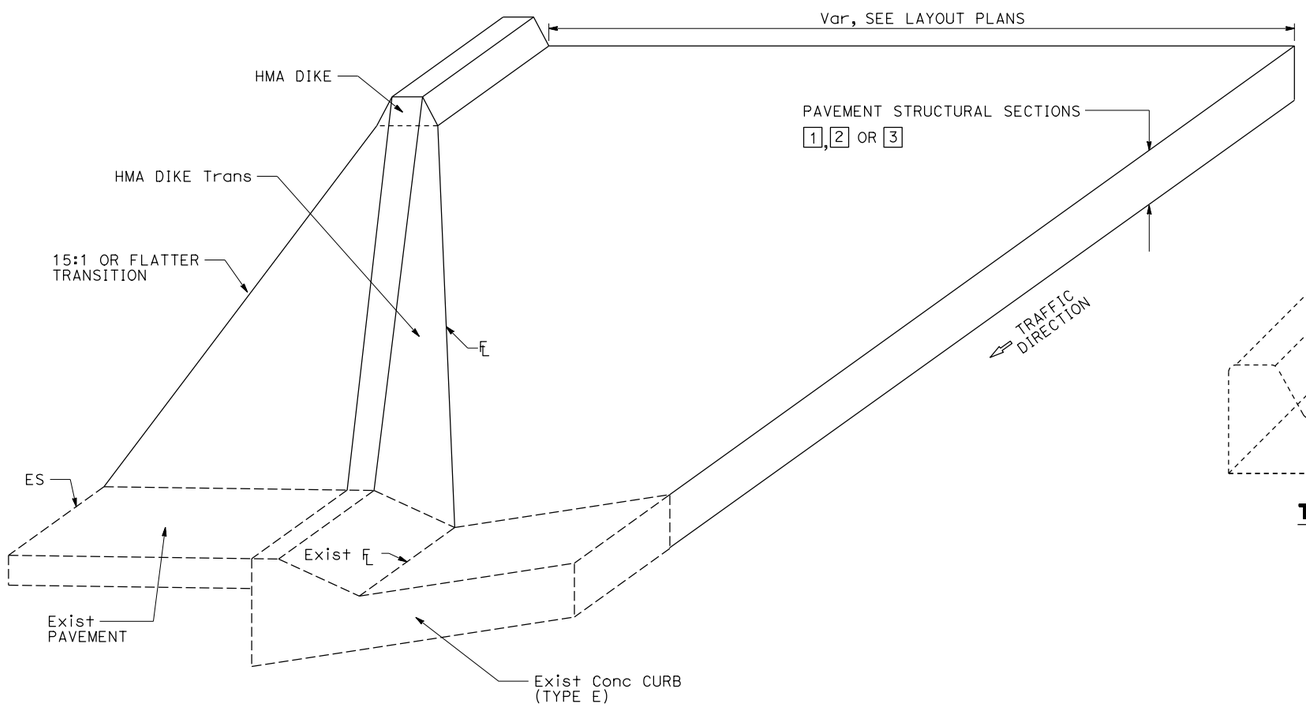

TRANSITION FROM HMA DIKE TO Exist TYPE E CURB

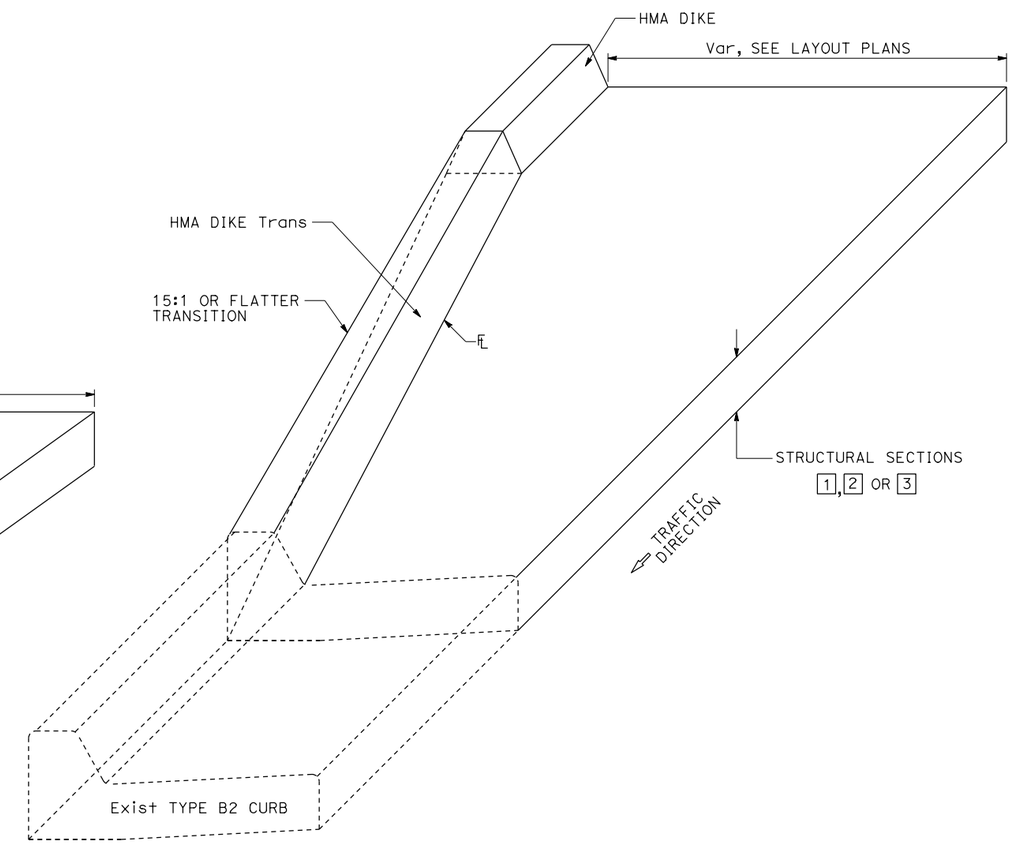

TRANSITION FROM HMA DIKE TO Exist TYPE B2 CURB

CONSTRUCTION DETAILS
HMA DIKE TRANSITIONS
NO SCALE

C-7

STATE OF CALIFORNIA - DEPARTMENT OF TRANSPORTATION
Caltrans®
DESIGN

FUNCTIONAL SUPERVISOR: DEREK HIGA
CALCULATED-DESIGNED BY: RICKY LEE
CHECKED BY: MARIA RODRIGUEZ
REVISED BY
DATE REVISED

LAST REVISION 03-02-15
DATE PLOTTED => 15-JAN-2016
TIME PLOTTED => 06:14

Dist	COUNTY	ROUTE	POST MILES TOTAL PROJECT	SHEET No.	TOTAL SHEETS
07	LA	5, 101	16.4, S0.0/25.9	75	459

Ricky Lee 4-22-15
REGISTERED CIVIL ENGINEER DATE

11-2-15
PLANS APPROVAL DATE

REGISTERED PROFESSIONAL ENGINEER RICKY LEE No. C74591 Exp. 12-31-17 CIVIL STATE OF CALIFORNIA

THE STATE OF CALIFORNIA OR ITS OFFICERS OR AGENTS SHALL NOT BE RESPONSIBLE FOR THE ACCURACY OR COMPLETENESS OF SCANNED COPIES OF THIS PLAN SHEET.

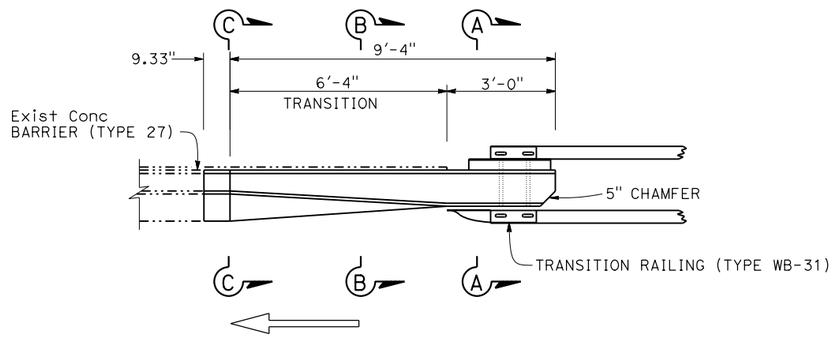

PLAN
1/2" = 1'-0"

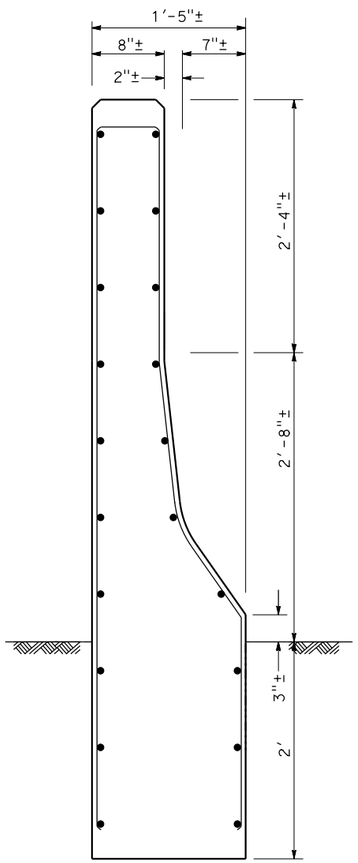

SECTION C-C
1 1/2" = 1'-0"

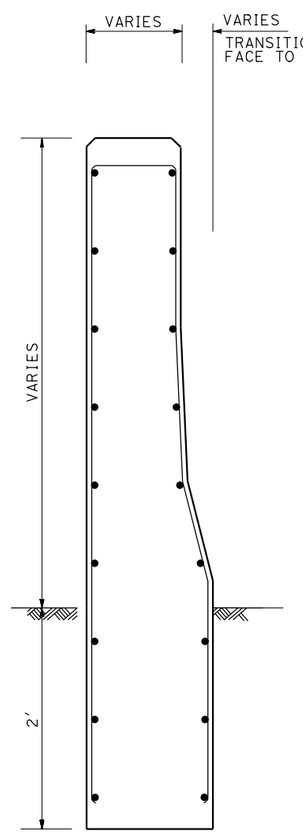

SECTION B-B
1 1/2" = 1'-0"

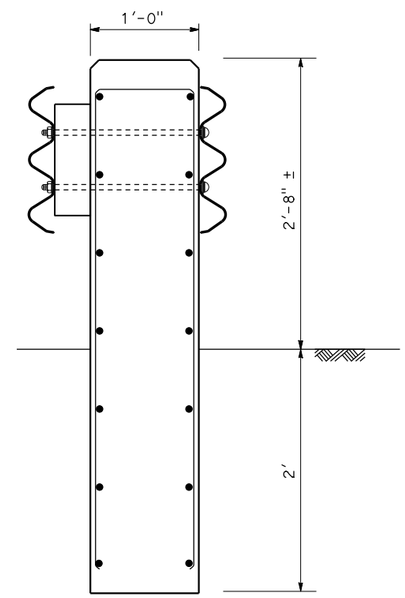

SECTION A-A
1 1/2" = 1'-0"

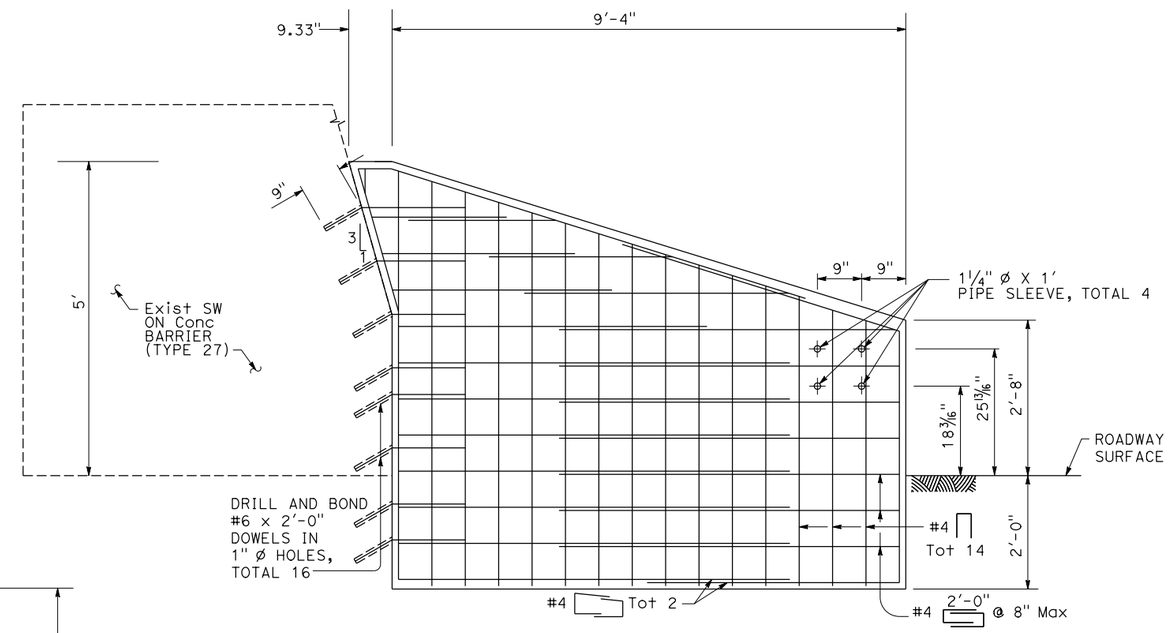

ELEVATION

ANCHOR BLOCK FOR TRANSITION

RAILING CONNECTION TO Exist SLANTED SOUND WALL

FOR DETAILS AND NOTES NOT SHOWN,
SEE REVISED STANDARD PLAN RSP A77U3

NO SCALE

CONSTRUCTION DETAILS

ANCHOR BLOCK FOR TRANSITION RAILING
(TYPE WB-31) CONNECTION TO WALLS - TYPE 27

SCALE AS SHOWN

C-8

STATE OF CALIFORNIA - DEPARTMENT OF TRANSPORTATION
Caltrans®
DESIGN

FUNCTIONAL SUPERVISOR: DEREK HIGA
CALCULATED-DESIGNED BY: RICKY LEE
CHECKED BY: MARIA RODRIGUEZ
REVISED BY
DATE REVISED

LAST REVISION 03-02-15
DATE PLOTTED => 15-JAN-2016
TIME PLOTTED => 06:14

Dist	COUNTY	ROUTE	POST MILES TOTAL PROJECT	SHEET No.	TOTAL SHEETS
07	LA	5, 101	16.4, S0.0/25.9	76	459

Ricky Lee 4-22-15
REGISTERED CIVIL ENGINEER DATE

11-2-15
PLANS APPROVAL DATE

REGISTERED PROFESSIONAL ENGINEER RICKY LEE No. C74591 Exp. 12-31-17 CIVIL STATE OF CALIFORNIA

THE STATE OF CALIFORNIA OR ITS OFFICERS OR AGENTS SHALL NOT BE RESPONSIBLE FOR THE ACCURACY OR COMPLETENESS OF SCANNED COPIES OF THIS PLAN SHEET.

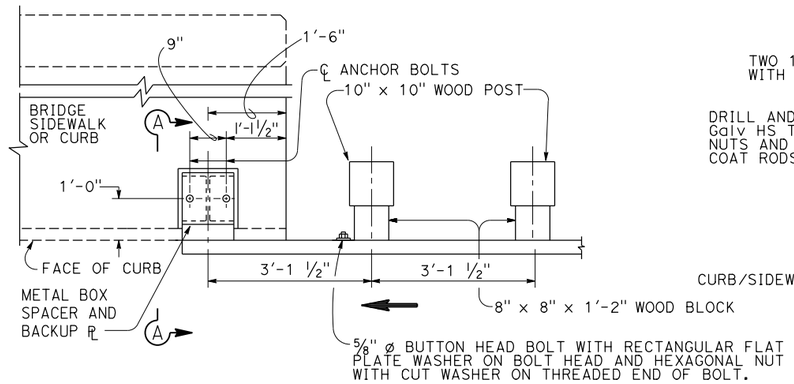

PLAN

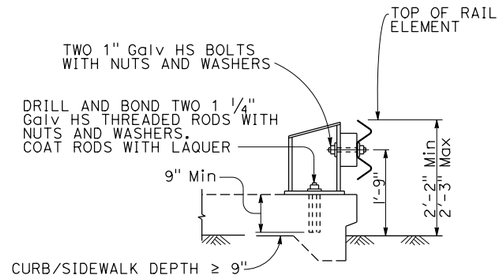

SECTION A-A

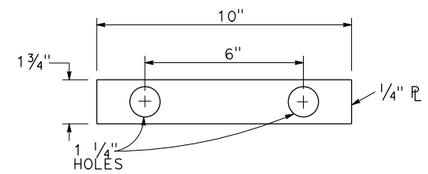

PLATE WASHER

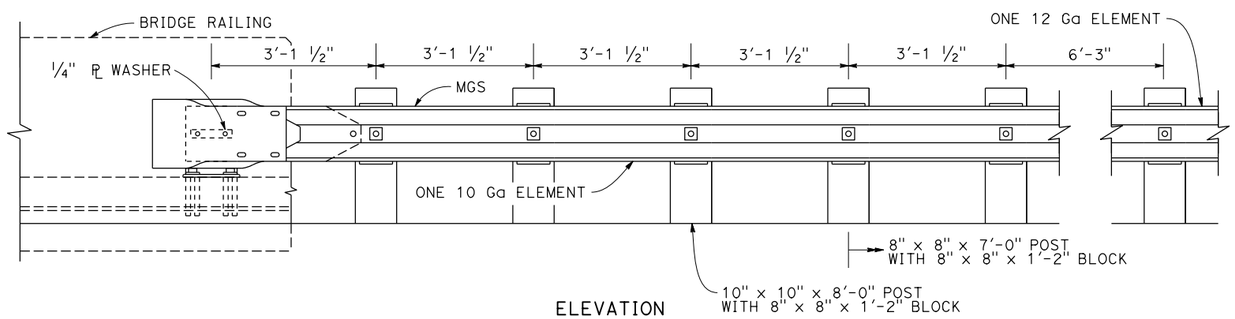

ELEVATION

CONNECTION DETAIL

CURB/SIDEWALK DEPTH ≥ 9"

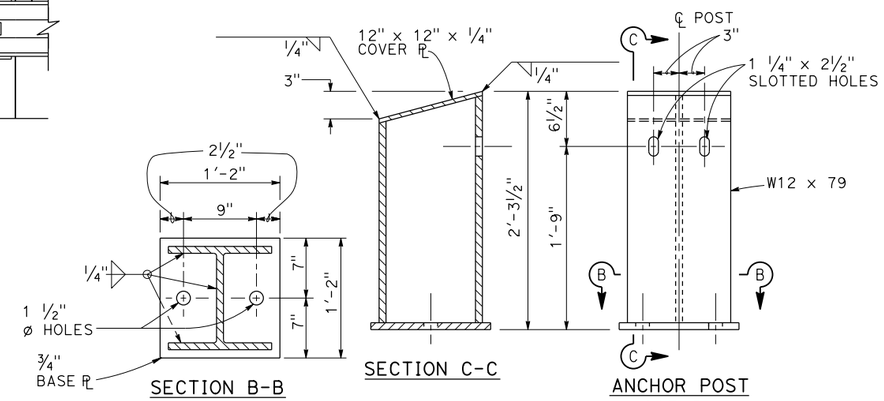

SECTION B-B

SECTION C-C

ANCHOR POST DETAILS

ANCHOR POST ASSEMBLY

TO BE GALVANIZED AFTER FABRICATION

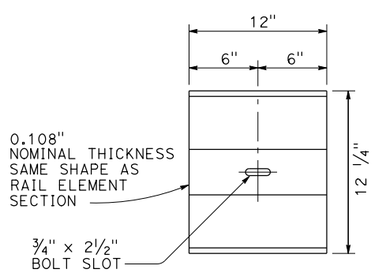

BACK-UP PLATE

FOR USE BETWEEN GUARDRAIL ELEMENT AND METAL BOX SPACER

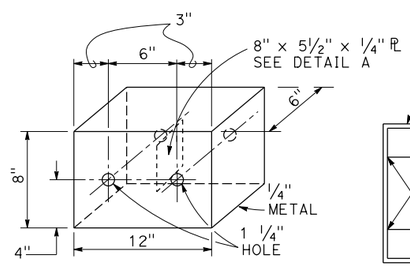

METAL BOX SPACER

PLACE 1" BOLTS THROUGH 1 1/4" ø x 5 1/4" PIPE SPACERS PASSING THROUGH BOX INTERIOR

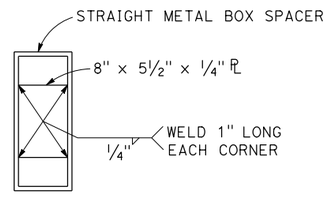

DETAIL A

CONSTRUCTION DETAILS
MIDWEST GUARDRAIL SYSTEM CONNECTION TO BRIDGE CURB

NO SCALE

C-9

REVISED BY	DATE REVISED

CALCULATED-DESIGNED BY	CHECKED BY
RICKY LEE	MARIA RODRIGUEZ

FUNCTIONAL SUPERVISOR: DEREK HIGA

STATE OF CALIFORNIA - DEPARTMENT OF TRANSPORTATION
Caltrans®
DESIGN

LAST REVISION 03-02-15 | DATE PLOTTED => 15-JAN-2016 | TIME PLOTTED => 06:14

Dist	COUNTY	ROUTE	POST MILES TOTAL PROJECT	SHEET No.	TOTAL SHEETS
07	LA	5, 101	16.4, S0.0/25.9	77	459

Ricky Lee 4-22-15
REGISTERED CIVIL ENGINEER DATE

11-2-15
PLANS APPROVAL DATE

REGISTERED PROFESSIONAL ENGINEER
RICKY LEE
No. C74591
Exp. 12-31-17
CIVIL
STATE OF CALIFORNIA

THE STATE OF CALIFORNIA OR ITS OFFICERS OR AGENTS SHALL NOT BE RESPONSIBLE FOR THE ACCURACY OR COMPLETENESS OF SCANNED COPIES OF THIS PLAN SHEET.

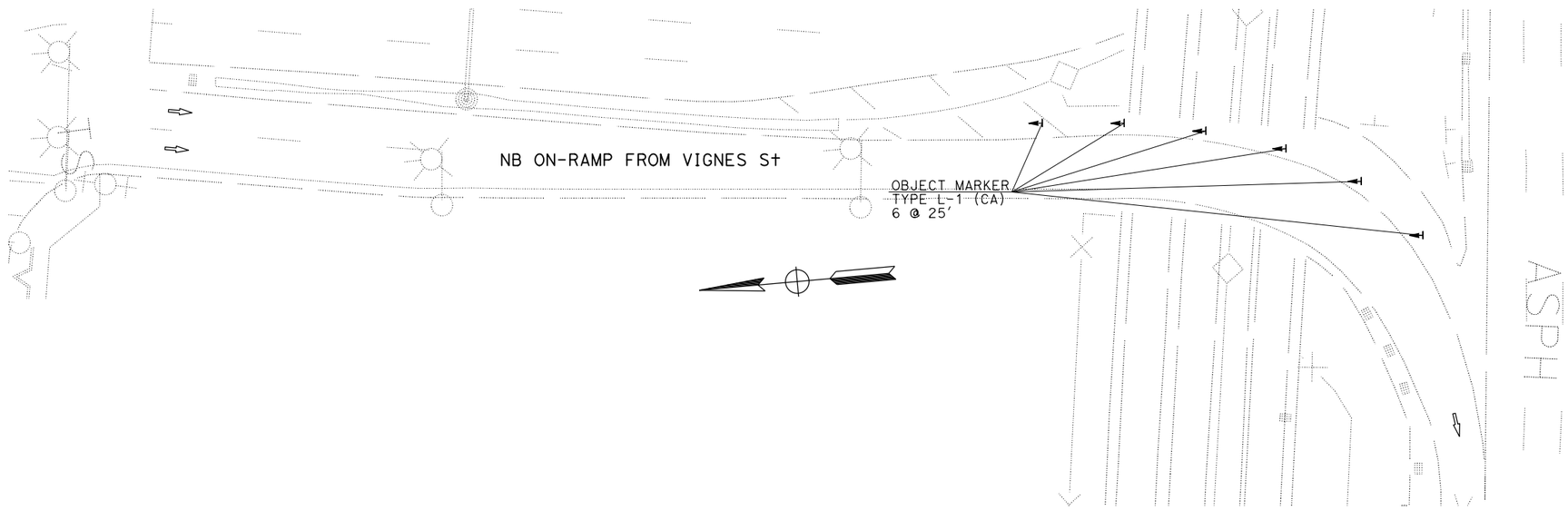

Loc 61 - PM 0.4 NORTHBOUND ON-RAMP FROM VIGNES STREET

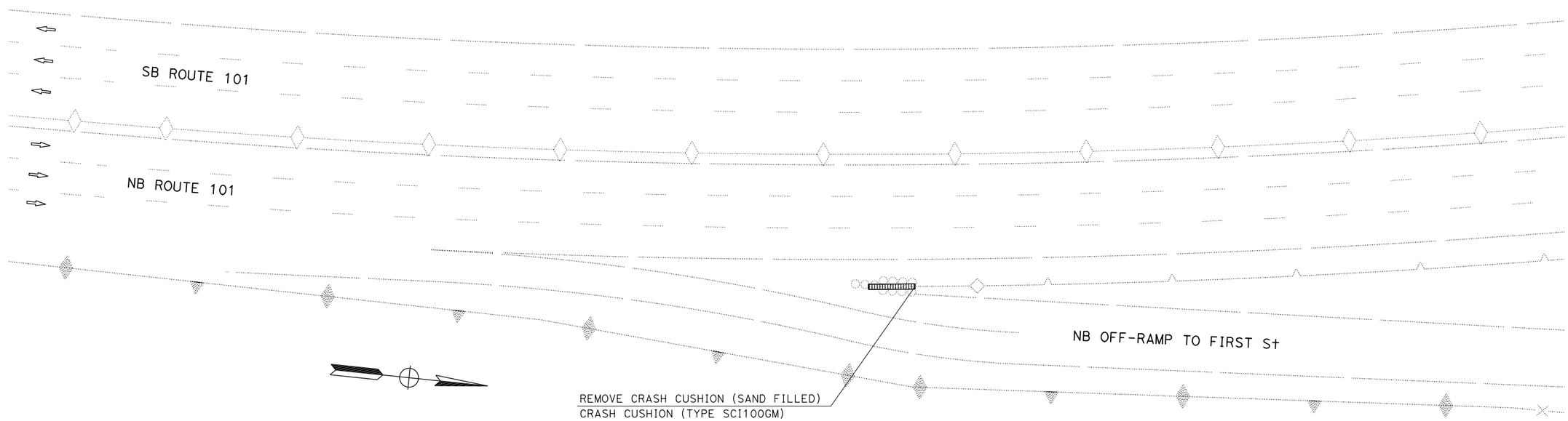

Loc 60 - PM S0.8 NORTHBOUND OFF-RAMP TO FIRST STREET

CONSTRUCTION DETAILS

NO SCALE

C-10

STATE OF CALIFORNIA - DEPARTMENT OF TRANSPORTATION
Caltrans® DESIGN

FUNCTIONAL SUPERVISOR: DEREK HIGA
CALCULATED-DESIGNED BY: RICKY LEE
CHECKED BY: MARIA RODRIGUEZ
REVISED BY
DATE REVISED

LAST REVISION 03-03-15
DATE PLOTTED => 15-JAN-2016
TIME PLOTTED => 06:14

Dist	COUNTY	ROUTE	POST MILES TOTAL PROJECT	SHEET No.	TOTAL SHEETS
07	LA	5, 101	16.4, S0.0/25.9	78	459

Ricky Lee 4-22-15
REGISTERED CIVIL ENGINEER DATE

11-2-15
PLANS APPROVAL DATE

REGISTERED PROFESSIONAL ENGINEER
RICKY LEE
No. C74591
Exp. 12-31-17
CIVIL
STATE OF CALIFORNIA

THE STATE OF CALIFORNIA OR ITS OFFICERS OR AGENTS SHALL NOT BE RESPONSIBLE FOR THE ACCURACY OR COMPLETENESS OF SCANNED COPIES OF THIS PLAN SHEET.

NOTE:
FOR PILE REINFORCING SPACING AND SIZE, SEE "CONSTRUCTION DETAILS".

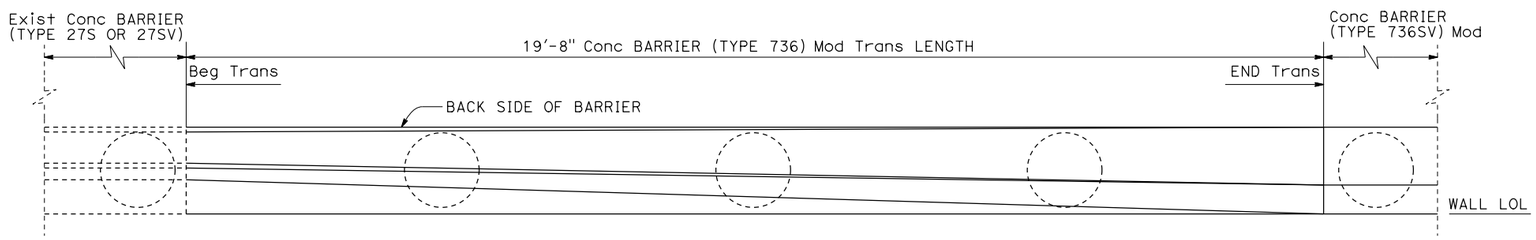

PLAN

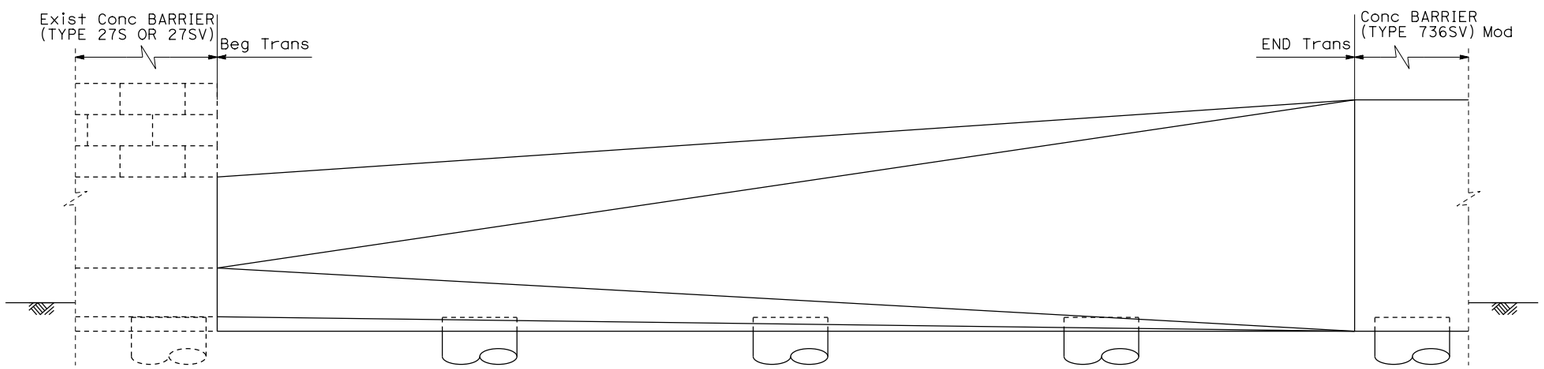

ELEVATION

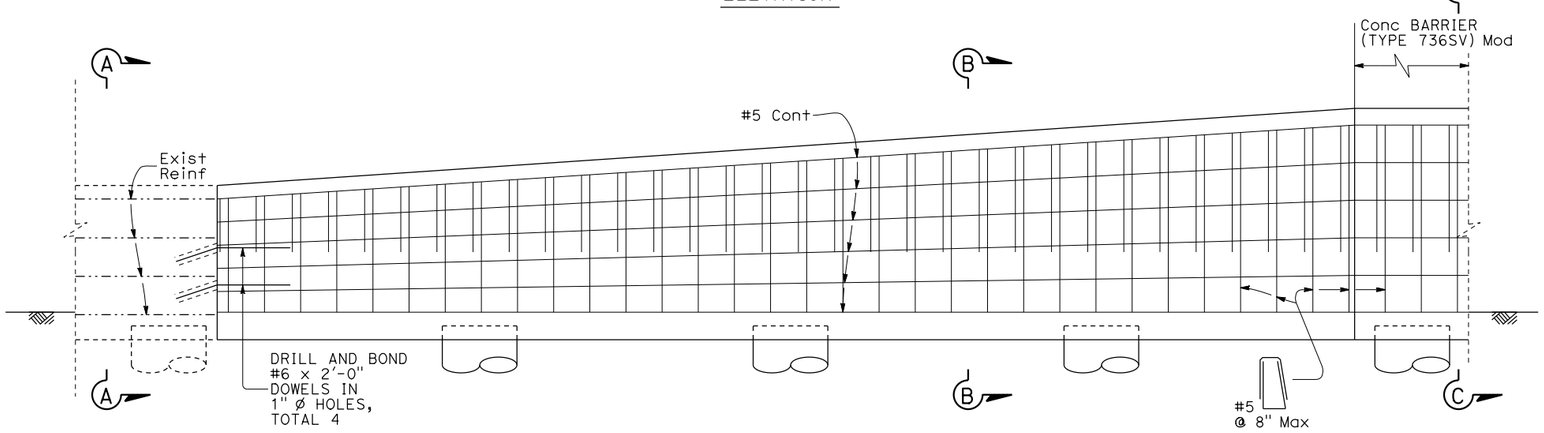

REINFORCEMENT DETAIL
ELEVATION

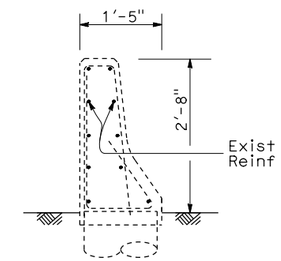

SECTION A-A

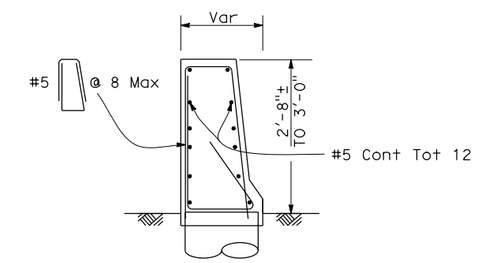

SECTION B-B

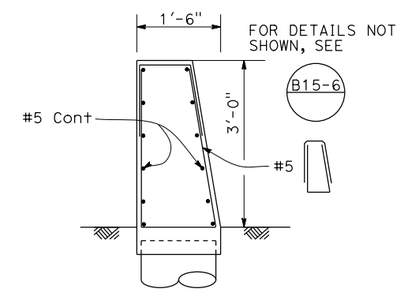

SECTION C-C

CONSTRUCTION DETAILS
CONCRETE BARRIER (TYPE 27S/SV) TRANSITION TO (TYPE 736SV) Mod

NO SCALE

C-11

REVISED BY	DATE REVISED

CALCULATED-DESIGNED BY	CHECKED BY
MYLY NGUYEN	RICKY LEE

FUNCTIONAL SUPERVISOR: DEREK HIGA

STATE OF CALIFORNIA - DEPARTMENT OF TRANSPORTATION
Caltrans®
DESIGN

LAST REVISION 03-02-15 | DATE PLOTTED => 15-JAN-2016 | TIME PLOTTED => 06:14

Dist	COUNTY	ROUTE	POST MILES TOTAL PROJECT	SHEET No.	TOTAL SHEETS
07	LA	5, 101	16.4, S0.0/25.9	79	459

Ricky Lee 4-22-15
REGISTERED CIVIL ENGINEER DATE

11-2-15
PLANS APPROVAL DATE

REGISTERED PROFESSIONAL ENGINEER RICKY LEE No. C74591 Exp. 12-31-17 CIVIL STATE OF CALIFORNIA

THE STATE OF CALIFORNIA OR ITS OFFICERS OR AGENTS SHALL NOT BE RESPONSIBLE FOR THE ACCURACY OR COMPLETENESS OF SCANNED COPIES OF THIS PLAN SHEET.

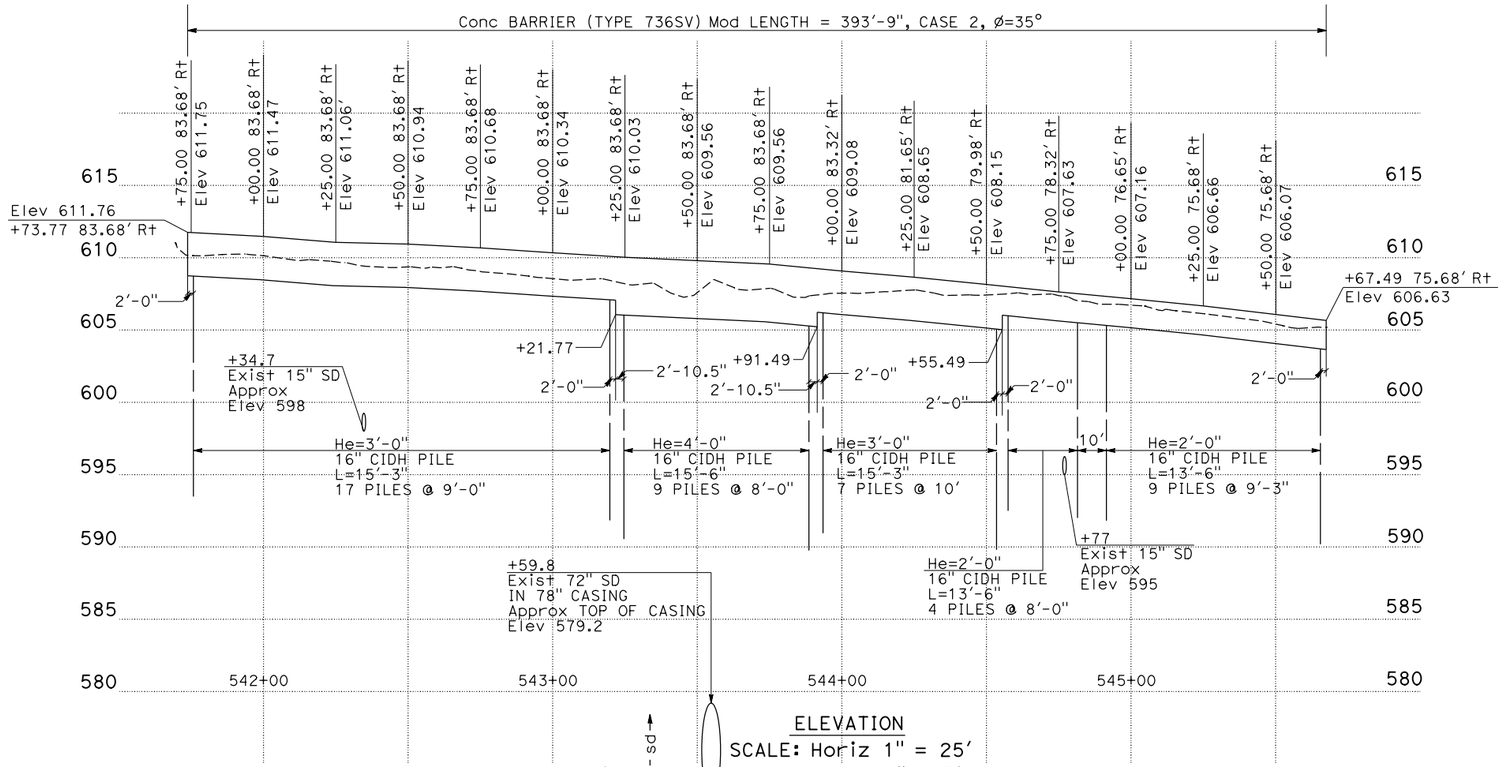

ELEVATION
SCALE: Horiz 1" = 25'
Vert 1" = 5'

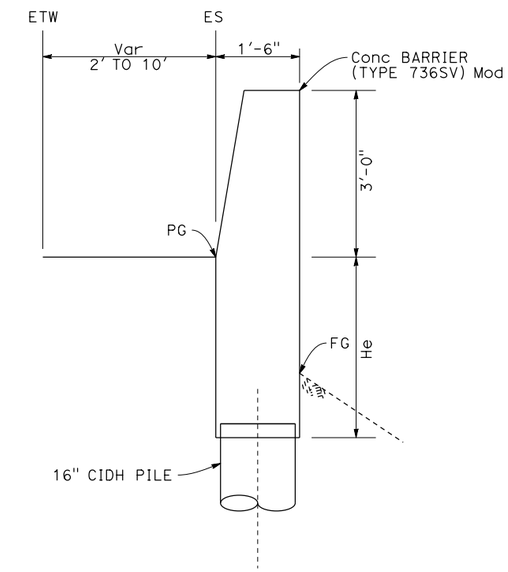

TYPICAL SECTION
NO SCALE

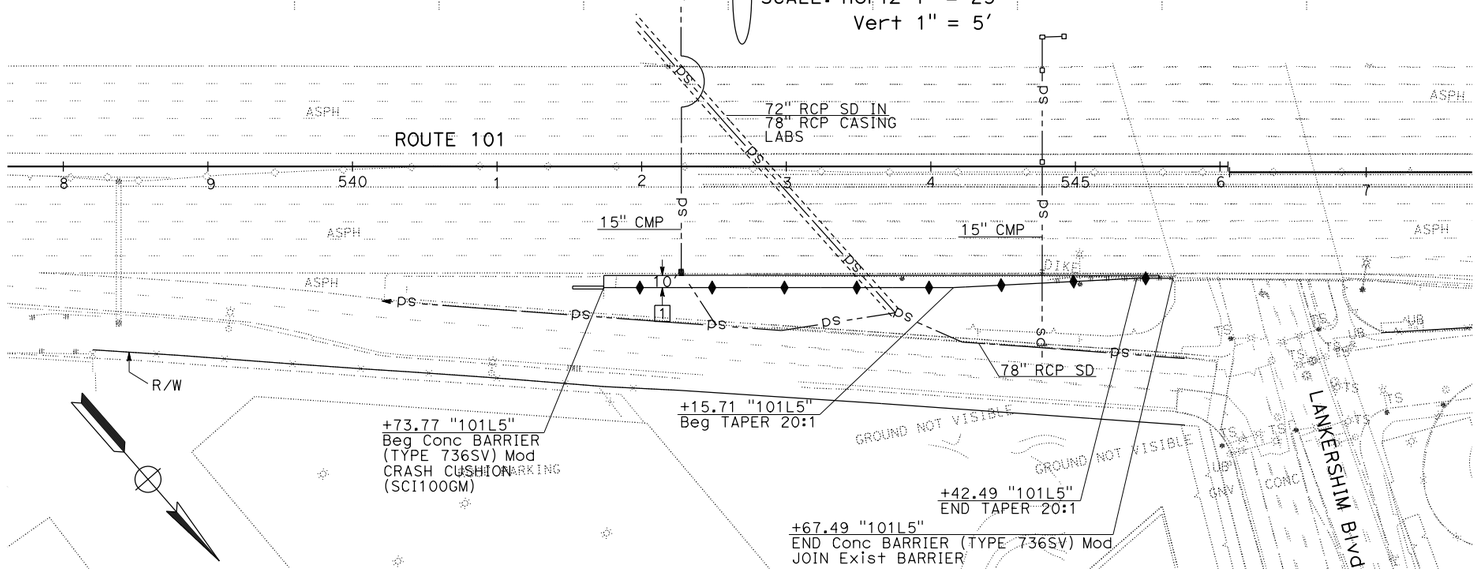

PLAN
SCALE: 1" = 50'

CONSTRUCTION DETAILS

Loc 35 - PM 10.3

NB MAINLINE S/O LANKERSHIM Blvd UC

SCALE AS SHOWN

C-12

REVISED BY	DATE REVISED

CALCULATED-DESIGNED BY	CHECKED BY
MYLY NGUYEN	RICKY LEE

FUNCTIONAL SUPERVISOR: DEREK HIGA

STATE OF CALIFORNIA - DEPARTMENT OF TRANSPORTATION
Caltrans®
DESIGN

LAST REVISION 03-03-15
DATE PLOTTED => 15-JAN-2016
TIME PLOTTED => 06:14

Dist	COUNTY	ROUTE	POST MILES TOTAL PROJECT	SHEET No.	TOTAL SHEETS
07	LA	5, 101	16.4, S0.0/25.9	80	459

Ricky Lee 4-22-15
REGISTERED CIVIL ENGINEER DATE

11-2-15
PLANS APPROVAL DATE

REGISTERED PROFESSIONAL ENGINEER RICKY LEE No. C74591 Exp. 12-31-17 CIVIL STATE OF CALIFORNIA

THE STATE OF CALIFORNIA OR ITS OFFICERS OR AGENTS SHALL NOT BE RESPONSIBLE FOR THE ACCURACY OR COMPLETENESS OF SCANNED COPIES OF THIS PLAN SHEET.

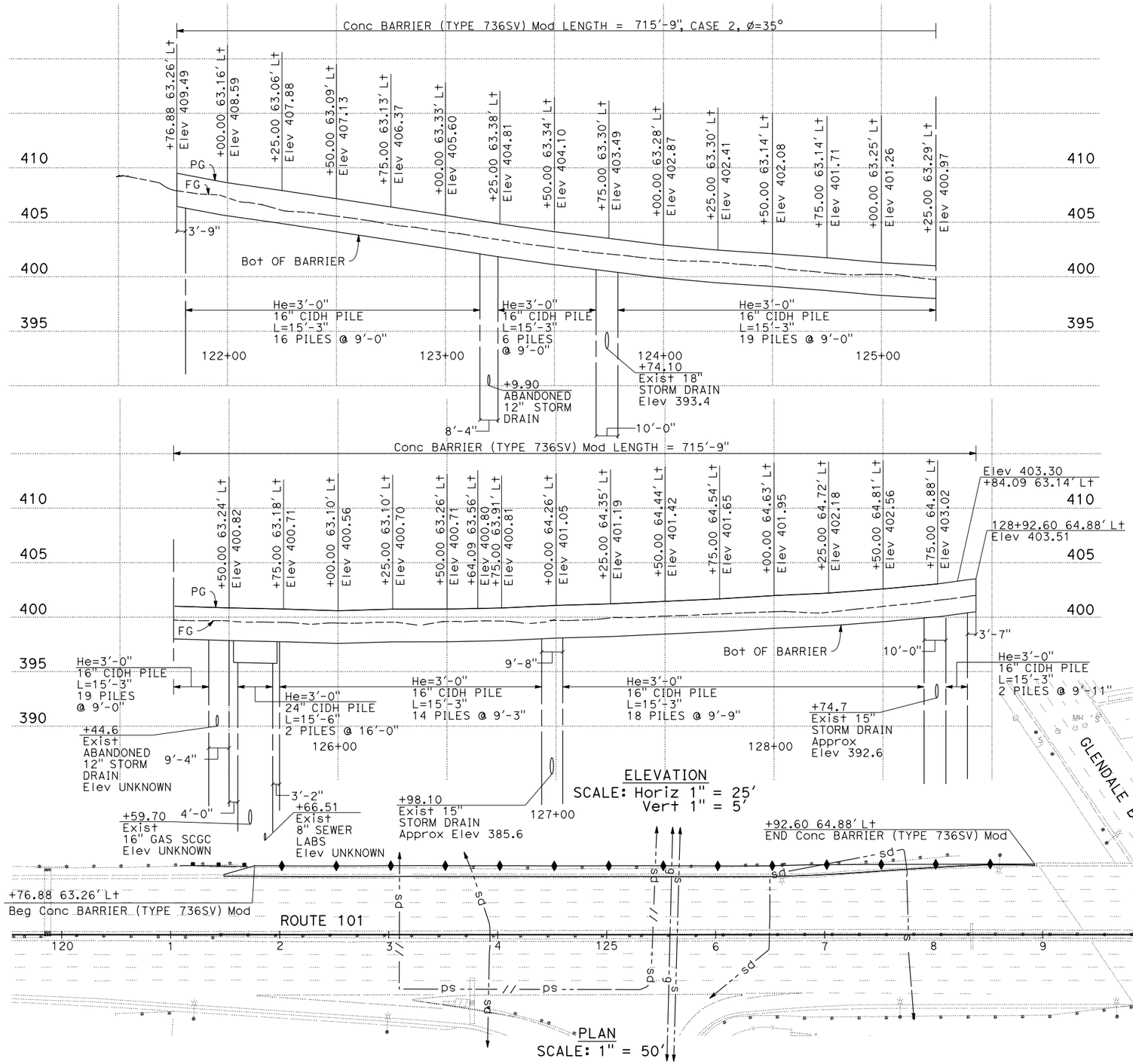

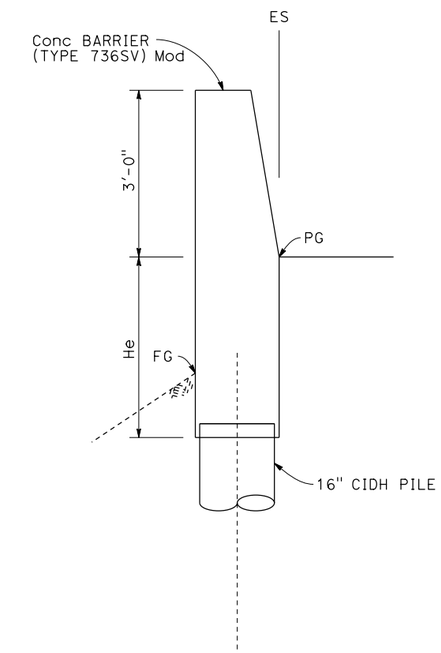

TYPICAL SECTION
NO SCALE

CONSTRUCTION DETAILS
Loc 17 - PM 2.2
SB MAINLINE S/O GLENDALE Blvd UC

SCALE AS SHOWN

C-13

REVISED BY	DATE REVISED

CALCULATED-DESIGNED BY	MARIA RODRIGUEZ
CHECKED BY	RICKY LEE
FUNCTIONAL SUPERVISOR	DEREK HIGA

STATE OF CALIFORNIA - DEPARTMENT OF TRANSPORTATION
Caltrans®
DESIGN

LAST REVISION 03-03-15 | DATE PLOTTED => 15-JAN-2016 | TIME PLOTTED => 06:14

Dist	COUNTY	ROUTE	POST MILES TOTAL PROJECT	SHEET No.	TOTAL SHEETS
07	LA	5, 101	16.4, S0.0/25.9	81	459

Ricky Lee 4-22-15
REGISTERED CIVIL ENGINEER DATE

11-2-15
PLANS APPROVAL DATE

REGISTERED PROFESSIONAL ENGINEER
RICKY LEE
No. C74591
Exp. 12-31-17
CIVIL
STATE OF CALIFORNIA

THE STATE OF CALIFORNIA OR ITS OFFICERS OR AGENTS SHALL NOT BE RESPONSIBLE FOR THE ACCURACY OR COMPLETENESS OF SCANNED COPIES OF THIS PLAN SHEET.

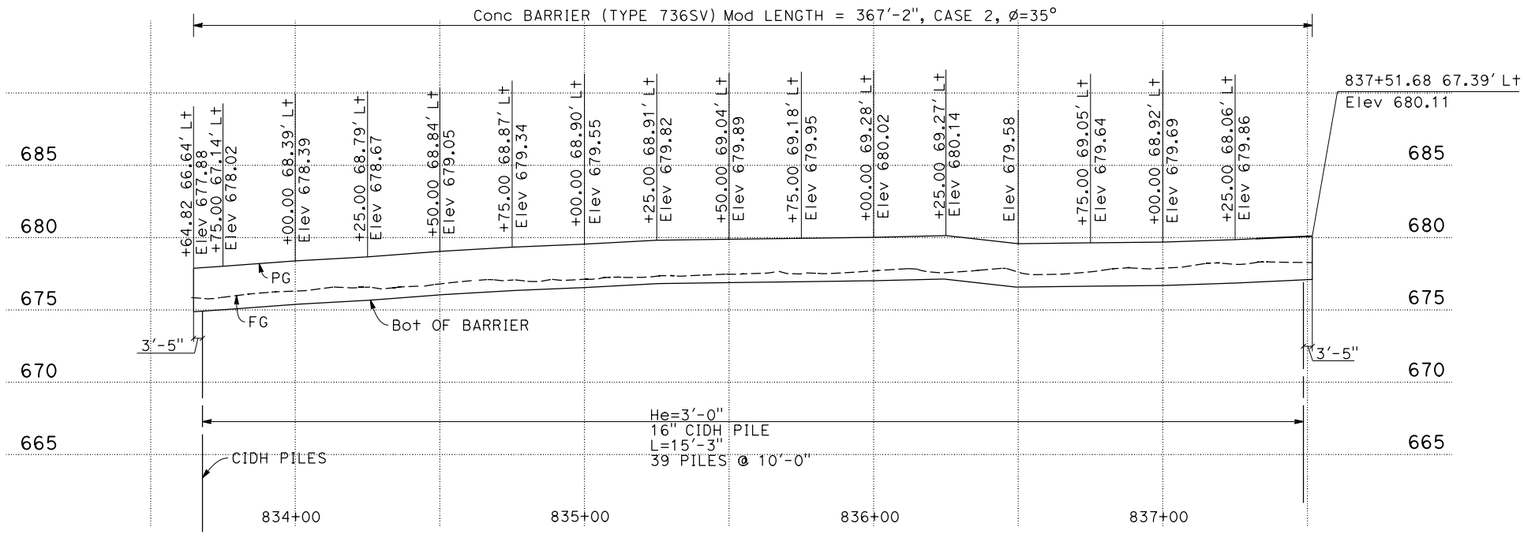

ELEVATION
SCALE: Horiz 1" = 25'
Vert 1" = 5'

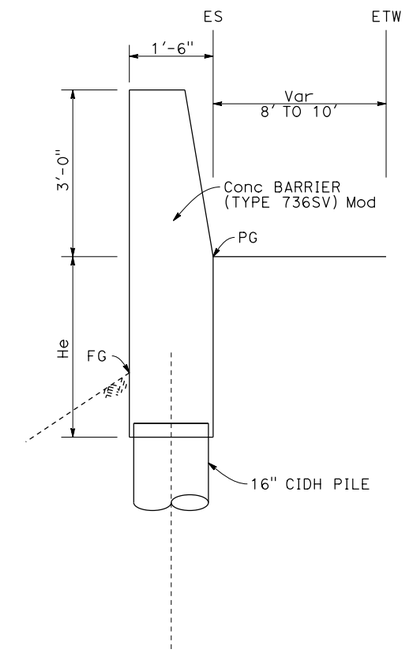

TYPICAL SECTION
NO SCALE

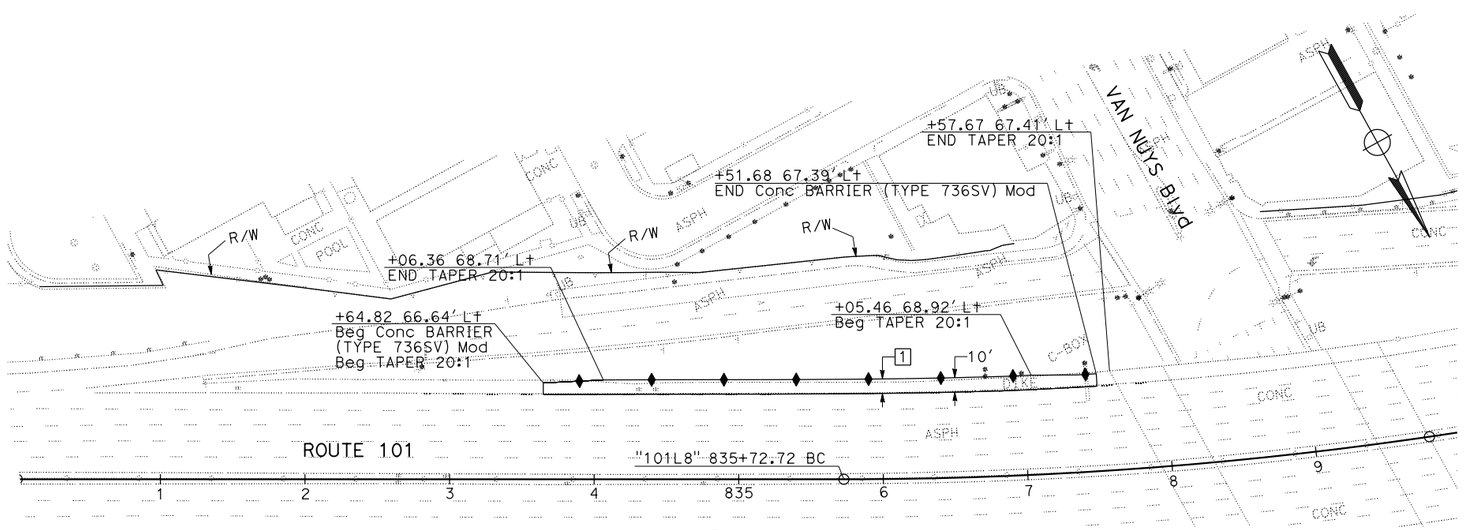

PLAN
SCALE: 1" = 50'

CONSTRUCTION DETAILS

Loc 47 - PM 15.9

SB MAINLINE S/O VAN NUYS Blvd UC

SCALE AS SHOWN

C-14

STATE OF CALIFORNIA - DEPARTMENT OF TRANSPORTATION
Caltrans®
DESIGN

FUNCTIONAL SUPERVISOR: DEREK HIGA
CALCULATED-DESIGNED BY: ANTOINE NADER
CHECKED BY: RICKY LEE
REVISED BY
DATE REVISED

LAST REVISION 03-03-15
DATE PLOTTED => 15-JAN-2016
TIME PLOTTED => 06:14

BORDER LAST REVISED 7/2/2010
USERNAME => s112049
DGN FILE => 72827uga014.dgn
RELATIVE BORDER SCALE IS IN INCHES 0 1 2 3
UNIT 1811
PROJECT NUMBER & PHASE 07140002041

Dist	COUNTY	ROUTE	POST MILES TOTAL PROJECT	SHEET No.	TOTAL SHEETS
07	LA	5, 101	16.4, S0.0/25.9	82	459

Ricky Lee 4-22-15
REGISTERED CIVIL ENGINEER DATE

11-2-15
PLANS APPROVAL DATE

REGISTERED PROFESSIONAL ENGINEER
RICKY LEE
No. C74591
Exp. 12-31-17
CIVIL
STATE OF CALIFORNIA

THE STATE OF CALIFORNIA OR ITS OFFICERS OR AGENTS SHALL NOT BE RESPONSIBLE FOR THE ACCURACY OR COMPLETENESS OF SCANNED COPIES OF THIS PLAN SHEET.

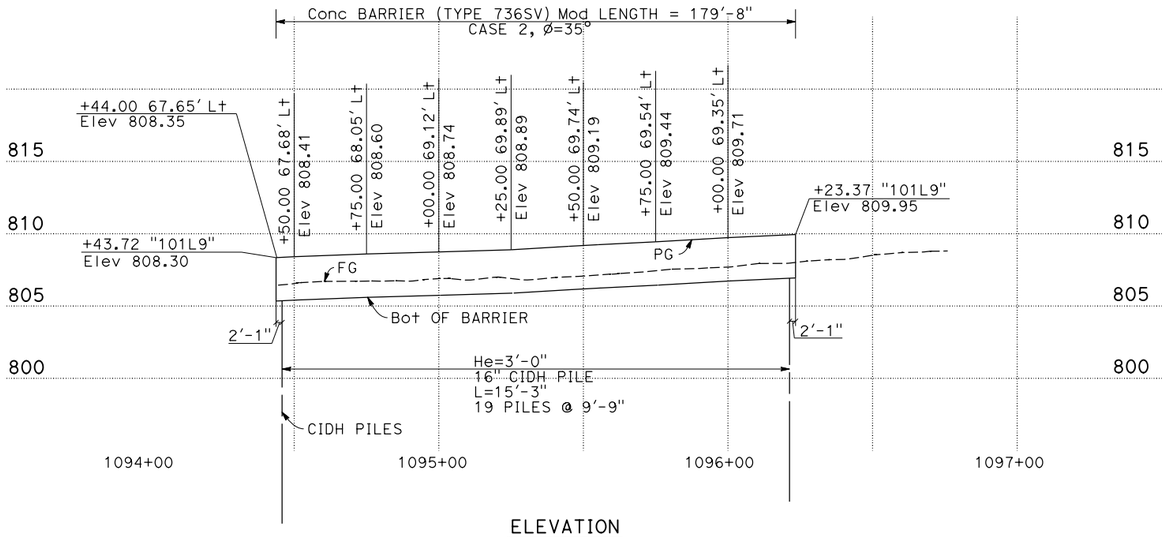

ELEVATION
SCALE: Horiz 1" = 25'
Vert 1" = 5'

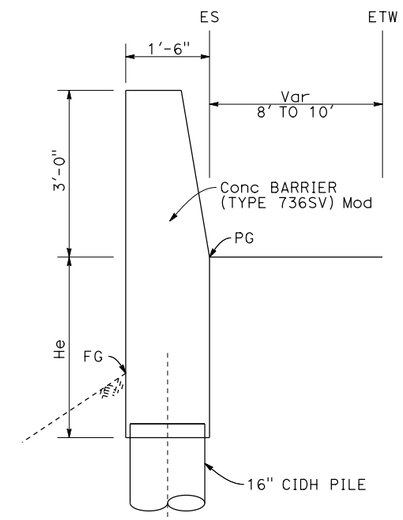

TYPICAL SECTION
NO SCALE

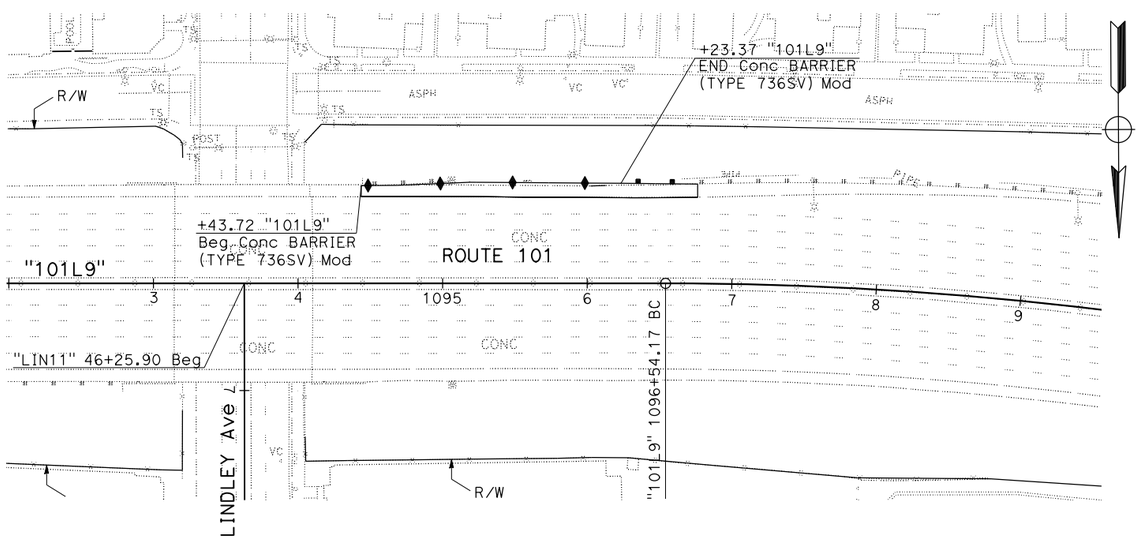

PLAN
SCALE: 1" = 50'

CONSTRUCTION DETAILS
Loc 53 - PM 20.7
SB MAINLINE N/O LINDLEY Ave UC

SCALE AS SHOWN

C-15

STATE OF CALIFORNIA - DEPARTMENT OF TRANSPORTATION
Caltrans
DESIGN

FUNCTIONAL SUPERVISOR: DEREK HIGA
CALCULATED-DESIGNED BY: ANTOINE NADER
CHECKED BY: RICKY LEE
REVISED BY
DATE REVISED

LAST REVISION 03-03-15
DATE PLOTTED => 15-JAN-2016
TIME PLOTTED => 06:15

Dist	COUNTY	ROUTE	POST MILES TOTAL PROJECT	SHEET No.	TOTAL SHEETS
07	LA	5, 101	16.4, S0.0/25.9	83	459

Ricky Lee 4-22-15
REGISTERED CIVIL ENGINEER DATE

11-2-15
PLANS APPROVAL DATE

REGISTERED PROFESSIONAL ENGINEER RICKY LEE No. C74591 Exp. 12-31-17 CIVIL STATE OF CALIFORNIA

THE STATE OF CALIFORNIA OR ITS OFFICERS OR AGENTS SHALL NOT BE RESPONSIBLE FOR THE ACCURACY OR COMPLETENESS OF SCANNED COPIES OF THIS PLAN SHEET.

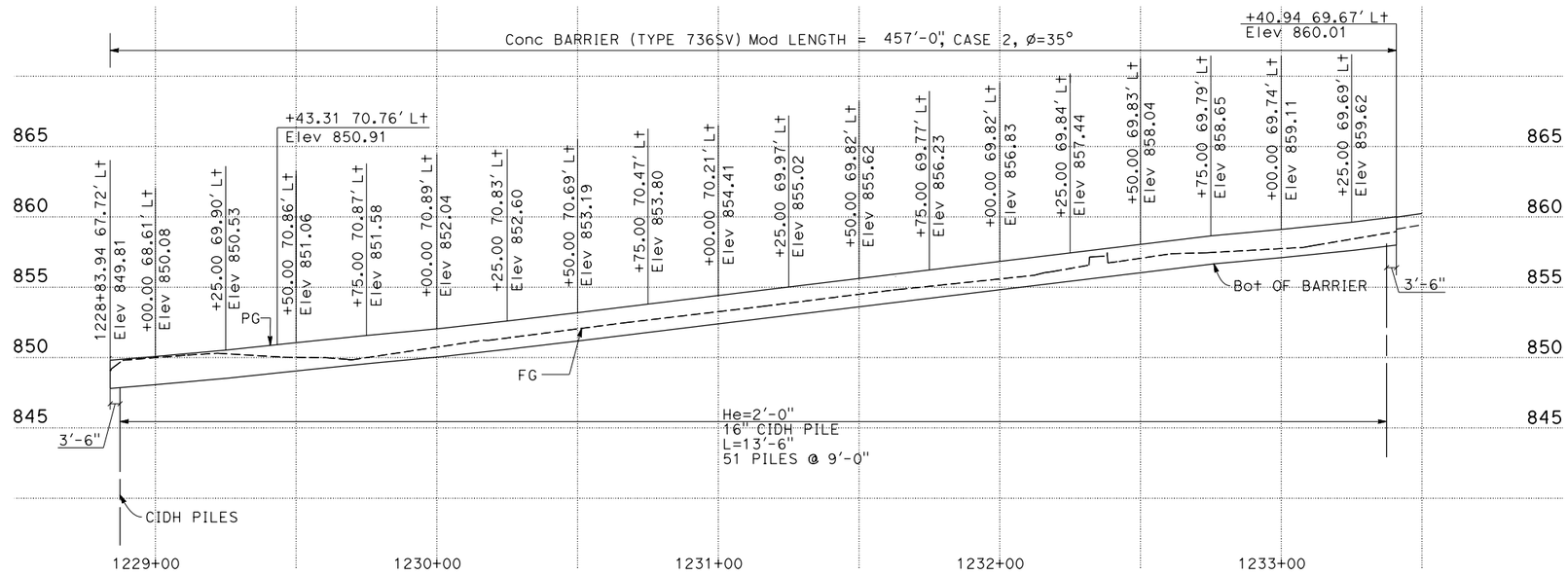

ELEVATION
SCALE: Horiz 1" = 25'
Vert 1" = 5'

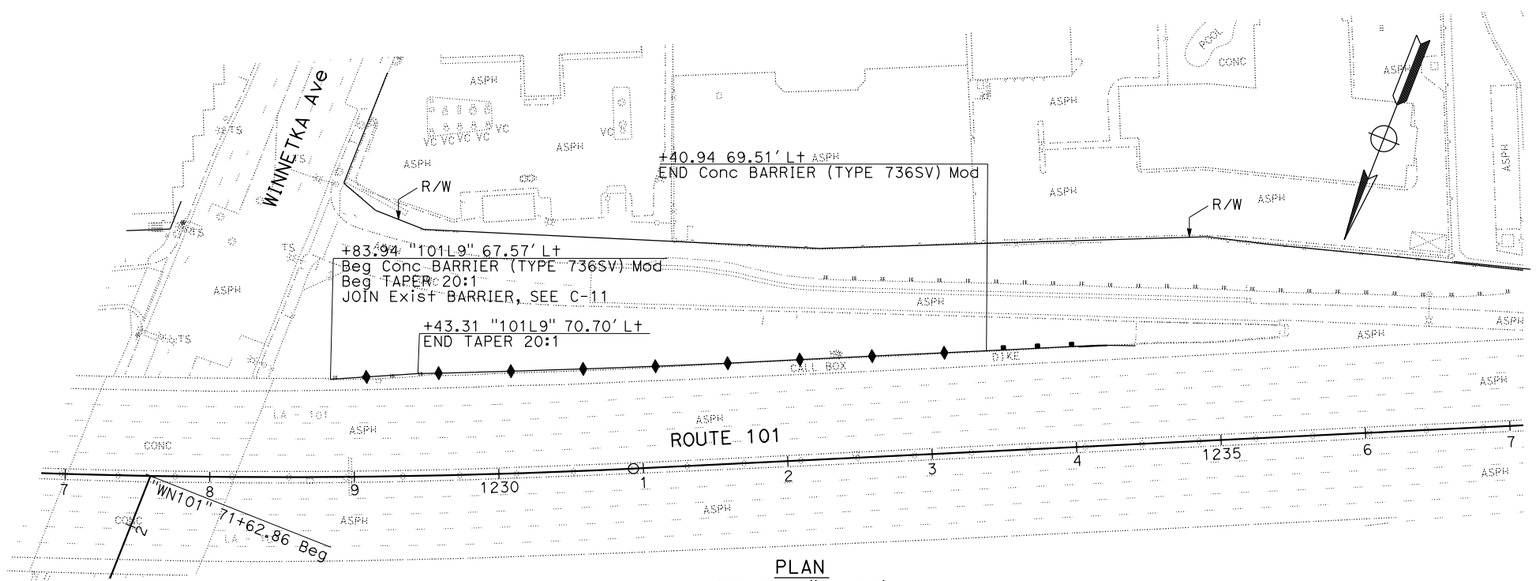

PLAN
SCALE: 1" = 50'

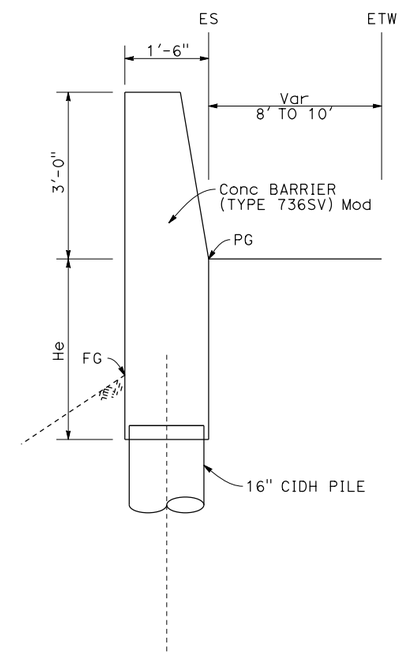

TYPICAL SECTION
NO SCALE

CONSTRUCTION DETAILS

Loc 57 - PM 23.6

SB MAINLINE N/O WINNETKA Ave UC

SCALE AS SHOWN

C-16

STATE OF CALIFORNIA - DEPARTMENT OF TRANSPORTATION
Caltrans®
DESIGN

FUNCTIONAL SUPERVISOR: DEREK HIGA
CALCULATED-DESIGNED BY: ANTOINE NADER
CHECKED BY: RICKY LEE
REVISED BY
DATE REVISED

LAST REVISION 03-03-15
DATE PLOTTED => 15-JAN-2016
TIME PLOTTED => 06:15

Dist	COUNTY	ROUTE	POST MILES TOTAL PROJECT	SHEET No.	TOTAL SHEETS
07	LA	5, 101	16.4, S0.0/25.9	84	459

Ricky Lee 4-22-15
REGISTERED CIVIL ENGINEER DATE

11-2-15
PLANS APPROVAL DATE

REGISTERED PROFESSIONAL ENGINEER RICKY LEE No. C74591 Exp. 12-31-17 CIVIL STATE OF CALIFORNIA

THE STATE OF CALIFORNIA OR ITS OFFICERS OR AGENTS SHALL NOT BE RESPONSIBLE FOR THE ACCURACY OR COMPLETENESS OF SCANNED COPIES OF THIS PLAN SHEET.

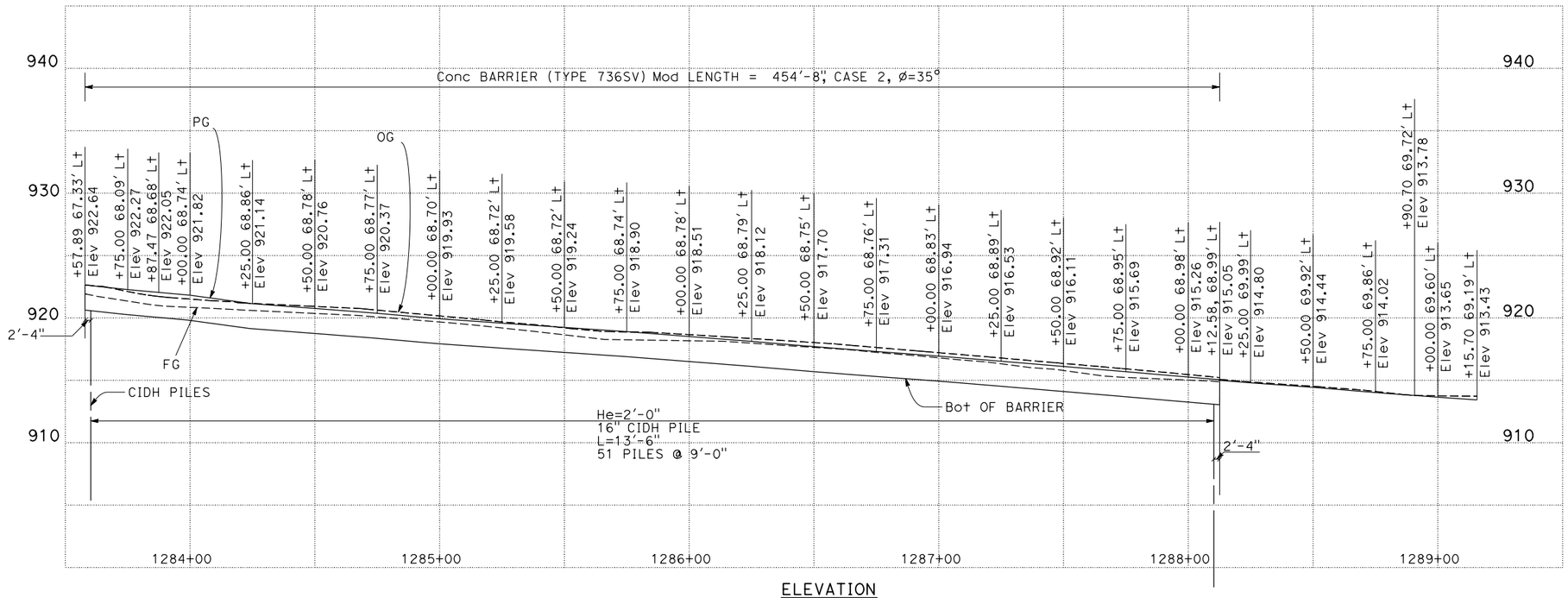

ELEVATION
SCALE: Horiz 1" = 25'
Vert 1" = 5'

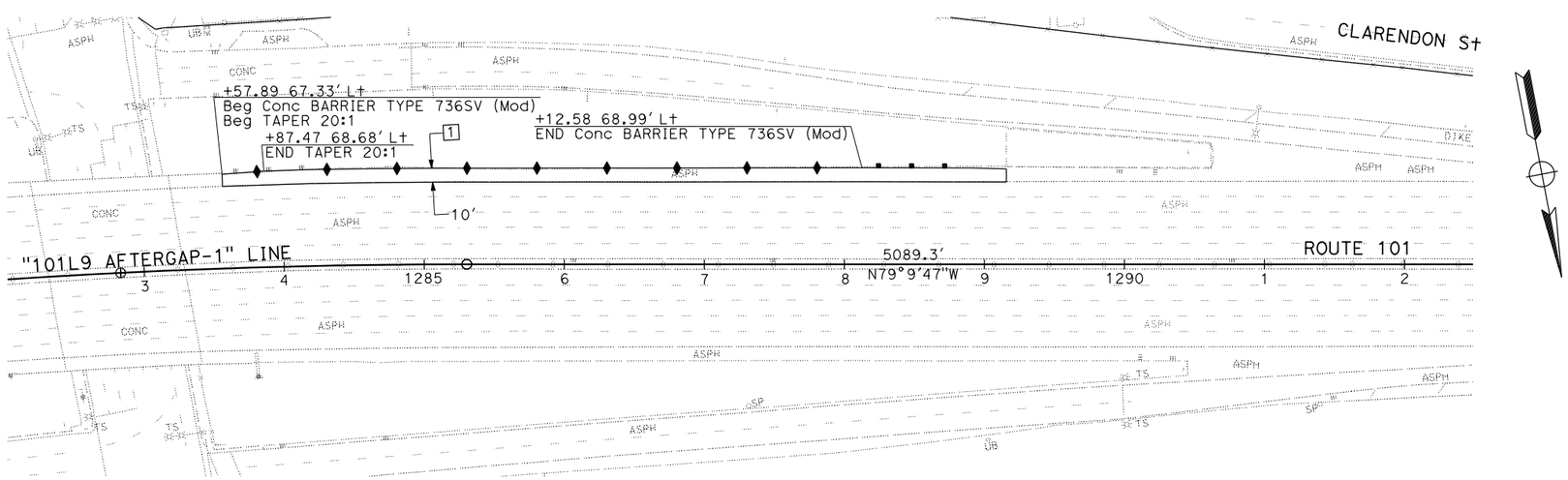

PLAN
SCALE: 1" = 50'

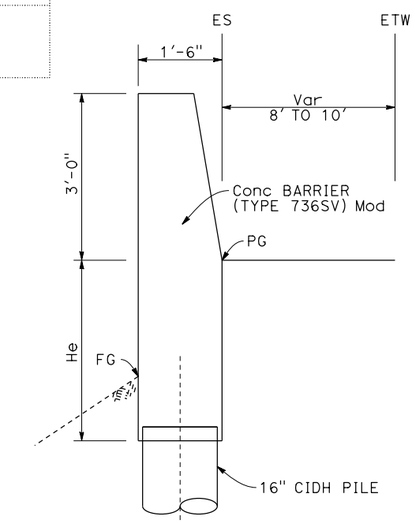

TYPICAL SECTION
NO SCALE

CONSTRUCTION DETAILS

Loc 59 - PM 24.3

SB MAINLINE N/O DE SOTO Ave UC

SCALE AS SHOWN

C-17

STATE OF CALIFORNIA - DEPARTMENT OF TRANSPORTATION
Caltrans® **DESIGN**

FUNCTIONAL SUPERVISOR: DEREK HIGA
CALCULATED-DESIGNED BY: MYLY NGUYEN
CHECKED BY: RICKY LEE
REVISED BY
DATE REVISED

LAST REVISION 03-03-15
DATE PLOTTED => 15-JAN-2016
TIME PLOTTED => 06:15

Dist	COUNTY	ROUTE	POST MILES TOTAL PROJECT	SHEET No.	TOTAL SHEETS
07	LA	5, 101	16.4, S0.0/25.9	85	459

Ricky Lee 4-22-15
REGISTERED CIVIL ENGINEER DATE

11-2-15
PLANS APPROVAL DATE

REGISTERED PROFESSIONAL ENGINEER RICKY LEE No. C74591 Exp. 12-31-17 CIVIL STATE OF CALIFORNIA

THE STATE OF CALIFORNIA OR ITS OFFICERS OR AGENTS SHALL NOT BE RESPONSIBLE FOR THE ACCURACY OR COMPLETENESS OF SCANNED COPIES OF THIS PLAN SHEET.

NOTES:

1. FOR DETAILS AND NOTES NOT SHOWN, SEE REVISED STANDARD PLAN RSP B15-6, RSP B15-7, AND STANDARD PLAN B15-8.
2. FOR SECTIONS NOT SHOWN, SEE STANDARD PLANS B15-8.
3. SLOPE GROUND AT TRAFFIC SIDE OF BARRIER TO DRAIN. MAXIMUM SLOPE ±10%. SEE Std PLAN B11-56, NOTE 3.
4. SEE CONSTRUCTION DETAILS FOR PILE SPACING.
5. SEE STANDARD PLAN B15-9 FOR OTHER DETAILS.
6. CONCRETE TO BE USED FOR THE BARRIER SHALL CONTAIN NOT LESS THAN 590 POUNDS OF CEMENTITIOUS MATERIAL PER CUBIC YARD.

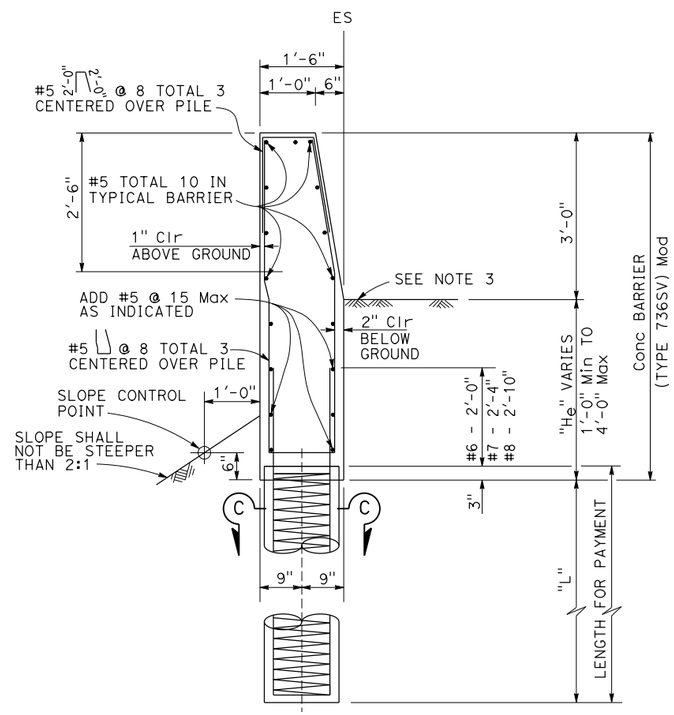

BARRIER SECTION

CONSTRUCTION DETAILS

CONCRETE BARRIER (TYPE 736SV) Mod

NO SCALE

C-18

STATE OF CALIFORNIA - DEPARTMENT OF TRANSPORTATION
Caltrans®
DESIGN

FUNCTIONAL SUPERVISOR: DEREK HIGA
CALCULATED-DESIGNED BY: MYLY NGUYEN
CHECKED BY: RICKY LEE
REVISED BY
DATE REVISED

LAST REVISION 03-02-15
DATE PLOTTED => 15-JAN-2016
TIME PLOTTED => 06:15

Dist	COUNTY	ROUTE	POST MILES TOTAL PROJECT	SHEET No.	TOTAL SHEETS
07	LA	5, 101	16.4, S0.0/25.9	86	459

Ricky Lee 4-22-15
REGISTERED CIVIL ENGINEER DATE

11-2-15
PLANS APPROVAL DATE

REGISTERED PROFESSIONAL ENGINEER
RICKY LEE
No. C74591
Exp. 12-31-17
CIVIL
STATE OF CALIFORNIA

THE STATE OF CALIFORNIA OR ITS OFFICERS OR AGENTS SHALL NOT BE RESPONSIBLE FOR THE ACCURACY OR COMPLETENESS OF SCANNED COPIES OF THIS PLAN SHEET.

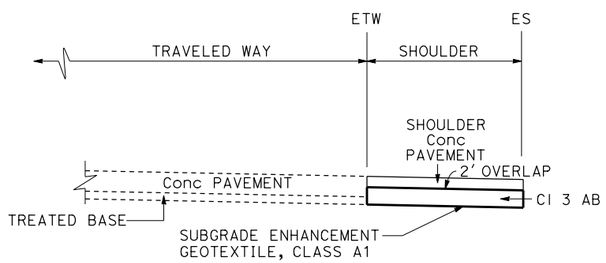

Conc PAVEMENT OUTSIDE SHOULDER
GEOTEXTILE WRAP DETAIL

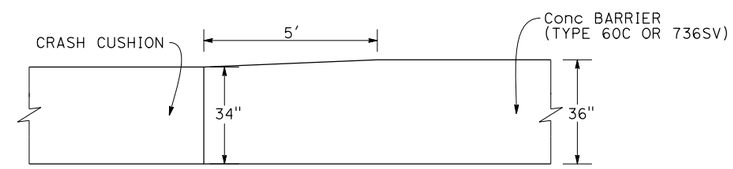

Conc BARRIER HEIGHT Trans AT
CRASH CUSHION
LOCATIONS 9, 10, AND 35

CONSTRUCTION DETAILS

NO SCALE

C-19

CALCULATED-DESIGNED BY	ANTOINE NADER	REVISED BY
CHECKED BY	RICKY LEE	DATE REVISED

FUNCTIONAL SUPERVISOR: DEREK HIGA

STATE OF CALIFORNIA - DEPARTMENT OF TRANSPORTATION
Caltrans
DESIGN

LAST REVISION 01-09-15 | DATE PLOTTED => 15-JAN-2016 | TIME PLOTTED => 06:15

Dist	COUNTY	ROUTE	POST MILES TOTAL PROJECT	SHEET No.	TOTAL SHEETS
07	LA	5, 101	16.4, S0.0/25.9	87	459

Ricky Lee 4-22-15
REGISTERED CIVIL ENGINEER DATE

11-2-15
PLANS APPROVAL DATE

REGISTERED PROFESSIONAL ENGINEER RICKY LEE No. C74591 Exp. 12-31-17 CIVIL STATE OF CALIFORNIA

THE STATE OF CALIFORNIA OR ITS OFFICERS OR AGENTS SHALL NOT BE RESPONSIBLE FOR THE ACCURACY OR COMPLETENESS OF SCANNED COPIES OF THIS PLAN SHEET.

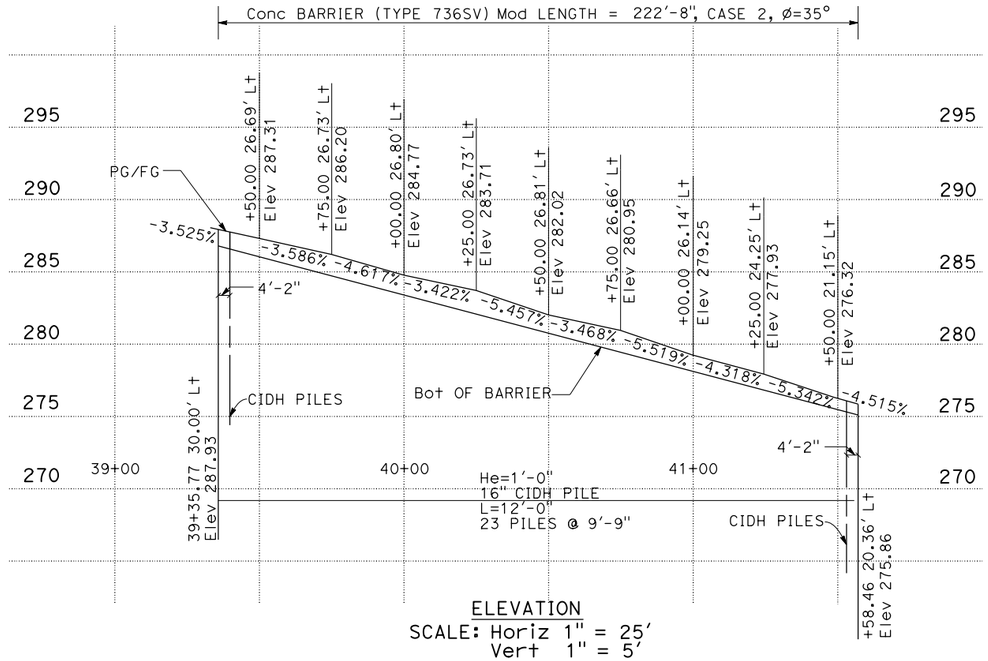

ELEVATION
SCALE: Horiz 1" = 25'
Vert 1" = 5'

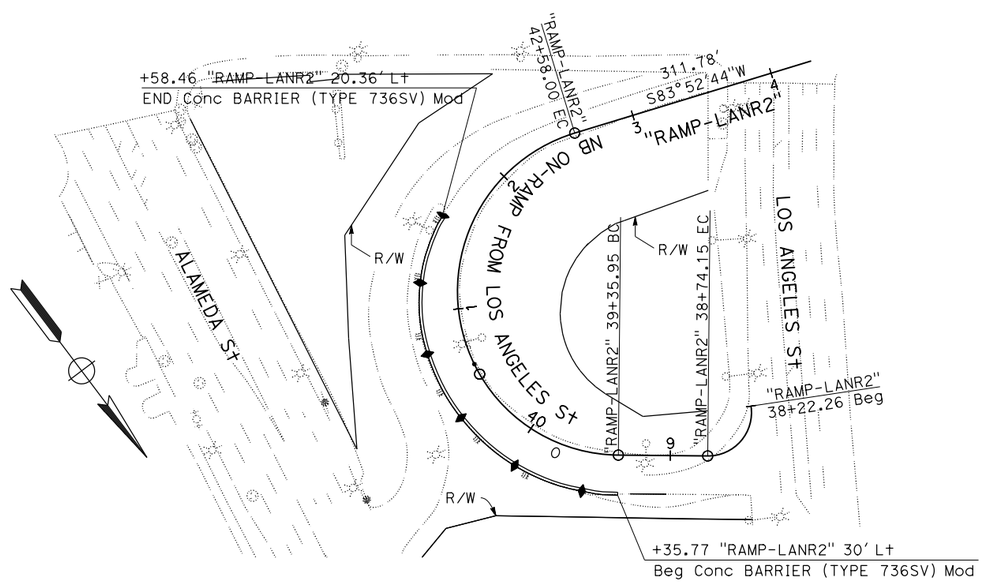

PLAN
SCALE: 1" = 50'

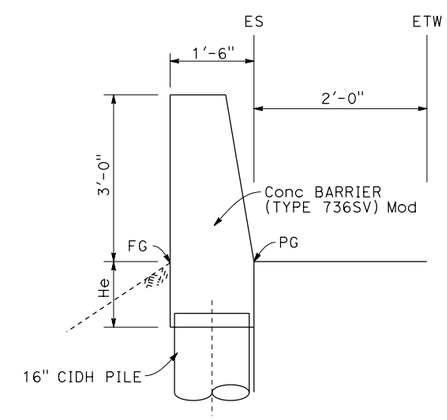

TYPICAL SECTION
NO SCALE

CONSTRUCTION DETAILS

Loc 9 - PM 0.91

NB LOS ANGELES St ON-RAMP

SCALE AS SHOWN

C-20

STATE OF CALIFORNIA - DEPARTMENT OF TRANSPORTATION
Caltrans® **DESIGN**

FUNCTIONAL SUPERVISOR: DEREK HIGA
CALCULATED-DESIGNED BY: MYLY NGUYEN
CHECKED BY: RICKY LEE
REVISED BY
DATE REVISED

LAST REVISION 03-03-15
DATE PLOTTED => 15-JAN-2016
TIME PLOTTED => 06:15

Dist	COUNTY	ROUTE	POST MILES TOTAL PROJECT	SHEET No.	TOTAL SHEETS
07	LA	5, 101	16.4, S0.0/25.9	88	459

LICENSED LANDSCAPE ARCHITECT

11-2-15
PLANS APPROVAL DATE

LICENSED LANDSCAPE ARCHITECT KATHLEEN LEDESMA No. 5888 Signature 12/31/17 Renewal Date 02/13/15 Date STATE OF CALIFORNIA

THE STATE OF CALIFORNIA OR ITS OFFICERS OR AGENTS SHALL NOT BE RESPONSIBLE FOR THE ACCURACY OR COMPLETENESS OF SCANNED COPIES OF THIS PLAN SHEET.

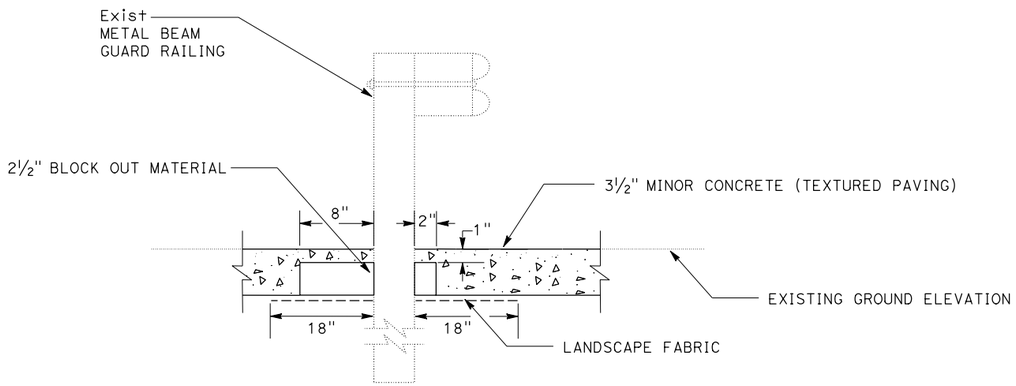

EXISTING METAL BEAM GUARD RAILING POST DETAIL

NOTE:

GROUT AROUND POST PER RSP A77N5 STANDARD PLAN

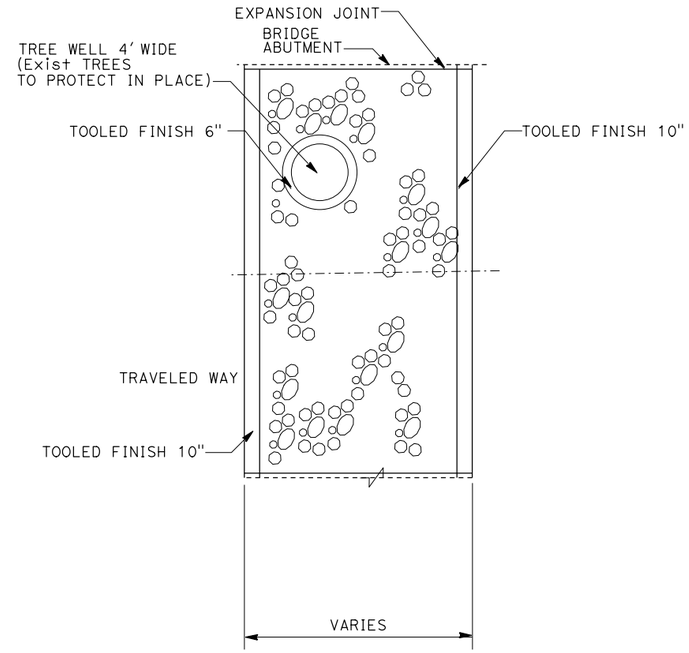

ROCK BLANKET

TYPICAL TREE WELL LAYOUT

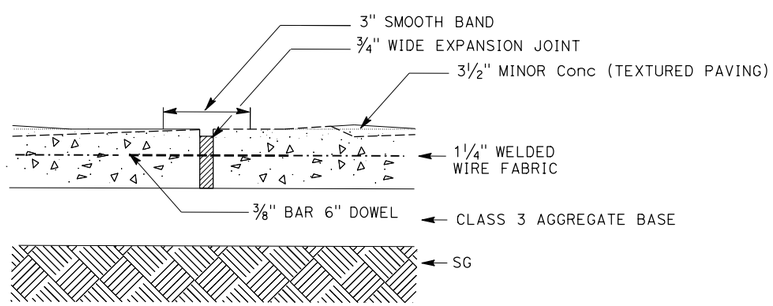

TYPICAL MINOR CONCRETE (TEXTURED PAVING) AND MINOR CONCRETE (BRUSHED CONCRETE) DETAIL

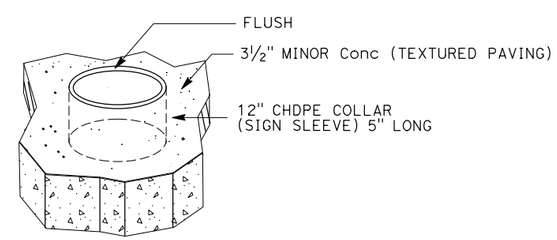

TYPICAL SIGN POST COLLAR DETAIL

NOTE:

PLACE 12" Dia CHDPE COLLAR (5" LENGTH) AS FORM (CLEAR) AROUND POST

CONSTRUCTION DETAILS

NO SCALE

C-21

STATE OF CALIFORNIA - DEPARTMENT OF TRANSPORTATION
Caltrans® LANDSCAPE ARCHITECTURE

SENIOR LANDSCAPE ARCHITECT: PATTY WATANABE
CALCULATED-DESIGNED BY: KATHLEEN LEDESMA
CHECKED BY: TIRSIT KEBEDE
REVISED BY
DATE REVISED

LAST REVISION 06-27-14
DATE PLOTTED => 15-JAN-2016
TIME PLOTTED => 06:15

Dist	COUNTY	ROUTE	POST MILES TOTAL PROJECT	SHEET No.	TOTAL SHEETS
07	LA	5, 101	16.4, S0.0/25.9	89	459

LICENSED LANDSCAPE ARCHITECT

11-2-15
PLANS APPROVAL DATE

LICENSED LANDSCAPE ARCHITECT KATHLEEN LEDESMA No. 5888 Signature 12/31/17 Renewal Date 02/13/15 Date STATE OF CALIFORNIA

THE STATE OF CALIFORNIA OR ITS OFFICERS OR AGENTS SHALL NOT BE RESPONSIBLE FOR THE ACCURACY OR COMPLETENESS OF SCANNED COPIES OF THIS PLAN SHEET.

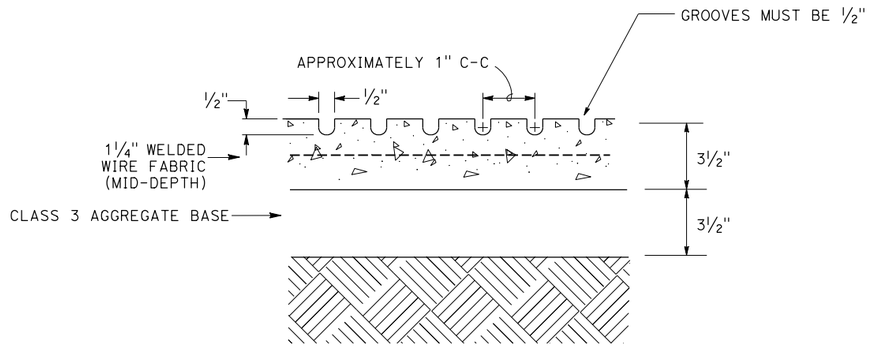

GROOVING DETAIL 'MISSION BELL'

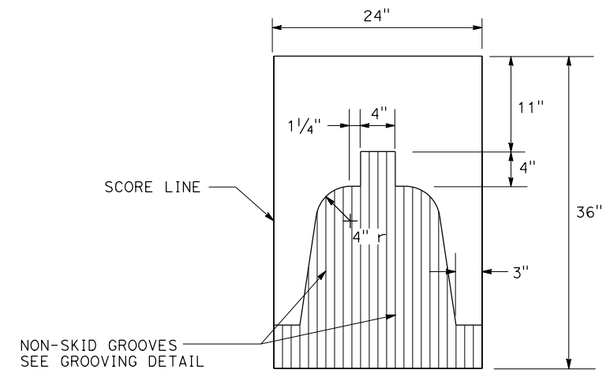

STAMP PATTERN 'MISSION BELL'

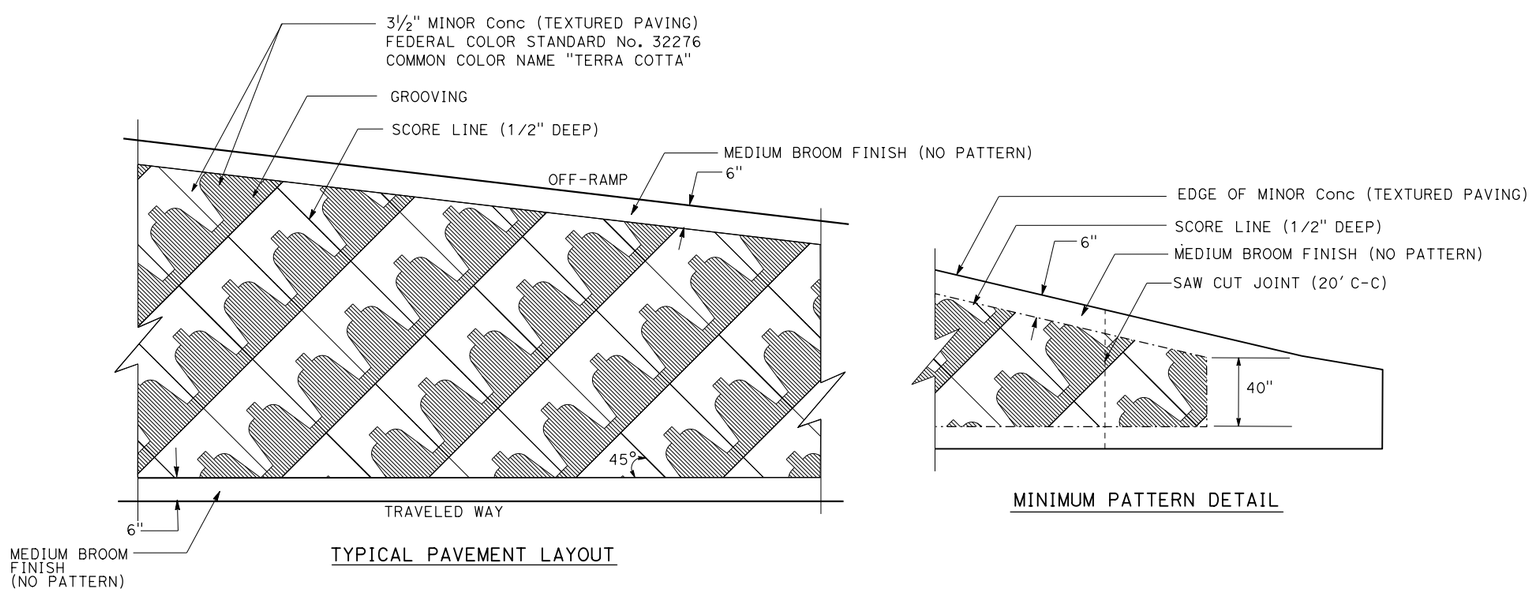

TYPICAL PAVEMENT LAYOUT

MINIMUM PATTERN DETAIL

MINOR Conc (TEXTURED PAVING) 'MISSION BELL'

CONSTRUCTION DETAILS

NO SCALE

C-22

STATE OF CALIFORNIA - DEPARTMENT OF TRANSPORTATION
Caltrans® LANDSCAPE ARCHITECTURE

SENIOR LANDSCAPE ARCHITECT: PATTY WATANABE
CALCULATED-DESIGNED BY: TIRSIT KEBEDE
CHECKED BY: KATHLEEN LEDESMA
REVISED BY
DATE REVISED

LAST REVISION 00-00-00
DATE PLOTTED => 15-JAN-2016
TIME PLOTTED => 06:15

Dist	COUNTY	ROUTE	POST MILES TOTAL PROJECT	SHEET No.	TOTAL SHEETS
07	LA	5, 101	16.4, S0.0/25.9	90	459

REGISTERED CIVIL ENGINEER 6-20-15 DATE

11-2-15
PLANS APPROVAL DATE

REGISTERED PROFESSIONAL ENGINEER PRAKASH YADAV No. 68479 Exp. 9-30-17 CIVIL STATE OF CALIFORNIA

THE STATE OF CALIFORNIA OR ITS OFFICERS OR AGENTS SHALL NOT BE RESPONSIBLE FOR THE ACCURACY OR COMPLETENESS OF SCANNED COPIES OF THIS PLAN SHEET.

NOTES:

1. FOR ACCURATE RIGHT OF WAY DATA, CONTACT RIGHT OF WAY ENGINEERING AT THE DISTRICT OFFICE.
2. CONTRACTOR SHALL VERIFY ELEVATIONS OF PROPOSED DRAINAGE WORK AND EXISTING CONDITIONS BEFORE COMMENCEMENT OF WORK.

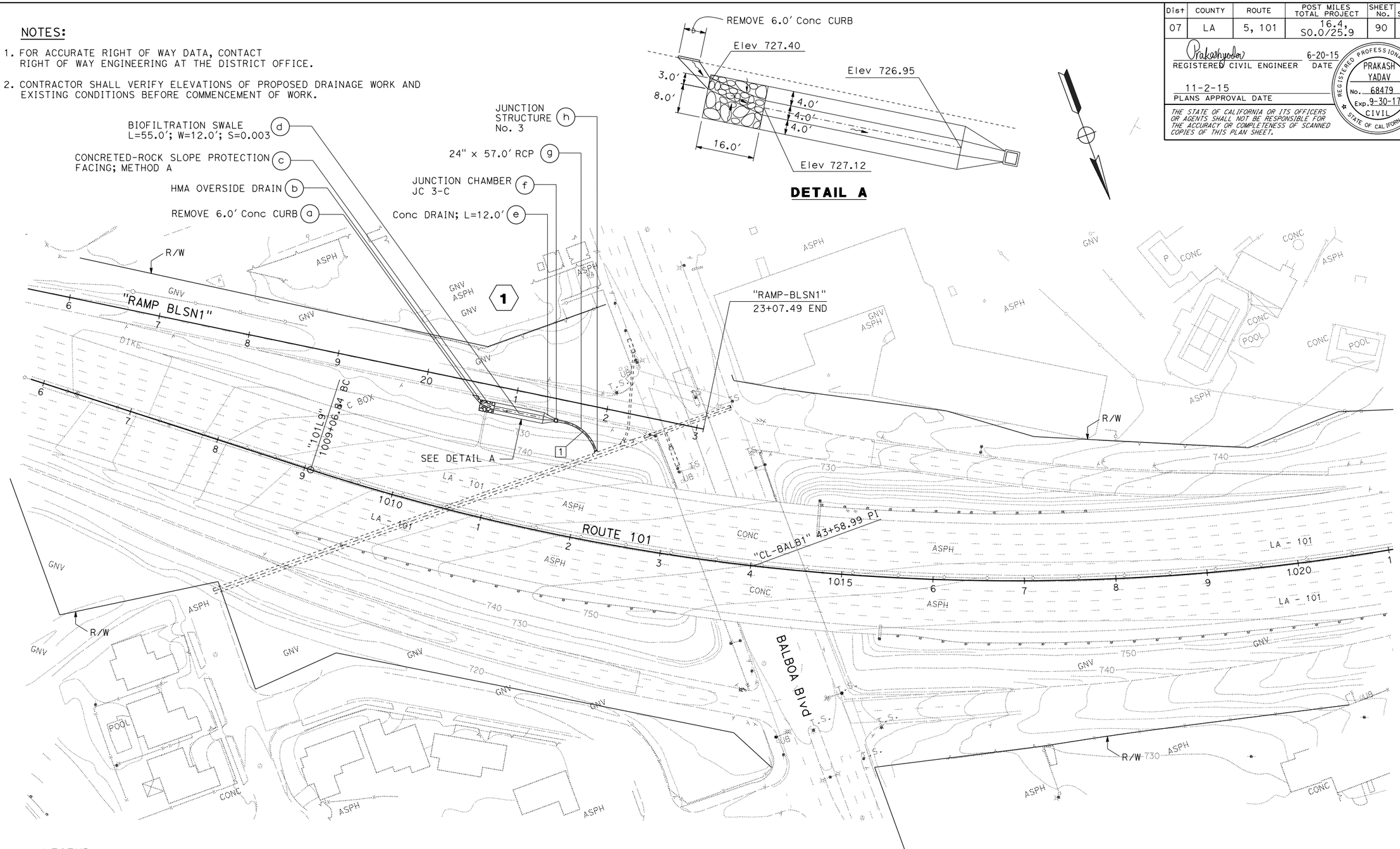

LEGEND:

(No.) WATER POLLUTION CONTROL SYSTEM NUMBER

(xx) WATER POLLUTION CONTROL ITEM

CURVE DATA

No. ⊕	R	Δ	T	L
1	45.0'	58°57'09"	25.44'	46.30'

WATER POLLUTION CONTROL PLAN

SCALE: 1" = 50'

APPROVED FOR WATER POLLUTION CONTROL WORK ONLY

W-1

STATE OF CALIFORNIA - DEPARTMENT OF TRANSPORTATION
Caltrans® HYDRAULICS

FUNCTIONAL SUPERVISOR: DAVE BHALLA
CALCULATED-DESIGNED BY: CHRIS NGUYEN
CHECKED BY: PRAKASH YADAV
REVISED BY / DATE REVISED

LAST REVISION 07-05-13
DATE PLOTTED => 15-JAN-2016
TIME PLOTTED => 06:15

Dist	COUNTY	ROUTE	POST MILES TOTAL PROJECT	SHEET No.	TOTAL SHEETS
07	LA	5, 101	16.4, S0.0/25.9	91	459

Prakashyadav 6-20-15
REGISTERED CIVIL ENGINEER DATE

11-2-15
PLANS APPROVAL DATE

REGISTERED PROFESSIONAL ENGINEER PRAKASH YADAV No. 68479 Exp. 9-30-17 CIVIL STATE OF CALIFORNIA

THE STATE OF CALIFORNIA OR ITS OFFICERS OR AGENTS SHALL NOT BE RESPONSIBLE FOR THE ACCURACY OR COMPLETENESS OF SCANNED COPIES OF THIS PLAN SHEET.

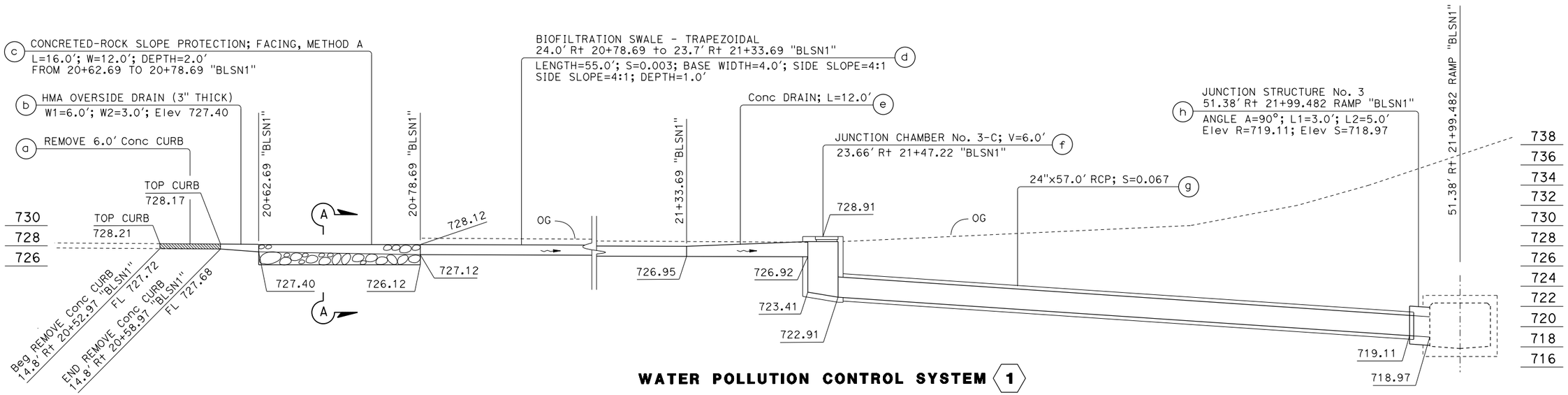

WATER POLLUTION CONTROL SYSTEM 1

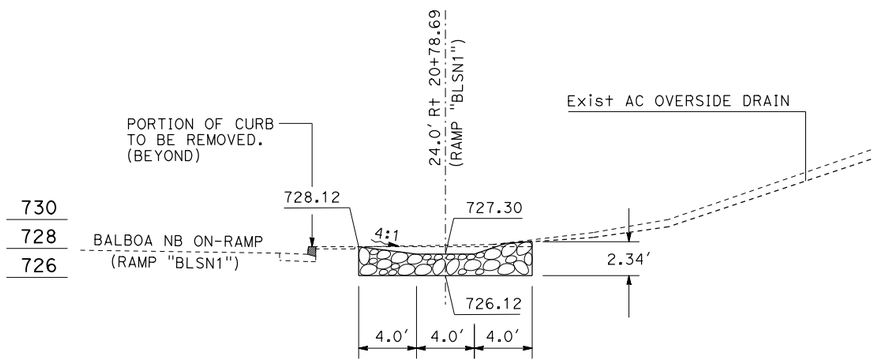

SECTION A-A

WATER POLLUTION CONTROL PROFILES

SCALE: Horiz 1" = 5'
Vert 1" = 5'

WP-1

REVISED BY	DATE REVISED

CALCULATED-DESIGNED BY	CHECKED BY
CHRIS NGUYEN	PRAKASH YADAV

FUNCTIONAL SUPERVISOR
DAVE BHALLA

STATE OF CALIFORNIA - DEPARTMENT OF TRANSPORTATION
Caltrans
HYDRAULICS

LAST REVISION 07-05-13 | DATE PLOTTED => 15-JAN-2016 TIME PLOTTED => 06:15

Dist	COUNTY	ROUTE	POST MILES TOTAL PROJECT	SHEET No.	TOTAL SHEETS
07	LA	5, 101	16.4, S0.0/25.9	92	459

REGISTERED CIVIL ENGINEER — DATE 6-20-15

11-2-15
PLANS APPROVAL DATE

REGISTERED PROFESSIONAL ENGINEER PRAKASH YADAV No. 68479 Exp. 9-30-17 CIVIL STATE OF CALIFORNIA

THE STATE OF CALIFORNIA OR ITS OFFICERS OR AGENTS SHALL NOT BE RESPONSIBLE FOR THE ACCURACY OR COMPLETENESS OF SCANNED COPIES OF THIS PLAN SHEET.

NOTES:

PIPE JOINTS ARE STANDARD OR AS NOTED ON PLANS

(N) NOT A SEPARATE PAY ITEM, FOR INFORMATION ONLY.

(*) ADDED IN DRAINAGE QUANTITY SHEET DQ-5

WATER POLLUTION CONTROL SHEET No.	WATER POLLUTION CONTROL SYSTEM No. ⬡	WATER POLLUTION CONTROL UNIT ◯	HEIGHT OF INLET H OR V	MINOR CONCRETE (MINOR STRUCTURE)	MINOR CONCRETE (MISCELLANEOUS CONSTRUCTION)	MISCELLANEOUS IRON AND STEEL	REMOVE CONCRETE CURB	DITCH EXCAVATION	24" REINFORCED CONCRETE PIPE	CONCRETED-ROCK SLOPE PROTECTION (FACING, METHOD A)	HOT MIX ASPHALT (TYPE A)	PLACE HOT MIX ASPHALT (MISCELLANEOUS AREA)	MANHOLE FRAME AND COVER (N)	MAXIMUM COVER	DESCRIPTION	STATION	WATER POLLUTION CONTROL SHEET No.	WATER POLLUTION CONTROL SYSTEM No. ⬡	WATER POLLUTION CONTROL UNIT ◯
			F†	CY	CY	LB	LF	CY	LF	CY	TON	SQYD	EA	F†					
W-1	1	a					6.0								REMOVE Conc CURB	FROM 14.8′ R† 20+52.97 TO 14.8′ R† 20+58.97 "BLSN1"	W-1	1	a
		b									0.7	4.36			HMA OVERSIDE DRAIN (3" THICK)				b
		c								16.7					CONCRETED-ROCK SLOPE PROTECTION	FROM 20+62.69 TO 20+78.69 "BLSN1"			c
		d						16.3							BIOFILTRATION SWALE - TRAPEZOIDAL	FROM 24.0′ R† 20+78.69 "BLSN1" TO 23.7′ R† 21+33.69 "BLSN1"			d
		e			1.3										Conc DRAIN; L = 12.0′				e
		f	6.0	2.1		250							1		JUNCTION CHAMBER No. 3-C; V = 6.0′	23.66′ R† 21+47.22 "BLSN1"			f
		g							57.0					14.0	24" x 57.0′ RCP				g
		h		0.4											JUNCTION STRUCTURE No. 3	51.38′ R† 21+99.482 "BLSN1"			h
(*) SHEET TOTAL				2.5	1.3	250	6.0	16.3	57.0	16.7	0.7	4.36	1						

WATER POLLUTION CONTROL QUANTITIES

WQ-1

CALCULATED-DESIGNED BY | CHECKED BY | CHRIS NGUYEN | PRAKASH YADAV | REVISED BY | DATE REVISED

FUNCTIONAL SUPERVISOR: DAVE BHALLA

STATE OF CALIFORNIA - DEPARTMENT OF TRANSPORTATION

Caltrans® HYDRAULICS

LAST REVISION 07-05-13 | DATE PLOTTED => 15-JAN-2016 | TIME PLOTTED => 06:15

Dist	COUNTY	ROUTE	POST MILES TOTAL PROJECT	SHEET No.	TOTAL SHEETS
07	LA	5, 101	16.4, S0.0/25.9	93	459

Prakashyadav 4-20-15
REGISTERED CIVIL ENGINEER DATE

11-2-15
PLANS APPROVAL DATE

REGISTERED PROFESSIONAL ENGINEER PRAKASH YADAV No. 68479 Exp. 9-30-17 CIVIL STATE OF CALIFORNIA

THE STATE OF CALIFORNIA OR ITS OFFICERS OR AGENTS SHALL NOT BE RESPONSIBLE FOR THE ACCURACY OR COMPLETENESS OF SCANNED COPIES OF THIS PLAN SHEET.

NOTES:

1. FOR ACCURATE RIGHT OF WAY DATA, CONTACT RIGHT OF WAY ENGINEERING AT THE DISTRICT OFFICE.
2. CONTRACTOR SHALL VERIFY ELEVATIONS OF PROPOSED DRAINAGE WORK AND EXISTING CONDITIONS BEFORE COMMENCEMENT OF WORK.

LEGEND:

(No.) DRAINAGE SYSTEM NUMBER

(XX) DRAINAGE ITEM

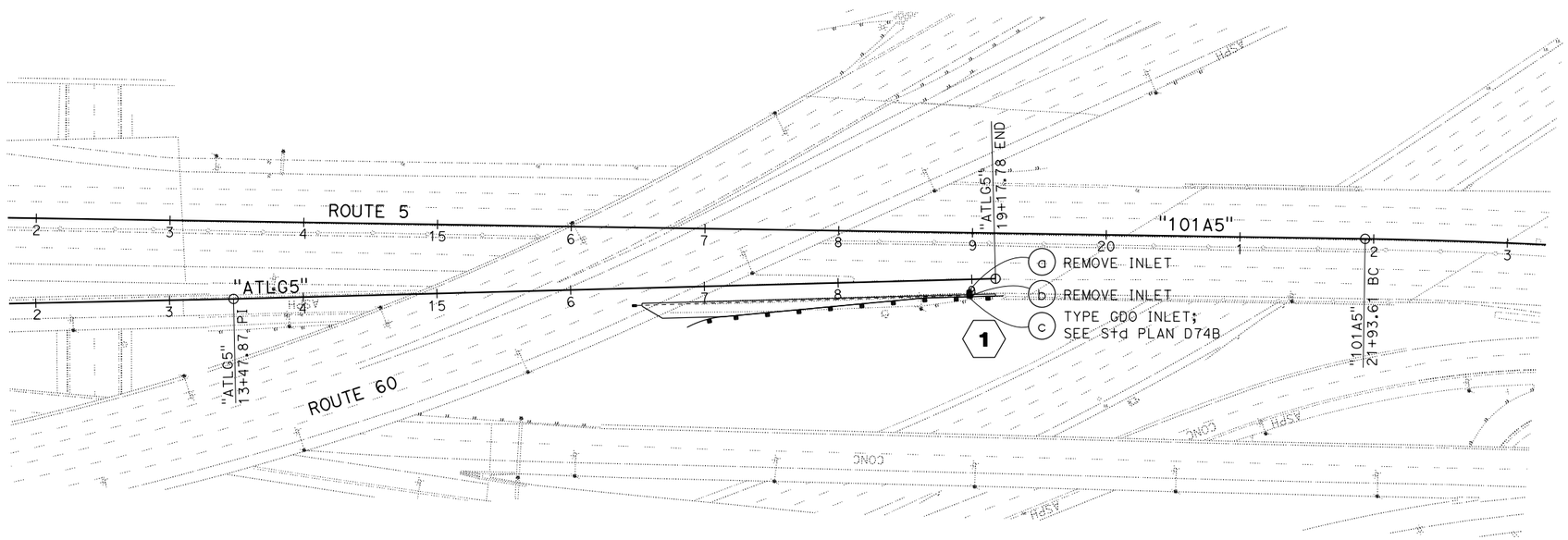

DRAINAGE PLAN

Loc 1 - PM 16.4

SCALE: 1" = 50'

D-1

APPROVED FOR DRAINAGE WORK ONLY

STATE OF CALIFORNIA - DEPARTMENT OF TRANSPORTATION
Caltrans
HYDRAULICS

FUNCTIONAL SUPERVISOR: DAVE BHALLA
CALCULATED-DESIGNED BY: CHRIS NGUYEN
CHECKED BY: PRAKASH YADAV
REVISED BY
DATE REVISED

LAST REVISION 07-05-13
DATE PLOTTED => 15-JAN-2016
TIME PLOTTED => 06:15

Dist	COUNTY	ROUTE	POST MILES TOTAL PROJECT	SHEET No.	TOTAL SHEETS
07	LA	5, 101	16.4, S0.0/25.9	94	459

Prakashyadav 4-20-15
REGISTERED CIVIL ENGINEER DATE

11-2-15
PLANS APPROVAL DATE

REGISTERED PROFESSIONAL ENGINEER PRAKASH YADAV No. 68479 Exp. 9-30-17 CIVIL STATE OF CALIFORNIA

THE STATE OF CALIFORNIA OR ITS OFFICERS OR AGENTS SHALL NOT BE RESPONSIBLE FOR THE ACCURACY OR COMPLETENESS OF SCANNED COPIES OF THIS PLAN SHEET.

NOTES:

1. FOR ACCURATE RIGHT OF WAY DATA, CONTACT RIGHT OF WAY ENGINEERING AT THE DISTRICT OFFICE.
2. CONTRACTOR SHALL VERIFY ELEVATIONS OF PROPOSED DRAINAGE WORK AND EXISTING CONDITIONS BEFORE COMMENCEMENT OF WORK.

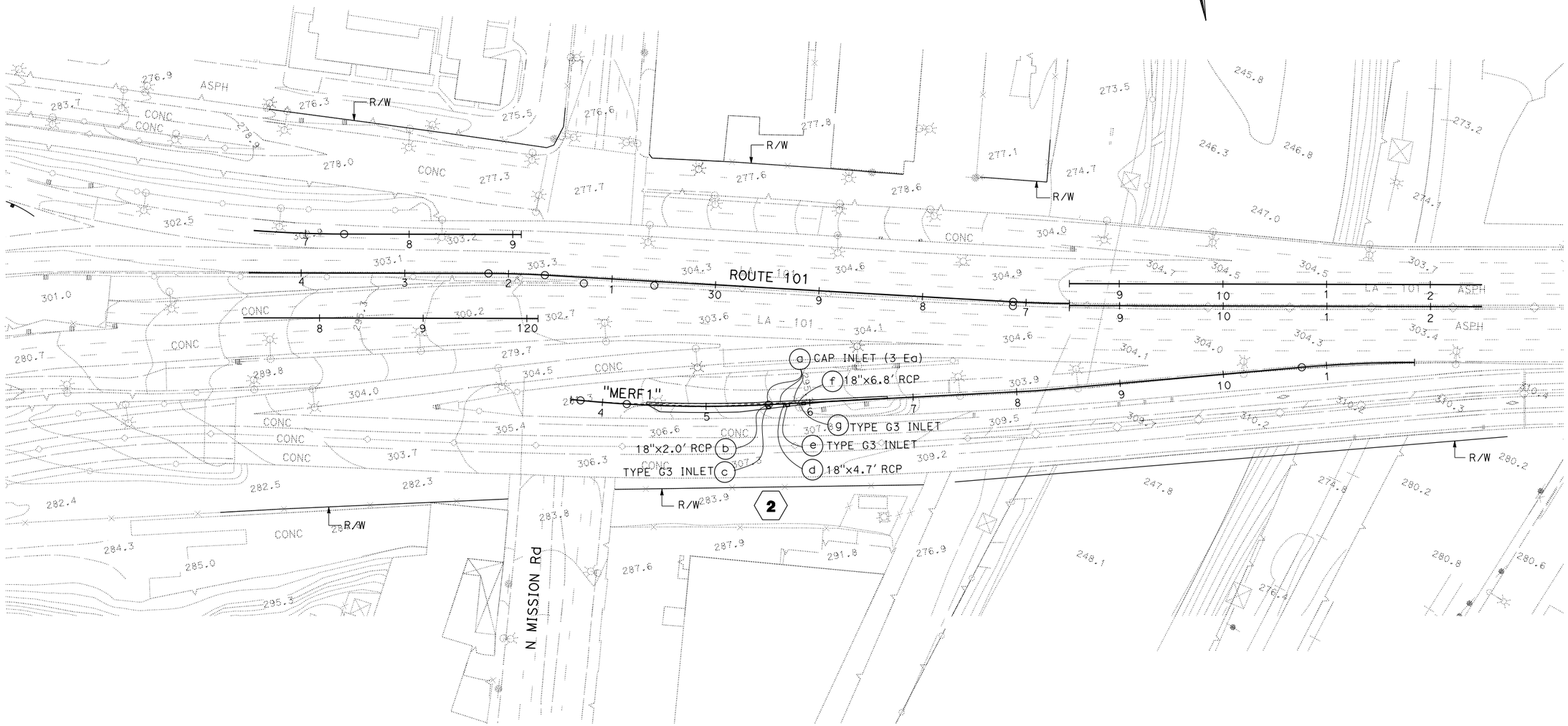

DRAINAGE PLAN

Loc 6 - PM 0.2

SCALE: 1" = 50'

D-2

APPROVED FOR DRAINAGE WORK ONLY

STATE OF CALIFORNIA - DEPARTMENT OF TRANSPORTATION
Caltrans
HYDRAULICS

FUNCTIONAL SUPERVISOR: DAVE BHALLA
CALCULATED-DESIGNED BY: CHRIS NGUYEN
CHECKED BY: PRAKASH YADAV
REVISED BY
DATE REVISED

LAST REVISION 07-05-13
DATE PLOTTED => 15-JAN-2016
TIME PLOTTED => 06:15

Dist	COUNTY	ROUTE	POST MILES TOTAL PROJECT	SHEET No.	TOTAL SHEETS
07	LA	5, 101	16.4, S0.0/25.9	95	459

REGISTERED CIVIL ENGINEER — DATE: 4-20-15

11-2-15
PLANS APPROVAL DATE

REGISTERED PROFESSIONAL ENGINEER — PRAKASH YADAV — No. 68479 — Exp. 9-30-17 — CIVIL — STATE OF CALIFORNIA

THE STATE OF CALIFORNIA OR ITS OFFICERS OR AGENTS SHALL NOT BE RESPONSIBLE FOR THE ACCURACY OR COMPLETENESS OF SCANNED COPIES OF THIS PLAN SHEET.

NOTES:

1. FOR ACCURATE RIGHT OF WAY DATA, CONTACT RIGHT OF WAY ENGINEERING AT THE DISTRICT OFFICE.
2. CONTRACTOR SHALL VERIFY ELEVATIONS OF PROPOSED DRAINAGE WORK AND EXISTING CONDITIONS BEFORE COMMENCEMENT OF WORK.

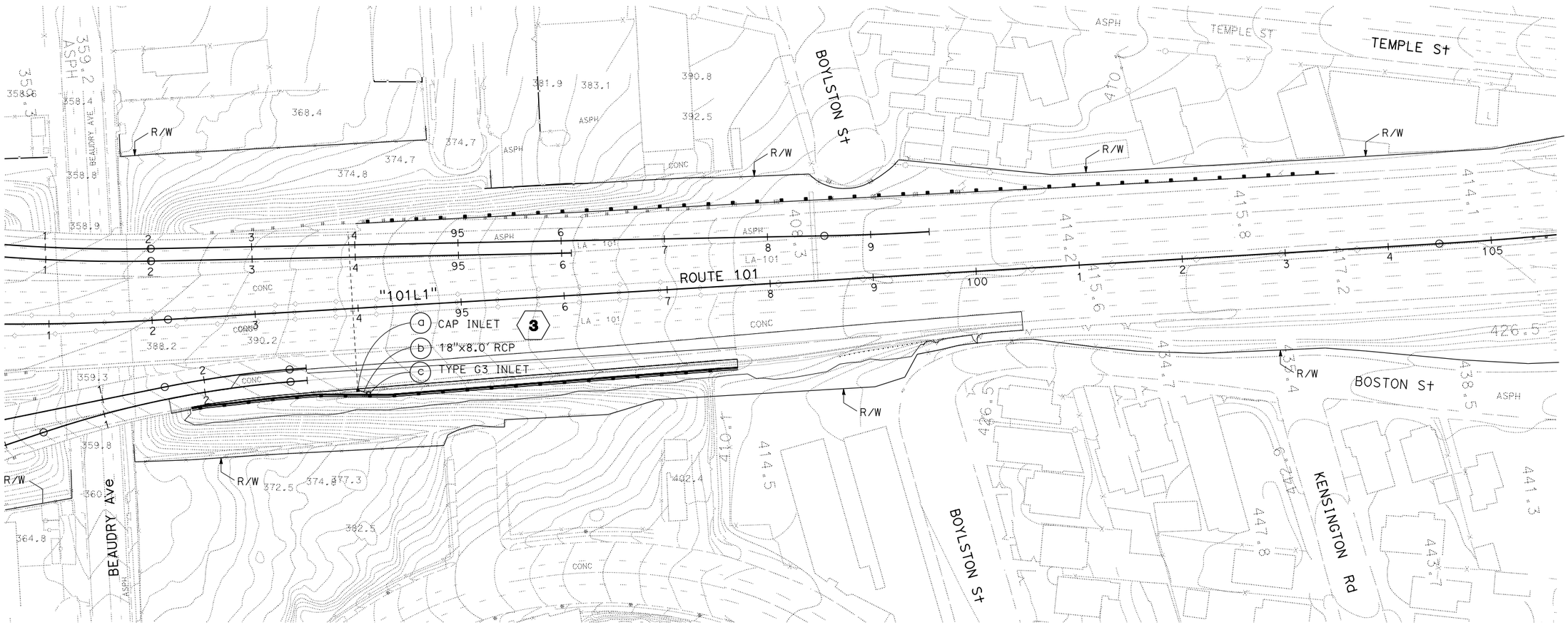

DRAINAGE PLAN

Loc 15 - PM 1.8

SCALE: 1" = 50'

D-3

APPROVED FOR DRAINAGE WORK ONLY

STATE OF CALIFORNIA - DEPARTMENT OF TRANSPORTATION
Caltrans® **HYDRAULICS**

FUNCTIONAL SUPERVISOR: DAVE BHALLA
CALCULATED-DESIGNED BY: CHRIS NGUYEN
CHECKED BY: PRAKASH YADAV
REVISED BY
DATE REVISED

LAST REVISION 07-05-13
DATE PLOTTED => 15-JAN-2016
TIME PLOTTED => 06:15

Dist	COUNTY	ROUTE	POST MILES TOTAL PROJECT	SHEET No.	TOTAL SHEETS
07	LA	5, 101	16.4, S0.0/25.9	96	459

REGISTERED CIVIL ENGINEER — DATE: 4-20-15

11-2-15
PLANS APPROVAL DATE

REGISTERED PROFESSIONAL ENGINEER — PRAKASH YADAV — No. 68479 — Exp. 9-30-17 — CIVIL — STATE OF CALIFORNIA

THE STATE OF CALIFORNIA OR ITS OFFICERS OR AGENTS SHALL NOT BE RESPONSIBLE FOR THE ACCURACY OR COMPLETENESS OF SCANNED COPIES OF THIS PLAN SHEET.

NOTES:

1. FOR ACCURATE RIGHT OF WAY DATA, CONTACT RIGHT OF WAY ENGINEERING AT THE DISTRICT OFFICE.
2. CONTRACTOR SHALL VERIFY ELEVATIONS OF PROPOSED DRAINAGE WORK AND EXISTING CONDITIONS BEFORE COMMENCEMENT OF WORK.

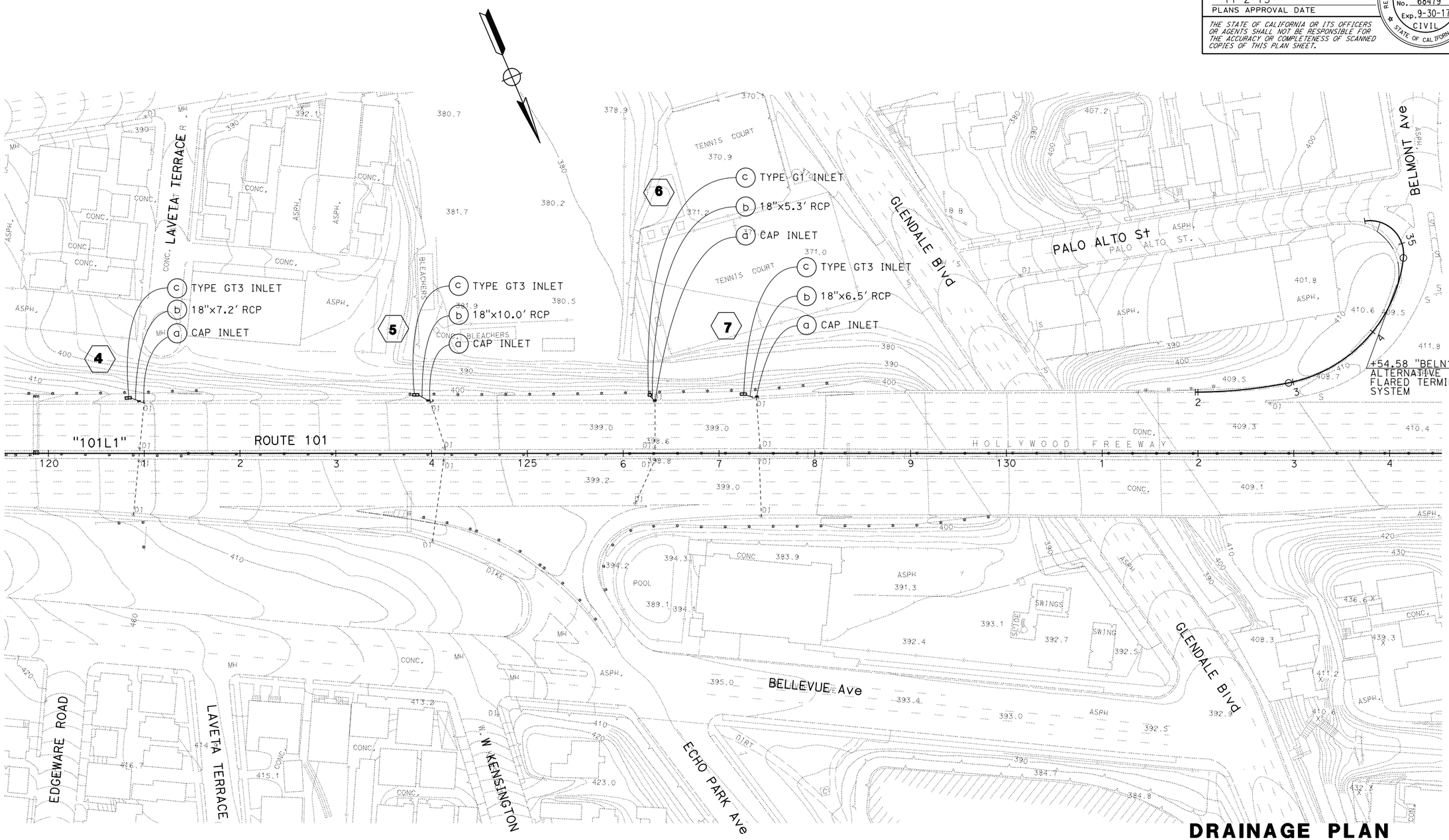

DRAINAGE PLAN

Loc 17 - PM 2.2 & PM 2.3

SCALE: 1" = 50'

D-4

APPROVED FOR DRAINAGE WORK ONLY

STATE OF CALIFORNIA - DEPARTMENT OF TRANSPORTATION
Caltrans
HYDRAULICS

FUNCTIONAL SUPERVISOR: DAVE BHALLA
CALCULATED-DESIGNED BY: CHRIS NGUYEN
CHECKED BY: PRAKASH YADAV
REVISED BY
DATE REVISED

LAST REVISION 07-05-13 | DATE PLOTTED => 15-JAN-2016 | TIME PLOTTED => 06:15

Dist	COUNTY	ROUTE	POST MILES TOTAL PROJECT	SHEET No.	TOTAL SHEETS
07	LA	5, 101	16.4, S0.0/25.9	97	459

Prakashyadav
REGISTERED CIVIL ENGINEER — 4-20-15 DATE

11-2-15
PLANS APPROVAL DATE

REGISTERED PROFESSIONAL ENGINEER — PRAKASH YADAV — No. 68479 — Exp. 9-30-17 — CIVIL — STATE OF CALIFORNIA

THE STATE OF CALIFORNIA OR ITS OFFICERS OR AGENTS SHALL NOT BE RESPONSIBLE FOR THE ACCURACY OR COMPLETENESS OF SCANNED COPIES OF THIS PLAN SHEET.

NOTES:

1. FOR ACCURATE RIGHT OF WAY DATA, CONTACT RIGHT OF WAY ENGINEERING AT THE DISTRICT OFFICE.
2. CONTRACTOR SHALL VERIFY ELEVATIONS OF PROPOSED DRAINAGE WORK AND EXISTING CONDITIONS BEFORE COMMENCEMENT OF WORK.

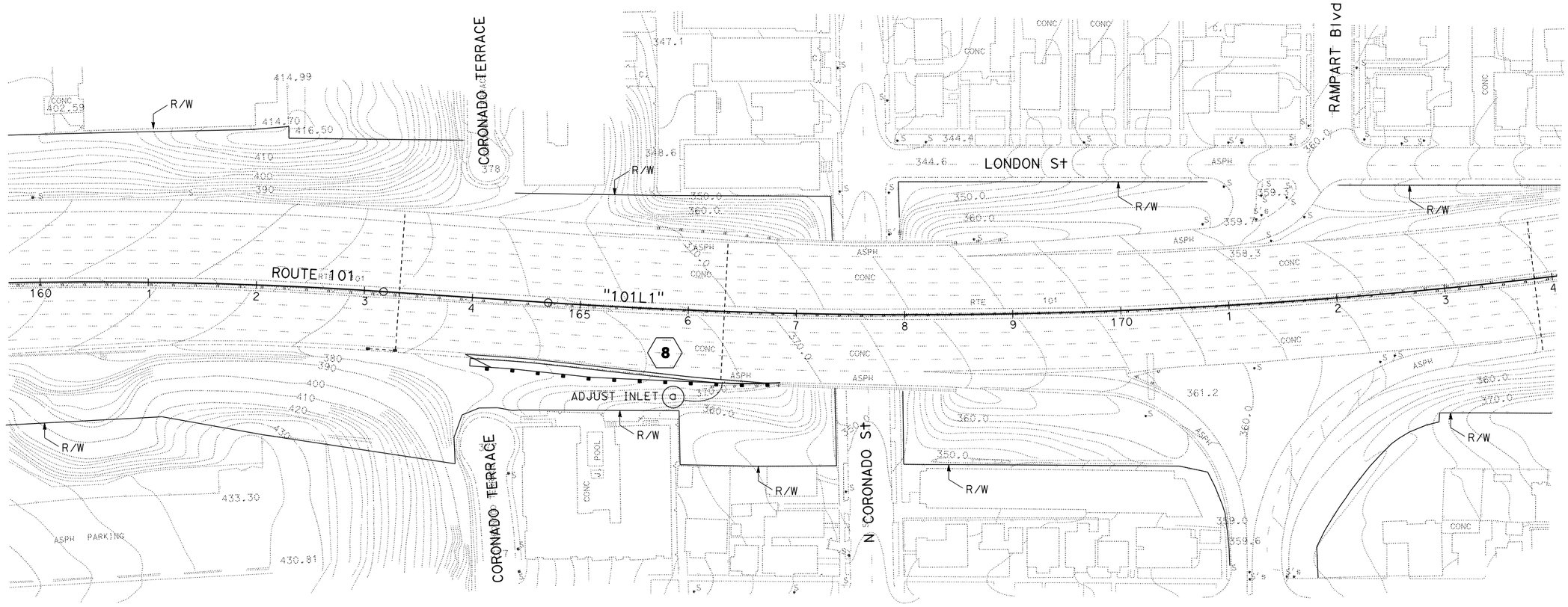

DRAINAGE PLAN

Loc 19 - PM 3.2

SCALE: 1" = 50'

D-5

APPROVED FOR DRAINAGE WORK ONLY

STATE OF CALIFORNIA - DEPARTMENT OF TRANSPORTATION
Caltrans
HYDRAULICS

FUNCTIONAL SUPERVISOR: DAVE BHALLA
CALCULATED-DESIGNED BY: CHRIS NGUYEN
CHECKED BY: PRAKASH YADAV
REVISED BY
DATE REVISED

LAST REVISION 07-05-13
DATE PLOTTED => 15-JAN-2016
TIME PLOTTED => 06:15

Dist	COUNTY	ROUTE	POST MILES TOTAL PROJECT	SHEET No.	TOTAL SHEETS
07	LA	5, 101	16.4, S0.0/25.9	98	459

Prakashyadav
REGISTERED CIVIL ENGINEER — 4-20-15 DATE

11-2-15
PLANS APPROVAL DATE

REGISTERED PROFESSIONAL ENGINEER — PRAKASH YADAV — No. 68479 — Exp. 9-30-17 — CIVIL — STATE OF CALIFORNIA

THE STATE OF CALIFORNIA OR ITS OFFICERS OR AGENTS SHALL NOT BE RESPONSIBLE FOR THE ACCURACY OR COMPLETENESS OF SCANNED COPIES OF THIS PLAN SHEET.

NOTES:

1. FOR ACCURATE RIGHT OF WAY DATA, CONTACT RIGHT OF WAY ENGINEERING AT THE DISTRICT OFFICE.
2. CONTRACTOR SHALL VERIFY ELEVATIONS OF PROPOSED DRAINAGE WORK AND EXISTING CONDITIONS BEFORE COMMENCEMENT OF WORK.

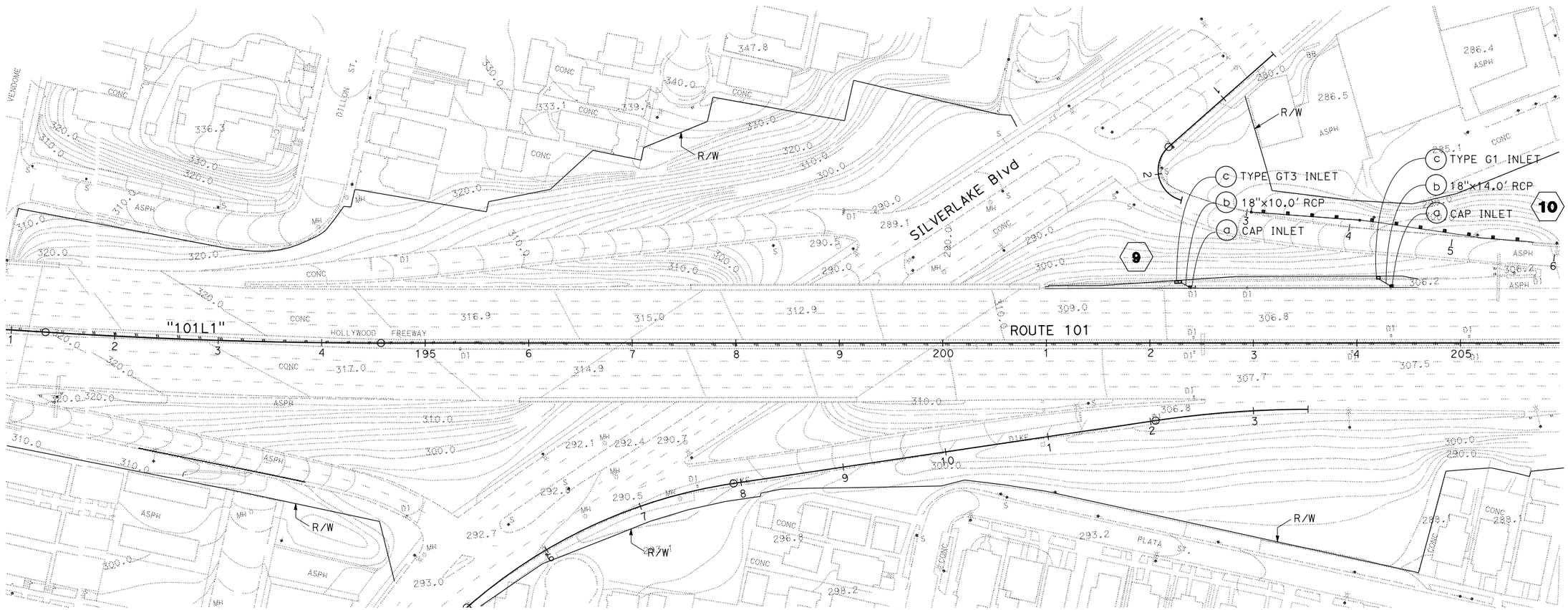

DRAINAGE PLAN

Loc 22 - PM 3.8

SCALE: 1" = 50'

D-6

APPROVED FOR DRAINAGE WORK ONLY

STATE OF CALIFORNIA - DEPARTMENT OF TRANSPORTATION
Caltrans
HYDRAULICS

FUNCTIONAL SUPERVISOR: DAVE BHALLA
CALCULATED-DESIGNED BY: CHRIS NGUYEN
CHECKED BY: PRAKASH YADAV
REVISED BY
DATE REVISED

LAST REVISION 07-05-13 | DATE PLOTTED => 15-JAN-2016 | TIME PLOTTED => 06:15

Dist	COUNTY	ROUTE	POST MILES TOTAL PROJECT	SHEET No.	TOTAL SHEETS
07	LA	5, 101	16.4, S0.0/25.9	99	459

Prakashyadav 4-20-15
REGISTERED CIVIL ENGINEER DATE

11-2-15
PLANS APPROVAL DATE

REGISTERED PROFESSIONAL ENGINEER PRAKASH YADAV No. 68479 Exp. 9-30-17 CIVIL STATE OF CALIFORNIA

THE STATE OF CALIFORNIA OR ITS OFFICERS OR AGENTS SHALL NOT BE RESPONSIBLE FOR THE ACCURACY OR COMPLETENESS OF SCANNED COPIES OF THIS PLAN SHEET.

NOTES:

1. FOR ACCURATE RIGHT OF WAY DATA, CONTACT RIGHT OF WAY ENGINEERING AT THE DISTRICT OFFICE.
2. CONTRACTOR SHALL VERIFY ELEVATIONS OF PROPOSED DRAINAGE WORK AND EXISTING CONDITIONS BEFORE COMMENCEMENT OF WORK.

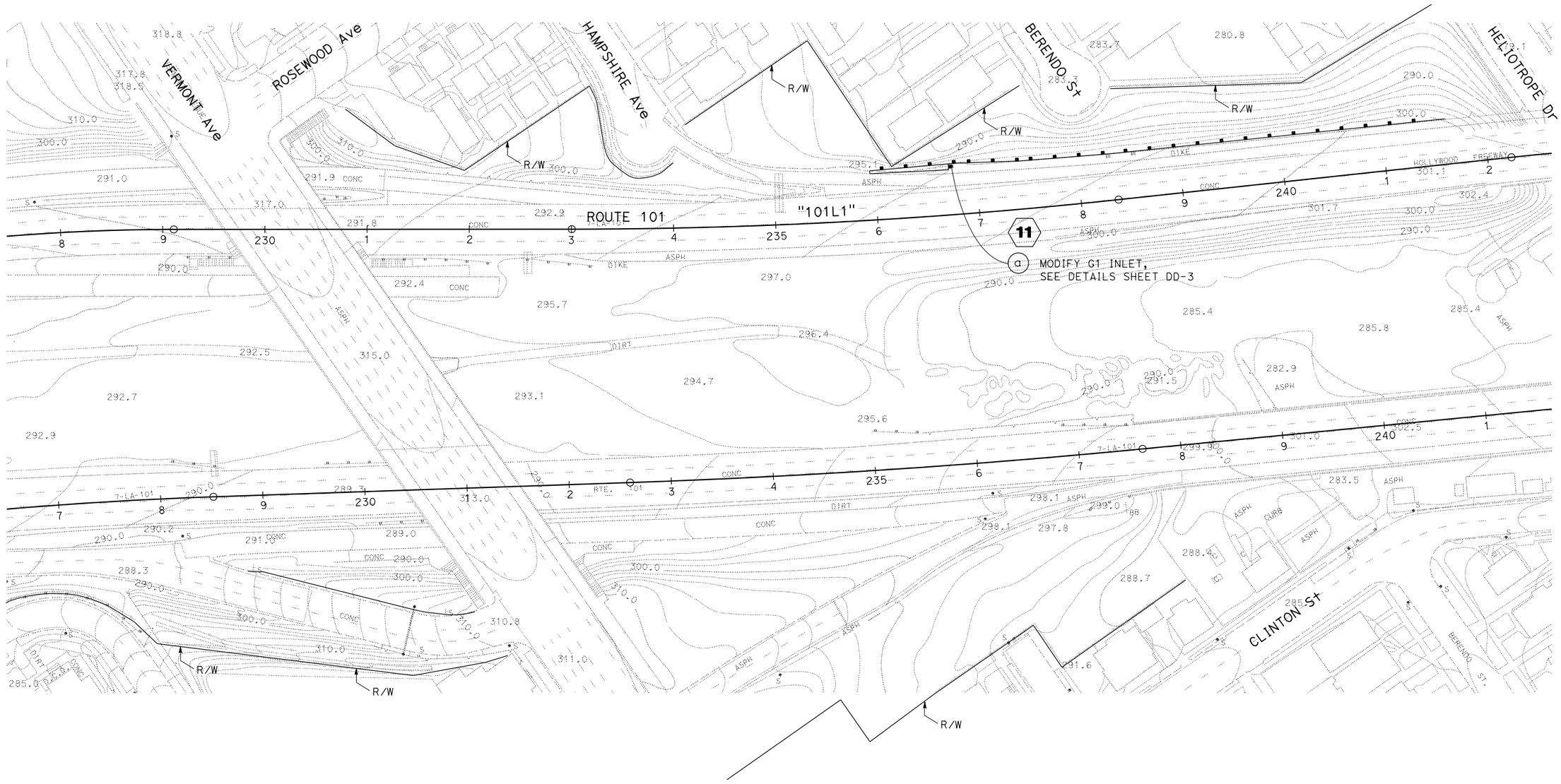

DRAINAGE PLAN

Loc 25 - PM 4.58

SCALE: 1" = 50'

D-7

APPROVED FOR DRAINAGE WORK ONLY

REVISED BY	DATE REVISED
CHRIS NGUYEN	PRAKASH YADAV

CALCULATED-DESIGNED BY
CHECKED BY

FUNCTIONAL SUPERVISOR: DAVE BHALLA

STATE OF CALIFORNIA - DEPARTMENT OF TRANSPORTATION
Caltrans
HYDRAULICS

LAST REVISION 07-05-13 | DATE PLOTTED => 15-JAN-2016 | TIME PLOTTED => 06:15

Dist	COUNTY	ROUTE	POST MILES TOTAL PROJECT	SHEET No.	TOTAL SHEETS
07	LA	5, 101	16.4, S0.0/25.9	100	459

Prakashyadav 4-20-15
REGISTERED CIVIL ENGINEER DATE

11-2-15
PLANS APPROVAL DATE

REGISTERED PROFESSIONAL ENGINEER PRAKASH YADAV No. 68479 Exp. 9-30-17 CIVIL STATE OF CALIFORNIA

THE STATE OF CALIFORNIA OR ITS OFFICERS OR AGENTS SHALL NOT BE RESPONSIBLE FOR THE ACCURACY OR COMPLETENESS OF SCANNED COPIES OF THIS PLAN SHEET.

NOTES:

1. FOR ACCURATE RIGHT OF WAY DATA, CONTACT RIGHT OF WAY ENGINEERING AT THE DISTRICT OFFICE.
2. CONTRACTOR SHALL VERIFY ELEVATIONS OF PROPOSED DRAINAGE WORK AND EXISTING CONDITIONS BEFORE COMMENCEMENT OF WORK.

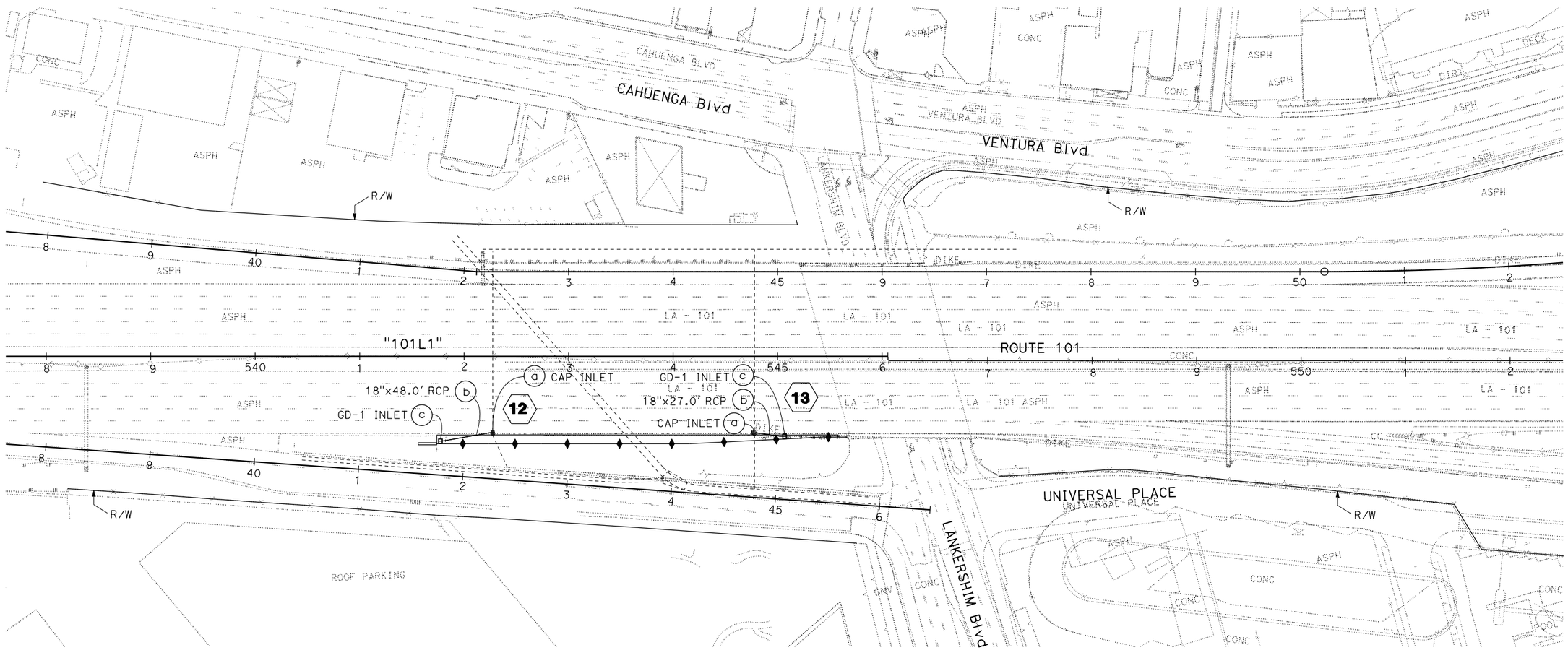

DRAINAGE PLAN

Loc 35 - PM 10.3

SCALE: 1" = 50'

D-8

APPROVED FOR DRAINAGE WORK ONLY

STATE OF CALIFORNIA - DEPARTMENT OF TRANSPORTATION

Caltrans® **HYDRAULICS**

FUNCTIONAL SUPERVISOR: DAVE BHALLA

CALCULATED-DESIGNED BY: CHRIS NGUYEN

CHECKED BY: PRAKASH YADAV

REVISED BY

DATE REVISED

LAST REVISION 07-05-13

DATE PLOTTED => 15-JAN-2016
TIME PLOTTED => 06:15