Dist	COUNTY	ROUTE	POST MILES TOTAL PROJECT	SHEET No.	TOTAL SHEETS
07	LA,Ven	126	0.0/5.8, 13.1/20.0, 22.0/34.6	1	34

STATE OF CALIFORNIA

DEPARTMENT OF TRANSPORTATION

HSNH-000C(328)E

PROJECT PLANS FOR CONSTRUCTION ON

STATE HIGHWAY

IN LOS ANGELES AND VENTURA COUNTIES IN SANTA PAULA AND FILLMORE AND AT BUCKHORN AND PIRU FROM HALLOCK DRIVE TO E STREET AND FROM KELLOGG STREET TO COMMERCE CENTER DRIVE

TO BE SUPPLEMENTED BY STANDARD PLANS DATED MAY 2006

INDEX OF PLANS

Sheet No.	Description
1	Title and Location Map
2	Typical Cross Sections
3-7	Construction Details
8	Utility Plan
9	Construction Area Signs
10	Traffic Handling Detail
11-12	Pavement Delineation Details
13-14	Pavement Delineation Quantities
15	Sign Plan
16	Sign Quantities
17-21	Summary Of Quantities
22-23	Electrical Plans
24-34	Revised and New Standard Plans

THE STANDARD PLANS LIST APPLICABLE TO THIS CONTRACT IS INCLUDED IN THE NOTICE TO CONTRACTORS AND SPECIAL PROVISIONS BOOK.

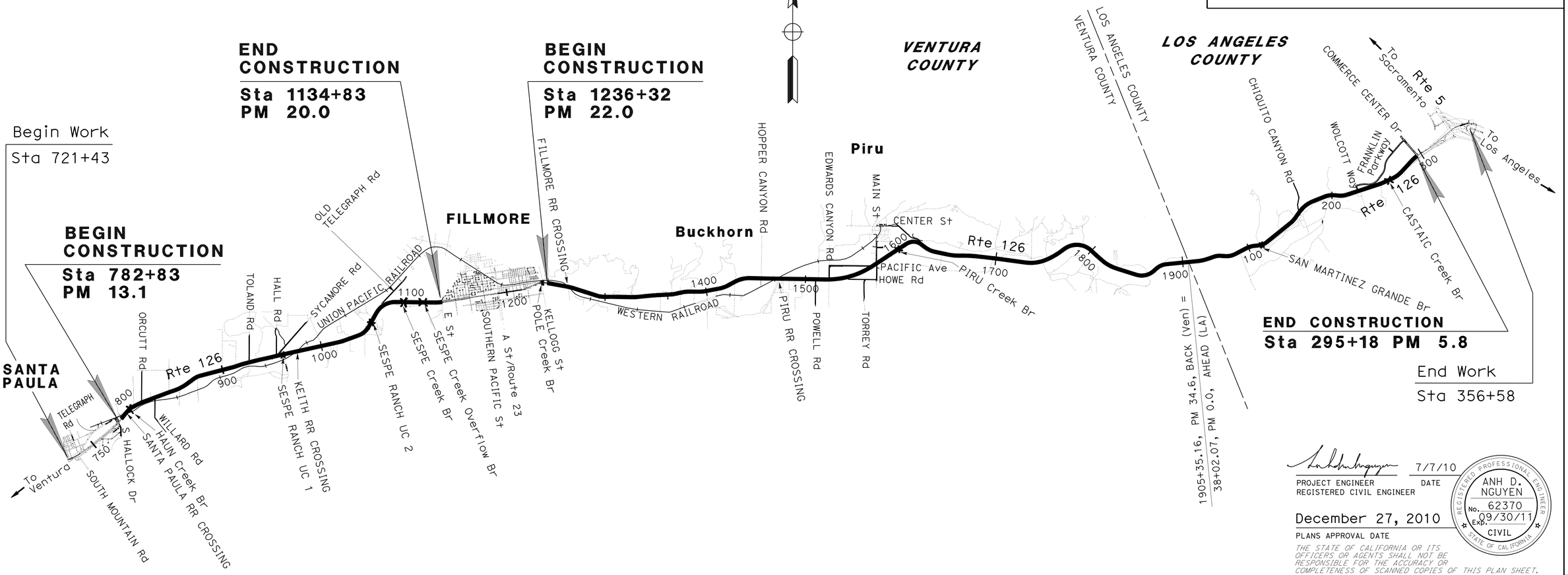

PROJECT MANAGER RAVI GHATE

DESIGN ENGINEER ANH D. NGUYEN

PROJECT ENGINEER REGISTERED CIVIL ENGINEER — DATE 7/7/10

REGISTERED PROFESSIONAL ENGINEER ANH D. NGUYEN No. 62370 Exp. 09/30/11 CIVIL STATE OF CALIFORNIA

December 27, 2010

PLANS APPROVAL DATE

THE STATE OF CALIFORNIA OR ITS OFFICERS OR AGENTS SHALL NOT BE RESPONSIBLE FOR THE ACCURACY OR COMPLETENESS OF SCANNED COPIES OF THIS PLAN SHEET.

THE CONTRACTOR SHALL POSSESS THE CLASS (OR CLASSES) OF LICENSE AS SPECIFIED IN THE "NOTICE TO BIDDERS."

NO SCALE

CONTRACT No.	07-280104
PROJECT ID	0700020065

LAST REVISION 00-00-00 — DATE PLOTTED => 19-JAN-2011 TIME PLOTTED => 12:24

Dist	COUNTY	ROUTE	POST MILES TOTAL PROJECT	SHEET No.	TOTAL SHEETS
07	LA,Ven	126	0.0/5.8, 13.1/20.0, 22.0/34.6	2	34

REGISTERED CIVIL ENGINEER 7/7/10 DATE

12-27-10
PLANS APPROVAL DATE

REGISTERED PROFESSIONAL ENGINEER ANH D. NGUYEN No. 62370 Exp. 9/30/11 CIVIL STATE OF CALIFORNIA

THE STATE OF CALIFORNIA OR ITS OFFICERS OR AGENTS SHALL NOT BE RESPONSIBLE FOR THE ACCURACY OR COMPLETENESS OF SCANNED COPIES OF THIS PLAN SHEET.

NOTES:

1. DIMENSIONS OF THE PAVEMENT STRUCTURES (STRUCTURAL SECTIONS) ARE SUBJECT TO THE TOLERANCES SPECIFIED IN THE STANDARD SPECIFICATIONS.
2. SUPERELEVATION AS SHOWN OR AS DIRECTED BY THE ENGINEER.
3. EXISTING UTILITY FACILITIES HAVE NOT BEEN PLOTTED ON THESE PLANS.
4. FOR ACCURATE RIGHT OF WAY DATA, CONTACT RIGHT OF WAY ENGINEERING AT DISTRICT OFFICE.
5. EXISTING DRAINAGE FACILITIES HAVE NOT BEEN PLOTTED ON THESE PLANS.

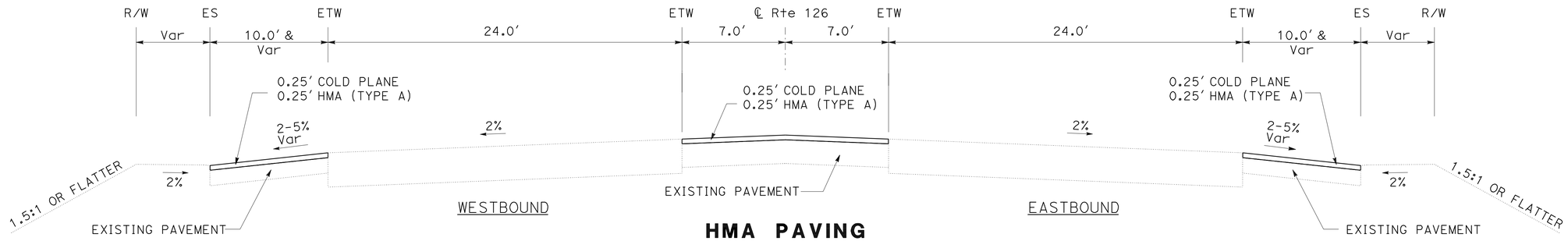

HMA PAVING

Sta 1236+25.0 TO Sta 1264+10.0

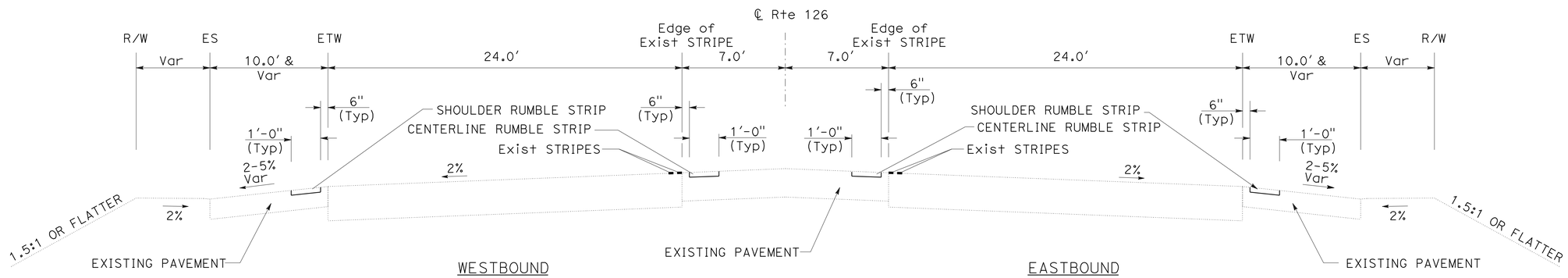

HMA, GROUND-IN INDENTATIONS

Sta 1236+25.0 TO Sta 1264+10.0

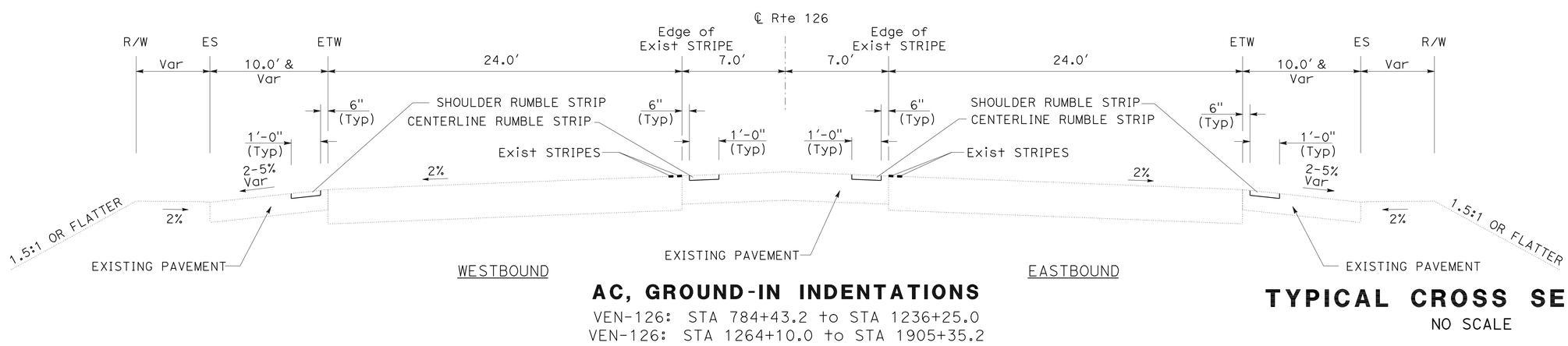

AC, GROUND-IN INDENTATIONS

VEN-126: STA 784+43.2 to STA 1236+25.0
VEN-126: STA 1264+10.0 to STA 1905+35.2
LA-126: STA 38+02.1 to STA 295+18.1

TYPICAL CROSS SECTIONS

NO SCALE

X-1

STATE OF CALIFORNIA - DEPARTMENT OF TRANSPORTATION
Caltrans® TRAFFIC DESIGN
FUNCTIONAL SUPERVISOR: FARIBORZ M. TEHRANI
CALCULATED-DESIGNED BY: JAMES CANALITA / RICHARD KHAW
CHECKED BY: ANH D. NGUYEN
REVISED BY
DATE REVISED

LAST REVISION 00-00-00 | DATE PLOTTED => 19-JAN-2011 | TIME PLOTTED => 12:25

Dist	COUNTY	ROUTE	POST MILES TOTAL PROJECT	SHEET No.	TOTAL SHEETS
07	LA,Ven	126	0.0/5.8, 13.1/20.0, 22.0/34.6	3	34

REGISTERED CIVIL ENGINEER 7/7/10 DATE

12-27-10
PLANS APPROVAL DATE

REGISTERED PROFESSIONAL ENGINEER ANH D. NGUYEN No. 62370 Exp. 9/30/11 CIVIL STATE OF CALIFORNIA

THE STATE OF CALIFORNIA OR ITS OFFICERS OR AGENTS SHALL NOT BE RESPONSIBLE FOR THE ACCURACY OR COMPLETENESS OF SCANNED COPIES OF THIS PLAN SHEET.

NOTES:

EXISTING UTILITY FACILITIES HAVE NOT BEEN PLOTTED ON THIS PLAN.
TS - ALTERNATIVE IN-LINE TERMINAL SYSTEM
SR - STRENGTHENED RAILING

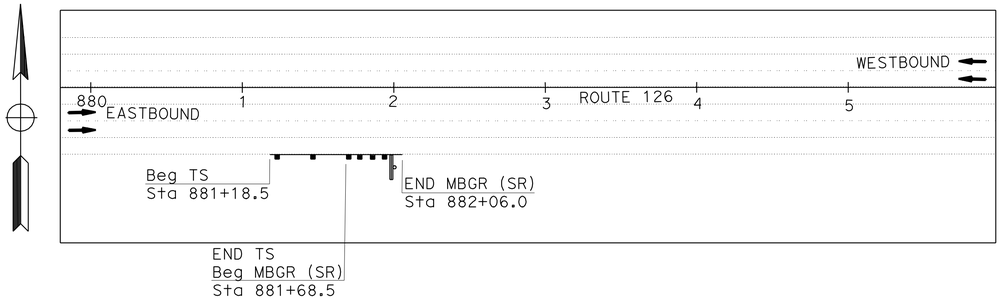

SPEED FEEDBACK SIGN LOCATION No. 1
(PM 15.3 & 380′ ± WEST OF PM MARKER 13.34 ON EB SIDE)

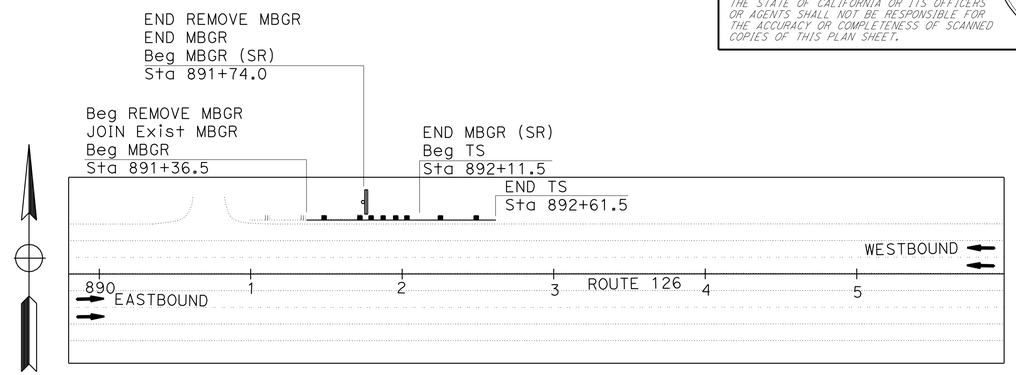

SPEED FEEDBACK SIGN LOCATION No. 2
(PM 15.5 IMMEDIATELY EAST OF Dwy @ HOUSE No. 19655 & 19659)

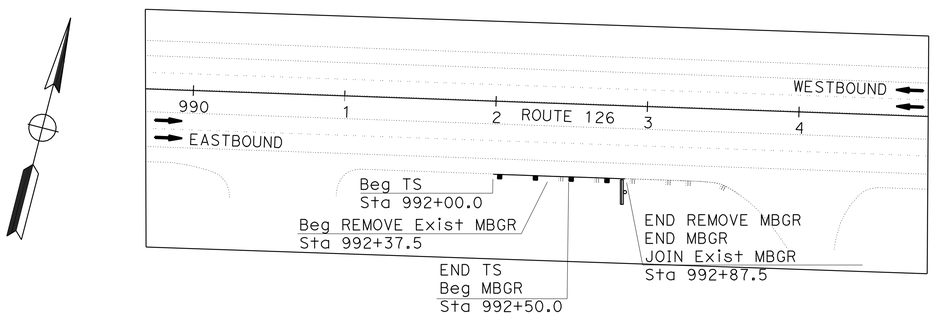

SPEED FEEDBACK SIGN LOCATION No. 3
(PM 17.32)

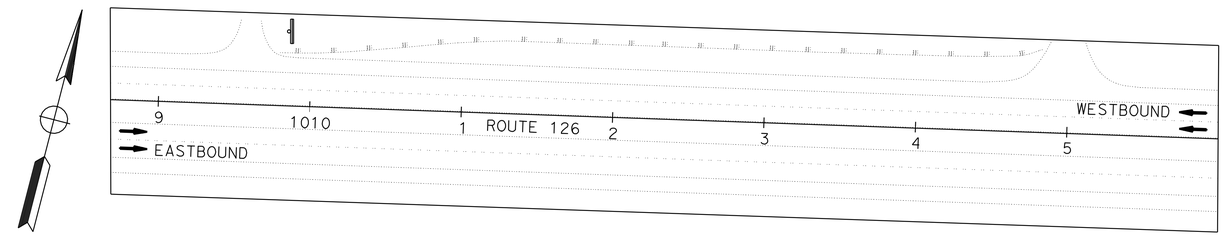

SPEED FEEDBACK SIGN LOCATION No. 4
(PM 17.6 AND 200′ ± EAST OF VALLEY CREST WATER TANK LOCATED ON EB SIDE)

NOTE: 1. SPEED FEEDBACK SIGN IS 34′-0" FROM ETW.

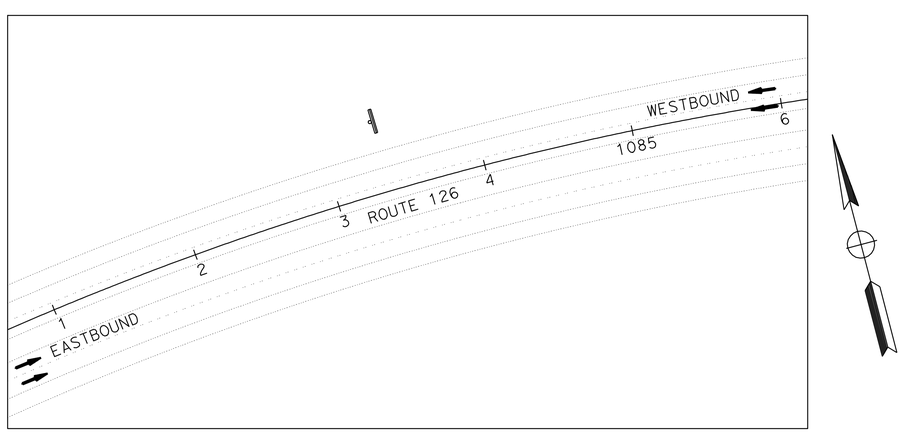

SPEED FEEDBACK SIGN LOCATION No. 5
(PM 19.1 & 100′ ± WEST OF POWER POLE # 4499954E)

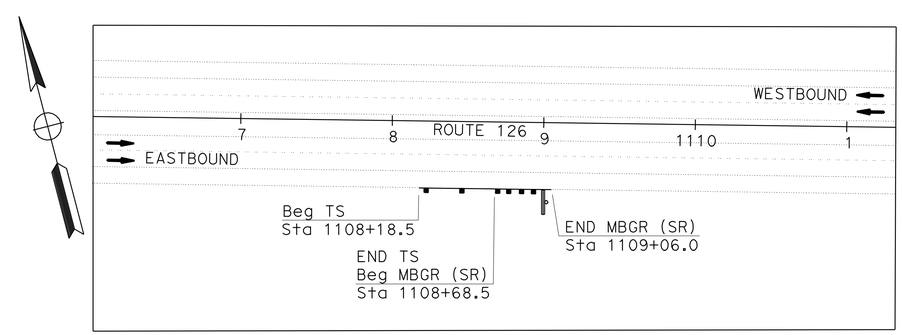

SPEED FEEDBACK SIGN LOCATION No. 6
(PM 20.0 DIRECTLY ACROSS FROM THE Dwy @ HOUSE No. 1555)

CONSTRUCTION DETAILS

NO SCALE

C-1

STATE OF CALIFORNIA - DEPARTMENT OF TRANSPORTATION
Caltrans® TRAFFIC DESIGN
FUNCTIONAL SUPERVISOR: FARIBORZ M. TEHRANI
CALCULATED-DESIGNED BY: JAMES CANALITA / RICHARD KHAW
CHECKED BY: ANH D. NGUYEN
REVISED BY
DATE REVISED

LAST REVISION 00-00-00
DATE PLOTTED => 19-JAN-2011
TIME PLOTTED => 12:25

Dist	COUNTY	ROUTE	POST MILES TOTAL PROJECT	SHEET No.	TOTAL SHEETS
07	LA,Ven	126	0.0/5.8, 13.1/20.0, 22.0/34.6	4	34

REGISTERED CIVIL ENGINEER 7/7/10 DATE

12-27-10
PLANS APPROVAL DATE

REGISTERED PROFESSIONAL ENGINEER ANH D. NGUYEN No. 62370 Exp. 9/30/11 CIVIL STATE OF CALIFORNIA

THE STATE OF CALIFORNIA OR ITS OFFICERS OR AGENTS SHALL NOT BE RESPONSIBLE FOR THE ACCURACY OR COMPLETENESS OF SCANNED COPIES OF THIS PLAN SHEET.

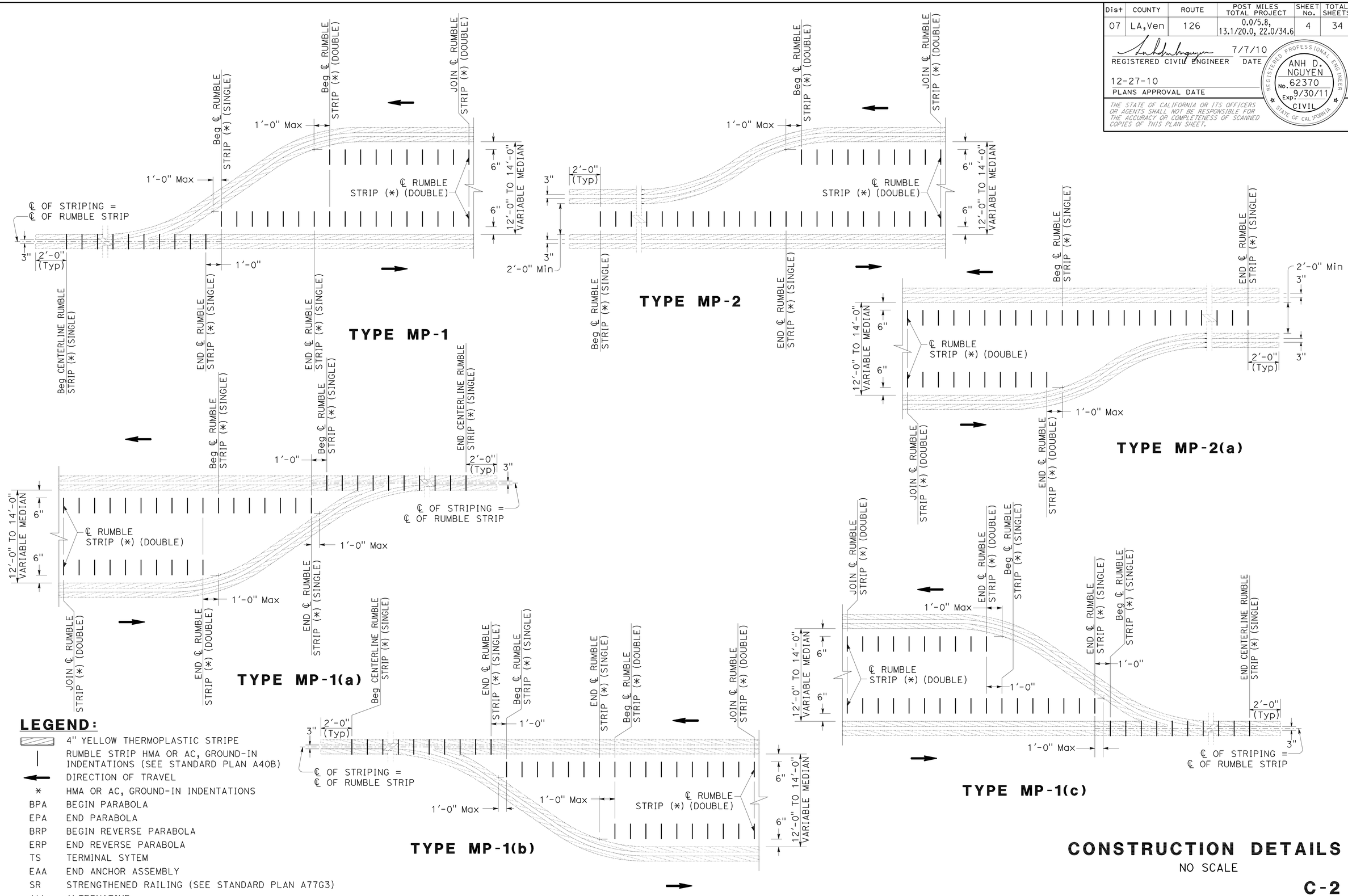

LEGEND:

- 4" YELLOW THERMOPLASTIC STRIPE
- RUMBLE STRIP HMA OR AC, GROUND-IN INDENTATIONS (SEE STANDARD PLAN A40B)
- DIRECTION OF TRAVEL
- * HMA OR AC, GROUND-IN INDENTATIONS
- BPA BEGIN PARABOLA
- EPA END PARABOLA
- BRP BEGIN REVERSE PARABOLA
- ERP END REVERSE PARABOLA
- TS TERMINAL SYTEM
- EAA END ANCHOR ASSEMBLY
- SR STRENGTHENED RAILING (SEE STANDARD PLAN A77G3)
- Alte ALTERNATIVE

CONSTRUCTION DETAILS

NO SCALE

C-2

STATE OF CALIFORNIA - DEPARTMENT OF TRANSPORTATION
Caltrans® TRAFFIC DESIGN

FUNCTIONAL SUPERVISOR: FARIBORZ M. TEHRANI
CALCULATED-DESIGNED BY: JAMES CANALITA / RICHARD KHAW
CHECKED BY: ANH D. NGUYEN
REVISED BY
DATE REVISED

LAST REVISION 00-00-00
DATE PLOTTED => 19-JAN-2011
TIME PLOTTED => 12:25

Dist	COUNTY	ROUTE	POST MILES TOTAL PROJECT	SHEET No.	TOTAL SHEETS
07	LA,Ven	126	0.0/5.8, 13.1/20.0, 22.0/34.6	5	34

REGISTERED CIVIL ENGINEER 7/7/10 DATE

12-27-10
PLANS APPROVAL DATE

REGISTERED PROFESSIONAL ENGINEER ANH D. NGUYEN No. 62370 Exp. 9/30/11 CIVIL STATE OF CALIFORNIA

THE STATE OF CALIFORNIA OR ITS OFFICERS OR AGENTS SHALL NOT BE RESPONSIBLE FOR THE ACCURACY OR COMPLETENESS OF SCANNED COPIES OF THIS PLAN SHEET.

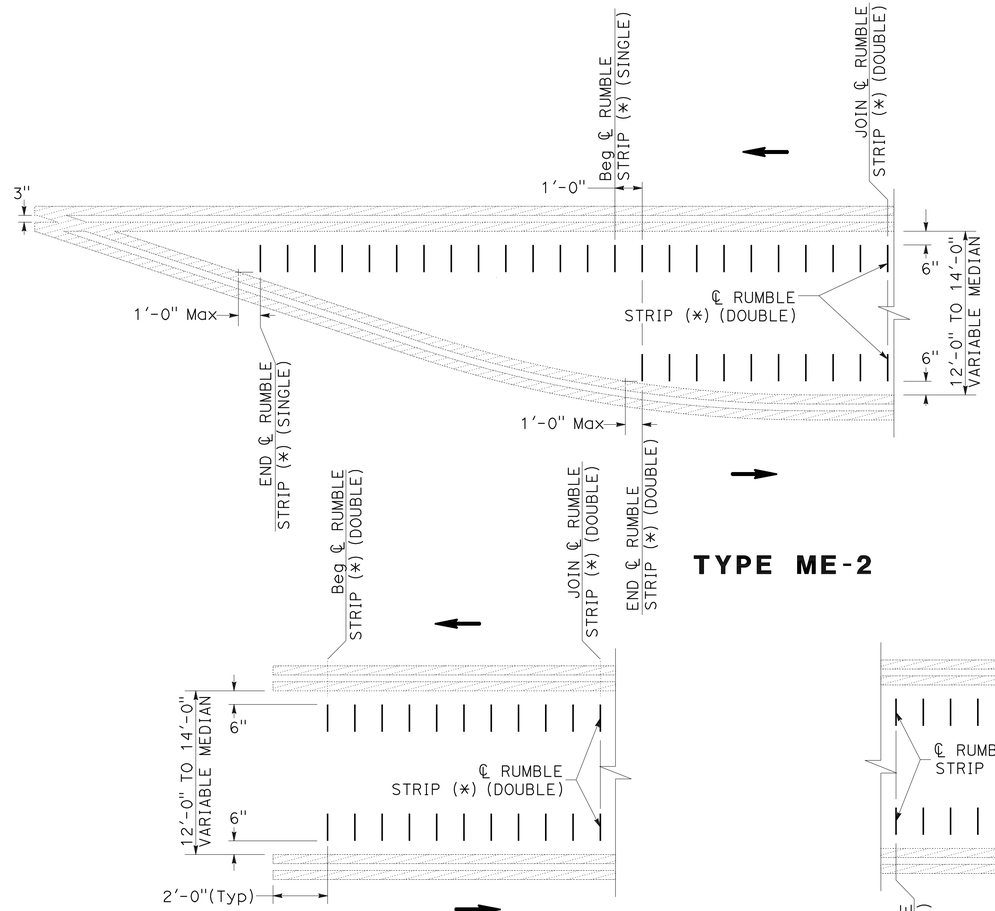

TYPE ME-2

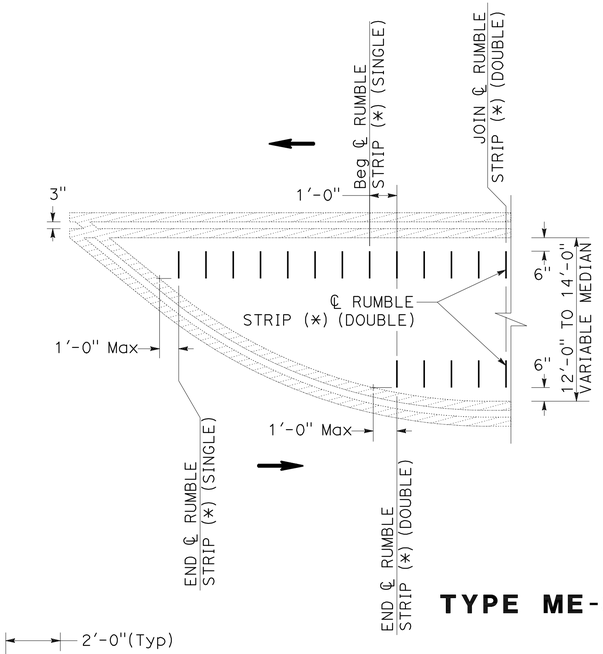

TYPE ME-3

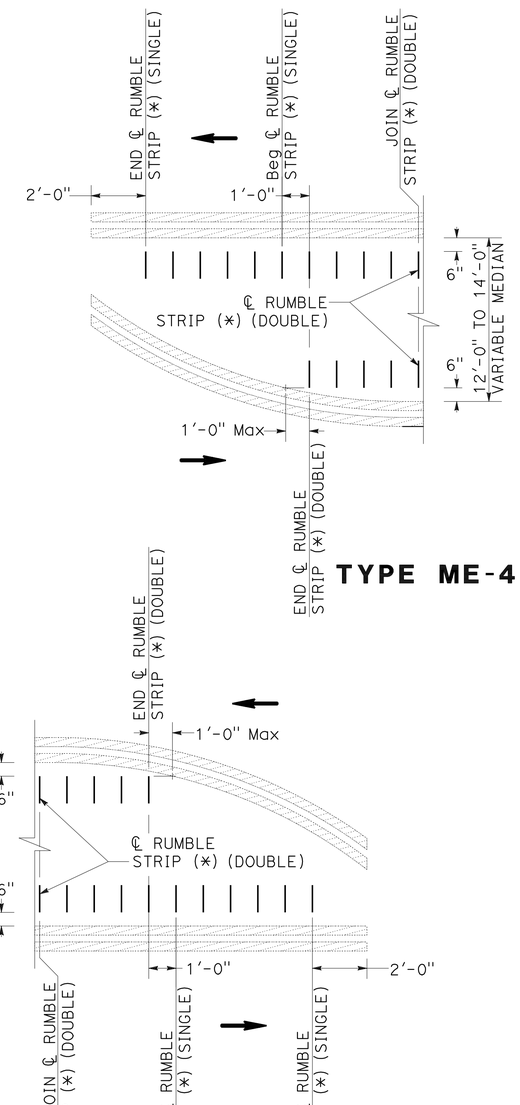

TYPE ME-4

TYPE ME-1

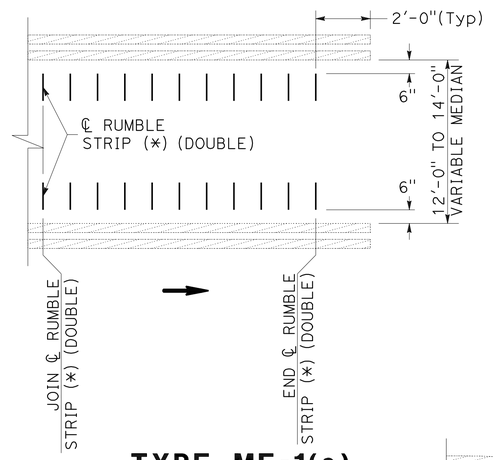

TYPE ME-1(a)

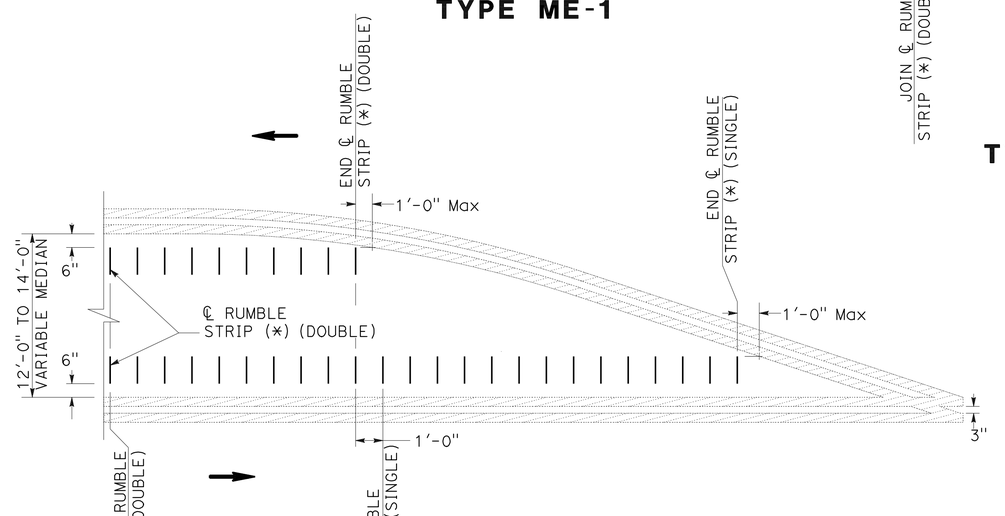

TYPE ME-2(a)

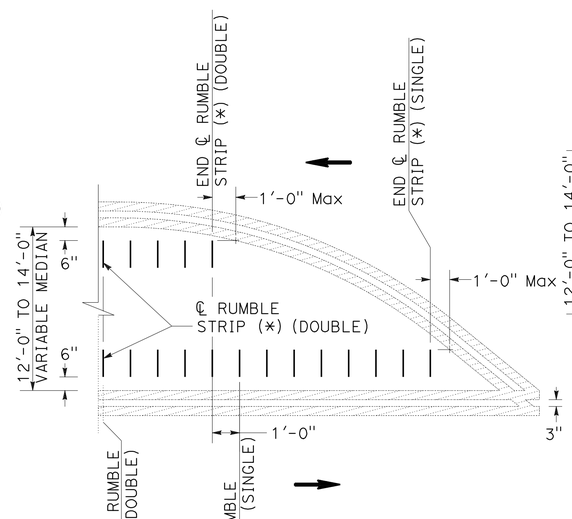

TYPE ME-3(a)

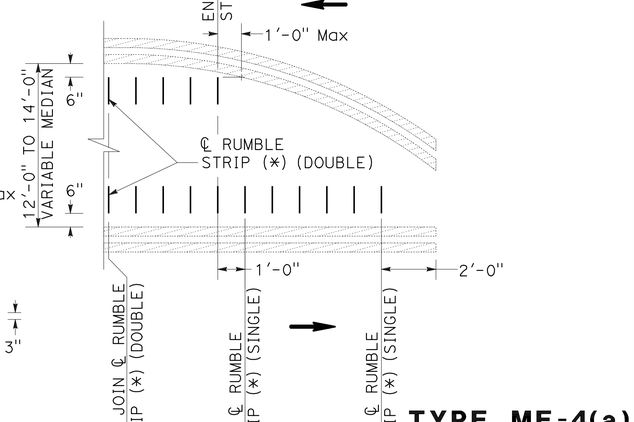

TYPE ME-4(a)

CONSTRUCTION DETAILS

NO SCALE

C-3

STATE OF CALIFORNIA - DEPARTMENT OF TRANSPORTATION
Caltrans® TRAFFIC DESIGN

FUNCTIONAL SUPERVISOR: FARIBORZ M. TEHRANI
CALCULATED-DESIGNED BY: JAMES CANALITA / RICHARD KHAW
CHECKED BY: ANH D. NGUYEN
REVISED BY
DATE REVISED

LAST REVISION 00-00-00
DATE PLOTTED => 19-JAN-2011
TIME PLOTTED => 12:25

Dist	COUNTY	ROUTE	POST MILES TOTAL PROJECT	SHEET No.	TOTAL SHEETS
07	LA,Ven	126	0.0/5.8, 13.1/20.0, 22.0/34.6	6	34

REGISTERED CIVIL ENGINEER 7/7/10 DATE

12-27-10
PLANS APPROVAL DATE

REGISTERED PROFESSIONAL ENGINEER
ANH D. NGUYEN
No. 62370
Exp. 9/30/11
CIVIL
STATE OF CALIFORNIA

THE STATE OF CALIFORNIA OR ITS OFFICERS OR AGENTS SHALL NOT BE RESPONSIBLE FOR THE ACCURACY OR COMPLETENESS OF SCANNED COPIES OF THIS PLAN SHEET.

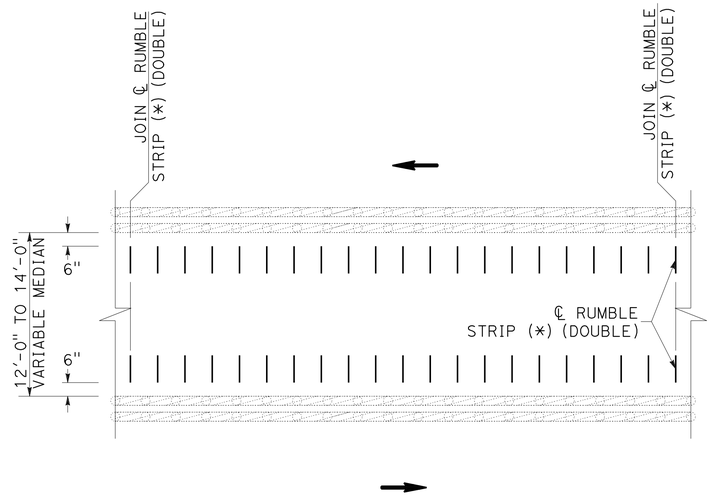

TYPE ME-5

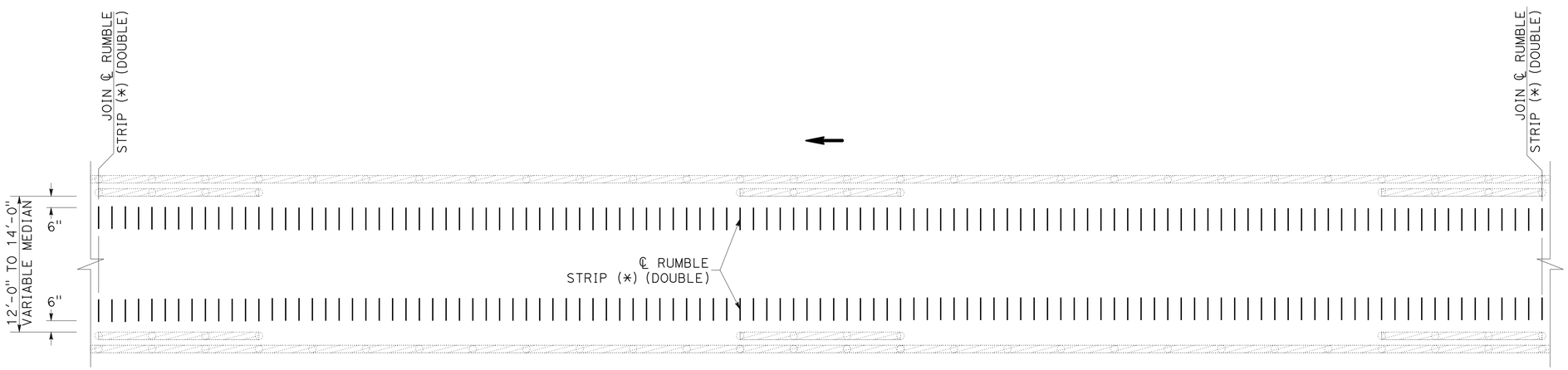

TYPE ME-6

CONSTRUCTION DETAILS

NO SCALE

C-4

STATE OF CALIFORNIA - DEPARTMENT OF TRANSPORTATION
Caltrans® **TRAFFIC DESIGN**

FUNCTIONAL SUPERVISOR: FARIBORZ M. TEHRANI
CALCULATED-DESIGNED BY: JAMES CANALITA / RICHARD KHAW
CHECKED BY: ANH D. NGUYEN
REVISED BY
DATE REVISED

LAST REVISION 00-00-00
DATE PLOTTED => 19-JAN-2011
TIME PLOTTED => 12:26

Dist	COUNTY	ROUTE	POST MILES TOTAL PROJECT	SHEET No.	TOTAL SHEETS
07	LA,Ven	126	0.0/5.8, 13.1/20.0, 22.0/34.6	7	34

REGISTERED CIVIL ENGINEER 7/7/10 DATE

12-27-10
PLANS APPROVAL DATE

REGISTERED PROFESSIONAL ENGINEER ANH D. NGUYEN No. 62370 Exp. 9/30/11 CIVIL STATE OF CALIFORNIA

THE STATE OF CALIFORNIA OR ITS OFFICERS OR AGENTS SHALL NOT BE RESPONSIBLE FOR THE ACCURACY OR COMPLETENESS OF SCANNED COPIES OF THIS PLAN SHEET.

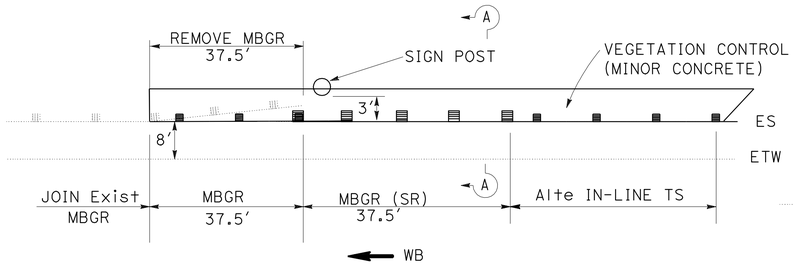

SIGN LOCATION 2

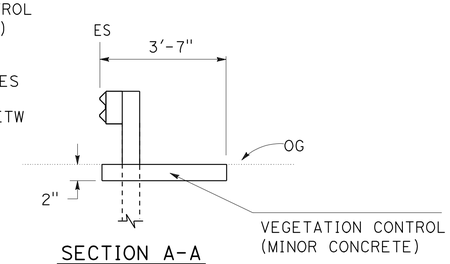

SECTION A-A

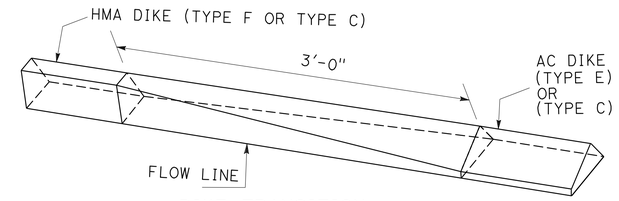

DIKE TRANSITION

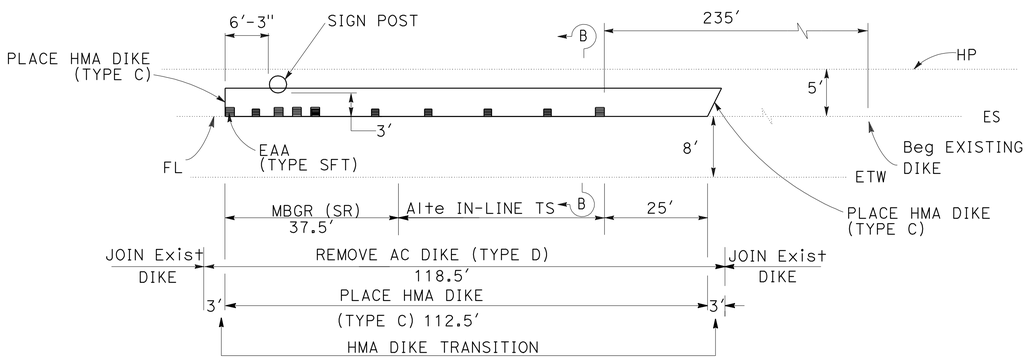

SIGN LOCATION 1

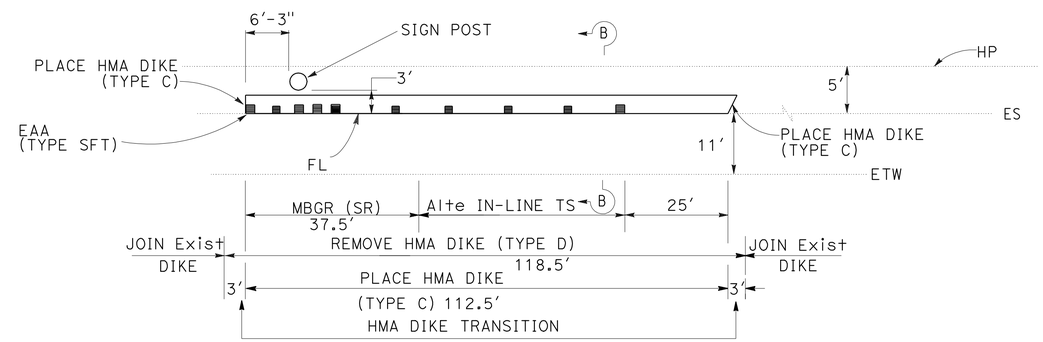

SIGN LOCATION 6

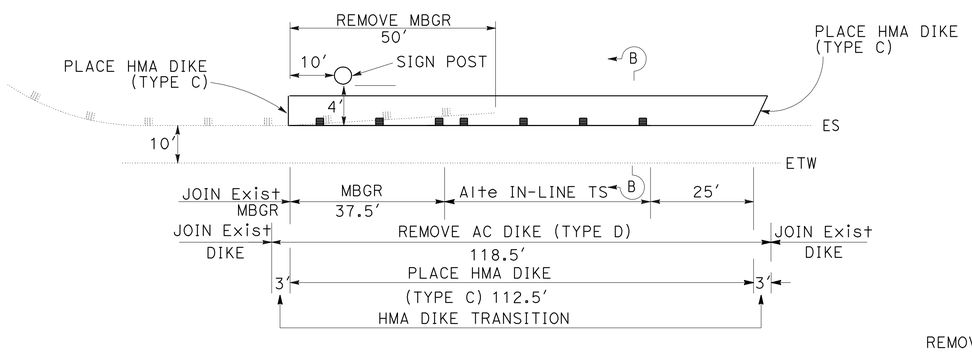

SIGN LOCATION 3
Sta 993+18.0

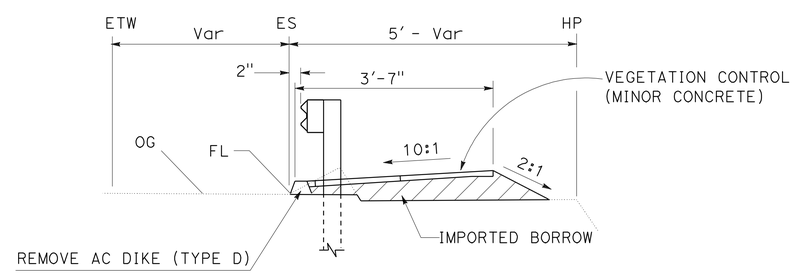

SECTION B-B

NOTES:

1. DIMENSIONS OF THE STRUCTURAL SECTION ARE SUBJECT TO TOLERANCES SPECIFIED IN THE STANDARD SPECIFICATIONS.
2. SUPERELEVATION AS SHOWN OR AS DIRECTED BY THE ENGINEER.
3. DIKES OR CURBS IF APPLICABLE, SEE CONSTRUCTION DETAILS AND SUMMARY OF QUANTITIES FOR SPECIFIC APPLICATION.
4. THE HOLES AT WEAK POSTS OF TERMINAL SYSTEM (PER MANUFACTURERS SPECIFICATIONS) SHALL BE INSTALLED ABOVE FINISHED GRADE.

CONSTRUCTION DETAILS

NO SCALE

C-5

STATE OF CALIFORNIA - DEPARTMENT OF TRANSPORTATION
Caltrans® TRAFFIC DESIGN

FUNCTIONAL SUPERVISOR: FARIBORZ M. TEHRANI
CALCULATED-DESIGNED BY: JAMES CANALITA / RICHARD KHAW
CHECKED BY: ANH D. NGUYEN
REVISED BY
DATE REVISED

LAST REVISION 00-00-00
DATE PLOTTED => 19-JAN-2011
TIME PLOTTED => 12:26

Dist	COUNTY	ROUTE	POST MILES TOTAL PROJECT	SHEET No.	TOTAL SHEETS
07	LA,Ven	126	0.0/5.8 13.1/20.0, 22.0/34.6	8	34

REGISTERED CIVIL ENGINEER 7/7/10 DATE

12-27-10
PLANS APPROVAL DATE

REGISTERED PROFESSIONAL ENGINEER PARVIZ YEGANEH No. 53797 Exp. 6/30/11 CIVIL STATE OF CALIFORNIA

THE STATE OF CALIFORNIA OR ITS OFFICERS OR AGENTS SHALL NOT BE RESPONSIBLE FOR THE ACCURACY OR COMPLETENESS OF SCANNED COPIES OF THIS PLAN SHEET.

NOTES:

⊗ POT HOLE LOCATION
HP HIGH PRESSURE
1. FOR ACCURATE RIGHT OF WAY DATA, CONTACT RIGHT OF WAY ENGINEERING AT DISTRICT OFFICE.
2. ELEVATIONS SHOWN REFER TO THE TOP OF PIPE OR CONDUIT, UNLESS OTHERWISE STATED.
3. LOCATION OF UTILITY FACILITIES SHOWN ON THESE PLANS ARE APPROXIMATE AND SHALL BE VERIFIED BY THE CONTRACTOR PRIOR TO CONSTRUCTION.

UTILITIES OWNERSHIP

TELEPHONE	AT&T
GAS	AERA ENERGY
GAS	SOUTHERN CALIFORNIA GAS
OIL	CRIMSON LP

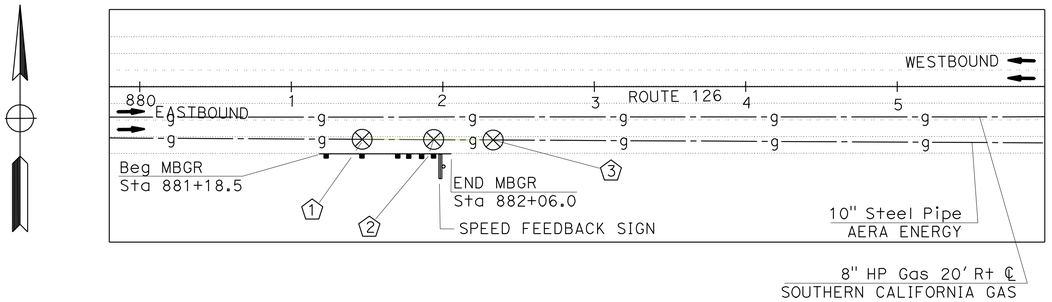

SPEED FEEDBACK SIGN LOCATION No. 1

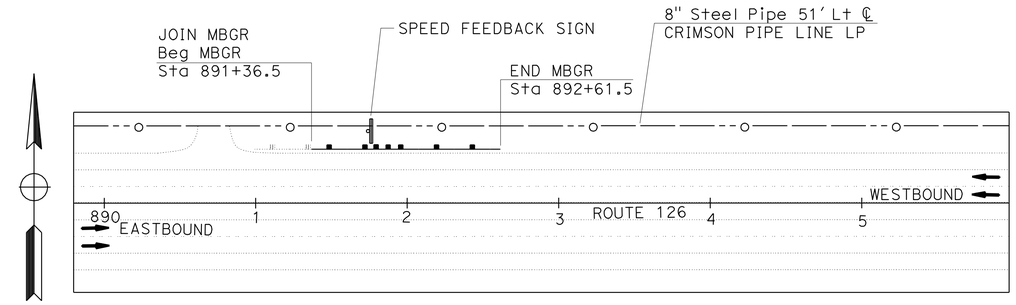

SPEED FEEDBACK SIGN LOCATION No. 2

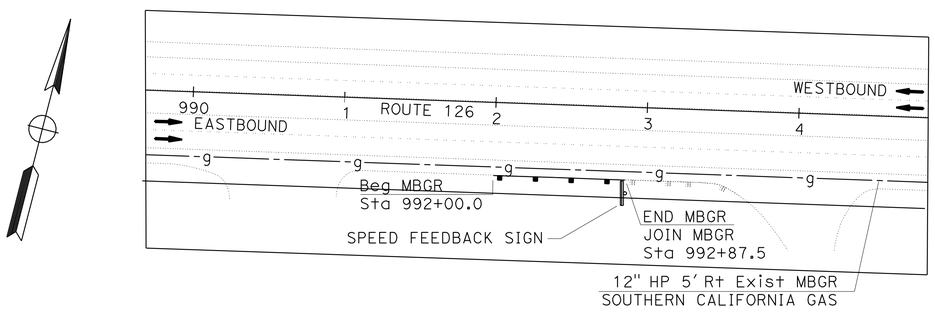

SPEED FEEDBACK SIGN LOCATION No. 3

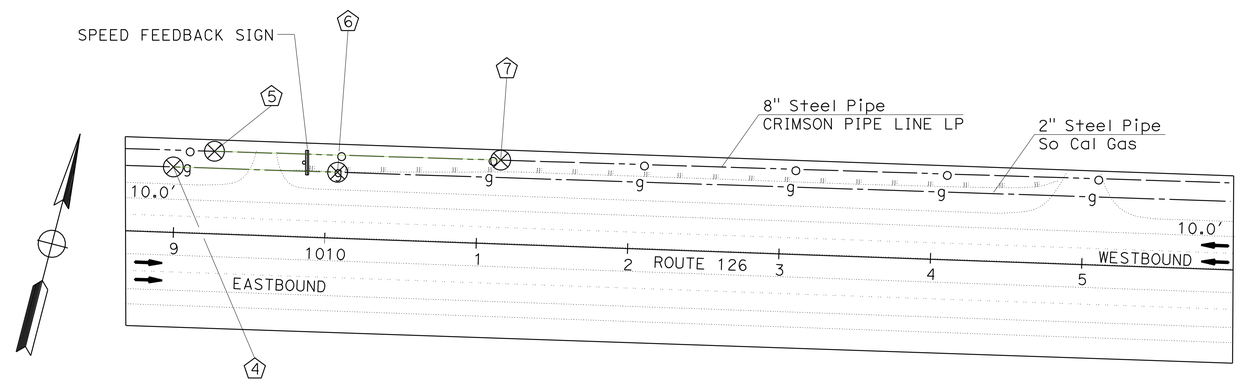

SPEED FEEDBACK SIGN LOCATION No. 4

No. ⬠	LOCATION	ELEVATION	METHOD
1	34.72' Rt ℄ 881+46.82	384.49'	POTHOLING
2	34.78' Rt ℄ 881+93.97	384.43'	POTHOLING
3	35.16' Rt ℄ 882+33.23	384.24'	POTHOLING
4	43.28' Lt ℄ 1008+98.46	402.21'	POTHOLING
5	54.58' Lt ℄ 1009+25.26	402.94'	POTHOLING
6	43.59' Lt ℄ 1010+06.89	401.78'	POTHOLING
7	55.40' Lt ℄ 1011+14.47	400.50'	POTHOLING
8	35.14' Lt ℄ 1110+10.09	401.36'	POTHOLING
9	35.00' Lt ℄ 1110+41.25	398.26'	POTHOLING

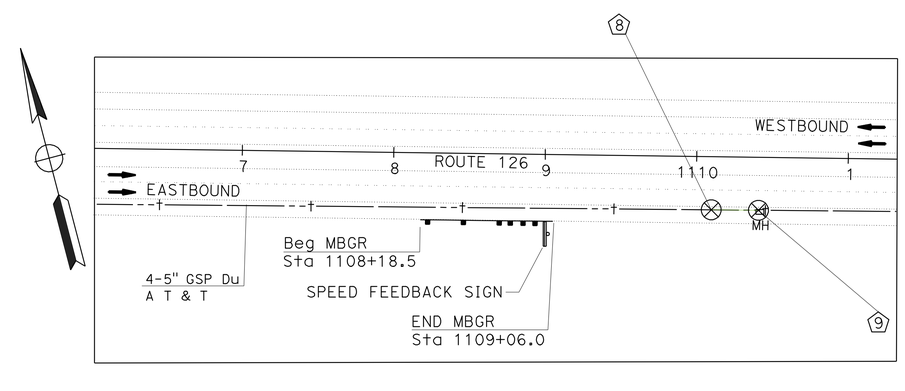

SPEED FEEDBACK SIGN LOCATION No. 6

THIS PLAN FOR UTILITIES INFORMATION ONLY

UTILITY PLAN
1" = 50'

U-1

STATE OF CALIFORNIA - DEPARTMENT OF TRANSPORTATION
Caltrans UTILITIES ENGINEERING

FUNCTIONAL SUPERVISOR: PARVIZ YEGANEH
CALCULATED-DESIGNED BY: MITRA VAHID
CHECKED BY: PARVIZ YEGANEH
REVISED BY / DATE REVISED

LAST REVISION 00-00-00 | DATE PLOTTED => 19-JAN-2011 | TIME PLOTTED => 12:26

Dist	COUNTY	ROUTE	POST MILES TOTAL PROJECT	SHEET No.	TOTAL SHEETS
07	LA,Ven	126	0.0/5.8 13.1/20.0, 22.0/34.6	9	34

REGISTERED CIVIL ENGINEER 7/7/10 DATE

12-27-10
PLANS APPROVAL DATE

REGISTERED PROFESSIONAL ENGINEER ANH D. NGUYEN No. 62370 Exp. 9/30/11 CIVIL STATE OF CALIFORNIA

THE STATE OF CALIFORNIA OR ITS OFFICERS OR AGENTS SHALL NOT BE RESPONSIBLE FOR THE ACCURACY OR COMPLETENESS OF SCANNED COPIES OF THIS PLAN SHEET.

STATIONARY MOUNTED CONSTRUCTION AREA SIGNS

SIGN No.	SIGN CODE	DESCRIPTION	PANEL SIZE (Inch x Inch)	No. OF POSTS AND SIZE (Inch X Inch)	No. OF SIGNS
A	W20-1	ROAD WORK AHEAD	48 X 48	1 - 4 X 4	35
B	W20-1	ROAD WORK AHEAD	72 X 72	2 - 6 X 6	2
C	G20-2(Mod)	END ROAD WORK	48 X 24	2 - 4 X 6	2
D	C40(CA)	TRAFFIC FINE DOUBLED IN CONSTRUCTION ZONE	108 X 42	2 - 6 X 6	2
E	C11(CA)	ROAD CONSTRUCTION NEXT 29 MILES	60 X 36	2 - 4 X 6	2

SIGN CODE LEGEND:

XXX-XX: MANUAL OF UNIFORM TRAFFIC CONTROL DEVICES (MUTCD).
XXX-XX (CA): CALIFORNIA CODE.

NOTE:

LOCATIONS OF CONSTRUCTION AREA SIGNS SHOWN ARE APPROXIMATE.
EXACT LOCATIONS WILL BE DETERMINED BY THE ENGINEER.

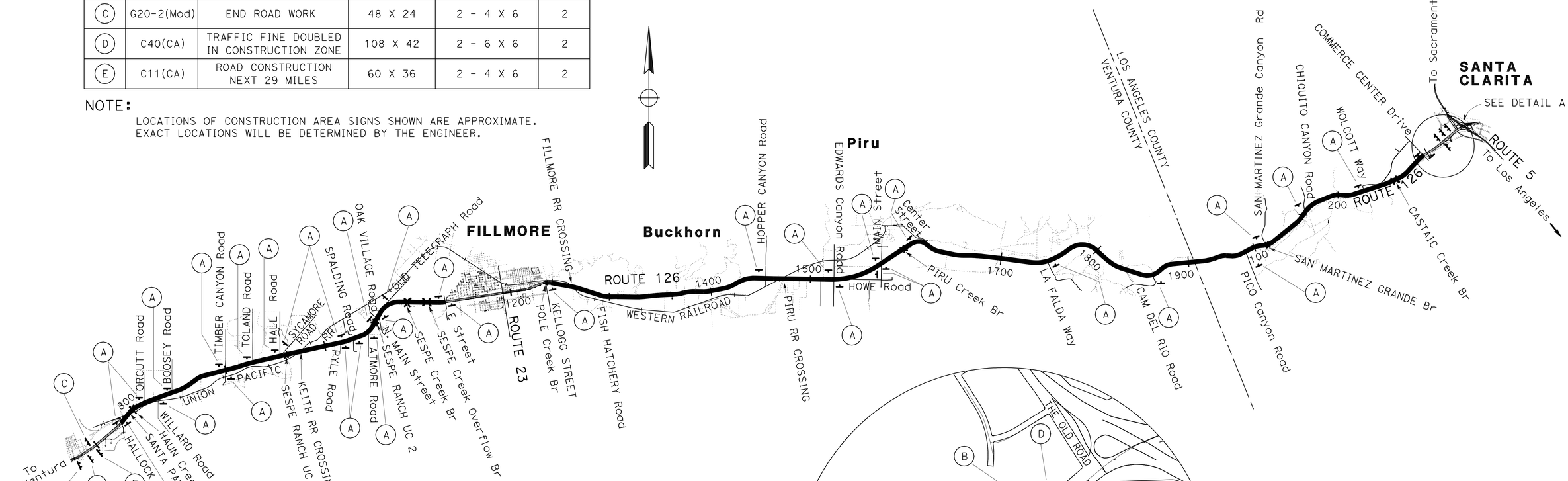

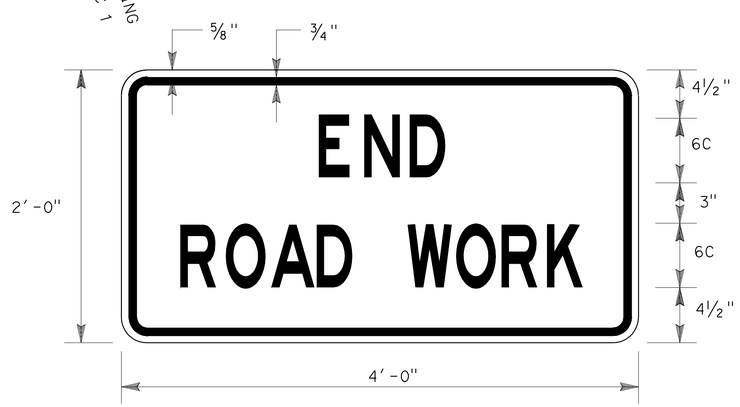

G20-2 (Mod)

BLACK LEGEND AND BORDER ON
ORANGE RETROREFLECTIVE BACKGROUND

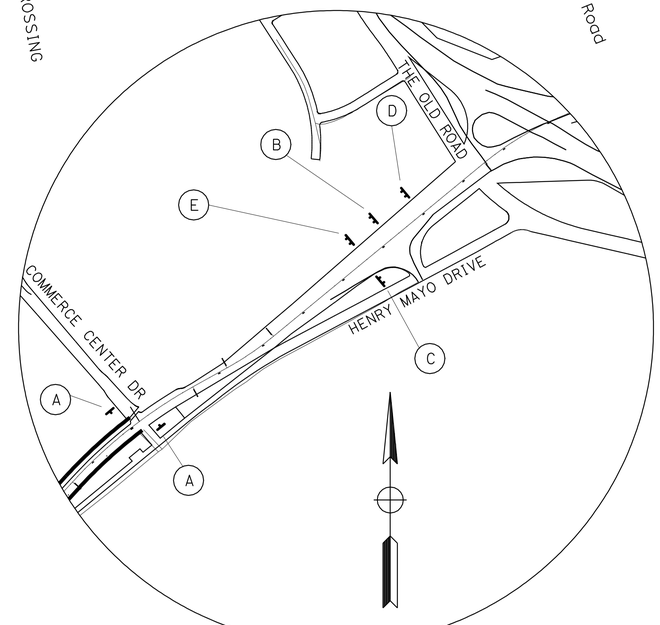

DETAIL A

CONSTRUCTION AREA SIGNS

NO SCALE

CS-1

THIS PLAN IS ACCURATE FOR CONSTRUCTION AREA SIGN WORK ONLY.

STATE OF CALIFORNIA - DEPARTMENT OF TRANSPORTATION
Caltrans® TRAFFIC DESIGN

FUNCTIONAL SUPERVISOR: FARIBORZ M. TEHRANI
CALCULATED-DESIGNED BY: ANH D. NGUYEN
CHECKED BY: JAMES CANALITA / RICHARD KHAW
REVISED BY
DATE REVISED

LAST REVISION 00-00-00
DATE PLOTTED => 19-JAN-2011
TIME PLOTTED => 12:26

Dist	COUNTY	ROUTE	POST MILES TOTAL PROJECT	SHEET No.	TOTAL SHEETS
07	LA,Ven	126	0.0/5.8 13.1/20.0, 22.0/34.6	10	34

REGISTERED CIVIL ENGINEER 7/7/10 DATE

12-27-10
PLANS APPROVAL DATE

REGISTERED PROFESSIONAL ENGINEER ANH D. NGUYEN No. 62370 Exp. 9/30/11 CIVIL STATE OF CALIFORNIA

THE STATE OF CALIFORNIA OR ITS OFFICERS OR AGENTS SHALL NOT BE RESPONSIBLE FOR THE ACCURACY OR COMPLETENESS OF SCANNED COPIES OF THIS PLAN SHEET.

LEGEND:

- DIRECTION OF TRAVEL
- TRAFFIC CONES
- TEMPORARY SIGNS
- WORK AREA
- FAS SUPPORT OR TRAILER
- FLASHING ARROW SIGN (FAS)
- PORTABLE FLASHING BEACON

NOTES:

UNLESS OTHERWISE SPECIFIED IN THE SPECIAL PROVISIONS, ALL TEMPORARY WARNING SIGNS SHALL HAVE BLACK LEGEND ON ORANGE BACKGROUND.

CALIFORNIA CODE ARE DESIGNATED BY (CA). OTHERWISE, FEDERAL (MUTCD) CODES ARE SHOWN.

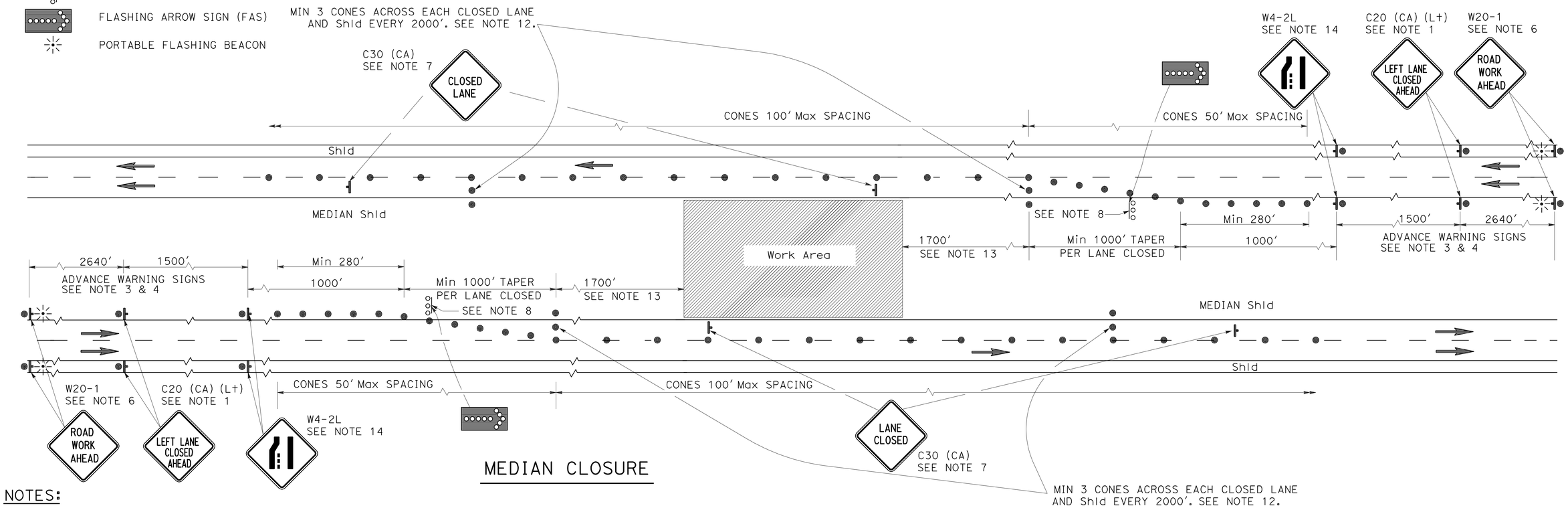

MEDIAN CLOSURE

NOTES:

1. MEDIAN LANE CLOSURES SHALL CONFORM TO THE DETAILS FOR OUTSIDE LANE CLOSURES EXCEPT THAT C20 (CA) (L+) SIGNS SHALL BE USED.
2. AT LEAST ONE PERSON SHALL BE ASSIGNED TO PROVIDE FULL TIME MAINTENANCE OF TRAFFIC CONTROL DEVICES FOR LANE CLOSURES.
3. DUPLICATE SIGN INSTALLATIONS ARE NOT REQUIRED:
   A) ON OPPOSITE SHOULDER IF AT LEAST ONE-HALF OF THE AVAILABLE LANES REMAIN OPEN TO TRAFFIC.
   B) IN THE MEDIAN IF THE WIDTH OF THE MEDIAN SHOULDER IS LESS THAN 8' AND THE OUTSIDE LANES ARE TO BE CLOSED.
4. EACH ADVANCE WARNING SIGN ON EACH SIDE OF THE ROADWAY SHALL BE EQUIPPED WITH AT LEAST TWO FLAGS FOR DAYTIME CLOSURE. EACH FLAG SHALL BE AT LEAST 16" X 16" IN SIZE AND SHALL BE ORANGE OR FLUORESCENT RED-ORANGE IN COLOR. FLASHING BEACONS SHALL BE PLACED AT THE LOCATIONS INDICATED FOR LANE CLOSURE DURING HOURS OF DARKNESS.
5. A C14 (CA) "END ROAD WORK" SIGN, AS APPROPRIATE, SHALL BE PLACED AT THE END OF THE LANE CLOSURE UNLESS THE END OF WORK AREA IS OBVIOUS OR ENDS WITHIN A LARGER PROJECT'S LIMITS.
6. IF THE W20-1 SIGN WOULD FOLLOW WITHIN 2000' OF A STATIONARY W20-1 OR C11 (CA) "ROAD WORK NEXT _____ MILES", USE A C20 (CA) SIGN FOR THE FIRST ADVANCE WARNING SIGN.
7. PLACE A C30 (CA) SIGN EVERY 2000' THROUGHOUT LENGTH OF LANE CLOSURE.
8. ONE FLASHING ARROW SIGN FOR EACH LANE CLOSED. THE FIRST FLASHING ARROW SIGN SHALL BE TYPE I. ALL OTHERS MAY BE EITHER TYPE I OR TYPE II.
9. A MINIMUM 1500' OF SIGHT DISTANCE SHALL BE PROVIDED WHERE POSSIBLE FOR VEHICLES APPROACHING THE FIRST FLASHING ARROW SIGN. LANE CLOSURES SHALL NOT BEGIN AT TOP OF CREST VERTICAL CURVE OR ON A HORIZONTAL CURVE.
10. ALL CONES USED FOR LANE CLOSURES DURING THE HOURS OF DARKNESS SHALL BE FITTED WITH RETROREFLECTIVE BANDS (OR SLEEVES) AS SPECIFIED IN THE SPECIFICATIONS.
11. PORTABLE DELINEATORS, PLACED AT ONE-HALF THE SPACING INDICATED FOR TRAFFIC CONES MAY BE USED INSTEAD OF CONES FOR DAYTIME CLOSURES ONLY.
12. UNLESS OTHERWISE SPECIFIED IN THE SPECIAL PROVISIONS, A MINIMUM OF 3 CONES SHALL BE PLACED TRANSVERSELY ACROSS EACH CLOSED LANE AND SHOULDER AT EACH LOCATION WHERE A TAPER ACROSS A TRAFFIC LANE ENDS AND EVERY 2000' AS SHOWN ON THE "LANE CLOSURE" DETAIL. TWO TYPE II BARRICADES MAY BE USED INSTEAD OF THE 3 CONES. THE TRANSVERSE ALIGNMENT OF THE CONES OR BARRICADES ON THE CLOSED SHOULDER MAY BE SHIFTED FROM THE TRANSVERSE ALIGNMENT TO PROVIDE ACCESS TO THE WORK.
13. UNLESS OTHERWISE SPECIFIED IN THE SPECIAL PROVISIONS, THE 1700' TANGENT SHOWN ALONG LANE LINES SHALL BE USED BETWEEN THE 1000' TAPERS REQUIRED FOR EACH CLOSED TRAFFIC LANE.
14. WHEN SPECIFIED IN THE SPECIAL PROVISIONS, A W4-2 "LANE ENDS" SYMBOL SIGN IS TO BE USED IN PLACE OF THE C20 (CA) "LEFT LANE CLOSED AHEAD" SIGN.

TRAFFIC HANDLING DETAIL

NO SCALE

THD-1

REVISED BY | DATE REVISED
JAMES CANALITA / RICHARD KHAW | ANH D. NGUYEN
CALCULATED-DESIGNED BY | CHECKED BY
FUNCTIONAL SUPERVISOR | FARIBORZ M. TEHRANI

STATE OF CALIFORNIA - DEPARTMENT OF TRANSPORTATION
Caltrans® TRAFFIC DESIGN

LAST REVISION 00-00-00 | DATE PLOTTED => 19-JAN-2011 | TIME PLOTTED => 12:28

Dist	COUNTY	ROUTE	POST MILES TOTAL PROJECT	SHEET No.	TOTAL SHEETS
07	LA,Ven	126	0.0/5.8 13.1/20.0, 22.0/34.6	11	34

REGISTERED CIVIL ENGINEER 7/7/10 DATE

12-27-10
PLANS APPROVAL DATE

REGISTERED PROFESSIONAL ENGINEER ANH D. NGUYEN No. 62370 Exp. 9/30/11 CIVIL STATE OF CALIFORNIA

THE STATE OF CALIFORNIA OR ITS OFFICERS OR AGENTS SHALL NOT BE RESPONSIBLE FOR THE ACCURACY OR COMPLETENESS OF SCANNED COPIES OF THIS PLAN SHEET.

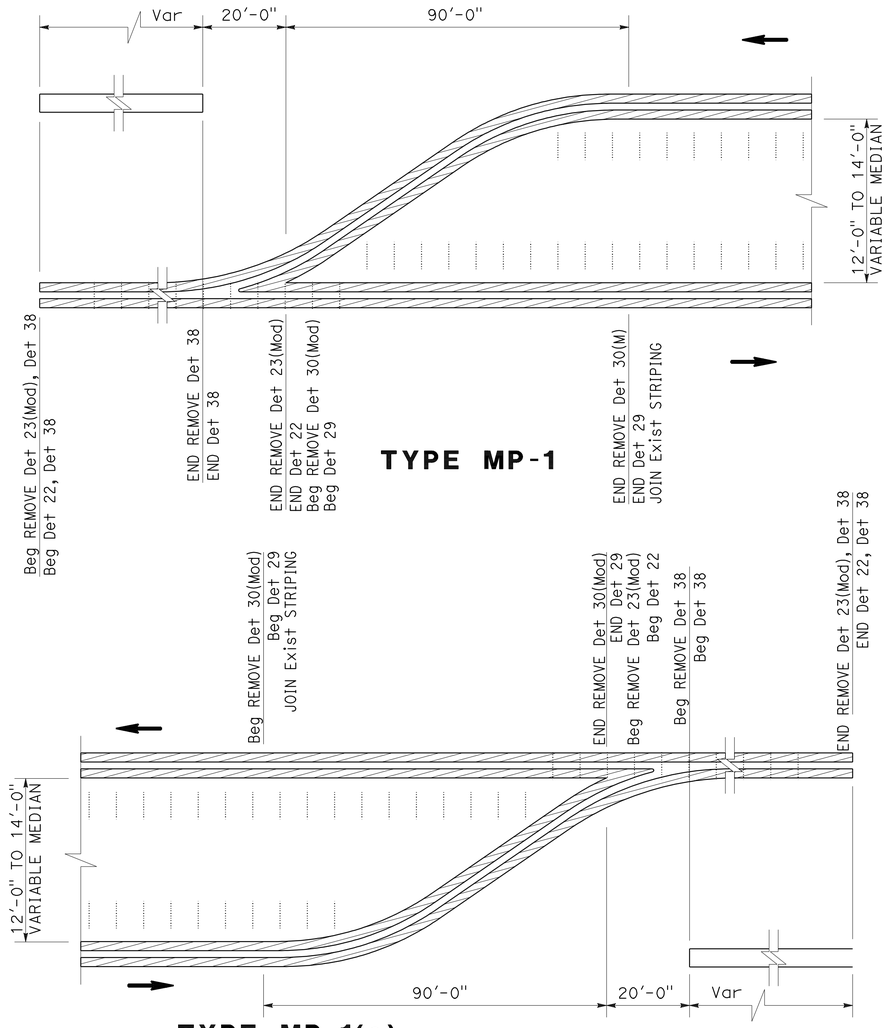

TYPE MP-1

TYPE MP-1(a)

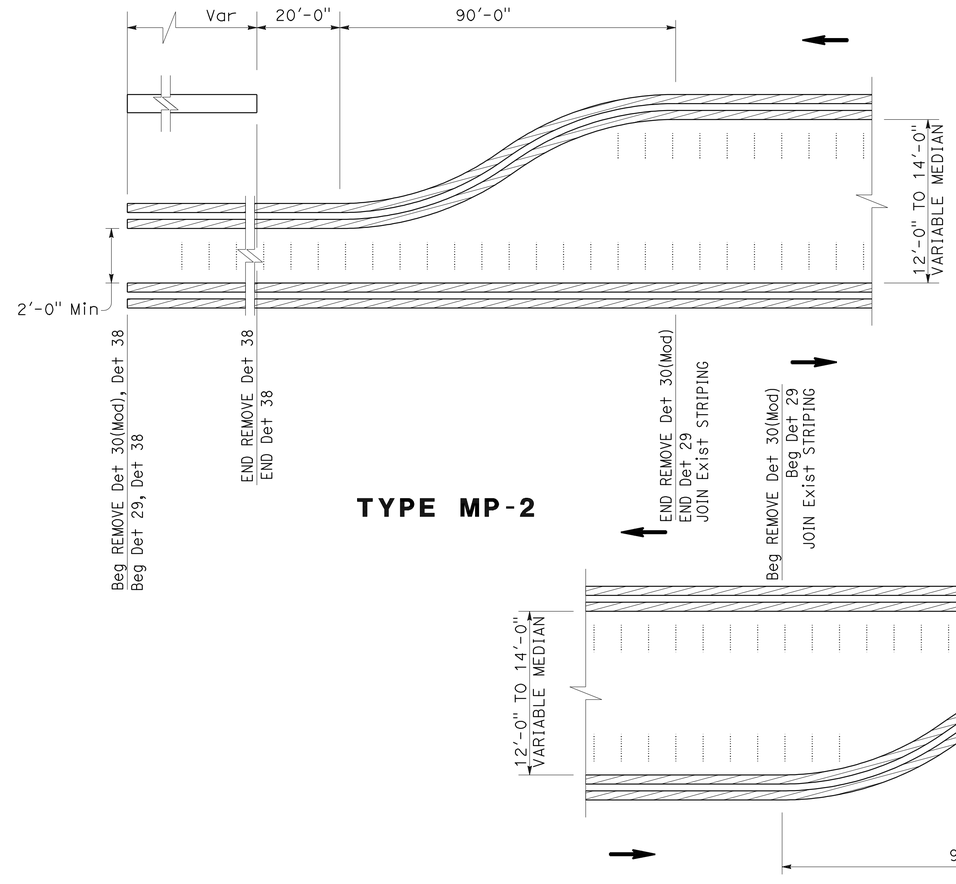

TYPE MP-2

TYPE MP-2(a)

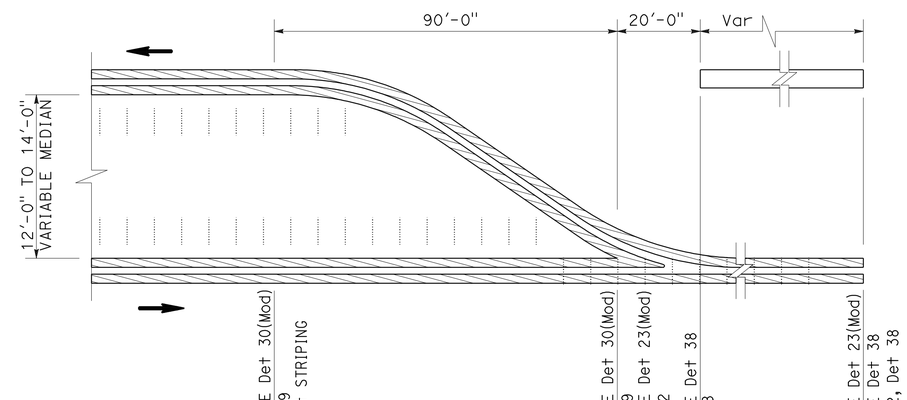

TYPE MP-1(c)

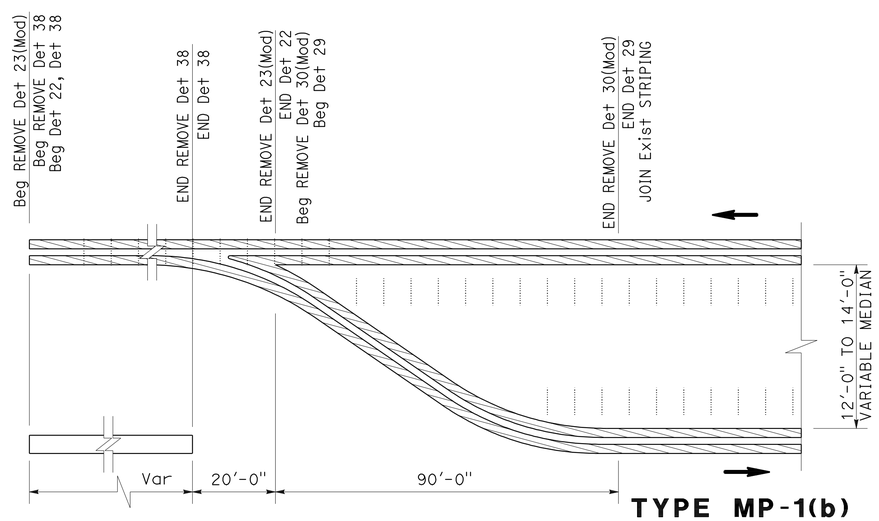

TYPE MP-1(b)

LEGEND

- 4" YELLOW THERMOPLASTIC STRIPE
- 8" WHITE THERMOPLASTIC STRIPE
- DIRECTION OF TRAVEL

PAVEMENT DELINEATION DETAILS

NO SCALE

PDD-1

STATE OF CALIFORNIA - DEPARTMENT OF TRANSPORTATION
Caltrans® TRAFFIC DESIGN

FUNCTIONAL SUPERVISOR: FARIBORZ M. TEHRANI
CALCULATED-DESIGNED BY: ANH D. NGUYEN
CHECKED BY: JAMES CANALITA / RICHARD KHAW
REVISED BY
DATE REVISED

LAST REVISION 00-00-00 | DATE PLOTTED => 19-JAN-2011 | TIME PLOTTED => 12:28

Dist	COUNTY	ROUTE	POST MILES TOTAL PROJECT	SHEET No.	TOTAL SHEETS
07	LA,Ven	126	0.0/5.8 13.1/20.0, 22.0/34.6	12	34

REGISTERED CIVIL ENGINEER 7/7/10 DATE

12-27-10
PLANS APPROVAL DATE

REGISTERED PROFESSIONAL ENGINEER
ANH D. NGUYEN
No. 62370
Exp. 9/30/11
CIVIL
STATE OF CALIFORNIA

THE STATE OF CALIFORNIA OR ITS OFFICERS OR AGENTS SHALL NOT BE RESPONSIBLE FOR THE ACCURACY OR COMPLETENESS OF SCANNED COPIES OF THIS PLAN SHEET.

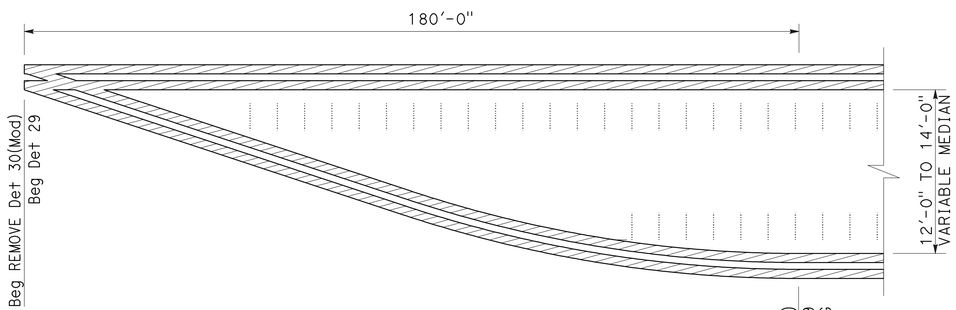

TYPE ME-2

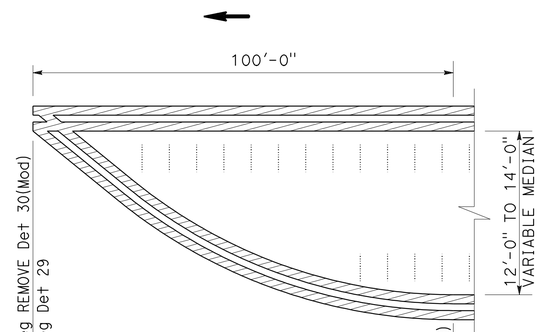

TYPE ME-3

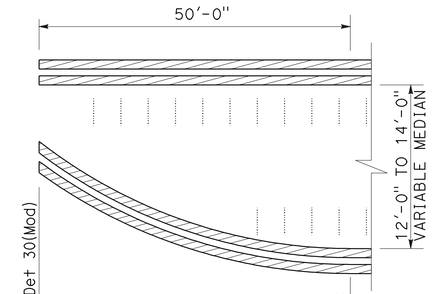

TYPE ME-4

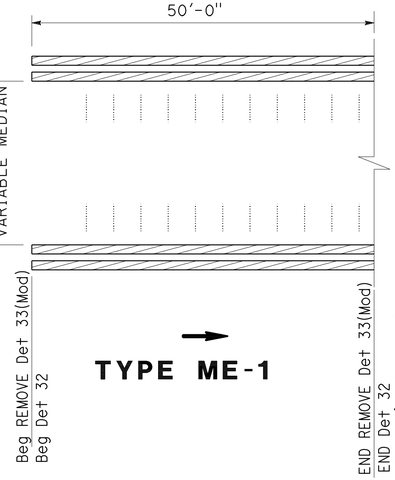

TYPE ME-1

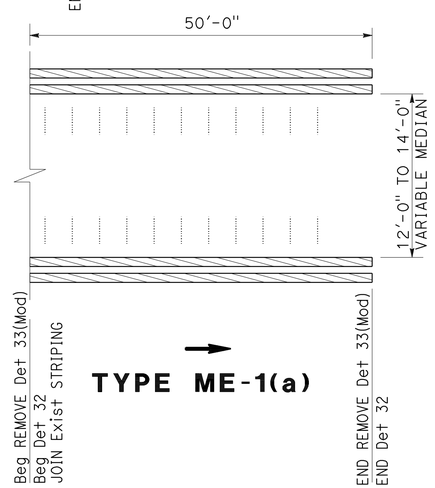

TYPE ME-1(a)

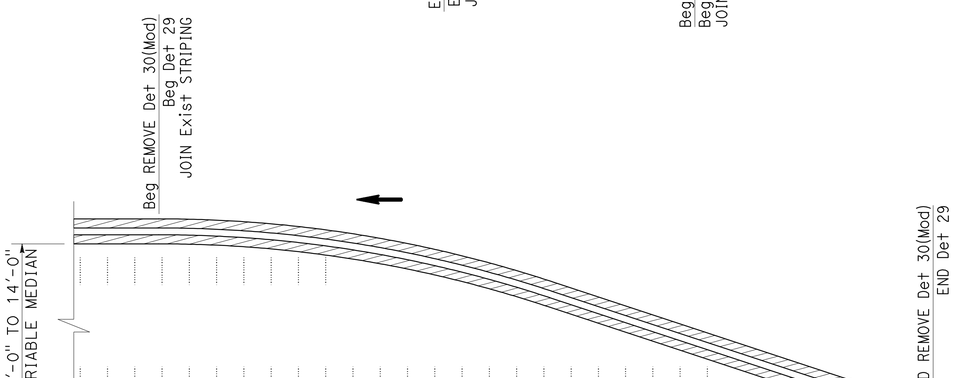

TYPE ME-2(a)

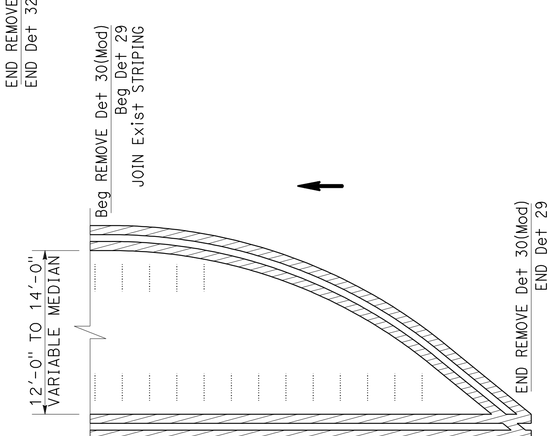

TYPE ME-3(a)

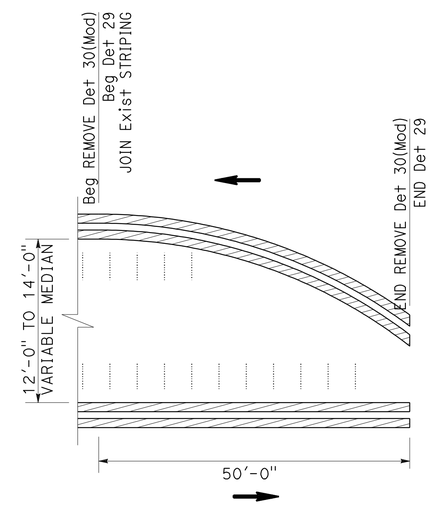

TYPE ME-4(a)

PAVEMENT DELINEATION DETAILS

NO SCALE

PDD-2

STATE OF CALIFORNIA - DEPARTMENT OF TRANSPORTATION
Caltrans® TRAFFIC DESIGN

FUNCTIONAL SUPERVISOR: FARIBORZ M. TEHRANI
CALCULATED-DESIGNED BY: ANH D. NGUYEN
CHECKED BY: JAMES CANALITA / RICHARD KHAW
REVISED BY
DATE REVISED

LAST REVISION 00-00-00
DATE PLOTTED => 19-JAN-2011
TIME PLOTTED => 12:28

Dist	COUNTY	ROUTE	POST MILES TOTAL PROJECT	SHEET No.	TOTAL SHEETS
07	LA,Ven	126	0.0/5.8 13.1/20.0, 22.0/34.6	13	34

REGISTERED CIVIL ENGINEER 7/7/10 DATE

12-27-10
PLANS APPROVAL DATE

REGISTERED PROFESSIONAL ENGINEER ANH D. NGUYEN No. 62370 Exp. 9/30/11 CIVIL STATE OF CALIFORNIA

THE STATE OF CALIFORNIA OR ITS OFFICERS OR AGENTS SHALL NOT BE RESPONSIBLE FOR THE ACCURACY OR COMPLETENESS OF SCANNED COPIES OF THIS PLAN SHEET.

PAVEMENT DELINEATION QUANTITIES

PM	STATION	DESCRIPTION	REMOVE						THERMOPLASTIC						PAVEMENT MARKER	
			THERMOPLASTIC						TRAFFIC STRIPE						RETRO-REFLECTIVE	
			TRAFFIC STRIPE													
			Det 23(Mod)	Det 30(Mod)	Det 33(Mod)	Det 38	PAVEMENT MARKING	PAVEMENT MARKER	Det 22	Det 29	Det 32	Det 27B	Det 38	PAVEMENT MARKING	TYPE D	TYPE G
			4" DOUBLE SOLID YELLOW	4" DOUBLE SOLID YELLOW	4" SINGLE SOLID YELLOW	8" SOLID WHITE			4" DOUBLE SOLID YELLOW	4" DOUBLE SOLID YELLOW	4" SINGLE SOLID YELLOW	4" SOLID WHITE	8" SOLID WHITE			
			LF	LF	LF	LF	SQFT	EA	LF	LF	LF	LF	LF	SQFT	EA	EA
13.3	782+83.2	HALLOCK Dr	480	360		220	30	229	480	360			220	30	32	11
13.8	813+34.3	ORCUTT Rd	440	760		200	30	318	440	760			200	30	40	10
14.1	826+83.9	WILLARD Rd	240	760		100	30	264	240	760			100	30	30	6
14.4	841+68.5	BOOSEY Rd	280	760		120	30	274	280	760			120	30	32	6
16.0	921+13.5	TOLAND Rd		400	124			130		400	124				20	
16.5	954+57.8	SYCAMORE Rd / HALL Rd	320	760		140	30	285	320	760			140	30	34	7
17.6	1007+99.0	PYLE Rd	240	360	124	100	30	186	240	360	124		100	30	30	6
18.0	1027+58.2	SPALDING Rd	240	560		100	30	212	240	560			100	30	28	6
18.3	1043+34.7	ATMORE Rd	240	360	124	100	30	186	240	360	124		100	30	30	6
18.6	1062+27.4	OAK VILLAGE Rd / MAIN St	340	360	124	150	30	216	340	360	124		150	30	36	8
18.9	1077+23.1	OLD TELEGRAPH Rd	1,380	360	124	670	30	485	1,380	360	124		670	30	78	29
20.0	1134+83.3	E STREET	340	360		150	30	198	340	360			150	30	28	8
22.3	1251+27.7	EL DORADO Dr							1,740	6,944		5,316	955	231	224	41
23.1	1293+93.7	CALIFORNIA WATERCRESS INC. ENTRANCE	240	760		100	55	276	240	760			100	55	30	6
23.7	1325+50.8	HAINES CANYON Rd	240	760		100	50	276	240	760			100	50	30	6
25.1	1400+71.8	CAVIN Rd	240	760		100	30	276	240	760			100	30	30	6
26.2	1455+80.5	HOPPER CANYON Rd	240	360	124	100	30	186	240	360	124		100	30	30	6
26.9	1486+05.0	ENTRANCE BEFORE POWELL Rd	240	760		100	30	276	240	760			100	30	30	6
27.2	1509+49.1	POWELL Rd	240	760		100	30	276	240	760			100	30	30	6
27.4	1522+84.5	EDWARDS CANYON Rd		1,560		100	15	105		1,560			100	15	36	6
27.7	1537+11.5	HOWE Rd		1,560		100	15	105		1,560			100	15	36	6
28.3	1572+47.9	MAIN St / TORREY Rd		3,840		720	294	995		3,840			720	294	82	31
29.3	1622+90.6	CENTER St	920	1,160		460	45	553	920	1,160			460	45	70	21
1.4	72+73.9	SAN MARTINEZ GRANDE CANYON Rd	960	60				262	960	60					50	
SHEET TOTAL			7,860	18,500	744	4,030	924	6,569	9,600	25,444	744	5,316	4,985	1,155	1,096	244

PAVEMENT DELINEATION QUANTITIES
PDQ-1

STATE OF CALIFORNIA - DEPARTMENT OF TRANSPORTATION
Caltrans® TRAFFIC DESIGN

FUNCTIONAL SUPERVISOR: FARIBORZ M. TEHRANI
CALCULATED-DESIGNED BY: JAMES CANALITA / RICHARD KHAW
CHECKED BY: ANH D. NGUYEN
REVISED BY
DATE REVISED

LAST REVISION 00-00-00 | DATE PLOTTED => 19-JAN-2011 | TIME PLOTTED => 12:28

Dist	COUNTY	ROUTE	POST MILES TOTAL PROJECT	SHEET No.	TOTAL SHEETS
07	LA,Ven	126	0.0/5.8 13.1/20.0, 22.0/34.6	14	34

REGISTERED CIVIL ENGINEER 7/7/10 DATE

12-27-10
PLANS APPROVAL DATE

REGISTERED PROFESSIONAL ENGINEER ANH D. NGUYEN No. 62370 Exp. 9/30/11 CIVIL STATE OF CALIFORNIA

THE STATE OF CALIFORNIA OR ITS OFFICERS OR AGENTS SHALL NOT BE RESPONSIBLE FOR THE ACCURACY OR COMPLETENESS OF SCANNED COPIES OF THIS PLAN SHEET.

PAVEMENT DELINEATION QUANTITIES

PM	STATION	DESCRIPTION	REMOVE						THERMOPLASTIC						PAVEMENT MARKER	
			THERMOPLASTIC						TRAFFIC STRIPE						RETRO-REFLECTIVE	
			TRAFFIC STRIPE				PAVEMENT MARKING	PAVEMENT MARKER						PAVEMENT MARKING		
			Det 23(Mod)	Det 30(Mod)	Det 33(Mod)	Det 38			Det 22	Det 29	Det 32	Det 27B	Det 38			
			4" DOUBLE SOLID YELLOW	4" DOUBLE SOLID YELLOW	4" SINGLE SOLID YELLOW	8" SOLID WHITE			4" DOUBLE SOLID YELLOW	4" DOUBLE SOLID YELLOW	4" SINGLE SOLID YELLOW	4" SOLID WHITE	8" SOLID WHITE		TYPE D	TYPE G
			LF	LF	LF	LF	SQFT	EA	LF	LF	LF	LF	LF	SQFT	EA	EA
2.4	123+77.0	CHIQUITO CANYON Rd	1,880	120				516	1,880	120					100	
3.1	160+71.2	CHIQUITO CANYON LANDFILL ENTRANCE	1,880	120				516	1,880	120					100	
3.6	187+63.6	WOLCOTT WAY	1,760	120				460	1,760	120					88	
4.5	237+08.0	VALENCIA TRAVEL VILLAGE ENTRANCE	940	60				258	940	60					50	
4.9	256+93.2	COMMERCE CENTER Dr	940	60				258	940	60					50	
SHEET TOTAL			7,400	480				2,008	7,400	480					388	
SHEET TOTAL FROM PDQ-1			7,860	18,500	744	4,030	924	6,569	9,600	25,444	744	5,316	4,985	1,155	1,096	244
TOTAL			17,000	18,980	744	4,030	924	8,577	17,000	25,924	744	5,316	4,985	1,155	1,484	244
GRAND TOTAL			36,724			8,060	924	8,577	48,984				4,985	1,155	1,728	

PAVEMENT DELINEATION QUANTITIES

PDQ-2

STATE OF CALIFORNIA - DEPARTMENT OF TRANSPORTATION
Caltrans TRAFFIC DESIGN

FUNCTIONAL SUPERVISOR: FARIBORZ M. TEHRANI
CALCULATED-DESIGNED BY: ANH D. NGUYEN
CHECKED BY: JAMES CANALITA / RICHARD KHAW
REVISED BY
DATE REVISED

LAST REVISION 00-00-00
DATE PLOTTED => 19-JAN-2011
TIME PLOTTED => 12:29

Dist	COUNTY	ROUTE	POST MILES TOTAL PROJECT	SHEET No.	TOTAL SHEETS
07	LA,Ven	126	0.0/5.8 13.1/20.0, 22.0/34.6	15	34

REGISTERED CIVIL ENGINEER 7/7/10 DATE

12-27-10
PLANS APPROVAL DATE

REGISTERED PROFESSIONAL ENGINEER ANH D. NGUYEN No. 62370 Exp. 9/30/11 CIVIL STATE OF CALIFORNIA

THE STATE OF CALIFORNIA OR ITS OFFICERS OR AGENTS SHALL NOT BE RESPONSIBLE FOR THE ACCURACY OR COMPLETENESS OF SCANNED COPIES OF THIS PLAN SHEET.

NOTE:

(SS) INSTALL SIGN (STRAP AND SADDLE BRACKET METHOD) (SEE SHEET SES-1)

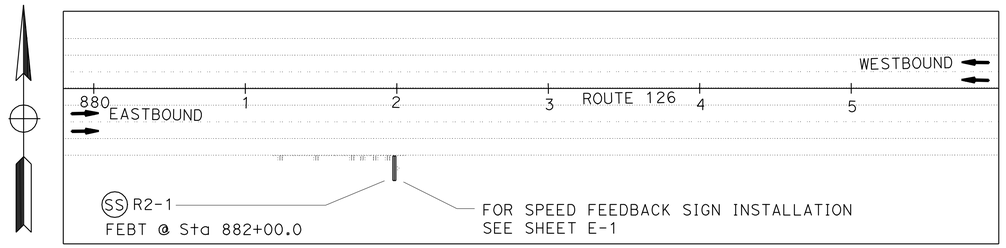

SIGN LOCATION No. 1

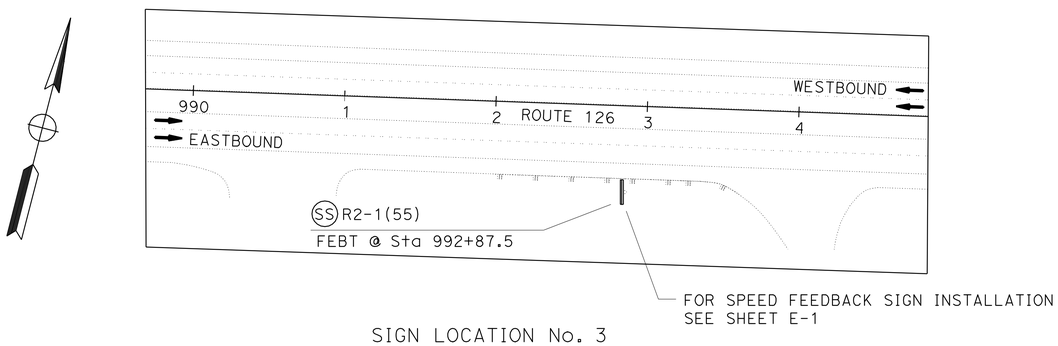

SIGN LOCATION No. 3

NOTE: 1. Speed Feedback Sign lateral offset from the ETW is 34'-0".

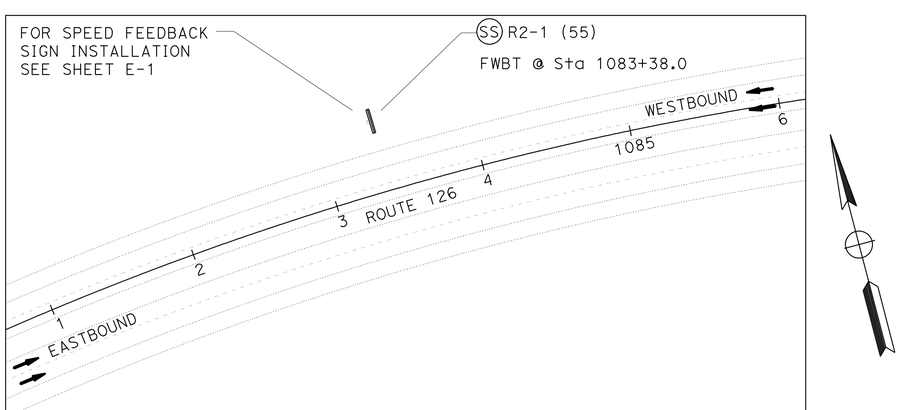

SIGN LOCATION No. 5

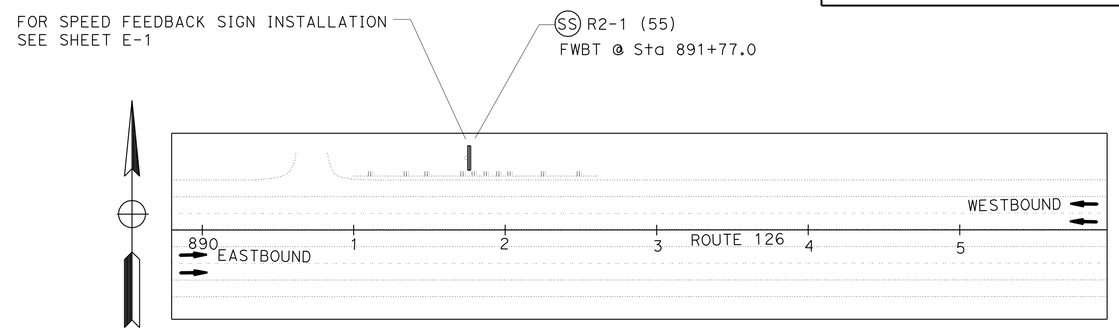

SIGN LOCATION No. 2

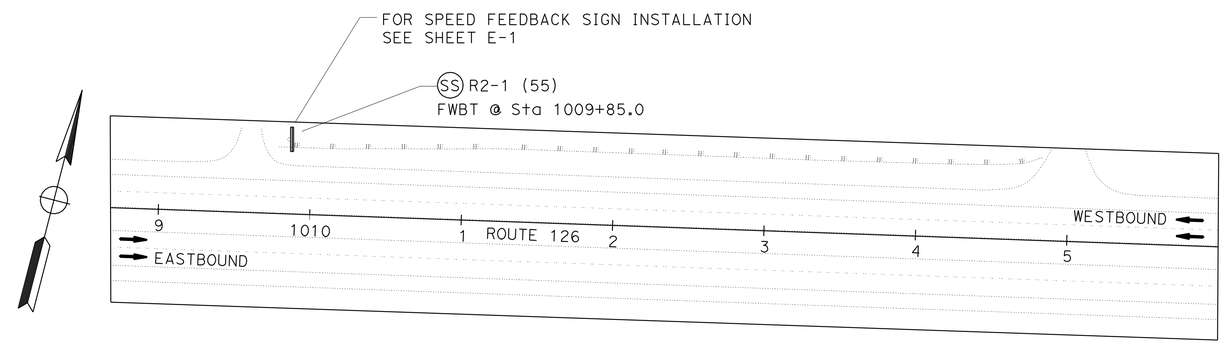

SIGN LOCATION No. 4

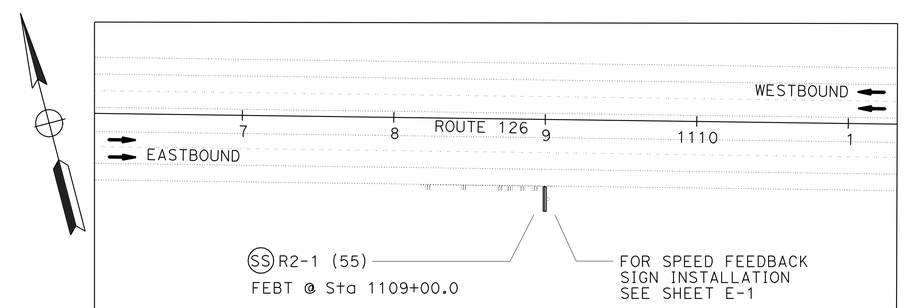

SIGN LOCATION No. 6

SIGN PLAN

NO SCALE

S-1

STATE OF CALIFORNIA - DEPARTMENT OF TRANSPORTATION
Caltrans® TRAFFIC DESIGN

FUNCTIONAL SUPERVISOR: FARIBORZ M. TEHRANI
CALCULATED-DESIGNED BY: JAMES CANALITA / RICHARD KHAW
CHECKED BY: ANH D. NGUYEN
REVISED BY
DATE REVISED

LAST REVISION 00-00-00
DATE PLOTTED => 19-JAN-2011
TIME PLOTTED => 12:29

Dist	COUNTY	ROUTE	POST MILES TOTAL PROJECT	SHEET No.	TOTAL SHEETS
07	LA,Ven	126	0.0/5.8 13.1/20.0, 22.0/34.6	16	34

REGISTERED CIVIL ENGINEER 7/7/10 DATE

12-27-10
PLANS APPROVAL DATE

REGISTERED PROFESSIONAL ENGINEER
ANH D. NGUYEN
No. 62370
Exp. 9/30/11
CIVIL
STATE OF CALIFORNIA

THE STATE OF CALIFORNIA OR ITS OFFICERS OR AGENTS SHALL NOT BE RESPONSIBLE FOR THE ACCURACY OR COMPLETENESS OF SCANNED COPIES OF THIS PLAN SHEET.

ROADSIDE SIGN QUANTITIES

SHEET No.	SIGN No.	LOCATION		SIGN CODE	SINGLE FACED	PANEL SIZE	CLEARANCE	SIGN FACING MATERIAL					FURNISH	INSTALL SIGN
								BACKGROUND		LEGEND		GRAFFITI FILM		
		STATION	DIRECTION			IN X IN	F+	SHEETING COLOR	RETROREFLECTIVE ASTM TYPE	SHEETING COLOR	RETROREFLECTIVE ASTM TYPE	PREMIUM	SINGLE SHEET ALUMINUM SIGN (0.080" - UNFRAMED) SQFT	STRAP SADDLE BRACKET METHOD EA
S - 1	1	893 + 32.0	FWBT	R2-1 (55)	X	48 X 60	7	WHITE	III	BLACK	IV	X	20	1
	2	894 + 34.0	FEBT	R2-1 (55)	X	48 X 60	7	WHITE	III	BLACK	IV	X	20	1
	3	1012 + 32.0	FEBT	R2-1 (55)	X	48 X 60	7	WHITE	III	BLACK	IV	X	20	1
	4	1013 + 13.0	FWBT	R2-1 (55)	X	48 X 60	7	WHITE	III	BLACK	IV	X	20	1
	5	1080 + 60.0	FWBT	R2-1 (55)	X	48 X 60	7	WHITE	III	BLACK	IV	X	20	1
	6	1108 + 45.0	FEBT	R2-1 (55)	X	48 X 60	7	WHITE	III	BLACK	IV	X	20	1
SHEET TOTAL													120	6

THIS PLAN ACCURATE FOR SIGN QUANTITY PLAN ONLY

SIGN QUANTITIES

SQ-1

CALCULATED-DESIGNED BY JAMES CANALITA / RICHARD KHAW
CHECKED BY ANH D. NGUYEN
REVISED BY
DATE REVISED
FUNCTIONAL SUPERVISOR FARIBORZ M. TEHRANI

STATE OF CALIFORNIA - DEPARTMENT OF TRANSPORTATION
Caltrans TRAFFIC DESIGN

LAST REVISION 00-00-00
DATE PLOTTED => 19-JAN-2011
TIME PLOTTED => 12:29

Dist	COUNTY	ROUTE	POST MILES TOTAL PROJECT	SHEET No.	TOTAL SHEETS
07	LA,Ven	126	0.0/5.8 13.1/20.0, 22.0/34.6	17	34

REGISTERED CIVIL ENGINEER 7/7/10 DATE

12-27-10
PLANS APPROVAL DATE

REGISTERED PROFESSIONAL ENGINEER ANH D. NGUYEN No. 62370 Exp. 9/30/11 CIVIL STATE OF CALIFORNIA

THE STATE OF CALIFORNIA OR ITS OFFICERS OR AGENTS SHALL NOT BE RESPONSIBLE FOR THE ACCURACY OR COMPLETENESS OF SCANNED COPIES OF THIS PLAN SHEET.

SHOULDER RUMBLE STRIP QUANTITIES

DIRECTION	PM	STATION	DESCRIPTION	SHOULDER RUMBLE STRIP AC, GROUND-IN INDENTATIONS (STA)	SHOULDER RUMBLE STRIP HMA, GROUND-IN INDENTATIONS (STA)	REMARKS
EB	13.3/ 13.5	784+43.2/ 793+55.1	HALLOCK Dr TO RR AFTER HALLOCK Dr	9.12		
EB	13.5/ 13.6	796+76.8/ 798+61.0	RR AFTER HALLOCK Dr TO HAUN CREEK Br	1.84		
EB	13.6/ 13.7	801+42.8/ 804+47.1	HAUN CREEK Br TO GARDEN CENTER	3.04		GARDEN CENTER
EB	13.7/ 14.1	805+98.4/ 826+76.3	GARDEN CENTER TO WILLARD Rd	20.78		
EB	14.1/ 14.3	827+75.7/ 836+28.1	WILLARD Rd TO OPENING	8.52		PRIVATE DRIVEWAY
EB	14.4/ 14.5	840+79.4/ 846+65.7	OPENING TO OPENING	5.86		PRIVATE DRIVEWAY
EB	14.5/ 14.6	848+27.5/ 852+42.6	OPENING TO HOBSON Rd	4.15		
EB	14.6/ 14.8	853+45.2/ 865+06.1	HOBSON Rd TO OPENING	11.61		PRIVATE DRIVEWAY
EB	14.9/ 15.0	867+30.1/ 873+80.0	OPENING TO FLEISCHER REDMAND Rd	6.50		
EB	15.0/ 15.3	874+85.4/ 890+03.1	FLEISCHER REDMAND Rd TO OPENING	15.18		PRIVATE DRIVEWAY
EB	15.3/ 15.9	891+10.9/ 920+08.9	OPENING TO TOLAND Rd	28.98		SCHOOL
EB	16.0/ 16.6	926+53.8/ 957+12.8	TOLAND Rd TO SESPE RANCH UC 1	30.59		
EB	16.6/ 16.8	960+29.0/ 970+84.0	SESPE RANCH UC 1 TO RR BEFORE PYLE Rd	10.55		
EB	16.9/ 17.5	975+13.8/ 1007+70.3	RR BEFORE PYLE Rd TO PYLE Rd	32.57		
EB	17.6/ 17.9	1010+27.9/ 1027+71.5	PYLE Rd TO SPALDING Dr	17.44		
EB	18.2/ 18.3	1045+45.5/ 1049+89.5	S ATMORE Rd TO SESPE RANCH UC 2	4.44		
EB	18.5/ 18.5	1057+43.1/ 1062+16.5	SESPE RANCH UC 2 TO OAK VILLAGE Rd	4.73		
EB	18.6/ 19.1	1065+49.9/ 1092+89.4	OAK VILLAGE Rd TO SESPE CREEK Br	27.40		
EB	19.3/ 19.6	1100+37.0/ 1116+98.4	SESPE CREEK Br TO SESPE CREEK OVERFLOW Br	16.61		
EB	19.7/ 19.9	1123+89.1/ 1134+55.5	SESPE CREEK OVERFLOW Br TO E STREET	10.66		
EB	21.8/ 21.9	1236+53.5/ 1240+53.0	KELLOGG St TO OPENING		4.00	COMMERICIAL BUSSINESS
EB	21.9/ 22.0	1241+31.6/ 1243+17.4	OPENING TO OPENING		1.86	COMMERICIAL BUSSINESS
EB	22.0/ 22.1	1244+47.3/ 1247+71.7	OPENING TO EL DORADO Dr		3.24	
EB	22.2/ 22.3	1253+09.3/ 1262+82.4	EL DORADO Dr TO SESPE LAND & WATER / RR		9.73	
EB	22.4/ 22.9	1265+91.7/ 1293+43.5	SESPE LAND & WATER / RR TO OPENING	27.52		ENTRANCE TO WATERCRESS INC.
EB	23.0/ 23.2	1295+27.5/ 1305+60.6	OPENING TO OPENING	10.33		FRUIT STAND
EB	23.2/ 24.3	1309+72.3/ 1365+58.9	OPENING TO OPENING	55.87		PRIVATE DRIVEWAY
EB	24.3/ 24.7	1367+27.9/ 1388+15.9	OPENING TO LAWTON RANCH Rd	20.88		
EB	24.7/ 24.9	1388+86.4/ 1397+16.2	LAWTON RANCH Rd TO CAVIN Rd	8.30		FRUIT STAND
EB	25.0/ 25.8	1401+76.5/ 1447+09.7	CAVIN Rd TO OPENING	45.33		PRIVATE DRIVEWAY
EB	25.8/ 25.9	1447+65.5/ 1449+84.8	OPENING TO OPENING	2.19		PRIVATE DRIVEWAY

SHOULDER RUMBLE STRIP QUANTITIES

DIRECTION	PM	STATION	DESCRIPTION	SHOULDER RUMBLE STRIP AC, GROUND-IN INDENTATIONS (STA)	SHOULDER RUMBLE STRIP HMA, GROUND-IN INDENTATIONS (STA)	REMARKS
EB	25.9/ 26.0	1450+35.6/ 1455+10.8	OPENING TO HOPPER CANYON Rd	4.75		PRIVATE DRIVEWAY
EB	26.0/ 26.2	1457+11.6/ 1466+95.6	HOPPER CANYON Rd TO HOOPER CANYON Br / RR	9.84		
EB	26.4/ 26.4	1474+88.6/ 1477+55.3	HOOPER CANYON Br / RR TO OPENING	2.67		
EB	26.4/ 26.5	1477+96.2/ 1480+03.9	OPENING TO OPENING	2.08		FRUIT STAND
EB	26.6/ 26.9	1488+30.6/ 1501+38.7	OPENING TO ENTRANCE BEFORE POWELL Rd	13.08		FRUIT STAND
EB	26.9/ 27.0	1502+63.9/ 1508+95.5	ENTRANCE BEFORE POWELL Rd TO POWELL Rd	6.32		
EB	27.0/ 27.5	1510+79.4/ 1536+81.3	POWELL Rd TO HOWE Rd	26.02		
EB	27.6/ 28.0	1538+76.5/ 1562+79.5	HOWE Rd TO OPENING	24.03		
EB	28.1/ 28.2	1564+33.6/ 1571+80.5	OPENING TO MAIN St / TORREY Rd	7.47		COUNTRY STORE
EB	28.2/ 28.3	1573+72.1/ 1579+76.1	MAIN St / TORREY Rd TO OPENING	6.04		
EB	28.4/ 28.7	1581+60.7/ 1597+46.2	OPENING TO PIRU CREEK Br	15.86		PRIVATE DRIVEWAY
EB	28.9/ 30.5	1606+25.9/ 1694+58.2	PIRU CREEK Br TO SHARP RANCH	88.32		
EB	30.6/ 34.5	1701+27.6/ 1905+35.2	SHARP RANCH TO LA / VEN COUNTY LINE	204.08		
EB	0.00/ 1.4	38+02.1/ 112+10.8	LA / VEN COUNTY LINE TO SAN MARTNEZ GRANDE Br	74.09		
EB	1.4/ 3.6	113+68.5/ 225+61.4	SAN MARTINEZ GRANDE Br TO WOLCOTT WAY	111.93		
EB	3.6/ 4.1	226+85.5/ 252+05.7	WOLCOTT WAY TO CASTIAC CREEK Br	25.20		
EB	4.2/ 4.4	257+45.6/ 270+29.4	CASTIAC CREEK Br TO VALENCIA TRAVEL VILLAGE ENTRANCE	12.84		
EB	4.5/ 4.9	277+44.7/ 295+18.1	VALENCIA TRAVEL VILLAGE ENTRANCE TO COMMERCE CENTER Dr	17.73		
WB	13.3/ 13.5	787+17.7/ 793+51.2	HALLOCK Dr TO RR AFTER HALLOCK Dr	6.34		
WB	13.5/ 13.6	796+75.5/ 799+29.5	RR AFTER HALLOCK Dr TO HAUN CREEK Br	2.54		
WB	13.6/ 13.6	800+30.3/ 803+01.8	HAUN CREEK Br TO OPENING	2.72		PRIVATE DRIVEWAY
WB	13.7/ 13.8	805+64.6/ 813+10.6	OPENING TO ORCUTT Rd	7.46		
WB	13.8/ 14.3	814+06.8/ 840+59.1	ORCUTT Rd TO BOOSEY Rd	26.52		
			SHEET TOTAL	1,138.92	18.83	

SUMMARY OF QUANTITIES

Q-1

STATE OF CALIFORNIA - DEPARTMENT OF TRANSPORTATION
Caltrans® TRAFFIC DESIGN

FUNCTIONAL SUPERVISOR: FARIBORZ M. TEHRANI
CALCULATED-DESIGNED BY: JAMES CANALITA / RICHARD KHAW
CHECKED BY: ANH D. NGUYEN
REVISED BY
DATE REVISED

LAST REVISION 00-00-00
DATE PLOTTED => 19-JAN-2011
TIME PLOTTED => 12:29

Dist	COUNTY	ROUTE	POST MILES TOTAL PROJECT	SHEET No.	TOTAL SHEETS
07	LA,Ven	126	0.0/5.8 13.1/20.0, 22.0/34.6	18	34

REGISTERED CIVIL ENGINEER 7/7/10 DATE

12-27-10
PLANS APPROVAL DATE

REGISTERED PROFESSIONAL ENGINEER ANH D. NGUYEN No. 62370 Exp. 9/30/11 CIVIL STATE OF CALIFORNIA

THE STATE OF CALIFORNIA OR ITS OFFICERS OR AGENTS SHALL NOT BE RESPONSIBLE FOR THE ACCURACY OR COMPLETENESS OF SCANNED COPIES OF THIS PLAN SHEET.

SHOULDER RUMBLE STRIP QUANTITIES

DIRECTION	PM	STATION	DESCRIPTION	SHOULDER RUMBLE STRIP AC, GROUND-IN INDENTATIONS (STA)	SHOULDER RUMBLE STRIP HMA, GROUND-IN INDENTATIONS (STA)	REMARKS
WB	14.4/ 14.6	842+32.0/ 853+27.7	BOOSEY Rd TO OPENING	10.96		
WB	14.6/ 14.8	855+91.2/ 867+26.3	OPENING TO OPENING	11.35		PRIVATE DRIVEWAY
WB	14.9/ 15.0	867+76.9/ 877+65.6	OPENING TO OPENING	9.89		PRIVATE DRIVEWAY
WB	15.1/ 15.2	878+71.3/ 886+41.5	OPENING TO OPENING	7.70		PRIVATE DRIVEWAY
WB	15.2/ 15.4	887+32.3/ 898+51.0	OPENING TO TIMBER CANYON Rd	11.19		PRIVATE DRIVEWAY
WB	15.5/ 15.9	899+49.3/ 925+31.7	TIMBER CANYON Rd TO TOLAND Rd	25.82		
WB	16.0/ 16.5	928+21.1/ 954+33.6	TOLAND Rd TO HALL / SYCAMORE Rd	26.13		
WB	16.6/ 16.8	960+35.1/ 971+83.0	HALL / SYCAMORE Rd TO RR BEFORE PYLE Rd	11.48		
WB	16.9/ 17.6	975+91.4/ 1014+66.7	RR BEFORE PYLE Rd TO OPENING	38.75		
WB	17.7/ 17.9	1015+35.6/ 1026+45.7	OPENING TO SPALDING Dr	11.10		PRIVATE DRIVEWAY
WB	18.0/ 17.9	1029+08.4/ 1031+71.9	SPALDING Dr TO OPENING	2.64		
WB	18.0/ 18.0	1032+86.6/ 1034+57.6	OPENING TO OPENING	1.71		PRIVATE DRIVEWAY
WB	18.1/ 18.1	1036+60.4/ 1037+66.5	OPENING TO OPENING	1.06		PRIVATE DRIVEWAY
WB	18.1/ 18.3	1038+67.0/ 1050+68.6	OPENING TO SESPE RANCH UC 2	12.02		PRIVATE DRIVEWAY
WB	18.5/ 18.5	1057+44.3/ 1060+86.5	SESPE RANCH UC 2 TO OAK VILLAGE Rd	3.42		
WB	18.6/ 18.8	1063+31.0/ 1075+43.8	OAK VILLAGE Rd TO OLD TELEGRAPH Rd	12.13		
WB	18.8/ 19.1	1078+37.2/ 1093+20.2	OLD TELEGRAPH Rd TO SESPE CREEK Br	14.83		
WB	19.3/ 19.5	1100+54.4/ 1113+29.8	SESPE CREEK Br TO SESPE CREEK OVERFLOW Br	12.75		
WB	19.7/ 19.9	1124+41.7/ 1131+89.9	SESPE CREEK OVERFLOW Br TO E STREET	7.48		
WB	21.8/ 21.9	1236+32.2/ 1237+55.6	KELLOGG St TO TEXICO Rd		1.23	
WB	21.9/ 22.3	1239+05.5/ 1262+85.8	TEXICO Rd TO SESPE LAND & WATER / RR		23.80	
WB	22.4/ 22.8	1264+64.4/ 1286+50.0	SESPE LAND & WATER / RR TO OPENING	21.86		
WB	22.8/ 23.5	1287+28.9/ 1325+91.5	OPENING TO HAINES CANYON Rd	38.63		PRIVATE DRIVEWAY
WB	23.5/ 23.8	1326+43.2/ 1338+28.2	HAINES CANYON TO OPENING	11.85		
WB	23.8/ 23.8	1338+84.7/ 1341+93.7	OPENING TO WETLAND Rd	3.09		PRIVATE DRIVEWAY
WB	23.9/ 24.1	1345+38.1/ 1355+92.4	WETLAND Rd TO OPENING	10.54		
WB	24.1/ 24.2	1356+64.6/ 1360+60.8	OPENING TO FIND Rd	3.96		PRIVATE DRIVEWAY
WB	24.2/ 24.3	1361+01.6/ 1363+43.1	FINE Rd TO FAIRVIEW CANYON Rd	2.42		
WB	24.3/ 24.6	1364+47.8/ 1383+57.7	FAIRVIEW CANYON Rd TO LAWTON RANCH Rd	19.10		
WB	24.7/ 25.0	1387+94.9/ 1404+67.4	LAWTON RANCH Rd TO S & J RANCH Rd	16.73		
WB	25.1/ 25.9	1407+82.2/ 1449+97.4	S & J RANCH Rd TO LIMCO Rd	42.15		

SHOULDER RUMBLE STRIP QUANTITIES

DIRECTION	PM	STATION	DESCRIPTION	SHOULDER RUMBLE STRIP AC, GROUND-IN INDENTATIONS (STA)	SHOULDER RUMBLE STRIP HMA, GROUND-IN INDENTATIONS (STA)	REMARKS
WB	25.9/ 26.2	1450+80.8/ 1466+95.3	LIMCO Rd TO HOPPER CANYON Rd / RR	16.15		
WB	26.4/ 26.9	1476+07.8/ 1502+32.6	HOPPER CANYON Rd / RR TO OPENING	26.25		PRIVATE DRIVEWAY
WB	26.9/ 27.3	1505+18.3/ 1522+20.4	OPENING TO EDWARDS CANYON Rd	17.02		
WB	27.3/ 27.5	1524+82.7/ 1532+65.9	EDWARDS CANYON Rd TO OPENING	7.83		PRIVATE DRIVEWAY
WB	27.5/ 27.8	1536+75.2/ 1549+82.8	OPENING TO CHANNEL ACCESS ENTRANCE	13.08		
WB	27.8/ 27.8	1550+69.9/ 1553+24.4	CHANNEL ACCESS ENTRANCE TO BUSINESS ENTRANCE	2.55		
WB	27.9/ 28.0	1553+84.5/ 1559+52.3	BUSINESS ENTRANCE TO MOBILE HOME PARK ENTRANCE	5.68		
WB	28.0/ 28.1	1561+98.7/ 1566+10.1	MOBILE HOME PARK ENTRANCE TO PACIFIC Ave	4.11		
WB	28.1/ 28.2	1568+53.1/ 1572+32.7	PACIFIC Ave TO MAIN St / TORREY Rd	3.80		
WB	28.2/ 28.7	1574+31.9/ 1597+62.6	MAIN St / TORREY Rd TO PIRU CREEK Br	23.31		
WB	28.9/ 29.2	1606+43.3/ 1622+22.0	PIRU CREEK Br TO CENTER St	15.79		
WB	29.2/ 29.6	1625+92.6/ 1646+87.1	CENTER St TO OPENING	20.95		PRIVATE DRIVEWAY
WB	29.6/ 29.8	1647+18.4/ 1655+04.3	OPENING TO OPENING	7.86		PRIVATE DRIVEWAY
WB	29.8/ 30.6	1655+51.8/ 1698+82.1	OPENING TO SHARP RANCH	43.30		
WB	30.7/ 34.5	1703+21.7/ 1905+35.2	SHARP RANCH TO LA / VEN COUNTY LINE	202.14		
WB	0.0/ 1.4	38+02.1/ 109+99.9	LA / VEN COUNTY LINE TO SAN MARTNEZ GRANDE Br	71.98		
WB	1.4/ 2.4	113+77.8/ 162+01.1	SAN MARTINEZ GRANDE Br TO CHIQUITO CANYON Rd	48.23		
WB	2.5/ 3.0	167+84.5/ 197+02.5	CHIQUITO CANYON Rd TO CHIQUITO CANYON LANDFILL	29.18		
WB	3.2/ 3.5	206+19.7/ 224+90.7	CHIQUITO CANYON LANDFILL TO WOLCOTT WAY	18.71		
WB	3.7/ 4.1	232+39.4/ 252+24.8	WOLCOTT WAY TO CASTIAC CREEK Br	19.85		
WB	4.2/ 4.9	257+65.8/ 294+46.6	CASTIAC CREEK Br TO COMMERCE CENTER Dr	36.81		
SHEET TOTAL				1,037.32	25.03	
SHEET TOTAL FROM Q-1				1,138.92	18.83	
GRAND TOTAL				2,177	44	

SUMMARY OF QUANTITIES

Q-2

STATE OF CALIFORNIA - DEPARTMENT OF TRANSPORTATION
Caltrans® TRAFFIC DESIGN
FUNCTIONAL SUPERVISOR: FARIBORZ M. TEHRANI
CALCULATED-DESIGNED BY: JAMES CANALITA / RICHARD KHAW
CHECKED BY: ANH D. NGUYEN
REVISED BY
DATE REVISED

LAST REVISION 00-00-00 | DATE PLOTTED => 19-JAN-2011 | TIME PLOTTED => 12:30

Dist	COUNTY	ROUTE	POST MILES TOTAL PROJECT	SHEET No.	TOTAL SHEETS
07	LA,Ven	126	0.0/5.8 13.1/20.0, 22.0/34.6	19	34

REGISTERED CIVIL ENGINEER 7/7/10 DATE

12-27-10
PLANS APPROVAL DATE

REGISTERED PROFESSIONAL ENGINEER ANH D. NGUYEN No. 62370 Exp. 9/30/11 CIVIL STATE OF CALIFORNIA

THE STATE OF CALIFORNIA OR ITS OFFICERS OR AGENTS SHALL NOT BE RESPONSIBLE FOR THE ACCURACY OR COMPLETENESS OF SCANNED COPIES OF THIS PLAN SHEET.

CENTERLINE RUMBLE STRIP QUANTITIES

PM	STATION	DESCRIPTION	CENTERLINE RUMBLE STRIP AC, GROUND-IN INDENTATIONS (STA) SINGLE	AC DOUBLE	HMA, GROUND-IN INDENTATIONS (STA) SINGLE	HMA DOUBLE	REMARKS
13.3/ 13.5	782+83.2/ 785+33.3	HALLOCK Dr TO RR AFTER HALLOCK Dr	2.50				TYPE MP-1
	785+33.3/ 793+52.8			16.40			TYPE ME-5 & ME-6
13.5/ 13.6	796+70.4/ 799+00.0	RR AFTER HALLOCK Dr TO HAUN CREEK Br		4.60			TYPE ME-6
13.6/ 13.8	799+98.2/ 811+04.3	HAUN CREEK Br TO ORCUTT Rd		22.12			TYPE ME-6
	811+04.3/ 813+34.3		2.30				TYPE MP-1(a)
13.8/ 14.1	814+12.6/ 814+29.0	ORCUTT Rd TO WILLARD Rd	0.16				TYPE ME-3
	814+29.0/ 826+53.2			24.48			TYPE ME-6
	826+53.2/ 826+83.9		0.31				TYPE ME-3(a)
14.1/ 14.4	827+49.4/ 828+79.0	WILLARD Rd TO BOOSEY Rd	1.30				TYPE MP-1
	828+79.0/ 840+18.9			22.80			TYPE ME-6
	840+18.9/ 841+68.5		1.50				TYPE MP-1(a)
14.4/ 16.0	842+08.8/ 842+34.7	BOOSEY Rd TO TOLAND Rd	0.26				TYPE ME-3
	842+34.7/ 920+76.8			156.84			TYPE ME-6
	920+76.8/ 921+13.5		0.37				TYPE ME-3(a)
16.0/ 16.5	927+74.4/ 952+88.2	TOLAND Rd TO SYCAMORE Rd / HALL Rd		50.28			TYPE ME-1
	952+88.2/ 954+57.8		1.70				TYPE MP-1(a)
16.5/ 16.6	955+89.9/ 956+12.7	SYCAMORE Rd / HALL Rd TO SESPE RANCH UC 1	0.23				TYPE ME-3
	956+12.7/ 959+25.7			6.26			TYPE ME-6
16.6/ 17.0	960+25.3/ 971+93.0	SESPE RANCH UC 1 TO RR BEFORE PYLE Rd		23.36			TYPE ME-6
17.0/ 17.6	975+50.6/ 1007+99.0	RR BEFORE PYLE Rd TO PYLE Rd		64.96			TYPE ME-1(a)
17.6/ 18.0	1008+62.7/ 1009+92.9	PYLE Rd TO SPALDING Rd	1.30				TYPE MP-1
	1009+92.9/ 1026+28.2			32.70			TYPE ME-6
	1026+28.2/ 1027+58.2		1.30				TYPE MP-1(a)
18.0/ 18.3	1028+35.8/ 1043+34.7	SPALDING Rd TO ATMORE Rd		29.98			TYPE ME-1
18.3/ 18.5	1044+14.9/ 1045+45.0	ATMORE Rd TO SESPE RANCH UC 2	1.30				TYPE MP-1
	1045+45.0/ 1056+44.3			21.98			TYPE ME-6
18.5/ 18.6	1057+40.9/ 1060+47.4	SESPE RANCH UC 2 TO OAK VILLAGE Rd / MAIN St		6.14			TYPE ME-5 & ME-6
	1060+47.4/ 1062+27.4		1.80				TYPE MP-1(a)
18.6/ 18.9	1063+09.5/ 1070+22.7	OAK VILLAGE Rd / N MAIN St TO OLD TELEGRAPH Rd		14.26			TYPE ME-1
	1070+22.7/ 1077+23.1		7.00				TYPE MP-1(a)

CENTERLINE RUMBLE STRIP QUANTITIES

PM	STATION	DESCRIPTION	CENTERLINE RUMBLE STRIP AC, GROUND-IN INDENTATIONS (STA) SINGLE	AC DOUBLE	HMA, GROUND-IN INDENTATIONS (STA) SINGLE	HMA DOUBLE	REMARKS
18.9/ 19.3	1078+01.5/ 1093+05.0	OLD TELEGRAPH Rd TO SESPE CREEK Br		30.08			TYPE ME-1
19.3/ 19.7	1100+37.5/ 1117+25.5	SESPE CREEK Br TO SESPE CREEK OVERFLOW Br		33.76			TYPE ME-6
19.7/ 20.0	1124+07.6/ 1133+03.3	SESPE CREEK OVERFLOW Br TO E STREET		17.92			TYPE ME-5
	1133+03.3/ 1134+83.3		1.80				TYPE MP-1(a)
22.0/ 22.3	1236+31.9/ 1246+17.8	POLE CREEK Br / KELLOGG St TO EL DORADO Dr				19.72	TYPE ME-6
	1246+17.8/ 1251+27.7				5.10		TYPE MP-1(c)
22.3/ 22.5	1251+90.3/ 1255+70.2	EL DORADO Dr TO SESPE LAND & WATER / RR			3.80		TYPE MP-1
	1255+70.2/ 1263+00.0					14.60	TYPE ME-5
22.5/ 23.1	1266+09.6/ 1293+77.3	SESPE LAND & WATER / RR TO CALIFORNIA WATERCRESS INC. ENTRANCE		55.36			TYPE ME-6
	1293+77.3/ 1293+93.7		0.16				TYPE ME-4(a)
23.1/ 23.7	1294+74.3/ 1296+04.5	CALIFORNIA WATERCRESS INC. ENTRANCE TO HAINES CANYON Rd	1.30				TYPE MP-1
	1296+04.5/ 1324+21.3			56.34			TYPE ME-5 & ME-6
	1324+21.3/ 1325+50.8		1.30				TYPE MP-1(a)
23.7/ 25.1	1326+33.0/ 1400+47.2	HAINES CANYON Rd TO CAVIN Rd		148.28			TYPE ME-4
	1400+47.2/ 1400+71.8		0.25				TYPE ME-4(a)
25.1/ 26.2	1401+38.9/ 1402+68.7	CAVIN Rd TO HOPPER CANYON Rd	1.30				TYPE MP-1
	1402+68.7/ 1455+80.5			106.24			TYPE ME-1(a)
26.2/ 26.4	1456+52.0/ 1457+81.8	HOPPER CANYON Rd TO HOPPER CANYON Br / RR	1.30				TYPE MP-1
	1457+81.8/ 1466+96.1			18.28			TYPE ME-6
26.4/ 26.9	1473+97.3/ 1485+90.8	HOPPER CANYON Br / RR TO ENTRANCE BEFORE POWELL Rd		23.88			TYPE ME-6
	1485+90.5/ 1486+05.0		0.15				TYPE ME-4(a)
26.9/ 27.2	1487+90.9/ 1488+97.9	ENTRANCE BEFORE POWELL Rd TO POWELL Rd	1.30				TYPE MP-1
	1487+90.9/ 1509+03.9			42.26			TYPE ME-6
	1509+03.9/ 1509+49.1		0.45				TYPE ME-4(a)
		SHEET TOTAL	32.64	1,029.56	8.90	34.32	

SUMMARY OF QUANTITIES

Q-3

STATE OF CALIFORNIA - DEPARTMENT OF TRANSPORTATION
Caltrans® TRAFFIC DESIGN

FUNCTIONAL SUPERVISOR: FARIBORZ M. TEHRANI
CALCULATED-DESIGNED BY: JAMES CANALITA / RICHARD KHAW
CHECKED BY: ANH D. NGUYEN
REVISED BY
DATE REVISED

LAST REVISION 00-00-00
DATE PLOTTED => 19-JAN-2011
TIME PLOTTED => 12:30

Dist	COUNTY	ROUTE	POST MILES TOTAL PROJECT	SHEET No.	TOTAL SHEETS
07	LA,Ven	126	0.0/5.8 13.1/20.0, 22.0/34.6	20	34

REGISTERED CIVIL ENGINEER 7/7/10 DATE

12-27-10
PLANS APPROVAL DATE

REGISTERED PROFESSIONAL ENGINEER ANH D. NGUYEN No. 62370 Exp. 9/30/11 CIVIL STATE OF CALIFORNIA

THE STATE OF CALIFORNIA OR ITS OFFICERS OR AGENTS SHALL NOT BE RESPONSIBLE FOR THE ACCURACY OR COMPLETENESS OF SCANNED COPIES OF THIS PLAN SHEET.

CENTERLINE RUMBLE STRIP QUANTITIES

PM	STATION	DESCRIPTION	CENTERLINE RUMBLE STRIP AC, GROUND-IN INDENTATIONS (STA) SINGLE	AC DOUBLE	HMA, GROUND-IN INDENTATIONS (STA) SINGLE	HMA DOUBLE	REMARKS
27.2/ 27.4	1510+23.1/ 1511+53.5	POWELL Rd TO EDWARDS CANYON Rd	1.30				TYPE MP-1
	1511+53.5/ 1519+74.3			16.42			TYPE ME-5
	1519+74.3/ 1522+84.5		3.10				TYPE MP-2(a)
27.4/ 27.7	1523+55.9/ 1524+00.0	EDWARDS CANYON Rd TO HOWE Rd	0.44				TYPE ME-3
	1524+00.0/ 1536+57.8			25.16			TYPE ME-6
	1536+57.8/ 1537+11.5		0.54				TYPE ME-3(a)
27.7/ 28.3	1538+18.0/ 1541+27.7	HOWE Rd TO MAIN St / TORREY Rd	3.10				TYPE MP-2
	1541+27.7/ 1567+37.8			52.20			TYPE ME-5 & ME-6
	1567+37.8/ 1572+47.9		5.10				TYPE MP-2(a)
28.3/ 28.8	1573+72.3/ 1576+42.1	MAIN St / TORREY Rd TO PIRU CREEK Br	2.70				TYPE MP-2
	1576+42.1/ 1597+54.4			44.20			TYPE ME-6
28.8/ 29.3	1605+33.6/ 1618+00.5	PIRU CREEK Br TO CENTER St		25.34			TYPE ME-6
	1618+00.5/ 1622+90.6		4.90				TYPE MP-1(a)
29.3/ 34.6	1624+04.7/ 1624+26.9	CENTER St TO LA / Ven COUNTY LINE	0.22				TYPE ME-2
	1624+26.9/ 1905+35.2			562.16			TYPE ME-6
0.0/ 1.4	38+02.1/ 105+86.1	LA / Ven COUNTY LINE TO SAN MARTINEZ GRANDE CANYON Rd		135.68			TYPE ME-5 & ME-6
	105+86.1/ 110+73.4		4.90				TYPE MP-1(a)
1.4/ 1.4	111+77.7/ 112+31.7	SAN MARTINEZ GRANDE CANYON Rd TO SAN MARTINEZ GRANDE	0.54				TYPE ME-2
1.4/ 2.4	113+74.1/ 157+20.1	SAN MARTINEZ GRANDE TO CHIQUITO CANYON Rd		86.52			TYPE ME-5
	157+20.1/ 162+00.2		4.80				TYPE MP-1(a)
2.4/ 3.1	162+16.9/ 166+96.9	CHIQUITO CANYON Rd TO CHIQUITO CANYON LANDFILL ENTRANCE	4.80				TYPE MP-1(b)
	166+96.9/ 193+74.2			53.54			TYPE ME-5
	193+74.2/ 198+54.2		4.80				TYPE MP-1(a)
3.1/ 3.6	200+46.9/ 205+26.9	CHIQUITO CANYON LANDFILL ENTRANCE TO WOLCOTT WAY	4.80				TYPE MP-1(b)
	205+26.9/ 221+10.4			31.68			TYPE ME-5
	221+10.4/ 225+60.4		4.50				TYPE MP-1(a)
3.6/ 4.1	226+79.2/ 231+29.2	WOLCOTT WAY TO CASTAIC CREEK Br	4.50				TYPE MP-1
	231+29.2/ 252+09.6			41.60			TYPE ME-5
4.1/ 4.5	257+56.5/ 275+42.8	CASTAIC CREEK Br TO VALENCIA TRAVEL VILLAGE ENTRANCE		35.72			TYPE ME-1(a)

CENTERLINE RUMBLE STRIP QUANTITIES

PM	STATION	DESCRIPTION	CENTERLINE RUMBLE STRIP AC, GROUND-IN INDENTATIONS (STA) SINGLE	AC DOUBLE	HMA, GROUND-IN INDENTATIONS (STA) SINGLE	HMA DOUBLE	REMARKS
4.5/ 4.9	276+89.9/ 281+69.9	VALECIA TRAVEL VILLAGE ENTRANCE TO COMMERECE CENTER Dr	4.80				TYPE MP-2
	281+69.9/ 290+38.1			17.36			TYPE ME-5
	290+38.1/ 295+18.1		4.80				TYPE MP-2(a)
SHEET TOTAL			64.64	1,127.58			
SHEET TOTAL FROM Q-3			32.64	1,029.56	8.90	34.32	
TOTAL			97.28	2,157.14	8.90	34.32	
GRAND TOTAL			2,255		44		

HMA (TYPE A) QUANTITY

No.	LOCATION	TYPE	POST MILE FROM	POST MILE TO	STATION FROM	STATION TO	COLD PLANE ASPHALT Conc PAVEMENT (SQYD)	HMA (Type A) (TON)
1	KELLOGG St TO 25' BEFORE RR	MEDIAN	22.0	22.5	1236+25.0	1264+10.0	3,714	627
		WB-Shld	22.0	22.5	1236+25.0	1263+85.0	3,067	518
		EB-Shld	22.0	22.5	1236+25.0	1264+35.0	3,123	527
					TOTAL		9,904	1,672

SUMMARY OF QUANTITIES

Q-4

STATE OF CALIFORNIA - DEPARTMENT OF TRANSPORTATION
Caltrans® TRAFFIC DESIGN

FUNCTIONAL SUPERVISOR: FARIBORZ M. TEHRANI
CALCULATED-DESIGNED BY: JAMES CANALITA / RICHARD KHAW
CHECKED BY: ANH D. NGUYEN
REVISED BY
DATE REVISED

LAST REVISION 00-00-00
DATE PLOTTED => 19-JAN-2011
TIME PLOTTED => 12:30

Dist	COUNTY	ROUTE	POST MILES TOTAL PROJECT	SHEET No.	TOTAL SHEETS
07	LA,Ven	126	0.0/5.8 13.1/20.0, 22.0/34.6	21	34

REGISTERED CIVIL ENGINEER 7/7/10 DATE

12-27-10
PLANS APPROVAL DATE

REGISTERED PROFESSIONAL ENGINEER ANH D. NGUYEN No. 62370 Exp. 9/30/11 CIVIL STATE OF CALIFORNIA

THE STATE OF CALIFORNIA OR ITS OFFICERS OR AGENTS SHALL NOT BE RESPONSIBLE FOR THE ACCURACY OR COMPLETENESS OF SCANNED COPIES OF THIS PLAN SHEET.

ROADWAY QUANTITIES

METAL BEAM GUARDRAILING LOCATION No.	SHEET No.	ROADWAY EXCAVATION	IMPORTED BORROW	HMA (TYPE B)	PLACE HMA DIKE (TYPE C)	METAL BEAM GUARD RAILING (WOOD POST)	METAL BEAM GUARD RAILING (8' POST)	VEGETATION CONTROL (MINOR CONCRETE)	END ANCHOR ASSEMBLY (TYPE SFT)	ALTERNATIVE IN-LINE TS	REMOVE ASPHALT CONCRETE DIKE	REMOVE MBGR
		CY	CY	TON	LF	LF	LF	SQYD	EA	EA	LF	LF
1	L-1		4.17	0.96	125.5		37.5	45.6	1	1	118.5	
2	L-1	4.15				37.5	37.5	50.4		1		37.5
3	L-1		4.80	0.96	125.5	37.5		45.6		1	118.5	50.0
6	L-1		4.17	0.96	125.5		37.5	45.6	1	1	118.5	
TOTAL		4.15	13.14	2.88	376.5	75	112.5	187.2	2	4	355.5	87.5

SUMMARY OF QUANTITIES

Q-5

STATE OF CALIFORNIA - DEPARTMENT OF TRANSPORTATION
Caltrans TRAFFIC DESIGN

FUNCTIONAL SUPERVISOR: FARIBORZ M. TEHRANI
CALCULATED-DESIGNED BY: JAMES CANALITA / RICHARD KHAW
CHECKED BY: ANH D. NGUYEN
REVISED BY
DATE REVISED

LAST REVISION 00-00-00 | DATE PLOTTED => 19-JAN-2011 | TIME PLOTTED => 12:30

Dist	COUNTY	ROUTE	POST MILES TOTAL PROJECT	SHEET No.	TOTAL SHEETS
07	LA,Ven	126	0.0/5.8 13.1/20.0, 22.0/34.6	22	34

Johannes O Anserlian 7/7/10
REGISTERED ELECTRICAL ENGINEER DATE

12-27-10
PLANS APPROVAL DATE

REGISTERED PROFESSIONAL ENGINEER
OHANNES ANSERLIAN
No. E16682
Exp. 6/30/12
ELECTRICAL
STATE OF CALIFORNIA

THE STATE OF CALIFORNIA OR ITS OFFICERS OR AGENTS SHALL NOT BE RESPONSIBLE FOR THE ACCURACY OR COMPLETENESS OF SCANNED COPIES OF THIS PLAN SHEET.

NOTE:

EXISTING UTILITY FACILITIES HAVE NOT BEEN PLOTTED ON THIS PLAN.

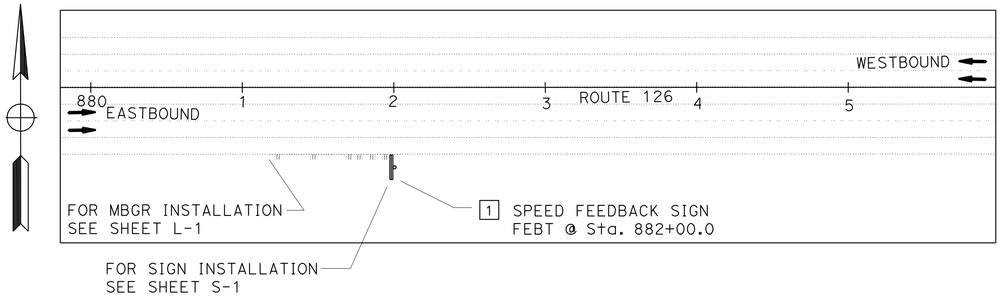

SIGN LOCATION No. 1

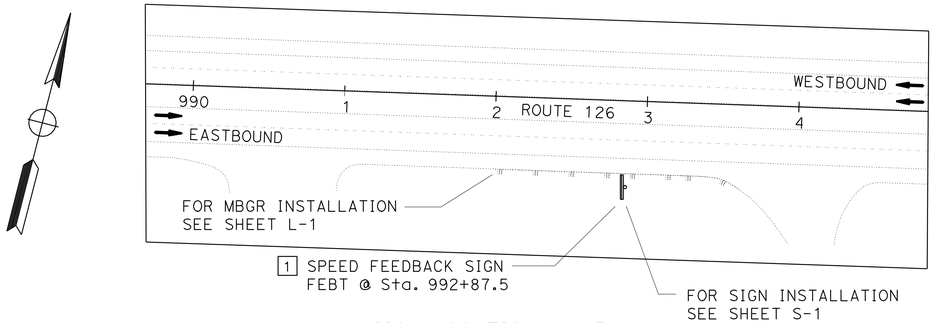

SIGN LOCATION No. 3

NOTE: 1. Speed Feedback Sign located at an elevation of 5' above roadway.
2. Speed Feedback Sign lateral offset from the ETW is 34'-0".

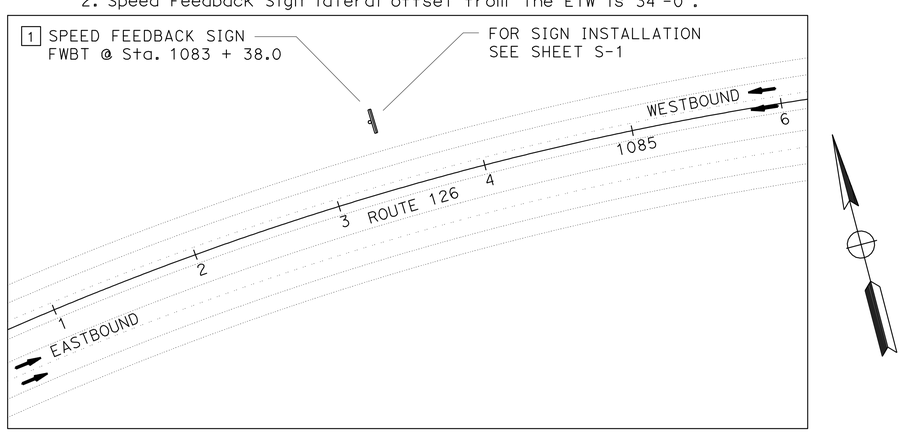

SIGN LOCATION No. 5

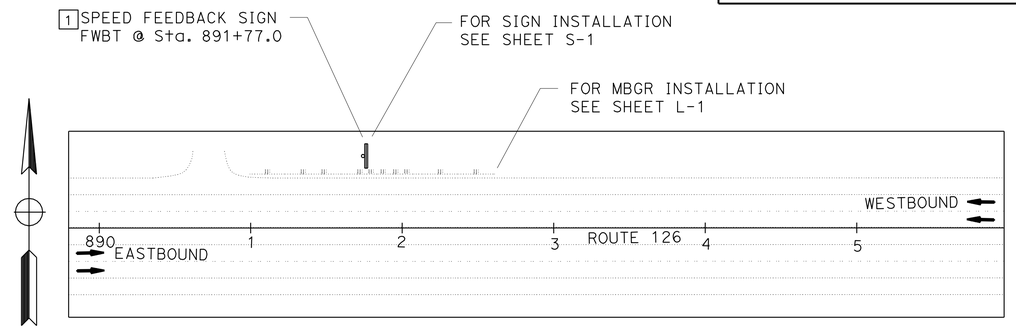

SIGN LOCATION No. 2

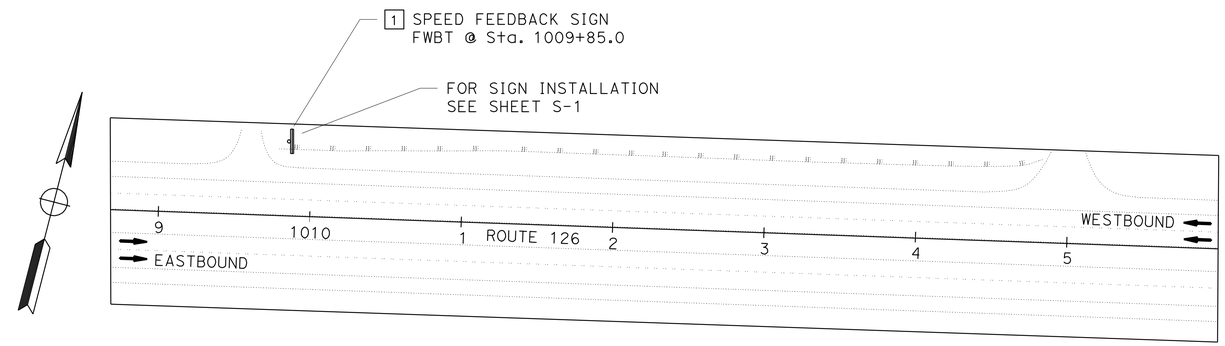

SIGN LOCATION No. 4

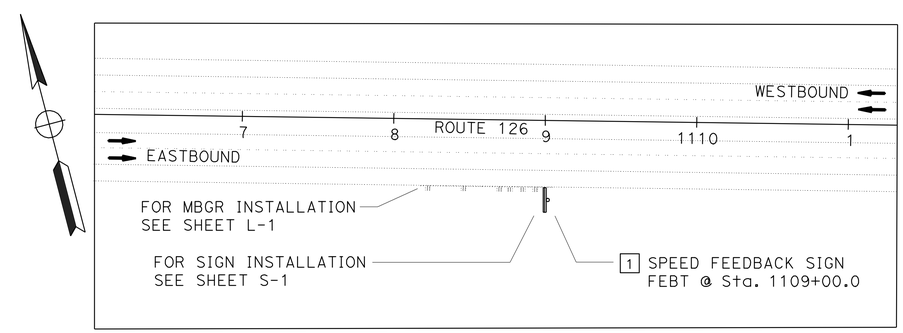

SIGN LOCATION No. 6

PROJECT NOTE: (THIS SHEET)

1 INSTALL VEHICLE SPEED FEEDBACK (VSF) SIGN. SEE DETAILS ON SHEET SES-1.

THIS PLAN IS ACCURATE FOR ELECTRICAL WORK ONLY.

VEHICLE SPEED FEEDBACK SIGN

NO SCALE

E-1

STATE OF CALIFORNIA - DEPARTMENT OF TRANSPORTATION
Caltrans® TRAFFIC DESIGN

FUNCTIONAL SUPERVISOR: OSWALD ELIZONDO
CALCULATED-DESIGNED BY: FARID REKABI
CHECKED BY: OHANNES ANSERLIAN
REVISED BY
DATE REVISED

LAST REVISION 00-00-00
DATE PLOTTED => 19-JAN-2011
TIME PLOTTED => 12:31

DIST	COUNTY	ROUTE	POST MILES TOTAL PROJECT	SHEET NO	TOTAL SHEETS
07	LA, Ven	126	0.0/5.8 13.1/20.0,22.0/34.6	23	34

Jeffrey B Woody 7/28/10
REGISTERED CIVIL ENGINEER DATE

12-27-10
PLANS APPROVAL DATE

REGISTERED PROFESSIONAL ENGINEER JEFF WOODY No. C41260 Exp. 3/31/11 CIVIL STATE OF CALIFORNIA

The State of California or its officers or agents shall not be responsible for the accuracy or completeness of electronic copies of this plan sheet.

TABLE A

POLE TYPE	POLE DATA				BASE PLATE DATA				"d" 2'-0" Ø CIDH Pile	STRUCTURAL STEEL LBS PLUS 3.5% GALVANIZING
	HEIGHT "H"	Min OD		THICKNESS	"C"	THICKNESS	ANCHOR BOLTS			
		BASE	TOP				SIZE	BC = BOLT CIRCLE	LEVEL GROUND	
VSF Pole	25'	10"	6 5/8"	0.1793"	1'-2"	1 1/4"	1 1/2" x 3'-6" x 6"	1'-2"	11'-0"	750

TABLE B

ATTACHMENT	MOUNTING HEIGHT	WEIGHT LIMITS (MAX)
Battery bay	9'-6"	20 lbs
R2-1 (55)	9'-6"	30 lbs
Vehicle Speed Feedback Sign	17'-6"	90 lbs
Photo-voltaic	21'-4"	60 lbs

TABLE C

PHOTO-VOLTAIC PANEL LIMITS	
PANEL SIZE	TILT ANGLE
10.20 ft^2 Max	45° Min

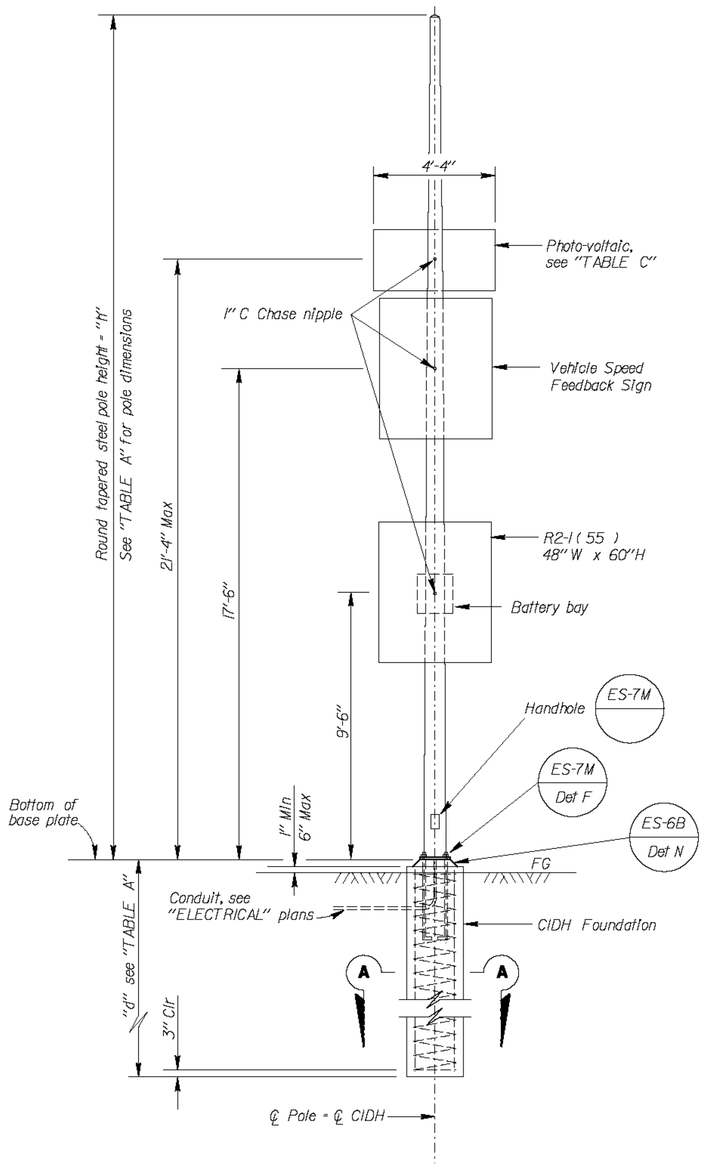

FRONT VIEW ELEVATION

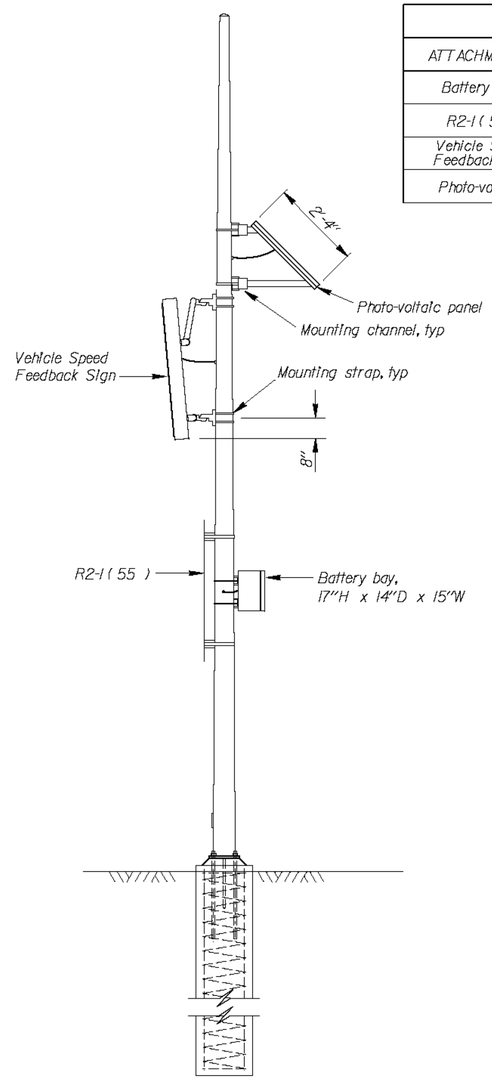

SIDE VIEW ELEVATION

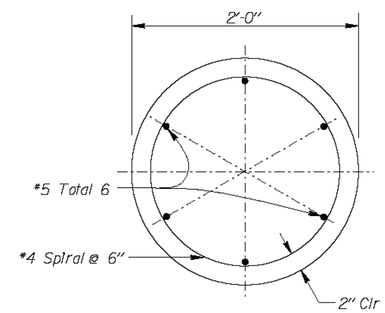

SECTION A-A

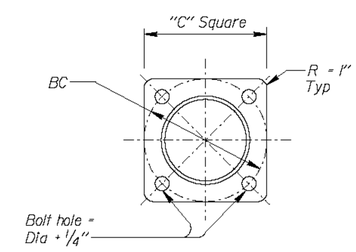

BASE PLATE

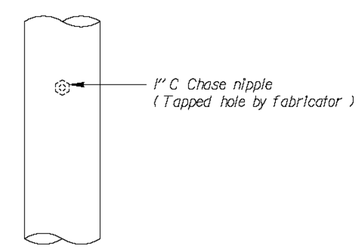

CHASE NIPPLE DETAIL

DESIGN NOTES:

SPECIFICATIONS

Design : AASHTO Standard Specifications for Structural Supports for Highway Signs, Luminaires and Traffic Signals dated 2001.

LOADING

Wind Loadings: 100 mph

UNIT STRESSES

Structural steel: fy = 48,000 psi tapered steel pole
fy = 36,000 psi unless otherwise noted.

Anchor bolts = A307
Reinforced concrete: f'_c = 3,600 psi
fy = 60,000 psi

NOTES:

1. All steel shall be galvanized after fabrication.
2. During pole erection the pole shall be raked as necessary with the use of leveling nuts to provide a plumb pole axis.
3. Foundation design is based on AASHTO 2001 article 13.6 Broms' approximate procedure assuming a cohesionless material. The angle of internal friction used is 30 degrees and unit weight of soil used is 120 lbs/ft^3.
4. Paint back of new vehicle speed feedback sign, battery bay, and R2-1 Sign with exterior flat latex black.
5. For details not shown, see 2006 "STANDARD PLANS" and 2006 "REVISED STANDARD PLANS".
6. Drill and tap 1" chase nipple and plug with raintight plugs. 1" chase nipple per attachment per pole. Plug should only be removed if chase nipple is used.
7. All attachments, unless otherwise noted, shall be mounted to pole with stainless steel straps or other method without drilling holes in pole.

NOTE:
THE CONTRACTOR SHALL VERIFY ALL CONTROLLING FIELD DIMENSIONS BEFORE ORDERING OR FABRICATING ANY MATERIAL.

STANDARD PLAN SHEET NO.
DETAIL NO.

NO SCALE

BRANCH CHIEF Jeffrey B Woody

	BY	CHECKED
DESIGN	JOHN DATILES	DEVANG VORA
DETAILS	R. YEE	JOHN DATILES
QUANTITIES	JOHN DATILES	DEVANG VORA

STATE OF CALIFORNIA
DEPARTMENT OF TRANSPORTATION

DIVISION OF ENGINEERING SERVICES
DESIGN AND TECHNICAL SERVICES
SPECIAL DESIGNS BRANCH A

BRIDGE NO.
POST MILE Various

VEHICLE SPEED FEEDBACK (VSF) SIGN POLE AND MOUNTING DETAILS

SES-1

(ENGLISH) SPECIAL DESIGNS BRANCH BORDER SHEET (REV. 7-1-09)

ORIGINAL SCALE IN INCHES FOR REDUCED PLANS 0 1 2 3

CU 07
EA 0700020065

DISREGARD PRINTS BEARING EARLIER REVISION DATES 7/28/10 7/28/10 7/29/10

REVISION DATES

SHEET OF

FILE => 2010ard//ses-1.dgn ses-1.dgn

USERNAME => ryee DATE PLOTTED => 29-JUL-2010 TIME PLOTTED => 11:39

DIST	COUNTY	ROUTE	POST MILES TOTAL PROJECT	SHEET NO.	TOTAL SHEETS
07	LA, Ven	126	0.0/5.8 13.1/20.0,22.0/34.6	24	34

REGISTERED CIVIL ENGINEER

June 6, 2008
PLANS APPROVAL DATE

REGISTERED PROFESSIONAL ENGINEER Donald E. Howe No. C46402 Exp. 3-31-09 CIVIL STATE OF CALIFORNIA

The State of California or its officers or agents shall not be responsible for the accuracy or completeness of electronic copies of this plan sheet.

To accompany plans dated 12-27-10

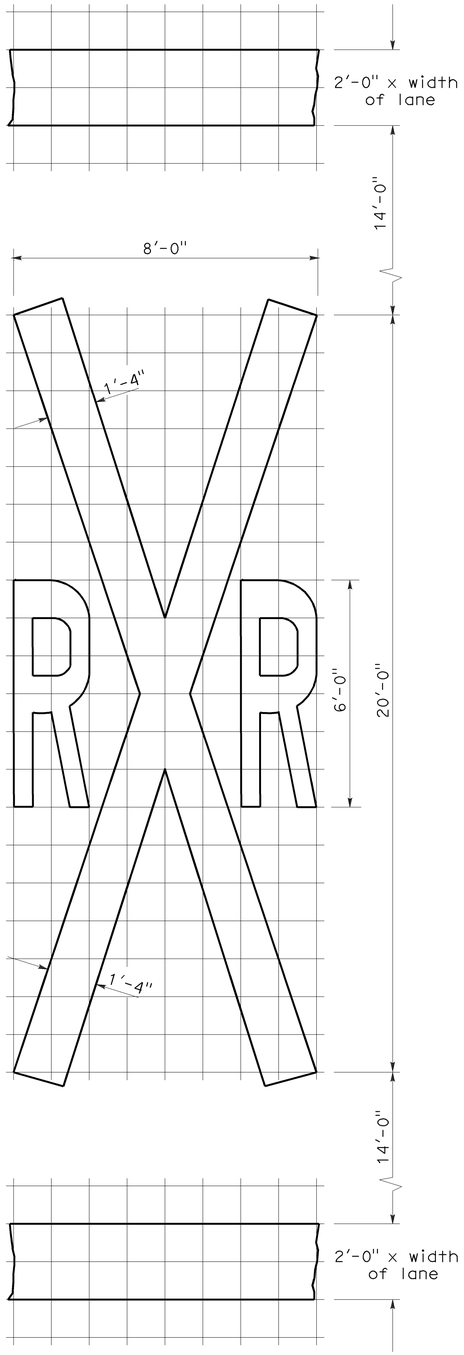

1'-0" GRID
A=70 sq ft ✳

RAILROAD CROSSING SYMBOL

✳70 sq ft DOES NOT INCLUDE THE 2'-0" x VARIABLE WIDTH TRANSVERSE LINES.

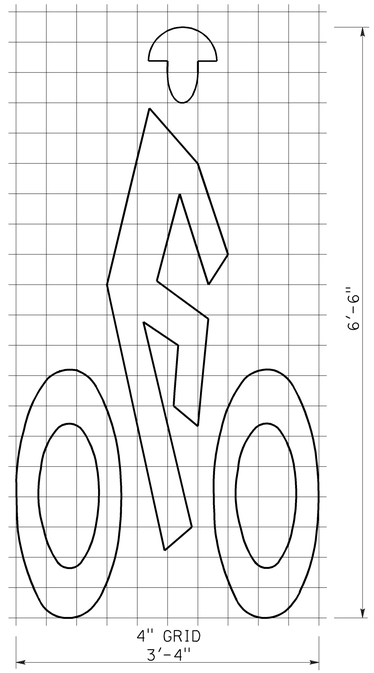

A=7 sq ft

BIKE LANE SYMBOL

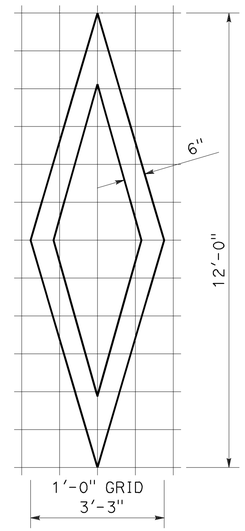

A=11 sq ft

DIAMOND SYMBOL

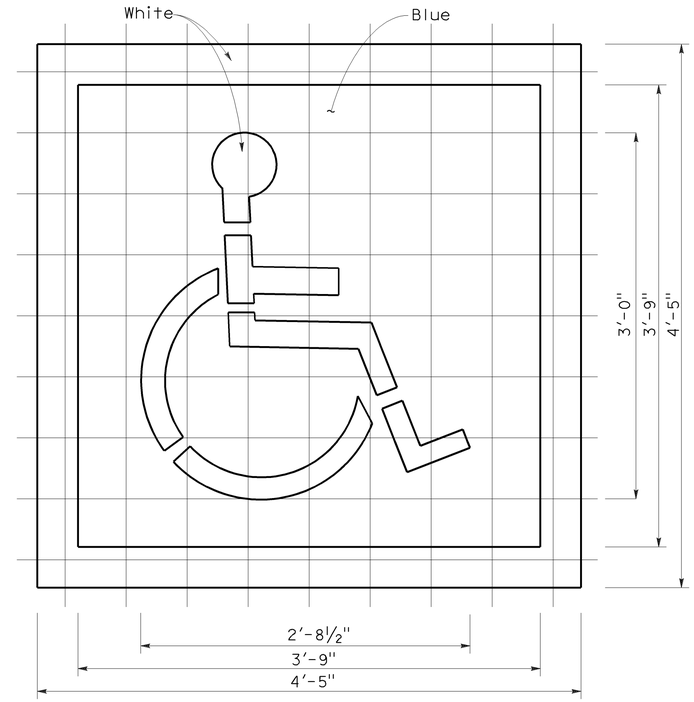

6" GRID
A (White) =9 sq ft
A (Blue) =14 sq ft

INTERNATIONAL SYMBOL OF ACCESSIBILITY MARKING

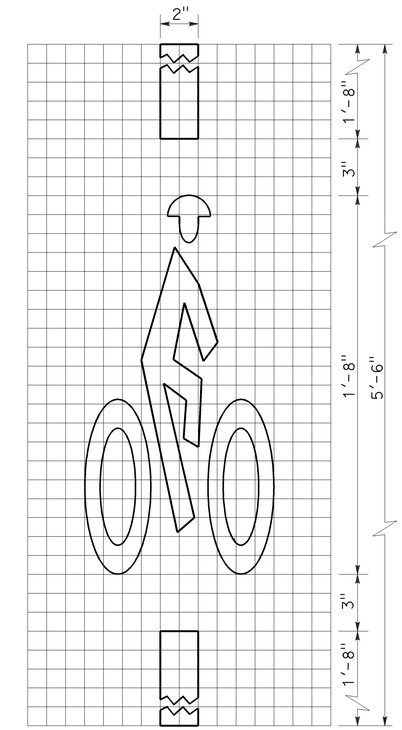

A=2 sq ft

BICYCLE LOOP DETECTOR SYMBOL

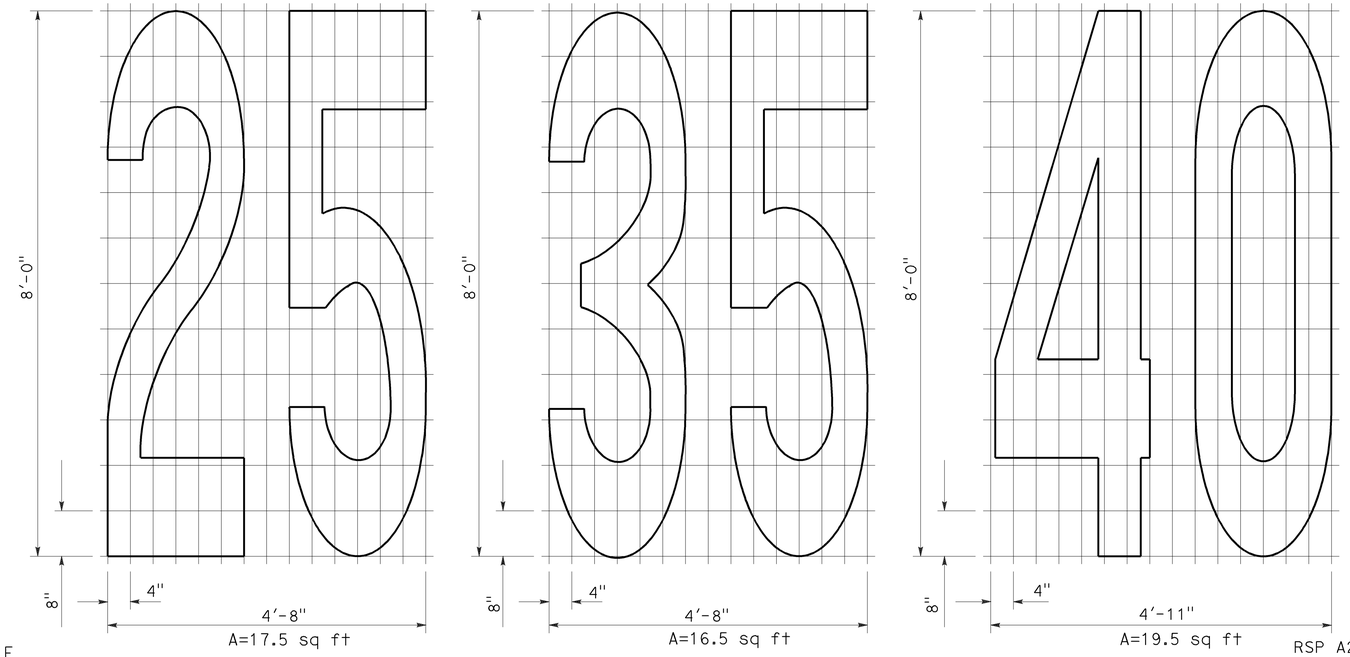

A=17.5 sq ft
A=16.5 sq ft
A=19.5 sq ft

NUMERALS

NOTE:

1. Minor variations in dimensions may be accepted by the Engineer.

STATE OF CALIFORNIA
DEPARTMENT OF TRANSPORTATION

PAVEMENT MARKINGS SYMBOLS AND NUMERALS

NO SCALE

RSP A24C DATED JUNE 6, 2008 SUPERSEDES STANDARD PLAN A24C DATED MAY 1, 2006 - PAGE 11 OF THE STANDARD PLANS BOOK DATED MAY 2006.

REVISED STANDARD PLAN RSP A24C

2006 REVISED STANDARD PLAN RSP A24C

5-27-08

DIST	COUNTY	ROUTE	POST MILES TOTAL PROJECT	SHEET NO.	TOTAL SHEETS
07	LA, Ven	126	0.0/5.8 13.1/20.0,22.0/34.6	25	34

Randell D. Hiatt
REGISTERED CIVIL ENGINEER

June 6, 2008
PLANS APPROVAL DATE

REGISTERED PROFESSIONAL ENGINEER Randell D. Hiatt No. C50200 Exp. 6-30-09 CIVIL STATE OF CALIFORNIA

The State of California or its officers or agents shall not be responsible for the accuracy or completeness of electronic copies of this plan sheet.

To accompany plans dated 12-27-10

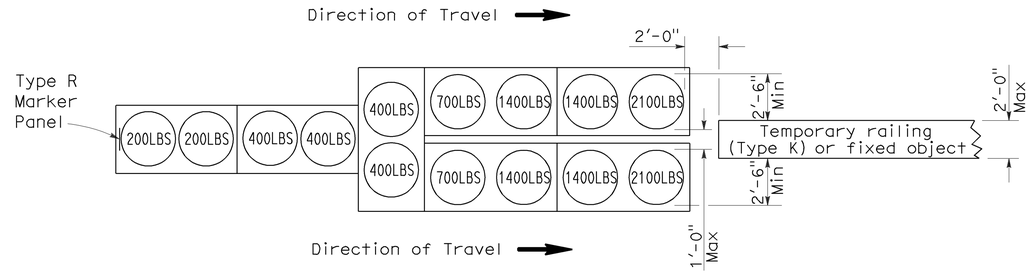

ARRAY 'TU14'

Approach speed 45 mph or more

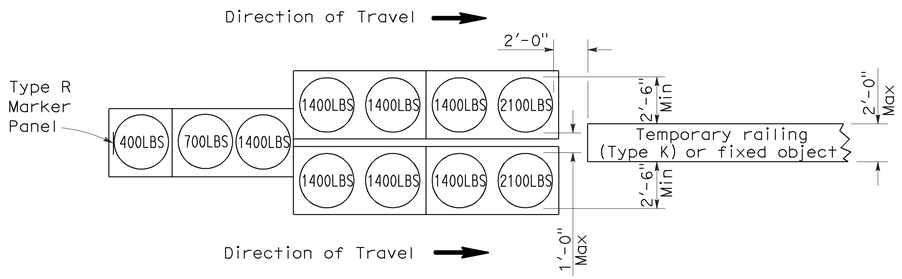

ARRAY 'TU11'

Approach speed less than 45 mph

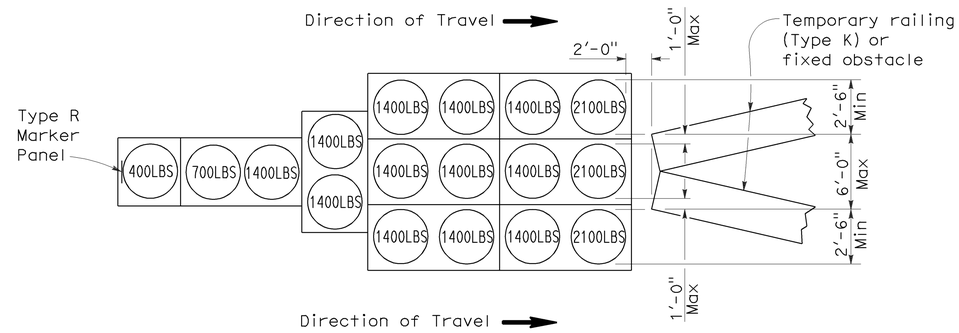

ARRAY 'TU17'

Approach speed less than 45 mph

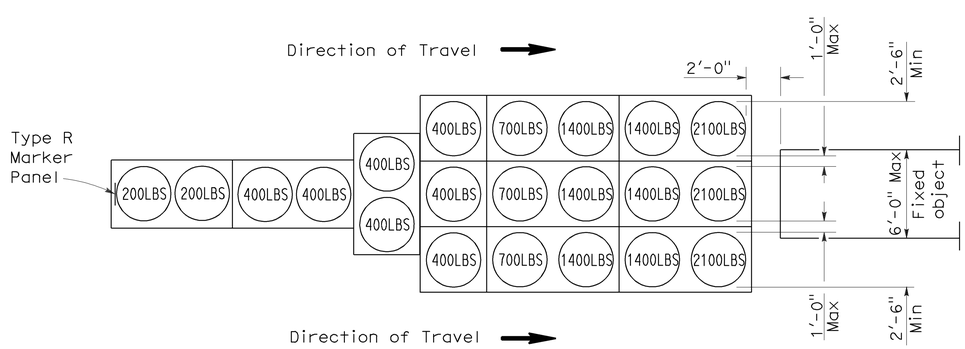

ARRAY 'TU21'

Approach speed 45 mph or more

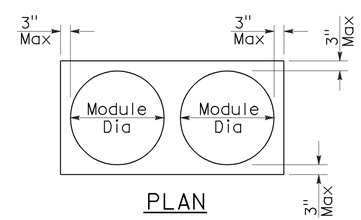

PLAN

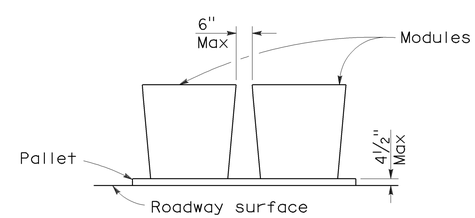

ELEVATION

CRASH CUSHION PALLET DETAIL

See Note 7

NOTES:

1. (XXX) Indicates sand filled module location and weight of sand in pounds for each module. Module spacing is based on the greater diameter of the module.
2. All sand weights are nominal.
3. Temporary crash cushion arrays shall not encroach on the traveled way.
4. Place the top of Type R marker panel 1" below the module lid.
5. Refer to Standard Plan A73B for marker details.
6. Approach speeds indicated conform to NCHRP 350 Report criteria.
7. Use of pallets is optional.

STATE OF CALIFORNIA
DEPARTMENT OF TRANSPORTATION

TEMPORARY CRASH CUSHION, SAND FILLED (UNIDIRECTIONAL)

NO SCALE

RSP T1A DATED JUNE 6, 2008 SUPERSEDES STANDARD PLAN T1A
DATED MAY 1, 2006 - PAGE 211 OF THE STANDARD PLANS BOOK DATED MAY 2006.

REVISED STANDARD PLAN RSP T1A

2006 REVISED STANDARD PLAN RSP T1A

5-15-08

DIST	COUNTY	ROUTE	POST MILES TOTAL PROJECT	SHEET NO.	TOTAL SHEETS
07	LA, Ven	126	0.0/5.8 13.1/20.0,22.0/34.6	26	34

Randell D. Hiatt
REGISTERED CIVIL ENGINEER

June 6, 2008
PLANS APPROVAL DATE

REGISTERED PROFESSIONAL ENGINEER
Randell D. Hiatt
No. C50200
Exp. 6-30-09
CIVIL
STATE OF CALIFORNIA

The State of California or its officers or agents shall not be responsible for the accuracy or completeness of electronic copies of this plan sheet.

To accompany plans dated 12-27-10

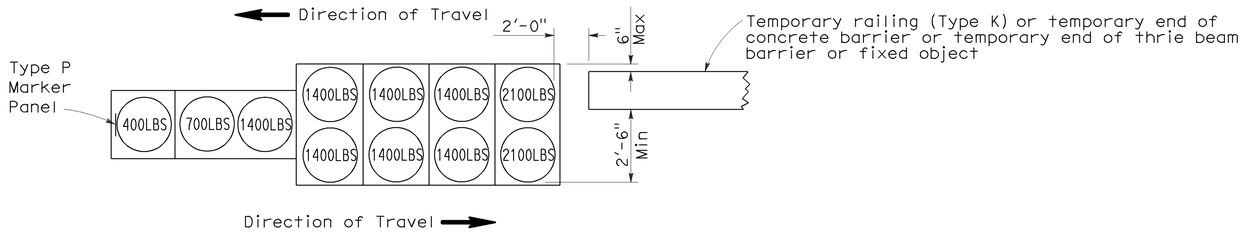

ARRAY 'TB11'

Approach speed less than 45 mph

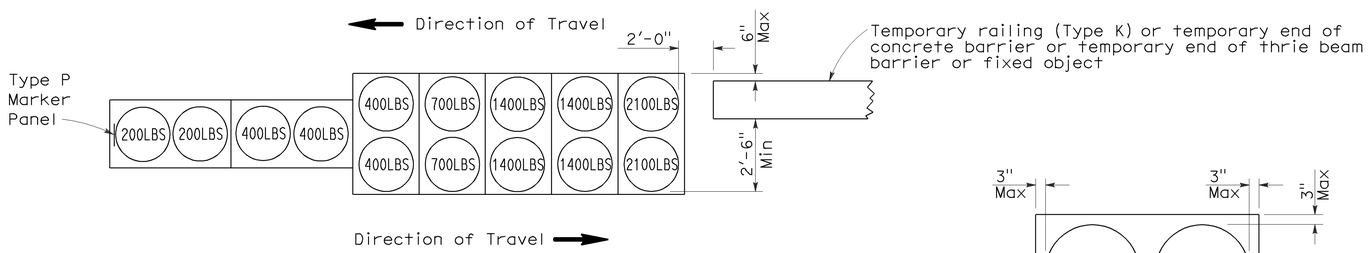

ARRAY 'TB14'

Approach speed 45 mph or more

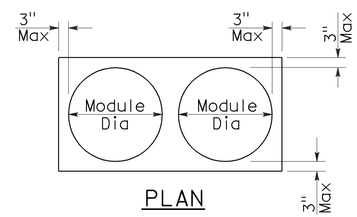

PLAN

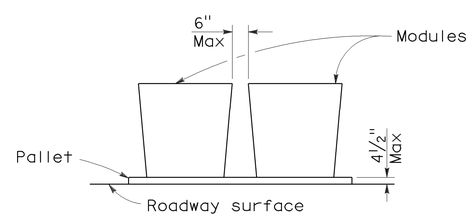

ELEVATION

CRASH CUSHION PALLET DETAIL

See Note 7

NOTES:

1. (XXX) Indicates sand filled module location and weight of sand in pounds for each module. Module spacing is based on the greater diameter of the module.
2. All sand weights are nominal.
3. Temporary crash cushion arrays shall not encroach on the traveled way.
4. Place the Type P marker panel so that the bottom of the panel rests upon the pallet.
5. Refer to Standard Plan A73B for marker details.
6. Approach speeds indicated conform to NCHRP 350 Report criteria.
7. Use of pallets is optional.

STATE OF CALIFORNIA
DEPARTMENT OF TRANSPORTATION

TEMPORARY CRASH CUSHION, SAND FILLED (BIDIRECTIONAL)

NO SCALE

RSP T1B DATED JUNE 6, 2008 SUPERSEDES STANDARD PLAN T1B
DATED MAY 1, 2006 - PAGE 212 OF THE STANDARD PLANS BOOK DATED MAY 2006.

REVISED STANDARD PLAN RSP T1B

2006 REVISED STANDARD PLAN RSP T1B

5-15-08

DIST	COUNTY	ROUTE	POST MILES TOTAL PROJECT	SHEET NO.	TOTAL SHEETS
07	LA, Ven	126	0.0/5.8 13.1/20.0,22.0/34.6	27	34

Randell D. Hiatt
REGISTERED CIVIL ENGINEER

June 6, 2008
PLANS APPROVAL DATE

REGISTERED PROFESSIONAL ENGINEER
Randell D. Hiatt
No. C50200
Exp. 6-30-09
CIVIL
STATE OF CALIFORNIA

The State of California or its officers or agents shall not be responsible for the accuracy or completeness of electronic copies of this plan sheet.

To accompany plans dated 12-27-10

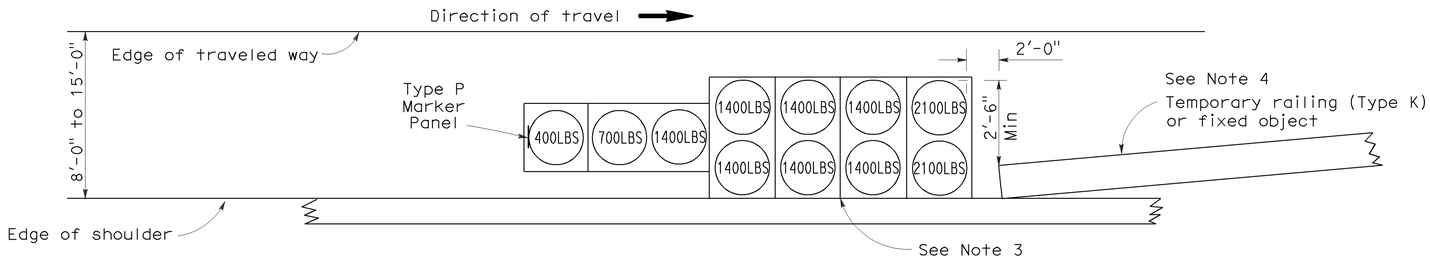

ARRAY 'TS11'

Approach speed less than 45 mph
See Note 9

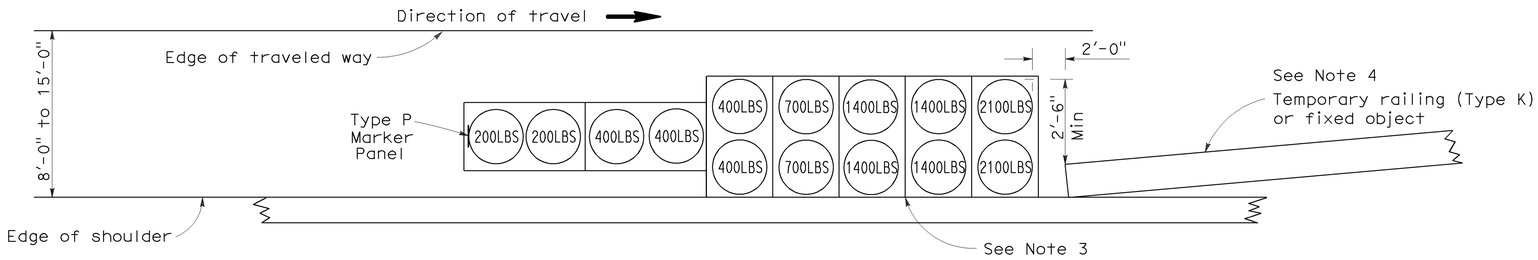

ARRAY 'TS14'

Approach speed 45 mph or more
See Note 9

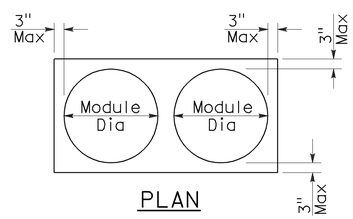

PLAN

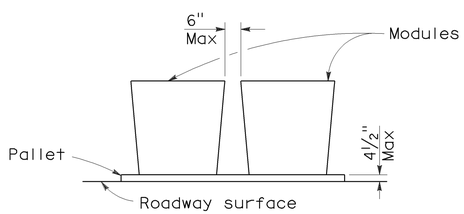

ELEVATION

CRASH CUSHION PALLET DETAIL

See Note 11

NOTES:

1. (XXX) Indicates sand filled module location and weight of sand in pounds for each module. Module spacing is based on the greater diameter of the module.
2. All sand weights are nominal.
3. The temporary crash cushion arrays shown on this plan shall be used only in locations where there will be traffic on one side of the temporary crash cushion array.
4. If the fixed object or approach end of the temporary railing is less than 15'-0" from the edge of traveled way, a temporary crash cushion is required in a construction or work zone.
5. Temporary crash cushion arrays shall not encroach on the traveled way.
6. Arrays for median shoulders shall conform to details shown on this plan for outside shoulders.
7. Place the Type P marker panel so that the bottom of the panel rests upon the pallet and faces traffic.
8. Refer to Standard Plan A73B for marker details.
9. For shoulder widths less than 8'-0", appropriate approved crash cushion protection, other than sand filled modules, shall be provided at fixed objects and at approach ends of temporary railing. The specific type of crash cushion shall be as shown on the project plans or as specified in the Special Provisions, or if not shown on the project plans or specified in the Special Provisions, shall be as approved by the Engineer.
10. Approach speeds indicated conform to NCHRP 350 Report criteria.
11. Use of pallets is optional.

STATE OF CALIFORNIA
DEPARTMENT OF TRANSPORTATION

TEMPORARY CRASH CUSHION, SAND FILLED (SHOULDER INSTALLATIONS)

NO SCALE

RSP T2 DATED JUNE 6, 2008 SUPERSEDES STANDARD PLAN T2
DATED MAY 1, 2006 - PAGE 213 OF THE STANDARD PLANS BOOK DATED MAY 2006.

REVISED STANDARD PLAN RSP T2

2006 REVISED STANDARD PLAN RSP T2

5-15-08

DIST	COUNTY	ROUTE	POST MILES TOTAL PROJECT	SHEET NO.	TOTAL SHEETS
07	LA, Ven	126	0.0/5.8 13.1/20.0,22.0/34.6	28	34

LICENSED LANDSCAPE ARCHITECT

August 15, 2008
PLANS Approval DATE

The State of California or its officers or agents shall not be responsible for the accuracy or completeness of electronic copies of this plan sheet.

LICENSED LANDSCAPE ARCHITECT Robert B. Schott 3635 Signature 11-04-08 Renewal Date 08-11-08 Date STATE OF CALIFORNIA

To accompany plans dated 12-27-10

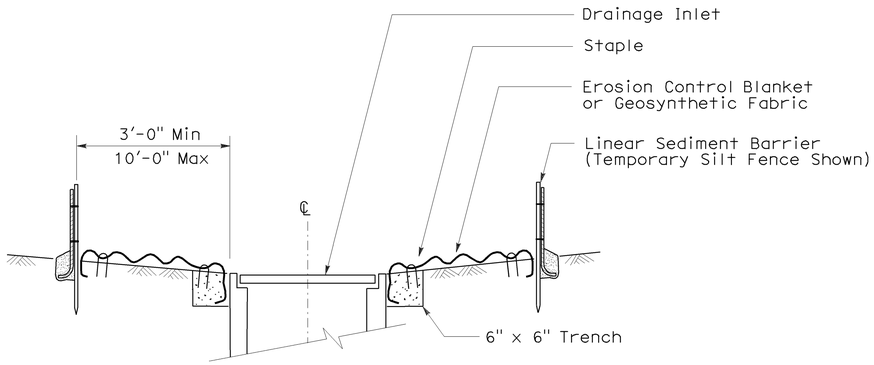

SECTION A-A

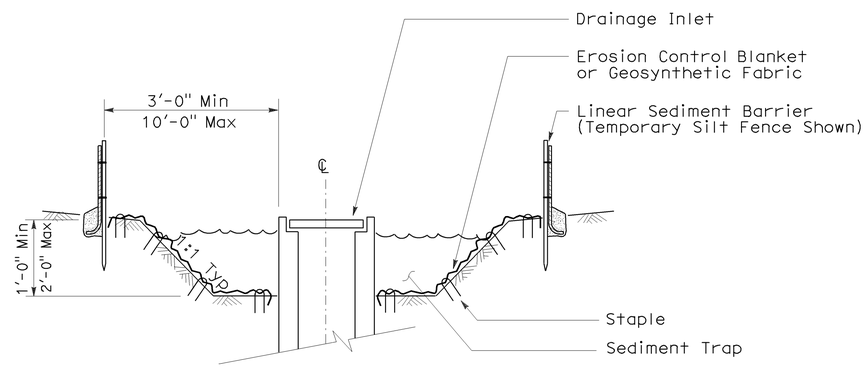

SECTION B-B

NOTES:

1. See Standard Plan T51 for Temporary Silt Fence.
2. Dimensions may vary to fit field conditions.

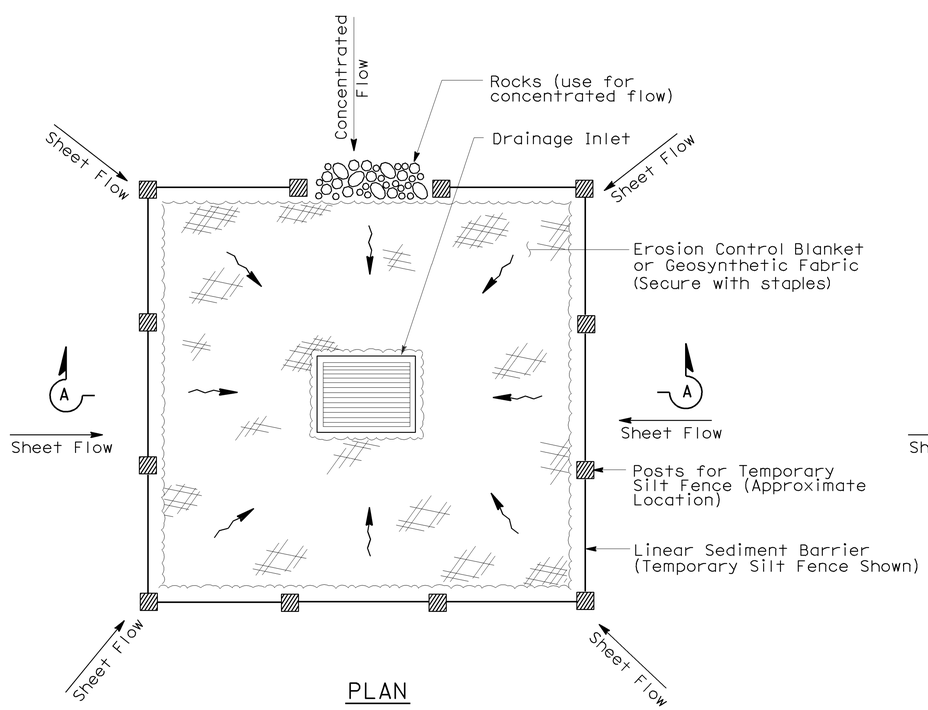

PLAN

TEMPORARY DRAINAGE INLET PROTECTION (TYPE 1)

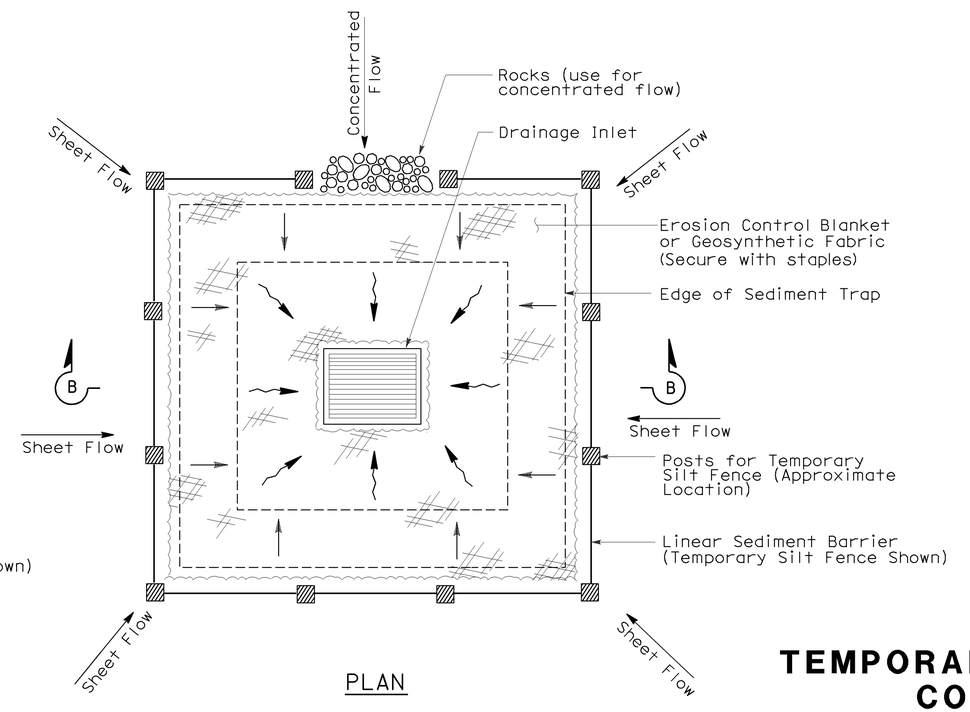

PLAN

TEMPORARY DRAINAGE INLET PROTECTION (TYPE 2) (EXCAVATED SEDIMENT TRAP)

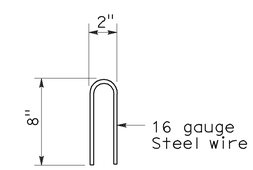

STAPLE DETAIL

STATE OF CALIFORNIA
DEPARTMENT OF TRANSPORTATION

TEMPORARY WATER POLLUTION CONTROL DETAILS (TEMPORARY DRAINAGE INLET PROTECTION)

NO SCALE

Nsp t61 dated august 15, 2008 supplements the standard plans book dated may 2006.

NEW STANDARD PLAN NSP T61

2006 NEW STANDARD PLAN NSP T61

7-11-08

DIST	COUNTY	ROUTE	POST MILES TOTAL PROJECT	SHEET NO.	TOTAL SHEETS
07	LA, Ven	126	0.0/5.8 13.1/20.0,22.0/34.6	29	34

LICENSED LANDSCAPE ARCHITECT

August 15, 2008
PLANS APPROVAL DATE

The State of California or its officers or agents shall not be responsible for the accuracy or completeness of electronic copies of this plan sheet.

LICENSED LANDSCAPE ARCHITECT — Robert B. Schott — Signature — 11-04-08 Renewal Date — 08-11-08 Date — STATE OF CALIFORNIA

To accompany plans dated 12-27-10

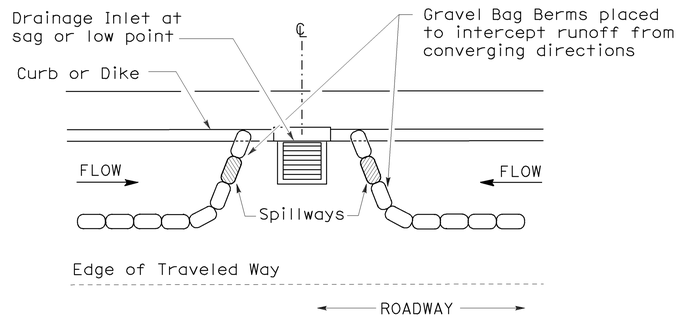

PLAN

CONFIGURATION FOR SAG POINT INLET (GRAVEL BAG BERM)

GRAVEL BAG BERM (TYPE 3A) SPACING TABLE

SLOPE OF ROADWAY (PERCENT)	1 to 3.9	4 to 5.9	6 to 7.9	8 to 10	10+
INTERVAL BETWEEN BERM	100′	75′	50′	25′	12′

For slope of less than 1%, install barriers only if erosion/sediment is prevalent

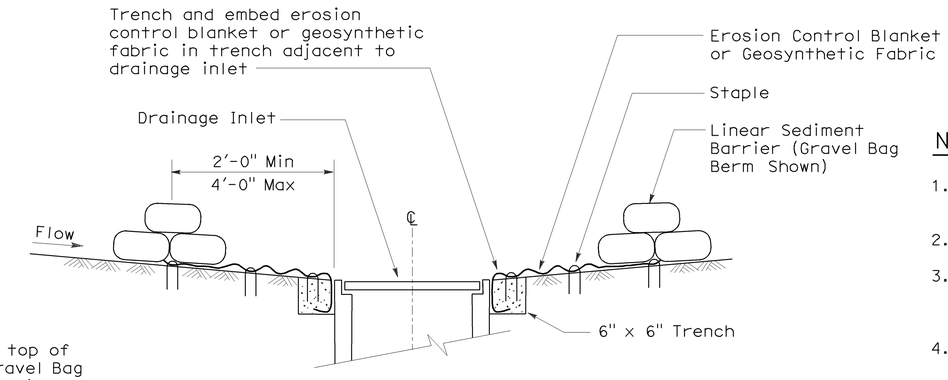

SECTION A-A

NOTES:

1. Place safety cones adjacent to drainage inlet protection.
2. Dimensions may vary to fit field conditions.
3. Install a minimum of 3 gravel bag berms upstream of each drainage inlet to be protected.
4. Position erosion control blanket or geosynthetic fabric at edge of concrete apron and secure in trench.
5. Erosion control blanket or geosynthetic fabric is not required if the area adjacent to the drainage inlet is vegetated or paved.

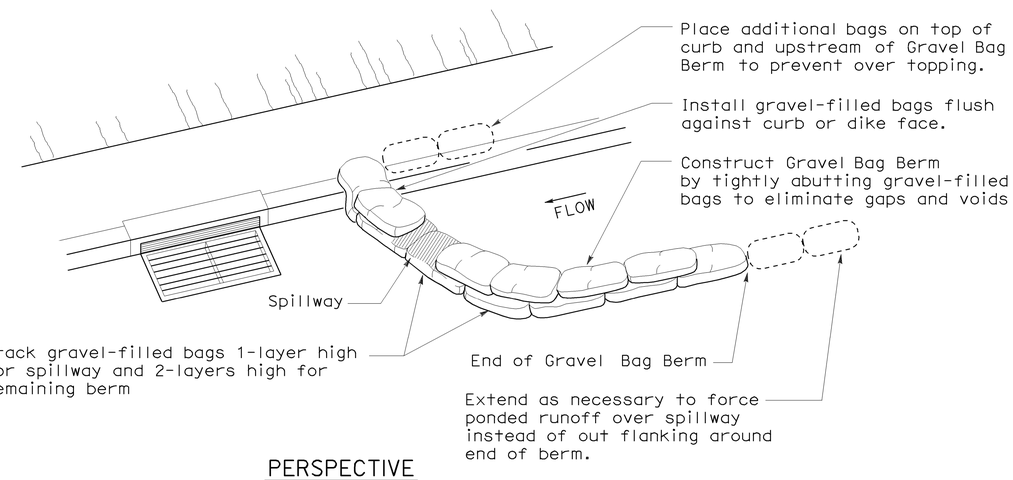

PERSPECTIVE

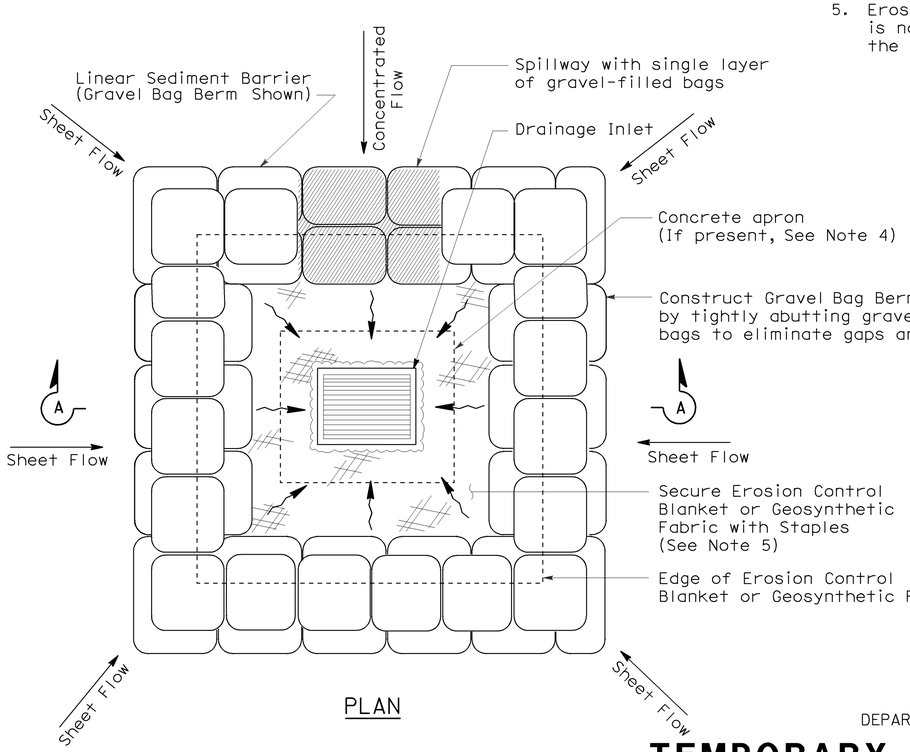

PLAN

TEMPORARY DRAINAGE INLET PROTECTION (TYPE 3B)

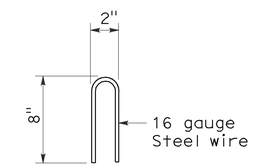

STAPLE DETAIL

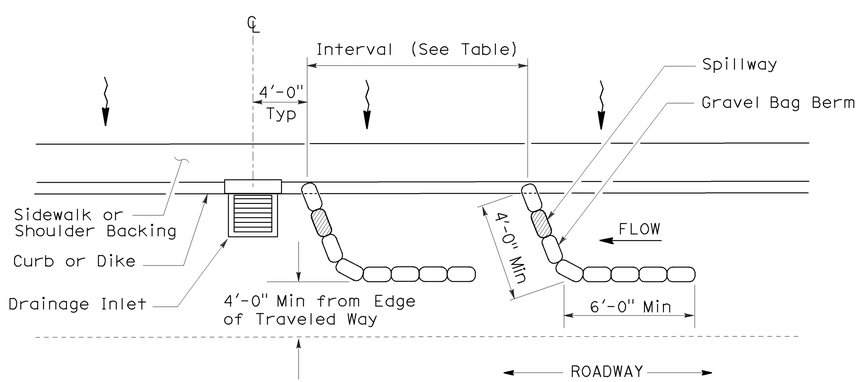

PLAN

TEMPORARY DRAINAGE INLET PROTECTION (TYPE 3A) (GRAVEL BAG BERM)

STATE OF CALIFORNIA
DEPARTMENT OF TRANSPORTATION

TEMPORARY WATER POLLUTION CONTROL DETAILS (TEMPORARY DRAINAGE INLET PROTECTION)

NO SCALE

NSP T62 DATED AUGUST 15, 2008 SUPPLEMENTS THE STANDARD PLANS BOOK DATED MAY 2006.

NEW STANDARD PLAN NSP T62

2006 NEW STANDARD PLAN NSP T62

7-11-08

DIST	COUNTY	ROUTE	POST MILES TOTAL PROJECT	SHEET NO.	TOTAL SHEETS
07	LA, Ven	126	0.0/5.8 13.1/20.0,22.0/34.6	30	34

LICENSED LANDSCAPE ARCHITECT

August 15, 2008
PLANS APPROVAL DATE

The State of California or its officers or agents shall not be responsible for the accuracy or completeness of electronic copies of this plan sheet.

LICENSED LANDSCAPE ARCHITECT — Robert B. Schott — 3695 — Signature — 11-04-08 Renewal Date — 08-11-08 Date — STATE OF CALIFORNIA

To accompany plans dated 12-27-10

FLEXIBLE SEDIMENT BARRIER SPACING TABLE

SLOPE OF ROADWAY (PERCENT)	0 to 0.9	1 to 1.9	2 to 2.9	3 to 4	5+
INTERVAL BETWEEN BARRIERS	50′	35′	30′	25′	20′
ANGLE FROM FACE OF CURB	70°	70°	70°	45°	45°
SUGGESTED BARRIER LENGTH	6′	6′	6′	6′	6′

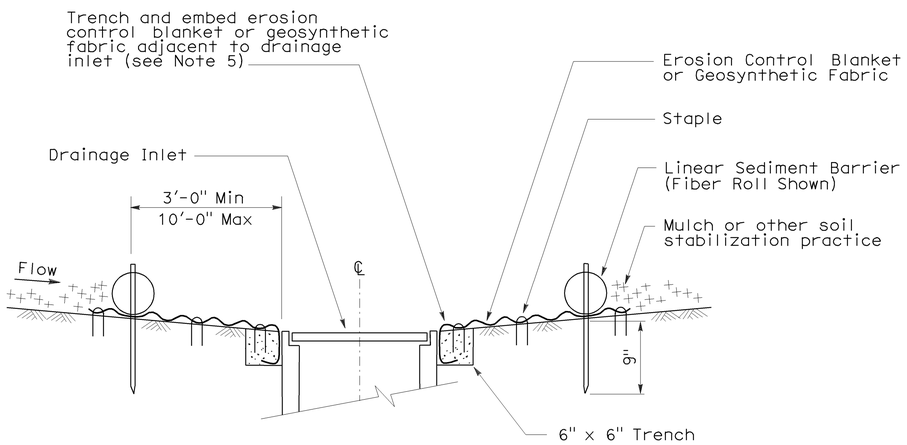

SECTION A-A

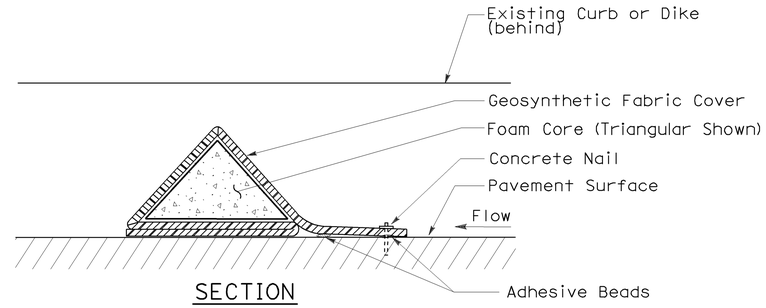

SECTION

FLEXIBLE SEDIMENT BARRIER DETAIL (FOAM BARRIER SHOWN)

NOTES:

1. See Standard Plan T51 for Temporary Silt Fence.
2. Dimensions may vary to fit field conditions.
3. Install a minimum of 3 flexible sediment barriers upstream of each drainage inlet to be protected.
4. Position erosion control blanket or geosynthetic fabric at edge of concrete apron and secure in trench.
5. Erosion control blanket or geosynthetic fabric is not required if the area adjacent to the drainage inlet is vegetated.

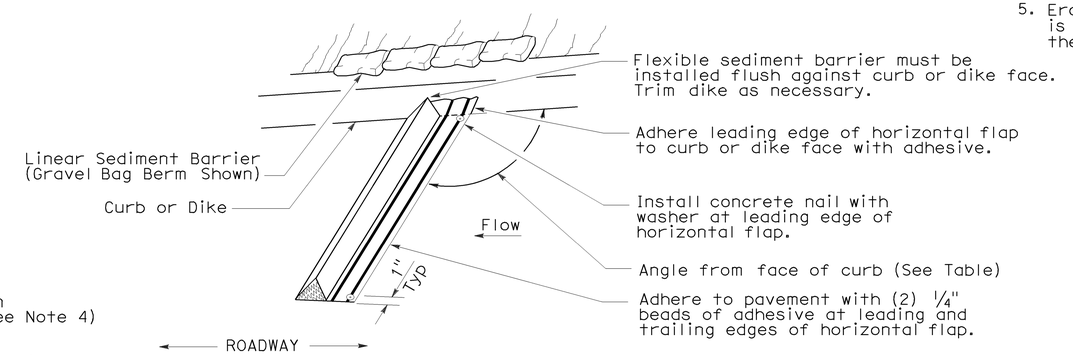

PERSPECTIVE

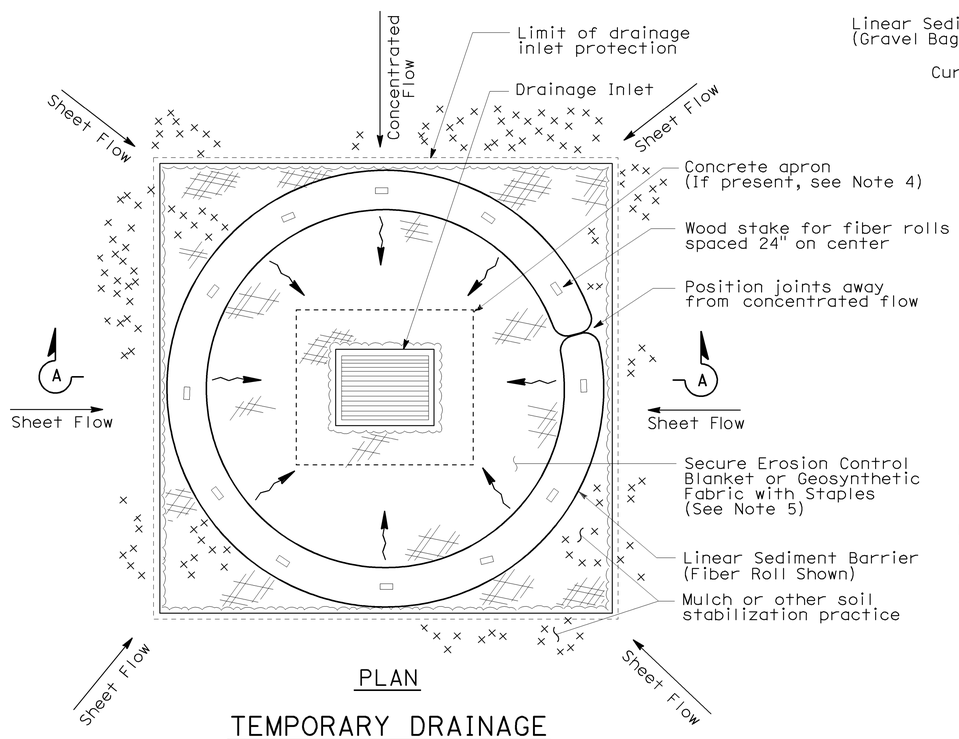

PLAN

TEMPORARY DRAINAGE INLET PROTECTION (TYPE 4A)

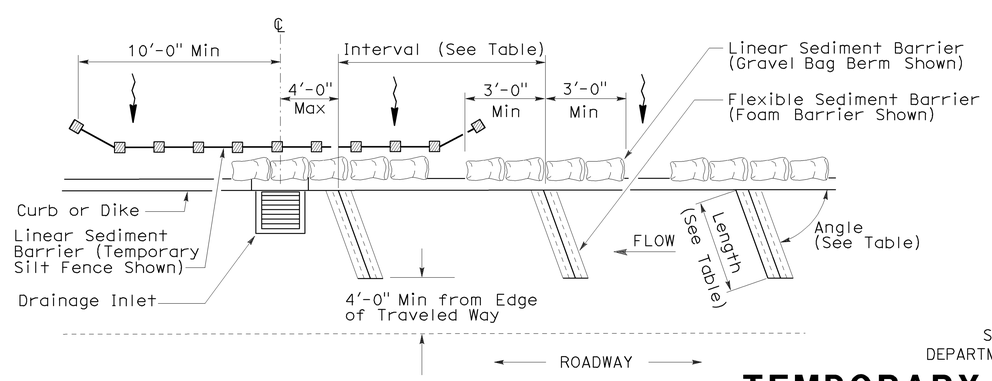

PLAN

TEMPORARY DRAINAGE INLET PROTECTION (TYPE 4B) FLEXIBLE SEDIMENT BARRIER

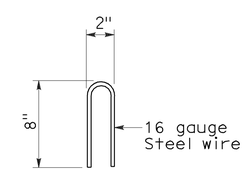

STAPLE DETAIL

STATE OF CALIFORNIA
DEPARTMENT OF TRANSPORTATION

TEMPORARY WATER POLLUTION CONTROL DETAILS (TEMPORARY DRAINAGE INLET PROTECTION)

NO SCALE

NSP T63 DATED AUGUST 15, 2008 SUPPLEMENTS THE STANDARD PLANS BOOK DATED MAY 2006.

NEW STANDARD PLAN NSP T63

2006 NEW STANDARD PLAN NSP T63

7-11-08

DIST	COUNTY	ROUTE	POST MILES TOTAL PROJECT	SHEET NO.	TOTAL SHEETS
07	LA, Ven	126	0.0/5.8 13.1/20.0,22.0/34.6	31	34

LICENSED LANDSCAPE ARCHITECT

August 15, 2008
PLANS APPROVAL DATE

The State of California or its officers or agents shall not be responsible for the accuracy or completeness of electronic copies of this plan sheet.

LICENSED LANDSCAPE ARCHITECT Robert B. Schott 3635 Signature 11-04-08 Renewal Date 08-11-08 Date STATE OF CALIFORNIA

To accompany plans dated 12-27-10

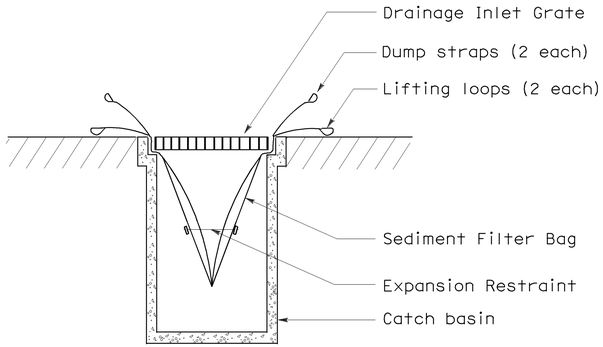

SECTION B-B

SEDIMENT FILTER BAG DETAIL

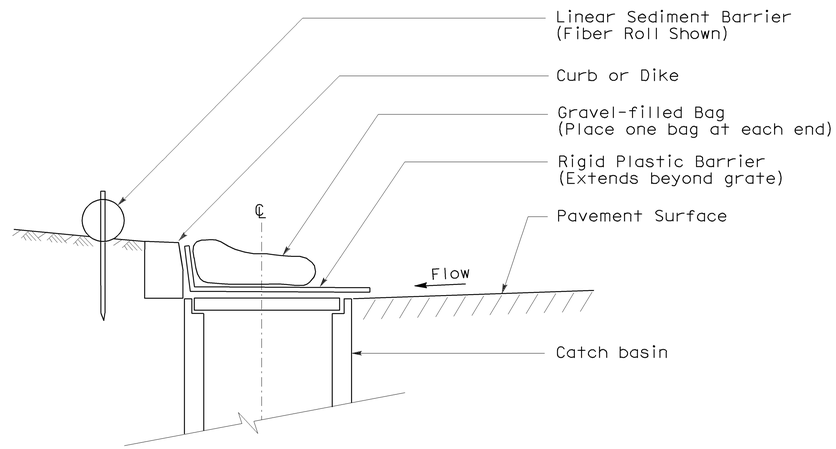

SECTION

TEMPORARY DRAINAGE INLET PROTECTION (TYPE 6A) (CATCH BASIN WITH GRATE)

NOTES:

1. See Standard Plan T51 for Temporary Silt Fence.
2. Dimensions may vary to fit field conditions.

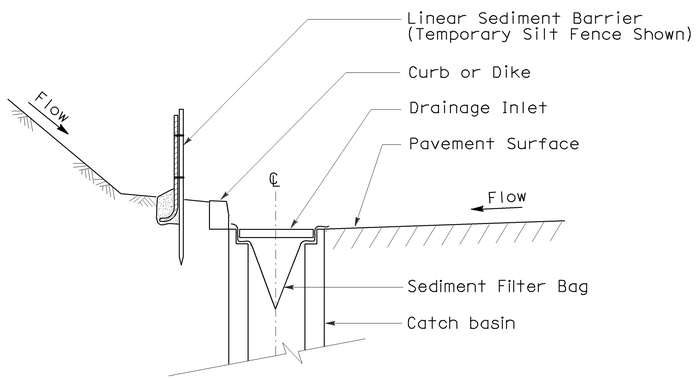

SECTION A-A

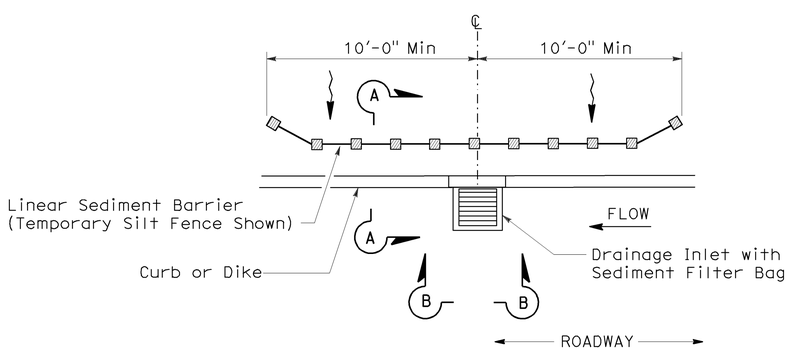

PLAN

TEMPORARY DRAINAGE INLET PROTECTION (TYPE 5) (SEDIMENT FILTER BAG)

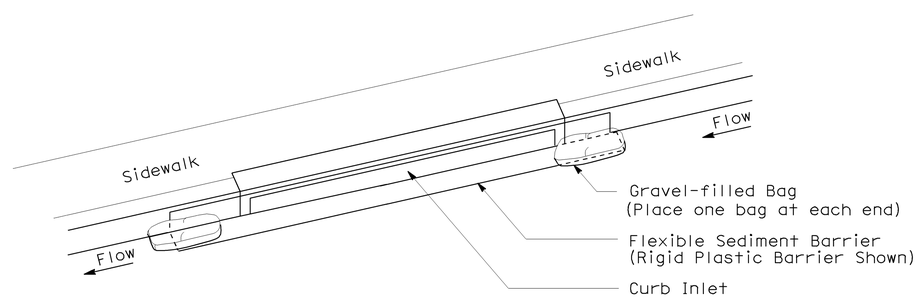

PERSPECTIVE

TEMPORARY DRAINAGE INLET PROTECTION (TYPE 6B) (CURB INLET WITHOUT GRATE)

STATE OF CALIFORNIA
DEPARTMENT OF TRANSPORTATION

TEMPORARY WATER POLLUTION CONTROL DETAILS (TEMPORARY DRAINAGE INLET PROTECTION)

NO SCALE

NSP T64 DATED AUGUST 15, 2008 SUPPLEMENTS THE STANDARD PLANS BOOK DATED MAY 2006.

NEW STANDARD PLAN NSP T64

2006 NEW STANDARD PLAN NSP T64

7-11-08

DIST	COUNTY	ROUTE	POST MILES TOTAL PROJECT	SHEET NO.	TOTAL SHEETS
07	LA, Ven	126	0.0/5.8 13.1/20.0,22.0/34.6	32	34

REGISTERED ELECTRICAL ENGINEER

October 5, 2007
PLANS APPROVAL DATE

REGISTERED PROFESSIONAL ENGINEER Jeffery G. McRae No. E14512 Exp. 6-30-08 ELECTRICAL STATE OF CALIFORNIA

The State of California or its officers or agents shall not be responsible for the accuracy or completeness of electronic copies of this plan sheet.

To accompany plans dated 12-27-10

ELECTROLIERS

STANDARD TYPES
15, 15D
15 STRUCTURE
21, 21D STRUCTURE
30
31
32
35
36-20A

High mast light pole

Double Arm lighting standard

Existing electrolier

Electrolier foundation (Future installation)

NOTES:

1. Luminaires shall be 310 W HPS when installed on Type 21, 21D, 30, 31, 32, 35 and 36-20A Standards, unless otherwise specified. Luminaires shall be 200 W HPS when installed on other type standards or poles, unless otherwise specified.
2. Luminaires shall be the cutoff type, ANSI Type III medium cutoff lighting distribution, unless otherwise specified.
3. Variations noted adjacent to symbol on project plans.

Electrolier (see project notes or project plans)

Luminaire on wood pole

STANDARD NOTES:

- AB — Abandon. If applied to conduit, remove conductors.
- BC — Install pull box in existing conduit run.
- BP — Pedestrian barricade, type as indicated on plan.
- CB — Install conduit into existing pull box.
- CC — Connect new and existing conduit. Remove existing conductors and install conductors as indicated.
- CF — Conduit to remain for future use. Remove conductors. Install pull wire or rope.
- DH — Detector handhole.
- FA — Foundation to be abandoned.
- IS — Install sign on signal mast arm.
- NS — No slip base on standard.
- PEC — Photoelectric control.
- PEU — Photoelectric unit.
- RC — Equipment or material to be removed and become the property of the Contractor.
- RE — Remove electrolier, fuses and ballast. Tape ends of conductors.
- RL — Relocate equipment.
- RR — Remove and reuse equipment.
- RS — Remove and salvage equipment.
- SC — Splice new to existing conductors.
- SD — Service disconnect.
- SF — Standard to remain for future use. Remove luminaire, pole conductors, fuses and ballast.
- TSP — Telephone service point.

ABBREVIATIONS AND EQUIPMENT DESIGNATIONS

PROPOSED	EXISTING	
BBS	bbs	Battery backup system
BC	bc	Bolt circle
C	C	Conduit
CCTV	cctv	Closed circuit television
CKT	ckt	Circuit
CMS	cms	Changeable message sign
DLC	dlc	Loop detector lead-in cable
EMS	ems	Extinguishable message sign
EVC	evc	Emergency vehicle cable
EVD	evd	Emergency vehicle detector
FB	fb	Flashing beacon
FBCA	fbca	Flashing beacon control assembly
FBS	fbs	Flashing beacon with slip base
FO	fo	Fiber optic
G	G	Ground (Equipment Grounding Conductor)
GFCI	GFCI	Ground fault circuit interrupt
HAR	har	Highway advisory radio
HEX	hex	Hexagonal
HPS	hps	High pressure sodium
IISNS	iisns	Internally illuminated street name sign
ISL	isl	Induction sign lighting
LED	led	Light emitting diode
LMA	lma	Luminaire mast arm
LPS	lps	Low pressure sodium
LTG	ltg	Lighting
LUM	lum	Luminaire
MAT	mat	Mast arm mounting vehicle signal faces, top attachment
MAS	mas	Mast arm mounting vehicle signal faces, side attachment
MAS-4A	mas-4A	Mast arm mounting vehicle signal faces, side attachment - 4 signal section
MAS-4B	mas-4B	
MAS-4C	mas-4C	
MAS-5A	mas-5A	Mast arm mounting vehicle signal faces, side attachment - 5 signal section
MAS-5B	mas-5B	
MC	mc	Mercury contactor
M/M	m/m	Multiple to multiple transformer
MT	mt	Conduit with pull wire or rope only
MTG	mtg	Mounting
	mv	Mercury vapor lighting fixture
N	N	Neutral (Grounded Conductor)
NC	NC	Normally closed
NO	NO	Normally open
PB	pb	Pull box
PEC	pec	Photoelectric control (Type I, II, III, IV or V as shown)
PED	ped	Pedestrian
PEU	peu	Photoelectric unit
PPB	ppb	Pedestrian push button
RL		Relocated equipment
RM	rm	Ramp metering
SB	sb	Slip base
SIC	sic	Signal interconnect cable
SIG	sig	Signal
SMA	sma	Signal mast arm
SNS	sns	Street name sign
SP	sp	Service point
TDC	tdc	Telephone demarcation cabinet
TMS	tms	Traffic monitoring station
TOS	tos	Traffic Operations System
VEH	veh	Vehicle
XFMR	xfmr	Transformer
COMM	comm	Communication
RWIS	rwis	Roadway weather information system

SOFFIT AND WALL MOUNTED LUMINAIRES

Pendant, 70 W HPS unless otherwise specified.

Flush, 70 W HPS unless otherwise specified.

Wall surface, 70 W HPS unless otherwise specified.

Existing soffit or wall luminaire to remain unmodified.

Existing soffit or wall luminaire to be modified as specified.

NOTE:

Arrow indicates "street side" of luminaire.

STATE OF CALIFORNIA
DEPARTMENT OF TRANSPORTATION

ELECTRICAL SYSTEMS (SYMBOLS AND ABBREVIATIONS)

NO SCALE

RSP ES-1A DATED OCTOBER 5, 2007 SUPERSEDES STANDARD PLAN ES-1A DATED MAY 1, 2006 - PAGE 400 OF THE STANDARD PLANS BOOK DATED MAY 2006.

REVISED STANDARD PLAN RSP ES-1A

2006 REVISED STANDARD PLAN RSP ES-1A

DIST	COUNTY	ROUTE	POST MILES TOTAL PROJECT	SHEET NO.	TOTAL SHEETS
07	LA, Ven	126	0.0/5.8 13.1/20.0,22.0/34.6	33	34

Jeffery G. McRae
REGISTERED ELECTRICAL ENGINEER

October 5, 2007
PLANS APPROVAL DATE

REGISTERED PROFESSIONAL ENGINEER Jeffery G. McRae No. E14512 Exp. 6-30-08 ELECTRICAL STATE OF CALIFORNIA

The State of California or its officers or agents shall not be responsible for the accuracy or completeness of electronic copies of this plan sheet.

To accompany plans dated 12-27-10

2006 REVISED STANDARD PLAN RSP ES-1B

CONDUIT

PROPOSED	EXISTING	
		Lighting Conduit, unless otherwise indicated or noted
		Traffic signal conduit
C	c	Communication conduit
T	t	Telephone conduit
F	f	Fire alarm conduit
FO	fo	Fiber optic conduit
		Conduit termination (RSP ES-9A C)
R	r	Conduit riser in/on structure or service pole

SERVICE EQUIPMENT

PROPOSED	EXISTING	
OH	oh	Overhead lines
U	U	Wood pole "U" indicates utility owned
		Pole guy with anchor
		Utility transformer - ground mounted
III		Service equipment enclosure type
		Service equipment enclosure door indicates front of enclosure
T	t	Telephone demarcation cabinet

POLE-MOUNTED SERVICE DESIGNATION

Type of installation

TYPE H SERVICE - 28'-10" ← Pole height above grade

ILLUMINATED OVERHEAD SIGN

PROPOSED	EXISTING	
		Overhead sign - Single post
		Overhead sign - Two post
		Overhead sign - Mounted on structure
		Overhead sign with electrolier

SIGNAL EQUIPMENT

PROPOSED	EXISTING	
		Pedestrian signal face
		Pedestrian push button post
		Pedestrian barricade
		Vehicle signal face (with backplate, 3-Section: red, yellow and green)
		Vehicle signal face with angle visors
PV	PV	Modifications of basic symbols: "L" indicates all non-arrow sections louvered "LG" indicates louvered green section only "PV" indicates 12" programmed visibility sections "8" indicates all 8" sections (only when specified)
		Type 15TS and Vehicle signal face
		Vehicle signal face with red, yellow and green left arrow sections
		Vehicle signal face with red and yellow sections and up green arrow
		Vehicle signal face (5 Section) with red, yellow and green sections and yellow and green right arrows
		Type 1 Standard and attached vehicle signal faces
		Standard with signal mast arm only and attached vehicle signal faces and internally illuminated street name sign
		Type 33 Standard, Left-turn vehicle signal face and sign
		Standard with luminaire and signal mast arms and attached vehicle signal faces
		Cantilever flashing beacon Type 9 Frame, with a sign unless otherwise specified or indicated
		Type 15-FBS Standard with two vehicle signal face sections with lens, backplate and visor with a sign
R	Y	Flashing beacon. One vehicle signal face section with lens, backplate and visor. "R" indicates red indication, "Y" indicates yellow indication
		Controller assembly. Door indicates front of cabinet

SIGNAL EQUIPMENT Cont

PROPOSED	EXISTING	
		Guard post
		Type 1 Standard with "Meter On" sign
		Emergency Vehicle detector

NOTES:

1. All signal sections shall be 12" unless shown otherwise.
2. Signal heads shall be provided with backplates unless shown otherwise.
3. Signal indication shall be LED.

STATE OF CALIFORNIA
DEPARTMENT OF TRANSPORTATION

ELECTRICAL SYSTEMS (SYMBOLS AND ABBREVIATIONS)

NO SCALE

RSP ES-1B DATED OCTOBER 5, 2007 SUPERCEDES STANDARD PLAN ES-1B DATED MAY 1, 2006 - PAGE 401 OF THE STANDARD PLANS BOOK DATED MAY 2006.

REVISED STANDARD PLAN RSP ES-1B

DIST	COUNTY	ROUTE	POST MILES TOTAL PROJECT	SHEET NO.	TOTAL SHEETS
07	LA, Ven	126	0.0/5.8 13.1/20.0,22.0/34.6	34	34

Jeffery G. McRae
REGISTERED ELECTRICAL ENGINEER

October 5, 2007
PLANS APPROVAL DATE

REGISTERED PROFESSIONAL ENGINEER Jeffery G. McRae No. E14512 Exp. 6-30-08 ELECTRICAL STATE OF CALIFORNIA

The State of California or its officers or agents shall not be responsible for the accuracy or completeness of electronic copies of this plan sheet.

To accompany plans dated 12-27-10

EQUIPMENT IDENTIFICATION

ILLUMINATED SIGN IDENTIFICATION NUMBER:

Sign No. 12345 — Sign number - Place on post or structure

10 ISL SCI 1.0

- 1.0 — Transformer rating (kVA)
- SCI — Lighting control type
- ISL — Number and type of fixtures

Do NOT place on standard or structure

ELECTROLIER OR EQUIPMENT IDENTIFICATION NUMBER:

12345 - 15'-0"

- 15'-0" — Mast arm length, if shown. Do not place on standard or structure.
- 12345 — Equipment number - Place on standard or structure. Existing equipment numbers are shown in parenthesis

CONDUIT AND CONDUCTOR IDENTIFICATION:

1½"C, 2#10, 15#14, 2 DLC

- 2#10, 15#14, 2 DLC — Number and size of conductors and cables
- 1½"C — Size of conduit in inches

Ø1, Ø2, Ø2P, etc.	Traffic phase identification for signal faces, detectors and phase diagrams
1 2 3	Project note numbers
A B C	Equipment description, installation or item numbers
1 2 3	Conduit run numbers

SIGNAL AND LIGHTING STANDARD (TYPICAL DESIGNATION):

19A - 3 - 100

- 100 — Wind velocity = 100 mph
- 3 — Case 3 arm loading
- 19A — Standard type
- Standard Plan sheet number
- Detail number or letter

MISCELLANEOUS EQUIPMENT

PROPOSED	EXISTING	
CMS	cms	Changeable message sign
		Closed circuit television camera
		Highway advisory radio pole and antenna
EMS	ems	Extinguishable message sign
M V	m v	Detection device M = Microwave sensor V = Video image sensor

WIRING DIAGRAM LEGEND

P	Pole
CB	Circuit breaker
A	Ampere
V	Volt
M	Metered
UM	Unmetered
NB	Neutral bus
GB	Ground bus
G	Equipment grounding conductor
N	Grounded conductor (Neutral)

- External conductor
- Conductor or bus
- Tie point
- Contactor coil
- Contactor, Contact NO
- Terminal blocks
- Contactor, Contact NC
- Enclosure bond
- Grounding electrode
- Circuit breaker
- Receptacle

PULL BOXES

PROPOSED EXISTING

Pull box-No. 5 unless otherwise indicated or noted.

3 — 9A(21)

Pull box-Additional designations or descriptions

- 3 = No. 3½ pull box
- 5 = No. 5 pull box
- 6 = No. 6 pull box
- 7 = No. 7 (Ceiling pull box)
- 8 = No. 8 (Pendant soffit pull box)
- 9 = No. 9 pull box
- 9A = No. 9A pull box

- (C) = Communications pull box
- (E) = Pull box with extension
- (S) = Sprinkler control pull box
- (21) = Anchor bolts and conduit for future installation of Type 21 Standard
- (T) = Traffic pull box

VEHICLE DETECTORS

5 J 9 U

- U = Upper
- L = Lower
- Slot number in input file
- Input file (I or J)
- Phase

PROPOSED	EXISTING	
		Type A detector loop. Outline of sawcut shown.
		Type B detector loop. Outline of sawcut shown.
		Type C detector loop. Outline of sawcut shown.
		Type D detector loop. Outline of sawcut shown.
		Type E detector loop. Outline of sawcut shown.
		Type Q detector loop. Outline of sawcut shown.
		Magnetic detector
DH	dh	Detector handhole
		Microwave or video detection zone

STATE OF CALIFORNIA
DEPARTMENT OF TRANSPORTATION

ELECTRICAL SYSTEMS (SYMBOLS AND ABBREVIATIONS)

NO SCALE

RSP ES-1C DATED OCTOBER 5, 2007 SUPERCEDES STANDARD PLAN ES-1C DATED MAY 1, 2006 - PAGE 402 OF THE STANDARD PLANS BOOK DATED MAY 2006.

REVISED STANDARD PLAN RSP ES-1C

2006 REVISED STANDARD PLAN RSP ES-1C