Dist	COUNTY	ROUTE	POST MILES TOTAL PROJECT	SHEET No.	TOTAL SHEETS
07	LA	Var	Var	1	25

INDEX OF PLANS

SHEET No.	DESCRIPTION
1	TITLE AND LOCATION MAP
2	CONSTRUCTION DETAILS
3	CONSTRUCTION AREA SIGNS
4-8	TRAFFIC HANDLING PLANS
9-10	SUMMARY OF QUANTITIES
11	PLANT LIST AND IRRIGATION SCHEDULE
12-17	PLANTING AND IRRIGATION PLAN
18-25	REVISED STANDARD PLANS

THE STANDARD PLANS LIST APPLICABLE TO THIS CONTRACT IS INCLUDED IN THE NOTICE TO BIDDERS AND SPECIAL PROVISIONS BOOK.

STATE OF CALIFORNIA

DEPARTMENT OF TRANSPORTATION

PROJECT PLANS FOR CONSTRUCTION ON

STATE HIGHWAY

IN LOS ANGELES COUNTY AT VARIOUS LOCATIONS

TO BE SUPPLEMENTED BY STANDARD PLANS DATED MAY 2006

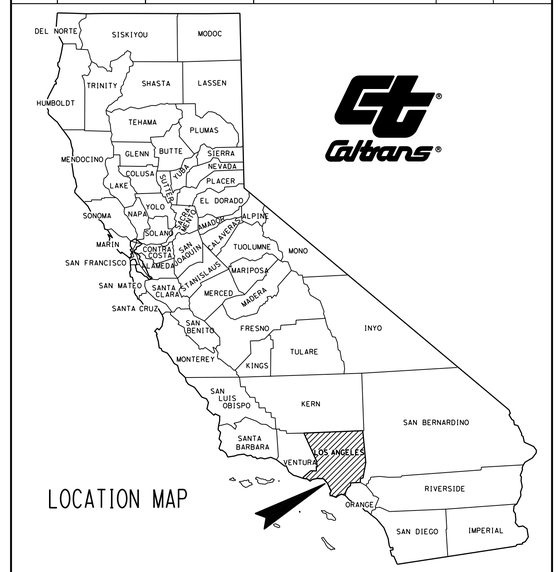

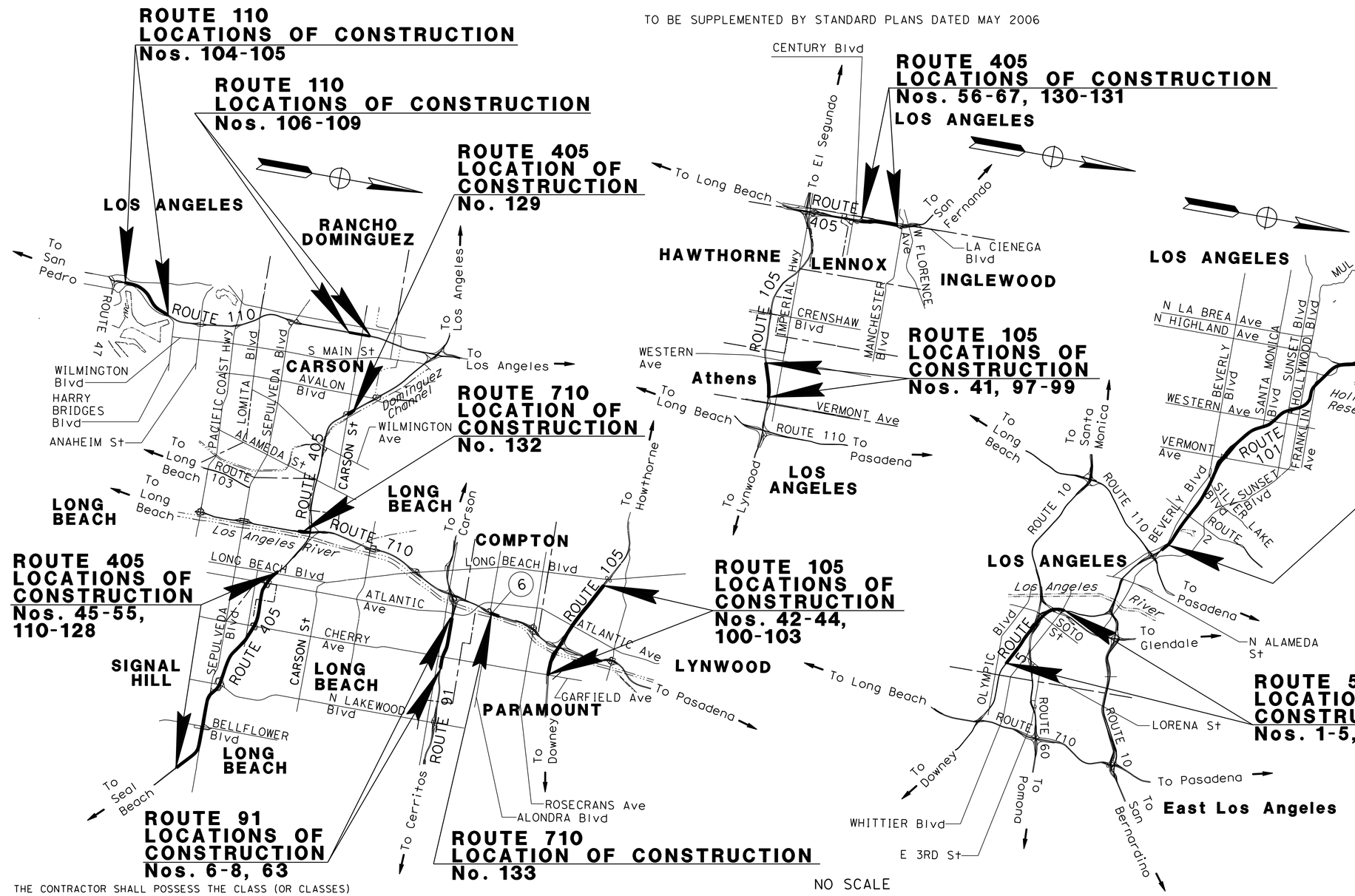

THE CONTRACTOR SHALL POSSESS THE CLASS (OR CLASSES) OF LICENSE AS SPECIFIED IN THE "NOTICE TO BIDDERS."

LOCATIONS OF CONSTRUCTION

No.	ROUTE	PM
1-5, 58-62	5	15.3/17.2
6-8, 63	91	12.2/13.4
9-40, 64-96, 134-137	101	1.9/8.7
41, 97-99	105	5.9/6.7
42-44, 100-103	105	12.1/13.8
104-105	110	0.1/1.7
106-109	110	6.7/7.0
45-55, 110-128	405	1.1/6.6
129	405	10.7
56-57, 130-131	405	22.2/23.2
132	710	9.1
133	710	14.0

f.M. Tehrani 3-17-10
PROJECT ENGINEER DATE
REGISTERED CIVIL ENGINEER

March 29, 2010
PLANS APPROVAL DATE

REGISTERED PROFESSIONAL ENGINEER FARIBORZ M TEHRANI No. 59694 Exp. 12-31-11 CIVIL STATE OF CALIFORNIA

THE STATE OF CALIFORNIA OR ITS OFFICERS OR AGENTS SHALL NOT BE RESPONSIBLE FOR THE ACCURACY OR COMPLETENESS OF SCANNED COPIES OF THIS PLAN SHEET.

PROJECT MANAGER ERIC WANG
DESIGN ENGINEER HAMID SAADATNEJADI

LAST REVISION 00-00-00
DATE PLOTTED => $DATE
TIME PLOTTED => $TIME

CONTRACT No. **07-279404**

Dist	COUNTY	ROUTE	POST MILES TOTAL PROJECT	SHEET No.	TOTAL SHEETS
07	LA	Var	Var	2	25

F.M. Tehrani 3-17-10
REGISTERED CIVIL ENGINEER DATE

3-29-10
PLANS APPROVAL DATE

REGISTERED PROFESSIONAL ENGINEER
FARIBORZ M TEHRANI
No. 59694
Exp. 12-31-11
CIVIL
STATE OF CALIFORNIA

THE STATE OF CALIFORNIA OR ITS OFFICERS OR AGENTS SHALL NOT BE RESPONSIBLE FOR THE ACCURACY OR COMPLETENESS OF SCANNED COPIES OF THIS PLAN SHEET.

NOTES:

1. FOR ACCURATE RIGHT OF WAY AND ACCESS DATA, CONTACT RIGHT OF WAY ENGINEERING AT THE DISTRICT OFFICE.
2. EXISTING UTILITY FACILITIES HAVE NOT BEEN PLOTTED ON THESE PLANS.
3. ALL POSTS, CABLES, AND HARDWARE SHALL BE GALVANIZED.
4. POSTS SHALL BE VERTICAL.
5. THE CONTRACTOR SHALL VERIFY ALL DEPENDENT DIMENSIONS IN THE FIELD BEFORE ORDERING OR FABRICATING ANY MATERIAL.
6. FOR ADDITIONAL DETAILS, SEE STANDARD PLAN B11-47.

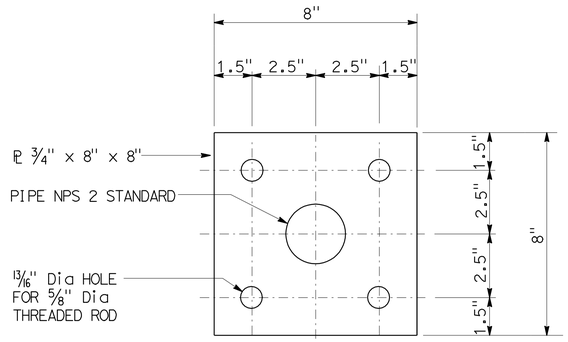

PLAN VIEW

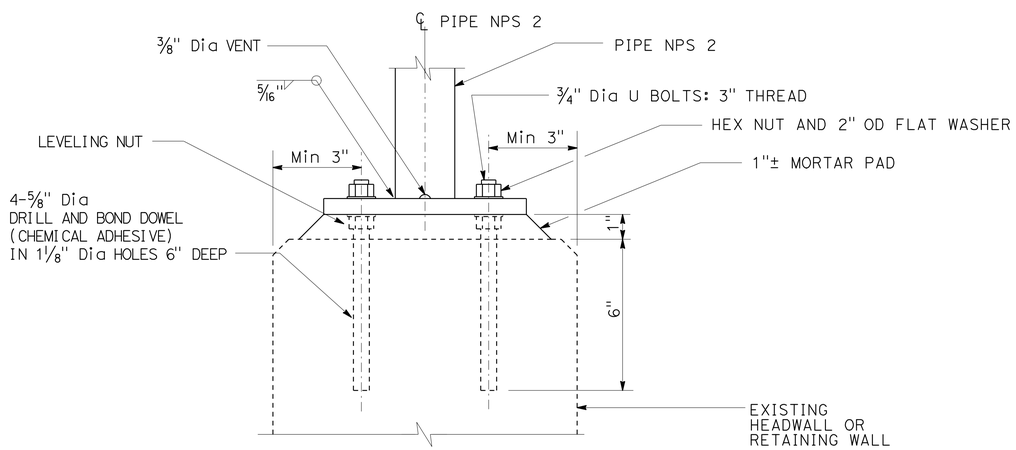

ELEVATION

POST ANCHORAGE DETAIL

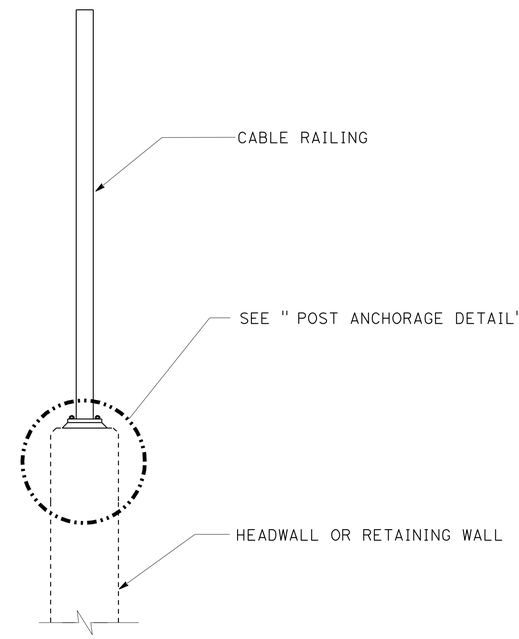

POST ANCHORAGE

(ALL LOCATIONS)

CONSTRUCTION DETAILS

NO SCALE

C-1

STATE OF CALIFORNIA - DEPARTMENT OF TRANSPORTATION
Caltrans MAINTENANCE ENGINEERING

FUNCTIONAL SUPERVISOR: HAMID SAADATNEJADI
CALCULATED-DESIGNED BY: FARIBORZ TEHRANI
CHECKED BY: HAMID SAADATNEJADI
REVISED BY
DATE REVISED

LAST REVISION 03-29-10
DATE PLOTTED => 30-MAR-2010
TIME PLOTTED => 12:31

Dist	COUNTY	ROUTE	POST MILES TOTAL PROJECT	SHEET No.	TOTAL SHEETS
07	LA	Var	Var	3	25

F.M. Tehrani 3-17-10
REGISTERED CIVIL ENGINEER DATE

3-29-10
PLANS APPROVAL DATE

REGISTERED PROFESSIONAL ENGINEER FARIBORZ M TEHRANI No. 59694 Exp. 12-31-11 CIVIL STATE OF CALIFORNIA

THE STATE OF CALIFORNIA OR ITS OFFICERS OR AGENTS SHALL NOT BE RESPONSIBLE FOR THE ACCURACY OR COMPLETENESS OF SCANNED COPIES OF THIS PLAN SHEET.

NOTES:

1. LOCATIONS OF CONSTRUCTION AREA SIGNS SHOWN ARE APPROXIMATE. EXACT SIGN LOCATIONS SHALL BE DETERMINED BY THE ENGINEER.
2. "TRAFFIC FINES DOUBLED IN CONSTRUCTION ZONES" SIGN SHALL BE PLACED APPROXIMATELY 500 FEET IN ADVANCE OF "ROAD WORK AHEAD" SIGN OR AS DETERMINED BY THE ENGINEER.

STATIONARY MOUNTED CONSTRUCTION AREA SIGNS

SIGN NUMBER	SIGN CODE	PANEL SIZE (inch x inch)	SIGN MESSAGE	NUMBER OF POSTS AND SIZE	NUMBER OF SIGNS
A	C40(CA)	144 x 60	TRAFFIC FINES DOUBLED IN CONSTRUCTION ZONES	2-6" x 8"	27
B	W20-1	60 x 60	ROAD WORK AHEAD	2-4" x 6"	54
C	G20-2	48 x 24	END ROAD WORK	1-4" x 6"	44

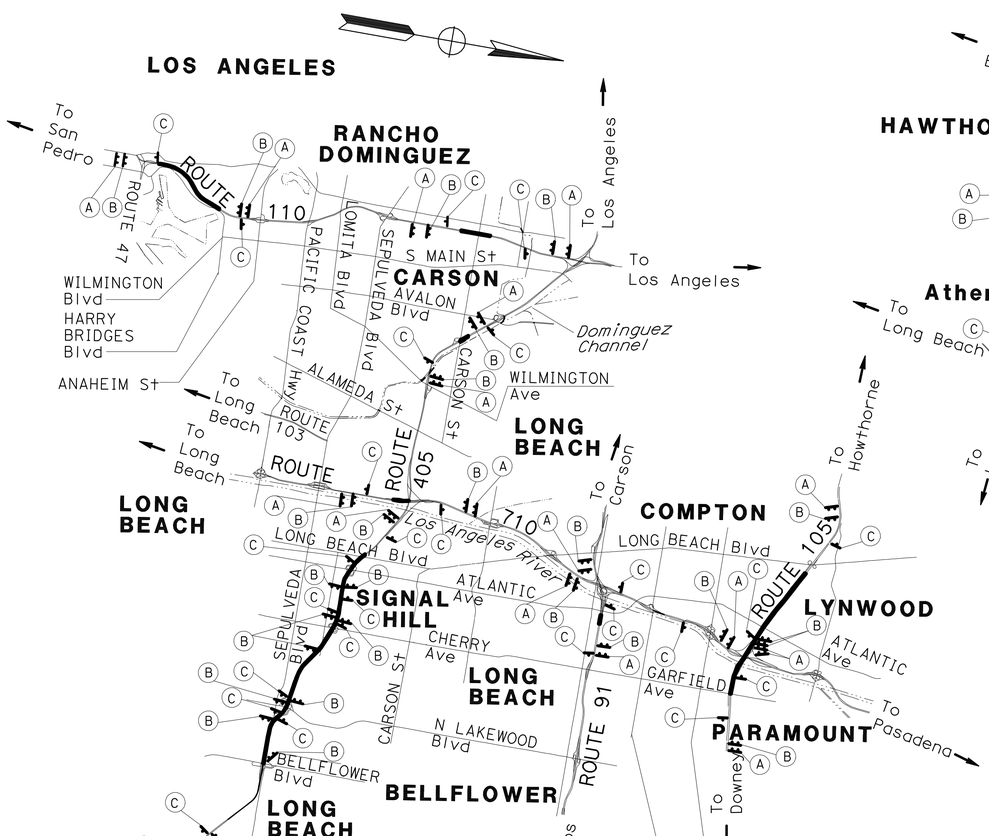

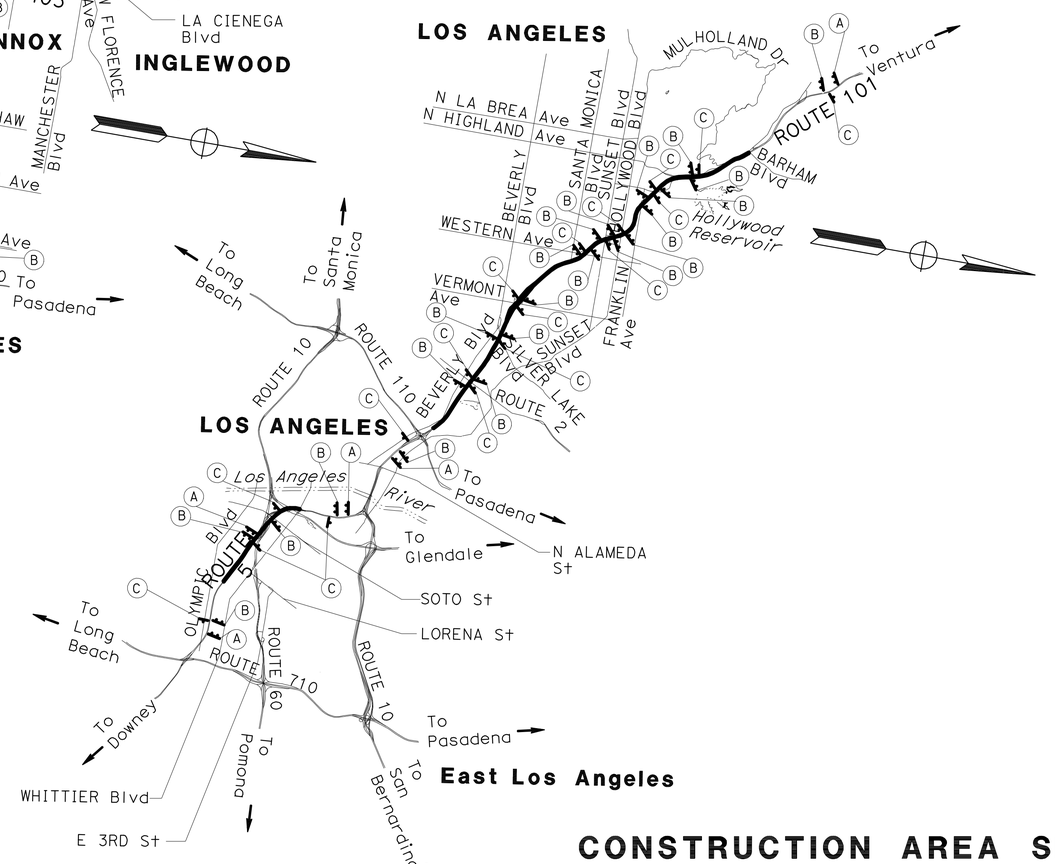

CONSTRUCTION AREA SIGNS

NO SCALE

CS-1

THIS PLAN ACCURATE FOR CONSTRUCTION AREA SIGN WORK ONLY.

STATE OF CALIFORNIA - DEPARTMENT OF TRANSPORTATION
Caltrans MAINTENANCE ENGINEERING

FUNCTIONAL SUPERVISOR: HAMID SAADATNEJADI
CALCULATED-DESIGNED BY: FARIBORZ TEHRANI
CHECKED BY: HAMID SAADATNEJADI
REVISED BY
DATE REVISED

LAST REVISION DATE PLOTTED => 30-MAR-2010
TIME PLOTTED => 12:31
03-29-10

Dist	COUNTY	ROUTE	POST MILES TOTAL PROJECT	SHEET No.	TOTAL SHEETS
07	LA	Var	Var	4	25

Denis Katayama 1-5-10
REGISTERED CIVIL ENGINEER DATE

3-29-10
PLANS APPROVAL DATE

REGISTERED PROFESSIONAL ENGINEER D.S. KATAYAMA No. C50648 Exp. 9-30-11 CIVIL STATE OF CALIFORNIA

THE STATE OF CALIFORNIA OR ITS OFFICERS OR AGENTS SHALL NOT BE RESPONSIBLE FOR THE ACCURACY OR COMPLETENESS OF SCANNED COPIES OF THIS PLAN SHEET.

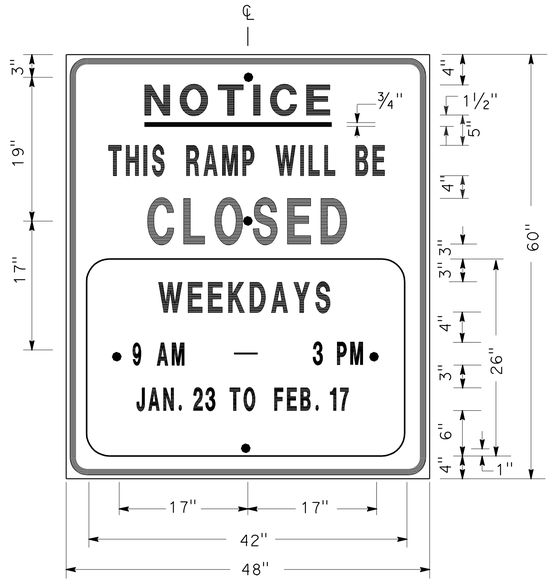

SIGN SP-1

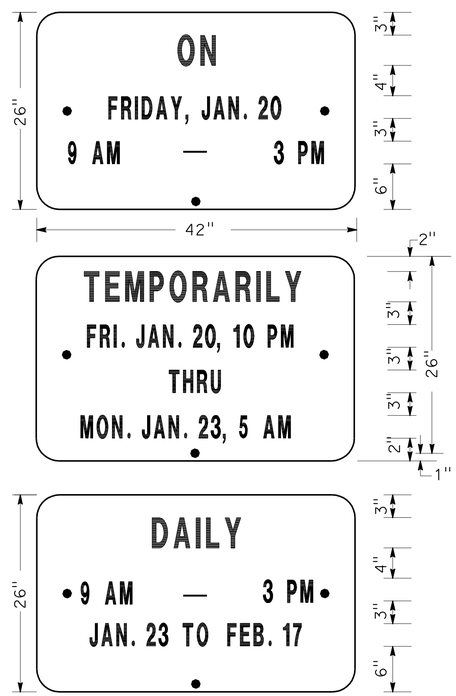

ALTERNATE OVERLAY PANELS (TYPICAL)

SPECIAL ADVANCE NOTICE PUBLICITY SIGN

NOTES: (SIGN SP-1)

1. SIGNS SHALL HAVE ORANGE RETROREFLECTORIZED BACKGROUND WITH BLACK BORDER AND LETTERS.
2. BOLT HOLES SHALL BE 3/8" DIAMETER.
3. BASE MATERIAL SHALL BE ALUMINUM (MINIMUM 0.06").
4. SIGNS SHALL BE MOUNTED WITH BOTTOMS OF SIGNS A MINIMUM OF 6' ABOVE GROUND.

SIZE	BORDER WIDTH	MARGIN WIDTH	LETTER SIZE					CORNER RADIUS
			LINE 1	LINE 2*	LINE 3	LINE 4	LINE 5,6 & 7*	
48"×60"	1 1/4"	3/4"	4E	4D	6E	4D		3"
42"×26"	OVERLAY						3D	1 1/2"
* CONDENSED SPACING IF NECESSARY								

SIGN SP-4

NOTES: (SIGN SP-4)

1. LETTERS - 6" SERIES C.
2. LETTERS AND BORDERS - BLACK ON RETROREFLECTORIZED WHITE BACKGROUND.
3. BASE MATERIAL SHALL BE ALUMINUM (MINIMUM 0.06").
4. SIGNS SHALL BE PLACED AT RAMP ENTRANCES IN ADDITION TO SIGNS POSTED IN ACCORDANCE WITH STANDARD PLAN T14.

SPECIAL SIGN FOR ENTRANCE RAMP CLOSURES

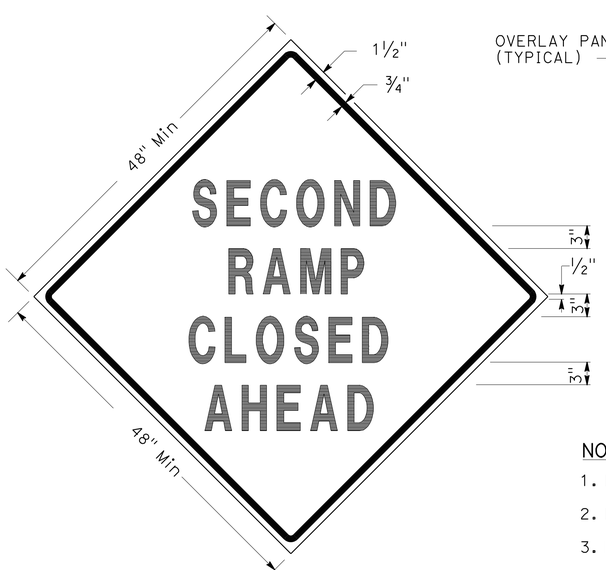

SIGN SP-3

SIGN SP-5

NOTES: (SIGNS SP-3 & SP-5)

1. LETTERS - 6" SERIES D.
2. LETTERS AND BORDERS - BLACK ON RETROREFLECTORIZED ORANGE BACKGROUND.
3. BASE MATERIAL SHALL BE ALUMINUM (MINIMUM 0.06").
4. SIGNS SHALL BE MOUNTED WITH BOTTOMS OF SIGNS A MINIMUM OF 6' ABOVE GROUND.

SPECIAL SIGN FOR EXIT RAMP CLOSURES

TRAFFIC HANDLING DETAILS
TRAFFIC CONTROL SYSTEM FOR RAMP CLOSURES, DETOUR SIGNS AND MISCELLANEOUS DETAILS
SHEET 1 OF 2
NO SCALE

THD-1

JC	JC	JC
9/08	8/08	7/08

REVISED BY / DATE REVISED

ALBERT K YU / JOCELYN C CHIANG

CALCULATED-DESIGNED BY / CHECKED BY

FUNCTIONAL SUPERVISOR: JOHN YANG

STATE OF CALIFORNIA - DEPARTMENT OF TRANSPORTATION
Caltrans
DTM

LAST REVISION 03-29-10 | DATE PLOTTED => 30-MAR-2010 | TIME PLOTTED => 12:31

Dist	COUNTY	ROUTE	POST MILES TOTAL PROJECT	SHEET No.	TOTAL SHEETS
07	LA	Var	Var	5	25

Denis Katayama 1-5-10
REGISTERED CIVIL ENGINEER DATE

3-29-10
PLANS APPROVAL DATE

REGISTERED PROFESSIONAL ENGINEER D.S. KATAYAMA No. C50648 Exp. 9-30-11 CIVIL STATE OF CALIFORNIA

THE STATE OF CALIFORNIA OR ITS OFFICERS OR AGENTS SHALL NOT BE RESPONSIBLE FOR THE ACCURACY OR COMPLETENESS OF SCANNED COPIES OF THIS PLAN SHEET.

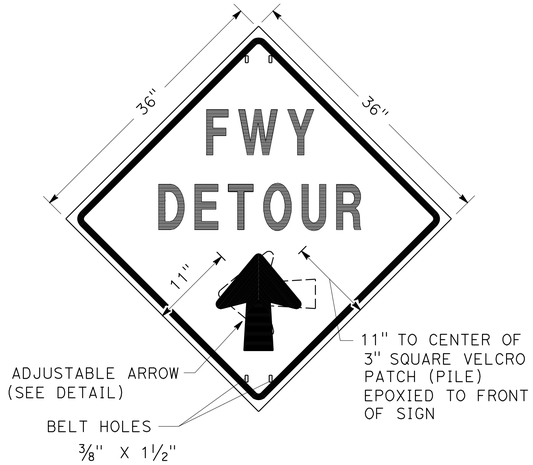

SIGN SP-2

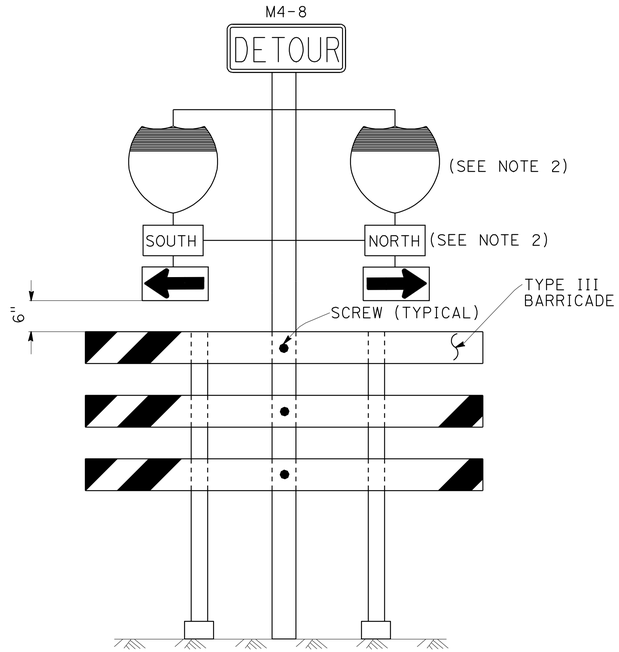

SIGN SP-6 (SEE NOTE 1)

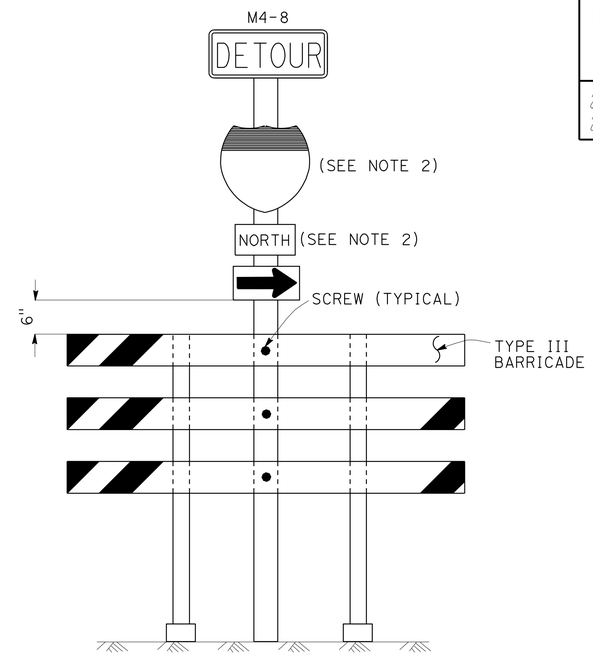

SIGN SP-7 (SEE NOTE 1)

NOTES: (SIGN SP-2)

1. LETTERS -6" SERIES E.
2. LETTERS, BORDER AND ARROW - BLACK ON RETROREFLECTORIZED ORANGE BACKGROUND.
3. BASE MATERIAL FOR SIGNS AND ARROWS SHALL BE ALUMINUM (MINIMUM 0.06").
4. BELTS (LUGGAGE STRAPS) SHALL BE 1" WIDE BY 48" LONG, MADE OF COTTON OR POLYPROPYLENE WEB MATERIAL.
5. SIGNS SHALL BE MOUNTED WITH BOTTOMS OF SIGNS A MINIMUM OF 6' ABOVE GROUND EXCEPT AS OTHERWISE SHOWN ON OTHER TRAFFIC HANDLING DETAILS PLANS.

ABBREVIATION

(CA) CALIFORNIA CODE

NOTES: (SIGNS SP-6 & SP-7)

1. IN LIEU OF PLACING SIGNS ON TYPE III BARRICADES, SIGNS, INCLUDING POSTS, MAY BE PLACED INTO THE GROUND OR FASTENED ONTO ELECTROLIERS.
2. USE APPROPRIATE ROUTE SHIELD [G26-2(CA), G27-2(CA), G28-2(CA)] AND CARDINAL DIRECTION [NORTH (M3-1), SOUTH (M3-3), EAST (M3-2), WEST (M3-4)]

SPECIAL PORTABLE FREEWAY DETOUR SIGNS

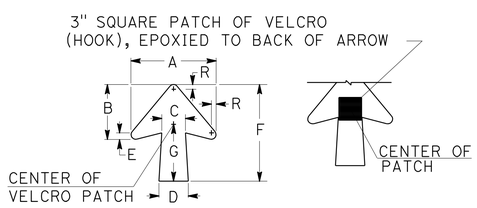

DIMENSIONS							
A	B	C	D	E	F	G	R
11 1/4"	7 1/4"	3 1/8"	4"	7/8"	13"	7 1/2"	5/8"

SPECIAL PORTABLE FREEWAY DETOUR SIGN

ADJUSTABLE ARROW DETAIL

TRAFFIC HANDLING DETAILS

TRAFFIC CONTROL SYSTEM FOR RAMP CLOSURES, DETOUR SIGNS AND MISCELLANEOUS DETAILS

SHEET 2 OF 2

NO SCALE

THD-2

JC	9/08
JC	7/08
REVISED BY	DATE REVISED
ALBERT K YU	JOCELYN C CHIANG
CALCULATED-DESIGNED BY	CHECKED BY
FUNCTIONAL SUPERVISOR	JOHN YANG

STATE OF CALIFORNIA - DEPARTMENT OF TRANSPORTATION
Caltrans DTM

LAST REVISION 03-29-10 | DATE PLOTTED => 30-MAR-2010 | TIME PLOTTED => 12:31

Dist	COUNTY	ROUTE	POST MILES TOTAL PROJECT	SHEET No.	TOTAL SHEETS
07	LA	Var	Var	6	25

REGISTERED CIVIL ENGINEER 1-5-10 DATE

3-29-10
PLANS APPROVAL DATE

REGISTERED PROFESSIONAL ENGINEER D.S. KATAYAMA No. C50648 Exp. 9-30-11 CIVIL STATE OF CALIFORNIA

THE STATE OF CALIFORNIA OR ITS OFFICERS OR AGENTS SHALL NOT BE RESPONSIBLE FOR THE ACCURACY OR COMPLETENESS OF SCANNED COPIES OF THIS PLAN SHEET.

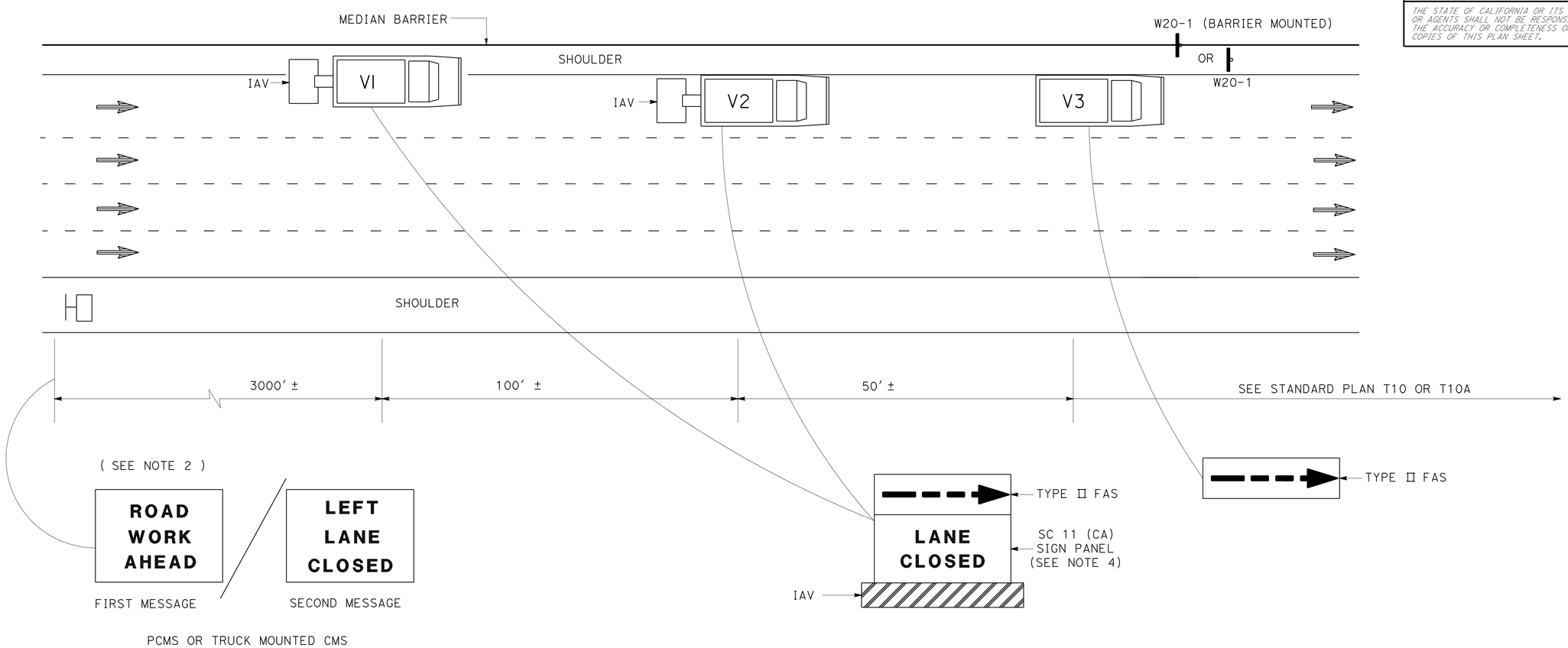

NOTES:

1. LANE CLOSURES SHALL NOT BE PLACED ON CREST VERTICAL CURVES OR ON HORIZONTAL CURVES.
2. PCMS SHALL BE ACTIVATED PRIOR TO TRAFFIC CONTROL ACTIVITIES ON THE LANE.
3. A MINIMUM SIGHT DISTANCE OF 1500′ SHALL BE PROVIDED IN ADVANCE OF PCMS.
4. VEHICLE-MOUNTED SIGN PANELS SHALL BE TYPE III OR IV RETROREFLECTORIZED SHEETING, BLACK ON WHITE OR BLACK ON ORANGE WITH 8" MINIMUM SERIES D LETTERS PER CALTRANS SIGN SPECIFICATIONS.

LEGEND

V1, V2	SHADOW VEHICLE
V3	WORK/APPLICATION VEHICLE
	PORTABLE CHANGEABLE MESSAGE SIGN (PCMS)
	DIRECTION OF TRAVEL
	CONSTRUCTION AREA SIGN

ABBREVIATIONS

FAS	FLASHING ARROW SIGN
IAV	IMPACT ATTENUATOR VEHICLE
CMS	CHANGEABLE MESSAGE SIGN
PCMS	PORTABLE CHANGEABLE MESSAGE SIGN
(CA)	CALIFORNIA CODE

TRAFFIC HANDLING DETAILS
TRAFFIC CONTROL SYSTEM
FOR MEDIAN SHOULDERS LESS THAN 8 FEET

NO SCALE

THD-3

REVISED BY	DATE REVISED
JC	9/08
JC	7/08

ALBERT K YU
JOCELYN C CHIANG
CALCULATED-DESIGNED BY
CHECKED BY
FUNCTIONAL SUPERVISOR
JOHN YANG

STATE OF CALIFORNIA - DEPARTMENT OF TRANSPORTATION
Caltrans
DTM

LAST REVISION 03-29-10
DATE PLOTTED => 30-MAR-2010
TIME PLOTTED => 12:31

Dist	COUNTY	ROUTE	POST MILES TOTAL PROJECT	SHEET No.	TOTAL SHEETS
07	LA	Var	Var	7	25

REGISTERED CIVIL ENGINEER 1-5-10 DATE

3-29-10
PLANS APPROVAL DATE

REGISTERED PROFESSIONAL ENGINEER D.S. KATAYAMA No. C50648 Exp. 9-30-11 CIVIL STATE OF CALIFORNIA

THE STATE OF CALIFORNIA OR ITS OFFICERS OR AGENTS SHALL NOT BE RESPONSIBLE FOR THE ACCURACY OR COMPLETENESS OF SCANNED COPIES OF THIS PLAN SHEET.

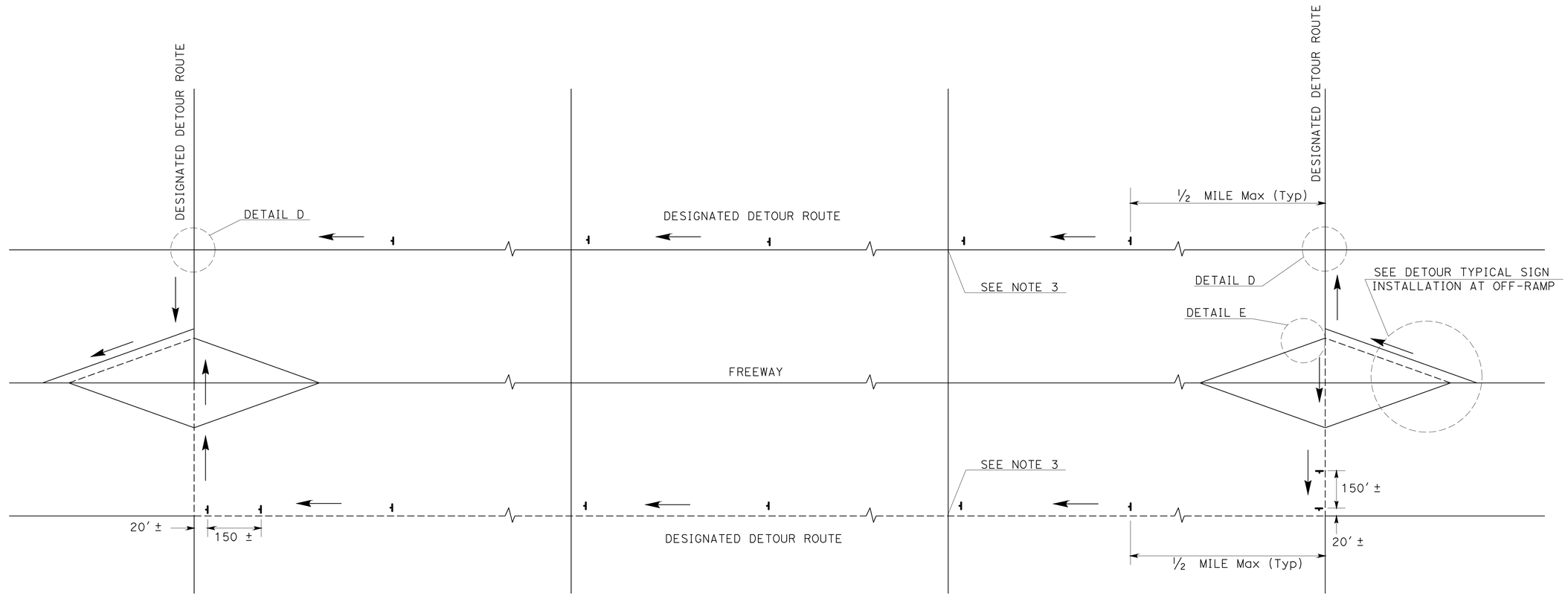

TYPICAL DETOUR SIGN INSTALLATION ALONG DESIGNATED DETOUR ROUTE

LEGEND

SIGN SP-2

AND/OR DESIGNATED DETOUR ROUTE

DIRECTION OF TRAVEL

NOTES:

1. SP-2 SIGNS SHALL NOT BE INSTALLED ON BARRICADES EXCEPT AS OTHERWISE SHOWN.
2. SIGN LOCATIONS ARE APPROXIMATE. EXACT LOCATIONS WILL BE DETERMINED BY THE ENGINEER.
3. SP-2 SIGNS SHALL BE POSTED AT SIGNALIZED INTERSECTIONS ALONG THE DESIGNATED DETOUR ROUTE OR ½ MILE MAXIMUM APART.

TRAFFIC HANDLING DETAILS

TRAFFIC CONTROL SYSTEM FOR DETOUR SIGN INSTALLATION ALONG DESIGNATED DETOUR ROUTE

SHEET 1 OF 2

NO SCALE

THD-4

STATE OF CALIFORNIA - DEPARTMENT OF TRANSPORTATION
Caltrans
DTM

FUNCTIONAL SUPERVISOR: JOHN YANG
CALCULATED-DESIGNED BY: ALBERT K YU
CHECKED BY: JOCELYN C CHIANG
REVISED BY: JC JC
DATE REVISED: 7/08 9/08

LAST REVISION 03-29-10
DATE PLOTTED => 30-MAR-2010
TIME PLOTTED => 12:31

Dist	COUNTY	ROUTE	POST MILES TOTAL PROJECT	SHEET No.	TOTAL SHEETS
07	LA	Var	Var	8	25

REGISTERED CIVIL ENGINEER 1-5-10 DATE

3-29-10
PLANS APPROVAL DATE

REGISTERED PROFESSIONAL ENGINEER D.S. KATAYAMA No. C50648 Exp. 9-30-11 CIVIL STATE OF CALIFORNIA

THE STATE OF CALIFORNIA OR ITS OFFICERS OR AGENTS SHALL NOT BE RESPONSIBLE FOR THE ACCURACY OR COMPLETENESS OF SCANNED COPIES OF THIS PLAN SHEET.

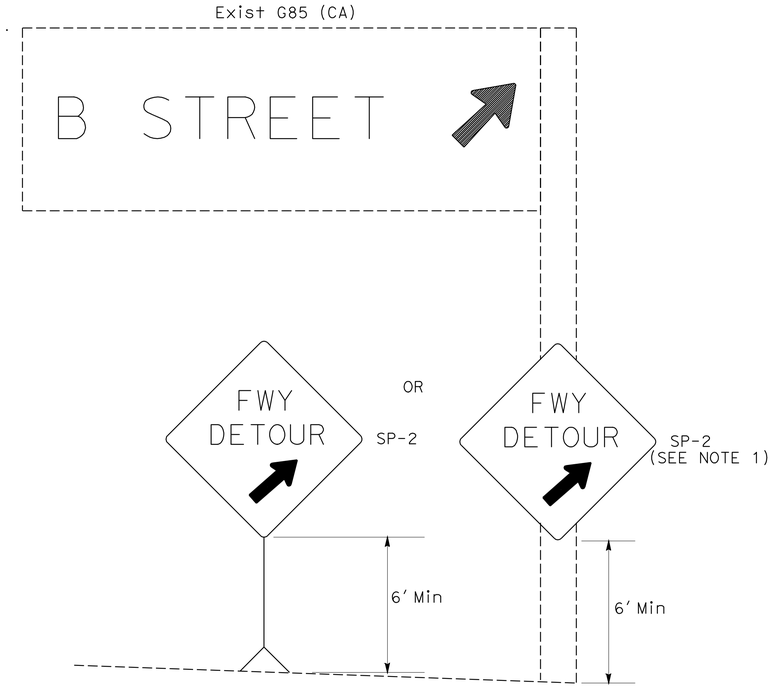

DETAIL A (SEE NOTE 2)

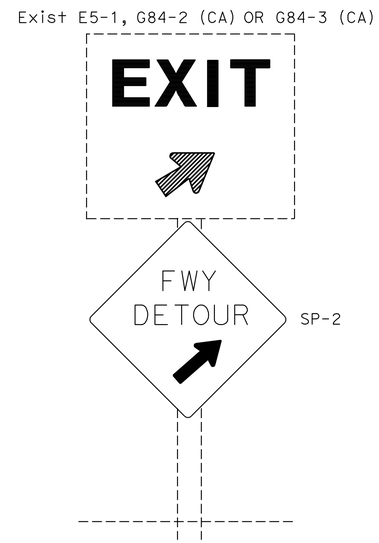

DETAIL B (SEE NOTE 2)

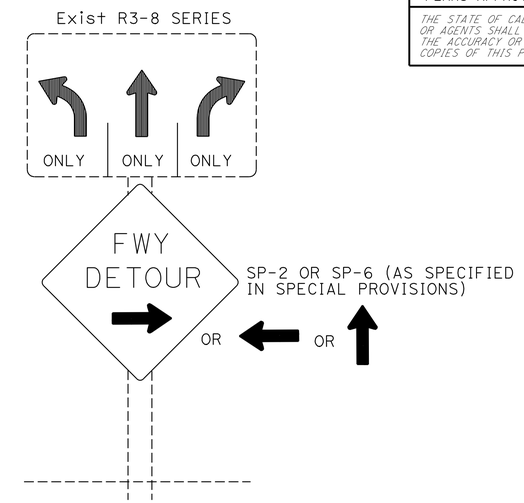

DETAIL C (SEE NOTE 3)

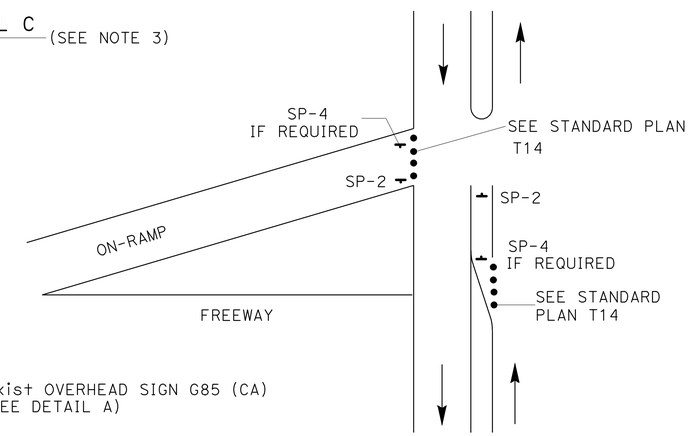

DETAIL E

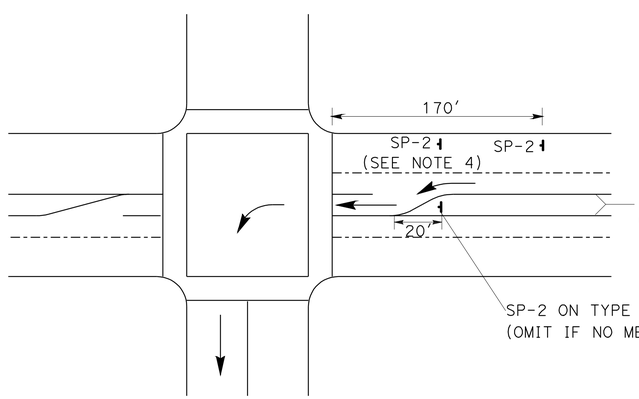

DETAIL D

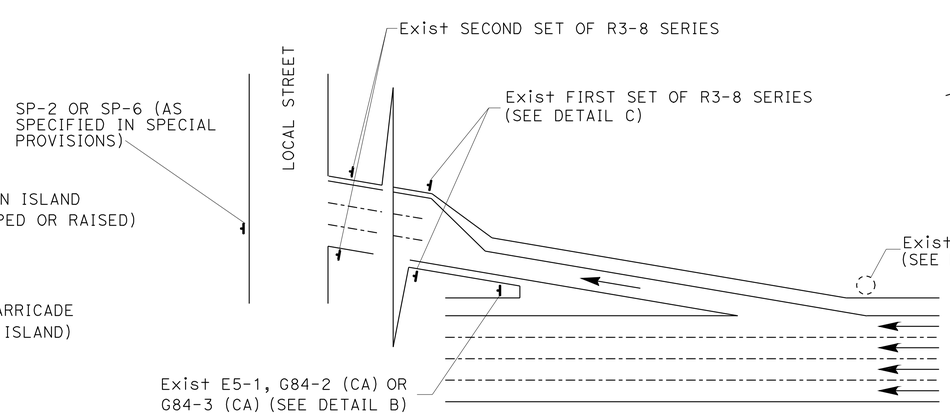

TYPICAL DETOUR SIGN INSTALLATION AT OFF-RAMP

NOTES:

1. SP-2 MAY BE STRAPPED ON EXISTING ELECTROLIER SIGNAL POSTS OR SIGN POSTS.
2. OMIT DETAIL A AND DETAIL B FOR FULL FREEWAY CLOSURES.
3. SEE TRAFFIC HANDLING DETAILS PLAN-TRAFFIC CONTROL SYSTEM FOR RAMP CLOSURES, DETOUR SIGNS AND MISCELLANEOUS DETAILS SHEET 2 OF 2 FOR SP-6.
4. OMIT IF MEDIAN ISLAND EXIST.

ABBREVIATIONS

(CA) CALIFORNIA CODE

LEGENDS

- • CONE
- PORTABLE SIGN
- → DIRECTION OF TRAVEL
- EXISTING OVERHEAD SIGN

TRAFFIC HANDLING DETAILS
TRAFFIC CONTROL SYSTEM FOR DETOUR SIGN INSTALLATION ALONG DESIGNATED DETOUR ROUTE
SHEET 2 OF 2

NO SCALE

THD-5

REVISED BY	DATE REVISED
JC	9/08
JC	7/08

ALBERT K YU
JOCELYN C CHIANG
CALCULATED-DESIGNED BY
CHECKED BY
FUNCTIONAL SUPERVISOR
JOHN YANG

STATE OF CALIFORNIA - DEPARTMENT OF TRANSPORTATION
DTM
Caltrans

LAST REVISION 03-29-10
DATE PLOTTED => 30-MAR-2010
TIME PLOTTED => 12:32

Dist	COUNTY	ROUTE	POST MILES TOTAL PROJECT	SHEET No.	TOTAL SHEETS
07	LA	Var	Var	9	25

F.M. Tehrani 3-17-10
REGISTERED CIVIL ENGINEER DATE

3-29-10
PLANS APPROVAL DATE

REGISTERED PROFESSIONAL ENGINEER FARIBORZ M TEHRANI No. 59694 Exp. 12-31-11 CIVIL STATE OF CALIFORNIA

THE STATE OF CALIFORNIA OR ITS OFFICERS OR AGENTS SHALL NOT BE RESPONSIBLE FOR THE ACCURACY OR COMPLETENESS OF SCANNED COPIES OF THIS PLAN SHEET.

CABLE RAILING QUANTITIES

No.	ROUTE	PM	DIRECTION	DESCRIPTION	INSTALL (LF)
58	5	15.5	NB	RIGHT SHOULDER TURNOUT NORTH OF ESPERANZA St	300
59	5	17.0	NB	ON RAMP FROM 7TH St AT BOYLE BRIDGE	25
60	5	17.2	NB	HOLENBECK LAKE BRIDGE AT BOYLE Ave	50
61	5	15.5	SB	RIGHT SHOULDER TURNOUT SOUTH OF LORENA St	300
62	5	16.8	SB	ON RAMP FROM 7TH St AT BOYLE BRIDGE	25
63	91	12.2	WB	OFF RAMP TO ATLANTIC Ave AT RIGHT SHOULDER AT PENFOLD St	20
64	101	1.9	NB	RIGHT SHOULDER SOUTH OF E EDGEWARE Rd OC AT BOYLSTON St	20
65	101	4.4	NB	OFF RAMP TO VERMONT Ave RIGHT SHOULDER	100
66	101	4.7	NB	OFF RAMP TO MELROSE Ave LEFT SHOULDER	140
67	101	5.4	NB	OFF RAMP TO SANTA MONICA Blvd RIGHT SHOULDER	200
68	101	5.7	NB	RIGHT SHOULDER NORTH OF SANTA MONICA Blvd OC AT NORTH AND SOUTH OF EXISTING RAILING	30
69	101	5.7	NB	BUS RAMP TO SANTA MONICA Blvd RIGHT SHOULDER NORTH AND SOUTH OF EXISTING RAILING	40
70	101	5.9	NB	BUS RAMP/ON RAMP FROM FOUNTAIN Ave RIGHT SHOULDER NORTH OF FOUNTAIN Ave OC	20
71	101	6.4	NB	OFF RAMP TO HOLLYWOOD Blvd RIGHT SHOULDER AT NORTH AND SOUTH OF EXISTING RAILING	230
72	101	6.8	NB	OFF RAMP TO GOWER St LEFT SHOULDER	70
73	101	7.7	NB	ODIN St AT ODIN St UC	50
74	101	7.8	NB	ON RAMP FROM N HIGHLAND Ave RIGHT SHOULDER	20
75	101	8.0	NB	RIGHT SHOULDER AT PILGRIMAGE OC	330
76	101	8.7	NB	OFF RAMP TO BARHAM Blvd (ABANDONED) RIGHT SHOULDER	50
77	101	2.1	SB	RIGHT SHOULDER SOUTH OF E EDGEWARE Rd OC	350
78	101	3.2	SB	RIGHT OF WAY LINE ALONG ALLEY WAY FROM SOUTH OF CORONADO St TO CORONADO TERRACE	100
79	101	3.4	SB	OFF RAMP TO BENTON WAY LEFT SHOULDER	130
80	101	4.1	SB	ON RAMP FROM VERMONT Ave LEFT SHOULDER	250
81	101	4.4	SB	BUS RAMP NORTH OF VERMONT Ave OC NORTH AND SOUTH OF EXISTING RAILING	75
82	101	4.7	SB	ON RAMP FROM MELROSE Ave LEFT SHOULDER	120
83	101	6.1	SB	ON RAMP FROM SUNSET Blvd RIGHT SHOULDER AT WILTON PLACE OC	100
84	101	6.2	SB	RIGHT SHOULDER SOUTH OF SUNSET Blvd OC SOUTH OF EXISTING RAILING	50
85	101	6.5	SB	OFF RAMP TO SUNSET Blvd RIGHT SHOULDER AT HOLLYWOOD Blvd OC SOUTH OF EXISTING RAILING	50
86	101	6.4	SB	OFF RAMP TO SUNSET Blvd RIGHT SHOULDER AT ON RAMP FROM HOLLYWOOD Blvd SOUTH OF EXISTING RAILING	20
87	101	6.5	SB	RIGHT SHOULDER NORTH OF HOLLYWOOD Blvd OC	25
88	101	6.6	SB	OFF RAMP TO HOLLYWOOD Blvd RIGHT SHOULDER NORTH OF HOLLYWOOD Blvd OC NORTH OF EXISTING RAILING	20
89	101	7.3	SB	IVAR Ave AT IVAR Ave UC	50
90	101	7.4	SB	HOLLY Dr AT HOLLY Dr UC	50
91	101	7.4	SB	ON RAMP FROM CAHUENGA Blvd RIGHT SHOULDER AT HOLLY Dr UC AND AT IVAR Ave UC	130
92	101	7.5	SB	ON RAMP FRPM CAHUENGA Blvd LEFT SHOULDER AT HOLLY Dr UC	100
93	101	7.6	SB	RIGHT SHOULDER BETWEEN ON RAMP FROM HIGHLAND Blvd AND OFF RAMP TO CAHUENGA Blvd	30
94	101	7.7	SB	ODIN St AT ODIN St UC AND ON RAMP FROM HIGHLAND Ave RIGHT SHOULDER SOUTH OF ODIN St UC	350
95	101	8.0	SB	RIGHT SHOULDER AT PILGRIMAGE OC	330
96	101	8.2	SB	RIGHT SHOULDER SOUTH OF OFF RAMP TO HIGHLAND Blvd	100
97	105	6.5	EB	RIGHT SHOULDER TURNOUT WEST OF OFF RAMP TO VERMONT Blvd	250
98	105	6.7	EB	RIGHT SHOULDER TURNOUT EAST OF OFF RAMP TO VERMONT Blvd	250
99	105	5.9	WB	RIGHT SHOULDER TURNOUT EAST OF WESTERN Ave BRIDGE	220
100	105	12.1	EB	RIGHT SHOULDER TURNOUT EAST OF BULLIS Rd	250
101	105	12.2	EB	RIGHT SHOULDER TURNOUT EAST OF GERTRUDE Dr	250
102	105	12.7	EB	RIGHT SHOULDER TURNOUT EAST OF WEST OF ATLANTIC Ave	250
103	105	13.8	WB	CONNECTOR TO SB ROUTE 710 AT LEFT SHOULDER	150
104	110	0.1	SB	OFF RAMP TO CHANNEL St LEFT SHOULDER/ON RAMP FROM CHANNEL St LEFT SHOULDER	140
105	110	1.7	SB	RIGHT SHOULDER NORTH OF OFF RAMP TO CHANNEL St	60
106	110	6.7	NB	BUS RAMP TO CARSON St RIGHT SHOULDER SOUTH OF CARSON St OC	220
107	110	6.7	NB	OFF RAMP TO CARSON St RIGHT SHOULDER	75
108	110	6.9	SB	ON RAMP FROM CARSON St RIGHT SHOULDER NORTH AND SOUTH OF EXISTING RAILING	125
109	110	7.0	SB	BUS RAMP CARSON St RIGHT SHOULDER	100
				SUBTOTAL LOCATIONS 1-109	6,790

SUMMARY OF QUANTITIES

Q-1

STATE OF CALIFORNIA - DEPARTMENT OF TRANSPORTATION
Caltrans MAINTENANCE ENGINEERING

FUNCTIONAL SUPERVISOR: HAMID SAADATNEJADI
CALCULATED-DESIGNED BY: FARIBORZ TEHRANI
CHECKED BY: HAMID SAADATNEJADI
REVISED BY
DATE REVISED

LAST REVISION 03-29-10 | DATE PLOTTED => 30-MAR-2010 | TIME PLOTTED => 12:32

Dist	COUNTY	ROUTE	POST MILES TOTAL PROJECT	SHEET No.	TOTAL SHEETS
07	LA	Var	Var	10	25

F.M. Tehrani 3-17-10
REGISTERED CIVIL ENGINEER DATE

3-29-10
PLANS APPROVAL DATE

REGISTERED PROFESSIONAL ENGINEER FARIBORZ M TEHRANI No. 59694 Exp. 12-31-11 CIVIL STATE OF CALIFORNIA

THE STATE OF CALIFORNIA OR ITS OFFICERS OR AGENTS SHALL NOT BE RESPONSIBLE FOR THE ACCURACY OR COMPLETENESS OF SCANNED COPIES OF THIS PLAN SHEET.

CABLE RAILING QUANTITIES

No.	ROUTE	PM	DIRECTION	DESCRIPTION	INSTALL (LF)
110	405	1.1	NB	NB WOODRUFF Ave LEFT SHOULDER AT PALO VERDE Ave	40
111	405	1.5	NB	NB WOODRUFF Ave LEFT SHOULDER AT MCNAB Ave	100
112	405	2.0	NB	EB WILLOW St RIGHT SHOULDER AT LOS COYOTES DIAGONAL	125
113	405	2.2	NB	ON RAMP FROM SB BELLFLOWER Blvd AT EB WILLOW St RIGHT SHOULDER	10
114	405	2.2	NB	EB WILLOW St RIGHT SHOULDER AT SB BELLFLOWER Blvd	10
115	405	2.5	NB	EB WILLOW St RIGHT SHOULDER BETWEEN BELLFLOWER Blvd AND CLARK Ave	225
116	405	2.8	NB	EB WILLOW St RIGHT SHOULDER AT CLARK Ave	300
117	405	4.6	NB	RIGHT SHOULDER BETWEEN ON RAMP FROM SPRING St AND OFF RAMP TO CHERRY Ave	80
118	405	4.9	NB	RIGHT SHOULDER NORTH OF CHERRY Ave OC	75
119	405	5.1	NB	ON RAMP FROM CHERRY Ave RIGHT SHOULDER SOUTH OF WALNUT Ave OC	60
120	405	6.0	NB	ON/OFF RAMP FROM/TO ATLANTIC Ave RIGHT SHOULDER SOUTH OF ATLANTIC Ave OC	20
121	405	6.6	NB	AT SB PINE Ave AND WB 35TH St INTERSECTION	15
122	405	2.2	SB	ON RAMP FROM NB BELLFLOWER BLVD/LOS COYOTES DIAGONAL AT LEFT SHOULDER	20
123	405	2.8	SB	E 25TH St LEFT SHOULDER AT VERNON St	30
124	405	4.4	SB	RIGHT SHOULDER SOUTH OF SPRING St OC	75
125	405	4.6	SB	RIGHT SHOULDER SOUTH OF ON RAMP FROM CHERRY Ave	100
126	405	4.8	SB	MAINLINE AT CHERRY Ave AND SPRING St	30
127	405	4.8	SB	OFF RAMP TO CHERRY AVE/SPRING St RIGHT SHOULDER NORTH OF CHERRY Ave OC	70
128	405	4.9	SB	ON RAMP FROM SB CHERRY Ave LEFT SHOULDER	325
129	405	10.7	NB	ON RAMP FROM CARSON St AT RIGHT SHOULDER	400
130	405	22.2	NB	ON RAMP FROM CENTURY Blvd AT OCEANGATE Ave	150
131	405	23.2	SB	ON RAMP FROM OLIVE St AT LEFT SHOULDER	400
132	710	9.1	SB	CONNECTOR FROM WB ROUTE 405 RIGHT SHOULDER AT OFF RAMP TO WARDLOW Rd	50
133	710	14.0	NB	ON RAMP FROM ALONDRA Blvd AT LEFT SHOULDER	260
				SUBTOTAL LOCATIONS 110-133	2,970
				SUBTOTAL LOCATIONS 58-109	6,790
				TOTAL	9,760

DOWEL QUANTITIES

LOCATION Nos.	DRILL AND BOND DOWEL (CHEMICAL ADHESIVE) EA
58-133	3,904

HARDSCAPING QUANTITIES

No.	ROUTE	PM	DIRECTION	DESCRIPTION	ROCK BLANKET SQYD	MINOR CONCRETE (TEXTURED PAVING) SQFT	MULCH CY (*)
134	101	3.3	SB	OFF RAMP TO BENTON WAY RIGHT SHOULDER	370		
135	101	4.4	NB	LEFT SHOULDER NORTH OF VERMONT Ave OC		6,354	90
136	101	6.5	NB	OFF RAMP TO HOLLYWOOD Blvd OC	345		65
137	101	6.5	SB	OFF RAMP TO HOLLYWOOD Blvd OC	195		35
				TOTAL	910	6,354	190

(*) NOT A SEPARATE ITEM

SUMMARY OF QUANTITIES

Q-2

REVISED BY | DATE REVISED
FARIBORZ TEHRANI | HAMID SAADATNEJADI
CALCULATED-DESIGNED BY | CHECKED BY
FUNCTIONAL SUPERVISOR
HAMID SAADATNEJADI
STATE OF CALIFORNIA - DEPARTMENT OF TRANSPORTATION
Caltrans MAINTENANCE ENGINEERING

LAST REVISION 03-29-10 | DATE PLOTTED => 30-MAR-2010 | TIME PLOTTED => 12:32

Dist	COUNTY	ROUTE	POST MILES TOTAL PROJECT	SHEET No.	TOTAL SHEETS
07	LA	Var	Var	11	25

LICENSED LANDSCAPE ARCHITECT

3-29-10
PLANS APPROVAL DATE

LICENSED LANDSCAPE ARCHITECT A. SIRIBOHDI No. 2793 Signature 10-31-10 Renewal Date 3-17-10 Date STATE OF CALIFORNIA

THE STATE OF CALIFORNIA OR ITS OFFICERS OR AGENTS SHALL NOT BE RESPONSIBLE FOR THE ACCURACY OR COMPLETENESS OF ELECTRONIC COPIES OF THIS PLAN SHEET.

ABBREVIATIONS

AMEND — amendment
B & B — balled and burlapped
Dia — diameter
EA — each
LB — pound
Oz — ounce
Ft — foot/feet
SQFT — square feet
SQYD — square yard
CF — cubic feet
Max — maximum
Min — minimum
NCN — no common name
No. — number
Pkt — packet
PLT ESTB — plant establishment
Pvmt — pavement
R/W — right of way
SF — state furnished
TRVD — traveled

PLANT LIST AND PLANTING SPECIFICATIONS

PLANT GROUP	PLANT No.	SYMBOL	BOTANICAL NAME	COMMON NAME	SIZE	QUANTITY EACH	HOLE SIZE (INCH) Dia	HOLE SIZE (INCH) DEPTH	BASIN TYPE	IRON SULFATE ①	SOIL AMEND ①	COMMERCIAL FERTILIZER ① PLANTING	COMMERCIAL FERTILIZER ① PLT ESTB	BASIN MULCH	STAKING	PLANTING LIMITS MINIMUM DISTANCE (Ft) FROM TRVD WAY	PVMT	FENCE	WALL	PAVED DITCH	EARTH DITCH	ON CENTER (Ft)	REMARKS
B	1	~o~	PARTHENOCISSUS TRICUSPIDATA	BOSTON IVY	No. 5	17	②	②	III	--	1 CF	¼ LB	--	1½ CF	⑥	--	--	--	0.3	--	--	15	VINE

APPLICABLE WHEN CIRCLED:

① - Quantities shown are "per plant" unless shown as SQFT or SQYD application rates.
② - Sufficient to receive root ball.
3 - Does not apply to mulch areas.
4 - As shown on plans.
5 - Unless otherwise shown on plans.
⑥ - See detail.
7 - See Special Provisions.

MULCH

ROCK BLANKET

MINOR CONCRETE (TEXTURED PAVING)

NOTE:

Underlined portions of botanical name indicate abbreviations used on Planting Plans.

SPRINKLER SCHEDULE

SYMBOL	TYPE	DESCRIPTION	SPRAY PATTERN	OPERATING PRESSURE (PSI)	PRESSURE COMPENSATING	PLUS/MINUS 5% ② DISCHARGE GALLONS PER MINUTE (GPM)	DISCHARGE GALLONS PER HOUR (GPH)	RADIUS (Ft)	WIDTH x LENGTH (Ft)	MATERIAL	INLET CONNECTION (NPT INCH)	POSITIVE-LOCKING ADJ ARC STOP	BACKSPLASH PREVENTER	DIFFUSER PIN	DISTANCE CONTROL FLAP	ADJ DISCHARGE	RISER TYPE	RISER MATERIAL PLASTIC	RISER MATERIAL GALVANIZED	RISER SIZE (IPS INCH)	RISER HEIGHT (INCH)	RISER FLOW SHUTOFF DEVICE	⑤ SWING JOINT (TYPE)	RISER SUPPORT	SPRINKLER PROTECTOR (TYPE)	REMARKS
●	C-2	FLOOD BUBBLER	--	35	--	0.5	--	--	--	PL	½	--	--	--	--	--	V	X	--	--	--	--	--	--	--	

X IN BOX DENOTES REQUIREMENT

APPLICABLE WHEN CIRCLED BELOW:

① - See Special Provisions.
2 - If a pressure compensating device is specified, the discharge and radii shown reflect its use.
3 - Arc Stop shall be fitted with a nut and bolt.
4 - Vinyl-coated cast iron housing.
5 - Swing Joints required adjacent to shoulders, curbs, sidewalks, and dikes.
6 - Unless otherwise shown on plans.

ABBREVIATIONS

F — full circle
P — part circle
F/P — full/part circle
Q — quarter circle
T — third circle
H — half circle
TT — two third circle
TQ — three quarter circle
CST — center strip
SST — side strip
EST — end strip
Ft — feet/foot
GPM — gallons per minute
GPH — gallons per hour
Adj — adjustable
PL — plastic
B/B — brass/bronze
B/PL — brass/plastic
B/B/PL — brass/bronze/plastic
NPT — national pipe thread
IPS — iron pipe size
PSI — pounds per square inch

PLANT LIST AND IRRIGATION SCHEDULE

PL-1

REVISED BY | DATE REVISED
TOBY MACELROY | ED SIRIBOHDI
CALCULATED-DESIGNED BY | CHECKED BY
SENIOR LANDSCAPE ARCHITECT | ED SIRIBOHDI
STATE OF CALIFORNIA - DEPARTMENT OF TRANSPORTATION
Caltrans MAINTENANCE ENGINEERING

LAST REVISION 03-29-10 | DATE PLOTTED => 30-MAR-2010 | TIME PLOTTED => 12:32

Dist	COUNTY	ROUTE	POST MILES TOTAL PROJECT	SHEET No.	TOTAL SHEETS
07	LA	Var	Var	12	25

LICENSED LANDSCAPE ARCHITECT

3-29-10
PLANS APPROVAL DATE

LICENSED LANDSCAPE ARCHITECT
A. SIRIBOHDI
No. 2793
Signature
10-31-10
Renewal Date
3-17-10
Date
STATE OF CALIFORNIA

THE STATE OF CALIFORNIA OR ITS OFFICERS OR AGENTS SHALL NOT BE RESPONSIBLE FOR THE ACCURACY OR COMPLETENESS OF ELECTRONIC COPIES OF THIS PLAN SHEET.

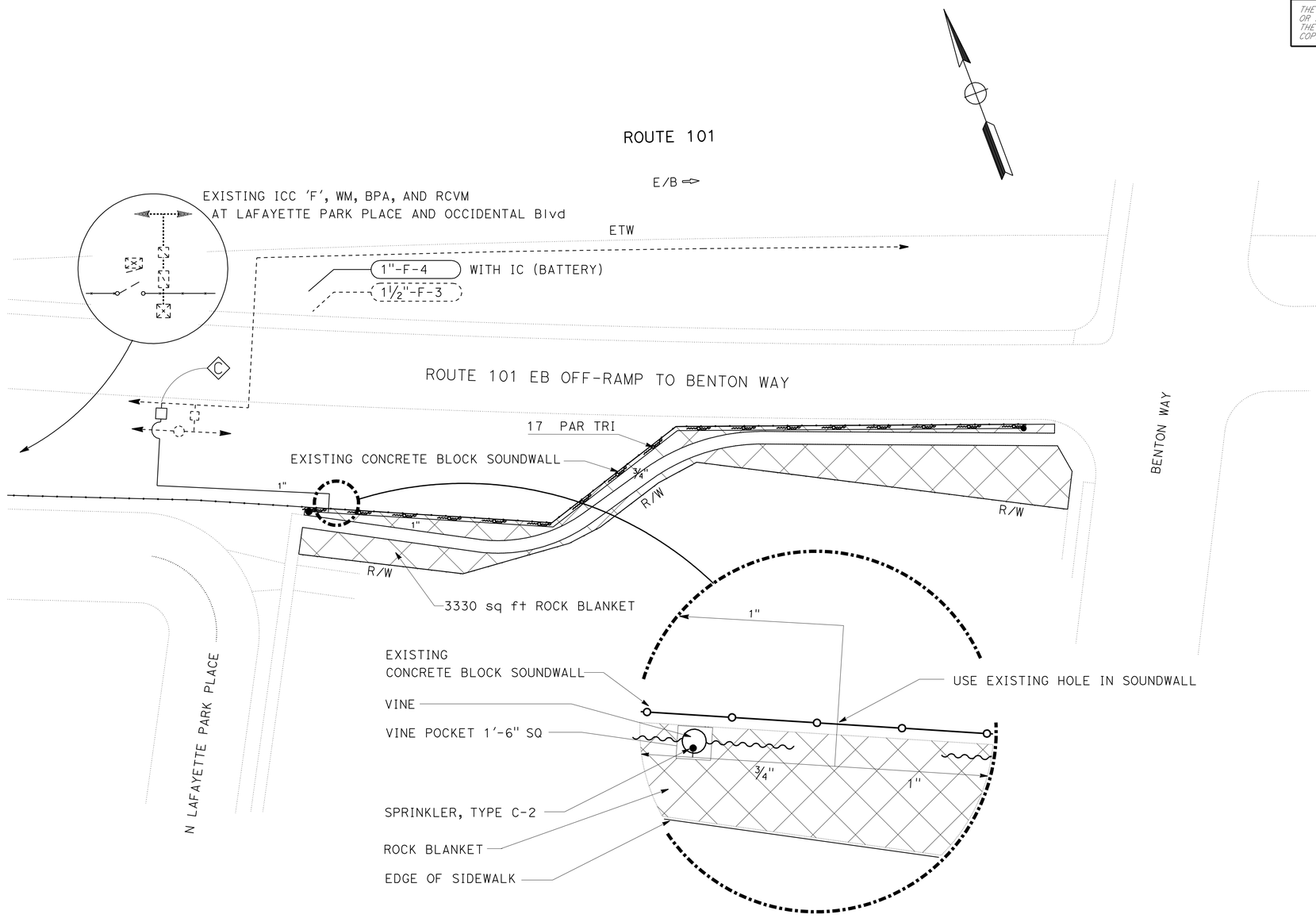

ROUTE 101
PM 3.3

PLANTING AND IRRIGATION PLAN

BENTON WAY/LAFAYETTE PARK PLACE PEDESTRIAN WALKWAY

SCALE: 1":20'

PI-1

REVISED BY	DATE REVISED

TOBY MACELROY — ED SIRIBOHDI

CALCULATED-DESIGNED BY — CHECKED BY

SENIOR LANDSCAPE ARCHITECT — ED SIRIBOHDI

STATE OF CALIFORNIA - DEPARTMENT OF TRANSPORTATION
Caltrans MAINTENANCE ENGINEERING

LAST REVISION 03-29-10 — DATE PLOTTED => 30-MAR-2010 — TIME PLOTTED => 12:32

Dist	COUNTY	ROUTE	POST MILES TOTAL PROJECT	SHEET No.	TOTAL SHEETS
07	LA	Var	Var	13	25

A. Siribohdi
LICENSED LANDSCAPE ARCHITECT

3-29-10
PLANS APPROVAL DATE

LICENSED LANDSCAPE ARCHITECT
A. SIRIBOHDI
No. 2793
A. Siribohdi
Signature
10-31-10
Renewal Date
3-17-10
Date
STATE OF CALIFORNIA

THE STATE OF CALIFORNIA OR ITS OFFICERS OR AGENTS SHALL NOT BE RESPONSIBLE FOR THE ACCURACY OR COMPLETENESS OF ELECTRONIC COPIES OF THIS PLAN SHEET.

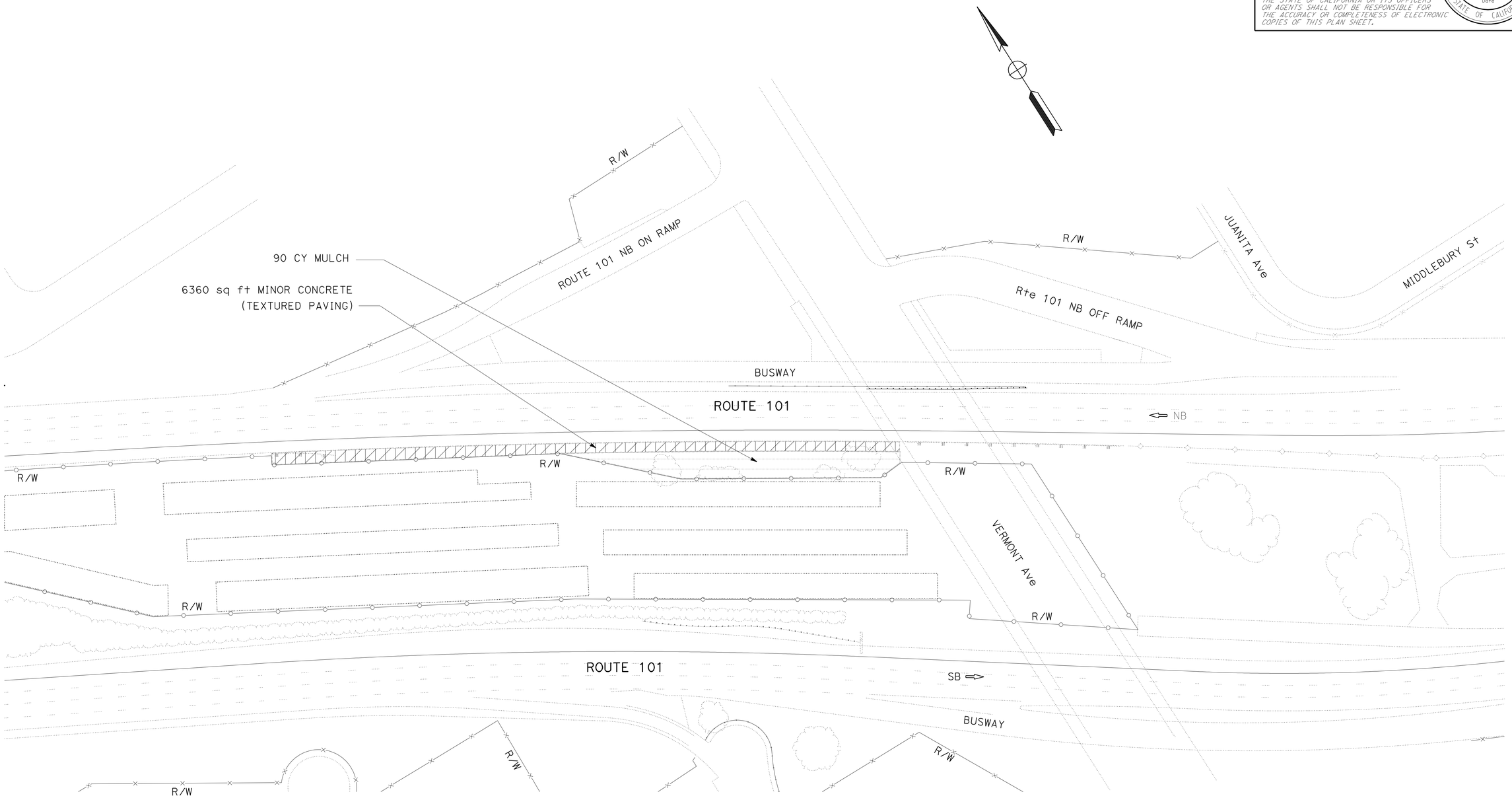

ROUTE 101
PM 4.4

PLANTING AND IRRIGATION PLAN
VERMONT AVENUE
SCALE 1"=50'

PI-2

STATE OF CALIFORNIA - DEPARTMENT OF TRANSPORTATION
Caltrans MAINTENANCE ENGINEERING

SENIOR LANDSCAPE ARCHITECT: ED SIRIBOHDI
CALCULATED-DESIGNED BY: TOBY MACELROY
CHECKED BY: ED SIRIBOHDI
REVISED BY
DATE REVISED

LAST REVISION 03-29-10
DATE PLOTTED => 30-MAR-2010
TIME PLOTTED => 12:32

Dist	COUNTY	ROUTE	POST MILES TOTAL PROJECT	SHEET No.	TOTAL SHEETS
07	LA	Var	Var	14	25

A. Siribohdi
LICENSED LANDSCAPE ARCHITECT

3-29-10
PLANS APPROVAL DATE

LICENSED LANDSCAPE ARCHITECT
A. SIRIBOHDI
No. 2793
A. Siribohdi
Signature
10-31-10
Renewal Date
3-17-10
Date
STATE OF CALIFORNIA

THE STATE OF CALIFORNIA OR ITS OFFICERS OR AGENTS SHALL NOT BE RESPONSIBLE FOR THE ACCURACY OR COMPLETENESS OF ELECTRONIC COPIES OF THIS PLAN SHEET.

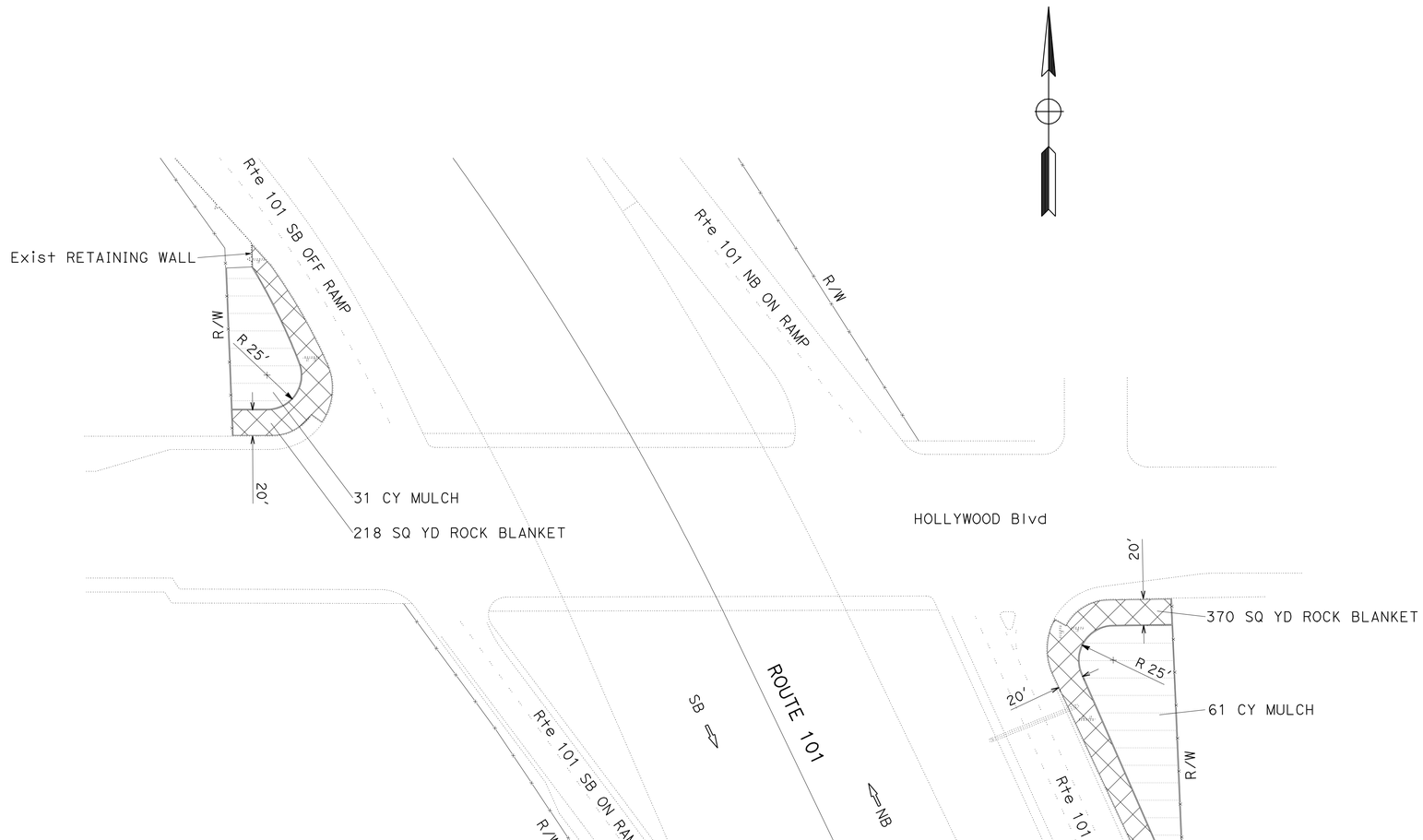

ROUTE 101
PM 3.2

PLANTING AND IRRIGATION PLAN
HOLLYWOOD BOULEVARD
SCALE 1"=40'

PI-3

STATE OF CALIFORNIA - DEPARTMENT OF TRANSPORTATION
Caltrans MAINTENANCE ENGINEERING

SENIOR LANDSCAPE ARCHITECT: ED SIRIBOHDI
CALCULATED-DESIGNED BY: TOBY MACELROY
CHECKED BY: ED SIRIBOHDI
REVISED BY
DATE REVISED

LAST REVISION 03-29-10
DATE PLOTTED => 30-MAR-2010
TIME PLOTTED => 12:33

Dist	COUNTY	ROUTE	POST MILES TOTAL PROJECT	SHEET No.	TOTAL SHEETS
07	LA	Var	Var	15	25

A Siribohdi
LICENSED LANDSCAPE ARCHITECT

3-29-10
PLANS APPROVAL DATE

LICENSED LANDSCAPE ARCHITECT
A. SIRIBOHDI
No. 2793
A Siribohdi
Signature
10-31-10
Renewal Date
3-17-10
Date
STATE OF CALIFORNIA

THE STATE OF CALIFORNIA OR ITS OFFICERS OR AGENTS SHALL NOT BE RESPONSIBLE FOR THE ACCURACY OR COMPLETENESS OF ELECTRONIC COPIES OF THIS PLAN SHEET.

BACKFLOW PREVENTER ASSEMBLY ENCLOSURE INSTALLATION LOCATIONS

No.	ROUTE	POST MILE	DIRECTION	LOCATION	NOTES	SIZE	WATER VENDOR
1	5	15.3	S/B	1085 ESPERANZA	AT BESWICK	3"	WATER VENDOR
2	5	15.3	N/B	ATLANTIC	AT ESPERANZA	3"	WATER VENDOR
3	5	15.5	N/B	ATLANTIC	AT GRANDE VISTA	3"	WATER VENDOR
4	5	15.7	N/B	3420 ATLANTIC	AT GRANDE VISTA	3"	WATER VENDOR
5	5	15.7	S/B	1065 S CONCORD	ON RAMP	3"	WATER VENDOR
6	91	12.3	E/B	MYRTLE @ 67th	ON RIGHT CORNER	3"	WATER VENDOR
7	91	12.8	W/B	WALNUT	FENCELINE AT CORNER OF WALNUT AND ELEANOR	3"	WATER VENDOR
8	91	13.4	W/B	67th WAY	WEST OF PARAMOUNT	3"	WATER VENDOR
9	101	2.0	S/B	TEMPLE	AT EDGEWARE ON MAINLINE AT BRIDGE	2"	LADWP
10	101	2.1	N/B	BELLEVUE	AT BOYLSTON	2"	LADWP
11	101	2.3	N/B	BELLEVUE	AT LAVATA TERRACE	2"	LADWP
12	101	2.7	N/B	BONNIE BRAE	AT BELLEVUE	2"	LADWP
13	101	2.8	N/B	ALVARADO	ON RAMP	2"	LADWP
14	101	2.8	S/B	ALVARADO	OFF RAMP	2"	LADWP
15	101	2.1	N/B	BELLEVUE	AT BOYLSTON	2"	LADWP
16	101	2.8	S/B	BONNIE BRAE		2"	LADWP
17	101	3.4	N/B	OCCIDENTAL	AT BELLEVUE ON MAINLINE	2"	LADWP
18	101	3.7	N/B	SILVERLAKE	OFF RAMP	2"	LADWP
19	101	3.9	S/B	HOOVER	AT ST JOHN	2"	LADWP
20	101	4.0	S/B	VIRGIL	AT OAKWOOD	2"	LADWP
21	101	4.1	N/B	WESTMORELAND	AT MIDDLEBURY	2"	LADWP
22	101	4.4	N/B	VERMONT	ON RAMP	2"	LADWP
23	101	4.4	S/B	VERMONT	ON RAMP	2"	LADWP
24	101	4.5	N/B	HELIOTROPE	AT CLINTON	2"	LADWP
25	101	4.8	N/B	MARIPOSA	AT MARATHON	2"	LADWP
26	101	4.8	S/B	MELROSE	AT OFF RAMP BEHIND SOUNDWALL	2"	LADWP
27	101	5.6	S/B	VIRGINIA	AT OXFORD	2"	LADWP
28	101	5.8	S/B	LA MIRADA	WESTERN OFF RAMP BEHIND SOUNDWALL	2"	LADWP
29	101	6.0	N/B	FERNWOOD	AT ST ANDREWS	2"	LADWP

BACKFLOW ENCLOSURE ASSEMBLY ENCLOSURE CONSTRUCTION LOCATIONS

PI-4

REVISED BY | DATE REVISED
TOBY MACELROY | ED SIRIBOHDI
CALCULATED-DESIGNED BY | CHECKED BY
SENIOR LANDSCAPE ARCHITECT
ED SIRIBOHDI

STATE OF CALIFORNIA - DEPARTMENT OF TRANSPORTATION
Caltrans MAINTENANCE ENGINEERING

LAST REVISION 03-29-10 | DATE PLOTTED => 30-MAR-2010 | TIME PLOTTED => 12:33

Dist	COUNTY	ROUTE	POST MILES TOTAL PROJECT	SHEET No.	TOTAL SHEETS
07	LA	Var	Var	16	25

A Siribohdi
LICENSED LANDSCAPE ARCHITECT

3-29-10
PLANS APPROVAL DATE

LICENSED LANDSCAPE ARCHITECT
A. SIRIBOHDI
No. 2793
A Siribohdi
Signature
10-31-10
Renewal Date
3-17-10
Date
STATE OF CALIFORNIA

THE STATE OF CALIFORNIA OR ITS OFFICERS OR AGENTS SHALL NOT BE RESPONSIBLE FOR THE ACCURACY OR COMPLETENESS OF ELECTRONIC COPIES OF THIS PLAN SHEET.

BACKFLOW PREVENTER ASSEMBLY ENCLOSURE INSTALLATION LOCATIONS

No.	ROUTE	POST MILE	DIRECTION	LOCATION	NOTES	SIZE	WATER VENDOR
30	101	6.1	S/B	SUNSET	ON RAMP	2"	LADWP
31	101	6.2	N/B	SUNSET	OFF RAMP LEFT SIDE	2"	LADWP
32	101	6.2	S/B	HAROLD WAY	SUNSET OFF RAMP	2"	LADWP
33	101	6.5	N/B	VAN NESS	AT HOLLYWOOD	2"	LADWP
34	101	6.9	N/B	GOWER	OFF RAMP BEHIND SOUNDWALL	2"	LADWP
35	101	6.9	S/B	ARGYLE	AT VISTA DEL MAR	2"	LADWP
36	101	7.2	S/B	IVAR	GOWER OFF RAMP UC	2"	LADWP
37	101	7.4	N/B	IRIS CIRCLE	ABOVE CAHUENGA OFF RAMP	2"	LADWP
38	101	7.7	S/B	ODIN	AT CAHUENGA	2"	LADWP
39	101	8.0	N/B	CAHUENGA	OFF RAMP AT PILGRIMAGE	2"	LADWP
40	101	8.4	N/B	CAHUENGA	OFF RAMP AT HOLLYCREST	2"	LADWP
41	105	6.5		NEW HAMPSHIRE	AT 115th	2"	WATER VENDOR
42	105	12.1	W/B	FERNWOOD	FENCELINE AT CORNER OF FERNWOOD AND BULLIS	1¼"	WATER VENDOR
43	105	12.5	W/B	FERNWOOD	FENCELINE AT FERNWOOD AND HARRIS	1½"	WATER VENDOR
44	105	13.4	W/B	PHILLIPS	FENCELINE AT CORNER OF PHILLIPS AND LAVINIA	3"	WATER VENDOR
45	405	2.2	S/B	BELLFLOWER	OFF RAMP	2"	WATER VENDOR
46	405	2.2	.	WILLOW	AT RADNOR EAST OF BELLFLOWER	2"	WATER VENDOR
47	405	2.2	S/B	LOS COYOTES	AT BELLFLOWER	2"	WATER VENDOR
48	405	2.2	N/B	WILLOW	AT EATON CIRCLE	2"	WATER VENDOR
49	405	2.2	N/B	BELLFLOWER	ON RAMP	2"	WATER VENDOR
50	405	3.3	S/B	LAKEWOOD	OFF RAMP TO N/B LAKEWOOD	3"	WATER VENDOR
51	405	4.5	N/B	SPRING	ON RAMP	3"	WATER VENDOR
52	405	5.1	N/B	WALNUT	ADJACENT TO TRUCK YARD	3"	WATER VENDOR
53	405	6.1	N/B	33RD	AT ELM	3"	WATER VENDOR
54	405	6.1	S/B	32ND	AT PASADENA	3"	WATER VENDOR
55	405	6.3	N/B	35TH	AT PINE	2"	WATER VENDOR
56	405	22.3	N/B	RED FERN	BEHIND MOTEL 8	3"	WATER VENDOR
57	405	22.7	N/B	ARBOR VITAE		3"	WATER VENDOR

BACKFLOW ENCLOSURE ASSEMBLY ENCLOSURE CONSTRUCTION LOCATIONS

PI-5

REVISED BY | DATE REVISED
TOBY MACELROY | ED SIRIBOHDI
CALCULATED-DESIGNED BY | CHECKED BY
SENIOR LANDSCAPE ARCHITECT | ED SIRIBOHDI
STATE OF CALIFORNIA - DEPARTMENT OF TRANSPORTATION
Caltrans MAINTENANCE ENGINEERING

LAST REVISION 03-29-10 | DATE PLOTTED => 30-MAR-2010 | TIME PLOTTED => 12:33

Dist	COUNTY	ROUTE	POST MILES TOTAL PROJECT	SHEET No.	TOTAL SHEETS
07	LA	Var	Var	17	25

LICENSED LANDSCAPE ARCHITECT

3-29-10
PLANS APPROVAL DATE

LICENSED LANDSCAPE ARCHITECT
A. SIRIBOHDI
No. 2793
Signature
10-31-10
Renewal Date
3-17-10
Date
STATE OF CALIFORNIA

THE STATE OF CALIFORNIA OR ITS OFFICERS OR AGENTS SHALL NOT BE RESPONSIBLE FOR THE ACCURACY OR COMPLETENESS OF ELECTRONIC COPIES OF THIS PLAN SHEET.

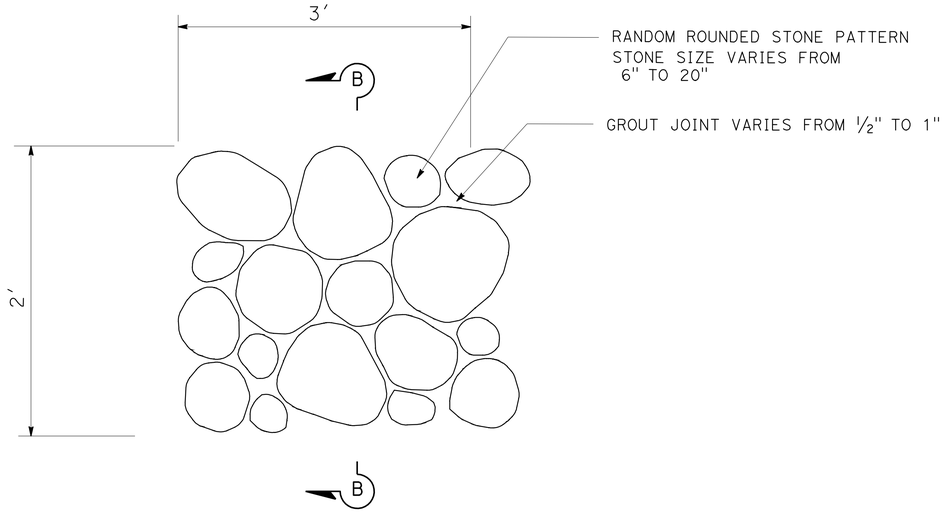

COBBLE TEXTURE

FOR MINOR CONCRETE
(TEXTURED PAVING)

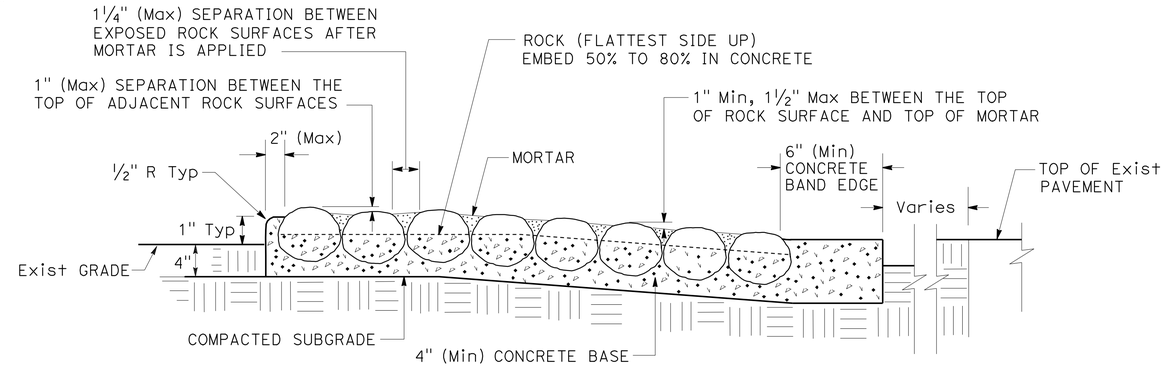

SECTION

Rte 101 ROCK BLANKET

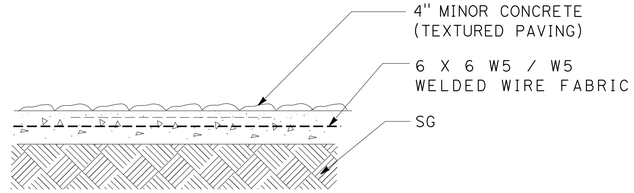

DETAIL B-B

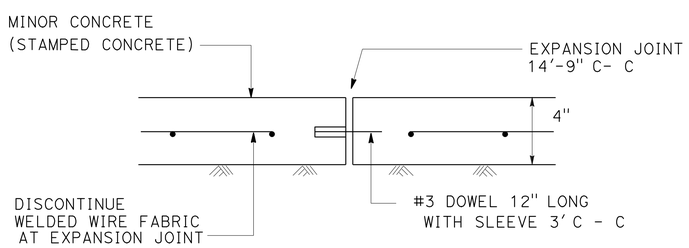

EXPANSION JOINT

FOR MINOR CONCRETE
(TEXTURED PAVING)

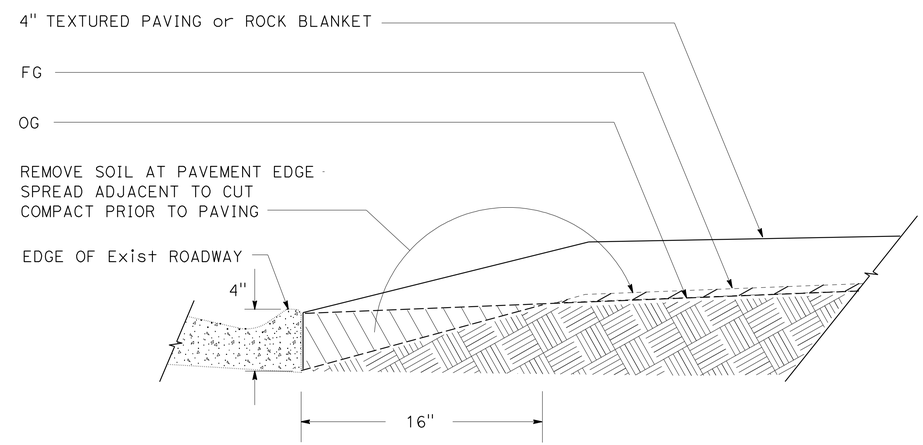

ROUTE 101 EXCAVATION AND BACKFILL

FOR MINOR CONCRETE (TEXTURED PAVING)
FOR ROCK BLANKET

CONSTRUCTION DETAILS

PI-6

REVISED BY | DATE REVISED
TOBY MACELROY | ED SIRIBOHDI
CALCULATED-DESIGNED BY | CHECKED BY
SENIOR LANDSCAPE ARCHITECT | ED SIRIBOHDI
STATE OF CALIFORNIA - DEPARTMENT OF TRANSPORTATION
Caltrans MAINTENANCE ENGINEERING

LAST REVISION 03-29-10
DATE PLOTTED => 30-MAR-2010
TIME PLOTTED => 12:33

DIST	COUNTY	ROUTE	POST MILES TOTAL PROJECT	SHEET NO.	TOTAL SHEETS
07	LA	Var	Var	19	25

Randell D. Hiatt
REGISTERED CIVIL ENGINEER

June 6, 2008
PLANS APPROVAL DATE

REGISTERED PROFESSIONAL ENGINEER
Randell D. Hiatt
No. C50200
Exp. 6-30-09
CIVIL
STATE OF CALIFORNIA

The State of California or its officers or agents shall not be responsible for the accuracy or completeness of electronic copies of this plan sheet.

To accompany plans dated 3-29-10

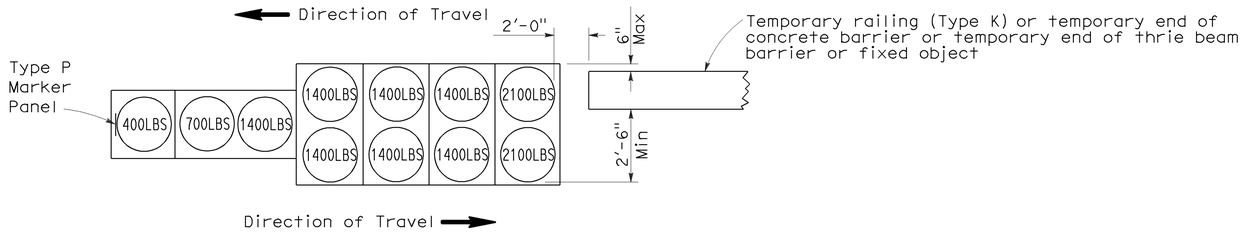

ARRAY 'TB11'

Approach speed less than 45 mph

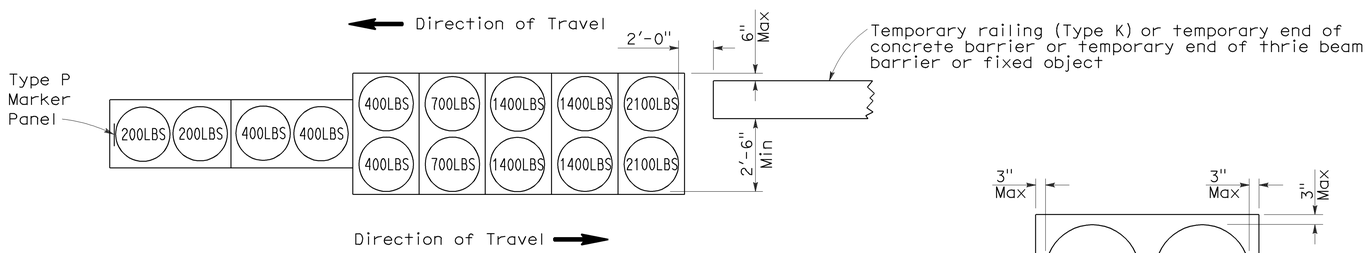

ARRAY 'TB14'

Approach speed 45 mph or more

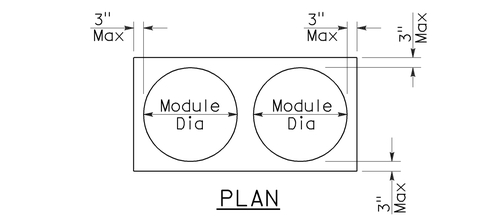

PLAN

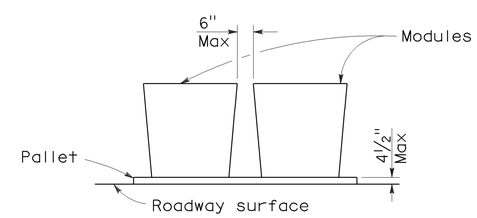

ELEVATION

CRASH CUSHION PALLET DETAIL

See Note 7

NOTES:

1. (XXX) Indicates sand filled module location and weight of sand in pounds for each module. Module spacing is based on the greater diameter of the module.
2. All sand weights are nominal.
3. Temporary crash cushion arrays shall not encroach on the traveled way.
4. Place the Type P marker panel so that the bottom of the panel rests upon the pallet.
5. Refer to Standard Plan A73B for marker details.
6. Approach speeds indicated conform to NCHRP 350 Report criteria.
7. Use of pallets is optional.

STATE OF CALIFORNIA
DEPARTMENT OF TRANSPORTATION

TEMPORARY CRASH CUSHION, SAND FILLED (BIDIRECTIONAL)

NO SCALE

RSP T1B DATED JUNE 6, 2008 SUPERSEDES STANDARD PLAN T1B
DATED MAY 1, 2006 - PAGE 212 OF THE STANDARD PLANS BOOK DATED MAY 2006.

REVISED STANDARD PLAN RSP T1B

2006 REVISED STANDARD PLAN RSP T1B

5-15-08

DIST	COUNTY	ROUTE	POST MILES TOTAL PROJECT	SHEET NO.	TOTAL SHEETS
07	LA	Var	Var	18	25

Randell D. Hiatt
REGISTERED CIVIL ENGINEER

June 6, 2008
PLANS APPROVAL DATE

REGISTERED PROFESSIONAL ENGINEER
Randell D. Hiatt
No. C50200
Exp. 6-30-09
CIVIL
STATE OF CALIFORNIA

The State of California or its officers or agents shall not be responsible for the accuracy or completeness of electronic copies of this plan sheet.

To accompany plans dated 3-29-10

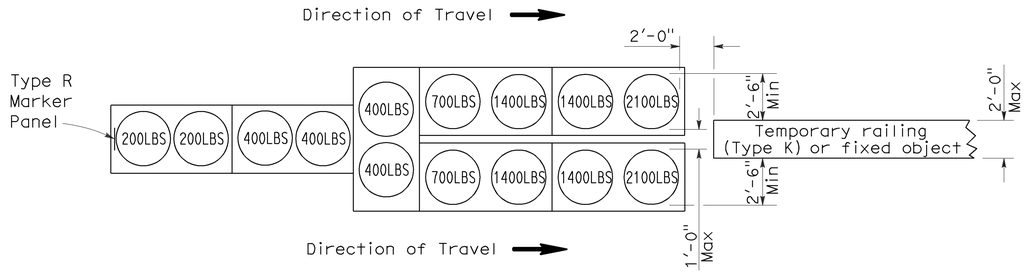

ARRAY 'TU14'

Approach speed 45 mph or more

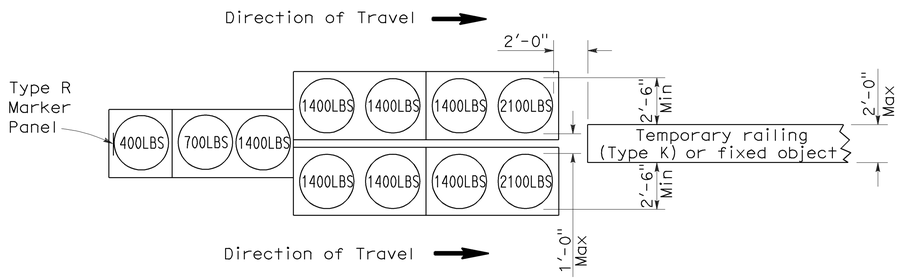

ARRAY 'TU11'

Approach speed less than 45 mph

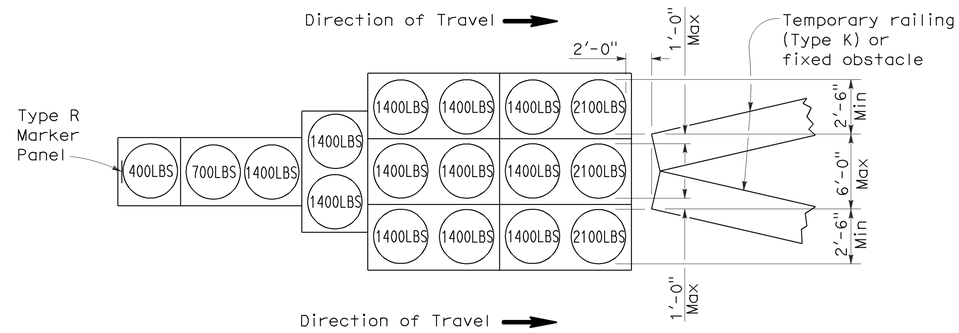

ARRAY 'TU17'

Approach speed less than 45 mph

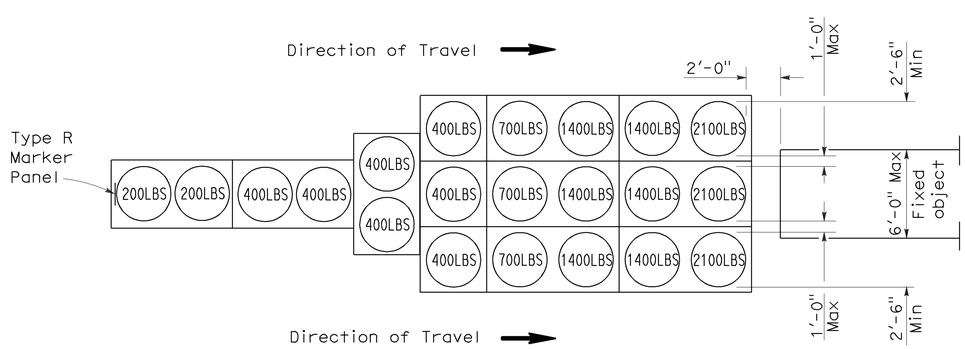

ARRAY 'TU21'

Approach speed 45 mph or more

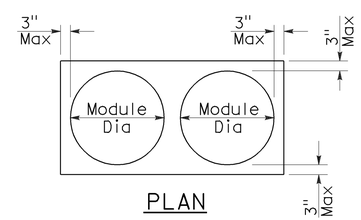

PLAN

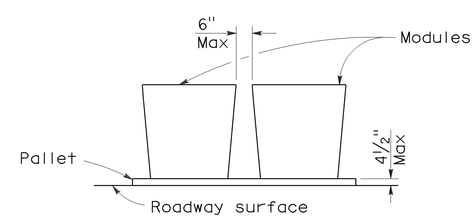

ELEVATION

CRASH CUSHION PALLET DETAIL

See Note 7

NOTES:

1. (XXX) Indicates sand filled module location and weight of sand in pounds for each module. Module spacing is based on the greater diameter of the module.
2. All sand weights are nominal.
3. Temporary crash cushion arrays shall not encroach on the traveled way.
4. Place the top of Type R marker panel 1" below the module lid.
5. Refer to Standard Plan A73B for marker details.
6. Approach speeds indicated conform to NCHRP 350 Report criteria.
7. Use of pallets is optional.

STATE OF CALIFORNIA
DEPARTMENT OF TRANSPORTATION

TEMPORARY CRASH CUSHION, SAND FILLED (UNIDIRECTIONAL)

NO SCALE

RSP T1A DATED JUNE 6, 2008 SUPERSEDES STANDARD PLAN T1A
DATED MAY 1, 2006 - PAGE 211 OF THE STANDARD PLANS BOOK DATED MAY 2006.

REVISED STANDARD PLAN RSP T1A

2006 REVISED STANDARD PLAN RSP T1A

DIST	COUNTY	ROUTE	POST MILES TOTAL PROJECT	SHEET NO.	TOTAL SHEETS
07	LA	Var	Var	20	25

Randell D. Hiatt
REGISTERED CIVIL ENGINEER

June 6, 2008
PLANS APPROVAL DATE

REGISTERED PROFESSIONAL ENGINEER
Randell D. Hiatt
No. C50200
Exp. 6-30-09
CIVIL
STATE OF CALIFORNIA

The State of California or its officers or agents shall not be responsible for the accuracy or completeness of electronic copies of this plan sheet.

To accompany plans dated 3-29-10

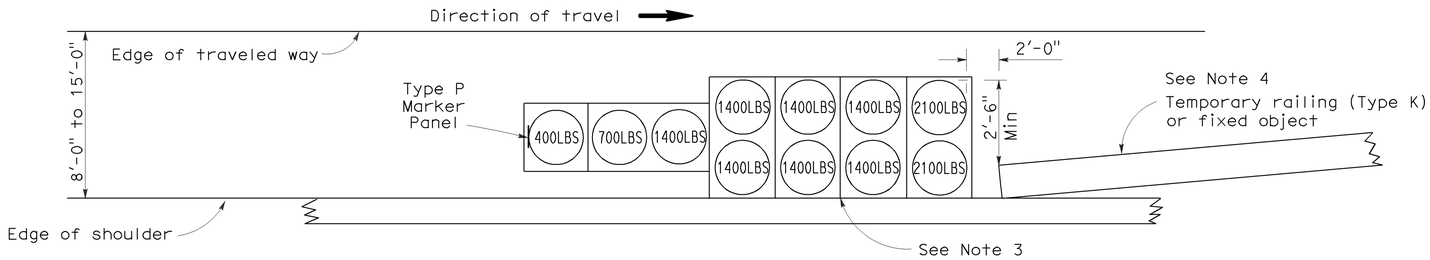

ARRAY 'TS11'

Approach speed less than 45 mph
See Note 9

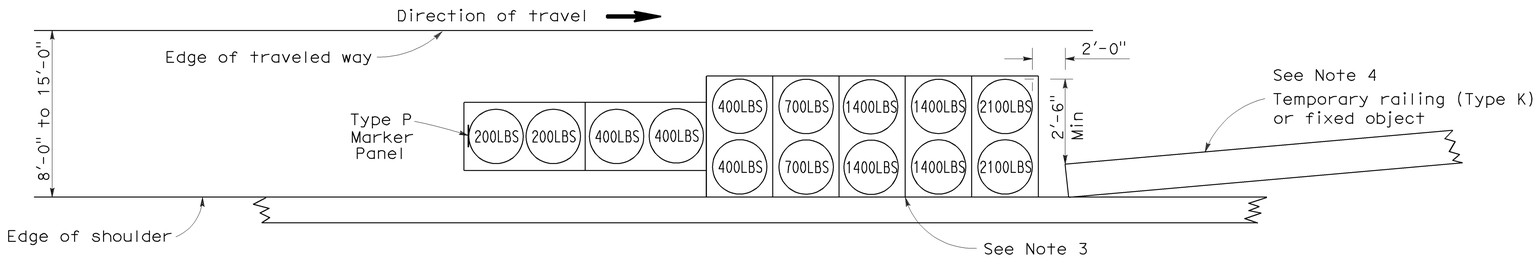

ARRAY 'TS14'

Approach speed 45 mph or more
See Note 9

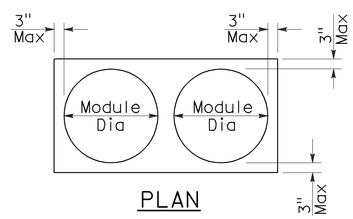

PLAN

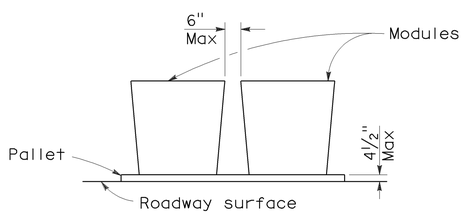

ELEVATION

CRASH CUSHION PALLET DETAIL

See Note 11

NOTES:

1. (XXX) Indicates sand filled module location and weight of sand in pounds for each module. Module spacing is based on the greater diameter of the module.
2. All sand weights are nominal.
3. The temporary crash cushion arrays shown on this plan shall be used only in locations where there will be traffic on one side of the temporary crash cushion array.
4. If the fixed object or approach end of the temporary railing is less than 15'-0" from the edge of traveled way, a temporary crash cushion is required in a construction or work zone.
5. Temporary crash cushion arrays shall not encroach on the traveled way.
6. Arrays for median shoulders shall conform to details shown on this plan for outside shoulders.
7. Place the Type P marker panel so that the bottom of the panel rests upon the pallet and faces traffic.
8. Refer to Standard Plan A73B for marker details.
9. For shoulder widths less than 8'-0", appropriate approved crash cushion protection, other than sand filled modules, shall be provided at fixed objects and at approach ends of temporary railing. The specific type of crash cushion shall be as shown on the project plans or as specified in the Special Provisions, or if not shown on the project plans or specified in the Special Provisions, shall be as approved by the Engineer.
10. Approach speeds indicated conform to NCHRP 350 Report criteria.
11. Use of pallets is optional.

STATE OF CALIFORNIA
DEPARTMENT OF TRANSPORTATION

TEMPORARY CRASH CUSHION, SAND FILLED (SHOULDER INSTALLATIONS)

NO SCALE

RSP T2 DATED JUNE 6, 2008 SUPERSEDES STANDARD PLAN T2
DATED MAY 1, 2006 - PAGE 213 OF THE STANDARD PLANS BOOK DATED MAY 2006.

REVISED STANDARD PLAN RSP T2

2006 REVISED STANDARD PLAN RSP T2

5-15-08

DIST	COUNTY	ROUTE	POST MILES TOTAL PROJECT	SHEET NO.	TOTAL SHEETS
07	LA	Var	Var	21	25

LICENSED LANDSCAPE ARCHITECT

June 5, 2009
PLANS APPROVAL DATE

LICENSED LANDSCAPE ARCHITECT
Gregory A. Balzer 2576
10-29-09
Renewal Date
2-28-11
Renewal Date
5-14-09
Date
STATE OF CALIFORNIA

The State of California or its officers or agents shall not be responsible for the accuracy or completeness of electronic copies of this plan sheet.

To accompany plans dated 3-29-10

A

AB	aggregate base
ABS	acrylonitrile-butadiene-styrene
AC	asphalt concrete
Adj	adjacent/adjustable
AIC	auxiliary irrigation controller
Alt	alternative
AMEND	amendment
ARV	air release valve
AUTO	automatic
AUX	auxiliary
AVB	atmospheric vacuum breaker

B

B&B	balled and burlapped
B/B	brass/bronze
B/B/PL	brass/bronze/plastic
B/PL	brass/plastic
BFM	bonded fiber matrix
Bit Ctd	bituminous coated
BP	booster pump
BPA	backflow preventer assembly
BPAE	backflow preventer assembly in enclosure
BPE	backflow preventer enclosure
BV	ball valve

C

CAP	corrugated aluminum pipe
CARV	combination air release valve
CCA	cam coupler assembly
CEC	controller enclosure cabinet
CHDPE	corrugated high density polyethylene
CL	chain link
CNC	control and neutral conductors
Conc	concrete
Cond	conduit
CSP	corrugated steel pipe
CST	center strip
CV	check valve

D

Dia	diameter
DIP	ductile iron pipe
DN	diameter nominal

E

EA	each
Elect	electric/electrical
Elev	elevation
ENCL	enclosure
EP	edge of pavement
ES	edge of shoulder
EST	end strip
ESTB	establishment
ETW	edge of traveled way

F

F	full circle
F/P	full/part circle
FAU	filter assembly unit
FCV	flow control valve
FERT	fertilizer
FG	finished grade
FIPT	female iron pipe thread
FIS	fertilizer injector system
FL	flow line
FM	flow monitor
FS	flow sensor
Ft	foot/feet
FV	flush valve

G

GAL	Gallon(s)
Galv	galvanized
GARV	garden valve
GPH	gallons per hour
GPM	gallons per minute
GSP	galvanized steel pipe
GV	gate valve

H

H	half circle
HB	hose bib
HDPE	high density polyethylene
HP	horsepower/hinge point
HPL	high pressure line
Hwy	highway

I

IC	irrigation controller
ICC	irrigation controller(s) in controller enclosure cabinet
ID	inside diameter
In	inches
IFS	irrigation filtration system
IPS	iron pipe size
IPT	iron pipe thread
Irr	irrigation

L

L	length
LF	linear foot

M

Max	maximum
MBGR	metal beam guard railing
MCV	manual control valve
MIC	master irrigation controller
Min	minimum
MIPT	male iron pipe thread
Misc	miscellaneous
Mtl	material
MVP	maintenance vehicle pullout

N

NCN	no common name
NL	nozzle line
No.	number
NPT	national pipe thread

O

O/C	on center
OD	outside diameter
Oz	ounce

P

P	part circle
PB	pull box
PCC	portland cement concrete
PE	polyethylene
Pkt	packet
PL	plastic
PLT	plant/planting
PLT ESTB	plant establishment
PM	post mile
PR	pressure rated
PRLV	pressure relief valve
PSFM	polymer stabilized fiber matrix
PSI	pounds per square inch
PRV	pressure reducing valve
PVC	polyvinyl chloride
Pvmt	pavement

Q

Q	quarter circle
QCV	quick coupling valve

R

R	radius
RCP	reinforced concrete pipe
RCV	remote control valve
RCVM	remote control valve (master)
RCVMF	remote control valve (master) w/ flow meter
RCW	recycled/reclaimed water
RECP	rolled erosion control product
REQ	required
R/W	right of way

S

S	slip
SCC	sprinkler control conduit
SCH	schedule
SF	state-furnished
Shld	shoulder
SQFT	square foot/feet
SQYD	square yard(s)
SST	side strip
Sta	station
Std	standard
SW	sidewalk/sound wall

T

T	third circle/thread
TLS	truck loading standpipe
TQ	three quarter circle
TRM	turf reinforcement mat
TRVD	traveled
TT	two third circle
Typ	typical

U

UG	underground

V

VAU	valve assembly unit

W

W	width
W/	with
WM	water meter
WS	wye strainer
WSP	welded steel pipe
WWM	welded wire mesh

NOTE:

FOR ADDITIONAL ABBREVIATIONS, SEE STANDARD PLANS A10A AND A10B.

STATE OF CALIFORNIA
DEPARTMENT OF TRANSPORTATION

PLANTING AND IRRIGATION ABBREVIATIONS

NO SCALE

RSP H1 DATED JUNE 5, 2009 SUPERSEDES STANDARD PLAN H1
DATED MAY 1, 2006 - PAGE 201 OF THE STANDARD PLANS BOOK DATED MAY 2006.

REVISED STANDARD PLAN RSP H1

2006 REVISED STANDARD PLAN RSP H1

5-28-09

DIST	COUNTY	ROUTE	POST MILES TOTAL PROJECT	SHEET NO.	TOTAL SHEETS
07	LA	Var	Var	22	25

LICENSED LANDSCAPE ARCHITECT

June 5, 2009
PLANS APPROVAL DATE

The State of California or its officers or agents shall not be responsible for the accuracy or completeness of electronic copies of this plan sheet.

LICENSED LANDSCAPE ARCHITECT — Gregory A. Balzer — 2576 — Expiration Date 2-28-11 — Renewal Date — 5-14-09 — Date — STATE OF CALIFORNIA

To accompany plans dated 3-29-10

2006 REVISED STANDARD PLAN RSP H2

EXISTING	PROPOSED	ITEM DESCRIPTION
		WATER METER (WM)
		BACKFLOW PREVENTER ASSEMBLY (BPA)
		BACKFLOW PREVENTER ASSEMBLY IN ENCLOSURE (BPAE)
		BACKFLOW PREVENTER ENCLOSURE (BPE)
		BOOSTER PUMP (BP)
		TRUCK LOADING STANDPIPE (TLS)
FS	FS	FLOW SENSOR (FS)
X	X	MASTER IRRIGATION CONTROLLER (MIC)
		AUXILIARY IRRIGATION CONTROLLER (AIC)
		IRRIGATION CONTROLLER (IC)/ IRRIGATION CONTROLLER (IC) (BATTERY) IRRIGATION CONTROLLER (IC) (SOLAR)
		IRRIGATION CONTROLLER(S) IN CONTROLLER ENCLOSURE CABINET (ICC)
		CONTROL AND NEUTRAL CONDUCTORS (CNC)
SCC	SCC	SPRINKLER CONTROL CONDUIT (SCC)
		IRRIGATION CROSSOVER
		EXTEND IRRIGATION CROSSOVER
		IRRIGATION SLEEVE
dip	DIP	DUCTILE IRON PIPE (SUPPLY LINE) (MAIN) (DIP)
		GALVANIZED STEEL PIPE (SUPPLY LINE) (MAIN) (GSP)
		GALVANIZED STEEL PIPE (SUPPLY LINE) (LATERAL) (GSP)
		PLASTIC PIPE (PR 200) (SUPPLY LINE) (MAIN)
		PLASTIC PIPE (PR 200) (SUPPLY LINE) (LATERAL)
		PLASTIC PIPE (IRRIGATION LINE)
		REMOTE CONTROL VALVE (RCV) REMOTE CONTROL VALVE (MASTER) (RCVM) REMOTE CONTROL VALVE (MASTER) W/FLOW METER (RCVMF)
		MANUAL CONTROL VALVE (MCV)
		VALVE ASSEMBLY UNIT (VAU)
		WYE STRAINER (WS)
		FILTER ASSEMBLY UNIT (FAU)
		GATE VALVE (GV)
		BALL VALVE (BV)

EXISTING	PROPOSED	ITEM DESCRIPTION
		QUICK COUPLING VALVE (QCV)
		CAM COUPLER ASSEMBLY (CCA)
		PRESSURE REDUCING VALVE (PRV)
		PRESSURE RELIEF VALVE (PRLV)
		FLOW CONTROL VALVE (FCV)
		COMBINATION AIR RELEASE VALVE (CARV)
		CHECK VALVE (CV)
		FLUSH VALVE (FV)
		NOZZLE LINE W/TURNING UNION
		IRRIGATION SYSTEM
		IRRIGATION SYSTEM TO BE REMOVED
		CHAIN LINK GATE
		QUICK COUPLING VALVE W/SPRINKLER PROTECTOR
3	3	SPRINKLER W/SPRINKLER PROTECTOR
	C	CONNECT TO EXISTING SYSTEM
		CAP
		CAP EXISTING

VALVE CODE

- RCV SIZE
- IRRIGATION CONTROLLER
- CONTROLLER STATION
- VALVE IN PARALLEL (IF APPLICABLE)
- GPM
- QUANTITY OF SPRINKLERS (WHEN SHOWN)

* 2½"-A-2b-40 -60

- MCV SIZE
- VALVE NUMBER
- GPM
- QUANTITY OF TYPE SPRINKLERS (WHEN SHOWN)

* 2"-3-30 -50

* VALVE CODES FOR EXISTING VALVES ARE SHOWN IN A DASHED ENCLOSURE.

STATE OF CALIFORNIA
DEPARTMENT OF TRANSPORTATION

PLANTING AND IRRIGATION SYMBOLS

NO SCALE

RSP H2 DATED JUNE 5, 2009 SUPERSEDES RSP H2 DATED MARCH 7, 2008 AND STANDARD PLAN H2 DATED MAY 1, 2006 - PAGE 202 OF THE STANDARD PLANS BOOK DATED MAY 2006.

REVISED STANDARD PLAN RSP H2

DIST	COUNTY	ROUTE	POST MILES TOTAL PROJECT	SHEET NO.	TOTAL SHEETS
07	LA	Var	Var	23	25

LICENSED LANDSCAPE ARCHITECT

June 5, 2009
PLANS APPROVAL DATE

The State of California or its officers or agents shall not be responsible for the accuracy or completeness of electronic copies of this plan sheet.

LICENSED LANDSCAPE ARCHITECT
Gregory A. Balzer 2576
10-31-10 Expiration Date
2-28-11 Renewal Date
5-14-09 Date
STATE OF CALIFORNIA

To accompany plans dated 3-29-10

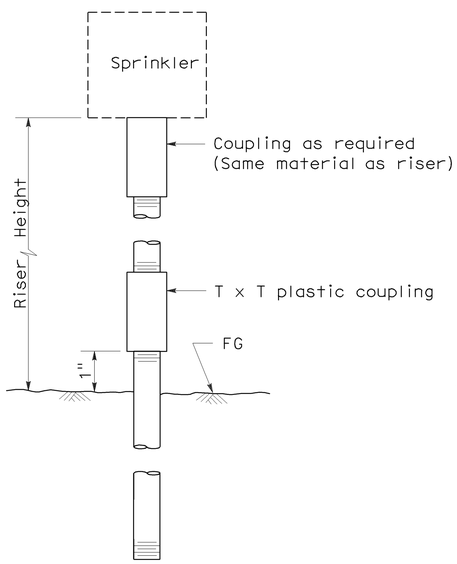

ELEVATION
RISER TYPE I

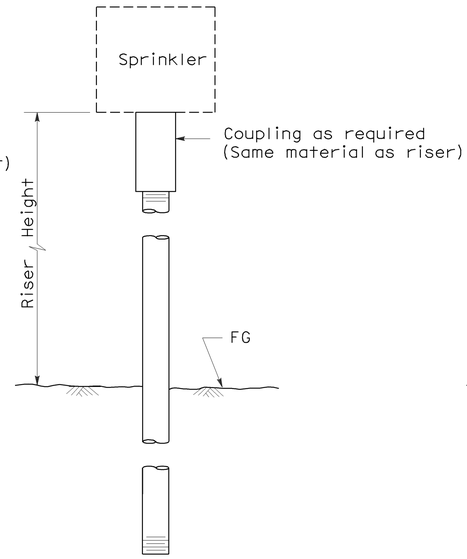

ELEVATION
RISER TYPE II

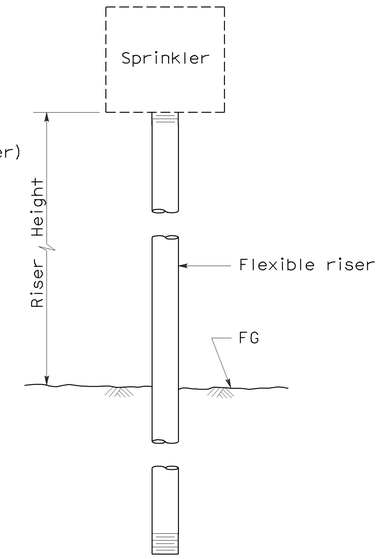

ELEVATION
RISER TYPE III

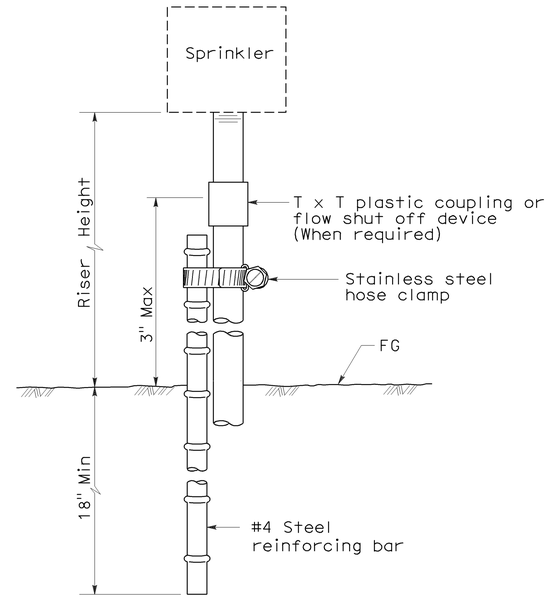

ELEVATION
RISER TYPE IV

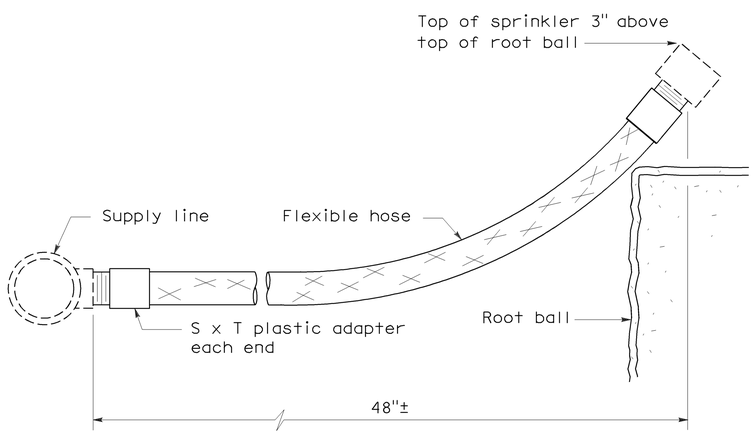

ELEVATION
RISER TYPE V

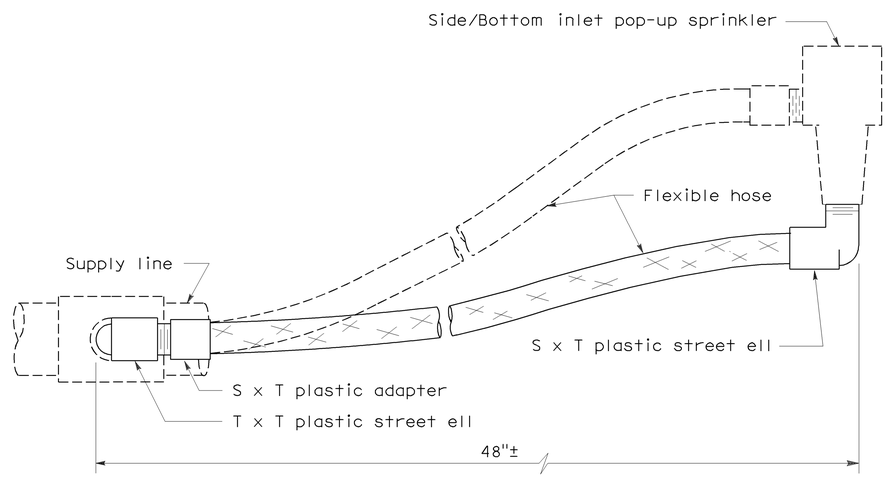

ELEVATION
RISER TYPE VI

STATE OF CALIFORNIA
DEPARTMENT OF TRANSPORTATION

PLANTING AND IRRIGATION DETAILS

NO SCALE

RSP H5 DATED JUNE 5, 2009 SUPERSEDES STANDARD PLAN H5
DATED MAY 1, 2006 - PAGE 205 OF THE STANDARD PLANS BOOK DATED MAY 2006.

REVISED STANDARD PLAN RSP H5

2006 REVISED STANDARD PLAN RSP H5

5-28-09

DIST	COUNTY	ROUTE	POST MILES TOTAL PROJECT	SHEET NO.	TOTAL SHEETS
07	LA	Var	Var	24	25

LICENSED LANDSCAPE ARCHITECT

June 5, 2009
PLANS APPROVAL DATE

Gregory A. Balzer 2576 — 10-31-11 Expiration Date — 2-28-11 Renewal Date — 5-14-09 Date — LICENSED LANDSCAPE ARCHITECT — STATE OF CALIFORNIA

The State of California or its officers or agents shall not be responsible for the accuracy or completeness of electronic copies of this plan sheet.

To accompany plans dated 3-29-10

2006 REVISED STANDARD PLAN RSP H7

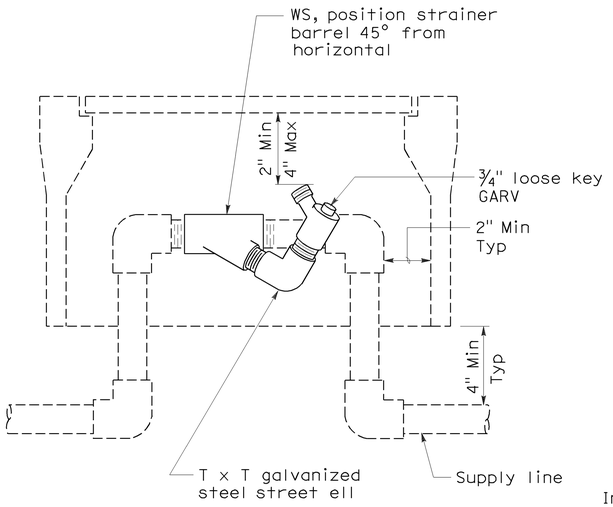

ELEVATION
WYE STRAINER

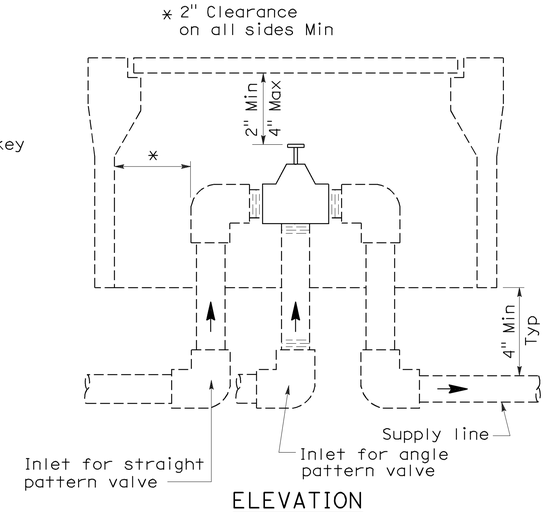

ELEVATION
VALVE

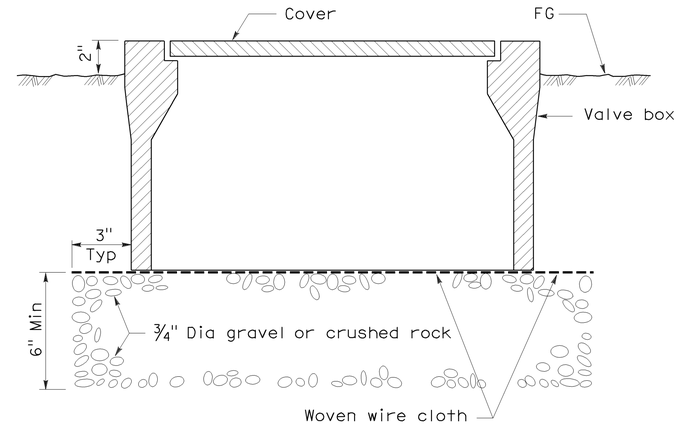

SECTION
VALVE BOX

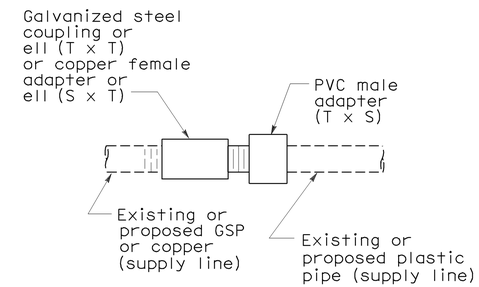

PLAN
GALVANIZED OR COPPER PIPE CONNECTION TO PLASTIC PIPE

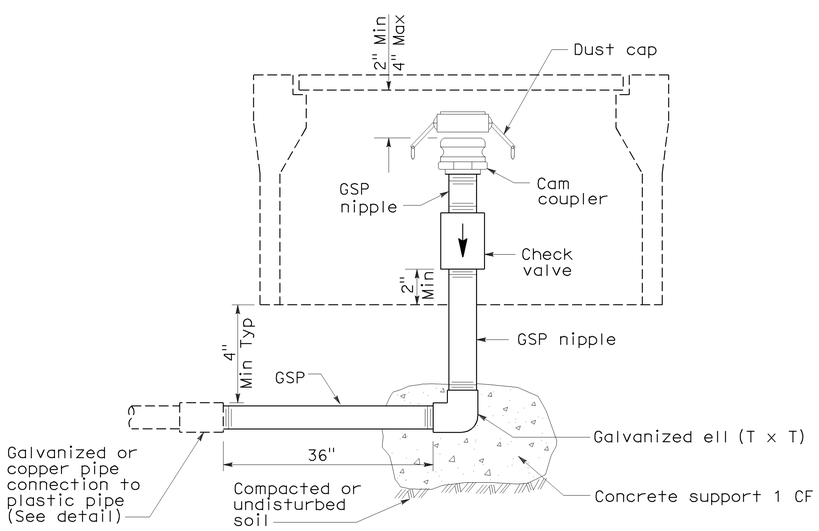

ELEVATION
CAM COUPLER ASSEMBLY

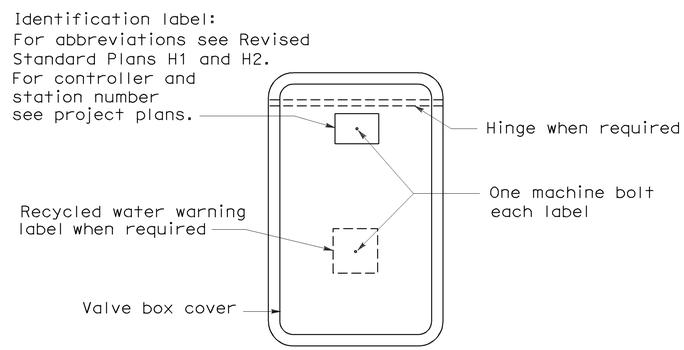

PLAN

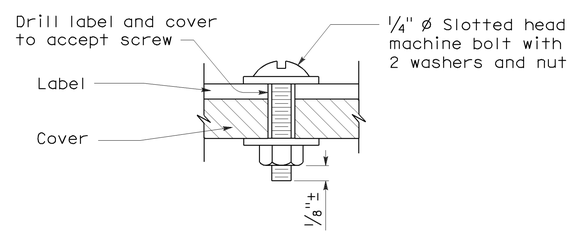

SECTION
VALVE BOX IDENTIFICATION

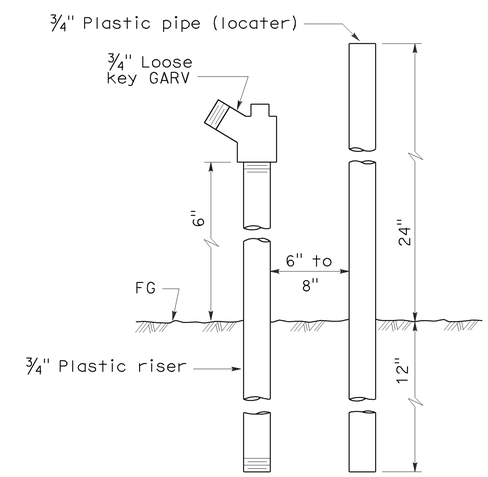

ELEVATION
FLUSH VALVE

STATE OF CALIFORNIA
DEPARTMENT OF TRANSPORTATION

PLANTING AND IRRIGATION DETAILS

NO SCALE

RSP H7 DATED JUNE 5, 2009 SUPERSEDES STANDARD PLAN H7
DATED MAY 1, 2006 - PAGE 207 OF THE STANDARD PLANS BOOK DATED MAY 2006.

REVISED STANDARD PLAN RSP H7

5-28-09

DIST	COUNTY	ROUTE	POST MILES TOTAL PROJECT	SHEET NO.	TOTAL SHEETS
07	LA	Var	Var	25	25

LICENSED LANDSCAPE ARCHITECT

June 5, 2009
PLANS APPROVAL DATE

LICENSED LANDSCAPE ARCHITECT Gregory A. Balzer 2576 STATE OF CALIFORNIA
10-31-09 Expiration Date
2-28-11 Renewal Date
5-14-09 Date

The State of California or its officers or agents shall not be responsible for the accuracy or completeness of electronic copies of this plan sheet.

To accompany plans dated 3-29-10

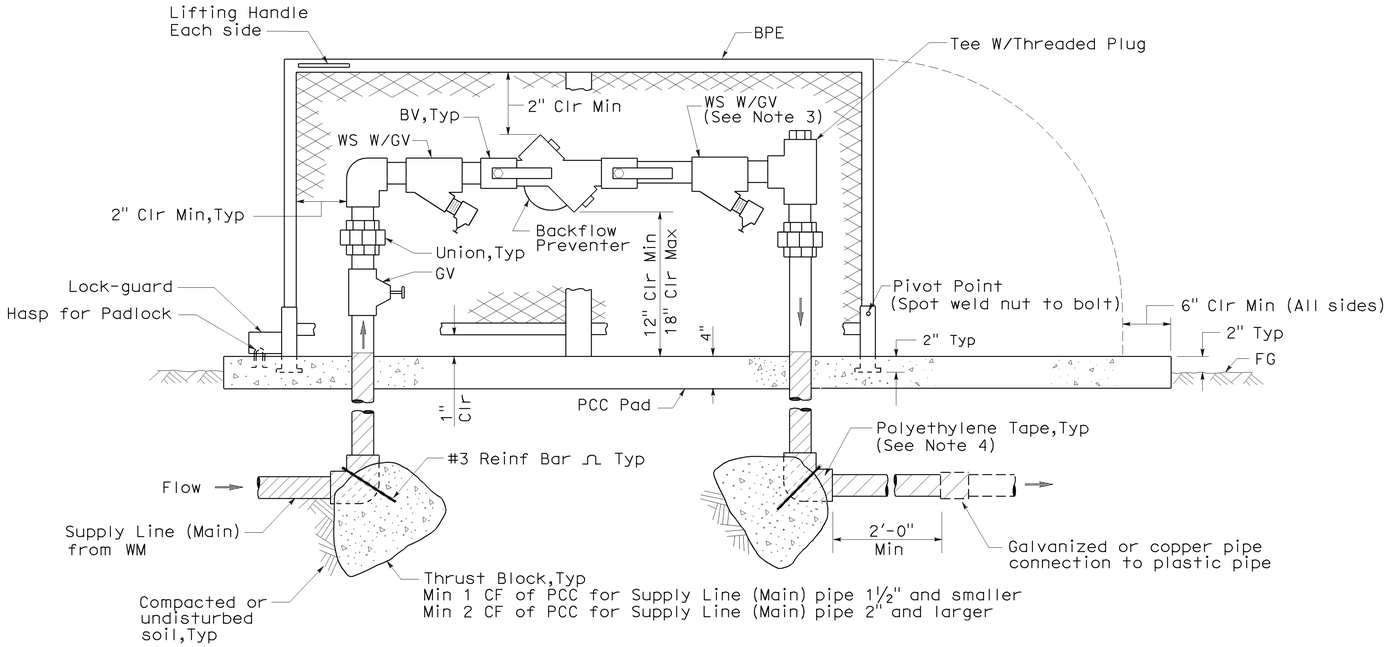

ELEVATION

BACKFLOW PREVENTER ASSEMBLY IN ENCLOSURE (ONE PIECE)

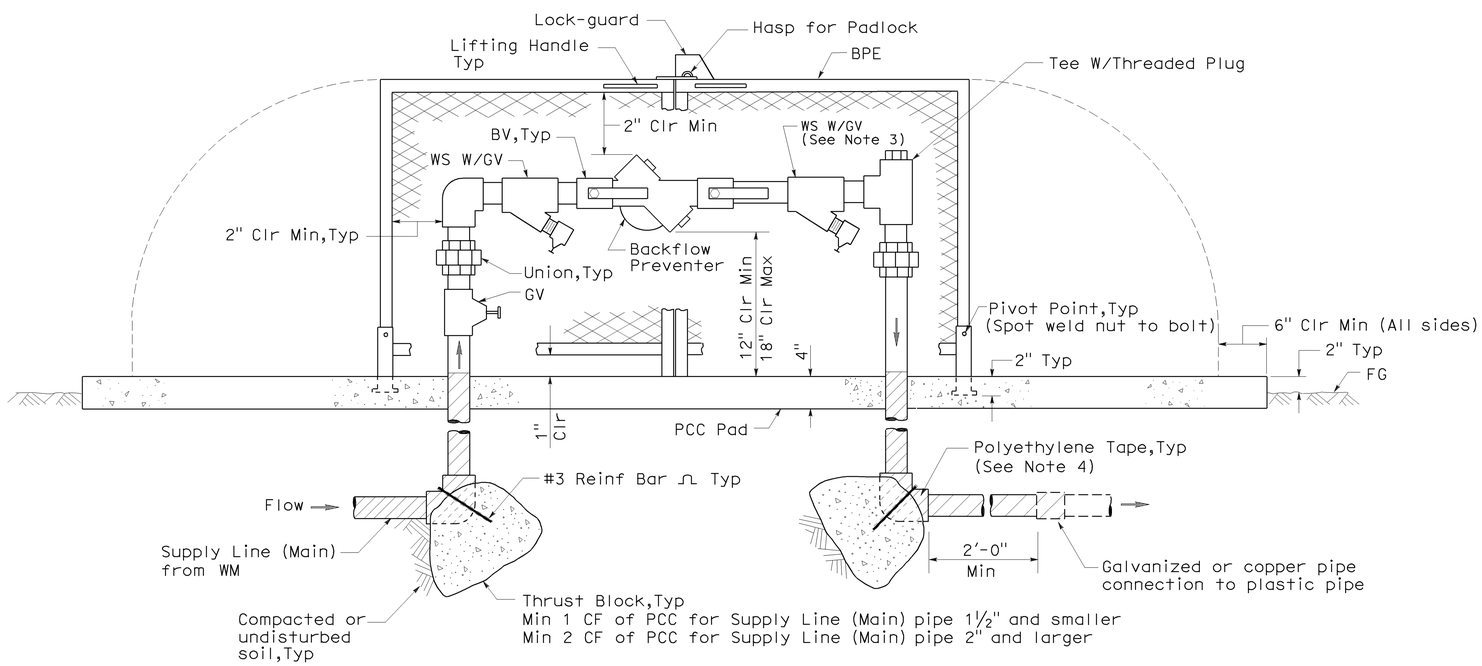

ELEVATION

BACKFLOW PREVENTER ASSEMBLY IN ENCLOSURE (TWO PIECE)

NOTES:

1. Wye strainer and fittings must be the same size as the backflow preventer shown on the plans.
2. Backflow preventer assembly manifold pipe must be the same pipe as the supply line (main) pipe to be installed from the water meter to the backflow preventer assembly.
3. Wye strainer location shown downstream of the backflow preventer is for District 11 projects only.
4. All metal in contact with soil and Portland Cement Concrete must be polyethylene wrapped using 2" wide plastic backed adhesive tape 20 mil thick with ½" overlap.

STATE OF CALIFORNIA
DEPARTMENT OF TRANSPORTATION

PLANTING AND IRRIGATION DETAILS

NO SCALE

RSP H8 DATED JUNE 5, 2009 SUPERSEDES STANDARD PLAN H8
DATED MAY 1, 2006 - PAGE 208 OF THE STANDARD PLANS BOOK DATED MAY 2006.

REVISED STANDARD PLAN RSP H8

2006 REVISED STANDARD PLAN RSP H8

5-28-09