Dist	COUNTY	ROUTE	POST MILES TOTAL PROJECT	SHEET No.	TOTAL SHEETS
07	Ven	101	14.1/21.1	1	108

STATE OF CALIFORNIA

DEPARTMENT OF TRANSPORTATION

ACNHP-Q101(270)E

PROJECT PLANS FOR CONSTRUCTION ON

STATE HIGHWAY

IN VENTURA COUNTY

IN CAMARILLO AND OXNARD AT VARIOUS LOCATIONS

FROM 0.1 MILE SOUTH OF CARMEN DRIVE OVERCROSSING

TO ROSE AVENUE OVERCROSSING

TO BE SUPPLEMENTED BY STANDARD PLANS DATED 2010

INDEX OF PLANS

SHEET No.	DESCRIPTION
1	TITLE AND LOCATION MAP
2	TYPICAL CROSS SECTIONS
3-12	LAYOUTS
13-14	CONSTRUCTION DETAILS
15-44	WATER POLLUTION CONTROL PLANS, PROFILES, DETAILS, AND QUANTITIES
45	CONTOUR GRADING
46	CONSTRUCTION AREA SIGNS
47-59	TRAFFIC HANDLING PLANS, DETAILS
60	SUMMARY OF QUANTITIES
61-91	LANDSCAPE PLANS, DETAILS AND QUANTITIES
92-108	REVISED STANDARD PLANS

THE STANDARD PLANS LIST APPLICABLE TO THIS CONTRACT IS INCLUDED IN THE NOTICE TO BIDDERS AND SPECIAL PROVISIONS BOOK.

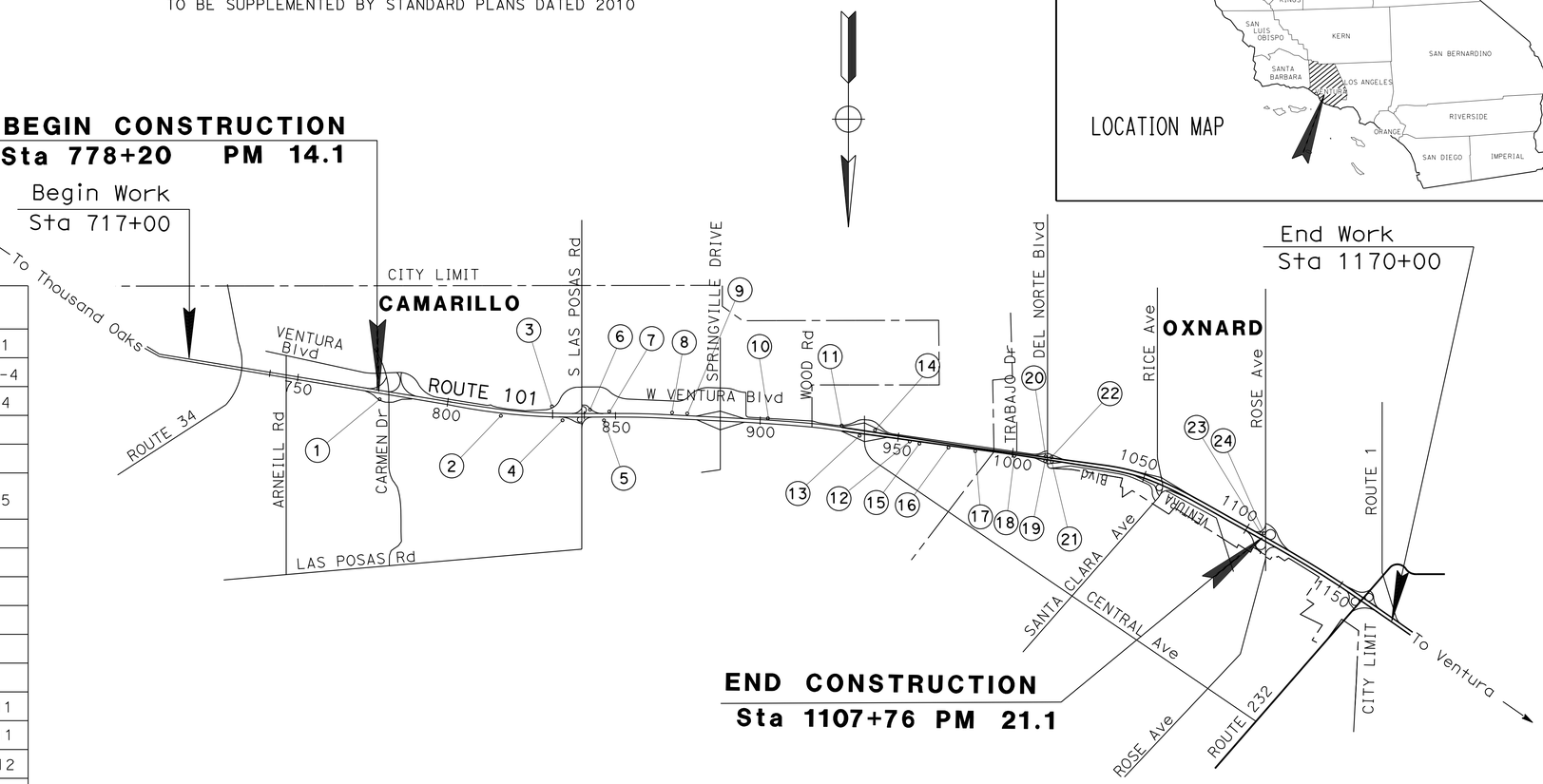

LOCATIONS OF CONSTRUCTION

Loc No. (#)	DIRECTION	DEVICE TYPE	PM	PLAN SHEET
1	NORTHBOUND	BIOFILTRATION SWALE	14.8	L-1, D-1, PP-1
2	NORTHBOUND	BIOFILTRATION STRIP	15.2-15.6	PP-2, PP-3, PP-4
3	SOUTHBOUND	BIOFILTRATION SWALE	15.7	L-3, D-2, PP-4
4	NORTHBOUND	BIOFILTRATION STRIP	15.7-15.9	PP-4
5	NORTHBOUND	BIOFILTRATION STRIP	15.9-16.1	PP-5
6	SOUTHBOUND	AUSTIN VAULT SAND FILTER	16.0	L-4, D-3, PP-5
7	SOUTHBOUND	BIOFILTRATION STRIP	15.9-16.1	PP-5, PP-6
8	SOUTHBOUND	BIOFILTRATION STRIP	16.1-16.3	PP-5, PP-6
9	SOUTHBOUND	BIOFILTRATION STRIP	16.3-16.7	PP-6, PP-7
10	SOUTHBOUND	BIOFILTRATION STRIP	17.2-17.4	PP-8, PP-9
11	SOUTHBOUND	BIOFILTRATION STRIP	17.5-17.7	PP-10
12	NORTHBOUND	BIOFILTRATION STRIP	18.1-18.3	PP-12, PP-13
13	NORTHBOUND	BIOFILTRATION SWALE	17.7	L-5, D-4, PP-11
14	SOUTHBOUND	BIOFILTRATION SWALE	17.8	L-5, D-4, PP-11
15	NORTHBOUND	BIOFILTRATION SWALE	18.1	L-6, D-5, PP-12
16	NORTHBOUND	BIOFILTRATION STRIP	18.3-18.6	PP-13, PP-14
17	NORTHBOUND	BIOFILTRATION SWALE	18.6	L-7, D-6
18	NORTHBOUND	BIOFILTRATION SWALE	18.9	L-9, D-7, PP-15
19	NORTHBOUND	BIOFILTRATION SWALE	19.1	L-10, D-8
20	SOUTHBOUND	BIOFILTRATION SWALE	19.1	L-10, D-8
21	NORTHBOUND	BIOFILTRATION SWALE	19.2	L-10, D-8
22	SOUTHBOUND	BIOFILTRATION SWALE	19.2	L-10, D-8
23	SOUTHBOUND	BIOFILTRATION SWALE	21.0	D-9
24	SOUTHBOUND	BIOFILTRATION SWALE	21.0	D-9

THE CONTRACTOR SHALL POSSESS THE CLASS (OR CLASSES) OF LICENSE AS SPECIFIED IN THE "NOTICE TO BIDDERS."

NO SCALE

PROJECT MANAGER RAVI B. GHATE

DESIGN MANAGER REFUGIO DOMINGUEZ

Refugio Dominguez 12-1-14
PROJECT ENGINEER DATE
REGISTERED CIVIL ENGINEER

REGISTERED PROFESSIONAL ENGINEER REFUGIO DOMINGUEZ No. 50820 Exp. 9-30-15 CIVIL STATE OF CALIFORNIA

February 9,2015
PLANS APPROVAL DATE

THE STATE OF CALIFORNIA OR ITS OFFICERS OR AGENTS SHALL NOT BE RESPONSIBLE FOR THE ACCURACY OR COMPLETENESS OF SCANNED COPIES OF THIS PLAN SHEET.

CONTRACT No.	07-276004
PROJECT ID	0712000100

LAST REVISION 00-00-00 DATE PLOTTED => 20-APR-2015 TIME PLOTTED => 12:54

Dist	COUNTY	ROUTE	POST MILES TOTAL PROJECT	SHEET No.	TOTAL SHEETS
07	Ven	101	14.1/21.1	2	108

REGISTERED CIVIL ENGINEER 12-1-14 DATE

2-9-15
PLANS APPROVAL DATE

REGISTERED PROFESSIONAL ENGINEER REFUGIO DOMINGUEZ No. 50820 Exp. 9-30-15 CIVIL STATE OF CALIFORNIA

THE STATE OF CALIFORNIA OR ITS OFFICERS OR AGENTS SHALL NOT BE RESPONSIBLE FOR THE ACCURACY OR COMPLETENESS OF SCANNED COPIES OF THIS PLAN SHEET.

NOTE:

1. DIMENSIONS OF THE PAVEMENT STRUCTURES (STRUCTURAL SECTIONS) ARE SUBJECT TO TOLERANCES SPECIFIED IN THE STANDARD SPECIFICATIONS.

PROPOSED STRUCTURAL SECTIONS

[1] 0.40′ HOT MIX ASPHALT (TYPE A)
0.40′ LEAN CONCRETE BASE
0.65′ CLASS 3 AGGREGATE BASE

[2] 0.35′ HOT MIX ASPHALT (TYPE A)
0.65′ CEMENT TREATED BASE (PLANT-MIXED, CLASS A)
0.30′ CLASS 3 AGGREGATE BASE
0.85′ CLASS 4 AGGREGATE SUBBASE

EXISTING STRUCTURAL SECTIONS

[A] 0.35′ TYPE B ASPHALT CONCRETE
0.65′ CLASS A CEMENT TREATED BASE
0.30′ CLASS 3 AGGREGATE BASE
0.85′ CLASS 4 AGGREGATE SUBBASE

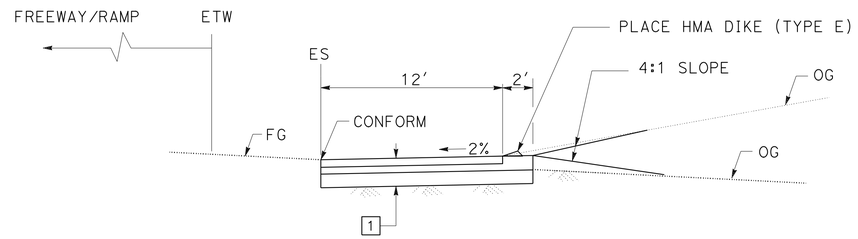

MAINTENANCE VEHICLE PULLOUT (MVP)

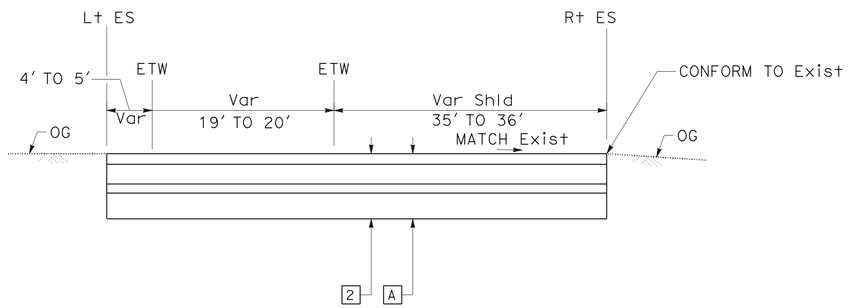

LAS POSAS Rd SB ON RAMP

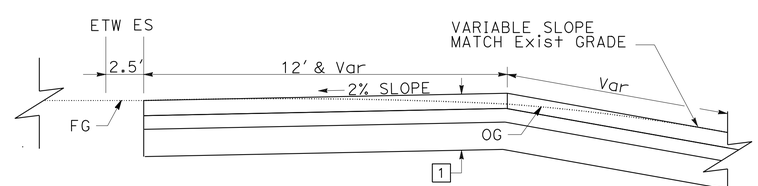

AUSTIN VAULT SAND FILTER ACCESS AREA

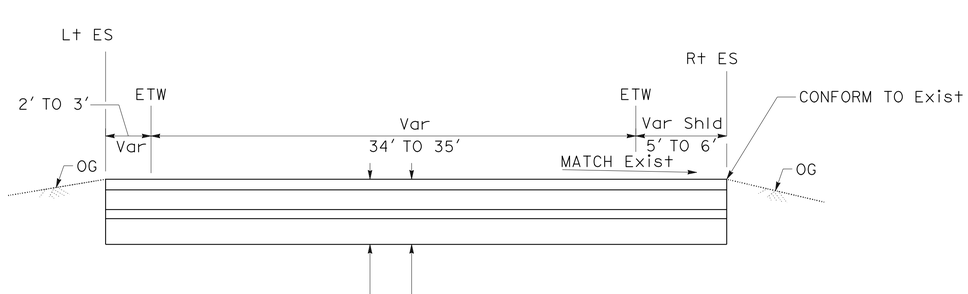

LAS POSAS Rd SB OFF RAMP

TYPICAL CROSS SECTIONS

NO SCALE

X-1

STATE OF CALIFORNIA - DEPARTMENT OF TRANSPORTATION
Caltrans® DESIGN

FUNCTIONAL SUPERVISOR: KAREN FONG
CALCULATED-DESIGNED BY: MOHAMMAD MOHSENZADEH
CHECKED BY: REFUGIO DOMINGUEZ
REVISED BY / DATE REVISED

LAST REVISION 00-00-00
DATE PLOTTED => 20-APR-2015
TIME PLOTTED => 12:54

Dist	COUNTY	ROUTE	POST MILES TOTAL PROJECT	SHEET No.	TOTAL SHEETS
07	Ven	101	14.1/21.1	3	108

REGISTERED CIVIL ENGINEER 12-1-14 DATE

2-9-15
PLANS APPROVAL DATE

REGISTERED PROFESSIONAL ENGINEER REFUGIO DOMINGUEZ No. 50820 Exp. 9-30-15 CIVIL STATE OF CALIFORNIA

THE STATE OF CALIFORNIA OR ITS OFFICERS OR AGENTS SHALL NOT BE RESPONSIBLE FOR THE ACCURACY OR COMPLETENESS OF SCANNED COPIES OF THIS PLAN SHEET.

NOTES:

1. EXISTING UTILITY FACILITIES HAVE NOT BEEN INCLUDED ON THESE PLANS.
2. FOR ACCURATE RIGHT OF WAY DATA, CONTACT RIGHT OF WAY ENGINEERING AT THE DISTRICT OFFICE.

LEGEND:

AVSF - AUSTIN VAULT SAND FILTER

ACCESS AREA

DITCH EXCAVATION

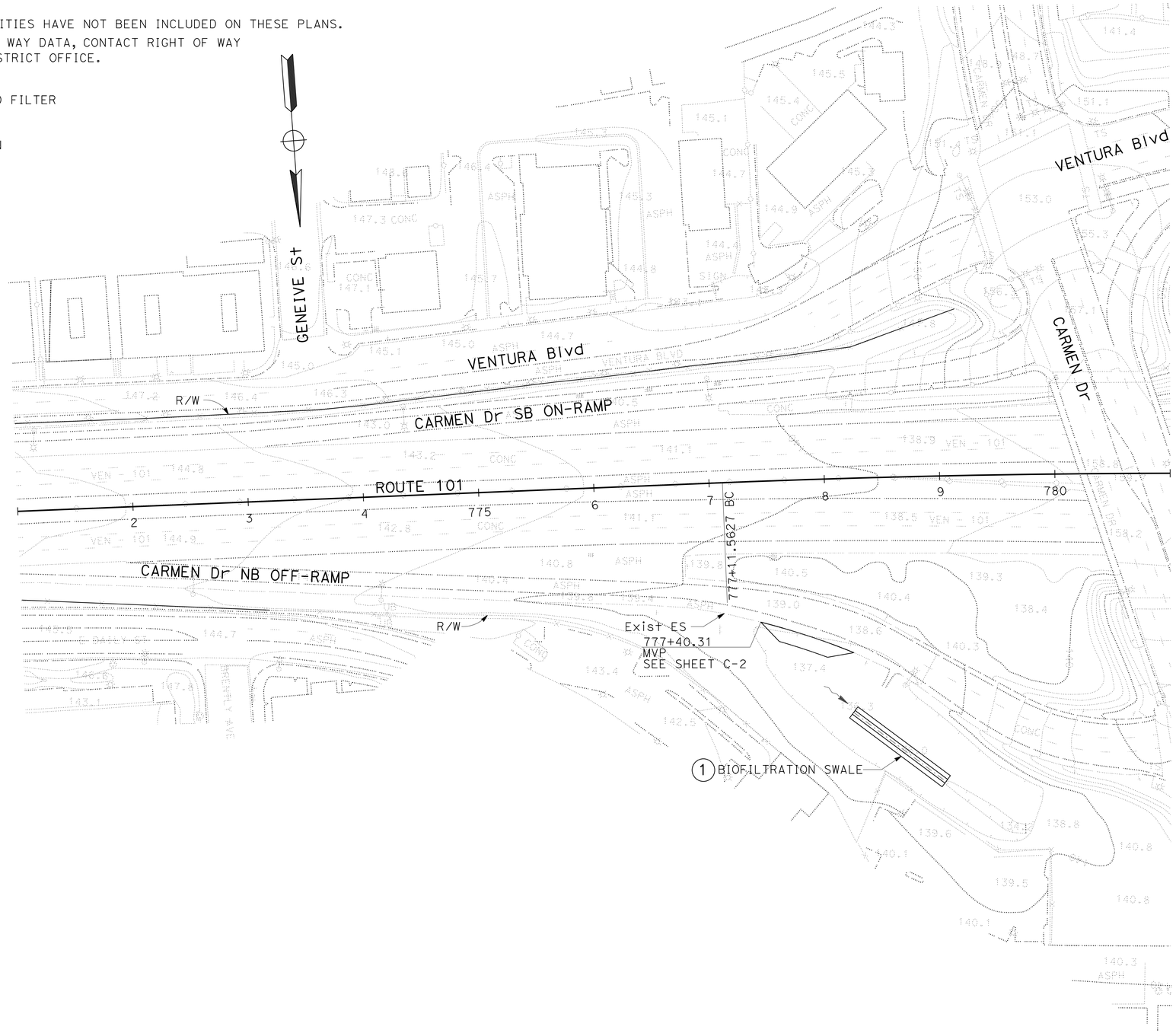

LOCATION No. 1

LAYOUT

SCALE: 1" = 50'

L-1

STATE OF CALIFORNIA - DEPARTMENT OF TRANSPORTATION

Caltrans

DESIGN

FUNCTIONAL SUPERVISOR: KAREN FONG

CALCULATED-DESIGNED BY: MOHAMMAD MOHSENZADEH

CHECKED BY: REFUGIO DOMINGUEZ

REVISED BY

DATE REVISED

LAST REVISION 00-00-00

DATE PLOTTED => 20-APR-2015
TIME PLOTTED => 12:54

Dist	COUNTY	ROUTE	POST MILES TOTAL PROJECT	SHEET No.	TOTAL SHEETS
07	Ven	101	14.1/21.1	4	108

REGISTERED CIVIL ENGINEER 12-1-14 DATE

2-9-15
PLANS APPROVAL DATE

REGISTERED PROFESSIONAL ENGINEER
REFUGIO DOMINGUEZ
No. 50820
Exp. 9-30-15
CIVIL
STATE OF CALIFORNIA

THE STATE OF CALIFORNIA OR ITS OFFICERS OR AGENTS SHALL NOT BE RESPONSIBLE FOR THE ACCURACY OR COMPLETENESS OF SCANNED COPIES OF THIS PLAN SHEET.

NOTES:

1. EXISTING UTILITY FACILITIES HAVE NOT BEEN INCLUDED ON THESE PLANS.
2. FOR ACCURATE RIGHT OF WAY DATA, CONTACT RIGHT OF WAY ENGINEERING AT THE DISTRICT OFFICE.

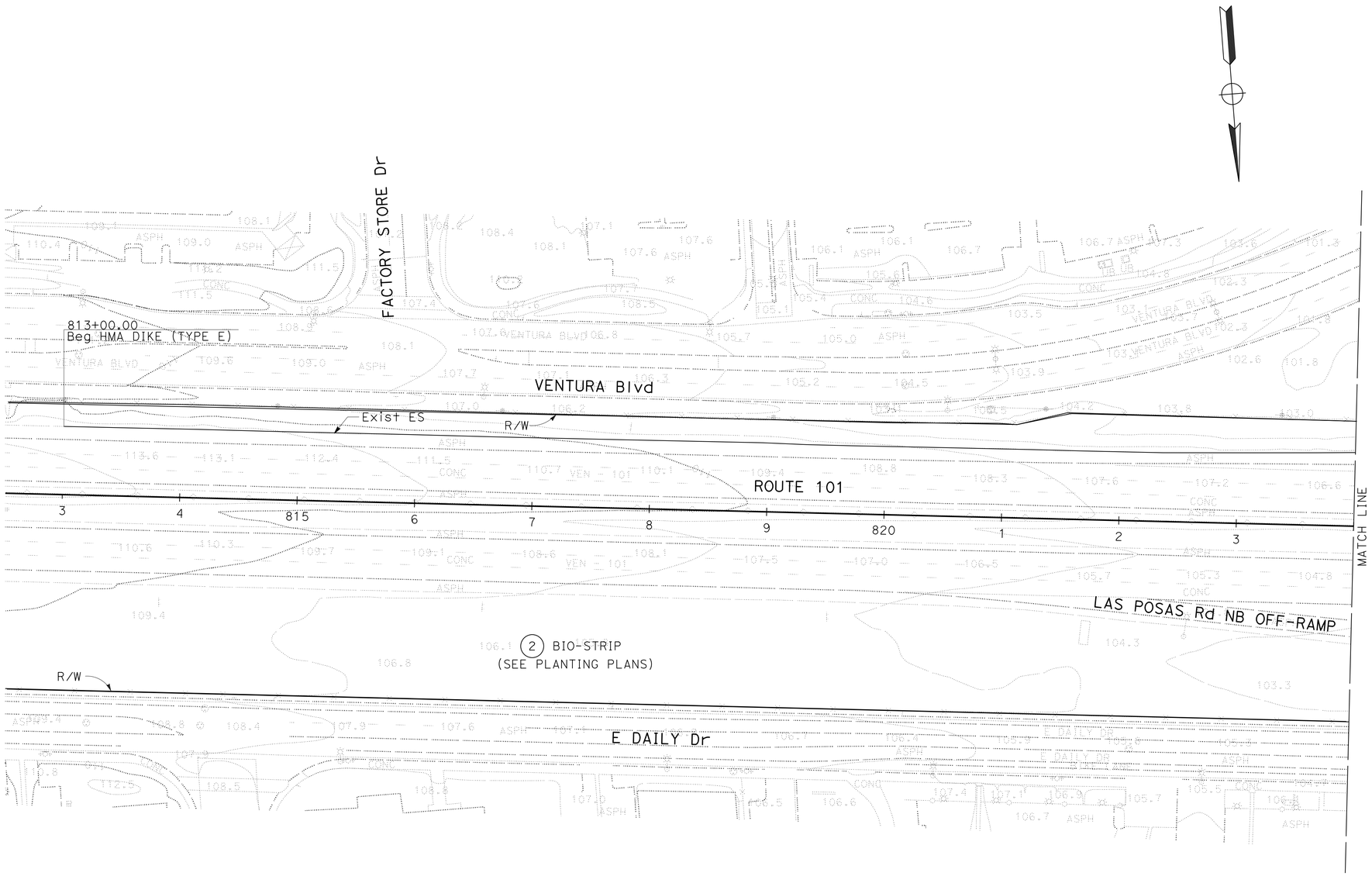

LOCATION No. 2

LAYOUT

SCALE: 1" = 50'

L-2

STATE OF CALIFORNIA - DEPARTMENT OF TRANSPORTATION
Caltrans®
DESIGN

FUNCTIONAL SUPERVISOR: KAREN FONG

CALCULATED-DESIGNED BY: MOHAMMAD MOHSENZADEH
CHECKED BY: REFUGIO DOMINGUEZ

REVISED BY
DATE REVISED

LAST REVISION 00-00-00
DATE PLOTTED => 20-APR-2015
TIME PLOTTED => 12:54

Dist	COUNTY	ROUTE	POST MILES TOTAL PROJECT	SHEET No.	TOTAL SHEETS
07	Ven	101	14.1/21.1	5	108

REGISTERED CIVIL ENGINEER 12-1-14 DATE

2-9-15
PLANS APPROVAL DATE

REGISTERED PROFESSIONAL ENGINEER REFUGIO DOMINGUEZ No. 50820 Exp. 9-30-15 CIVIL STATE OF CALIFORNIA

THE STATE OF CALIFORNIA OR ITS OFFICERS OR AGENTS SHALL NOT BE RESPONSIBLE FOR THE ACCURACY OR COMPLETENESS OF SCANNED COPIES OF THIS PLAN SHEET.

NOTES:

1. EXISTING UTILITY FACILITIES HAVE NOT BEEN INCLUDED ON THESE PLANS.
2. FOR ACCURATE RIGHT OF WAY DATA, CONTACT RIGHT OF WAY ENGINEERING AT THE DISTRICT OFFICE.

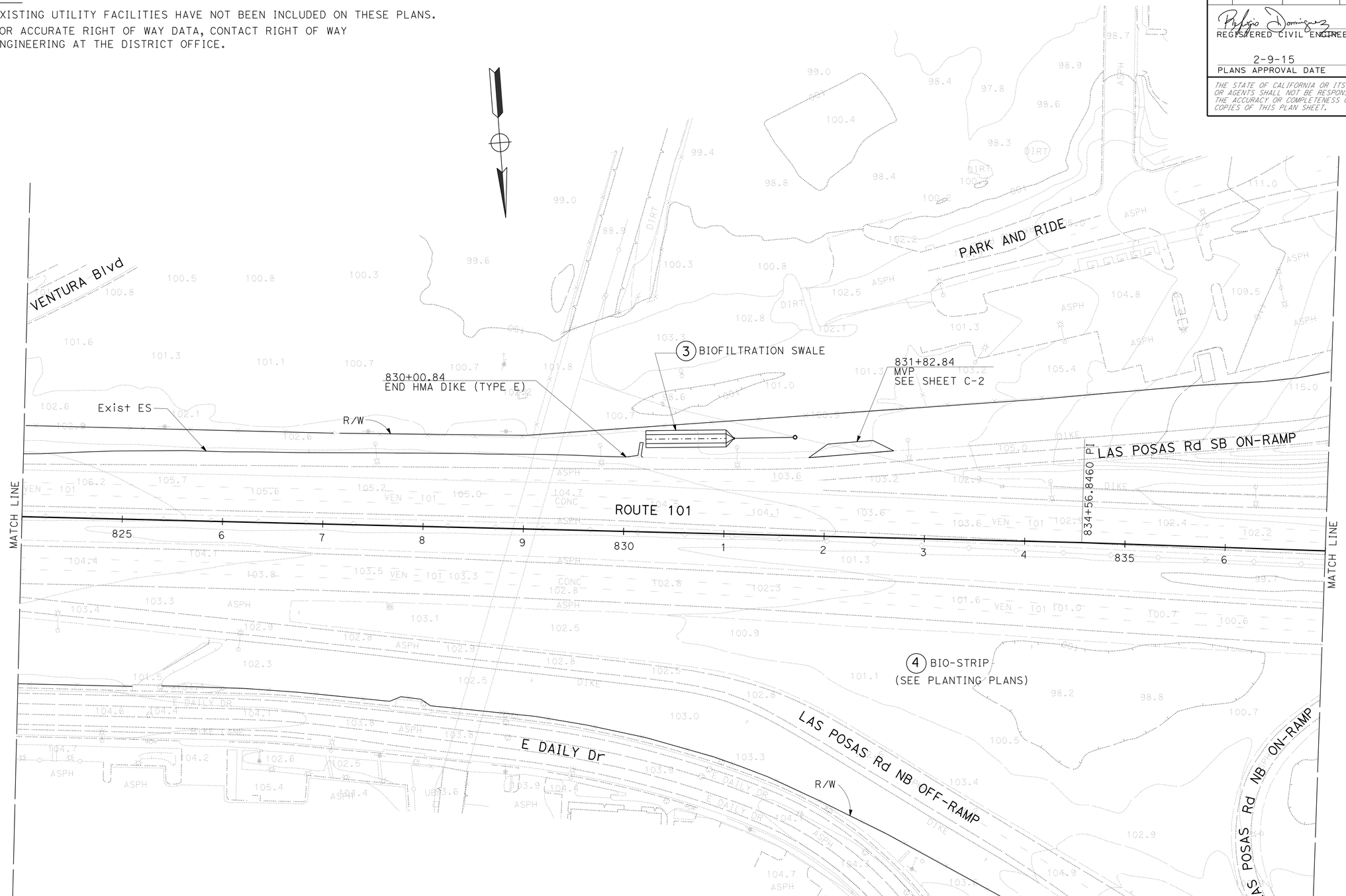

LOCATION No. 3 & 4

LAYOUT

SCALE: 1" = 50'

L-3

STATE OF CALIFORNIA - DEPARTMENT OF TRANSPORTATION
Caltrans DESIGN

FUNCTIONAL SUPERVISOR: KAREN FONG
CALCULATED-DESIGNED BY: MOHAMMAD MOHSENZADEH
CHECKED BY: REFUGIO DOMINGUEZ
REVISED BY
DATE REVISED

LAST REVISION 00-00-00
DATE PLOTTED => 20-APR-2015
TIME PLOTTED => 12:54

Dist	COUNTY	ROUTE	POST MILES TOTAL PROJECT	SHEET No.	TOTAL SHEETS
07	Ven	101	14.1/21.1	6	108

REGISTERED CIVIL ENGINEER 12-1-14 DATE

2-9-15
PLANS APPROVAL DATE

REGISTERED PROFESSIONAL ENGINEER REFUGIO DOMINGUEZ No. 50820 Exp. 9-30-15 CIVIL STATE OF CALIFORNIA

THE STATE OF CALIFORNIA OR ITS OFFICERS OR AGENTS SHALL NOT BE RESPONSIBLE FOR THE ACCURACY OR COMPLETENESS OF SCANNED COPIES OF THIS PLAN SHEET.

NOTES:

1. EXISTING UTILITY FACILITIES HAVE NOT BEEN INCLUDED ON THESE PLANS.
2. FOR ACCURATE RIGHT OF WAY DATA, CONTACT RIGHT OF WAY ENGINEERING AT THE DISTRICT OFFICE.
3. SEE SHEET C-1 AND C-2 FOR ADDITIONAL DETAILS

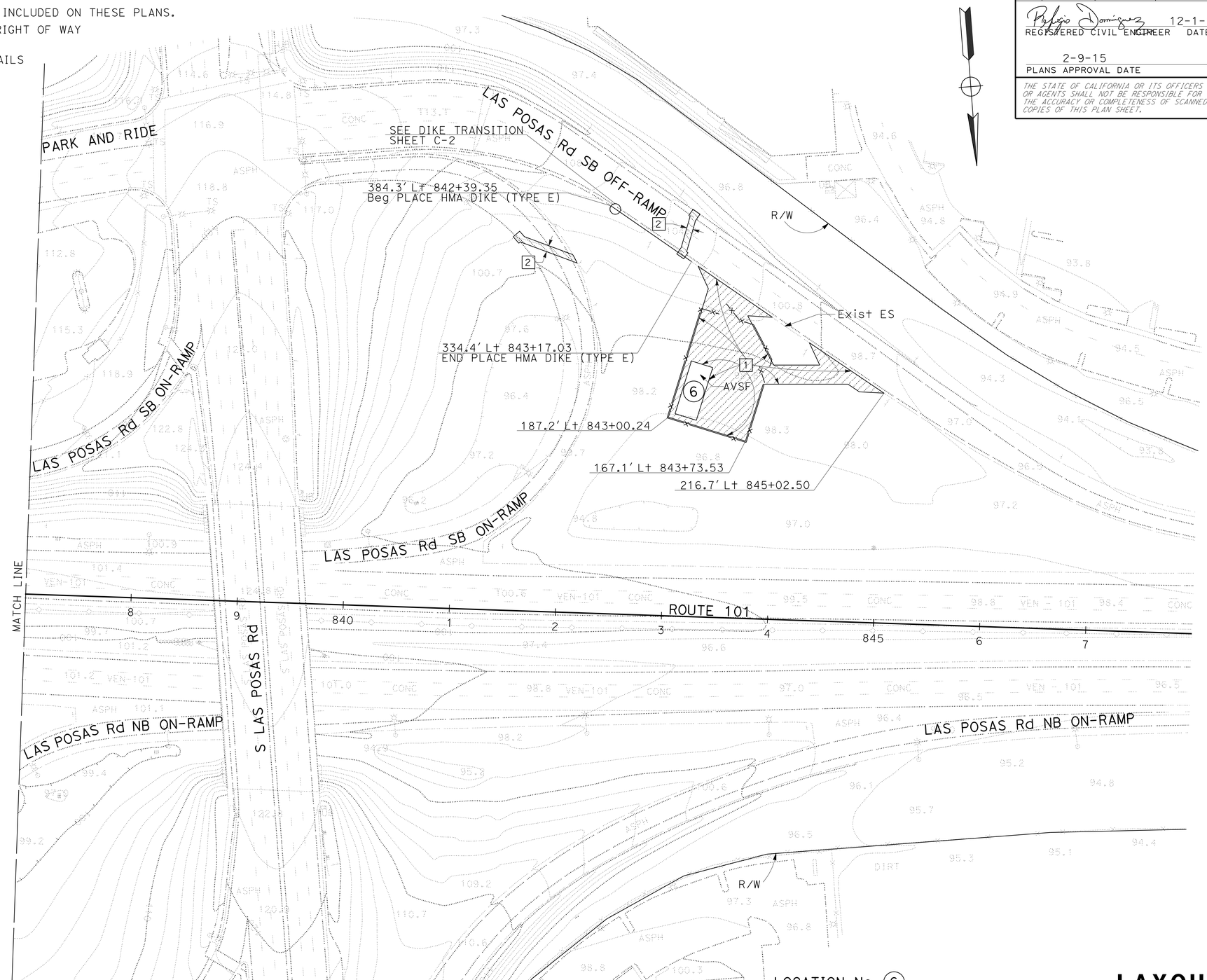

LOCATION No. 6

LAYOUT

SCALE: 1" = 50'

L-4

STATE OF CALIFORNIA - DEPARTMENT OF TRANSPORTATION
Caltrans
DESIGN

FUNCTIONAL SUPERVISOR: KAREN FONG
CALCULATED-DESIGNED BY: MOHAMMAD MOHSENZADEH
CHECKED BY: REFUGIO DOMINGUEZ
REVISED BY
DATE REVISED

LAST REVISION 00-00-00
DATE PLOTTED => 20-APR-2015
TIME PLOTTED => 12:54

Dist	COUNTY	ROUTE	POST MILES TOTAL PROJECT	SHEET No.	TOTAL SHEETS
07	Ven	101	14.1/21.1	7	108

REGISTERED CIVIL ENGINEER 12-1-14 DATE

2-9-15
PLANS APPROVAL DATE

REGISTERED PROFESSIONAL ENGINEER REFUGIO DOMINGUEZ No. 50820 Exp. 9-30-15 CIVIL STATE OF CALIFORNIA

THE STATE OF CALIFORNIA OR ITS OFFICERS OR AGENTS SHALL NOT BE RESPONSIBLE FOR THE ACCURACY OR COMPLETENESS OF SCANNED COPIES OF THIS PLAN SHEET.

NOTES:

1. EXISTING UTILITY FACILITIES HAVE NOT BEEN INCLUDED ON THESE PLANS.
2. FOR ACCURATE RIGHT OF WAY DATA, CONTACT RIGHT OF WAY ENGINEERING AT THE DISTRICT OFFICE.

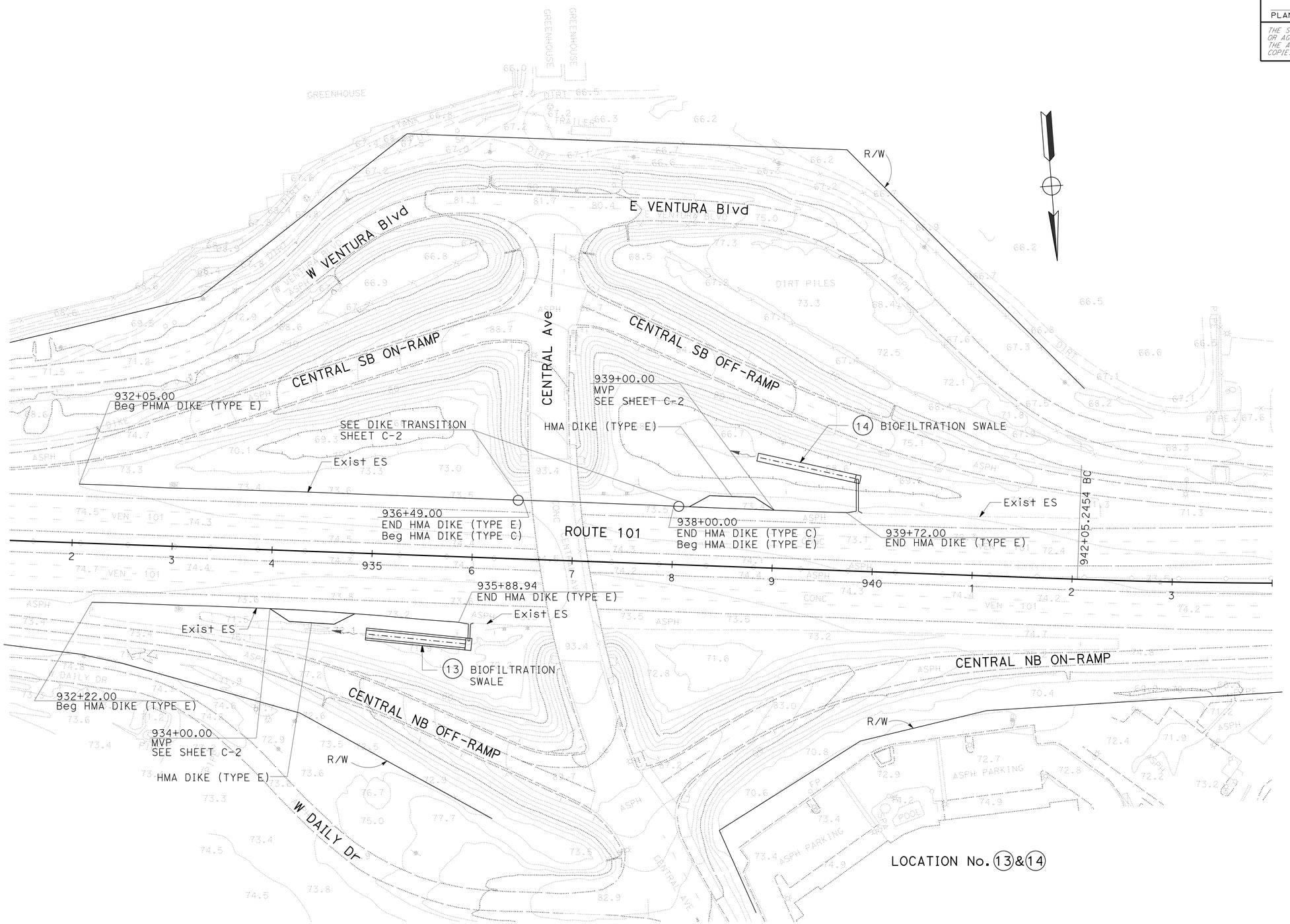

LAYOUT

SCALE: 1" = 50'

L-5

STATE OF CALIFORNIA - DEPARTMENT OF TRANSPORTATION
Caltrans
DESIGN

FUNCTIONAL SUPERVISOR: KAREN FONG
CALCULATED-DESIGNED BY: MOHAMMAD MOHSENZADEH
CHECKED BY: REFUGIO DOMINGUEZ
REVISED BY
DATE REVISED

LAST REVISION 00-00-00
DATE PLOTTED => 20-APR-2015
TIME PLOTTED => 12:54

Dist	COUNTY	ROUTE	POST MILES TOTAL PROJECT	SHEET No.	TOTAL SHEETS
07	Ven	101	14.1/21.1	8	108

REGISTERED CIVIL ENGINEER 12-1-14 DATE

2-9-15
PLANS APPROVAL DATE

REGISTERED PROFESSIONAL ENGINEER
REFUGIO DOMINGUEZ
No. 50820
Exp. 9-30-15
CIVIL
STATE OF CALIFORNIA

THE STATE OF CALIFORNIA OR ITS OFFICERS OR AGENTS SHALL NOT BE RESPONSIBLE FOR THE ACCURACY OR COMPLETENESS OF SCANNED COPIES OF THIS PLAN SHEET.

NOTES:

1. EXISTING UTILITY FACILITIES HAVE NOT BEEN INCLUDED ON THESE PLANS.
2. FOR ACCURATE RIGHT OF WAY DATA, CONTACT RIGHT OF WAY ENGINEERING AT THE DISTRICT OFFICE.

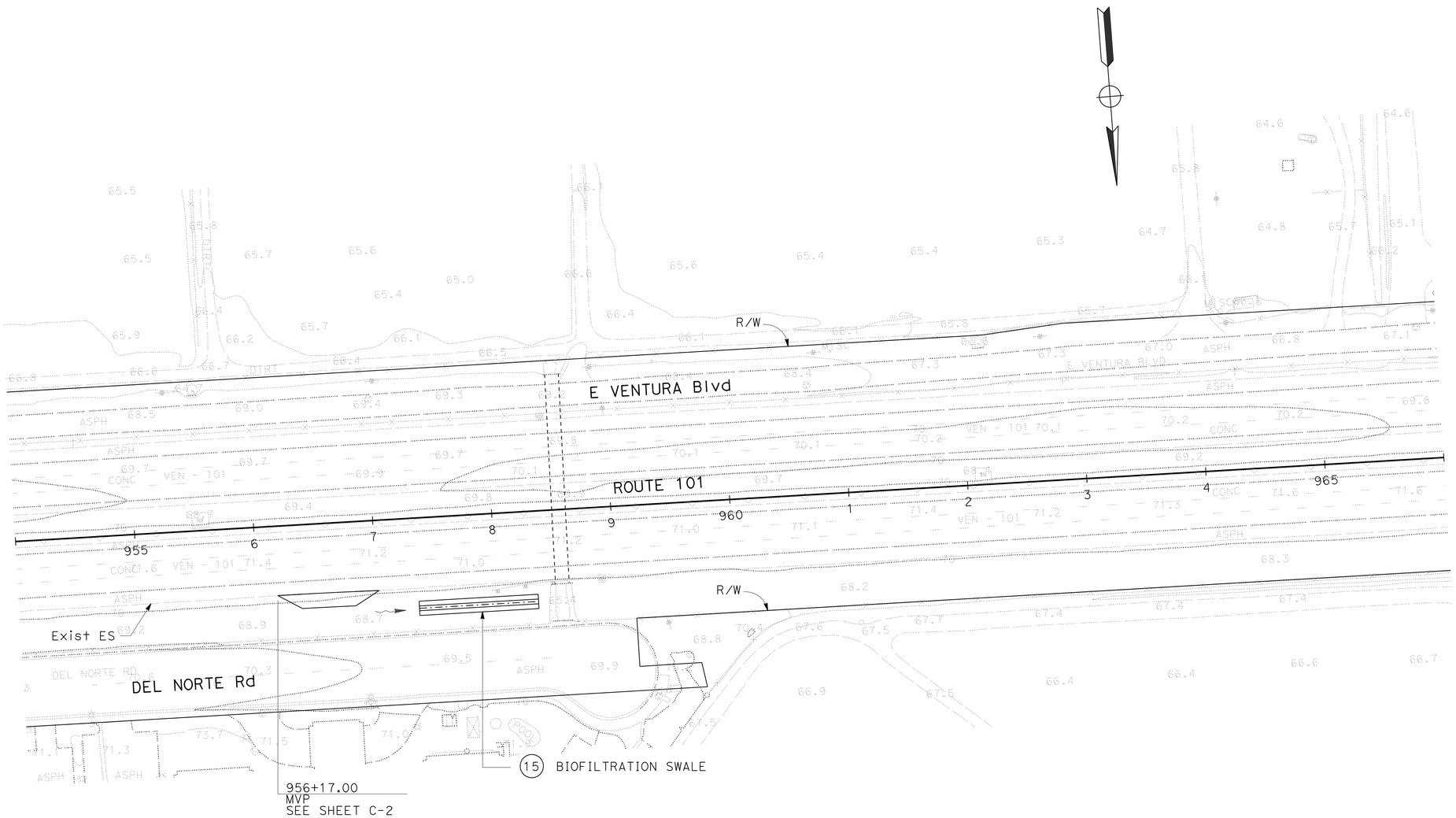

LOCATION No. 15

LAYOUT

SCALE: 1" = 50'

L-6

STATE OF CALIFORNIA - DEPARTMENT OF TRANSPORTATION
Caltrans
DESIGN

FUNCTIONAL SUPERVISOR: KAREN FONG

CALCULATED-DESIGNED BY: MOHAMMAD MOHSENZADEH
CHECKED BY: REFUGIO DOMINGUEZ

REVISED BY
DATE REVISED

LAST REVISION 00-00-00
DATE PLOTTED => 20-APR-2015
TIME PLOTTED => 12:54

Dist	COUNTY	ROUTE	POST MILES TOTAL PROJECT	SHEET No.	TOTAL SHEETS
07	Ven	101	14.1/21.1	9	108

REGISTERED CIVIL ENGINEER 12-1-14 DATE

2-9-15
PLANS APPROVAL DATE

REGISTERED PROFESSIONAL ENGINEER
REFUGIO DOMINGUEZ
No. 50820
Exp. 9-30-15
CIVIL
STATE OF CALIFORNIA

THE STATE OF CALIFORNIA OR ITS OFFICERS OR AGENTS SHALL NOT BE RESPONSIBLE FOR THE ACCURACY OR COMPLETENESS OF SCANNED COPIES OF THIS PLAN SHEET.

NOTES:

1. EXISTING UTILITY FACILITIES HAVE NOT BEEN INCLUDED ON THESE PLANS.
2. FOR ACCURATE RIGHT OF WAY DATA, CONTACT RIGHT OF WAY ENGINEERING AT THE DISTRICT OFFICE.

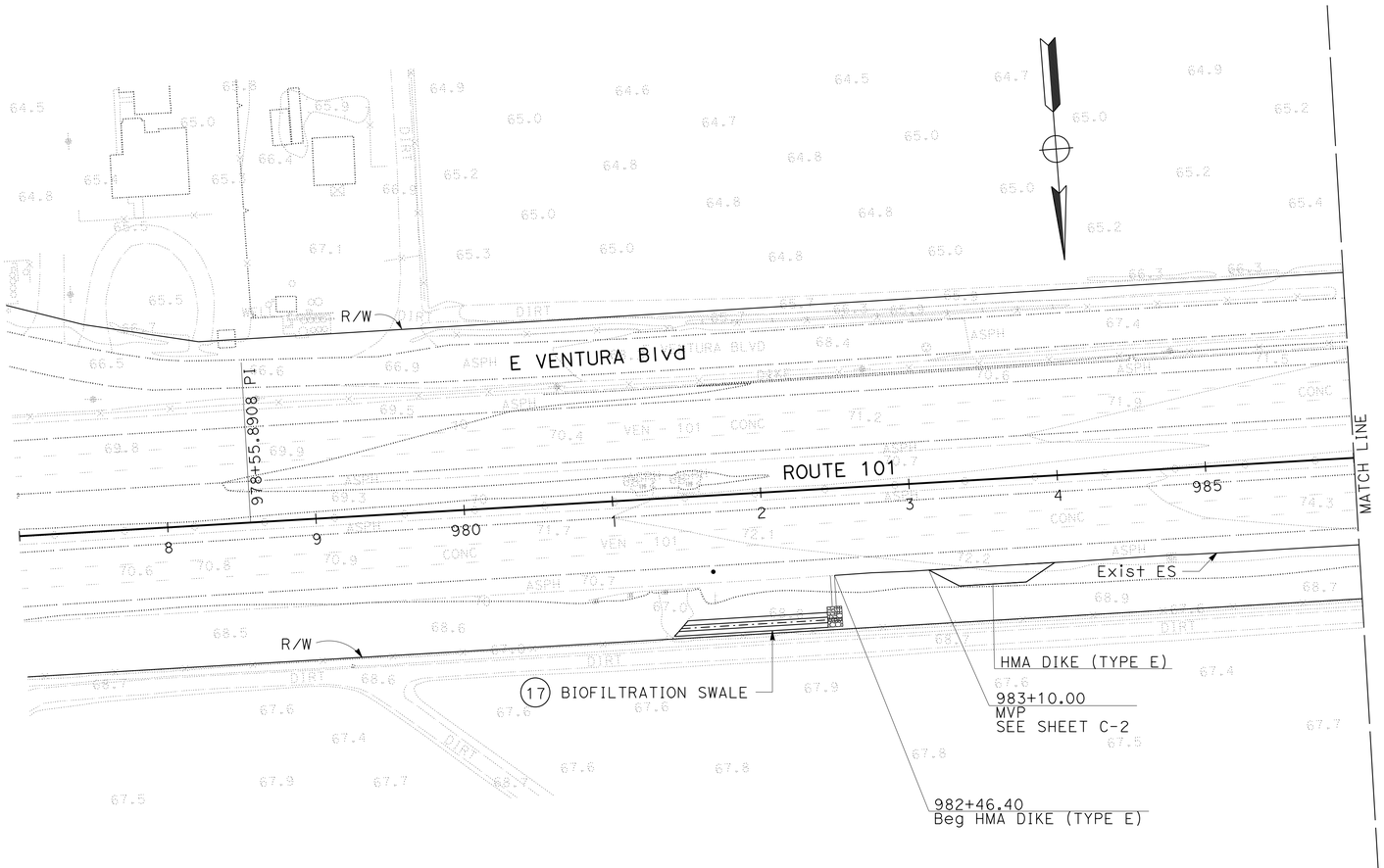

LOCATION No. 17

LAYOUT

SCALE: 1" = 50'

L-7

REVISED BY | DATE REVISED

MOHAMMAD MOHSENZADEH | REFUGIO DOMINGUEZ

CALCULATED-DESIGNED BY | CHECKED BY

FUNCTIONAL SUPERVISOR: KAREN FONG

STATE OF CALIFORNIA - DEPARTMENT OF TRANSPORTATION

Caltrans® DESIGN

LAST REVISION 00-00-00 | DATE PLOTTED => 20-APR-2015 | TIME PLOTTED => 12:54

BORDER LAST REVISED 7/2/2010 | USERNAME => s125624 | DGN FILE => 727600ea007.dgn | RELATIVE BORDER SCALE IS IN INCHES 0 1 2 3 | UNIT 1819 | PROJECT NUMBER & PHASE 07120001001

Dist	COUNTY	ROUTE	POST MILES TOTAL PROJECT	SHEET No.	TOTAL SHEETS
07	Ven	101	14.1/21.1	10	108

REGISTERED CIVIL ENGINEER 12-1-14 DATE

2-9-15
PLANS APPROVAL DATE

REGISTERED PROFESSIONAL ENGINEER
REFUGIO DOMINGUEZ
No. 50820
Exp. 9-30-15
CIVIL
STATE OF CALIFORNIA

THE STATE OF CALIFORNIA OR ITS OFFICERS OR AGENTS SHALL NOT BE RESPONSIBLE FOR THE ACCURACY OR COMPLETENESS OF SCANNED COPIES OF THIS PLAN SHEET.

NOTES:

1. EXISTING UTILITY FACILITIES HAVE NOT BEEN INCLUDED ON THESE PLANS.
2. FOR ACCURATE RIGHT OF WAY DATA, CONTACT RIGHT OF WAY ENGINEERING AT THE DISTRICT OFFICE.

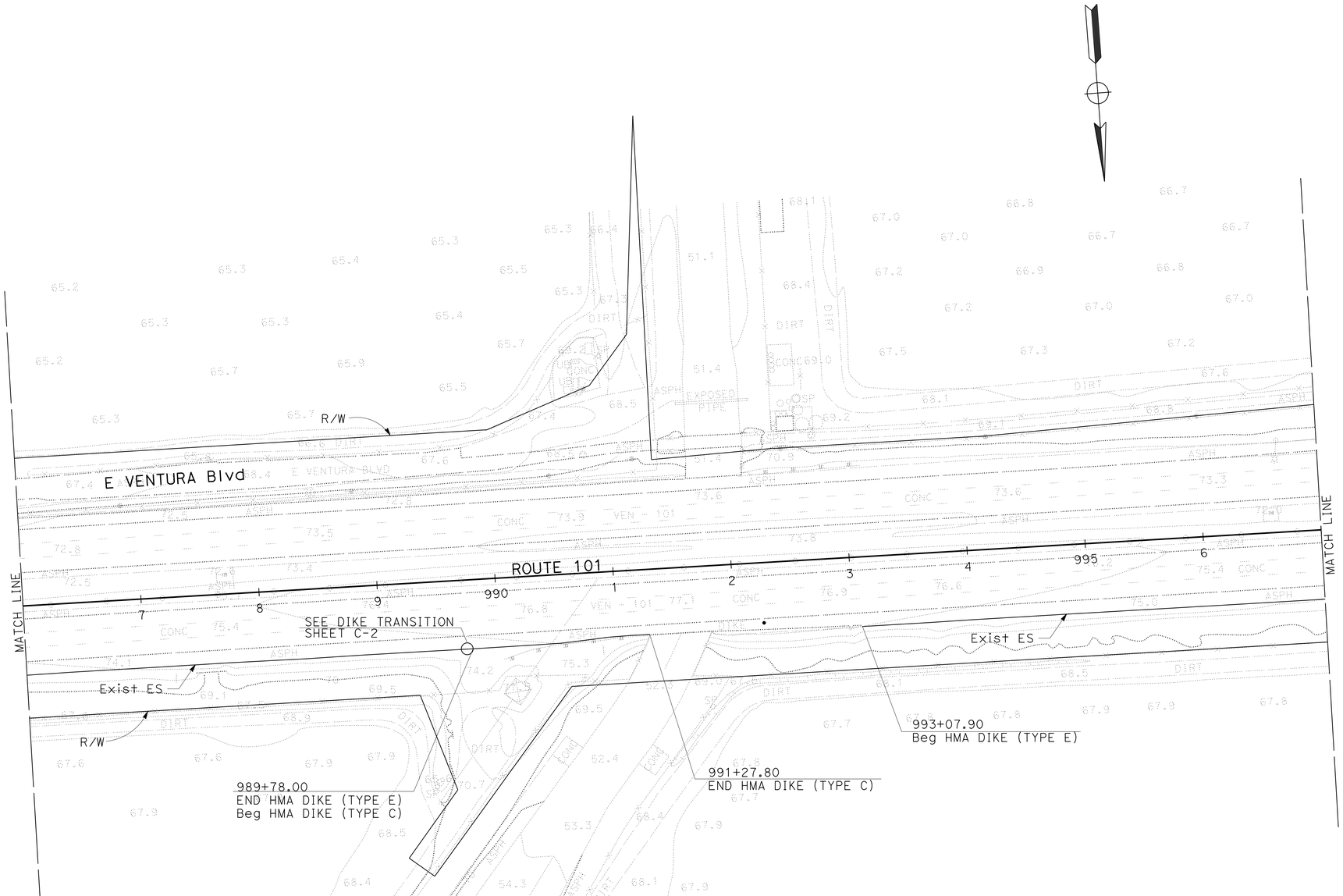

LAYOUT

SCALE: 1" = 50'

L-8

STATE OF CALIFORNIA - DEPARTMENT OF TRANSPORTATION
Caltrans
DESIGN

FUNCTIONAL SUPERVISOR: KAREN FONG
CALCULATED-DESIGNED BY: MOHAMMAD MOHSENZADEH
CHECKED BY: REFUGIO DOMINGUEZ
REVISED BY
DATE REVISED

LAST REVISION 00-00-00
DATE PLOTTED => 20-APR-2015
TIME PLOTTED => 12:54

Dist	COUNTY	ROUTE	POST MILES TOTAL PROJECT	SHEET No.	TOTAL SHEETS
07	Ven	101	14.1/21.1	11	108

REGISTERED CIVIL ENGINEER 12-1-14 DATE

2-9-15
PLANS APPROVAL DATE

REGISTERED PROFESSIONAL ENGINEER REFUGIO DOMINGUEZ No. 50820 Exp. 9-30-15 CIVIL STATE OF CALIFORNIA

THE STATE OF CALIFORNIA OR ITS OFFICERS OR AGENTS SHALL NOT BE RESPONSIBLE FOR THE ACCURACY OR COMPLETENESS OF SCANNED COPIES OF THIS PLAN SHEET.

NOTES:

1. EXISTING UTILITY FACILITIES HAVE NOT BEEN INCLUDED ON THESE PLANS.
2. FOR ACCURATE RIGHT OF WAY DATA, CONTACT RIGHT OF WAY ENGINEERING AT THE DISTRICT OFFICE.

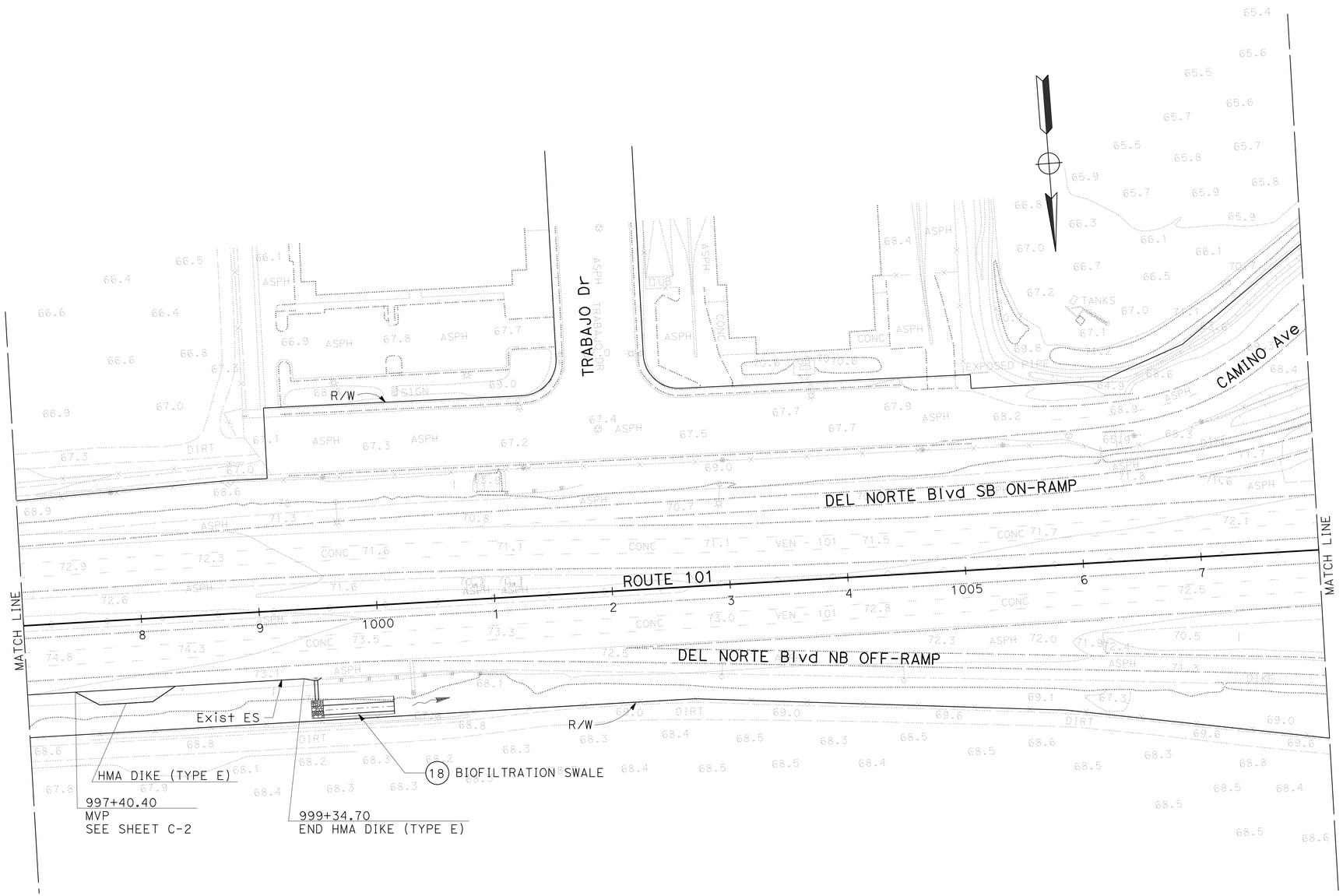

LOCATION No. 18

LAYOUT

SCALE: 1" = 50'

L-9

STATE OF CALIFORNIA - DEPARTMENT OF TRANSPORTATION

Caltrans

DESIGN

FUNCTIONAL SUPERVISOR: KAREN FONG

CALCULATED-DESIGNED BY: MOHAMMAD MOHSENZADEH

CHECKED BY: REFUGIO DOMINGUEZ

REVISED BY

DATE REVISED

LAST REVISION 00-00-00

DATE PLOTTED => 20-APR-2015

TIME PLOTTED => 12:54

Dist	COUNTY	ROUTE	POST MILES TOTAL PROJECT	SHEET No.	TOTAL SHEETS
07	Ven	101	14.1/21.1	12	108

REGISTERED CIVIL ENGINEER 12-1-14 DATE

2-9-15
PLANS APPROVAL DATE

REGISTERED PROFESSIONAL ENGINEER REFUGIO DOMINGUEZ No. 50820 Exp. 9-30-15 CIVIL STATE OF CALIFORNIA

THE STATE OF CALIFORNIA OR ITS OFFICERS OR AGENTS SHALL NOT BE RESPONSIBLE FOR THE ACCURACY OR COMPLETENESS OF SCANNED COPIES OF THIS PLAN SHEET.

NOTES:

1. EXISTING UTILITY FACILITIES HAVE NOT BEEN INCLUDED ON THESE PLANS.
2. FOR ACCURATE RIGHT OF WAY DATA, CONTACT RIGHT OF WAY ENGINEERING AT THE DISTRICT OFFICE.

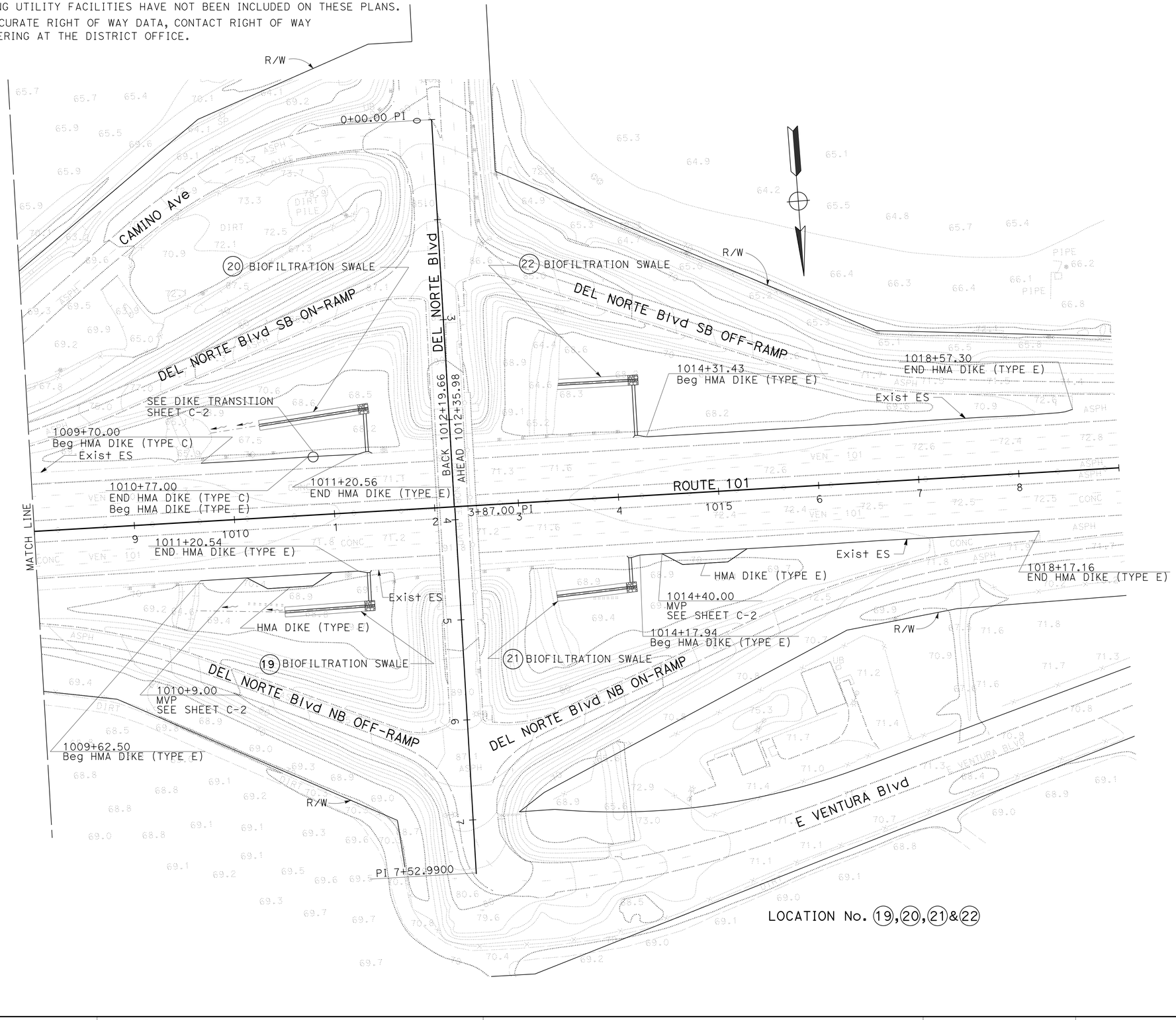

LOCATION No. 19, 20, 21 & 22

LAYOUT

SCALE: 1" = 50'

L-10

REVISED BY	DATE REVISED

CALCULATED-DESIGNED BY	CHECKED BY
MOHAMMAD MOHSENZADEH	REFUGIO DOMINGUEZ

FUNCTIONAL SUPERVISOR: KAREN FONG

STATE OF CALIFORNIA - DEPARTMENT OF TRANSPORTATION

Caltrans

DESIGN

LAST REVISION 00-00-00 | DATE PLOTTED => 20-APR-2015 | TIME PLOTTED => 12:54

Dist	COUNTY	ROUTE	POST MILES TOTAL PROJECT	SHEET No.	TOTAL SHEETS
07	Ven	101	14.1/21.1	13	108

REGISTERED CIVIL ENGINEER 9-8-14 DATE

2-9-15
PLANS APPROVAL DATE

REGISTERED PROFESSIONAL ENGINEER REFUGIO DOMINGUEZ No. 50820 Exp. 9-30-15 CIVIL STATE OF CALIFORNIA

THE STATE OF CALIFORNIA OR ITS OFFICERS OR AGENTS SHALL NOT BE RESPONSIBLE FOR THE ACCURACY OR COMPLETENESS OF SCANNED COPIES OF THIS PLAN SHEET.

NOTES:

1. EXISTING UTILITY FACILITIES ARE NOT INCLUDED ON THESE PLANS.
2. FOR ACCURATE RIGHT OF WAY DATA, CONTACT RIGHT OF WAY ENGINEERING AT THE DISTRICT OFFICE.

LEGEND:

AVSF - AUSTIN VAULT SAND FILTER

ACCESS AREA

[1] - 0.40' HOT MIX ASPHALT (TYPE A)
0.40' LEAN CONCRETE BASE
0.65' CLASS 3 AGGREGATE BASE

DITCH EXCAVATION

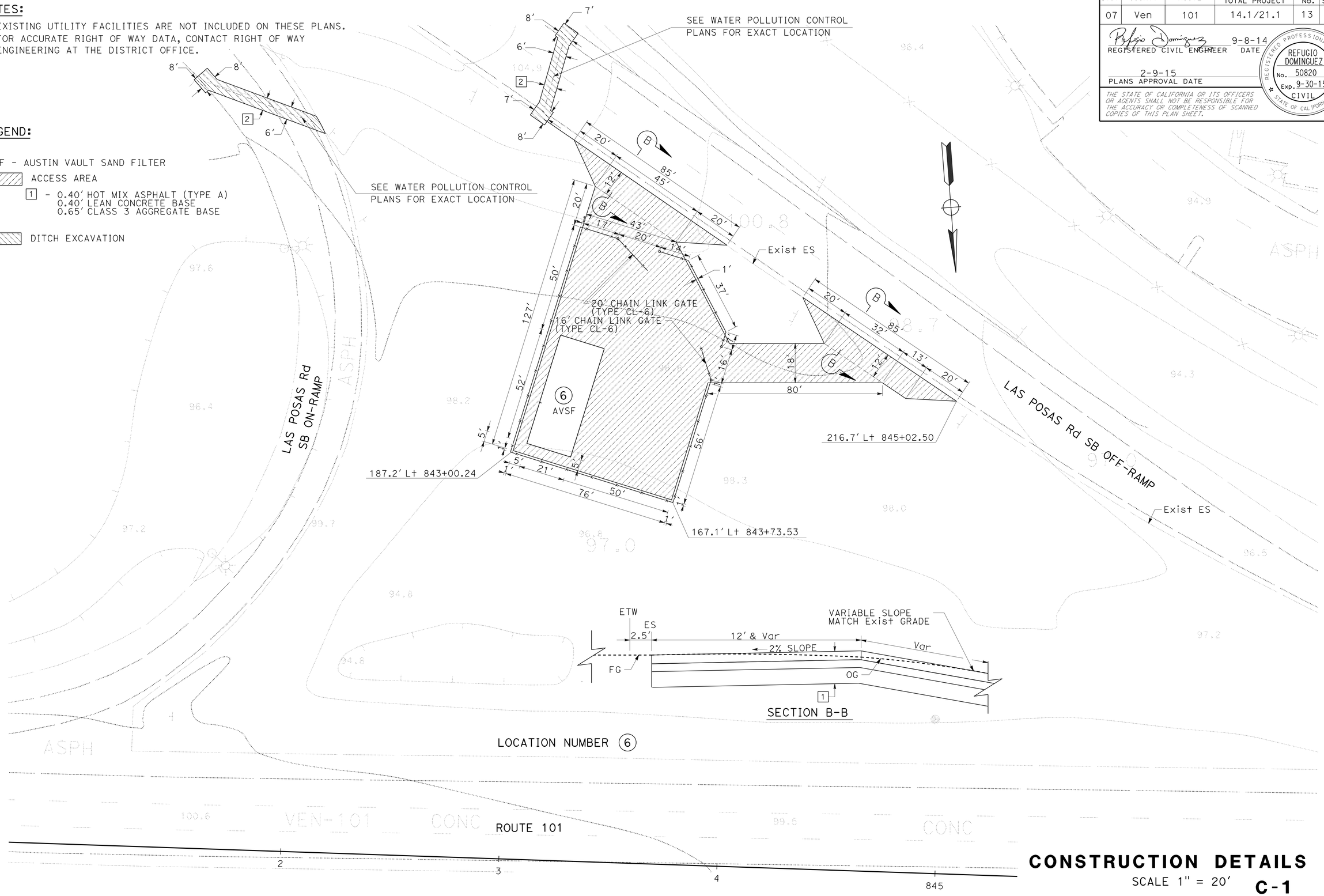

CONSTRUCTION DETAILS

SCALE 1" = 20'

C-1

STATE OF CALIFORNIA - DEPARTMENT OF TRANSPORTATION

DESIGN

FUNCTIONAL SUPERVISOR: KAREN FONG

CALCULATED-DESIGNED BY: MOHAMMAD MOHSENZADEH

CHECKED BY: REFUGIO DOMINGUEZ

REVISED BY

DATE REVISED

LAST REVISION 00-00-00

DATE PLOTTED => 20-APR-2015
TIME PLOTTED => 12:54

Dist	COUNTY	ROUTE	POST MILES TOTAL PROJECT	SHEET No.	TOTAL SHEETS
07	Ven	101	14.1/21.1	14	108

REGISTERED CIVIL ENGINEER 12-1-14 DATE

2-9-15
PLANS APPROVAL DATE

REGISTERED PROFESSIONAL ENGINEER
REFUGIO DOMINGUEZ
No. 50820
Exp. 9-30-15
CIVIL
STATE OF CALIFORNIA

THE STATE OF CALIFORNIA OR ITS OFFICERS OR AGENTS SHALL NOT BE RESPONSIBLE FOR THE ACCURACY OR COMPLETENESS OF SCANNED COPIES OF THIS PLAN SHEET.

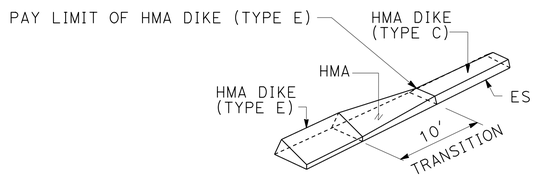

HMA DIKE (TYPE E) TO HMA DIKE (TYPE C)

DIKE TRANSITION

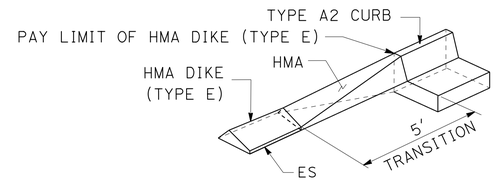

HMA DIKE (TYPE E) TO TYPE A2 CURB

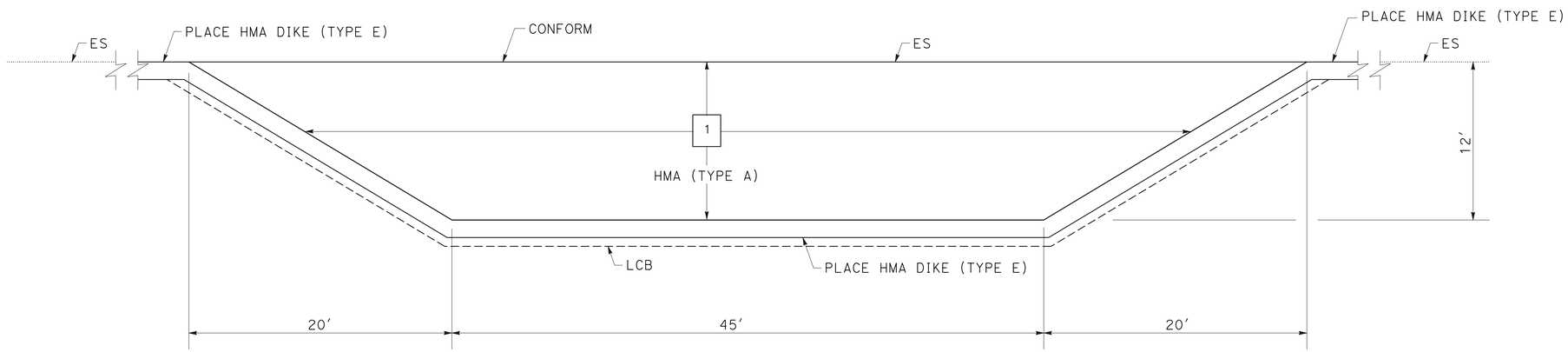

PLAN

CONSTRUCTION DETAILS

NO SCALE

C-2

STATE OF CALIFORNIA - DEPARTMENT OF TRANSPORTATION
Caltrans DESIGN

FUNCTIONAL SUPERVISOR: KAREN FONG

CALCULATED-DESIGNED BY: MOHAMMAD MOHSENZADEH
CHECKED BY: REFUGIO DOMINGUEZ

REVISED BY | DATE REVISED

LAST REVISION 00-00-00 | DATE PLOTTED => 20-APR-2015 | TIME PLOTTED => 12:54

Dist	COUNTY	ROUTE	POST MILES TOTAL PROJECT	SHEET No.	TOTAL SHEETS
07	Ven	101	14.1/21.1	15	108

REGISTERED CIVIL ENGINEER 11-17-14 DATE

2-9-15
PLANS APPROVAL DATE

REGISTERED PROFESSIONAL ENGINEER SA K. THAI No. 71390 Exp. 12/31/15 CIVIL STATE OF CALIFORNIA

THE STATE OF CALIFORNIA OR ITS OFFICERS OR AGENTS SHALL NOT BE RESPONSIBLE FOR THE ACCURACY OR COMPLETENESS OF SCANNED COPIES OF THIS PLAN SHEET.

NOTES:

1. FOR ACCURATE RIGHT OF WAY DATA, CONTACT RIGHT OF WAY ENGINEER AT THE DISTRICT OFFICE.
2. CONTRACTOR SHALL VERIFY ELEVATIONS OF PROPOSED DRAINAGE WORK AND EXISTING CONDITIONS BEFORE COMMENCEMENT OF WORK

LEGEND:

No. — DRAINAGE SYSTEM NUMBER

XX — DRAINAGE ITEM

APPROVED FOR WATER POLLUTION CONTROL WORK ONLY

WATER POLLUTION CONTROL PLAN

SCALE: 1" = 50'

W-1

STATE OF CALIFORNIA - DEPARTMENT OF TRANSPORTATION
Caltrans
HYDRAULICS

FUNCTIONAL SUPERVISOR: DAVE BHALLA
CALCULATED-DESIGNED BY: S. THAI
CHECKED BY: C.P. NGUYEN
REVISED BY
DATE REVISED

LAST REVISION 08-17-11
DATE PLOTTED => 20-APR-2015
TIME PLOTTED => 12:54

Dist	COUNTY	ROUTE	POST MILES TOTAL PROJECT	SHEET No.	TOTAL SHEETS
07	Ven	101	14.1/21.1	16	108

REGISTERED CIVIL ENGINEER 11-17-14 DATE

2-9-15
PLANS APPROVAL DATE

REGISTERED PROFESSIONAL ENGINEER SA K. THAI No. 71390 Exp. 12/31/15 CIVIL STATE OF CALIFORNIA

THE STATE OF CALIFORNIA OR ITS OFFICERS OR AGENTS SHALL NOT BE RESPONSIBLE FOR THE ACCURACY OR COMPLETENESS OF SCANNED COPIES OF THIS PLAN SHEET.

NOTES:

1. FOR ACCURATE RIGHT OF WAY DATA, CONTACT RIGHT OF WAY ENGINEER AT THE DISTRICT OFFICE.
2. CONTRACTOR SHALL VERIFY ELEVATIONS OF PROPOSED DRAINAGE WORK AND EXISTING CONDITIONS BEFORE COMMENCEMENT OF WORK

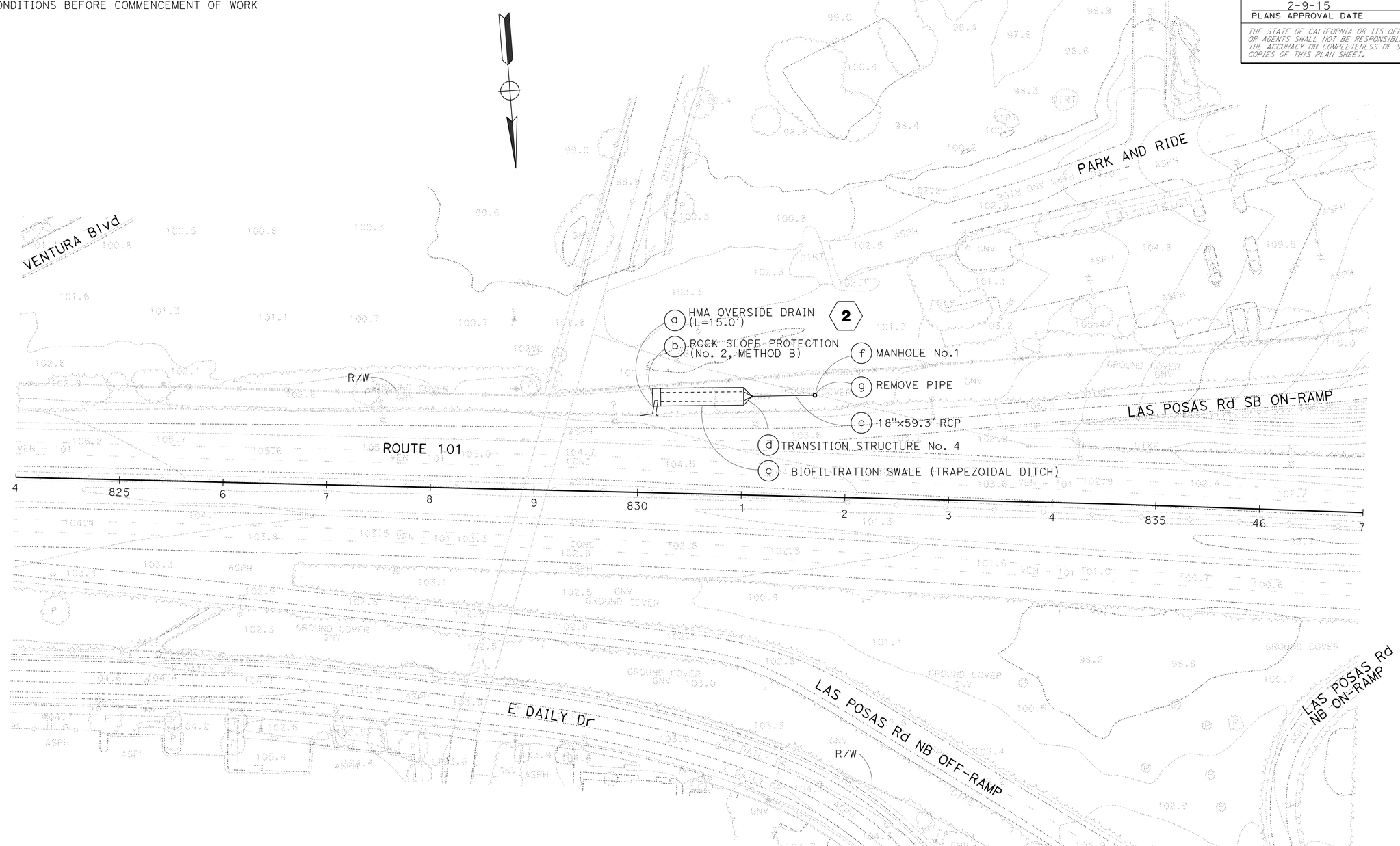

WATER POLLUTION CONTROL PLAN

SCALE: 1" = 50'

W-2

APPROVED FOR WATER POLLUTION CONTROL WORK ONLY

STATE OF CALIFORNIA - DEPARTMENT OF TRANSPORTATION

Caltrans

HYDRAULICS

FUNCTIONAL SUPERVISOR: DAVE BHALLA

CALCULATED-DESIGNED BY: S. THAI

CHECKED BY: C.P. NGUYEN

REVISED BY

DATE REVISED

LAST REVISION 08-17-11

DATE PLOTTED => 20-APR-2015
TIME PLOTTED => 12:54

Dist	COUNTY	ROUTE	POST MILES TOTAL PROJECT	SHEET No.	TOTAL SHEETS
07	Ven	101	14.1/21.1	17	108

REGISTERED CIVIL ENGINEER 11-17-14 DATE

2-9-15
PLANS APPROVAL DATE

REGISTERED PROFESSIONAL ENGINEER SA K. THAI No. 71390 Exp. 12/31/15 CIVIL STATE OF CALIFORNIA

THE STATE OF CALIFORNIA OR ITS OFFICERS OR AGENTS SHALL NOT BE RESPONSIBLE FOR THE ACCURACY OR COMPLETENESS OF SCANNED COPIES OF THIS PLAN SHEET.

NOTES:

1. FOR ACCURATE RIGHT OF WAY DATA, CONTACT RIGHT OF WAY ENGINEER AT THE DISTRICT OFFICE.
2. CONTRACTOR SHALL VERIFY ELEVATIONS OF PROPOSED DRAINAGE WORK AND EXISTING CONDITIONS BEFORE COMMENCEMENT OF WORK

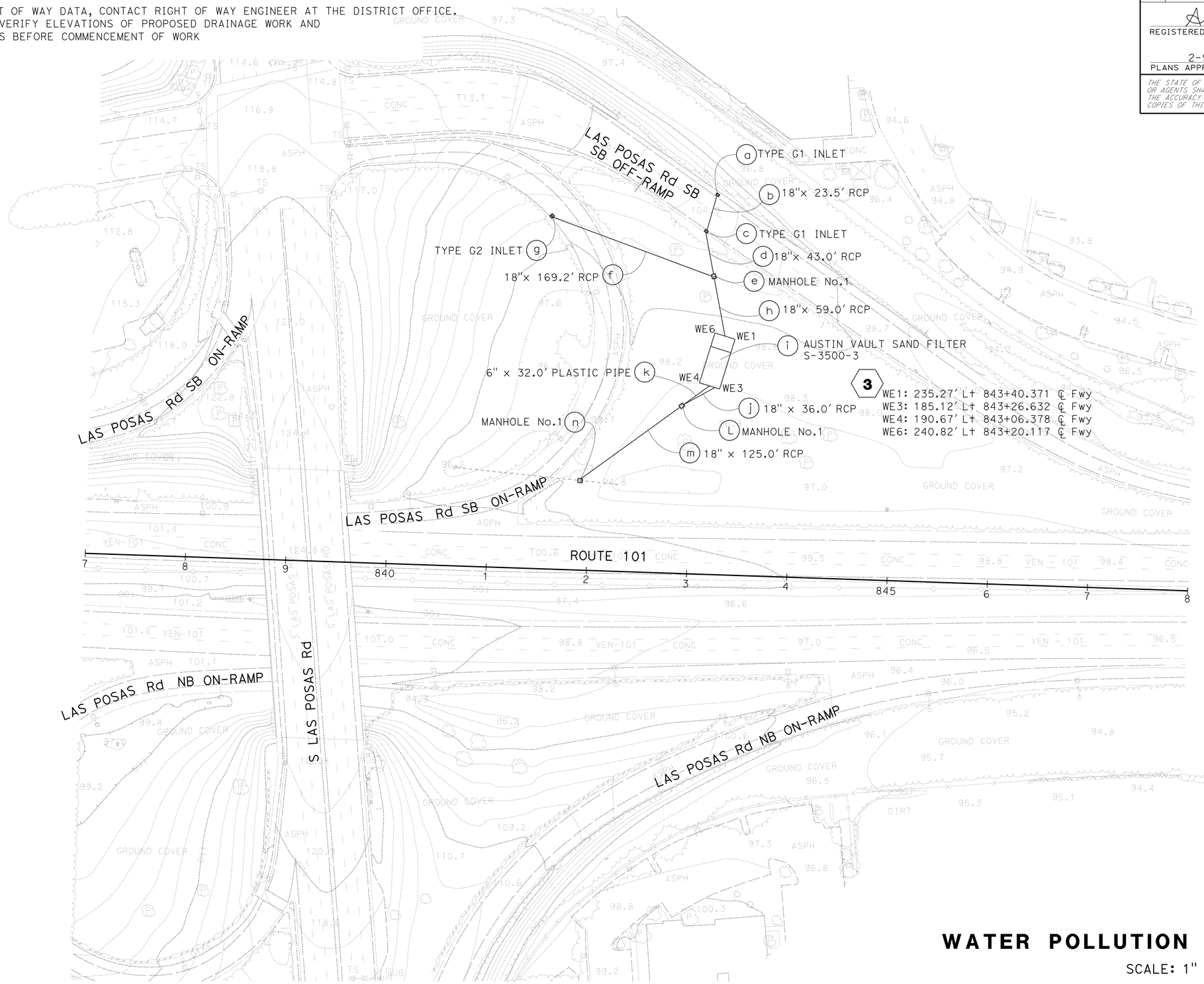

WATER POLLUTION CONTROL PLAN

SCALE: 1" = 50'

W-3

APPROVED FOR WATER POLLUTION CONTROL WORK ONLY

STATE OF CALIFORNIA - DEPARTMENT OF TRANSPORTATION

Caltrans

HYDRAULICS

FUNCTIONAL SUPERVISOR: DAVE BHALLA

CALCULATED-DESIGNED BY: S. THAI

CHECKED BY: C.P. NGUYEN

REVISED BY

DATE REVISED

LAST REVISION 08-17-11

DATE PLOTTED => 20-APR-2015
TIME PLOTTED => 12:54

Dist	COUNTY	ROUTE	POST MILES TOTAL PROJECT	SHEET No.	TOTAL SHEETS
07	Ven	101	14.1/21.1	18	108

REGISTERED CIVIL ENGINEER 11-17-14 DATE

2-9-15
PLANS APPROVAL DATE

REGISTERED PROFESSIONAL ENGINEER SA K. THAI No. 71390 Exp. 12/31/15 CIVIL STATE OF CALIFORNIA

THE STATE OF CALIFORNIA OR ITS OFFICERS OR AGENTS SHALL NOT BE RESPONSIBLE FOR THE ACCURACY OR COMPLETENESS OF SCANNED COPIES OF THIS PLAN SHEET.

NOTES:

1. FOR ACCURATE RIGHT OF WAY DATA, CONTACT RIGHT OF WAY ENGINEER AT THE DISTRICT OFFICE.
2. CONTRACTOR SHALL VERIFY ELEVATIONS OF PROPOSED DRAINAGE WORK AND EXISTING CONDITIONS BEFORE COMMENCEMENT OF WORK

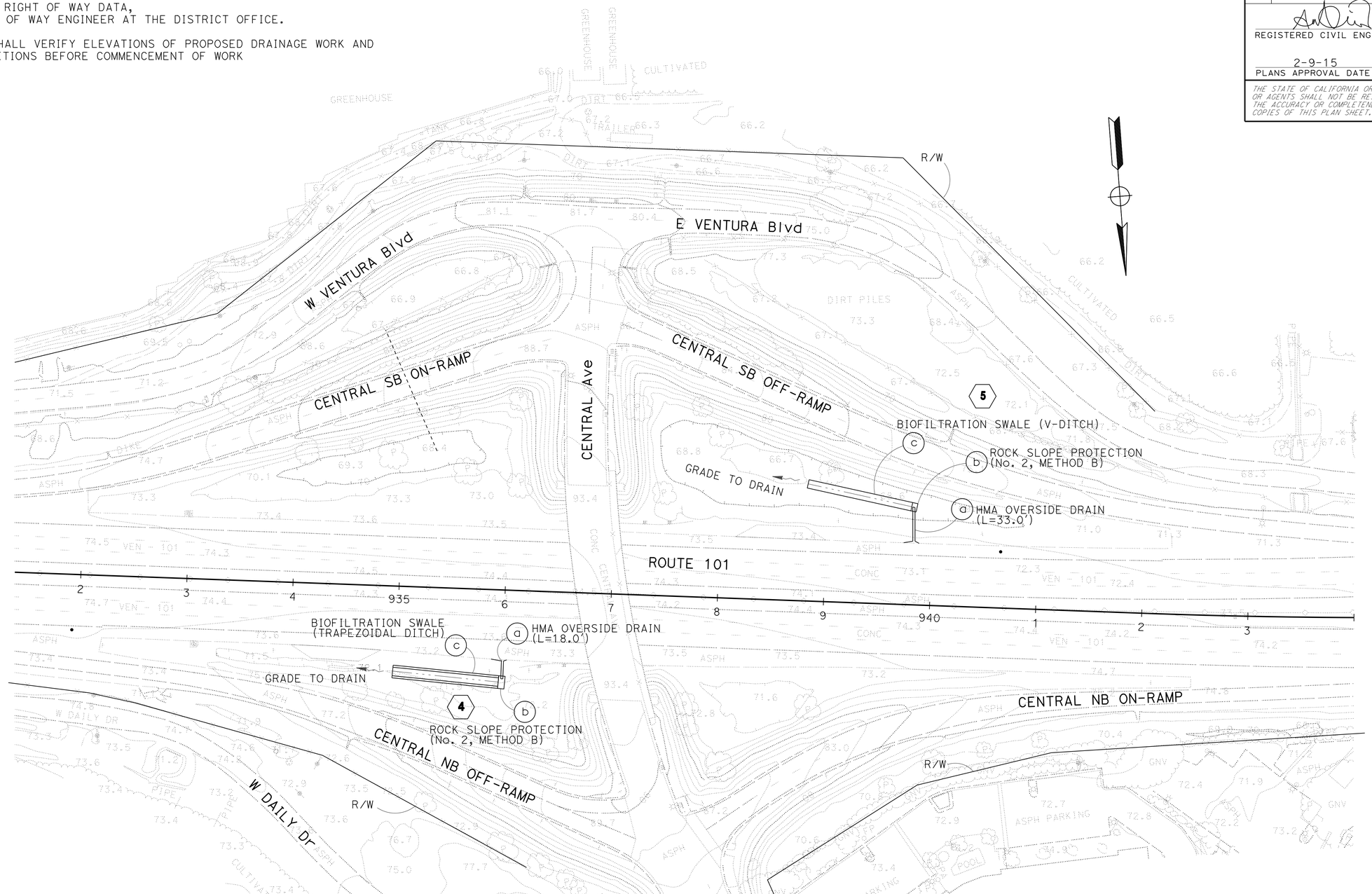

WATER POLLUTION CONTROL PLAN

SCALE: 1" = 50'

W-4

APPROVED FOR WATER POLLUTION CONTROL WORK ONLY

STATE OF CALIFORNIA - DEPARTMENT OF TRANSPORTATION
Caltrans
HYDRAULICS

FUNCTIONAL SUPERVISOR: DAVE BHALLA
CALCULATED-DESIGNED BY: S. THAI
CHECKED BY: C.P. NGUYEN
REVISED BY
DATE REVISED

LAST REVISION 08-17-11
DATE PLOTTED => 20-APR-2015
TIME PLOTTED => 12:54

Dist	COUNTY	ROUTE	POST MILES TOTAL PROJECT	SHEET No.	TOTAL SHEETS
07	Ven	101	14.1/21.1	19	108

REGISTERED CIVIL ENGINEER 11-17-14 DATE

2-9-15
PLANS APPROVAL DATE

REGISTERED PROFESSIONAL ENGINEER
SA K. THAI
No. 71390
Exp. 12/31/15
CIVIL
STATE OF CALIFORNIA

THE STATE OF CALIFORNIA OR ITS OFFICERS OR AGENTS SHALL NOT BE RESPONSIBLE FOR THE ACCURACY OR COMPLETENESS OF SCANNED COPIES OF THIS PLAN SHEET.

NOTES:

1. FOR ACCURATE RIGHT OF WAY DATA, CONTACT RIGHT OF WAY ENGINEER AT THE DISTRICT OFFICE.
2. CONTRACTOR SHALL VERIFY ELEVATIONS OF PROPOSED DRAINAGE WORK AND EXISTING CONDITIONS BEFORE COMMENCEMENT OF WORK

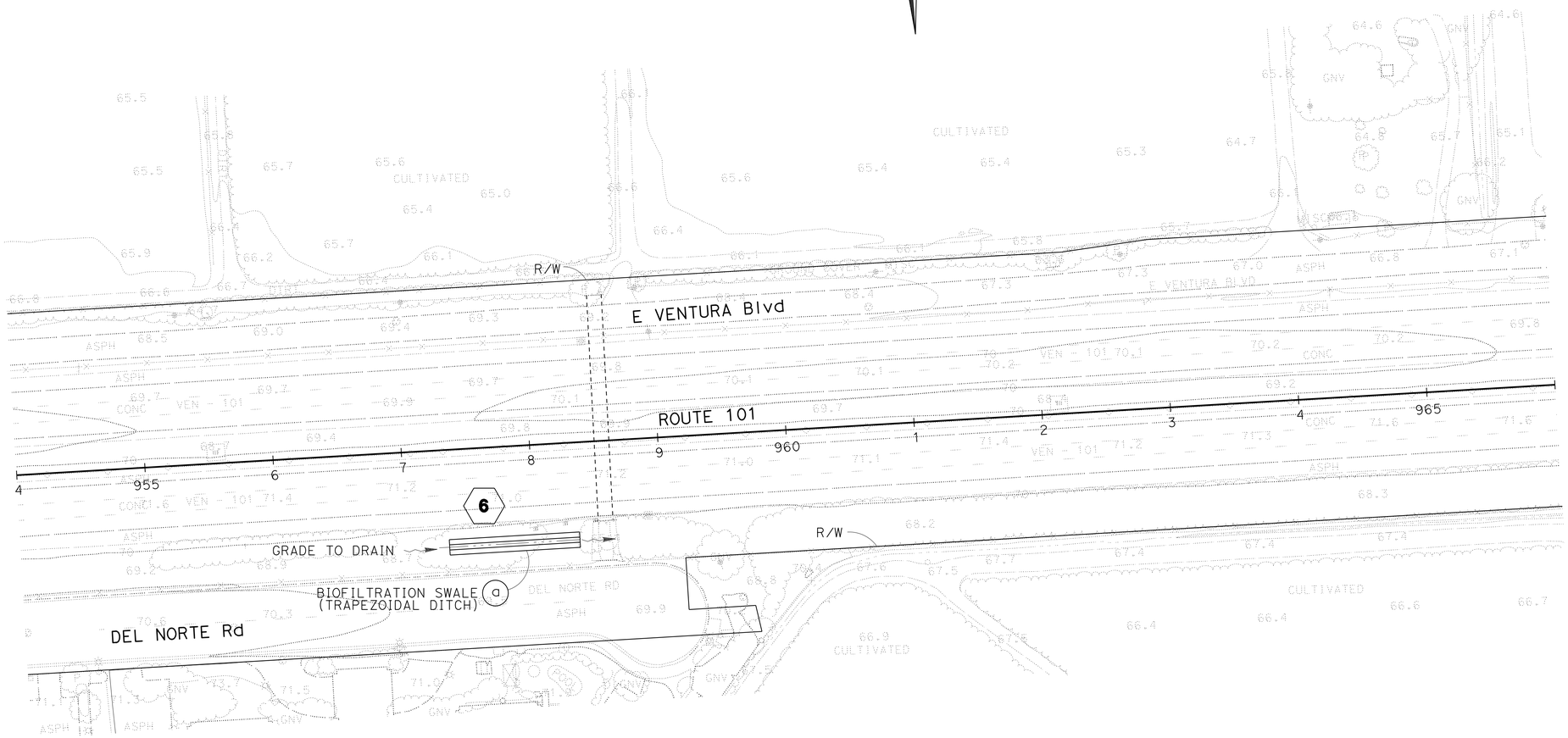

WATER POLLUTION CONTROL PLAN

SCALE: 1" = 50'

APPROVED FOR WATER POLLUTION CONTROL WORK ONLY

W-5

REVISED BY | DATE REVISED
S. THAI | C.P. NGUYEN
CALCULATED-DESIGNED BY | CHECKED BY
FUNCTIONAL SUPERVISOR
DAVE BHALLA

STATE OF CALIFORNIA - DEPARTMENT OF TRANSPORTATION
Caltrans
HYDRAULICS

LAST REVISION 08-17-11 | DATE PLOTTED => 20-APR-2015 | TIME PLOTTED => 12:54

Dist	COUNTY	ROUTE	POST MILES TOTAL PROJECT	SHEET No.	TOTAL SHEETS
07	Ven	101	14.1/21.1	20	108

REGISTERED CIVIL ENGINEER 11-17-14 DATE

2-9-15
PLANS APPROVAL DATE

REGISTERED PROFESSIONAL ENGINEER
SA K. THAI
No. 71390
Exp. 12/31/15
CIVIL
STATE OF CALIFORNIA

THE STATE OF CALIFORNIA OR ITS OFFICERS OR AGENTS SHALL NOT BE RESPONSIBLE FOR THE ACCURACY OR COMPLETENESS OF SCANNED COPIES OF THIS PLAN SHEET.

NOTES:

1. FOR ACCURATE RIGHT OF WAY DATA, CONTACT RIGHT OF WAY ENGINEER AT THE DISTRICT OFFICE.

2. CONTRACTOR SHALL VERIFY ELEVATIONS OF PROPOSED DRAINAGE WORK AND EXISTING CONDITIONS BEFORE COMMENCEMENT OF WORK

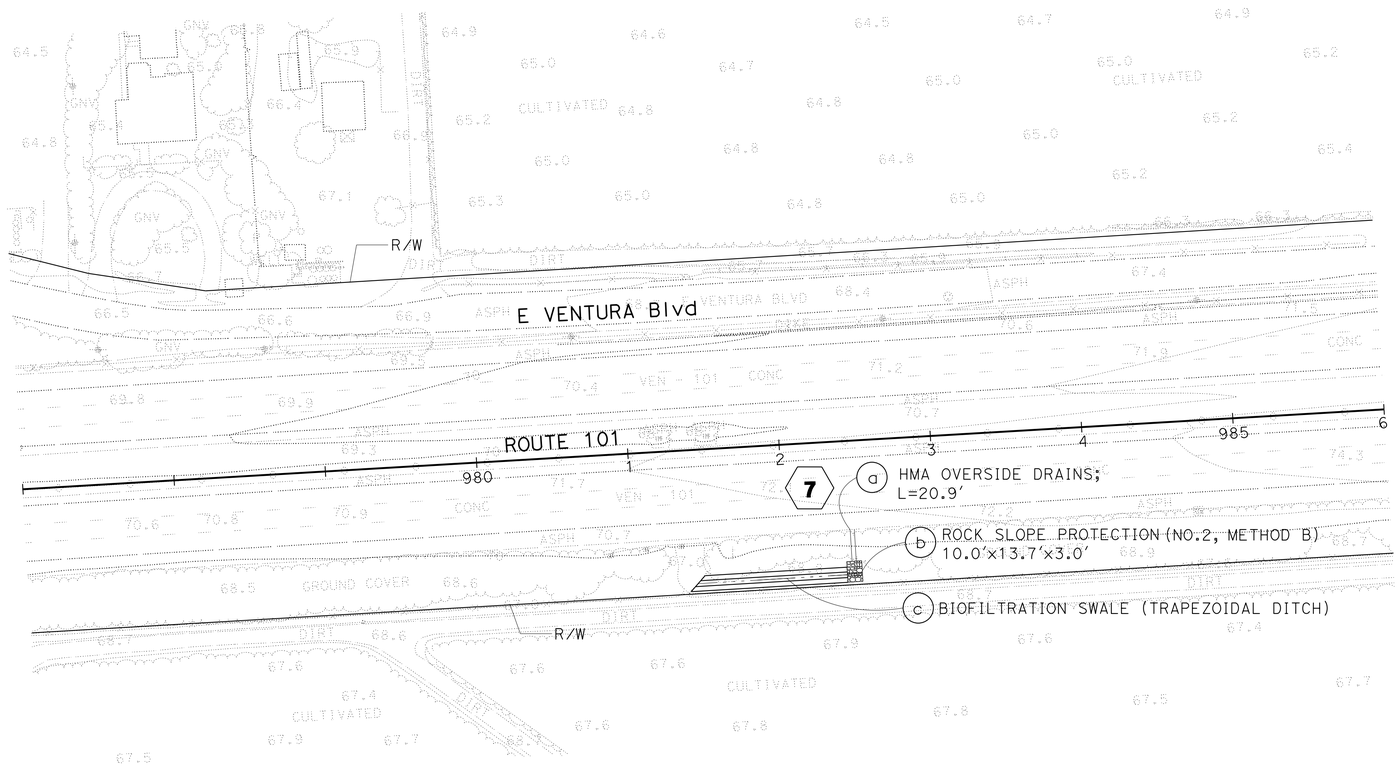

WATER POLLUTION CONTROL PLAN

SCALE: 1" = 50'

APPROVED FOR WATER POLLUTION CONTROL WORK ONLY

W-6

STATE OF CALIFORNIA - DEPARTMENT OF TRANSPORTATION
Caltrans
HYDRAULICS

FUNCTIONAL SUPERVISOR: DAVE BHALLA
CALCULATED-DESIGNED BY: S. THAI
CHECKED BY: C.P. NGUYEN
REVISED BY
DATE REVISED

LAST REVISION 08-17-11
DATE PLOTTED => 20-APR-2015
TIME PLOTTED => 12:54

Dist	COUNTY	ROUTE	POST MILES TOTAL PROJECT	SHEET No.	TOTAL SHEETS
07	Ven	101	14.1/21.1	21	108

REGISTERED CIVIL ENGINEER 11-17-14 DATE

2-9-15
PLANS APPROVAL DATE

REGISTERED PROFESSIONAL ENGINEER SA K. THAI No. 71390 Exp. 12/31/15 CIVIL STATE OF CALIFORNIA

THE STATE OF CALIFORNIA OR ITS OFFICERS OR AGENTS SHALL NOT BE RESPONSIBLE FOR THE ACCURACY OR COMPLETENESS OF SCANNED COPIES OF THIS PLAN SHEET.

NOTES:

1. FOR ACCURATE RIGHT OF WAY DATA, CONTACT RIGHT OF WAY ENGINEER AT THE DISTRICT OFFICE.
2. CONTRACTOR SHALL VERIFY ELEVATIONS OF PROPOSED DRAINAGE WORK AND EXISTING CONDITIONS BEFORE COMMENCEMENT OF WORK.

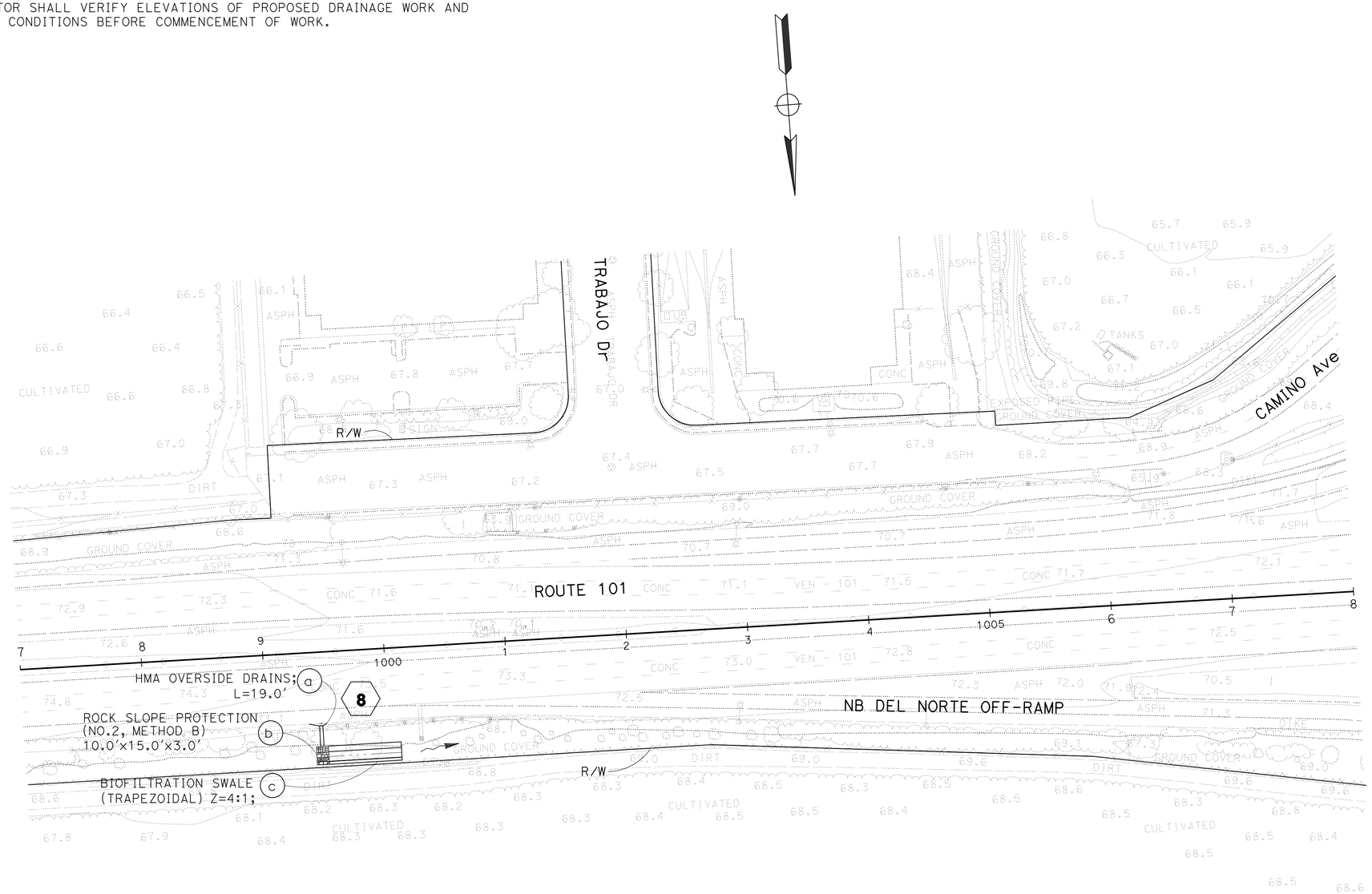

WATER POLLUTION CONTROL PLAN

SCALE: 1" = 50'

W-7

APPROVED FOR WATER POLLUTION CONTROL WORK ONLY

STATE OF CALIFORNIA - DEPARTMENT OF TRANSPORTATION
Caltrans
HYDRAULICS

FUNCTIONAL SUPERVISOR: DAVE BHALLA
CALCULATED-DESIGNED BY: S. THAI
CHECKED BY: C.P. NGUYEN
REVISED BY
DATE REVISED

LAST REVISION 08-17-11
DATE PLOTTED => 20-APR-2015
TIME PLOTTED => 12:54

Dist	COUNTY	ROUTE	POST MILES TOTAL PROJECT	SHEET No.	TOTAL SHEETS
07	Ven	101	14.1/21.1	22	108

REGISTERED CIVIL ENGINEER 11-17-14 DATE

2-9-15
PLANS APPROVAL DATE

REGISTERED PROFESSIONAL ENGINEER SA K. THAI No. 71390 Exp. 12/31/15 CIVIL STATE OF CALIFORNIA

THE STATE OF CALIFORNIA OR ITS OFFICERS OR AGENTS SHALL NOT BE RESPONSIBLE FOR THE ACCURACY OR COMPLETENESS OF SCANNED COPIES OF THIS PLAN SHEET.

NOTES:

1. FOR ACCURATE RIGHT OF WAY DATA, CONTACT RIGHT OF WAY ENGINEER AT THE DISTRICT OFFICE.
2. CONTRACTOR SHALL VERIFY ELEVATIONS OF PROPOSED DRAINAGE WORK AND EXISTING CONDITIONS BEFORE COMMENCEMENT OF WORK

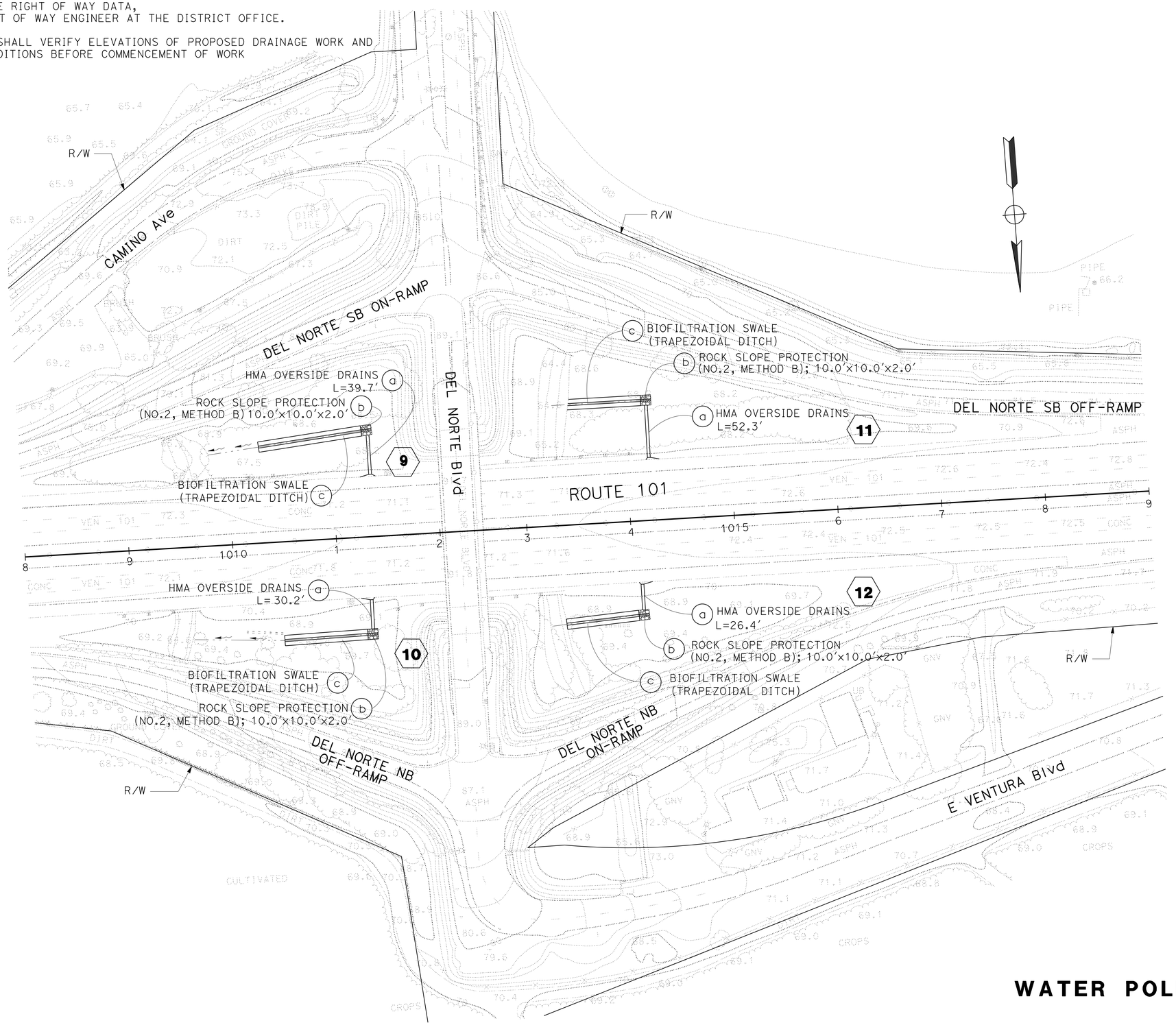

APPROVED FOR WATER POLLUTION CONTROL WORK ONLY

WATER POLLUTION CONTROL PLAN

SCALE: 1" = 50'

W-8

STATE OF CALIFORNIA - DEPARTMENT OF TRANSPORTATION
Caltrans
HYDRAULICS

FUNCTIONAL SUPERVISOR: DAVE BHALLA
CALCULATED-DESIGNED BY: S. THAI
CHECKED BY: C.P. NGUYEN
REVISED BY
DATE REVISED

LAST REVISION 08-17-11
DATE PLOTTED => 20-APR-2015
TIME PLOTTED => 12:54

Dist	COUNTY	ROUTE	POST MILES TOTAL PROJECT	SHEET No.	TOTAL SHEETS
07	Ven	101	14.1/21.1	23	108

REGISTERED CIVIL ENGINEER 11-17-14 DATE

2-9-15
PLANS APPROVAL DATE

REGISTERED PROFESSIONAL ENGINEER SA K. THAI No. 71390 Exp. 12/31/15 CIVIL STATE OF CALIFORNIA

THE STATE OF CALIFORNIA OR ITS OFFICERS OR AGENTS SHALL NOT BE RESPONSIBLE FOR THE ACCURACY OR COMPLETENESS OF SCANNED COPIES OF THIS PLAN SHEET.

NOTES:

1. FOR ACCURATE RIGHT OF WAY DATA, CONTACT RIGHT OF WAY ENGINEER AT THE DISTRICT OFFICE.
2. CONTRACTOR SHALL VERIFY ELEVATIONS OF PROPOSED DRAINAGE WORK AND EXISTING CONDITIONS BEFORE COMMENCEMENT OF WORK

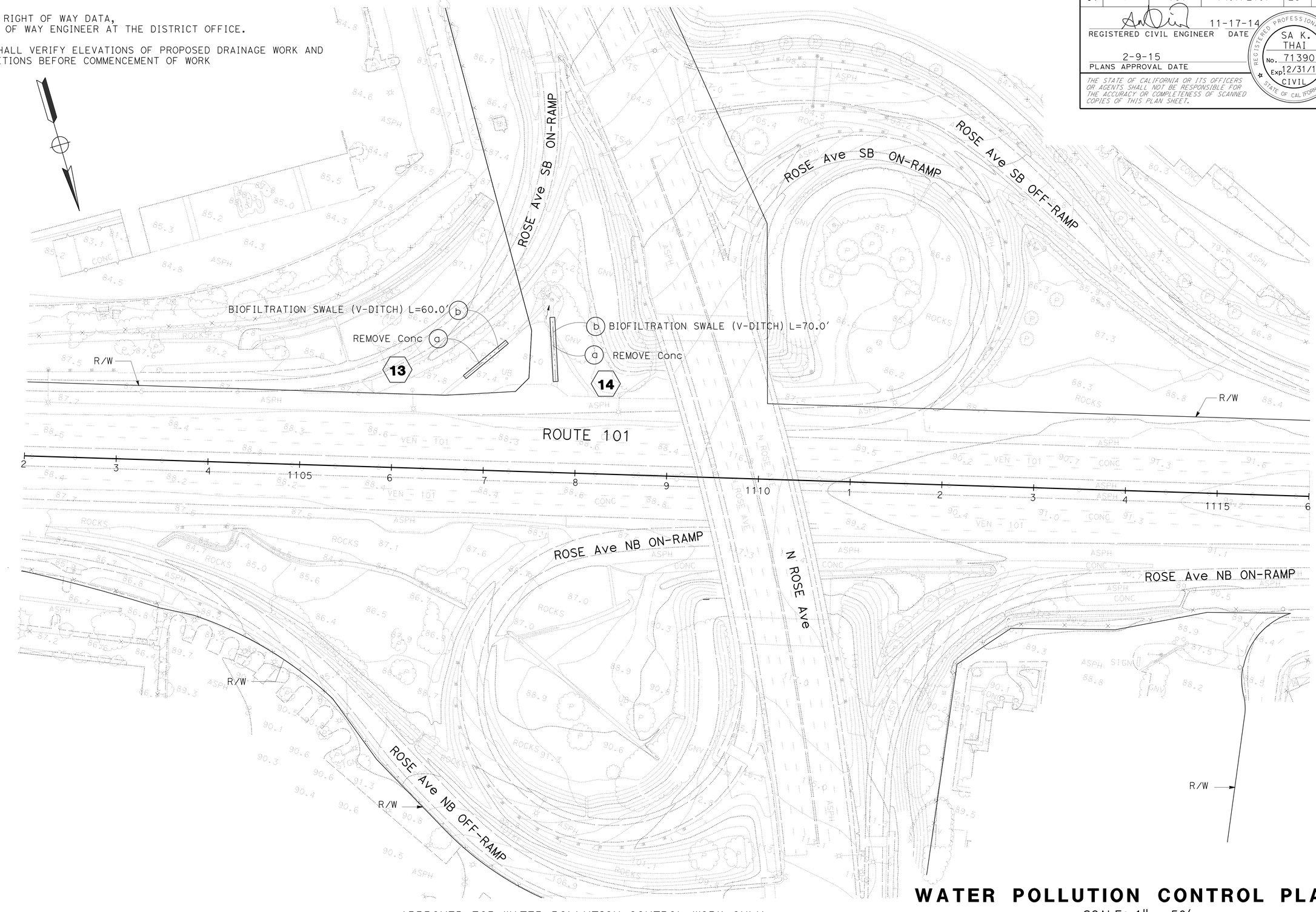

APPROVED FOR WATER POLLUTION CONTROL WORK ONLY

WATER POLLUTION CONTROL PLAN

SCALE: 1" = 50'

W-9

REVISED BY	DATE REVISED

CALCULATED-DESIGNED BY: S. THAI
CHECKED BY: C.P. NGUYEN
FUNCTIONAL SUPERVISOR: DAVE BHALLA

STATE OF CALIFORNIA - DEPARTMENT OF TRANSPORTATION
Caltrans
HYDRAULICS

LAST REVISION 08-17-11
DATE PLOTTED => 20-APR-2015
TIME PLOTTED => 12:54

Dist	COUNTY	ROUTE	POST MILES TOTAL PROJECT	SHEET No.	TOTAL SHEETS
07	Ven	101	14.1/21.1	24	108

REGISTERED CIVIL ENGINEER 11-17-14 DATE

2-9-15
PLANS APPROVAL DATE

REGISTERED PROFESSIONAL ENGINEER SA K. THAI No. 71390 Exp. 12/31/15 CIVIL STATE OF CALIFORNIA

THE STATE OF CALIFORNIA OR ITS OFFICERS OR AGENTS SHALL NOT BE RESPONSIBLE FOR THE ACCURACY OR COMPLETENESS OF SCANNED COPIES OF THIS PLAN SHEET.

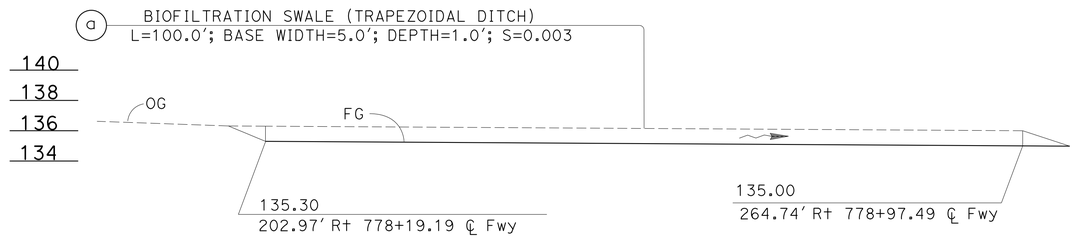

DRAINAGE SYSTEM 1

SCALE: Horiz 1" = 10'
Vert 1" = 5'

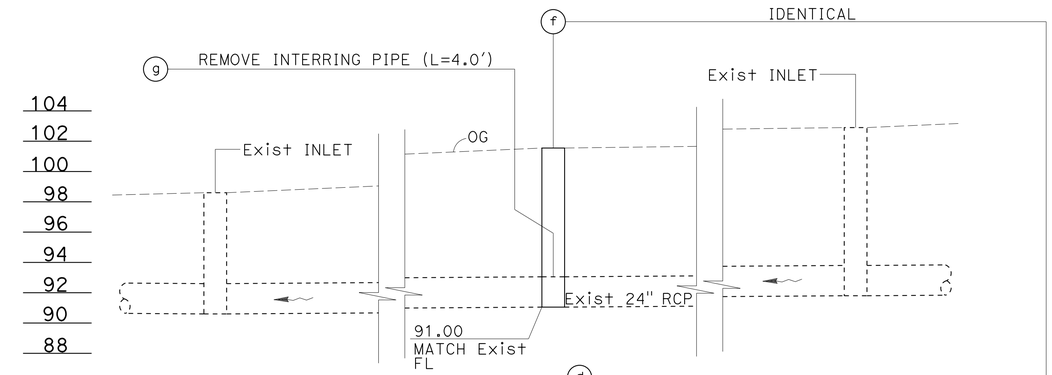

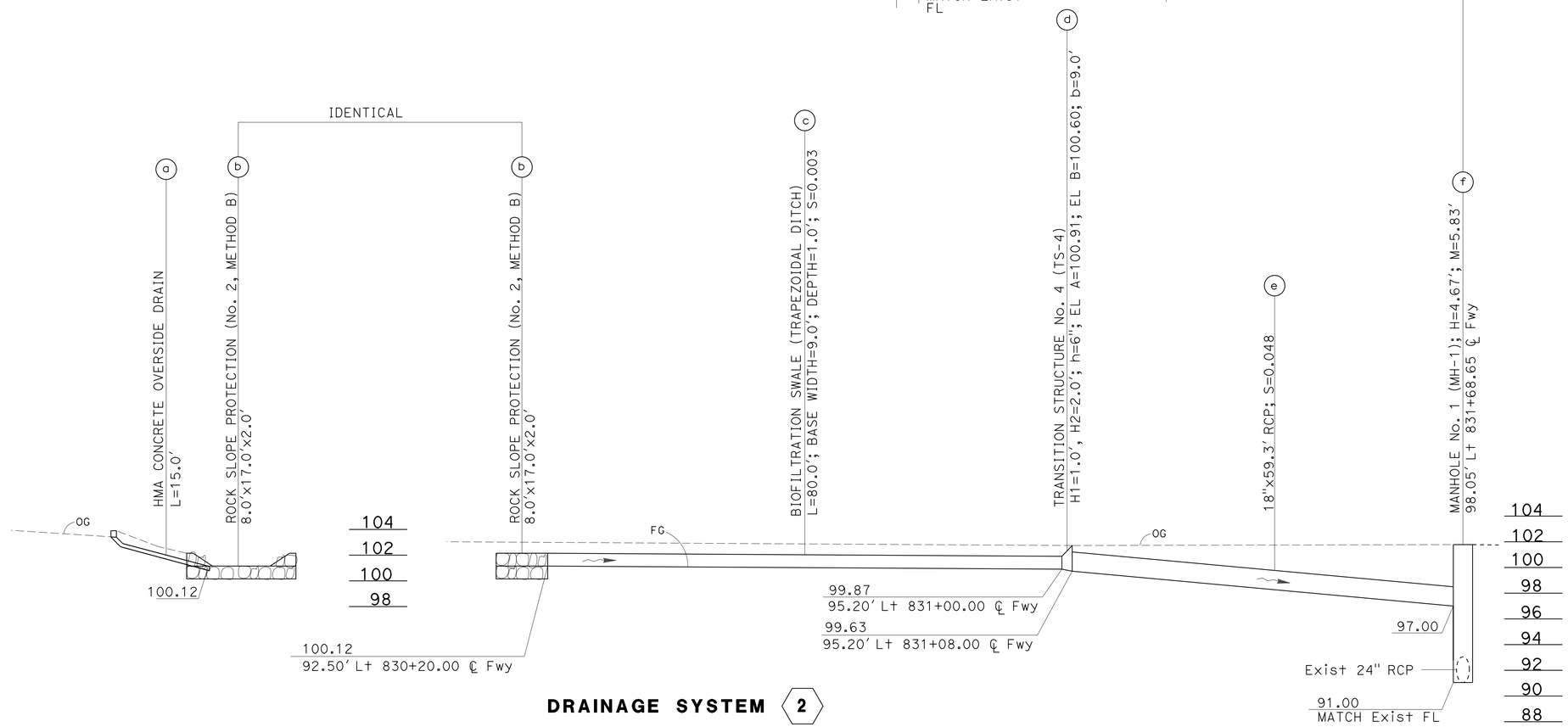

DRAINAGE SYSTEM 2

SCALE: Horiz 1" = 10'
Vert 1" = 5'

WATER POLLUTION CONTROL PROFILES

SCALE AS SHOWN

WP-1

STATE OF CALIFORNIA - DEPARTMENT OF TRANSPORTATION
Caltrans
HYDRAULICS

FUNCTIONAL SUPERVISOR: DAVE BHALLA
CALCULATED-DESIGNED BY: S. THAI
CHECKED BY: C.P. NGUYEN
REVISED BY
DATE REVISED

LAST REVISION 08-17-11
DATE PLOTTED => 20-APR-2015
TIME PLOTTED => 12:54

Dist	COUNTY	ROUTE	POST MILES TOTAL PROJECT	SHEET No.	TOTAL SHEETS
07	Ven	101	14.1/21.1	25	108

REGISTERED CIVIL ENGINEER 11-17-14 DATE

2-9-15
PLANS APPROVAL DATE

REGISTERED PROFESSIONAL ENGINEER SA K. THAI No. 71390 Exp. 12/31/15 CIVIL STATE OF CALIFORNIA

THE STATE OF CALIFORNIA OR ITS OFFICERS OR AGENTS SHALL NOT BE RESPONSIBLE FOR THE ACCURACY OR COMPLETENESS OF SCANNED COPIES OF THIS PLAN SHEET.

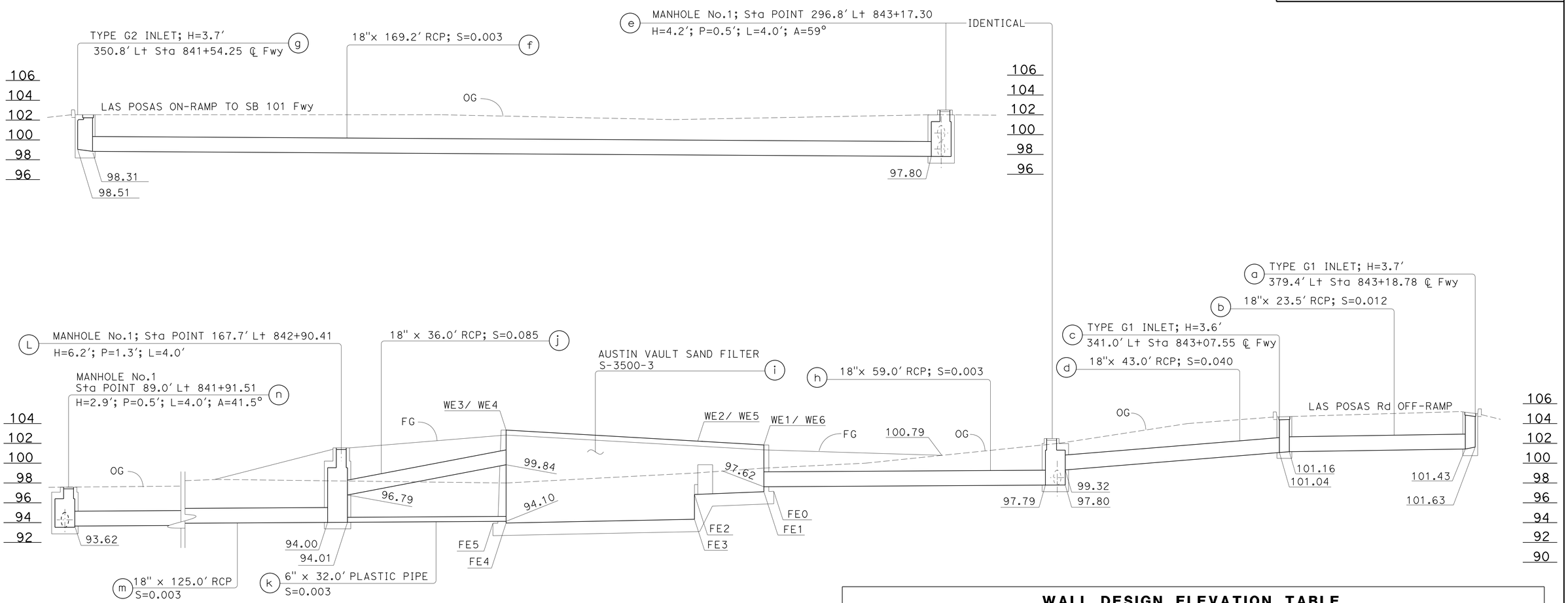

DRAINAGE SYSTEM 3

SCALE: Horiz 1" = 10′
Vert 1" = 5′

WALL DESIGN ELEVATION TABLE

DESIGN "H" FOR SEDIMENTATION BASIN = 6′
DESIGN "H" FOR FILTRATION BASIN = 10′

TOP OF WALL ELEVATION						TOP OF FOOTING ELEVATION					
WE1	WE2	WE3	WE4	WE5	WE6	FE0	FE1	FE2	FE3	FE4	FE5
101.84	102.24	103.34	103.34	102.24	101.84	97.13	97.09	96.81	94.31	93.93	93.91

WATER POLLUTION CONTROL PROFILES

SCALE AS SHOWN

WP-2

STATE OF CALIFORNIA - DEPARTMENT OF TRANSPORTATION
Caltrans
HYDRAULICS

FUNCTIONAL SUPERVISOR: DAVE BHALLA
CALCULATED-DESIGNED BY: C.P. NGUYEN
CHECKED BY: S. THAI
REVISED BY
DATE REVISED

LAST REVISION 08-17-11
DATE PLOTTED => 20-APR-2015
TIME PLOTTED => 12:54

Dist	COUNTY	ROUTE	POST MILES TOTAL PROJECT	SHEET No.	TOTAL SHEETS
07	Ven	101	14.1/21.1	26	108

REGISTERED CIVIL ENGINEER 11-17-14 DATE

2-9-15
PLANS APPROVAL DATE

REGISTERED PROFESSIONAL ENGINEER SA K. THAI No. 71390 Exp. 12/31/15 CIVIL STATE OF CALIFORNIA

THE STATE OF CALIFORNIA OR ITS OFFICERS OR AGENTS SHALL NOT BE RESPONSIBLE FOR THE ACCURACY OR COMPLETENESS OF SCANNED COPIES OF THIS PLAN SHEET.

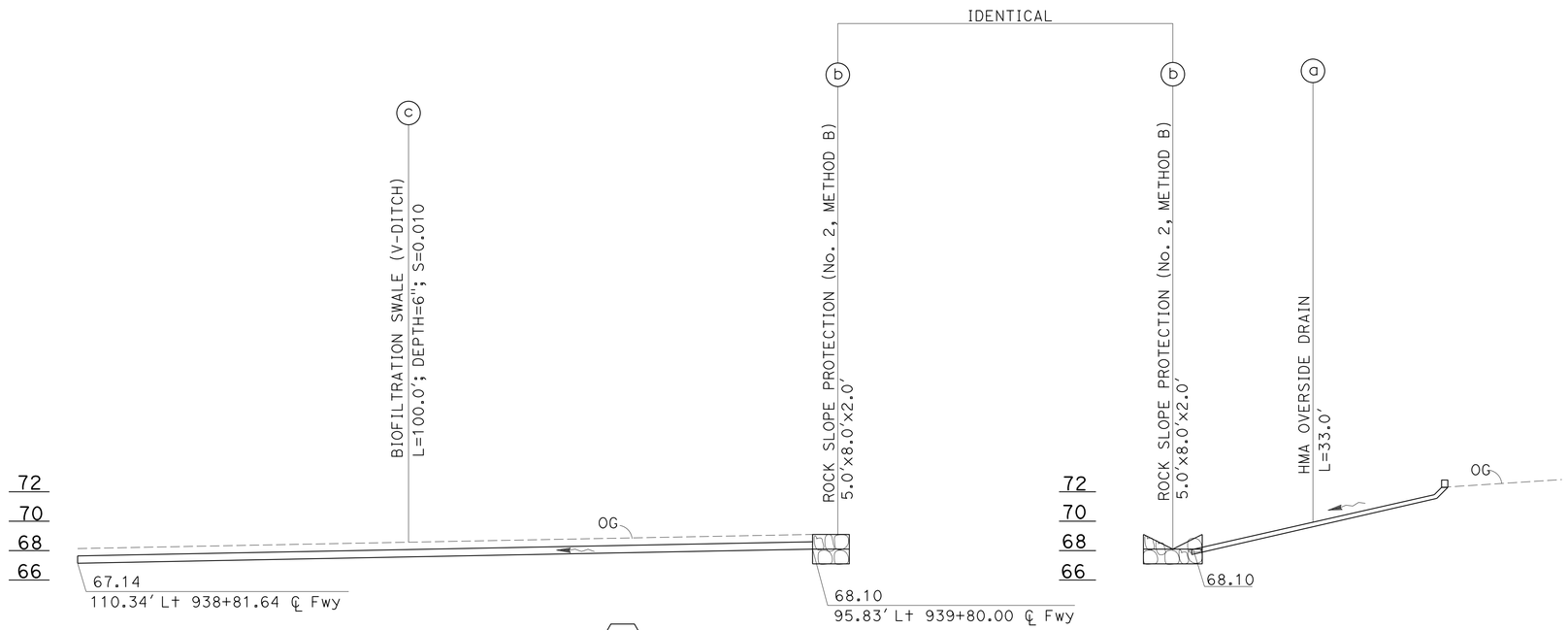

DRAINAGE SYSTEM 5

SCALE: Horiz 1" = 10'
Vert 1" = 5'

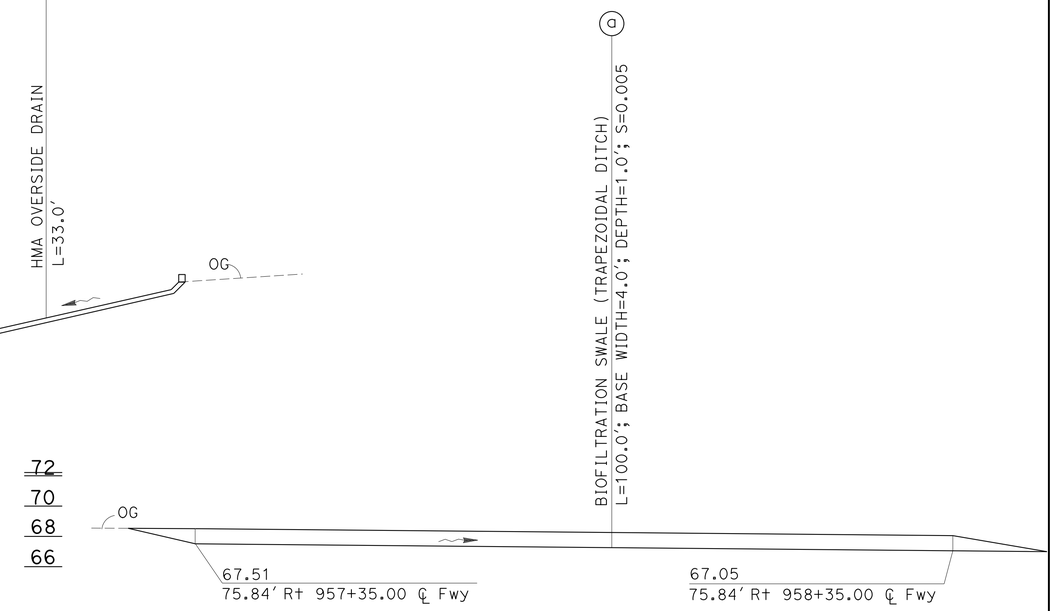

DRAINAGE SYSTEM 6

SCALE: Horiz 1" = 10'
Vert 1" = 5'

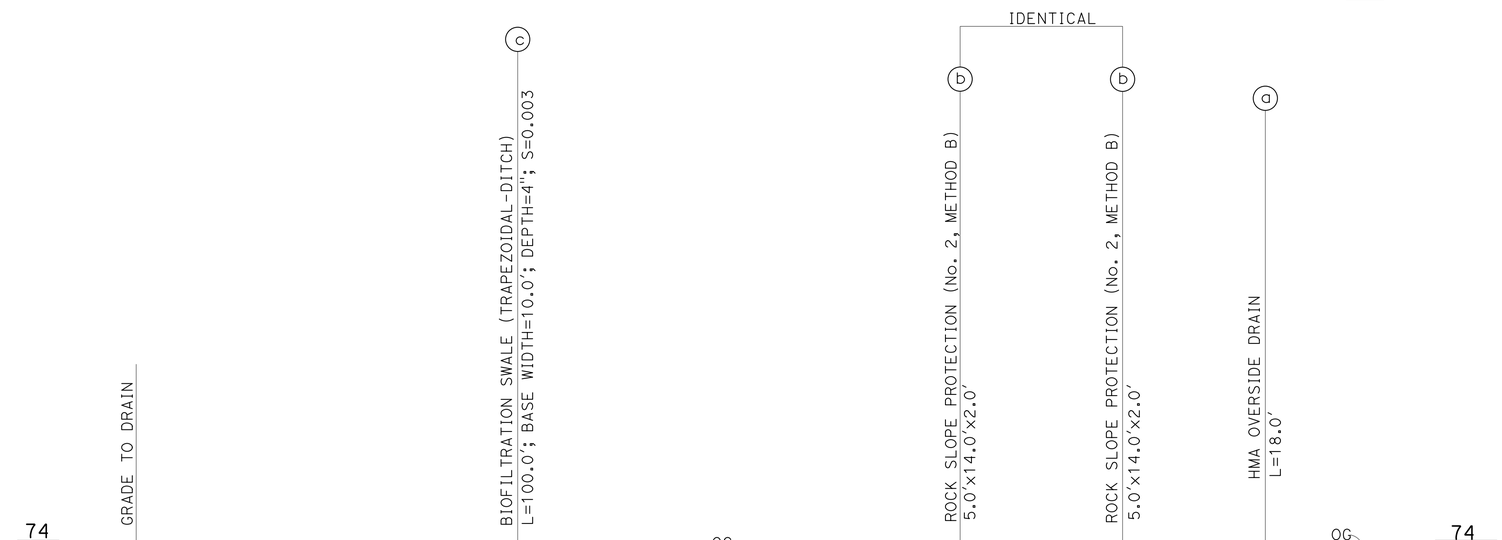

DRAINAGE SYSTEM 4

SCALE: Horiz 1" = 10'
Vert 1" = 5'

WATER POLLUTION CONTROL PROFILES

SCALE AS SHOWN

WP-3

STATE OF CALIFORNIA - DEPARTMENT OF TRANSPORTATION
Caltrans
HYDRAULICS

FUNCTIONAL SUPERVISOR: DAVE BHALLA
CALCULATED-DESIGNED BY: S. THAI
CHECKED BY: C.P. NGUYEN
REVISED BY
DATE REVISED

LAST REVISION 08-17-11
DATE PLOTTED => 20-APR-2015
TIME PLOTTED => 12:54

Dist	COUNTY	ROUTE	POST MILES TOTAL PROJECT	SHEET No.	TOTAL SHEETS
07	Ven	101	14.1/21.1	27	108

REGISTERED CIVIL ENGINEER 11-17-14 DATE

2-9-15
PLANS APPROVAL DATE

REGISTERED PROFESSIONAL ENGINEER SA K. THAI No. 71390 Exp. 12/31/15 CIVIL STATE OF CALIFORNIA

THE STATE OF CALIFORNIA OR ITS OFFICERS OR AGENTS SHALL NOT BE RESPONSIBLE FOR THE ACCURACY OR COMPLETENESS OF SCANNED COPIES OF THIS PLAN SHEET.

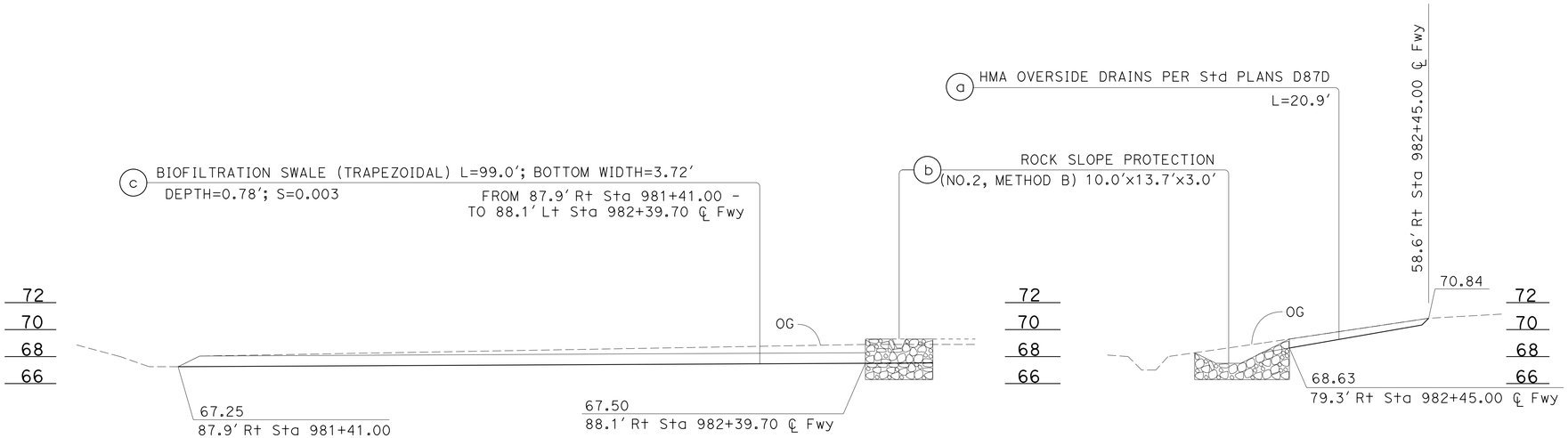

DRAINAGE SYSTEM 7

SCALE: Horiz 1" = 10'
Vert 1" = 5'

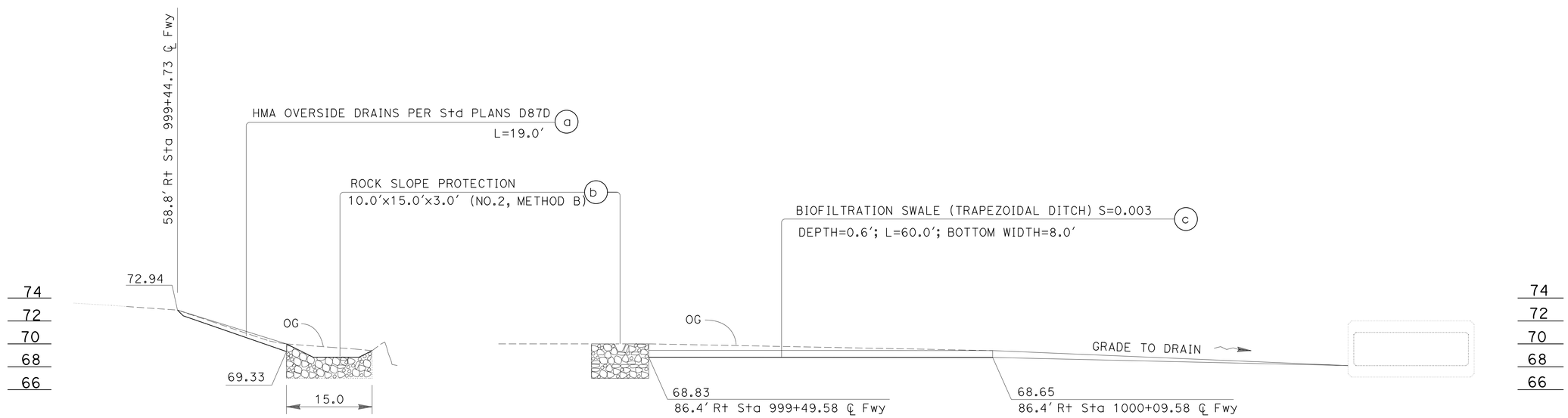

DRAINAGE SYSTEM 8

SCALE: Horiz 1" = 10'
Vert 1" = 5'

WATER POLLUTION CONTROL PROFILES

SCALE AS SHOWN

WP-4

STATE OF CALIFORNIA - DEPARTMENT OF TRANSPORTATION
Caltrans
HYDRAULICS

FUNCTIONAL SUPERVISOR: DAVE BHALLA
CALCULATED-DESIGNED BY: C.P. NGUYEN
CHECKED BY: S. THAI
REVISED BY
DATE REVISED

LAST REVISION 08-17-11
DATE PLOTTED => 20-APR-2015
TIME PLOTTED => 12:54

Dist	COUNTY	ROUTE	POST MILES TOTAL PROJECT	SHEET No.	TOTAL SHEETS
07	Ven	101	14.1/21.1	28	108

REGISTERED CIVIL ENGINEER 11-17-14 DATE

2-9-15
PLANS APPROVAL DATE

REGISTERED PROFESSIONAL ENGINEER SA K. THAI No. 71390 Exp. 12/31/15 CIVIL STATE OF CALIFORNIA

THE STATE OF CALIFORNIA OR ITS OFFICERS OR AGENTS SHALL NOT BE RESPONSIBLE FOR THE ACCURACY OR COMPLETENESS OF SCANNED COPIES OF THIS PLAN SHEET.

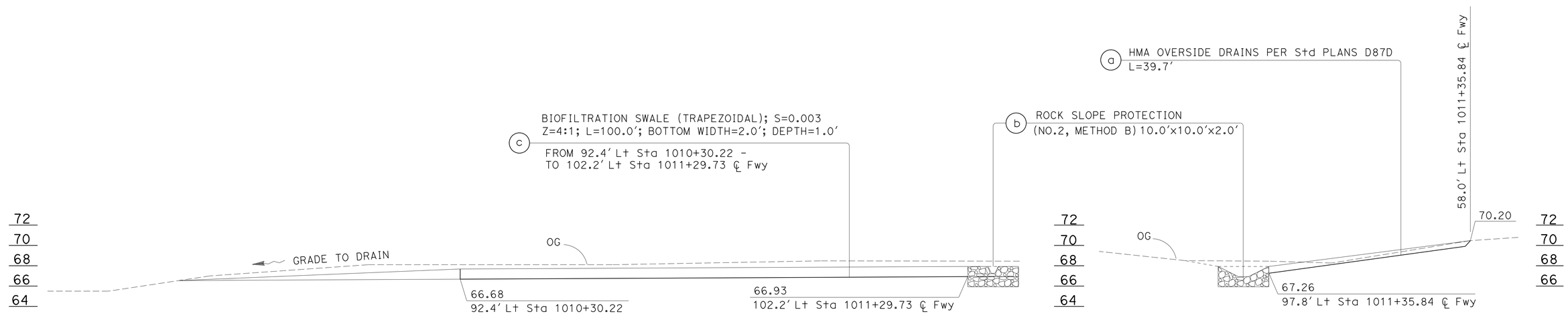

DRAINAGE SYSTEM (9)

SCALE: Horiz 1" = 10'
Vert 1" = 5'

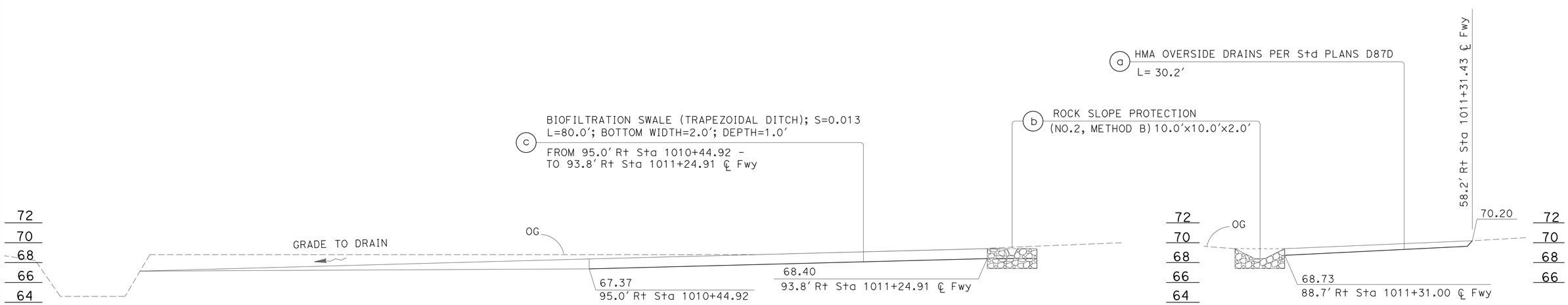

DRAINAGE SYSTEM (10)

SCALE: Horiz 1" = 10'
Vert 1" = 5'

WATER POLLUTION CONTROL PROFILES

SCALE AS SHOWN

WP-5

STATE OF CALIFORNIA - DEPARTMENT OF TRANSPORTATION
Caltrans
HYDRAULICS

FUNCTIONAL SUPERVISOR: DAVE BHALLA

CALCULATED-DESIGNED BY: C.P. NGUYEN
CHECKED BY: S. THAI

REVISED BY
DATE REVISED

LAST REVISION 08-17-11
DATE PLOTTED => 20-APR-2015
TIME PLOTTED => 12:54

Dist	COUNTY	ROUTE	POST MILES TOTAL PROJECT	SHEET No.	TOTAL SHEETS
07	Ven	101	14.1/21.1	29	108

REGISTERED CIVIL ENGINEER 11-17-14 DATE

2-9-15
PLANS APPROVAL DATE

REGISTERED PROFESSIONAL ENGINEER SA K. THAI No. 71390 Exp. 12/31/15 CIVIL STATE OF CALIFORNIA

THE STATE OF CALIFORNIA OR ITS OFFICERS OR AGENTS SHALL NOT BE RESPONSIBLE FOR THE ACCURACY OR COMPLETENESS OF SCANNED COPIES OF THIS PLAN SHEET.

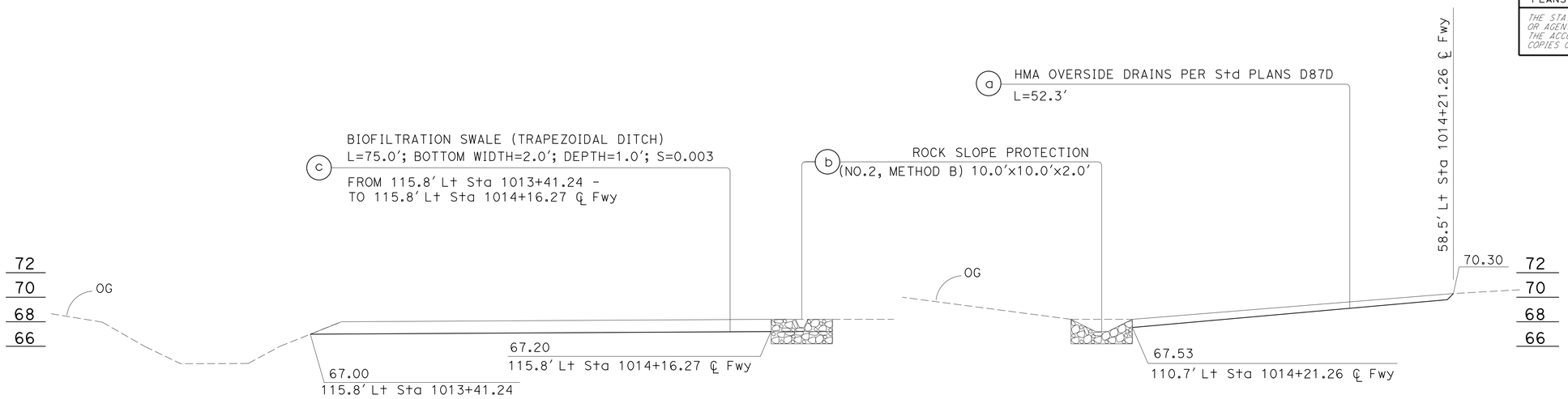

DRAINAGE SYSTEM 11

SCALE: Horiz 1" = 10′
Vert 1" = 5′

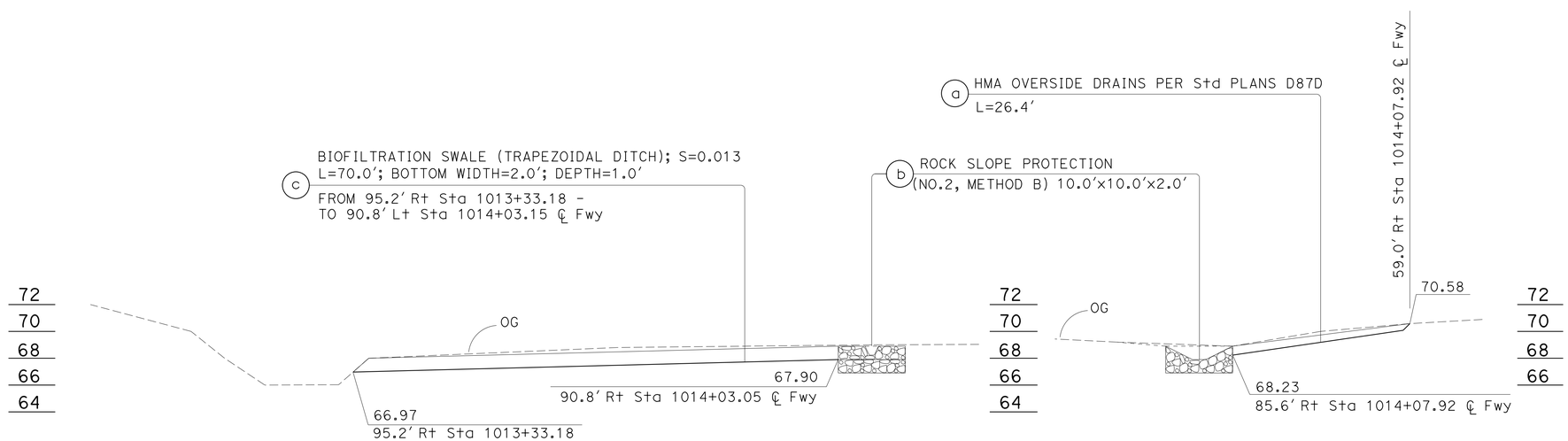

DRAINAGE SYSTEM 12

SCALE: Horiz 1" = 10′
Vert 1" = 5′

WATER POLLUTION CONTROL PROFILES

SCALE AS SHOWN

WP-6

STATE OF CALIFORNIA - DEPARTMENT OF TRANSPORTATION
Caltrans
HYDRAULICS
FUNCTIONAL SUPERVISOR: DAVE BHALLA
CALCULATED-DESIGNED BY: C.P. NGUYEN
CHECKED BY: S. THAI
REVISED BY
DATE REVISED

LAST REVISION 08-17-11
DATE PLOTTED => 20-APR-2015
TIME PLOTTED => 12:54

Dist	COUNTY	ROUTE	POST MILES TOTAL PROJECT	SHEET No.	TOTAL SHEETS
07	Ven	101	14.1/21.1	30	108

REGISTERED CIVIL ENGINEER DATE 11-17-14

2-9-15
PLANS APPROVAL DATE

REGISTERED PROFESSIONAL ENGINEER SA K. THAI No. 71390 Exp. 12/31/15 CIVIL STATE OF CALIFORNIA

THE STATE OF CALIFORNIA OR ITS OFFICERS OR AGENTS SHALL NOT BE RESPONSIBLE FOR THE ACCURACY OR COMPLETENESS OF SCANNED COPIES OF THIS PLAN SHEET.

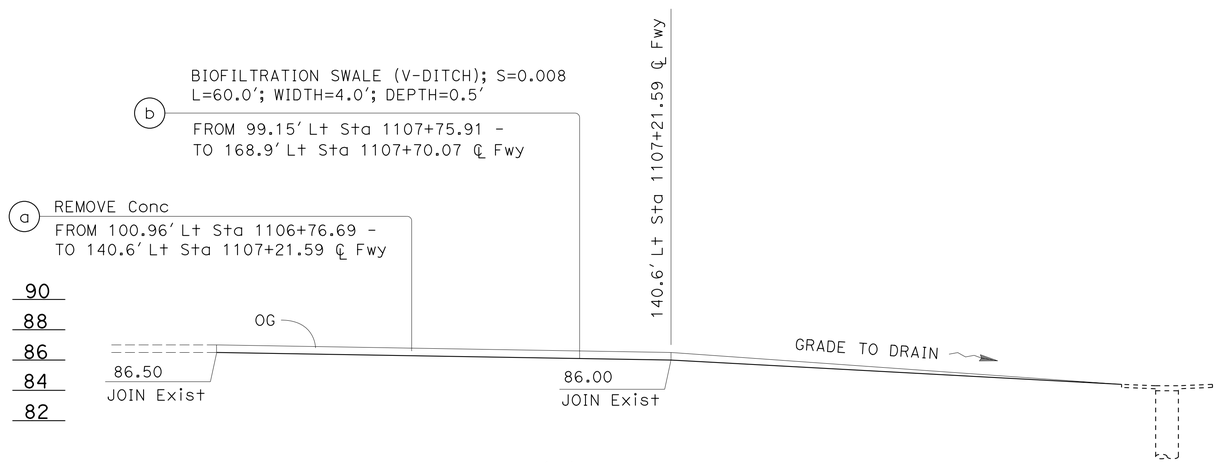

DRAINAGE SYSTEM 13

SCALE: Horiz 1" = 10'
Vert 1" = 5'

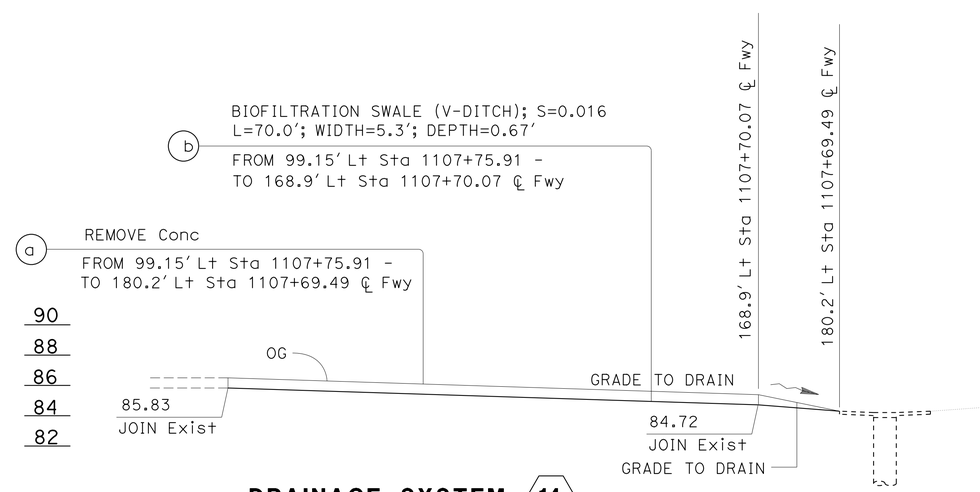

DRAINAGE SYSTEM 14

SCALE: Horiz 1" = 10'
Vert 1" = 5'

WATER POLLUTION CONTROL PROFILES

SCALE AS SHOWN

WP-7

REVISED BY	DATE REVISED

CALCULATED-DESIGNED BY: C.P. NGUYEN
CHECKED BY: S. THAI
FUNCTIONAL SUPERVISOR: DAVE BHALLA

STATE OF CALIFORNIA - DEPARTMENT OF TRANSPORTATION
Caltrans
HYDRAULICS

LAST REVISION 08-17-11
DATE PLOTTED => 20-APR-2015
TIME PLOTTED => 12:54

Dist	COUNTY	ROUTE	POST MILES TOTAL PROJECT	SHEET No.	TOTAL SHEETS
07	Ven	101	14.1/21.1	31	108

REGISTERED CIVIL ENGINEER 11-17-14 DATE

2-9-15
PLANS APPROVAL DATE

REGISTERED PROFESSIONAL ENGINEER SA K. THAI No. 71390 Exp. 12/31/15 CIVIL STATE OF CALIFORNIA

THE STATE OF CALIFORNIA OR ITS OFFICERS OR AGENTS SHALL NOT BE RESPONSIBLE FOR THE ACCURACY OR COMPLETENESS OF SCANNED COPIES OF THIS PLAN SHEET.

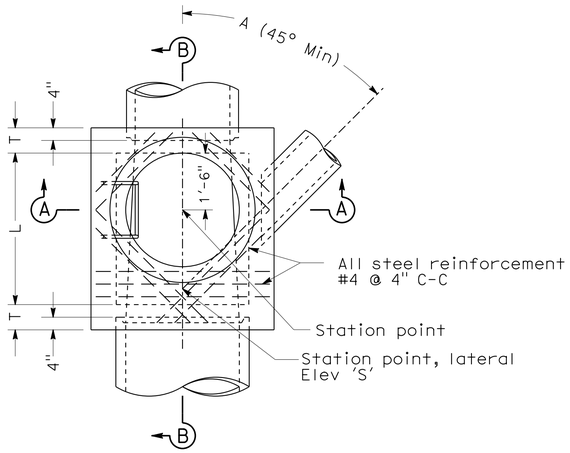

PLAN
(Shaft not shown)

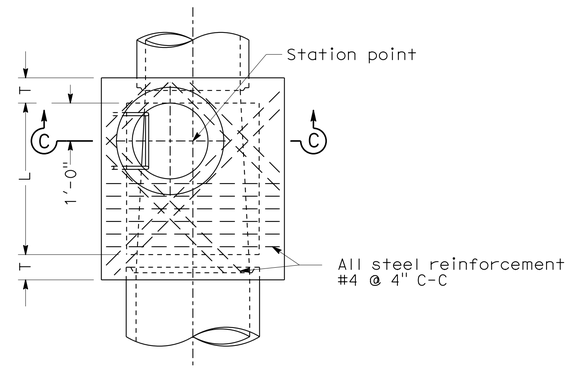

PLAN
DETAIL N
(Shaft not shown)

NOTES:

1. Height 'H' (in Sec A-A and Sec B-B) shall be not less than 4'-8", but may be increased provided that the value of 'M' shall be not less than the minimum specified and that the reducer shall be used. For 'H' (in Sec C-C) see Note 4.
2. Length 'L' shall be 4' unless otherwise shown on drainage plan.
3. Shaft shall be constructed as per Sec C-C and Detail N when depth 'M' from street grade to top of box is less than 2'-10 1/2" for paved streets or 3'-6" for unpaved streets.
4. Depth 'P' may be reduced to an absolute limit of 6" when larger values of 'P' would reduce 'H' (in Sec C-C) to 3'-6" or less.
5. 'T' shall be 8" for values of 'H' up to and including 8'. 'T' shall be 10" for values of 'H' over 8'.
6. Lowest step shall be not more than 16" above the ledge at the side of manhole floor.
7. Body of manhole shall be poured in one continuous operation, except that the Contractor shall have the option of placing at the spring line a construction joint with a longitudinal keyway.
8. Reinforcing steel shall be 1 1/2" clear from face of concrete.
9. Floor of manhole shall be steel-troweled to spring line.
10. Rings, reducer, and pipe for access shaft shall be seated in 1:2 cement mortar and neatly pointed or wiped inside shaft.
11. Manhole frame and cover per Standard Plan B7-11 detail 'U45'.
12. Step detail per Standard Plans D74C.

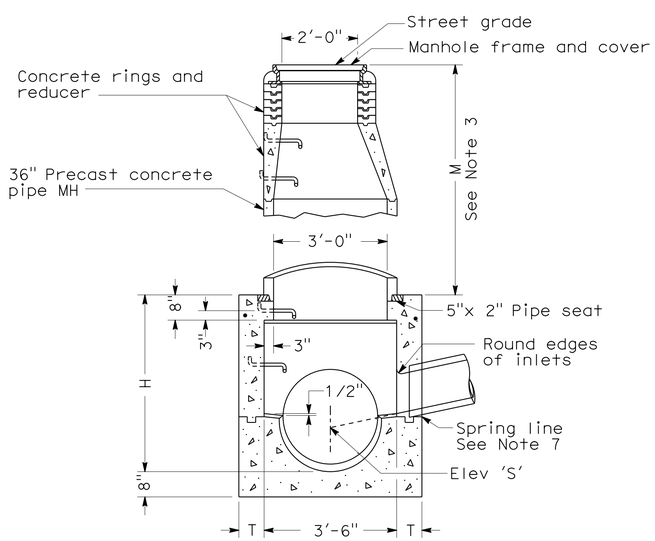

SECTION A-A

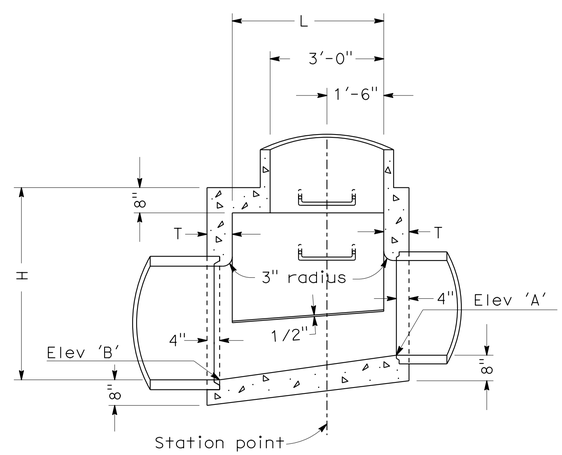

SECTION B-B

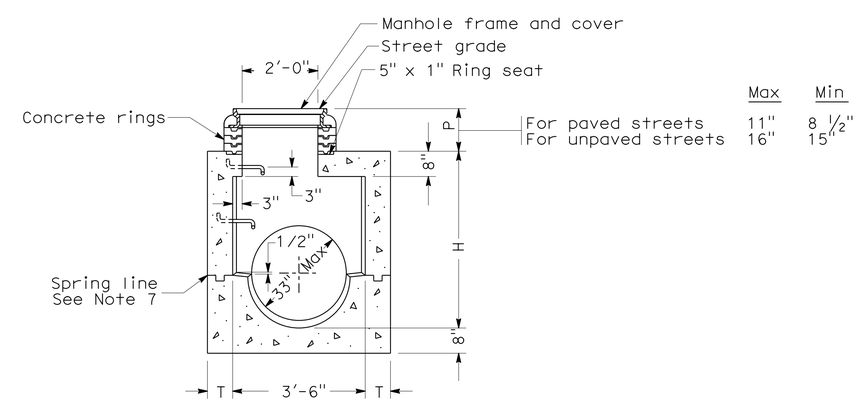

	Max	Min
For paved streets	11"	8 1/2"
For unpaved streets	16"	15"

SECTION C-C

MANHOLE No. 1 (MH No. 1)

WATER POLLUTION CONTROL DETAILS

NO SCALE

WD-1

STATE OF CALIFORNIA - DEPARTMENT OF TRANSPORTATION
Caltrans
HYDRAULICS
FUNCTIONAL SUPERVISOR: DAVE BHALLA
CALCULATED-DESIGNED BY: S. THAI
CHECKED BY: C.P. NGUYEN
REVISED BY
DATE REVISED

LAST REVISION 08-17-11
DATE PLOTTED => 20-APR-2015
TIME PLOTTED => 12:54

Dist	COUNTY	ROUTE	POST MILES TOTAL PROJECT	SHEET No.	TOTAL SHEETS
07	Ven	101	14.1/21.1	32	108

REGISTERED CIVIL ENGINEER 11-17-14 DATE

2-9-15
PLANS APPROVAL DATE

REGISTERED PROFESSIONAL ENGINEER SA K. THAI No. 71390 Exp. 12/31/15 CIVIL STATE OF CALIFORNIA

THE STATE OF CALIFORNIA OR ITS OFFICERS OR AGENTS SHALL NOT BE RESPONSIBLE FOR THE ACCURACY OR COMPLETENESS OF SCANNED COPIES OF THIS PLAN SHEET.

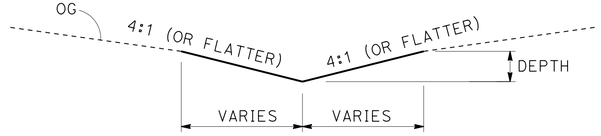

BIOFILTRATION SWALE (V-DITCH)

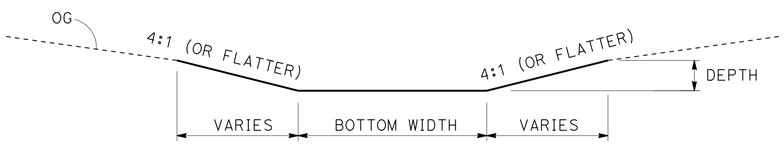

BIOFILTRATION SWALE (TRAPEZOIDAL DITCH)

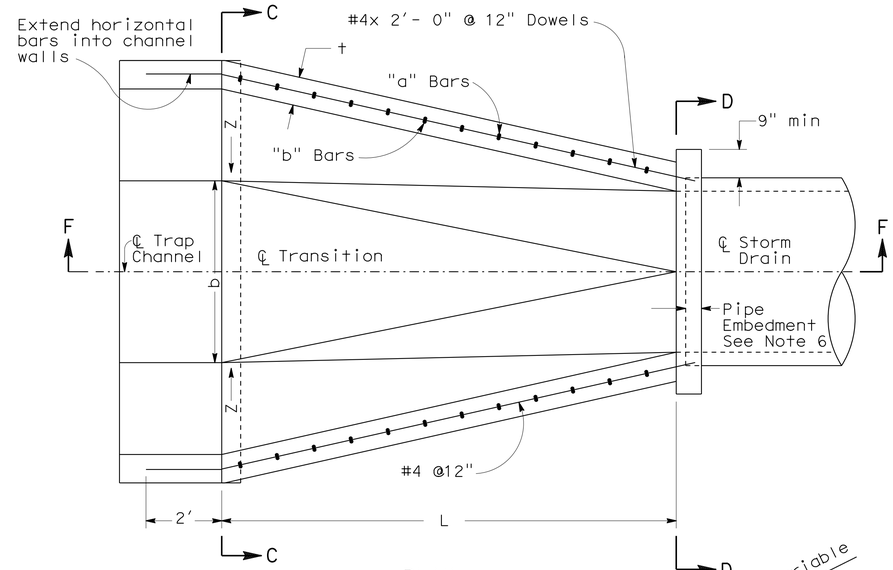

PLAN

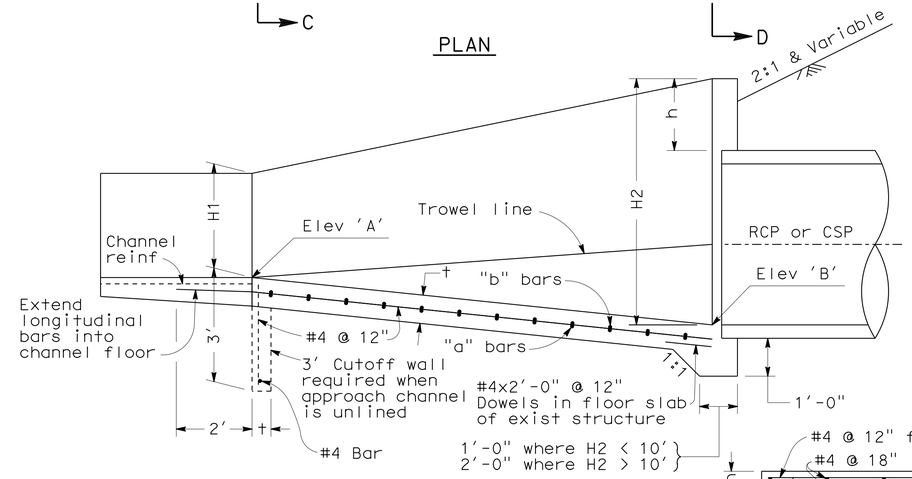

SECTION F-F

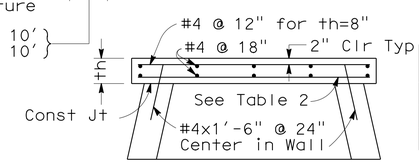

SECTION H-H

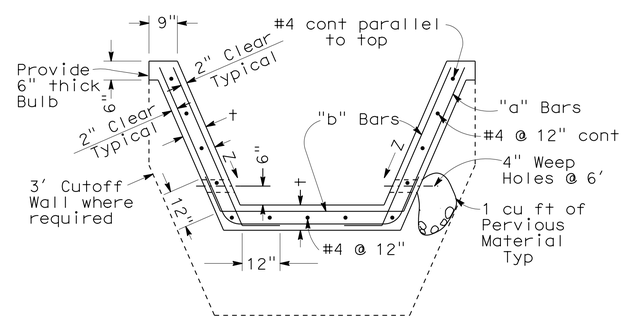

SECTION C-C

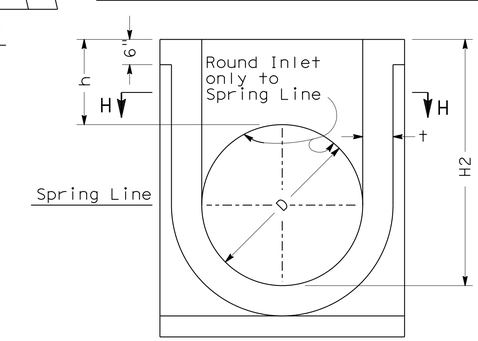

SECTION D-D

TABLE 1

* DESIGN "H"	t	REINFORCEMENT
0' - 4'	6"	#4 @ 12" both ways centered in slab
4' - 6'	6"	"a" bars #5 @ 24" "b" bars #5 @ 24"
6' - 8'	6"	"a" bars #5 @ 12" "b" bars #5 @ 12"
Greater than 8'	10"	"a" bars #6 @ 6" "b" bars #5 @ 12"

* Design "H" varies throughout length of transition. Use larger "H" on short transitions (L=15' or less). For longer transitions, vary reinforcement as indicated above.

NOTES

1. Provide a construction joint between the transition and the storm drain.
2. Extend the longitudinal reinforcing steel of the transition 2' into the trapezoidal channel.
3. In lieu of placing the dowels between the transition and the rectangular storm drain, the longitudinal reinforcing steel of the transition structure may be extended 2' into the storm drain.
4. 'H', 'H2', 'h', 'L', 'b', Elev 'A' and Elev 'B', and 'Z' shall be shown on the plans.
5. This structural detail may be applied to transitions with curved bottoms and curved side walls.
6. Pipe embedment shall be 5" for 96" or less and 8" for over 96".

TABLE 2

S or D	th	REINFORCEMENT	
		h=6" to 4'	h=5' to 8'
1'-6" to 5'-6"	6"	#4 @ 12"	#4 @ 12"
6' to 10'	6"	#4 @ 8"	#6 @ 9"
12'	8"	#5 @ 9"	#6 @ 6"

TRANSITION STRUCTURE No. 4
(TS No. 4)

WATER POLLUTION CONTROL DETAILS
NO SCALE

WD-2

STATE OF CALIFORNIA - DEPARTMENT OF TRANSPORTATION
Caltrans
HYDRAULICS
FUNCTIONAL SUPERVISOR: DAVE BHALLA
CALCULATED-DESIGNED BY: S. THAI
CHECKED BY: C.P. NGUYEN
REVISED BY
DATE REVISED

LAST REVISION 08-17-11
DATE PLOTTED => 20-APR-2015
TIME PLOTTED => 12:54

Dist	COUNTY	ROUTE	POST MILES TOTAL PROJECT	SHEET No.	TOTAL SHEETS
07	Ven	101	14.1/21.1	33	108

Timothy B Sobelman 11-16-12
REGISTERED CIVIL ENGINEER DATE

2-9-15
PLANS APPROVAL DATE

REGISTERED PROFESSIONAL ENGINEER TIMOTHY B. SOBELMAN No. 59249 Exp. 6-30-15 CIVIL STATE OF CALIFORNIA

THE STATE OF CALIFORNIA OR ITS OFFICERS OR AGENTS SHALL NOT BE RESPONSIBLE FOR THE ACCURACY OR COMPLETENESS OF SCANNED COPIES OF THIS PLAN SHEET.

GENERAL NOTES

Designation:
Partial Austin Vault Sand Filters (AVSFs) are open air reinforced concrete vaults utilizing both sedimentation and sand filtration basins. Type designation is based on length configuration, water quality volume to be drained in a 24 hour period, and average depth of water.

Standard configurations are noted for the following design water quality volumes (WQV): 5,000, 10,000, and 15,000 cubic feet. Length configurations are either short (S) or long (L). The average water depth can be either 3 ft, 4.5 ft, or 6 ft as designed in Design Water Quality Volumes (WQV) table.

Special Reinforcement Coverage:
AVSF Standard Details are not to be used in a corrosive environment or where there is a severe abrasive flow condition or in freeze-thaw locations.

Special Design:
Required for the following conditions: ground water conditions above bottom of AVSF, surcharge loads exceeding HS20 truck load, design bearing pressures or sizes greater than those on this plan, inlet velocities which exceed 8.0 ft/sec at gabion wall, and settlement due to liquefaction.

DESIGN WATER QUALITY VOLUMES (WQV)

AVSF Type*	WQV (ft^3)	W(ft)	L_S(ft)	L_f(ft)	H_W(ft)
S-3500-3	3,500	21	14	38	3
L-3500-3	3,500	15	18	53	3
S-3500-4.5	4,380	21	14	38	4.5
L-3500-4.5	4,380	15	18	53	4.5
S-3500-6	5,260	21	14	38	6
L-3500-6	5,260	15	18	53	6
S-5000-3	5,000	27	15	42	3
L-5000-3	5,000	18	21	63	3
S-5000-4.5	6,250	27	15	42	4.5
L-5000-4.5	6,250	18	21	63	4.5
S-5000-6	7,500	27	15	42	6
L-5000-6	7,500	18	21	63	6
S-10000-3	10,000	36	21	63	3
L-10000-3	10,000	24	30	94	3
S-10000-4.5	12,500	36	21	63	4.5
L-10000-4.5	12,500	24	30	94	4.5
S-10000-6	15,000	36	21	63	6
L-10000-6	15,000	24	30	94	6
S-15000-3	15,000	45	25	76	3
L-15000-3	15,000	30	37	115	3
S-15000-4.5	18,750	45	25	76	4.5
L-15000-4.5	18,750	30	37	115	4.5
S-15000-6	22,500	45	25	76	6
L-15000-6	22,500	30	37	115	6

* AVSF TYPE = LENGTH CONFIGURATION (S OR L) - WATER QUALITY VOLUME (CF) - DESIGN WATER DEPTH (H_W ELEVATION)

DESIGN NOTES

Specifications:
Design:
Bridge Design Specification April 2000 (LFD) (1996 AASHTO) with interims and revisions by Caltrans

Wall & Footing (LFD): 1.5 D + 1.5 E + 1.5 W + 1.5 SC
Where D = Dead Load
E = Earth Load
W = Water Load
SC = Surcharge

Capacity reduction factor is included.

Earth Load:
125 lb/ft^3 vertical,

Water Load:
62.4 lb/ft^3 horizontal/vertical,

Earth pressure for 2:1 unlimited slope determined from Rankine's formula with ϕ = 33°42′ (Case II).

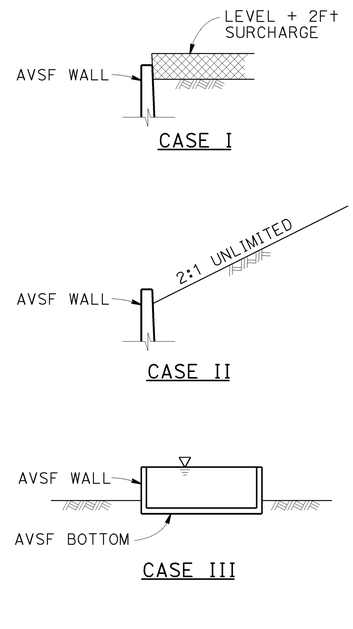

DETAIL OF DESIGN LOADING CASES

CASE I LEVEL + 2FT SURCHARGE, AVSF EMPTY
CASE II 2:1 UNLIMITED SLOPE, AVSF EMPTY
CASE III AVSF FULL OF WATER, NO SOIL PRESSURE

UNIT STRESSES:
f'_c = 4,000 psi
f_y = 60,000 psi

ABBREVIATIONS

AVSF - AUSTIN VAULT SAND FILTER
EWT&B - EACH WAY TOP AND BOTTOM
H_W - GABION WALL HEIGHT (TYPICALLY SET AT DESIGN WATER DEPTH)
L_f - LENGTH OF FILTRATION BASIN
L_S - LENGTH OF SEDIMENT BASIN
T - WALL THICKNESS
W - WIDTH OF AVSF
WQV - WATER QUALITY VOLUME

LEGEND

DESIGN WATER DEPTH
STANDARD PLAN SHEET No.
DETAIL No.

NOTES

Expansion joints:
Inverts and sidewalls - Place ½" expansion joint filler and waterstop where indicated. See "Austin Vault Sand Filter Details No. 2" sheet for specific wall & invert details.

Construction Joints:
Must be placed where indicated on plans.

Backfill:
See Standard Specifications, except the difference in backfill must not exceed 8′-0" between side walls and inlet and outlet walls.

Earthwork:
Limits of payment for excavation and backfill.

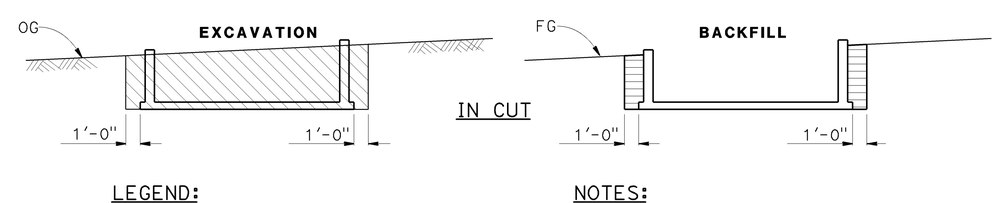

LEGEND:
STRUCTURE EXCAVATION
STRUCTURE BACKFILL

NOTES:
1. Slope or shore excavation sides as necessary.
2. Dimensions shown are minimum.
3. 95% compaction 1′-0" below floor slabs.

AUSTIN VAULT SAND FILTER

WATER POLLUTION CONTROL DETAILS
AUSTIN VAULT SAND FILTER
LEGEND
NO SCALE

WD-3

STATE OF CALIFORNIA - DEPARTMENT OF TRANSPORTATION
Caltrans
FUNCTIONAL SUPERVISOR: TIMOTHY B. SOBELMAN
CALCULATED-DESIGNED BY: D. WANG
CHECKED BY: L. HE
REVISED BY
DATE REVISED

LAST REVISION 04-12-13
DATE PLOTTED => 15-APR-2013
TIME PLOTTED => 13:48

Dist	COUNTY	ROUTE	POST MILES TOTAL PROJECT	SHEET No.	TOTAL SHEETS
07	Ven	101	14.1/21.1	34	108

Timothy B. Sobelman 11-16-12
REGISTERED CIVIL ENGINEER DATE

2-9-15
PLANS APPROVAL DATE

REGISTERED PROFESSIONAL ENGINEER TIMOTHY B. SOBELMAN No. 59249 Exp. 6-30-15 CIVIL STATE OF CALIFORNIA

THE STATE OF CALIFORNIA OR ITS OFFICERS OR AGENTS SHALL NOT BE RESPONSIBLE FOR THE ACCURACY OR COMPLETENESS OF SCANNED COPIES OF THIS PLAN SHEET.

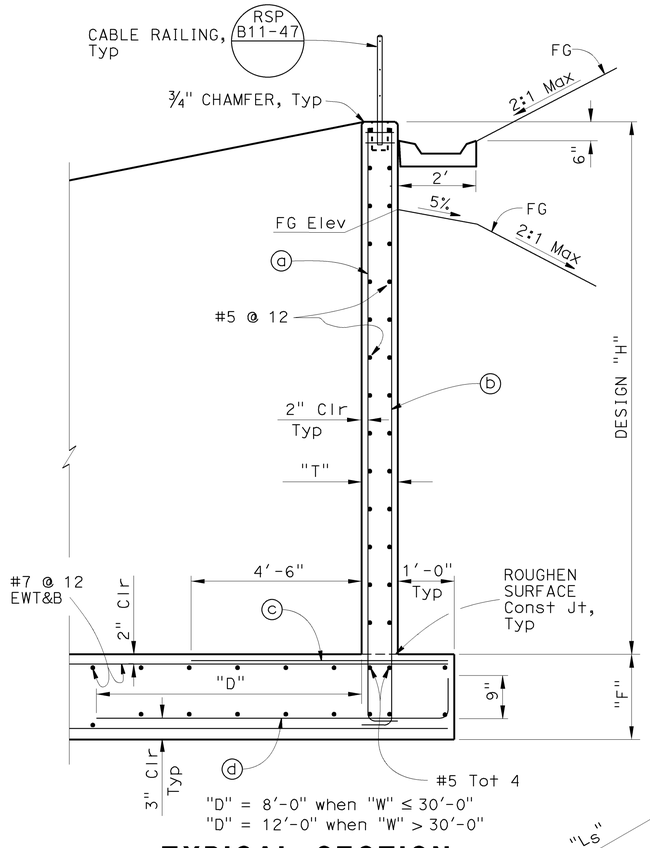

TYPICAL SECTION

REINFORCING STEEL AND DATA FOR WALLS

Design "H"	6'	8'	10'	12'	14'	16'
"T"	12"	12"	12"	12"	14"	14"
"F"	1'-3"	1'-3"	1'-3"	1'-6"	1'-9"	1'-9"
ⓐ bars ⌊	#6 @ 12	#6 @ 12	#6 @ 8	#7 @ 8	#8 @ 8	#9 @ 6
ⓑ bars ⌋	#6 @ 12	#6 @ 12	#6 @ 8	#7 @ 8	#8 @ 8	#8 @ 6
ⓒ bars	#6 @ 12	#6 @ 12	#6 @ 8	#6 @ 8	#7 @ 8	#7 @ 6
ⓓ bars ⌣	#6 @ 12	#6 @ 12	#6 @ 8	#6 @ 8	#7 @ 8	#7 @ 6

NOTES (THIS SHEET ONLY):

1. For dimensions "W", "Ls", "Lf" and "Hw", see Design WQV table on "Austin Vault Sand Filter Legend" sheet.
2. For footing details not shown, see "Austin Wall Sand Filter Details No. 1 and No. 2" sheets.
3. The contractor has the option of matching the Sedimentation Basin wall thickness with the Filtration Basin wall thickness. Thicker design wall must be used at no additional cost to the Department.
4. For additional corner reinforcement not shown see Typical Corner Detail on "Austin Wall Sand Filter Details No. 1" sheet.
5. * - For details see "Drainage Plans".
6. For project specific AVFS elevations, see Wall Design Elevation Table on the drainage profile sheets.

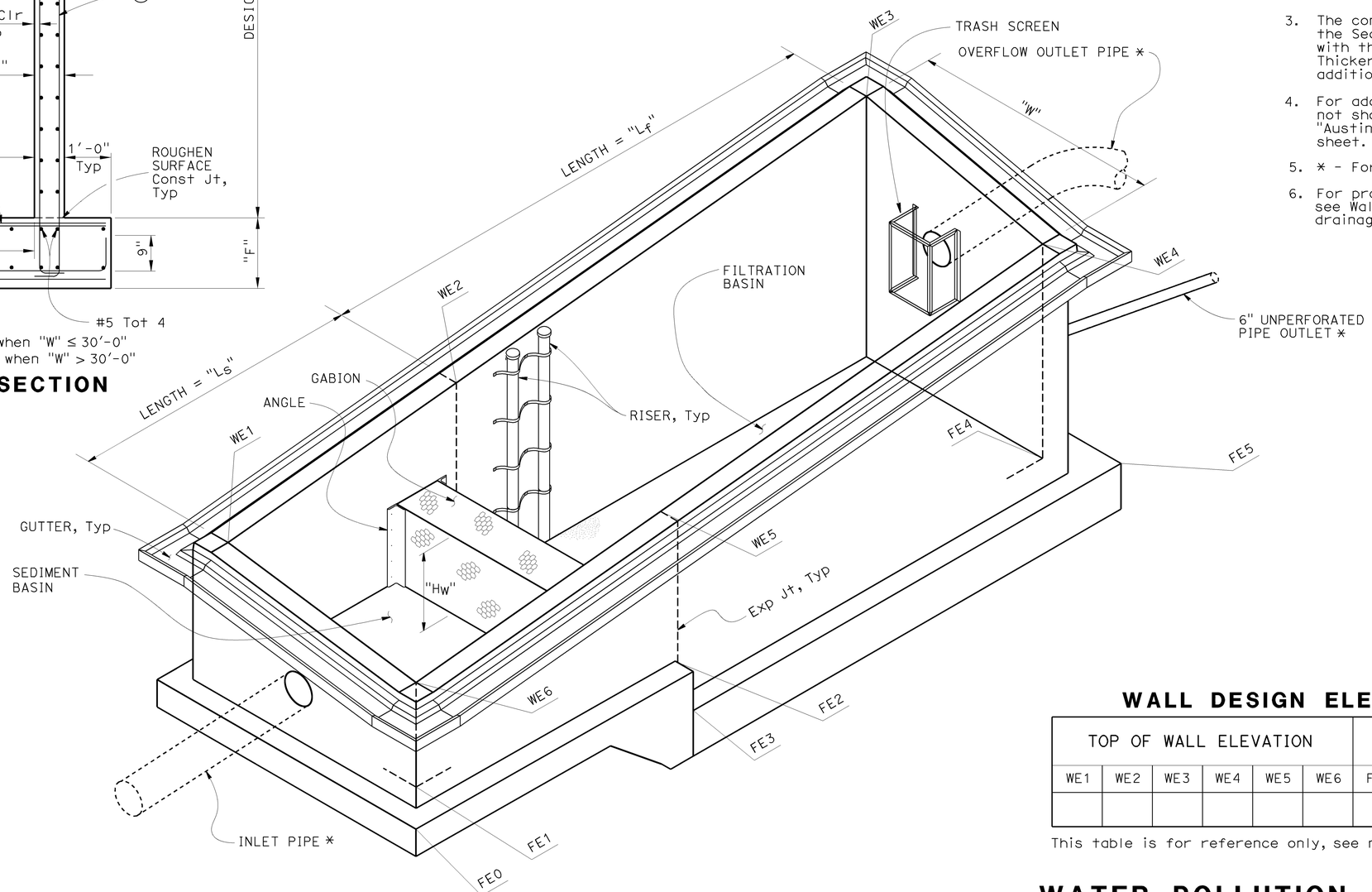

AUSTIN VAULT SAND FILTER DRAINAGE SYSTEM

NOTE: Steel ladders and cable railings not shown for clarity.

WALL DESIGN ELEVATION TABLE

TOP OF WALL ELEVATION						TOP OF FOOTING ELEVATION					
WE1	WE2	WE3	WE4	WE5	WE6	FE0	FE1	FE2	FE3	FE4	FE5

This table is for reference only, see note 6.

WATER POLLUTION CONTROL DETAILS
AUSTIN VAULT SAND FILTER
LAYOUT No. 1

NO SCALE

WD-4

STATE OF CALIFORNIA - DEPARTMENT OF TRANSPORTATION
Caltrans

FUNCTIONAL SUPERVISOR: TIMOTHY B. SOBELMAN
CALCULATED-DESIGNED BY: D. WANG
CHECKED BY: L. HE
REVISED BY
DATE REVISED

LAST REVISION 04-12-13
DATE PLOTTED => 15-APR-2013
TIME PLOTTED => 13:48

Dist	COUNTY	ROUTE	POST MILES TOTAL PROJECT	SHEET No.	TOTAL SHEETS
07	Ven	101	14.1/21.1	35	108

Timothy G Sobelman 11-16-12
REGISTERED CIVIL ENGINEER DATE

2-9-15
PLANS APPROVAL DATE

REGISTERED PROFESSIONAL ENGINEER TIMOTHY B. SOBELMAN No. 59249 Exp. 6-30-15 CIVIL STATE OF CALIFORNIA

THE STATE OF CALIFORNIA OR ITS OFFICERS OR AGENTS SHALL NOT BE RESPONSIBLE FOR THE ACCURACY OR COMPLETENESS OF SCANNED COPIES OF THIS PLAN SHEET.

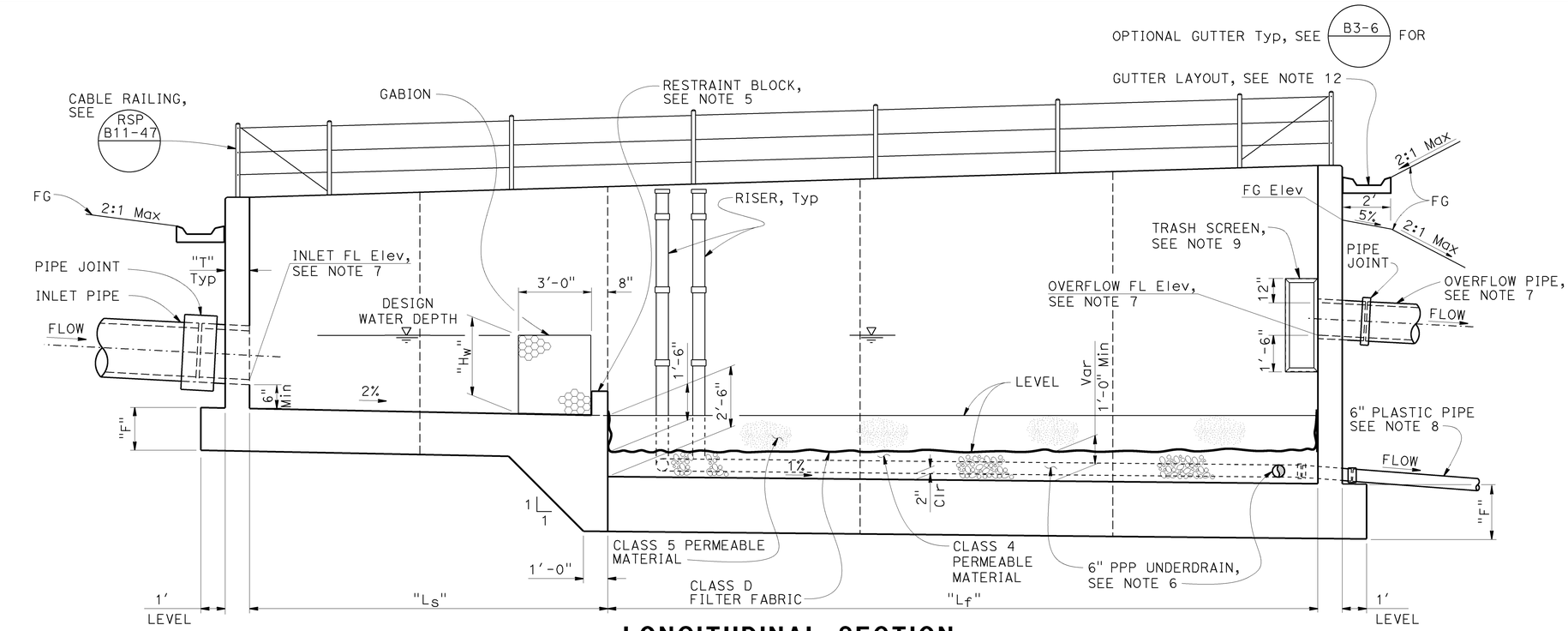

LONGITUDINAL SECTION

NOTE: Ladder not shown for clarity.

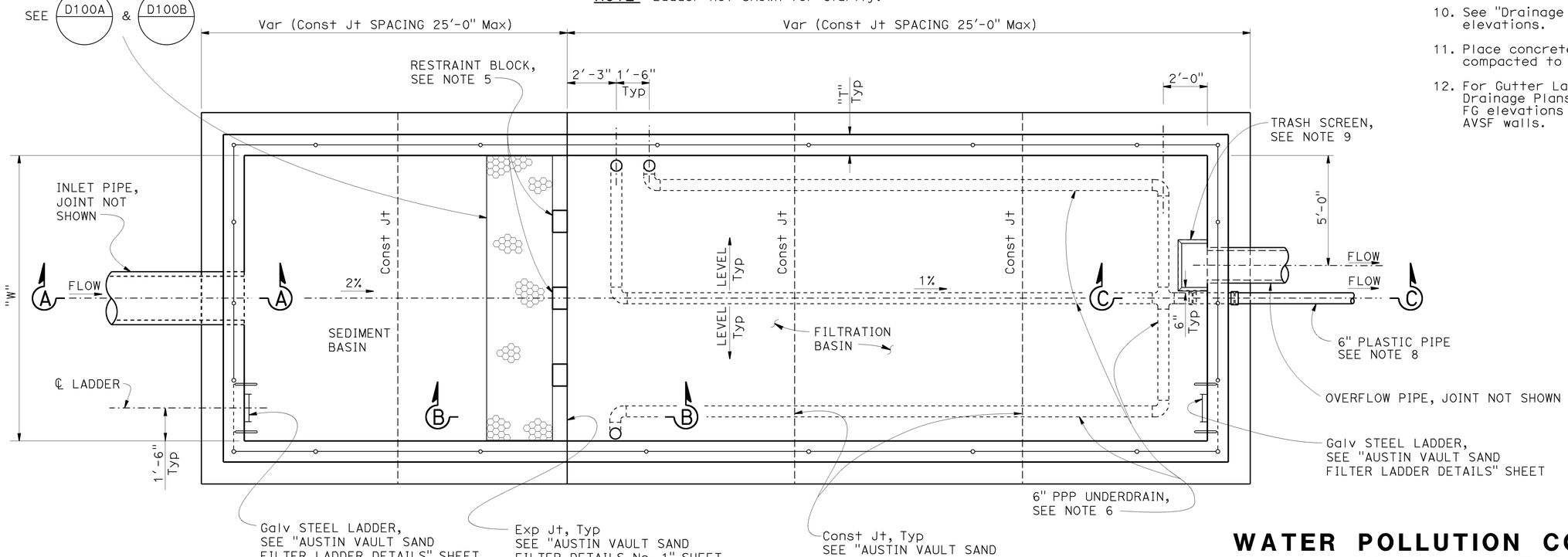

PLAN

NOTE: Gutter not shown for clarity.

NOTES (THIS SHEET ONLY)

1. For dimensions "W", "Ls", "Lf" and "Hw", see Design WQV table on "Austin Vault Sand Filter Legend" sheet.
2. For dimensions "T" and "F", see "Austin Vault Sand Filter Layout No. 1" sheet.
3. For Typical Section, see "Austin Vault Sand Filter Layout No. 1" sheet.
4. For Section A-A, B-B and C-C, see "Austin Vault Sand Filter Details No. 1" sheet.
5. For restraint block details, see "Austin Vault Sand Filter Details No. 1" and "Details No. 2" sheets.
6. For details of PPP underdrain system, see "Austin Vault Sand Filter Underdrain Details" sheet.
7. For Layout and FL elevations of inlet and overflow pipe, see "Drainage Plans and Drainage Profiles" sheets.
8. For slope of outlet plastic pipe, see "Drainage Profiles".
9. For trash screen details (frame and perforated metal skin), see "Austin Vault Sand Filter Trash Screen Details" sheet.
10. See "Drainage Profiles" for top of wall elevations.
11. Place concrete on base or native material compacted to 95% relative compaction.
12. For Gutter Layout and FL elevations, see Drainage Plans and Drainage Profiles. Show FG elevations at all grade breaks along the AVSF walls.

WATER POLLUTION CONTROL DETAILS
AUSTIN VAULT SAND FILTER
LAYOUT No. 2

NO SCALE

WD-5

STATE OF CALIFORNIA - DEPARTMENT OF TRANSPORTATION
Caltrans

FUNCTIONAL SUPERVISOR: TIMOTHY B. SOBELMAN
CALCULATED-DESIGNED BY: D. WANG
CHECKED BY: L. HE
REVISED BY
DATE REVISED

LAST REVISION 04-12-13
DATE PLOTTED => 15-APR-2013
TIME PLOTTED => 13:48

Dist	COUNTY	ROUTE	POST MILES TOTAL PROJECT	SHEET No.	TOTAL SHEETS
07	Ven	101	14.1/21.1	36	108

Timothy B. Sobelman 11-16-12
REGISTERED CIVIL ENGINEER DATE

2-9-15
PLANS APPROVAL DATE

REGISTERED PROFESSIONAL ENGINEER TIMOTHY B. SOBELMAN No. 59249 Exp. 6-30-15 CIVIL STATE OF CALIFORNIA

THE STATE OF CALIFORNIA OR ITS OFFICERS OR AGENTS SHALL NOT BE RESPONSIBLE FOR THE ACCURACY OR COMPLETENESS OF SCANNED COPIES OF THIS PLAN SHEET.

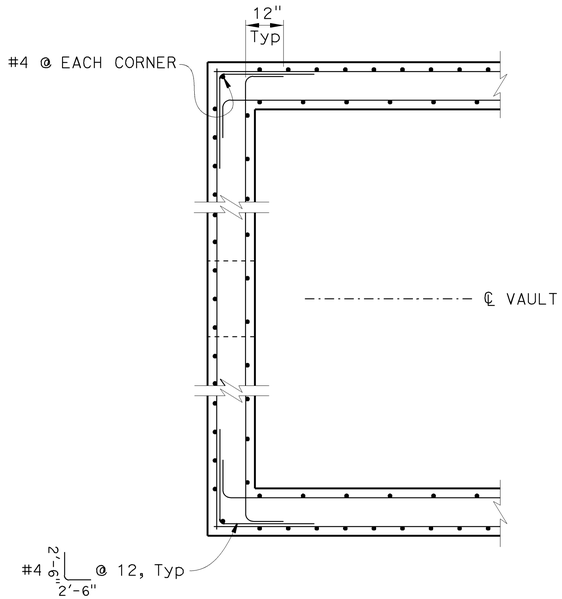

TYPICAL CORNER DETAIL

Inlet wall shown, outlet wall similar.

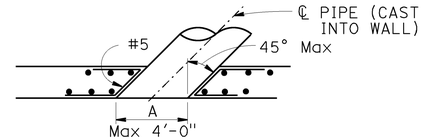

SECTION D-D

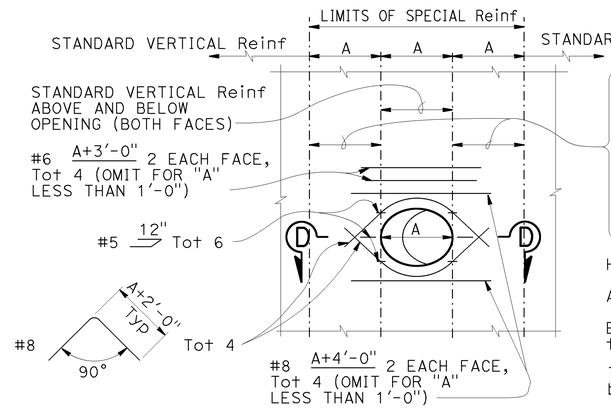

Standard vertical reinforcement plus additional vertical bars corresponding in size and number to bars cut by the opening. Place half on each side. Extend the additional bars into the footing the same as other vertical wall reinforcement and to a minimum of 60 bar diameters above the top of utility opening if wall height permits. Bundle bars as required.

Horizontal Reinf to be standard except as shown.

All Reinf to clear opening by 2" minimum.

Expansion joints must not be located within the limits of special reinforcing.

The rebar lengths shown are maximum and must be adjusted due to the limitations of space.

WALL OPENING DETAIL

To be used at inlet, outlet and overflow pipe locations

NOTES (THIS SHEET ONLY):

1. For locations of section A-A, B-B, and C-C, see "Austin Vault Sand Filter Layout No. 2" sheet.
2. For wall and footing reinforcement details, see Typical Section on "Austin Vault Sand Filter Layout No. 1" sheet.

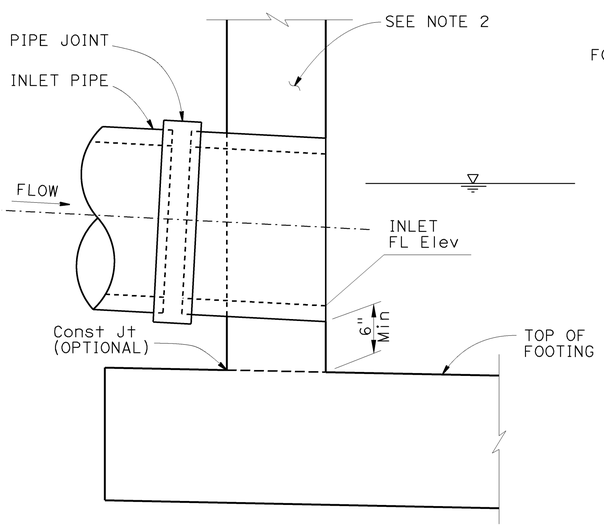

SECTION A-A

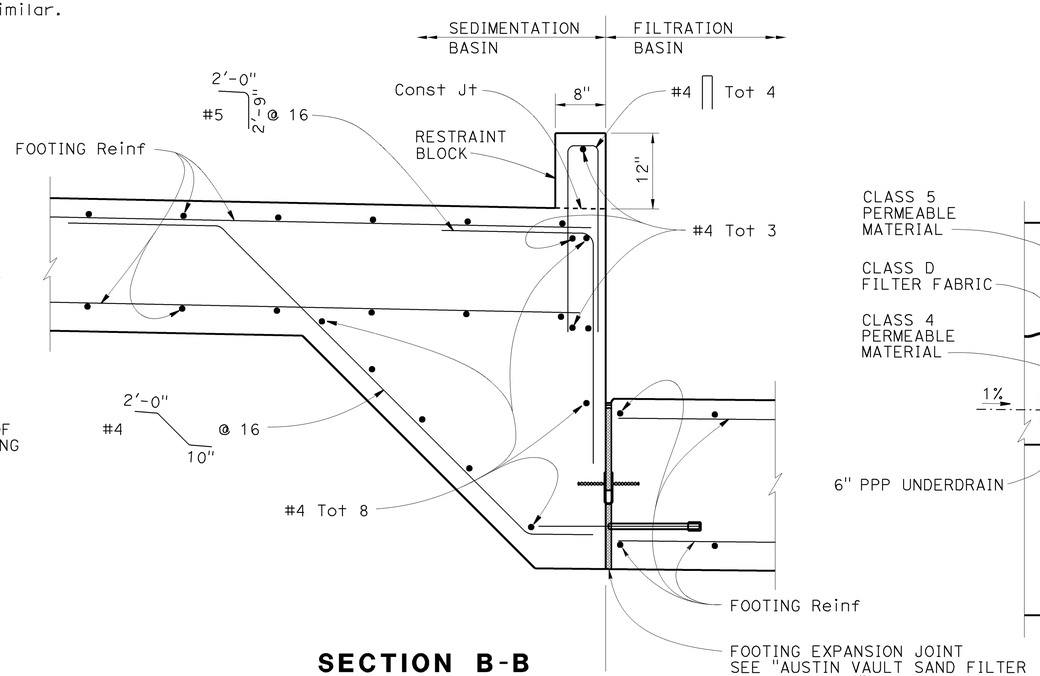

SECTION B-B

(Gabion wall and other details not shown for clarity)

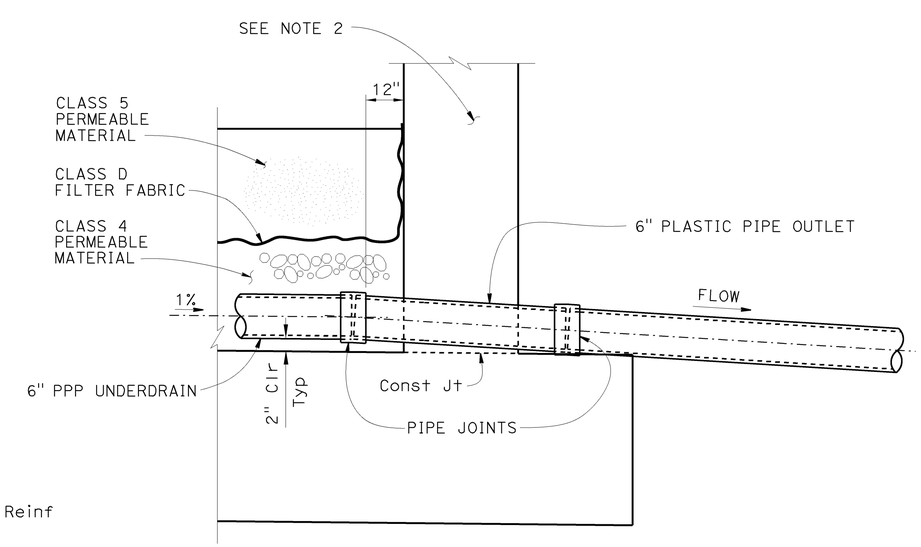

SECTION C-C

WATER POLLUTION CONTROL DETAILS
AUSTIN VAULT SAND FILTER
DETAILS No. 1

NO SCALE

WD- 6

STATE OF CALIFORNIA - DEPARTMENT OF TRANSPORTATION
Caltrans

FUNCTIONAL SUPERVISOR: TIMOTHY B. SOBELMAN
CALCULATED-DESIGNED BY: D. WANG
CHECKED BY: L. HE
REVISED BY
DATE REVISED

LAST REVISION 04-12-13
DATE PLOTTED => 15-APR-2013
TIME PLOTTED => 13:48

Dist	COUNTY	ROUTE	POST MILES TOTAL PROJECT	SHEET No.	TOTAL SHEETS
07	Ven	101	14.1/21.1	37	108

REGISTERED CIVIL ENGINEER 11-16-12 DATE

2-9-15
PLANS APPROVAL DATE

REGISTERED PROFESSIONAL ENGINEER TIMOTHY B. SOBELMAN No. 59249 Exp. 6-30-15 CIVIL STATE OF CALIFORNIA

THE STATE OF CALIFORNIA OR ITS OFFICERS OR AGENTS SHALL NOT BE RESPONSIBLE FOR THE ACCURACY OR COMPLETENESS OF SCANNED COPIES OF THIS PLAN SHEET.

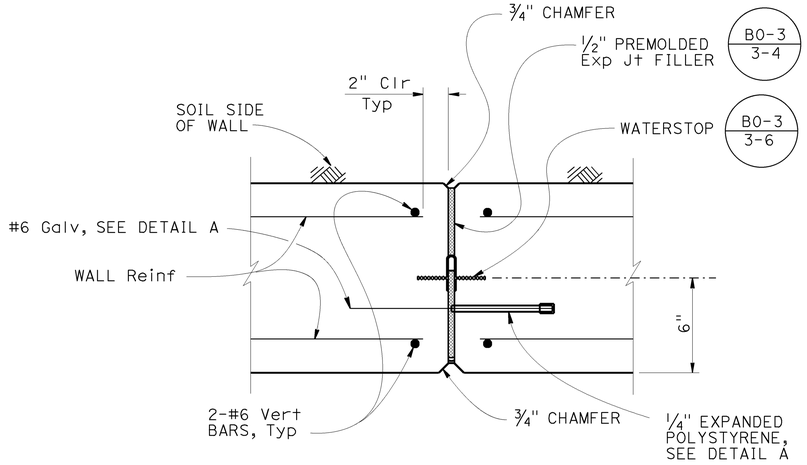

WALL EXPANSION JOINT DETAIL - PLAN SECTION

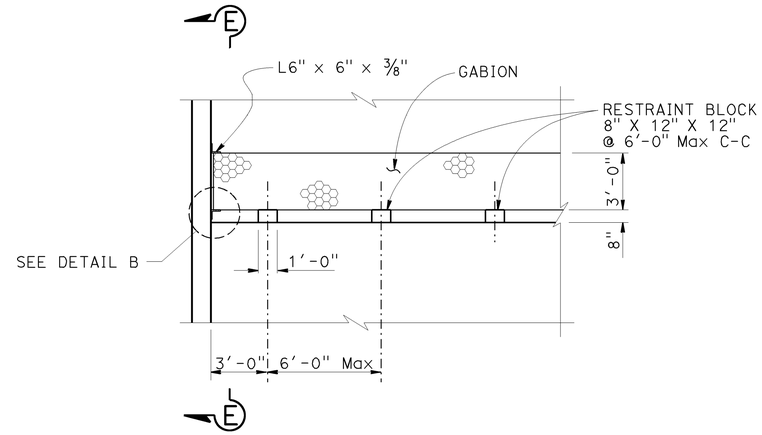

RESTRAINT BLOCK DETAIL

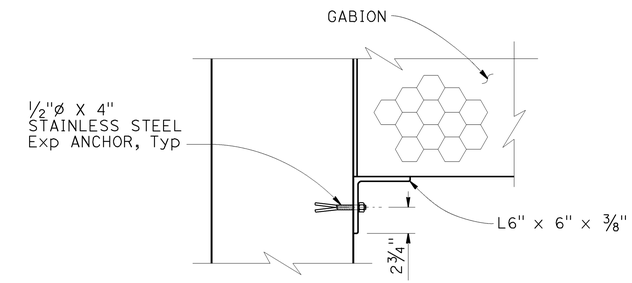

DETAIL B

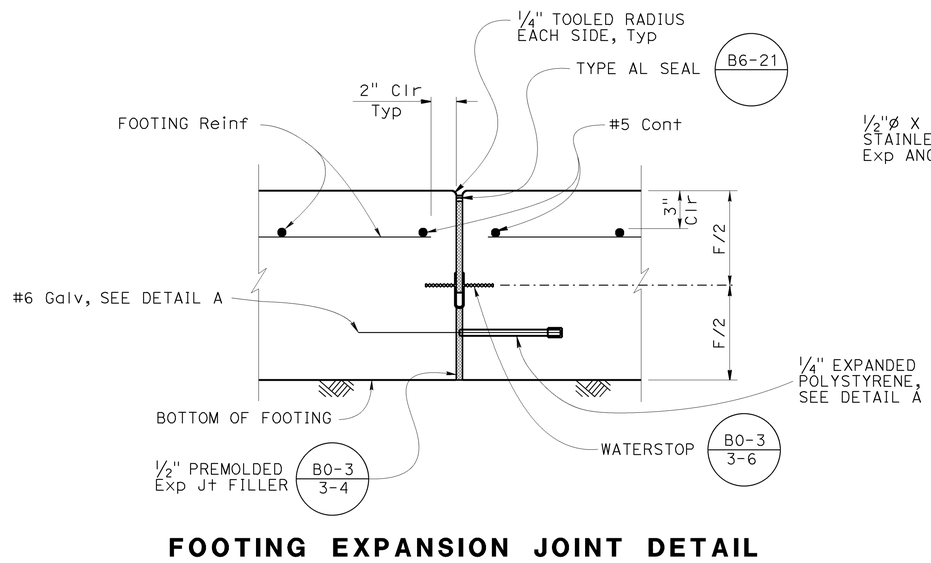

FOOTING EXPANSION JOINT DETAIL

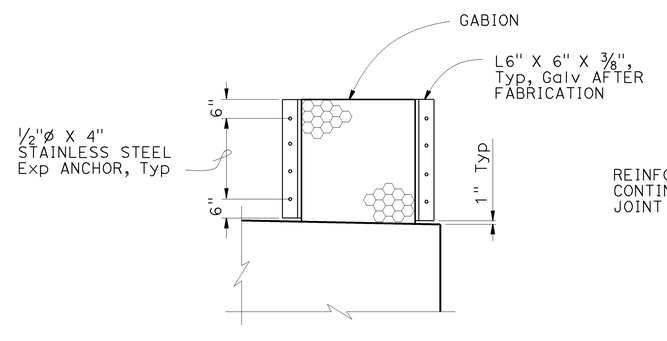

SECTION E-E

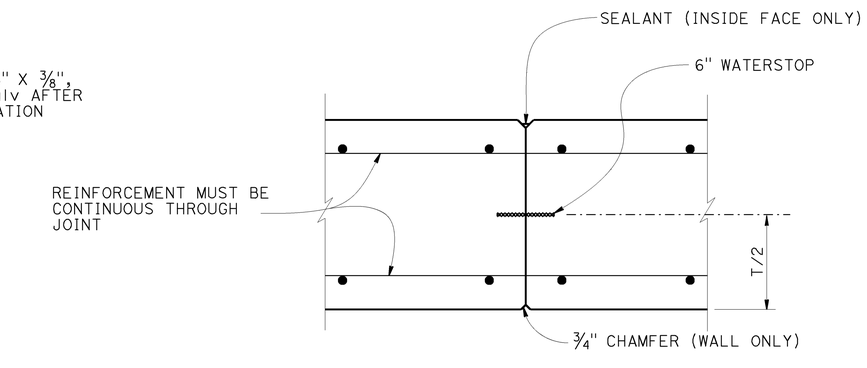

WALL CONSTRUCTION JOINT DETAIL

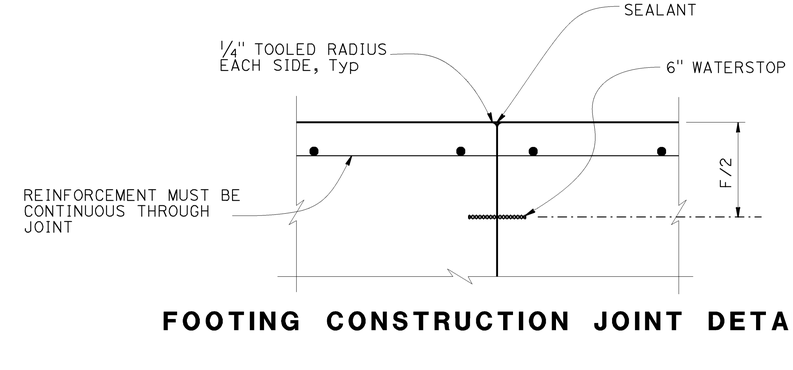

FOOTING CONSTRUCTION JOINT DETAIL

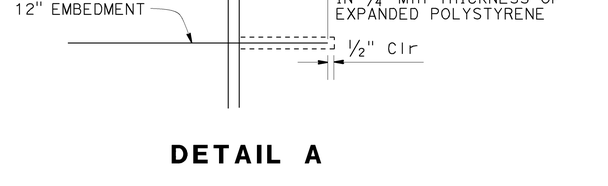

DETAIL A

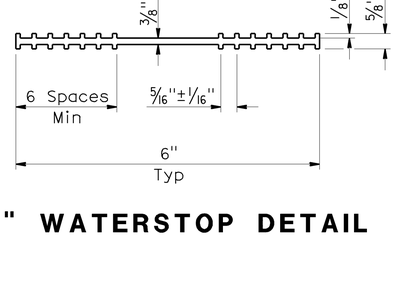

6" WATERSTOP DETAIL

WATER POLLUTION CONTROL DETAILS
AUSTIN VAULT SAND FILTER
DETAILS No. 2

NO SCALE

WD-7

REVISED BY	DATE REVISED

CALCULATED-DESIGNED BY	CHECKED BY
D. WANG	L. HE

FUNCTIONAL SUPERVISOR: TIMOTHY B. SOBELMAN

STATE OF CALIFORNIA - DEPARTMENT OF TRANSPORTATION

Caltrans

LAST REVISION 04-12-13 | DATE PLOTTED => 15-APR-2013 | TIME PLOTTED => 13:48

Dist	COUNTY	ROUTE	POST MILES TOTAL PROJECT	SHEET No.	TOTAL SHEETS
07	Ven	101	14.1/21.1	38	108

REGISTERED CIVIL ENGINEER 11-16-12 DATE

2-9-15
PLANS APPROVAL DATE

REGISTERED PROFESSIONAL ENGINEER TIMOTHY B. SOBELMAN No. 59249 Exp. 6-30-15 CIVIL STATE OF CALIFORNIA

THE STATE OF CALIFORNIA OR ITS OFFICERS OR AGENTS SHALL NOT BE RESPONSIBLE FOR THE ACCURACY OR COMPLETENESS OF SCANNED COPIES OF THIS PLAN SHEET.

NOTES (THIS SHEET ONLY):

1. All angles, screws and perforated metal must be galvanized.
2. Paint all weld joints with zinc rich paint or galvanize after welding.
3. Dimension "D1" is to be equal to inside diameter of overflow pipe.

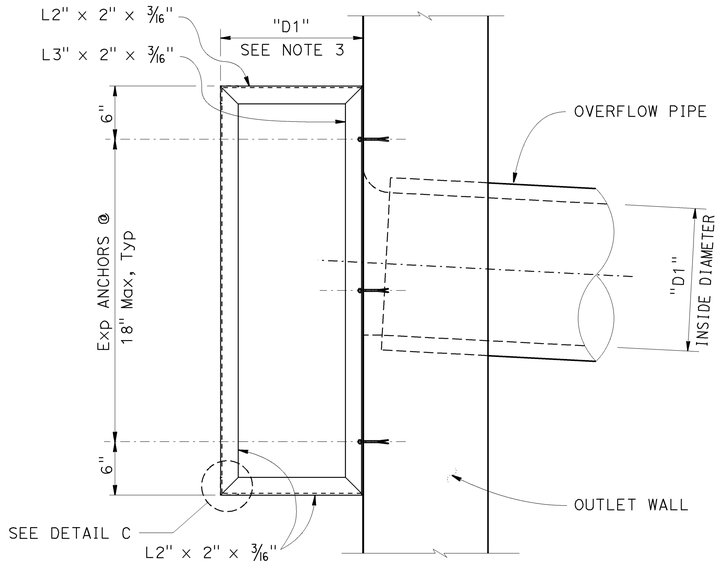

ELEVATION

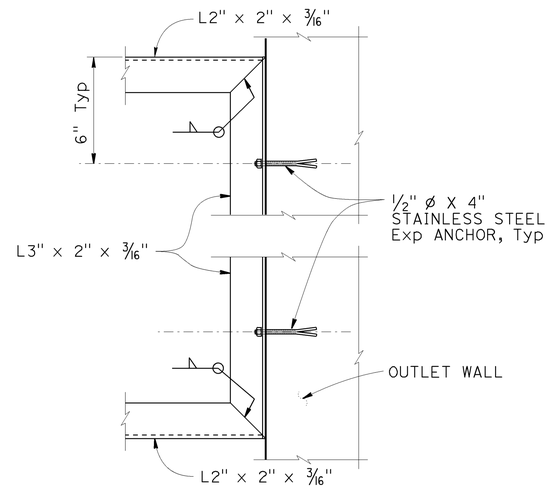

SECTION F - F

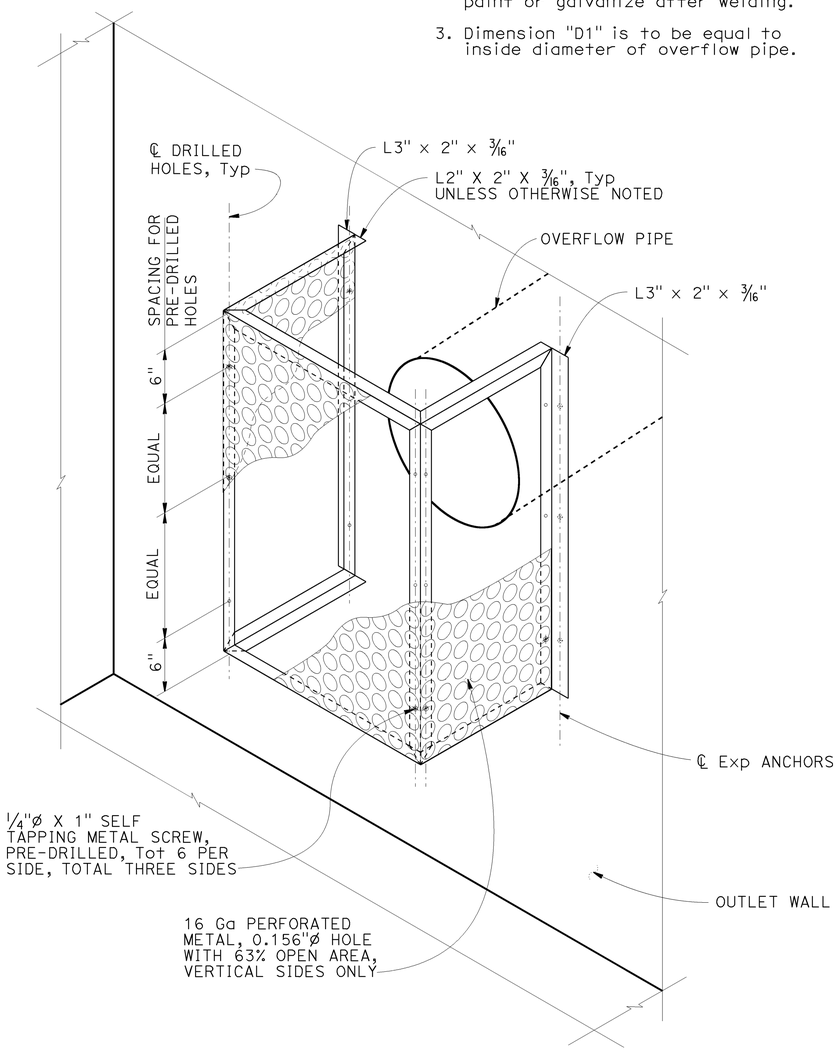

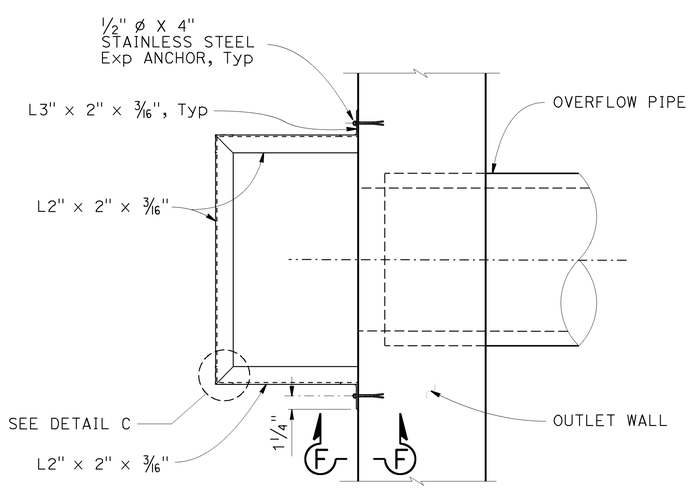

PLAN

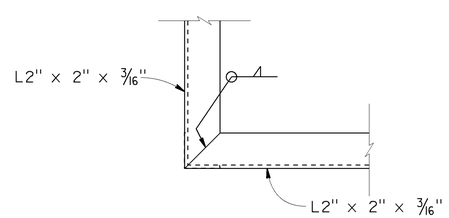

DETAIL C
TYPICAL CORNER DETAIL

WATER POLLUTION CONTROL DETAILS
AUSTIN VAULT SAND FILTER
TRASH SCREEN DETAILS

NO SCALE

WD- 8

STATE OF CALIFORNIA - DEPARTMENT OF TRANSPORTATION

Caltrans

FUNCTIONAL SUPERVISOR: TIMOTHY B. SOBELMAN

CALCULATED-DESIGNED BY: D. WANG

CHECKED BY: L. HE

REVISED BY

DATE REVISED

LAST REVISION 04-12-13

DATE PLOTTED => 15-APR-2013
TIME PLOTTED => 13:48

Dist	COUNTY	ROUTE	POST MILES TOTAL PROJECT	SHEET No.	TOTAL SHEETS
07	Ven	101	14.1/21.1	39	108

REGISTERED CIVIL ENGINEER 11-16-12 DATE

2-9-15
PLANS APPROVAL DATE

REGISTERED PROFESSIONAL ENGINEER TIMOTHY B. SOBELMAN No. 59249 Exp. 6-30-15 CIVIL STATE OF CALIFORNIA

THE STATE OF CALIFORNIA OR ITS OFFICERS OR AGENTS SHALL NOT BE RESPONSIBLE FOR THE ACCURACY OR COMPLETENESS OF SCANNED COPIES OF THIS PLAN SHEET.

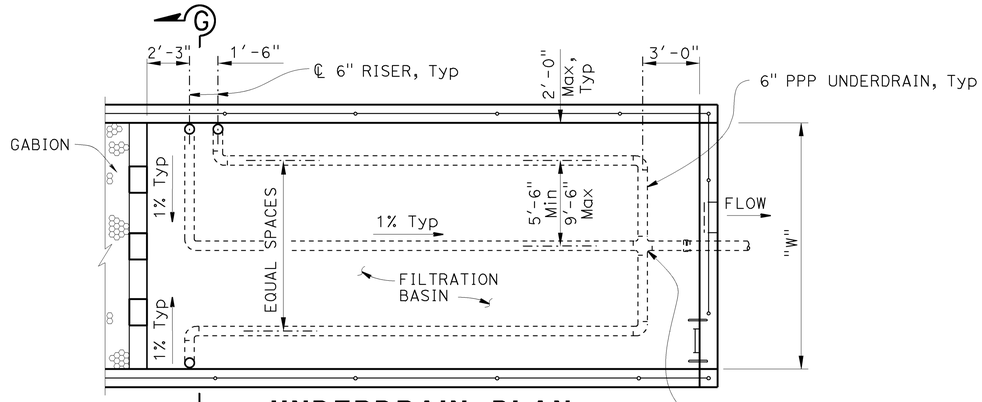

UNDERDRAIN PLAN (FILTRATION BASIN)

"W" = 15' or 21'
AVSF Type = (S or L 3,500)

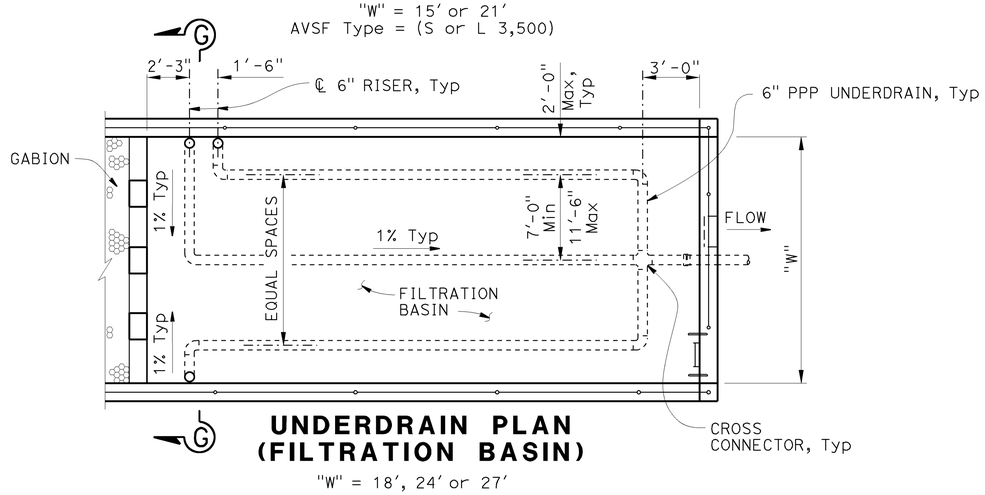

UNDERDRAIN PLAN (FILTRATION BASIN)

"W" = 18', 24' or 27'
AVSF Type = (S or L 5,000, L 10,000)

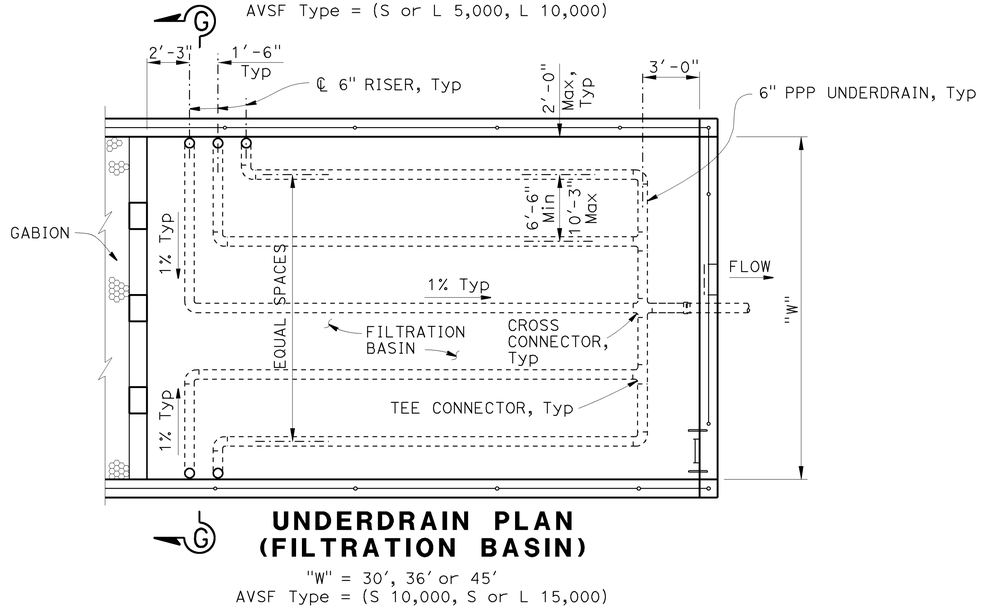

UNDERDRAIN PLAN (FILTRATION BASIN)

"W" = 30', 36' or 45'
AVSF Type = (S 10,000, S or L 15,000)

NOTE (THIS SHEET ONLY):

1. For typical cover and depth of permeable material, see "Austin Vault Sand Filter Layout No. 2" sheet.

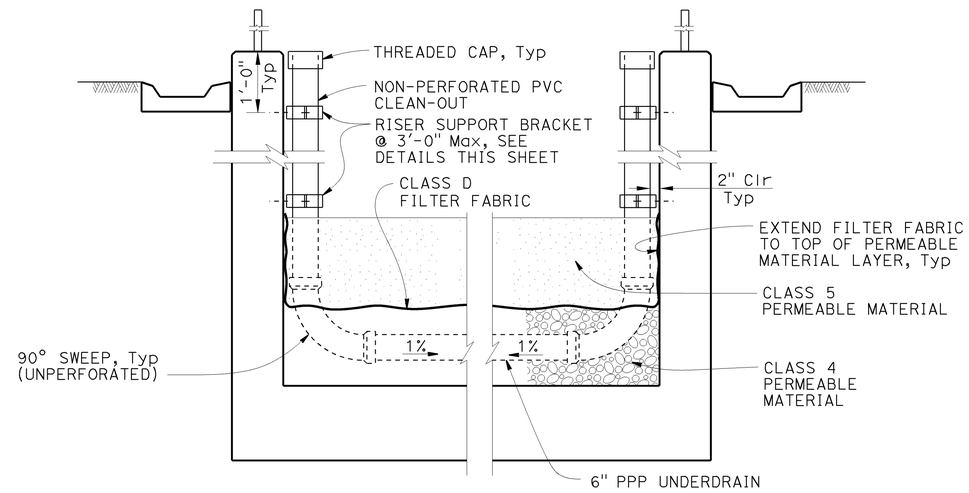

SECTION G - G

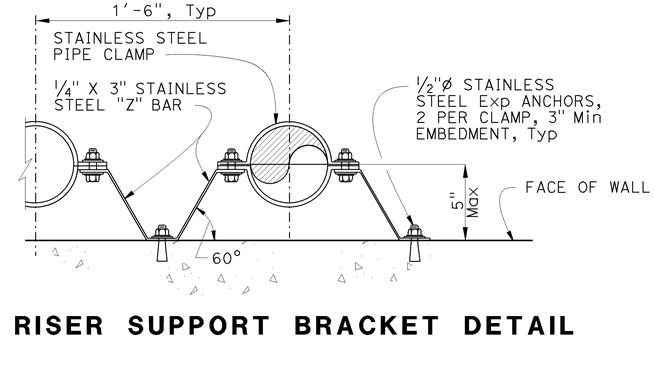

RISER SUPPORT BRACKET DETAIL

WATER POLLUTION CONTROL DETAILS
AUSTIN VAULT SAND FILTER UNDERDRAIN DETAILS

NO SCALE

WD-9

STATE OF CALIFORNIA - DEPARTMENT OF TRANSPORTATION
Caltrans

FUNCTIONAL SUPERVISOR: TIMOTHY B. SOBELMAN
CALCULATED-DESIGNED BY: D. WANG
CHECKED BY: L. HE
REVISED BY
DATE REVISED

LAST REVISION 04-12-13
DATE PLOTTED => 15-APR-2013
TIME PLOTTED => 13:48

Dist	COUNTY	ROUTE	POST MILES TOTAL PROJECT	SHEET No.	TOTAL SHEETS
07	Ven	101	14.1/21.1	40	108

Timothy G Sobelman 11-16-12
REGISTERED CIVIL ENGINEER DATE

2-9-15
PLANS APPROVAL DATE

REGISTERED PROFESSIONAL ENGINEER TIMOTHY B SOBELMAN No. 59249 Exp. 6-30-15 CIVIL STATE OF CALIFORNIA

THE STATE OF CALIFORNIA OR ITS OFFICERS OR AGENTS SHALL NOT BE RESPONSIBLE FOR THE ACCURACY OR COMPLETENESS OF SCANNED COPIES OF THIS PLAN SHEET.

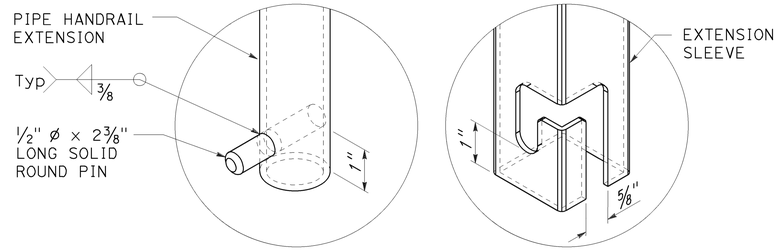

EXTENDABLE HANDRAIL LATCH

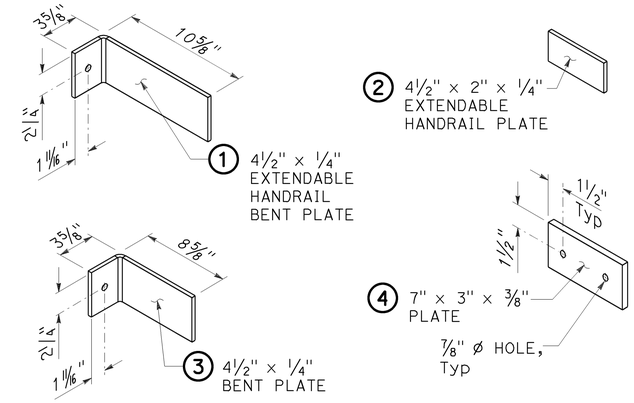

BRACKET DETAILS

NOTES (THIS SHEET ONLY):

1. Rungs must be skid resistant.
2. Use wall mounted handrail for vault depths between 4'-0" and 6'-6". For deeper vaults use extendable handrail detail. Vault depth is distance between top of wall and either top of floor slab or top of filter media material (use which ever distance is less). Ladders must not extend into filter media material.
3. No handrail required for Linear Radial GSRD 4'-0" depth, due to grate conflict.

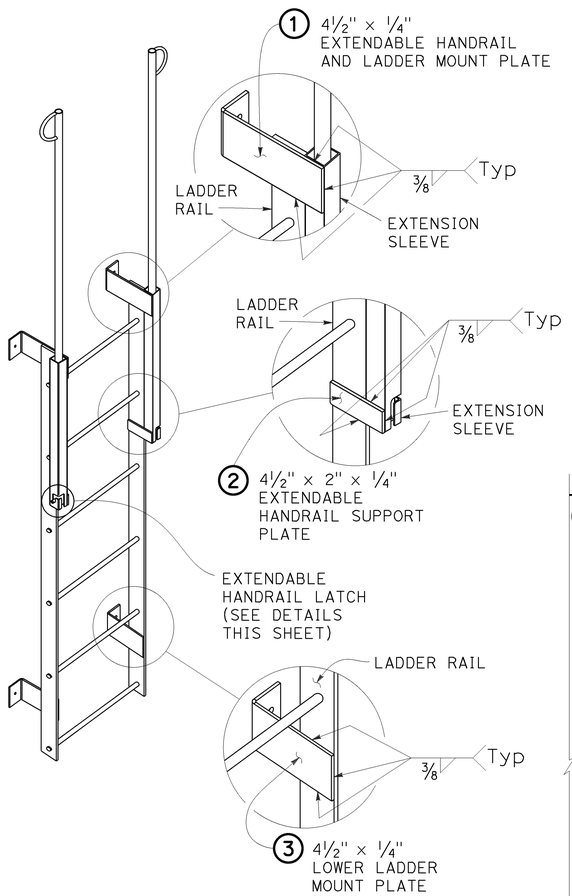

LADDER

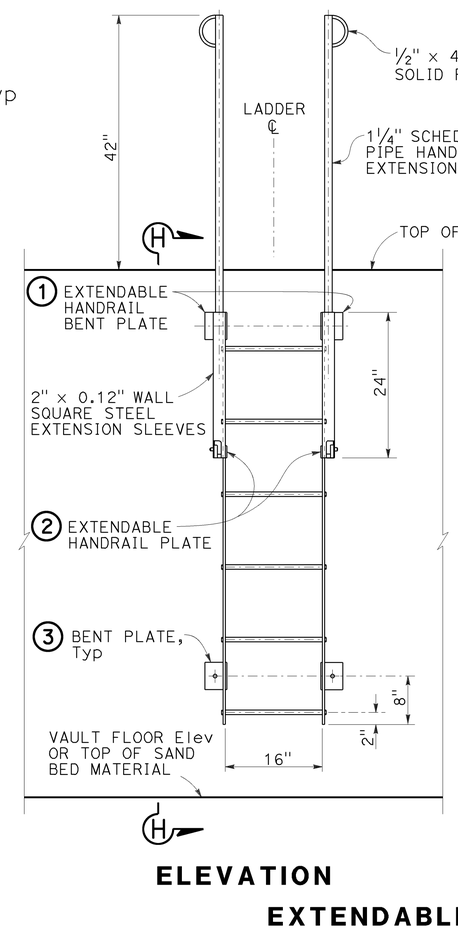

ELEVATION

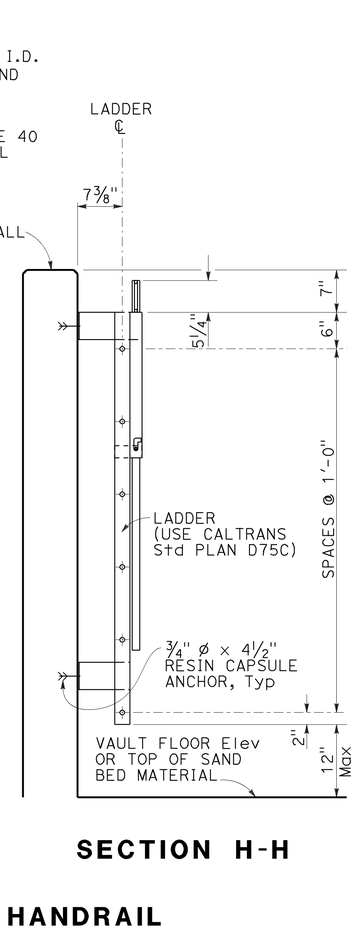

SECTION H-H

EXTENDABLE HANDRAIL

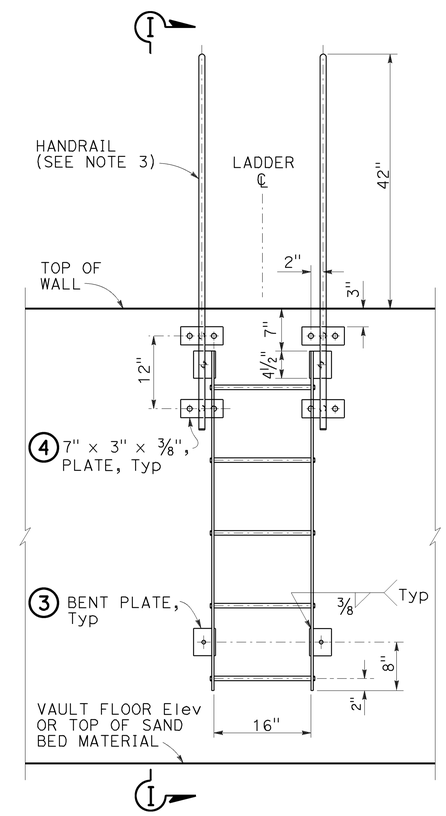

ELEVATION

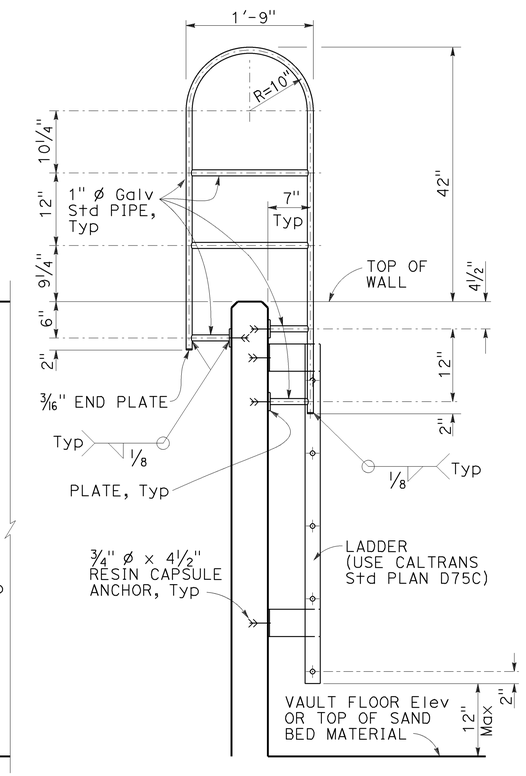

SECTION I-I

WALL MOUNTED HANDRAIL

WATER POLLUTION CONTROL DETAILS
AUSTIN VAULT SAND FILTER
LADDER DETAILS

NO SCALE

WD-10

REVISED BY	DATE REVISED

CALCULATED-DESIGNED BY: D. WANG
CHECKED BY: L. HE
FUNCTIONAL SUPERVISOR: TIMOTHY B. SOBELMAN

STATE OF CALIFORNIA - DEPARTMENT OF TRANSPORTATION
Caltrans

LAST REVISION 04-12-13 | DATE PLOTTED => 15-APR-2013 | TIME PLOTTED => 13:48

Dist	COUNTY	ROUTE	POST MILES TOTAL PROJECT	SHEET No.	TOTAL SHEETS
07	Ven	101	14.1/21.1	41	108

REGISTERED CIVIL ENGINEER 11-17-14 DATE

2-9-15
PLANS APPROVAL DATE

REGISTERED PROFESSIONAL ENGINEER SA K. THAI No. 71390 Exp. 12/31/15 CIVIL STATE OF CALIFORNIA

THE STATE OF CALIFORNIA OR ITS OFFICERS OR AGENTS SHALL NOT BE RESPONSIBLE FOR THE ACCURACY OR COMPLETENESS OF SCANNED COPIES OF THIS PLAN SHEET.

NOTES:

1. PIPE JOINTS ARE STANDARD OR AS NOTED ON PLANS
2. (N) NOT A SEPARATE PAY ITEM, FOR INFORMATION ONLY.

DRAINAGE SHEET No	DRAINAGE SYSTEM No (⬡)	DRAINAGE UNIT (◯)	HEIGHT OF INLET H OR V	MINOR CONCRETE (MINOR STRUCTURE)	MISCELLANEOUS IRON AND STEEL	REMOVE CONCRETE	DITCH EXCAVATION	18" REINFORCED CONCRETE PIPE	ROCK SLOPE PROTECTION (NO. 2, METHOD B)	ROCK SLOPE PROTECTION FABRIC (CLASS 8)	HOT MIX ASPHALT (TYPE A)	PLACE HOT MIX ASPHALT (MISCELLANEOUS AREA)	(N) TYPE 24-12 FRAME AND GRATE	REMOVE PIPE	36" PRECAST CONCRETE PIPE MANHOLE	(N) MAXIMUM COVER	AUSTIN VAULT SAND FILTER: STRUCTURE EXCAVATION	STRUCTURE BACKFILL	STRUCTURAL CONCRETE	JOINT SEAL (TYPE AL)	BAR REINFORCING STEEL	6" PERFORATED PLASTIC PIPE UNDERDRAIN	6" NON-PERFORATED PLASTIC PIPE UNDERDRAIN	CLASS 4 PERMEABLE MATERIAL	CLASS 5 PERMEABLE MATERIAL	GABION	MISCELLANEOUS METAL	CABLE RAILING	CLASS D FILTER FABRIC	DESCRIPTION	STATION
			Ft	CY	LB	CY	CY	LF	CY	SQYD	TON	SQYD	EA	LF	LF	LF	CY	CY	CY	LF	LB	LF	LF	CY	CY	CY	LB	LF	SQYD		
W-1	1	a					50.0																							BIOFILTRATION SWALE (TRAPEZOIDAL DITCH)	202.97' Rt 778+19.19 ℄ Fwy - 264.74' Rt 778+97.49 ℄ Fwy
W-2	2	a									1.3	6.6																		HMA OVERSIDE DRAINS	
		b							10.1	28.0																				ROCK SLOPE PROTECTION (NO.2, METHOD B)	
		c					119.4																							BIOFILTRATION SWALE (TRAPEZOIDAL DITCH)	92.50' Lt 830+20.00 ℄ Fwy - 95.20' Lt 831+00.00 ℄ Fwy
		d		1.1																										TRANSITION STRUCTURE No. 4 (TS-4)	
		e						59.3								4														18" RCP	
		f		3.08	435										5.83															MANHOLE No. 1 (MH-1)	98.05' Lt 831+68.65 ℄ Fwy
		g												4.0																REMOVE PIPE	
SHEET TOTAL				4.18	435		169.4	59.3	10.1	28.0	1.3	6.6		4.0	5.83																

WATER POLLUTION CONTROL QUANTITIES

WQ-1

STATE OF CALIFORNIA - DEPARTMENT OF TRANSPORTATION
Caltrans HYDRAULICS

FUNCTIONAL SUPERVISOR: DAVE BHALLA
CALCULATED-DESIGNED BY: S. THAI
CHECKED BY: C.P. NGUYEN
REVISED BY
DATE REVISED

LAST REVISION 08-17-11
DATE PLOTTED => 20-APR-2015
TIME PLOTTED => 12:54

Dist	COUNTY	ROUTE	POST MILES TOTAL PROJECT	SHEET No.	TOTAL SHEETS
07	Ven	101	14.1/21.1	42	108

REGISTERED CIVIL ENGINEER 11-17-14 DATE

2-9-15
PLANS APPROVAL DATE

REGISTERED PROFESSIONAL ENGINEER SA K. THAI No. 71390 Exp. 12/31/15 CIVIL STATE OF CALIFORNIA

THE STATE OF CALIFORNIA OR ITS OFFICERS OR AGENTS SHALL NOT BE RESPONSIBLE FOR THE ACCURACY OR COMPLETENESS OF SCANNED COPIES OF THIS PLAN SHEET.

NOTES:

1. PIPE JOINTS ARE STANDARD OR AS NOTED ON PLANS
2. (N) NOT A SEPARATE PAY ITEM, FOR INFORMATION ONLY.

DRAINAGE SHEET No	DRAINAGE SYSTEM No	DRAINAGE UNIT	HEIGHT OF INLET H OR V	MINOR CONCRETE (MINOR STRUCTURE)	MISCELLANEOUS IRON AND STEEL	REMOVE CONCRETE	DITCH EXCAVATION	18" REINFORCED CONCRETE PIPE	ROCK SLOPE PROTECTION (NO. 2, METHOD B)	ROCK SLOPE PROTECTION FABRIC (CLASS 8)	HOT MIX ASPHALT (TYPE A)	PLACE HOT MIX ASPHALT (MISCELLANEOUS AREA)	(N) TYPE 24-12 FRAME AND GRATE	REMOVE PIPE	36" PRECAST CONCRETE PIPE MANHOLE	(N) MAXIMUM COVER	AUSTIN VAULT SAND FILTER: STRUCTURE EXCAVATION	STRUCTURE BACKFILL	STRUCTURAL CONCRETE	JOINT SEAL (TYPE AL)	BAR REINFORCING STEEL	6" PERFORATED PLASTIC PIPE UNDERDRAIN	6" NON-PERFORATED PLASTIC PIPE UNDERDRAIN	CLASS 4 PERMEABLE MATERIAL	CLASS 5 PERMEABLE MATERIAL	GABION	MISCELLANEOUS METAL	CABLE RAILING	CLASS D FILTER FABRIC	DESCRIPTION	STATION
			Ft	CY	LB	CY	CY	LF	CY	SQYD	TON	SQYD	EA	LF	LF	LF	CY	CY	CY	LF	LB	LF	LF	CY	CY	CY	LB	LF	SQYD		
W-3	3	a	3.7	1.1	326								1																	TYPE G1 INLET	379.4' Lt Sta 843+18.78 ℄ Fwy
		b						23.5																						18" RCP	
		c	3.6	1.1	326								1																	TYPE G1 INLET	341.0' Lt Sta 843+07.55 ℄ Fwy
		d						43.0																						18" RCP	
		e	4.2	3.3	435																									MANHOLE No.1	Sta POINT 296.8' Lt 843+17.30 ℄ Fwy
		f						169.2																						18" RCP	
		g	3.7	1.5	326								1																	TYPE G2 INLET	350.8' Lt Sta 841+54.25 ℄ Fwy
		h						59.0																						18" RCP	
		i															343.0	288.0	116.0	25.0	27611	131.0	23.0	35.0	44.0	7.0	115.0	143.0	109.0	AUSTIN VAULT SAND FILTER S-3500-3	
		j						36.0																						18" RCP	
		k																					32.0							6" PLASTIC PIPE	
		L	6.2	4.6	435																									MANHOLE No.1	Sta POINT 167.7' Lt 842+90.41 ℄ Fwy
		m						125.0																						18" RCP	
		n	4.0	3.3	435																									MANHOLE No.1	Sta POINT 89.0' Lt 841+91.51 ℄ Fwy
SHEET TOTAL				14.9	2283			455.7					3				343.0	288.0	116.0	25.0	27611	131.0	55.0	35.0	44.0	7.0	115.0	143.0	109.0		

WATER POLLUTION CONTROL QUANTITIES

WQ-2

STATE OF CALIFORNIA - DEPARTMENT OF TRANSPORTATION
Caltrans HYDRAULICS

C.P. NGUYEN | S. THAI | DAVE BHALLA | REVISED BY | DATE REVISED | CALCULATED-DESIGNED BY | CHECKED BY | FUNCTIONAL SUPERVISOR

LAST REVISION 08-17-11 | DATE PLOTTED => 20-APR-2015 | TIME PLOTTED => 12:54

Dist	COUNTY	ROUTE	POST MILES TOTAL PROJECT	SHEET No.	TOTAL SHEETS
07	Ven	101	14.1/21.1	43	108

REGISTERED CIVIL ENGINEER 11-17-14 DATE

2-9-15
PLANS APPROVAL DATE

REGISTERED PROFESSIONAL ENGINEER SA K. THAI No. 71390 Exp. 12/31/15 CIVIL STATE OF CALIFORNIA

THE STATE OF CALIFORNIA OR ITS OFFICERS OR AGENTS SHALL NOT BE RESPONSIBLE FOR THE ACCURACY OR COMPLETENESS OF SCANNED COPIES OF THIS PLAN SHEET.

NOTES:

1. PIPE JOINTS ARE STANDARD OR AS NOTED ON PLANS
2. (N) NOT A SEPARATE PAY ITEM, FOR INFORMATION ONLY.

DRAINAGE SHEET No	DRAINAGE SYSTEM No ⬡	DRAINAGE UNIT ◯	HEIGHT OF INLET H OR V	MINOR CONCRETE (MINOR STRUCTURE)	MISCELLANEOUS IRON AND STEEL	REMOVE CONCRETE	DITCH EXCAVATION	18" REINFORCED CONCRETE PIPE	ROCK SLOPE PROTECTION (NO. 2, METHOD B)	ROCK SLOPE PROTECTION FABRIC (CLASS 8)	HOT MIX ASPHALT (TYPE A)	PLACE HOT MIX ASPHALT (MISCELLANEOUS AREA)	(N) TYPE 24-12 FRAME AND GRATE	REMOVE PIPE	36" PRECAST CONCRETE PIPE MANHOLE	(N) MAXIMUM COVER	AUSTIN VAULT SAND FILTER: STRUCTURE EXCAVATION	STRUCTURE BACKFILL	STRUCTURAL CONCRETE	JOINT SEAL (TYPE AL)	BAR REINFORCING STEEL	6" PERFORATED PLASTIC PIPE UNDERDRAIN	6" NON-PERFORATED PLASTIC PIPE UNDERDRAIN	CLASS 4 PERMEABLE MATERIAL	CLASS 5 PERMEABLE MATERIAL	GABION	MISCELLANEOUS METAL	CABLE RAILING	CLASS D FILTER FABRIC	DESCRIPTION	STATION
			F†	CY	LB	CY	CY	LF	CY	SQYD	TON	SQYD	EA	LF	LF	LF	CY	CY	CY	LF	LB	LF	LF	CY	CY	CY	LB	LF	SQYD		
W-4	4	a									1.5	7.4																		HMA OVERSIDE DRAINS	
		b							5.2	18.0																				ROCK SLOPE PROTECTION (NO.2, METHOD B)	
		c					17.3																							BIOFILTRATION SWALE (TRAPEZOIDAL DITCH)	80.51′ R† 934+96.75 ℄ Fwy - 86.84′ R† 935+96.55 ℄ Fwy
W-4	5	a									2.4	12.2																		HMA OVERSIDE DRAINS	
		b							3.0	12.0																				ROCK SLOPE PROTECTION (NO.2, METHOD B)	
		c					3.7																							BIOFILTRATION SWALE (V-DITCH)	110.34′ L† 938+81.64 ℄ Fwy - 95.83′ L† 939+80.00 ℄ Fwy
W-5	6	a					29.6																							BIOFILTRATION SWALE (TRAPEZOIDAL DITCH)	75.84′ R† 957+35.00 ℄ Fwy - 75.84′ R† 958+35.00 ℄ Fwy
W-6	7	a									1.30	8.0																		HMA OVERSIDE DRAINS; L=20.9′	
		b							15.2	35.0																				ROCK SLOPE PROTECTION 10.0′x13.7′x3.0′	
		C					22.10																							BIOFILTRATION SWALE (TRAPEZOIDAL); L=99.0′	FROM 87.9′ R† Sta 981+41.00 - TO 88.1′ L† Sta 982+39.70 ℄ Fwy
W-7	8	a									1.20	7.2																		HMA OVERSIDE DRAINS; L=19.0′	
		b							16.7	37.3																				ROCK SLOPE PROTECTION 10.0′x15.0′x3.0′	
		C					50.7																							BIOFILTRATION SWALE (TRAPEZOIDAL); L=60.0′	FROM 86.4′ R† Sta 999+49.58 - TO 86.4′ L† Sta 1000+09.58 ℄ Fwy
SHEET TOTAL							123.4		40.1	102.3	6.4	34.8																			

WATER POLLUTION CONTROL QUANTITIES

WQ-3

STATE OF CALIFORNIA - DEPARTMENT OF TRANSPORTATION
Caltrans® HYDRAULICS

FUNCTIONAL SUPERVISOR: DAVE BHALLA
CALCULATED-DESIGNED BY: S. THAI
CHECKED BY: C.P. NGUYEN
REVISED BY
DATE REVISED

LAST REVISION 08-17-11
DATE PLOTTED => 20-APR-2015
TIME PLOTTED => 12:54

Dist	COUNTY	ROUTE	POST MILES TOTAL PROJECT	SHEET No.	TOTAL SHEETS
07	Ven	101	14.1/21.1	44	108

REGISTERED CIVIL ENGINEER 11-17-14 DATE

2-9-15
PLANS APPROVAL DATE

REGISTERED PROFESSIONAL ENGINEER SA K. THAI No. 71390 Exp. 12/31/15 CIVIL STATE OF CALIFORNIA

THE STATE OF CALIFORNIA OR ITS OFFICERS OR AGENTS SHALL NOT BE RESPONSIBLE FOR THE ACCURACY OR COMPLETENESS OF SCANNED COPIES OF THIS PLAN SHEET.

NOTES:

1. PIPE JOINTS ARE STANDARD OR AS NOTED ON PLANS
2. (N) NOT A SEPARATE PAY ITEM, FOR INFORMATION ONLY.

DRAINAGE SHEET No	DRAINAGE SYSTEM No ⬡	DRAINAGE UNIT ◯	HEIGHT OF INLET H OR V	MINOR CONCRETE (MINOR STRUCTURE)	MISCELLANEOUS IRON AND STEEL	REMOVE CONCRETE	DITCH EXCAVATION	18" REINFORCED CONCRETE PIPE	ROCK SLOPE PROTECTION (NO. 2, METHOD B)	ROCK SLOPE PROTECTION FABRIC (CLASS 8)	HOT MIX ASPHALT (TYPE A)	PLACE HOT MIX ASPHALT (MISCELLANEOUS AREA)	(N) TYPE 24-12 FRAME AND GRATE	REMOVE PIPE	36" PRECAST CONCRETE PIPE MANHOLE	(N) MAXIMUM COVER	AUSTIN VAULT SAND FILTER: STRUCTURE EXCAVATION	STRUCTURE BACKFILL	STRUCTURAL CONCRETE	JOINT SEAL (TYPE AL)	BAR REINFORCING STEEL	6" PERFORATED PLASTIC PIPE UNDERDRAIN	6" NON-PERFORATED PLASTIC PIPE UNDERDRAIN	CLASS 4 PERMEABLE MATERIAL	CLASS 5 PERMEABLE MATERIAL	GABION	MISCELLANEOUS METAL	CABLE RAILING	CLASS D FILTER FABRIC	DESCRIPTION	STATION
			Ft	CY	LB	CY	CY	LF	CY	SQYD	TON	SQYD	EA	LF	LF	LF	CY	CY	CY	LF	LB	LF	LF	CY	CY	CY	LB	LF	SQYD		
W-8	9	a									2.46	15.1																	HMA OVERSIDE DRAINS; L=39.7′	
		b							7.4	21.8																			ROCK SLOPE PROTECTION 10.0′x10.0′x2.0′	
		C					34.53																						BIOFILTRATION SWALE (TRAPEZOIDAL);L=100.0′	FROM 92.4′ Lt Sta 1010+30.22 - TO 102.2′ Lt Sta 1011+29.73 ℄ Fwy
W-8	10	a									1.87	11.5																	HMA OVERSIDE DRAINS; L= 30.2′	
		b							7.4	21.8																			ROCK SLOPE PROTECTION 10.0′x10.0′x2.0′	
		C					37.78																						BIOFILTRATION SWALE (TRAPEZOIDAL);L=80.0′	FROM 95.0′ Rt Sta 1010+44.92 - TO 93.8′ Rt Sta 1011+24.91 ℄ Fwy
W-8	11	a									3.24	19.9																	HMA OVERSIDE DRAINS; L=52.3′	
		b							7.4	21.8																			ROCK SLOPE PROTECTION 10.0′x10.0′x2.0′	
		C					16.67																						BIOFILTRATION SWALE (TRAPEZOIDAL); L=75.0′	FROM 115.8′ Lt Sta 1013+41.24 - TO 115.8′ Lt Sta 1014+16.27 ℄ Fwy
W-8	12	a									1.64	10.0																	HMA OVERSIDE DRAINS; L=26.4′	
		b							7.4	21.8																			ROCK SLOPE PROTECTION 10.0′x10.0′x2.0′	
		C					15.56																						BIOFILTRATION SWALE (TRAPEZOIDAL); L=70.0′	FROM 95.2′ Rt Sta 1013+33.18 - TO 90.8′ Lt Sta 1014+03.15 ℄ Fwy
W-9	13	a				2.1																							REMOVE Conc	FROM 100.96′ Lt Sta 1106+76.69 - TO 140.6′ Lt Sta 1107+21.59 ℄ Fwy
		b					2.22																						BIOFILTRATION SWALE (V-DITCH); L=60.0′	FROM 99.15′ Lt Sta 1107+75.91 - TO 168.9′ Lt Sta 1107+70.07 ℄ Fwy
W-9	14	a				2.8																							REMOVE Conc	FROM 99.15′ Lt Sta 1107+75.91 - TO 180.2′ Lt Sta 1107+69.49 ℄ Fwy
		b					2.60																						BIOFILTRATION SWALE (V-DITCH); L=70.0′	FROM 99.15′ Lt Sta 1107+75.91 - TO 168.9′ Lt Sta 1107+70.07 ℄ Fwy
SHEET TOTAL						4.9	109.36		29.6	87.2	8.81	56.5																		
GRAND TOTAL				19.08	2718	4.9	402.16	515.0	79.8	217.5	16.51	97.9	3	4.0	5.83		343.0	288.0	116.0	25.0	2761	131.0	55.0	35.0	44.0	7.0	115.0	143.0	109.0	

WATER POLLUTION CONTROL QUANTITIES

WQ-4

STATE OF CALIFORNIA - DEPARTMENT OF TRANSPORTATION
Caltrans® HYDRAULICS

FUNCTIONAL SUPERVISOR: DAVE BHALLA
CALCULATED-DESIGNED BY: S. THAI
CHECKED BY: C.P. NGUYEN
REVISED BY
DATE REVISED

LAST REVISION 08-17-11
DATE PLOTTED => 20-APR-2015
TIME PLOTTED => 12:54

Dist	COUNTY	ROUTE	POST MILES TOTAL PROJECT	SHEET No.	TOTAL SHEETS
07	Ven	101	14.1/21.1	45	108

Refugio Dominguez 12-1-14
REGISTERED CIVIL ENGINEER DATE

2-9-15
PLANS APPROVAL DATE

REGISTERED PROFESSIONAL ENGINEER
REFUGIO DOMINGUEZ
No. 50820
Exp. 9-30-15
CIVIL
STATE OF CALIFORNIA

THE STATE OF CALIFORNIA OR ITS OFFICERS OR AGENTS SHALL NOT BE RESPONSIBLE FOR THE ACCURACY OR COMPLETENESS OF SCANNED COPIES OF THIS PLAN SHEET.

NOTES:

1. EXISTING UTILITY FACILITIES ARE NOT INCLUDED ON THESE PLANS.
2. FOR ACCURATE RIGHT OF WAY DATA, CONTACT RIGHT OF WAY ENGINEERING AT THE DISTRICT OFFICE.

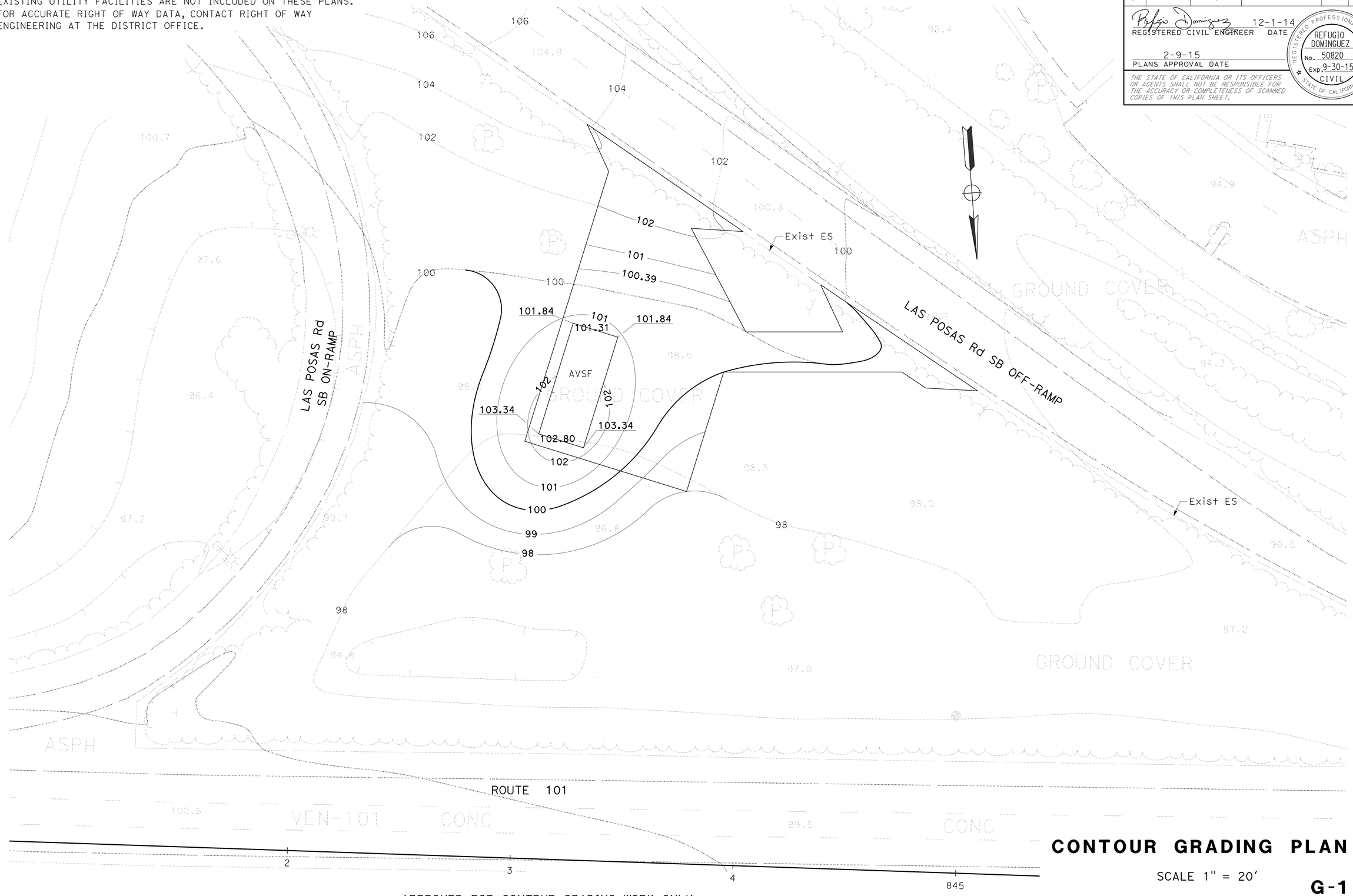

CONTOUR GRADING PLAN

SCALE 1" = 20'

G-1

APPROVED FOR CONTRUR GRADING WORK ONLY

STATE OF CALIFORNIA - DEPARTMENT OF TRANSPORTATION
Caltrans®
DESIGN

FUNCTIONAL SUPERVISOR: KAREN FONG
CALCULATED-DESIGNED BY: MOHAMMAD MOHSENZADEH
CHECKED BY: REFUGIO DOMINGUEZ
REVISED BY
DATE REVISED

LAST REVISION 00-00-00
DATE PLOTTED => 20-APR-2015
TIME PLOTTED => 12:54

Dist	COUNTY	ROUTE	POST MILES TOTAL PROJECT	SHEET No.	TOTAL SHEETS
07	Ven	101	14.1/21.1	46	108

REGISTERED CIVIL ENGINEER 12-1-14 DATE

2-9-15
PLANS APPROVAL DATE

REGISTERED PROFESSIONAL ENGINEER REFUGIO DOMINGUEZ No. 50820 Exp. 9-30-15 CIVIL STATE OF CALIFORNIA

THE STATE OF CALIFORNIA OR ITS OFFICERS OR AGENTS SHALL NOT BE RESPONSIBLE FOR THE ACCURACY OR COMPLETENESS OF SCANNED COPIES OF THIS PLAN SHEET.

STATIONARY MOUNTED CONSTRUCTION AREA SIGNS

SIGN No. (X)	SIGN CODE FEDERAL	SIGN CODE CALIFORNIA	PANEL SIZE	SIGN MESSAGE	NUMBER OF POSTS AND SIZE	NUMBER OF SIGNS
A	W20-1		48" x 48"	ROAD WORK AHEAD	2 - 4" x 6"	2
B	W20-1		36" x 36"	ROAD WORK AHEAD	1 - 4" x 4"	20
C	G20-2		36" x 18"	END ROAD WORK	1 - 4" x 4"	16
D	G20-1		60" x 36"	ROAD WORK NEXT 7 MILES	2 - 4" x 6"	2
E	TYPE 2		132" x 84"	FUNDING IDENTIFICATION SIGN	2 - 6" x 8	2
F		C40	144" x 60"	TRAFFIC FINES DOUBLED IN CONSTRUCTION ZONE	2 - 6" x 8"	2

NOTES:

1. SIGN LOCATIONS SHOWN ARE APPROXIMATE. EXACT LOCATIONS WILL BE DETERMINED BY THE ENGINEER.
2. SIGNS SHALL BE REMOVED WHEN NO LONGER NEEDED.
3. FOR ADDITIONAL CONSTRUCTION AREA SIGNS, SEE TRAFFIC HANDLING PLAN.

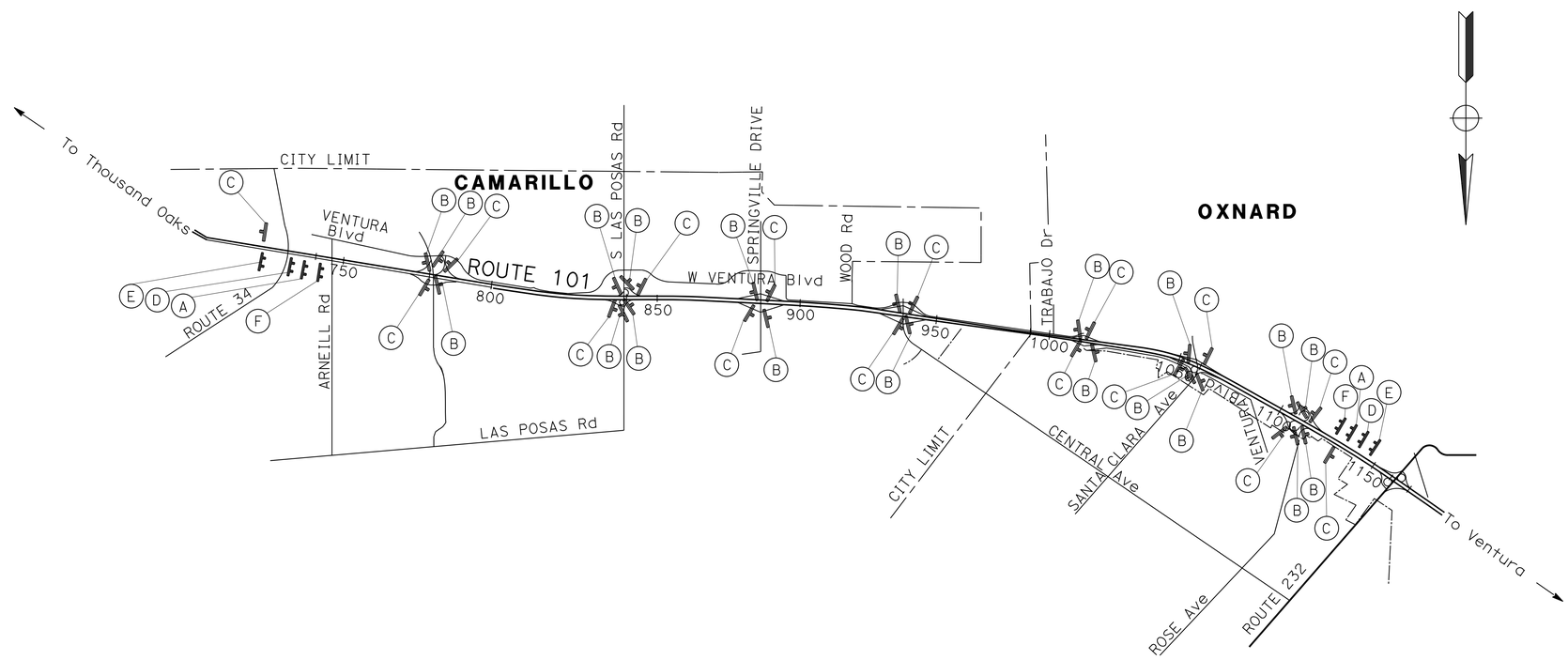

CONSTRUCTION AREA SIGNS

NO SCALE

CS-1

APPROVED FOR CONSTRUCION AREA SIGN WORK ONLY

STATE OF CALIFORNIA - DEPARTMENT OF TRANSPORTATION
Caltrans DESIGN

FUNCTIONAL SUPERVISOR: KAREN FONG
CALCULATED-DESIGNED BY: MOHAMMAD MOHSENZADEH
CHECKED BY: REFUGIO DOMINGUEZ
REVISED BY
DATE REVISED

LAST REVISION 00-00-00
DATE PLOTTED => 20-APR-2015
TIME PLOTTED => 12:54

Dist	COUNTY	ROUTE	POST MILES TOTAL PROJECT	SHEET No.	TOTAL SHEETS
07	Ven	101	14.1/21.1	47	108

REGISTERED CIVIL ENGINEER 12-1-14 DATE

2-9-15
PLANS APPROVAL DATE

REGISTERED PROFESSIONAL ENGINEER REFUGIO DOMINGUEZ No. 50820 Exp. 9-30-15 CIVIL STATE OF CALIFORNIA

THE STATE OF CALIFORNIA OR ITS OFFICERS OR AGENTS SHALL NOT BE RESPONSIBLE FOR THE ACCURACY OR COMPLETENESS OF SCANNED COPIES OF THIS PLAN SHEET.

NOTE:

1. FOR ACCURATE RIGHT OF WAY DATA, CONTACT RIGHT OF WAY ENGINEERING AT THE DISTRICT OFFICE.

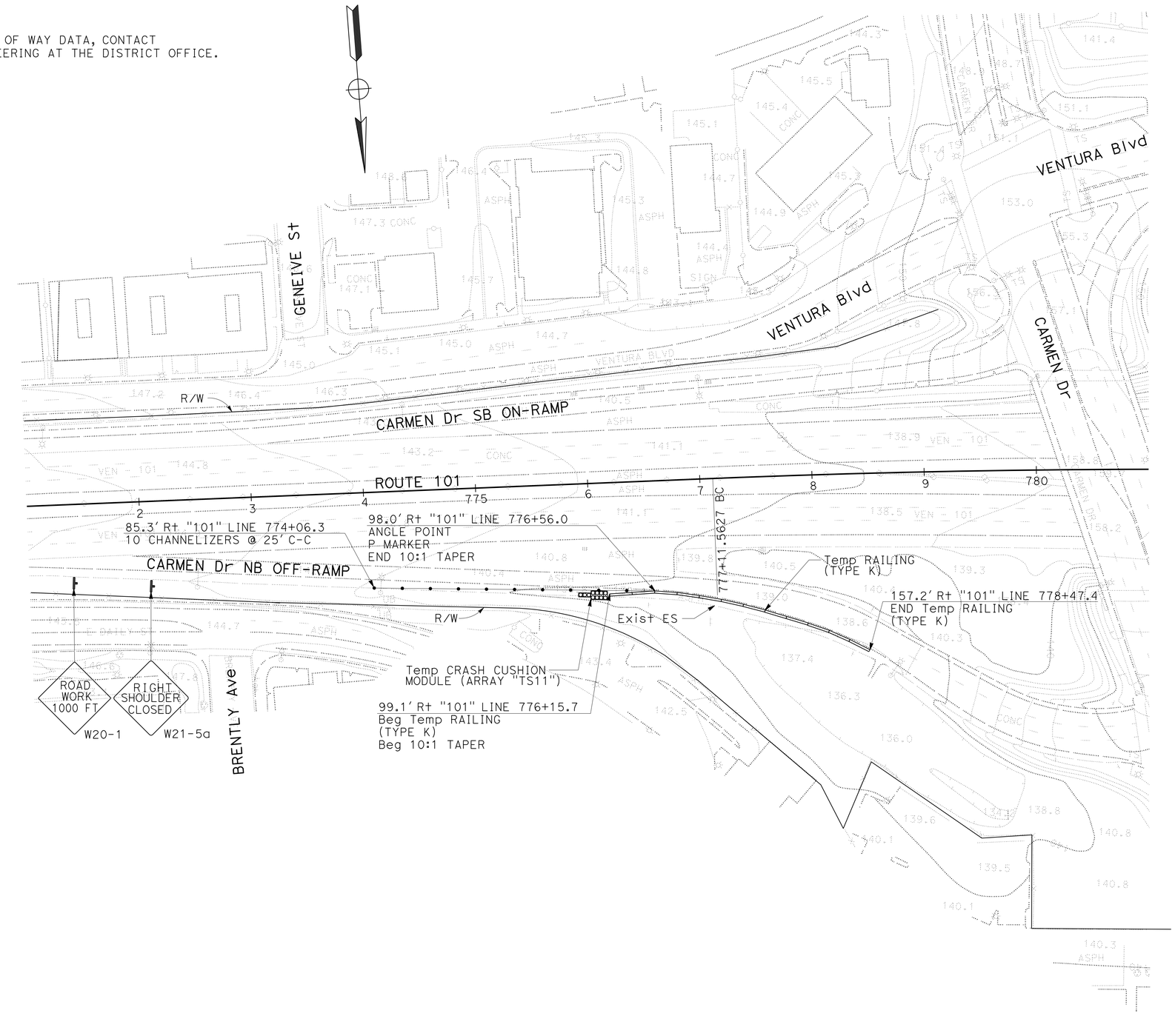

TRAFFIC HANDLING PLAN

SCALE: 1" = 50'

APPROVED FOR TRAFFIC HANDLING WORK ONLY

TH-1

STATE OF CALIFORNIA - DEPARTMENT OF TRANSPORTATION

Caltrans®

DESIGN

FUNCTIONAL SUPERVISOR: KAREN FONG

CALCULATED-DESIGNED BY: MOHAMMAD MOHSENZADEH

CHECKED BY: REFUGIO DOMINGUEZ

REVISED BY

DATE REVISED

LAST REVISION 00-00-00

DATE PLOTTED => 20-APR-2015

TIME PLOTTED => 12:55

Dist	COUNTY	ROUTE	POST MILES TOTAL PROJECT	SHEET No.	TOTAL SHEETS
07	Ven	101	14.1/21.1	48	108

REGISTERED CIVIL ENGINEER 12-1-14 DATE

2-9-15
PLANS APPROVAL DATE

REGISTERED PROFESSIONAL ENGINEER REFUGIO DOMINGUEZ No. 50820 Exp. 9-30-15 CIVIL STATE OF CALIFORNIA

THE STATE OF CALIFORNIA OR ITS OFFICERS OR AGENTS SHALL NOT BE RESPONSIBLE FOR THE ACCURACY OR COMPLETENESS OF SCANNED COPIES OF THIS PLAN SHEET.

NOTE:

1. FOR ACCURATE RIGHT OF WAY DATA, CONTACT RIGHT OF WAY ENGINEERING AT THE DISTRICT OFFICE.

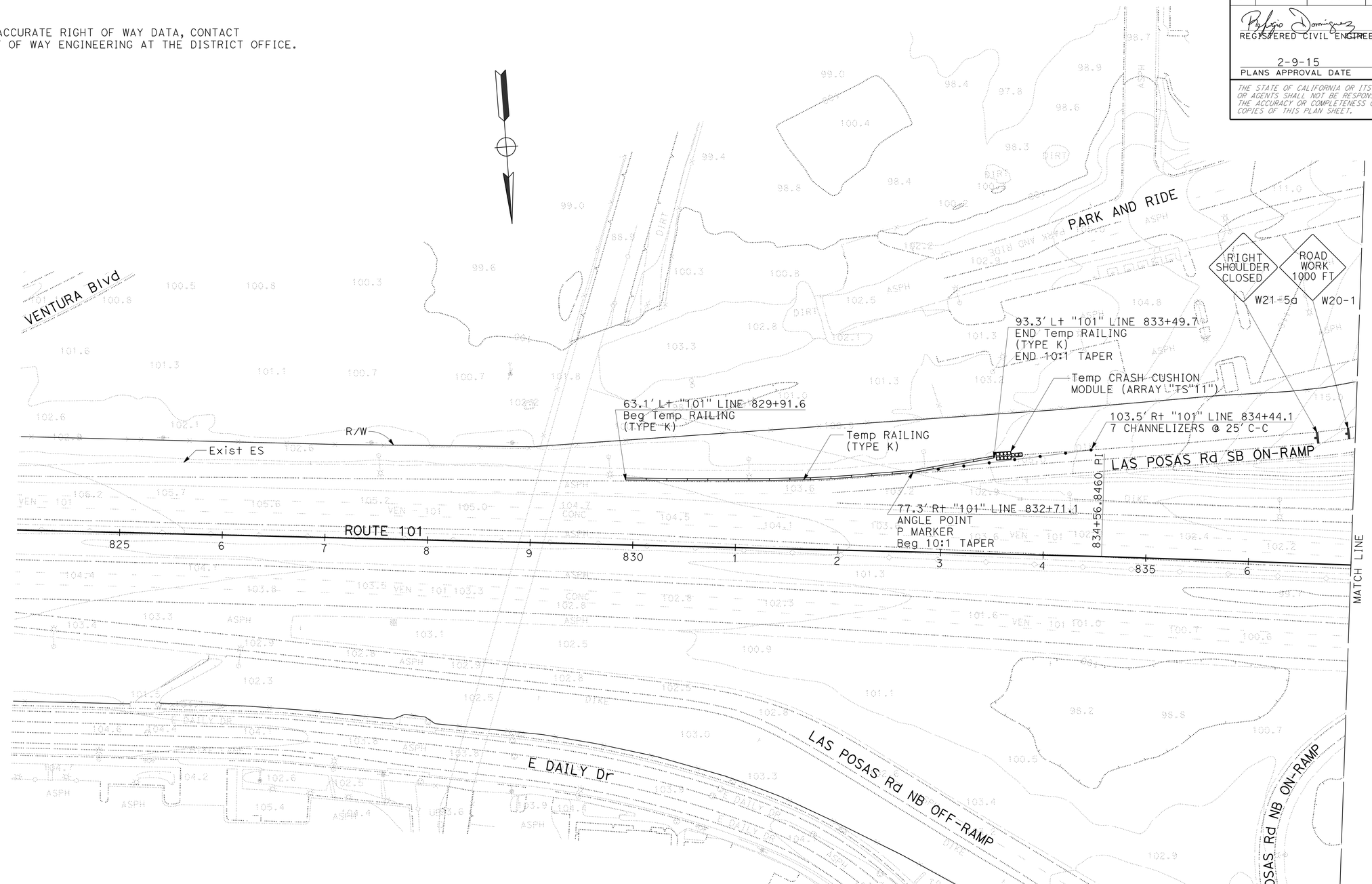

TRAFFIC HANDLING PLAN

SCALE: 1" = 50'

APPROVED FOR TRAFFIC HANDLING WORK ONLY

TH-2

STATE OF CALIFORNIA - DEPARTMENT OF TRANSPORTATION

Caltrans

DESIGN

FUNCTIONAL SUPERVISOR: KAREN FONG

CALCULATED-DESIGNED BY: MOHAMMAD MOHSENZADEH

CHECKED BY: REFUGIO DOMINGUEZ

REVISED BY

DATE REVISED

LAST REVISION 00-00-00

DATE PLOTTED => 20-APR-2015
TIME PLOTTED => 12:55

Dist	COUNTY	ROUTE	POST MILES TOTAL PROJECT	SHEET No.	TOTAL SHEETS
07	Ven	101	14.1/21.1	49	108

REGISTERED CIVIL ENGINEER 12-1-14 DATE

2-9-15
PLANS APPROVAL DATE

REGISTERED PROFESSIONAL ENGINEER REFUGIO DOMINGUEZ No. 50820 Exp. 9-30-15 CIVIL STATE OF CALIFORNIA

THE STATE OF CALIFORNIA OR ITS OFFICERS OR AGENTS SHALL NOT BE RESPONSIBLE FOR THE ACCURACY OR COMPLETENESS OF SCANNED COPIES OF THIS PLAN SHEET.

NOTE:

1. FOR ACCURATE RIGHT OF WAY DATA, CONTACT RIGHT OF WAY ENGINEERING AT THE DISTRICT OFFICE.

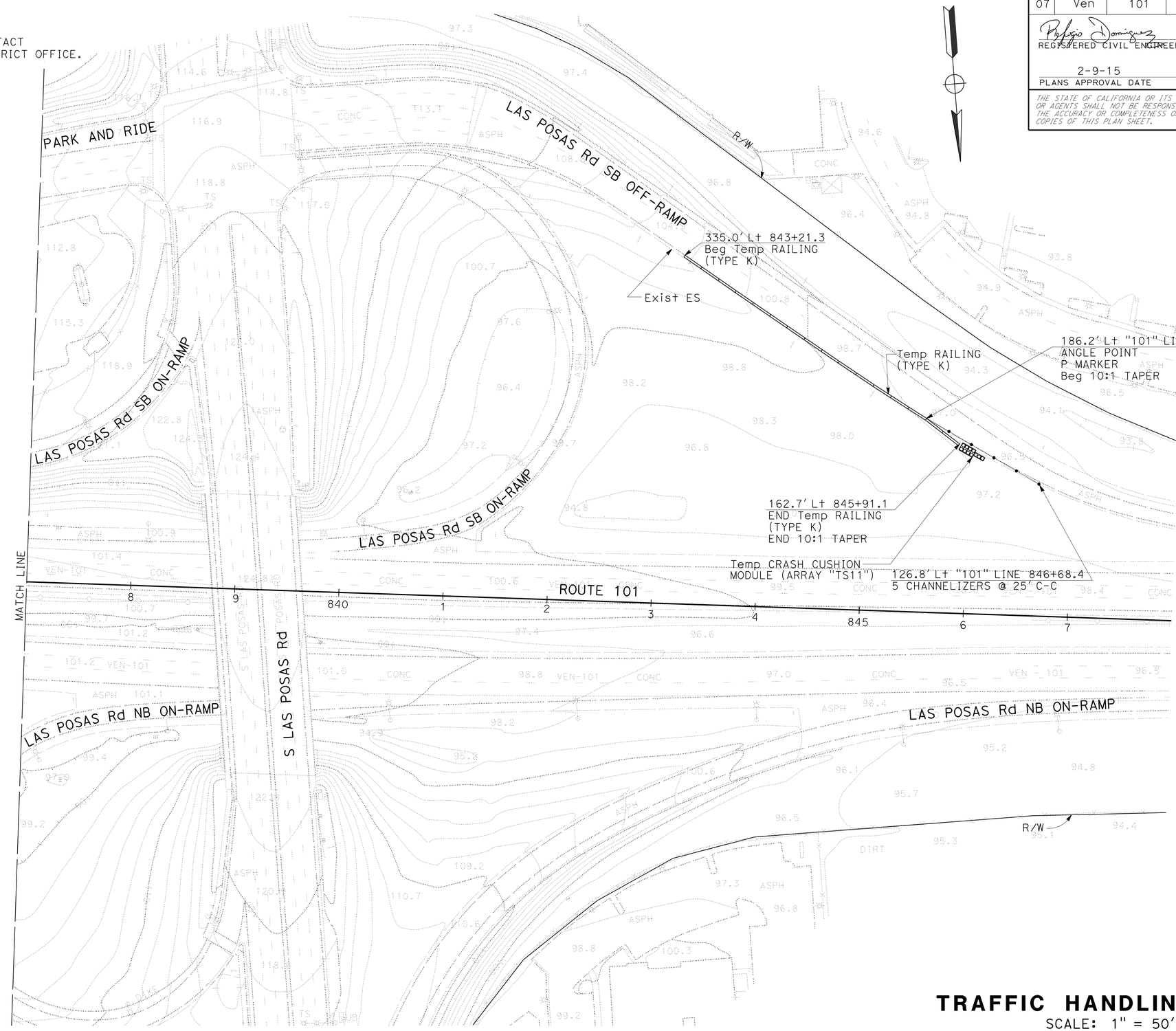

TRAFFIC HANDLING PLAN

SCALE: 1" = 50'

APPROVED FOR TRAFFIC HANDLING WORK ONLY

TH-3

STATE OF CALIFORNIA - DEPARTMENT OF TRANSPORTATION

Caltrans

DESIGN

FUNCTIONAL SUPERVISOR: KAREN FONG

CALCULATED-DESIGNED BY: MOHAMMAD MOHSENZADEH

CHECKED BY: REFUGIO DOMINGUEZ

REVISED BY

DATE REVISED

LAST REVISION 00-00-00

DATE PLOTTED => 20-APR-2015
TIME PLOTTED => 12:55

Dist	COUNTY	ROUTE	POST MILES TOTAL PROJECT	SHEET No.	TOTAL SHEETS
07	Ven	101	14.1/21.1	50	108

REGISTERED CIVIL ENGINEER 12-1-14 DATE

2-9-15
PLANS APPROVAL DATE

REGISTERED PROFESSIONAL ENGINEER
REFUGIO DOMINGUEZ
No. 50820
Exp. 9-30-15
CIVIL
STATE OF CALIFORNIA

THE STATE OF CALIFORNIA OR ITS OFFICERS OR AGENTS SHALL NOT BE RESPONSIBLE FOR THE ACCURACY OR COMPLETENESS OF SCANNED COPIES OF THIS PLAN SHEET.

NOTE:

1. FOR ACCURATE RIGHT OF WAY DATA, CONTACT RIGHT OF WAY ENGINEERING AT THE DISTRICT OFFICE.

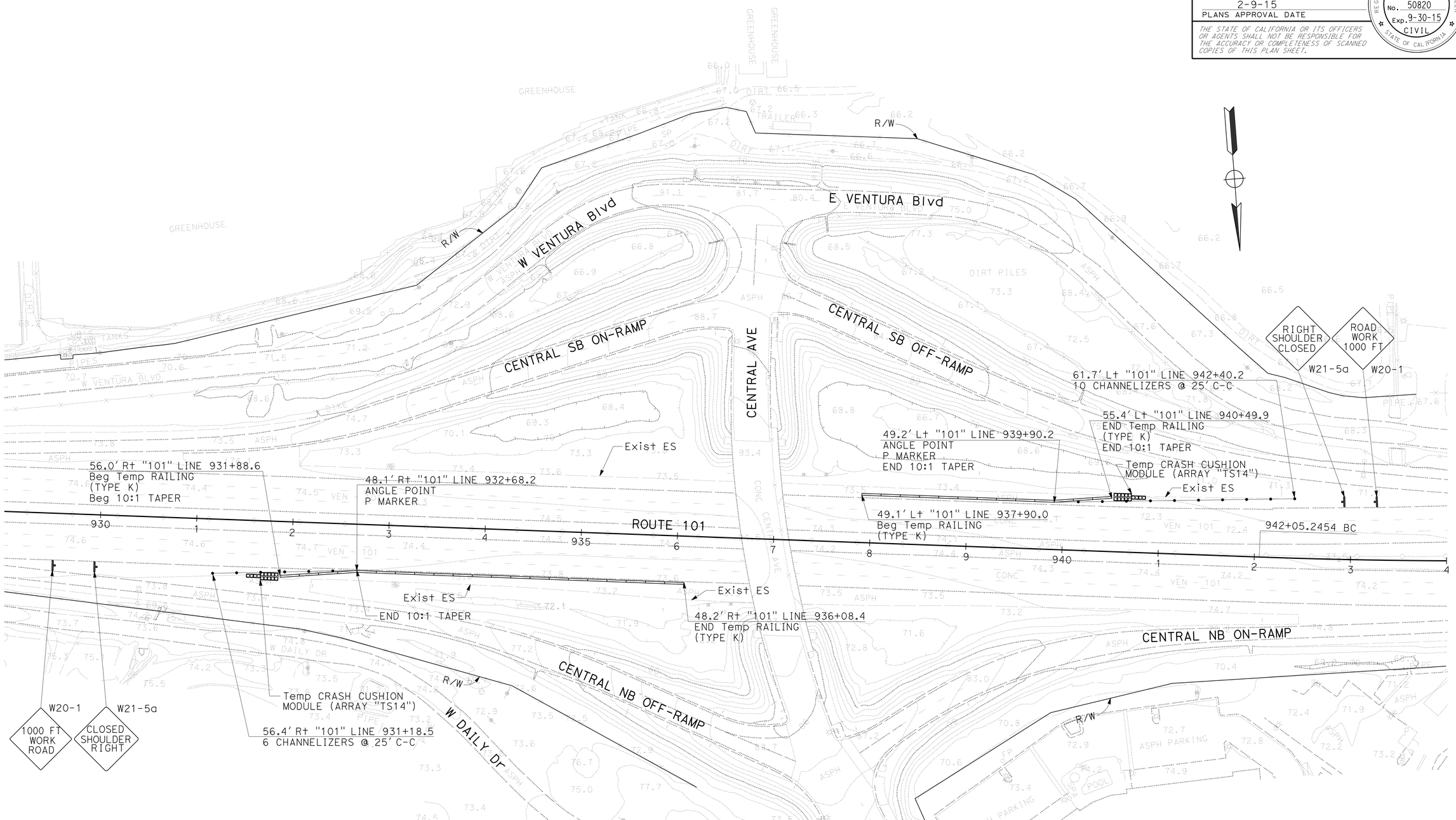

APPROVED FOR TRAFFIC HANDLING WORK ONLY

TRAFFIC HANDLING PLAN

SCALE: 1" = 50'

TH-4

STATE OF CALIFORNIA - DEPARTMENT OF TRANSPORTATION
Caltrans
DESIGN

FUNCTIONAL SUPERVISOR: KAREN FONG

CALCULATED-DESIGNED BY: MOHAMMAD MOHSENZADEH
CHECKED BY: REFUGIO DOMINGUEZ

REVISED BY
DATE REVISED

LAST REVISION 00-00-00
DATE PLOTTED => 20-APR-2015
TIME PLOTTED => 12:55

Dist	COUNTY	ROUTE	POST MILES TOTAL PROJECT	SHEET No.	TOTAL SHEETS
07	Ven	101	14.1/21.1	51	108

REGISTERED CIVIL ENGINEER 12-1-14 DATE

2-9-15
PLANS APPROVAL DATE

REGISTERED PROFESSIONAL ENGINEER REFUGIO DOMINGUEZ No. 50820 Exp. 9-30-15 CIVIL STATE OF CALIFORNIA

THE STATE OF CALIFORNIA OR ITS OFFICERS OR AGENTS SHALL NOT BE RESPONSIBLE FOR THE ACCURACY OR COMPLETENESS OF SCANNED COPIES OF THIS PLAN SHEET.

NOTE:

1. FOR ACCURATE RIGHT OF WAY DATA, CONTACT RIGHT OF WAY ENGINEERING AT THE DISTRICT OFFICE.

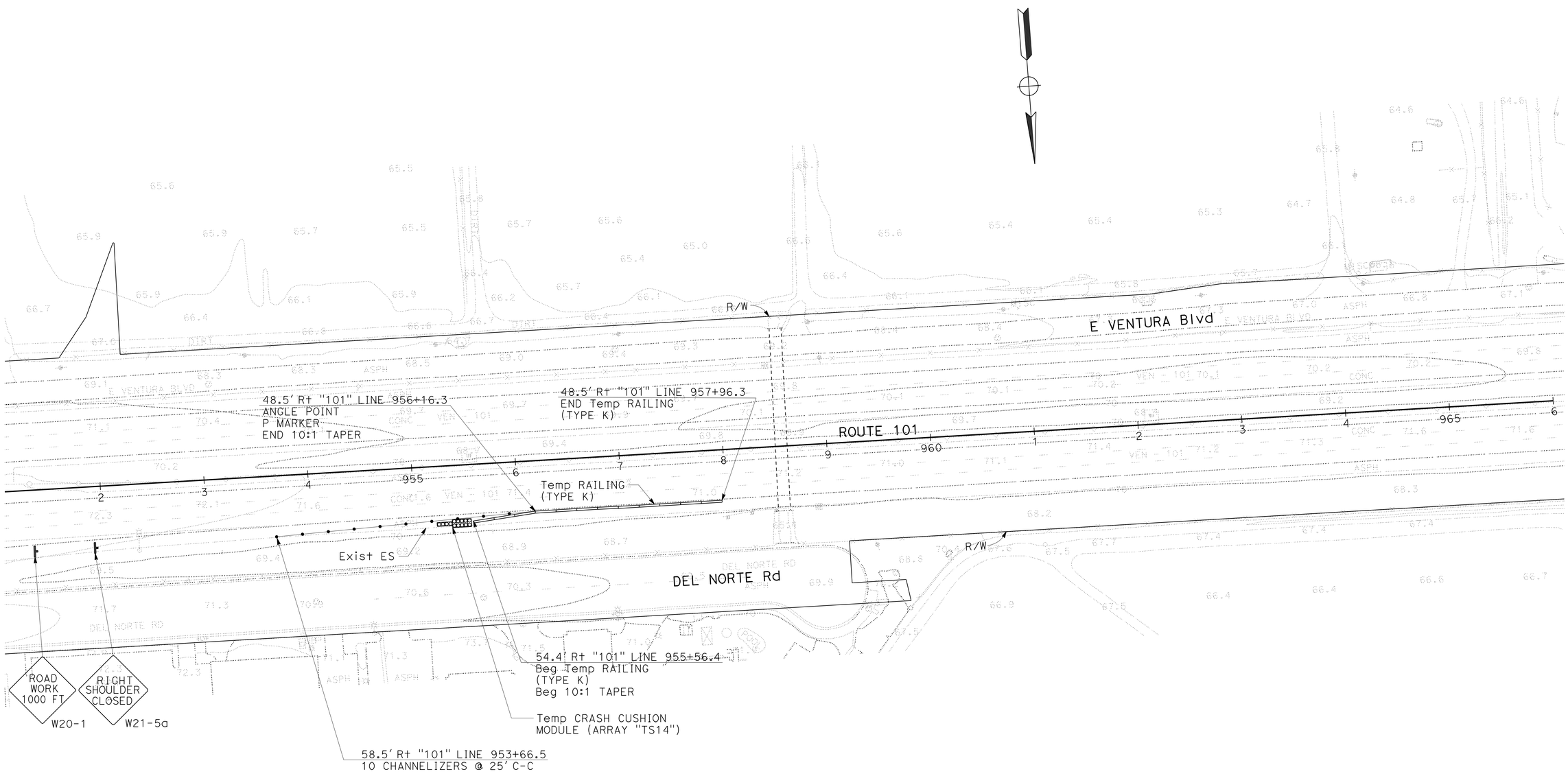

TRAFFIC HANDLING PLAN

SCALE: 1" = 50'

APPROVED FOR TRAFFIC HANDLING WORK ONLY

TH-5

STATE OF CALIFORNIA - DEPARTMENT OF TRANSPORTATION

Caltrans® DESIGN

FUNCTIONAL SUPERVISOR: KAREN FONG

CALCULATED-DESIGNED BY: MOHAMMAD MOHSENZADEH

CHECKED BY: REFUGIO DOMINGUEZ

REVISED BY

DATE REVISED

LAST REVISION 00-00-00

DATE PLOTTED => 20-APR-2015
TIME PLOTTED => 12:55

Dist	COUNTY	ROUTE	POST MILES TOTAL PROJECT	SHEET No.	TOTAL SHEETS
07	Ven	101	14.1/21.1	52	108

REGISTERED CIVIL ENGINEER 12-1-14 DATE

2-9-15
PLANS APPROVAL DATE

REGISTERED PROFESSIONAL ENGINEER REFUGIO DOMINGUEZ No. 50820 Exp. 9-30-15 CIVIL STATE OF CALIFORNIA

THE STATE OF CALIFORNIA OR ITS OFFICERS OR AGENTS SHALL NOT BE RESPONSIBLE FOR THE ACCURACY OR COMPLETENESS OF SCANNED COPIES OF THIS PLAN SHEET.

NOTE:

1. FOR ACCURATE RIGHT OF WAY DATA, CONTACT RIGHT OF WAY ENGINEERING AT THE DISTRICT OFFICE.

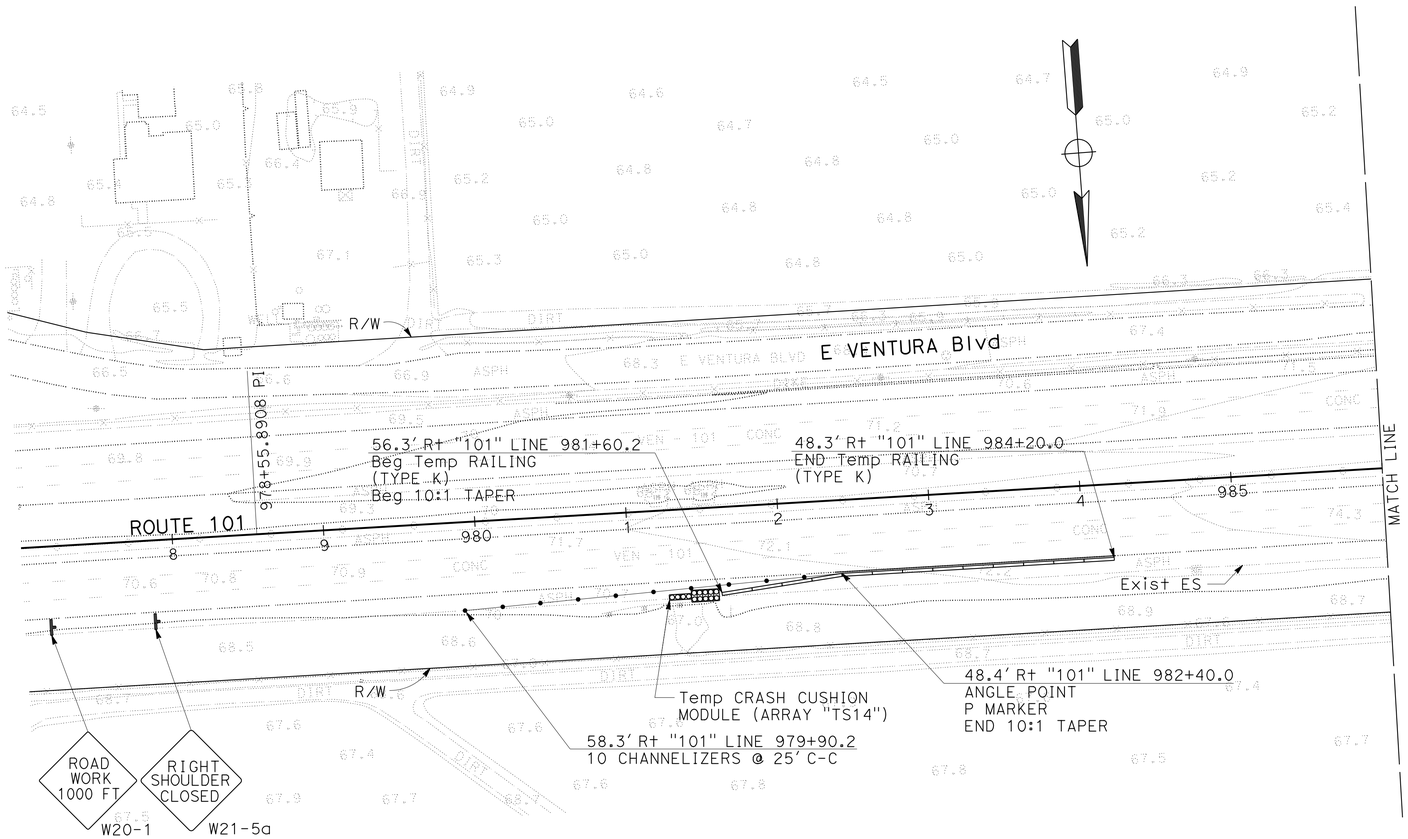

APPROVED FOR TRAFFIC HANDLING WORK ONLY

TRAFFIC HANDLING PLAN

SCALE: 1" = 50'

TH-6

STATE OF CALIFORNIA - DEPARTMENT OF TRANSPORTATION
Caltrans DESIGN

FUNCTIONAL SUPERVISOR: KAREN FONG
CALCULATED-DESIGNED BY: MOHAMMAD MOHSENZADEH
CHECKED BY: REFUGIO DOMINGUEZ
REVISED BY
DATE REVISED

LAST REVISION 00-00-00
DATE PLOTTED => 20-APR-2015
TIME PLOTTED => 12:55

Dist	COUNTY	ROUTE	POST MILES TOTAL PROJECT	SHEET No.	TOTAL SHEETS
07	Ven	101	14.1/21.1	53	108

REGISTERED CIVIL ENGINEER 12-1-14 DATE

2-9-15
PLANS APPROVAL DATE

REGISTERED PROFESSIONAL ENGINEER REFUGIO DOMINGUEZ No. 50820 Exp. 9-30-15 CIVIL STATE OF CALIFORNIA

THE STATE OF CALIFORNIA OR ITS OFFICERS OR AGENTS SHALL NOT BE RESPONSIBLE FOR THE ACCURACY OR COMPLETENESS OF SCANNED COPIES OF THIS PLAN SHEET.

NOTE:

1. FOR ACCURATE RIGHT OF WAY DATA, CONTACT RIGHT OF WAY ENGINEERING AT THE DISTRICT OFFICE.

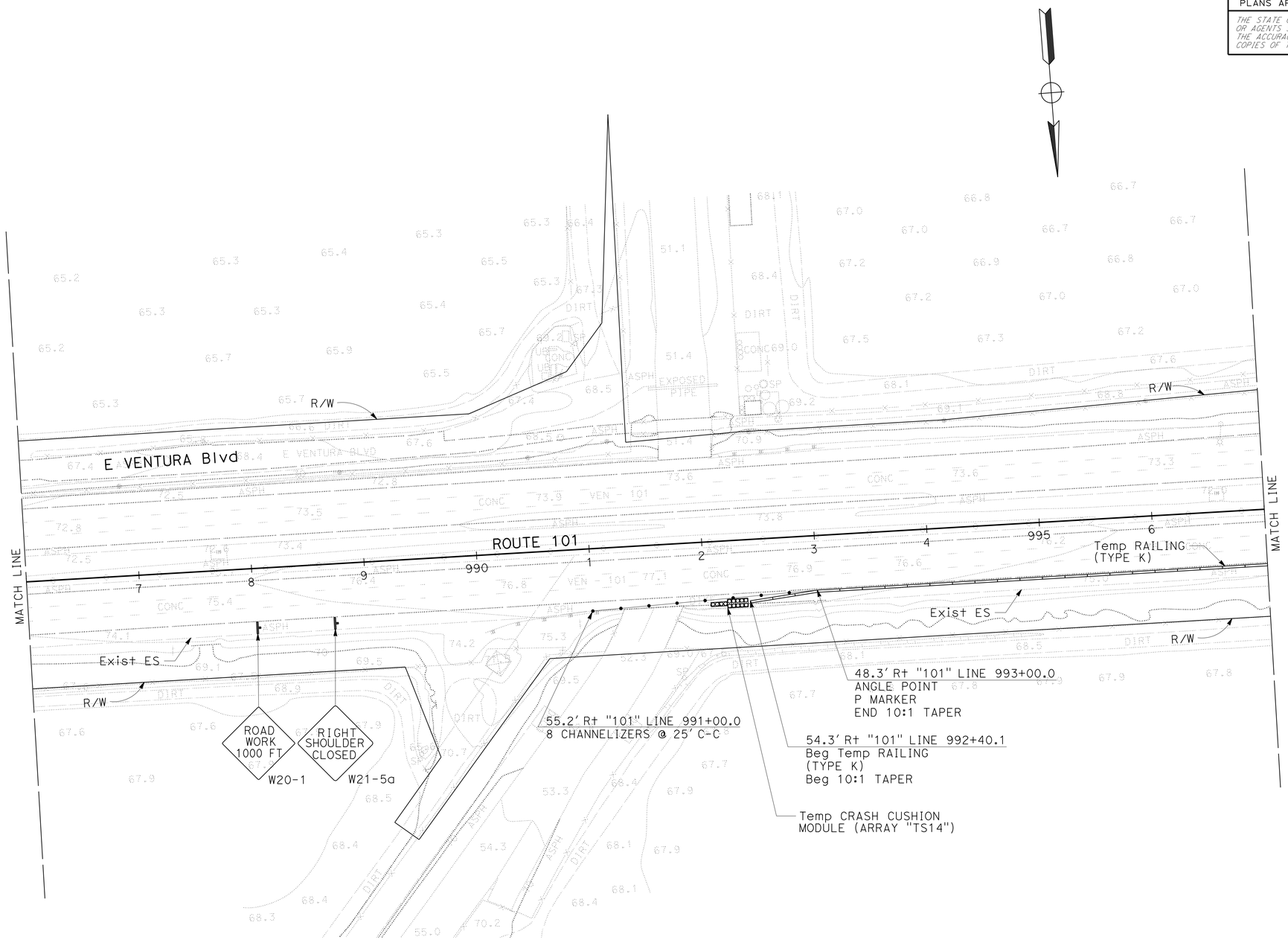

APPROVED FOR TRAFFIC HANDLING WORK ONLY

TRAFFIC HANDLING PLAN

SCALE: 1" = 50'

TH-7

STATE OF CALIFORNIA - DEPARTMENT OF TRANSPORTATION

Caltrans

DESIGN

FUNCTIONAL SUPERVISOR: KAREN FONG

CALCULATED-DESIGNED BY: MOHAMMAD MOHSENZADEH

CHECKED BY: REFUGIO DOMINGUEZ

REVISED BY

DATE REVISED

LAST REVISION 00-00-00

DATE PLOTTED => 20-APR-2015
TIME PLOTTED => 12:55

Dist	COUNTY	ROUTE	POST MILES TOTAL PROJECT	SHEET No.	TOTAL SHEETS
07	Ven	101	14.1/21.1	54	108

REGISTERED CIVIL ENGINEER 12-1-14 DATE

2-9-15
PLANS APPROVAL DATE

REGISTERED PROFESSIONAL ENGINEER REFUGIO DOMINGUEZ No. 50820 Exp. 9-30-15 CIVIL STATE OF CALIFORNIA

THE STATE OF CALIFORNIA OR ITS OFFICERS OR AGENTS SHALL NOT BE RESPONSIBLE FOR THE ACCURACY OR COMPLETENESS OF SCANNED COPIES OF THIS PLAN SHEET.

NOTE:

1. FOR ACCURATE RIGHT OF WAY DATA, CONTACT RIGHT OF WAY ENGINEERING AT THE DISTRICT OFFICE.

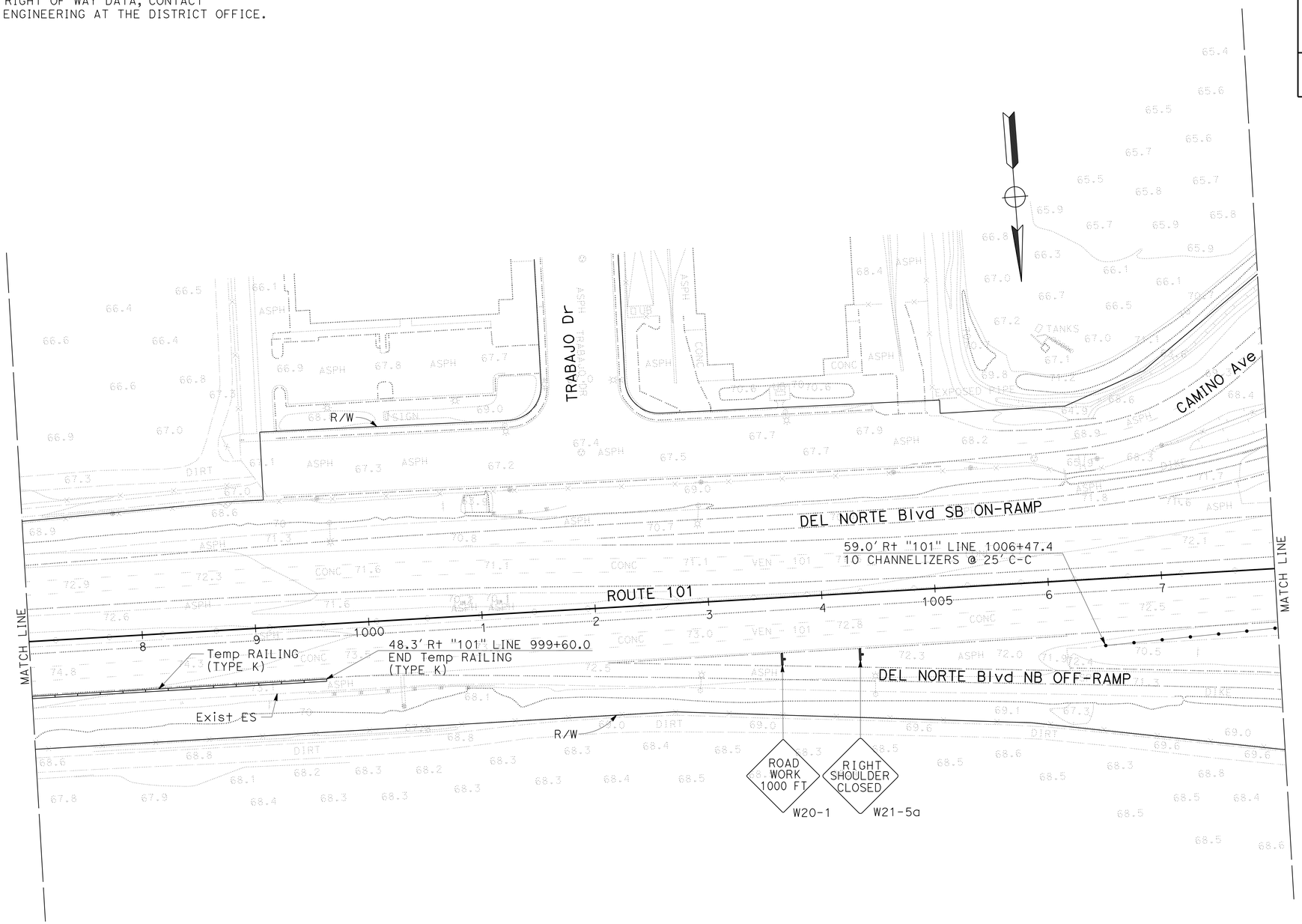

TRAFFIC HANDLING PLAN

SCALE: 1" = 50'

APPROVED FOR TRAFFIC HANDLING WORK ONLY

TH-8

STATE OF CALIFORNIA - DEPARTMENT OF TRANSPORTATION

Caltrans

DESIGN

FUNCTIONAL SUPERVISOR: KAREN FONG

CALCULATED-DESIGNED BY: MOHAMMAD MOHSENZADEH

CHECKED BY: REFUGIO DOMINGUEZ

REVISED BY

DATE REVISED

LAST REVISION 00-00-00

DATE PLOTTED => 20-APR-2015

TIME PLOTTED => 12:55

Dist	COUNTY	ROUTE	POST MILES TOTAL PROJECT	SHEET No.	TOTAL SHEETS
07	Ven	101	14.1/21.1	55	108

REGISTERED CIVIL ENGINEER 12-1-14 DATE

2-9-15
PLANS APPROVAL DATE

REGISTERED PROFESSIONAL ENGINEER REFUGIO DOMINGUEZ No. 50820 Exp. 9-30-15 CIVIL STATE OF CALIFORNIA

THE STATE OF CALIFORNIA OR ITS OFFICERS OR AGENTS SHALL NOT BE RESPONSIBLE FOR THE ACCURACY OR COMPLETENESS OF SCANNED COPIES OF THIS PLAN SHEET.

NOTE:

1. FOR ACCURATE RIGHT OF WAY DATA, CONTACT RIGHT OF WAY ENGINEERING AT THE DISTRICT OFFICE.

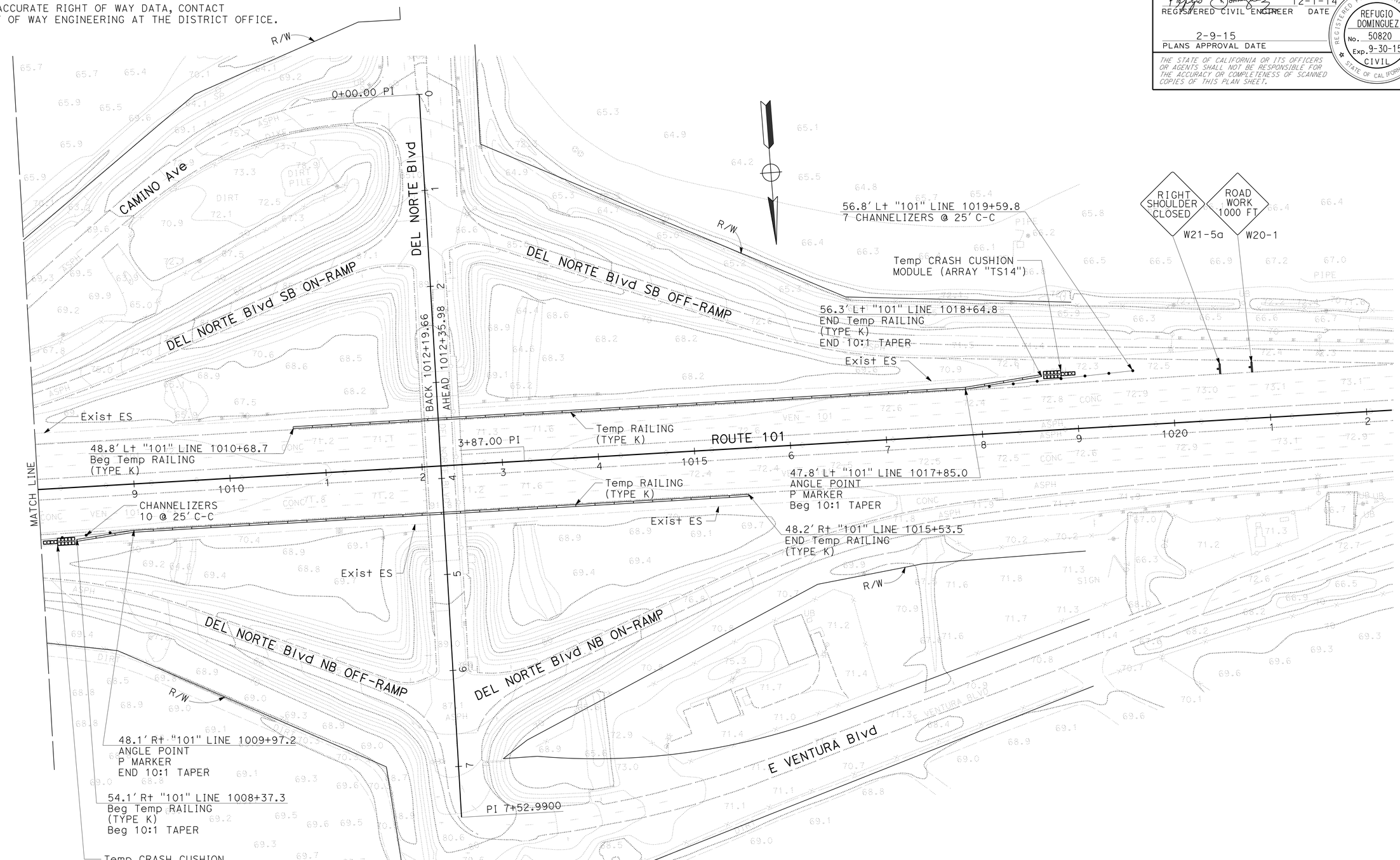

APPROVED FOR TRAFFIC HANDLING WORK ONLY

TRAFFIC HANDLING PLAN

SCALE: 1" = 50'

TH-9

STATE OF CALIFORNIA - DEPARTMENT OF TRANSPORTATION

Caltrans

DESIGN

FUNCTIONAL SUPERVISOR: KAREN FONG

MOHAMMAD MOHSENZADEH

REFUGIO DOMINGUEZ

CALCULATED-DESIGNED BY

CHECKED BY

REVISED BY

DATE REVISED

LAST REVISION 00-00-00

DATE PLOTTED => 20-APR-2015

TIME PLOTTED => 12:55

Dist	COUNTY	ROUTE	POST MILES TOTAL PROJECT	SHEET No.	TOTAL SHEETS
07	Ven	101	14.1/21.1	56	108

REGISTERED CIVIL ENGINEER 7-25-14 DATE

2-9-15
PLANS APPROVAL DATE

REGISTERED PROFESSIONAL ENGINEER SHANGJIA HORN No. 51846 Exp. 6-30-16 CIVIL STATE OF CALIFORNIA

THE STATE OF CALIFORNIA OR ITS OFFICERS OR AGENTS SHALL NOT BE RESPONSIBLE FOR THE ACCURACY OR COMPLETENESS OF SCANNED COPIES OF THIS PLAN SHEET.

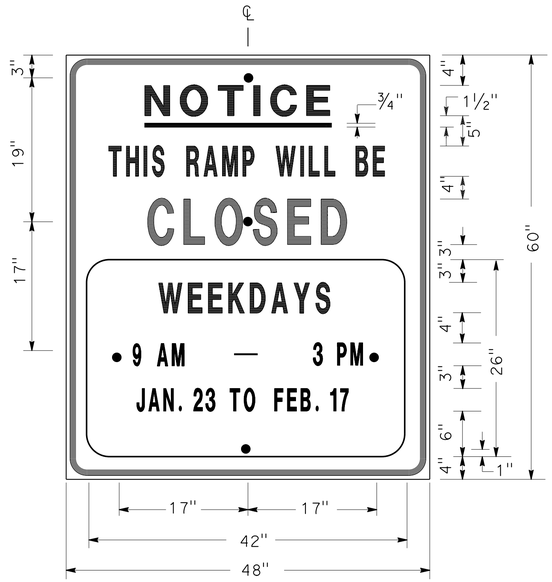

SIGN SP-1

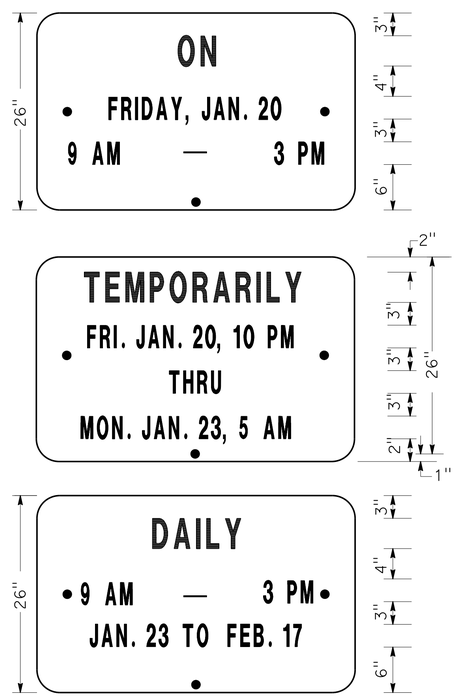

ALTERNATE OVERLAY PANELS (TYPICAL)

SPECIAL ADVANCE NOTICE PUBLICITY SIGN

NOTES: SIGN SP-1

1. LETTERS AND BORDER MUST BE BLACK ON REFLECTORIZED ORANGE BACKGROUND.
2. BOLT HOLES MUST BE 3/8" DIAMETER.
3. BASE MATERIAL MUST BE ALUMINUM (MINIMUM 0.06").
4. SIGNS MUST BE MOUNTED WITH BOTTOMS OF SIGNS A MINIMUM OF 7' ABOVE GROUND.

SIZE	BORDER WIDTH	MARGIN WIDTH	LETTER SIZE					CORNER RADIUS
			LINE 1	LINE 2*	LINE 3	LINE 4	LINE 5, 6, & 7*	
48"x60"	1 1/4"	3/4"	4E	4D	6E	4D		3"
42"x26"	OVERLAY						3D	1 1/2"
* CONDENSED SPACING IF NECESSARY								

SIGN SP-4

NOTES: SIGN SP-4

1. LETTERS - 6" SERIES C.
2. LETTERS AND BORDER MUST BE BLACK ON REFLECTORIZED WHITE BACKGROUND.
3. BOLT HOLES MUST BE 3/8" DIAMETER.
4. BASE MATERIAL MUST BE ALUMINUM (MINIMUM 0.06").
5. SIGNS MUST BE PLACED AT RAMP ENTRANCES IN ADDITION TO SIGNS POSTED IN ACCORDANCE WITH REVISED STANDARD PLAN RSP T14.

SPECIAL SIGN FOR ENTRANCE RAMP CLOSURES

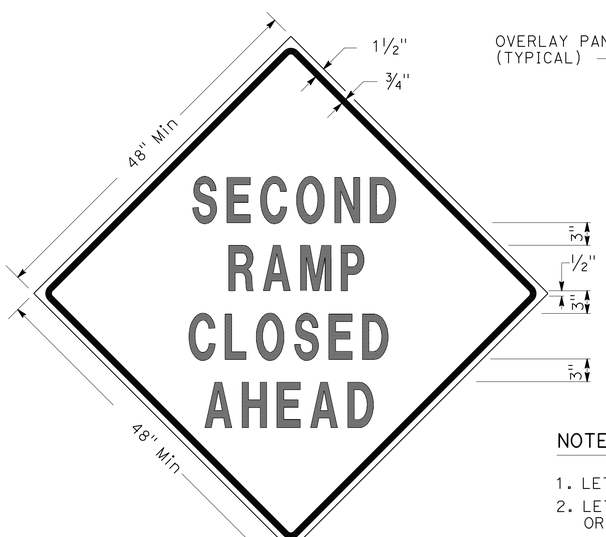

SIGN SP-3

SIGN SP-5

NOTES: SIGNS SP-3 & SP-5

1. LETTERS - 6" SERIES D.
2. LETTERS AND BORDER MUST BE BLACK ON REFLECTORIZED ORANGE BACKGROUND.
3. BOLT HOLES MUST BE 3/8" DIAMETER.
4. BASE MATERIAL MUST BE ALUMINUM (MINIMUM 0.06").
5. SIGNS MUST BE MOUNTED WITH BOTTOMS OF SIGNS A MINIMUM OF 7' ABOVE GROUND.
6. SIGN SP-5 MUST BE USED IF THE OFF-RAMP TO BE CLOSED FOLLOWS A FREEWAY OFF-CONNECTOR.

SPECIAL SIGNS FOR EXIT RAMP CLOSURES

TRAFFIC HANDLING DETAILS
TRAFFIC CONTROL SYSTEM FOR RAMP CLOSURES, DETOUR SIGNS, AND MISCELLANEOUS DETAILS
SHEET 1 OF 2

NO SCALE

THD-1

STATE OF CALIFORNIA - DEPARTMENT OF TRANSPORTATION
Caltrans® DTM

FUNCTIONAL SUPERVISOR: ALBERT K YU
CALCULATED-DESIGNED BY: ALBERT K YU
CHECKED BY: JOCELYN C CHIANG
REVISED BY: JC
DATE REVISED: 2/14

LAST REVISION 00-00-00
DATE PLOTTED => 20-APR-2015
TIME PLOTTED => 12:55

Dist	COUNTY	ROUTE	POST MILES TOTAL PROJECT	SHEET No.	TOTAL SHEETS
07	Ven	101	14.1/21.1	57	108

REGISTERED CIVIL ENGINEER 7-25-14 DATE

2-9-15
PLANS APPROVAL DATE

REGISTERED PROFESSIONAL ENGINEER SHANGJIA HORN No. 51846 Exp. 6-30-16 CIVIL STATE OF CALIFORNIA

THE STATE OF CALIFORNIA OR ITS OFFICERS OR AGENTS SHALL NOT BE RESPONSIBLE FOR THE ACCURACY OR COMPLETENESS OF SCANNED COPIES OF THIS PLAN SHEET.

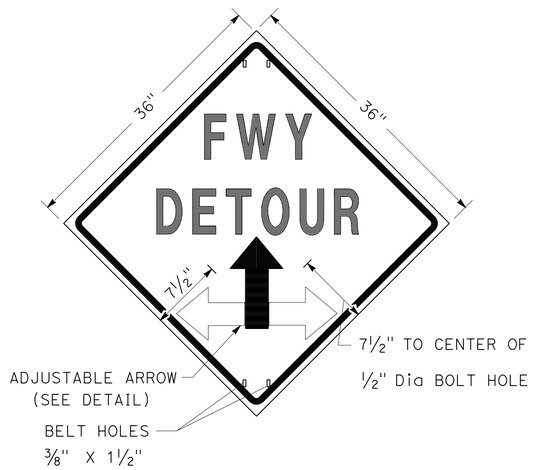

SIGN SP-2

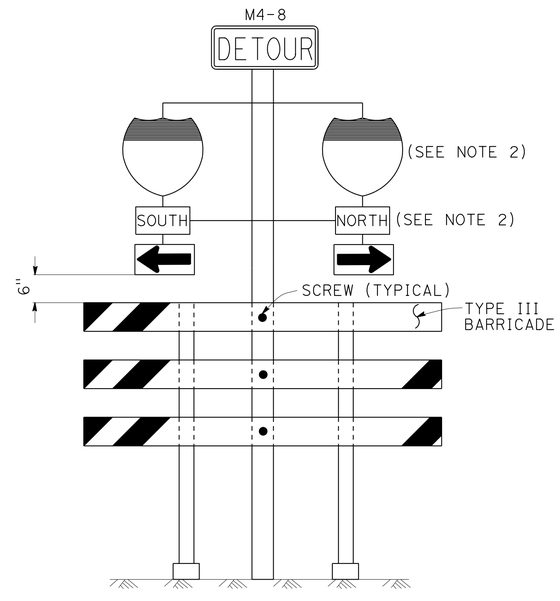

SIGN SP-6 (SEE NOTE 1)

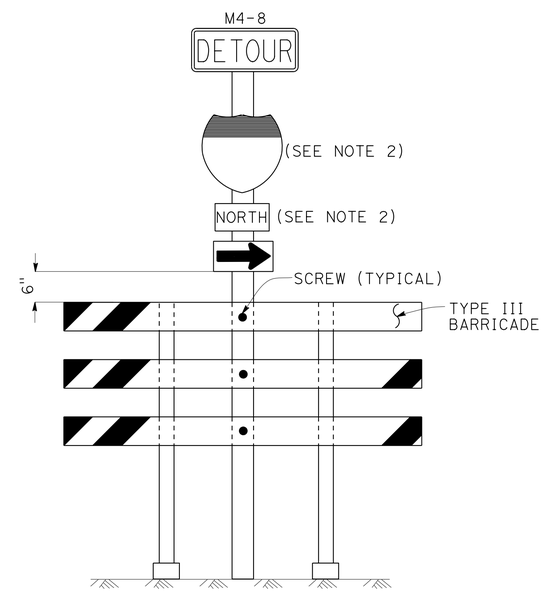

SIGN SP-7 (SEE NOTE 1)

NOTES: SIGN SP-2

1. LETTERS - 6" SERIES E.
2. LETTERS, BORDER AND ARROW - BLACK ON RETROREFLECTORIZED ORANGE BACKGROUND.
3. BASE MATERIAL FOR SIGNS AND ARROWS MUST BE ALUMINUM (MINIMUM 0.06").
4. BELTS (LUGGAGE STRAPS) MUST BE 1" WIDE BY 48" LONG, MADE OF COTTON OR POLYPROPYLENE WEB MATERIAL.
5. SIGNS MUST BE MOUNTED WITH BOTTOMS OF SIGNS A MINIMUM OF 7' ABOVE GROUND EXCEPT AS OTHERWISE SHOWN ON OTHER TRAFFIC HANDLING DETAILS PLANS.

NOTES: SIGNS SP-6 & SP-7

1. IN LIEU OF PLACING SIGNS ON TYPE III BARRICADES, SIGNS, INCLUDING POSTS, MAY BE PLACED INTO THE GROUND OR FASTENED ONTO ELECTROLIERS.
2. USE APPROPRIATE ROUTE MARKER [G26-2(CA), G27-2(CA), G28-2(CA)] AND CARDINAL DIRECTION [NORTH (M3-1), SOUTH (M3-3), EAST (M3-2), WEST (M3-4)].

SPECIAL PORTABLE FREEWAY DETOUR SIGNS

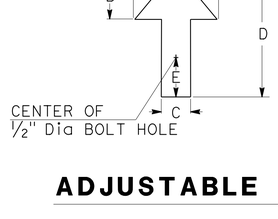

DIMENSIONS				
A	B	C	D	E
6"	3"	2"	8"	1"

ADJUSTABLE ARROW DETAIL

ABBREVIATION

(CA) CALIFORNIA CODE

TRAFFIC HANDLING DETAILS

TRAFFIC CONTROL SYSTEM FOR RAMP CLOSURES, DETOUR SIGNS, AND MISCELLANEOUS DETAILS

SHEET 2 OF 2

NO SCALE

THD-2

STATE OF CALIFORNIA - DEPARTMENT OF TRANSPORTATION
Caltrans DTM

FUNCTIONAL SUPERVISOR: ALBERT K YU
CALCULATED-DESIGNED BY: ALBERT K YU
CHECKED BY: JOCELYN C CHIANG
REVISED BY: JC
DATE REVISED: 2/14

LAST REVISION 00-00-00 | DATE PLOTTED => 20-APR-2015 | TIME PLOTTED => 12:55

Dist	COUNTY	ROUTE	POST MILES TOTAL PROJECT	SHEET No.	TOTAL SHEETS
07	Ven	101	14.1/21.1	58	108

REGISTERED CIVIL ENGINEER 3-11-14 DATE

2-9-15
PLANS APPROVAL DATE

REGISTERED PROFESSIONAL ENGINEER SHANGJIA HORN No. 51846 Exp. 6-30-16 CIVIL STATE OF CALIFORNIA

THE STATE OF CALIFORNIA OR ITS OFFICERS OR AGENTS SHALL NOT BE RESPONSIBLE FOR THE ACCURACY OR COMPLETENESS OF SCANNED COPIES OF THIS PLAN SHEET.

LEGEND

- SIGN SP-2
- AND/OR — DESIGNATED DETOUR ROUTE
- DETOUR DIRECTION
- CONTROLLED INTERSECTION

NOTES:

1. SP-2 SIGNS MAY BE STRAPPED ON EXISTING ELECTROLIER, SIGNAL POST OR SIGN POST.
2. SP-2 SIGNS MUST NOT BE INSTALLED ON BARRICADES EXCEPT AS OTHERWISE SHOWN.
3. SIGN LOCATIONS ARE APPROXIMATE. EXACT LOCATIONS WILL BE DETERMINED BY THE ENGINEER.
4. SP-2 SIGNS MUST BE POSTED AT EACH CONTROLLED INTERSECTION (EXCEPT AT COMMERCIAL PROPERTY, RESIDENTIAL COMPLEX OR T-INTERSECTION FROM ONE-WAY STREET) ALONG THE DESIGNATED DETOUR ROUTE.
5. UNLESS OTHERWISE SHOWN ON OTHER THD PLANS, WHEN CONTROLLED INTERSECTIONS ALONG THE DESIGNATED DETOUR ROUTE ARE CLOSELY SPACED, PLACE SP-2 SIGNS AT CONTROLLED INTERSECTIONS AT A DISTANCE NOT TO EXCEED 1/4 MILE FROM THE PRECEDING DETOUR SIGN.
6. EXCEPT AS OTHERWISE SHOWN ON OTHER PLANS OR SPECIFIED IN THE SPECIAL PROVISIONS, SP-2 SIGNS MUST BE PLACED AS SHOWN ON THIS PLAN.

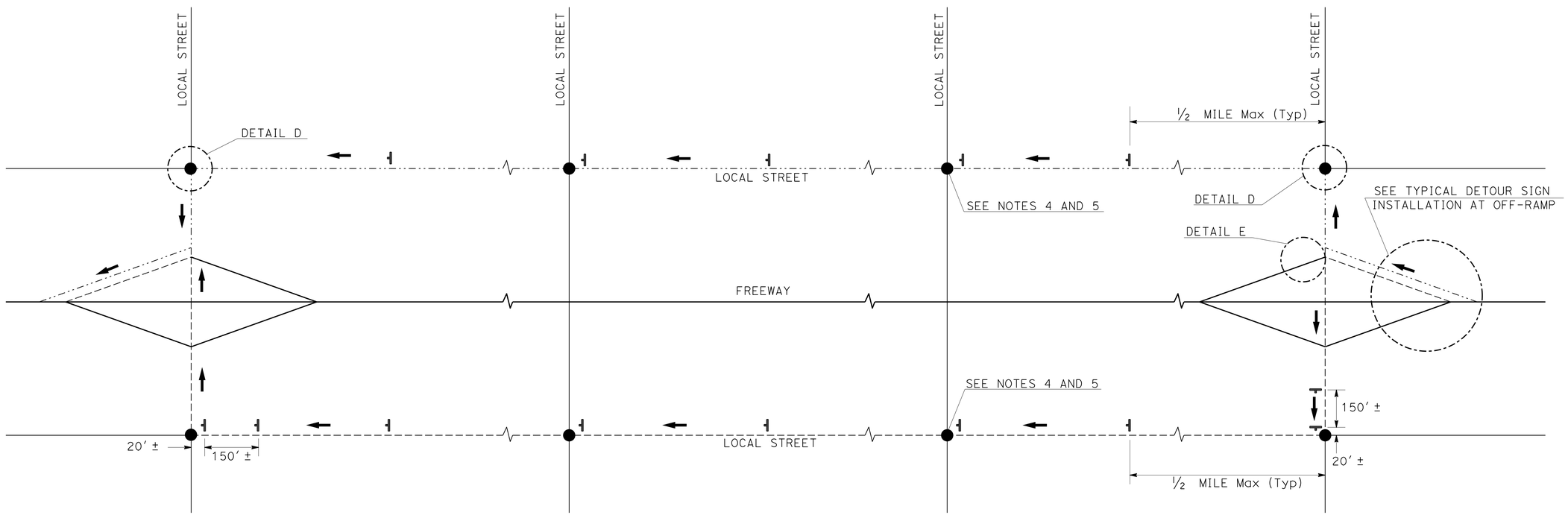

TYPICAL DETOUR SIGN INSTALLATION ALONG DESIGNATED DETOUR ROUTE

TRAFFIC HANDLING DETAILS

TRAFFIC CONTROL SYSTEM FOR DETOUR SIGN INSTALLATION ALONG DESIGNATED DETOUR ROUTE

SHEET 1 OF 3

NO SCALE

THD-3

STATE OF CALIFORNIA - DEPARTMENT OF TRANSPORTATION

Caltrans DTM

FUNCTIONAL SUPERVISOR: ALBERT K YU

CALCULATED-DESIGNED BY: ALBERT K YU

CHECKED BY: JOCELYN C CHIANG

REVISED BY: JC

DATE REVISED: 2/14

LAST REVISION: 00-00-00

DATE PLOTTED => 20-APR-2015

TIME PLOTTED => 12:55

Dist	COUNTY	ROUTE	POST MILES TOTAL PROJECT	SHEET No.	TOTAL SHEETS
07	Ven	101	14.1/21.1	59	108

REGISTERED CIVIL ENGINEER 7-25-14 DATE

2-9-15
PLANS APPROVAL DATE

REGISTERED PROFESSIONAL ENGINEER SHANGJIA HORN No. 51846 Exp. 6-30-16 CIVIL STATE OF CALIFORNIA

THE STATE OF CALIFORNIA OR ITS OFFICERS OR AGENTS SHALL NOT BE RESPONSIBLE FOR THE ACCURACY OR COMPLETENESS OF SCANNED COPIES OF THIS PLAN SHEET.

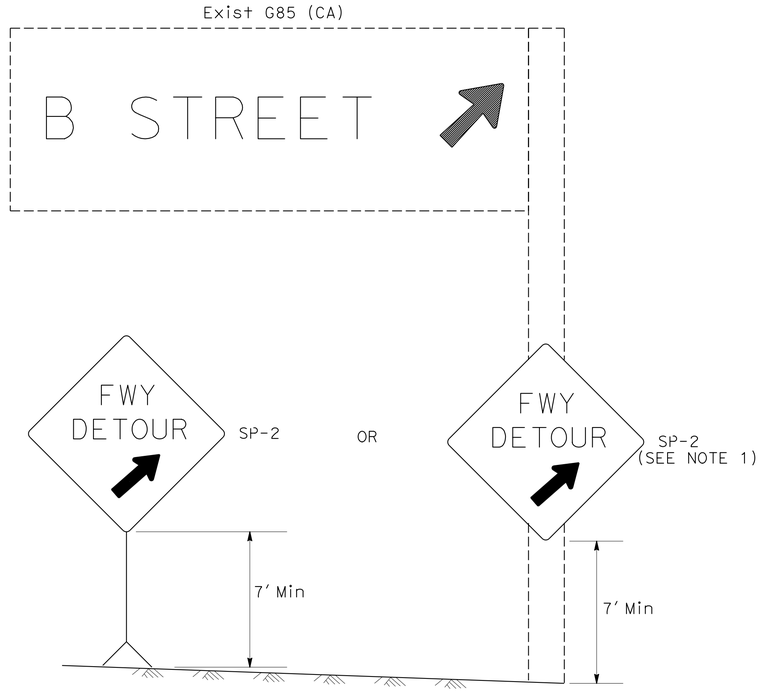

DETAIL A (SEE NOTE 3)

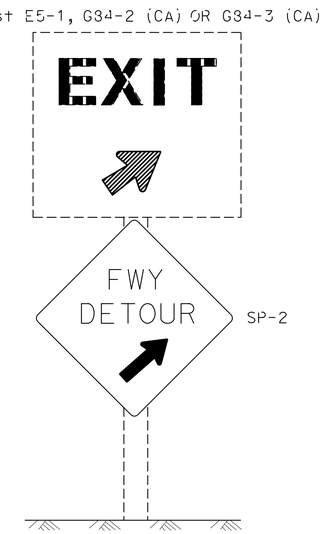

DETAIL B (SEE NOTE 3)

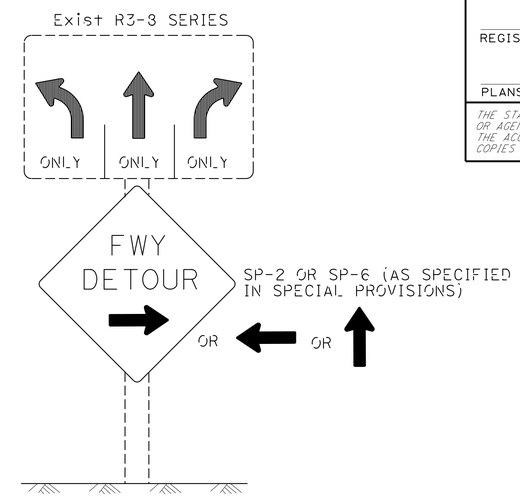

DETAIL C (SEE NOTES 4, 5, AND 6)

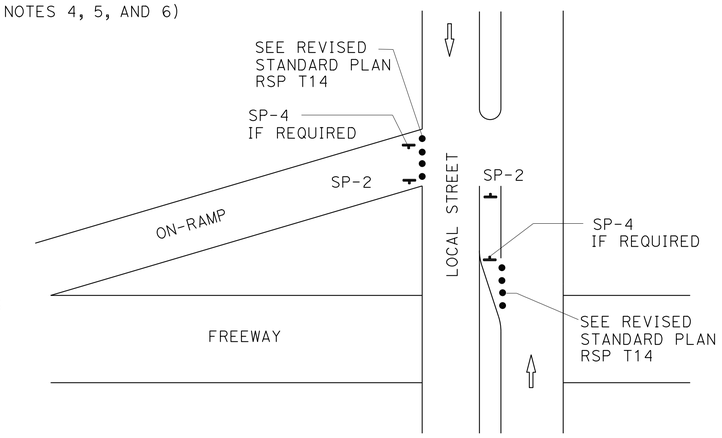

DETAIL E

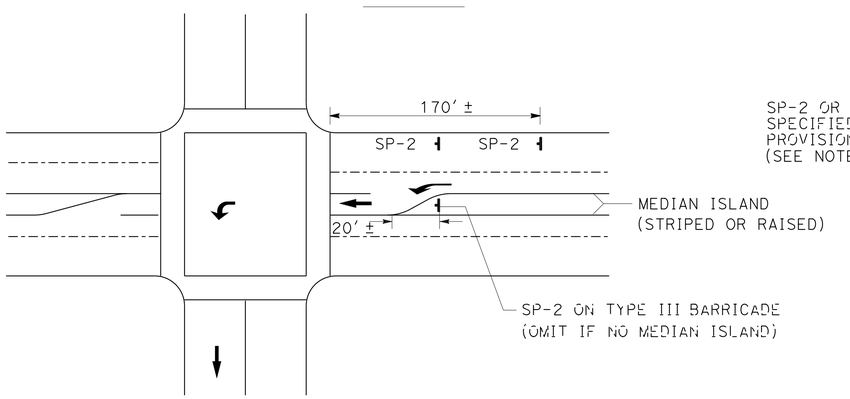

DETAIL D

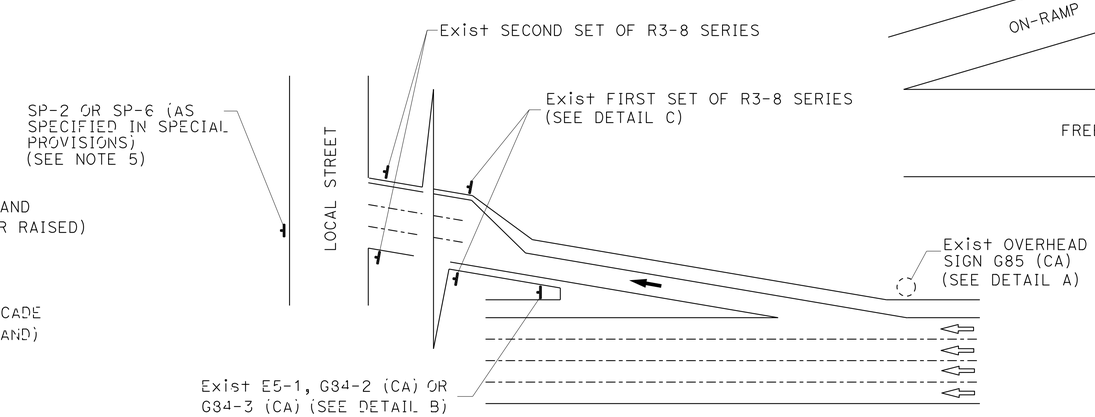

TYPICAL DETOUR SIGN INSTALLATION AT OFF-RAMP

LEGEND

- • TRAFFIC CONE
- TEMPORARY TRAFFIC CONTROL SIGN
- → DETOUR DIRECTION
- ◌ EXISTING OVERHEAD SIGN

NOTES: SIGN SP-2

1. SP-2 SIGNS MAY BE STRAPPED ON EXISTING ELECTROLIER, SIGNAL POST OR SIGN POST.
2. SP-2 SIGNS MUST NOT BE INSTALLED ON BARRICADES EXCEPT AS OTHERWISE SHOWN.
3. OMIT DETAILS A AND B FOR FULL FREEWAY CLOSURES.
4. SEE TRAFFIC HANDLING DETAILS-TRAFFIC CONTROL SYSTEM FOR RAMP CLOSURES, DETOUR SIGNS, AND MISCELLANEOUS DETAILS PLAN SHEET 2 OF 2 FOR SP-6 SIGN DETAILS.
5. IF R3-8 SERIES SIGNS ARE NOT PRESENT AT THE OFF-RAMP, SP-2 OR SP-6 SIGNS MUST BE FASTENED ONTO EXISTING ELECTROLIER, SIGNAL POST OR SIGN POST.
6. EXCEPT FOR DETAILS A & B, OMIT SP-2 SIGNS IF RAMP HAS MANDATORY SINGLE MOVE.

SIGN CODE LEGEND

XXYY-Y: FEDERAL SIGN CODE PER MANUAL ON UNIFORM TRAFFIC CONTROL DEVICES (MUTCD)

XXYY-Y (CA): CALIFORNIA SIGN CODE PER CALIFORNIA MUTCD

TRAFFIC HANDLING DETAILS
TRAFFIC CONTROL SYSTEM FOR DETOUR SIGN INSTALLATION ALONG DESIGNATED DETOUR ROUTE
SHEET 2 OF 3

NO SCALE **THD-4**

STATE OF CALIFORNIA - DEPARTMENT OF TRANSPORTATION
Caltrans DTM

FUNCTIONAL SUPERVISOR: ALBERT K YU
CALCULATED-DESIGNED BY: ALBERT K YU
CHECKED BY: JOCELYN C CHIANG
REVISED BY: JC
DATE REVISED: 2/14

LAST REVISION 00-00-00
DATE PLOTTED => 20-APR-2015
TIME PLOTTED => 12:55

Dist	COUNTY	ROUTE	POST MILES TOTAL PROJECT	SHEET No.	TOTAL SHEETS
07	Ven	101	14.1/21.1	60	108

REGISTERED CIVIL ENGINEER 12-1-14 DATE

2-9-15
PLANS APPROVAL DATE

REGISTERED PROFESSIONAL ENGINEER REFUGIO DOMINGUEZ No. 50820 Exp. 9-30-15 CIVIL STATE OF CALIFORNIA

THE STATE OF CALIFORNIA OR ITS OFFICERS OR AGENTS SHALL NOT BE RESPONSIBLE FOR THE ACCURACY OR COMPLETENESS OF SCANNED COPIES OF THIS PLAN SHEET.

SUMMARY OF QUANTITIES

SHEET NUMBER	ROADWAY EXCAVATION	ROADWAY EXCAVATION (AERIALLY DEPOSITED LEAD TYPE Z-2)	HOT MIX ASPHALT (TYPE A)	LEAN CONCRETE BASE	CLASS 3 AGGREGATE BASE	CLASS 4 AGGREGATE SUBBASE	CEMENT TREATED BASE (PLANT-MIXED, CLASS A)	CHAIN LINK FENCE (TYPE CL-6)	20' CHAIN LINK GATE (TYPE CL-6)	16' CHAIN LINK GATE (TYPE CL-6)	PLACE HOT MIX ASPHALT DIKE (TYPE E)	PLACE HOT MIX ASPHALT DIKE (TYPE C)	PLACE HOT MIX ASPHALT (MISCELLANEOUS AREA)	TACK COAT
	CY	CY	TON	CY	CY	CY	CY	LF	EA	EA	LF	LF	SQ YD	TON
L-1	42	42	25	12	19								87	0.01
L-2											601			
L-3	42	42	25	12	19						1,100		87	0.01
L-4	537	537	339	156	241	22	17	319	1	1	93		318	0.03
L-5	84	84	50	24	38						997	151	174	0.01
L-6	42	42	25	12	19								87	0.01
L-7	42	42	25	12	19						361		87	0.01
L-8											770	150		
L-9	42	42	25	12	19						242		87	0.01
L-10	84	84	50	24	38						1,061	107	788	0.01
TOTAL	915	915	564	264	412	22	17	319	1	1	5,225	408	1,889	0.1

TEMPORARY TRAFFIC CONTROL QUANTITIES

SHEET NUMBER	TEMPORARY RAILING (TYPE K)	TEMPORARY CRASH CUSHION MODULE	CHANNELIZER (SURFACE MOUNTED)
	LF	EA	EA
TH-1	240	11	10
TH-2	360	11	7
TH-3	300	11	5
TH-4	680	28	16
TH-5	240	14	10
TH-6	260	14	10
TH-7	460	14	8
TH-8	260		7
TH-9	1,480	28	10
TOTAL	4,280	131	83

WATER POLLUTION CONTROL QUANTITIES

ITEM DESCRIPTION	UNIT	QUANTITY
TEMPORARY SILT FENCE	LF	3,500
TEMPORARY DRAINAGE INLET PROTECTION	EA	4
RAIN EVENT ACTION PLAN	EA	2
STORM WATER SAMPLING AND ANALYSIS DAY	EA	5
STORM WATER ANNUAL REPORT	EA	1

SUMMARY OF QUANTITIES

Q-1

REVISED BY | DATE REVISED
MOHAMMAD MOHSENZADEH | AARON FOONG
CALCULATED-DESIGNED BY | CHECKED BY
FUNCTIONAL SUPERVISOR: REFUGIO DOMINGUEZ
STATE OF CALIFORNIA - DEPARTMENT OF TRANSPORTATION
Caltrans DESIGN

LAST REVISION 00-00-00 | DATE PLOTTED => 20-APR-2015 | TIME PLOTTED => 12:55

Dist	COUNTY	ROUTE	POST MILES TOTAL PROJECT	SHEET No.	TOTAL SHEETS
07	Ven	101	14.1/21.1	61	108

George Olguin
LICENSED LANDSCAPE ARCHITECT

2-9-15
PLANS APPROVAL DATE

LICENSED LANDSCAPE ARCHITECT
GEORGE OLGUIN
NO. 4333
George Olguin
Signature
08-31-16
Renewal date
02-06-15
Date
STATE OF CALIFORNIA

THE STATE OF CALIFORNIA OR ITS OFFICERS OR AGENTS SHALL NOT BE RESPONSIBLE FOR THE ACCURACY OR COMPLETENESS OF SCANNED COPIES OF THIS PLAN SHEET.

NOTE:

FOR ACCURATE RIGHT OF WAY DATA, CONTACT
RIGHT OF WAY ENGINEERING AT THE DISTRICT OFFICE.

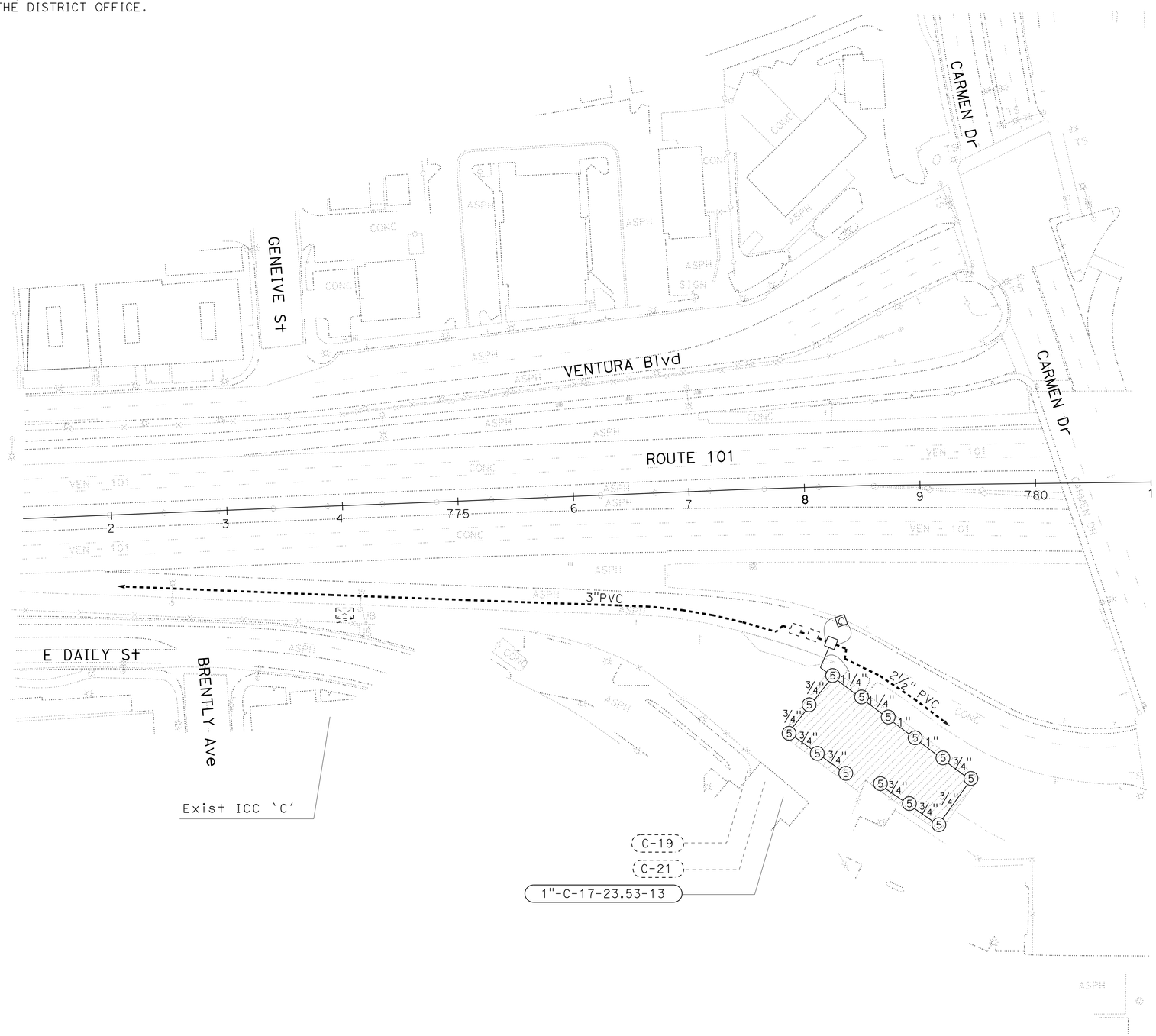

IRRIGATION PLAN

SCALE: 1" = 50'

APPROVED FOR IRRIGATION WORK ONLY

IP-1

STATE OF CALIFORNIA - DEPARTMENT OF TRANSPORTATION
Caltrans® LANDSCAPE ARCHITECTURE

SENIOR LANDSCAPE ARCHITECT: RON RUSSAK

CALCULATED-DESIGNED BY: XUAN WU
CHECKED BY: GEORGE OLGUIN

REVISED BY
DATE REVISED

LAST REVISION 00-00-00
DATE PLOTTED => 20-APR-2015
TIME PLOTTED => 12:55

Dist	COUNTY	ROUTE	POST MILES TOTAL PROJECT	SHEET No.	TOTAL SHEETS
07	Ven	101	14.1/21.1	62	108

George Olguin
LICENSED LANDSCAPE ARCHITECT

2-9-15
PLANS APPROVAL DATE

LICENSED LANDSCAPE ARCHITECT
GEORGE OLGUIN
NO. 4333
George Olguin
Signature
08-31-16
Renewal date
02-06-15
Date
STATE OF CALIFORNIA

THE STATE OF CALIFORNIA OR ITS OFFICERS OR AGENTS SHALL NOT BE RESPONSIBLE FOR THE ACCURACY OR COMPLETENESS OF SCANNED COPIES OF THIS PLAN SHEET.

NOTE:

FOR ACCURATE RIGHT OF WAY DATA, CONTACT
RIGHT OF WAY ENGINEERING AT THE DISTRICT OFFICE.

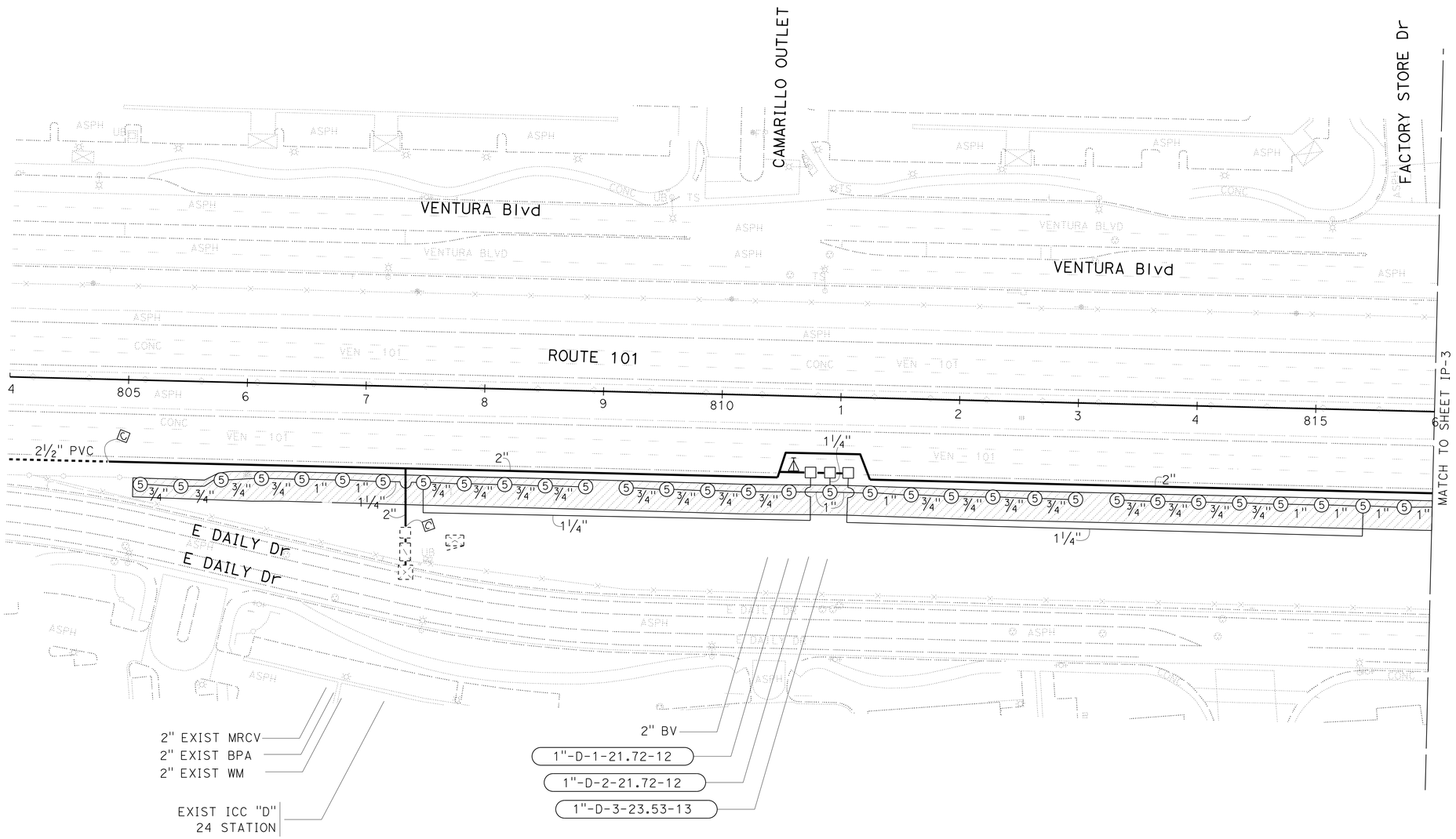

IRRIGATION PLAN

SCALE: 1" = 50'

IP-2

APPROVED FOR IRRIGATION WORK ONLY

REVISED BY | DATE REVISED
XUAN WU | GEORGE OLGUIN
CALCULATED-DESIGNED BY | CHECKED BY
SENIOR LANDSCAPE ARCHITECT | RON RUSSAK

STATE OF CALIFORNIA - DEPARTMENT OF TRANSPORTATION
Caltrans® LANDSCAPE ARCHITECTURE

LAST REVISION 00-00-00 | DATE PLOTTED => 20-APR-2015 | TIME PLOTTED => 12:55

Dist	COUNTY	ROUTE	POST MILES TOTAL PROJECT	SHEET No.	TOTAL SHEETS
07	Ven	101	14.1/21.1	63	108

George Olguin
LICENSED LANDSCAPE ARCHITECT

2-9-15
PLANS APPROVAL DATE

LICENSED LANDSCAPE ARCHITECT
GEORGE OLGUIN
NO. 4333
George Olguin
Signature
08-31-16
Renewal Date
02-06-15
Date
STATE OF CALIFORNIA

THE STATE OF CALIFORNIA OR ITS OFFICERS OR AGENTS SHALL NOT BE RESPONSIBLE FOR THE ACCURACY OR COMPLETENESS OF SCANNED COPIES OF THIS PLAN SHEET.

NOTE:

FOR ACCURATE RIGHT OF WAY DATA, CONTACT
RIGHT OF WAY ENGINEERING AT THE DISTRICT OFFICE.

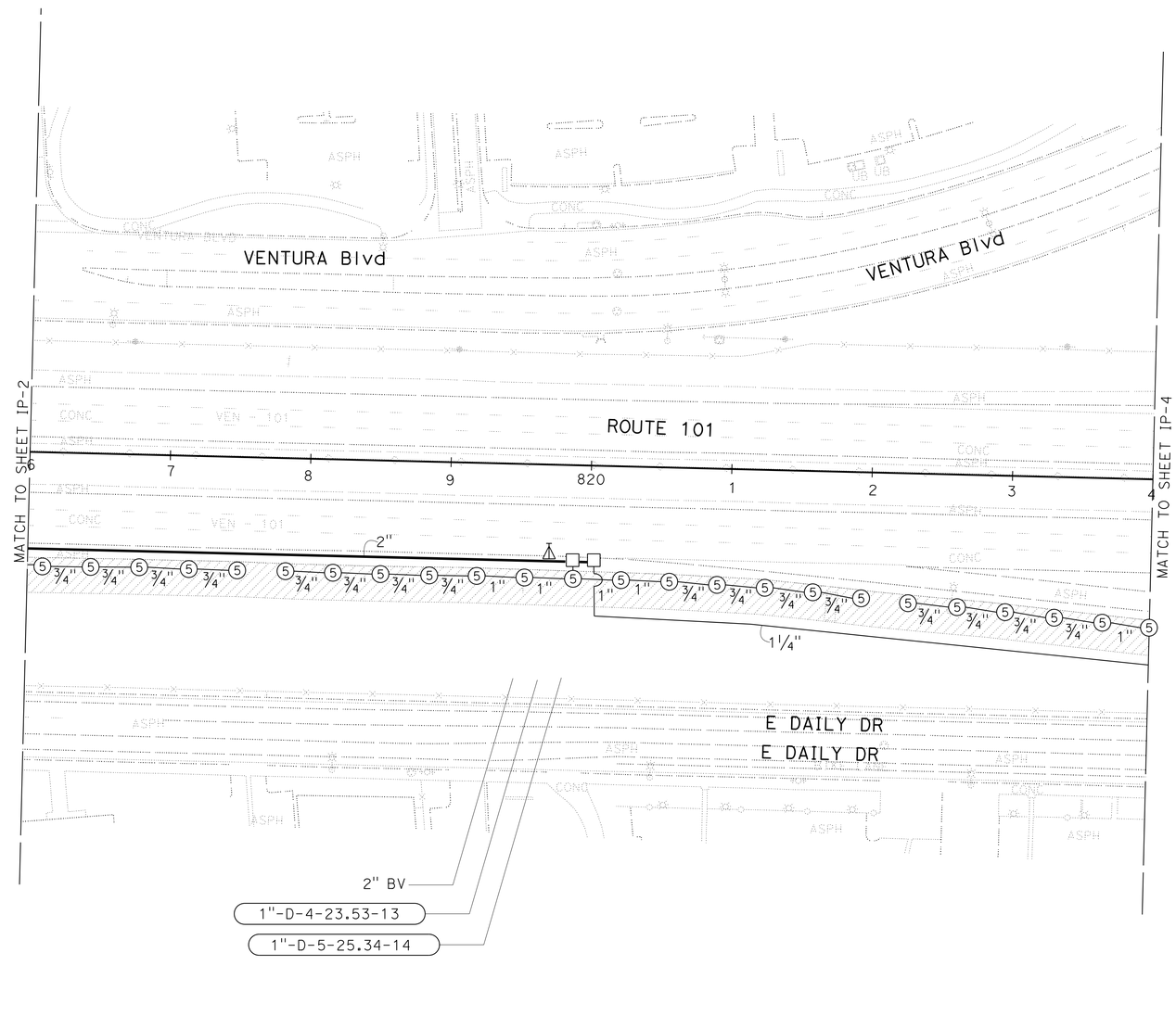

IRRIGATION PLAN

SCALE: 1" = 50'

IP-3

APPROVED FOR IRRIGATION WORK ONLY

REVISED BY | DATE REVISED
XUAN WU | GEORGE OLGUIN
CALCULATED-DESIGNED BY | CHECKED BY
SENIOR LANDSCAPE ARCHITECT | RON RUSSAK
STATE OF CALIFORNIA - DEPARTMENT OF TRANSPORTATION
Caltrans® LANDSCAPE ARCHITECTURE

LAST REVISION 00-00-00 | DATE PLOTTED => 20-APR-2015 | TIME PLOTTED => 12:55

Dist	COUNTY	ROUTE	POST MILES TOTAL PROJECT	SHEET No.	TOTAL SHEETS
07	Ven	101	14.1/21.1	64	108

George Olguin
LICENSED LANDSCAPE ARCHITECT

2-9-15
PLANS APPROVAL DATE

LICENSED LANDSCAPE ARCHITECT
GEORGE OLGUIN
NO. 4333
George Olguin
Signature
08-31-16
Renewal Date
02-06-15
Date
STATE OF CALIFORNIA

THE STATE OF CALIFORNIA OR ITS OFFICERS OR AGENTS SHALL NOT BE RESPONSIBLE FOR THE ACCURACY OR COMPLETENESS OF SCANNED COPIES OF THIS PLAN SHEET.

NOTE:

FOR ACCURATE RIGHT OF WAY DATA, CONTACT
RIGHT OF WAY ENGINEERING AT THE DISTRICT OFFICE.

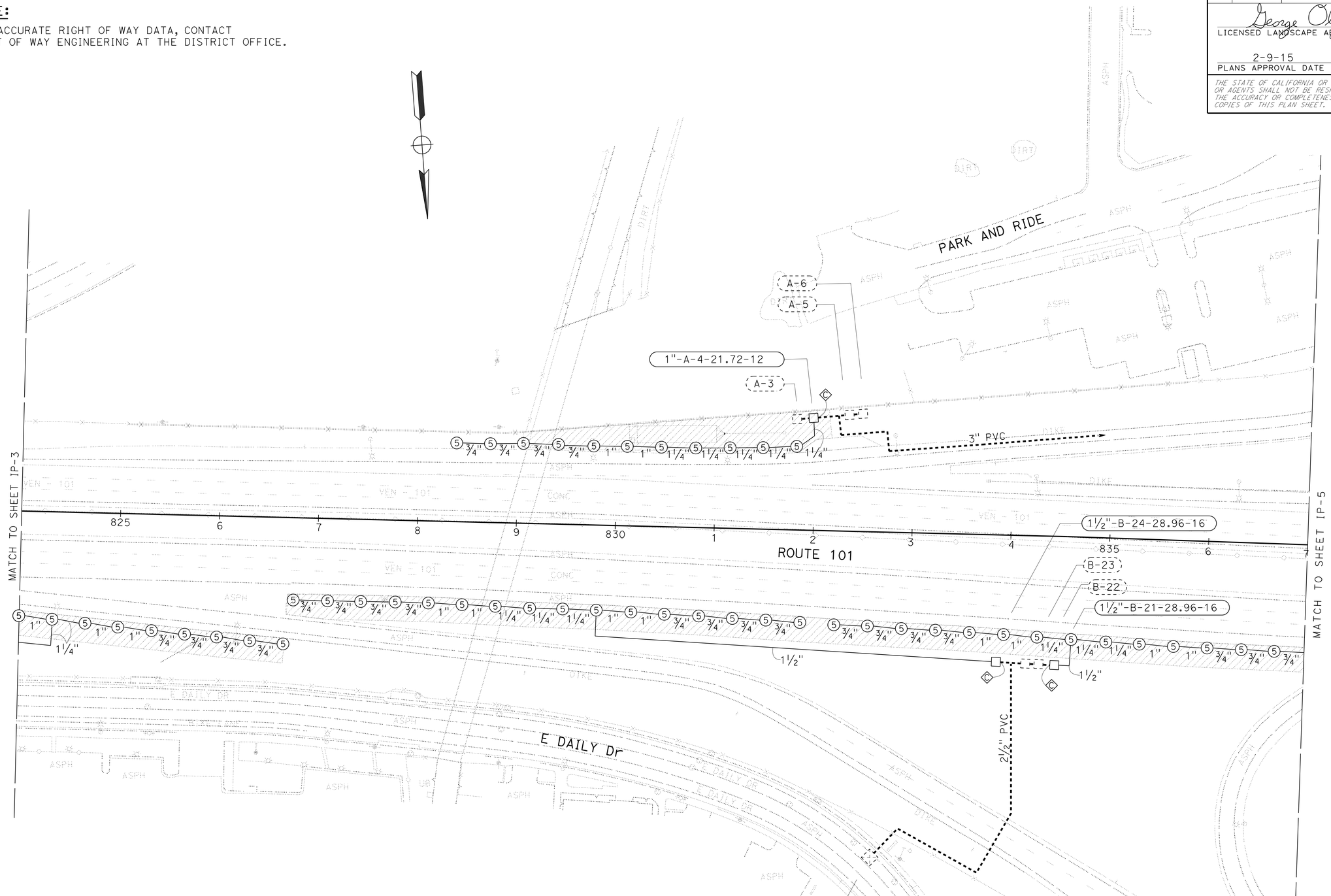

IRRIGATION PLAN

SCALE: 1" = 50'

APPROVED FOR IRRIGATION WORK ONLY

IP-4

STATE OF CALIFORNIA - DEPARTMENT OF TRANSPORTATION
Caltrans® LANDSCAPE ARCHITECTURE

SENIOR LANDSCAPE ARCHITECT: RON RUSSAK
CALCULATED-DESIGNED BY: XUAN WU
CHECKED BY: GEORGE OLGUIN
REVISED BY
DATE REVISED

LAST REVISION 00-00-00
DATE PLOTTED => 20-APR-2015
TIME PLOTTED => 12:55

Dist	COUNTY	ROUTE	POST MILES TOTAL PROJECT	SHEET No.	TOTAL SHEETS
07	Ven	101	14.1/21.1	65	108

George Olguin
LICENSED LANDSCAPE ARCHITECT

2-9-15
PLANS APPROVAL DATE

LICENSED LANDSCAPE ARCHITECT GEORGE OLGUIN NO. 4333 George Olguin Signature 08-31-16 Renewal date 02-06-15 Date STATE OF CALIFORNIA

THE STATE OF CALIFORNIA OR ITS OFFICERS OR AGENTS SHALL NOT BE RESPONSIBLE FOR THE ACCURACY OR COMPLETENESS OF SCANNED COPIES OF THIS PLAN SHEET.

NOTE:

FOR ACCURATE RIGHT OF WAY DATA, CONTACT RIGHT OF WAY ENGINEERING AT THE DISTRICT OFFICE.

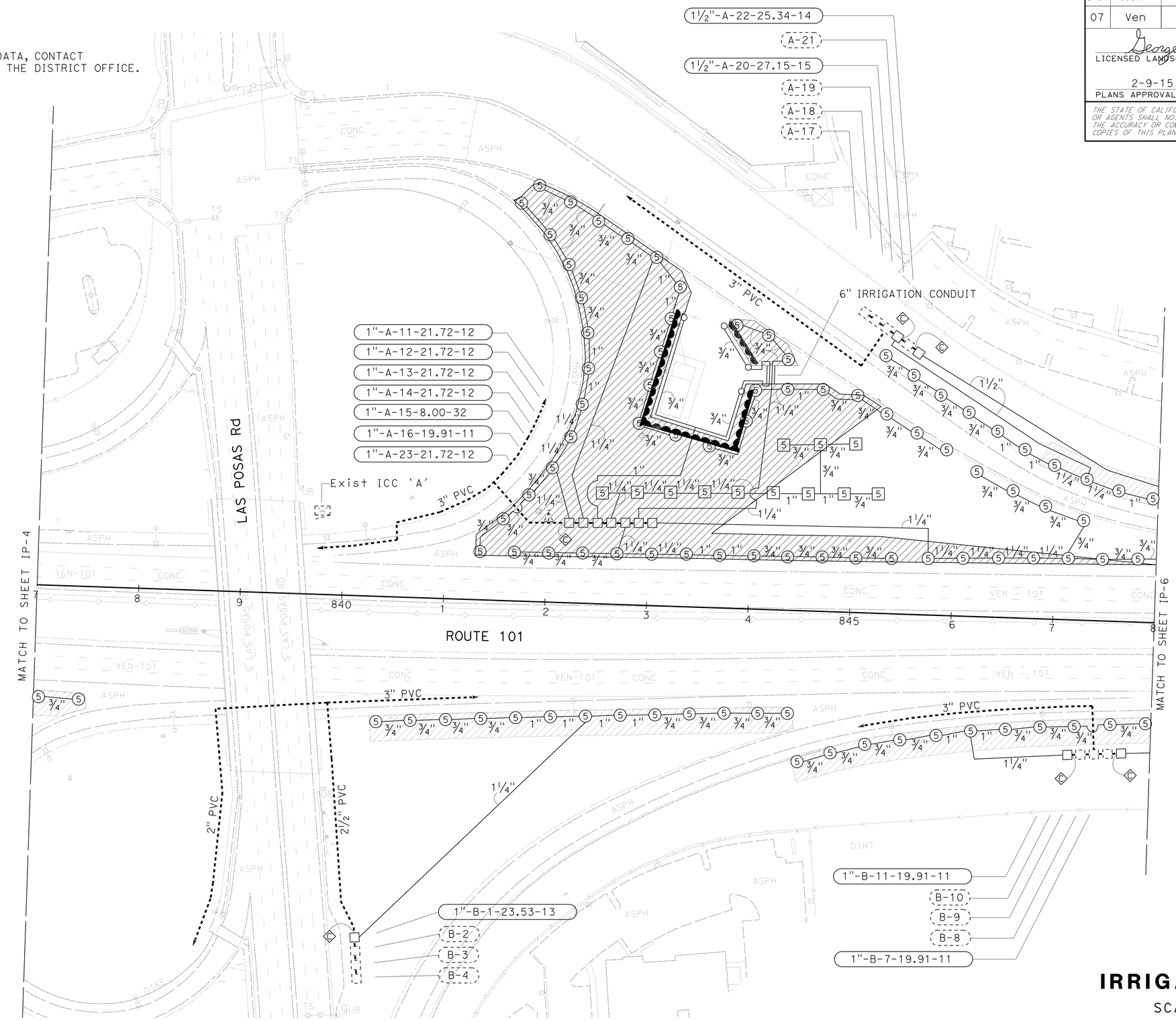

IRRIGATION PLAN

SCALE: 1" = 50'

IP-5

APPROVED FOR IRRIGATION WORK ONLY

STATE OF CALIFORNIA - DEPARTMENT OF TRANSPORTATION
Caltrans® LANDSCAPE ARCHITECTURE

SENIOR LANDSCAPE ARCHITECT: RON RUSSAK
CALCULATED-DESIGNED BY: XUAN WU
CHECKED BY: GEORGE OLGUIN
REVISED BY / DATE REVISED

LAST REVISION 00-00-00
DATE PLOTTED => 20-APR-2015
TIME PLOTTED => 12:55

Dist	COUNTY	ROUTE	POST MILES TOTAL PROJECT	SHEET No.	TOTAL SHEETS
07	Ven	101	14.1/21.1	66	108

George Olguin
LICENSED LANDSCAPE ARCHITECT

2-9-15
PLANS APPROVAL DATE

LICENSED LANDSCAPE ARCHITECT
GEORGE OLGUIN
NO. 4333
George Olguin
Signature
08-31-16
Renewal Date
02-06-15
Date
STATE OF CALIFORNIA

THE STATE OF CALIFORNIA OR ITS OFFICERS OR AGENTS SHALL NOT BE RESPONSIBLE FOR THE ACCURACY OR COMPLETENESS OF SCANNED COPIES OF THIS PLAN SHEET.

NOTE:

FOR ACCURATE RIGHT OF WAY DATA, CONTACT
RIGHT OF WAY ENGINEERING AT THE DISTRICT OFFICE.

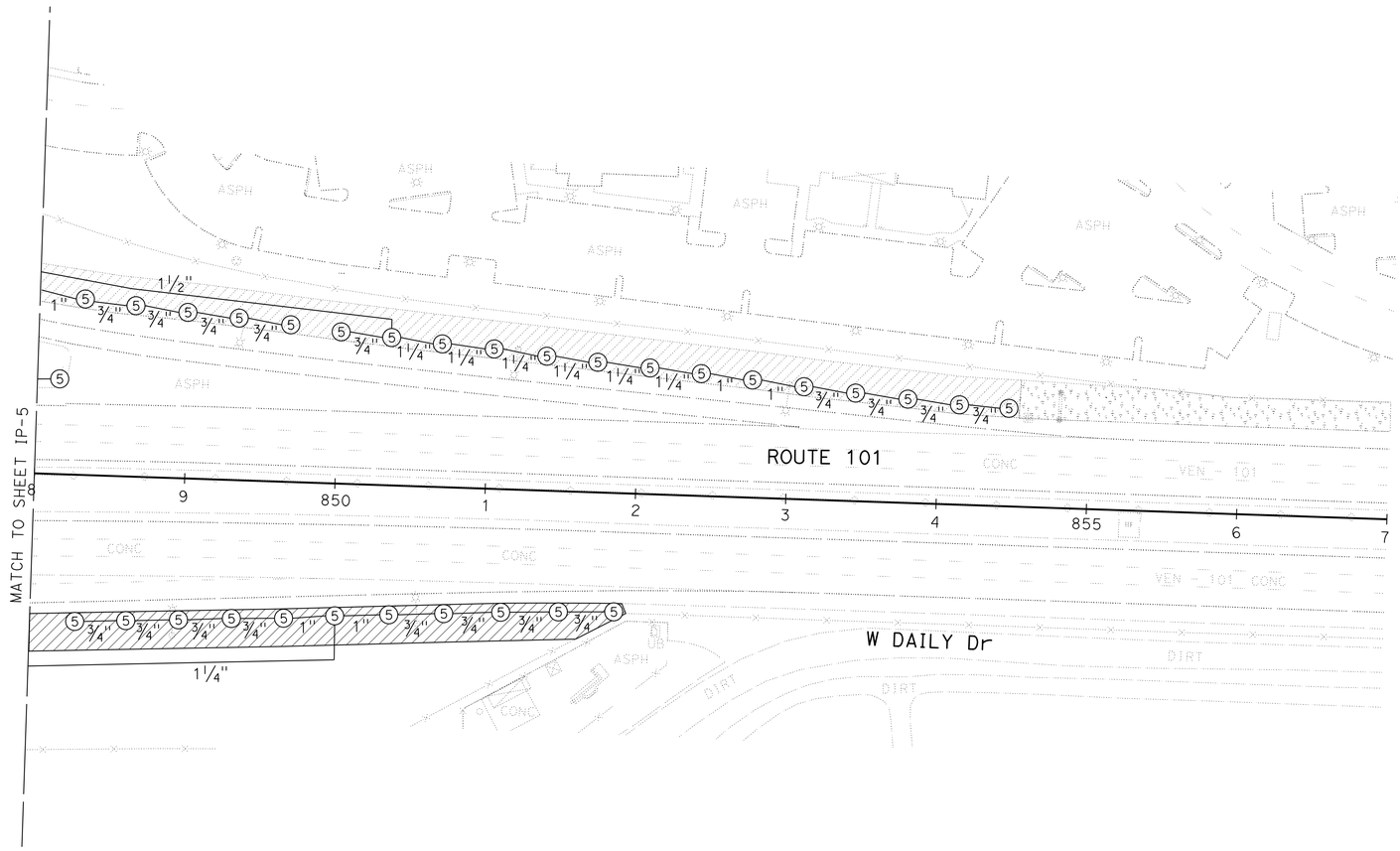

IRRIGATION PLAN

SCALE: 1" = 50'

IP-6

APPROVED FOR IRRIGATION WORK ONLY

REVISED BY	DATE REVISED

CALCULATED-DESIGNED BY	XUAN WU
CHECKED BY	GEORGE OLGUIN
SENIOR LANDSCAPE ARCHITECT	RON RUSSAK

STATE OF CALIFORNIA - DEPARTMENT OF TRANSPORTATION
Caltrans® LANDSCAPE ARCHITECTURE

LAST REVISION 00-00-00 | DATE PLOTTED => 20-APR-2015 | TIME PLOTTED => 12:55

Dist	COUNTY	ROUTE	POST MILES TOTAL PROJECT	SHEET No.	TOTAL SHEETS
07	Ven	101	14.1/21.1	67	108

George Olguin
LICENSED LANDSCAPE ARCHITECT

2-9-15
PLANS APPROVAL DATE

LICENSED LANDSCAPE ARCHITECT
GEORGE OLGUIN
NO. 4333
George Olguin
Signature
08-31-16
Renewal Date
02-06-15
Date
STATE OF CALIFORNIA

THE STATE OF CALIFORNIA OR ITS OFFICERS OR AGENTS SHALL NOT BE RESPONSIBLE FOR THE ACCURACY OR COMPLETENESS OF SCANNED COPIES OF THIS PLAN SHEET.

NOTE:

FOR ACCURATE RIGHT OF WAY DATA, CONTACT
RIGHT OF WAY ENGINEERING AT THE DISTRICT OFFICE.

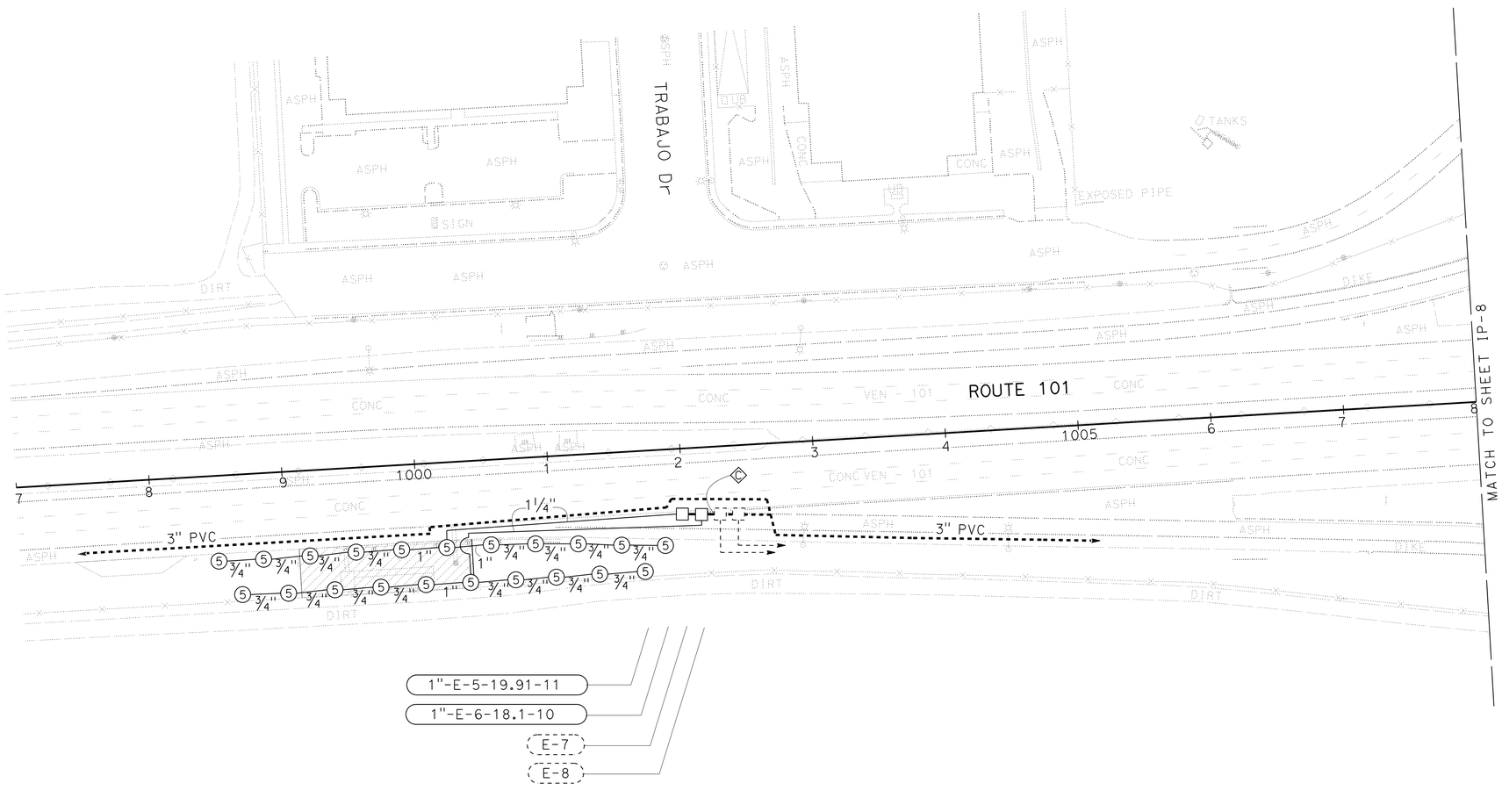

IRRIGATION PLAN

SCALE: 1" = 50'

IP-7

APPROVED FOR IRRIGATION WORK ONLY

STATE OF CALIFORNIA - DEPARTMENT OF TRANSPORTATION
Caltrans® LANDSCAPE ARCHITECTURE

SENIOR LANDSCAPE ARCHITECT: RON RUSSAK
CALCULATED-DESIGNED BY: XUAN WU
CHECKED BY: GEORGE OLGUIN
REVISED BY
DATE REVISED

LAST REVISION 00-00-00
DATE PLOTTED => 20-APR-2015
TIME PLOTTED => 12:55

Dist	COUNTY	ROUTE	POST MILES TOTAL PROJECT	SHEET No.	TOTAL SHEETS
07	Ven	101	14.1/21.1	68	108

George Olguin
LICENSED LANDSCAPE ARCHITECT

2-9-15
PLANS APPROVAL DATE

LICENSED LANDSCAPE ARCHITECT
GEORGE OLGUIN
NO. 4333
George Olguin
Signature
08-31-16
Renewal Date
02-06-15
Date
STATE OF CALIFORNIA

THE STATE OF CALIFORNIA OR ITS OFFICERS OR AGENTS SHALL NOT BE RESPONSIBLE FOR THE ACCURACY OR COMPLETENESS OF SCANNED COPIES OF THIS PLAN SHEET.

NOTE:

FOR ACCURATE RIGHT OF WAY DATA, CONTACT RIGHT OF WAY ENGINEERING AT THE DISTRICT OFFICE.

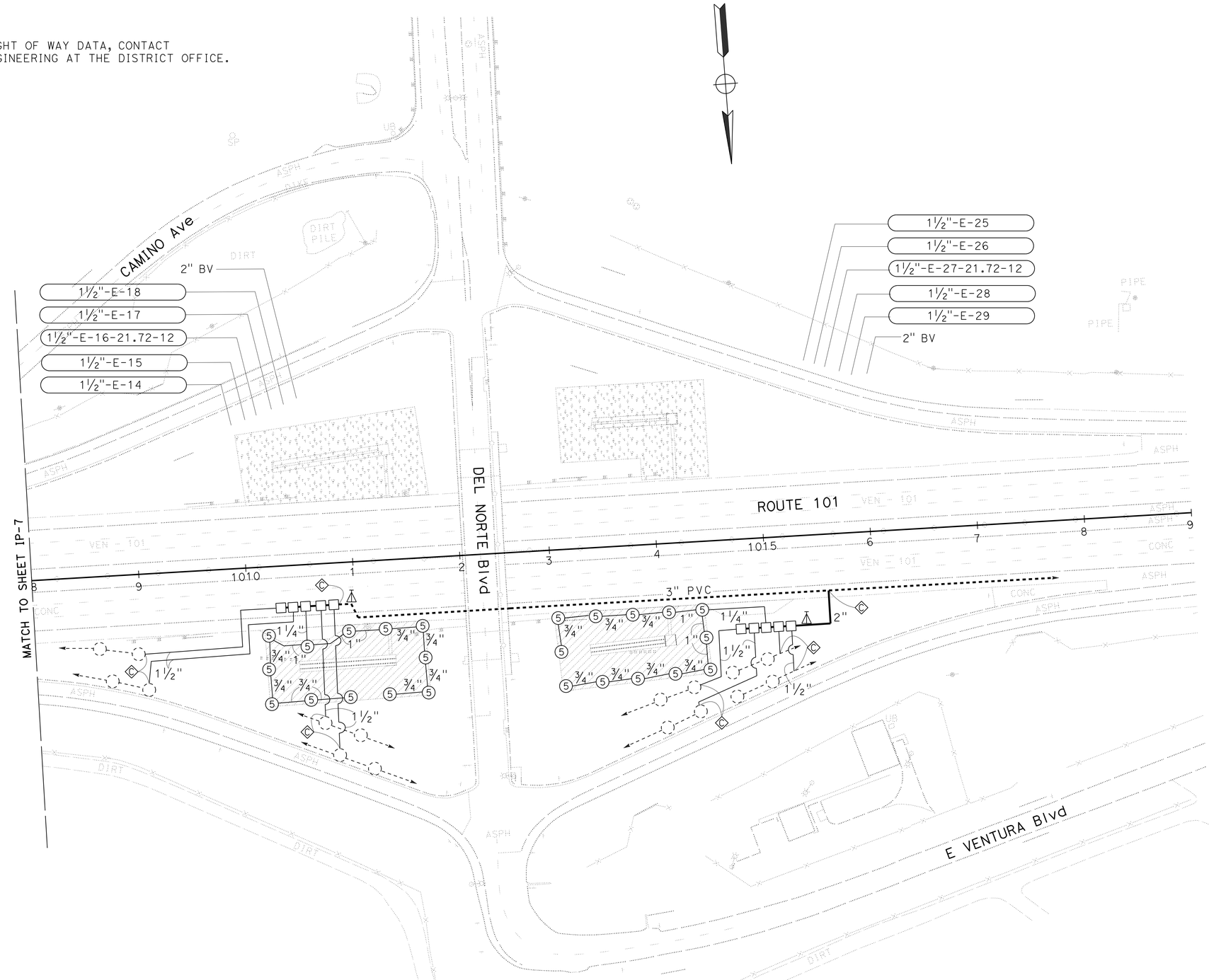

IRRIGATION PLAN

SCALE: 1" = 50'

IP-8

APPROVED FOR IRRIGATION WORK ONLY

STATE OF CALIFORNIA - DEPARTMENT OF TRANSPORTATION
Caltrans® LANDSCAPE ARCHITECTURE

SENIOR LANDSCAPE ARCHITECT: RON RUSSAK

CALCULATED-DESIGNED BY: XUAN WU
CHECKED BY: GEORGE OLGUIN

REVISED BY
DATE REVISED

LAST REVISION 00-00-00
DATE PLOTTED => 20-APR-2015
TIME PLOTTED => 12:55

Dist	COUNTY	ROUTE	POST MILES TOTAL PROJECT	SHEET No.	TOTAL SHEETS
07	Ven	101	14.1/21.1	69	108

George Olguin
LICENSED LANDSCAPE ARCHITECT

2-9-15
PLANS APPROVAL DATE

LICENSED LANDSCAPE ARCHITECT
GEORGE OLGUIN
NO. 4333
George Olguin
Signature
08-31-16
Renewal Date
02-06-15
Date
STATE OF CALIFORNIA

THE STATE OF CALIFORNIA OR ITS OFFICERS OR AGENTS SHALL NOT BE RESPONSIBLE FOR THE ACCURACY OR COMPLETENESS OF SCANNED COPIES OF THIS PLAN SHEET.

NOTE:

FOR ACCURATE RIGHT OF WAY DATA, CONTACT
RIGHT OF WAY ENGINEERING AT THE DISTRICT OFFICE.

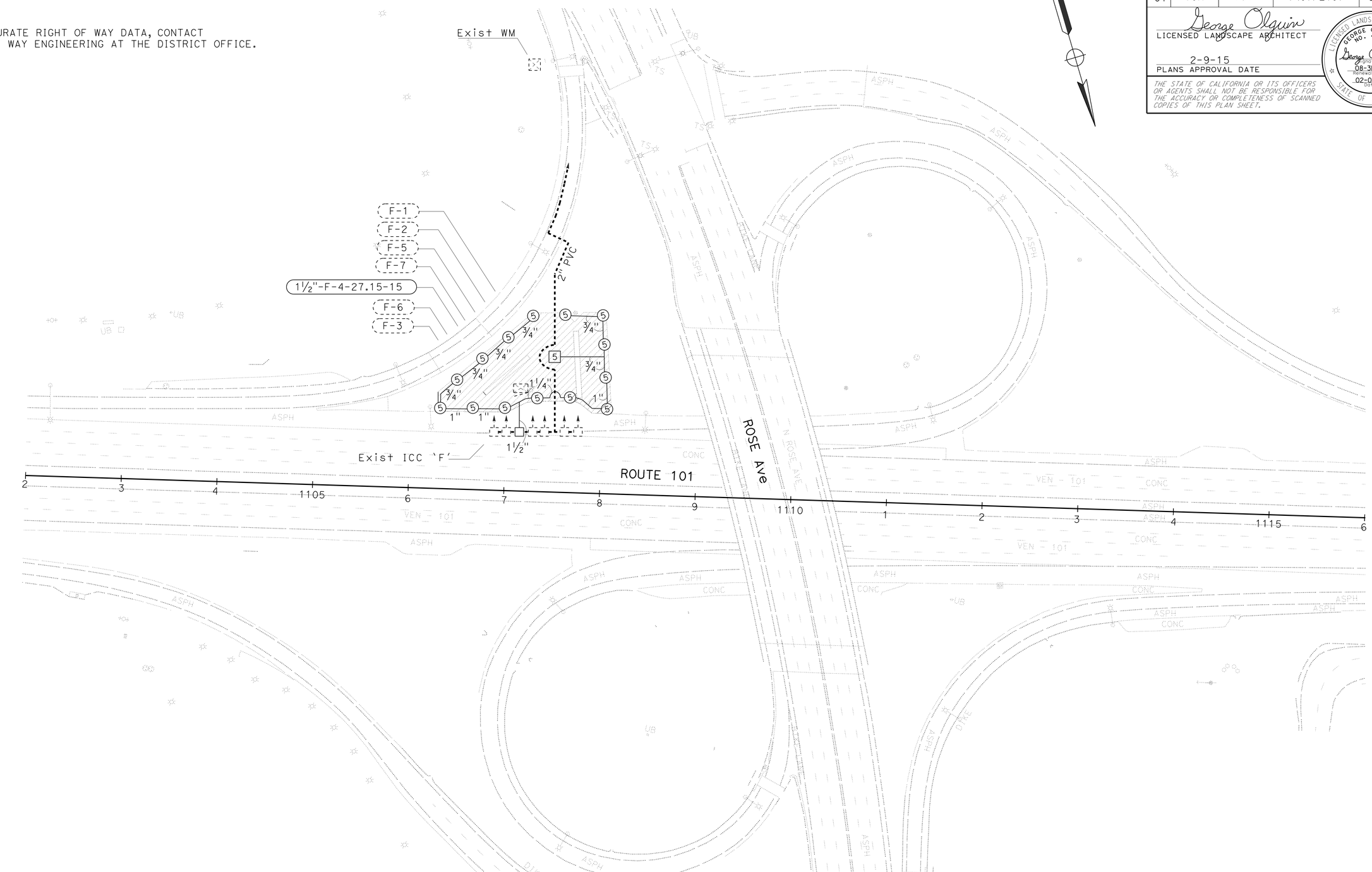

IRRIGATION PLAN

SCALE: 1" = 50'

IP-9

APPROVED FOR IRRIGATION WORK ONLY

STATE OF CALIFORNIA - DEPARTMENT OF TRANSPORTATION
Caltrans® LANDSCAPE ARCHITECTURE

SENIOR LANDSCAPE ARCHITECT: RON RUSSAK

CALCULATED-DESIGNED BY: XUAN WU
CHECKED BY: GEORGE OLGUIN

REVISED BY
DATE REVISED

LAST REVISION 00-00-00
DATE PLOTTED => 20-APR-2015
TIME PLOTTED => 12:55

Dist	COUNTY	ROUTE	POST MILES TOTAL PROJECT	SHEET No.	TOTAL SHEETS
07	Ven	101	14.1/21.1	70	108

George Olguin
LICENSED LANDSCAPE ARCHITECT

2-9-15
PLANS APPROVAL DATE

LICENSED LANDSCAPE ARCHITECT GEORGE OLGUIN NO. 4333 STATE OF CALIFORNIA
George Olguin
Expiration Date 08-31-16
Renewal Date 02-06-15
Date

THE STATE OF CALIFORNIA OR ITS OFFICERS OR AGENTS SHALL NOT BE RESPONSIBLE FOR THE ACCURACY OR COMPLETENESS OF SCANNED COPIES OF THIS PLAN SHEET.

SUBTOTALS PER VALVE ON LATERAL SUPPLY SIDE OF CONTROL VALVE

DESCRIPTION		UNIT	VALVE OR ASSEMBLY NUMBER																											SUBTOTALS	UNIT	DESCRIPTION	
			A-4	A-11	A-12	A-13	A-14	A-15	A-16	A-20	A-22	A-23	B-1	B-7	B-11	B-21	B-24	C-17	D-1	D-2	D-3	D-4	D-5	E-5	E-6	E-14							
PLASTIC PIPE SUPPLY LINE SCHEDULE 40	¾ INCH	LF	140	245	315	245	140	344	280	280	175	245	280	280	280	280	280	280	280	280	280	280	280	280	280		6049	LF	¾ INCH	SCHEDULE 40 PLASTIC PIPE SUPPLY LINE
	1 INCH	LF	70		35	70	70	131	70	140	70	70	140	70	70	140	140	70	70	105	140	140	140	70	35		2056	LF	1 INCH	
	1¼ INCH	LF	175	408	217	105	210		261	70	210	120	307	230	92	105	105	105	360	20	434	15	467	178	179		4373	LF	1¼ INCH	
	1½ INCH	LF								230	500					35	406									132	1303	LF	1½ INCH	
GSP																														GSP
DIP																														DIP
SPRINKLER ASSEMBLY	RISER (GEAR DRIVEN)	EA	12	12	12	12	12		11	15	14	12	13	11	11	16	16	13	12	12	13	13	14	11	10		277	EA	RISER (GEAR DRIVEN)	SPRINKLER ASSEMBLY
	RISER	EA						32																			32	EA	RISER	

DESCRIPTION		UNIT	VALVE OR ASSEMBLY NUMBER											SUBTOTALS	UNIT	DESCRIPTION	
			E-15	E-16	E-17	E-18	E-25	E-26	E-27	E-28	E-29		F-4				
PLASTIC PIPE SUPPLY LINE SCHEDULE 40	¾ INCH	LF		280					280				280	840	LF	¾ INCH	SCHEDULE 40 PLASTIC PIPE SUPPLY LINE
	1 INCH	LF		105					105				140	350	LF	1 INCH	
	1¼ INCH	LF		35					54				70	159	LF	1¼ INCH	
	1½ INCH	LF	150		99	129	66	92		25	42		35	638	LF	1½ INCH	
GSP																	GSP
DIP																	DIP
SPRINKLER ASSEMBLY	RISER (GEAR DRIVEN)	EA		12					12				15	39	EA	RISER (GEAR DRIVEN)	SPRINKLER ASSEMBLY

IRRIGATION QUANTITIES

IQ-1

STATE OF CALIFORNIA - DEPARTMENT OF TRANSPORTATION
Caltrans® LANDSCAPE ARCHITECTURE

SENIOR LANDSCAPE ARCHITECT: RON RUSSAK
CALCULATED-DESIGNED BY: XUAN WU
CHECKED BY: GEORGE OLGUIN
REVISED BY
DATE REVISED

LAST REVISION 00-00-00
DATE PLOTTED => 20-APR-2015
TIME PLOTTED => 12:55

Dist	COUNTY	ROUTE	POST MILES TOTAL PROJECT	SHEET No.	TOTAL SHEETS
07	Ven	101	14.1/21.1	71	108

George Olguin
LICENSED LANDSCAPE ARCHITECT

2-9-15
PLANS APPROVAL DATE

LICENSED LANDSCAPE ARCHITECT GEORGE OLGUIN NO. 4333 STATE OF CALIFORNIA
George Olguin 08-31-15 Renewal Date 02-06-15 Date

THE STATE OF CALIFORNIA OR ITS OFFICERS OR AGENTS SHALL NOT BE RESPONSIBLE FOR THE ACCURACY OR COMPLETENESS OF SCANNED COPIES OF THIS PLAN SHEET.

SUBTOTALS PER PLAN SHEET ON MAIN SUPPLY SIDE OF CONTROL VALVE

DESCRIPTION			UNIT	SHEET NUMBER IP-1	IP-2	IP-3	IP-4	IP-5	IP-7	IP-8	IP-9	SUBTOTALS
BPA		1" BPA	EA									
BPA		2" BPA	EA									
BPA		ENCLOSURE(N)	EA									
BOOSTER PUMP												
IRRIGATION CONTROLLER		24 STATION	EA									
IRRIGATION CONTROLLER	CEC	SINGLE	EA									
IRRIGATION CONTROLLER	CEC	DOUBLE										
VALVES AND ASSEMBLIES	RCV	1"	EA	1	3	2	1	10	2			19
VALVES AND ASSEMBLIES	RCV	1½"	EA				2	2		10	1	15
VALVES AND ASSEMBLIES	RCV	2"	EA									
VALVES AND ASSEMBLIES	GV	2"	EA									
VALVES AND ASSEMBLIES	BV	1"	EA									
VALVES AND ASSEMBLIES	BV	1½"	EA									
VALVES AND ASSEMBLIES	BV	2"	EA		1	1				2		4
VALVES AND ASSEMBLIES	FAU											
CONDUIT	CSP											
CONDUIT	WSP	6"	LF					25				25
PLASTIC PIPE SUPPLY LINE	SCHEDULE 40											
PLASTIC PIPE SUPPLY LINE	SCHEDULE 40	1 INCH	LF									
PLASTIC PIPE SUPPLY LINE	SCHEDULE 40	1¼ INCH	LF									
PLASTIC PIPE SUPPLY LINE	SCHEDULE 40	1½ INCH	LF									
PLASTIC PIPE SUPPLY LINE	SCHEDULE 40	2 INCH	LF		1165	383				120		1668
PLASTIC PIPE SUPPLY LINE	PR 315											
GSP												
DIP												

TOTAL QUANTITIES

TOTALS	UNIT	DESCRIPTION		
	EA	1" BPA		BPA
	EA	2" BPA		BPA
	EA	ENCLOSURE(N)		BPA
		BOOSTER PUMP		
	EA	24 STATION		IRRIGATION CONTROLLER
	EA	SINGLE	CEC	IRRIGATION CONTROLLER
		DOUBLE	CEC	IRRIGATION CONTROLLER
19	EA	1"	RCV	VALVES AND ASSEMBLIES
15	EA	1½"	RCV	VALVES AND ASSEMBLIES
	EA	2"	RCV	VALVES AND ASSEMBLIES
	EA	2"	GV	VALVES AND ASSEMBLIES
	EA	1"	BV	VALVES AND ASSEMBLIES
	EA	1½"	BV	VALVES AND ASSEMBLIES
4	EA	2"	BV	VALVES AND ASSEMBLIES
			FAU	VALVES AND ASSEMBLIES
			CSP	CONDUIT
25	LF	6"	WSP	CONDUIT
6889	LF	¾ INCH	SCHEDULE 40	PLASTIC PIPE SUPPLY LINE
2406	LF	1 INCH	SCHEDULE 40	PLASTIC PIPE SUPPLY LINE
4532	LF	1¼ INCH	SCHEDULE 40	PLASTIC PIPE SUPPLY LINE
1941	LF	1½ INCH	SCHEDULE 40	PLASTIC PIPE SUPPLY LINE
1668	LF	2 INCH	SCHEDULE 40	PLASTIC PIPE SUPPLY LINE
			PR 315	PLASTIC PIPE SUPPLY LINE
			GSP	
			DIP	
316	EA	RISER (GEAR DRIVEN)		SPRINKLER ASSEMBLY
32	EA	RISER		SPRINKLER ASSEMBLY

IRRIGATION QUANTITIES

IQ-2

STATE OF CALIFORNIA - DEPARTMENT OF TRANSPORTATION
Caltrans® LANDSCAPE ARCHITECTURE

SENIOR LANDSCAPE ARCHITECT: RON RUSSAK
CALCULATED-DESIGNED BY: XUAN WU
CHECKED BY: GEORGE OLGUIN
REVISED BY
DATE REVISED

LAST REVISION 00-00-00
DATE PLOTTED => 20-APR-2015
TIME PLOTTED => 12:55

Dist	COUNTY	ROUTE	POST MILES TOTAL PROJECT	SHEET No.	TOTAL SHEETS
07	Ven	101	14.1/21.1	72	108

George Olguin
LICENSED LANDSCAPE ARCHITECT

2-9-15
PLANS APPROVAL DATE

LICENSED LANDSCAPE ARCHITECT GEORGE OLGUIN NO. 4333 George Olguin Signature 08-31-16 Renewal Date 02-06-15 Date STATE OF CALIFORNIA

THE STATE OF CALIFORNIA OR ITS OFFICERS OR AGENTS SHALL NOT BE RESPONSIBLE FOR THE ACCURACY OR COMPLETENESS OF SCANNED COPIES OF THIS PLAN SHEET.

PLANTING LEGEND

PLANT GROUP	PLANT No.	SYMBOL	BOTANICAL NAME	COMMON NAME	SIZE	QUANTITY EACH	HOLE SIZE (INCH) Dia	HOLE SIZE (INCH) DEPTH	BASIN TYPE	SOIL AMENDMENT TYPE	SOIL AMENDMENT RATE	IRON SULFATE RATE	COMMERCIAL FERTILIZER ① PLANTING	COMMERCIAL FERTILIZER ① PLT ESTB	BASIN MULCH ① TYPE	BASIN MULCH ① CY	STAKING	PLANTING LIMITS MINIMUM DISTANCE (ft) FROM ETW	Pvmt	FENCE	WALL	PAVED DITCH	EARTH DITCH	ON CENTER (ft)	REMARKS
H	1		CARPOBROTUS EDULIS	HOTTENTOT FIG	CUTTINGS	129360	—	—	—	—	—	—	6 LBS/ 1,000 SQFT	6 LBS/ 1,000 SQFT	—	—	—	—	6	6	6	6	8	1.5	GROUND COVER
I	2		CALAMAGROSTIS ACUTIFLORA	KARL FORESTER	2.5"X 2.5"X6"	311	③	③	I	S	1.5 CY/ 1,000 SQFT	—	6.6 LBS/ 1,000 SQFT	6.6 LBS/ 1,000 SQFT	—	—	—	—	—	—	—	—	—	2	GRASS
	3		LEYMUS CONDENSATUS	CANYON PRINCE	2.5"X 2.5"X6"	311	③	③	I	S	1.5 CY/ 1,000 SQFT	—	6.6 LBS/ 1,000 SQFT	6.6 LBS/ 1,000 SQFT	—	—	—	—	—	—	—	—	—	2	GRASS
A	4		PARTHENOCISSUS TRICUSPIDATA	BOSTON IVY	No.1	32	③	③	III	—	—	—	0.5 oz	0.5 oz	WC	0.05	④	—	—	—	—	4	15	10	VINE

NOTE:
UNDERLINED PORTIONS OF BOTANICAL NAME INDICATE ABBREVIATIONS USED ON PLANTING PLANS.

LEGEND

EROSION CONTROL TYPE I

WOOD MULCH

TYPE	LOCATION BASIN	LOCATION SPREAD	QUANTITY (CY)
TREE BARK (N)	—	—	—
WOOD CHIP (N)	2	—	2
SHREDDED BARK (N)	—	—	—
TREE TRIMMING (N)	—	—	—
		TOTAL	2

(N) - NOT A SEPARATE PAY ITEM, FOR INFORMATION ONLY

APPLICABLE WHEN CIRCLED:

① - QUANTITIES SHOWN ARE "PER PLANT" UNLESS SHOWN AS SQFT OR SQYD APPLICATION RATES
2 - BASIN MULCH IS INCLUDED WITH MULCH QUANTITIES SHOWN ON PLANTING PLAN
③ - SUFFICIENT TO RECEIVE ROOT BALL AND AMENDMENTS IF REQUIRED
④ - SEE DETAIL
5 - SEE SPECIAL PROVISIONS
6 - SEE STANDARD SPECIFICATIONS
7 - AS SHOWN ON PLANS
8 - UNLESS OTHERWISE SHOWN ON PLANS
9 - FOLIAGE PROTECTOR REQUIRED
10 - ROOT PROTECTOR REQUIRED
11 - ROOT BARRIER REQUIRED
12 - DEPARTMENT-FURNISHED

ABBREVIATIONS:

S - SPHAGNUM PEAT MOSS
N - NITROLIZED FIR BARK
V - VERMICULITE
P - PERLITE
TB - TREE BARK
WC - WOOD CHIP
SB - SHREDDED BARK
TT - TREE TRIMMING

PLANT LEGEND

PL-1

REVISED BY | DATE REVISED
XUAN WU | GEORGE OLGUIN
CALCULATED-DESIGNED BY | CHECKED BY
SENIOR LANDSCAPE ARCHITECT | RON RUSSAK

STATE OF CALIFORNIA - DEPARTMENT OF TRANSPORTATION
Caltrans® LANDSCAPE ARCHITECTURE

LAST REVISION 00-00-00 | DATE PLOTTED => 20-APR-2015 | TIME PLOTTED => 12:55

Dist	COUNTY	ROUTE	POST MILES TOTAL PROJECT	SHEET No.	TOTAL SHEETS
07	Ven	101	14.1/21.1	73	108

George Olguin
LICENSED LANDSCAPE ARCHITECT

2-9-15
PLANS APPROVAL DATE

LICENSED LANDSCAPE ARCHITECT
GEORGE OLGUIN
NO. 4333
George Olguin
Signature
08-31-16
Renewal date
02-06-15
Date
STATE OF CALIFORNIA

THE STATE OF CALIFORNIA OR ITS OFFICERS OR AGENTS SHALL NOT BE RESPONSIBLE FOR THE ACCURACY OR COMPLETENESS OF SCANNED COPIES OF THIS PLAN SHEET.

NOTE:

FOR ACCURATE RIGHT OF WAY DATA, CONTACT
RIGHT OF WAY ENGINEERING AT THE DISTRICT OFFICE.

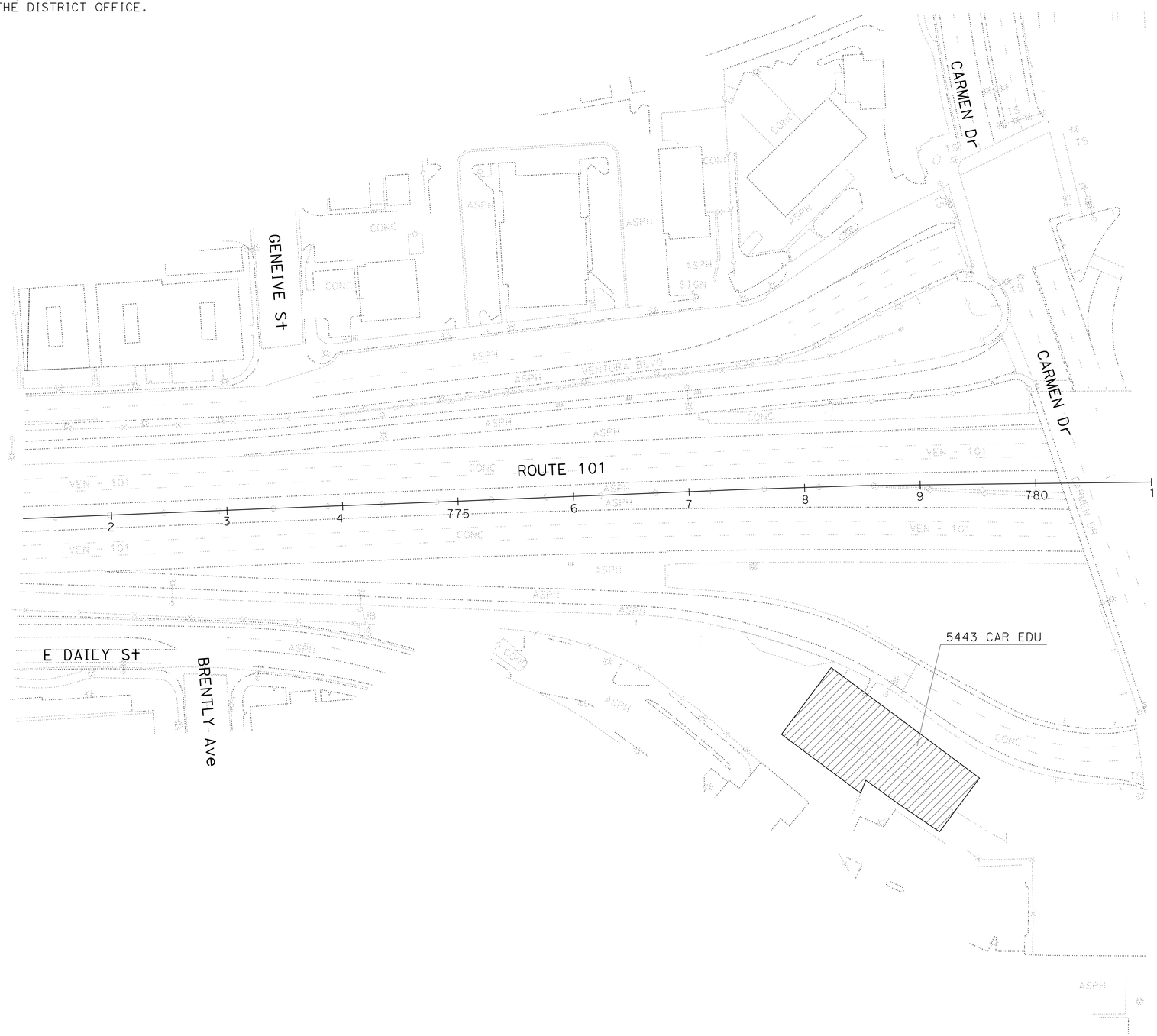

PLANTING PLAN

SCALE: 1" = 50'

PP-1

APPROVED FOR PLANTING WORK ONLY

REVISED BY	DATE REVISED

CALCULATED-DESIGNED BY	CHECKED BY
XUAN WU	GEORGE OLGUIN

SENIOR LANDSCAPE ARCHITECT
RON RUSSAK

STATE OF CALIFORNIA - DEPARTMENT OF TRANSPORTATION
Caltrans® LANDSCAPE ARCHITECTURE

LAST REVISION 00-00-00
DATE PLOTTED => 20-APR-2015
TIME PLOTTED => 12:55

Dist	COUNTY	ROUTE	POST MILES TOTAL PROJECT	SHEET No.	TOTAL SHEETS
07	Ven	101	14.1/21.1	74	108

George Olguin
LICENSED LANDSCAPE ARCHITECT

2-9-15
PLANS APPROVAL DATE

LICENSED LANDSCAPE ARCHITECT
GEORGE OLGUIN
NO. 4333
George Olguin
Signature
08-31-16
Renewal date
02-06-15
Date
STATE OF CALIFORNIA

THE STATE OF CALIFORNIA OR ITS OFFICERS OR AGENTS SHALL NOT BE RESPONSIBLE FOR THE ACCURACY OR COMPLETENESS OF SCANNED COPIES OF THIS PLAN SHEET.

NOTE:

FOR ACCURATE RIGHT OF WAY DATA, CONTACT
RIGHT OF WAY ENGINEERING AT THE DISTRICT OFFICE.

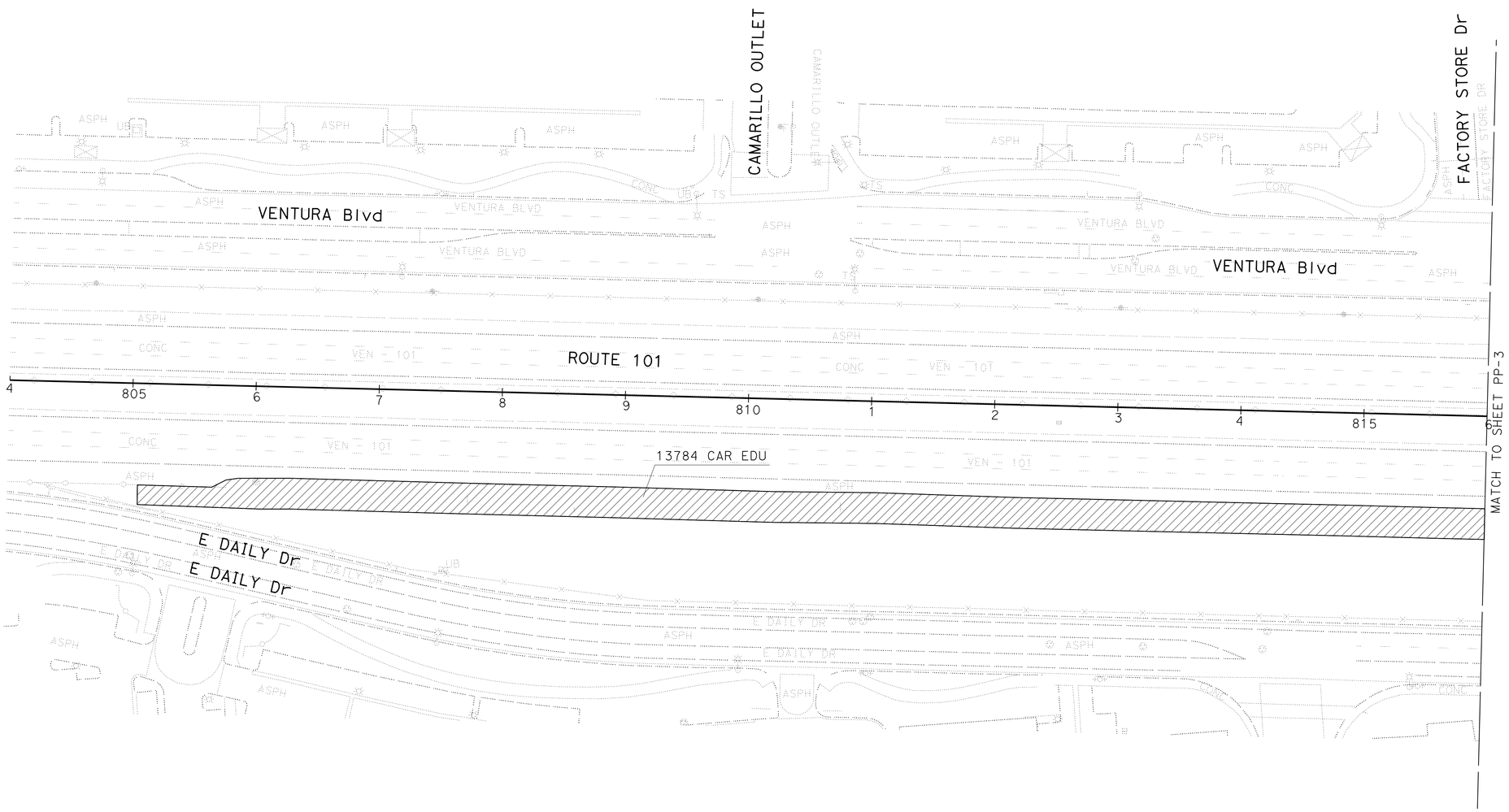

PLANTING PLAN

SCALE: 1" = 50'

PP-2

APPROVED FOR PLANTING WORK ONLY

REVISED BY	DATE REVISED

CALCULATED-DESIGNED BY	XUAN WU
CHECKED BY	GEORGE OLGUIN
SENIOR LANDSCAPE ARCHITECT	RON RUSSAK

STATE OF CALIFORNIA - DEPARTMENT OF TRANSPORTATION
Caltrans® LANDSCAPE ARCHITECTURE

LAST REVISION 00-00-00
DATE PLOTTED => 20-APR-2015
TIME PLOTTED => 12:55

Dist	COUNTY	ROUTE	POST MILES TOTAL PROJECT	SHEET No.	TOTAL SHEETS
07	Ven	101	14.1/21.1	75	108

George Olguin
LICENSED LANDSCAPE ARCHITECT

2-9-15
PLANS APPROVAL DATE

LICENSED LANDSCAPE ARCHITECT
GEORGE OLGUIN
NO. 4333
George Olguin
Signature
08-31-16
Renewal date
02-06-15
Date
STATE OF CALIFORNIA

THE STATE OF CALIFORNIA OR ITS OFFICERS OR AGENTS SHALL NOT BE RESPONSIBLE FOR THE ACCURACY OR COMPLETENESS OF SCANNED COPIES OF THIS PLAN SHEET.

NOTE:

FOR ACCURATE RIGHT OF WAY DATA, CONTACT
RIGHT OF WAY ENGINEERING AT THE DISTRICT OFFICE.

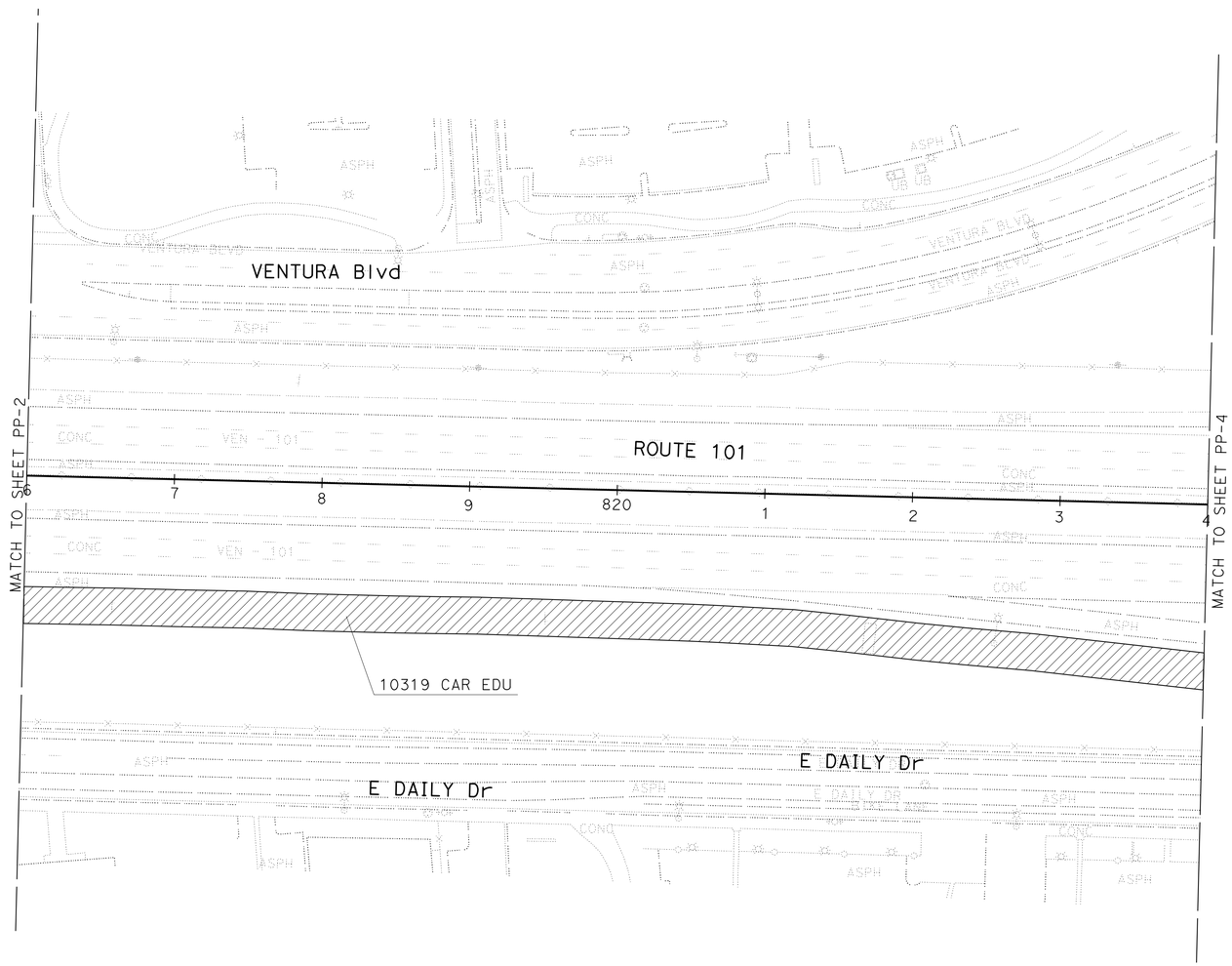

PLANTING PLAN

SCALE: 1" = 50'

PP-3

APPROVED FOR PLANTING WORK ONLY

REVISED BY	DATE REVISED

XUAN WU	GEORGE OLGUIN
CALCULATED-DESIGNED BY	CHECKED BY
SENIOR LANDSCAPE ARCHITECT	RON RUSSAK

STATE OF CALIFORNIA - DEPARTMENT OF TRANSPORTATION
Caltrans® LANDSCAPE ARCHITECTURE

LAST REVISION 00-00-00
DATE PLOTTED => 20-APR-2015
TIME PLOTTED => 12:55

Dist	COUNTY	ROUTE	POST MILES TOTAL PROJECT	SHEET No.	TOTAL SHEETS
07	Ven	101	14.1/21.1	76	108

George Olguin
LICENSED LANDSCAPE ARCHITECT

2-9-15
PLANS APPROVAL DATE

LICENSED LANDSCAPE ARCHITECT
GEORGE OLGUIN
NO. 4333
George Olguin
Signature
08-31-16
Renewal date
02-06-15
Date
STATE OF CALIFORNIA

THE STATE OF CALIFORNIA OR ITS OFFICERS OR AGENTS SHALL NOT BE RESPONSIBLE FOR THE ACCURACY OR COMPLETENESS OF SCANNED COPIES OF THIS PLAN SHEET.

NOTE:

FOR ACCURATE RIGHT OF WAY DATA, CONTACT
RIGHT OF WAY ENGINEERING AT THE DISTRICT OFFICE.

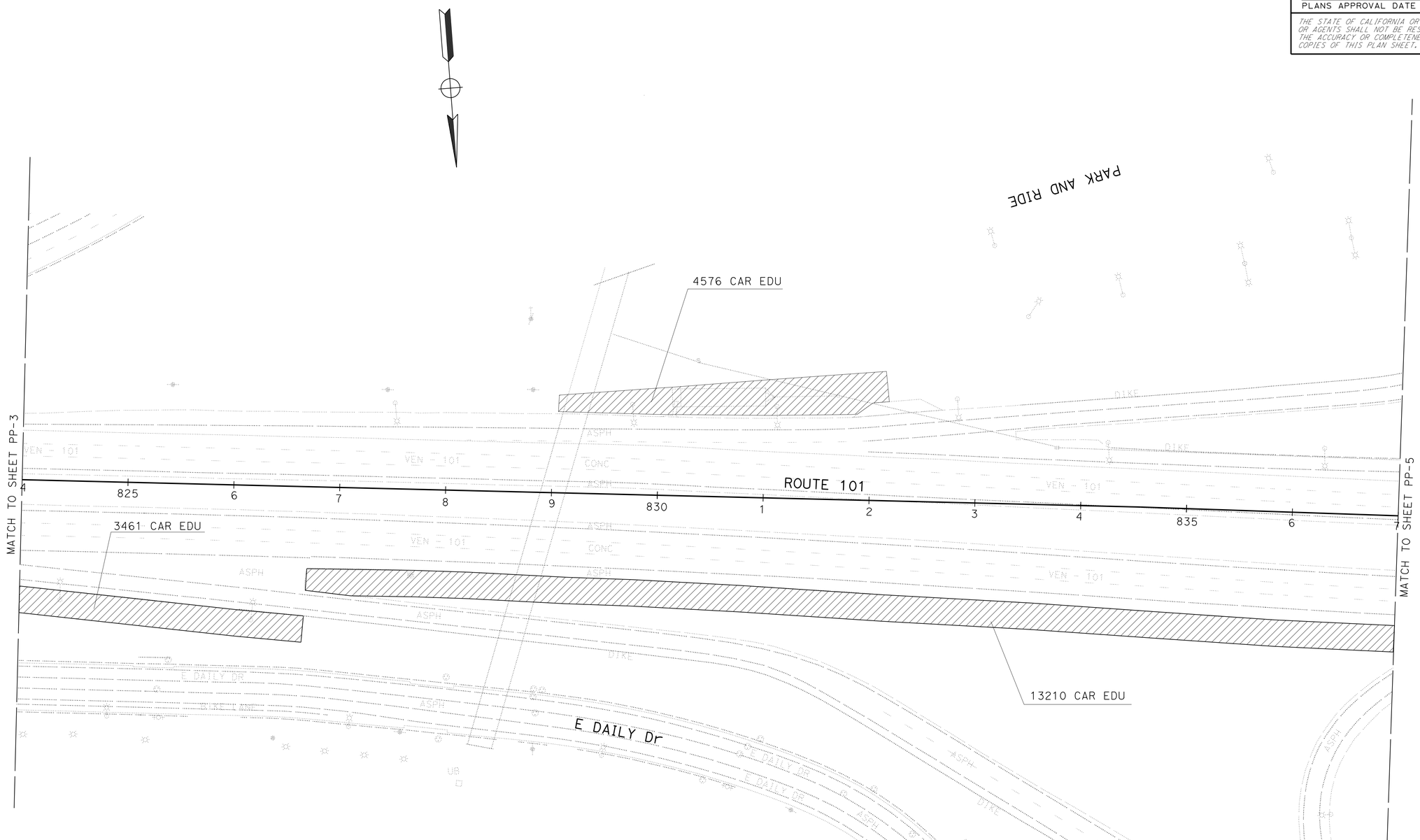

PLANTING PLAN

SCALE: 1" = 50'

PP-4

APPROVED FOR PLANTING WORK ONLY

REVISED BY | DATE REVISED

XUAN WU | GEORGE OLGUIN

CALCULATED-DESIGNED BY | CHECKED BY

SENIOR LANDSCAPE ARCHITECT
RON RUSSAK

STATE OF CALIFORNIA - DEPARTMENT OF TRANSPORTATION
Caltrans® LANDSCAPE ARCHITECTURE

LAST REVISION 00-00-00 | DATE PLOTTED => 20-APR-2015 | TIME PLOTTED => 12:55

Dist	COUNTY	ROUTE	POST MILES TOTAL PROJECT	SHEET No.	TOTAL SHEETS
07	Ven	101	14.1/21.1	77	108

George Olguin
LICENSED LANDSCAPE ARCHITECT

2-9-15
PLANS APPROVAL DATE

LICENSED LANDSCAPE ARCHITECT
GEORGE OLGUIN
NO. 4333
George Olguin
Signature
08-31-16
Renewal date
02-06-15
Date
STATE OF CALIFORNIA

THE STATE OF CALIFORNIA OR ITS OFFICERS OR AGENTS SHALL NOT BE RESPONSIBLE FOR THE ACCURACY OR COMPLETENESS OF SCANNED COPIES OF THIS PLAN SHEET.

NOTE:

FOR ACCURATE RIGHT OF WAY DATA, CONTACT RIGHT OF WAY ENGINEERING AT THE DISTRICT OFFICE.

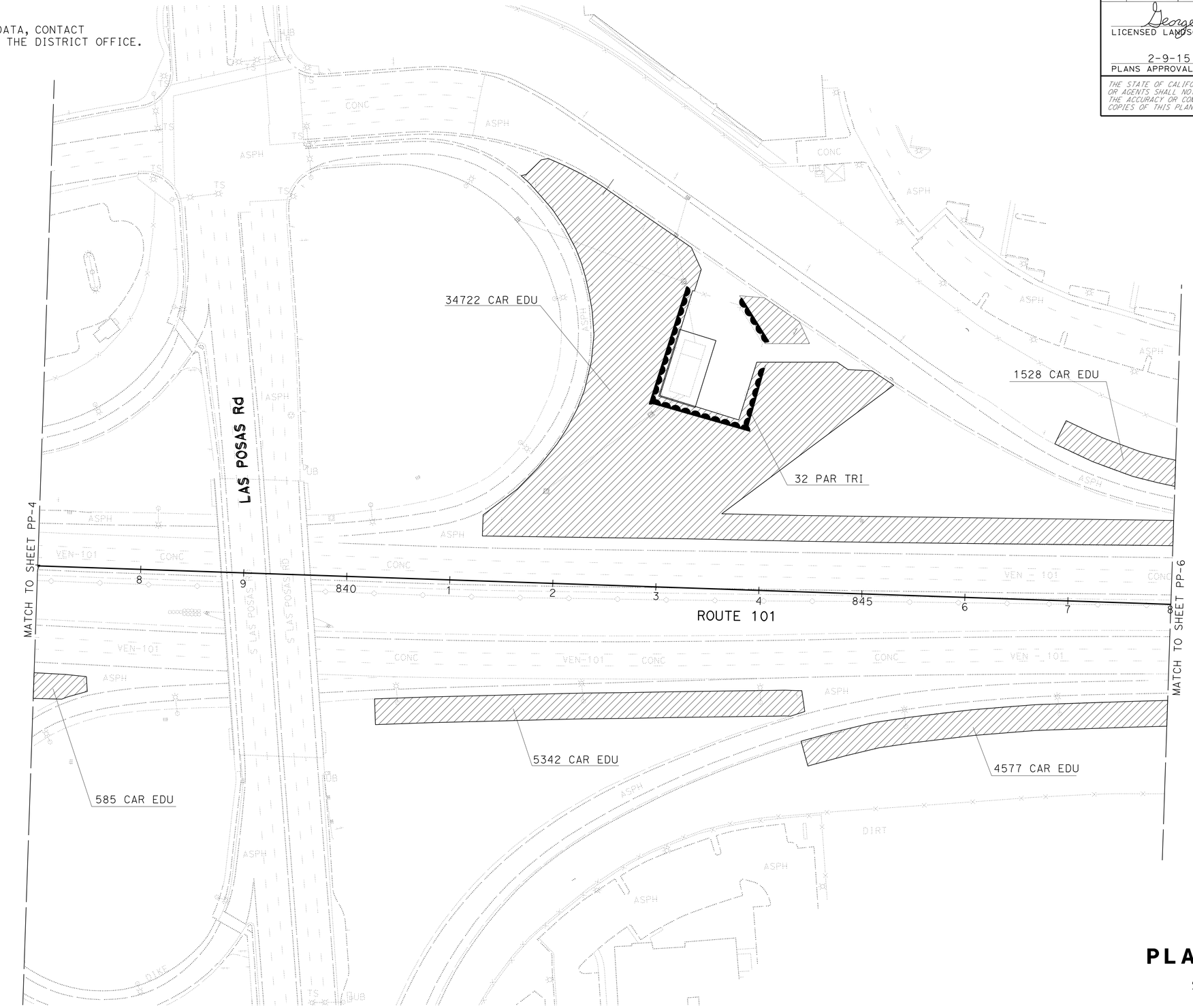

PLANTING PLAN

SCALE: 1" = 50'

PP-5

APPROVED FOR PLANTING WORK ONLY

REVISED BY | DATE REVISED

XUAN WU | GEORGE OLGUIN

CALCULATED-DESIGNED BY | CHECKED BY

SENIOR LANDSCAPE ARCHITECT
RON RUSSAK

STATE OF CALIFORNIA - DEPARTMENT OF TRANSPORTATION
Caltrans® LANDSCAPE ARCHITECTURE

LAST REVISION 00-00-00 | DATE PLOTTED => 20-APR-2015 | TIME PLOTTED => 12:55

Dist	COUNTY	ROUTE	POST MILES TOTAL PROJECT	SHEET No.	TOTAL SHEETS
07	Ven	101	14.1/21.1	78	108

George Olguin
LICENSED LANDSCAPE ARCHITECT

2-9-15
PLANS APPROVAL DATE

LICENSED LANDSCAPE ARCHITECT
GEORGE OLGUIN
NO. 4333
George Olguin
Signature
08-31-16
Renewal date
02-06-15
Date
STATE OF CALIFORNIA

THE STATE OF CALIFORNIA OR ITS OFFICERS OR AGENTS SHALL NOT BE RESPONSIBLE FOR THE ACCURACY OR COMPLETENESS OF SCANNED COPIES OF THIS PLAN SHEET.

NOTE:

FOR ACCURATE RIGHT OF WAY DATA, CONTACT
RIGHT OF WAY ENGINEERING AT THE DISTRICT OFFICE.

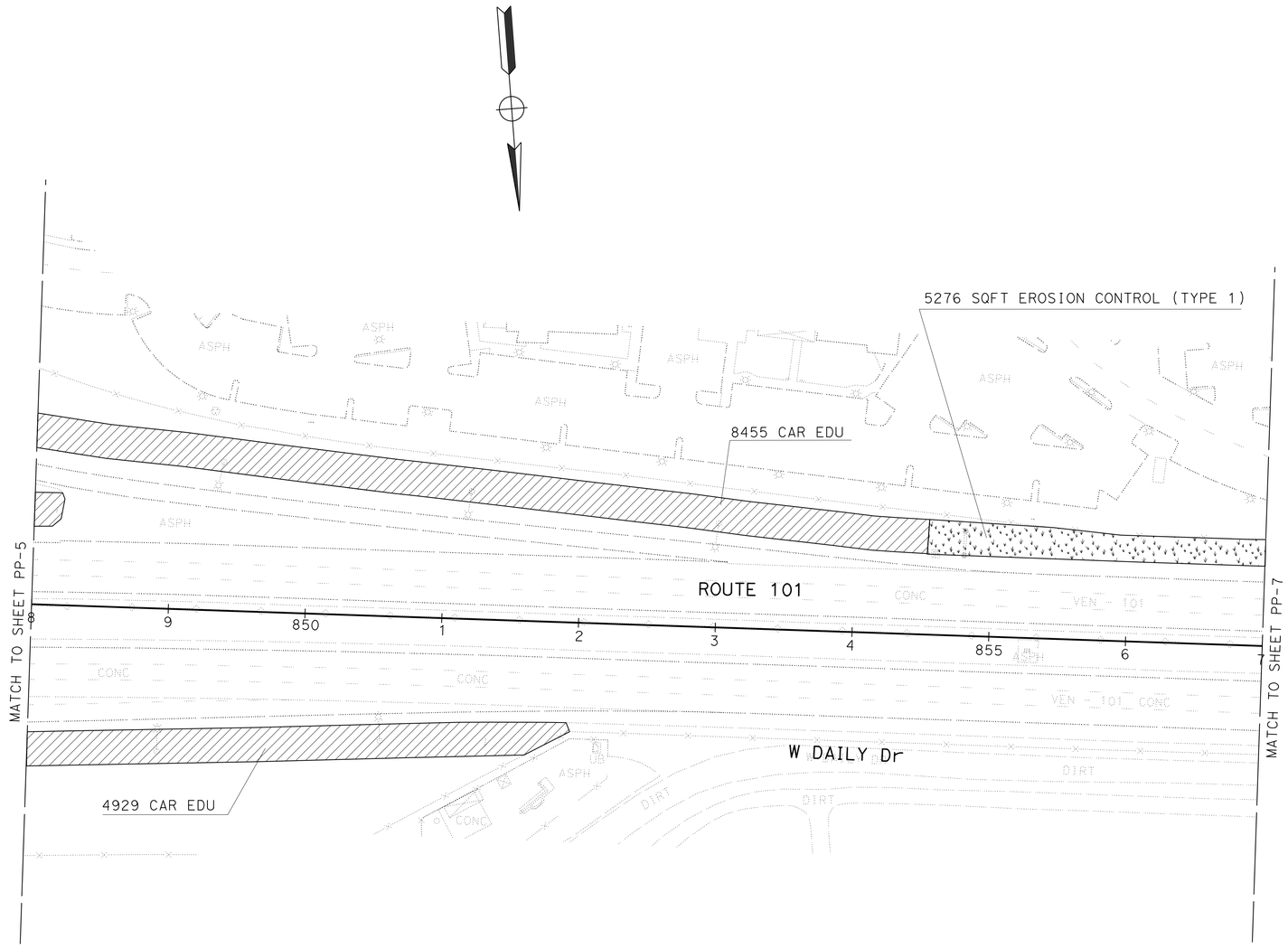

APPROVED FOR PLANTING WORK ONLY

PLANTING PLAN

SCALE: 1" = 50'

PP-6

REVISED BY	DATE REVISED

CALCULATED-DESIGNED BY: XUAN WU
CHECKED BY: GEORGE OLGUIN
SENIOR LANDSCAPE ARCHITECT: RON RUSSAK

STATE OF CALIFORNIA - DEPARTMENT OF TRANSPORTATION
Caltrans® LANDSCAPE ARCHITECTURE

LAST REVISION 00-00-00
DATE PLOTTED => 20-APR-2015
TIME PLOTTED => 12:55

Dist	COUNTY	ROUTE	POST MILES TOTAL PROJECT	SHEET No.	TOTAL SHEETS
07	Ven	101	14.1/21.1	79	108

George Olguin
LICENSED LANDSCAPE ARCHITECT

2-9-15
PLANS APPROVAL DATE

LICENSED LANDSCAPE ARCHITECT
GEORGE OLGUIN
NO. 4333
George Olguin
Signature
08-31-16
Renewal date
02-06-15
Date
STATE OF CALIFORNIA

THE STATE OF CALIFORNIA OR ITS OFFICERS OR AGENTS SHALL NOT BE RESPONSIBLE FOR THE ACCURACY OR COMPLETENESS OF SCANNED COPIES OF THIS PLAN SHEET.

NOTE:

FOR ACCURATE RIGHT OF WAY DATA, CONTACT
RIGHT OF WAY ENGINEERING AT THE DISTRICT OFFICE.

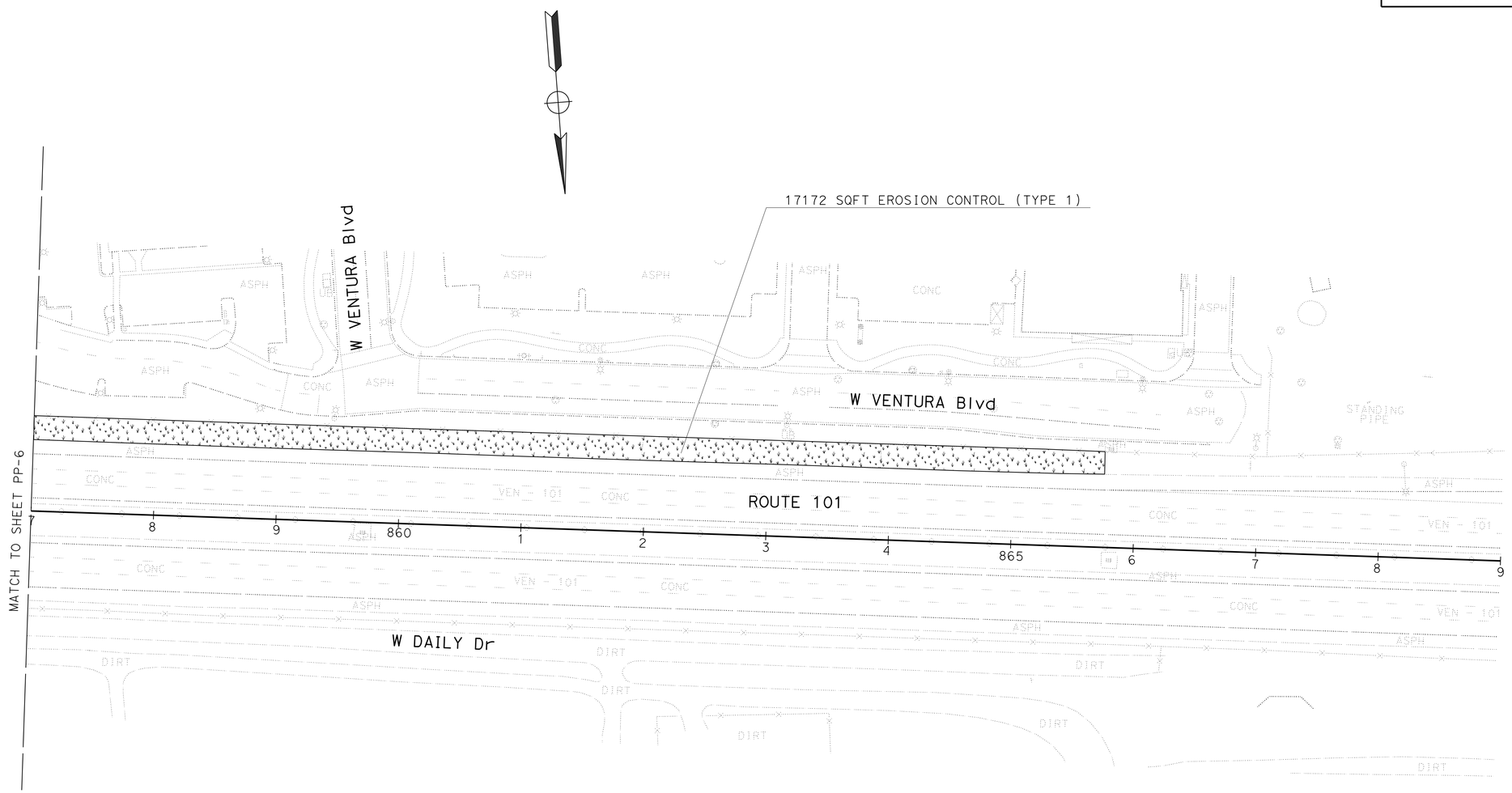

PLANTING PLAN

SCALE: 1" = 50'

PP-7

APPROVED FOR PLANTING WORK ONLY

REVISED BY	XUAN WU
DATE REVISED	
CALCULATED-DESIGNED BY	GEORGE OLGUIN
CHECKED BY	
SENIOR LANDSCAPE ARCHITECT	RON RUSSAK

STATE OF CALIFORNIA - DEPARTMENT OF TRANSPORTATION
Caltrans® LANDSCAPE ARCHITECTURE

LAST REVISION 00-00-00 | DATE PLOTTED => 20-APR-2015 | TIME PLOTTED => 12:55

Dist	COUNTY	ROUTE	POST MILES TOTAL PROJECT	SHEET No.	TOTAL SHEETS
07	Ven	101	14.1/21.1	80	108

George Olguin
LICENSED LANDSCAPE ARCHITECT

2-9-15
PLANS APPROVAL DATE

LICENSED LANDSCAPE ARCHITECT
GEORGE OLGUIN
NO. 4333
George Olguin
Signature
08-31-16
Renewal date
02-06-15
Date
STATE OF CALIFORNIA

THE STATE OF CALIFORNIA OR ITS OFFICERS OR AGENTS SHALL NOT BE RESPONSIBLE FOR THE ACCURACY OR COMPLETENESS OF SCANNED COPIES OF THIS PLAN SHEET.

NOTE:

FOR ACCURATE RIGHT OF WAY DATA, CONTACT
RIGHT OF WAY ENGINEERING AT THE DISTRICT OFFICE.

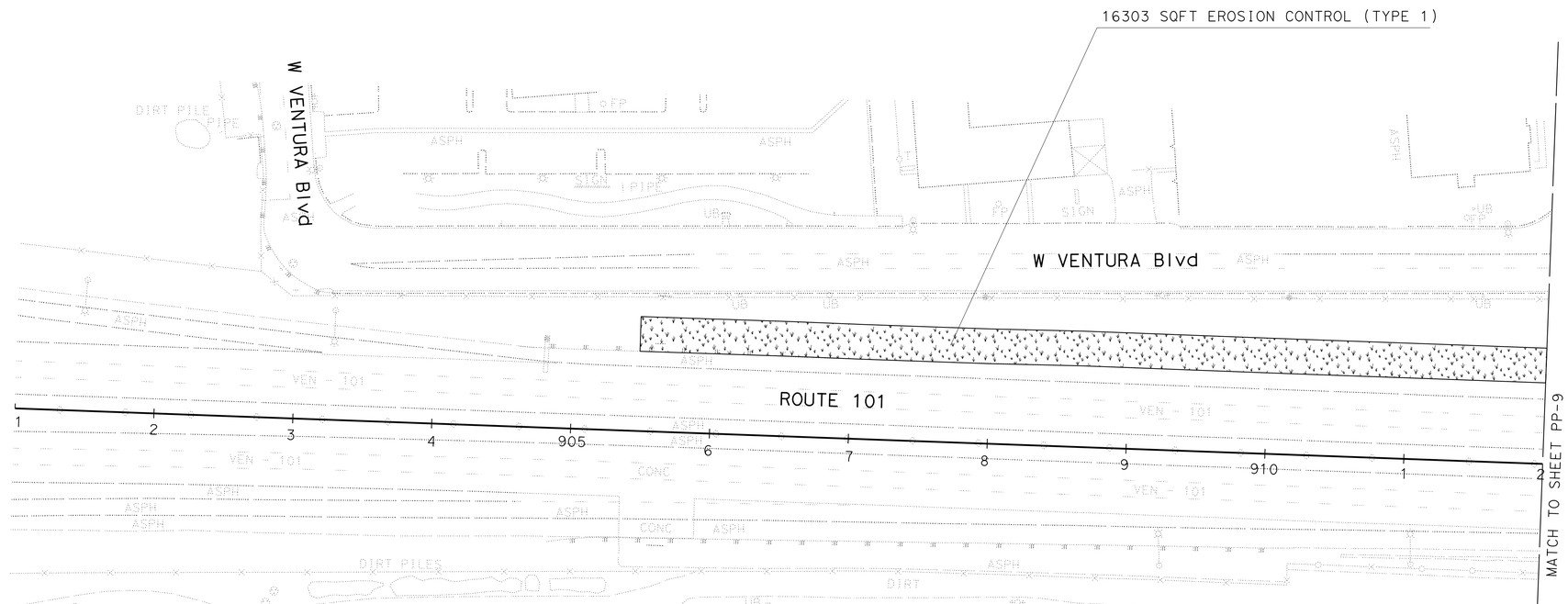

PLANTING PLAN

SCALE: 1" = 50'

PP-8

APPROVED FOR PLANTING WORK ONLY

STATE OF CALIFORNIA - DEPARTMENT OF TRANSPORTATION
Caltrans® LANDSCAPE ARCHITECTURE

SENIOR LANDSCAPE ARCHITECT: RON RUSSAK

CALCULATED-DESIGNED BY: XUAN WU
CHECKED BY: GEORGE OLGUIN

REVISED BY
DATE REVISED

LAST REVISION 00-00-00
DATE PLOTTED => 20-APR-2015
TIME PLOTTED => 12:55

Dist	COUNTY	ROUTE	POST MILES TOTAL PROJECT	SHEET No.	TOTAL SHEETS
07	Ven	101	14.1/21.1	81	108

George Olguin
LICENSED LANDSCAPE ARCHITECT

2-9-15
PLANS APPROVAL DATE

LICENSED LANDSCAPE ARCHITECT
GEORGE OLGUIN
NO. 4333
George Olguin
Signature
08-31-16
Renewal date
02-06-15
Date
STATE OF CALIFORNIA

THE STATE OF CALIFORNIA OR ITS OFFICERS OR AGENTS SHALL NOT BE RESPONSIBLE FOR THE ACCURACY OR COMPLETENESS OF SCANNED COPIES OF THIS PLAN SHEET.

NOTE:

FOR ACCURATE RIGHT OF WAY DATA, CONTACT
RIGHT OF WAY ENGINEERING AT THE DISTRICT OFFICE.

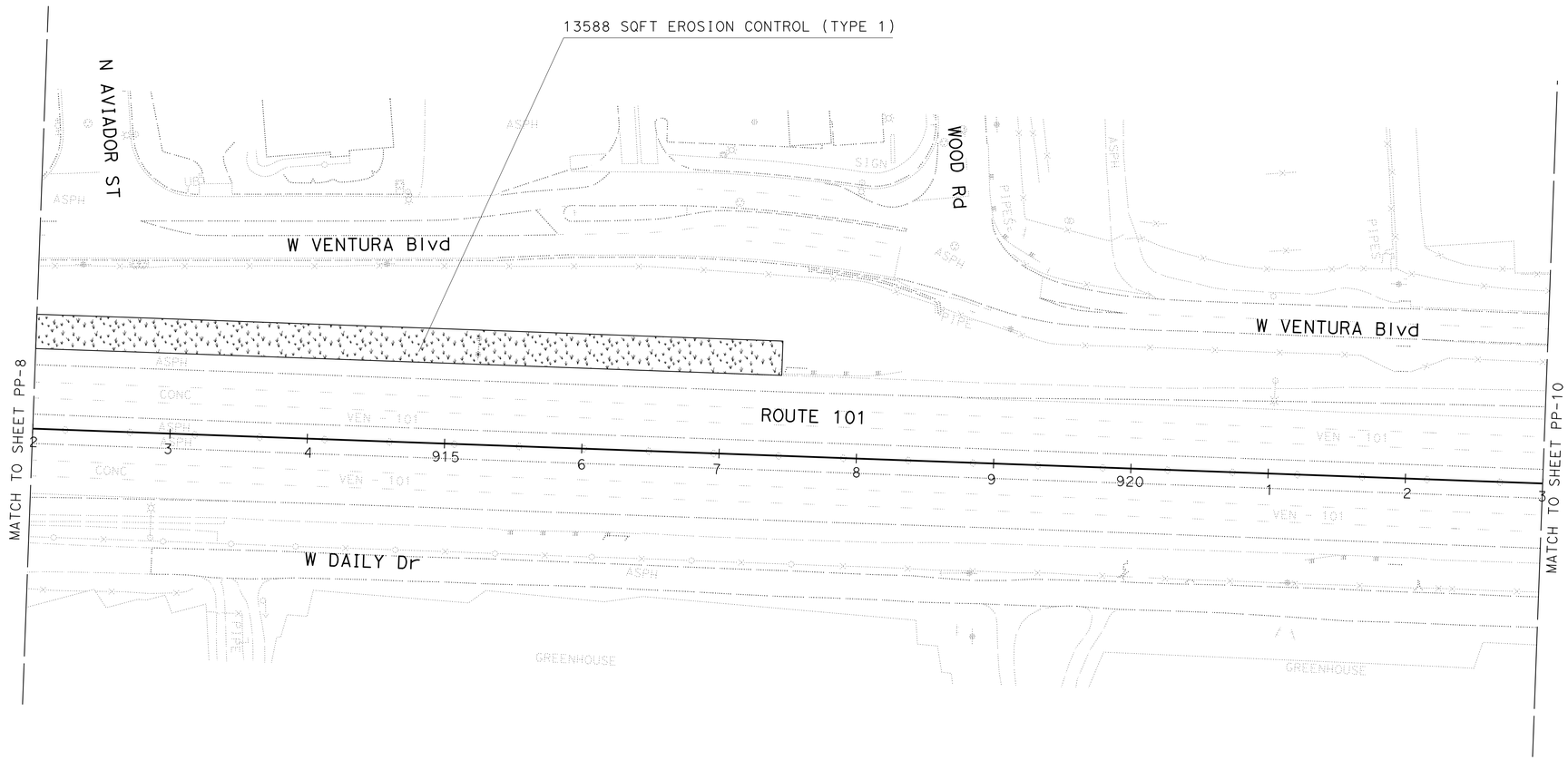

PLANTING PLAN

SCALE: 1" = 50'

PP-9

APPROVED FOR PLANTING WORK ONLY

STATE OF CALIFORNIA - DEPARTMENT OF TRANSPORTATION
Caltrans® LANDSCAPE ARCHITECTURE

SENIOR LANDSCAPE ARCHITECT: RON RUSSAK
CALCULATED-DESIGNED BY: XUAN WU
CHECKED BY: GEORGE OLGUIN
REVISED BY
DATE REVISED

LAST REVISION 00-00-00
DATE PLOTTED => 20-APR-2015
TIME PLOTTED => 12:55

Dist	COUNTY	ROUTE	POST MILES TOTAL PROJECT	SHEET No.	TOTAL SHEETS
07	Ven	101	14.1/21.1	82	108

George Olguin
LICENSED LANDSCAPE ARCHITECT

2-9-15
PLANS APPROVAL DATE

LICENSED LANDSCAPE ARCHITECT
GEORGE OLGUIN
NO. 4333
George Olguin
Signature
08-31-16
Renewal date
02-06-15
Date
STATE OF CALIFORNIA

THE STATE OF CALIFORNIA OR ITS OFFICERS OR AGENTS SHALL NOT BE RESPONSIBLE FOR THE ACCURACY OR COMPLETENESS OF SCANNED COPIES OF THIS PLAN SHEET.

NOTE:

FOR ACCURATE RIGHT OF WAY DATA, CONTACT
RIGHT OF WAY ENGINEERING AT THE DISTRICT OFFICE.

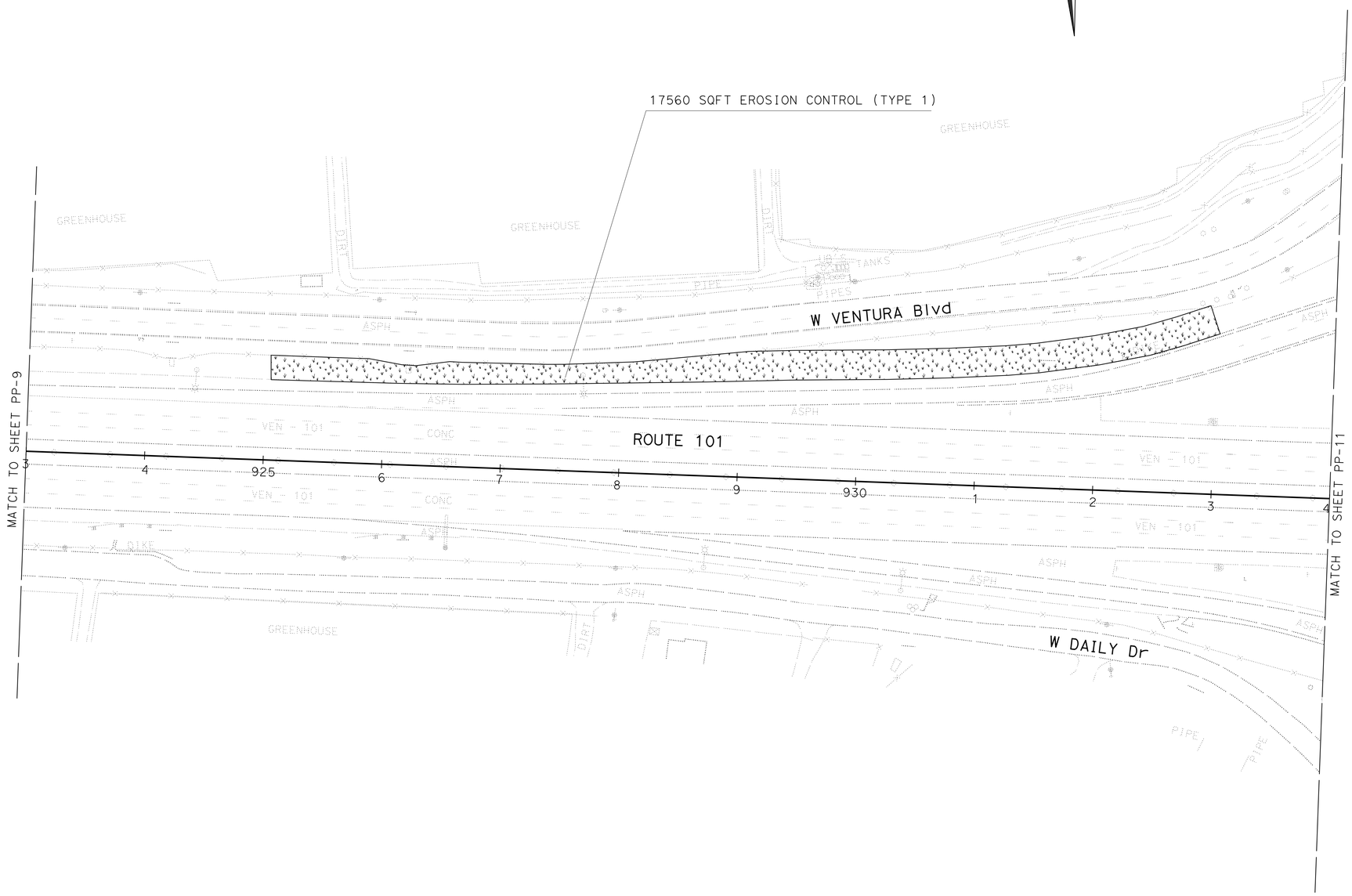

PLANTING PLAN

SCALE: 1" = 50'

PP-10

APPROVED FOR PLANTING WORK ONLY

STATE OF CALIFORNIA - DEPARTMENT OF TRANSPORTATION
Caltrans LANDSCAPE ARCHITECTURE

SENIOR LANDSCAPE ARCHITECT: RON RUSSAK
CALCULATED-DESIGNED BY: XUAN WU
CHECKED BY: GEORGE OLGUIN
REVISED BY
DATE REVISED

LAST REVISION 00-00-00
DATE PLOTTED => 20-APR-2015
TIME PLOTTED => 12:55

Dist	COUNTY	ROUTE	POST MILES TOTAL PROJECT	SHEET No.	TOTAL SHEETS
07	Ven	101	14.1/21.1	83	108

George Olguin
LICENSED LANDSCAPE ARCHITECT

2-9-15
PLANS APPROVAL DATE

LICENSED LANDSCAPE ARCHITECT
GEORGE OLGUIN
NO. 4333
George Olguin
Signature
08-31-16
Renewal date
02-06-15
Date
STATE OF CALIFORNIA

THE STATE OF CALIFORNIA OR ITS OFFICERS OR AGENTS SHALL NOT BE RESPONSIBLE FOR THE ACCURACY OR COMPLETENESS OF SCANNED COPIES OF THIS PLAN SHEET.

NOTE:

FOR ACCURATE RIGHT OF WAY DATA, CONTACT
RIGHT OF WAY ENGINEERING AT THE DISTRICT OFFICE.

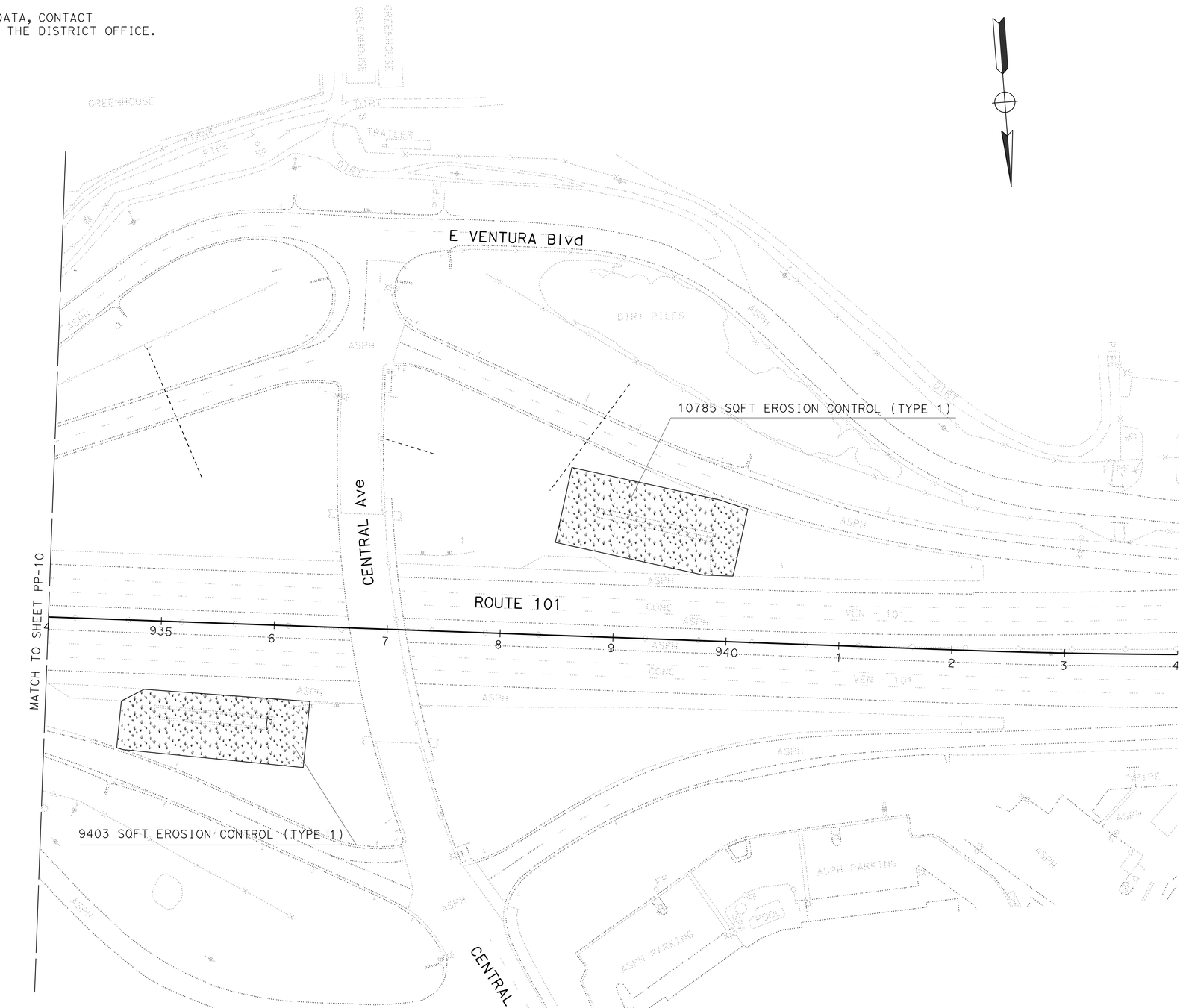

PLANTING PLAN

SCALE: 1" = 50'

PP-11

APPROVED FOR PLANTING WORK ONLY

STATE OF CALIFORNIA - DEPARTMENT OF TRANSPORTATION
Caltrans® LANDSCAPE ARCHITECTURE

SENIOR LANDSCAPE ARCHITECT: RON RUSSAK
CALCULATED-DESIGNED BY: XUAN WU
CHECKED BY: GEORGE OLGUIN
REVISED BY
DATE REVISED

LAST REVISION 00-00-00
DATE PLOTTED => 20-APR-2015
TIME PLOTTED => 12:55

Dist	COUNTY	ROUTE	POST MILES TOTAL PROJECT	SHEET No.	TOTAL SHEETS
07	Ven	101	14.1/21.1	84	108

George Olguin
LICENSED LANDSCAPE ARCHITECT

2-9-15
PLANS APPROVAL DATE

LICENSED LANDSCAPE ARCHITECT
GEORGE OLGUIN
NO. 4333
George Olguin
Signature
08-31-16
Renewal date
02-06-15
Date
STATE OF CALIFORNIA

THE STATE OF CALIFORNIA OR ITS OFFICERS OR AGENTS SHALL NOT BE RESPONSIBLE FOR THE ACCURACY OR COMPLETENESS OF SCANNED COPIES OF THIS PLAN SHEET.

NOTE:

FOR ACCURATE RIGHT OF WAY DATA, CONTACT
RIGHT OF WAY ENGINEERING AT THE DISTRICT OFFICE.

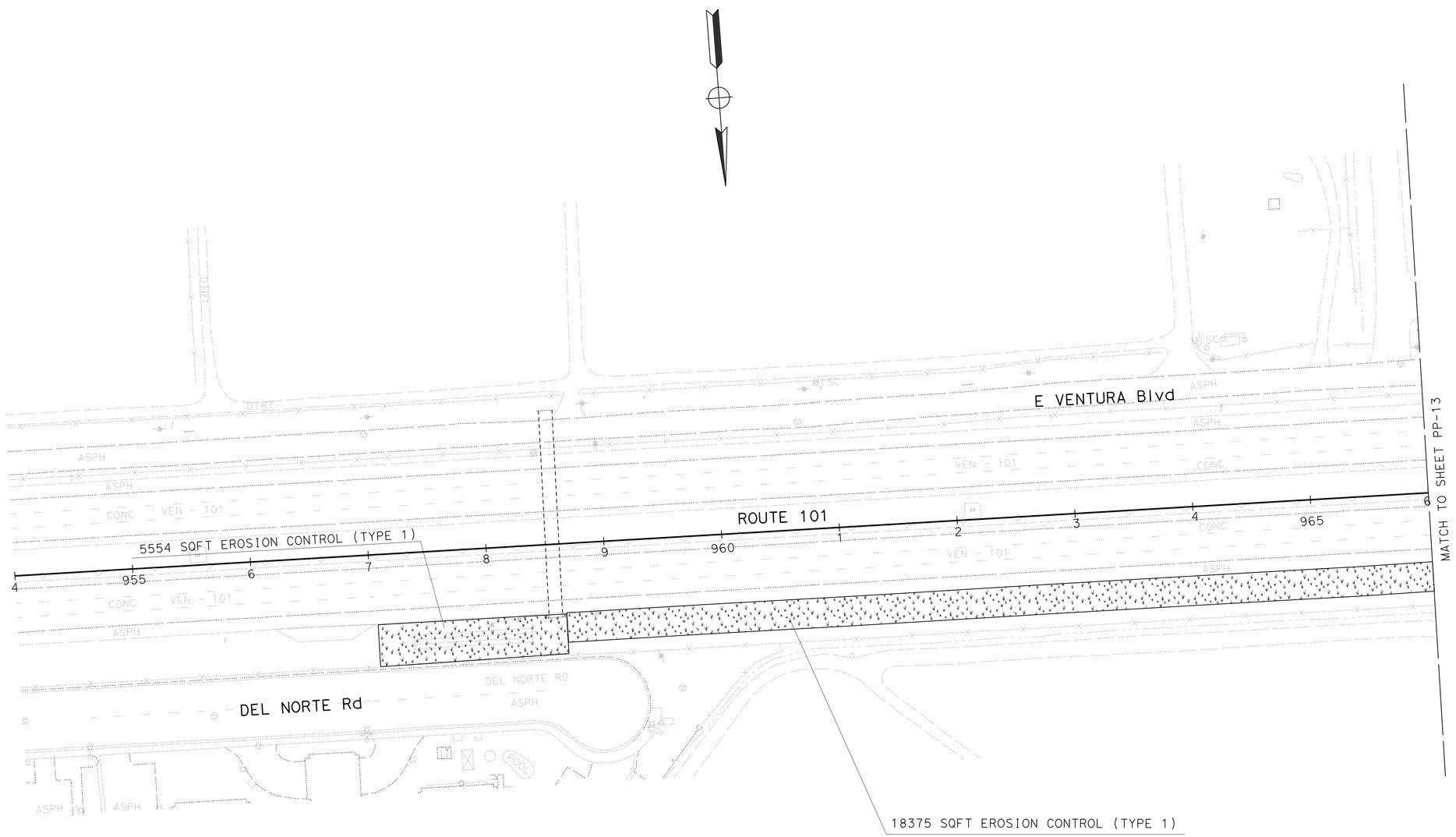

PLANTING PLAN

SCALE: 1" = 50'

PP-12

APPROVED FOR PLANTING WORK ONLY

STATE OF CALIFORNIA - DEPARTMENT OF TRANSPORTATION
Caltrans® LANDSCAPE ARCHITECTURE

SENIOR LANDSCAPE ARCHITECT: RON RUSSAK

CALCULATED-DESIGNED BY: XUAN WU
CHECKED BY: GEORGE OLGUIN

REVISED BY
DATE REVISED

LAST REVISION 00-00-00
DATE PLOTTED => 20-APR-2015
TIME PLOTTED => 12:55

Dist	COUNTY	ROUTE	POST MILES TOTAL PROJECT	SHEET No.	TOTAL SHEETS
07	Ven	101	14.1/21.1	85	108

George Olguin
LICENSED LANDSCAPE ARCHITECT

2-9-15
PLANS APPROVAL DATE

LICENSED LANDSCAPE ARCHITECT
GEORGE OLGUIN
NO. 4333
George Olguin
Signature
08-31-16
Renewal date
02-06-15
Date
STATE OF CALIFORNIA

THE STATE OF CALIFORNIA OR ITS OFFICERS OR AGENTS SHALL NOT BE RESPONSIBLE FOR THE ACCURACY OR COMPLETENESS OF SCANNED COPIES OF THIS PLAN SHEET.

NOTE:

FOR ACCURATE RIGHT OF WAY DATA, CONTACT
RIGHT OF WAY ENGINEERING AT THE DISTRICT OFFICE.

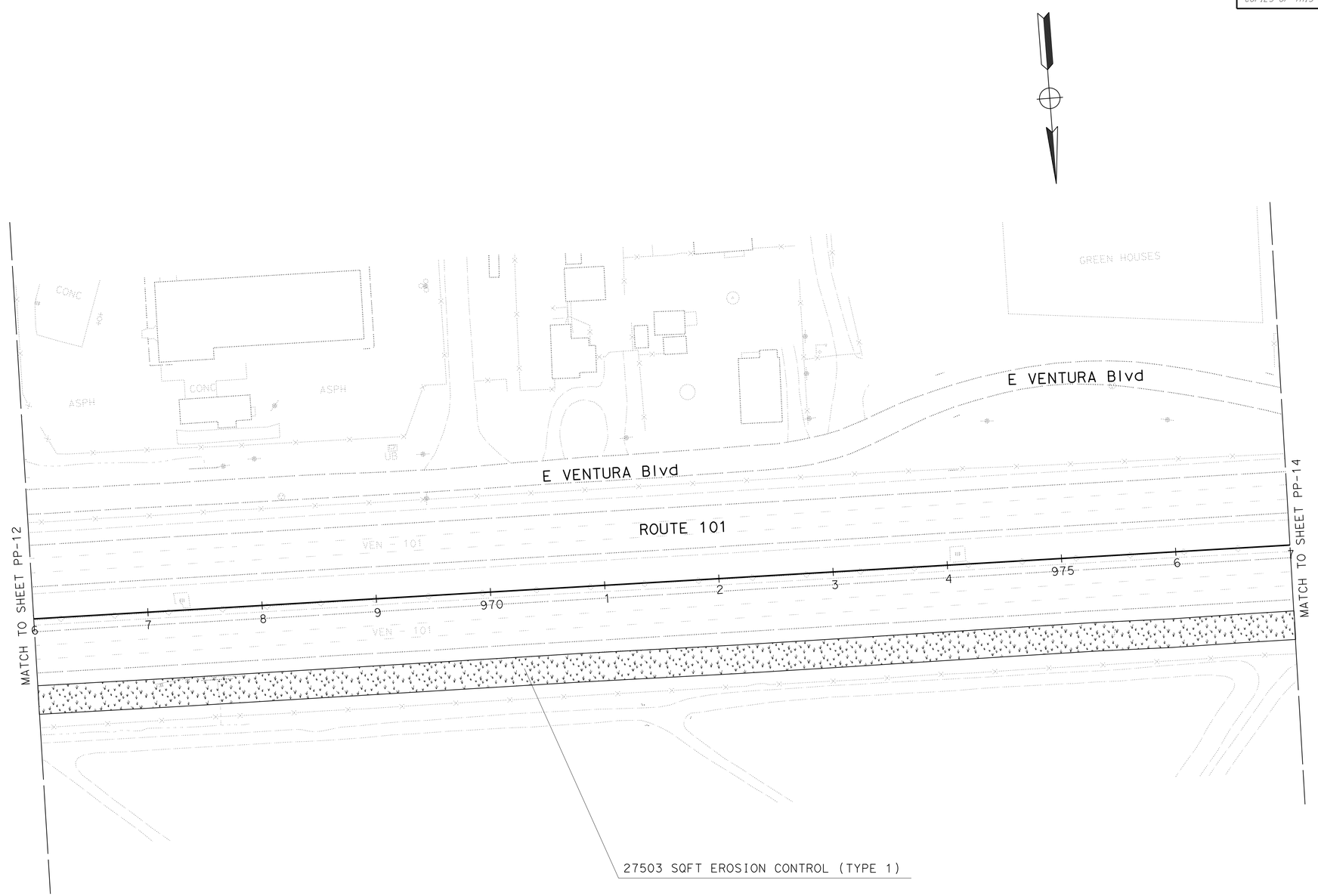

PLANTING PLAN

SCALE: 1" = 50'

PP-13

APPROVED FOR PLANTING WORK ONLY

STATE OF CALIFORNIA - DEPARTMENT OF TRANSPORTATION
Caltrans® LANDSCAPE ARCHITECTURE

SENIOR LANDSCAPE ARCHITECT: RON RUSSAK
CALCULATED-DESIGNED BY: XUAN WU
CHECKED BY: GEORGE OLGUIN
REVISED BY
DATE REVISED

LAST REVISION 00-00-00
DATE PLOTTED => 20-APR-2015
TIME PLOTTED => 12:55

Dist	COUNTY	ROUTE	POST MILES TOTAL PROJECT	SHEET No.	TOTAL SHEETS
07	Ven	101	14.1/21.1	86	108

George Olguin
LICENSED LANDSCAPE ARCHITECT

2-9-15
PLANS APPROVAL DATE

LICENSED LANDSCAPE ARCHITECT
GEORGE OLGUIN
NO. 4333
George Olguin
Signature
08-31-16
Renewal date
02-06-15
Date
STATE OF CALIFORNIA

THE STATE OF CALIFORNIA OR ITS OFFICERS OR AGENTS SHALL NOT BE RESPONSIBLE FOR THE ACCURACY OR COMPLETENESS OF SCANNED COPIES OF THIS PLAN SHEET.

NOTE:

FOR ACCURATE RIGHT OF WAY DATA, CONTACT
RIGHT OF WAY ENGINEERING AT THE DISTRICT OFFICE.

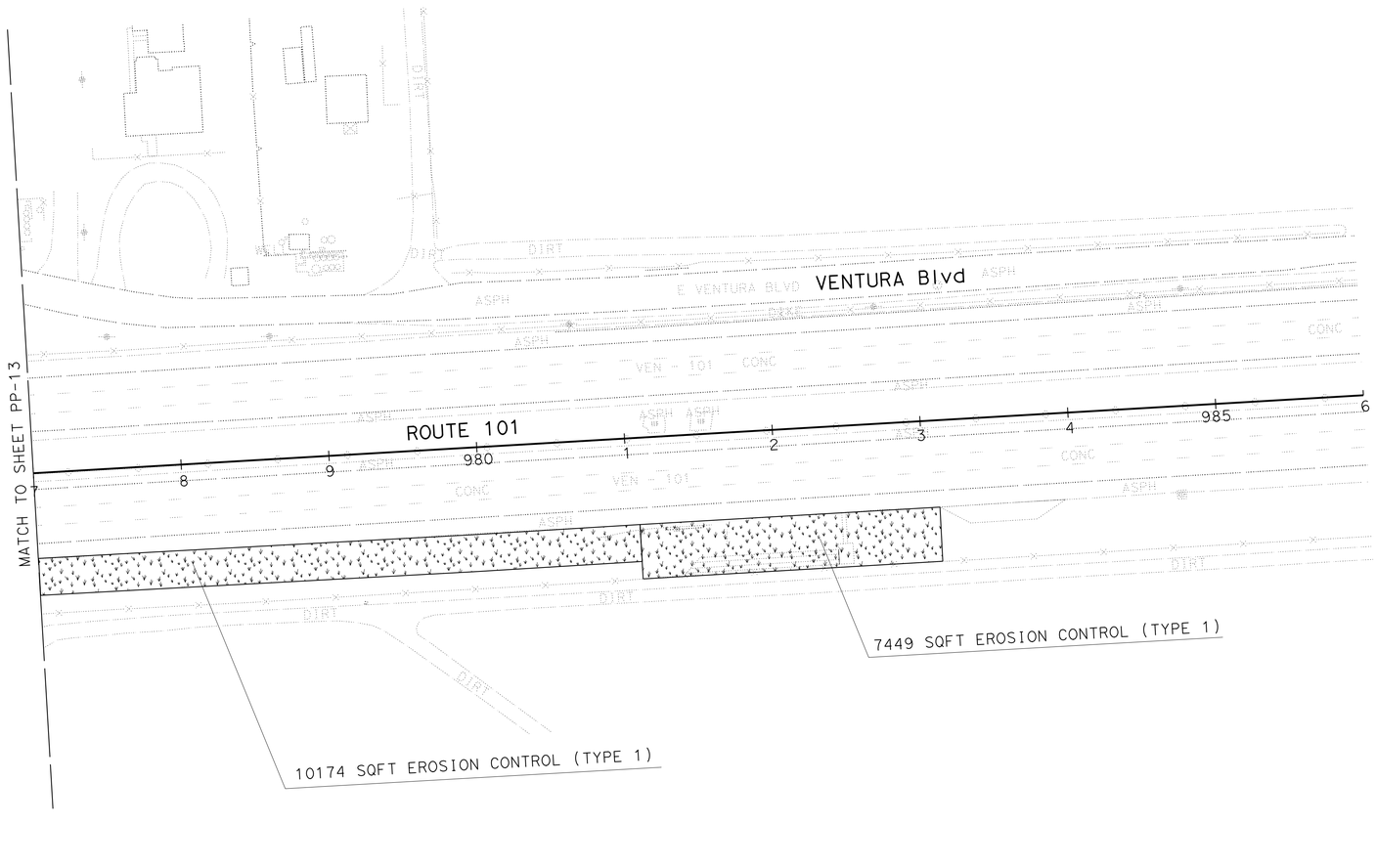

APPROVED FOR PLANTING WORK ONLY

PLANTING PLAN

SCALE: 1" = 50'

PP-14

STATE OF CALIFORNIA - DEPARTMENT OF TRANSPORTATION
Caltrans® LANDSCAPE ARCHITECTURE

SENIOR LANDSCAPE ARCHITECT: RON RUSSAK

CALCULATED-DESIGNED BY: XUAN WU
CHECKED BY: GEORGE OLGUIN

REVISED BY
DATE REVISED

LAST REVISION 00-00-00
DATE PLOTTED => 20-APR-2015
TIME PLOTTED => 12:55

Dist	COUNTY	ROUTE	POST MILES TOTAL PROJECT	SHEET No.	TOTAL SHEETS
07	Ven	101	14.1/21.1	87	108

George Olguin
LICENSED LANDSCAPE ARCHITECT

2-9-15
PLANS APPROVAL DATE

LICENSED LANDSCAPE ARCHITECT
GEORGE OLGUIN
NO. 4333
George Olguin
Signature
08-31-16
Renewal date
02-06-15
Date
STATE OF CALIFORNIA

THE STATE OF CALIFORNIA OR ITS OFFICERS OR AGENTS SHALL NOT BE RESPONSIBLE FOR THE ACCURACY OR COMPLETENESS OF SCANNED COPIES OF THIS PLAN SHEET.

NOTE:

FOR ACCURATE RIGHT OF WAY DATA, CONTACT
RIGHT OF WAY ENGINEERING AT THE DISTRICT OFFICE.

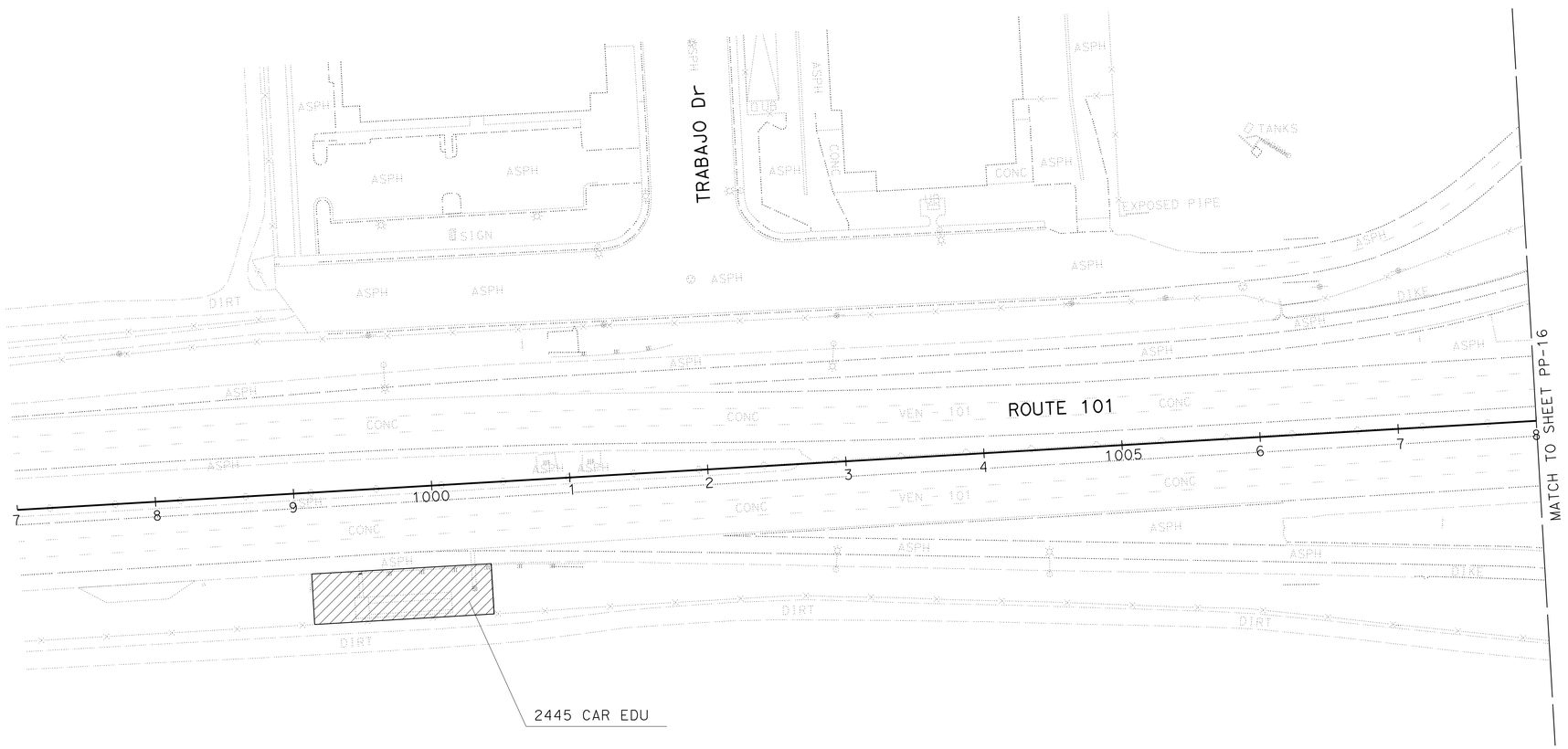

PLANTING PLAN

SCALE: 1" = 50'

PP-15

APPROVED FOR PLANTING WORK ONLY

REVISED BY | DATE REVISED

XUAN WU | GEORGE OLGUIN

CALCULATED-DESIGNED BY | CHECKED BY

SENIOR LANDSCAPE ARCHITECT
RON RUSSAK

STATE OF CALIFORNIA - DEPARTMENT OF TRANSPORTATION
Caltrans® LANDSCAPE ARCHITECTURE

LAST REVISION 00-00-00 | DATE PLOTTED => 20-APR-2015 | TIME PLOTTED => 12:55

Dist	COUNTY	ROUTE	POST MILES TOTAL PROJECT	SHEET No.	TOTAL SHEETS
07	Ven	101	14.1/21.1	88	108

George Olguin
LICENSED LANDSCAPE ARCHITECT

2-9-15
PLANS APPROVAL DATE

THE STATE OF CALIFORNIA OR ITS OFFICERS OR AGENTS SHALL NOT BE RESPONSIBLE FOR THE ACCURACY OR COMPLETENESS OF SCANNED COPIES OF THIS PLAN SHEET.

LICENSED LANDSCAPE ARCHITECT
GEORGE OLGUIN
NO. 4333
George Olguin
Signature
08-31-16
Renewal date
02-06-15
Date
STATE OF CALIFORNIA

NOTE:

FOR ACCURATE RIGHT OF WAY DATA, CONTACT RIGHT OF WAY ENGINEERING AT THE DISTRICT OFFICE.

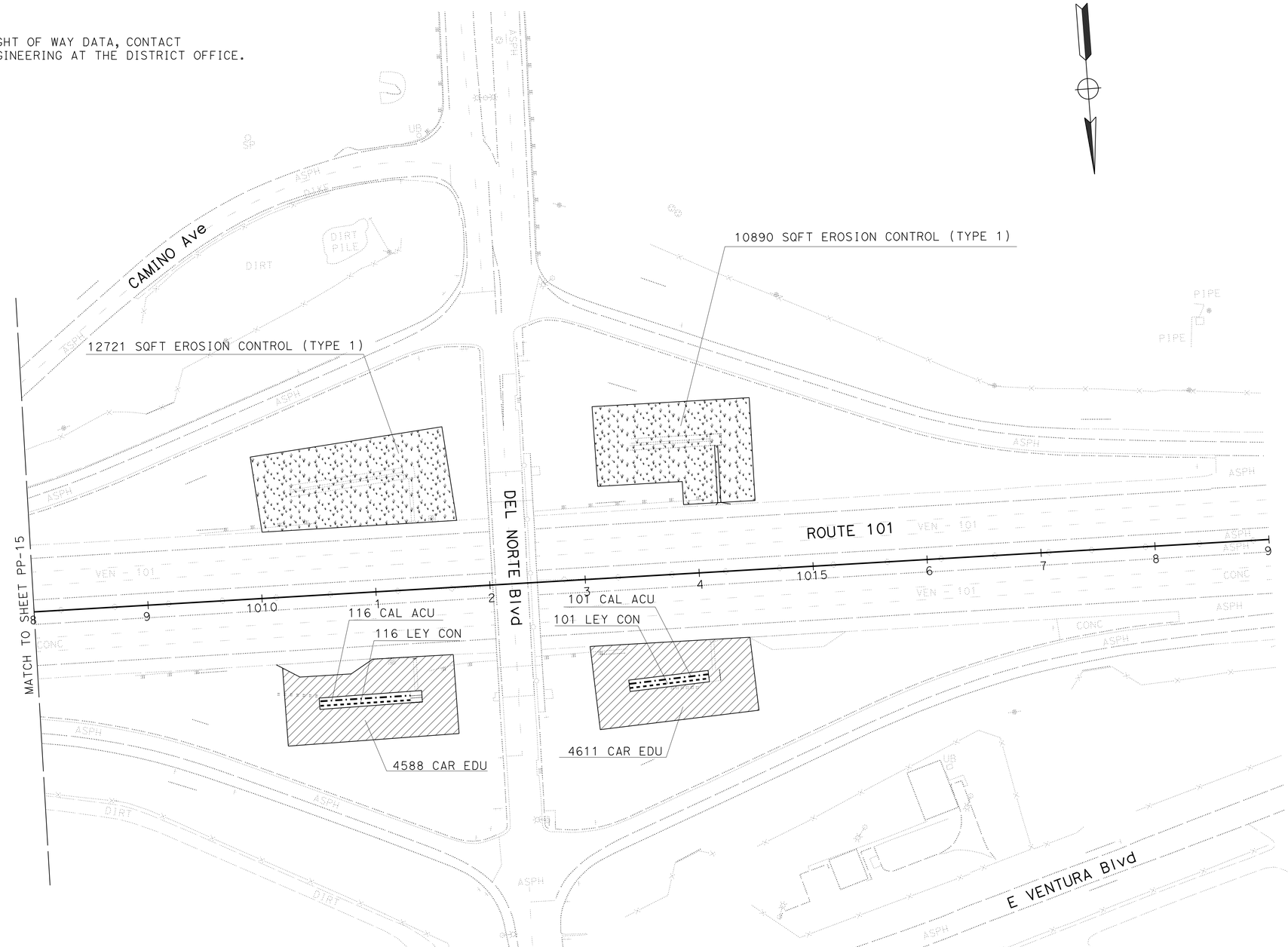

APPROVED FOR PLANTING WORK ONLY

PLANTING PLAN

SCALE: 1" = 50'

PP-16

STATE OF CALIFORNIA - DEPARTMENT OF TRANSPORTATION
Caltrans® LANDSCAPE ARCHITECTURE

SENIOR LANDSCAPE ARCHITECT: RON RUSSAK
CALCULATED-DESIGNED BY: XUAN WU
CHECKED BY: GEORGE OLGUIN
REVISED BY
DATE REVISED

LAST REVISION 00-00-00
DATE PLOTTED => 20-APR-2015
TIME PLOTTED => 12:55

Dist	COUNTY	ROUTE	POST MILES TOTAL PROJECT	SHEET No.	TOTAL SHEETS
07	Ven	101	14.1/21.1	89	108

George Olguin
LICENSED LANDSCAPE ARCHITECT

2-9-15
PLANS APPROVAL DATE

LICENSED LANDSCAPE ARCHITECT
GEORGE OLGUIN
NO. 4333
George Olguin
Signature
08-31-16
Renewal Date
02-06-15
Date
STATE OF CALIFORNIA

THE STATE OF CALIFORNIA OR ITS OFFICERS OR AGENTS SHALL NOT BE RESPONSIBLE FOR THE ACCURACY OR COMPLETENESS OF SCANNED COPIES OF THIS PLAN SHEET.

NOTE:

FOR ACCURATE RIGHT OF WAY DATA, CONTACT
RIGHT OF WAY ENGINEERING AT THE DISTRICT OFFICE.

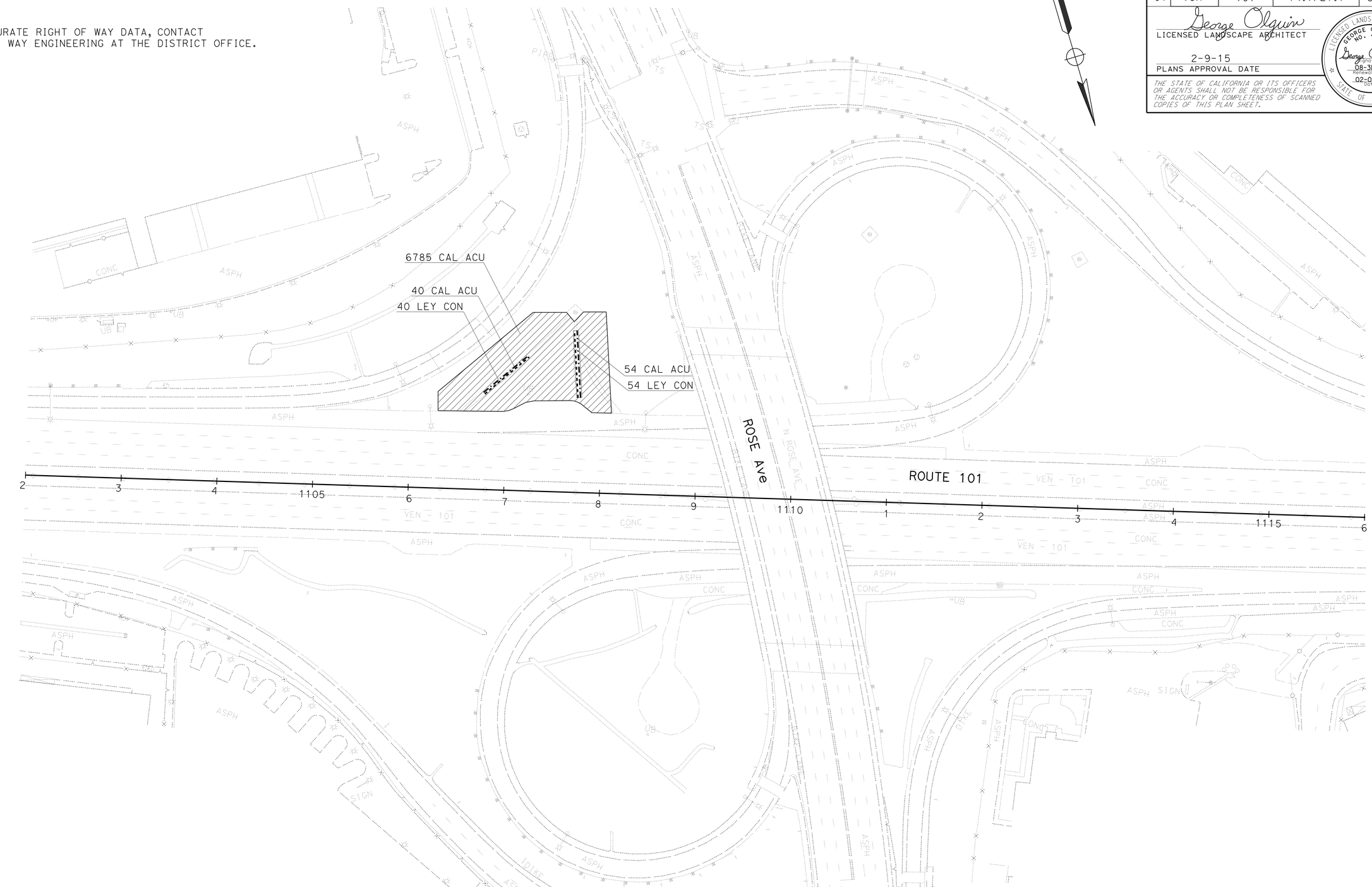

PLANTING PLAN

SCALE: 1" = 50'

PP-17

APPROVED FOR PLANTING WORK ONLY

STATE OF CALIFORNIA - DEPARTMENT OF TRANSPORTATION
Caltrans® LANDSCAPE ARCHITECTURE

SENIOR LANDSCAPE ARCHITECT: RON RUSSAK

CALCULATED-DESIGNED BY: XUAN WU
CHECKED BY: GEORGE OLGUIN

REVISED BY | DATE REVISED

LAST REVISION 00-00-00 | DATE PLOTTED => 20-APR-2015 | TIME PLOTTED => 12:55

Dist	COUNTY	ROUTE	POST MILES TOTAL PROJECT	SHEET No.	TOTAL SHEETS
07	Ven	101	14.1/21.1	90	108

George Olguin
LICENSED LANDSCAPE ARCHITECT

2-9-15
PLANS APPROVAL DATE

LICENSED LANDSCAPE ARCHITECT GEORGE OLGUIN NO. 4333 George Olguin Expiration date 08-31-16 Renewal date 02-06-15 Date STATE OF CALIFORNIA

THE STATE OF CALIFORNIA OR ITS OFFICERS OR AGENTS SHALL NOT BE RESPONSIBLE FOR THE ACCURACY OR COMPLETENESS OF SCANNED COPIES OF THIS PLAN SHEET.

IRRIGATION LEGEND

SYMBOL	DESCRIPTION	SPRINKLER TYPE	SPRAY PATTERN	OPERATING PRESSURE (psi)	PRESSURE COMPENSATING ②	PLUS/MINUS 5% ② DISCHARGE: GALLONS PER MINUTE (GPM)	DISCHARGE: GALLONS PER HOUR (GPH)	RADIUS (ft)	WIDTH x LENGTH (ft)	FLOW SHUTOFF DEVICE	SPRINLKER ASSEMBLY RISER: TYPE	RISER MATERIAL: PLASTIC	RISER MATERIAL: GALVANIZED	RISER SIZE (IPS INCH)	RISER HEIGHT (INCH)	POP-UP: TYPE	POP-UP: INLET CONNECTION (NPT INCH)	POP-UP: SPRINLKER PROTECTOR (TYPE)	TREE WELL: HEIGHT (INCH)	REMARKS
⑤/5	RISER SPRINKLER ASSEMBLY (GEAR DRIVEN)	A-5	P/F	25	—	1.81	—	35	—	X	IV	—	X	½	18	—	—	—	—	
○	RISER SPRINKLER ASSEMBLY	C-2	—	30	X	0.25/0.5	—	—	—	—	V	X	—	½	—	—	—	—	—	BUBBLER

X IN BOX DENOTES REQUIREMENT

APPLICABLE WHEN CIRCLED BELOW:

1 - SEE SPECIAL PROVISIONS.
② - IF A PRESSURE COMPENSATING DEVICE IS SPECIFIED, THE DISCHARGE AND RADII SHOWN REFLECT ITS USE.
3 - VINYL-COATED CAST IRON HOUSING.
4 - SWING JOINTS REQUIRED ADJACENT TO SHOULDERS, CURBS, SIDEWALKS, AND DIKES.
5 - UNLESS OTHERWISE SHOWN ON PLANS.

SPRINKLERS SIZING CHART (0.25 GPM)
(FOR INFORMATION ONLY)
RISER SPRINKLER ASSEMBLY VINES AND SHRUBS

NUMBER OF SPRINKLERS	SIZE OF PIPE
1-32	¾"
33-48	1"
49-88	1¼"

LANDSCAPE DETAILS

NO SCALE

LD-1

REVISED BY | DATE REVISED
XUAN WU | GEORGE OLGUIN
CALCULATED-DESIGNED BY | CHECKED BY
SENIOR LANDSCAPE ARCHITECT
RON RUSSAK

STATE OF CALIFORNIA - DEPARTMENT OF TRANSPORTATION
Caltrans® LANDSCAPE ARCHITECTURE

LAST REVISION 00-00-00 | DATE PLOTTED => 20-APR-2015 | TIME PLOTTED => 12:55

Dist	COUNTY	ROUTE	POST MILES TOTAL PROJECT	SHEET No.	TOTAL SHEETS
07	Ven	101	14.1/21.1	91	108

George Olguin
LICENSED LANDSCAPE ARCHITECT

2-9-15
PLANS APPROVAL DATE

LICENSED LANDSCAPE ARCHITECT GEORGE OLGUIN NO. 4333 George Olguin Signature 08-31-16 Renewal Date 02-06-15 Date STATE OF CALIFORNIA

THE STATE OF CALIFORNIA OR ITS OFFICERS OR AGENTS SHALL NOT BE RESPONSIBLE FOR THE ACCURACY OR COMPLETENESS OF SCANNED COPIES OF THIS PLAN SHEET.

NOTE:

FOR ACCURATE RIGHT OF WAY DATA, CONTACT
RIGHT OF WAY ENGINEERING AT THE DISTRICT OFFICE.

EROSION CONTROL

SHEET	DESCRIPTION	HYDROSEED	HYDROMULCH
		SQFT	SQFT
PP-6	EROSION CONTROL TYPE 1	5,276	5,276
PP-7	EROSION CONTROL TYPE 1	17,172	17,172
PP-8	EROSION CONTROL TYPE 1	16,303	16,303
PP-9	EROSION CONTROL TYPE 1	13,588	13,588
PP-10	EROSION CONTROL TYPE 1	17,560	17,560
PP-11	EROSION CONTROL TYPE 1	20,188	20,188
PP-12	EROSION CONTROL TYPE 1	23,929	23,929
PP-13	EROSION CONTROL TYPE 1	27,503	27,503
PP-14	EROSION CONTROL TYPE 1	17,623	17,623
PP-16	EROSION CONTROL TYPE 1	23,611	23,611
TOTAL		182,753	182,753

EROSION CONTROL TYPE 1

SEQUENCE	ITEM	MATERIAL		APPLICATION RATE
		DESCRIPTION	TYPE	
STEP 1	HYDROSEED	SEED	MIX 1	41 LB/ACRE
		FIBER	WOOD	500 LB/ACRE
STEP 2	HYDROMULCH	FIBER	WOOD	1,500 LB/ACRE
		TACKIFIER	GUAR	125 LB/ACRE

SEED MIX

SEED	BOTANICAL NAME (COMMON NAME)	PERCENT GERMINATION (MINIMUM)	POUNDS PURE LIVE SEED PER ACRE (SLOPE MEASUREMENT)
MIX	ACHILLEA MILLEFOLIUM [1] (COMMON YARROW)	2.4	1.00
	HORDEUM CALIFORNICUM [1] (CALIFORNIA BARLEY)	48.8	20.00
	LEYMUS TRITICOIDES [1] (CREEPING WILDRYE)	48.8	20.00
		TOTAL	41

[1] SEED PRODUCED IN CALIFORNIA ONLY.

APPROVED FOR EROSION CONTROL WORK ONLY

EROSION CONTROL LEGEND
EROSION CONTROL QUANTITIES

ECQ-1

REVISED BY | DATE REVISED
XUAN WU | GEORGE OLGUIN
CALCULATED-DESIGNED BY | CHECKED BY
SENIOR LANDSCAPE ARCHITECT | RON RUSSAK
STATE OF CALIFORNIA - DEPARTMENT OF TRANSPORTATION
Caltrans LANDSCAPE ARCHITECTURE

LAST REVISION 00-00-00 | DATE PLOTTED => 20-APR-2015 | TIME PLOTTED => 12:55

M

Maint	MAINTENANCE
Max	MAXIMUM
MB	METAL BEAM
MBB	METAL BEAM BARRIER
MBGR	METAL BEAM GUARD RAILING
Med	MEDIAN
MGS	MIDWEST GUARDRAIL SYSTEM
MH	MANHOLE
Min	MINIMUM
Misc	MISCELLANEOUS
Misc I & S	MISCELLANEOUS IRON AND STEEL
Mkr	MARKER
Mod	MODIFIED,
	MODIFY
Mon	MONUMENT
MP	METAL PLATE
MPGR	METAL PLATE GUARD RAILING
MR	MOVEMENT RATING
MSE	MECHANICALLY STABILIZED EMBANKMENT
Mt	MOUNTAIN, MOUNT
Mtl	MATERIAL
MVP	MAINTENANCE VEHICLE PULLOUT

N

N	NORTH
NB	NORTHBOUND
No.	NUMBER (MUST HAVE PERIOD)
Nos.	NUMBERS (MUST HAVE PERIOD)
NPS	NOMINAL PIPE SIZE
NS	NEAR SIDE
NSP	NEW STANDARD PLAN
NTS	NOT TO SCALE

O

Oblr	OBLITERATE
OC	OVERCROSSING
OD	OUTSIDE DIAMETER
OF	OUTSIDE FACE
OG	ORIGINAL GROUND
OGAC	OPEN GRADED ASPHALT CONCRETE
OGFC	OPEN GRADED FRICTION COURSE
OH	OVERHEAD
OHWM	ORDINARY HIGH WATER MARK
O-O	OUT TO OUT
Opp	OPPOSITE
OSD	OVERSIDE DRAIN

P

P	PAGE
PAP	PERFORATED ALUMINUM PIPE
PB	PULL BOX
PC	POINT OF CURVATURE,
	PRECAST
PCC	POINT OF COMPOUND CURVE,
	PORTLAND CEMENT CONCRETE
PCMS	PORTABLE CHANGEABLE MESSAGE SIGN
PCP	PERFORATED CONCRETE PIPE,
	PRESTRESSED CONCRETE PIPE
PCVC	POINT OF COMPOUND VERTICAL CURVE
PEC	PERMIT TO ENTER AND CONSTRUCT
Ped	PEDESTRIAN
Ped OC	PEDESTRIAN OVERCROSSING
Ped UC	PEDESTRIAN UNDERCROSSING
Perm Mtl	PERMEABLE MATERIAL

P continued

PG	PROFILE GRADE
PI	POINT OF INTERSECTION
PJP	PARTIAL JOINT PENETRATION
Pkwy	PARKWAY
ℙ,PL	PLATE
P/L	PROPERTY LINE
PM	POST MILE,
	TIME FROM NOON TO MIDNIGHT
PN	PAVING NOTCH
POC	POINT OF HORIZONTAL CURVE
POT	POINT OF TANGENT
POVC	POINT OF VERTICAL CURVE
PP	PIPE PILE,
	PLASTIC PIPE,
	POWER POLE
PPL	PREFORMED PERMEABLE LINER
PPP	PERFORATED PLASTIC PIPE
PRC	POINT OF REVERSE CURVE
PRF	PAVEMENT REINFORCING FABRIC
PRVC	POINT OF REVERSE VERTICAL CURVE
PS&E	PLANS, SPECIFICATIONS AND ESTIMATES
PS, P/S	PRESTRESSED
PSP	PERFORATED STEEL PIPE
PT	POINT OF TANGENCY
PVC	POLYVINYL CHLORIDE
Pvmt	PAVEMENT

Q

Qty	QUANTITY

R

R	RADIUS
R & D	REMOVE AND DISPOSE
R & S	REMOVE AND SALVAGE
R/C	RATE OF CHANGE
RCA	REINFORCED CONCRETE ARCH
RCB	REINFORCED CONCRETE BOX
RCP	REINFORCED CONCRETE PIPE
RCPA	REINFORCED CONCRETE PIPE ARCH
Rd	ROAD
Reinf	REINFORCED,
	REINFORCEMENT,
	REINFORCING
Rel	RELOCATE
Repl	REPLACEMENT
Ret	RETAINING
Rev	REVISED, REVISION
Rdwy	ROADWAY
RHMA	RUBBERIZED HOT MIX ASPHALT
Riv	RIVER
RM	ROAD-MIXED
RP	RADIUS POINT,
	REFERENCE POINT
RR	RAILROAD
RSP	ROCK SLOPE PROTECTION,
	REVISED STANDARD PLAN
Rt	RIGHT
Rte	ROUTE
RW	REDWOOD,
	RETAINING WALL
R/W	RIGHT OF WAY
Rwy	RAILWAY

S

S	SOUTH,
	SUPPLEMENT
SAE	STRUCTURE APPROACH EMBANKMENT
Salv	SALVAGE
SAPP	STRUCTURAL ALUMINUM PLATE PIPE
SB	SOUTHBOUND
SC	SAND CUSHION
SCSP	SLOTTED CORRUGATED STEEL PIPE
SD	STORM DRAIN
Sec	SECOND,
	SECTION
Sep	SEPARATION
SG	SUBGRADE
Shld	SHOULDER
Sht	SHEET
Sim	SIMILAR
℄	STATION LINE
SM	SELECTED MATERIAL
Spec	SPECIAL,
	SPECIFICATIONS
SPP	SLOTTED PLASTIC PIPE
SS	SLOPE STAKE
SSBM	STRAP AND SADDLE BRACKET METHOD
SSD	STRUCTURAL SECTION DRAIN
SSPA	STRUCTURAL STEEL PLATE ARCH
SSPP	STRUCTURAL STEEL PLATE PIPE
SSPPA	STRUCTURAL STEEL PLATE PIPE ARCH
SSRP	STEEL SPIRAL RIB PIPE
St	STREET
Sta	STATION
STBB	SINGLE THRIE BEAM BARRIER
Std	STANDARD
Str	STRUCTURE
Surf	SURFACING
SW	SIDEWALK,
	SOUND WALL
Swr	SEWER
Sym	SYMMETRICAL
S4S	SURFACE 4 SIDES

T

T	SEMI-TANGENT
Tan	TANGENT
TBB	THRIE BEAM BARRIER
Tbr	TIMBER
TC	TOP OF CURB
TCB	TRAFFIC CONTROL BOX
TCE	TEMPORARY CONSTRUCTION EASEMENT
Tel	TELEPHONE
Temp	TEMPORARY
TG	TOP OF GRADE
Tot	TOTAL
TP	TELEPHONE POLE
TPB	TREATED PERMEABLE BASE
TPM	TREATED PERMEABLE MATERIAL
Trans	TRANSITION

T continued

TS	TRANSVERSE,
	TRAFFIC SIGNAL,
	TUBULAR STEEL
Typ	TYPICAL

U

UC	UNDERCROSSING
UD	UNDERDRAIN
UG	UNDERGROUND
UON	UNLESS OTHERWISE NOTED
UP	UNDERPASS

V

V	VALVE,
	DESIGN SPEED
Var	VARIABLE,
	VARIES
VC	VERTICAL CURVE
VCP	VITRIFIED CLAY PIPE
Vert	VERTICAL
Via	VIADUCT
Vol	VOLUME

W

W	WEST,
	WIDTH
WB	WESTBOUND
WH	WEEP HOLE
WM	WIRE MESH
WS	WATER SURFACE
WSP	WELDED STEEL PIPE
Wt	WEIGHT
WV	WATER VALVE
WW	WINGWALL
WWLOL	WINGWALL LAYOUT LINE

X

X Sec	CROSS SECTION
Xing	CROSSING

Y

Yr	YEAR
Yrs	YEARS

Dist	COUNTY	ROUTE	POST MILES TOTAL PROJECT	SHEET No.	TOTAL SHEETS
07	Ven	101	14.1/21.1	92	108

Grace M. Tsushima
REGISTERED CIVIL ENGINEER

July 19, 2013
PLANS APPROVAL DATE

REGISTERED PROFESSIONAL ENGINEER
Grace M. Tsushima
No. C49814
Exp. 9-30-14
CIVIL
STATE OF CALIFORNIA

THE STATE OF CALIFORNIA OR ITS OFFICERS OR AGENTS SHALL NOT BE RESPONSIBLE FOR THE ACCURACY OR COMPLETENESS OF SCANNED COPIES OF THIS PLAN SHEET.

TO ACCOMPANY PLANS DATED 2-9-15

UNIT OF MEASUREMENT SYMBOLS:

Some of the symbols used in the project plan quantity tables and in the Bid Item List are:

TABLE A

SYMBOL USED	DEFINITIONS
ACRE	ACRE
CF	CUBIC FOOT
CY	CUBIC YARD
EA	EACH
GAL	GALLON
LB	POUND
LF	LINEAR FOOT
SQFT	SQUARE FOOT
SQYD	SQUARE YARD
STA	100 FEET
TAB	TABLET
TON	2,000 POUNDS

Some of the symbols used in the plans other than in the project plan quantity tables are:

TABLE B

SYMBOL USED	DEFINITIONS
ksi	KIPS PER SQUARE INCH
ksf	KIPS PER SQUARE FOOT
psi	POUNDS PER SQUARE INCH
psf	POUNDS PER SQUARE FOOT
lb/ft^3, pcf	POUNDS PER CUBIC FOOT
tsf	TONS PER SQUARE FOOT
mph, MPH *	MILES PER HOUR
ø	NOMINAL DIAMETER
oz	OUNCE
lb	POUND
kip	1,000 POUNDS
cal	CALORIE
ft	FOOT OR FEET
gal	GALLON

* For use on a sign panel only

STATE OF CALIFORNIA
DEPARTMENT OF TRANSPORTATION

ABBREVIATIONS (SHEET 2 OF 2)

NO SCALE

RSP A10B DATED JULY 19, 2013 SUPERSEDES STANDARD PLAN A10B DATED MAY 20, 2011 - PAGE 2 OF THE STANDARD PLANS BOOK DATED 2010.

REVISED STANDARD PLAN RSP A10B

2010 REVISED STANDARD PLAN RSP A10B

6-7-13

Dist	COUNTY	ROUTE	POST MILES TOTAL PROJECT	SHEET No.	TOTAL SHEETS
07	Ven	101	14.1/21.1	93	108

REGISTERED CIVIL ENGINEER

July 18, 2014
PLANS APPROVAL DATE

Glenn DeCou No. C34547 Exp. 9-30-15 CIVIL — REGISTERED PROFESSIONAL ENGINEER — STATE OF CALIFORNIA

THE STATE OF CALIFORNIA OR ITS OFFICERS OR AGENTS SHALL NOT BE RESPONSIBLE FOR THE ACCURACY OR COMPLETENESS OF SCANNED COPIES OF THIS PLAN SHEET.

TO ACCOMPANY PLANS DATED 2-9-15

2010 REVISED STANDARD PLAN RSP A85

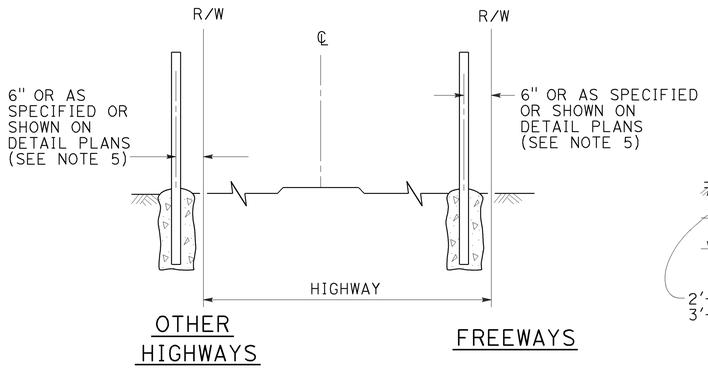

FENCE LOCATION

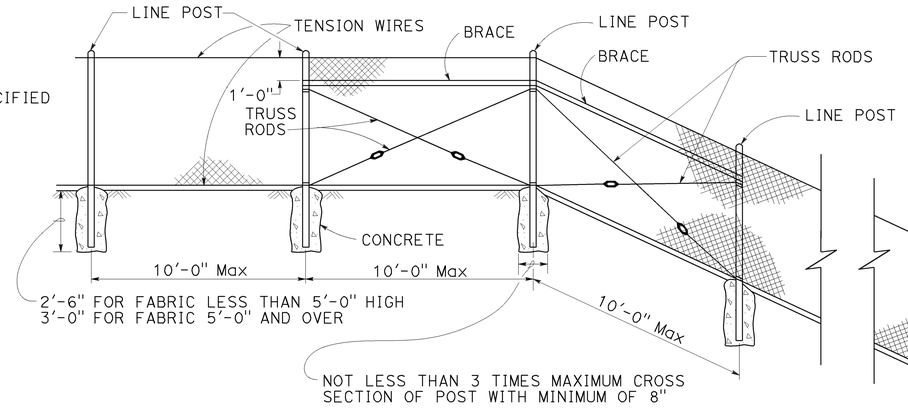

CHAIN LINK FENCE ON SHARP BREAK IN GRADE

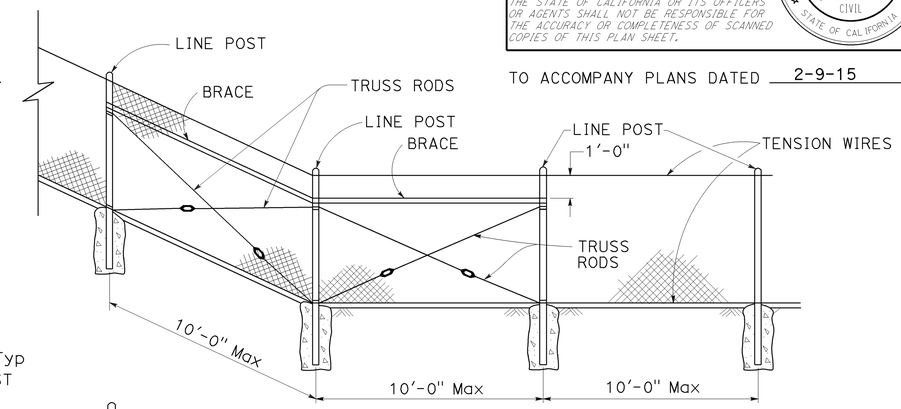

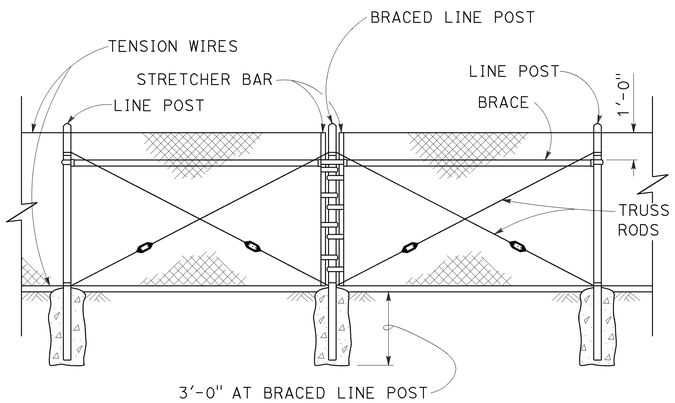

BRACED LINE POST INSTALLATION

Braced line post at intervals not exceeding 1000'

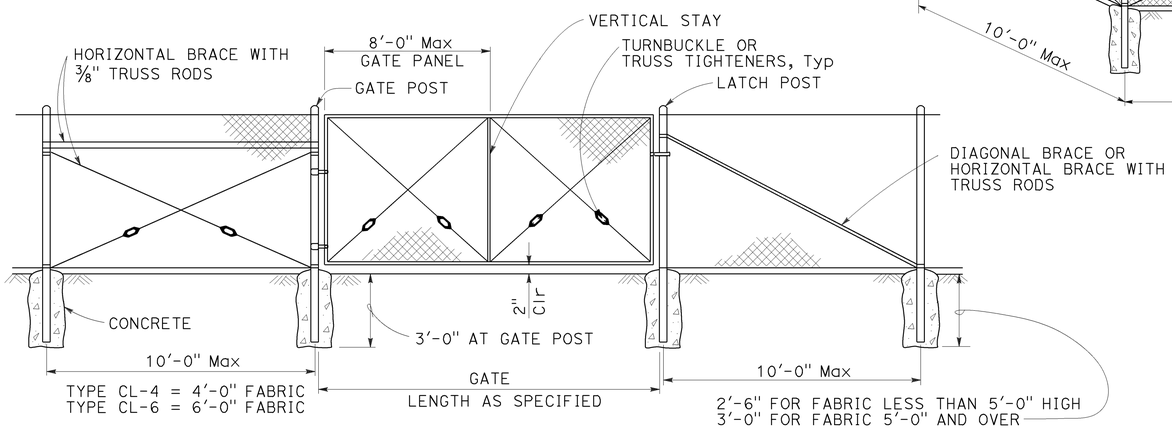

CHAIN LINK GATE INSTALLATION

GATE POST			
FENCE HEIGHT	GATE WIDTHS	ROUND OD PIPE	WEIGHT (lb/ft)
6'-0" AND LESS	UP THRU 6'-0"	2.875"	5.80
	OVER 6'-0" THRU 12'-0"	4.500"	10.80
	OVER 12'-0" THRU 18'-0"	5.563"	14.63
	OVER 18'-0" TO 24'-0" Max	6.625"	18.99
OVER 6'-0" TO 8'-0" Max	UP THRU 6'-0"	3.500"	7.58
	OVER 6'-0" THRU 12'-0"	5.563"	14.63
	OVER 12'-0" THRU 18'-0"	6.625"	18.99
	OVER 18'-0" TO 24'-0" Max	8.625"	28.58

Above post dimensions and weights are minimums. Larger sizes may be used upon approval.

NOTES:

1. The table below shows minimum sized posts and braces complying with the specifications. Larger or heavier post and brace sizes may be used upon approval.
2. Sections shown in the tables must also comply with the strength requirements and other provisions of the Specifications.
3. Other sections which comply with the strength requirements and other provisions of the Specifications may be used upon approval.
4. Options exercised shall be uniform on any one project.
5. Offset to be 2'-0" at monument locations, measured at right angles to R/W lines. Taper to achieve offset to be at least 20'-0" long.
6. See Revised Standard Plan RSP A85B for Brace, Stretcher Bar, and Truss Tightener Details.

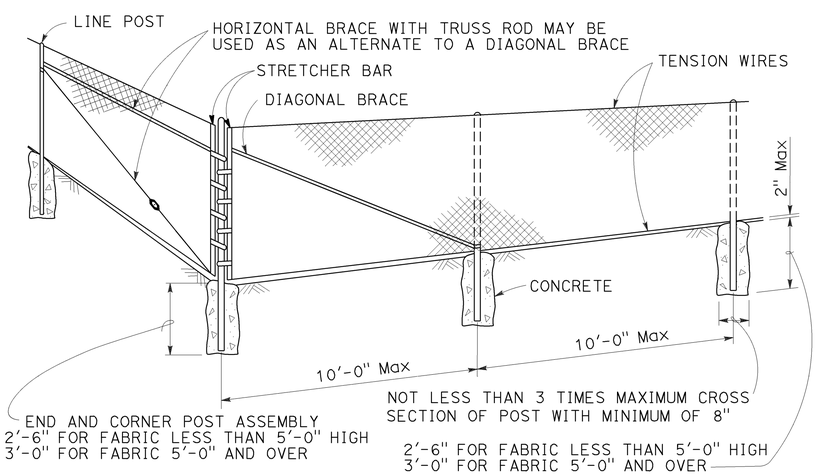

CORNER POST

TYPICAL MEMBER DIMENSIONS (See Notes)										
FENCE HEIGHT	LINE POSTS				END, LATCH AND CORNER POSTS		BRACES			
	ROUND OD PIPE	WEIGHT (lb/ft)	ROLL FORMED		ROUND OD PIPE	WEIGHT (lb/ft)	ROUND OD PIPE	WEIGHT (lb/ft)	ROLL FORMED	
			SECTION	WEIGHT (lb/ft)					SECTION	WEIGHT (lb/ft)
6'-0" AND LESS	1.900"	2.72	1.875" x 1.625"	1.85	2.375"	3.65	1.66"	2.27	1.625" x 1.25"	1.35
OVER 6'-0" TO 8'-0" Max	2.375"	3.65	2.25" x 1.70"	2.78	2.875"	5.80	1.66"	2.27	1.625" x 1.25"	1.35

STATE OF CALIFORNIA
DEPARTMENT OF TRANSPORTATION

CHAIN LINK FENCE

NO SCALE

RSP A85 DATED JULY 18, 2014 SUPERSEDES STANDARD PLAN A85 DATED MAY 20, 2011 - PAGE 112 OF THE STANDARD PLANS BOOK DATED 2010.

REVISED STANDARD PLAN RSP A85

7-1-14

Dist	COUNTY	ROUTE	POST MILES TOTAL PROJECT	SHEET No.	TOTAL SHEETS
07	Ven	101	14.1/21.1	94	108

REGISTERED CIVIL ENGINEER

October 19, 2012
PLANS APPROVAL DATE

REGISTERED PROFESSIONAL ENGINEER
Glenn DeCou
No. C34547
Exp. 9-30-13
CIVIL
STATE OF CALIFORNIA

THE STATE OF CALIFORNIA OR ITS OFFICERS OR AGENTS SHALL NOT BE RESPONSIBLE FOR THE ACCURACY OR COMPLETENESS OF SCANNED COPIES OF THIS PLAN SHEET.

TO ACCOMPANY PLANS DATED 2-9-15

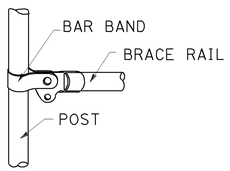

BRACE RAIL

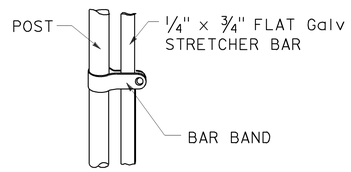

STRETCHER BAR

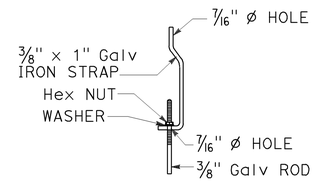

TRUSS TIGHTENER

NOTES:

1. All material for abutment connection to be galvanized.
2. The chain link fabric shall be replaced by barbed wire strands at 12" maximum centers between the double posts.
3. When the width of the culvert makes it necessary to anchor a post to the top of the culvert, a cast iron shoe or other device approved by the Engineer shall be used.
4. Fencing over stream and around headwall may also use Barbed Wire or Wire Mesh fencing with either wood post or steel post installation.
5. See Standard Plan A85 for Chain Link fence dimensions. See Standard Plan A86 for Barbed Wire and Wire Mesh fence dimensions and for wood post and steel post installation.

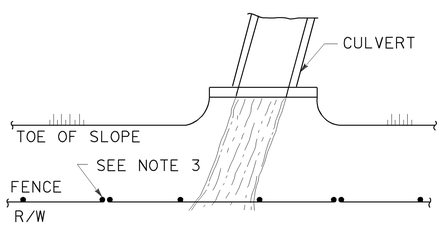

PLAN

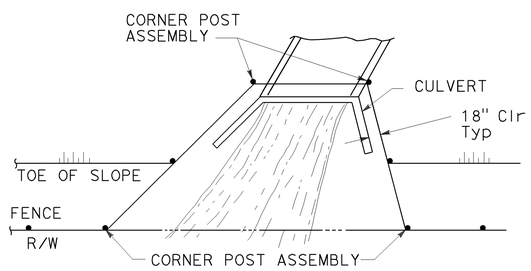

PLAN

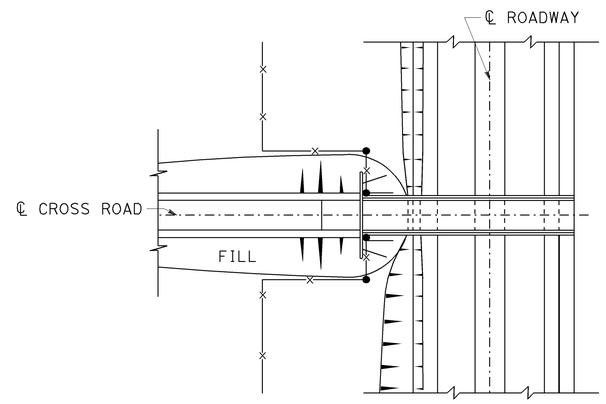

PLAN OF ROADWAY - OVERCROSSING

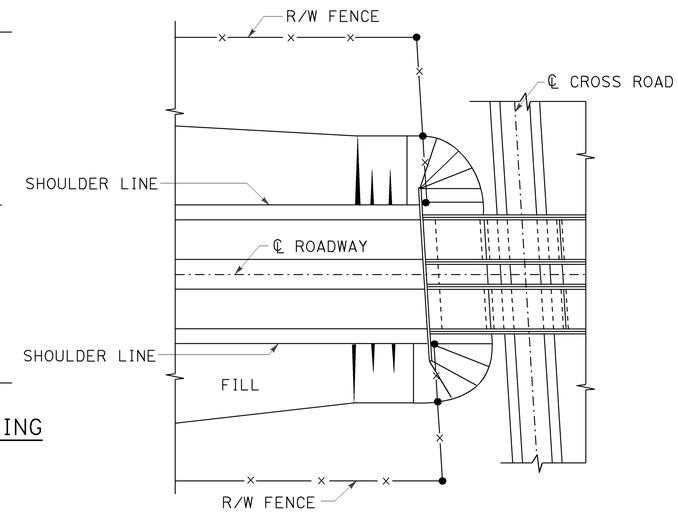

PLAN OF ROADWAY - UNDERCROSSING

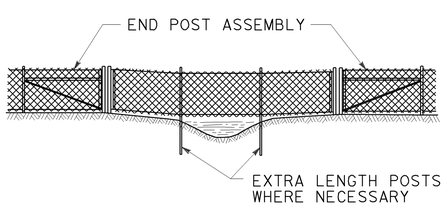

ELEVATION

INSTALLATION OVER STREAM

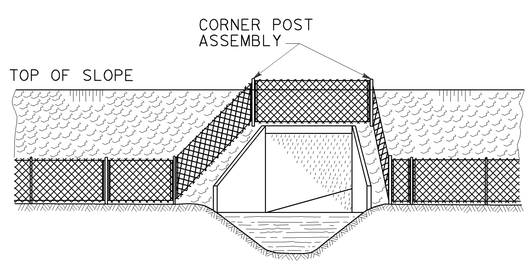

ELEVATION

INSTALLATION AROUND HEADWALL

See Note 4

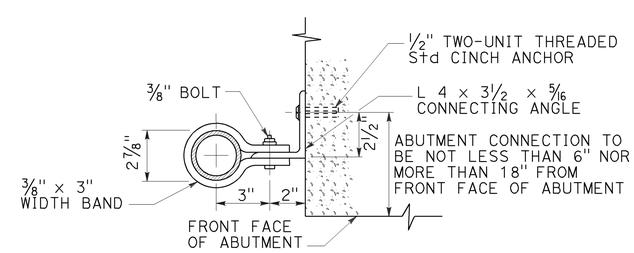

ABUTMENT CONNECTION

TYPICAL INSTALLATION AT BRIDGES

STATE OF CALIFORNIA
DEPARTMENT OF TRANSPORTATION

CHAIN LINK FENCE DETAILS

NO SCALE

RSP A85B DATED OCTOBER 19, 2012 SUPERSEDES STANDARD PLAN A85B DATED MAY 20, 2011 - PAGE 114 OF THE STANDARD PLANS BOOK DATED 2010.

REVISED STANDARD PLAN RSP A85B

2010 REVISED STANDARD PLAN RSP A85B

7-19-12

Dist	COUNTY	ROUTE	POST MILES TOTAL PROJECT	SHEET No.	TOTAL SHEETS
07	Ven	101	14.1/21.1	95	108

REGISTERED CIVIL ENGINEER

July 19, 2013
PLANS APPROVAL DATE

REGISTERED PROFESSIONAL ENGINEER
Michael Janzen
No. 44788
Exp. 03-31-14
CIVIL
STATE OF CALIFORNIA

THE STATE OF CALIFORNIA OR ITS OFFICERS OR AGENTS SHALL NOT BE RESPONSIBLE FOR THE ACCURACY OR COMPLETENESS OF SCANNED COPIES OF THIS PLAN SHEET.

TO ACCOMPANY PLANS DATED 2-9-15

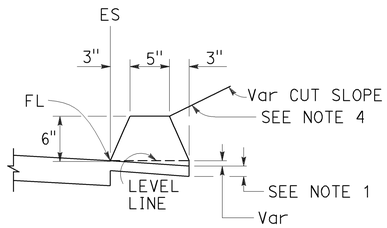

TYPE A
See Note 3

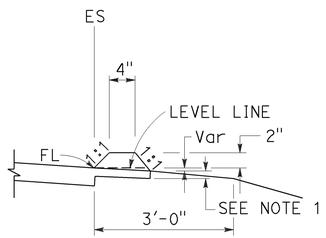

TYPE C

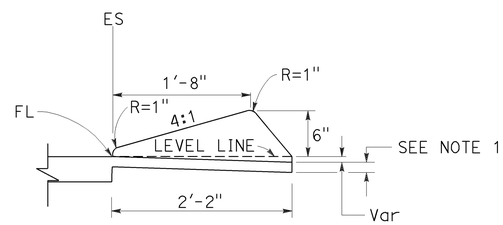

TYPE D

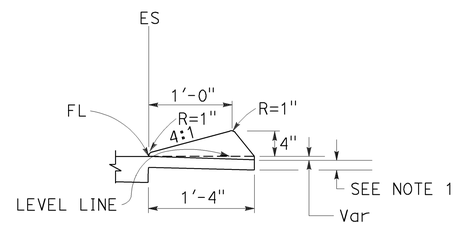

TYPE E

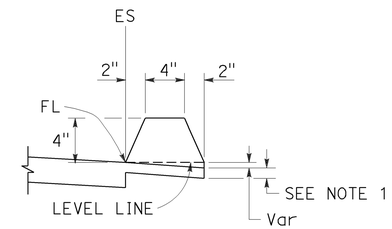

TYPE F
See Note 5

DIKES

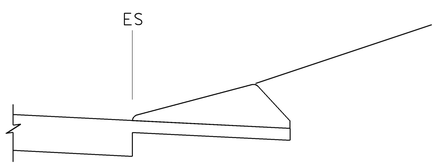

CASE C-1
Cut Slope

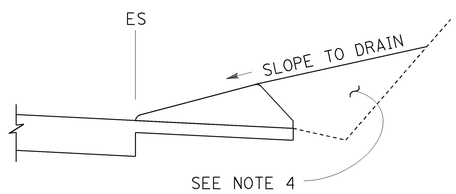

CASE C-2
Cut Slope

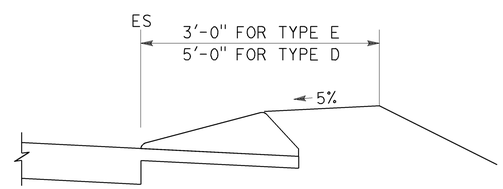

CASE F

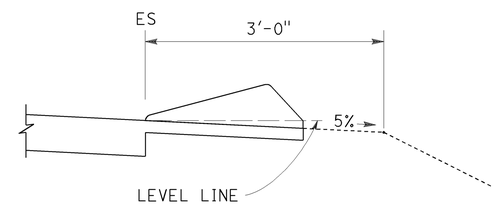

CASE R
See Note 2

TYPE D AND E BACKFILL DETAILS

NOTES:

1. For HMA shoulders only, extend top layer of HMA placed on the shoulder under dike with no joint at the ES. For projects with OGFC shoulders, do not extend OGFC under dike. See project plans for modified dike detail.
2. Case R applies to retrofit only projects where restrictive conditions do not provide enough width for Case F backfill.
3. Type A dike only to be used where restrictive slope conditions do not provide enough width to use Type D or Type E dike.
4. Fill and compact with excavated material to top of dike.
5. Use Type F dike, where dike is required with guard railing installations. See Revised Standard Plan RSP A77N4 for dike positioning details.

DIKE QUANTITIES

TYPE	CUBIC YARDS PER LINEAR FOOT
A	0.0135
C	0.0038
D	0.0293
E	0.0130
F	0.0066

Quantities based on 5% cross slope.

STATE OF CALIFORNIA
DEPARTMENT OF TRANSPORTATION

HOT MIX ASPHALT DIKES

NO SCALE

RSP A87B DATED JULY 19, 2013 SUPERSEDES STANDARD PLAN A87B DATED MAY 20, 2011 - PAGE 120 OF THE STANDARD PLANS BOOK DATED 2010.

REVISED STANDARD PLAN RSP A87B

2010 REVISED STANDARD PLAN RSP A87B

6-27-13

Dist	COUNTY	ROUTE	POST MILES TOTAL PROJECT	SHEET No.	TOTAL SHEETS
07	Ven	101	14.1/21.1	96	108

LICENSED LANDSCAPE ARCHITECT

July 19, 2013
PLANS APPROVAL DATE

THE STATE OF CALIFORNIA OR ITS OFFICERS OR AGENTS SHALL NOT BE RESPONSIBLE FOR THE ACCURACY OR COMPLETENESS OF SCANNED COPIES OF THIS PLAN SHEET.

LICENSED LANDSCAPE ARCHITECT — Gregory A. Balzer — 2516 — 02-28-15 Renewal Date — 7-19-13 Date — STATE OF CALIFORNIA

TO ACCOMPANY PLANS DATED 2-9-15

A

AB	AGGREGATE BASE
ABS	ACRYLONITRILE-BUTADIENE-STYRENE
AC	ASPHALT CONCRETE
ACC	ARMOR-CLAD CONDUCTORS
Adj	ADJACENT/ADJUSTABLE
AIC	AUXILIARY IRRIGATION CONTROLLER
Alt	ALTERNATIVE
AMEND	AMENDMENT
ARV	AIR RELEASE VALVE
AUTO	AUTOMATIC
AUX	AUXILIARY
AVB	ATMOSPHERIC VACUUM BREAKER

B

B&B	BALLED AND BURLAPPED
B/B	BRASS/BRONZE
B/B/PL	BRASS/BRONZE/PLASTIC
B/PL	BRASS/PLASTIC
BFM	BONDED FIBER MATRIX
Bit Ctd	BITUMINOUS COATED
BP	BOOSTER PUMP
BPA	BACKFLOW PREVENTER ASSEMBLY
BPE	BACKFLOW PREVENTER ENCLOSURE
BV	BALL VALVE

C

C	CONDUIT
CAP	CORRUGATED ALUMINUM PIPE
CARV	COMBINATION AIR RELEASE VALVE
CB	COUPLING BAND
CCA	CAM COUPLER ASSEMBLY
CEC	CONTROLLER ENCLOSURE CABINET
CHDPE	CORRUGATED HIGH DENSITY POLYETHYLENE
CL	CHAIN LINK
CNC	CONTROL AND NEUTRAL CONDUCTORS
Conc	CONCRETE
CP	COPPER PIPE
CS	COMPOST SOCK
CSP	CORRUGATED STEEL PIPE
CST	CENTER STRIP
CV	CHECK VALVE

D

Dia	DIAMETER
DIP	DUCTILE IRON PIPE
DIT	DRIP IRRIGATION TUBING
DG	DECOMPOSED GRANITE
DN	DIAMETER NOMINAL
DVA	DRIP VALVE ASSEMBLY

E

EC	EROSION CONTROL
ECTC	EROSION CONTROL TECHNOLOGY COUNCIL
Elect	ELECTRIC/ELECTRICAL
Elev	ELEVATION
ELL	ELBOW
ENCL	ENCLOSURE
EP	EDGE OF PAVEMENT
ES	EDGE OF SHOULDER
EST	END STRIP
ESTB	ESTABLISHMENT
ETW	EDGE OF TRAVELED WAY

F

F	FULL CIRCLE
F/P	FULL/PART CIRCLE
FCV	FLOW CONTROL VALVE
FERT	FERTILIZER
FG	FINISHED GRADE
FH	FLEXIBLE HOSE
FIPT	FEMALE IRON PIPE THREAD
FIS	FERTILIZER INJECTOR SYSTEM
FL	FLOW LINE
FR	FIBER ROLL
FS	FLOW SENSOR
FSC	FLOW SENSOR CABLE
FV	FLUSH VALVE

G

Galv	GALVANIZED
GARV	GARDEN VALVE
GARVA	GARDEN VALVE ASSEMBLY
GM	GRAVEL MULCH
GPH	GALLONS PER HOUR
GPM	GALLONS PER MINUTE
GSP	GALVANIZED STEEL PIPE
GV	GATE VALVE

H

H	HALF CIRCLE
HDPE	HIGH DENSITY POLYETHYLENE
HP	HORSEPOWER/HINGE POINT
HPL	HIGH PRESSURE LINE
Hwy	HIGHWAY

I

IC	IRRIGATION CONTROLLER
ICC	IRRIGATION CONTROLLER(S) IN CONTROLLER ENCLOSURE CABINET
ID	INSIDE DIAMETER
IFS	IRRIGATION FILTRATION SYSTEM
IPS	IRON PIPE SIZE
IPT	IRON PIPE THREAD
Irr	IRRIGATION

L

L	LENGTH

M

Max	MAXIMUM
MBGR	METAL BEAM GUARD RAILING
MCV	MANUAL CONTROL VALVE
MIC	MASTER IRRIGATION CONTROLLER
Min	MINIMUM
MIPT	MALE IRON PIPE THREAD
Misc	MISCELLANEOUS
Mtl	MATERIAL
MVP	MAINTENANCE VEHICLE PULLOUT

N

NCN	NO COMMON NAME
NL	NOZZLE LINE
No.	NUMBER
NPT	NATIONAL PIPE THREAD

O

O/C	ON CENTER
OD	OUTSIDE DIAMETER
OL	OVERLAP

P

P	PART CIRCLE
PB	PULL BOX
PCC	PORTLAND CEMENT CONCRETE
PE	POLYETHYLENE
Pkt	PACKET
PL	PLASTIC
PLS	PURE LIVE SEED
PLT	PLANT/PLANTING
PLT ESTB	PLANT ESTABLISHMENT
PM	POST MILE
PR	PRESSURE RATED
PRLV	PRESSURE RELIEF VALVE
PRV	PRESSURE REGULATING VALVE
PVC	POLYVINYL CHLORIDE
Pvmt	PAVEMENT

Q

Q	QUARTER CIRCLE
QCV	QUICK COUPLING VALVE

R

R	RADIUS
RCP	REINFORCED CONCRETE PIPE
RCV	REMOTE CONTROL VALVE
RCVM	REMOTE CONTROL VALVE (MASTER)
RCVMF	REMOTE CONTROL VALVE (MASTER) W/FLOW SENSOR
RCVP	REMOTE CONTROL VALVE W/PRESSURE REGULATOR
RCW	RECYCLED WATER
RECP	ROLLED EROSION CONTROL PRODUCT
REQ	REQUIRED
RICS	REMOTE IRRIGATION CONTROL SYSTEM
R/W	RIGHT OF WAY

S

S	SLIP
SCH	SCHEDULE
SF	STATE-FURNISHED
Shld	SHOULDER
Sq	SQUARE
SST	SIDE STRIP
Sta	STATION
Std	STANDARD
SW	SIDEWALK/SOUND WALL

T

T	THIRD CIRCLE/THREAD
TLS	TRUCK LOADING STANDPIPE
TQ	THREE QUARTER CIRCLE
TRM	TURF REINFORCEMENT MAT
TT	TWO-THIRDS CIRCLE
TWSA	TREE WELL SPRINKLER ASSEMBLY
Typ	TYPICAL

U

UG	UNDERGROUND

W

W	WIDTH
W/	WITH
WM	WATER METER
WS	WYE STRAINER
WSA	WYE STRAINER ASSEMBLY
WSP	WELDED STEEL PIPE
WWM	WELDED WIRE MESH

NOTE:
For additional abbreviations, see Standard Plans A10A and A10B.

STATE OF CALIFORNIA
DEPARTMENT OF TRANSPORTATION

LANDSCAPE AND EROSION CONTROL ABBREVIATIONS

NO SCALE

RSP H1 DATED JULY 19, 2013 SUPERSEDES STANDARD PLAN H1 DATED MAY 20, 2011 - PAGE 218 OF THE STANDARD PLANS BOOK DATED 2010.

REVISED STANDARD PLAN RSP H1

2010 REVISED STANDARD PLAN RSP H1

6-28-13

Dist	COUNTY	ROUTE	POST MILES TOTAL PROJECT	SHEET No.	TOTAL SHEETS
07	Ven	101	14.1/21.1	97	108

LICENSED LANDSCAPE ARCHITECT

November 15, 2013
PLANS APPROVAL DATE

LICENSED LANDSCAPE ARCHITECT
Gregory A. Balzer 2576
02-28-15
Renewal Date
11-15-13
Date
STATE OF CALIFORNIA

THE STATE OF CALIFORNIA OR ITS OFFICERS OR AGENTS SHALL NOT BE RESPONSIBLE FOR THE ACCURACY OR COMPLETENESS OF SCANNED COPIES OF THIS PLAN SHEET.

TO ACCOMPANY PLANS DATED 2-9-15

2010 REVISED STANDARD PLAN RSP H2

EXISTING	NEW	ITEM DESCRIPTION
		WATER METER (WM)
		BACKFLOW PREVENTER ASSEMBLY (BPA)
		BACKFLOW PREVENTER ENCLOSURE (BPE)
		BOOSTER PUMP (BP)
		TRUCK LOADING STANDPIPE (TLS)
	FS	FLOW SENSOR (FS)
		MASTER IRRIGATION CONTROLLER (MIC)
		AUXILIARY IRRIGATION CONTROLLER (AIC)
		IRRIGATION CONTROLLER (IC) IRRIGATION CONTROLLER (IC) (BATTERY) IRRIGATION CONTROLLER (IC) (SOLAR) IRRIGATION CONTROLLER (IC) (TWO WIRE) IRRIGATION CONTROLLER(S) IN CONTROLLER ENCLOSURE CABINET (ICC)
acc	ACC	ARMOR-CLAD CONDUCTORS (ACC)
cnc	CNC	CONTROL AND NEUTRAL CONDUCTORS (CNC)
		IRRIGATION CONDUIT
		EXTEND IRRIGATION CONDUIT
dip	DIP	DUCTILE IRON PIPE (SUPPLY LINE) (MAIN) (DIP)
		GALVANIZED STEEL PIPE (SUPPLY LINE) (MAIN) (GSP)
		GALVANIZED STEEL PIPE (SUPPLY LINE) (LATERAL) (GSP)
		PLASTIC PIPE (SUPPLY LINE) (MAIN)
		PLASTIC PIPE (SUPPLY LINE) (LATERAL)
cp	CP	COPPER PIPE (SUPPLY LINE)
dit	DIT	DRIP IRRIGATION TUBING
		REMOTE CONTROL VALVE (RCV) REMOTE CONTROL VALVE (MASTER) (RCVM) REMOTE CONTROL VALVE (MASTER) W/FLOW METER (RCVMF)
P	P	REMOTE CONTROL VALVE W/PRESSURE REGULATOR (RCVP)
		EXISTING MANUAL CONTROL VALVE (MCV)
	V	DRIP VALVE ASSEMBLY (DVA)
	Y	WYE STRAINER ASSEMBLY (WSA)

EXISTING	NEW	ITEM DESCRIPTION
		GATE VALVE (GV)
		BALL VALVE (BV)
		QUICK COUPLING VALVE (QCV)
		CAM COUPLER ASSEMBLY (CCA)
		GARDEN VALVE ASSEMBLY (GARVA)
		PRESSURE REGULATING VALVE (PRV)
		PRESSURE RELIEF VALVE (PRLV)
		FLOW CONTROL VALVE (FCV)
		COMBINATION AIR RELEASE VALVE (CARV)
		CHECK VALVE (CV)
		FLUSH VALVE (FV)
		EXISTING NOZZLE LINE W/TURNING UNION
		EXISTING IRRIGATION SYSTEM
		EXISTING IRRIGATION SYSTEM TO BE REMOVED
		CHAIN LINK GATE
		QUICK COUPLING VALVE W/SPRINKLER PROTECTOR
3	3	SPRINKLER W/SPRINKLER PROTECTOR
	C	CONNECT TO EXISTING SYSTEM
		CAP
		CAP EXISTING
	\\\FR\\\	FIBER ROLL
	\\\CS\\\	COMPOST SOCK

- RCV SIZE
- IRRIGATION CONTROLLER
- CONTROLLER STATION
- VALVE IN PARALLEL (IF APPLICABLE)
- GPM
- QUANTITY OF SPRINKLERS (WHEN SHOWN)

* 2½"-A-2b-40-60

VALVE CODE

* VALVE CODES FOR EXISTING VALVES ARE SHOWN IN A DASHED ENCLOSURE.

STATE OF CALIFORNIA
DEPARTMENT OF TRANSPORTATION

LANDSCAPE AND EROSION CONTROL SYMBOLS

NO SCALE

RSP H2 DATED NOVEMBER 15, 2013 SUPERSEDES RSP H2 DATED JULY 19, 2013 AND STANDARD PLAN H2 DATED MAY 20, 2011 - PAGE 219 OF THE STANDARD PLANS BOOK DATED 2010.

REVISED STANDARD PLAN RSP H2

10-9-13

Dist	COUNTY	ROUTE	POST MILES TOTAL PROJECT	SHEET No.	TOTAL SHEETS
07	Ven	101	14.1/21.1	98	108

Gregory A. Balzer
LICENSED LANDSCAPE ARCHITECT

July 19, 2013
PLANS APPROVAL DATE

LICENSED LANDSCAPE ARCHITECT
Gregory A. Balzer 2576
Expiration Date 2-28-15
Renewal Date 7-19-13
Date
STATE OF CALIFORNIA

THE STATE OF CALIFORNIA OR ITS OFFICERS OR AGENTS SHALL NOT BE RESPONSIBLE FOR THE ACCURACY OR COMPLETENESS OF SCANNED COPIES OF THIS PLAN SHEET.

TO ACCOMPANY PLANS DATED 2-9-15

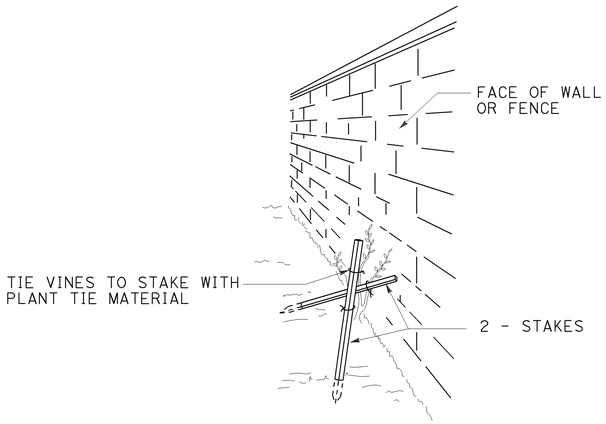

PERSPECTIVE
VINE STAKING

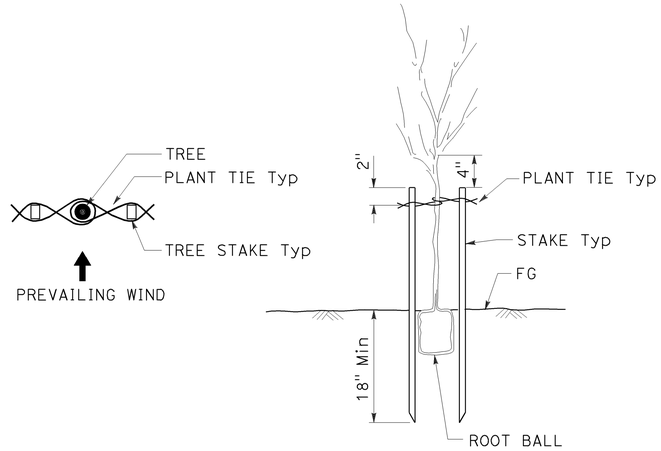

TREE STAKING

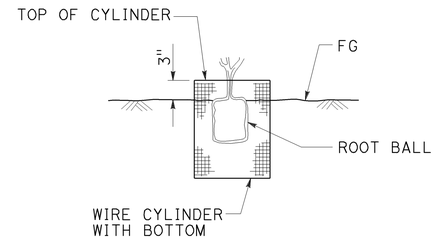

SECTION
ROOT PROTECTOR

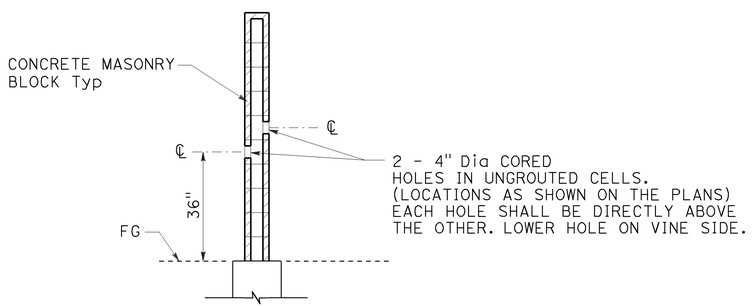

SECTION
CORE HOLE (VINE)

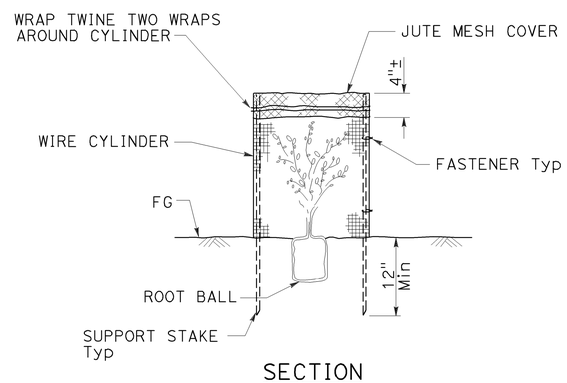

SECTION
FOLIAGE PROTECTOR

STATE OF CALIFORNIA
DEPARTMENT OF TRANSPORTATION

LANDSCAPE DETAILS

NO SCALE

RSP H4 DATED JULY 19, 2013 SUPERSEDES STANDARD PLAN H4
DATED MAY 20, 2011 - PAGE 221 OF THE STANDARD PLANS BOOK DATED 2010.

REVISED STANDARD PLAN RSP H4

2010 REVISED STANDARD PLAN RSP H4

6-28-13

Dist	COUNTY	ROUTE	POST MILES TOTAL PROJECT	SHEET No.	TOTAL SHEETS
07	Ven	101	14.1/21.1	99	108

Gregory A. Balzer
LICENSED LANDSCAPE ARCHITECT

July 19, 2013
PLANS APPROVAL DATE

LICENSED LANDSCAPE ARCHITECT Gregory A. Balzer 2576 Registered Expires 2-28-15 Renewal Date 7-19-13 Date STATE OF CALIFORNIA

THE STATE OF CALIFORNIA OR ITS OFFICERS OR AGENTS SHALL NOT BE RESPONSIBLE FOR THE ACCURACY OR COMPLETENESS OF SCANNED COPIES OF THIS PLAN SHEET.

TO ACCOMPANY PLANS DATED 2-9-15

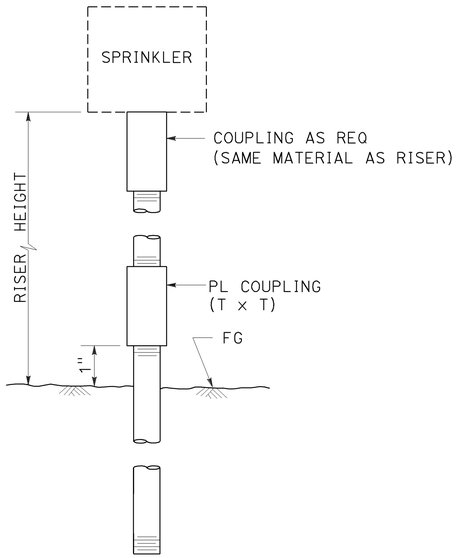

ELEVATION

RISER SPRINKLER ASSEMBLY TYPE I

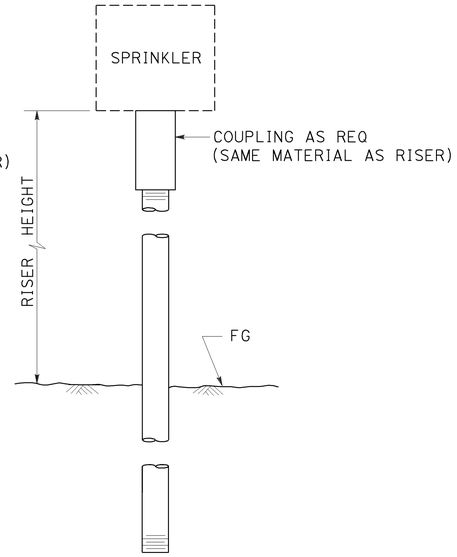

ELEVATION

RISER SPRINKLER ASSEMBLY TYPE II

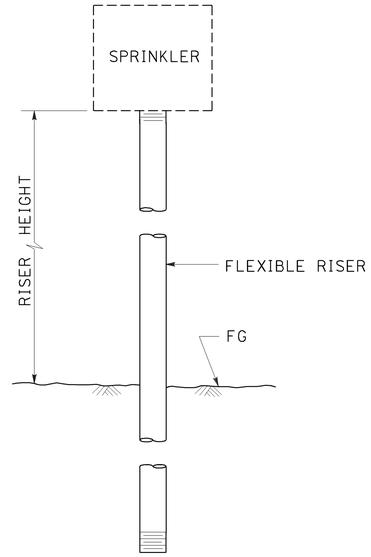

ELEVATION

RISER SPRINKLER ASSEMBLY TYPE III

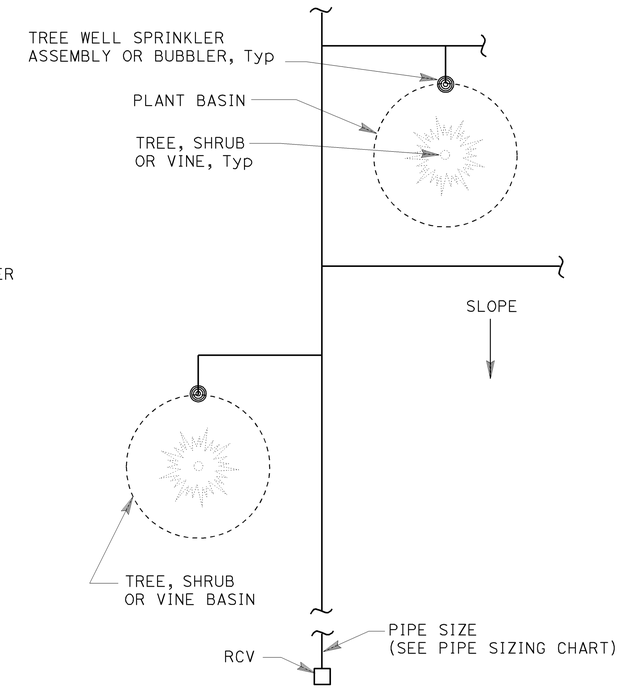

PLAN

NOTES:

1. Install tree well sprinkler assembly on up-hill side of plant when on slope.
2. Install bubbler within basin.

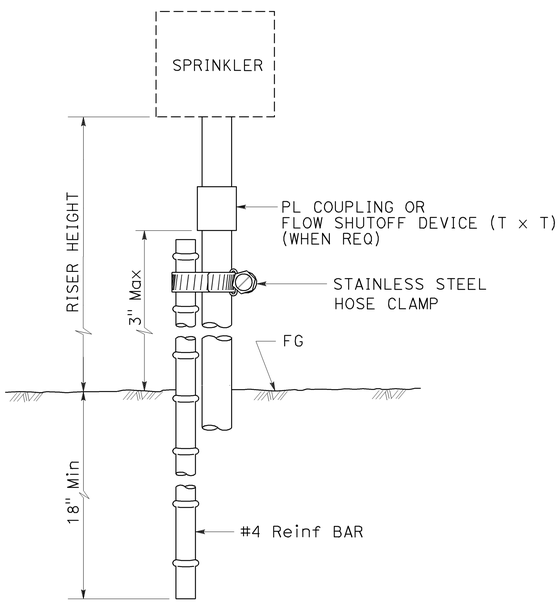

ELEVATION

RISER SPRINKLER ASSEMBLY TYPE IV

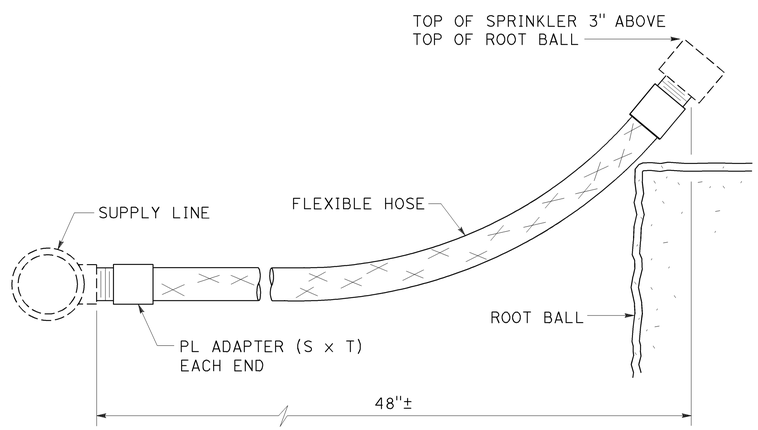

ELEVATION

RISER SPRINKLER ASSEMBLY TYPE V

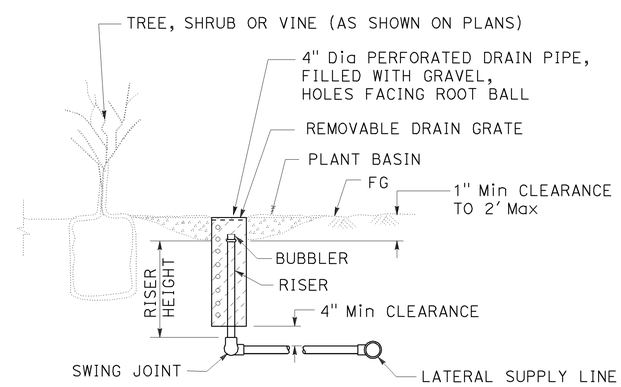

SECTION

TREE WELL SPRINKLER ASSEMBLY

STATE OF CALIFORNIA
DEPARTMENT OF TRANSPORTATION

LANDSCAPE DETAILS

NO SCALE

RSP H5 DATED JULY 19, 2013 SUPERSEDES STANDARD PLAN H5
DATED MAY 20, 2011 - PAGE 222 OF THE STANDARD PLANS BOOK DATED 2010.

REVISED STANDARD PLAN RSP H5

2010 REVISED STANDARD PLAN RSP H5

6-28-13

Dist	COUNTY	ROUTE	POST MILES TOTAL PROJECT	SHEET No.	TOTAL SHEETS
07	Ven	101	14.1/21.1	100	108

Gregory A. Balzer
LICENSED LANDSCAPE ARCHITECT

July 19, 2013
PLANS APPROVAL DATE

LICENSED LANDSCAPE ARCHITECT
Gregory A. Balzer 2576
Gregory A. Balzer
02-28-15
Renewal Date
7-19-13
Date
STATE OF CALIFORNIA

THE STATE OF CALIFORNIA OR ITS OFFICERS OR AGENTS SHALL NOT BE RESPONSIBLE FOR THE ACCURACY OR COMPLETENESS OF SCANNED COPIES OF THIS PLAN SHEET.

TO ACCOMPANY PLANS DATED 2-9-15

2010 REVISED STANDARD PLAN RSP H6

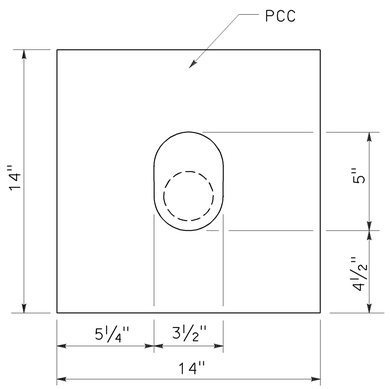

PLAN

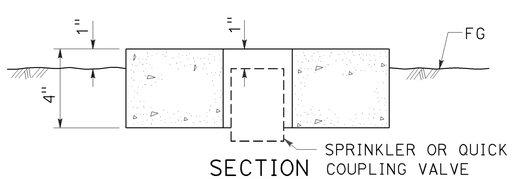

SECTION

SPRINKLER PROTECTOR TYPE I

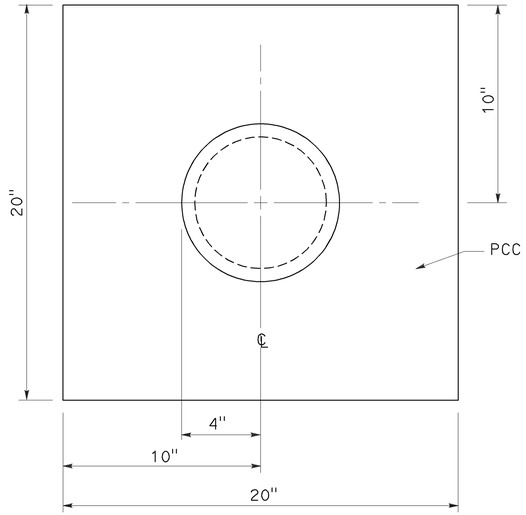

PLAN

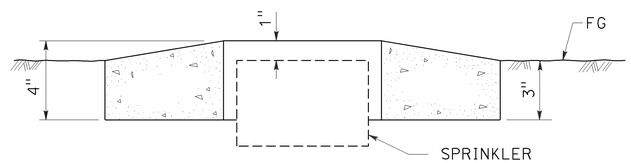

SECTION

SPRINKLER PROTECTOR TYPE II

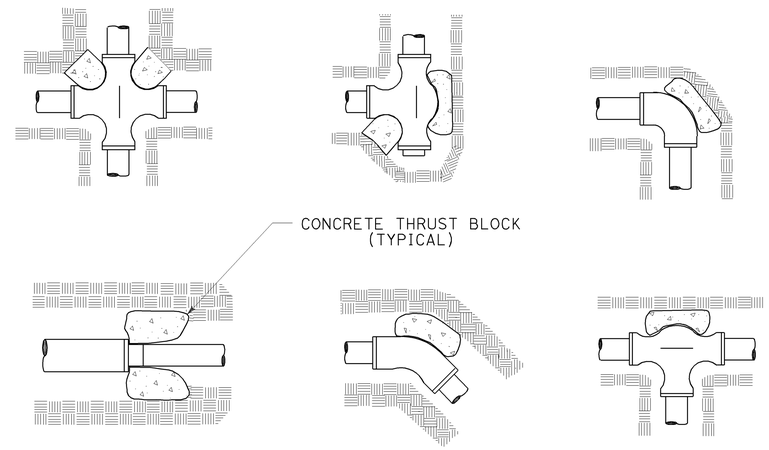

TYPICAL THRUST BLOCKS

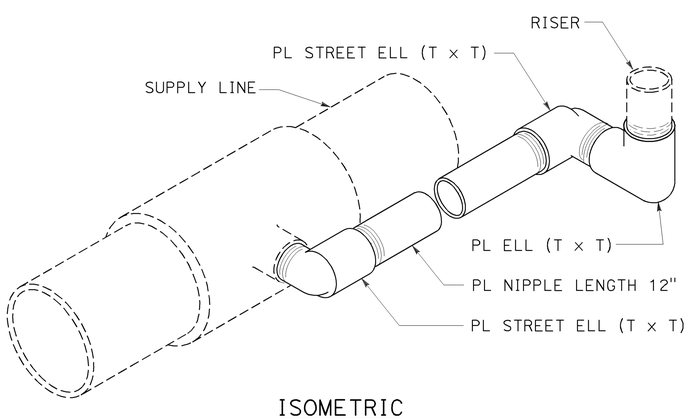

ISOMETRIC

POP-UP SPRINKLER ASSEMBLY TYPE I

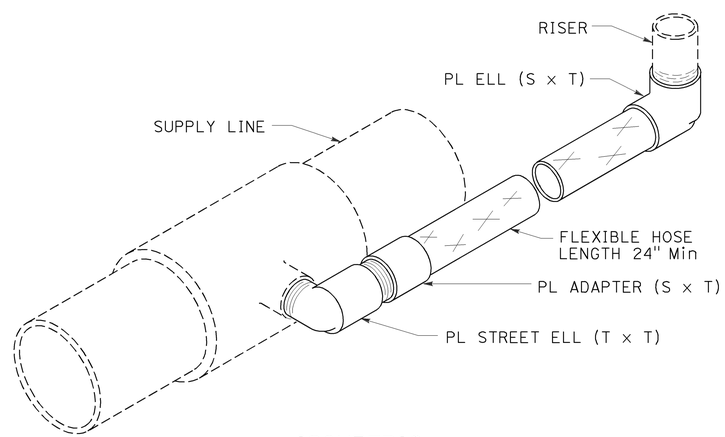

ISOMETRIC

POP-UP SPRINKLER ASSEMBLY TYPE II

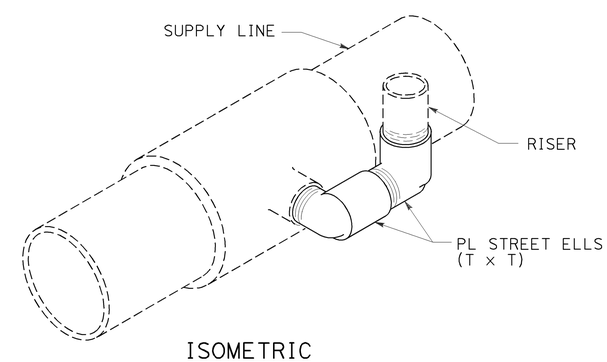

ISOMETRIC

POP-UP SPRINKLER ASSEMBLY TYPE III

STATE OF CALIFORNIA
DEPARTMENT OF TRANSPORTATION

LANDSCAPE DETAILS

NO SCALE

RSP H6 DATED JULY 19, 2013 SUPERSEDES STANDARD PLAN H6
DATED MAY 20, 2011 - PAGE 223 OF THE STANDARD PLANS BOOK DATED 2010.

REVISED STANDARD PLAN RSP H6

6-28-13