ACNHP-X037(186)E

Dist	COUNTY	ROUTE	POST MILES TOTAL PROJECT	SHEET No.	TOTAL SHEETS
07	Ven	33, 101	0.9/T5.8 2.3/13.8	1	239

STATE OF CALIFORNIA

DEPARTMENT OF TRANSPORTATION

PROJECT PLANS FOR CONSTRUCTION ON

STATE HIGHWAY

IN VENTURA COUNTY AT VARIOUS LOCATIONS

TO BE SUPPLEMENTED BY STANDARD PLANS DATED 2010

INDEX OF PLANS

SHEET No.	DESCRIPTION
1	TITLE AND LOCATION MAP
2-3	LOCATIONS OF CONSTRUCTION
4	TYPICAL CROSS SECTIONS
5-23	LAYOUTS
24-31	CONSTRUCTION DETAILS
32-107	WATER POLLUTION CONTROL PLANS, PROFILES, DETAILS AND QUANTITIES
108-119	CONTOUR GRADING PLANS
120-132	UTILITY PLANS
133	CONSTRUCTION AREA SIGNS
134-153	TRAFFIC HANDLING PLANS, DETAILS AND QUANTITIES
154-161	PAVEMENT DELINEATION AND SIGN PLANS AND QUANTITIES
162-163	SUMMARY OF QUANTITIES
164	RETAINING WALL PLAN
165-191	LANDSCAPE PLANS
192-197	ELECTRICAL PLANS
198-239	REVISED STANDARD PLANS

THE STANDARD PLANS LIST APPLICABLE TO THIS CONTRACT IS INCLUDED IN THE NOTICE TO BIDDERS AND SPECIAL AND SPECIAL PROVISIONS BOOK

LOCATION MAP

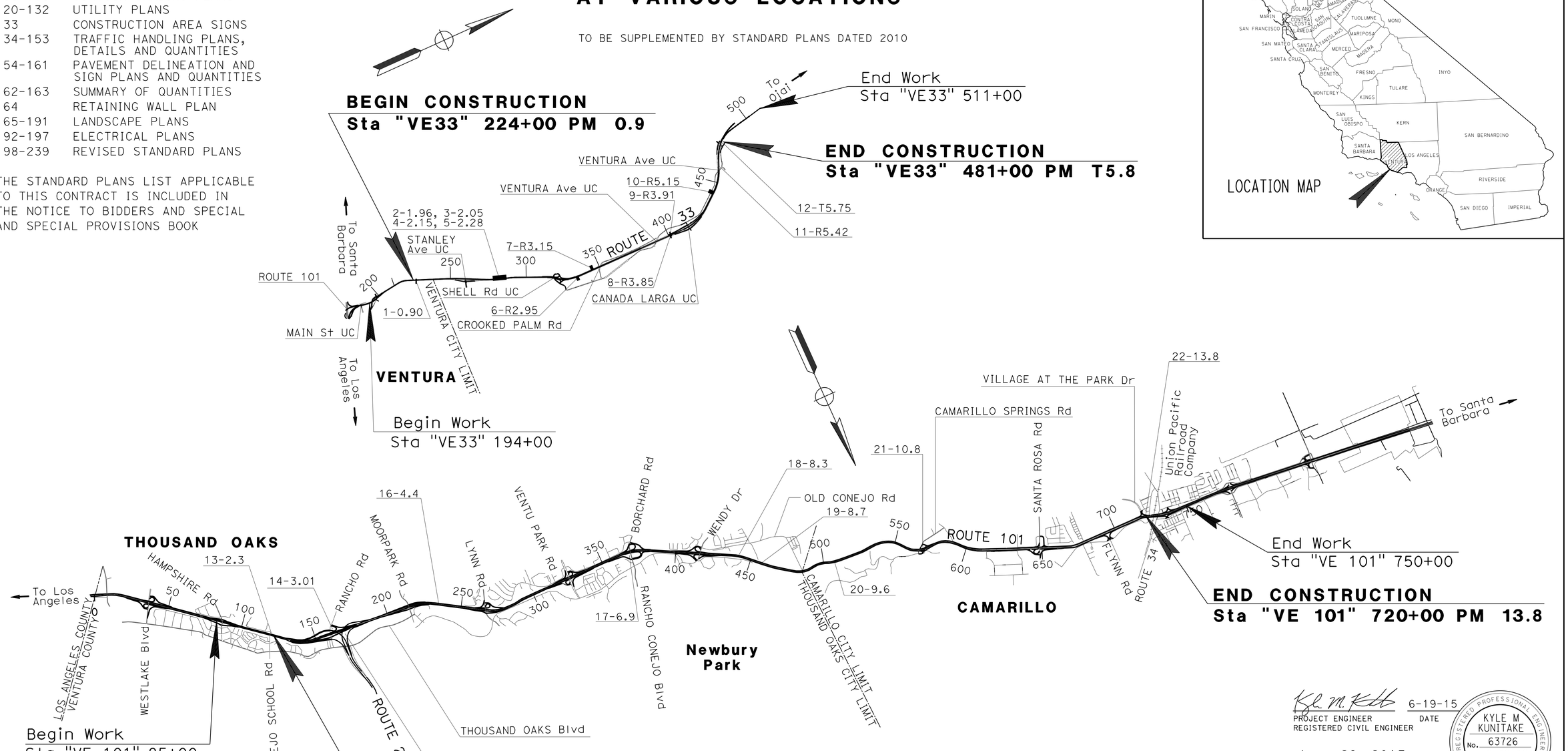

NOTE:

THE TABLE OF LOCATIONS OF CONSTRUCTION IS SHOWN ON THE LOCATIONS OF CONSTRUCTION SHEET.

NO SCALE

THE CONTRACTOR SHALL POSSESS THE CLASS (OR CLASSES) OF LICENSE AS SPECIFIED IN THE "NOTICE TO BIDDERS."

PROJECT MANAGER RAVI GHATE

DESIGN MANAGER KYLE M. KUNITAKE

PROJECT ENGINEER REGISTERED CIVIL ENGINEER — DATE 6-19-15

June 29, 2015
PLANS APPROVAL DATE

REGISTERED PROFESSIONAL ENGINEER — KYLE M KUNITAKE — No. 63726 — Exp. 9-30-16 — CIVIL — STATE OF CALIFORNIA

THE STATE OF CALIFORNIA OR ITS OFFICERS OR AGENTS SHALL NOT BE RESPONSIBLE FOR THE ACCURACY OR COMPLETENESS OF SCANNED COPIES OF THIS PLAN SHEET.

CONTRACT No.	07-2750U4
PROJECT ID	0715000283

LAST REVISION 05-27-15 — DATE PLOTTED => 11-SEP-2015 TIME PLOTTED => 11:00

Dist	COUNTY	ROUTE	POST MILES TOTAL PROJECT	SHEET No.	TOTAL SHEETS
07	Ven	33, 101	0.9/T5.8 2.3/13.8	2	239

REGISTERED CIVIL ENGINEER 6/19/15 DATE

6-29-15
PLANS APPROVAL DATE

REGISTERED PROFESSIONAL ENGINEER
KYLE M KUNITAKE
No. 63726
Exp. 9/30/16
CIVIL
STATE OF CALIFORNIA

THE STATE OF CALIFORNIA OR ITS OFFICERS OR AGENTS SHALL NOT BE RESPONSIBLE FOR THE ACCURACY OR COMPLETENESS OF SCANNED COPIES OF THIS PLAN SHEET.

LOCATIONS OF CONSTRUCTION (ROUTE 33)

Loc No. (#)	COUNTY	ROUTE	PM	DIRECTION	LOCATION	DEVICE TYPE	SHEET No.
1	Ven	33	0.90	NB	OUTSIDE Shld	DRAINAGE MODIFICATION & MVP	L-1, G-1, W-1, U-1, PP-1
2	Ven	33	1.96	SB	OUTSIDE Shld	GROSS SOLIDS REMOVAL DEVICE	L-2, G-2, W-2, U-2, TH-1, PP-2
3	Ven	33	2.05	SB	OUTSIDE Shld	GROSS SOLIDS REMOVAL DEVICE	L-2, G-2, W-2, U-2, TH-1, PD-1, PP-2
4	Ven	33	2.15	SB	OUTSIDE Shld	GROSS SOLIDS REMOVAL DEVICE	L-3, G-3, W-3, U-3, TH-2, PP-3
5	Ven	33	2.28	SB	OUTSIDE Shld	GROSS SOLIDS REMOVAL DEVICE	L-3, G-3, W-3, U-3, TH-2, PP-3
6	Ven	33	R2.95	NB	OUTSIDE Shld	DRAINAGE MODIFICATION	L-4, W-4, U-4, TH-3, PD-2, PP-4
7	Ven	33	R3.15	SB	OUTSIDE Shld	GROSS SOLIDS REMOVAL DEVICE	L-5, G-4, W-5, U-5, TH-4, PP-5
8	Ven	33	R3.85	NB	GORE AREA	DRAINAGE MODIFICATION	L-6, W-6, U-6, PP-6
9	Ven	33	R3.91	SB	OUTSIDE Shld	GROSS SOLIDS REMOVAL DEVICE	L-6, G-5, W-6, U-6, TH-5, PP-6
10	Ven	33	R5.15	SB	OUTSIDE Shld	GROSS SOLIDS REMOVAL DEVICE	L-7, G-6, W-7, U-7, TH-6, PP-7
11	Ven	33	R5.42	NB	OUTSIDE Shld	DRAINAGE MODIFICATION	W-8, U-8, TH-7, PP-8
12	Ven	33	T5.75	NB	OUTSIDE Shld	DRAINAGE MODIFICATION	L-8, W-9, U-9, PP-9

LOCATIONS OF CONSTRUCTION

LC-1

STATE OF CALIFORNIA - DEPARTMENT OF TRANSPORTATION
Caltrans® DESIGN

FUNCTIONAL SUPERVISOR: SUJAYA KALAINESAN
CALCULATED-DESIGNED BY: CUONG T. TRAN
CHECKED BY: KATHY PHAM
REVISED BY
DATE REVISED

LAST REVISION 00-00-00
DATE PLOTTED => 11-SEP-2015
TIME PLOTTED => 11:00

Dist	COUNTY	ROUTE	POST MILES TOTAL PROJECT	SHEET No.	TOTAL SHEETS
07	Ven	33, 101	0.9/T5.8 2.3/13.8	3	239

REGISTERED CIVIL ENGINEER 6/19/15 DATE

6-29-15
PLANS APPROVAL DATE

REGISTERED PROFESSIONAL ENGINEER
KYLE M KUNITAKE
No. 63726
Exp. 9/30/16
CIVIL
STATE OF CALIFORNIA

THE STATE OF CALIFORNIA OR ITS OFFICERS OR AGENTS SHALL NOT BE RESPONSIBLE FOR THE ACCURACY OR COMPLETENESS OF SCANNED COPIES OF THIS PLAN SHEET.

LOCATIONS OF CONSTRUCTION (ROUTE 101)

Loc No. #	COUNTY	ROUTE	PM	DIRECTION	LOCATION	DEVICE TYPE	SHEET No.
13	Ven	101	2.30	SB	SW CORNER SR-101 AND WILLOW Ln	AUSTIN VAULT SAND FILTER	L-9, G-7, W-10, U-10, TH-8, PP-10
14	Ven	101	3.01	SB	ON-RAMP FROM RANCHO Rd	AUSTIN VAULT SAND FILTER	L-10, G-8, W-11, U-11, TH-9, PP-11
15	Ven	101	3.10	NB	SB Ven-23 TO WB Ven-101	AUSTIN VAULT SAND FILTER	L-11, G-9, W-12, U-12, TH-10, PP-12
16	Ven	101	4.40	SB	OUTSIDE Shld BETWEEN MOORPARK Rd AND LYNN Rd	AUSTIN VAULT SAND FILTER	L-12, W-13, U-13, TH-11, PD-3, PP-13
17	Ven	101	6.90	NB	NE CORNER SR-101 AND RANCHO CONEJO Rd	DRAINAGE MODIFICATION AND MVP	L-13, W-14, U-14, TH-12, PD-4, PP-14
18	Ven	101	8.30	SB	OUTSIDE Shld BETWEEN WENDY Dr AND TRUCK WEIGH STATION	AUSTIN VAULT SAND FILTER	L-14, G-10, W-15, U-15, TH-13, PD-5, PP-15
19	Ven	101	8.70	SB	OUTSIDE Shld BETWEEN WENDY Dr AND TRUCK WEIGH STATION	AUSTIN VAULT SAND FILTER	L-15, G-11, W-16, U-16, TH-14, PD-6, PP-16
20	Ven	101	9.60	NB	OUTSIDE Shld BETWEEN TRUCK WEIGHT STATION AND CAMARILLO SPRINGS Rd	BIOFILTRATION STRIP	L-16, L-17, U-17, U-18, PP-17, PP-18
21	Ven	101	10.80	SB	LOOP ON-RAMP FROM CAMARILLO SPRINGS Rd	AUSTIN VAULT SAND FILTER	L-18, G-12, W-17, U-19, TH-15, PP-19
22	Ven	101	13.80	SB	OFF-RAMP TO VILLAGE AT THE PARK Dr	DRAINAGE MODIFCATION	L-19, W-18, U-20, PP-20

LOCATIONS OF CONSTRUCTION

LC-2

REVISED BY | DATE REVISED
CUONG T. TRAN | KATHY PHAM
CALCULATED-DESIGNED BY | CHECKED BY
FUNCTIONAL SUPERVISOR
KYLE M. KUNITAKE
STATE OF CALIFORNIA - DEPARTMENT OF TRANSPORTATION
Caltrans
DESIGN

LAST REVISION 00-00-00 | DATE PLOTTED => 11-SEP-2015 | TIME PLOTTED => 11:00

Dist	COUNTY	ROUTE	POST MILES TOTAL PROJECT	SHEET No.	TOTAL SHEETS
07	Ven	33, 101	0.9/T5.8 2.3/13.8	4	239

REGISTERED CIVIL ENGINEER 6/19/15 DATE

6-29-15
PLANS APPROVAL DATE

REGISTERED PROFESSIONAL ENGINEER
KYLE M KUNITAKE
No. 63726
Exp. 9/30/16
CIVIL
STATE OF CALIFORNIA

THE STATE OF CALIFORNIA OR ITS OFFICERS OR AGENTS SHALL NOT BE RESPONSIBLE FOR THE ACCURACY OR COMPLETENESS OF SCANNED COPIES OF THIS PLAN SHEET.

NOTES:

1. DIMENSIONS OF THE STRUCTURAL SECTIONS ARE SUBJECT TO TOLERANCES SPECIFIED IN THE STANDARD SPECIFICATIONS.
2. SUPERELEVATION AS SHOWN OR AS DIRECTED BY THE ENGINEER.

TYPICAL PAVEMENT STRUCTURAL SECTIONS:

1
- 0.20′ RUBBERIZED HOT MIX ASPHALT (GAP GRADED)
- 0.25′ HOT MIX ASPHALT (TYPE A)
- 0.45′ LEAN CONCRETE BASE
- 0.75′ CLASS 3 AGGREGATE BASE

2
- 0.20′ RUBBERIZED HOT MIX ASPHALT (GAP GRADED)
- 0.35′ HOT MIX ASPHALT (TYPE A)
- 0.55′ LEAN CONCRETE BASE RAPID SETTING
- 1.05′ CLASS 3 AGGREGATE BASE

3
- 0.5′ HOT MIX ASPHALT (TYPE A)

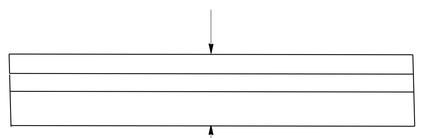

TYPE 1

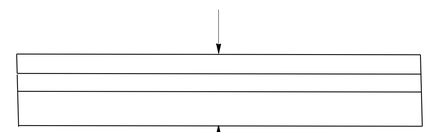

TYPE 2

TYPE 3

EXISTING STRUCTURE SECTIONS

A
- 0.3′ ASPHALT CONCRETE
- 0.7′ ASPHALT BASE
- 1.0′ ASPHALT SUBBASE

B
- 0.33′ ASPHALT CONCRETE
- 0.67′ ASPHALT BASE
- 1.0′ ASPHALT SUBBASE

C
- 0.4′ ASPHALT CONCRETE (TYPE B)
- 0.7′ ASPHALT BASE (CLASS 2)
- 0.9′ ASPHALT SUBBASE (CLASS 4)

D
- 0.25′ ASPHALT CONCRETE (TYPE B)
- 0.50′ ASPHALT BASE (CLASS 2)
- Var THICKNESS ASPHALT SUBBASE (CLASS 4)

E
- 0.25′ ASPHALT CONCRETE (TYPE B)
- 0.50′ ASPHALT BASE (CLASS 2)
- Var THICKNESS ASPHALT SUBBASE (CLASS 4)

F
- 0.30′ ASPHALT CONCRETE (TYPE B)
- 0.65′ ROAD MIXED CEMENT TREATED BASE (CLASS A)
- 0.35′ ASPHALT BASE (CLASS 3)
- 0.5′ ASPHALT SUBBASE (TYPE B)

G
- 0.40′ ASPHALT CONCRETE (TYPE B)
- 0.70′ CLASS 2 ASPHALT BASE (CLASS 2)
- 0.90′ CLASS 4 ASPHALT SUBBASE (CLASS 4)

H
- 0.25′ TO 0.15′ ASPHALT CONCRETE
- 0.50′ AND Var ASPHALT BASE (CLASS 2)
- 1.0′ ASPHALT SUBBASE (CLASS 4)

TYPICAL CROSS SECTIONS

NO SCALE

X-1

REVISED BY | DATE REVISED
LEVI ONYIAH | KATHY PHAM
CALCULATED-DESIGNED BY | CHECKED BY
FUNCTIONAL SUPERVISOR
KYLE KUNITAKE

STATE OF CALIFORNIA - DEPARTMENT OF TRANSPORTATION
Caltrans®
DESIGN

LAST REVISION 00-00-00
DATE PLOTTED => 11-SEP-2015
TIME PLOTTED => 11:00

Dist	COUNTY	ROUTE	POST MILES TOTAL PROJECT	SHEET No.	TOTAL SHEETS
07	Ven	33, 101	0.9/T5.8 2.3/13.8	5	239

REGISTERED CIVIL ENGINEER 6/19/15 DATE

6-29-15
PLANS APPROVAL DATE

REGISTERED PROFESSIONAL ENGINEER KYLE M KUNITAKE No. 63726 Exp. 9/30/16 CIVIL STATE OF CALIFORNIA

THE STATE OF CALIFORNIA OR ITS OFFICERS OR AGENTS SHALL NOT BE RESPONSIBLE FOR THE ACCURACY OR COMPLETENESS OF SCANNED COPIES OF THIS PLAN SHEET.

NOTE:

FOR ACCURATE RIGHT OF WAY DATA, CONTACT RIGHT OF WAY ENGINEERING AT THE DISTRICT OFFICE.

ABBREVIATIONS:

AVSF	AUSTIN VAULT SAND FILTER
BSW	BIOFILTRATION SWALE
BST	BIOFILTRATION STRIP
GSRD	GROSS SOLIDS REMOVAL DEVICE
WPCP	WATER POLLUTION CONTROL PLANS

LEGEND:

CHAIN LINK GATE (TYPE CL-6)

DIRECTION OF TRAFFIC

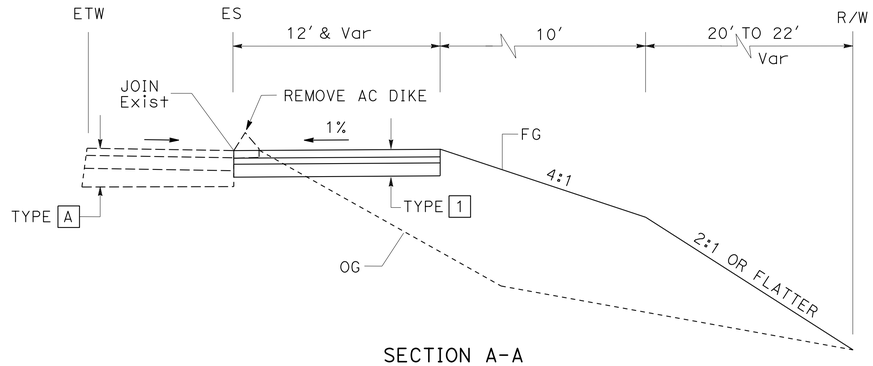

SECTION A-A
NO SCALE

Sta 224+04.00 TO 224+89.00

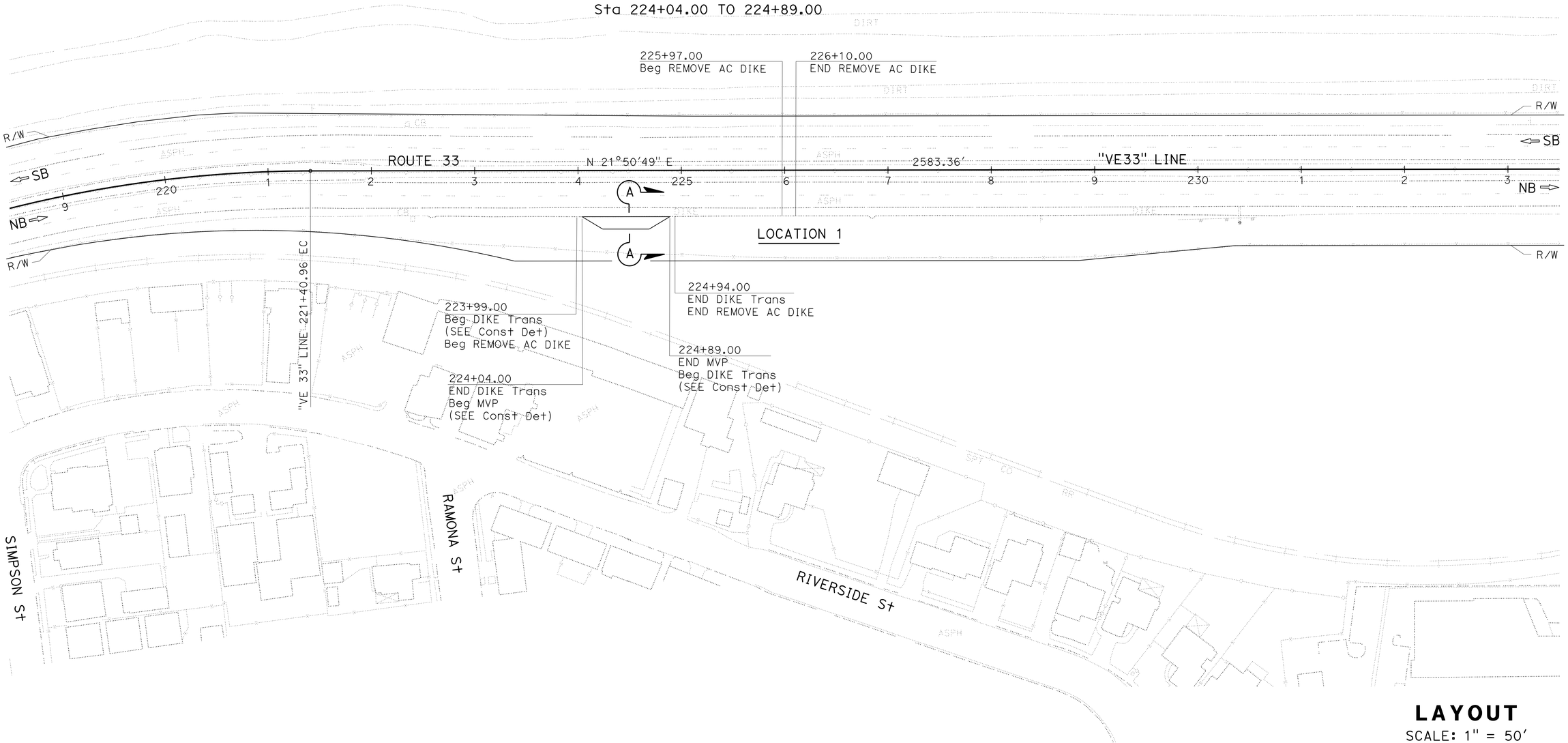

LAYOUT
SCALE: 1" = 50'

L-1

STATE OF CALIFORNIA - DEPARTMENT OF TRANSPORTATION
Caltrans
DESIGN

FUNCTIONAL SUPERVISOR: KYLE M. KUNITAKE
CALCULATED-DESIGNED BY: DAN PHAM
CHECKED BY: KATHY PHAM
REVISED BY
DATE REVISED

LAST REVISION 00-00-00
DATE PLOTTED => 11-SEP-2015
TIME PLOTTED => 11:00

Dist	COUNTY	ROUTE	POST MILES TOTAL PROJECT	SHEET No.	TOTAL SHEETS
07	Ven	33, 101	0.9/T5.8 2.3/13.8	6	239

REGISTERED CIVIL ENGINEER 6/19/15 DATE

6-29-15
PLANS APPROVAL DATE

REGISTERED PROFESSIONAL ENGINEER
KYLE M KUNITAKE
No. 63726
Exp. 9/30/16
CIVIL
STATE OF CALIFORNIA

THE STATE OF CALIFORNIA OR ITS OFFICERS OR AGENTS SHALL NOT BE RESPONSIBLE FOR THE ACCURACY OR COMPLETENESS OF SCANNED COPIES OF THIS PLAN SHEET.

NOTE:

FOR ACCURATE RIGHT OF WAY DATA, CONTACT
RIGHT OF WAY ENGINEERING AT THE DISTRICT OFFICE.

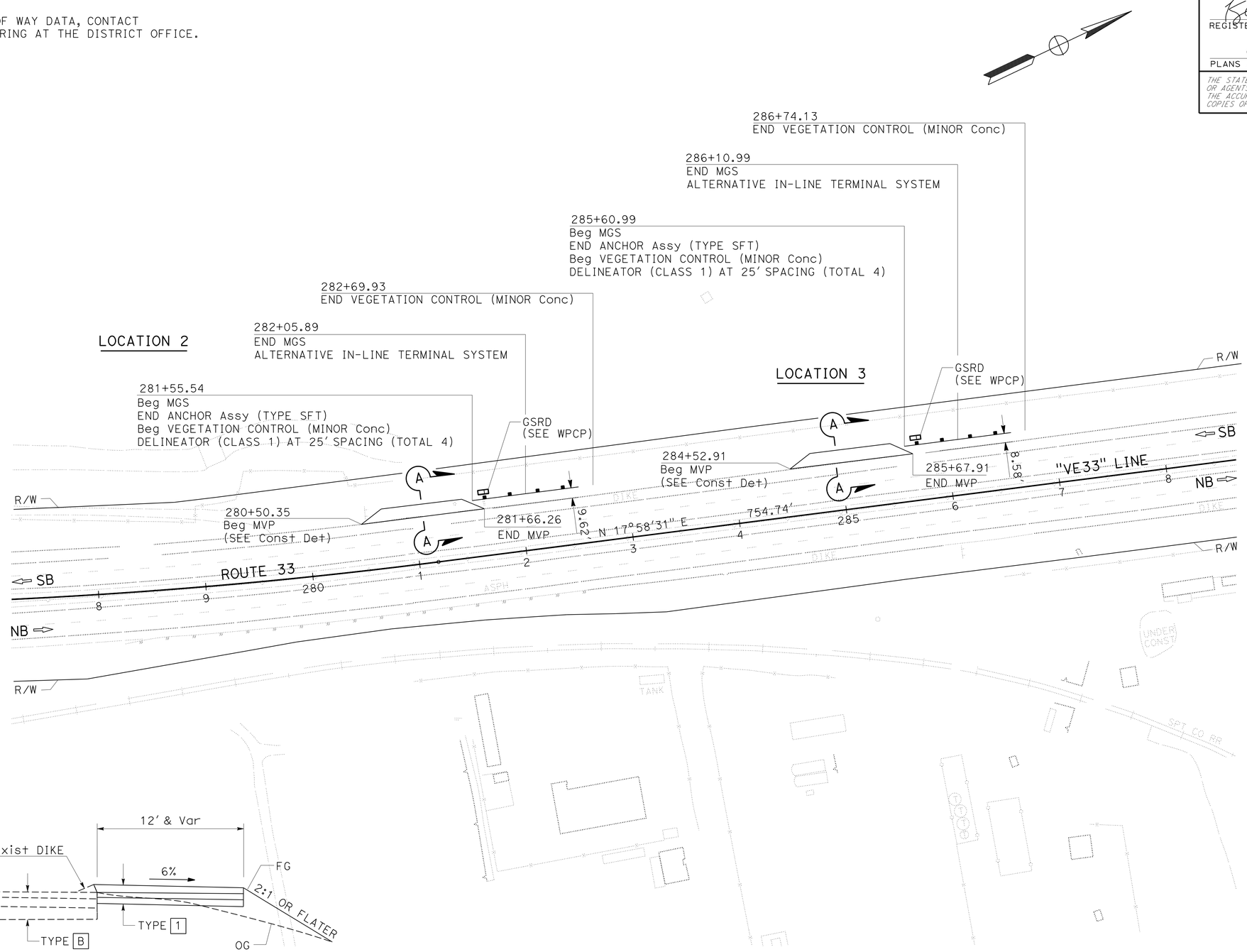

SECTION A-A
NO SCALE

Sta 280+50.35 TO 281+66.26
Sta 284+52.91 TO 285+67.91

LAYOUT

SCALE: 1" = 50'

L-2

STATE OF CALIFORNIA - DEPARTMENT OF TRANSPORTATION
Caltrans
DESIGN

FUNCTIONAL SUPERVISOR: KYLE M. KUNITAKE
CALCULATED-DESIGNED BY: DAN PHAM
CHECKED BY: KATHY PHAM
REVISED BY
DATE REVISED

LAST REVISION 00-00-00
DATE PLOTTED => 11-SEP-2015
TIME PLOTTED => 11:00

Dist	COUNTY	ROUTE	POST MILES TOTAL PROJECT	SHEET No.	TOTAL SHEETS
07	Ven	33, 101	0.9/T5.8 2.3/13.8	7	239

REGISTERED CIVIL ENGINEER 6/19/15 DATE

6-29-15
PLANS APPROVAL DATE

REGISTERED PROFESSIONAL ENGINEER
KYLE M KUNITAKE
No. 63726
Exp. 9/30/16
CIVIL
STATE OF CALIFORNIA

THE STATE OF CALIFORNIA OR ITS OFFICERS OR AGENTS SHALL NOT BE RESPONSIBLE FOR THE ACCURACY OR COMPLETENESS OF SCANNED COPIES OF THIS PLAN SHEET.

NOTE:

FOR ACCURATE RIGHT OF WAY DATA, CONTACT
RIGHT OF WAY ENGINEERING AT THE DISTRICT OFFICE.

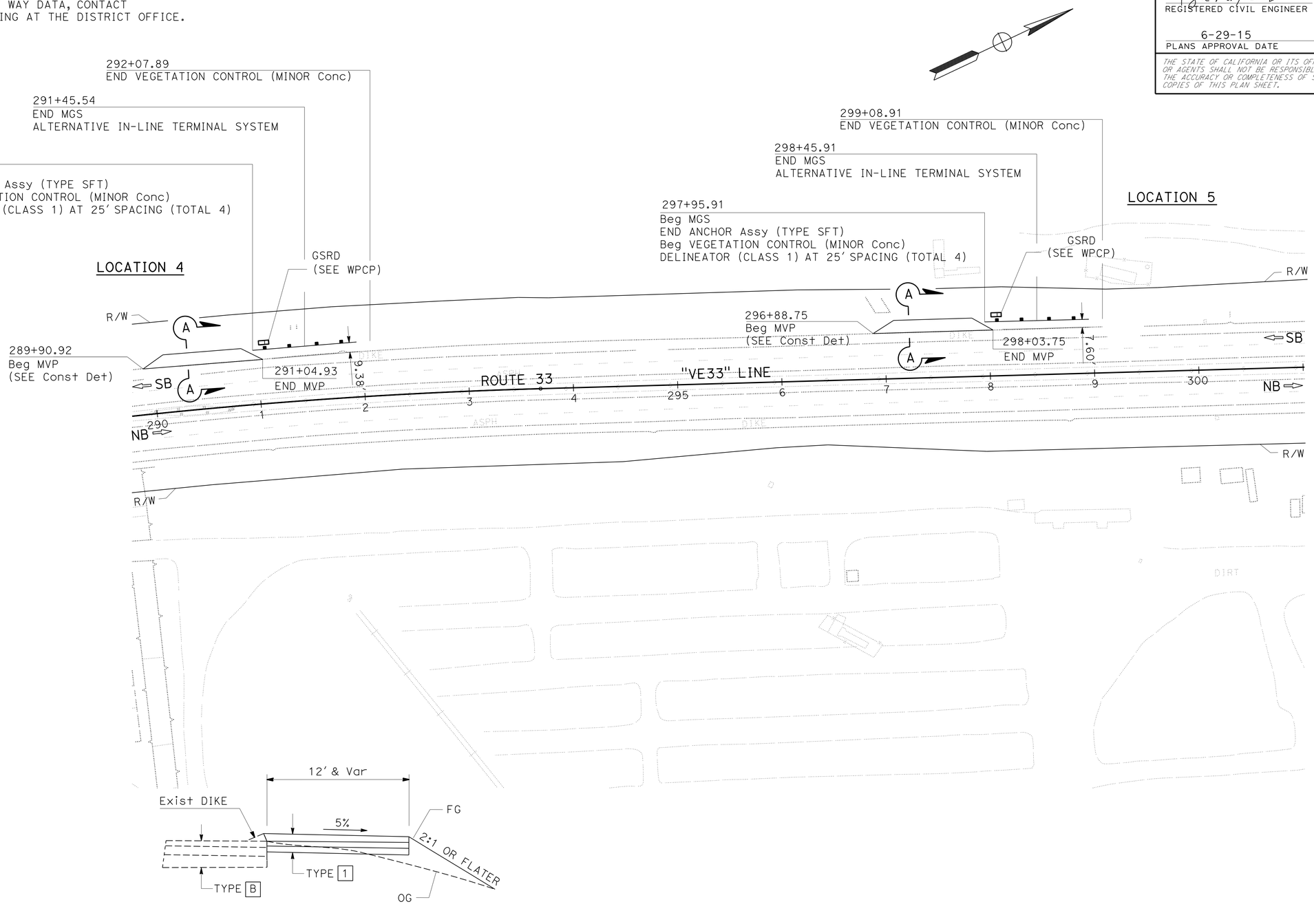

SECTION A-A
NO SCALE

Sta 289+90.92 TO 291+04.93
Sta 296+88.75 TO 298+03.75

LAYOUT
SCALE: 1" = 50'

L-3

STATE OF CALIFORNIA - DEPARTMENT OF TRANSPORTATION
Caltrans
DESIGN

FUNCTIONAL SUPERVISOR: KYLE M. KUNITAKE
CALCULATED-DESIGNED BY: DAN PHAM
CHECKED BY: KATHY PHAM
REVISED BY
DATE REVISED

LAST REVISION 00-00-00
DATE PLOTTED => 11-SEP-2015
TIME PLOTTED => 11:00

Dist	COUNTY	ROUTE	POST MILES TOTAL PROJECT	SHEET No.	TOTAL SHEETS
07	Ven	33, 101	0.9/T5.8 2.3/13.8	8	239

REGISTERED CIVIL ENGINEER 6/19/15 DATE

6-29-15
PLANS APPROVAL DATE

REGISTERED PROFESSIONAL ENGINEER
KYLE M KUNITAKE
No. 63726
Exp. 9/30/16
CIVIL
STATE OF CALIFORNIA

THE STATE OF CALIFORNIA OR ITS OFFICERS OR AGENTS SHALL NOT BE RESPONSIBLE FOR THE ACCURACY OR COMPLETENESS OF SCANNED COPIES OF THIS PLAN SHEET.

NOTE:

FOR ACCURATE RIGHT OF WAY DATA, CONTACT RIGHT OF WAY ENGINEERING AT THE DISTRICT OFFICE.

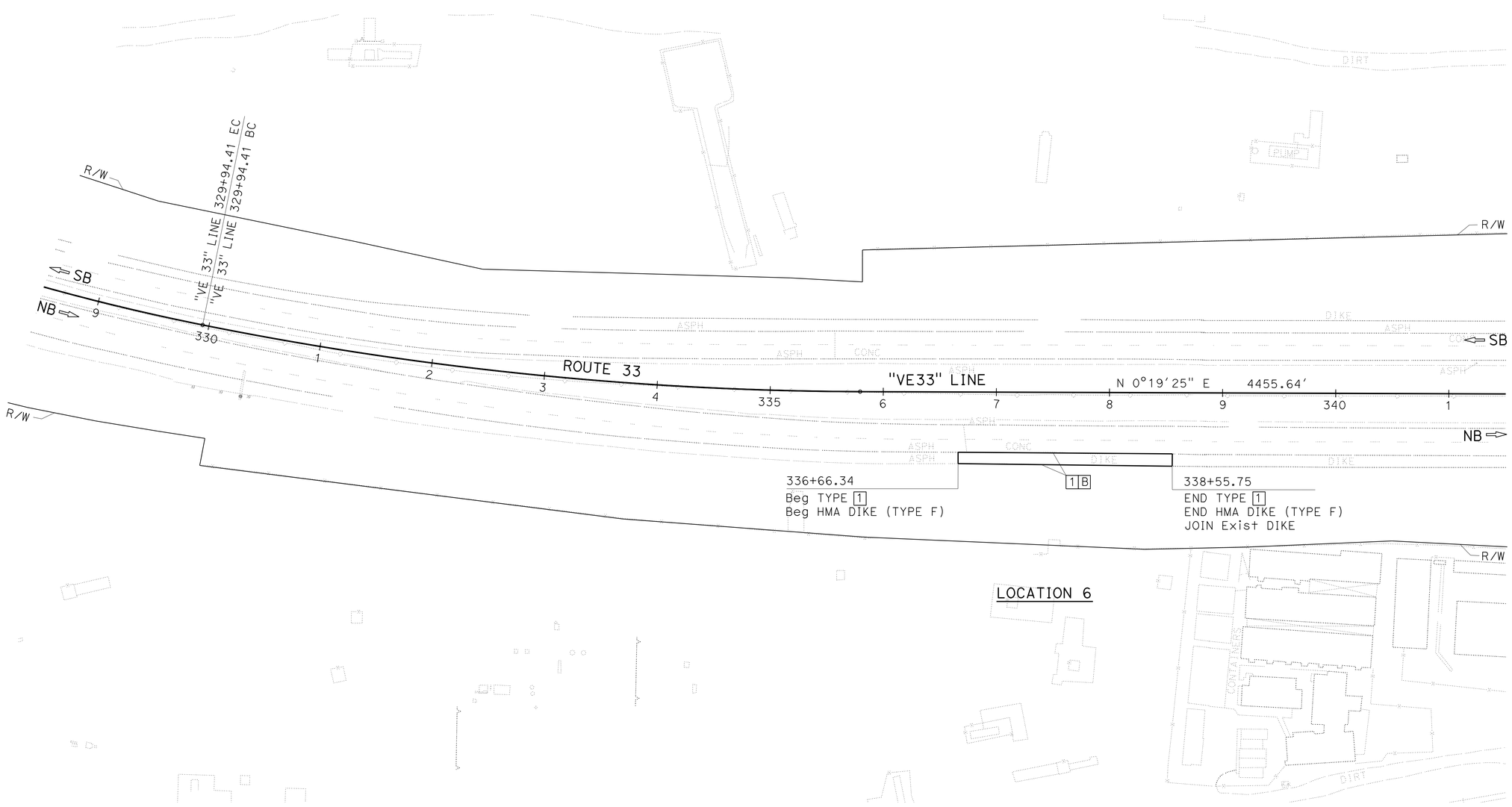

LAYOUT

SCALE: 1" = 50'

L-4

STATE OF CALIFORNIA - DEPARTMENT OF TRANSPORTATION
Caltrans
DESIGN

FUNCTIONAL SUPERVISOR: KYLE M. KUNITAKE

CALCULATED-DESIGNED BY: DAN PHAM
CHECKED BY: KATHY PHAM

REVISED BY
DATE REVISED

LAST REVISION 00-00-00
DATE PLOTTED => 11-SEP-2015
TIME PLOTTED => 11:00

Dist	COUNTY	ROUTE	POST MILES TOTAL PROJECT	SHEET No.	TOTAL SHEETS
07	Ven	33, 101	0.9/T5.8 2.3/13.8	9	239

REGISTERED CIVIL ENGINEER 6/19/15 DATE

6-29-15
PLANS APPROVAL DATE

REGISTERED PROFESSIONAL ENGINEER
KYLE M KUNITAKE
No. 63726
Exp. 9/30/16
CIVIL
STATE OF CALIFORNIA

THE STATE OF CALIFORNIA OR ITS OFFICERS OR AGENTS SHALL NOT BE RESPONSIBLE FOR THE ACCURACY OR COMPLETENESS OF SCANNED COPIES OF THIS PLAN SHEET.

NOTE:

FOR ACCURATE RIGHT OF WAY DATA, CONTACT RIGHT OF WAY ENGINEERING AT THE DISTRICT OFFICE.

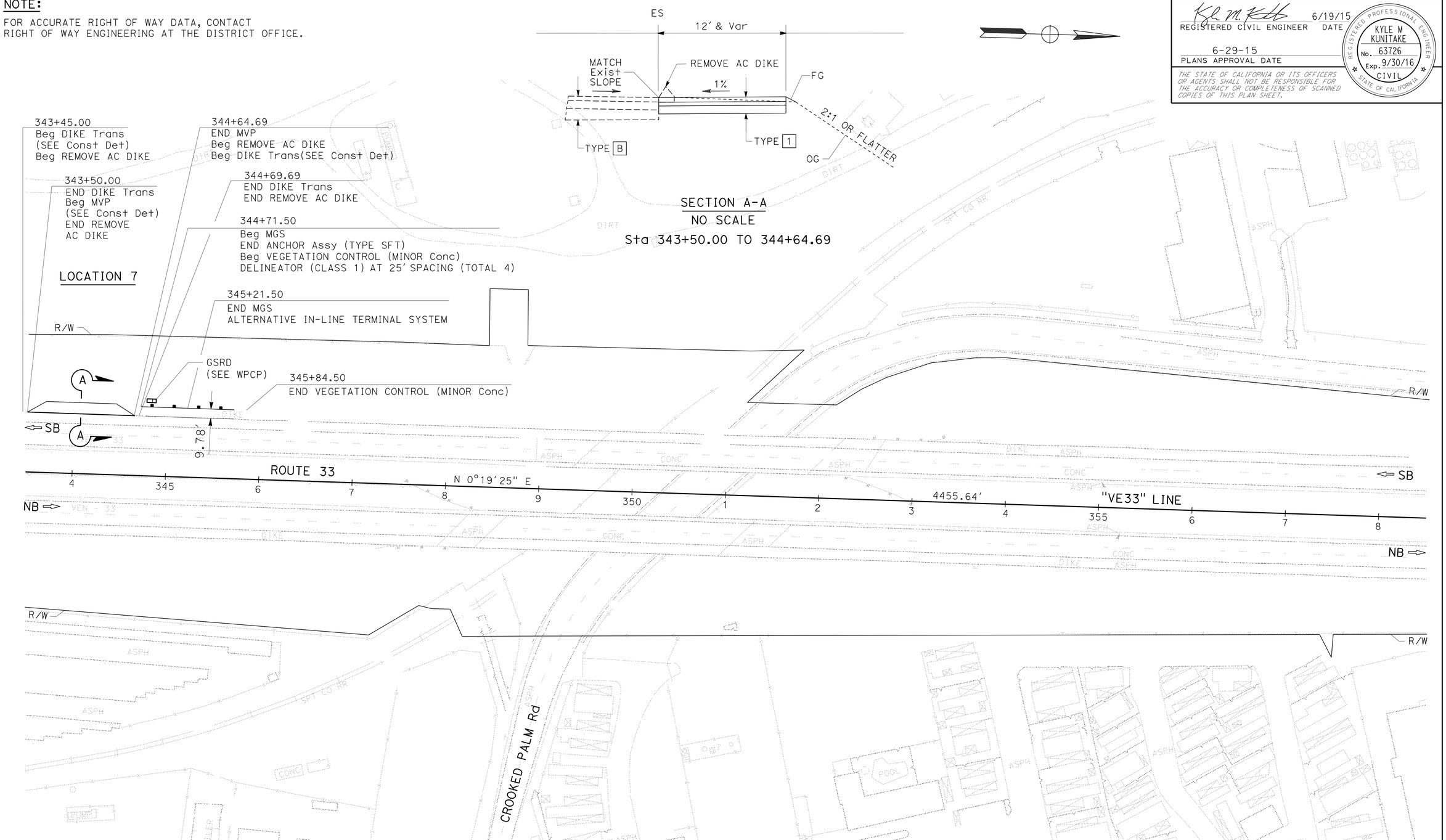

LAYOUT
SCALE: 1" = 50'

L-5

STATE OF CALIFORNIA - DEPARTMENT OF TRANSPORTATION
Caltrans® **DESIGN**

FUNCTIONAL SUPERVISOR: KYLE M. KUNITAKE

CALCULATED-DESIGNED BY: DAN PHAM
CHECKED BY: KATHY PHAM

REVISED BY | DATE REVISED

LAST REVISION 00-00-00 | DATE PLOTTED => 11-SEP-2015 | TIME PLOTTED => 11:00

Dist	COUNTY	ROUTE	POST MILES TOTAL PROJECT	SHEET No.	TOTAL SHEETS
07	Ven	33, 101	0.9/T5.8 2.3/13.8	10	239

REGISTERED CIVIL ENGINEER 6/19/15 DATE

6-29-15
PLANS APPROVAL DATE

REGISTERED PROFESSIONAL ENGINEER KYLE M KUNITAKE No. 63726 Exp. 9/30/16 CIVIL STATE OF CALIFORNIA

THE STATE OF CALIFORNIA OR ITS OFFICERS OR AGENTS SHALL NOT BE RESPONSIBLE FOR THE ACCURACY OR COMPLETENESS OF SCANNED COPIES OF THIS PLAN SHEET.

NOTE:

FOR ACCURATE RIGHT OF WAY DATA, CONTACT RIGHT OF WAY ENGINEERING AT THE DISTRICT OFFICE.

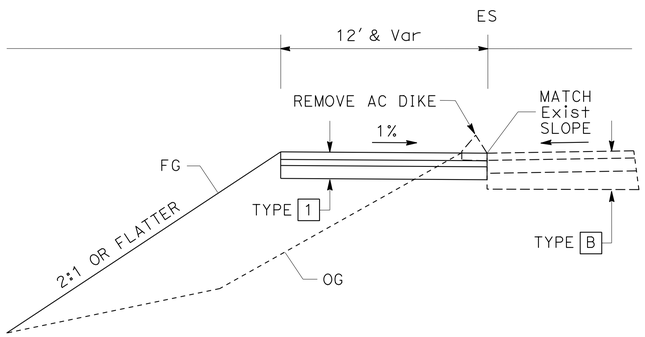

SECTION A-A
NO SCALE
Sta 383+41.69 TO 384+56.73

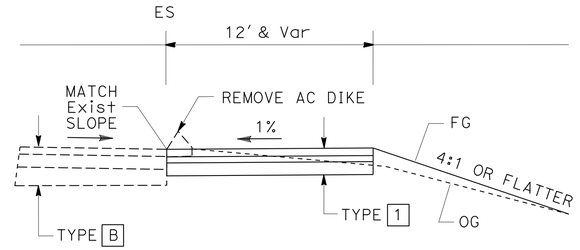

SECTION B-B
NO SCALE
Sta 380+57.61 TO 381+42.61

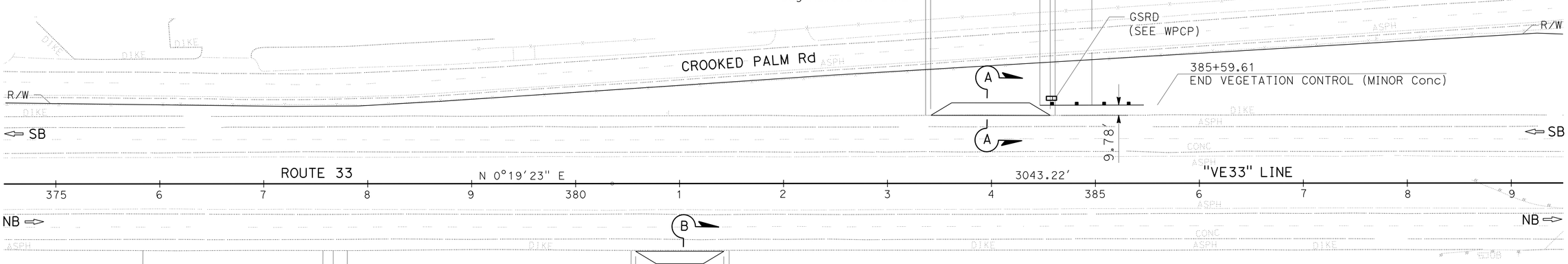

LAYOUT
SCALE: 1" = 50'

L-6

STATE OF CALIFORNIA - DEPARTMENT OF TRANSPORTATION
Caltrans
DESIGN

FUNCTIONAL SUPERVISOR: KYLE M. KUNITAKE
CALCULATED-DESIGNED BY: DAN PHAM
CHECKED BY: KATHY PHAM
REVISED BY
DATE REVISED

LAST REVISION 00-00-00 | DATE PLOTTED => 11-SEP-2015 | TIME PLOTTED => 11:00

Dist	COUNTY	ROUTE	POST MILES TOTAL PROJECT	SHEET No.	TOTAL SHEETS
07	Ven	33, 101	0.9/T5.8 2.3/13.8	11	239

REGISTERED CIVIL ENGINEER 6/19/15 DATE

6-29-15
PLANS APPROVAL DATE

REGISTERED PROFESSIONAL ENGINEER KYLE M KUNITAKE No. 63726 Exp. 9/30/16 CIVIL STATE OF CALIFORNIA

THE STATE OF CALIFORNIA OR ITS OFFICERS OR AGENTS SHALL NOT BE RESPONSIBLE FOR THE ACCURACY OR COMPLETENESS OF SCANNED COPIES OF THIS PLAN SHEET.

NOTE:

FOR ACCURATE RIGHT OF WAY DATA, CONTACT RIGHT OF WAY ENGINEERING AT THE DISTRICT OFFICE.

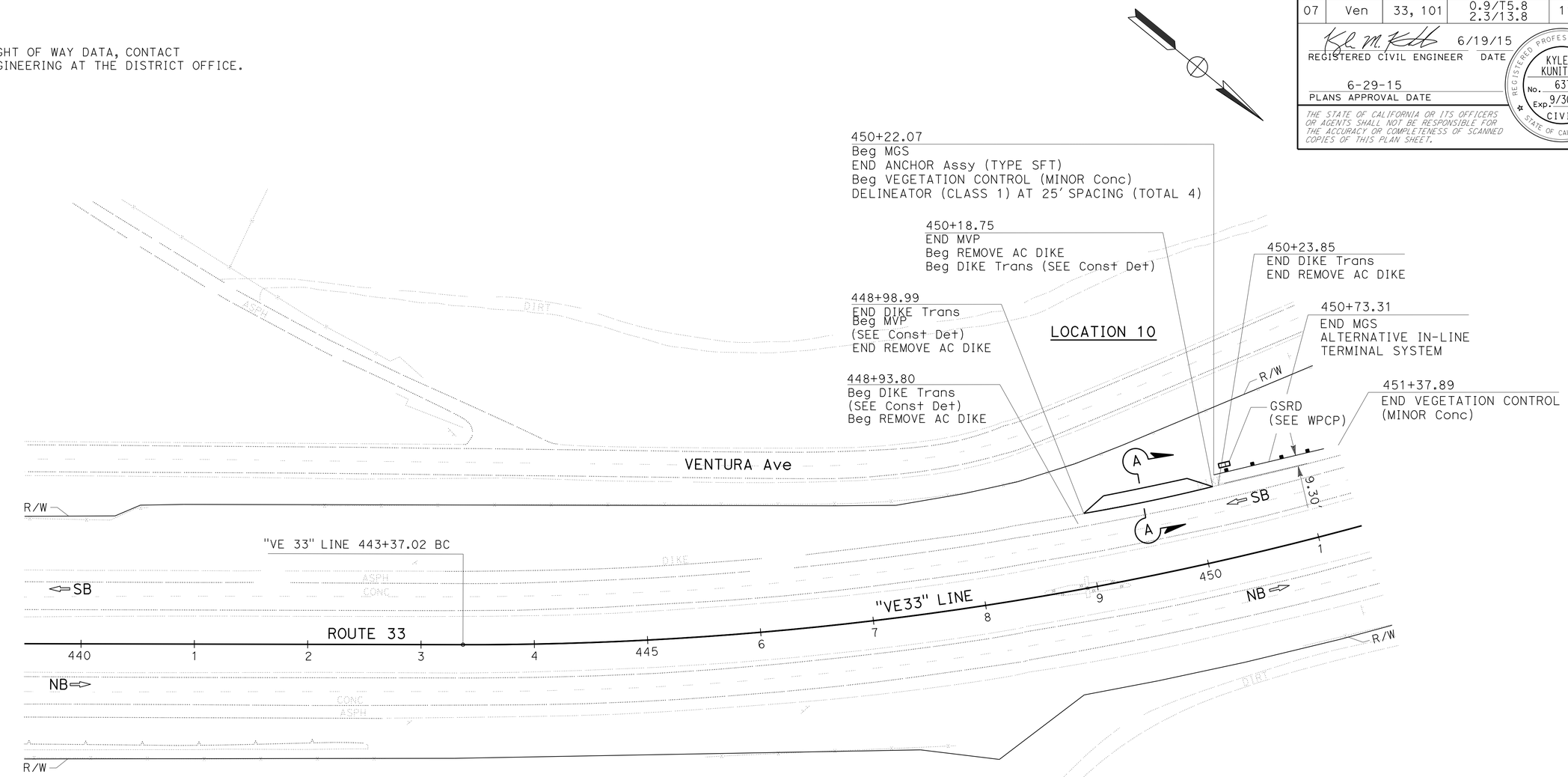

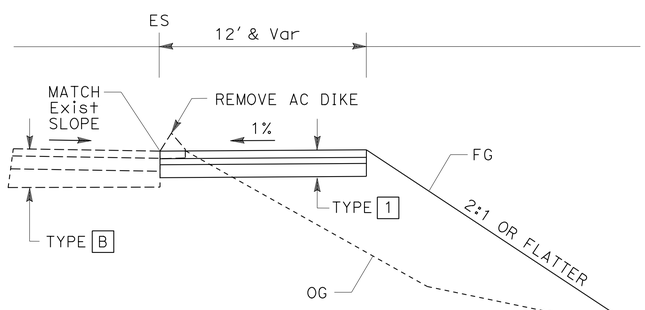

SECTION A-A
NO SCALE
Sta 448+98.99 TO 450+18.75

LAYOUT
SCALE: 1" = 50'

L-7

REVISED BY	DATE REVISED

CALCULATED-DESIGNED BY	CHECKED BY
DAN PHAM	KATHY PHAM

FUNCTIONAL SUPERVISOR: KYLE M. KUNITAKE

STATE OF CALIFORNIA - DEPARTMENT OF TRANSPORTATION
Caltrans
DESIGN

LAST REVISION 00-00-00 | DATE PLOTTED => 11-SEP-2015 | TIME PLOTTED => 11:00

Dist	COUNTY	ROUTE	POST MILES TOTAL PROJECT	SHEET No.	TOTAL SHEETS
07	Ven	33, 101	0.9/T5.8 2.3/13.8	12	239

REGISTERED CIVIL ENGINEER 6/19/15 DATE

6-29-15
PLANS APPROVAL DATE

REGISTERED PROFESSIONAL ENGINEER
KYLE M KUNITAKE
No. 63726
Exp. 9/30/16
CIVIL
STATE OF CALIFORNIA

THE STATE OF CALIFORNIA OR ITS OFFICERS OR AGENTS SHALL NOT BE RESPONSIBLE FOR THE ACCURACY OR COMPLETENESS OF SCANNED COPIES OF THIS PLAN SHEET.

NOTE:

FOR ACCURATE RIGHT OF WAY DATA, CONTACT RIGHT OF WAY ENGINEERING AT THE DISTRICT OFFICE.

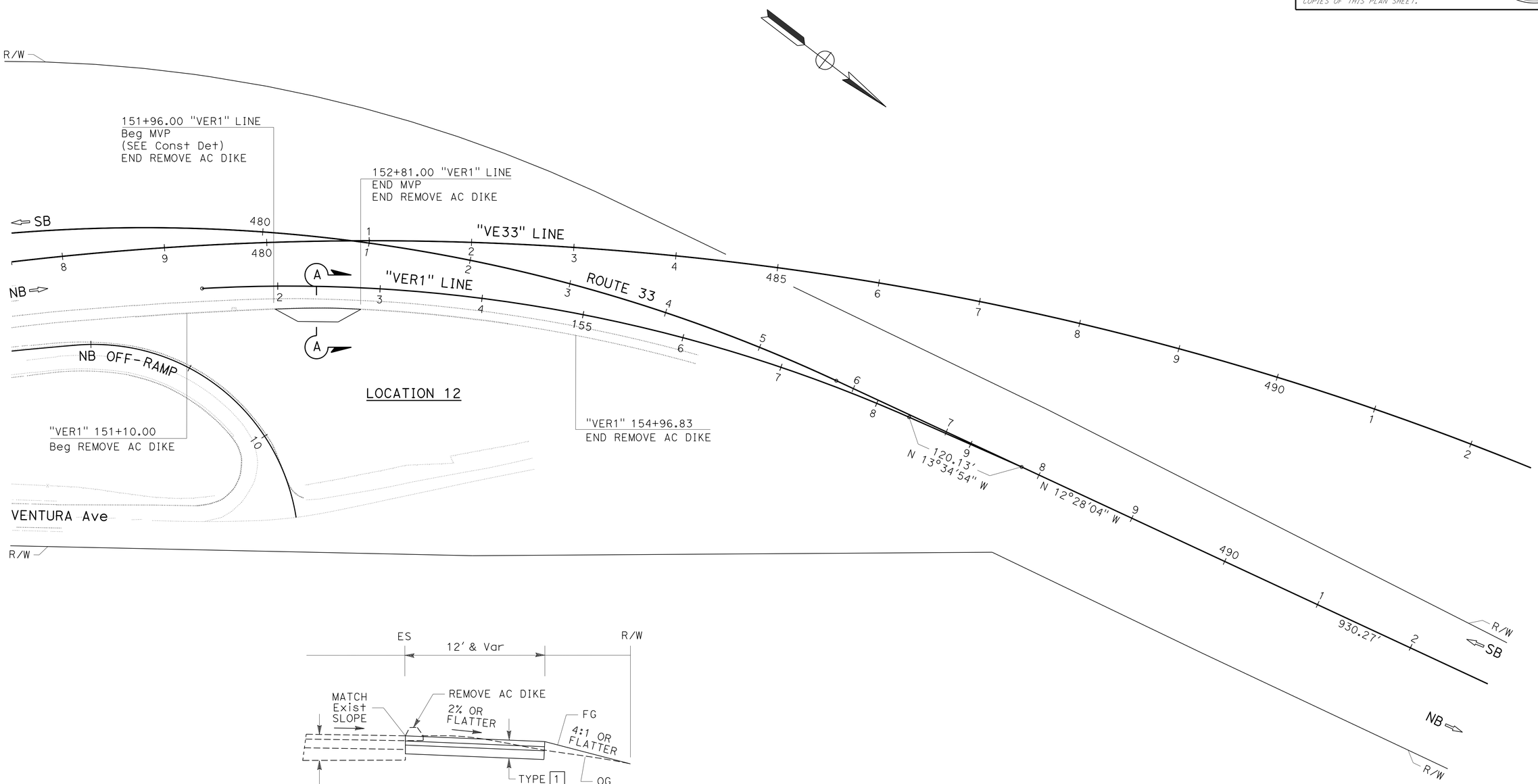

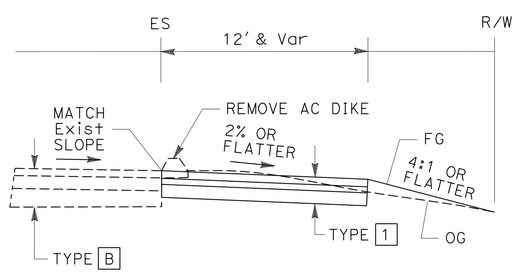

SECTION A-A
NO SCALE
Sta 151+96.00 TO 152+81.00 "VER1" LINE

LAYOUT
SCALE: 1" = 50'

L-8

STATE OF CALIFORNIA - DEPARTMENT OF TRANSPORTATION
Caltrans
DESIGN
FUNCTIONAL SUPERVISOR: KYLE M. KUNITAKE
CALCULATED-DESIGNED BY: DAN PHAM
CHECKED BY: KATHY PHAM
REVISED BY
DATE REVISED

LAST REVISION 00-00-00
DATE PLOTTED => 11-SEP-2015
TIME PLOTTED => 11:00

Dist	COUNTY	ROUTE	POST MILES TOTAL PROJECT	SHEET No.	TOTAL SHEETS
07	Ven	33, 101	0.9/T5.8 2.3/13.8	13	239

REGISTERED CIVIL ENGINEER 6/19/15 DATE

6-29-15
PLANS APPROVAL DATE

REGISTERED PROFESSIONAL ENGINEER
KYLE M KUNITAKE
No. 63726
Exp. 9/30/16
CIVIL
STATE OF CALIFORNIA

THE STATE OF CALIFORNIA OR ITS OFFICERS OR AGENTS SHALL NOT BE RESPONSIBLE FOR THE ACCURACY OR COMPLETENESS OF SCANNED COPIES OF THIS PLAN SHEET.

NOTE:

FOR ACCURATE RIGHT OF WAY DATA, CONTACT RIGHT OF WAY ENGINEERING AT THE DISTRICT OFFICE.

LOCATION 13

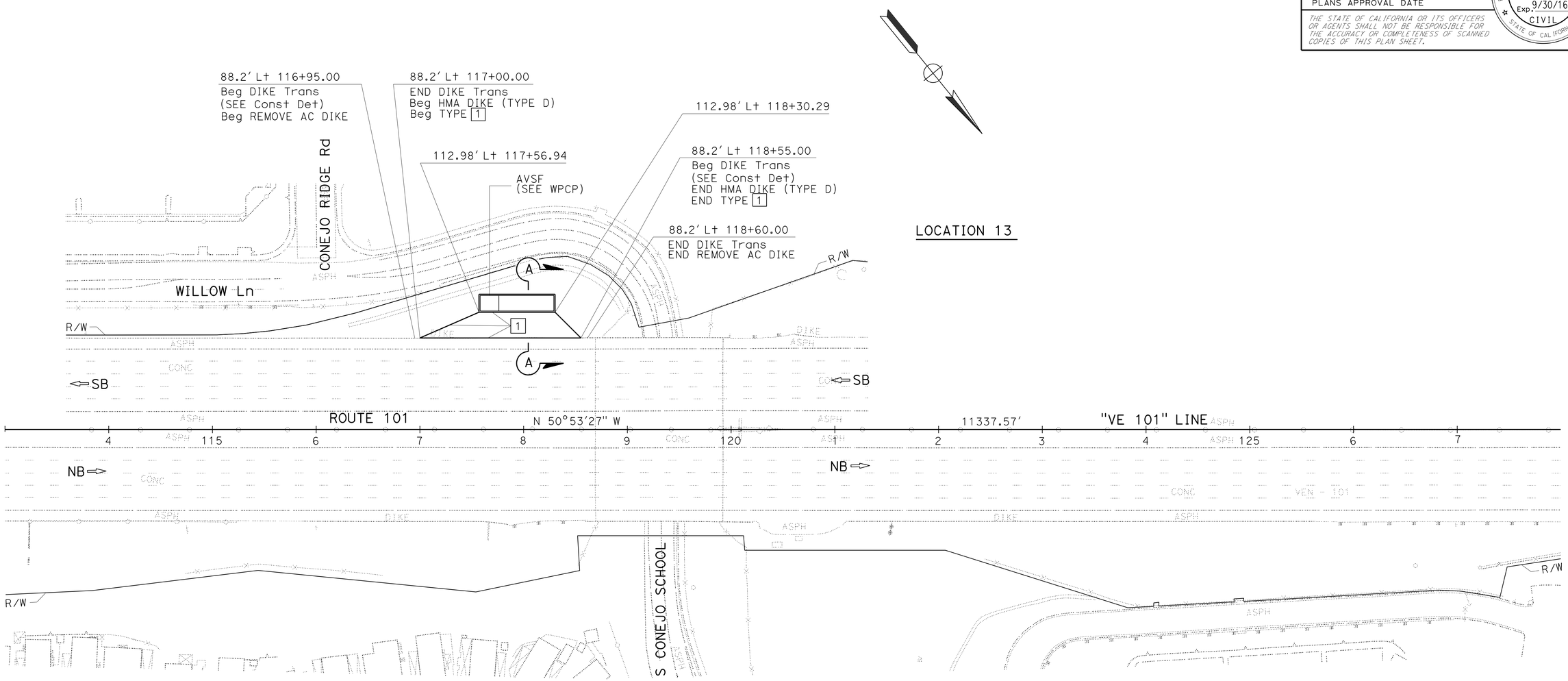

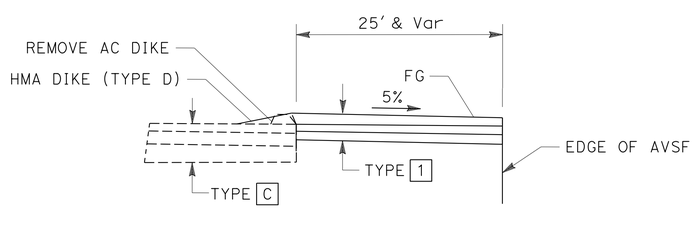

SECTION A-A
NO SCALE
Sta 117+00.00 TO 118+55.00

LAYOUT
SCALE: 1" = 50'

L-9

STATE OF CALIFORNIA - DEPARTMENT OF TRANSPORTATION
Caltrans
DESIGN

FUNCTIONAL SUPERVISOR: KYLE M. KUNITAKE
CALCULATED-DESIGNED BY: DAN PHAM
CHECKED BY: KATHY PHAM
REVISED BY
DATE REVISED

LAST REVISION 00-00-00
DATE PLOTTED => 11-SEP-2015
TIME PLOTTED => 11:00

Dist	COUNTY	ROUTE	POST MILES TOTAL PROJECT	SHEET No.	TOTAL SHEETS
07	Ven	33, 101	0.9/T5.8 2.3/13.8	14	239

REGISTERED CIVIL ENGINEER 6/19/15 DATE

6-29-15
PLANS APPROVAL DATE

REGISTERED PROFESSIONAL ENGINEER KYLE M KUNITAKE No. 63726 Exp. 9/30/16 CIVIL STATE OF CALIFORNIA

THE STATE OF CALIFORNIA OR ITS OFFICERS OR AGENTS SHALL NOT BE RESPONSIBLE FOR THE ACCURACY OR COMPLETENESS OF SCANNED COPIES OF THIS PLAN SHEET.

NOTE:

FOR ACCURATE RIGHT OF WAY DATA, CONTACT RIGHT OF WAY ENGINEERING AT THE DISTRICT OFFICE.

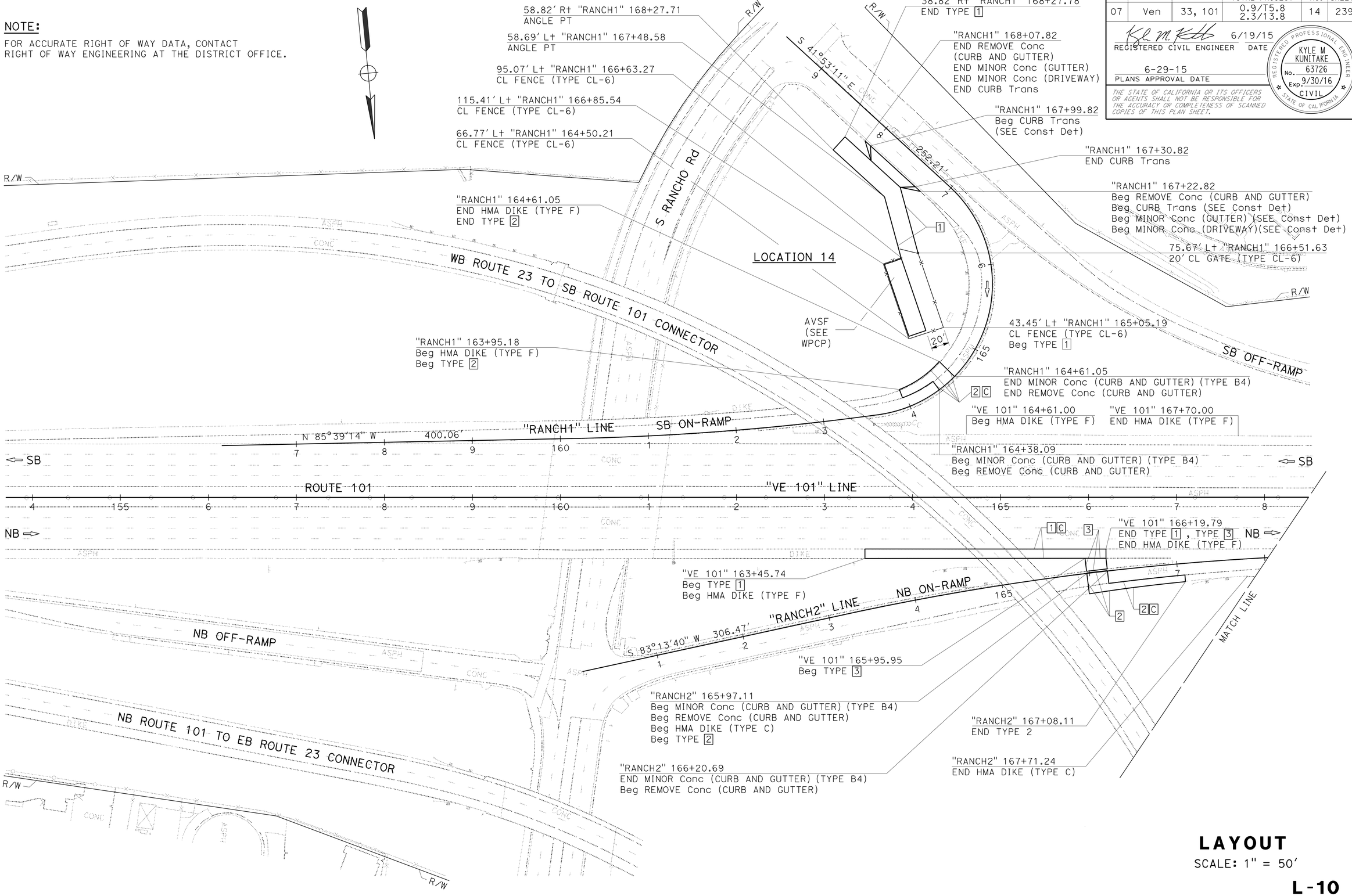

LAYOUT

SCALE: 1" = 50'

L-10

STATE OF CALIFORNIA - DEPARTMENT OF TRANSPORTATION
Caltrans
DESIGN

FUNCTIONAL SUPERVISOR: KYLE M. KUNITAKE
CALCULATED-DESIGNED BY: DAN PHAM
CHECKED BY: KATHY PHAM
REVISED BY
DATE REVISED

LAST REVISION 00-00-00
DATE PLOTTED => 11-SEP-2015
TIME PLOTTED => 11:00

Dist	COUNTY	ROUTE	POST MILES TOTAL PROJECT	SHEET No.	TOTAL SHEETS
07	Ven	33, 101	0.9/T5.8 2.3/13.8	15	239

REGISTERED CIVIL ENGINEER 6/19/15 DATE

6-29-15
PLANS APPROVAL DATE

REGISTERED PROFESSIONAL ENGINEER KYLE M KUNITAKE No. 63726 Exp. 9/30/16 CIVIL STATE OF CALIFORNIA

THE STATE OF CALIFORNIA OR ITS OFFICERS OR AGENTS SHALL NOT BE RESPONSIBLE FOR THE ACCURACY OR COMPLETENESS OF SCANNED COPIES OF THIS PLAN SHEET.

NOTE:

FOR ACCURATE RIGHT OF WAY DATA, CONTACT RIGHT OF WAY ENGINEERING AT THE DISTRICT OFFICE.

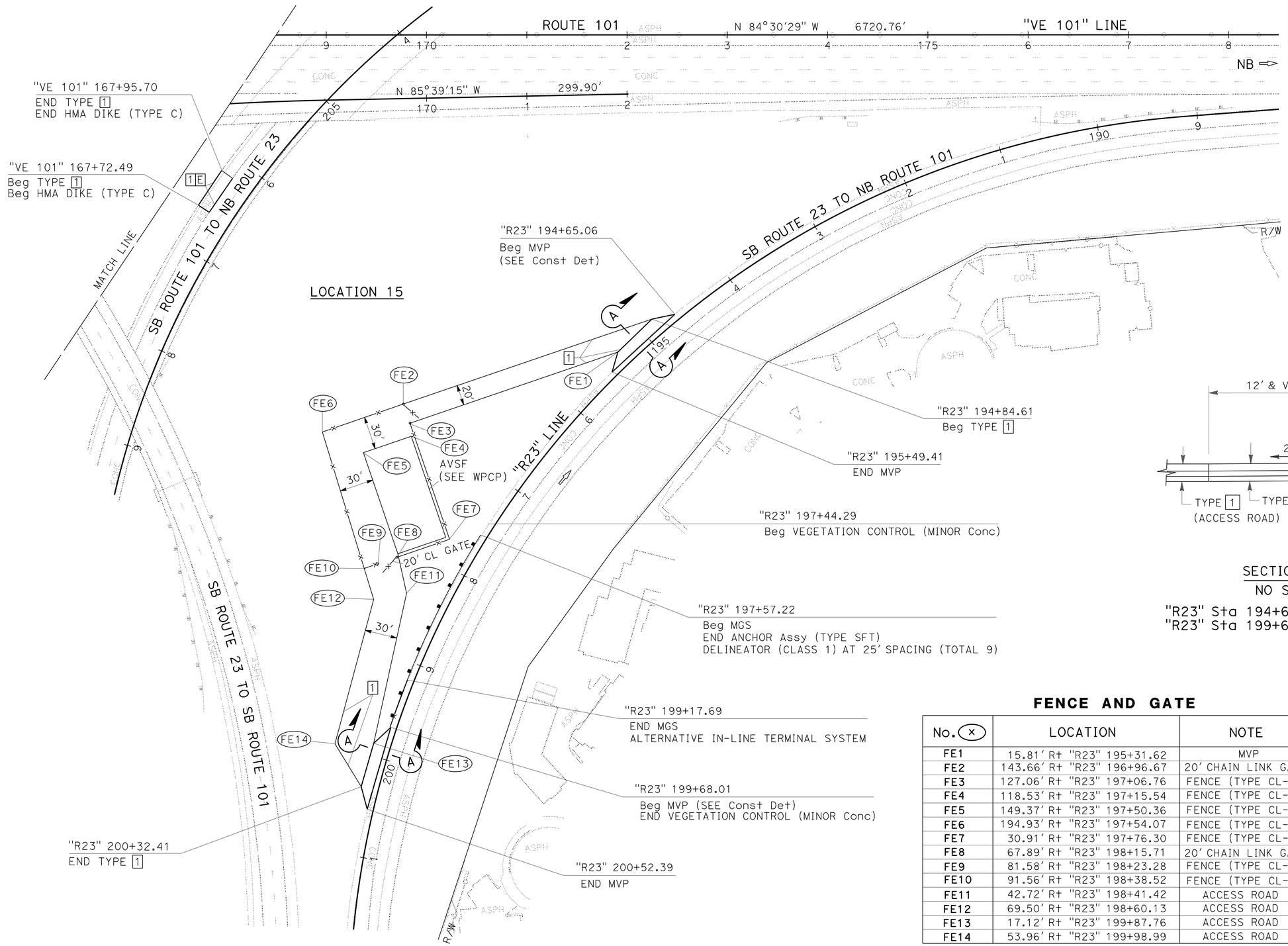

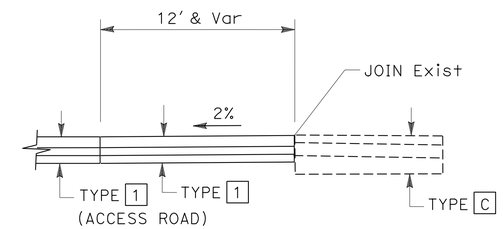

SECTION A-A
NO SCALE

"R23" Sta 194+65.06 TO 195+49.41
"R23" Sta 199+68.01 TO 200+52.39

FENCE AND GATE

No. (x)	LOCATION	NOTE
FE1	15.81' R+ "R23" 195+31.62	MVP
FE2	143.66' R+ "R23" 196+96.67	20' CHAIN LINK GATE
FE3	127.06' R+ "R23" 197+06.76	FENCE (TYPE CL-6)
FE4	118.53' R+ "R23" 197+15.54	FENCE (TYPE CL-6)
FE5	149.37' R+ "R23" 197+50.36	FENCE (TYPE CL-6)
FE6	194.93' R+ "R23" 197+54.07	FENCE (TYPE CL-6)
FE7	30.91' R+ "R23" 197+76.30	FENCE (TYPE CL-6)
FE8	67.89' R+ "R23" 198+15.71	20' CHAIN LINK GATE
FE9	81.58' R+ "R23" 198+23.28	FENCE (TYPE CL-6)
FE10	91.56' R+ "R23" 198+38.52	FENCE (TYPE CL-6)
FE11	42.72' R+ "R23" 198+41.42	ACCESS ROAD
FE12	69.50' R+ "R23" 198+60.13	ACCESS ROAD
FE13	17.12' R+ "R23" 199+87.76	ACCESS ROAD
FE14	53.96' R+ "R23" 199+98.99	ACCESS ROAD

LAYOUT

SCALE: 1" = 50'

L-11

REVISED BY	DATE REVISED
DAN PHAM	KATHY PHAM
CALCULATED-DESIGNED BY	CHECKED BY
FUNCTIONAL SUPERVISOR	KYLE M. KUNITAKE

STATE OF CALIFORNIA - DEPARTMENT OF TRANSPORTATION
Caltrans
DESIGN

LAST REVISION 00-00-00 | DATE PLOTTED => 11-SEP-2015 | TIME PLOTTED => 11:00

Dist	COUNTY	ROUTE	POST MILES TOTAL PROJECT	SHEET No.	TOTAL SHEETS
07	Ven	33, 101	0.9/T5.8 2.3/13.8	16	239

REGISTERED CIVIL ENGINEER 6/19/15 DATE

6-29-15
PLANS APPROVAL DATE

REGISTERED PROFESSIONAL ENGINEER KYLE M KUNITAKE No. 63726 Exp. 9/30/16 CIVIL STATE OF CALIFORNIA

THE STATE OF CALIFORNIA OR ITS OFFICERS OR AGENTS SHALL NOT BE RESPONSIBLE FOR THE ACCURACY OR COMPLETENESS OF SCANNED COPIES OF THIS PLAN SHEET.

NOTE:

FOR ACCURATE RIGHT OF WAY DATA, CONTACT RIGHT OF WAY ENGINEERING AT THE DISTRICT OFFICE.

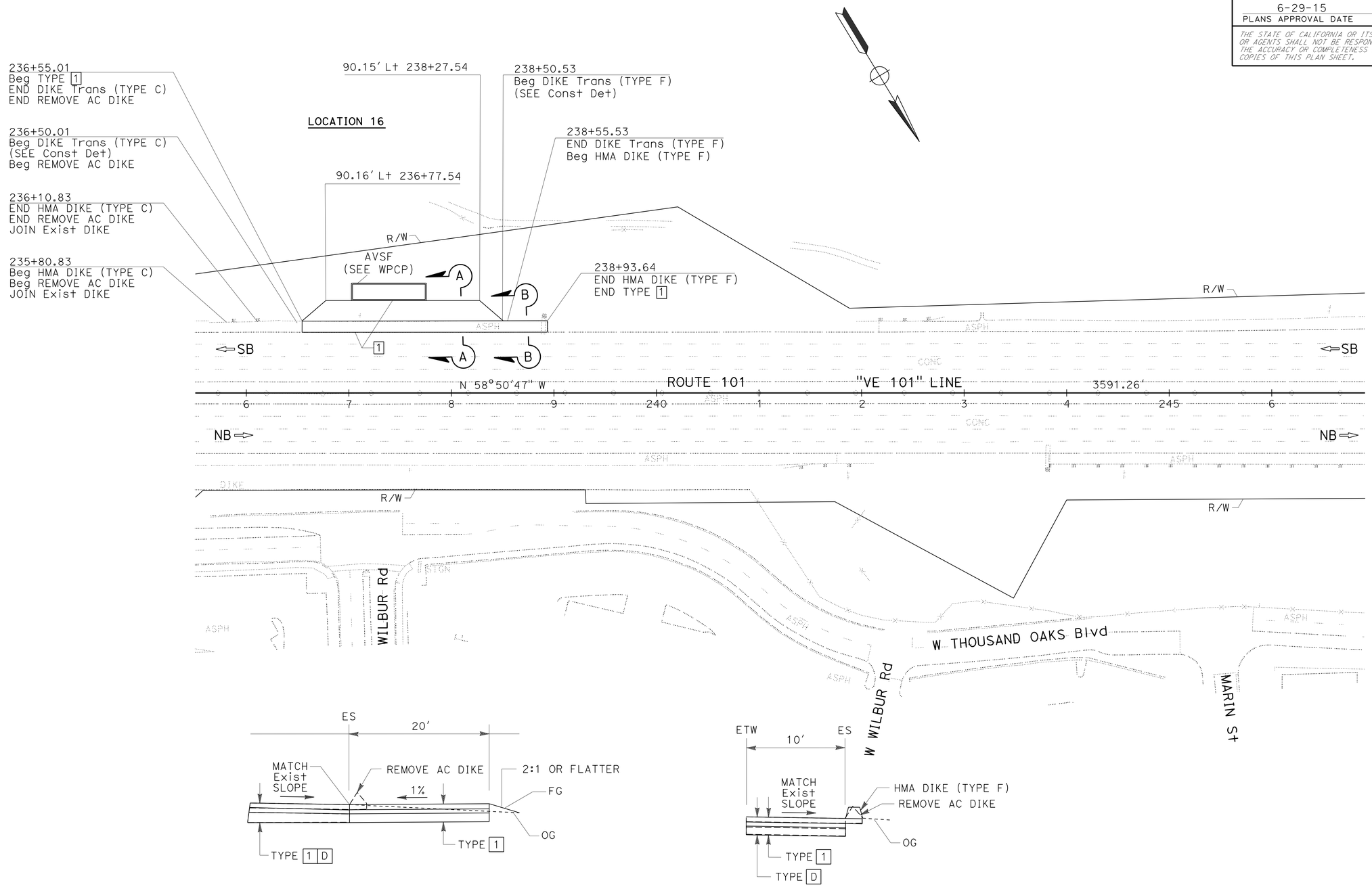

SECTION A-A
NO SCALE
Sta 236+55.01 TO 238+50.53

SECTION B-B
NO SCALE
Sta 238+50.53 TO 238+93.64

LAYOUT
SCALE: 1" = 50'

L-12

STATE OF CALIFORNIA - DEPARTMENT OF TRANSPORTATION
Caltrans®
DESIGN
FUNCTIONAL SUPERVISOR: KYLE M. KUNITAKE
CALCULATED-DESIGNED BY: DAN PHAM
CHECKED BY: KATHY PHAM
REVISED BY
DATE REVISED

LAST REVISION 00-00-00
DATE PLOTTED => 11-SEP-2015
TIME PLOTTED => 11:00

Dist	COUNTY	ROUTE	POST MILES TOTAL PROJECT	SHEET No.	TOTAL SHEETS
07	Ven	33, 101	0.9/T5.8 2.3/13.8	17	239

REGISTERED CIVIL ENGINEER DATE 6/19/15

PLANS APPROVAL DATE 6-29-15

REGISTERED PROFESSIONAL ENGINEER KYLE M KUNITAKE No. 63726 Exp. 9/30/16 CIVIL STATE OF CALIFORNIA

THE STATE OF CALIFORNIA OR ITS OFFICERS OR AGENTS SHALL NOT BE RESPONSIBLE FOR THE ACCURACY OR COMPLETENESS OF SCANNED COPIES OF THIS PLAN SHEET.

NOTE:

FOR ACCURATE RIGHT OF WAY DATA, CONTACT RIGHT OF WAY ENGINEERING AT THE DISTRICT OFFICE.

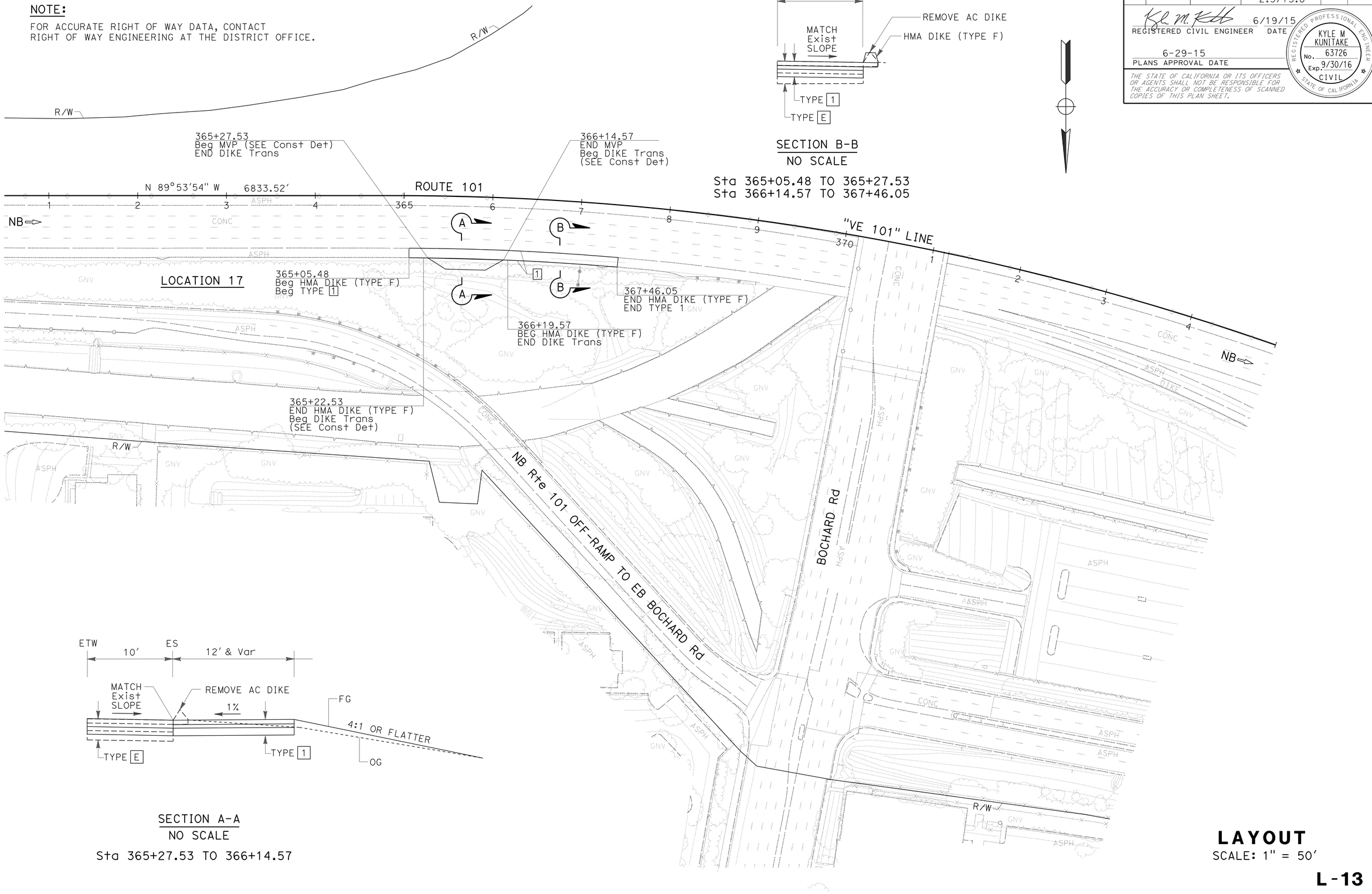

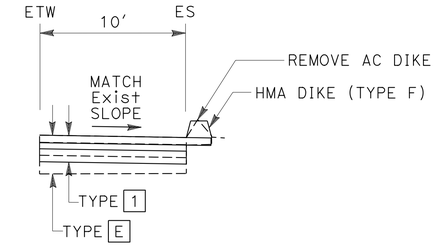

SECTION B-B

NO SCALE

Sta 365+05.48 TO 365+27.53
Sta 366+14.57 TO 367+46.05

SECTION A-A

NO SCALE

Sta 365+27.53 TO 366+14.57

LAYOUT

SCALE: 1" = 50'

L-13

STATE OF CALIFORNIA - DEPARTMENT OF TRANSPORTATION

Caltrans® DESIGN

FUNCTIONAL SUPERVISOR: KYLE M. KUNITAKE

CALCULATED-DESIGNED BY: DAN PHAM

CHECKED BY: KATHY PHAM

REVISED BY

DATE REVISED

LAST REVISION 00-00-00

DATE PLOTTED => 11-SEP-2015
TIME PLOTTED => 11:00

Dist	COUNTY	ROUTE	POST MILES TOTAL PROJECT	SHEET No.	TOTAL SHEETS
07	Ven	33, 101	0.9/T5.8 2.3/13.8	18	239

REGISTERED CIVIL ENGINEER — DATE 6/19/15

6-29-15
PLANS APPROVAL DATE

REGISTERED PROFESSIONAL ENGINEER — KYLE M KUNITAKE — No. 63726 — Exp. 9/30/16 — CIVIL — STATE OF CALIFORNIA

THE STATE OF CALIFORNIA OR ITS OFFICERS OR AGENTS SHALL NOT BE RESPONSIBLE FOR THE ACCURACY OR COMPLETENESS OF SCANNED COPIES OF THIS PLAN SHEET.

NOTE:
FOR ACCURATE RIGHT OF WAY DATA, CONTACT
RIGHT OF WAY ENGINEERING AT THE DISTRICT OFFICE.

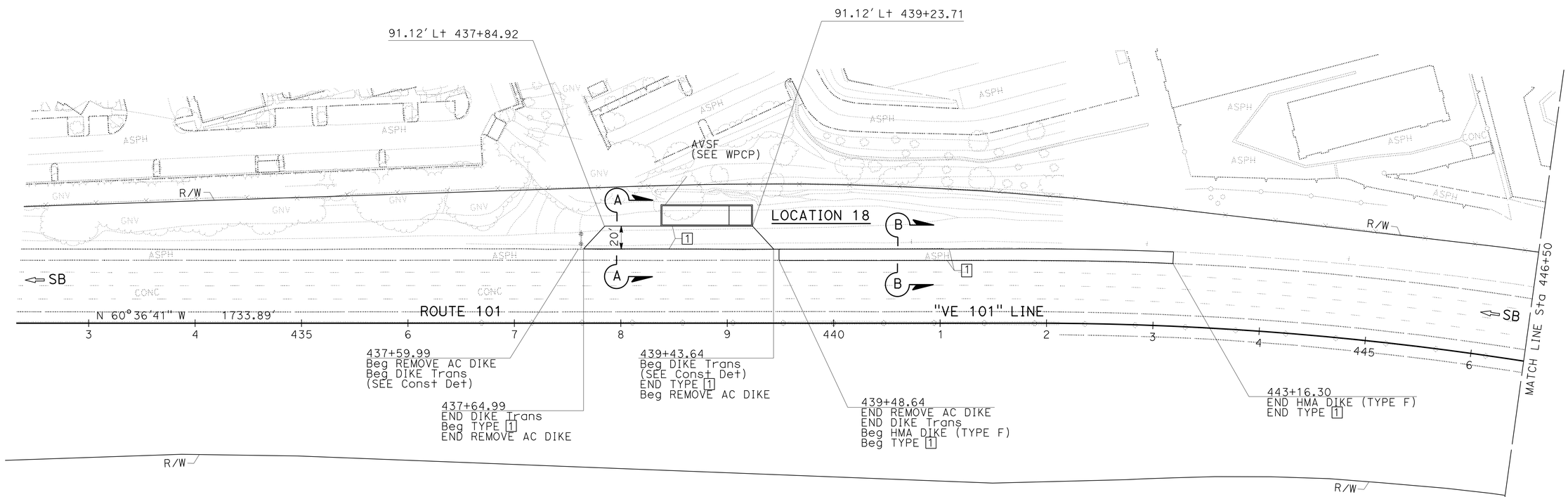

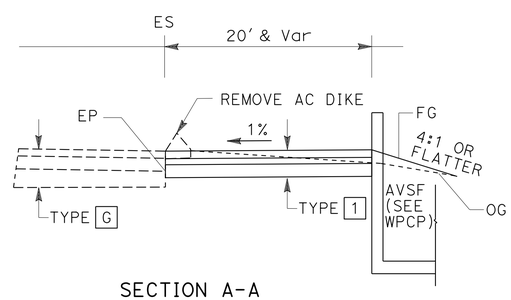

SECTION A-A
NO SCALE
Sta 437+64.99 TO 439+43.64

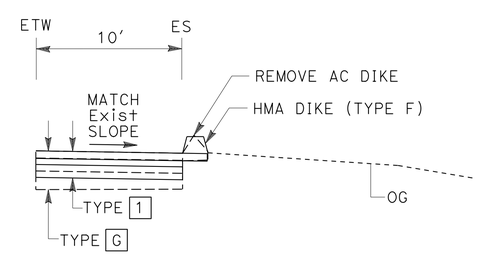

SECTION B-B
NO SCALE
Sta 439+48.64 TO 443+16.30

LAYOUT
SCALE: 1" = 50'

L-14

STATE OF CALIFORNIA - DEPARTMENT OF TRANSPORTATION
Caltrans
DESIGN
FUNCTIONAL SUPERVISOR: KYLE M. KUNITAKE
CALCULATED-DESIGNED BY: DAN PHAM
CHECKED BY: KATHY PHAM
REVISED BY
DATE REVISED

LAST REVISION 00-00-00
DATE PLOTTED => 11-SEP-2015
TIME PLOTTED => 11:00

Dist	COUNTY	ROUTE	POST MILES TOTAL PROJECT	SHEET No.	TOTAL SHEETS
07	Ven	33, 101	0.9/T5.8 2.3/13.8	19	239

REGISTERED CIVIL ENGINEER 6/19/15 DATE

6-29-15
PLANS APPROVAL DATE

REGISTERED PROFESSIONAL ENGINEER
KYLE M KUNITAKE
No. 63726
Exp. 9/30/16
CIVIL
STATE OF CALIFORNIA

THE STATE OF CALIFORNIA OR ITS OFFICERS OR AGENTS SHALL NOT BE RESPONSIBLE FOR THE ACCURACY OR COMPLETENESS OF SCANNED COPIES OF THIS PLAN SHEET.

NOTE:

FOR ACCURATE RIGHT OF WAY DATA, CONTACT RIGHT OF WAY ENGINEERING AT THE DISTRICT OFFICE.

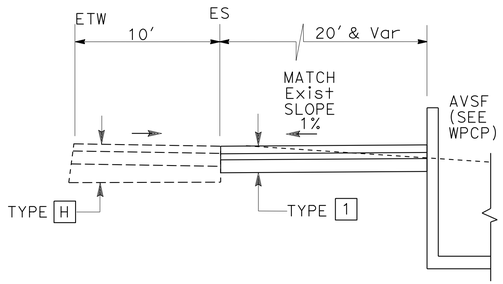

Sta 457+64.23 TO 460+11.17

SECTION A-A

NO SCALE

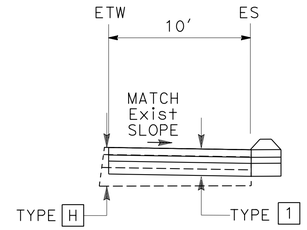

Sta 459+09.03 TO 460+11.17

SECTION B-B

NO SCALE

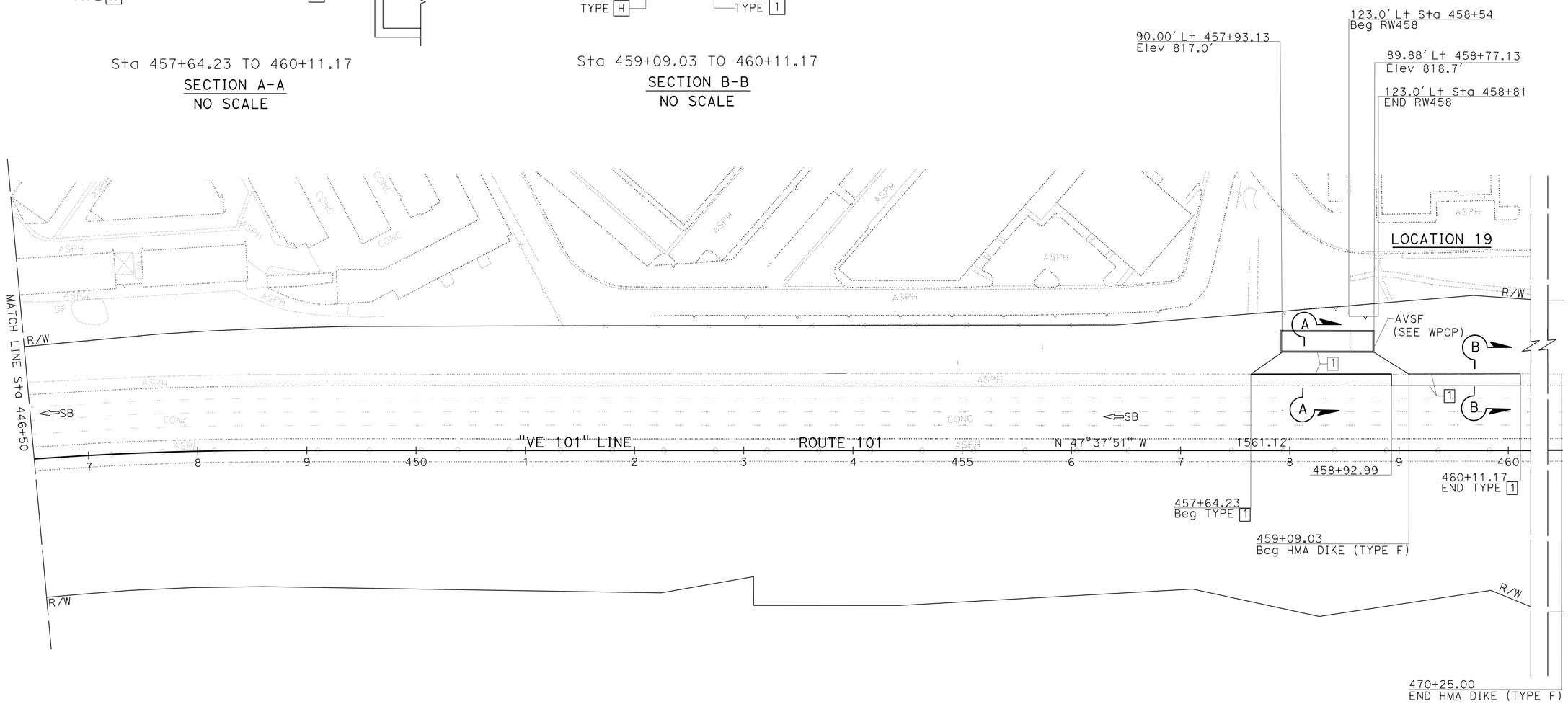

LAYOUT

SCALE: 1" = 50'

L-15

STATE OF CALIFORNIA - DEPARTMENT OF TRANSPORTATION

Caltrans

DESIGN

FUNCTIONAL SUPERVISOR: KYLE M. KUNITAKE

CALCULATED-DESIGNED BY: DAN PHAM

CHECKED BY: KATHY PHAM

REVISED BY | DATE REVISED

LAST REVISION 00-00-00 | DATE PLOTTED => 11-SEP-2015 | TIME PLOTTED => 11:00

Dist	COUNTY	ROUTE	POST MILES TOTAL PROJECT	SHEET No.	TOTAL SHEETS
07	Ven	33, 101	0.9/T5.8 2.3/13.8	20	239

REGISTERED CIVIL ENGINEER 6/19/15 DATE

6-29-15
PLANS APPROVAL DATE

REGISTERED PROFESSIONAL ENGINEER
KYLE M KUNITAKE
No. 63726
Exp. 9/30/16
CIVIL
STATE OF CALIFORNIA

THE STATE OF CALIFORNIA OR ITS OFFICERS OR AGENTS SHALL NOT BE RESPONSIBLE FOR THE ACCURACY OR COMPLETENESS OF SCANNED COPIES OF THIS PLAN SHEET.

NOTE:
FOR ACCURATE RIGHT OF WAY DATA, CONTACT
RIGHT OF WAY ENGINEERING AT THE DISTRICT OFFICE.

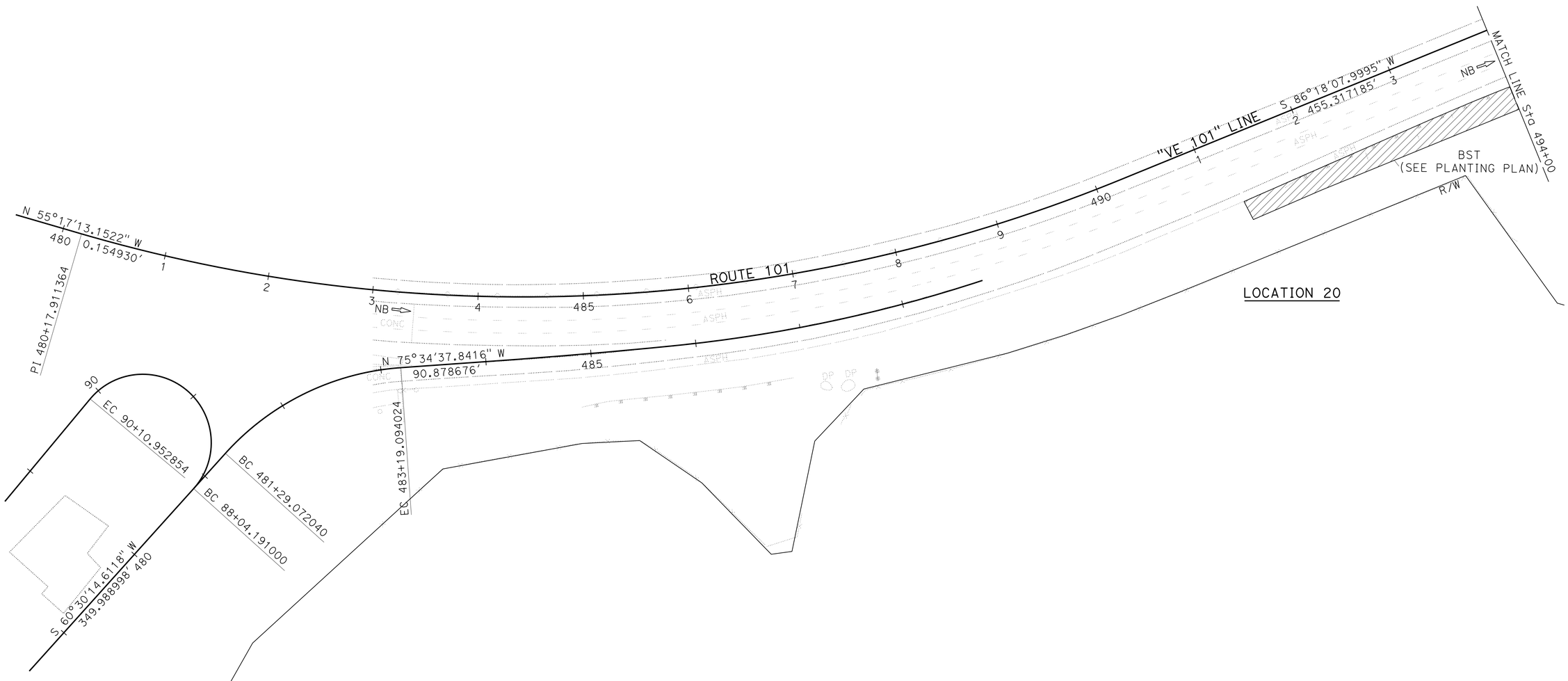

LAYOUT
SCALE: 1" = 50'

L-16

REVISED BY	
DATE REVISED	
CALCULATED-DESIGNED BY	DAN PHAM
CHECKED BY	KATHY PHAM
FUNCTIONAL SUPERVISOR	KYLE M. KUNITAKE

STATE OF CALIFORNIA - DEPARTMENT OF TRANSPORTATION
Caltrans
DESIGN

LAST REVISION 00-00-00 | DATE PLOTTED => 11-SEP-2015 | TIME PLOTTED => 11:00

Dist	COUNTY	ROUTE	POST MILES TOTAL PROJECT	SHEET No.	TOTAL SHEETS
07	Ven	33, 101	0.9/T5.8 2.3/13.8	21	239

REGISTERED CIVIL ENGINEER 6/19/15 DATE

6-29-15
PLANS APPROVAL DATE

REGISTERED PROFESSIONAL ENGINEER
KYLE M KUNITAKE
No. 63726
Exp. 9/30/16
CIVIL
STATE OF CALIFORNIA

THE STATE OF CALIFORNIA OR ITS OFFICERS OR AGENTS SHALL NOT BE RESPONSIBLE FOR THE ACCURACY OR COMPLETENESS OF SCANNED COPIES OF THIS PLAN SHEET.

NOTE:
FOR ACCURATE RIGHT OF WAY DATA, CONTACT RIGHT OF WAY ENGINEERING AT THE DISTRICT OFFICE.

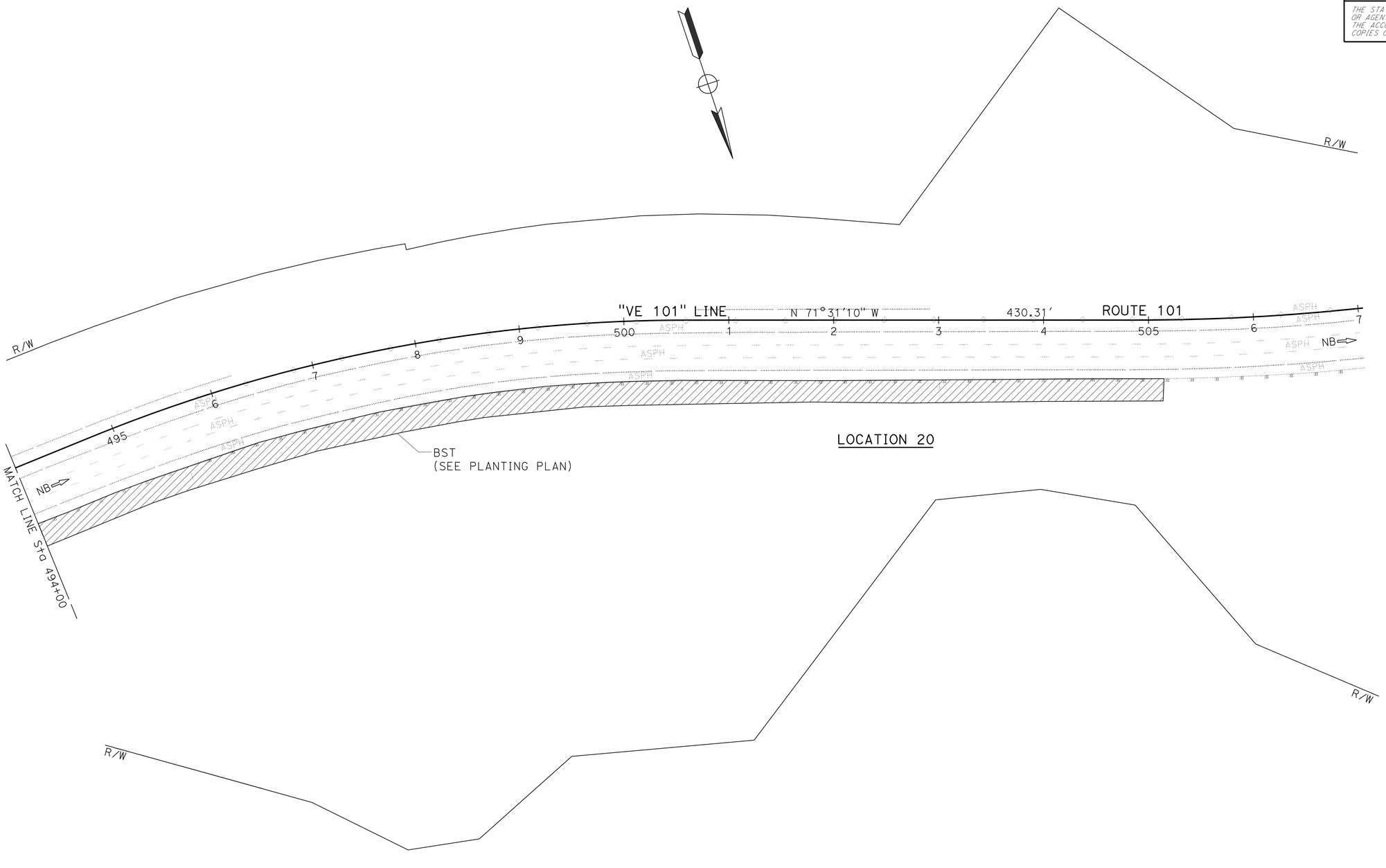

LOCATION 20

LAYOUT
SCALE: 1" = 50'

L-17

REVISED BY	DATE REVISED
DAN PHAM	KATHY PHAM

CALCULATED-DESIGNED BY / CHECKED BY

FUNCTIONAL SUPERVISOR: KYLE M. KUNITAKE

STATE OF CALIFORNIA - DEPARTMENT OF TRANSPORTATION
Caltrans
DESIGN

LAST REVISION 00-00-00 | DATE PLOTTED => 11-SEP-2015 | TIME PLOTTED => 11:00

Dist	COUNTY	ROUTE	POST MILES TOTAL PROJECT	SHEET No.	TOTAL SHEETS
07	Ven	33, 101	0.9/T5.8 2.3/13.8	22	239

REGISTERED CIVIL ENGINEER 6/19/15 DATE

6-29-15
PLANS APPROVAL DATE

REGISTERED PROFESSIONAL ENGINEER KYLE M KUNITAKE No. 63726 Exp. 9/30/16 CIVIL STATE OF CALIFORNIA

THE STATE OF CALIFORNIA OR ITS OFFICERS OR AGENTS SHALL NOT BE RESPONSIBLE FOR THE ACCURACY OR COMPLETENESS OF SCANNED COPIES OF THIS PLAN SHEET.

NOTE:

FOR ACCURATE RIGHT OF WAY DATA, CONTACT RIGHT OF WAY ENGINEERING AT THE DISTRICT OFFICE.

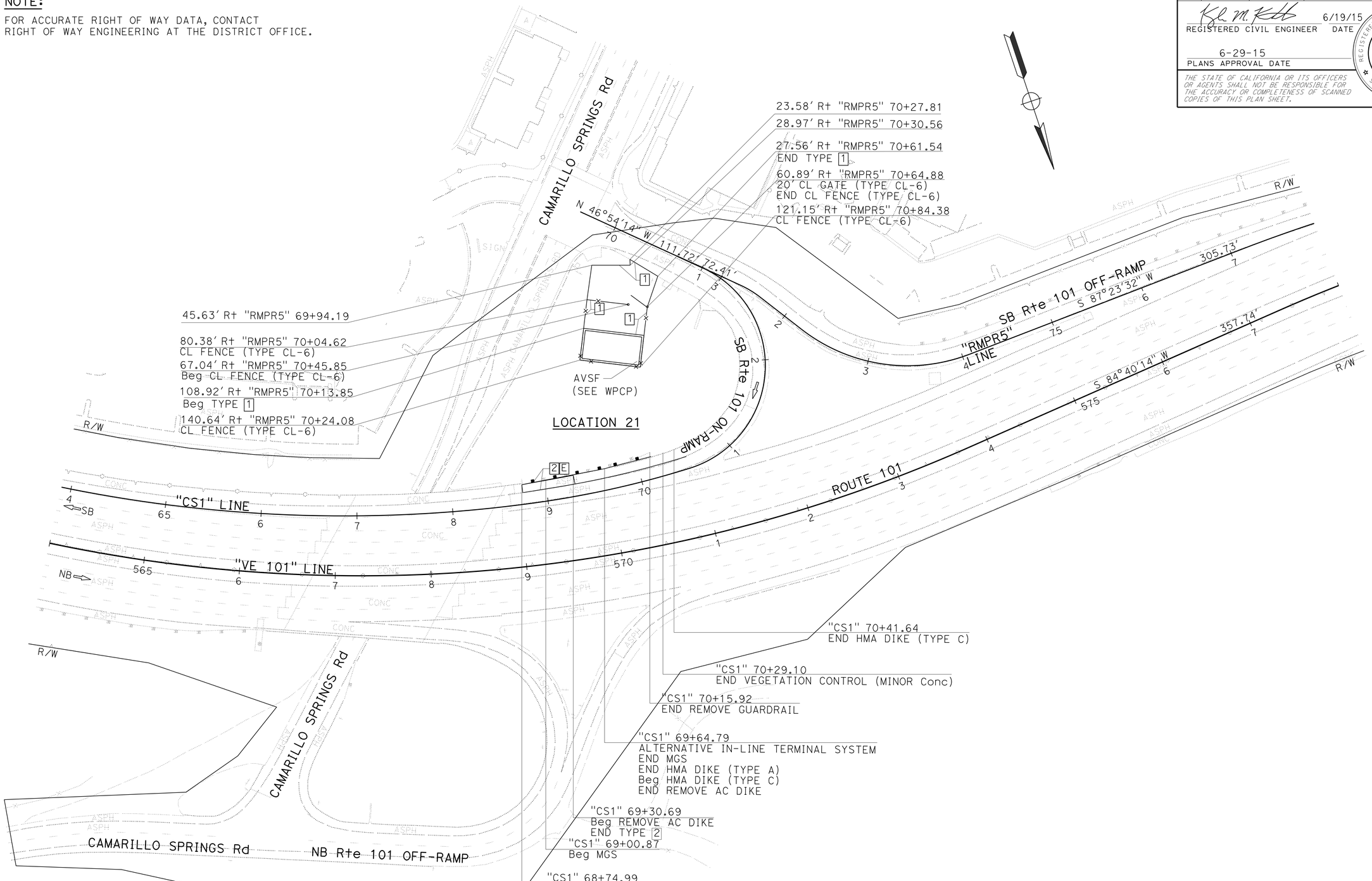

LAYOUT

SCALE: 1" = 50'

L-18

STATE OF CALIFORNIA - DEPARTMENT OF TRANSPORTATION

Caltrans

DESIGN

FUNCTIONAL SUPERVISOR: KYLE M. KUNITAKE

CALCULATED-DESIGNED BY: DAN PHAM

CHECKED BY: KATHY PHAM

REVISED BY

DATE REVISED

LAST REVISION 00-00-00

DATE PLOTTED => 11-SEP-2015

TIME PLOTTED => 11:00

Dist	COUNTY	ROUTE	POST MILES TOTAL PROJECT	SHEET No.	TOTAL SHEETS
07	Ven	33, 101	0.9/T5.8 2.3/13.8	23	239

REGISTERED CIVIL ENGINEER 6/19/15 DATE

6-29-15
PLANS APPROVAL DATE

REGISTERED PROFESSIONAL ENGINEER
KYLE M KUNITAKE
No. 63726
Exp. 9/30/16
CIVIL
STATE OF CALIFORNIA

THE STATE OF CALIFORNIA OR ITS OFFICERS OR AGENTS SHALL NOT BE RESPONSIBLE FOR THE ACCURACY OR COMPLETENESS OF SCANNED COPIES OF THIS PLAN SHEET.

NOTE:

FOR ACCURATE RIGHT OF WAY DATA, CONTACT RIGHT OF WAY ENGINEERING AT THE DISTRICT OFFICE.

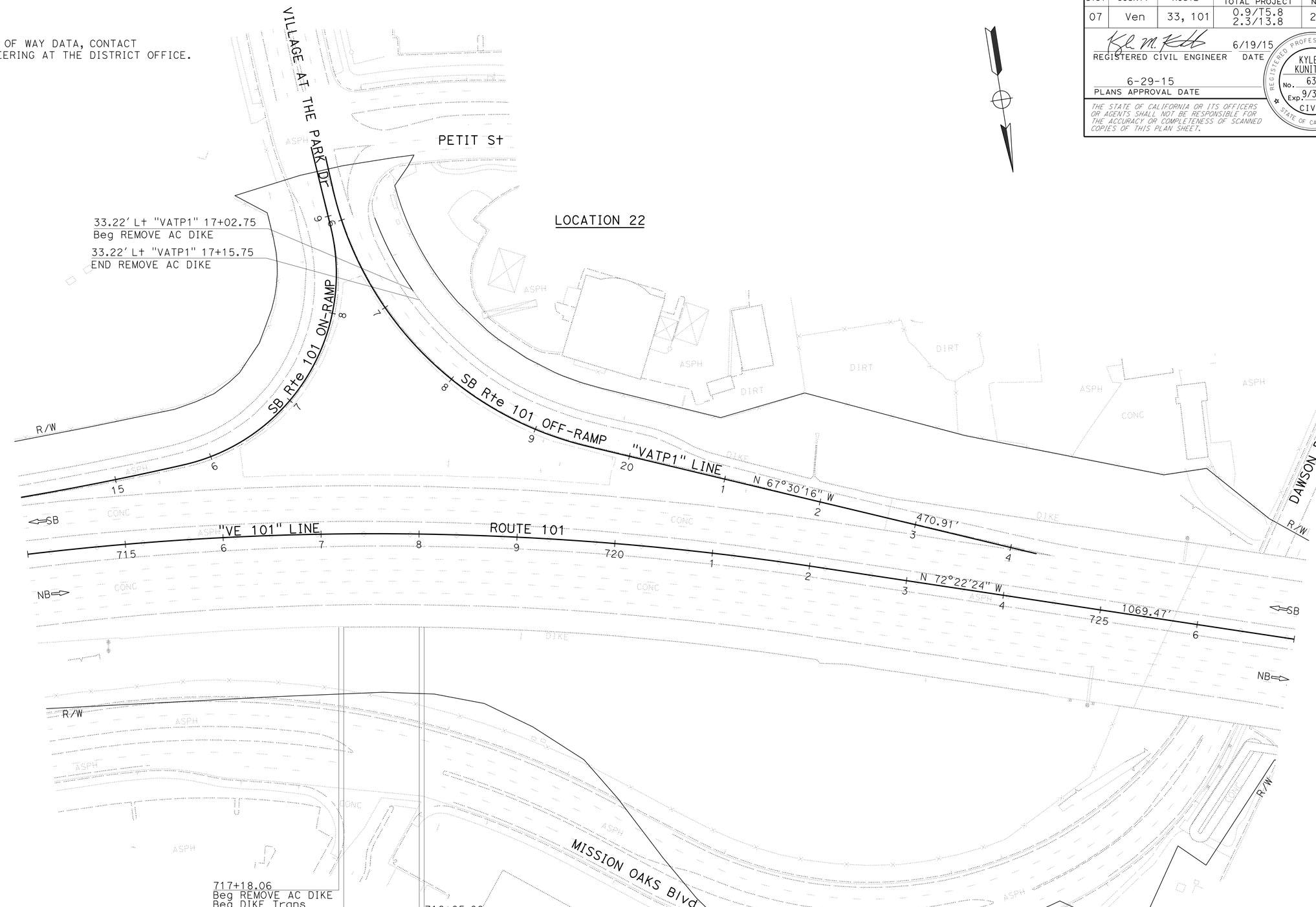

LAYOUT

SCALE: 1" = 50'

L-19

STATE OF CALIFORNIA - DEPARTMENT OF TRANSPORTATION
Caltrans
DESIGN

FUNCTIONAL SUPERVISOR: KYLE M. KUNITAKE
CALCULATED-DESIGNED BY: DAN PHAM
CHECKED BY: KATHY PHAM
REVISED BY
DATE REVISED

LAST REVISION 00-00-00
DATE PLOTTED => 11-SEP-2015
TIME PLOTTED => 11:00

Dist	COUNTY	ROUTE	POST MILES TOTAL PROJECT	SHEET No.	TOTAL SHEETS
07	Ven	33, 101	0.9/T5.8 2.3/13.8	24	239

REGISTERED CIVIL ENGINEER 6/19/15 DATE

6-29-15
PLANS APPROVAL DATE

REGISTERED PROFESSIONAL ENGINEER KYLE M KUNITAKE No. 63726 Exp. 9/30/16 CIVIL STATE OF CALIFORNIA

THE STATE OF CALIFORNIA OR ITS OFFICERS OR AGENTS SHALL NOT BE RESPONSIBLE FOR THE ACCURACY OR COMPLETENESS OF SCANNED COPIES OF THIS PLAN SHEET.

LEGEND:

ROADWAY EXCAVATION (TYPE Z-2) (AERIALLY DEPOSITED LEAD)

STRUCTURAL EXCAVATION (TYPE Z-2) (AERIALLY DEPOSITED LEAD)

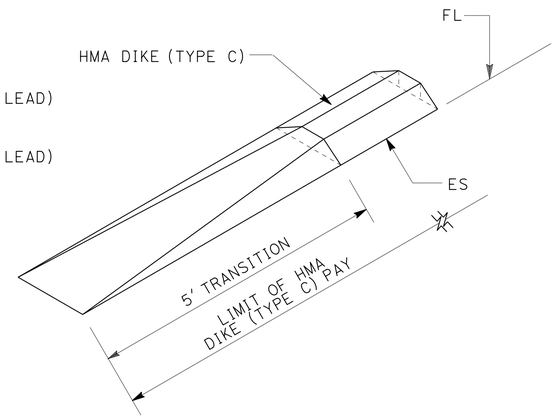

DIKE TRANSITION (TYPE C)

LOCATION 16

FROM 0 TO FULL HEIGHT

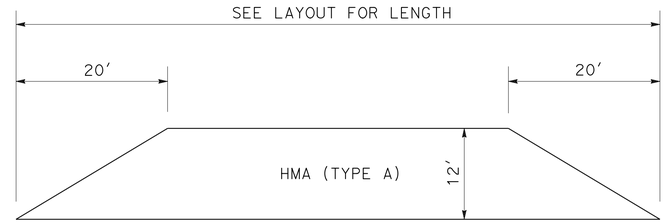

MAINTENANCE VEHICLE PULLOUT

LOCATIONS 2,3,4,5,11,14,16

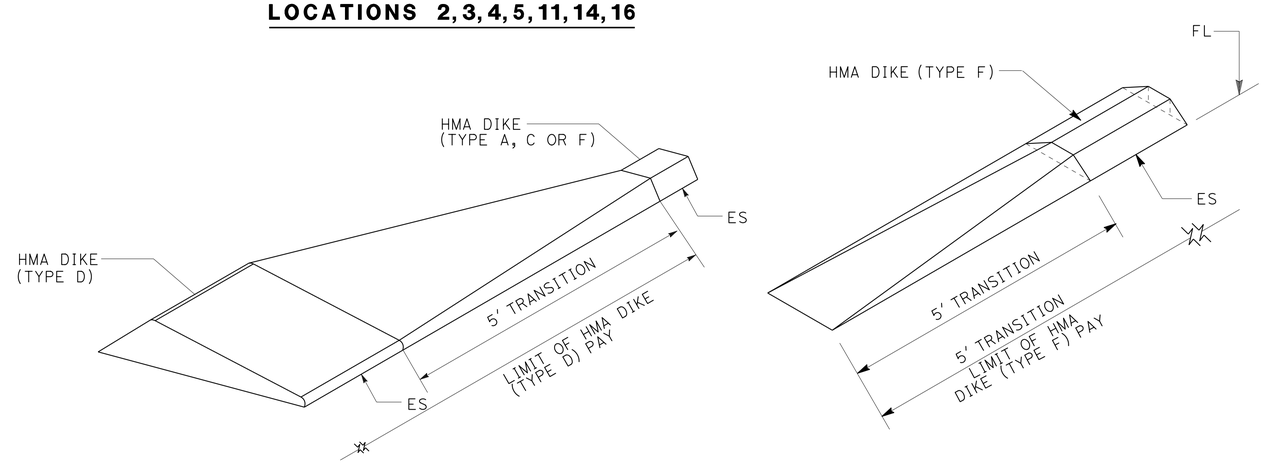

DIKE TRANSITION (LOCATION 13)

(TYPE D) TO (TYPE A, C OR F)

DIKE TRANSITION (TYPE F)

LOCATIONS 1, 7,8,9,10,16,17,18,22

FROM 0 TO FULL HEIGHT

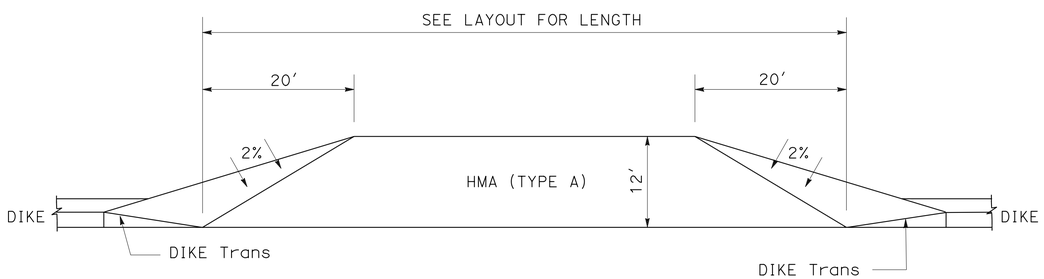

MAINTENANCE VEHICLE PULLOUT

LOCATIONS 1,7,8,9,10,17

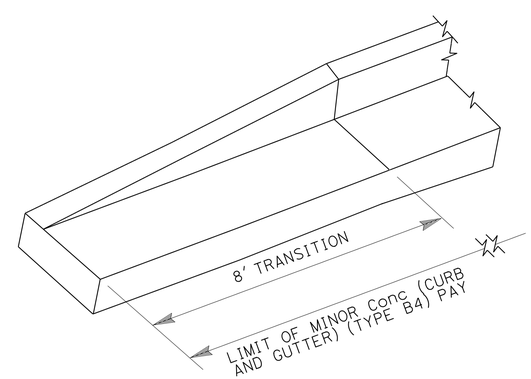

CURB TRANSITION (LOCATION 14)

CURB

FROM FULL HEIGHT TO ZERO

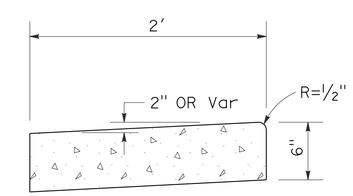

MINOR Conc (GUTTER)

(LOCATION 14)

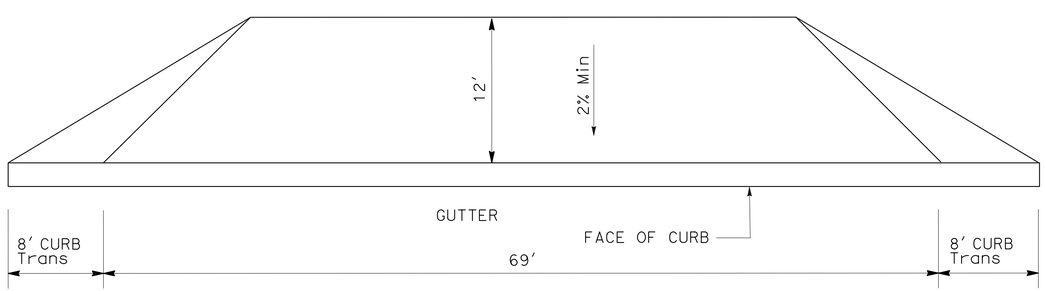

MINOR Conc (DRIVEWAY)(LOCATION 14)

CONSTRUCTION DETAILS

NO SCALE

C-1

STATE OF CALIFORNIA - DEPARTMENT OF TRANSPORTATION

Caltrans DESIGN

FUNCTIONAL SUPERVISOR: KYLE M. KUNITAKE

CALCULATED-DESIGNED BY: DAN PHAM

CHECKED BY: KATHY PHAM

REVISED BY

DATE REVISED

LAST REVISION 00-00-00

DATE PLOTTED => 11-SEP-2015

TIME PLOTTED => 11:00

Dist	COUNTY	ROUTE	POST MILES TOTAL PROJECT	SHEET No.	TOTAL SHEETS
07	Ven	33, 101	0.9/T5.8 2.3/13.8	25	239

REGISTERED CIVIL ENGINEER 6/19/15 DATE

6-29-15
PLANS APPROVAL DATE

REGISTERED PROFESSIONAL ENGINEER
KYLE M KUNITAKE
No. 63726
Exp. 9/30/16
CIVIL
STATE OF CALIFORNIA

THE STATE OF CALIFORNIA OR ITS OFFICERS OR AGENTS SHALL NOT BE RESPONSIBLE FOR THE ACCURACY OR COMPLETENESS OF SCANNED COPIES OF THIS PLAN SHEET.

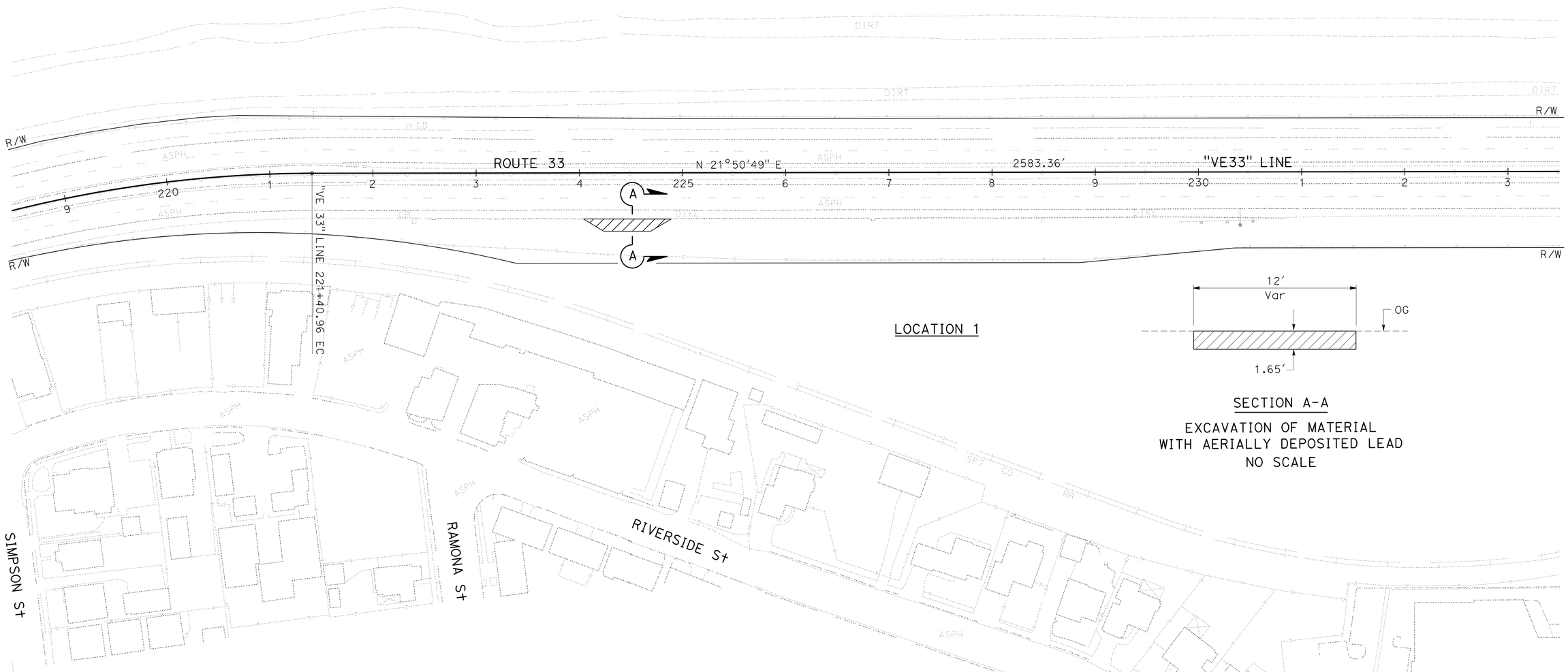

SECTION A-A

EXCAVATION OF MATERIAL
WITH AERIALLY DEPOSITED LEAD
NO SCALE

CONSTRUCTION DETAILS

SCALE: 1" = 50'

C-2

REVISED BY | DATE REVISED
DAN PHAM | KATHY PHAM
CALCULATED-DESIGNED BY | CHECKED BY
FUNCTIONAL SUPERVISOR
KYLE M. KUNITAKE

STATE OF CALIFORNIA - DEPARTMENT OF TRANSPORTATION
Caltrans
DESIGN

LAST REVISION 00-00-00 | DATE PLOTTED => 11-SEP-2015 | TIME PLOTTED => 11:00

Dist	COUNTY	ROUTE	POST MILES TOTAL PROJECT	SHEET No.	TOTAL SHEETS
07	Ven	33, 101	0.9/T5.8 2.3/13.8	26	239

REGISTERED CIVIL ENGINEER 6/19/15 DATE

6-29-15
PLANS APPROVAL DATE

REGISTERED PROFESSIONAL ENGINEER
KYLE M KUNITAKE
No. 63726
Exp. 9/30/16
CIVIL
STATE OF CALIFORNIA

THE STATE OF CALIFORNIA OR ITS OFFICERS OR AGENTS SHALL NOT BE RESPONSIBLE FOR THE ACCURACY OR COMPLETENESS OF SCANNED COPIES OF THIS PLAN SHEET.

NOTE:

FOR ACCURATE RIGHT OF WAY DATA, CONTACT RIGHT OF WAY ENGINEERING AT THE DISTRICT OFFICE.

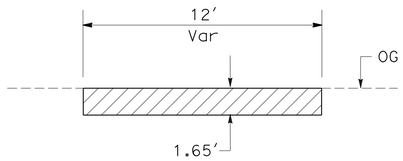

SECTION A-A

EXCAVATION OF MATERIAL
WITH AERIALLY DEPOSITED LEAD
NO SCALE

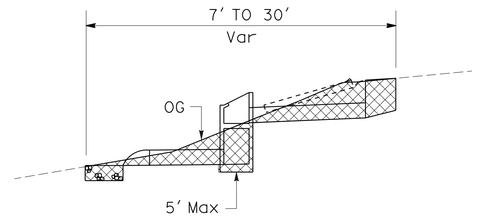

SECTION B-B

EXCAVATION OF MATERIAL
WITH AERIALLY DEPOSITED LEAD
NO SCALE

LOCATION 2

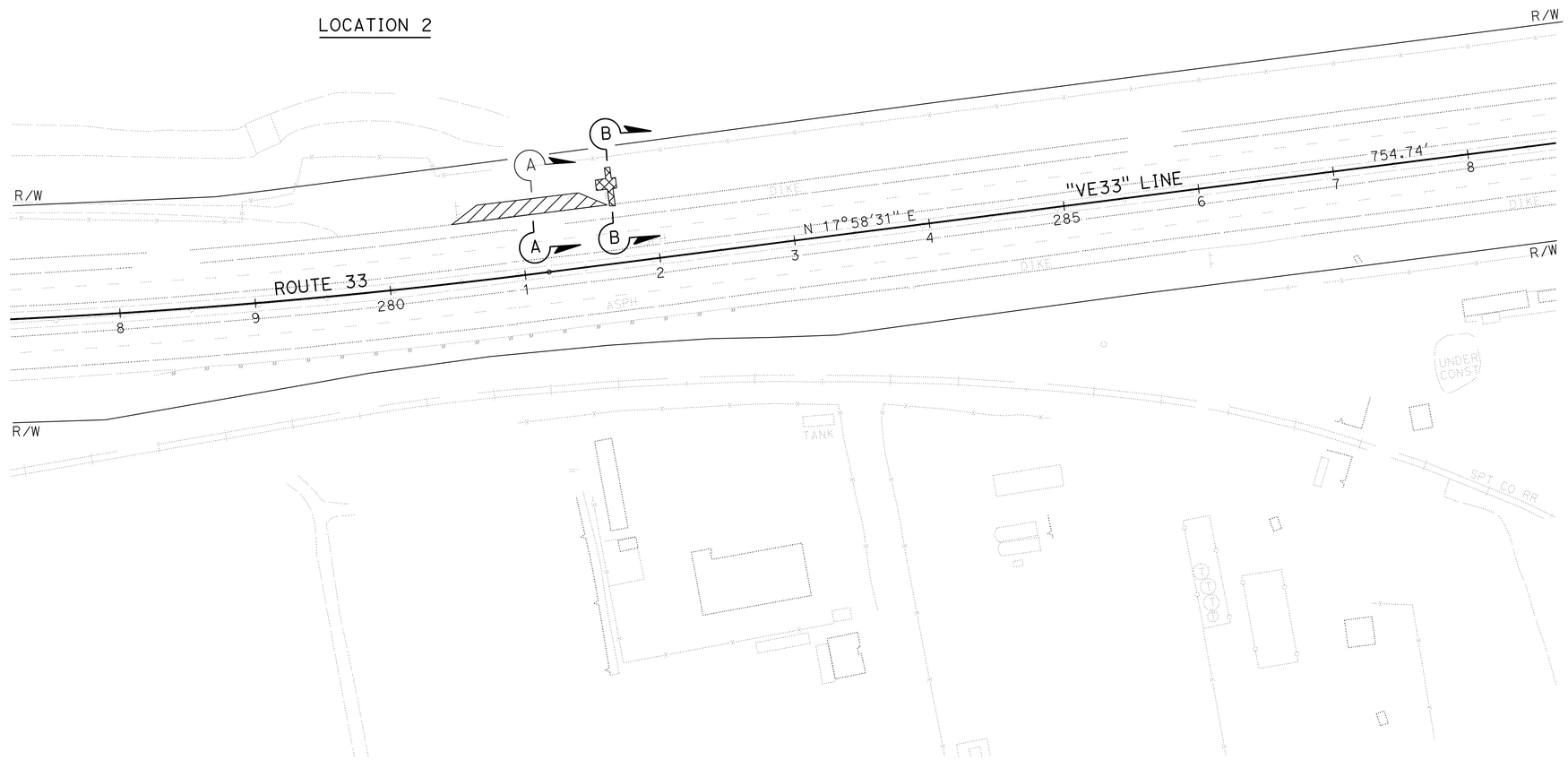

CONSTRUCTION DETAILS

SCALE: 1" = 50'

C-3

STATE OF CALIFORNIA - DEPARTMENT OF TRANSPORTATION
Caltrans®
DESIGN

FUNCTIONAL SUPERVISOR: KYLE M. KUNITAKE
CALCULATED-DESIGNED BY: DAN PHAM
CHECKED BY: KATHY PHAM
REVISED BY
DATE REVISED

LAST REVISION 00-00-00
DATE PLOTTED => 11-SEP-2015
TIME PLOTTED => 11:00

Dist	COUNTY	ROUTE	POST MILES TOTAL PROJECT	SHEET No.	TOTAL SHEETS
07	Ven	33, 101	0.9/T5.8 2.3/13.8	27	239

REGISTERED CIVIL ENGINEER 6/19/15 DATE

6-29-15
PLANS APPROVAL DATE

REGISTERED PROFESSIONAL ENGINEER
KYLE M KUNITAKE
No. 63726
Exp. 9/30/16
CIVIL
STATE OF CALIFORNIA

THE STATE OF CALIFORNIA OR ITS OFFICERS OR AGENTS SHALL NOT BE RESPONSIBLE FOR THE ACCURACY OR COMPLETENESS OF SCANNED COPIES OF THIS PLAN SHEET.

NOTE:

FOR ACCURATE RIGHT OF WAY DATA, CONTACT
RIGHT OF WAY ENGINEERING AT THE DISTRICT OFFICE.

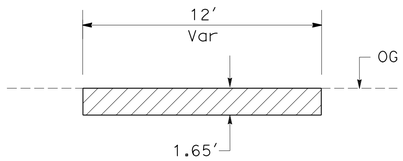

SECTION A-A

EXCAVATION OF MATERIAL
WITH AERIALLY DEPOSITED LEAD
NO SCALE

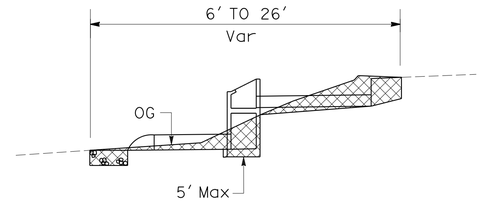

SECTION B-B

EXCAVATION OF MATERIAL
WITH AERIALLY DEPOSITED LEAD
NO SCALE

LOCATION 5

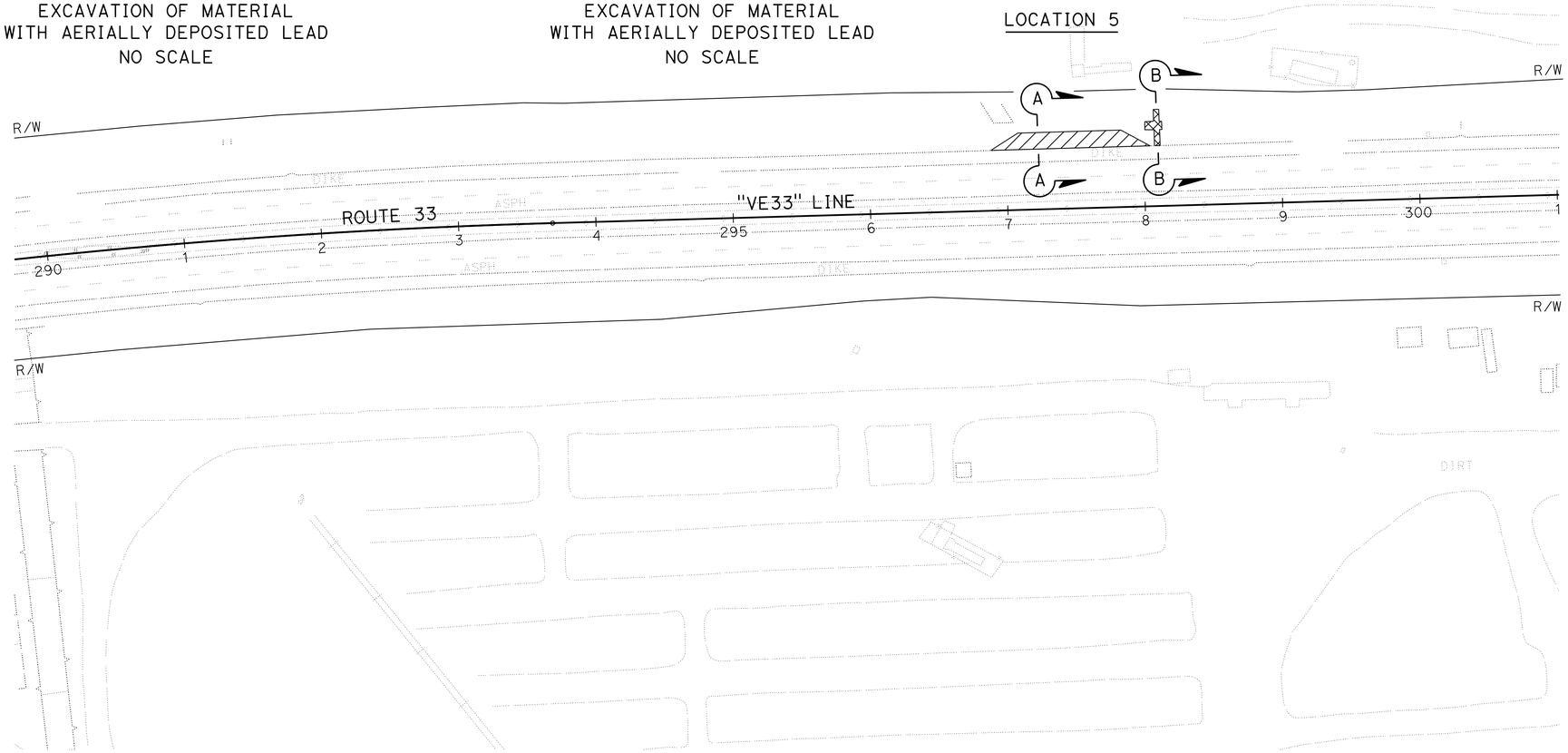

CONSTRUCTION DETAILS

SCALE: 1" = 50'

C-4

STATE OF CALIFORNIA - DEPARTMENT OF TRANSPORTATION
Caltrans
DESIGN

FUNCTIONAL SUPERVISOR: KYLE M. KUNITAKE
CALCULATED-DESIGNED BY: DAN PHAM
CHECKED BY: KATHY PHAM
REVISED BY
DATE REVISED

LAST REVISION 00-00-00
DATE PLOTTED => 11-SEP-2015
TIME PLOTTED => 11:00

Dist	COUNTY	ROUTE	POST MILES TOTAL PROJECT	SHEET No.	TOTAL SHEETS
07	Ven	33, 101	0.9/T5.8 2.3/13.8	28	239

REGISTERED CIVIL ENGINEER — DATE 6/19/15

6-29-15
PLANS APPROVAL DATE

REGISTERED PROFESSIONAL ENGINEER — KYLE M KUNITAKE — No. 63726 — Exp. 9/30/16 — CIVIL — STATE OF CALIFORNIA

THE STATE OF CALIFORNIA OR ITS OFFICERS OR AGENTS SHALL NOT BE RESPONSIBLE FOR THE ACCURACY OR COMPLETENESS OF SCANNED COPIES OF THIS PLAN SHEET.

NOTE:

FOR ACCURATE RIGHT OF WAY DATA, CONTACT
RIGHT OF WAY ENGINEERING AT THE DISTRICT OFFICE.

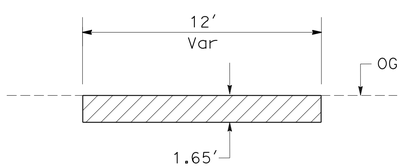

SECTION A-A

EXCAVATION OF MATERIAL
WITH AERIALLY DEPOSITED LEAD
NO SCALE

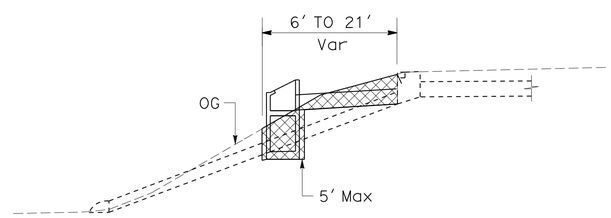

SECTION B-B

EXCAVATION OF MATERIAL
WITH AERIALLY DEPOSITED LEAD
NO SCALE

CONSTRUCTION DETAILS

SCALE: 1" = 50′

C-5

STATE OF CALIFORNIA - DEPARTMENT OF TRANSPORTATION
DESIGN

FUNCTIONAL SUPERVISOR: KYLE M. KUNITAKE
CALCULATED-DESIGNED BY: DAN PHAM
CHECKED BY: KATHY PHAM
REVISED BY
DATE REVISED

LAST REVISION 00-00-00
DATE PLOTTED => 11-SEP-2015
TIME PLOTTED => 11:00

Dist	COUNTY	ROUTE	POST MILES TOTAL PROJECT	SHEET No.	TOTAL SHEETS
07	Ven	33, 101	0.9/T5.8 2.3/13.8	29	239

REGISTERED CIVIL ENGINEER 9/30/16 DATE

6-29-15
PLANS APPROVAL DATE

REGISTERED PROFESSIONAL ENGINEER
KYLE M KUNITAKE
No. 63726
Exp. 9/30/16
CIVIL
STATE OF CALIFORNIA

THE STATE OF CALIFORNIA OR ITS OFFICERS OR AGENTS SHALL NOT BE RESPONSIBLE FOR THE ACCURACY OR COMPLETENESS OF SCANNED COPIES OF THIS PLAN SHEET.

NOTE:

FOR ACCURATE RIGHT OF WAY DATA, CONTACT RIGHT OF WAY ENGINEERING AT THE DISTRICT OFFICE.

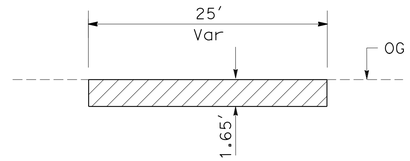

SECTION A-A

EXCAVATION OF MATERIAL
WITH AERIALLY DEPOSITED LEAD
NO SCALE

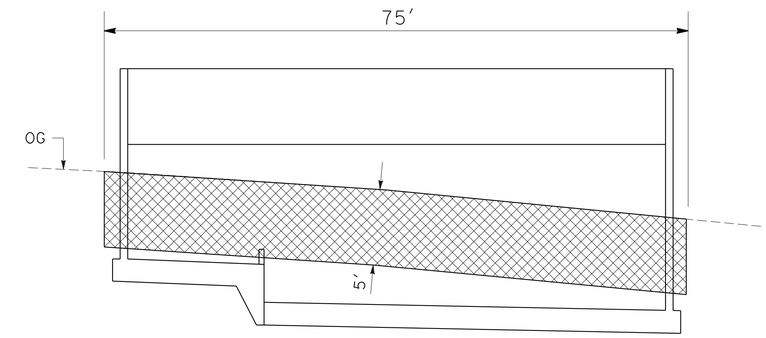

SECTION B-B

EXCAVATION OF MATERIAL
WITH AERIALLY DEPOSITED LEAD
NO SCALE

LOCATION 13

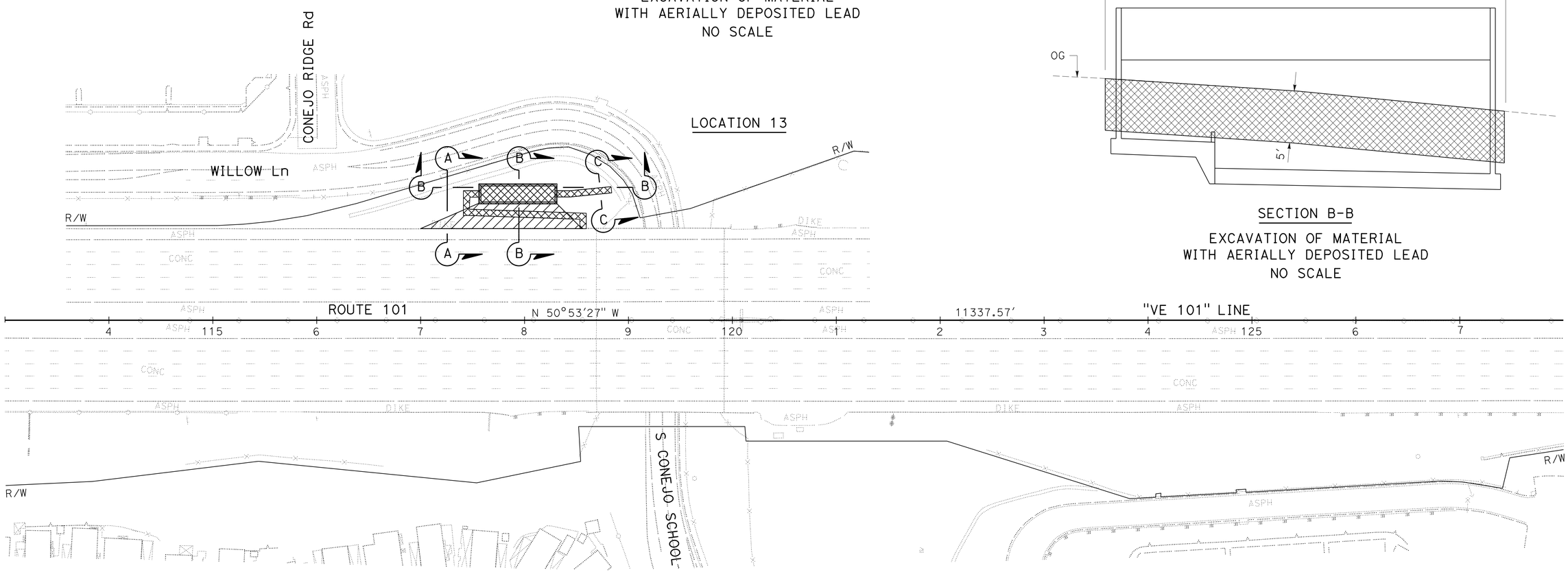

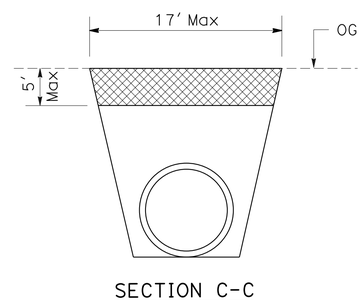

SECTION C-C

EXCAVATION OF MATERIAL
WITH AERIALLY DEPOSITED LEAD
NO SCALE

CONSTRUCTION DETAILS

SCALE: 1" = 50'

C-6

STATE OF CALIFORNIA - DEPARTMENT OF TRANSPORTATION
DESIGN
FUNCTIONAL SUPERVISOR: KYLE M. KUNITAKE
CALCULATED-DESIGNED BY: DAN PHAM
CHECKED BY: KATHY PHAM
REVISED BY
DATE REVISED

LAST REVISION 00-00-00
DATE PLOTTED => 11-SEP-2015
TIME PLOTTED => 11:00

Dist	COUNTY	ROUTE	POST MILES TOTAL PROJECT	SHEET No.	TOTAL SHEETS
07	Ven	33, 101	0.9/T5.8 2.3/13.8	30	239

REGISTERED CIVIL ENGINEER 9/30/16 DATE

6-29-15
PLANS APPROVAL DATE

REGISTERED PROFESSIONAL ENGINEER
KYLE M KUNITAKE
No. 63726
Exp. 9/30/16
CIVIL
STATE OF CALIFORNIA

THE STATE OF CALIFORNIA OR ITS OFFICERS OR AGENTS SHALL NOT BE RESPONSIBLE FOR THE ACCURACY OR COMPLETENESS OF SCANNED COPIES OF THIS PLAN SHEET.

NOTE:

FOR ACCURATE RIGHT OF WAY DATA, CONTACT RIGHT OF WAY ENGINEERING AT THE DISTRICT OFFICE.

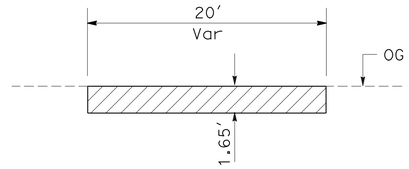

SECTION A-A

EXCAVATION OF MATERIAL
WITH AERIALLY DEPOSITED LEAD
NO SCALE

LOCATION 16

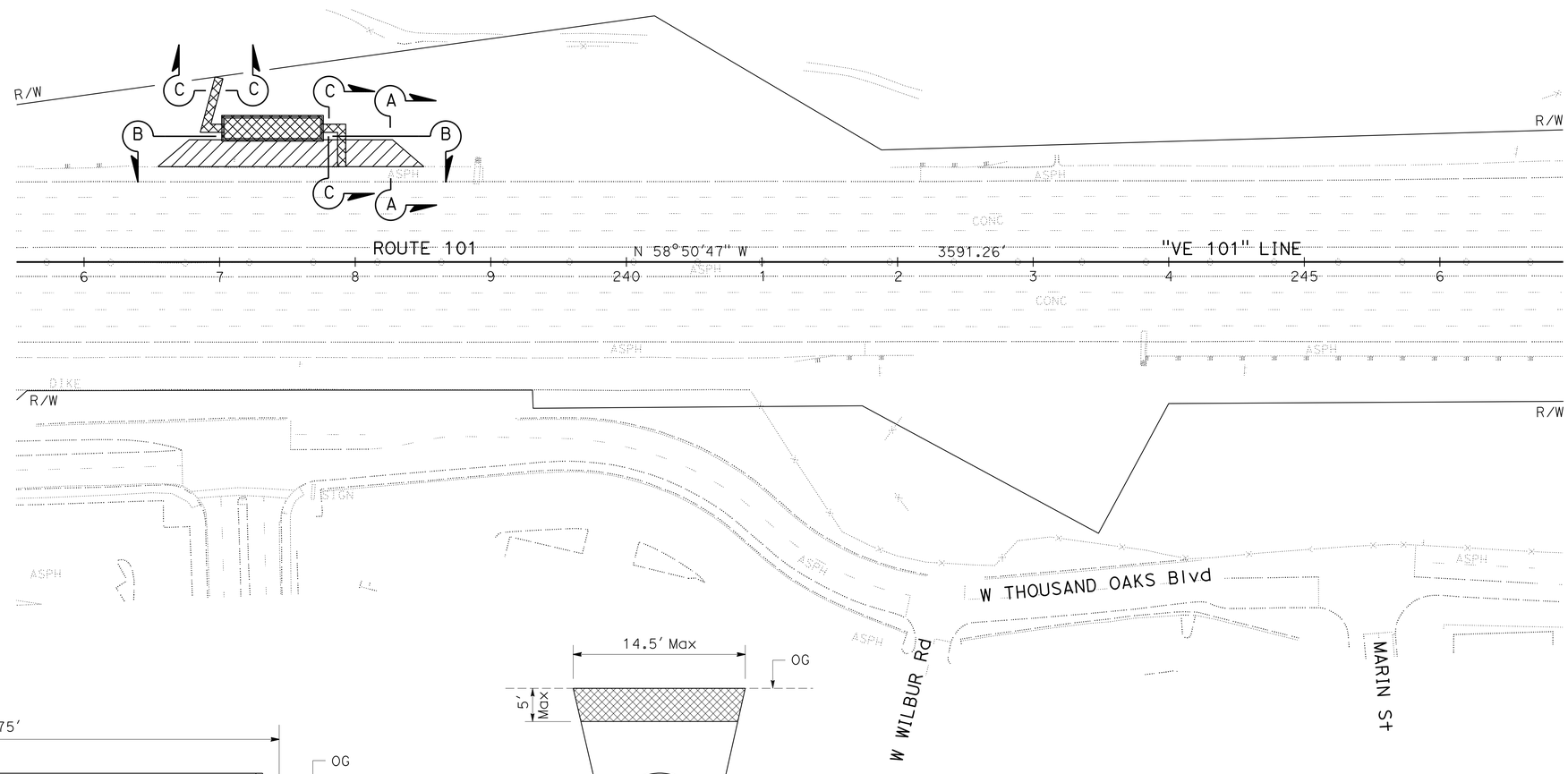

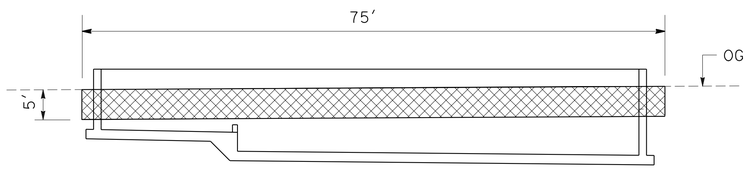

SECTION B-B

EXCAVATION OF MATERIAL
WITH AERIALLY DEPOSITED LEAD
NO SCALE

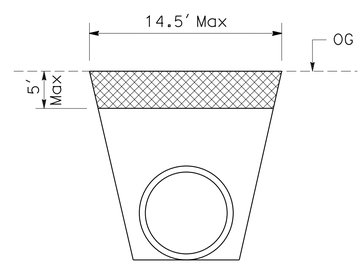

SECTION C-C

EXCAVATION OF MATERIAL
WITH AERIALLY DEPOSITED LEAD
NO SCALE

CONSTRUCTION DETAILS

SCALE: 1" = 50'

C-7

STATE OF CALIFORNIA - DEPARTMENT OF TRANSPORTATION
Caltrans
DESIGN

FUNCTIONAL SUPERVISOR: KYLE M. KUNITAKE
CALCULATED-DESIGNED BY: DAN PHAM
CHECKED BY: KATHY PHAM
REVISED BY
DATE REVISED

LAST REVISION 00-00-00
DATE PLOTTED => 11-SEP-2015
TIME PLOTTED => 11:00

Dist	COUNTY	ROUTE	POST MILES TOTAL PROJECT	SHEET No.	TOTAL SHEETS
07	Ven	33, 101	0.9/T5.8 2.3/13.8	31	239

REGISTERED CIVIL ENGINEER 6/19/15 DATE

6-29-15
PLANS APPROVAL DATE

REGISTERED PROFESSIONAL ENGINEER
KYLE M KUNITAKE
No. 63726
Exp. 9/30/16
CIVIL
STATE OF CALIFORNIA

THE STATE OF CALIFORNIA OR ITS OFFICERS OR AGENTS SHALL NOT BE RESPONSIBLE FOR THE ACCURACY OR COMPLETENESS OF SCANNED COPIES OF THIS PLAN SHEET.

NOTE:
FOR ACCURATE RIGHT OF WAY DATA, CONTACT RIGHT OF WAY ENGINEERING AT THE DISTRICT OFFICE.

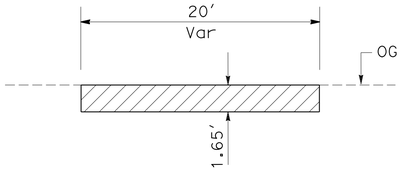

SECTION A-A
EXCAVATION OF MATERIAL
WITH AERIALLY DEPOSITED LEAD
NO SCALE

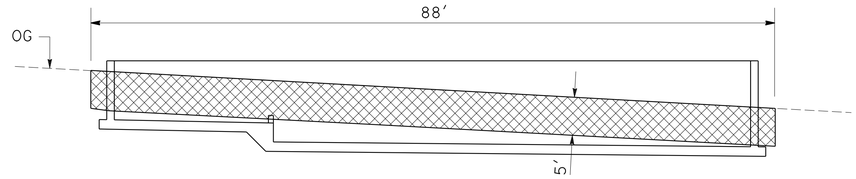

SECTION B-B
EXCAVATION OF MATERIAL
WITH AERIALLY DEPOSITED LEAD
NO SCALE

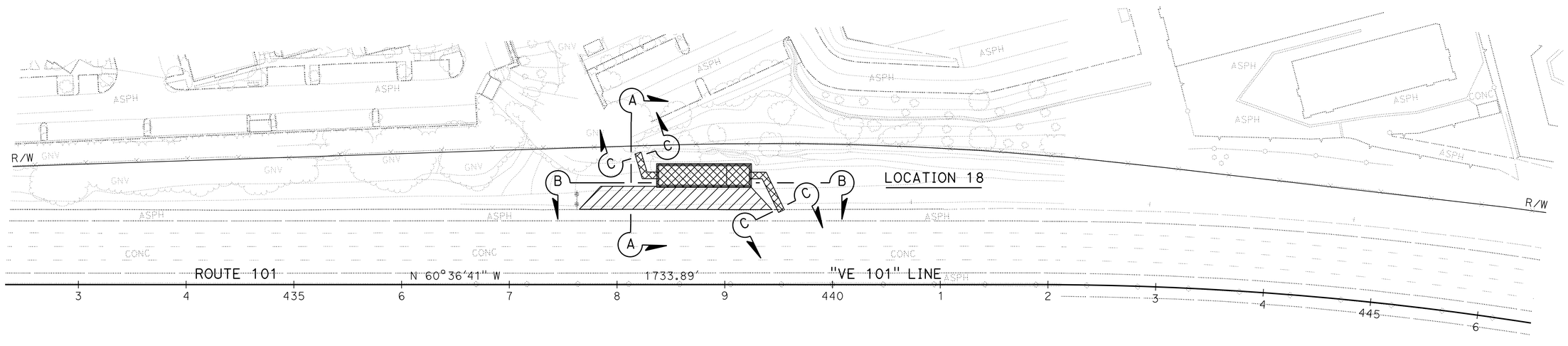

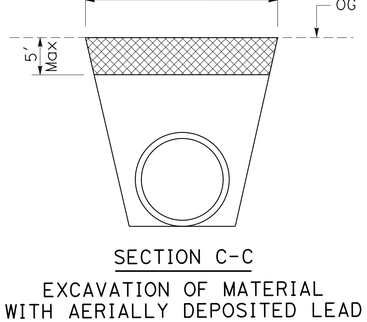

SECTION C-C
EXCAVATION OF MATERIAL
WITH AERIALLY DEPOSITED LEAD
NO SCALE

CONSTRUCTION DETAILS

SCALE: 1" = 50'

C-8

REVISED BY	DATE REVISED
DAN PHAM	KATHY PHAM

CALCULATED-DESIGNED BY	CHECKED BY

FUNCTIONAL SUPERVISOR: KYLE M. KUNITAKE

STATE OF CALIFORNIA - DEPARTMENT OF TRANSPORTATION
Caltrans
DESIGN

LAST REVISION 00-00-00
DATE PLOTTED => 11-SEP-2015
TIME PLOTTED => 11:00

Dist	COUNTY	ROUTE	POST MILES TOTAL PROJECT	SHEET No.	TOTAL SHEETS
07	Ven	33, 101	0.9/T5.8 2.3/13.8	32	239

Paul Fong 6/20/15
REGISTERED CIVIL ENGINEER DATE

6-29-15
PLANS APPROVAL DATE

REGISTERED PROFESSIONAL ENGINEER
PAUL FONG
No. C67053
Exp. 9/30/16
CIVIL
STATE OF CALIFORNIA

THE STATE OF CALIFORNIA OR ITS OFFICERS OR AGENTS SHALL NOT BE RESPONSIBLE FOR THE ACCURACY OR COMPLETENESS OF SCANNED COPIES OF THIS PLAN SHEET.

NOTES:

1. FOR ACCURATE RIGHT OF WAY DATA, CONTACT RIGHT OF WAY ENGINEERING AT THE DISTRICT OFFICE.
2. VERIFY LOCATIONS AND ELEVATIONS OF EXISTING DRAINAGE SYSTEMS BEFORE COMMENCEMENT OF WORK.
3. FOR DRAINAGE SYSTEMS No. 13, 14, 17, 19, 20 AND 21 USE ASVF WATER POLLUTION CONTROL DETAILS, WD-17, WD-18 AND WD-21 TO WD-26.
4. FOR DRAINAGE SYSTEMS No. 16 USE ASVF WATER POLLUTION CONTROL DETAILS, WD-19, WD-20 and WD-22 TO WD-28.

LEGEND:

DRAINAGE SYSTEM No.

DRAINAGE UNIT

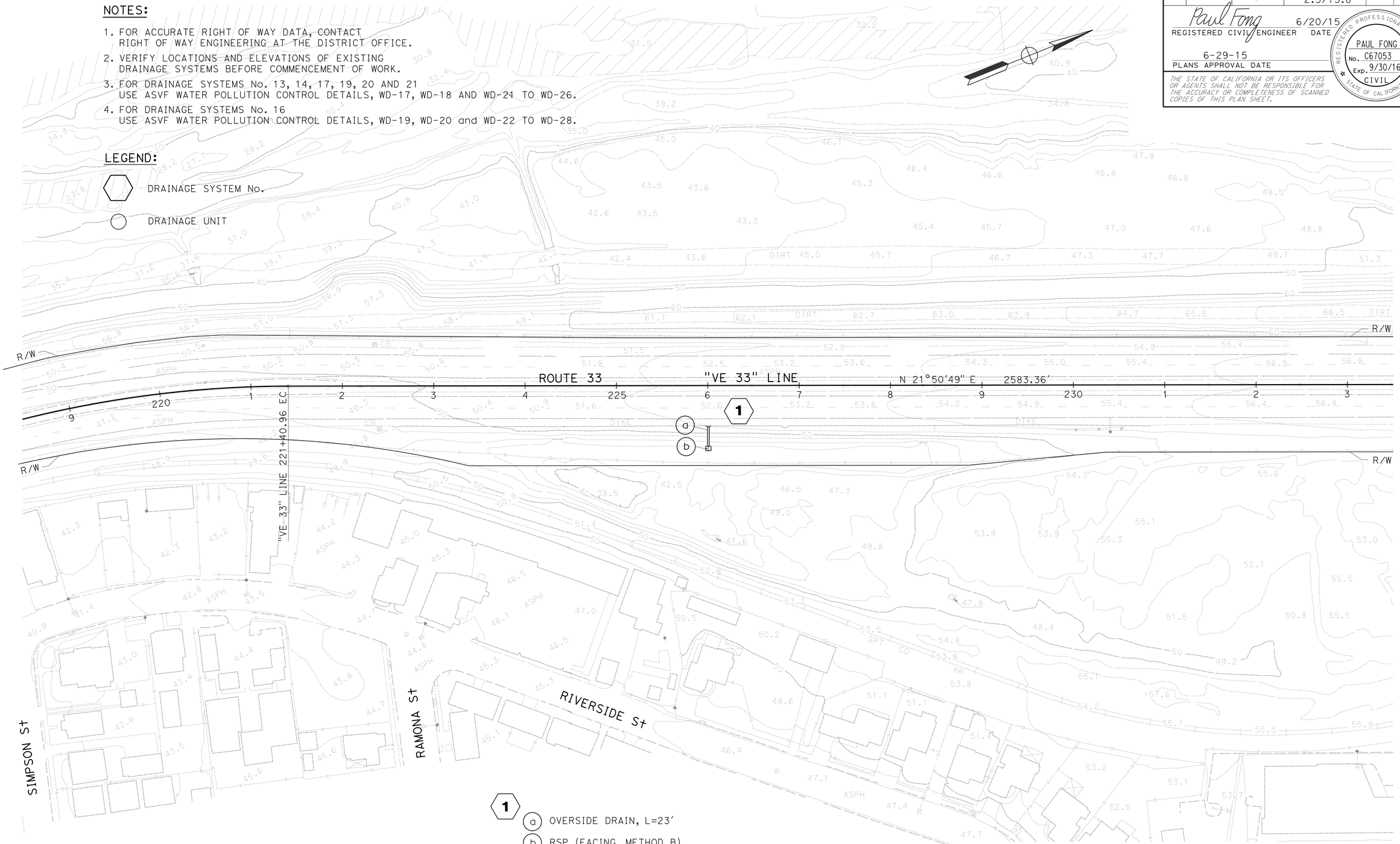

1
a OVERSIDE DRAIN, L=23'
b RSP (FACING, METHOD B)

WATER POLLUTION CONTROL PLAN

SCALE: 1" = 50'

W-1

APPROVED FOR WATER POLLUTION CONTROL WORK ONLY

STATE OF CALIFORNIA - DEPARTMENT OF TRANSPORTATION
Caltrans
HYDRAULICS

FUNCTIONAL SUPERVISOR: DAVE BHALLA
CALCULATED-DESIGNED BY: PAUL FONG
CHECKED BY: ROMULO D. ROBENIOL
REVISED BY
DATE REVISED

LAST REVISION 00-00-00
DATE PLOTTED => 11-SEP-2015
TIME PLOTTED => 11:00

Dist	COUNTY	ROUTE	POST MILES TOTAL PROJECT	SHEET No.	TOTAL SHEETS
07	Ven	33, 101	0.9/T5.8 2.3/13.8	33	239

Paul Fong 6/20/15
REGISTERED CIVIL ENGINEER DATE

6-29-15
PLANS APPROVAL DATE

REGISTERED PROFESSIONAL ENGINEER
PAUL FONG
No. C67053
Exp. 9/30/16
CIVIL
STATE OF CALIFORNIA

THE STATE OF CALIFORNIA OR ITS OFFICERS OR AGENTS SHALL NOT BE RESPONSIBLE FOR THE ACCURACY OR COMPLETENESS OF SCANNED COPIES OF THIS PLAN SHEET.

NOTE:

FOR ACCURATE RIGHT OF WAY DATA, CONTACT
RIGHT OF WAY ENGINEERING AT THE DISTRICT OFFICE.

2

- (a) REMOVE 12" x 12' CSP
- (b) GD-1 INLET' H=5'
- (c) 24" x 15.4' CSP
- (d) GSRD TYPE A
- (e) 24" x 9.8' CSP
- (f) 24" STEEL FES
- (g) RSP (FACING, METHOD B)

3

- (a) GD-1 INLET, H=5'
- (b) 24" x 15.4' CSP
- (c) GSRD TYPE A
- (d) 24" x 10.5' CSP
- (e) 24" STEEL FES
- (f) RSP (FACING, METHOD B)

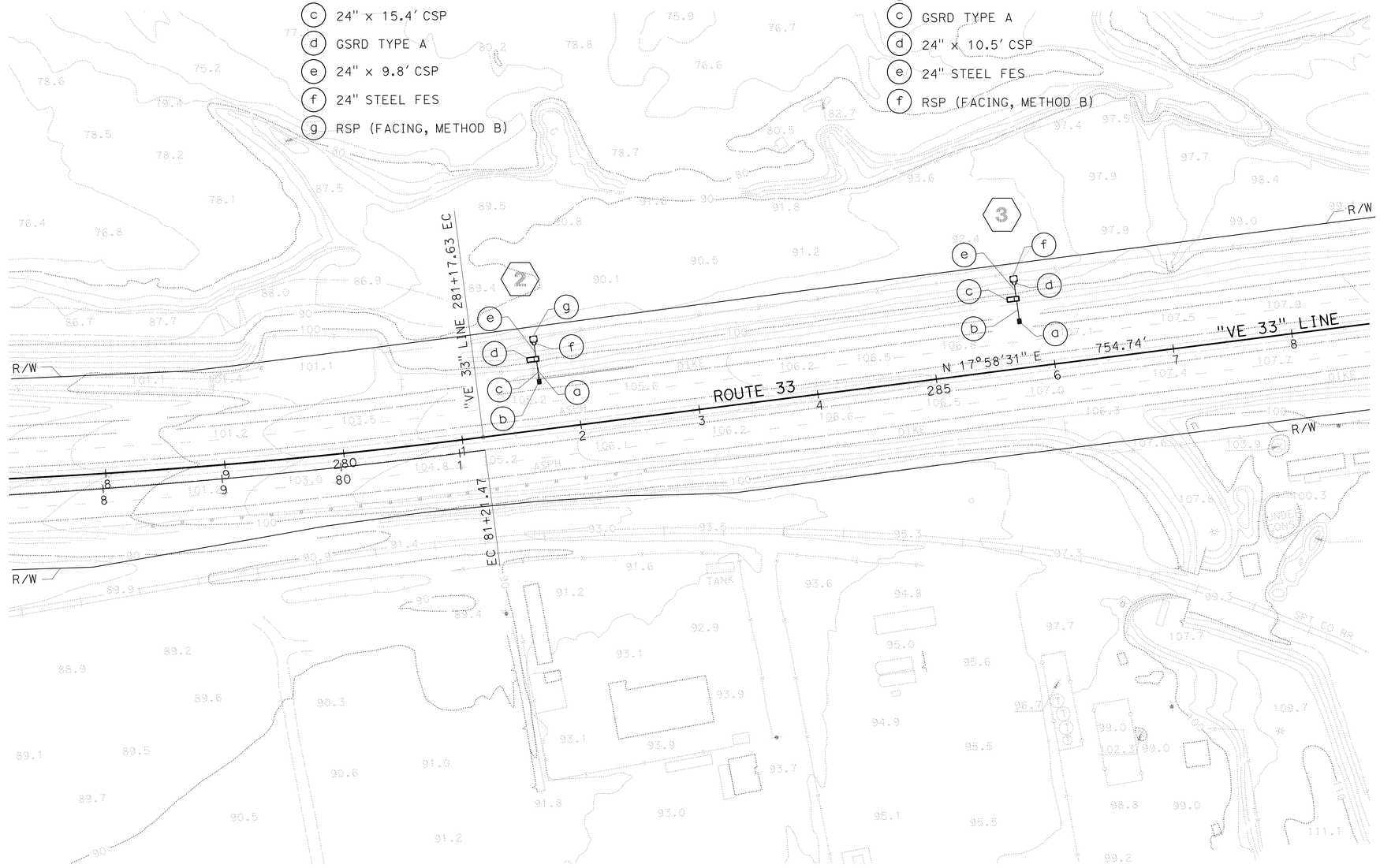

WATER POLLUTION CONTROL PLAN

SCALE: 1" = 50'

W-2

APPROVED FOR WATER POLLUTION CONTROL WORK ONLY

STATE OF CALIFORNIA - DEPARTMENT OF TRANSPORTATION
Caltrans
HYDRAULICS

FUNCTIONAL SUPERVISOR: DAVE BHALLA
CALCULATED-DESIGNED BY: ROMULO D. ROBENIOL
CHECKED BY: PAUL FONG
REVISED BY
DATE REVISED

LAST REVISION 00-00-00
DATE PLOTTED => 11-SEP-2015
TIME PLOTTED => 11:00

Dist	COUNTY	ROUTE	POST MILES TOTAL PROJECT	SHEET No.	TOTAL SHEETS
07	Ven	33, 101	0.9/T5.8 2.3/13.8	34	239

Paul Fong 6/20/15
REGISTERED CIVIL ENGINEER DATE

6-29-15
PLANS APPROVAL DATE

REGISTERED PROFESSIONAL ENGINEER
PAUL FONG
No. C67053
Exp. 9/30/16
CIVIL
STATE OF CALIFORNIA

THE STATE OF CALIFORNIA OR ITS OFFICERS OR AGENTS SHALL NOT BE RESPONSIBLE FOR THE ACCURACY OR COMPLETENESS OF SCANNED COPIES OF THIS PLAN SHEET.

NOTE:

FOR ACCURATE RIGHT OF WAY DATA, CONTACT RIGHT OF WAY ENGINEERING AT THE DISTRICT OFFICE.

4

- (a) REMOVE 12" x 12' CSP
- (b) GD-1 INLET, H=5'
- (c) 24" x 15.2' CSP
- (d) GSRD TYPE A
- (e) 24" x 10.1' CSP
- (f) 24" STEEL FES
- (g) RSP (FACING, METHOD B)

5

- (a) REMOVE 12" x 12' CSP
- (b) GD-1 INLET, H=3.6'
- (c) 18" x 15.2' CSP
- (d) GSRD TYPE A
- (e) 24" x 10.1' CSP
- (f) 24" STEEL FES
- (g) RSP (FACING, METHOD B)

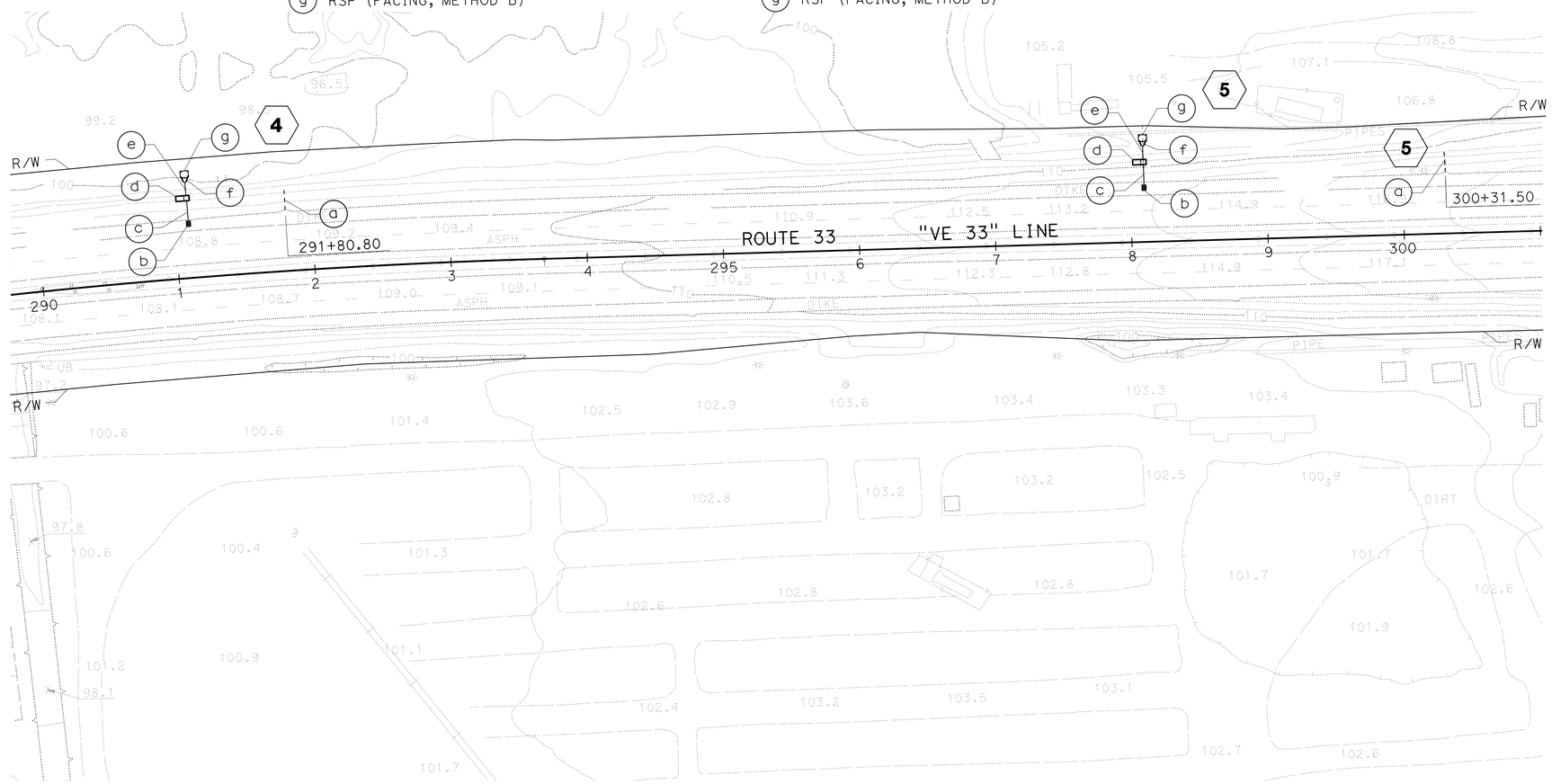

WATER POLLUTION CONTROL PLAN

SCALE: 1" = 50'

W-3

APPROVED FOR WATER POLLUTION CONTROL WORK ONLY

STATE OF CALIFORNIA - DEPARTMENT OF TRANSPORTATION
Caltrans
HYDRAULICS

FUNCTIONAL SUPERVISOR: DAVE BHALLA
CALCULATED-DESIGNED BY: ROMULO D. ROBENIOL
CHECKED BY: PAUL FONG
REVISED BY
DATE REVISED

LAST REVISION 00-00-00
DATE PLOTTED => 11-SEP-2015
TIME PLOTTED => 11:00

Dist	COUNTY	ROUTE	POST MILES TOTAL PROJECT	SHEET No.	TOTAL SHEETS
07	Ven	33, 101	0.9/T5.8 2.3/13.8	35	239

Paul Fong 6/20/15
REGISTERED CIVIL ENGINEER DATE

6-29-15
PLANS APPROVAL DATE

REGISTERED PROFESSIONAL ENGINEER
PAUL FONG
No. C67053
Exp. 9/30/16
CIVIL
STATE OF CALIFORNIA

THE STATE OF CALIFORNIA OR ITS OFFICERS OR AGENTS SHALL NOT BE RESPONSIBLE FOR THE ACCURACY OR COMPLETENESS OF SCANNED COPIES OF THIS PLAN SHEET.

NOTE:

FOR ACCURATE RIGHT OF WAY DATA, CONTACT RIGHT OF WAY ENGINEERING AT THE DISTRICT OFFICE.

6
- (a) RSP (FACING, METHOD B)
- (b) 18" STEEL FES
- (c) 18" x 48' CSP
- (d) TYPE G1 INLET, H=3.5'
- (e) 18" x 144' RCP
- (f) REMOVE INLET
- (g) TYPE G1 INLET, H=3.6'

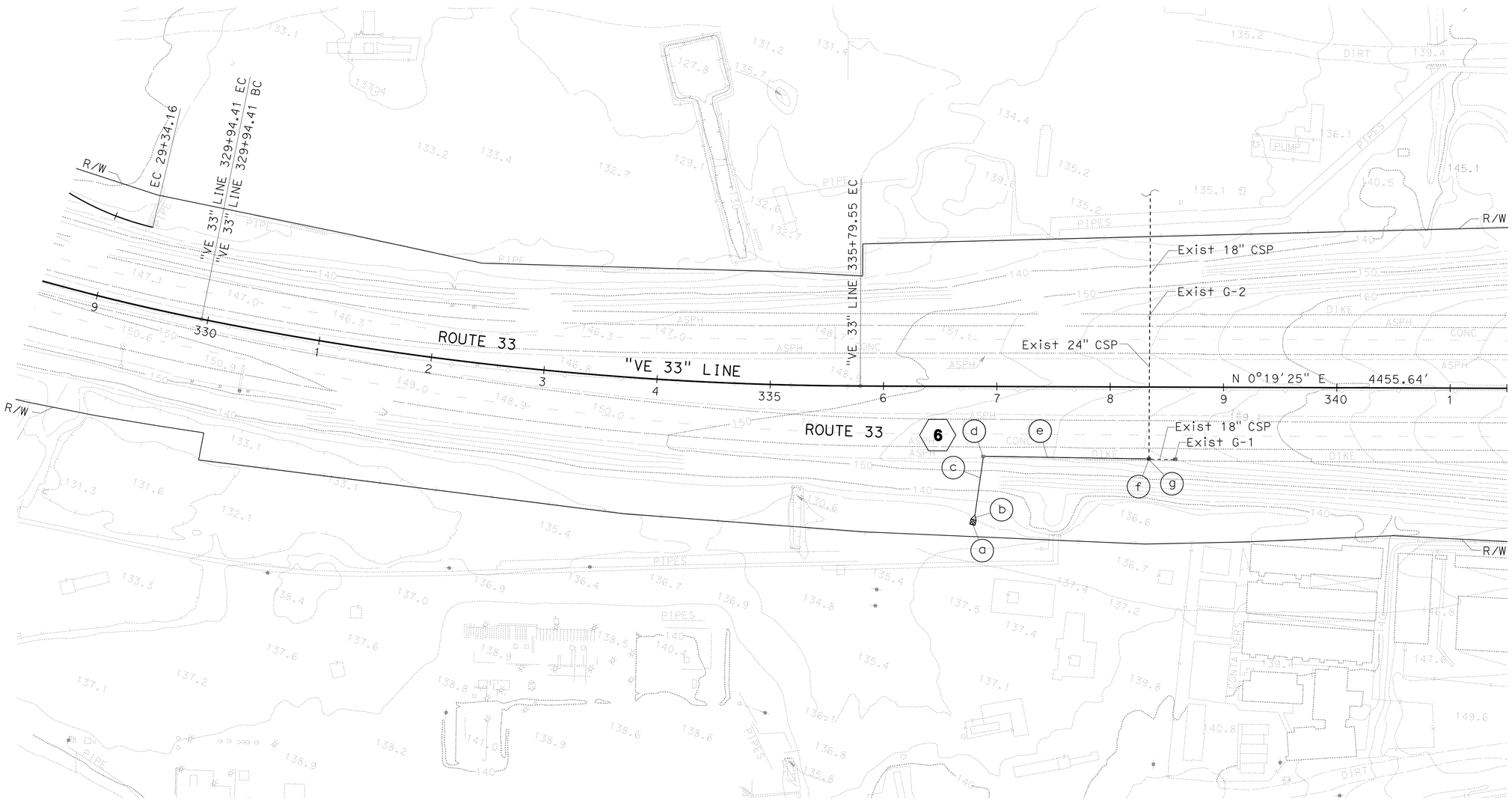

WATER POLLUTION CONTROL PLAN

SCALE: 1" = 50'

W-4

APPROVED FOR WATER POLLUTION CONTROL WORK ONLY

STATE OF CALIFORNIA - DEPARTMENT OF TRANSPORTATION
Caltrans
HYDRAULICS

FUNCTIONAL SUPERVISOR: DAVE BHALLA
CALCULATED-DESIGNED BY: PAUL FONG
CHECKED BY: ROMULO D. ROBENIOL
REVISED BY
DATE REVISED

LAST REVISION 00-00-00
DATE PLOTTED => 11-SEP-2015
TIME PLOTTED => 11:00

Dist	COUNTY	ROUTE	POST MILES TOTAL PROJECT	SHEET No.	TOTAL SHEETS
07	Ven	33, 101	0.9/T5.8 2.3/13.8	36	239

Paul Fong 6/20/15
REGISTERED CIVIL ENGINEER DATE

6-29-15
PLANS APPROVAL DATE

REGISTERED PROFESSIONAL ENGINEER
PAUL FONG
No. C67053
Exp. 9/30/16
CIVIL
STATE OF CALIFORNIA

THE STATE OF CALIFORNIA OR ITS OFFICERS OR AGENTS SHALL NOT BE RESPONSIBLE FOR THE ACCURACY OR COMPLETENESS OF SCANNED COPIES OF THIS PLAN SHEET.

NOTE:

FOR ACCURATE RIGHT OF WAY DATA, CONTACT RIGHT OF WAY ENGINEERING AT THE DISTRICT OFFICE.

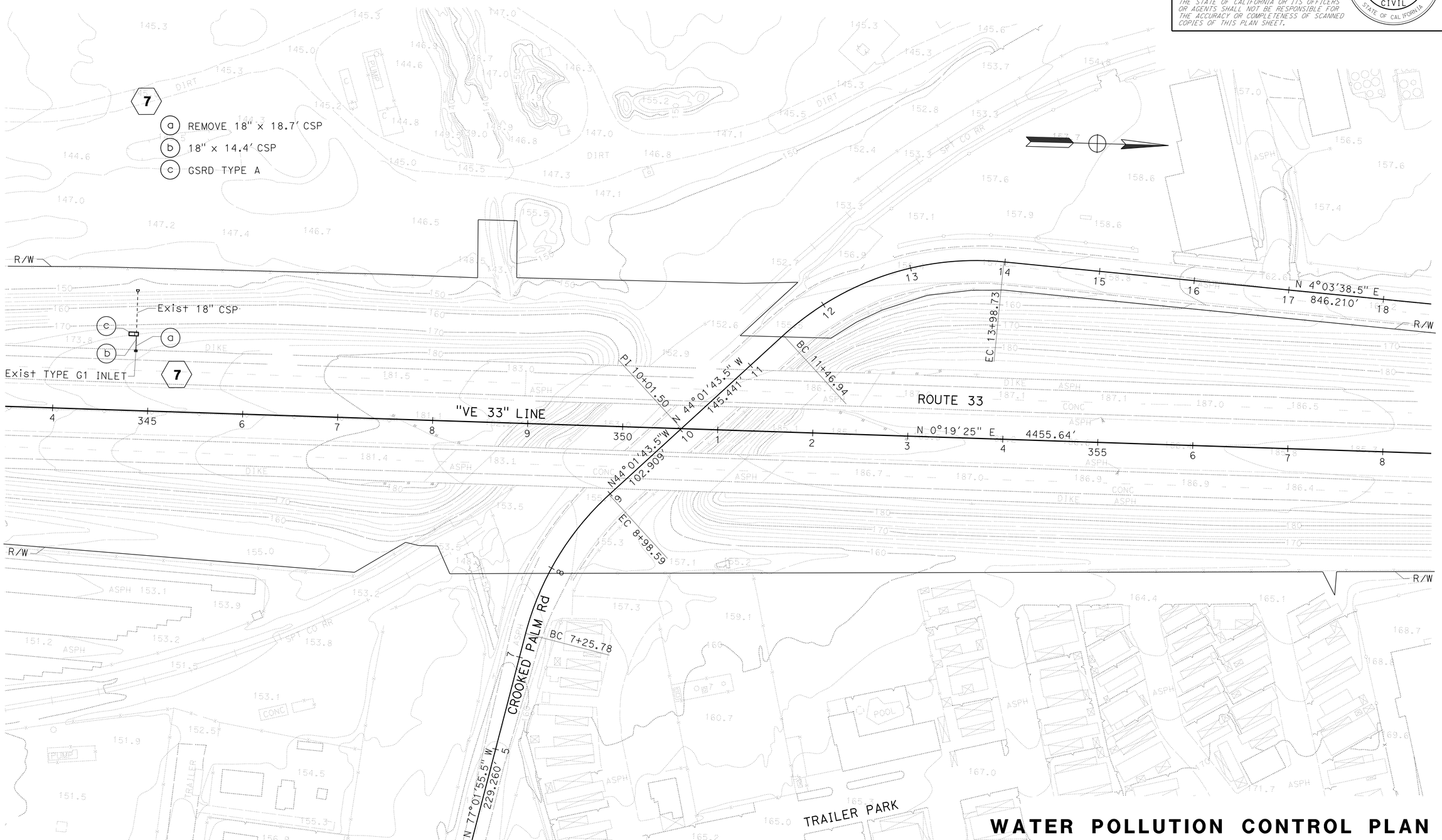

WATER POLLUTION CONTROL PLAN

SCALE: 1" = 50'

W-5

APPROVED FOR WATER POLLUTION CONTROL WORK ONLY

STATE OF CALIFORNIA - DEPARTMENT OF TRANSPORTATION
Caltrans
HYDRAULICS
FUNCTIONAL SUPERVISOR: DAVE BHALLA
CALCULATED-DESIGNED BY: ROMULO D. ROBENIOL
CHECKED BY: PAUL FONG
REVISED BY
DATE REVISED

LAST REVISION 00-00-00
DATE PLOTTED => 11-SEP-2015
TIME PLOTTED => 11:00

Dist	COUNTY	ROUTE	POST MILES TOTAL PROJECT	SHEET No.	TOTAL SHEETS
07	Ven	33, 101	0.9/T5.8 2.3/13.8	37	239

Paul Fong 6/20/15
REGISTERED CIVIL ENGINEER DATE

6-29-15
PLANS APPROVAL DATE

REGISTERED PROFESSIONAL ENGINEER
PAUL FONG
No. C67053
Exp. 9/30/16
CIVIL
STATE OF CALIFORNIA

THE STATE OF CALIFORNIA OR ITS OFFICERS OR AGENTS SHALL NOT BE RESPONSIBLE FOR THE ACCURACY OR COMPLETENESS OF SCANNED COPIES OF THIS PLAN SHEET.

NOTE:

FOR ACCURATE RIGHT OF WAY DATA, CONTACT
RIGHT OF WAY ENGINEERING AT THE DISTRICT OFFICE.

8
- (a) OVERSIDE DRAIN, L=10.5′
- (b) RSP (FACING, METHOD B)

9
- (a) REMOVE 18" x 18.2′ CSP
- (b) 24" x 14′ CSP
- (c) GSRD TYPE A
- (d) CAP INLET

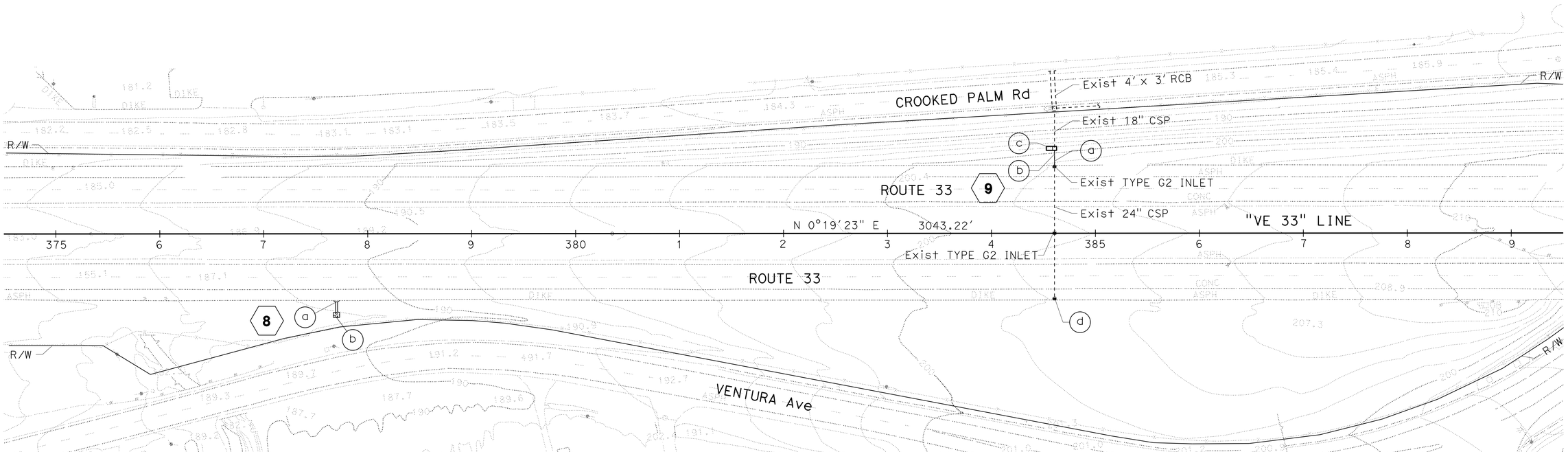

WATER POLLUTION CONTROL PLAN

SCALE: 1" = 50′

W-6

APPROVED FOR WATER POLLUTION CONTROL WORK ONLY

STATE OF CALIFORNIA - DEPARTMENT OF TRANSPORTATION
Caltrans
HYDRAULICS

FUNCTIONAL SUPERVISOR: DAVE BHALLA

CALCULATED-DESIGNED BY: PAUL FONG
CHECKED BY: ROMULO D. ROBENIOL

REVISED BY
DATE REVISED

LAST REVISION 00-00-00
DATE PLOTTED => 11-SEP-2015
TIME PLOTTED => 11:00

Dist	COUNTY	ROUTE	POST MILES TOTAL PROJECT	SHEET No.	TOTAL SHEETS
07	Ven	33, 101	0.9/T5.8 2.3/13.8	38	239

Paul Fong 6/20/15
REGISTERED CIVIL ENGINEER DATE

6-29-15
PLANS APPROVAL DATE

REGISTERED PROFESSIONAL ENGINEER
PAUL FONG
No. C67053
Exp. 9/30/16
CIVIL
STATE OF CALIFORNIA

THE STATE OF CALIFORNIA OR ITS OFFICERS OR AGENTS SHALL NOT BE RESPONSIBLE FOR THE ACCURACY OR COMPLETENESS OF SCANNED COPIES OF THIS PLAN SHEET.

NOTE:

FOR ACCURATE RIGHT OF WAY DATA, CONTACT
RIGHT OF WAY ENGINEERING AT THE DISTRICT OFFICE.

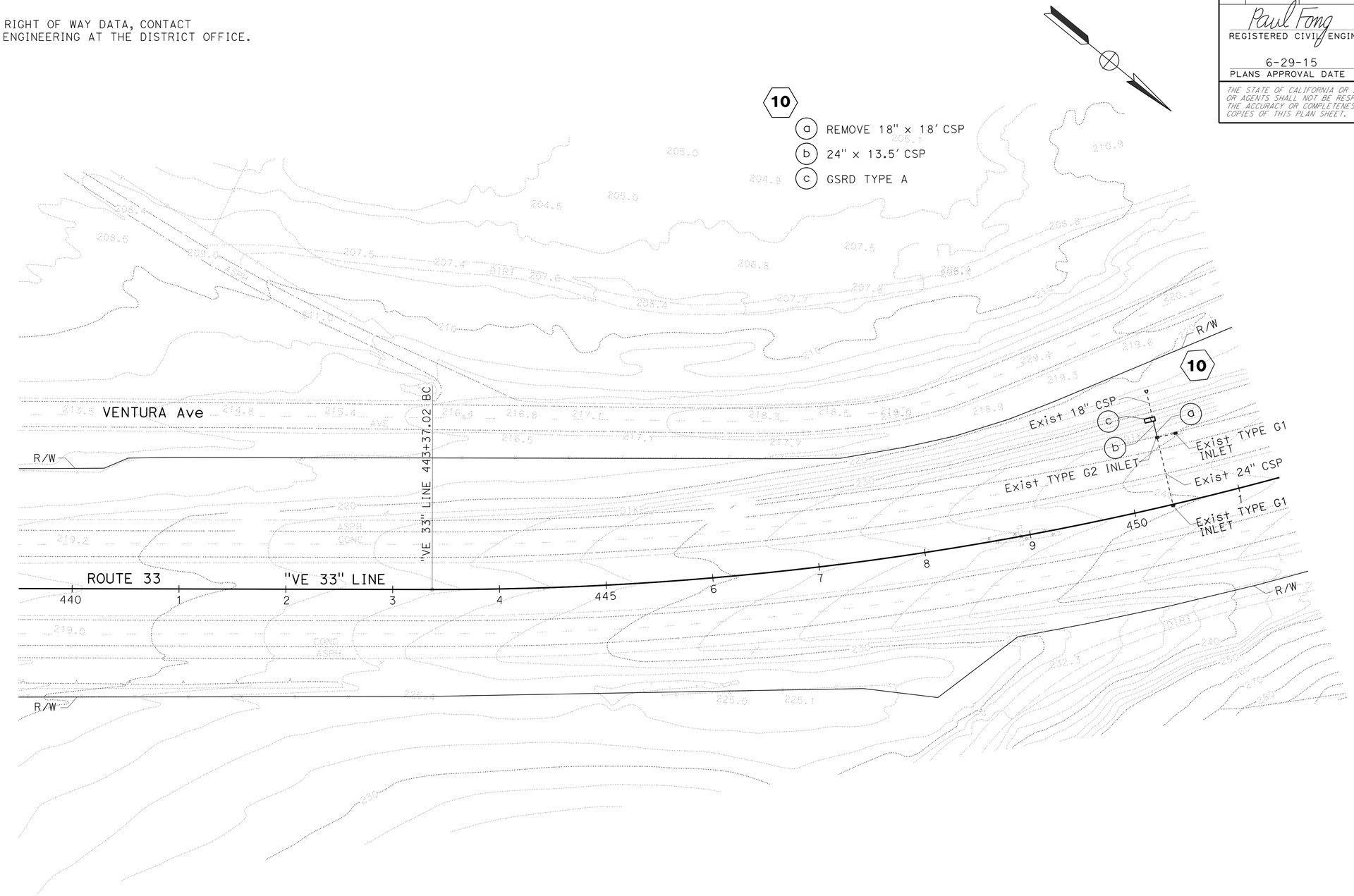

WATER POLLUTION CONTROL PLAN

SCALE: 1" = 50'

W-7

APPROVED FOR WATER POLLUTION CONTROL WORK ONLY

STATE OF CALIFORNIA - DEPARTMENT OF TRANSPORTATION
Caltrans
HYDRAULICS

FUNCTIONAL SUPERVISOR: DAVE BHALLA
CALCULATED-DESIGNED BY: ROMULO D. ROBENIOL
CHECKED BY: PAUL FONG
REVISED BY
DATE REVISED

LAST REVISION 00-00-00
DATE PLOTTED => 11-SEP-2015
TIME PLOTTED => 11:00

Dist	COUNTY	ROUTE	POST MILES TOTAL PROJECT	SHEET No.	TOTAL SHEETS
07	Ven	33, 101	0.9/T5.8 2.3/13.8	39	239

Paul Fong 6/20/15
REGISTERED CIVIL ENGINEER DATE

6-29-15
PLANS APPROVAL DATE

REGISTERED PROFESSIONAL ENGINEER
PAUL FONG
No. C67053
Exp. 9/30/16
CIVIL
STATE OF CALIFORNIA

THE STATE OF CALIFORNIA OR ITS OFFICERS OR AGENTS SHALL NOT BE RESPONSIBLE FOR THE ACCURACY OR COMPLETENESS OF SCANNED COPIES OF THIS PLAN SHEET.

NOTE:

FOR ACCURATE RIGHT OF WAY DATA, CONTACT RIGHT OF WAY ENGINEERING AT THE DISTRICT OFFICE.

11
- (a) TYPE G-1 INLET, H=3.5'
- (b) 18" x 48' CSP
- (c) 18" STEEL FES
- (d) RSP (FACING, METHOD B)

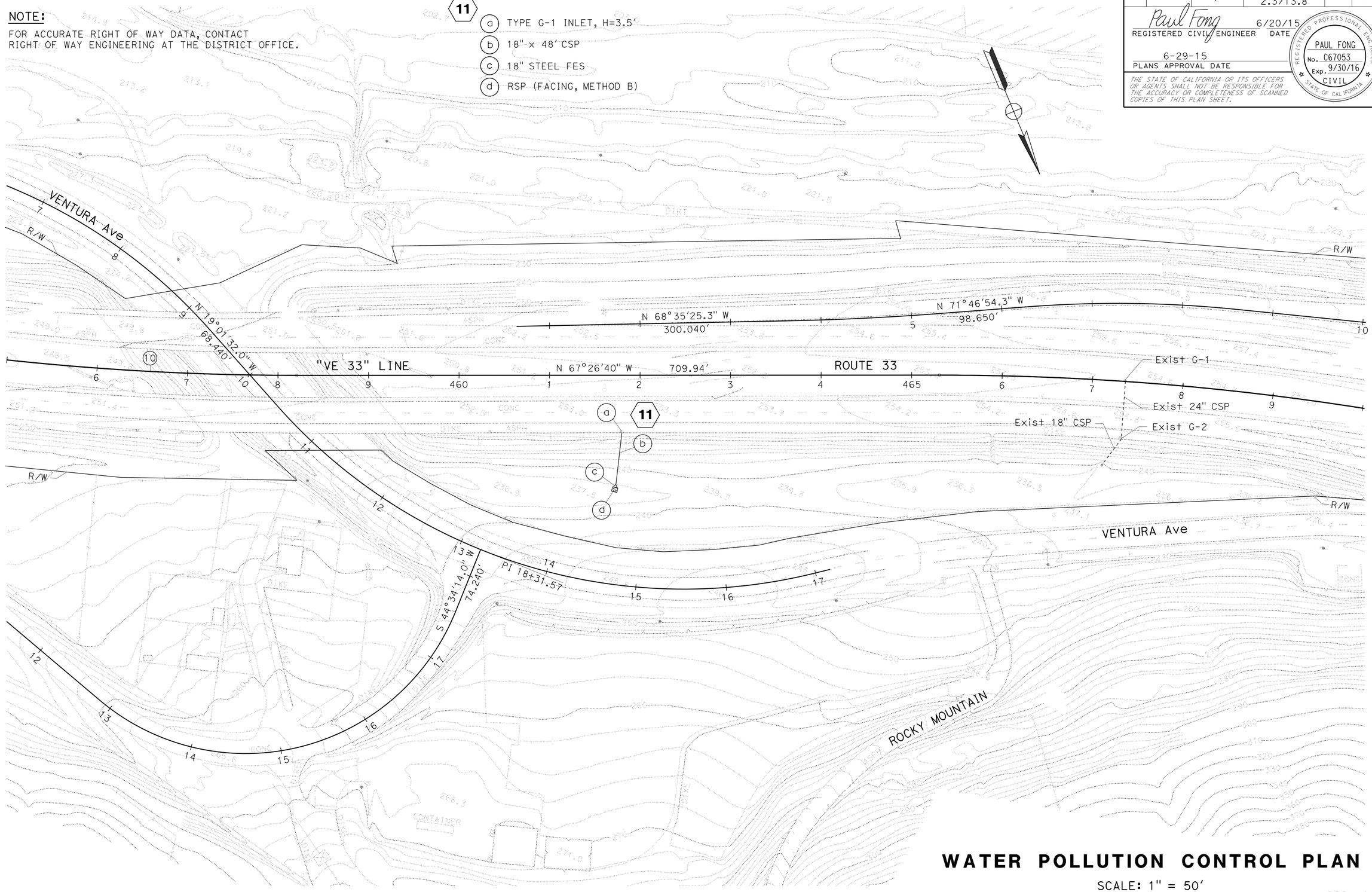

WATER POLLUTION CONTROL PLAN

SCALE: 1" = 50'

W-8

APPROVED FOR WATER POLLUTION CONTROL WORK ONLY

STATE OF CALIFORNIA - DEPARTMENT OF TRANSPORTATION
Caltrans
HYDRAULICS

FUNCTIONAL SUPERVISOR: DAVE BHALLA
CALCULATED-DESIGNED BY: PAUL FONG
CHECKED BY: ROMULO D. ROBENIOL
REVISED BY
DATE REVISED

LAST REVISION 00-00-00
DATE PLOTTED => 11-SEP-2015
TIME PLOTTED => 11:00

Dist	COUNTY	ROUTE	POST MILES TOTAL PROJECT	SHEET No.	TOTAL SHEETS
07	Ven	33, 101	0.9/T5.8 2.3/13.8	40	239

Paul Fong 6/20/15
REGISTERED CIVIL ENGINEER DATE

6-29-15
PLANS APPROVAL DATE

REGISTERED PROFESSIONAL ENGINEER
PAUL FONG
No. C67053
Exp. 9/30/16
CIVIL
STATE OF CALIFORNIA

THE STATE OF CALIFORNIA OR ITS OFFICERS OR AGENTS SHALL NOT BE RESPONSIBLE FOR THE ACCURACY OR COMPLETENESS OF SCANNED COPIES OF THIS PLAN SHEET.

NOTE:

FOR ACCURATE RIGHT OF WAY DATA, CONTACT RIGHT OF WAY ENGINEERING AT THE DISTRICT OFFICE.

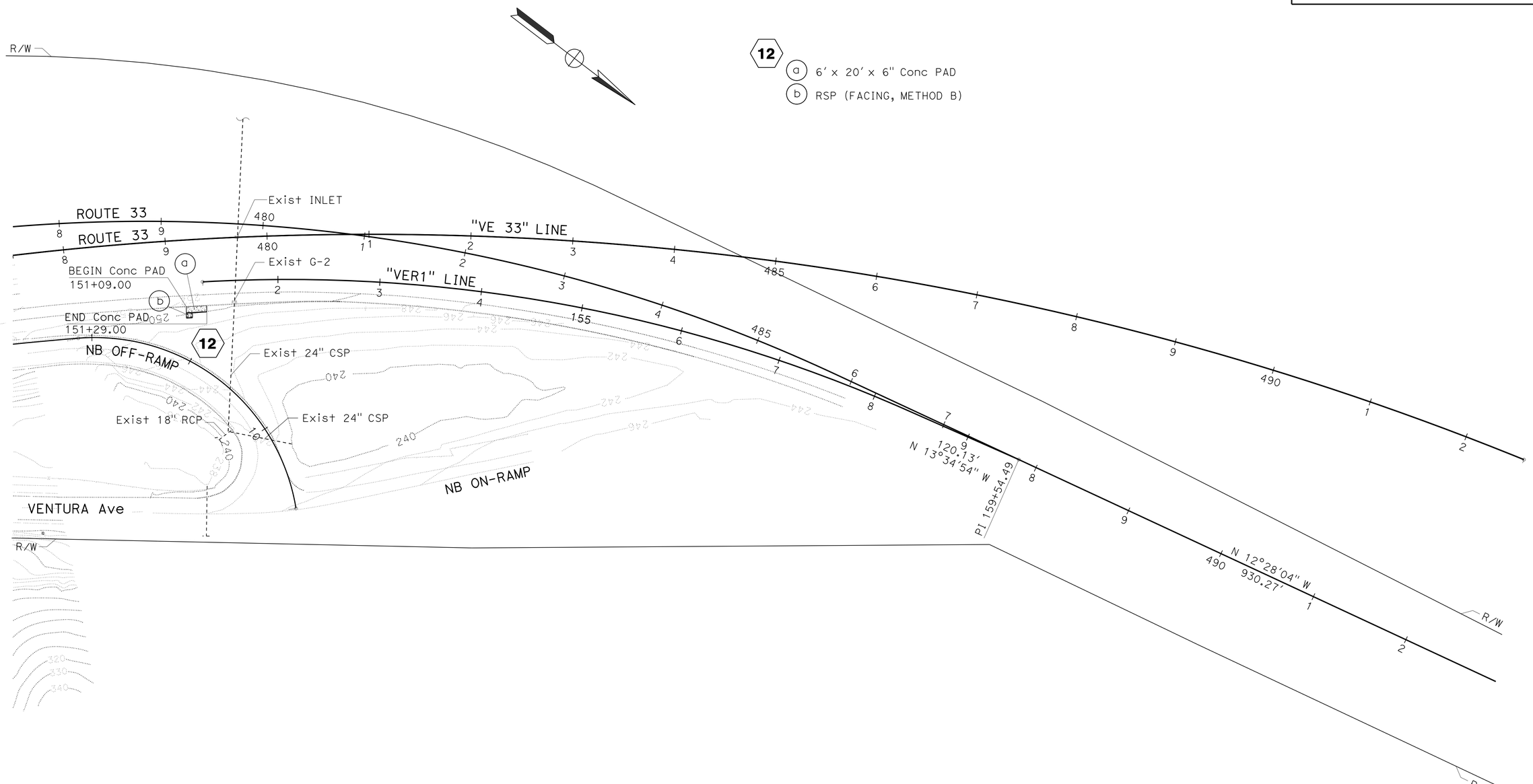

WATER POLLUTION CONTROL PLAN

SCALE: 1" = 50′

W-9

APPROVED FOR WATER POLLUTION CONTROL WORK ONLY

STATE OF CALIFORNIA - DEPARTMENT OF TRANSPORTATION
Caltrans
HYDRAULICS

FUNCTIONAL SUPERVISOR: DAVE BHALLA
CALCULATED-DESIGNED BY: PAUL FONG
CHECKED BY: ROMULO D. ROBENIOL
REVISED BY
DATE REVISED

LAST REVISION 00-00-00
DATE PLOTTED => 11-SEP-2015
TIME PLOTTED => 11:00

Dist	COUNTY	ROUTE	POST MILES TOTAL PROJECT	SHEET No.	TOTAL SHEETS
07	Ven	33, 101	0.9/T5.8 2.3/13.8	41	239

Paul Fong 6/20/15
REGISTERED CIVIL ENGINEER DATE

6-29-15
PLANS APPROVAL DATE

REGISTERED PROFESSIONAL ENGINEER
PAUL FONG
No. C67053
Exp. 9/30/16
CIVIL
STATE OF CALIFORNIA

THE STATE OF CALIFORNIA OR ITS OFFICERS OR AGENTS SHALL NOT BE RESPONSIBLE FOR THE ACCURACY OR COMPLETENESS OF SCANNED COPIES OF THIS PLAN SHEET.

NOTE:

FOR ACCURATE RIGHT OF WAY DATA, CONTACT RIGHT OF WAY ENGINEERING AT THE DISTRICT OFFICE.

13

- (a) 18" STEEL FES
- (b) 18" x 40' CSP
- (c) MH No. 1, H=7.1', P=16"
- (d) 6" x 14.5' PLASTIC PIPE
- (e) 18" x 15' CSP
- (f) AVSF TYPE L-3500-4.5
- (g) 18" x 14' RCP
- (h) MH No. 1, H=6', P=16"
- (i) 18" x 15' RCP
- (j) MH No. 1, H=9', P=16"
- (k) 18" x 110' RCP
- (l) MH No. 1, H=4', P=16"
- (m) 18" x 12' CSP
- (n) REMOVE 18" x 5' CMP

WATER POLLUTION CONTROL PLAN

SCALE: 1" = 50'

W-10

APPROVED FOR WATER POLLUTION CONTROL WORK ONLY

STATE OF CALIFORNIA - DEPARTMENT OF TRANSPORTATION
Caltrans
HYDRAULICS

FUNCTIONAL SUPERVISOR: DAVE BHALLA
CALCULATED-DESIGNED BY: ROMULO D. ROBENIOL
CHECKED BY: PAUL FONG
REVISED BY
DATE REVISED

LAST REVISION 00-00-00
DATE PLOTTED => 11-SEP-2015
TIME PLOTTED => 11:00

Dist	COUNTY	ROUTE	POST MILES TOTAL PROJECT	SHEET No.	TOTAL SHEETS
07	Ven	33, 101	0.9/T5.8 2.3/13.8	42	239

Paul Fong 6/20/15
REGISTERED CIVIL ENGINEER DATE

6-29-15
PLANS APPROVAL DATE

REGISTERED PROFESSIONAL ENGINEER
PAUL FONG
No. C67053
Exp. 9/30/16
CIVIL
STATE OF CALIFORNIA

THE STATE OF CALIFORNIA OR ITS OFFICERS OR AGENTS SHALL NOT BE RESPONSIBLE FOR THE ACCURACY OR COMPLETENESS OF SCANNED COPIES OF THIS PLAN SHEET.

NOTE:

FOR ACCURATE RIGHT OF WAY DATA, CONTACT RIGHT OF WAY ENGINEERING AT THE DISTRICT OFFICE.

14
- a REMOVE 48" x 5.5' CMP
- b MH No. 2, H=12', P=16"
- c 18" x 27' RCP
- d MH No. 1, H=9', P=15"
- e 6" x 13' PLASTIC PIPE
- f 18" x 15.5' CSP
- g AVSF TYPE L-5000-3
- h 18" x 48' RCP
- i TYPE G-2 INLET, H=3.5'
- j 18" x 19' RCP TYPE G-2 INLET, H=3.5'
- k
- l 18" x 19' RCP TYPE G-2 INLET, H=3.5'
- m
- n 18" x 56' RCP
- o GD-3 INLET, H=4.2'
- p 18" x 30' CSP
- q GD-1 INLET, H=4.4'

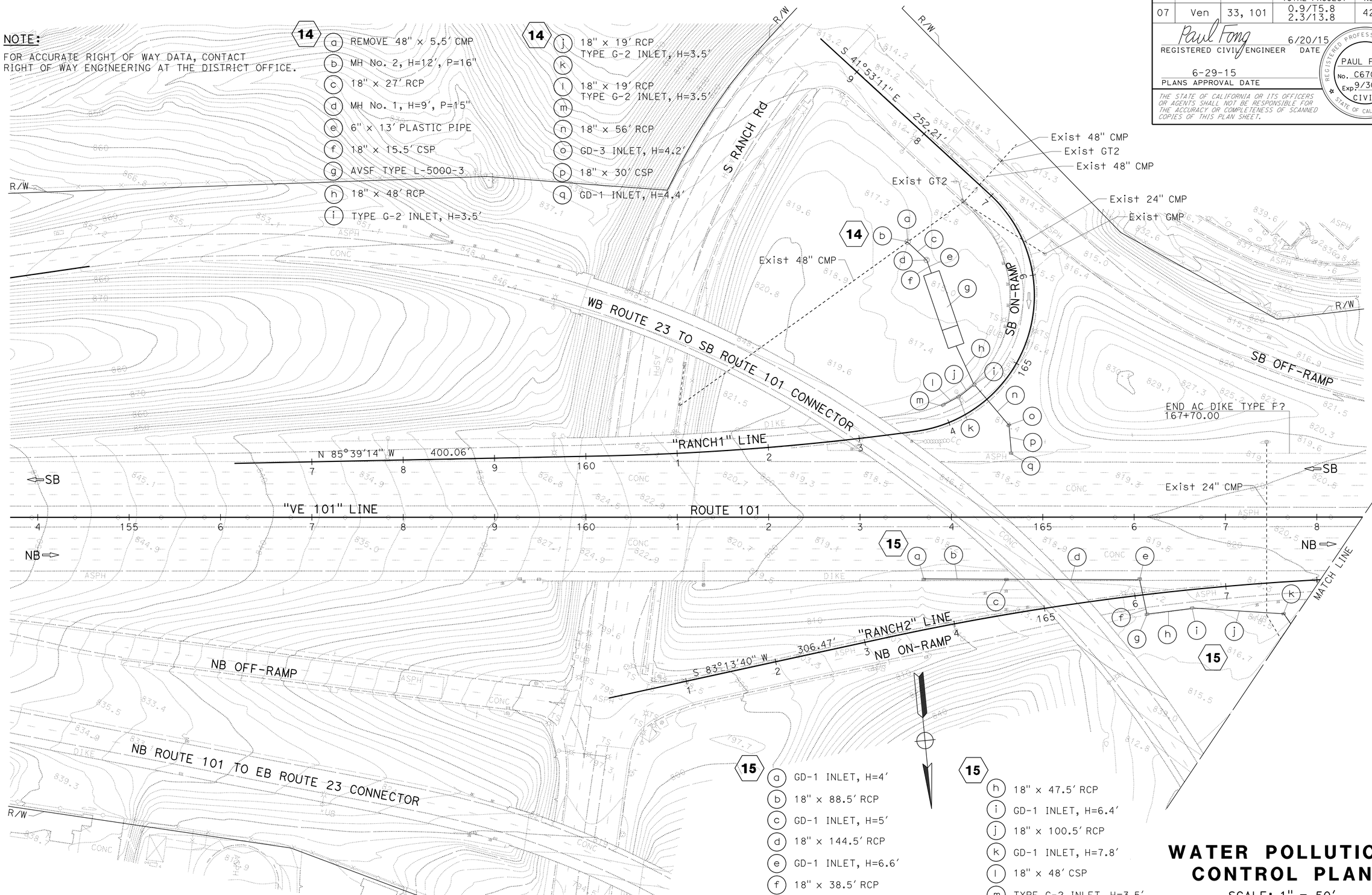

15
- a GD-1 INLET, H=4'
- b 18" x 88.5' RCP
- c GD-1 INLET, H=5'
- d 18" x 144.5' RCP
- e GD-1 INLET, H=6.6'
- f 18" x 38.5' RCP
- g GD-1 INLET, H=5.1'
- h 18" x 47.5' RCP
- i GD-1 INLET, H=6.4'
- j 18" x 100.5' RCP
- k GD-1 INLET, H=7.8'
- l 18" x 48' CSP
- m TYPE G-2 INLET, H=3.5'
- n 18" x 21' RCP

WATER POLLUTION CONTROL PLAN

SCALE: 1" = 50'

W-11

APPROVED FOR WATER POLLUTION CONTROL WORK ONLY

STATE OF CALIFORNIA - DEPARTMENT OF TRANSPORTATION
Caltrans
HYDRAULICS

FUNCTIONAL SUPERVISOR: DAVE BHALLA
CALCULATED-DESIGNED BY: PAUL FONG
CHECKED BY: ROMULO D. ROBENIOL
REVISED BY
DATE REVISED

LAST REVISION 00-00-00
DATE PLOTTED => 11-SEP-2015
TIME PLOTTED => 11:00

Dist	COUNTY	ROUTE	POST MILES TOTAL PROJECT	SHEET No.	TOTAL SHEETS
07	Ven	33, 101	0.9/T5.8 2.3/13.8	43	239

Paul Fong 6/20/15
REGISTERED CIVIL ENGINEER DATE

6-29-15
PLANS APPROVAL DATE

REGISTERED PROFESSIONAL ENGINEER
PAUL FONG
No. C67053
Exp. 9/30/16
CIVIL
STATE OF CALIFORNIA

THE STATE OF CALIFORNIA OR ITS OFFICERS OR AGENTS SHALL NOT BE RESPONSIBLE FOR THE ACCURACY OR COMPLETENESS OF SCANNED COPIES OF THIS PLAN SHEET.

NOTE:

FOR ACCURATE RIGHT OF WAY DATA, CONTACT RIGHT OF WAY ENGINEERING AT THE DISTRICT OFFICE.

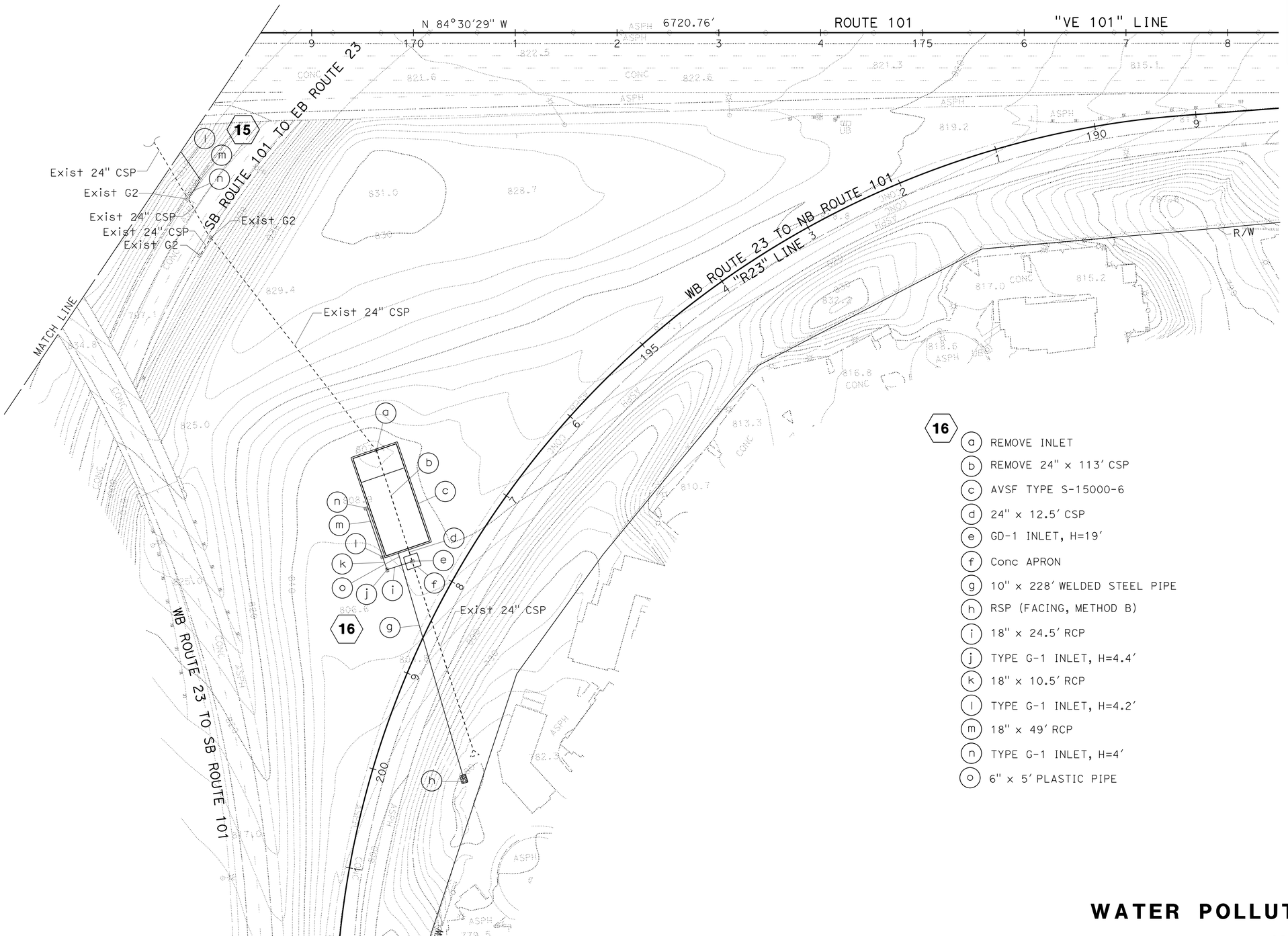

16

- (a) REMOVE INLET
- (b) REMOVE 24" x 113' CSP
- (c) AVSF TYPE S-15000-6
- (d) 24" x 12.5' CSP
- (e) GD-1 INLET, H=19'
- (f) Conc APRON
- (g) 10" x 228' WELDED STEEL PIPE
- (h) RSP (FACING, METHOD B)
- (i) 18" x 24.5' RCP
- (j) TYPE G-1 INLET, H=4.4'
- (k) 18" x 10.5' RCP
- (l) TYPE G-1 INLET, H=4.2'
- (m) 18" x 49' RCP
- (n) TYPE G-1 INLET, H=4'
- (o) 6" x 5' PLASTIC PIPE

WATER POLLUTION CONTROL PLAN

SCALE: 1" = 50'

W-12

APPROVED FOR WATER POLLUTION CONTROL WORK ONLY

STATE OF CALIFORNIA - DEPARTMENT OF TRANSPORTATION
Caltrans
HYDRAULICS

FUNCTIONAL SUPERVISOR: DAVE BHALLA
CALCULATED-DESIGNED BY: PAUL FONG
CHECKED BY: ROMULO D. ROBENIOL
REVISED BY
DATE REVISED

LAST REVISION 00-00-00
DATE PLOTTED => 11-SEP-2015
TIME PLOTTED => 11:00

Dist	COUNTY	ROUTE	POST MILES TOTAL PROJECT	SHEET No.	TOTAL SHEETS
07	Ven	33, 101	0.9/T5.8 2.3/13.8	44	239

Paul Fong 6/20/15
REGISTERED CIVIL ENGINEER DATE

6-29-15
PLANS APPROVAL DATE

REGISTERED PROFESSIONAL ENGINEER
PAUL FONG
No. C67053
Exp. 9/30/16
CIVIL
STATE OF CALIFORNIA

THE STATE OF CALIFORNIA OR ITS OFFICERS OR AGENTS SHALL NOT BE RESPONSIBLE FOR THE ACCURACY OR COMPLETENESS OF SCANNED COPIES OF THIS PLAN SHEET.

NOTE:

FOR ACCURATE RIGHT OF WAY DATA, CONTACT RIGHT OF WAY ENGINEERING AT THE DISTRICT OFFICE.

17

- (a) TYPE G1 INLET, H=4′
- (b) 18" x 97′ RCP
- (c) GD-1 INLET, H=6′
- (d) 18" x 92′ RCP
- (e) TYPE G1 INLET, H=4′
- (f) 24" x 27.7′ RCP
- (g) JUNCTION CHAMBER No. 3-C Mod, V=5.5′
- (h) 24" x 14′ RCP
- (i) AVSF L-3500-3
- (j) 6" x 12′ PLASTIC PIPE
- (k) 18" x 12′ CSP
- (l) JUNCTION CHAMBER No. 3-C Mod, V=10.2′
- (m) 24" x 22.2′ CSP
- (n) 24" STEEL FES
- (o) RSP (FACING, METHOD B)

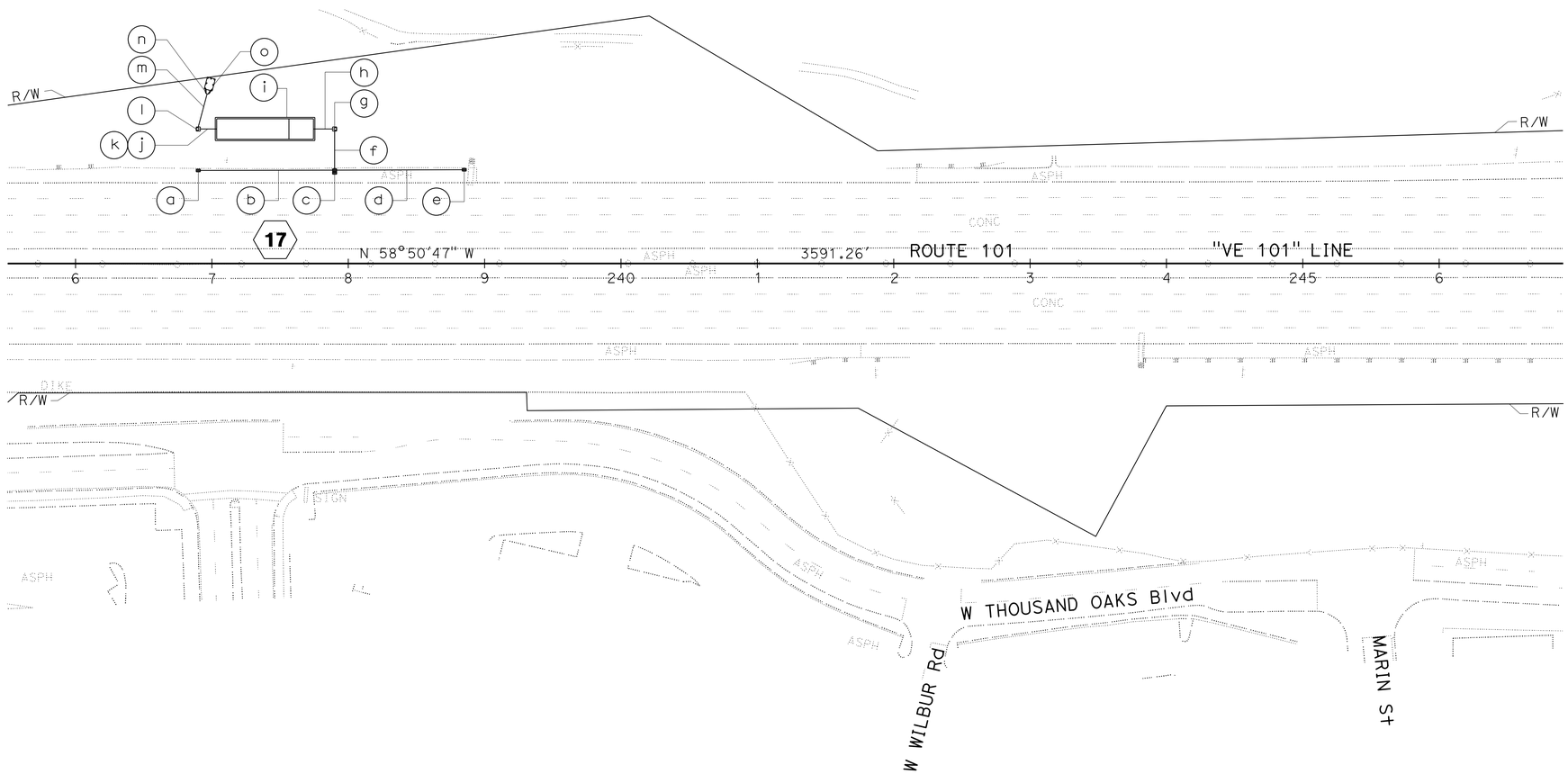

WATER POLLUTION CONTROL PLAN

SCALE: 1" = 50′

W-13

APPROVED FOR WATER POLLUTION CONTROL WORK ONLY

STATE OF CALIFORNIA - DEPARTMENT OF TRANSPORTATION
Caltrans
HYDRAULICS

FUNCTIONAL SUPERVISOR: DAVE BHALLA
CALCULATED-DESIGNED BY: ROMULO D. ROBENIOL
CHECKED BY: PAUL FONG
REVISED BY
DATE REVISED

LAST REVISION 00-00-00
DATE PLOTTED => 11-SEP-2015
TIME PLOTTED => 11:00

Dist	COUNTY	ROUTE	POST MILES TOTAL PROJECT	SHEET No.	TOTAL SHEETS
07	Ven	33, 101	0.9/T5.8 2.3/13.8	45	239

Paul Fong 6/20/15
REGISTERED CIVIL ENGINEER DATE

6-29-15
PLANS APPROVAL DATE

REGISTERED PROFESSIONAL ENGINEER
PAUL FONG
No. C67053
Exp. 9/30/16
CIVIL
STATE OF CALIFORNIA

THE STATE OF CALIFORNIA OR ITS OFFICERS OR AGENTS SHALL NOT BE RESPONSIBLE FOR THE ACCURACY OR COMPLETENESS OF SCANNED COPIES OF THIS PLAN SHEET.

NOTE:

FOR ACCURATE RIGHT OF WAY DATA, CONTACT RIGHT OF WAY ENGINEERING AT THE DISTRICT OFFICE.

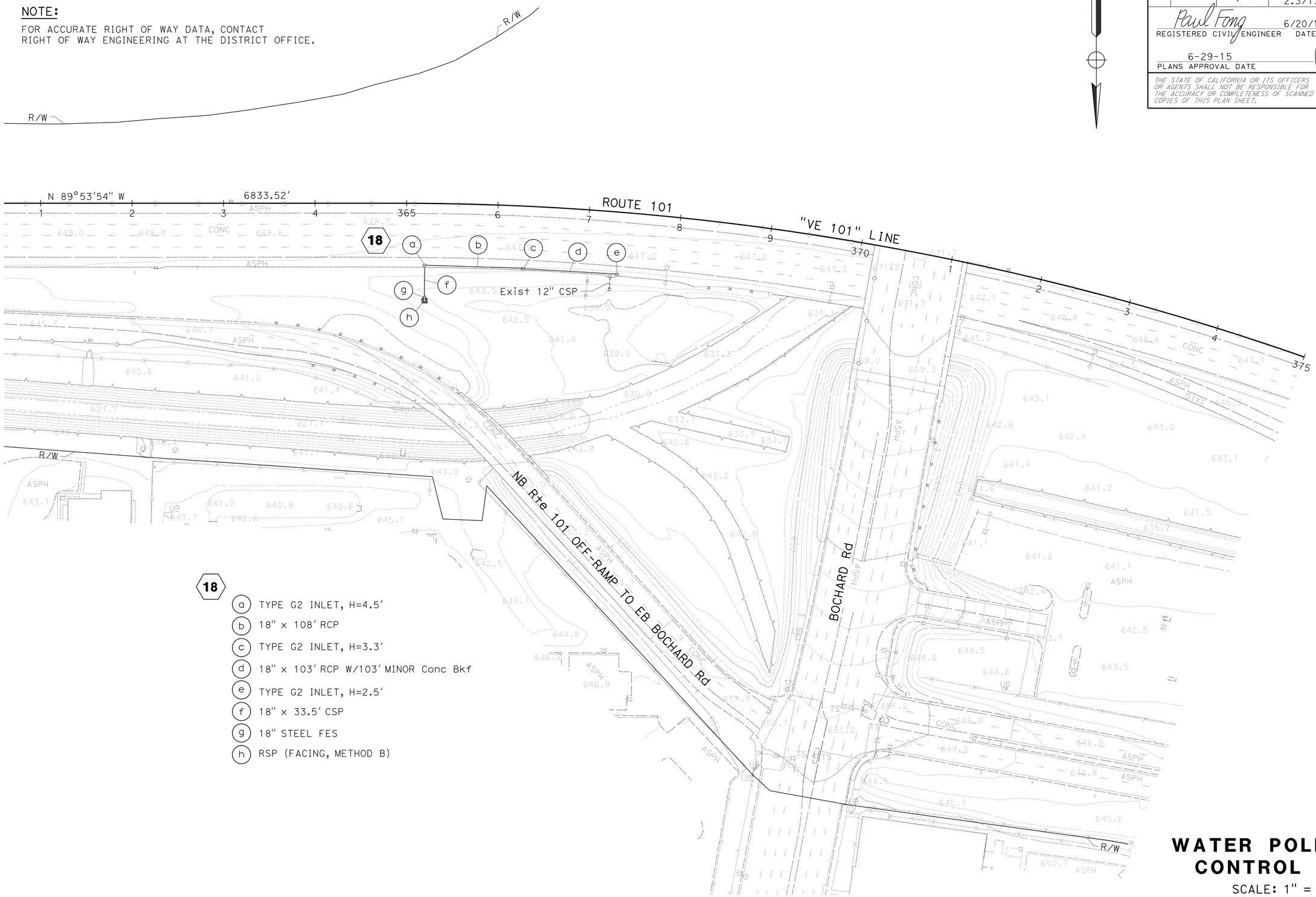

18

- (a) TYPE G2 INLET, H=4.5'
- (b) 18" x 108' RCP
- (c) TYPE G2 INLET, H=3.3'
- (d) 18" x 103' RCP W/103' MINOR Conc Bkf
- (e) TYPE G2 INLET, H=2.5'
- (f) 18" x 33.5' CSP
- (g) 18" STEEL FES
- (h) RSP (FACING, METHOD B)

WATER POLLUTION CONTROL PLAN

SCALE: 1" = 50'

W-14

APPROVED FOR WATER POLLUTION CONTROL WORK ONLY

STATE OF CALIFORNIA - DEPARTMENT OF TRANSPORTATION
Caltrans
HYDRAULICS

FUNCTIONAL SUPERVISOR: DAVE BHALLA

CALCULATED-DESIGNED BY: PAUL FONG
CHECKED BY: ROMULO D. ROBENIOL

REVISED BY
DATE REVISED

LAST REVISION 00-00-00
DATE PLOTTED => 11-SEP-2015
TIME PLOTTED => 11:00

Dist	COUNTY	ROUTE	POST MILES TOTAL PROJECT	SHEET No.	TOTAL SHEETS
07	Ven	33, 101	0.9/T5.8 2.3/13.8	46	239

Paul Fong 6/20/15
REGISTERED CIVIL ENGINEER DATE

6-29-15
PLANS APPROVAL DATE

REGISTERED PROFESSIONAL ENGINEER
PAUL FONG
No. C67053
Exp. 9/30/16
CIVIL
STATE OF CALIFORNIA

THE STATE OF CALIFORNIA OR ITS OFFICERS OR AGENTS SHALL NOT BE RESPONSIBLE FOR THE ACCURACY OR COMPLETENESS OF SCANNED COPIES OF THIS PLAN SHEET.

NOTE:
FOR ACCURATE RIGHT OF WAY DATA, CONTACT
RIGHT OF WAY ENGINEERING AT THE DISTRICT OFFICE.

19

- (a) REMOVE 24" STEEL FES
- (b) REMOVE 24" x 33' CSP
- (c) REMOVE 24" STEEL FES
- (d) REMOVE 24" x 47.7' CSP
- (e) GD-1 INLET, H=8.7'
- (f) 24" x 178' RCP
- (g) GD-1 INLET, H=4.2'
- (h) 24" x 171.9' RCP
- (i) GD-1 INLET, H=5'
- (j) 24" x 33.1' RCP
- (k) JUNCTION CHAMBER No. 3-C Mod, V=8.1'
- (l) 24" x 13.1' RCP
- (m) AVSF TYPE L-5000-3
- (n) 6" x 12' PLASTIC PIPE
- (o) 18" x 12.9' CSP
- (p) JUNCTION CHAMBER No. 3-C Mod, V=6.1'
- (q) 24" x 21.3' CSP
- (r) JUNCTION CHAMBER No. 3-C Mod, V=5.4'
- (s) REMOVE 24" x 4' CSP

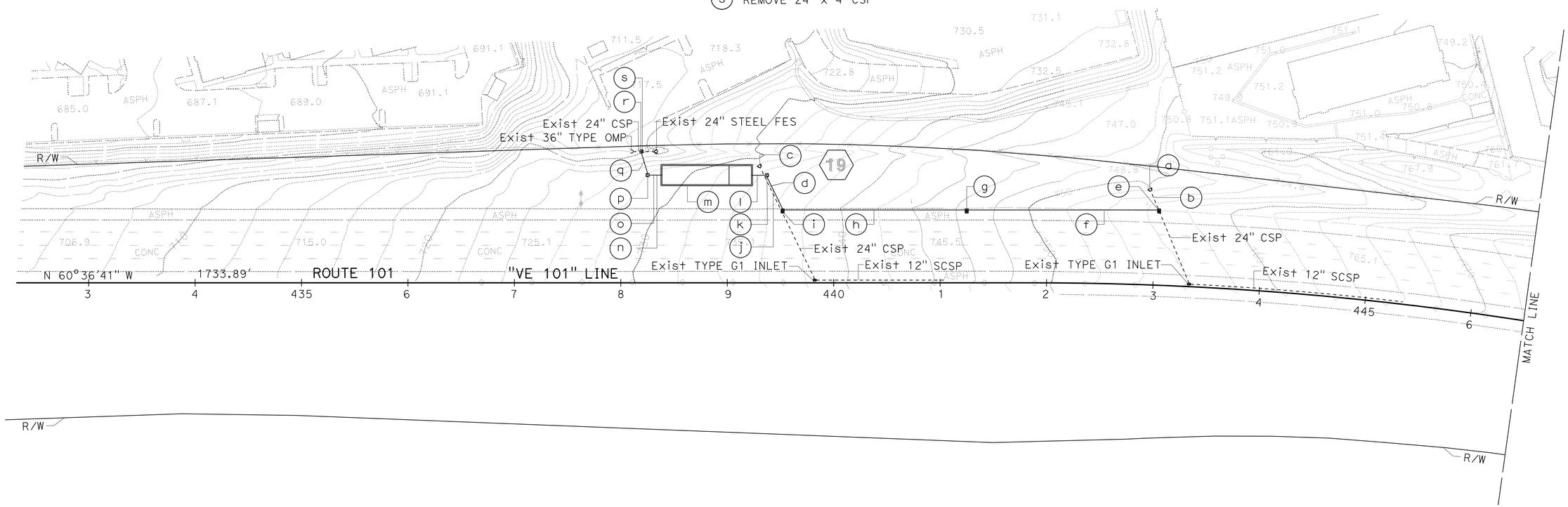

WATER POLLUTION CONTROL PLAN

SCALE: 1" = 50'

W-15

APPROVED FOR WATER POLLUTION CONTROL WORK ONLY

STATE OF CALIFORNIA - DEPARTMENT OF TRANSPORTATION
Caltrans
HYDRAULICS

FUNCTIONAL SUPERVISOR: DAVE BHALLA
CALCULATED-DESIGNED BY: ROMULO D. ROBENIOL
CHECKED BY: PAUL FONG
REVISED BY
DATE REVISED

LAST REVISION 00-00-00
DATE PLOTTED => 11-SEP-2015
TIME PLOTTED => 11:00

Dist	COUNTY	ROUTE	POST MILES TOTAL PROJECT	SHEET No.	TOTAL SHEETS
07	Ven	33, 101	0.9/T5.8 2.3/13.8	47	239

Paul Fong 6/20/15
REGISTERED CIVIL ENGINEER DATE

6-29-15
PLANS APPROVAL DATE

REGISTERED PROFESSIONAL ENGINEER
PAUL FONG
No. C67053
Exp. 9/30/16
CIVIL
STATE OF CALIFORNIA

THE STATE OF CALIFORNIA OR ITS OFFICERS OR AGENTS SHALL NOT BE RESPONSIBLE FOR THE ACCURACY OR COMPLETENESS OF SCANNED COPIES OF THIS PLAN SHEET.

NOTE:
FOR ACCURATE RIGHT OF WAY DATA, CONTACT
RIGHT OF WAY ENGINEERING AT THE DISTRICT OFFICE.

20

- (a) GD-1 INLET, H=4.5′
- (b) 24" x 88.5′ RCP
- (c) GD-1 INLET, H=6.1′
- (d) 24" x 31.6′ RCP
- (e) JUNCTION CHAMBER No. 3-C Mod, V=7.1′
- (f) 24" x 12′ RCP
- (g) AVSF TYPE L-5000-3
- (h) 6" x 16′ PLASTIC PIPE
- (i) 18" x 16.7′ CSP
- (j) JUNCTION CHAMBER No. 3-C Mod, V=10.2′
- (k) 24" x 12′ CSP
- (l) 24" STEEL FES
- (m) RSP (FACING, METHOD B)

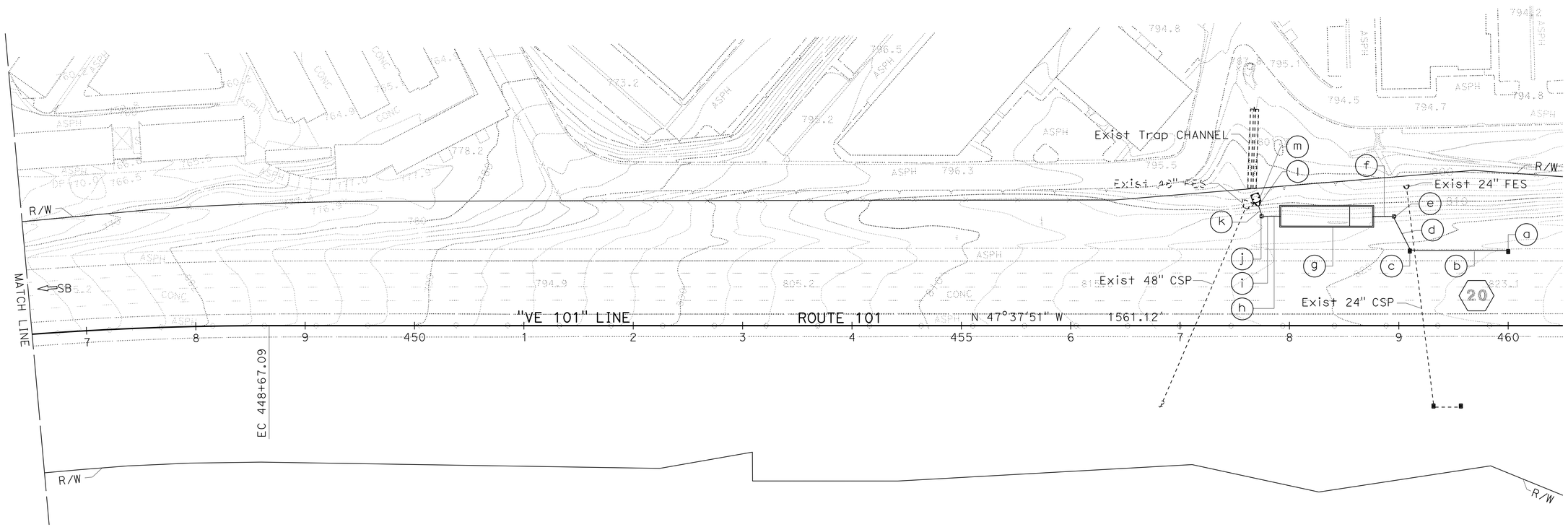

WATER POLLUTION CONTROL PLAN

SCALE: 1" = 50′

W-16

APPROVED FOR WATER POLLUTION CONTROL WORK ONLY

STATE OF CALIFORNIA - DEPARTMENT OF TRANSPORTATION
Caltrans
HYDRAULICS

FUNCTIONAL SUPERVISOR: DAVE BHALLA
CALCULATED-DESIGNED BY: ROMULO D. ROBENIOL
CHECKED BY: PAUL FONG
REVISED BY
DATE REVISED

LAST REVISION 00-00-00
DATE PLOTTED => 11-SEP-2015
TIME PLOTTED => 11:00

Dist	COUNTY	ROUTE	POST MILES TOTAL PROJECT	SHEET No.	TOTAL SHEETS
07	Ven	33, 101	0.9/T5.8 2.3/13.8	48	239

Paul Fong 6/20/15
REGISTERED CIVIL ENGINEER DATE

6-29-15
PLANS APPROVAL DATE

REGISTERED PROFESSIONAL ENGINEER
PAUL FONG
No. C67053
Exp. 9/30/16
CIVIL
STATE OF CALIFORNIA

THE STATE OF CALIFORNIA OR ITS OFFICERS OR AGENTS SHALL NOT BE RESPONSIBLE FOR THE ACCURACY OR COMPLETENESS OF SCANNED COPIES OF THIS PLAN SHEET.

NOTE:

FOR ACCURATE RIGHT OF WAY DATA, CONTACT RIGHT OF WAY ENGINEERING AT THE DISTRICT OFFICE.

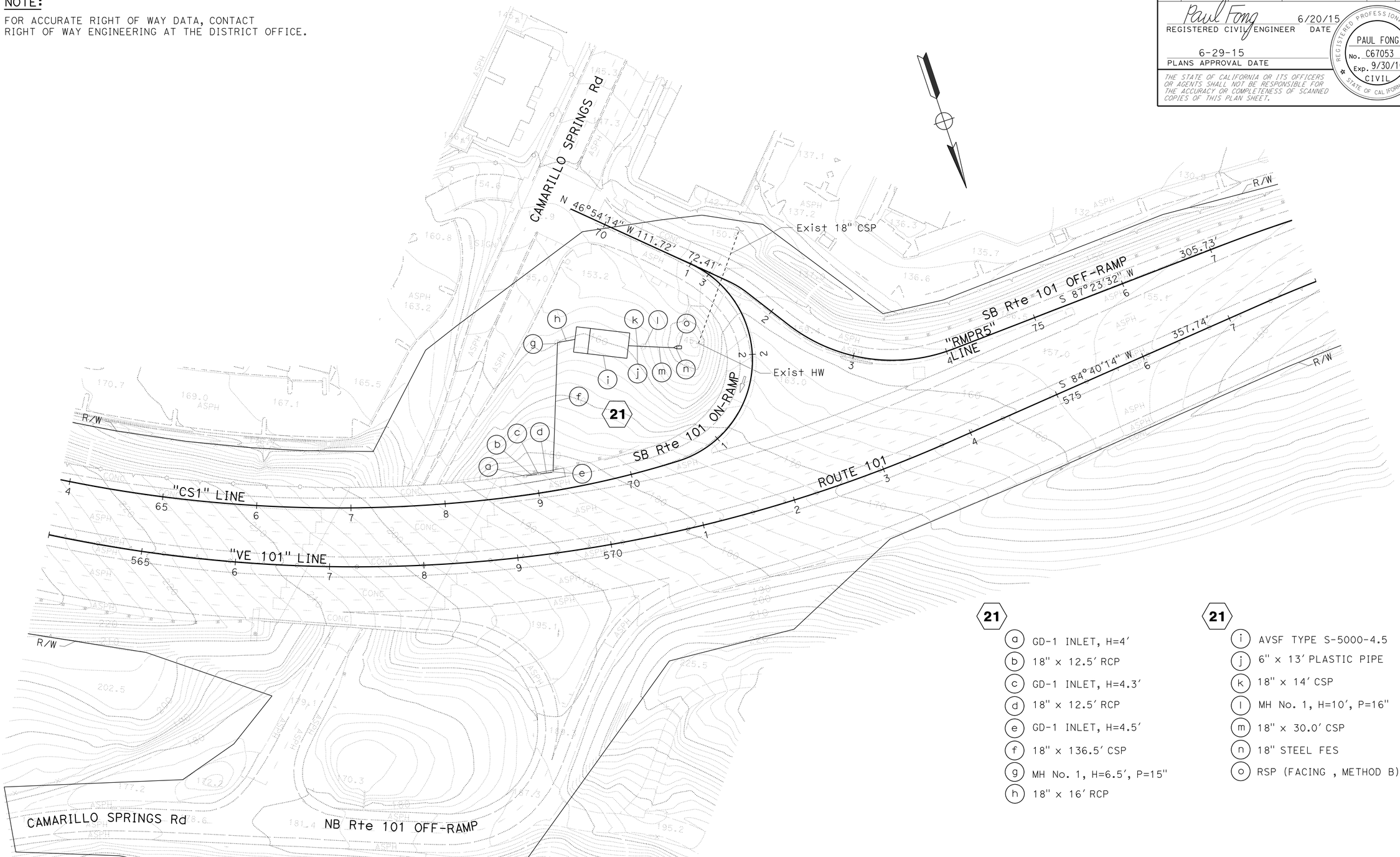

21

- (a) GD-1 INLET, H=4'
- (b) 18" x 12.5' RCP
- (c) GD-1 INLET, H=4.3'
- (d) 18" x 12.5' RCP
- (e) GD-1 INLET, H=4.5'
- (f) 18" x 136.5' CSP
- (g) MH No. 1, H=6.5', P=15"
- (h) 18" x 16' RCP

21

- (i) AVSF TYPE S-5000-4.5
- (j) 6" x 13' PLASTIC PIPE
- (k) 18" x 14' CSP
- (l) MH No. 1, H=10', P=16"
- (m) 18" x 30.0' CSP
- (n) 18" STEEL FES
- (o) RSP (FACING , METHOD B)

WATER POLLUTION CONTROL PLAN

SCALE: 1" = 50'

W-17

APPROVED FOR WATER POLLUTION CONTROL WORK ONLY

STATE OF CALIFORNIA - DEPARTMENT OF TRANSPORTATION
Caltrans
HYDRAULICS

FUNCTIONAL SUPERVISOR: DAVE BHALLA

CALCULATED-DESIGNED BY: PAUL FONG
CHECKED BY: ROMULO D. ROBENIOL

REVISED BY
DATE REVISED

LAST REVISION 00-00-00
DATE PLOTTED => 11-SEP-2015
TIME PLOTTED => 11:00

Dist	COUNTY	ROUTE	POST MILES TOTAL PROJECT	SHEET No.	TOTAL SHEETS
07	Ven	33, 101	0.9/T5.8 2.3/13.8	49	239

Paul Fong 6/20/15
REGISTERED CIVIL ENGINEER DATE

6-29-15
PLANS APPROVAL DATE

REGISTERED PROFESSIONAL ENGINEER
PAUL FONG
No. C67053
Exp. 9/30/16
CIVIL
STATE OF CALIFORNIA

THE STATE OF CALIFORNIA OR ITS OFFICERS OR AGENTS SHALL NOT BE RESPONSIBLE FOR THE ACCURACY OR COMPLETENESS OF SCANNED COPIES OF THIS PLAN SHEET.

NOTE:

FOR ACCURATE RIGHT OF WAY DATA, CONTACT RIGHT OF WAY ENGINEERING AT THE DISTRICT OFFICE.

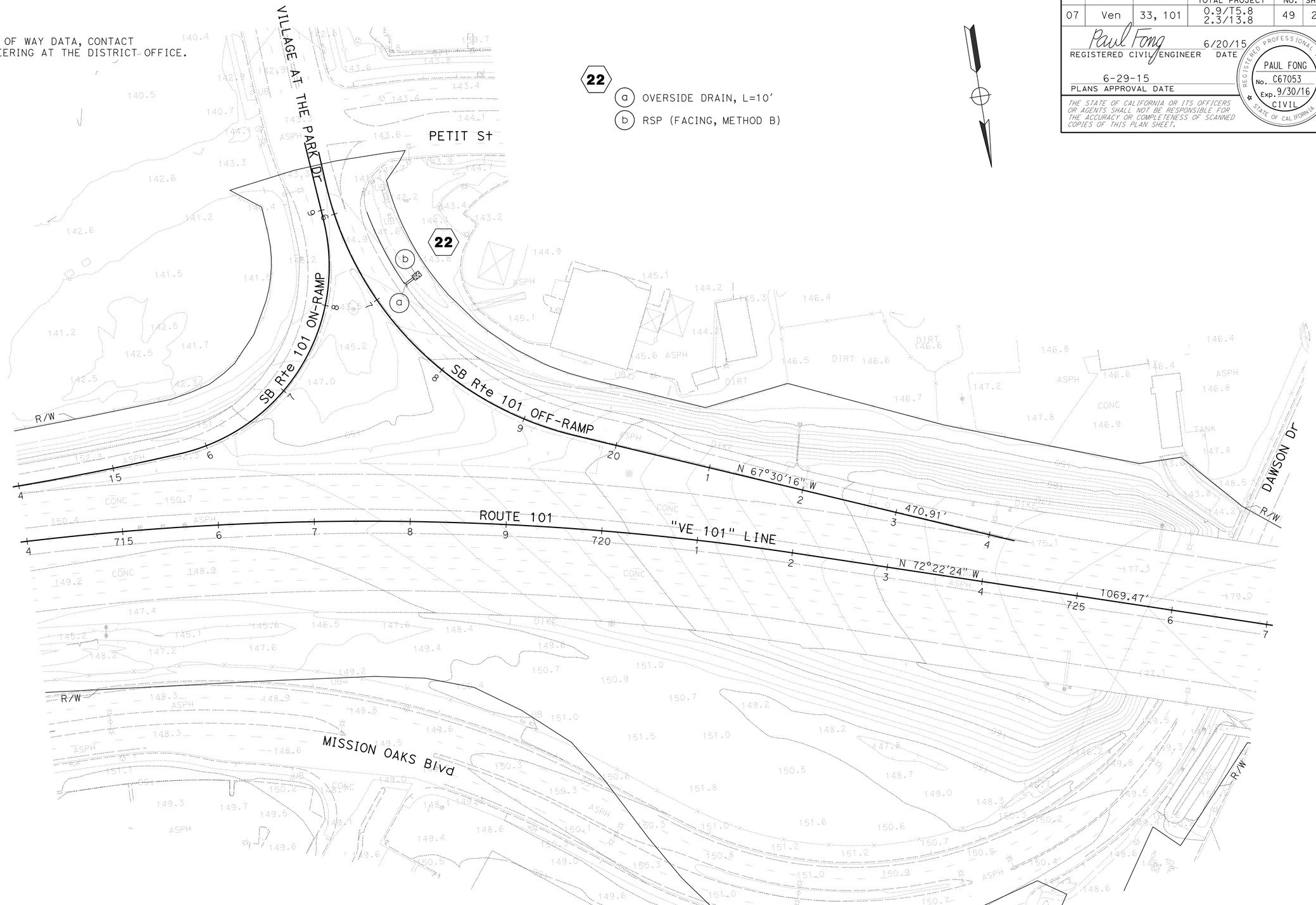

WATER POLLUTION CONTROL PLAN

SCALE: 1" = 50'

W-18

APPROVED FOR WATER POLLUTION CONTROL WORK ONLY

STATE OF CALIFORNIA - DEPARTMENT OF TRANSPORTATION
Caltrans
HYDRAULICS

FUNCTIONAL SUPERVISOR: DAVE BHALLA

CALCULATED-DESIGNED BY: PAUL FONG
CHECKED BY: ROMULO D. ROBENIOL

REVISED BY
DATE REVISED

LAST REVISION 00-00-00
DATE PLOTTED => 11-SEP-2015
TIME PLOTTED => 11:00

Dist	COUNTY	ROUTE	POST MILES TOTAL PROJECT	SHEET No.	TOTAL SHEETS
07	Ven	33, 101	0.9/T5.8 2.3/13.8	50	239

Paul Fong 6/19/15
REGISTERED CIVIL ENGINEER DATE

6-29-15
PLANS APPROVAL DATE

REGISTERED PROFESSIONAL ENGINEER
PAUL FONG
No. C67053
Exp. 9-30-16
CIVIL
STATE OF CALIFORNIA

THE STATE OF CALIFORNIA OR ITS OFFICERS OR AGENTS SHALL NOT BE RESPONSIBLE FOR THE ACCURACY OR COMPLETENESS OF SCANNED COPIES OF THIS PLAN SHEET.

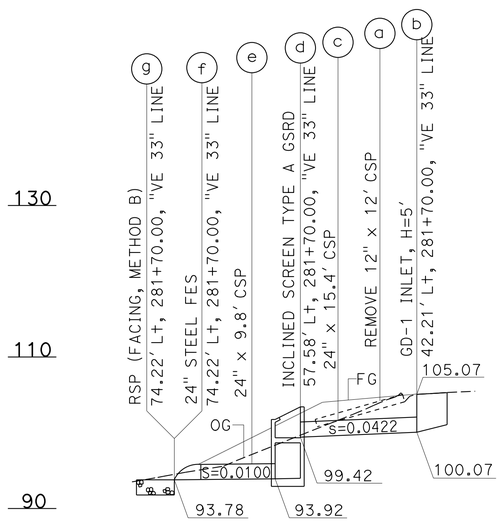

DRAINAGE SYSTEM No. 2

SCALE: Horiz: 1" = 10'
Vert: 1" = 10'

DETAIL FOR UNIT 2 d

GSRD TYPE	TOP OF WALL ELEVATION				PIPE Dia (INCHES)		
	TW1	TW2	TW3	TW4	FL IN	IN	OUT
A	101.75	103.42	103.42	101.75	99.42	24	24
	FG1	FG2	FG3	FG4			
	100.65	102.82	102.82	100.65			

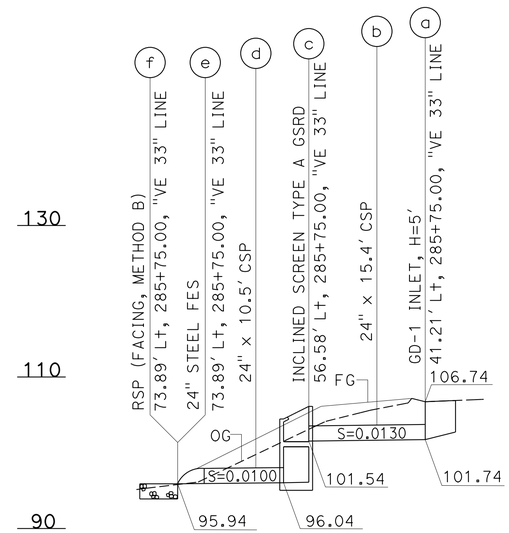

DRAINAGE SYSTEM No. 3

SCALE: Horiz: 1" = 10'
Vert: 1" = 10'

DETAIL FOR UNIT 3 c

GSRD TYPE	TOP OF WALL ELEVATION				PIPE Dia (INCHES)		
	TW1	TW2	TW3	TW4	FL IN	IN	OUT
A	104.46	106.12	106.12	104.46	101.54	24	24
	FG1	FG2	FG3	FG4			
	103.40	105.56	105.56	103.40			

WATER POLLUTION CONTROL PROFILE

SCALE AS SHOWN

WP-1

REVISED BY	DATE REVISED
ROMULO D. ROBENIOL	
PAUL FONG	
CALCULATED-DESIGNED BY	
CHECKED BY	
FUNCTIONAL SUPERVISOR	
DAVE BHALLA	

STATE OF CALIFORNIA - DEPARTMENT OF TRANSPORTATION
Caltrans®
HYDRAULICS

LAST REVISION 00-00-00
DATE PLOTTED => 11-SEP-2015
TIME PLOTTED => 11:01

Dist	COUNTY	ROUTE	POST MILES TOTAL PROJECT	SHEET No.	TOTAL SHEETS
07	Ven	33, 101	0.9/T5.8 2.3/13.8	51	239

Paul Fong 6/19/15
REGISTERED CIVIL ENGINEER DATE

6-29-15
PLANS APPROVAL DATE

REGISTERED PROFESSIONAL ENGINEER
PAUL FONG
No. C67053
Exp. 9-30-16
CIVIL
STATE OF CALIFORNIA

THE STATE OF CALIFORNIA OR ITS OFFICERS OR AGENTS SHALL NOT BE RESPONSIBLE FOR THE ACCURACY OR COMPLETENESS OF SCANNED COPIES OF THIS PLAN SHEET.

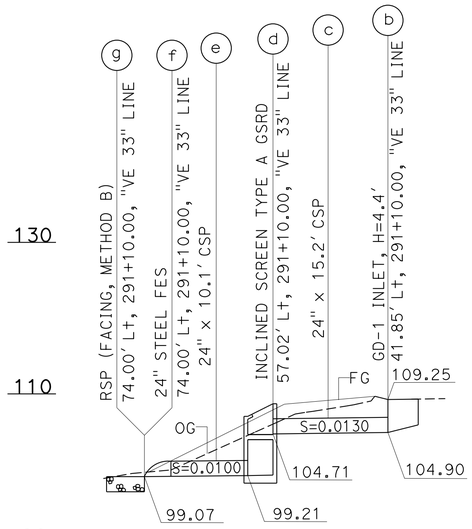

DRAINAGE SYSTEM No. 4

SCALE: Horiz: 1" = 10'
Vert: 1" = 10'

DETAIL FOR UNIT 4 d

GSRD TYPE	TOP OF WALL ELEVATION				PIPE Dia (INCHES)		
	TW1	TW2	TW3	TW4	FL IN	IN	OUT
A	107.03	108.70	108.70	107.03	104.71	24	24
	FG1	FG2	FG3	FG4			
	105.97	108.14	108.14	105.97			

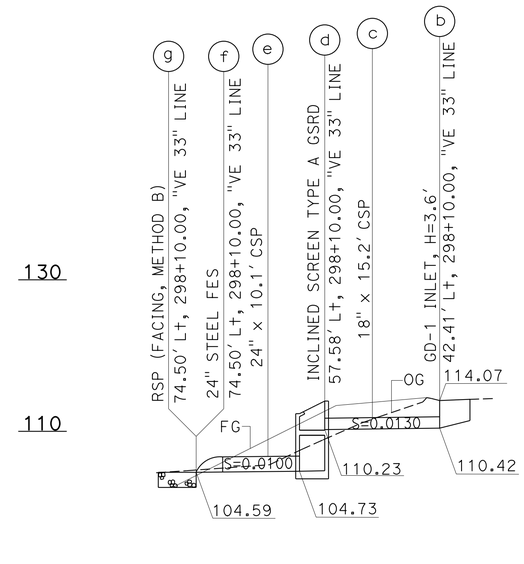

DRAINAGE SYSTEM No. 5

SCALE: Horiz: 1" = 10'
Vert: 1" = 10'

DETAIL FOR UNIT 5 d

GSRD TYPE	TOP OF WALL ELEVATION				PIPE Dia (INCHES)		
	TW1	TW2	TW3	TW4	FL IN	IN	OUT
A	112.33	114.00	114.00	112.33	110.23	18	24
	FG1	FG2	FG3	FG4			
	110.74	112.90	112.90	110.74			

WATER POLLUTION CONTROL PROFILE

SCALE AS SHOWN

WP-2

STATE OF CALIFORNIA - DEPARTMENT OF TRANSPORTATION
Caltrans®
HYDRAULICS

FUNCTIONAL SUPERVISOR: DAVE BHALLA
CALCULATED-DESIGNED BY: ROMULO D. ROBENIOL
CHECKED BY: PAUL FONG
REVISED BY
DATE REVISED

LAST REVISION 00-00-00
DATE PLOTTED => 11-SEP-2015
TIME PLOTTED => 11:01

Dist	COUNTY	ROUTE	POST MILES TOTAL PROJECT	SHEET No.	TOTAL SHEETS
07	Ven	33, 101	0.9/T5.8 2.3/13.8	52	239

Paul Fong 6/19/15
REGISTERED CIVIL ENGINEER DATE

6-29-15
PLANS APPROVAL DATE

REGISTERED PROFESSIONAL ENGINEER
PAUL FONG
No. C67053
Exp. 9-30-16
CIVIL
STATE OF CALIFORNIA

THE STATE OF CALIFORNIA OR ITS OFFICERS OR AGENTS SHALL NOT BE RESPONSIBLE FOR THE ACCURACY OR COMPLETENESS OF SCANNED COPIES OF THIS PLAN SHEET.

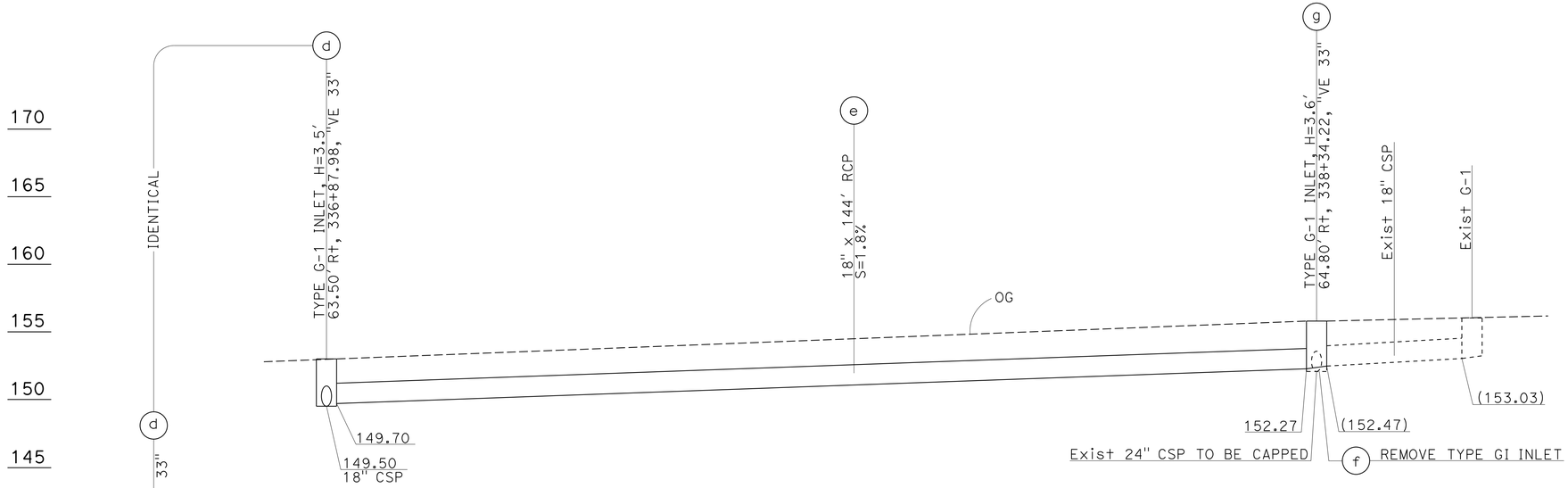

DRAINAGE SYSTEM No. 6

SCALE: Horiz: 1" = 10'
Vert: 1" = 5'

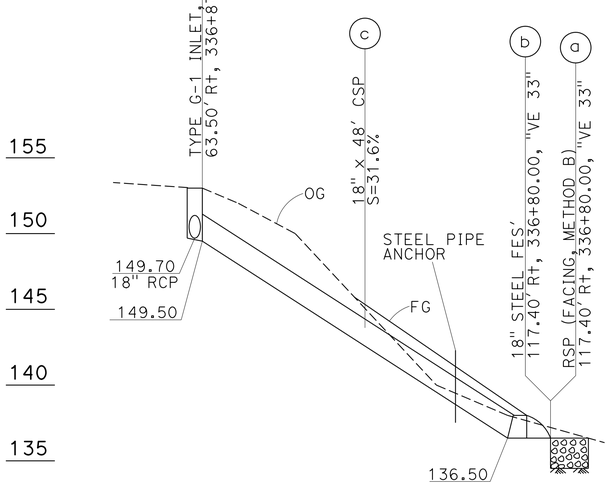

DRAINAGE SYSTEM No. 6

SCALE: Horiz: 1" = 10'
Vert: 1" = 5'

WATER POLLUTION CONTROL PROFILE

WP-3

STATE OF CALIFORNIA - DEPARTMENT OF TRANSPORTATION
Caltrans
HYDRAULICS

FUNCTIONAL SUPERVISOR: DAVE BHALLA
CALCULATED-DESIGNED BY: PAUL FONG
CHECKED BY: ROMULO D. ROBENIOL
REVISED BY
DATE REVISED

LAST REVISION 00-00-00
DATE PLOTTED => 11-SEP-2015
TIME PLOTTED => 11:01

Dist	COUNTY	ROUTE	POST MILES TOTAL PROJECT	SHEET No.	TOTAL SHEETS
07	Ven	33, 101	0.9/T5.8 2.3/13.8	53	239

Paul Fong 6/19/15
REGISTERED CIVIL ENGINEER DATE

6-29-15
PLANS APPROVAL DATE

REGISTERED PROFESSIONAL ENGINEER
PAUL FONG
No. C67053
Exp. 9-30-16
CIVIL
STATE OF CALIFORNIA

THE STATE OF CALIFORNIA OR ITS OFFICERS OR AGENTS SHALL NOT BE RESPONSIBLE FOR THE ACCURACY OR COMPLETENESS OF SCANNED COPIES OF THIS PLAN SHEET.

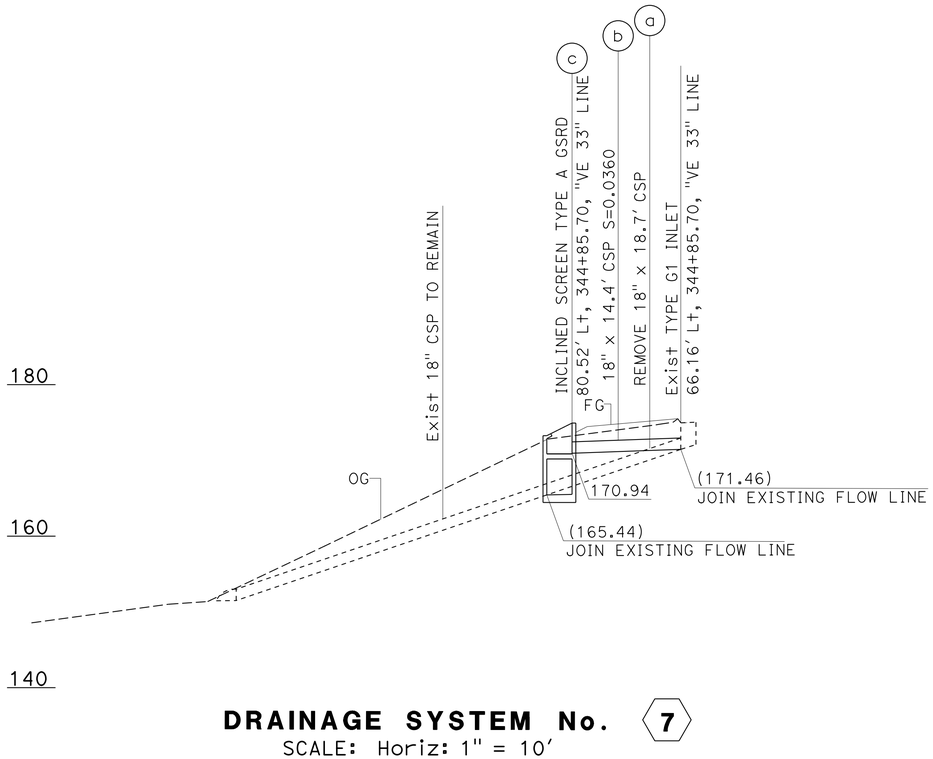

DRAINAGE SYSTEM No. 7

SCALE: Horiz: 1" = 10'
Vert: 1" = 10'

DETAIL FOR UNIT 7 c

GSRD TYPE	TOP OF WALL ELEVATION				PIPE Dia (INCHES)		
	TW1	TW2	TW3	TW4	FL IN	IN	OUT
A	173.26	174.93	174.93	173.26	170.94	18	18
	FG1	FG2	FG3	FG4			
	172.52	173.71	173.71	172.52			

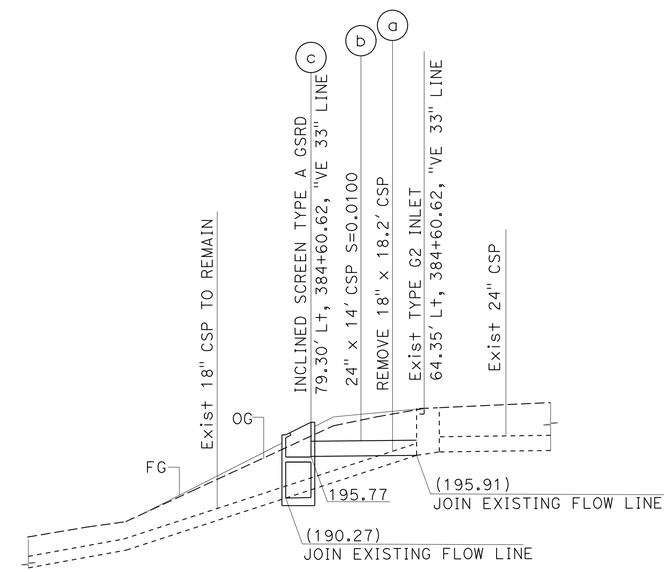

DRAINAGE SYSTEM No. 9

SCALE: Horiz: 1" = 10'
Vert: 1" = 10'

DETAIL FOR UNIT 9 c

GSRD TYPE	TOP OF WALL ELEVATION				PIPE Dia (INCHES)		
	TW1	TW2	TW3	TW4	FL IN	IN	OUT
A	198.61	200.28	200.28	198.61	195.77	24	18
	FG1	FG2	FG3	FG4			
	197.52	199.72	199.72	197.52			

WATER POLLUTION CONTROL PROFILE

SCALE AS SHOWN

WP-4

STATE OF CALIFORNIA - DEPARTMENT OF TRANSPORTATION
Caltrans
HYDRAULICS
FUNCTIONAL SUPERVISOR: DAVE BHALLA
CALCULATED-DESIGNED BY: ROMULO D. ROBENIOL
CHECKED BY: PAUL FONG
REVISED BY
DATE REVISED

LAST REVISION 00-00-00
DATE PLOTTED => 11-SEP-2015
TIME PLOTTED => 11:01

Dist	COUNTY	ROUTE	POST MILES TOTAL PROJECT	SHEET No.	TOTAL SHEETS
07	Ven	33, 101	0.9/T5.8 2.3/13.8	54	239

Paul Fong 6/19/15
REGISTERED CIVIL ENGINEER DATE

6-29-15
PLANS APPROVAL DATE

REGISTERED PROFESSIONAL ENGINEER
PAUL FONG
No. C67053
Exp. 9-30-16
CIVIL
STATE OF CALIFORNIA

THE STATE OF CALIFORNIA OR ITS OFFICERS OR AGENTS SHALL NOT BE RESPONSIBLE FOR THE ACCURACY OR COMPLETENESS OF SCANNED COPIES OF THIS PLAN SHEET.

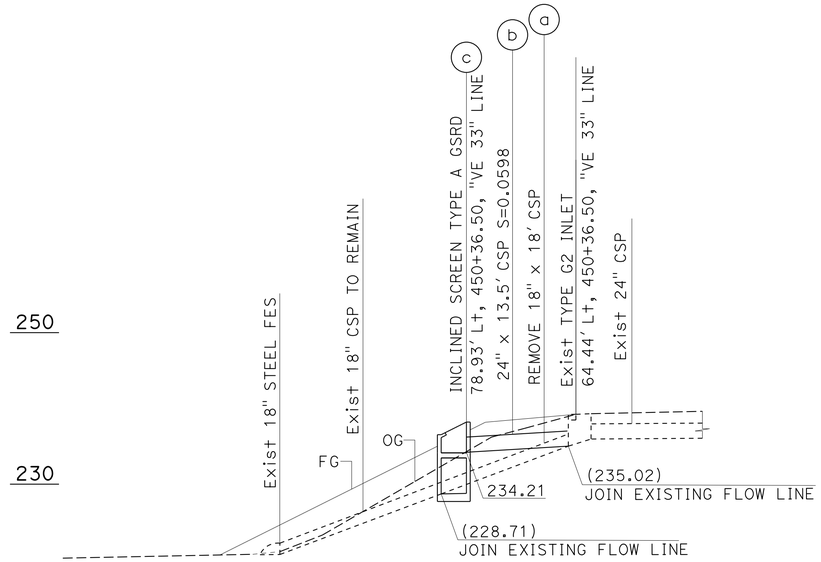

DRAINAGE SYSTEM No. 10

SCALE: Horiz: 1" = 10'
Vert: 1" = 10'

DETAIL FOR UNIT 10 c

GSRD TYPE	TOP OF WALL ELEVATION				PIPE Dia (INCHES)		
	TW1	TW2	TW3	TW4	FL IN	IN	OUT
A	236.53	238.20	238.20	236.53	234.21	24	18
	FG1	FG2	FG3	FG4			
	235.00	237.17	237.17	235.00			

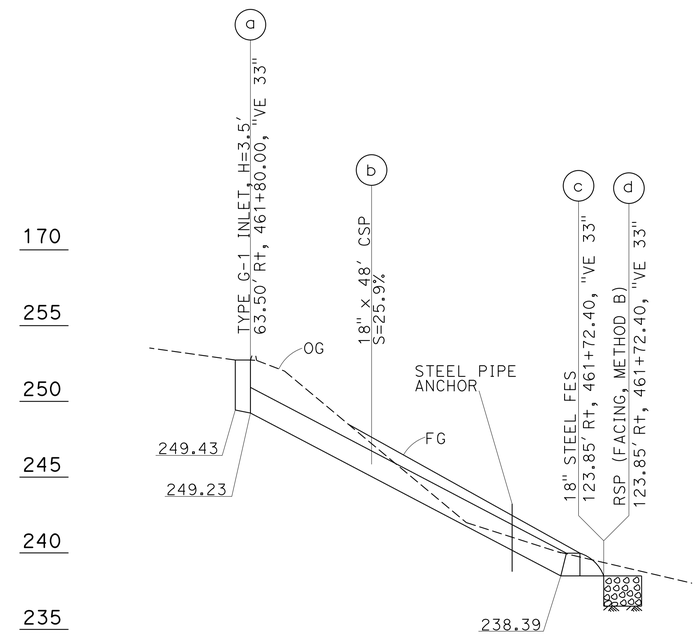

DRAINAGE SYSTEM No. 11

SCALE: Horiz: 1" = 10'
Vert: 1" = 5'

WATER POLLUTION CONTROL PROFILE

SCALE AS SHOWN

WP-5

STATE OF CALIFORNIA - DEPARTMENT OF TRANSPORTATION
Caltrans
HYDRAULICS

FUNCTIONAL SUPERVISOR: DAVE BHALLA
CALCULATED-DESIGNED BY: ROMULO D. ROBENIOL
CHECKED BY: PAUL FONG
REVISED BY
DATE REVISED

LAST REVISION 00-00-00
DATE PLOTTED => 11-SEP-2015
TIME PLOTTED => 11:01

Dist	COUNTY	ROUTE	POST MILES TOTAL PROJECT	SHEET No.	TOTAL SHEETS
07	Ven	33, 101	0.9/T5.8 2.3/13.8	55	239

Paul Fong 6/19/15
REGISTERED CIVIL ENGINEER DATE

6-29-15
PLANS APPROVAL DATE

REGISTERED PROFESSIONAL ENGINEER
PAUL FONG
No. C67053
Exp. 9-30-16
CIVIL
STATE OF CALIFORNIA

THE STATE OF CALIFORNIA OR ITS OFFICERS OR AGENTS SHALL NOT BE RESPONSIBLE FOR THE ACCURACY OR COMPLETENESS OF SCANNED COPIES OF THIS PLAN SHEET.

NOTE:

TOP OF MANHOLE SHALL BE FLUSH WITH FG OF MVP

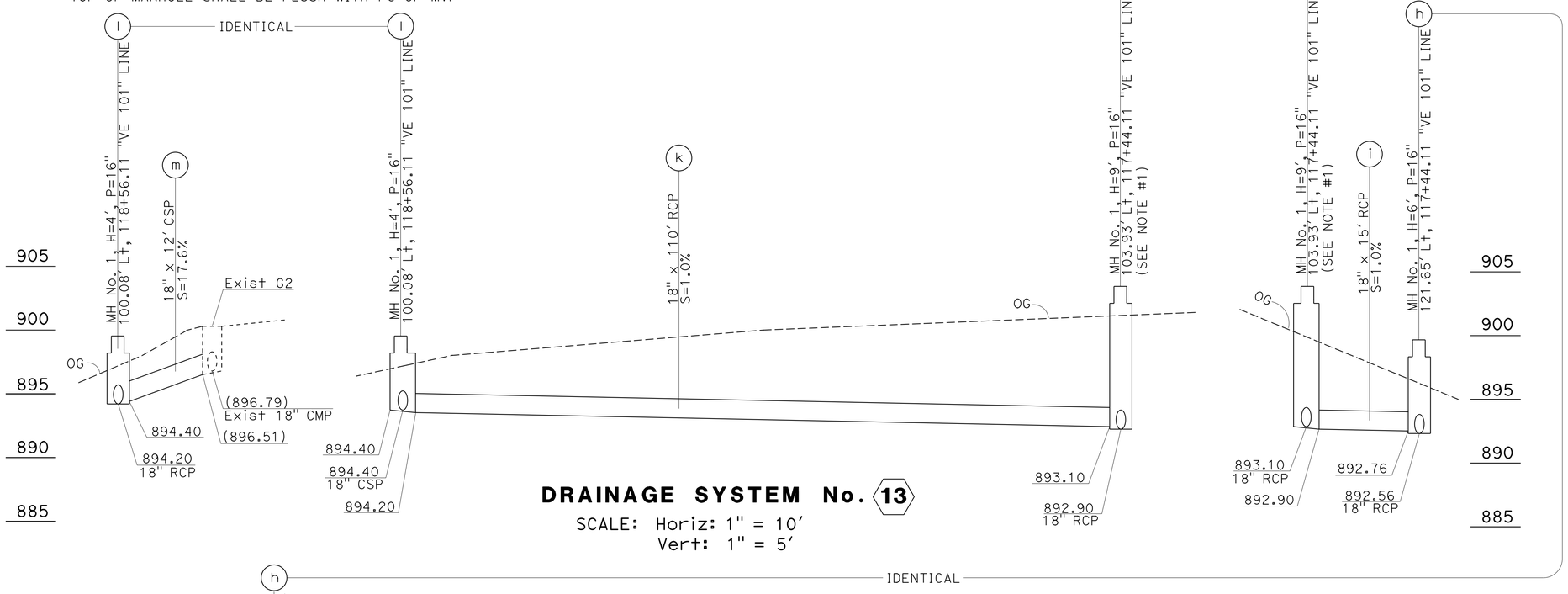

DRAINAGE SYSTEM No. 13

SCALE: Horiz: 1" = 10'
Vert: 1" = 5'

	STATION
WE1	129.15' Lt, 117+58.11 "VE 101" LINE
WE3	129.15' Lt, 118+29.11 "VE 101" LINE
WE4	114.15' Lt, 118+29.11 "VE 101" LINE
WE6	114.15' Lt, 117+58.11 "VE 101" LINE

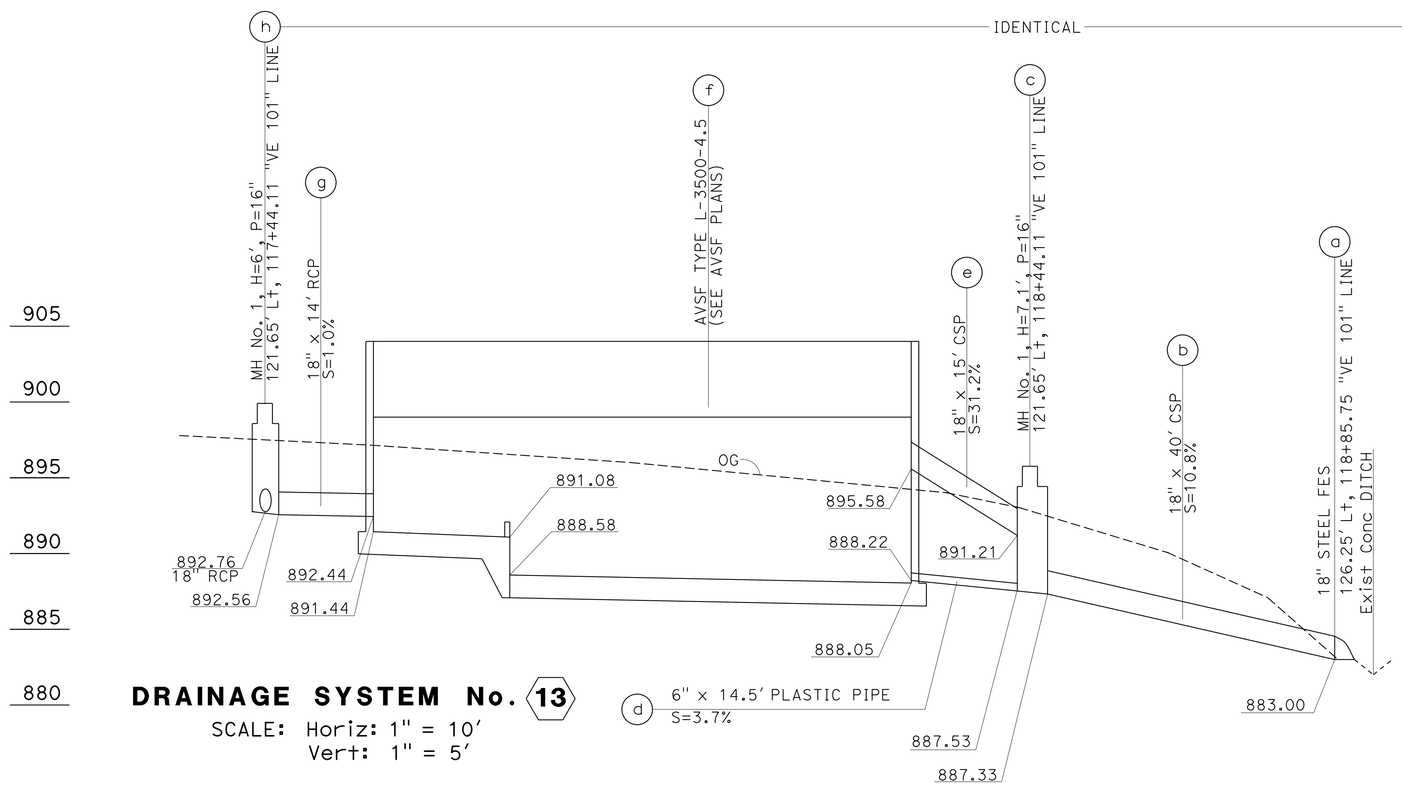

DRAINAGE SYSTEM No. 13

SCALE: Horiz: 1" = 10'
Vert: 1" = 5'

WALL DESIGN TABLE

TOP OF WALL ELEVATION					
WE1	WE2	WE3	WE4	WE5	WE6
899	899	899	904	904	904
TOP OF FOOTING ELEVATION					
FE0	FE1	FE2	FE3	FE4	FE5
891.49	891.44	891.08	888.58	888.05	888.03
FINISHED GRADE ELEVATION					
FG1	FG2	FG3	FG4	FG5	FG6
896.50	896.50	896.50	902	902	902

DESIGN BASIN WALL	DESIGN WALL H+ H	FOOTING THICKNESS	
		SEDIMENT BASIN	FILTRATION BASIN
Sed	14'	21"	21"
Fil	16'		

WATER POLLUTION CONTROL PROFILE

SCALE AS SHOWN

WP-6

STATE OF CALIFORNIA - DEPARTMENT OF TRANSPORTATION
Caltrans
HYDRAULICS

FUNCTIONAL SUPERVISOR: DAVE BHALLA
CALCULATED-DESIGNED BY: ROMULO D. ROBENIOL
CHECKED BY: PAUL FONG
REVISED BY
DATE REVISED

LAST REVISION 00-00-00
DATE PLOTTED => 11-SEP-2015
TIME PLOTTED => 11:01

Dist	COUNTY	ROUTE	POST MILES TOTAL PROJECT	SHEET No.	TOTAL SHEETS
07	Ven	33, 101	0.9/T5.8 2.3/13.8	56	239

Paul Fong 6/19/15
REGISTERED CIVIL ENGINEER DATE

6-29-15
PLANS APPROVAL DATE

REGISTERED PROFESSIONAL ENGINEER
PAUL FONG
No. C67053
Exp. 9-30-16
CIVIL
STATE OF CALIFORNIA

THE STATE OF CALIFORNIA OR ITS OFFICERS OR AGENTS SHALL NOT BE RESPONSIBLE FOR THE ACCURACY OR COMPLETENESS OF SCANNED COPIES OF THIS PLAN SHEET.

	STATION
WE1	184.57′ Lt, 163+96.67 "VE 101" LINE
WE3	264.13′ Lt, 163+69.57 "VE 101" LINE
WE4	269.83′ Lt, 163+86.61 "VE 101" LINE
WE6	190.31′ Lt, 164+13.71 "VE 101" LINE

WALL DESIGN TABLE

TOP OF WALL ELEVATION					
WE1	WE2	WE3	WE4	WE5	WE6
818	818	818	818	818	818
TOP OF FOOTING ELEVATION					
FE0	FE1	FE2	FE3	FE4	FE5
809.42	809.38	808.96	806.46	805.83	805.81
FINISHED GRADE ELEVATION					
FG1	FG2	FG3	FG4	FG5	FG6
817	817	817	817	817	817

DESIGN BASIN WALL	DESIGN WALL H+ H	FOOTING THICKNESS	
		SEDIMENT BASIN	FILTRATION BASIN
Sed	10′	15"	21"
Fil	14′		

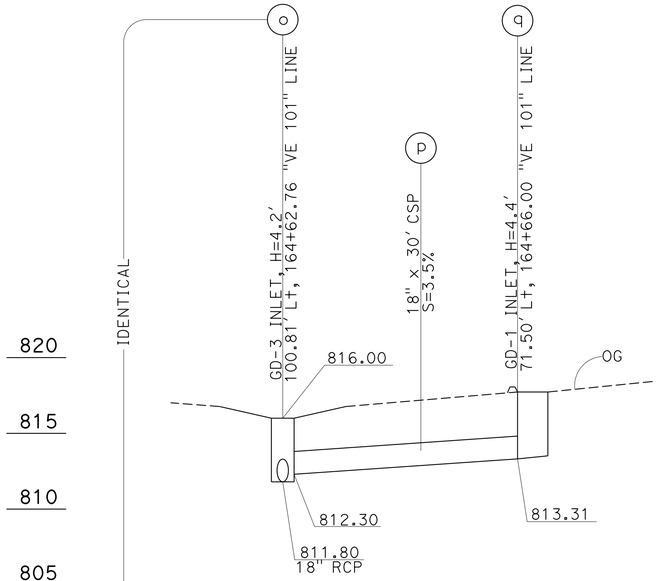

DRAINAGE SYSTEM No. 14
SCALE: Horiz: 1" = 10′
Vert: 1" = 5′

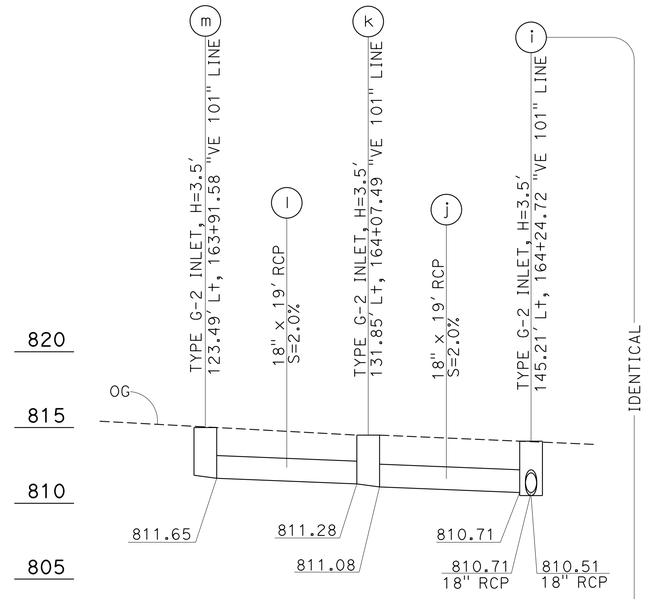

DRAINAGE SYSTEM No. 14
SCALE: Horiz: 1" = 10′
Vert: 1" = 5′

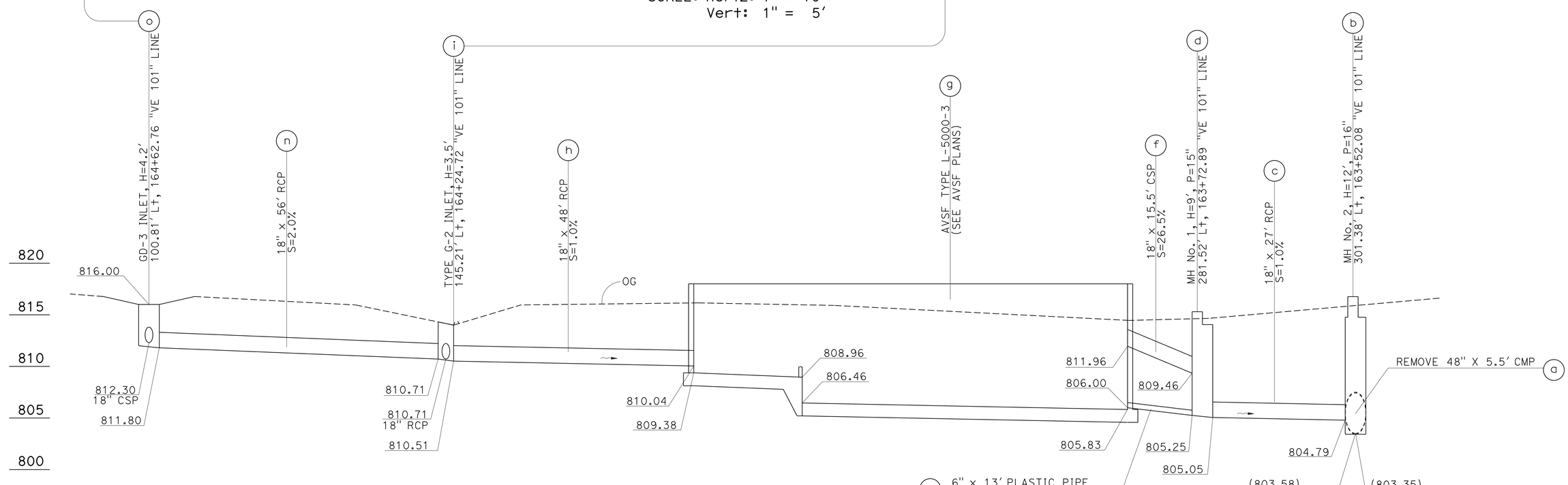

DRAINAGE SYSTEM No. 14
SCALE: Horiz: 1" = 10′
Vert: 1" = 5′

WATER POLLUTION CONTROL PROFILE

SCALE AS SHOWN

WP-7

STATE OF CALIFORNIA - DEPARTMENT OF TRANSPORTATION
Caltrans
HYDRAULICS

FUNCTIONAL SUPERVISOR: DAVE BHALLA
CALCULATED-DESIGNED BY: PAUL FONG
CHECKED BY: ROMULO D. ROBENIOL
REVISED BY
DATE REVISED

LAST REVISION 00-00-00
DATE PLOTTED => 11-SEP-2015
TIME PLOTTED => 11:01

Dist	COUNTY	ROUTE	POST MILES TOTAL PROJECT	SHEET No.	TOTAL SHEETS
07	Ven	33, 101	0.9/T5.8 2.3/13.8	57	239

Paul Fong 6/19/15
REGISTERED CIVIL ENGINEER DATE

6-29-15
PLANS APPROVAL DATE

REGISTERED PROFESSIONAL ENGINEER
PAUL FONG
No. C67053
Exp. 9-30-16
CIVIL
STATE OF CALIFORNIA

THE STATE OF CALIFORNIA OR ITS OFFICERS OR AGENTS SHALL NOT BE RESPONSIBLE FOR THE ACCURACY OR COMPLETENESS OF SCANNED COPIES OF THIS PLAN SHEET.

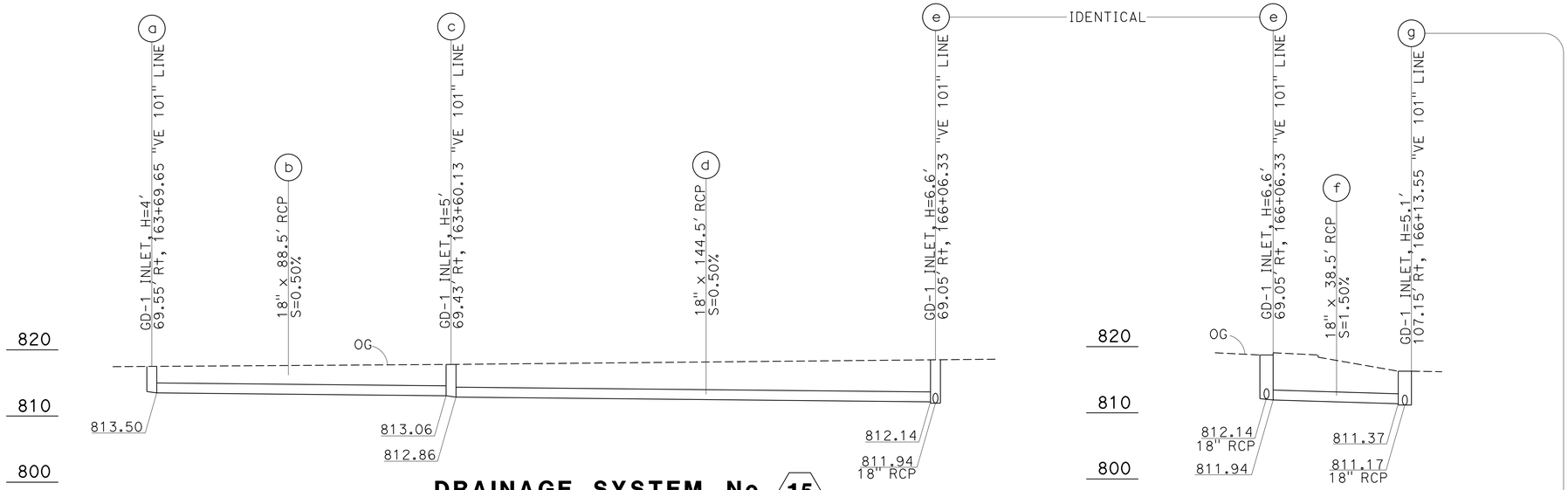

DRAINAGE SYSTEM No. 15

SCALE: Horiz: 1" = 20'
Vert: 1" = 10'

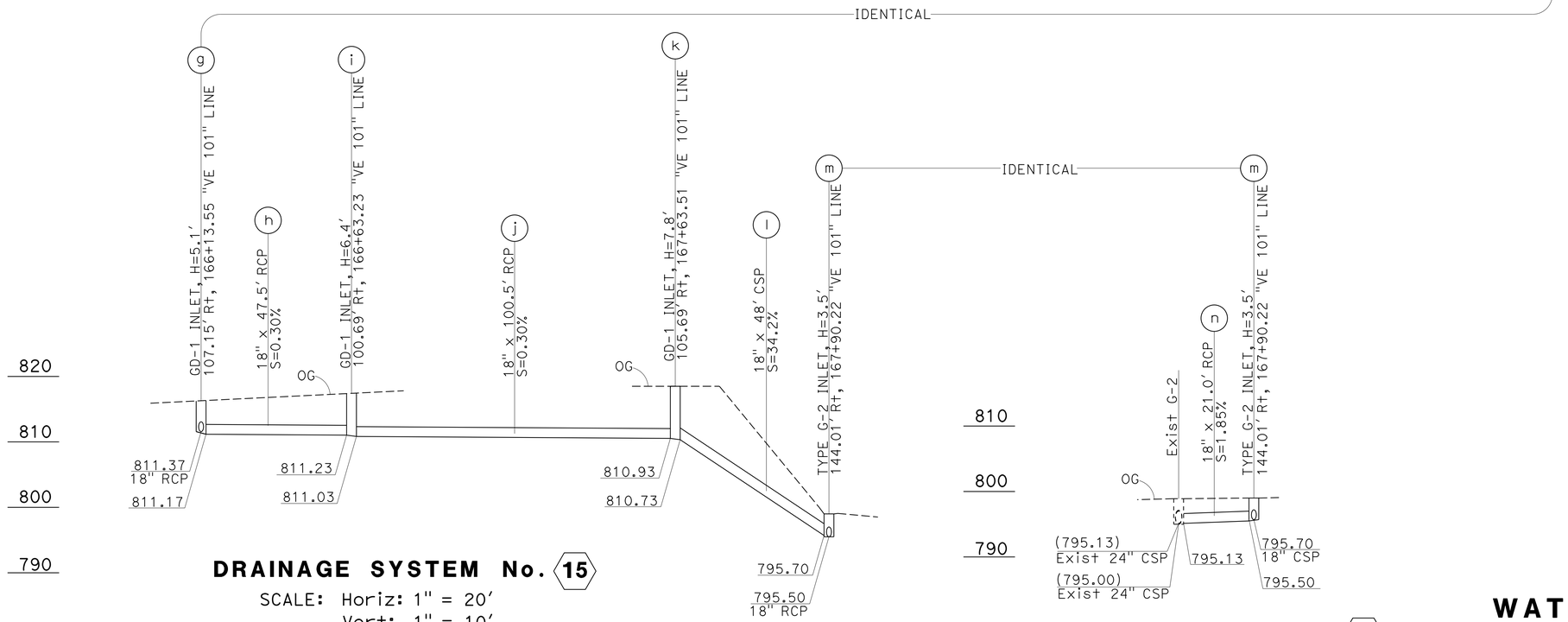

DRAINAGE SYSTEM No. 15

SCALE: Horiz: 1" = 20'
Vert: 1" = 10'

DRAINAGE SYSTEM No. 15

SCALE: Horiz: 1" = 20'
Vert: 1" = 10'

WATER POLLUTION CONTROL PROFILE

SCALE AS SHOWN

WP-8

STATE OF CALIFORNIA - DEPARTMENT OF TRANSPORTATION
Caltrans
HYDRAULICS
FUNCTIONAL SUPERVISOR: DAVE BHALLA
CALCULATED-DESIGNED BY: PAUL FONG
CHECKED BY: ROMULO D. ROBENIOL
REVISED BY
DATE REVISED

LAST REVISION 00-00-00
DATE PLOTTED => 11-SEP-2015
TIME PLOTTED => 11:01

Dist	COUNTY	ROUTE	POST MILES TOTAL PROJECT	SHEET No.	TOTAL SHEETS
07	Ven	33, 101	0.9/T5.8 2.3/13.8	58	239

Paul Fong 6/19/15
REGISTERED CIVIL ENGINEER DATE

6-29-15
PLANS APPROVAL DATE

REGISTERED PROFESSIONAL ENGINEER
PAUL FONG
No. C67053
Exp. 9-30-16
CIVIL
STATE OF CALIFORNIA

THE STATE OF CALIFORNIA OR ITS OFFICERS OR AGENTS SHALL NOT BE RESPONSIBLE FOR THE ACCURACY OR COMPLETENESS OF SCANNED COPIES OF THIS PLAN SHEET.

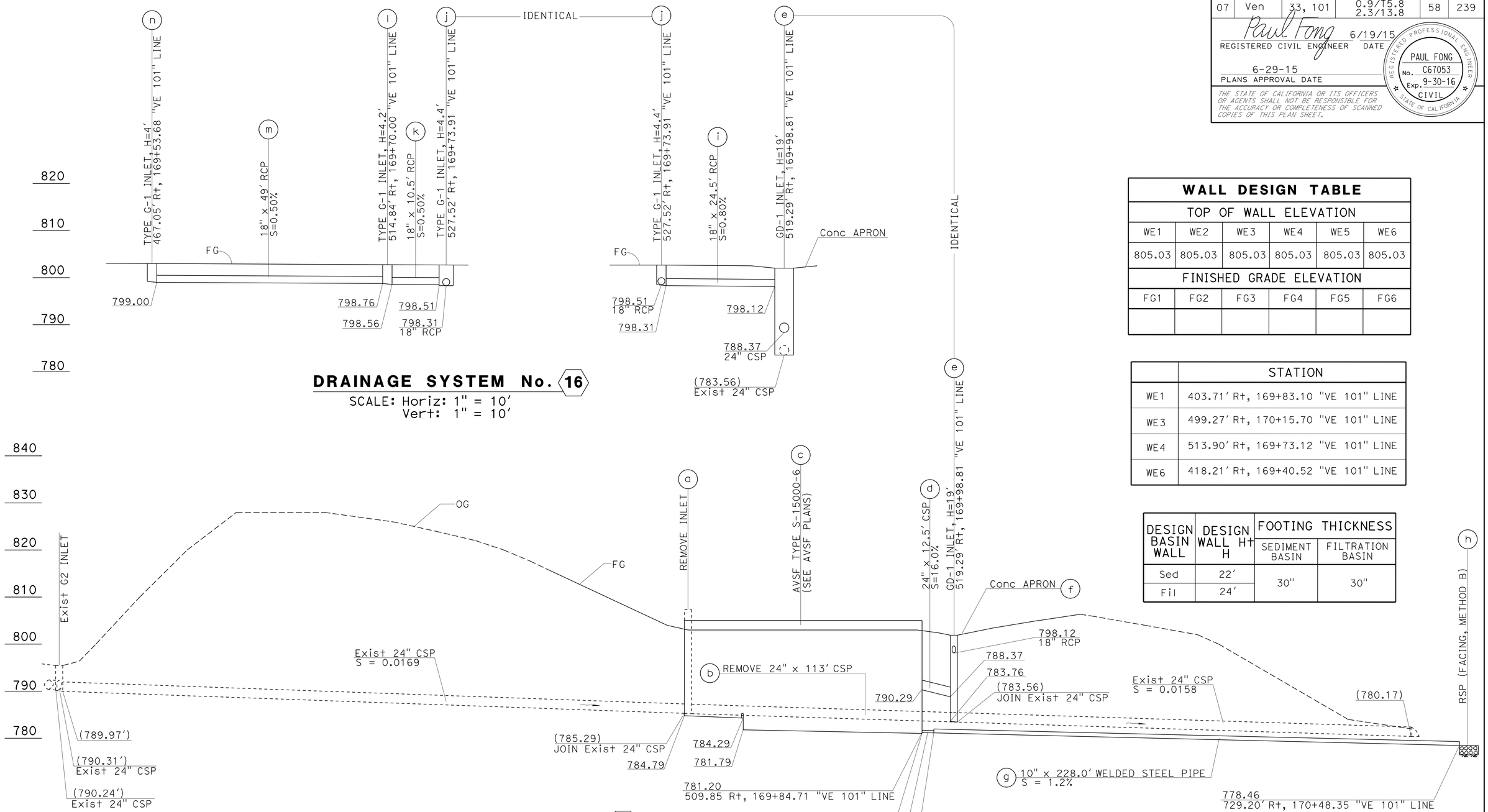

WALL DESIGN TABLE

TOP OF WALL ELEVATION					
WE1	WE2	WE3	WE4	WE5	WE6
805.03	805.03	805.03	805.03	805.03	805.03
FINISHED GRADE ELEVATION					
FG1	FG2	FG3	FG4	FG5	FG6

	STATION
WE1	403.71′ Rt, 169+83.10 "VE 101" LINE
WE3	499.27′ Rt, 170+15.70 "VE 101" LINE
WE4	513.90′ Rt, 169+73.12 "VE 101" LINE
WE6	418.21′ Rt, 169+40.52 "VE 101" LINE

DESIGN BASIN WALL	DESIGN WALL H+ H	FOOTING THICKNESS	
		SEDIMENT BASIN	FILTRATION BASIN
Sed	22′	30"	30"
Fil	24′		

WATER POLLUTION CONTROL PROFILE

SCALE AS SHOWN

WP-9

STATE OF CALIFORNIA - DEPARTMENT OF TRANSPORTATION
HYDRAULICS
Caltrans

FUNCTIONAL SUPERVISOR: DAVE BHALLA
CALCULATED-DESIGNED BY: PAUL FONG
CHECKED BY: ROMULO D. ROBENIOL
REVISED BY
DATE REVISED

LAST REVISION
DATE PLOTTED => 11-SEP-2015
TIME PLOTTED => 11:01

Dist	COUNTY	ROUTE	POST MILES TOTAL PROJECT	SHEET No.	TOTAL SHEETS
07	Ven	33, 101	0.9/T5.8 2.3/13.8	59	239

Paul Fong 6/19/15
REGISTERED CIVIL ENGINEER DATE

6-29-15
PLANS APPROVAL DATE

REGISTERED PROFESSIONAL ENGINEER
PAUL FONG
No. C67053
Exp. 9-30-16
CIVIL
STATE OF CALIFORNIA

THE STATE OF CALIFORNIA OR ITS OFFICERS OR AGENTS SHALL NOT BE RESPONSIBLE FOR THE ACCURACY OR COMPLETENESS OF SCANNED COPIES OF THIS PLAN SHEET.

DRAINAGE SYSTEM No. 17

SCALE: Horiz: 1" = 10'
Vert: 1" = 10'

WATER POLLUTION CONTROL PROFILE

SCALE AS SHOWN

WP-10

STATE OF CALIFORNIA - DEPARTMENT OF TRANSPORTATION
Caltrans
HYDRAULICS

FUNCTIONAL SUPERVISOR: DAVE BHALLA
CALCULATED-DESIGNED BY: ROMULO D. ROBENIOL
CHECKED BY: PAUL FONG
REVISED BY
DATE REVISED

LAST REVISION 00-00-00
DATE PLOTTED => 11-SEP-2015
TIME PLOTTED => 11:01

Dist	COUNTY	ROUTE	POST MILES TOTAL PROJECT	SHEET No.	TOTAL SHEETS
07	Ven	33, 101	0.9/T5.8 2.3/13.8	60	239

Paul Fong 6/19/15
REGISTERED CIVIL ENGINEER DATE

6-29-15
PLANS APPROVAL DATE

REGISTERED PROFESSIONAL ENGINEER
PAUL FONG
No. C67053
Exp. 9-30-16
CIVIL
STATE OF CALIFORNIA

THE STATE OF CALIFORNIA OR ITS OFFICERS OR AGENTS SHALL NOT BE RESPONSIBLE FOR THE ACCURACY OR COMPLETENESS OF SCANNED COPIES OF THIS PLAN SHEET.

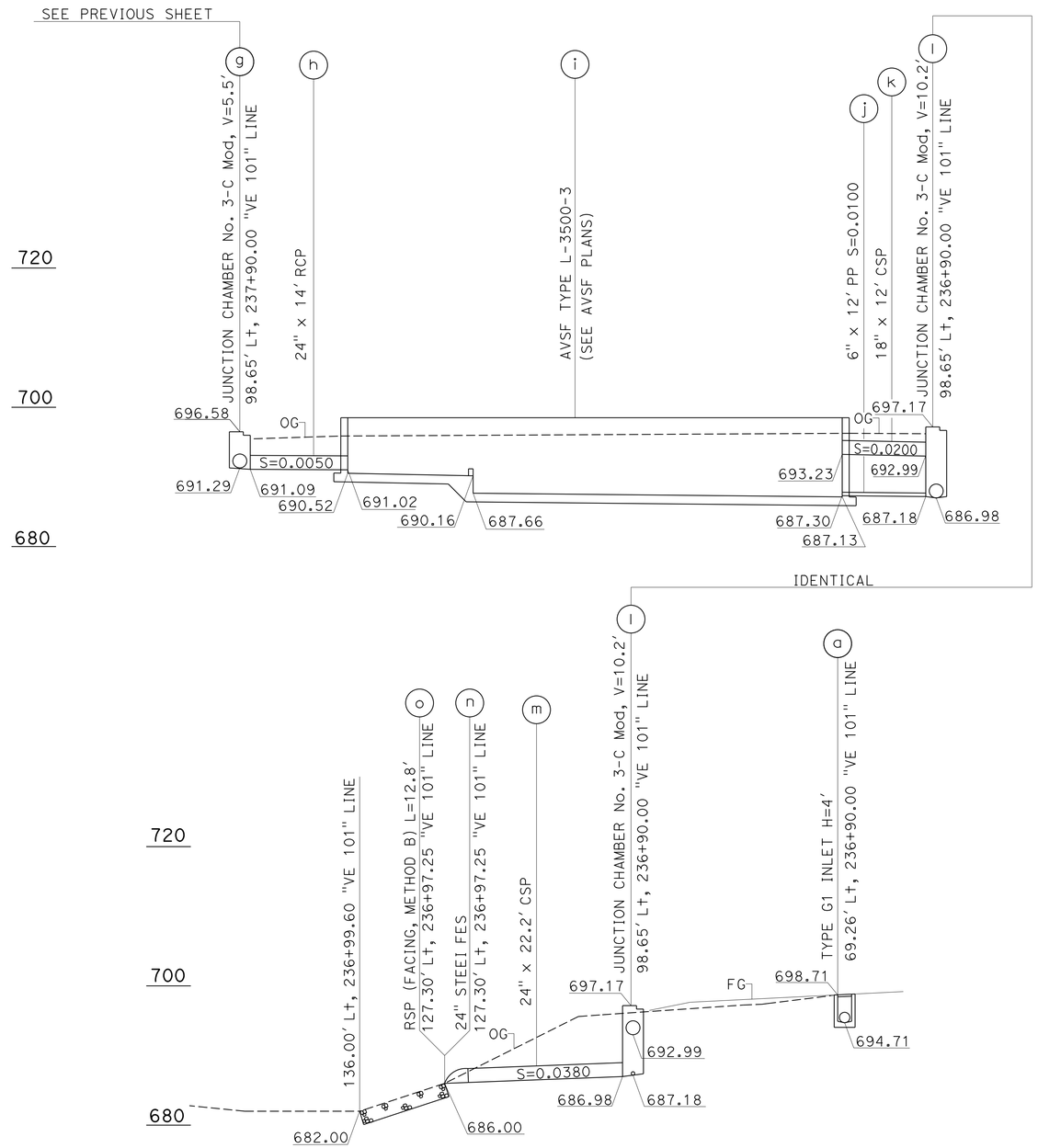

	STATION
WE1	91.27' Lt, 237+74.49 "VE 101" LINE
WE3	91.15' Lt, 237+03.14 "VE 101" LINE
WE4	106.15' Lt, 237+03.49 "VE 101" LINE
WE6	106.27' Lt, 237+74.49 "VE 101" LINE

WALL DESIGN TABLE

TOP OF WALL ELEVATION					
WE1	WE2	WE3	WE4	WE5	WE6
698.50	698.50	698.50	698.50	698.50	698.50
TOP OF FOOTING ELEVATION					
FE0	FE1	FE2	FE3	FE4	FE5
690.56	690.52	690.16	687.66	687.13	687.11
FINISHED GRADE ELEVATION					
FG1	FG2	FG3	FG4	FG5	FG6
696.68	696.87	697.46	695.54	695.40	695.36

DESIGN BASIN WALL	DESIGN WALL H+ H	FOOTING THICKNESS	
		SEDIMENT BASIN	FILTRATION BASIN
Sed	10'	15"	18"
Fil	12'		

DRAINAGE SYSTEM No. 17
SCALE: Horiz: 1" = 10'
Vert: 1" = 10'

WATER POLLUTION CONTROL PROFILE

SCALE AS SHOWN

WP-11

STATE OF CALIFORNIA - DEPARTMENT OF TRANSPORTATION
Caltrans
HYDRAULICS

FUNCTIONAL SUPERVISOR: DAVE BHALLA
CALCULATED-DESIGNED BY: ROMULO D. ROBENIOL
CHECKED BY: PAUL FONG
REVISED BY
DATE REVISED

LAST REVISION 00-00-00
DATE PLOTTED => 11-SEP-2015
TIME PLOTTED => 11:01

Dist	COUNTY	ROUTE	POST MILES TOTAL PROJECT	SHEET No.	TOTAL SHEETS
07	Ven	33, 101	0.9/T5.8 2.3/13.8	61	239

Paul Fong 6/19/15
REGISTERED CIVIL ENGINEER DATE

6-29-15
PLANS APPROVAL DATE

REGISTERED PROFESSIONAL ENGINEER
PAUL FONG
No. C67053
Exp. 9-30-16
CIVIL
STATE OF CALIFORNIA

THE STATE OF CALIFORNIA OR ITS OFFICERS OR AGENTS SHALL NOT BE RESPONSIBLE FOR THE ACCURACY OR COMPLETENESS OF SCANNED COPIES OF THIS PLAN SHEET.

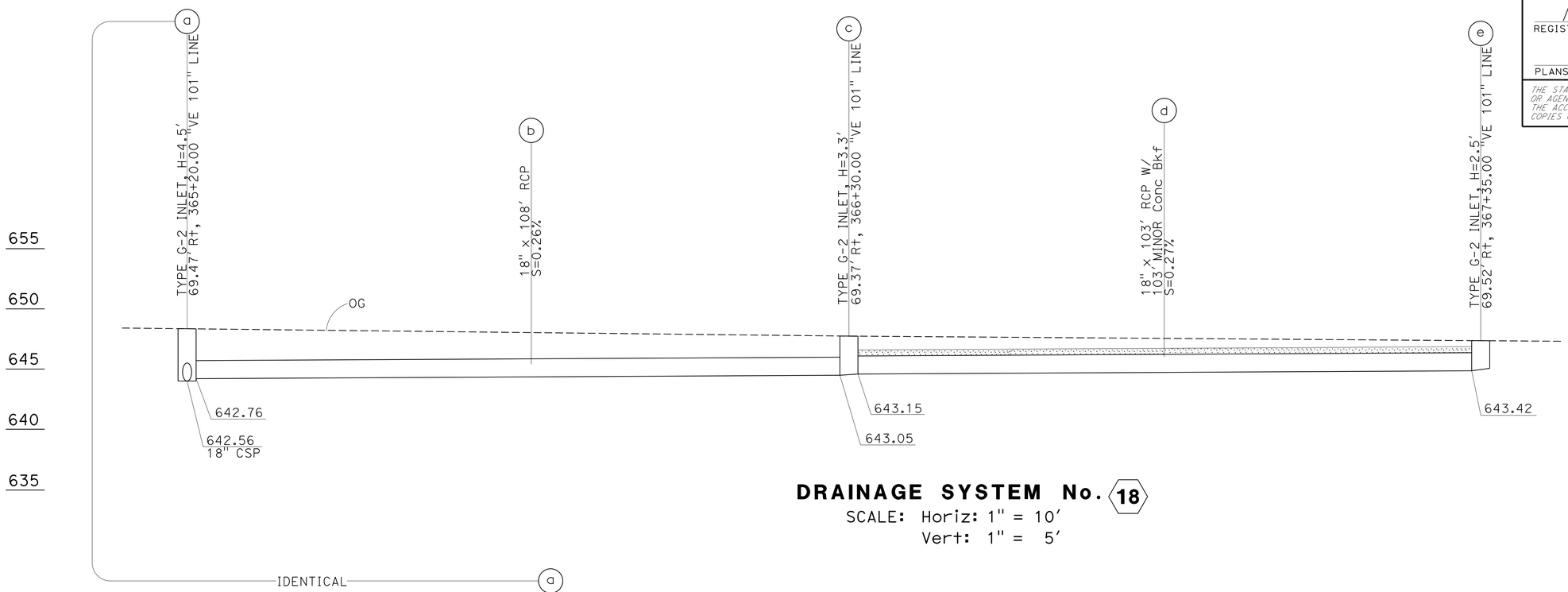

DRAINAGE SYSTEM No. 18

SCALE: Horiz: 1" = 10'
Vert: 1" = 5'

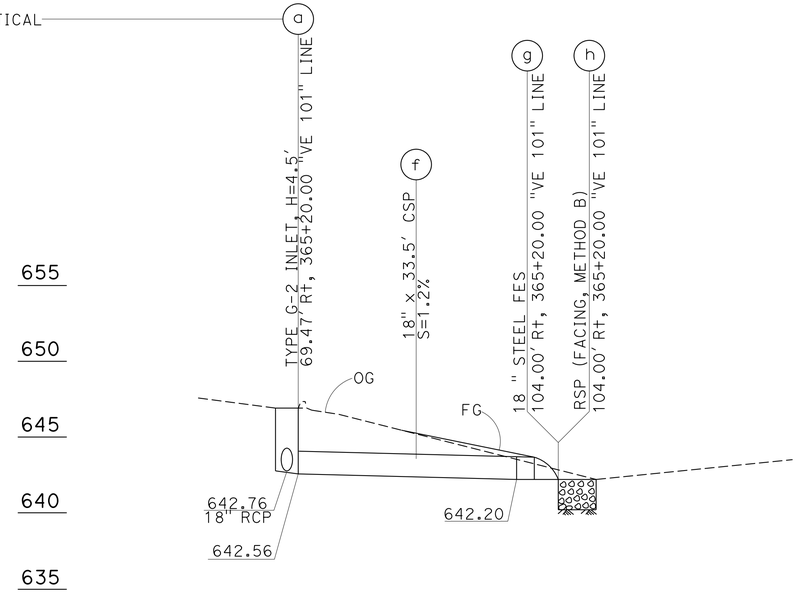

DRAINAGE SYSTEM No. 18

SCALE: Horiz: 1" = 10'
Vert: 1" = 5'

WATER POLLUTION CONTROL PROFILE

SCALE AS SHOWN

WP-12

STATE OF CALIFORNIA - DEPARTMENT OF TRANSPORTATION
Caltrans
HYDRAULICS

FUNCTIONAL SUPERVISOR: DAVE BHALLA
CALCULATED-DESIGNED BY: PAUL FONG
CHECKED BY: ROMULO D. ROBENIOL
REVISED BY
DATE REVISED

LAST REVISION 00-00-00
DATE PLOTTED => 11-SEP-2015
TIME PLOTTED => 11:01

Dist	COUNTY	ROUTE	POST MILES TOTAL PROJECT	SHEET No.	TOTAL SHEETS
07	Ven	33, 101	0.9/T5.8 2.3/13.8	62	239

Paul Fong 6/19/15
REGISTERED CIVIL ENGINEER DATE

6-29-15
PLANS APPROVAL DATE

REGISTERED PROFESSIONAL ENGINEER
PAUL FONG
No. C67053
Exp. 9-30-16
CIVIL
STATE OF CALIFORNIA

THE STATE OF CALIFORNIA OR ITS OFFICERS OR AGENTS SHALL NOT BE RESPONSIBLE FOR THE ACCURACY OR COMPLETENESS OF SCANNED COPIES OF THIS PLAN SHEET.

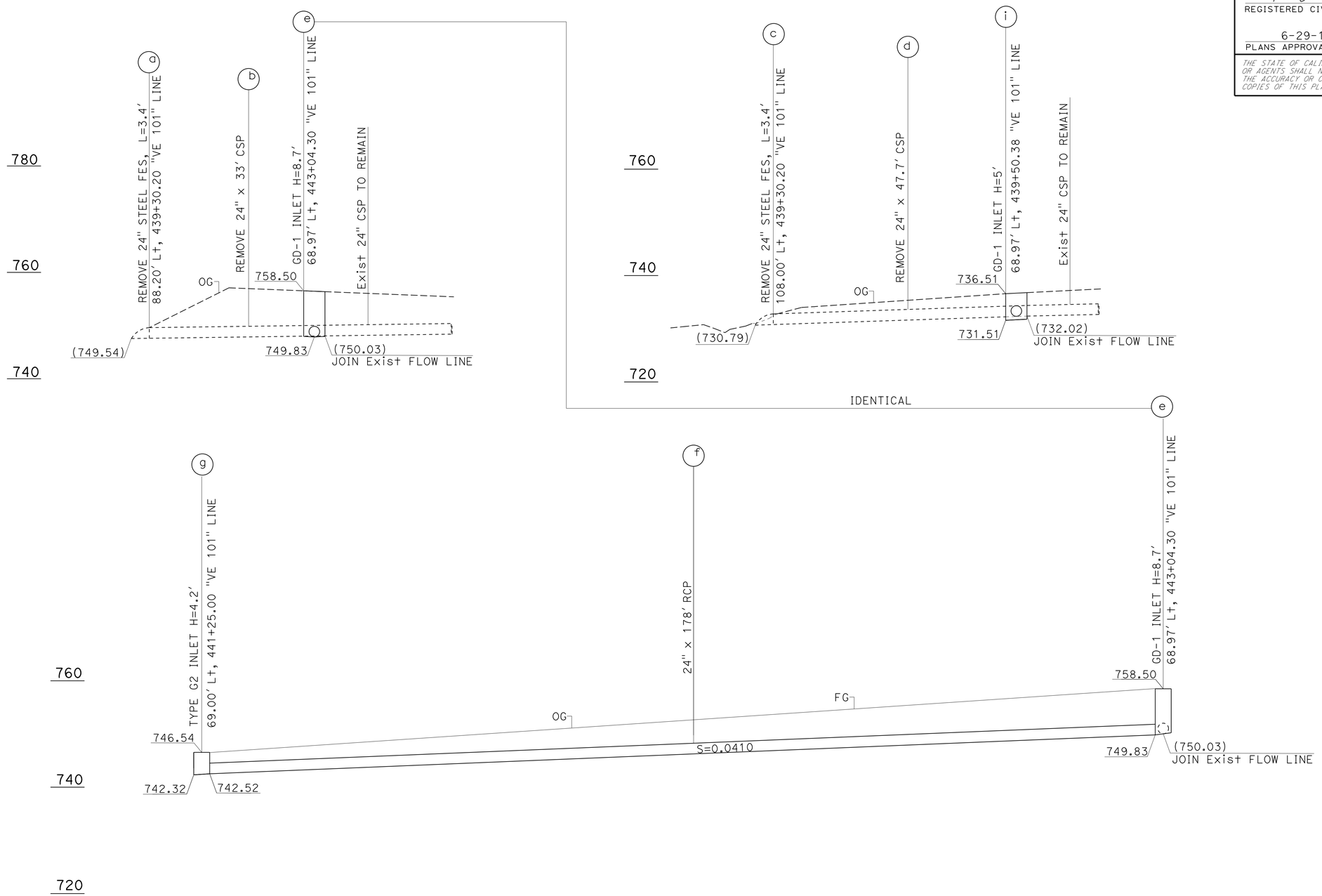

DRAINAGE SYSTEM No. 19

SCALE: Horiz: 1" = 10'
Vert: 1" = 10'

WATER POLLUTION CONTROL PROFILE

SCALE AS SHOWN

WP-13

STATE OF CALIFORNIA - DEPARTMENT OF TRANSPORTATION
Caltrans
HYDRAULICS

FUNCTIONAL SUPERVISOR: DAVE BHALLA
CALCULATED-DESIGNED BY: ROMULO D. ROBENIOL
CHECKED BY: PAUL FONG
REVISED BY
DATE REVISED

LAST REVISION 00-00-00
DATE PLOTTED => 11-SEP-2015
TIME PLOTTED => 11:01

Dist	COUNTY	ROUTE	POST MILES TOTAL PROJECT	SHEET No.	TOTAL SHEETS
07	Ven	33, 101	0.9/T5.8 2.3/13.8	63	239

Paul Fong 6/19/15
REGISTERED CIVIL ENGINEER DATE

6-29-15
PLANS APPROVAL DATE

REGISTERED PROFESSIONAL ENGINEER
PAUL FONG
No. C67053
Exp. 9-30-16
CIVIL
STATE OF CALIFORNIA

THE STATE OF CALIFORNIA OR ITS OFFICERS OR AGENTS SHALL NOT BE RESPONSIBLE FOR THE ACCURACY OR COMPLETENESS OF SCANNED COPIES OF THIS PLAN SHEET.

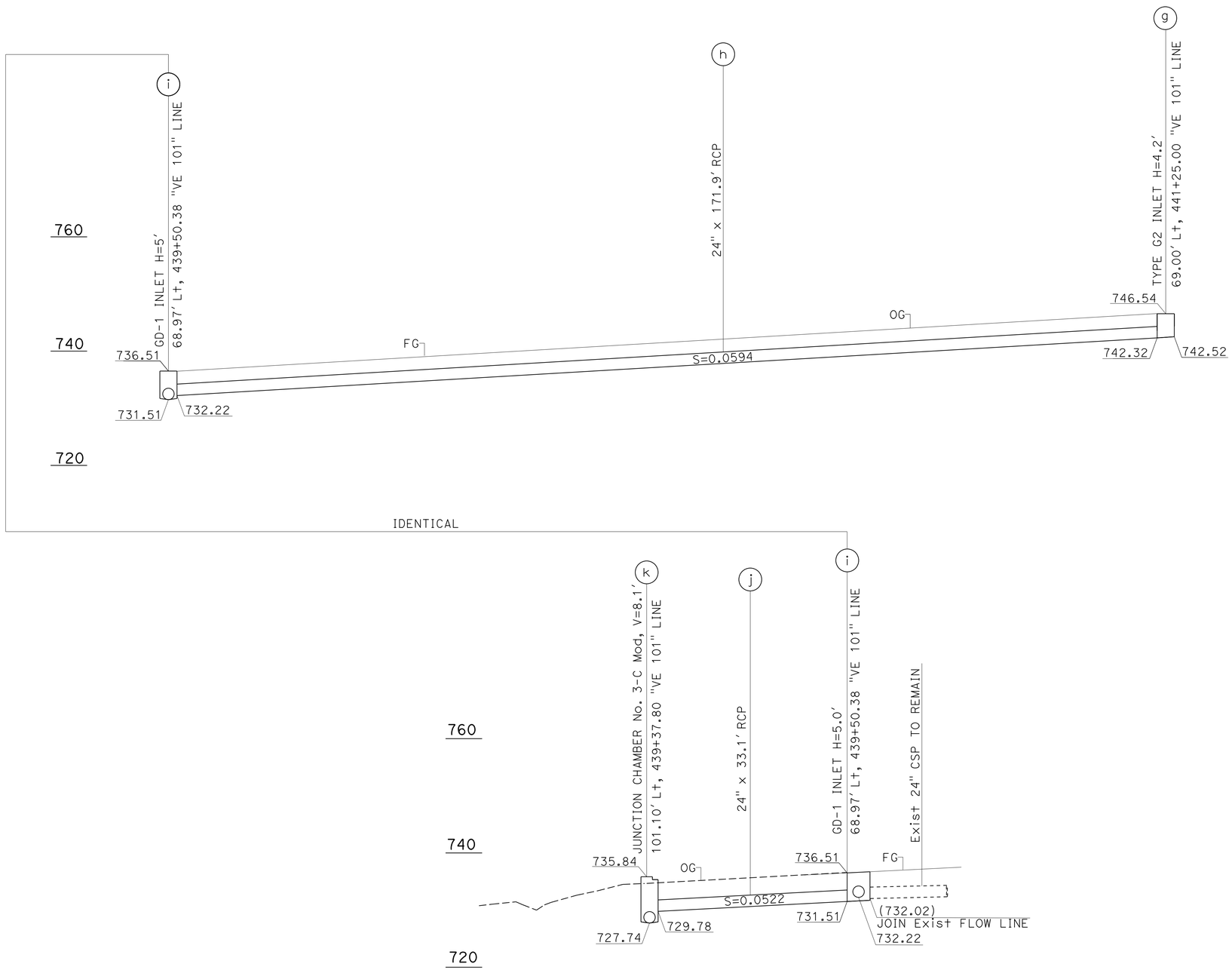

DRAINAGE SYSTEM No. 19

SCALE: Horiz: 1" = 10'
Vert: 1" = 10'

WATER POLLUTION CONTROL PROFILE

SCALE AS SHOWN

WP-14

STATE OF CALIFORNIA - DEPARTMENT OF TRANSPORTATION
Caltrans
HYDRAULICS

FUNCTIONAL SUPERVISOR: DAVE BHALLA
CALCULATED-DESIGNED BY: ROMULO D. ROBENIOL
CHECKED BY: PAUL FONG
REVISED BY
DATE REVISED

LAST REVISION 00-00-00
DATE PLOTTED => 11-SEP-2015
TIME PLOTTED => 11:01

Dist	COUNTY	ROUTE	POST MILES TOTAL PROJECT	SHEET No.	TOTAL SHEETS
07	Ven	33, 101	0.9/T5.8 2.3/13.8	64	239

Paul Fong 6/19/15
REGISTERED CIVIL ENGINEER DATE

6-29-15
PLANS APPROVAL DATE

REGISTERED PROFESSIONAL ENGINEER
PAUL FONG
No. C67053
Exp. 9-30-16
CIVIL
STATE OF CALIFORNIA

THE STATE OF CALIFORNIA OR ITS OFFICERS OR AGENTS SHALL NOT BE RESPONSIBLE FOR THE ACCURACY OR COMPLETENESS OF SCANNED COPIES OF THIS PLAN SHEET.

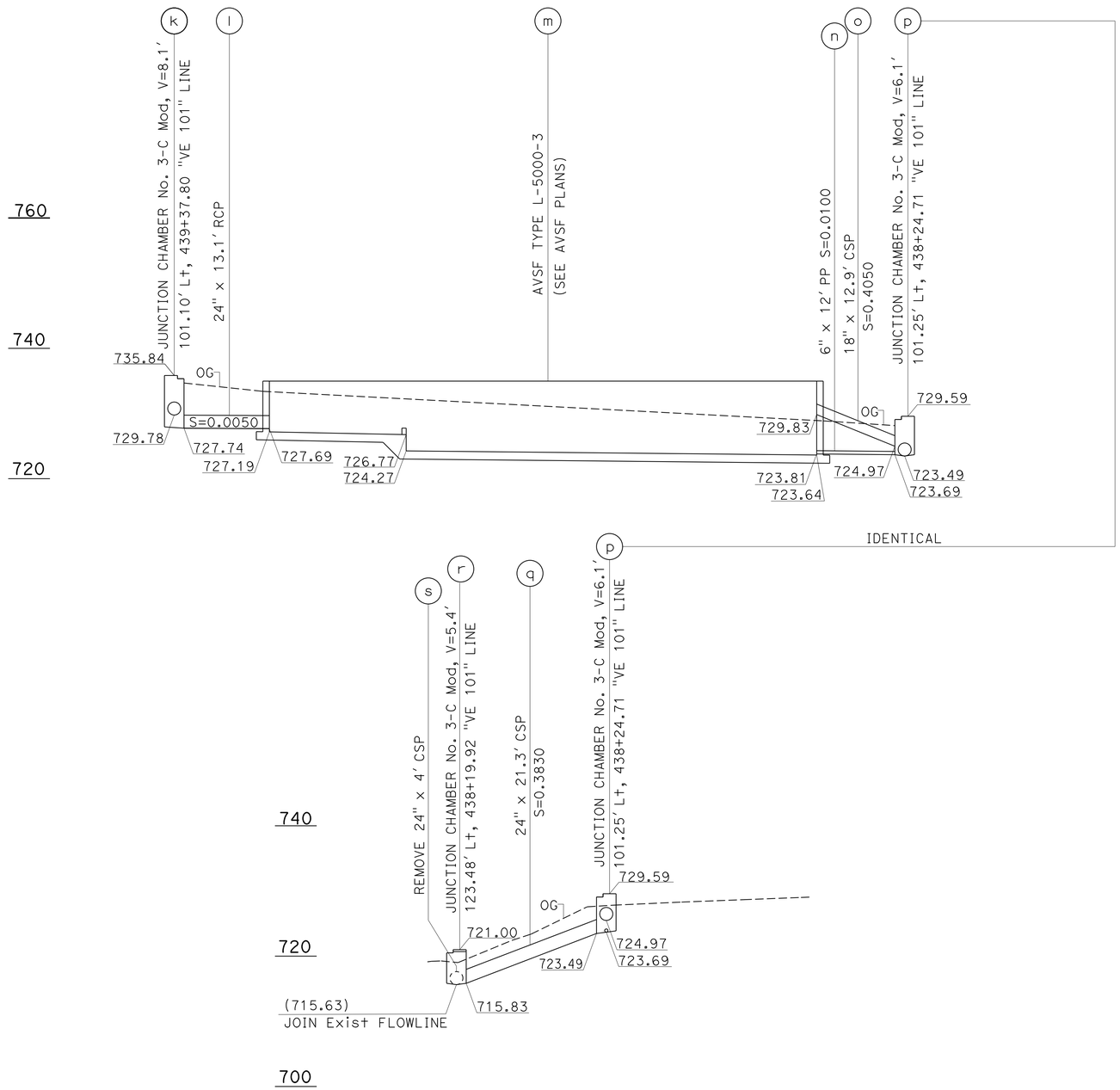

	STATION
WE1	92.12' Lt, 439+22.71 "VE 101" LINE
WE3	92.24' Lt, 438+38.71 "VE 101" LINE
WE4	110.24' Lt, 438+38.71 "VE 101" LINE
WE6	110.12' Lt, 439+22.71 "VE 101" LINE

WALL DESIGN TABLE

TOP OF WALL ELEVATION					
WE1	WE2	WE3	WE4	WE5	WE6
734.97	734.97	734.97	734.97	734.97	734.97
TOP OF FOOTING ELEVATION					
FE0	FE1	FE2	FE3	FE4	FE5
727.23	727.19	726.77	724.27	723.64	723.62
FINISHED GRADE ELEVATION					
FG1	FG2	FG3	FG4	FG5	FG6
733.82	732.68	729.30	728	730.78	731.71

DESIGN BASIN WALL	DESIGN WALL H+ H	FOOTING THICKNESS	
		SEDIMENT BASIN	FILTRATION BASIN
Sed	10'	15"	18"
Fil	12'		

DRAINAGE SYSTEM No. 19
SCALE: Horiz: 1" = 10'
Vert: 1" = 10'

WATER POLLUTION CONTROL PROFILE

SCALE AS SHOWN

WP-15

STATE OF CALIFORNIA - DEPARTMENT OF TRANSPORTATION
Caltrans
HYDRAULICS

FUNCTIONAL SUPERVISOR: DAVE BHALLA
CALCULATED-DESIGNED BY: ROMULO D. ROBENIOL
CHECKED BY: PAUL FONG
REVISED BY
DATE REVISED

LAST REVISION 00-00-00
DATE PLOTTED => 11-SEP-2015
TIME PLOTTED => 11:01

Dist	COUNTY	ROUTE	POST MILES TOTAL PROJECT	SHEET No.	TOTAL SHEETS
07	Ven	33, 101	0.9/T5.8 2.3/13.8	65	239

Paul Fong 6/19/15
REGISTERED CIVIL ENGINEER DATE

6-29-15
PLANS APPROVAL DATE

REGISTERED PROFESSIONAL ENGINEER
PAUL FONG
No. C67053
Exp. 9-30-16
CIVIL
STATE OF CALIFORNIA

THE STATE OF CALIFORNIA OR ITS OFFICERS OR AGENTS SHALL NOT BE RESPONSIBLE FOR THE ACCURACY OR COMPLETENESS OF SCANNED COPIES OF THIS PLAN SHEET.

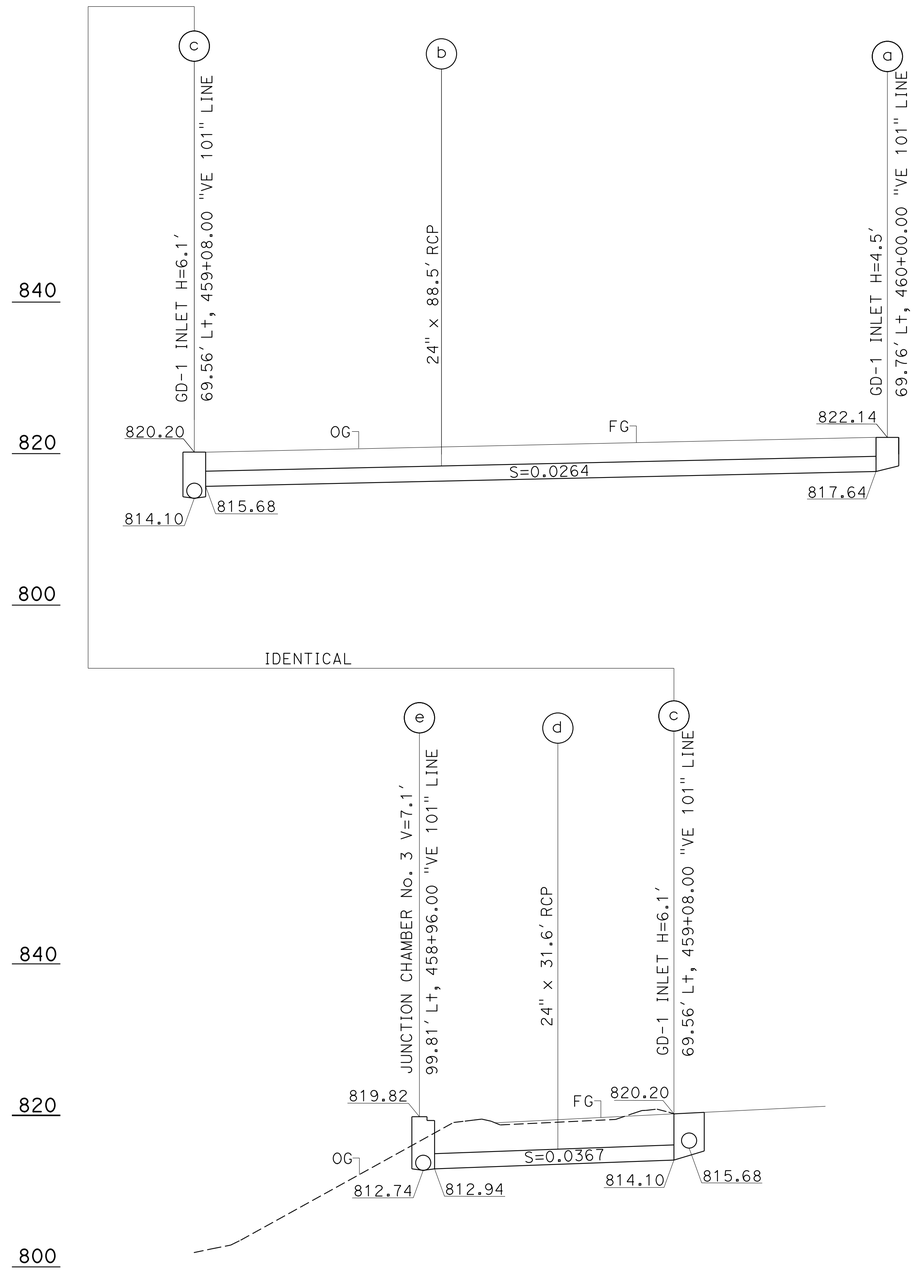

DRAINAGE SYSTEM No. 20

SCALE: Horiz: 1" = 10′
Vert: 1" = 10′

WATER POLLUTION CONTROL PROFILE

SCALE AS SHOWN

WP-16

STATE OF CALIFORNIA - DEPARTMENT OF TRANSPORTATION
Caltrans
HYDRAULICS

FUNCTIONAL SUPERVISOR: DAVE BHALLA
CALCULATED-DESIGNED BY: ROMULO D. ROBENIOL
CHECKED BY: PAUL FONG
REVISED BY
DATE REVISED

LAST REVISION 00-00-00
DATE PLOTTED => 11-SEP-2015
TIME PLOTTED => 11:01

Dist	COUNTY	ROUTE	POST MILES TOTAL PROJECT	SHEET No.	TOTAL SHEETS
07	Ven	33, 101	0.9/T5.8 2.3/13.8	66	239

Paul Fong 6/19/15
REGISTERED CIVIL ENGINEER DATE

6-29-15
PLANS APPROVAL DATE

REGISTERED PROFESSIONAL ENGINEER
PAUL FONG
No. C67053
Exp. 9-30-16
CIVIL
STATE OF CALIFORNIA

THE STATE OF CALIFORNIA OR ITS OFFICERS OR AGENTS SHALL NOT BE RESPONSIBLE FOR THE ACCURACY OR COMPLETENESS OF SCANNED COPIES OF THIS PLAN SHEET.

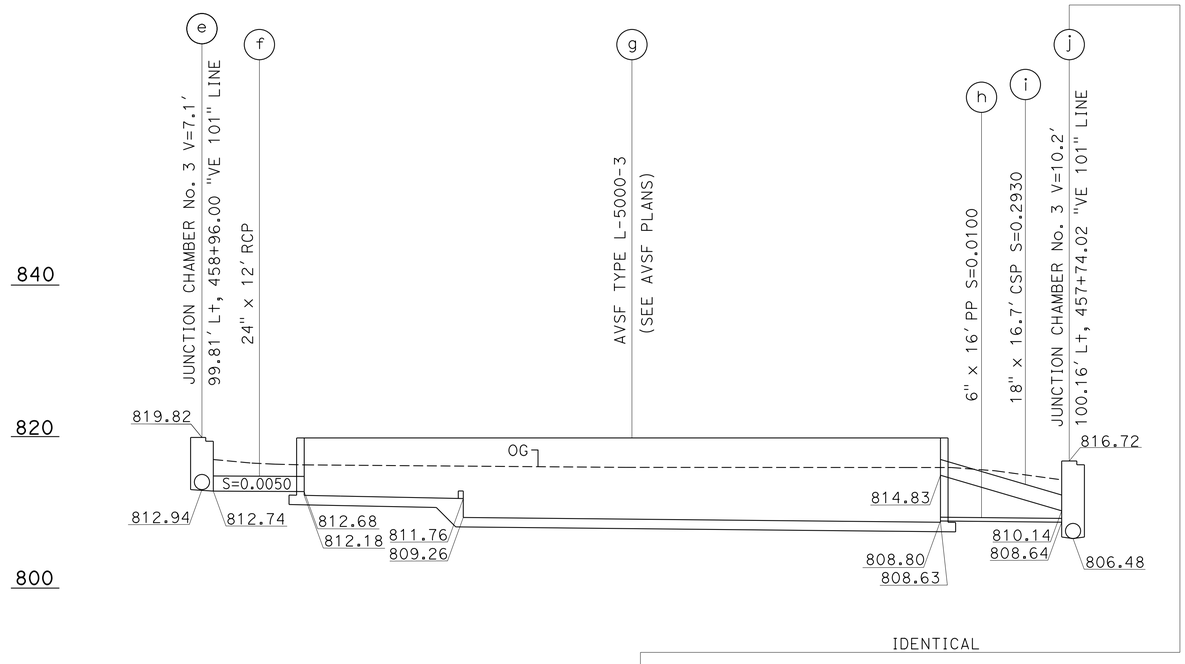

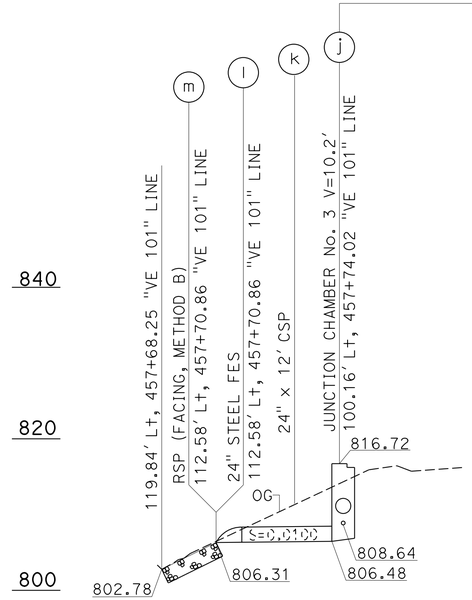

	STATION
WE1	90.89' Lt, 458+76.01 "VE 101" LINE
WE3	91.12' Lt, 457+92.01 "VE 101" LINE
WE4	109.12' Lt, 457+92.01 "VE 101" LINE
WE6	108.89' Lt, 458+76.01 "VE 101" LINE

WALL DESIGN TABLE

TOP OF WALL ELEVATION					
WE1	WE2	WE3	WE4	WE5	WE6
819.76	819.76	819.76	819.76	819.76	819.76
TOP OF FOOTING ELEVATION					
FE0	FE1	FE2	FE3	FE4	FE5
812.22	812.18	811.76	809.26	808.63	808.61
FINISHED GRADE ELEVATION					
FG1	FG2	FG3	FG4	FG5	FG6
818.46	816.84	816.30	816	816	816

DESIGN BASIN WALL	DESIGN WALL H+ H	FOOTING THICKNESS	
		SEDIMENT BASIN	FILTRATION BASIN
Sed	8'	15"	18"
Fil	12'		

DRAINAGE SYSTEM No. 20
SCALE: Horiz: 1" = 10'
Vert: 1" = 10'

WATER POLLUTION CONTROL PROFILE

SCALE AS SHOWN

WP-17

STATE OF CALIFORNIA - DEPARTMENT OF TRANSPORTATION
Caltrans
HYDRAULICS

FUNCTIONAL SUPERVISOR: DAVE BHALLA
CALCULATED-DESIGNED BY: ROMULO D. ROBENIOL
CHECKED BY: PAUL FONG
REVISED BY
DATE REVISED

LAST REVISION 00-00-00
DATE PLOTTED => 11-SEP-2015
TIME PLOTTED => 11:01

Dist	COUNTY	ROUTE	POST MILES TOTAL PROJECT	SHEET No.	TOTAL SHEETS
07	Ven	33, 101	0.9/T5.8 2.3/13.8	67	239

Paul Fong 6/19/15
REGISTERED CIVIL ENGINEER DATE

6-29-15
PLANS APPROVAL DATE

REGISTERED PROFESSIONAL ENGINEER
PAUL FONG
No. C67053
Exp. 9-30-16
CIVIL
STATE OF CALIFORNIA

THE STATE OF CALIFORNIA OR ITS OFFICERS OR AGENTS SHALL NOT BE RESPONSIBLE FOR THE ACCURACY OR COMPLETENESS OF SCANNED COPIES OF THIS PLAN SHEET.

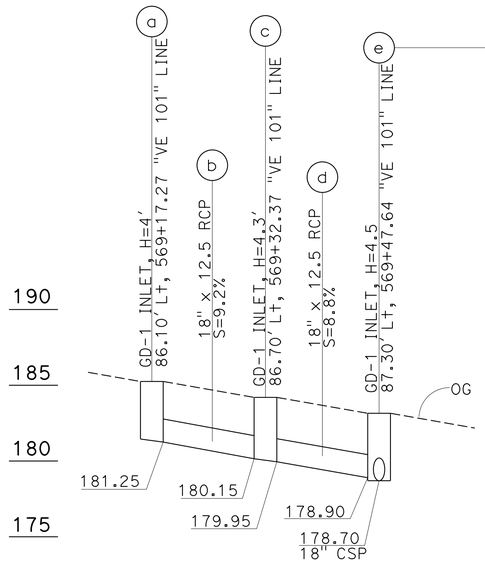

DRAINAGE SYSTEM No. 21

SCALE: Horiz: 1" = 10'
Vert: 1" = 5'

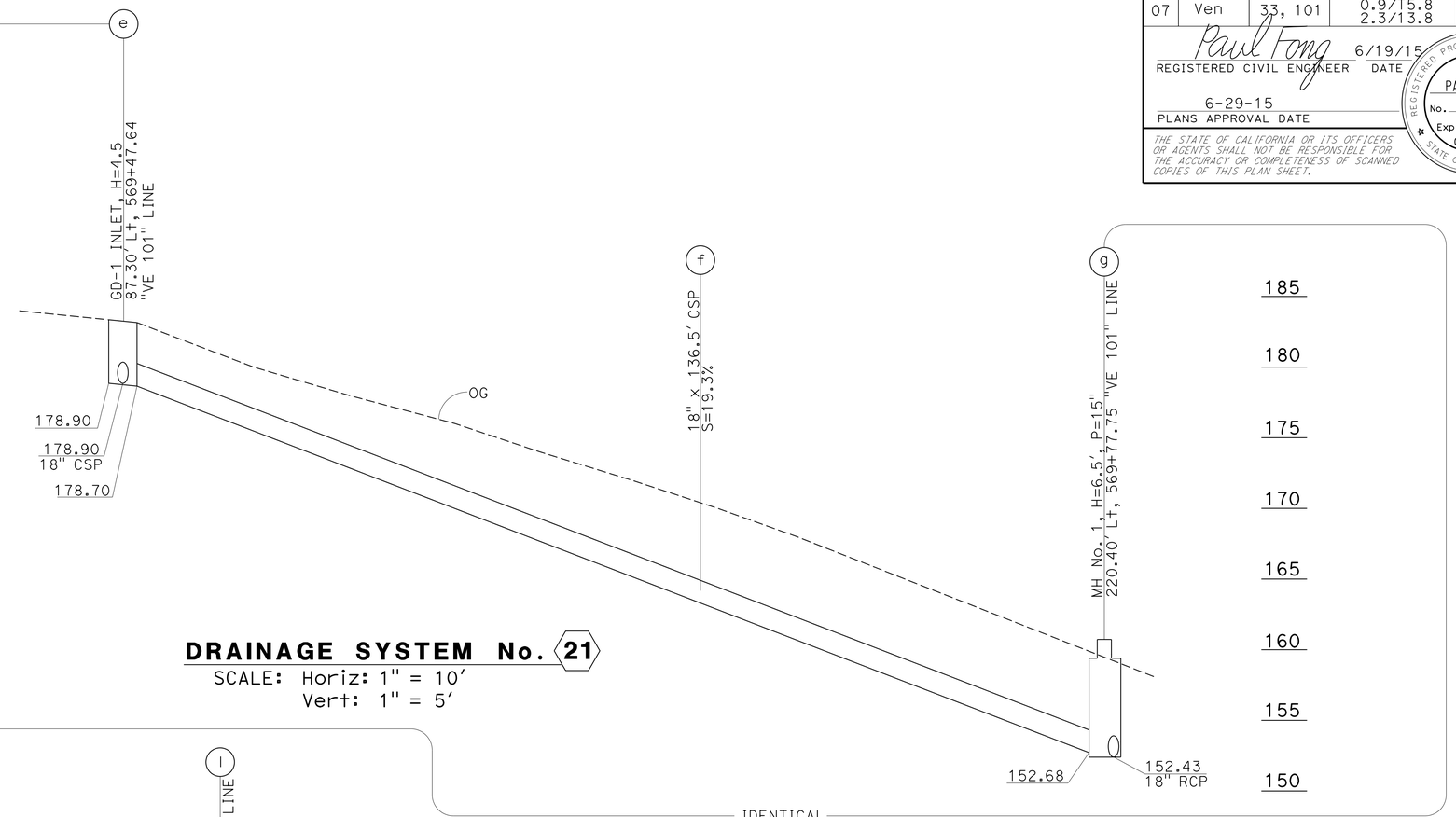

DRAINAGE SYSTEM No. 21

SCALE: Horiz: 1" = 10'
Vert: 1" = 5'

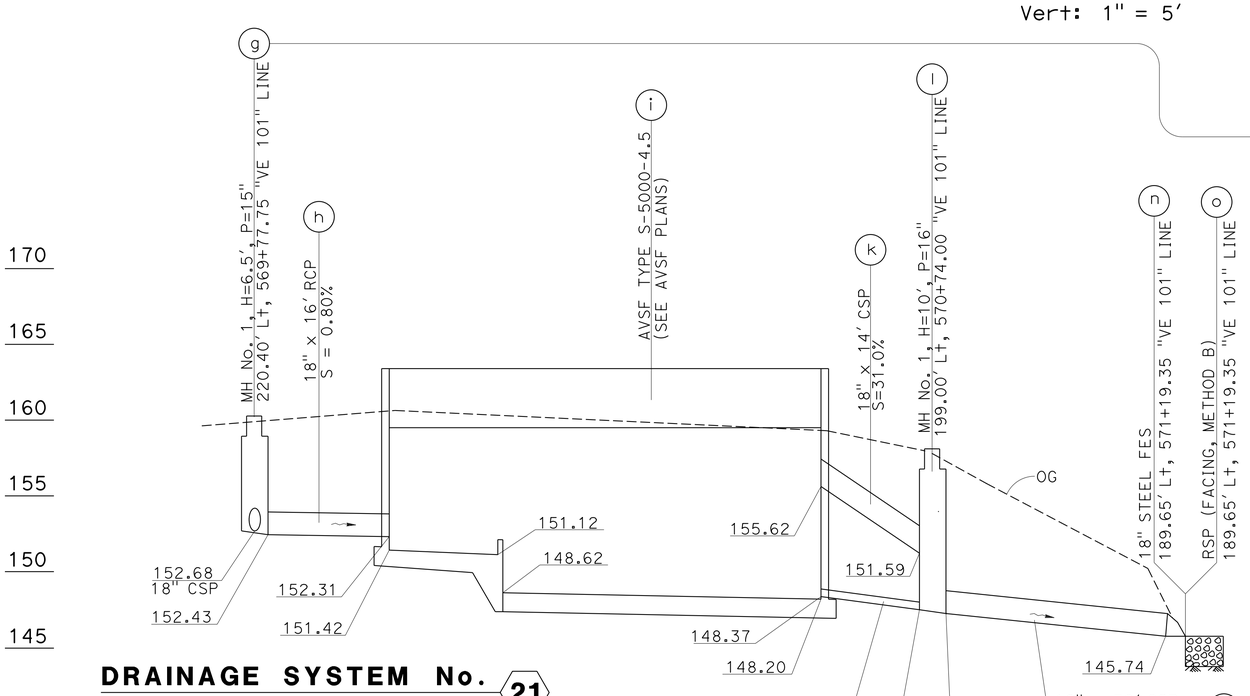

DRAINAGE SYSTEM No. 21

SCALE: Horiz: 1" = 10'
Vert: 1" = 5'

	STATION
WE1	233.59' Lt, 570+00.00 "VE 101" LINE
WE3	216.49' Lt, 570+62.23 "VE 101" LINE
WE4	190.49' Lt, 570+54.08 "VE 101" LINE
WE6	207.70' Lt, 569+92.44 "VE 101" LINE

DESIGN BASIN WALL	DESIGN WALL Ht H	FOOTING THICKNESS	
		SEDIMENT BASIN	FILTRATION BASIN
Sed	14'	21"	21"
Fil	16'		

WALL DESIGN TABLE

TOP OF WALL ELEVATION					
WE1	WE2	WE3	WE4	WE5	WE6
159.50	159.50	159.50	163.40	163.40	163.40
TOP OF FOOTING ELEVATION					
FE0	FE1	FE2	FE3	FE4	FE5
151.47	151.42	151.12	148.62	148.20	148.18
FINISHED GRADE ELEVATION					
FG1	FG2	FG3	FG4	FG5	FG6
157.50	157.50	157.50	162.40	162.40	162.40

WATER POLLUTION CONTROL PROFILE

SCALE AS SHOWN

WP-18

STATE OF CALIFORNIA - DEPARTMENT OF TRANSPORTATION
Caltrans
HYDRAULICS

FUNCTIONAL SUPERVISOR: DAVE BHALLA
CALCULATED-DESIGNED BY: PAUL FONG
CHECKED BY: ROMULO D. ROBENIOL
REVISED BY
DATE REVISED

LAST REVISION 00-00-00
DATE PLOTTED => 11-SEP-2015
TIME PLOTTED => 11:01

Dist	COUNTY	ROUTE	POST MILES TOTAL PROJECT	SHEET No.	TOTAL SHEETS
07	Ven	33, 101	0.9/T5.8 2.3/13.8	68	239

Paul Fong 6/20/15
REGISTERED CIVIL ENGINEER DATE

6-29-15
PLANS APPROVAL DATE

REGISTERED PROFESSIONAL ENGINEER
PAUL FONG
No. C67053
Exp. 9/30/16
CIVIL
STATE OF CALIFORNIA

THE STATE OF CALIFORNIA OR ITS OFFICERS OR AGENTS SHALL NOT BE RESPONSIBLE FOR THE ACCURACY OR COMPLETENESS OF SCANNED COPIES OF THIS PLAN SHEET.

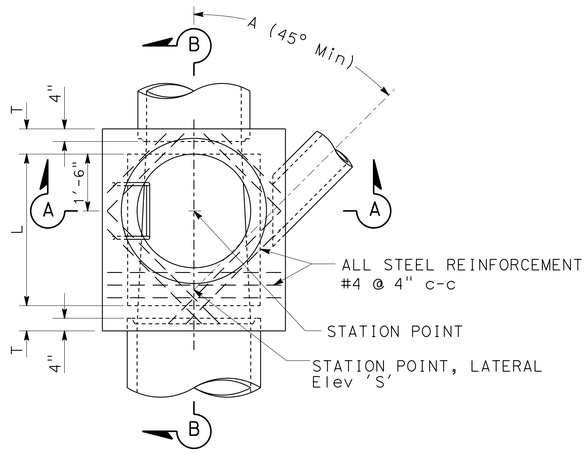

PLAN
(SHAFT NOT SHOWN)

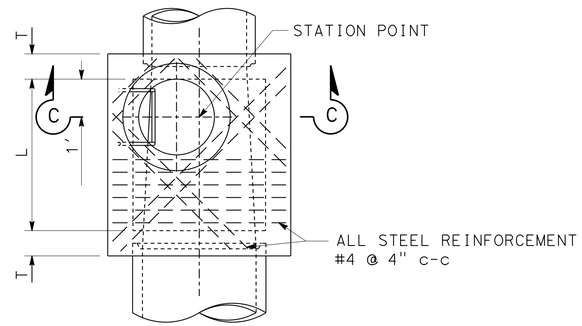

PLAN
DETAIL N
(SHAFT NOT SHOWN)

NOTES:

1. HEIGHT 'H' (IN Sec A-A AND Sec B-B) MUST BE NOT LESS THAN 4'-8", BUT MAY BE INCREASED PROVIDED THAT THE VALUE OF 'M' MUST BE NOT LESS THAN THE MINIMUM SPECIFIED AND THAT THE REDUCER MUST BE USED. FOR 'H' (IN SEC C-C) SEE NOTE 4.
2. LENGTH 'L' MUST BE 4' UNLESS OTHERWISE SHOWN ON WATER POLLUTION CONTROL PLAN.
3. SHAFT MUST BE CONSTRUCTED AS PER Sec C-C AND DETAIL N WHEN DEPTH 'M' FROM STREET GRADE TO TOP OF BOX IS LESS THAN 2'-10 1/2" FOR PAVED STREETS OR 3'-6" FOR UNPAVED STREETS.
4. DEPTH 'P' MAY BE REDUCED TO AN ABSOLUTE LIMIT OF 6" WHEN LARGER VALUES OF 'P' WOULD REDUCE 'H' (IN Sec C-C) TO 3'-6" OR LESS.
5. 'T' MUST BE 8" FOR VALUES OF 'H' UP TO AND INCLUDING 8'. 'T' MUST BE 10" FOR VALUES OF 'H' OVER 8'.
6. LOWEST STEP MUST BE NOT MORE THAN 16" ABOVE THE LEDGE AT THE SIDE OF MANHOLE FLOOR.
7. BODY OF MANHOLE MUST BE POURED IN ONE CONTINUOUS OPERATION, EXCEPT THAT THE CONTRACTOR MUST HAVE THE OPTION OF PLACING AT THE SPRING LINE A CONSTRUCTION JOINT WITH A LONGITUDINAL KEYWAY.
8. REINFORCING STEEL MUST BE 1½" CLEAR FROM FACE OF CONCRETE.
9. FLOOR OF MANHOLE MUST BE STEEL-TROWELED TO SPRING LINE.
10. RINGS, REDUCER, AND PIPE FOR ACCESS SHAFT MUST BE SEATED IN 1:2 CEMENT MORTAR AND NEATLY POINTED OR WIPED INSIDE SHAFT.
11. MANHOLE FRAME AND COVER PER STANDARD PLAN B7-11 DETAIL 'U45'.
12. STEP DETAIL PER STANDARD PLANS D74C AND D75C.

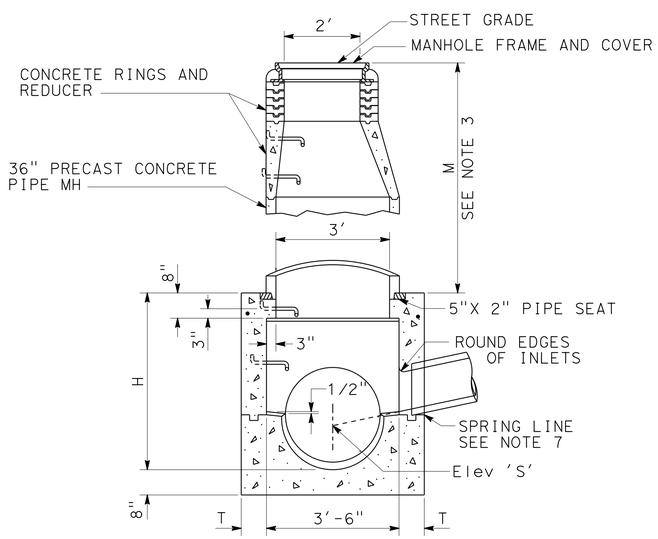

SECTION A-A

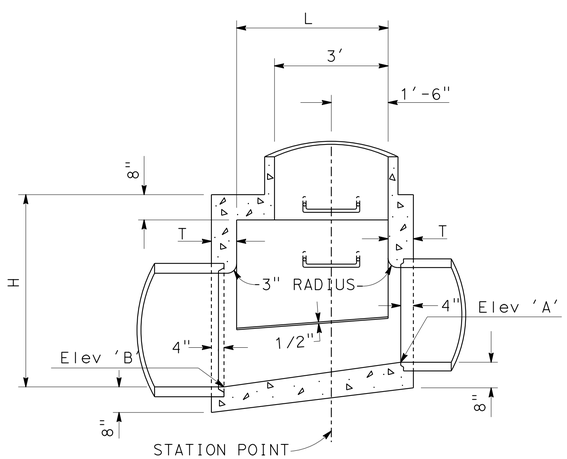

SECTION B-B

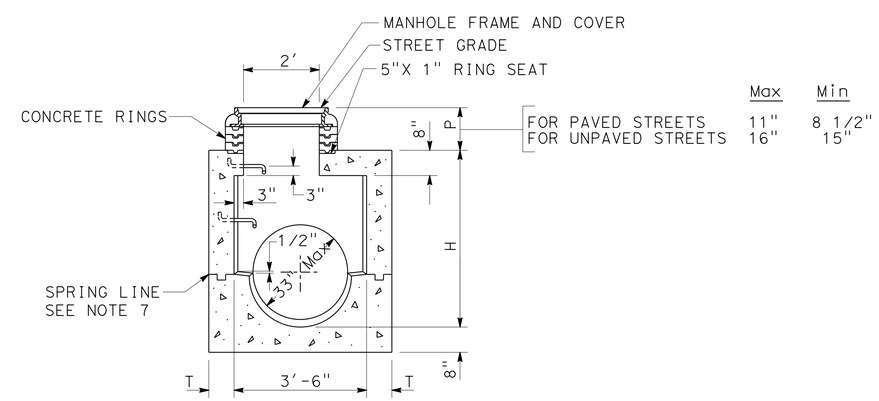

	Max	Min
FOR PAVED STREETS	11"	8 1/2"
FOR UNPAVED STREETS	16"	15"

SECTION C-C

MANHOLE No. 1 (MH No. 1)

WATER POLLUTION CONTROL DETAILS

NO SCALE

WD-1

STATE OF CALIFORNIA - DEPARTMENT OF TRANSPORTATION
Caltrans
HYDRAULICS

FUNCTIONAL SUPERVISOR: DAVE BHALLA
CALCULATED-DESIGNED BY: ROMULO D. ROBENIOL
CHECKED BY: PAUL FONG
REVISED BY
DATE REVISED

LAST REVISION 00-00-00
DATE PLOTTED => 11-SEP-2015
TIME PLOTTED => 11:01

Dist	COUNTY	ROUTE	POST MILES TOTAL PROJECT	SHEET No.	TOTAL SHEETS
07	Ven	33, 101	0.9/T5.8 2.3/13.8	69	239

Paul Fong 6/20/15
REGISTERED CIVIL ENGINEER DATE

6-29-15
PLANS APPROVAL DATE

REGISTERED PROFESSIONAL ENGINEER
PAUL FONG
No. C67053
Exp. 9/30/16
CIVIL
STATE OF CALIFORNIA

THE STATE OF CALIFORNIA OR ITS OFFICERS OR AGENTS SHALL NOT BE RESPONSIBLE FOR THE ACCURACY OR COMPLETENESS OF SCANNED COPIES OF THIS PLAN SHEET.

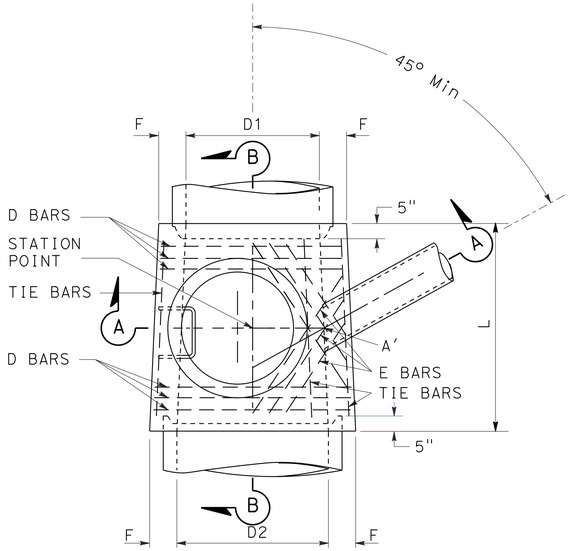

PLAN
(SHAFT NOT SHOWN)

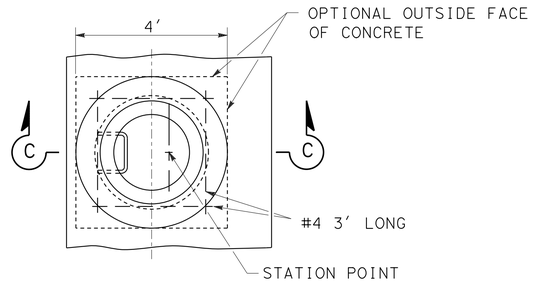

DETAIL N
(SHAFT NOT SHOWN)

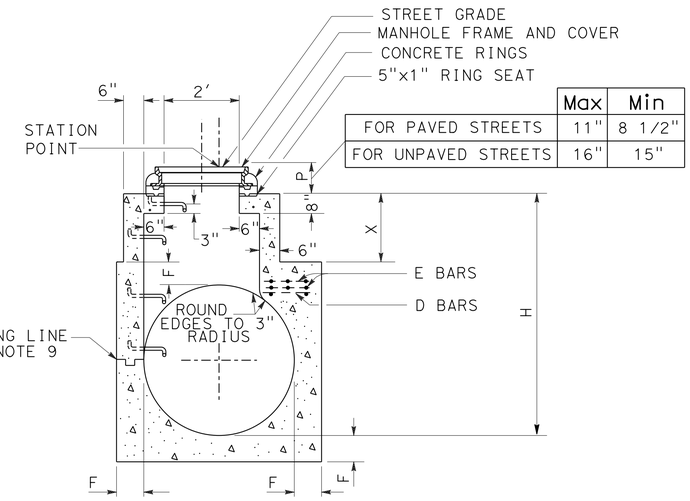

SECTION C-C
(SEE NOTE 10)

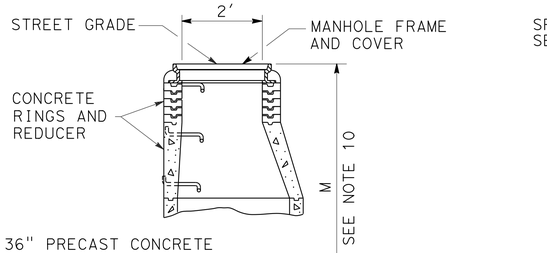

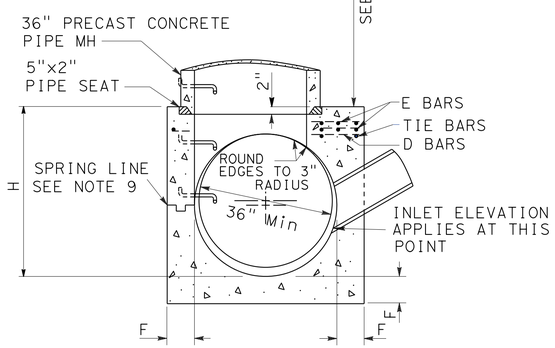

SECTION A-A'-A"

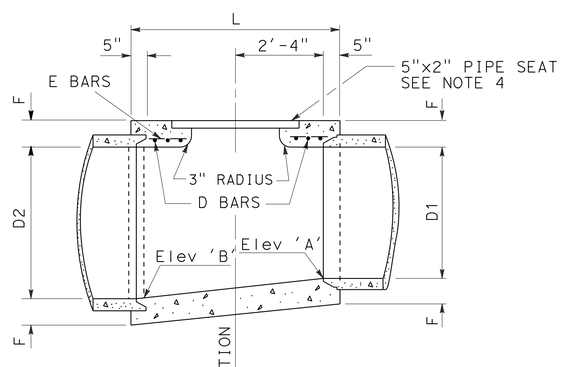

SECTION B-B

NOTES:

1. VALUE FOR Elev 'A', Elev 'B', 'H', 'L', 'M' OR 'P' AND 'X' ARE SHOWN ON WATER POLLUTION CONTROL PLAN.
2. CENTER OF MANHOLE SHAFT MUST BE LOCATED OVER CENTERING OF STORM DRAIN WHEN DIAMETER 'D1' IS 48" OR LESS, IN WHICH CASE PLACE E BAR SYMMETRICALLY AROUND SHAFT AT 45° WITH CENTERLINE.
3. LENGTH 'L' MUST BE 5'-6" UNLESS SHOWN OTHERWISE ON WATER POLLUTION CONTROL PLAN.
4. THICKNESS OF 'F' MUST VARY WHEN NECESSARY TO PROVIDE LEVEL PIPE SEAT, BUT MUST NOT BE LESS THAN TABULAR VALUES FOR 'F' SHOWN ON THIS PLAN.
5. REINFORCING STEEL MUST BE 1½" CLEAR FROM FACE OF CONCRETE UNLESS SHOWN OTHERWISE. SIZES AND LENGTHS ARE SHOWN IN TABLE BELOW.
6. UNLESS OTHERWISE SHOWN, STEPS MUST BE PLACED 12" ON CENTERS. THE LOWEST STEP MUST BE NOT MORE THAN 16" ABOVE THE LEDGE AT SIDE OF MANHOLE FLOOR.
7. RINGS, REDUCER, AND PIPE FOR ACCESS SHAFT MUST BE SEATED IN 1:2 CEMENT MORTAR AND NEATLY PAINTED OR WIPED INSIDE THE SHAFT.
8. FLOOR OF MANHOLE MUST BE STEEL-TROWELED TO SPRING LINE.
9. BODY OF MANHOLE MUST BE POURED IN ONE CONTINOUS OPERATION, EXCEPT THAT THE CONTRACTOR SHALL HAVE THE OPTION OF PLACING AT THE SPRING LINE A CONSTRUCTION JOINT WITH A LONGITUDINAL KEYWAY.
10. SECTION C-C: WHEN DEPTH OF MANHOLE FROM STREET GRADE TO TOP OF BOX IS LESS THAN 2'-10½" FOR PAVED STREETS OR 3'-6" FOR UNPAVED STREETS, CONSTRUCT MONOLITHIC SHAFT AS PER SECTION. WHEN DIAMETER 'D' IS 48" OR LESS, CENTER OF SHAFT MUST BE LOCATED AS PER NOTE 2.
11. MANHOLE FRAME AND COVER PER STANDARD PLAN B7-11 DETAIL 'U45'.
12. STEP DETAIL PER STANDARD PLANS D74C AND D75C.
13. D BARS MUST BE PLACED 3" C-C. E BARS MUST BE PLACED 4" C-C. TIE BARS MUST BE #3 SPACED 18" C-C OR LESS.
14. WHEN 'L' GREATER THAN 5'-6" IS SPECIFIED ON DRAINAGE PLAN, CONTINUE D BARS AT 6" C-C.
15. LENGTHS SHOWN IN TABLE ARE FOR LONGEST BARS. WHERE SHORTER BARS ARE REQUIRED, BEND OR CUT TO MEET FIELD REQUIREMENTS.

	Max	Min
FOR PAVED STREETS	11"	8 1/2"
FOR UNPAVED STREETS	16"	15"

TABLE OF VALUES FOR F

D2	F
36"	6 1/2"
39"	7"
42"	7 1/2"
45"	7 3/4"
48"	8"
51"	8 1/2"
54"	9"
57"	9 1/4"
60"	9 1/2"
63"	10"
66"	10 1/4"
69"	10 3/4"
72"	11"
78"	11 3/4"
84"	12 1/2"
90"	13 1/4"
96"	14"

STEEL TABLE

D BARS				E BARS		
D2	No Req	SIZE	LENGTH	No Req	SIZE	LENGTH
36"	6	#4	3'-10"	4	#4	2'-9"
39"	6	#4	4'-2"	4	"	2'-11"
42"	6	#5	4'-6"	4	"	3'-2"
45"	6	"	4'-10"	4	"	3'-5"
48"	6	"	5'-1"	4	"	3'-7"
51"	6	"	5'-5"	6	"	4'-9"
54"	6	"	5'-9"	6	"	5'-1"
57"	6	"	6'-1"	6	"	5'-6"
60"	6	"	6'-4"	6	"	5'-11"
63"	6	"	6'-8"	6	"	6'-3"
66"	6	"	7'-0"	8	"	6'-8"
69"	6	"	7'-4"	8	"	6'-8"
72"	6	"	7'-7"	8	"	6'-8"
78"	6	"	8'-3"	8	"	6'-8"
84"	6	"	8'-10"	10	"	6'-8"
90"	6	#6	9'-6"	10	"	6'-8"
96"	6	#6	10'-1"	10	"	6'-8"

MANHOLE NO 2 (MH NO 2)

WATER POLLUTION CONTROL DETAILS

NO SCALE

WD-2

STATE OF CALIFORNIA - DEPARTMENT OF TRANSPORTATION
Caltrans®
HYDRAULICS
FUNCTIONAL SUPERVISOR: DAVE BHALLA
CALCULATED-DESIGNED BY: PAUL FONG
CHECKED BY: ROMULO D. ROBENIOL
REVISED BY
DATE REVISED

LAST REVISION: 00-00-00
DATE PLOTTED => 11-SEP-2015
TIME PLOTTED => 11:01

Dist	COUNTY	ROUTE	POST MILES TOTAL PROJECT	SHEET No.	TOTAL SHEETS
07	Ven	33, 101	0.9/T5.8 2.3/13.8	70	239

Paul Fong 6/20/15
REGISTERED CIVIL ENGINEER DATE

6-29-15
PLANS APPROVAL DATE

REGISTERED PROFESSIONAL ENGINEER
PAUL FONG
No. C67053
Exp. 9/30/16
CIVIL
STATE OF CALIFORNIA

THE STATE OF CALIFORNIA OR ITS OFFICERS OR AGENTS SHALL NOT BE RESPONSIBLE FOR THE ACCURACY OR COMPLETENESS OF SCANNED COPIES OF THIS PLAN SHEET.

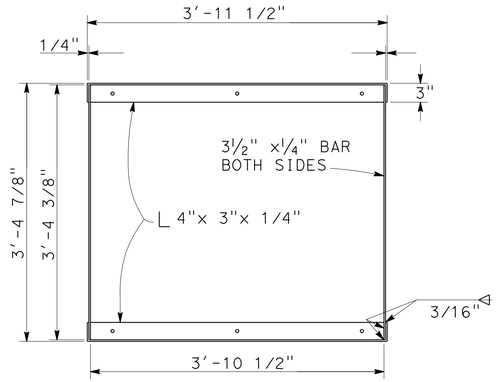

GRATE FRAME DETAIL

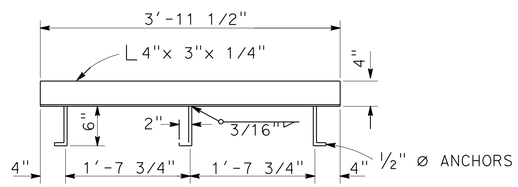

ANCHOR PLACEMENT DETAIL

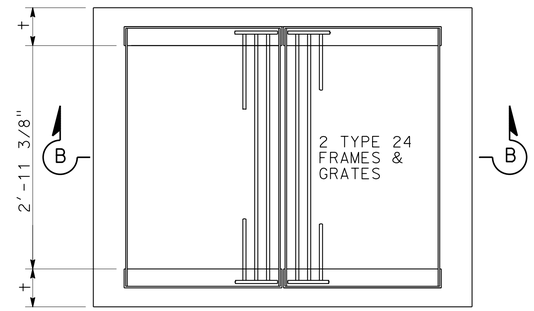

PLAN

FOR GRATE, FRAME AND ANCHOR PLACEMENT DETAILS SEE REVISED STANDARD PLANS D77-A AND D77-B

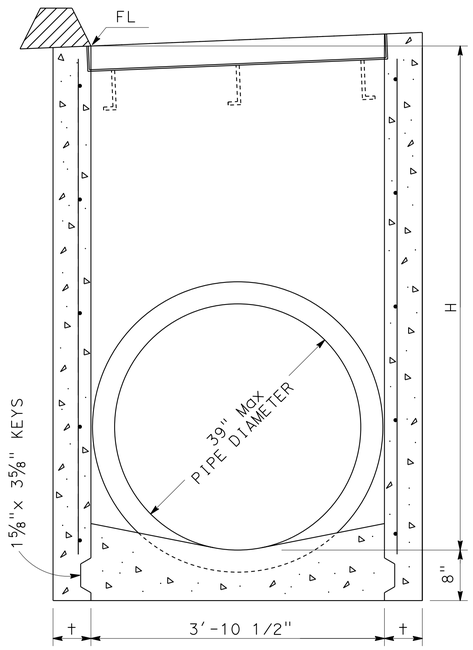

SECTION A-A

(FOR PIPE DIAMETERS 39" OR LESS)

GD-1

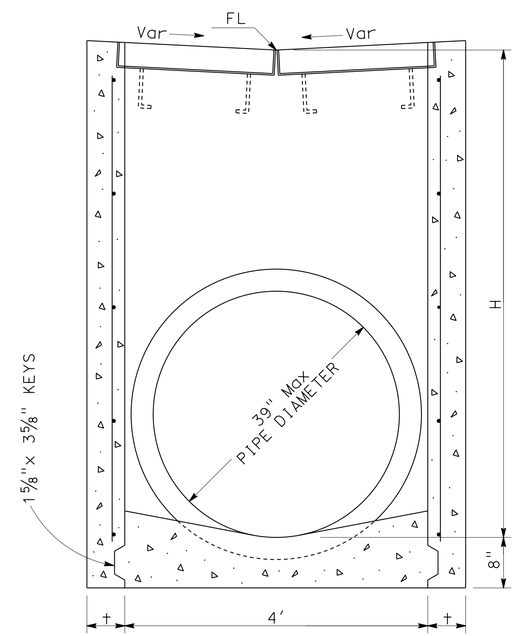

SECTION B-B

(FOR PIPE DIAMETERS 39" OR LESS)

GD-3

NOTES:

1. 'H' IS THE DIFFERENCE IN ELEVATION BETWEEN THE OUTSIDE PIPE FLOW LINE AND THE FLOW LINE OF THE GRATES.
2. STEPS - NONE REQUIRED WHEN 'H' IS 3'-6" OR LESS. INSTALL ONE STEP 16"± ABOVE FLOOR WHEN 'H' IS MORE THAN 3'-6" AND LESS THAN 5'. WHERE 'H' IS MORE THAN 5' STEPS SHALL BE EVENLY SPACED @ 12"± INTERVALS 16"± ABOVE FLOOR TO WITHIN 12"± OF THE TOP OF THE BOX. PLACE STEPS IN WALL WITHOUT PIPE OPENINGS. SEE STANDARD PLAN D74C FOR STEP DETAIL.
3. PIPE(S) CAN BE PLACED IN ANY WALL.
4. REINFORCING STEEL NOT REQUIRED IN WALLS WHEN H=6' OR LESS.
5. REINFORCING STEEL IN WALLS SHALL BE #4 BARS @ 18"± CENTERS PLACED 1½" CLEAR TO INSIDE OF BOX.

MISCELLANEOUS IRON & STEEL

INLET TYPE	GRATE TYPE	WEIGHT
GD-1 & GD-2	24 - 12	580
	24 - 10C	379
	24 - 10S	433
	24 - 12X	453
	24 - 13	351
GD-3	24 - 12	652

H	±
8' OR LESS	6"
8'1" to 20'	8"

DRAINAGE INLETS

WATER POLLUTION CONTROL DETAILS

NO SCALE

WD-3

STATE OF CALIFORNIA - DEPARTMENT OF TRANSPORTATION
Caltrans
HYDRAULICS
FUNCTIONAL SUPERVISOR: DAVE BHALLA
CALCULATED-DESIGNED BY: ROMULO D. ROBENIOL
CHECKED BY: PAUL FONG
REVISED BY
DATE REVISED

LAST REVISION 00-00-00
DATE PLOTTED => 11-SEP-2015
TIME PLOTTED => 11:01

Dist	COUNTY	ROUTE	POST MILES TOTAL PROJECT	SHEET No.	TOTAL SHEETS
07	Ven	33, 101	0.9/T5.8 2.3/13.8	71	239

Paul Fong 6/20/15
REGISTERED CIVIL ENGINEER DATE

6-29-15
PLANS APPROVAL DATE

REGISTERED PROFESSIONAL ENGINEER
PAUL FONG
No. C67053
Exp. 9/30/16
CIVIL
STATE OF CALIFORNIA

THE STATE OF CALIFORNIA OR ITS OFFICERS OR AGENTS SHALL NOT BE RESPONSIBLE FOR THE ACCURACY OR COMPLETENESS OF SCANNED COPIES OF THIS PLAN SHEET.

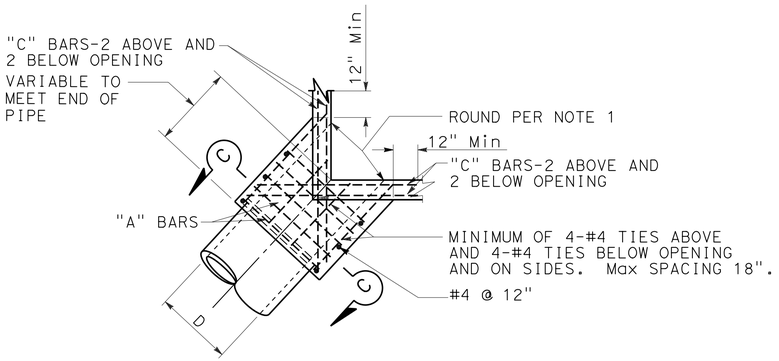

PLAN
CORNER CONNECTION

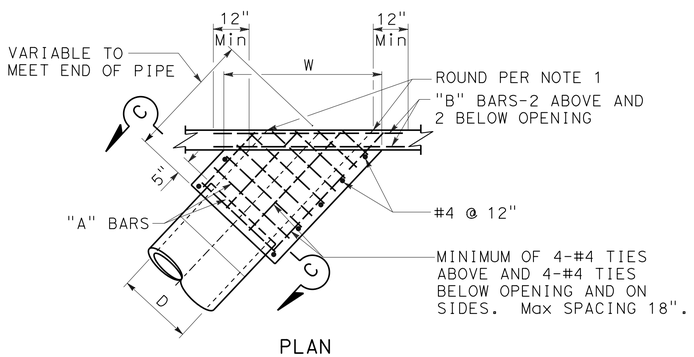

PLAN
SIDE CONNECTION

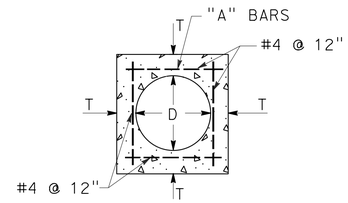

SECTION C-C

D	T	"A"	"B"-"C"
12"	4-½"	#4 @ 6"	#5
15"	4-½"		
18"	5"		
21"	5-½"		
24"	6"		
27"	6-½"		
30"	7"		
33"	7"		
36"	7-½"		
39"	8"		
42"	8"		
45"	8"	#5 @ 6"	#6
48"	8"		
51"	8"		
54"	8"		
57"	10"		
60"	10"		
63"	10"		
66"	11"		
69"	11"		
72"	11"		

NOTES:

1. ROUND EDGE OF OUTLET TO 3" RADIUS.
2. REINFORCEMENT SHALL BE 1½" CLEAR FROM THE FACE OF CONCRETE.
3. IN CONNECTING TO AN EXISTING STRUCTURE BREAK OUT PORTIONS OF THE EXISTING STRUCTURE SIX INCHES OUTSIDE ITS INTERSECTION WITH THE NEW CONNECTION. BEND ENDS OF #4 BARS OVER CONNECTION OPENING AS REQUIRED.

MONOLITHIC CONNECTION
FOR PIPES 12" TO 72" INCLUSIVE

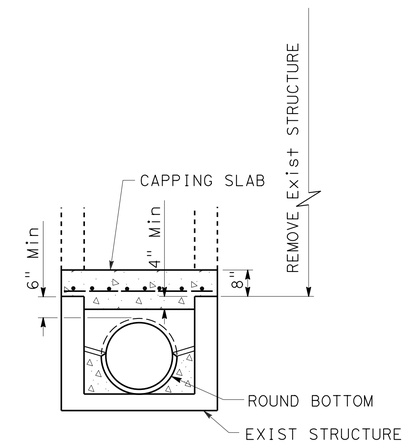

SECTION A-A

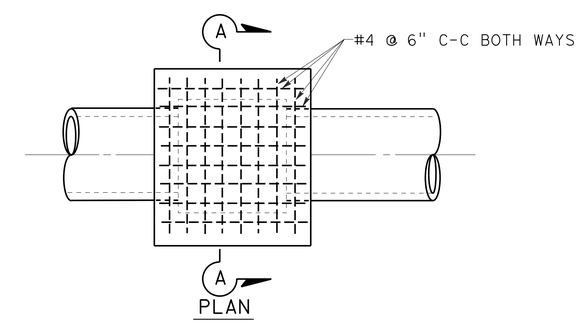

PLAN
CAP INLET DETAIL

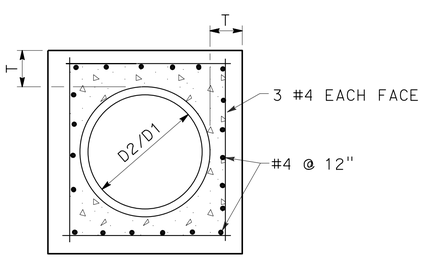

SECTION B-B

D	L	T
10"	1'	4"
12"	1'	4"
18"	1'	5"
24"	1'	6"
36"	1.5'	8"
48"	1.5'	10"
54"	1.5'	10"
60"	1.75'	11"
66"	1.75'	11"
72"	2'	12"

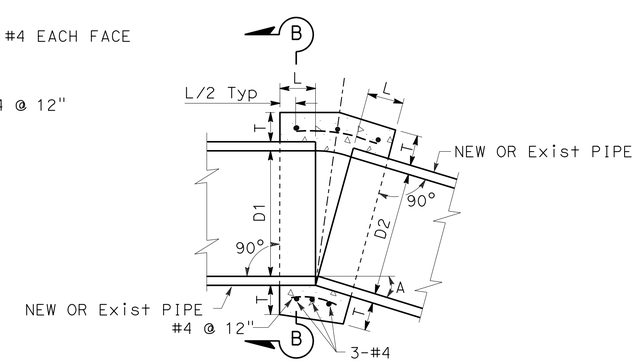

CONCRETE COLLAR

NOTES:

1. WHERE PIPES OF DIFFERENT DIAMETERS ARE JOINED WITH A CONCRETE COLLAR, 'L' AND 'T' SHALL BE THOSE OF THE LARGER PIPE. D=D1 OR D2, WHICHEVER IS GREATER.
2. FOR PIPE SIZE NOT LISTED USE NEXT SIZE LARGER.
3. OMIT REINFORCING ON PIPES 24" AND LESS IN DIAMETER AND ON ALL PIPES WHERE ANGLE A IS LESS THAN 10°.
4. JOIN PIPES AT INVERTS.
5. REINFORCEMENT SHALL BE PLACED 1½" CLEAR FROM OUTSIDE DIAMETER OF PIPE.

WATER POLLUTION CONTROL DETAILS

NO SCALE

WD-4

STATE OF CALIFORNIA - DEPARTMENT OF TRANSPORTATION
Caltrans® HYDRAULICS

FUNCTIONAL SUPERVISOR: DAVE BHALLA
CALCULATED-DESIGNED BY: ROMULO D. ROBENIOL
CHECKED BY: PAUL FONG
REVISED BY
DATE REVISED

LAST REVISION 00-00-00
DATE PLOTTED => 11-SEP-2015
TIME PLOTTED => 11:01

Dist	COUNTY	ROUTE	POST MILES TOTAL PROJECT	SHEET No.	TOTAL SHEETS
07	Ven	33, 101	0.9/T5.8 2.3/13.8	72	239

Paul Fong 6/20/15
REGISTERED CIVIL ENGINEER DATE

6-29-15
PLANS APPROVAL DATE

REGISTERED PROFESSIONAL ENGINEER
PAUL FONG
No. C67053
Exp. 9/30/16
CIVIL
STATE OF CALIFORNIA

THE STATE OF CALIFORNIA OR ITS OFFICERS OR AGENTS SHALL NOT BE RESPONSIBLE FOR THE ACCURACY OR COMPLETENESS OF SCANNED COPIES OF THIS PLAN SHEET.

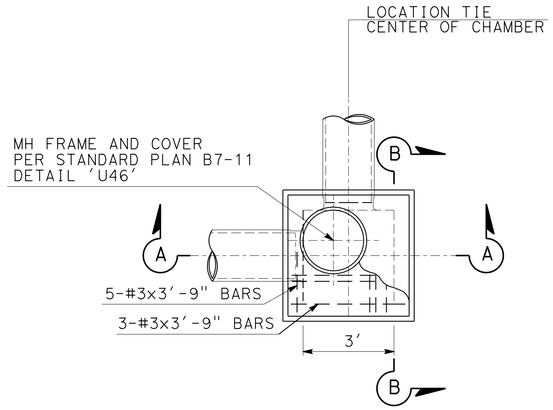

PLAN

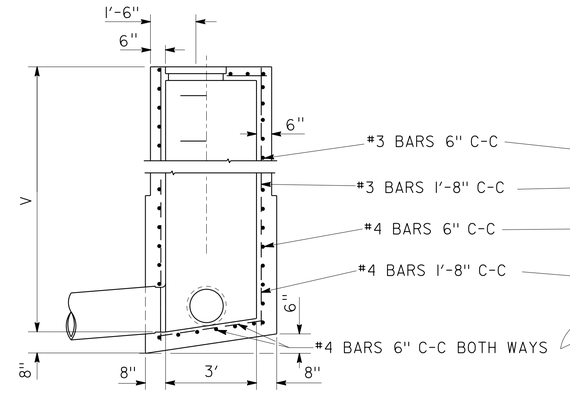

SECTION A-A

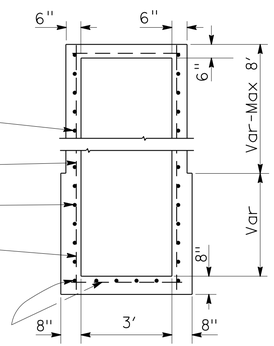

SECTION B-B

JUNCTION CHAMBER No. 3-C (JC 3-C) MOD

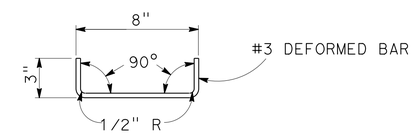

DETAIL OF DOWEL

ONE AT EACH CORNER TO BE USED WHEN TOP IS POURED SEPARATE

NOTES:

1. CONNECTION PIPES MAY BE PLACED IN ANY POSITION AROUND THE WALLS PROVIDED THEY POINT IN THE PROPER DIRECTION AND THE POSITION IS OTHERWISE CONSISTENT WITH THE DRAINAGE PLAN.
2. DIMENSIONS: D=18" UNLESS OTHERWISE SPECIFIED.
   V=3'-6" UNLESS OTHERWISE SPECIFIED.
3. EXPOSED SURFACE OF THE JUNCTION CHAMBER SHALL CONFORM IN SLOPE, GRADE, COLOR, FINISH AND SCORING TO EXISTING SIDEWALK ADJACENT TO THE JUNCTION CHAMBER. WHERE NO SIDEWALK EXISTS, THE TOP SHALL BE FINISHED TO CONFORM TO STANDARD SIDEWALK SLOPE AND FINISH, AND SCORING LINES SHALL CONFORM AS NEARLY AS POSSIBLE TO 20" SQUARES.
4. FLOOR OF CHAMBER SHALL BE GIVEN A STEEL-TROWELED FINISH AND SHALL SLOPE FROM ALL DIRECTIONS TO OUTLET.
5. MANHOLE SHALL BE PLACED IN CORNER NEAREST OUTLET.
6. OUTLET PIPE SHALL BE CONNECTED TO JUNCTION CHAMBER WITH MONOLITHIC CONNECTION.
7. REINFORCING STEEL NOT REQUIRED IN WALLS WHEN V=6' OR LESS.
8. STEPS: NONE REQUIRED WHERE V=3'-6" OR LESS.
   INSTALL ONE STEP 16"± ABOVE FLOOR WHEN V IS MORE THAN 3'-6" AND LESS THAN 5'.
   WHERE V IS MORE THAN 5' STEPS SHALL BE EVENLY SPACED AT12"± INTERVALS FROM 16" ± ABOVE FLOOR TO WITHIN 12"± OF THE TOP OF THE BOX.

WATER POLLUTION CONTROL DETAILS

NO SCALE

WD-5

STATE OF CALIFORNIA - DEPARTMENT OF TRANSPORTATION
Caltrans
HYDRAULICS

FUNCTIONAL SUPERVISOR: DAVE BHALLA
CALCULATED-DESIGNED BY: PAUL FONG
CHECKED BY: ROMULO D. ROBENIOL
REVISED BY
DATE REVISED

LAST REVISION 00-00-00
DATE PLOTTED => 11-SEP-2015
TIME PLOTTED => 11:01

Dist	COUNTY	ROUTE	POST MILES TOTAL PROJECT	SHEET No.	TOTAL SHEETS
07	Ven	33, 101	0.9/T5.8 2.3/13.8	73	239

Paul Fong 6/20/15
REGISTERED CIVIL ENGINEER DATE

6-29-15
PLANS APPROVAL DATE

REGISTERED PROFESSIONAL ENGINEER
PAUL FONG
No. C67053
Exp. 9/30/16
CIVIL
STATE OF CALIFORNIA

THE STATE OF CALIFORNIA OR ITS OFFICERS OR AGENTS SHALL NOT BE RESPONSIBLE FOR THE ACCURACY OR COMPLETENESS OF SCANNED COPIES OF THIS PLAN SHEET.

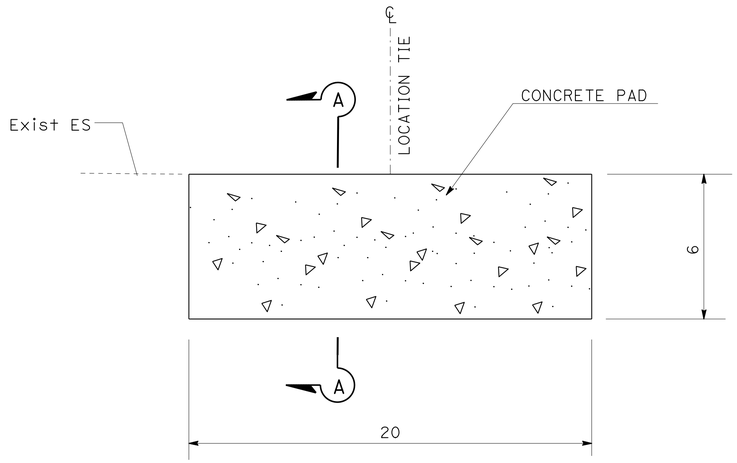

PLAN

DRAINAGE SYSTEM 12 a

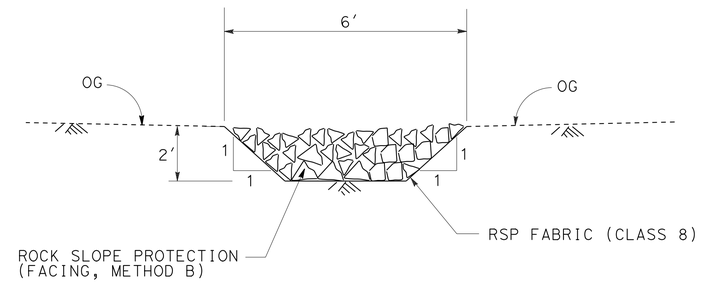

CROSS SECTION

ROCK SLOPE PROTECTION DETAIL

(FACING, METHOD B)

L = 8′
L = LENGTH OF RSP

DRAINAGE SYSTEM 16 h

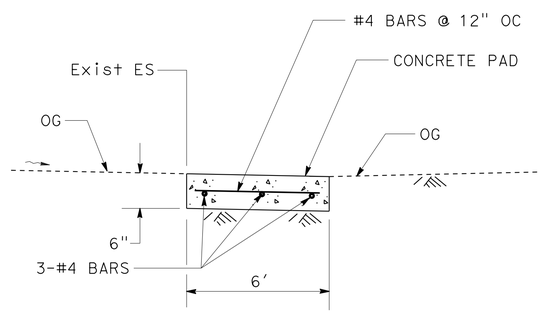

SECTION A-A

CONCRETE PAD DETAIL

WATER POLLUTION CONTROL DETAILS

NO SCALE

WD-6

STATE OF CALIFORNIA - DEPARTMENT OF TRANSPORTATION
Caltrans
HYDRAULICS

FUNCTIONAL SUPERVISOR: DAVE BHALLA
CALCULATED-DESIGNED BY: PAUL FONG
CHECKED BY: ROMULO D. ROBENIOL
REVISED BY
DATE REVISED

LAST REVISION 00-00-00
DATE PLOTTED => 11-SEP-2015
TIME PLOTTED => 11:01

Dist	COUNTY	ROUTE	POST MILES TOTAL PROJECT	SHEET No.	TOTAL SHEETS
07	Ven	33, 101	0.9/T5.8 2.3/13.8	74	239

Paul Fong 6/20/15
REGISTERED CIVIL ENGINEER DATE

6-29-15
PLANS APPROVAL DATE

REGISTERED PROFESSIONAL ENGINEER
PAUL FONG
No. C67053
Exp. 9/30/16
CIVIL
STATE OF CALIFORNIA

THE STATE OF CALIFORNIA OR ITS OFFICERS OR AGENTS SHALL NOT BE RESPONSIBLE FOR THE ACCURACY OR COMPLETENESS OF SCANNED COPIES OF THIS PLAN SHEET.

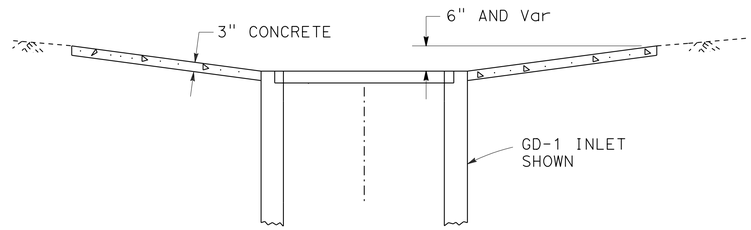

SECTION A-A

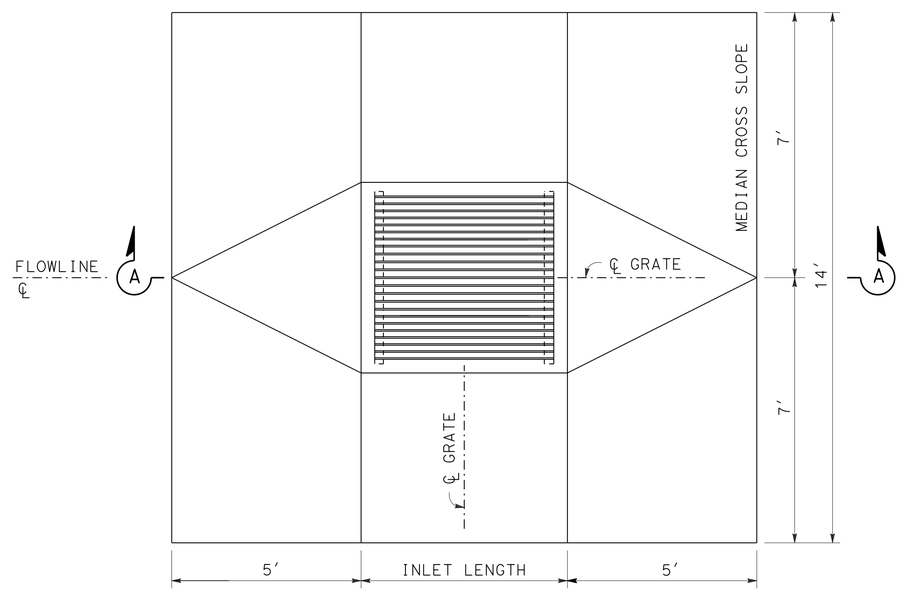

PLAN

MEDIAN INLET APRON DETAIL

DRAINAGE SYSTEM 16 f

WATER POLLUTION CONTROL DETAILS

NO SCALE

WD-7

STATE OF CALIFORNIA - DEPARTMENT OF TRANSPORTATION
Caltrans
HYDRAULICS

FUNCTIONAL SUPERVISOR: DAVE BHALLA

CALCULATED-DESIGNED BY: PAUL FONG
CHECKED BY: ROMULO D. ROBENIOL

REVISED BY
DATE REVISED

LAST REVISION 00-00-00
DATE PLOTTED => 11-SEP-2015
TIME PLOTTED => 11:01

Dist	COUNTY	ROUTE	POST MILES TOTAL PROJECT	SHEET No.	TOTAL SHEETS
07	Ven	33, 101	0.9/T5.8 2.3/13.8	75	239

Paul Fong 6/20/15
REGISTERED CIVIL ENGINEER DATE

6-29-15
PLANS APPROVAL DATE

REGISTERED PROFESSIONAL ENGINEER
PAUL FONG
No. C67053
Exp. 9/30/16
CIVIL
STATE OF CALIFORNIA

THE STATE OF CALIFORNIA OR ITS OFFICERS OR AGENTS SHALL NOT BE RESPONSIBLE FOR THE ACCURACY OR COMPLETENESS OF SCANNED COPIES OF THIS PLAN SHEET.

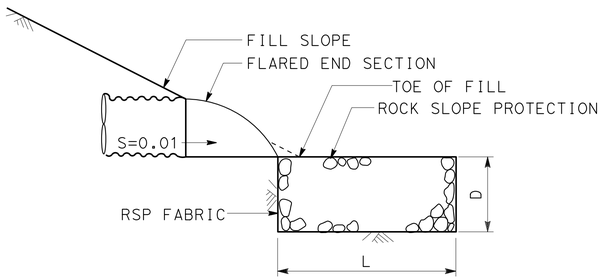

PROFILE

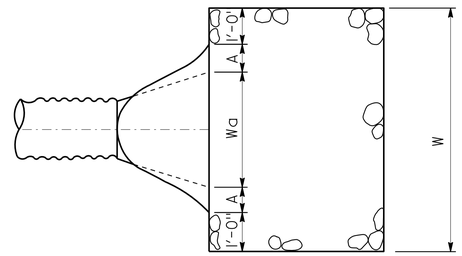

PLAN

	L (ft)	W (ft)	D (ft)
18" STEEL FES	5	6.50	2
24" STEEL FES	5	7.50	2
AC OVERSIDE & OTHERS	5	6.00	2

ROCK SLOPE PROTECTION DETAIL

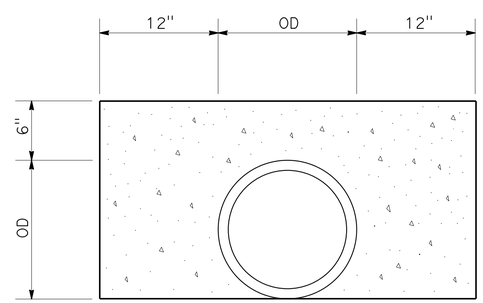

CONCRETE BACKFILL

WATER POLLUTION CONTROL DETAILS

NO SCALE

WD-8

STATE OF CALIFORNIA - DEPARTMENT OF TRANSPORTATION
Caltrans®
HYDRAULICS

FUNCTIONAL SUPERVISOR: DAVE BHALLA
CALCULATED-DESIGNED BY: PAUL FONG
CHECKED BY: ROMULO D. ROBENIOL
REVISED BY
DATE REVISED

LAST REVISION 00-00-00
DATE PLOTTED => 11-SEP-2015
TIME PLOTTED => 11:01

Dist	COUNTY	ROUTE	POST MILES TOTAL PROJECT	SHEET No.	TOTAL SHEETS
07	Ven	33, 101	0.9/T5.8 2.3/13.8	76	239

REGISTERED CIVIL ENGINEER 12-12-12 DATE

6-29-15
PLANS APPROVAL DATE

REGISTERED PROFESSIONAL ENGINEER TIMOTHY B. SOBELMAN No. 59249 Exp. 6-30-17 CIVIL STATE OF CALIFORNIA

THE STATE OF CALIFORNIA OR ITS OFFICERS OR AGENTS SHALL NOT BE RESPONSIBLE FOR THE ACCURACY OR COMPLETENESS OF SCANNED COPIES OF THIS PLAN SHEET.

GENERAL NOTES

Designation:
Types of Gross Solids Removal Devices (GSRDs) are Linear Radial (LR) and Inclined Screen. The Linear Radial has either a standard or high velocity configuration noted as Linear Radial or Linear Radial (HV). All GSRD BMP Detail Drawings are applicable for velocities up to 20 fps.

Special Reinforcement Coverage:
GSRD BMP Detail Drawings are not to be used in a corrosive environment or where there is a severe abrasive flow condition or in freeze-thaw locations.

Special Design:
Required for ground water conditions above bottom of GSRD, surcharge loads exceeding HS20 truck load, design bearing pressures or sizes greater than those on this plan.

Traffic Loading:
No traffic load is allowed over GSRDs. As determined by the Engineer, barriers or MBGR shall be provided between GSRDs and traffic lanes.

DESIGN FLOW CHART

INCLINED SCREEN

GSRD TYPE	TOTAL SCREEN LENGTH "C"	FLOW RATE (cfs)	DEBRIS AREA (acres)
A	3'-4"	5.83	2.21
B	5'-0"	8.74	3.31
C	6'-8"	11.65	4.41
D	8'-4"	14.57	5.52
E	10'-0"	17.48	6.63
F	11'-8"	20.39	7.74

NOTE:

1. The total screen length "C" is shown on the "Inclined Screen Layout" sheet and "Inclined Screen Details No. 1" sheet.

DESIGN NOTES

Specifications:
Design:
Bridge Design Specification April 2000 (LFD)
(1996 AASHTO) with interims and revisions by Caltrans

Wall (LFD) : 1.5 D + 1.5 E and 1.5D + W
Footing (LFD): 1.5 D + 1.5 E
Where D = Dead Load
E = Earth Load

Capacity reduction factor is included.

Earth Load:
125 lb/ft vertical,

Water Load:
62.4 lb/ft horizontal,

Equivalent Fluid Pressure =
100 lb/ft horizontal (Case I).

Earth pressure for 2:1 unlimited slope determined from Rankine's formula with ø = 33°42' (Case II).

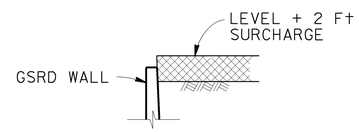

CASE I

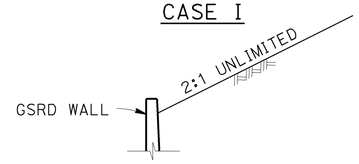

CASE II

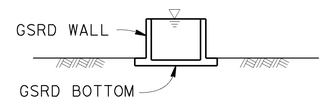

CASE III

DETAIL OF DESIGN LOADING CASES

CASE I Level + 2'-0" surcharge, GSRD empty
CASE II 2:1 Unlimited slope, GSRD empty
CASE III GSRD full of water, no soil pressure

Grating (LL) Load :
0.5 psi

Unit Stresses:
f'_c = 4.0 ksi
fy = 60 ksi (bar reinforcing)

Design Soil Bearing Pressure (Service Load) = 20 psi

ABBREVIATIONS

cfs	CUBIC FEET PER SECOND
EWT&B	EACH WAY TOP AND BOTTOM
fps	FEET PER SECOND
GSRD	GROSS SOLIDS REMOVAL DEVICE
LL	LIVE LOAD

LEGEND

DESIGN WATER DEPTH

STANDARD PLAN SHEET No.

DETAIL No.

NOTES

Expansion joints:
Inverts - No expansion joints permitted.
Walls - Place ½" expansion joint filler vertically at 26'-0" centers with strip water stop (B0-1 / 1-3).

Construction Joints:
Construction joints may be permitted if normal (or radial) to ℄ of GSRD.

Backfill:
See Standard Specifications, except the difference in backfill will not exceed 4 ft between side walls and will not exceed the lesser of wall height "H" or 4 ft between inlet and outlet walls.

Earthwork:
Excavation and Backfill with Cut and Exposed conditions:

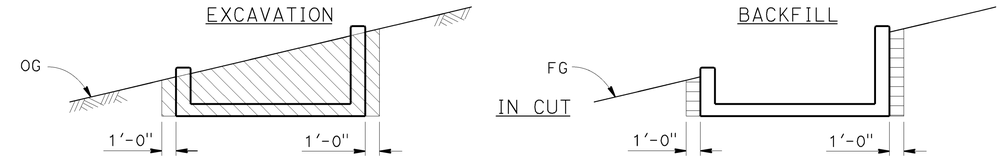

INCLINED SCREEN

LEGEND

STRUCTURE EXCAVATION

STRUCTURE BACKFILL
90% RELATIVE COMPACTION

NOTES

1. Slope or shore excavation sides as necessary.
2. Dimensions shown are minimum.

WATER POLLUTION CONTROL DETAILS
GROSS SOLIDS REMOVAL DEVICE
INCLINED SCREEN LEGEND

NO SCALE

WD-9

STATE OF CALIFORNIA - DEPARTMENT OF TRANSPORTATION
Caltrans
DIVISION OF DESIGN
OFFICE OF STORM WATER MANAGEMENT

FUNCTIONAL SUPERVISOR: TIMOTHY B. SOBELMAN
CALCULATED-DESIGNED BY: D. WANG
CHECKED BY: L. HE
REVISED BY
DATE REVISED

LAST REVISION 10-16-13
DATE PLOTTED => 25-JUN-2015
TIME PLOTTED => 09:27

Dist	COUNTY	ROUTE	POST MILES TOTAL PROJECT	SHEET No.	TOTAL SHEETS
07	Ven	33, 101	0.9/T5.8 2.3/13.8	77	239

Timothy B. Sobelman 12-12-12
REGISTERED CIVIL ENGINEER DATE

6-29-15
PLANS APPROVAL DATE

REGISTERED PROFESSIONAL ENGINEER TIMOTHY B. SOBELMAN No. 59249 Exp. 6-30-17 CIVIL STATE OF CALIFORNIA

THE STATE OF CALIFORNIA OR ITS OFFICERS OR AGENTS SHALL NOT BE RESPONSIBLE FOR THE ACCURACY OR COMPLETENESS OF SCANNED COPIES OF THIS PLAN SHEET.

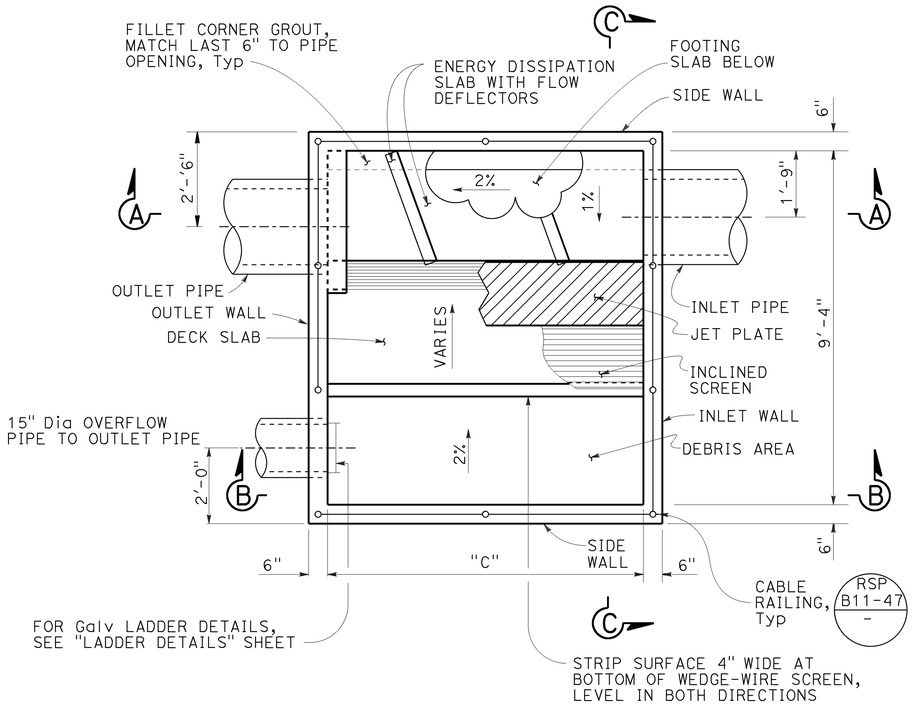

PLAN

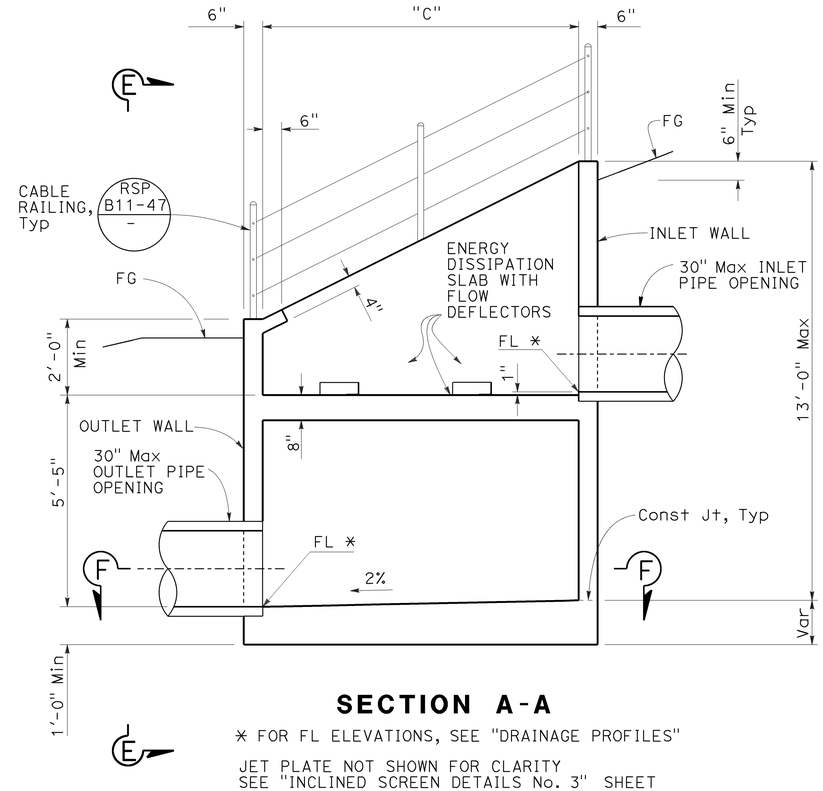

SECTION A-A

* FOR FL ELEVATIONS, SEE "DRAINAGE PROFILES"

JET PLATE NOT SHOWN FOR CLARITY
SEE "INCLINED SCREEN DETAILS No. 3" SHEET

NOTES (THIS SHEET ONLY):

1. See "Drainage Plans" for additional details.
2. Inlet and outlet pipe opening sizes are shown on "Drainage Plans". The overflow and outlet piping must be connected via standard elbows and tees.
3. For Sections B-B and C-C, see "Inclined Screen Details No. 1" sheet.
4. For reinforcing details which include Sections A-A, B-B, C-C and F-F, see "Inclined Screen Details No. 3" sheet.
5. For inlet and outlet pipe details not shown, see "Inclined Screen Details No. 2" sheet.
6. For View E-E, see "Inclined Screen Details No. 2" sheet.

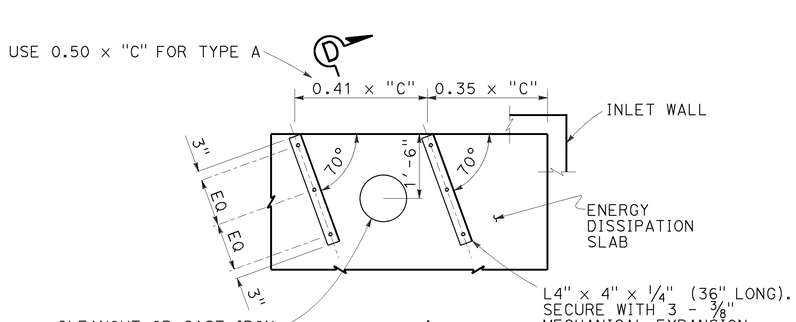

DEFLECTOR PLAN

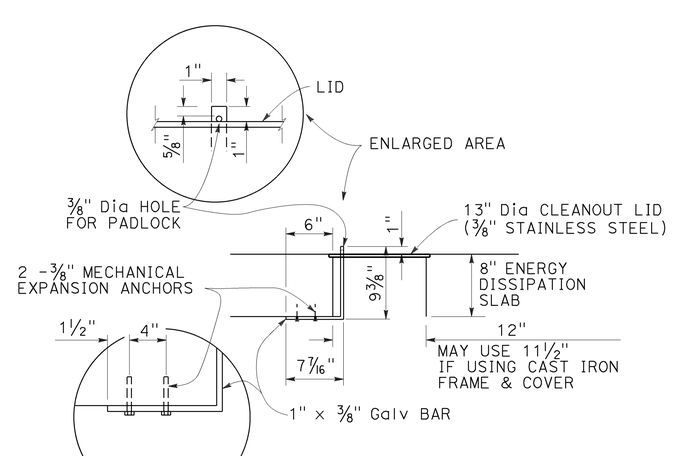

SECTION D-D

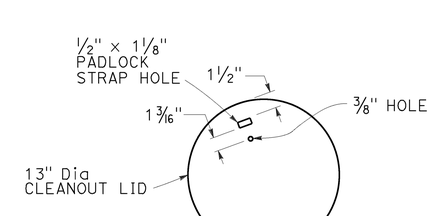

CLEANOUT LID DETAIL

WATER POLLUTION CONTROL DETAILS
GROSS SOLIDS REMOVAL DEVICE
INCLINED SCREEN LAYOUT

NO SCALE

WD -10

REVISED BY	DATE REVISED

CALCULATED-DESIGNED BY: D. WANG
CHECKED BY: L. HE
FUNCTIONAL SUPERVISOR: TIMOTHY B. SOBELMAN

STATE OF CALIFORNIA - DEPARTMENT OF TRANSPORTATION
DIVISION OF DESIGN
OFFICE OF STORM WATER MANAGEMENT

LAST REVISION 10-16-13 | DATE PLOTTED => 25-JUN-2015 | TIME PLOTTED => 09:27

Dist	COUNTY	ROUTE	POST MILES TOTAL PROJECT	SHEET No.	TOTAL SHEETS
07	Ven	33, 101	0.9/T5.8 2.3/13.8	78	239

Timothy B. Sobelman 12-12-12
REGISTERED CIVIL ENGINEER DATE

6-29-15
PLANS APPROVAL DATE

REGISTERED PROFESSIONAL ENGINEER TIMOTHY B. SOBELMAN No. 59249 Exp. 6-30-17 CIVIL STATE OF CALIFORNIA

THE STATE OF CALIFORNIA OR ITS OFFICERS OR AGENTS SHALL NOT BE RESPONSIBLE FOR THE ACCURACY OR COMPLETENESS OF SCANNED COPIES OF THIS PLAN SHEET.

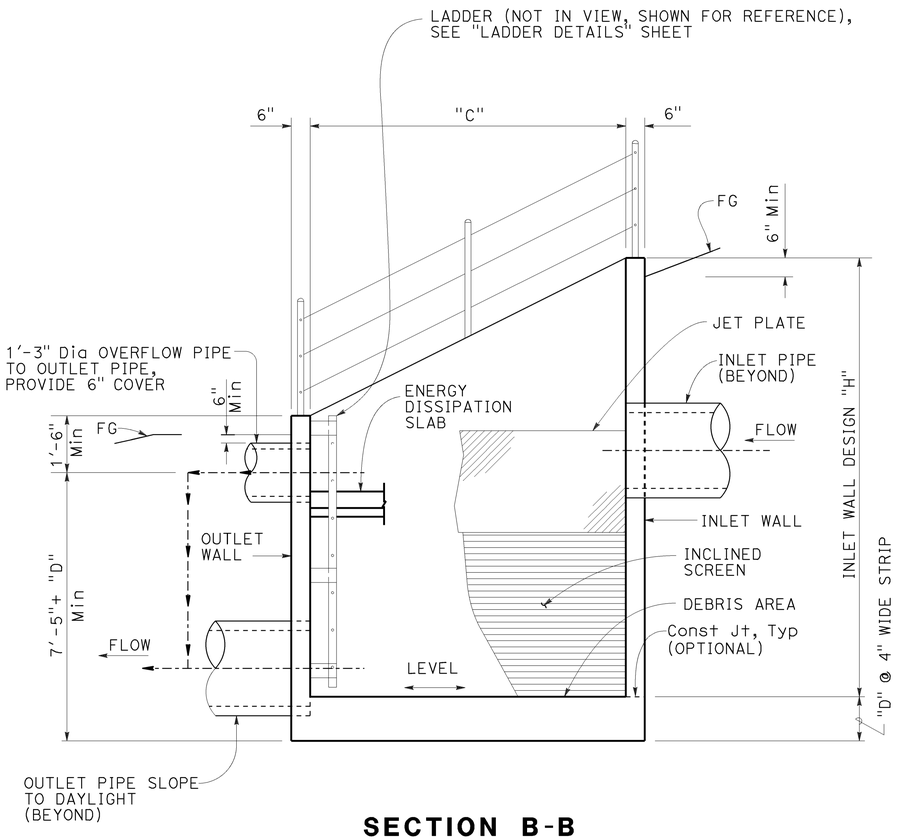

SECTION B-B

* FLOW DEFLECTORS NOT SHOWN FOR CLARITY

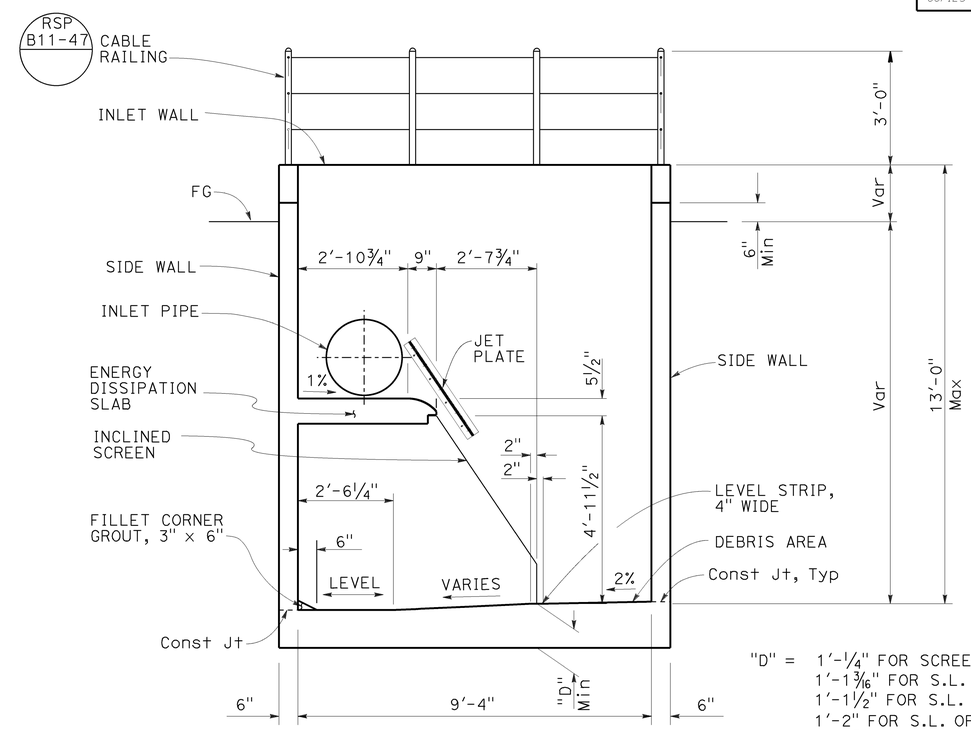

"D" = 1'-¼" FOR SCREEN LENGTH (S.L.) OF 3'-4⅛".
1'-1 3/16" FOR S.L. OF 5'-0"
1'-1½" FOR S.L. OF 6'-8"
1'-2" FOR S.L. OF 8'-4"
1'-2⅜" FOR S.L. OF 10'-0"
1'-2¾" FOR S.L. OF 11'-8⅛"

SECTION C-C

* FLOW DEFLECTORS NOT SHOWN FOR CLARITY

NOTES:

1. See "Drainage Plans" for additional details.
2. For Section B-B & C-C locations, see "Inclined Screen Layout" sheet.
3. Inlet and outlet piping opening sizes are shown on the "Drainage Plans." The overflow and outlet piping shall be connected via standard elbows and tees.
4. For inlet and outlet pipe details not shown, see "Drainage Plans".

WATER POLLUTION CONTROL DETAILS
GROSS SOLIDS REMOVAL DEVICE
INCLINED SCREEN DETAILS No. 1

NO SCALE

WD-11

STATE OF CALIFORNIA - DEPARTMENT OF TRANSPORTATION
DIVISION OF DESIGN
OFFICE OF STORM WATER MANAGEMENT

FUNCTIONAL SUPERVISOR: TIMOTHY B. SOBELMAN
CALCULATED-DESIGNED BY: D. WANG
CHECKED BY: L. HE
REVISED BY
DATE REVISED

LAST REVISION 00-00-00
DATE PLOTTED => 25-JUN-2015
TIME PLOTTED => 09:27

Dist	COUNTY	ROUTE	POST MILES TOTAL PROJECT	SHEET No.	TOTAL SHEETS
07	Ven	33, 101	0.9/T5.8 2.3/13.8	79	239

Timothy B. Sobelman 12-12-12
REGISTERED CIVIL ENGINEER DATE

6-29-15
PLANS APPROVAL DATE

REGISTERED PROFESSIONAL ENGINEER
TIMOTHY B. SOBELMAN
No. 59249
Exp. 6-30-17
CIVIL
STATE OF CALIFORNIA

THE STATE OF CALIFORNIA OR ITS OFFICERS OR AGENTS SHALL NOT BE RESPONSIBLE FOR THE ACCURACY OR COMPLETENESS OF SCANNED COPIES OF THIS PLAN SHEET.

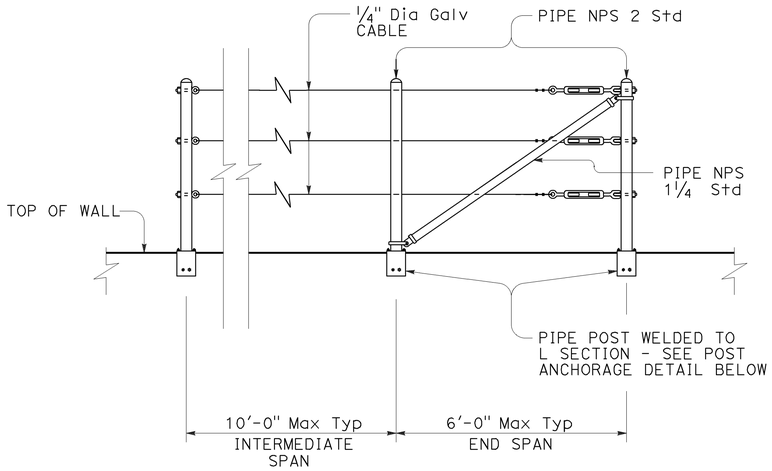

CABLE RAILING

NOTE:
REFER TO REVISED STANDARD PLAN RSP B11-47 FOR ADDITIONAL INFORMATION.

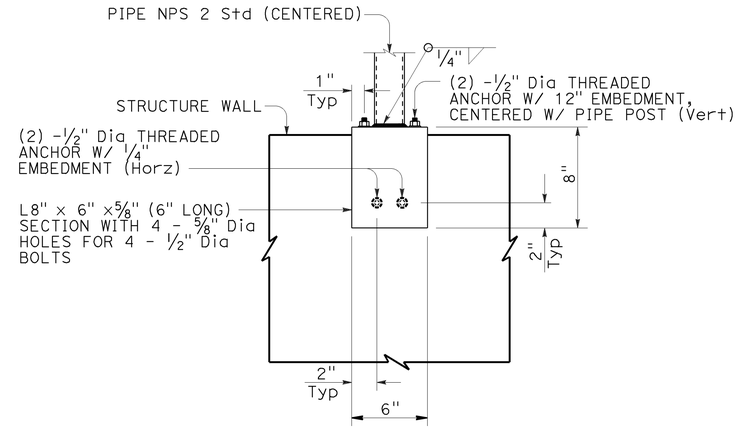

POST ANCHORAGE

NOTE:

1. Safety chain must be 1/4" galvanized steel coil chain, approximately 12 links per foot. Length must be minimum which allows lock-up of safety railing. Minimum of two safety chains per safety railing. Material must be grade 43 high test chain ASTM A413.

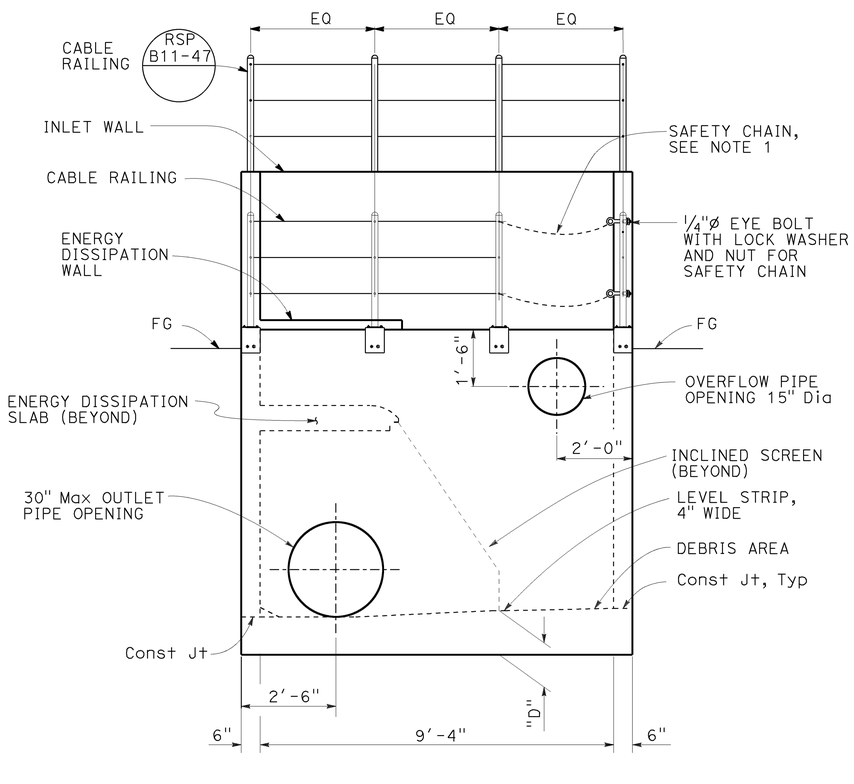

VIEW E-E

NOTE:
JET PLATE AND FLOW DEFLECTORS NOT SHOWN FOR CLARITY.

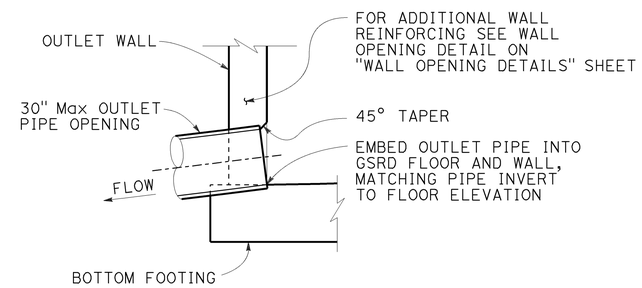

OUTLET DETAIL

PIPE EXIT AT WALL - INCLINED SCREEN

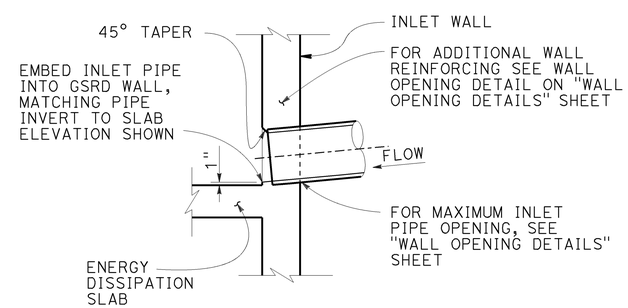

INLET DETAIL

PIPE ENTRANCE AT WALL

WATER POLLUTION CONTROL DETAILS
GROSS SOLIDS REMOVAL DEVICE
INCLINED SCREEN DETAILS No.2

NO SCALE

WD-12

STATE OF CALIFORNIA - DEPARTMENT OF TRANSPORTATION
DIVISION OF DESIGN
OFFICE OF STORM WATER MANAGEMENT
Caltrans

FUNCTIONAL SUPERVISOR: TIMOTHY B. SOBELMAN
CALCULATED-DESIGNED BY: D. WANG
CHECKED BY: L. HE
REVISED BY
DATE REVISED

LAST REVISION 00-00-00
DATE PLOTTED => 25-JUN-2015
TIME PLOTTED => 09:27

Dist	COUNTY	ROUTE	POST MILES TOTAL PROJECT	SHEET No.	TOTAL SHEETS
07	Ven	33, 101	0.9/T5.8 2.3/13.8	80	239

Timothy B. Sobelman 12-12-12
REGISTERED CIVIL ENGINEER DATE

6-29-15
PLANS APPROVAL DATE

REGISTERED PROFESSIONAL ENGINEER
TIMOTHY B. SOBELMAN
No. 59249
Exp. 6-30-17
CIVIL
STATE OF CALIFORNIA

THE STATE OF CALIFORNIA OR ITS OFFICERS OR AGENTS SHALL NOT BE RESPONSIBLE FOR THE ACCURACY OR COMPLETENESS OF SCANNED COPIES OF THIS PLAN SHEET.

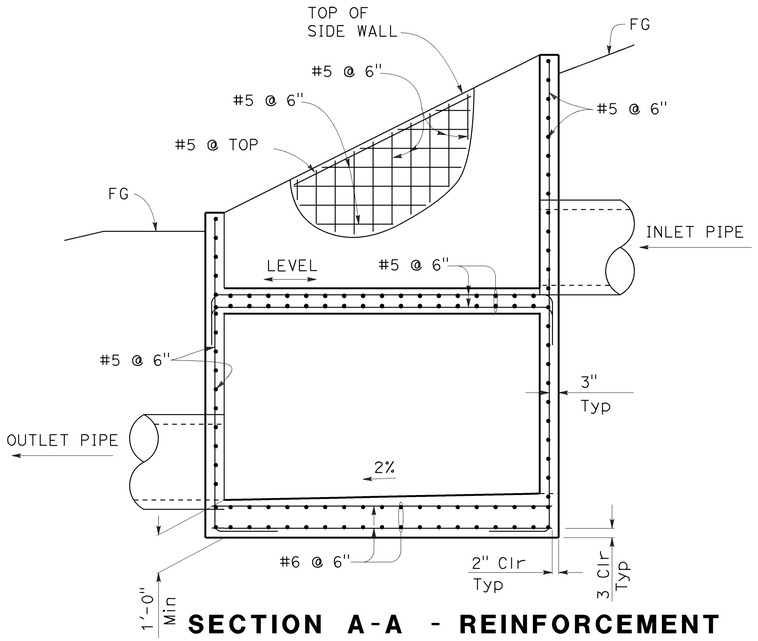

SECTION A-A - REINFORCEMENT

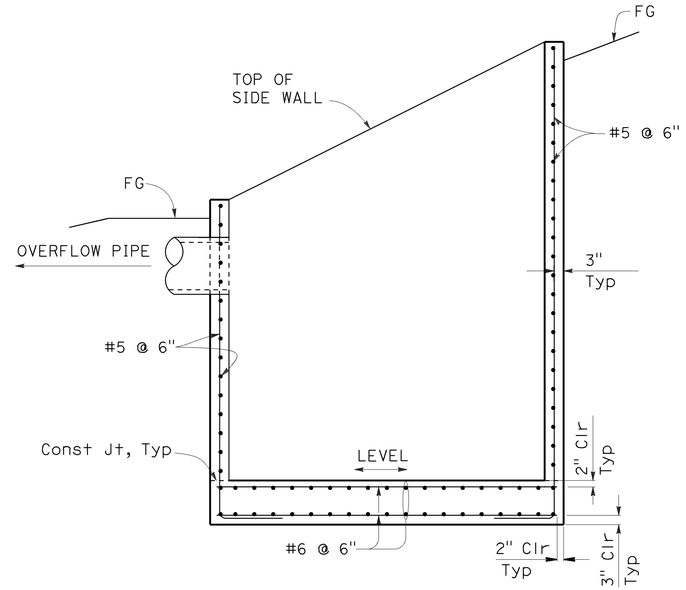

SECTION B-B - REINFORCEMENT

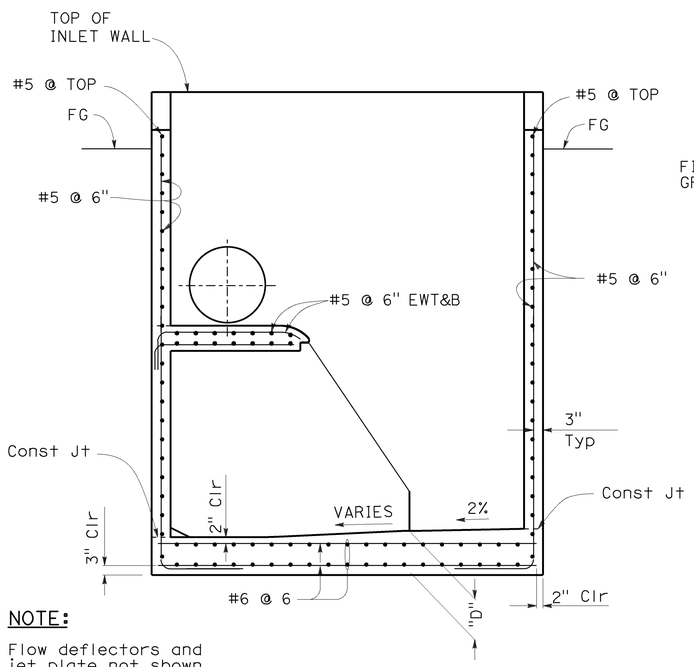

NOTE:

Flow deflectors and jet plate not shown for clarity

SECTION C-C - REINFORCEMENT

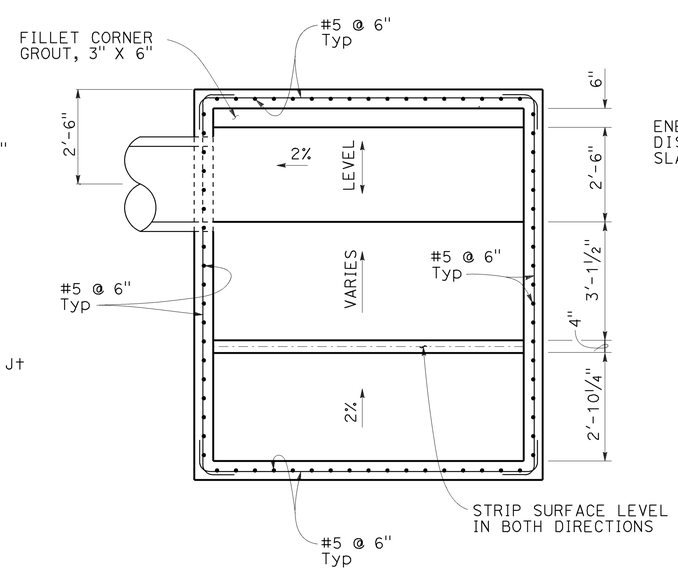

SECTION F-F

WALL REINFORCEMENT AND GRADES AT FOOTING SLAB

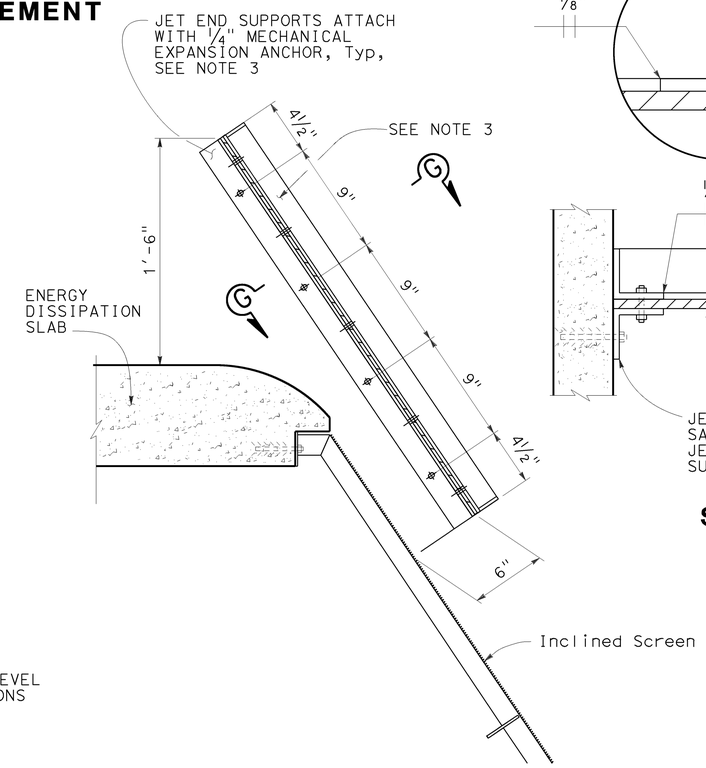

JET PLATE DETAIL

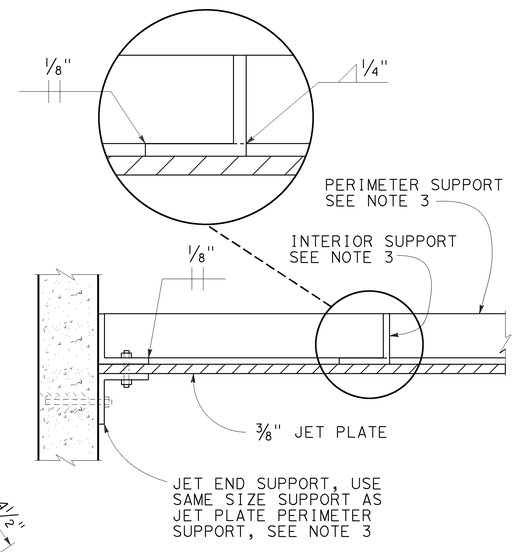

SECTION G-G

NOTES:

1. For additional reinforcing at openings, see "Wall Opening Details" sheet.
2. For section locations, see "Inclined Screen Layout" sheet.
3. ⅜" jet plate with L2" x 2" x ¼" braced supports around perimeter for screen lengths up to 6'-8". For longer screen lengths use L3" x 2" x ¼". Use additional interior supports at 2'-6" Max O.C. equally spaced. Fillet weld brace supports to plate @ 1'-6" O.C. Fasten jet plate assembly to jet end supports with five ¼" machine bolts A307 equally spaced. Start bolt pattern @ 2¼" Max from edge.

WATER POLLUTION CONTROL DETAILS
GROSS SOLIDS REMOVAL DEVICE
INCLINED SCREEN DETAILS No. 3

NO SCALE

WD-13

STATE OF CALIFORNIA - DEPARTMENT OF TRANSPORTATION
DIVISION OF DESIGN
OFFICE OF STORM WATER MANAGEMENT
Caltrans

FUNCTIONAL SUPERVISOR: TIMOTHY B. SOBELMAN
CALCULATED-DESIGNED BY: D. WANG
CHECKED BY: L. HE
REVISED BY
DATE REVISED

LAST REVISION 10-16-13
DATE PLOTTED => 25-JUN-2015
TIME PLOTTED => 09:27

Dist	COUNTY	ROUTE	POST MILES TOTAL PROJECT	SHEET No.	TOTAL SHEETS
07	Ven	33, 101	0.9/T5.8 2.3/13.8	81	239

REGISTERED CIVIL ENGINEER 12-12-12 DATE

6-29-15
PLANS APPROVAL DATE

REGISTERED PROFESSIONAL ENGINEER TIMOTHY B. SOBELMAN No. 59249 Exp. 6-30-17 CIVIL STATE OF CALIFORNIA

THE STATE OF CALIFORNIA OR ITS OFFICERS OR AGENTS SHALL NOT BE RESPONSIBLE FOR THE ACCURACY OR COMPLETENESS OF SCANNED COPIES OF THIS PLAN SHEET.

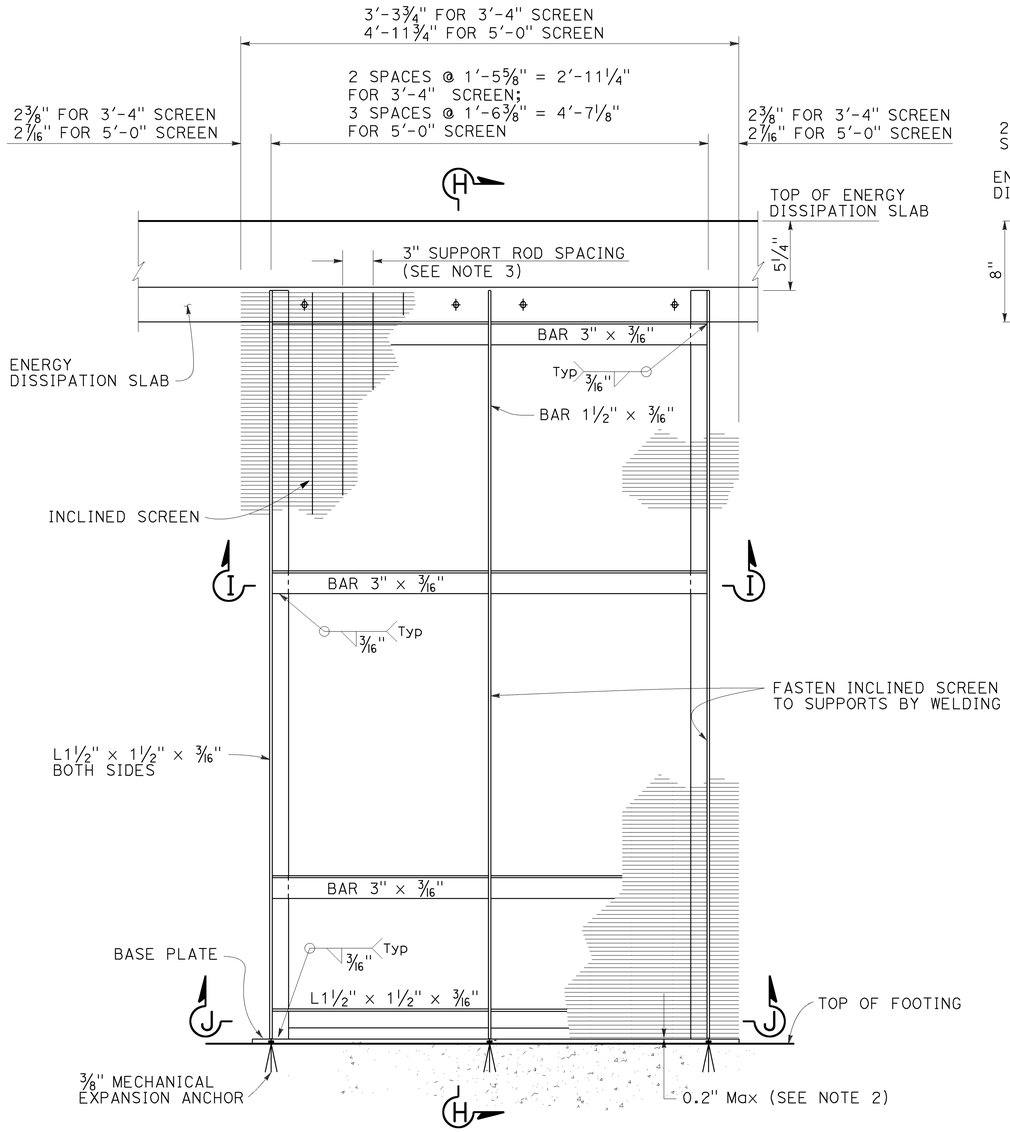

ELEVATION

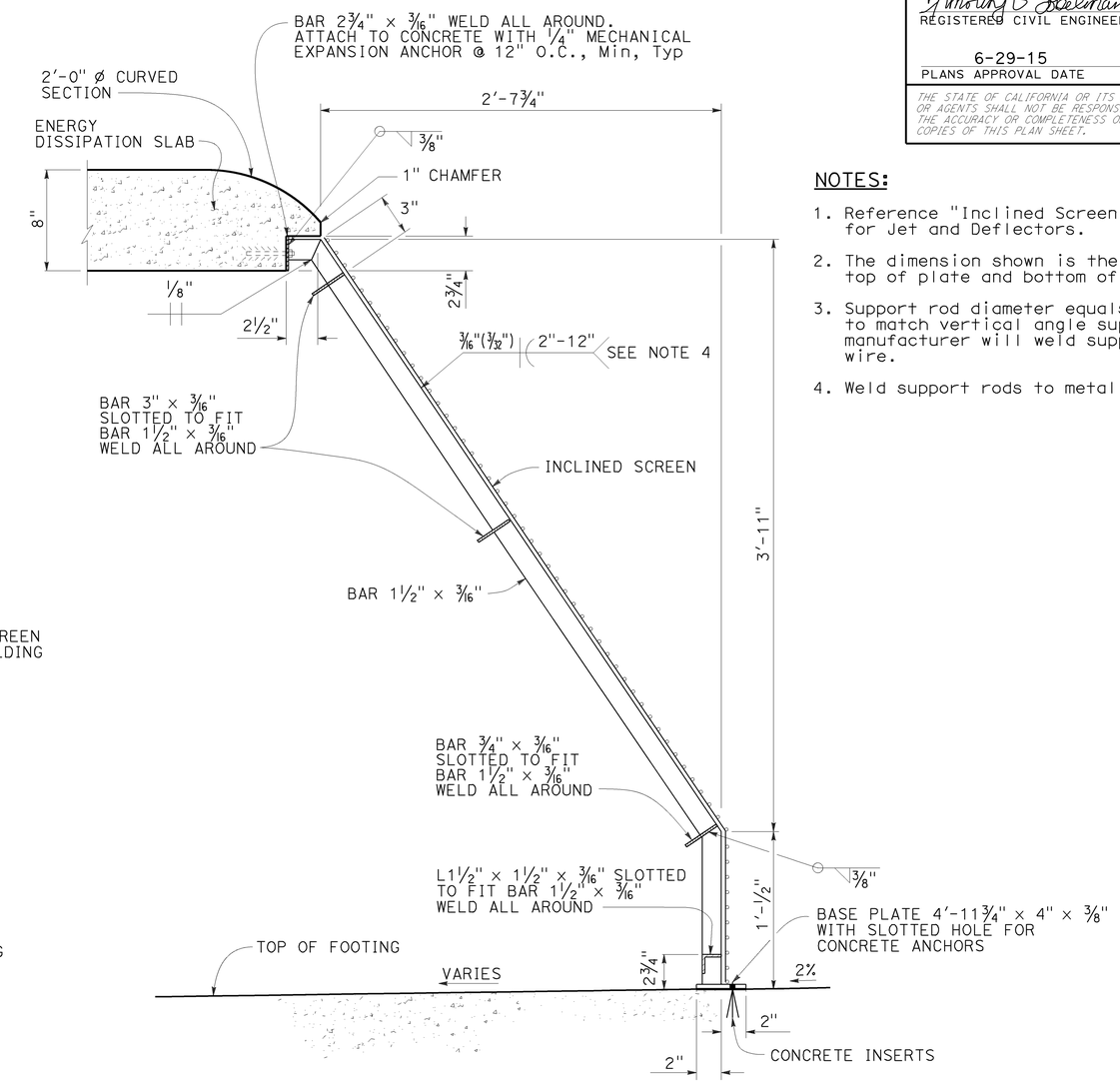

SECTION H-H

NOTES:

1. Reference "Inclined Screen Details No. 3" for Jet and Deflectors.
2. The dimension shown is the distance between top of plate and bottom of wire.
3. Support rod diameter equals ⅜". Align rods to match vertical angle supports. Screen manufacturer will weld support rods to wedge wire.
4. Weld support rods to metal frame (all around).

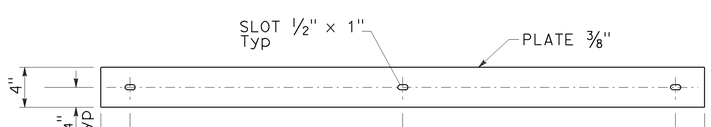

BASE PLATE

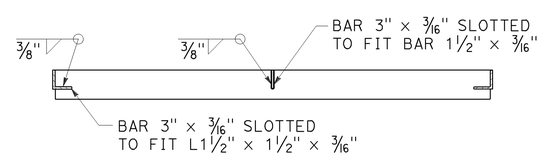

SECTION I-I

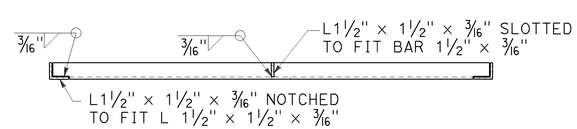

SECTION J-J

WATER POLLUTION CONTROL DETAILS
GROSS SOLIDS REMOVAL DEVICE
INCLINED SCREEN DETAILS

NO SCALE

WD-14

STATE OF CALIFORNIA - DEPARTMENT OF TRANSPORTATION
DIVISION OF DESIGN
OFFICE OF STORM WATER MANAGEMENT
Caltrans

FUNCTIONAL SUPERVISOR: TIMOTHY B. SOBELMAN
CALCULATED-DESIGNED BY: D. WANG
CHECKED BY: L. HE
REVISED BY
DATE REVISED

LAST REVISION 10-16-13
DATE PLOTTED => 25-JUN-2015
TIME PLOTTED => 09:27

Dist	COUNTY	ROUTE	POST MILES TOTAL PROJECT	SHEET No.	TOTAL SHEETS
07	Ven	33, 101	0.9/T5.8 2.3/13.8	82	239

Timothy B. Sobelman 1-22-12
REGISTERED CIVIL ENGINEER DATE

6-29-15
PLANS APPROVAL DATE

REGISTERED PROFESSIONAL ENGINEER TIMOTHY B. SOBELMAN No. 59249 Exp. 6-30-17 CIVIL STATE OF CALIFORNIA

THE STATE OF CALIFORNIA OR ITS OFFICERS OR AGENTS SHALL NOT BE RESPONSIBLE FOR THE ACCURACY OR COMPLETENESS OF SCANNED COPIES OF THIS PLAN SHEET.

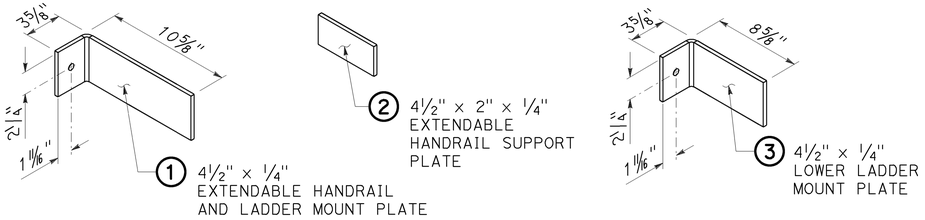

BRACKET DETAILS

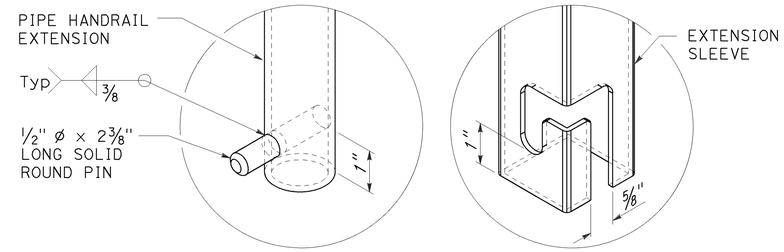

EXTENDABLE HANDRAIL LATCH

NOTES (THIS SHEET ONLY):

1. Rungs must be skid resistant.
2. Extendable handrail plates 1 and 2 to be welded to extension sleeve and ladder rails. Lower ladder mount plate 3 to be welded to ladder.
3. Grind exposed corners of metal parts to 3/16" radius.

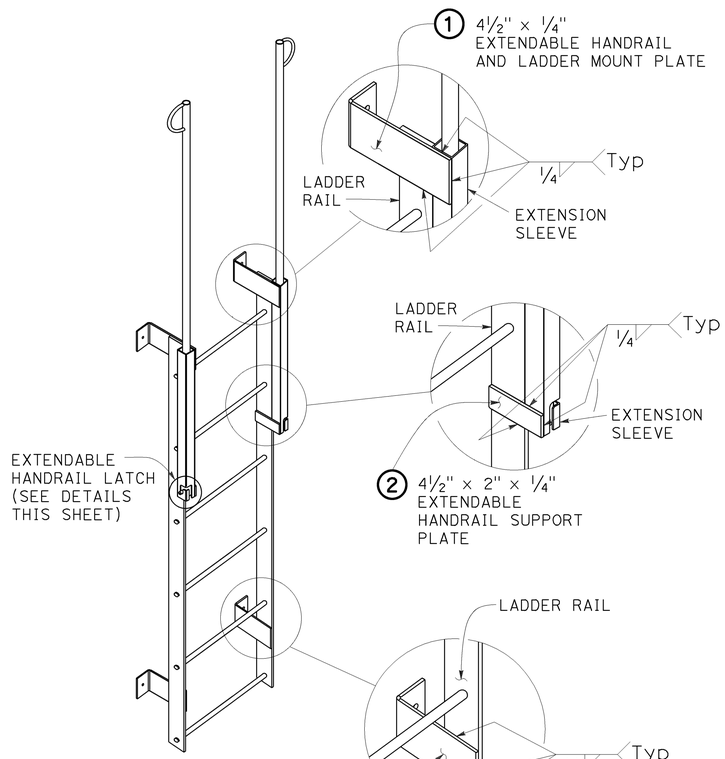

LADDER

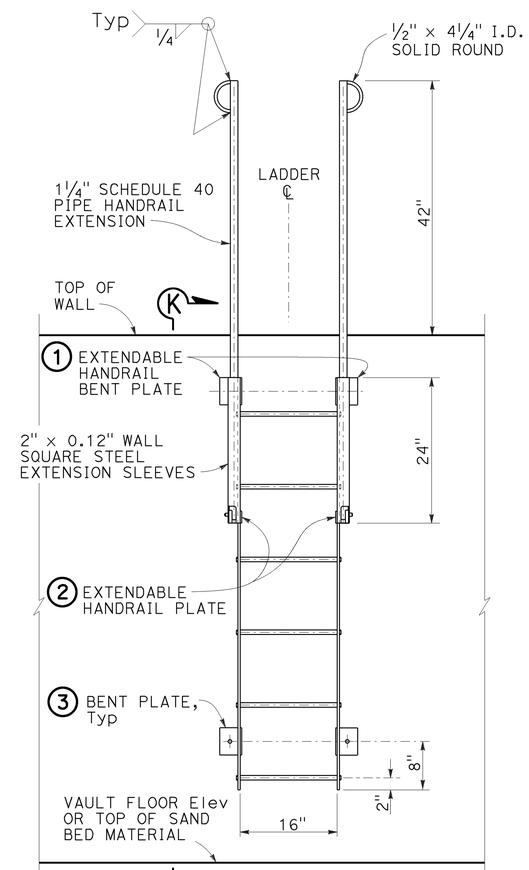

ELEVATION

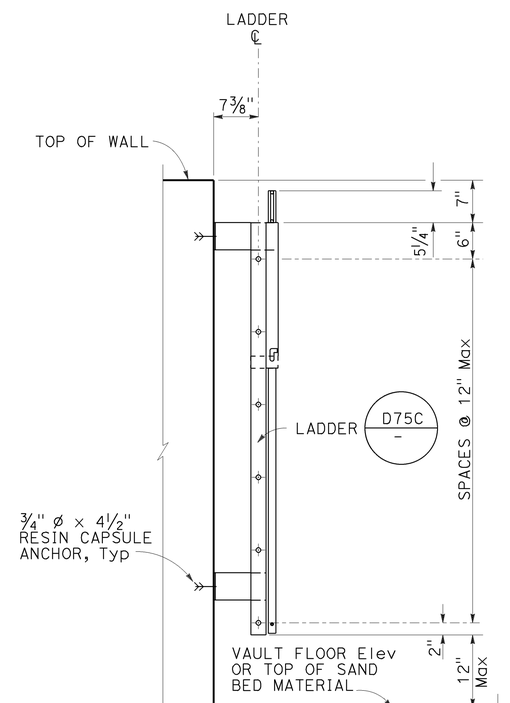

SECTION K-K

EXTENDABLE HANDRAIL

WATER POLLUTION CONTROL DETAILS
GROSS SOLIDS REMOVAL DEVICE
INCLINED SCREEN LADDER DETAILS

NO SCALE

WD-15

STATE OF CALIFORNIA - DEPARTMENT OF TRANSPORTATION
Caltrans®
DIVISION OF DESIGN
OFFICE OF STORM WATER MANAGEMENT

FUNCTIONAL SUPERVISOR: TIMOTHY B. SOBELMAN
CALCULATED-DESIGNED BY: D. WANG
CHECKED BY: L. HE
REVISED BY
DATE REVISED

LAST REVISION 10-16-13
DATE PLOTTED => 25-JUN-2015
TIME PLOTTED => 09:27

Dist	COUNTY	ROUTE	POST MILES TOTAL PROJECT	SHEET No.	TOTAL SHEETS
07	Ven	33, 101	0.9/T5.8 2.3/13.8	83	239

Timothy B. Sobelman 12-12-12
REGISTERED CIVIL ENGINEER DATE

6-29-15
PLANS APPROVAL DATE

REGISTERED PROFESSIONAL ENGINEER TIMOTHY B. SOBELMAN No. 59249 Exp. 6-30-17 CIVIL STATE OF CALIFORNIA

THE STATE OF CALIFORNIA OR ITS OFFICERS OR AGENTS SHALL NOT BE RESPONSIBLE FOR THE ACCURACY OR COMPLETENESS OF SCANNED COPIES OF THIS PLAN SHEET.

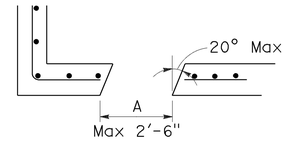

SECTION L-L

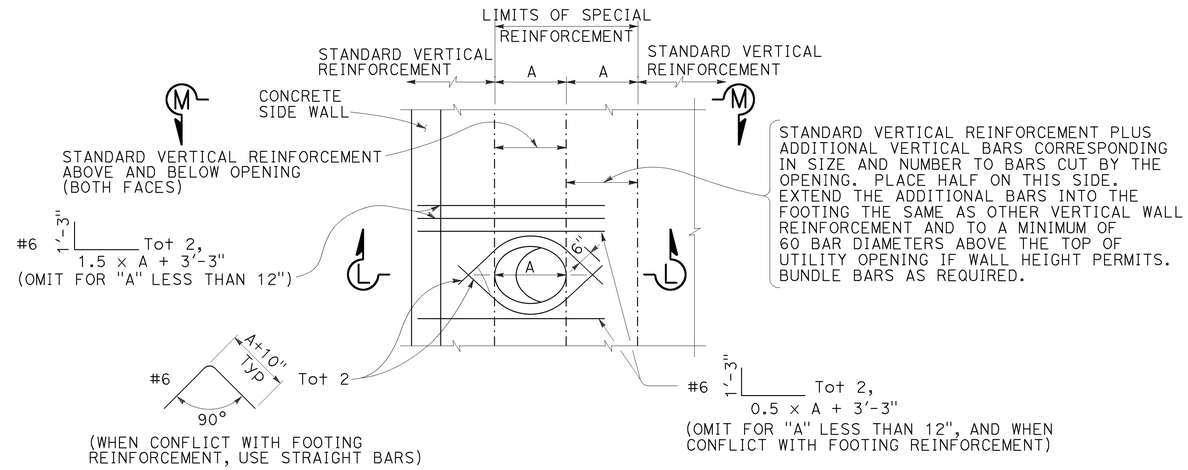

WALL OPENING

To be used at inlet and outlet pipe locations

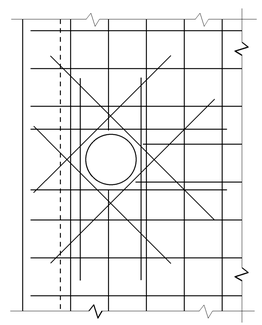

ENERGY DISSIPATION SLAB

To be used at 12" cast iron frame and cover (Place 8 - #5 as shown top and bottom. Extend bars 1'-3" past the opening or use 6" hook if development length is not available.)

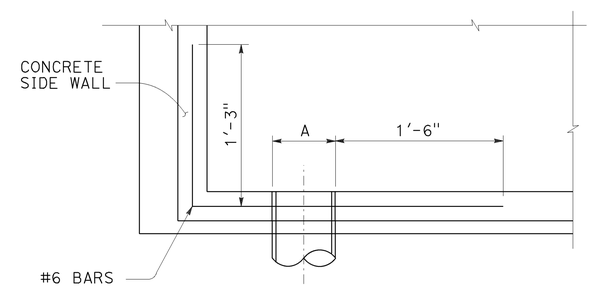

SECTION M-M

(Only specified horizontal bars are shown)

NOTE:
In all opening locations, horizontal reinforcement to be standard except as shown. All reinforcement to clear opening by 2" minimum.

WATER POLLUTION CONTROL DETAILS
GROSS SOLIDS REMOVAL DEVICE
INCLINED SCREEN WALL OPENING DETAILS

NO SCALE

WD-16

STATE OF CALIFORNIA - DEPARTMENT OF TRANSPORTATION
Caltrans
DIVISION OF DESIGN
OFFICE OF STORM WATER MANAGEMENT

FUNCTIONAL SUPERVISOR: TIMOTHY B. SOBELMAN
CALCULATED-DESIGNED BY: D. WANG
CHECKED BY: L. HE
REVISED BY
DATE REVISED

LAST REVISION 00-00-00
DATE PLOTTED => 25-JUN-2015
TIME PLOTTED => 09:27

Dist	COUNTY	ROUTE	POST MILES TOTAL PROJECT	SHEET No.	TOTAL SHEETS
07	Ven	33, 101	0.9/T5.8 2.3/13.8	84	239

Timothy G Sobelman 11-16-12
REGISTERED CIVIL ENGINEER DATE

6-29-15
PLANS APPROVAL DATE

REGISTERED PROFESSIONAL ENGINEER TIMOTHY B. SOBELMAN No. 59249 Exp. 6-30-17 CIVIL STATE OF CALIFORNIA

THE STATE OF CALIFORNIA OR ITS OFFICERS OR AGENTS SHALL NOT BE RESPONSIBLE FOR THE ACCURACY OR COMPLETENESS OF SCANNED COPIES OF THIS PLAN SHEET.

GENERAL NOTES

Designation:
Partial Austin Vault Sand Filters (AVSFs) are open air reinforced concrete vaults utilizing both sedimentation and sand filtration basins. Type designation is based on length configuration, water quality volume to be drained in a 24 hour period, and average depth of water.

Standard configurations are noted for the following design water quality volumes (WQV): 5,000, 10,000, and 15,000 cubic feet. Length configurations are either short (S) or long (L). The average water depth can be either 3 ft, 4.5 ft, or 6 ft as designed in Design Water Quality Volumes (WQV) table.

Special Reinforcement Coverage:
AVSF Standard Details are not to be used in a corrosive environment or where there is a severe abrasive flow condition or in freeze-thaw locations.

Special Design:
Required for the following conditions: ground water conditions above bottom of AVSF, surcharge loads exceeding HS20 truck load, design bearing pressures or sizes greater than those on this plan, inlet velocities which exceed 8.0 ft/sec at gabion wall, and settlement due to liquefaction.

DESIGN WATER QUALITY VOLUMES (WQV)

AVSF Type*	WQV (ft^3)	W(ft)	L_s(ft)	L_f(ft)	H_w(ft)
S-3500-3	3,500	21	14	38	3
L-3500-3	3,500	15	18	53	3
S-3500-4.5	4,380	21	14	38	4.5
L-3500-4.5	4,380	15	18	53	4.5
S-3500-6	5,260	21	14	38	6
L-3500-6	5,260	15	18	53	6
S-5000-3	5,000	27	15	42	3
L-5000-3	5,000	18	21	63	3
S-5000-4.5	6,250	27	15	42	4.5
L-5000-4.5	6,250	18	21	63	4.5
S-5000-6	7,500	27	15	42	6
L-5000-6	7,500	18	21	63	6
S-10000-3	10,000	36	21	63	3
L-10000-3	10,000	24	30	94	3
S-10000-4.5	12,500	36	21	63	4.5
L-10000-4.5	12,500	24	30	94	4.5
S-10000-6	15,000	36	21	63	6
L-10000-6	15,000	24	30	94	6
S-15000-3	15,000	45	25	76	3
L-15000-3	15,000	30	37	115	3
S-15000-4.5	18,750	45	25	76	4.5
L-15000-4.5	18,750	30	37	115	4.5
S-15000-6	22,500	45	25	76	6
L-15000-6	22,500	30	37	115	6

* AVSF TYPE = LENGTH CONFIGURATION (S OR L) - WATER QUALITY VOLUME (CF) - DESIGN WATER DEPTH (H_W ELEVATION)

DESIGN NOTES

Specifications:
Design:
Bridge Design Specification April 2000 (LFD) (1996 AASHTO) with interims and revisions by Caltrans

Wall & Footing (LFD): 1.5 D + 1.5 E + 1.5 W + 1.5 SC
Where D = Dead Load
E = Earth Load
W = Water Load
SC = Surcharge

Capacity reduction factor is included.

Earth Load:
125 lb/ft^3 vertical,

Water Load:
62.4 lb/ft^3 horizontal/vertical,

Earth pressure for 2:1 unlimited slope determined from Rankine's formula with $\phi = 33°42'$ (Case II).

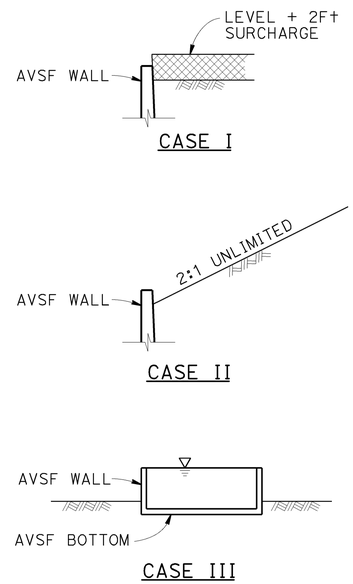

DETAIL OF DESIGN LOADING CASES

CASE I LEVEL + 2FT SURCHARGE, AVSF EMPTY
CASE II 2:1 UNLIMITED SLOPE, AVSF EMPTY
CASE III AVSF FULL OF WATER, NO SOIL PRESSURE

UNIT STRESSES:
$f'c$ = 4,000 psi
fy = 60,000 psi

ABBREVIATIONS

AVSF - AUSTIN VAULT SAND FILTER
EWT&B - EACH WAY TOP AND BOTTOM
H_W - GABION WALL HEIGHT (TYPICALLY SET AT DESIGN WATER DEPTH)
L_f - LENGTH OF FILTRATION BASIN
L_S - LENGTH OF SEDIMENT BASIN
T - WALL THICKNESS
W - WIDTH OF AVSF
WQV - WATER QUALITY VOLUME

LEGEND

DESIGN WATER DEPTH
STANDARD PLAN SHEET No.
DETAIL No.

NOTES

Expansion joints:
Inverts and sidewalls - Place ½" expansion joint filler and waterstop where indicated. See "Austin Vault Sand Filter Details No. 2" sheet for specific wall & invert details.

Construction Joints:
Must be placed where indicated on plans.

Backfill:
See Standard Specifications, except the difference in backfill must not exceed 8'-0" between side walls and inlet and outlet walls.

Earthwork:
Limits of payment for excavation and backfill.

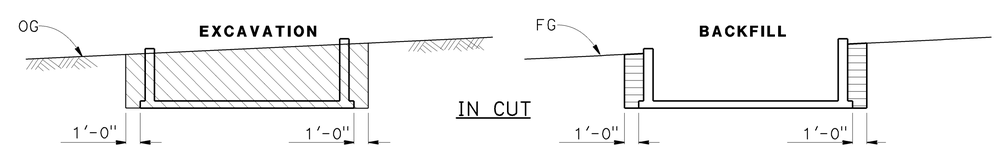

LEGEND:
STRUCTURE EXCAVATION
STRUCTURE BACKFILL

NOTES:
1. Slope or shore excavation sides as necessary.
2. Dimensions shown are minimum.
3. 95% compaction 1'-0" below floor slabs.

AUSTIN VAULT SAND FILTER

WATER POLLUTION CONTROL DETAILS
AUSTIN VAULT SAND FILTER
LEGEND
NO SCALE

WD-17

STATE OF CALIFORNIA - DEPARTMENT OF TRANSPORTATION
DIVISION OF DESIGN
OFFICE OF STORM WATER MANAGEMENT
Caltrans

FUNCTIONAL SUPERVISOR: TIMOTHY B. SOBELMAN
CALCULATED-DESIGNED BY: D. WANG
CHECKED BY: L. HE
REVISED BY
DATE REVISED

LAST REVISION 04-12-13
DATE PLOTTED => 25-JUN-2015
TIME PLOTTED => 08:58

Dist	COUNTY	ROUTE	POST MILES TOTAL PROJECT	SHEET No.	TOTAL SHEETS
07	Ven	33, 101	0.9/T5.8 2.3/13.8	85	239

Timothy B Sobelman 11-16-12
REGISTERED CIVIL ENGINEER DATE

6-29-15
PLANS APPROVAL DATE

REGISTERED PROFESSIONAL ENGINEER TIMOTHY B. SOBELMAN No. 59249 Exp. 6-30-17 CIVIL STATE OF CALIFORNIA

THE STATE OF CALIFORNIA OR ITS OFFICERS OR AGENTS SHALL NOT BE RESPONSIBLE FOR THE ACCURACY OR COMPLETENESS OF SCANNED COPIES OF THIS PLAN SHEET.

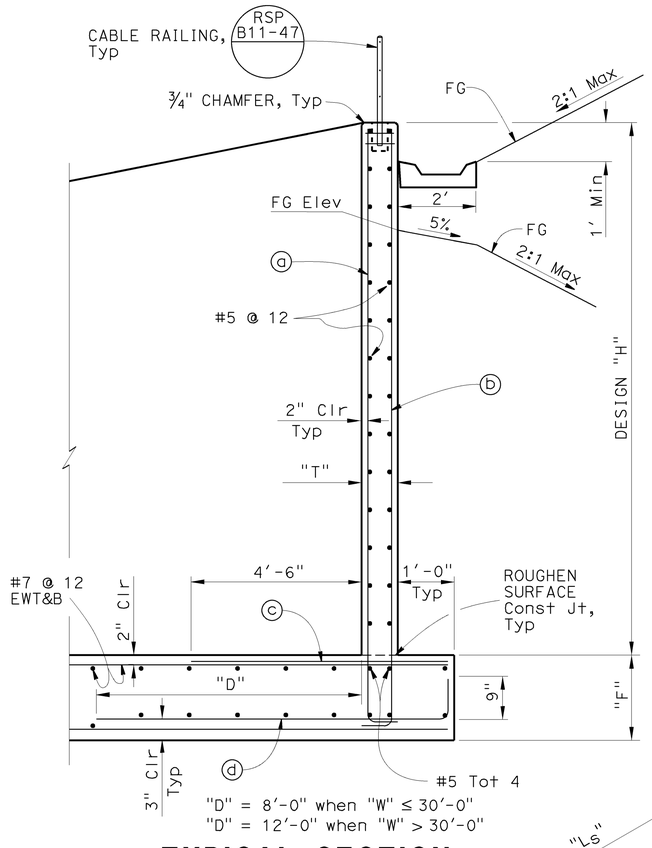

TYPICAL SECTION

REINFORCING STEEL AND DATA FOR WALLS

Design "H"	6'	8'	10'	12'	14'	16'
"T"	12"	12"	12"	12"	14"	14"
"F"	1'-3"	1'-3"	1'-3"	1'-6"	1'-9"	1'-9"
ⓐ bars ⌊	#6 @ 12	#6 @ 12	#6 @ 8	#7 @ 8	#8 @ 8	#9 @ 6
ⓑ bars ⌋	#6 @ 12	#6 @ 12	#6 @ 8	#7 @ 8	#8 @ 8	#8 @ 6
ⓒ bars	#6 @ 12	#6 @ 12	#6 @ 8	#6 @ 8	#7 @ 8	#7 @ 6
ⓓ bars ⌣	#6 @ 12	#6 @ 12	#6 @ 8	#6 @ 8	#7 @ 8	#7 @ 6

NOTES (THIS SHEET ONLY):

1. For dimensions "W", "Ls", "Lf" and "Hw", see Design WQV table on "Austin Vault Sand Filter Legend" sheet.
2. For footing details not shown, see "Austin Wall Sand Filter Details No. 1 and No. 2" sheets.
3. The contractor has the option of matching the Sedimentation Basin wall thickness with the Filtration Basin wall thickness. Thicker design wall must be used at no additional cost to the Department.
4. For additional corner reinforcement not shown see Typical Corner Detail on "Austin Wall Sand Filter Details No. 1" sheet.
5. * - For details see "Drainage Plans".
6. For project specific AVFS elevations, see Wall Design Elevation Table on the drainage profile sheets.

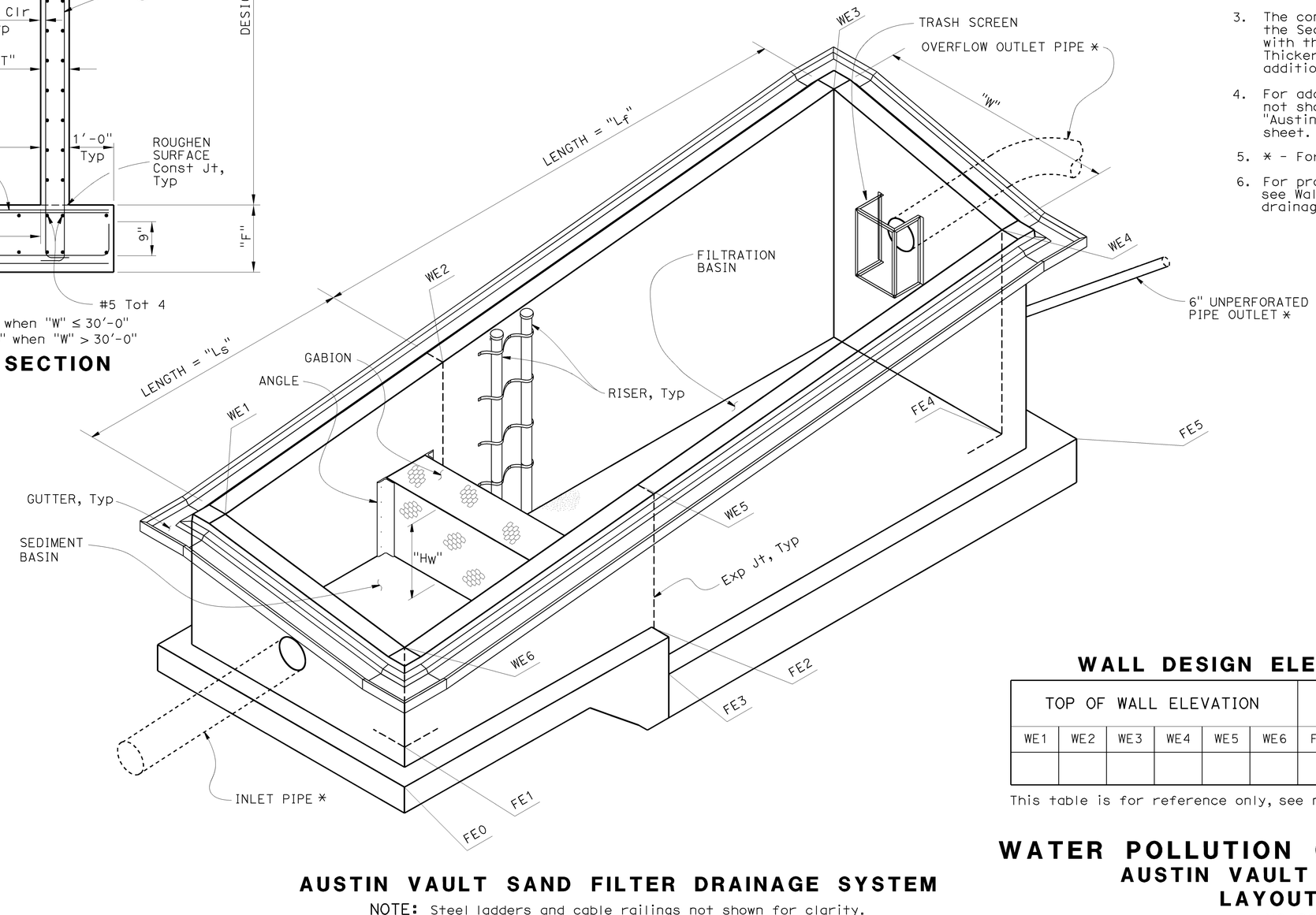

AUSTIN VAULT SAND FILTER DRAINAGE SYSTEM

NOTE: Steel ladders and cable railings not shown for clarity.

WALL DESIGN ELEVATION TABLE

TOP OF WALL ELEVATION						TOP OF FOOTING ELEVATION					
WE1	WE2	WE3	WE4	WE5	WE6	FE0	FE1	FE2	FE3	FE4	FE5

This table is for reference only, see note 6.

WATER POLLUTION CONTROL DETAILS
AUSTIN VAULT SAND FILTER
LAYOUT No. 1

NO SCALE

WD-18

STATE OF CALIFORNIA - DEPARTMENT OF TRANSPORTATION
Caltrans
DIVISION OF DESIGN
OFFICE OF STORM WATER MANAGEMENT

FUNCTIONAL SUPERVISOR: TIMOTHY B. SOBELMAN
CALCULATED-DESIGNED BY: D. WANG
CHECKED BY: L. HE
REVISED BY
DATE REVISED

LAST REVISION 04-12-13
DATE PLOTTED => 25-JUN-2015
TIME PLOTTED => 08:58

Dist	COUNTY	ROUTE	POST MILES TOTAL PROJECT	SHEET No.	TOTAL SHEETS
07	Ven	33, 101	0.9/T5.8 2.3/13.8	86	239

Timothy G Sobelman 11-16-12
REGISTERED CIVIL ENGINEER DATE

6-29-15
PLANS APPROVAL DATE

REGISTERED PROFESSIONAL ENGINEER TIMOTHY B. SOBELMAN No. 59249 Exp. 6-30-17 CIVIL STATE OF CALIFORNIA

THE STATE OF CALIFORNIA OR ITS OFFICERS OR AGENTS SHALL NOT BE RESPONSIBLE FOR THE ACCURACY OR COMPLETENESS OF SCANNED COPIES OF THIS PLAN SHEET.

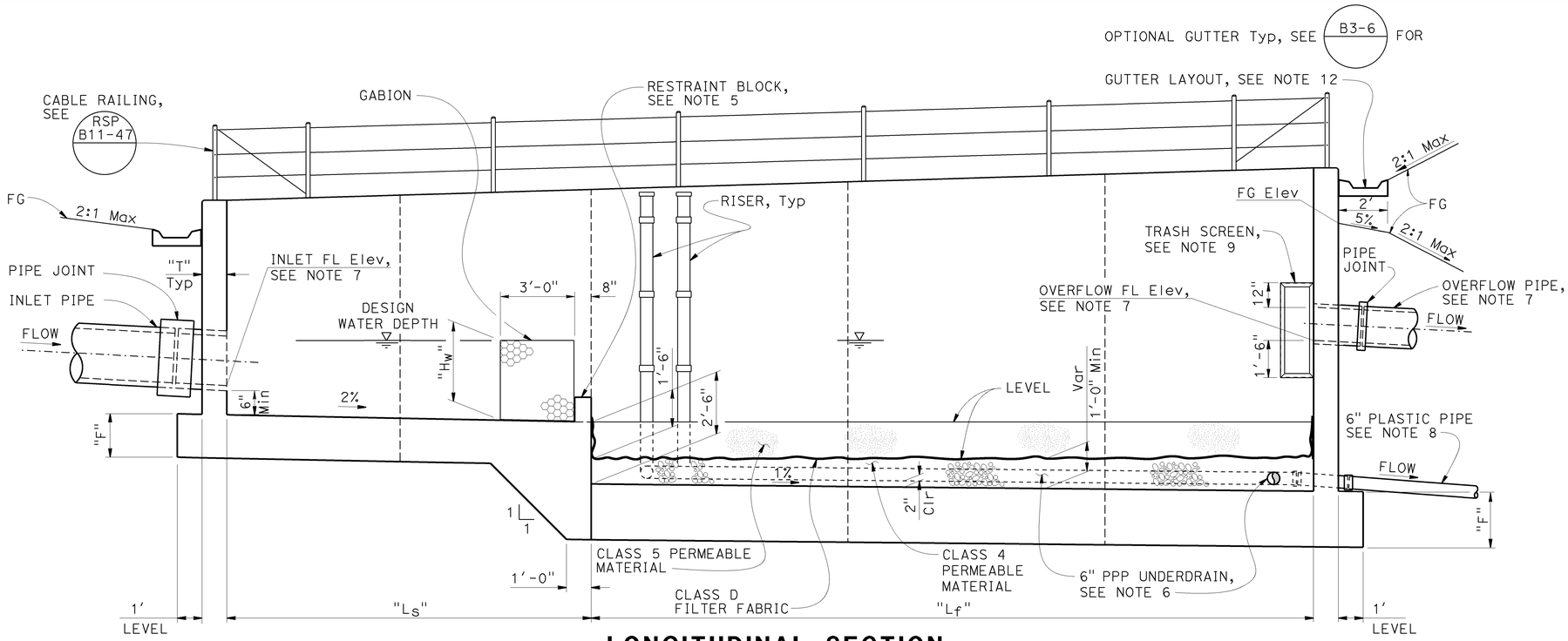

LONGITUDINAL SECTION

NOTE: Ladder not shown for clarity.

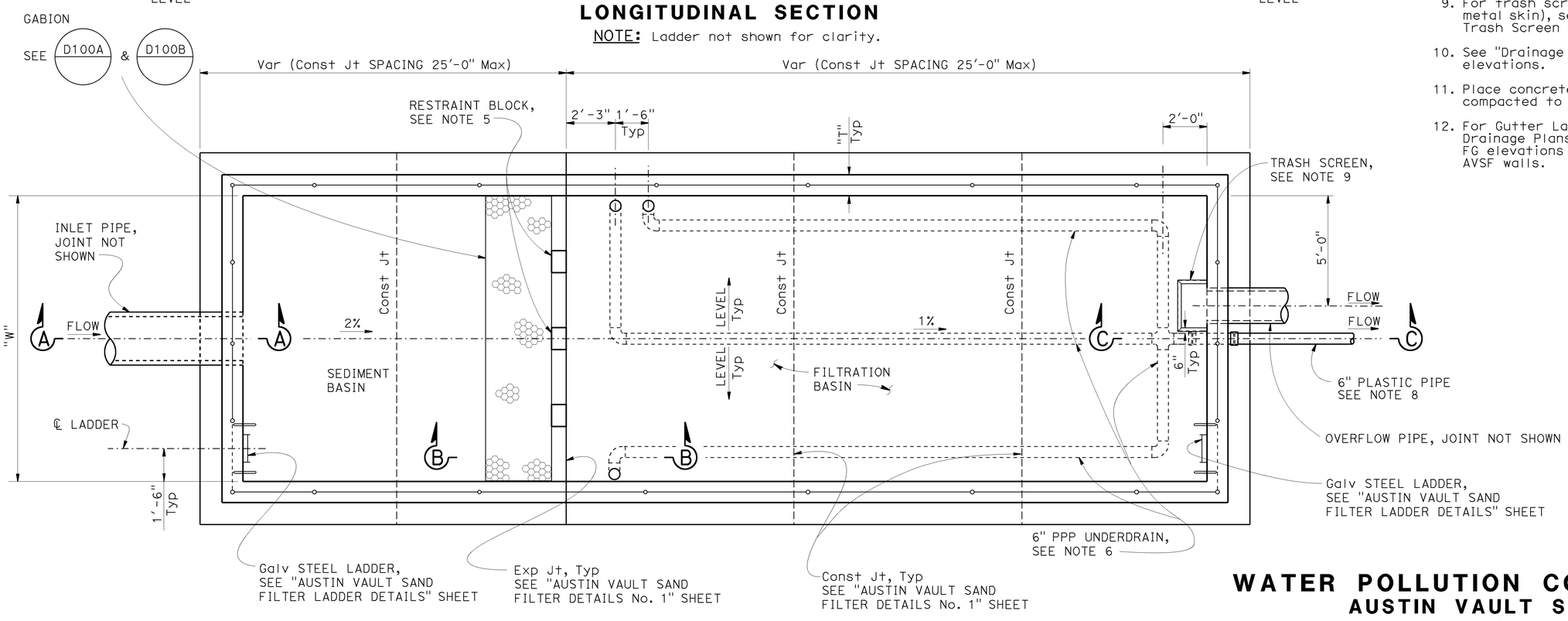

PLAN

NOTE: Gutter not shown for clarity.

NOTES (THIS SHEET ONLY)

1. For dimensions "W", "Ls", "Lf" and "Hw", see Design WQV table on "Austin Vault Sand Filter Legend" sheet.
2. For dimensions "T" and "F", see "Austin Vault Sand Filter Layout No. 1" sheet.
3. For Typical Section, see "Austin Vault Sand Filter Layout No. 1" sheet.
4. For Section A-A, B-B and C-C, see "Austin Vault Sand Filter Details No. 1" sheet.
5. For restraint block details, see "Austin Vault Sand Filter Details No. 1" and "Details No. 2" sheets.
6. For details of PPP underdrain system, see "Austin Vault Sand Filter Underdrain Details" sheet.
7. For Layout and FL elevations of inlet and overflow pipe, see "Drainage Plans and Drainage Profiles" sheets.
8. For slope of outlet plastic pipe, see "Drainage Profiles".
9. For trash screen details (frame and perforated metal skin), see "Austin Vault Sand Filter Trash Screen Details" sheet.
10. See "Drainage Profiles" for top of wall elevations.
11. Place concrete on base or native material compacted to 95% relative compaction.
12. For Gutter Layout and FL elevations, see Drainage Plans and Drainage Profiles. Show FG elevations at all grade breaks along the AVSF walls.

WATER POLLUTION CONTROL DETAILS
AUSTIN VAULT SAND FILTER
LAYOUT No. 2

NO SCALE

WD-19

STATE OF CALIFORNIA - DEPARTMENT OF TRANSPORTATION
DIVISION OF DESIGN
OFFICE OF STORM WATER MANAGEMENT

FUNCTIONAL SUPERVISOR: TIMOTHY B. SOBELMAN
CALCULATED-DESIGNED BY: D. WANG
CHECKED BY: L. HE
REVISED BY
DATE REVISED

LAST REVISION 04-12-13
DATE PLOTTED => 25-JUN-2015
TIME PLOTTED => 08:58

Dist	COUNTY	ROUTE	POST MILES TOTAL PROJECT	SHEET No.	TOTAL SHEETS
07	Ven	33, 101	0.9/T5.8 2.3/13.8	87	239

Timothy G Sobelman 11-16-12
REGISTERED CIVIL ENGINEER DATE

6-29-15
PLANS APPROVAL DATE

REGISTERED PROFESSIONAL ENGINEER TIMOTHY B. SOBELMAN No. 59249 Exp. 6-30-17 CIVIL STATE OF CALIFORNIA

THE STATE OF CALIFORNIA OR ITS OFFICERS OR AGENTS SHALL NOT BE RESPONSIBLE FOR THE ACCURACY OR COMPLETENESS OF SCANNED COPIES OF THIS PLAN SHEET.

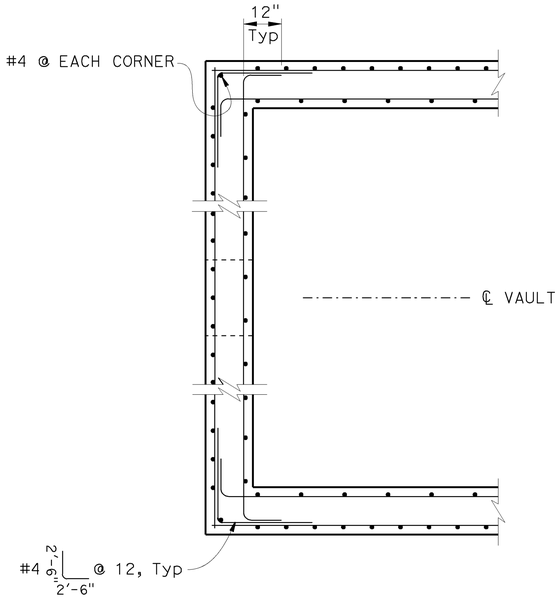

TYPICAL CORNER DETAIL

Inlet wall shown, outlet wall similar.

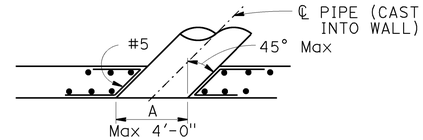

SECTION D-D

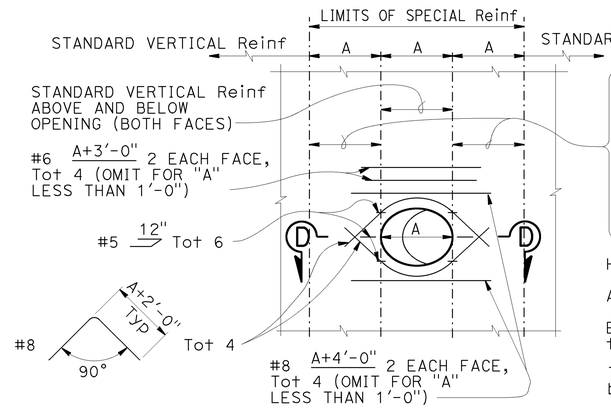

Standard vertical reinforcement plus additional vertical bars corresponding in size and number to bars cut by the opening. Place half on each side. Extend the additional bars into the footing the same as other vertical wall reinforcement and to a minimum of 60 bar diameters above the top of utility opening if wall height permits. Bundle bars as required.

Horizontal Reinf to be standard except as shown.

All Reinf to clear opening by 2" minimum.

Expansion joints must not be located within the limits of special reinforcing.

The rebar lengths shown are maximum and must be adjusted due to the limitations of space.

WALL OPENING DETAIL

To be used at inlet, outlet and overflow pipe locations

NOTES (THIS SHEET ONLY):

1. For locations of section A-A, B-B, and C-C, see "Austin Vault Sand Filter Layout No. 2" sheet.
2. For wall and footing reinforcement details, see Typical Section on "Austin Vault Sand Filter Layout No. 1" sheet.

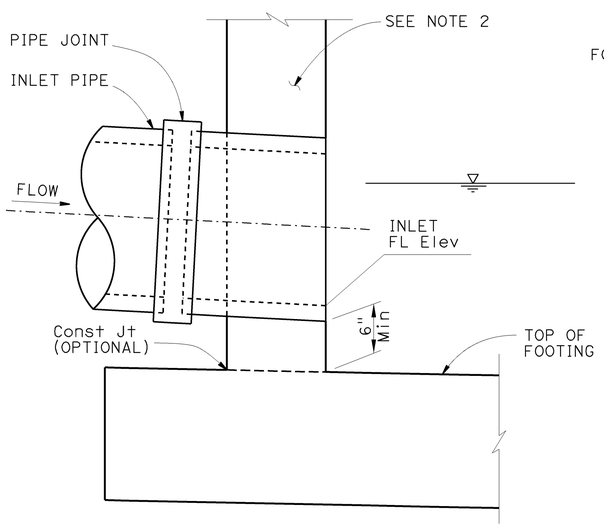

SECTION A-A

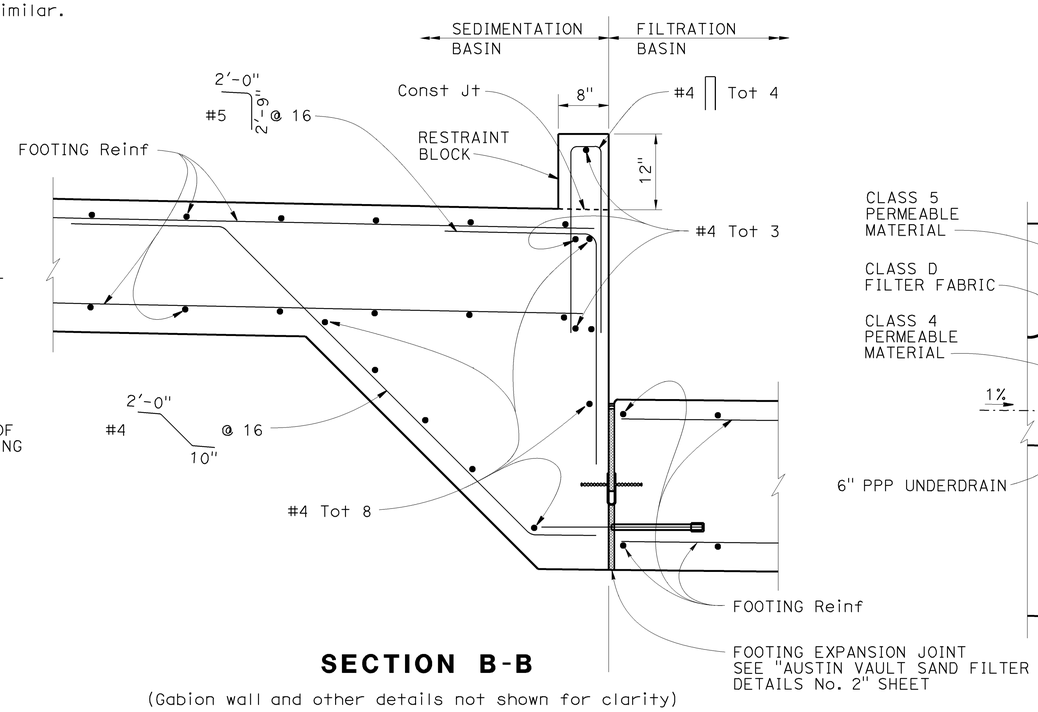

SECTION B-B

(Gabion wall and other details not shown for clarity)

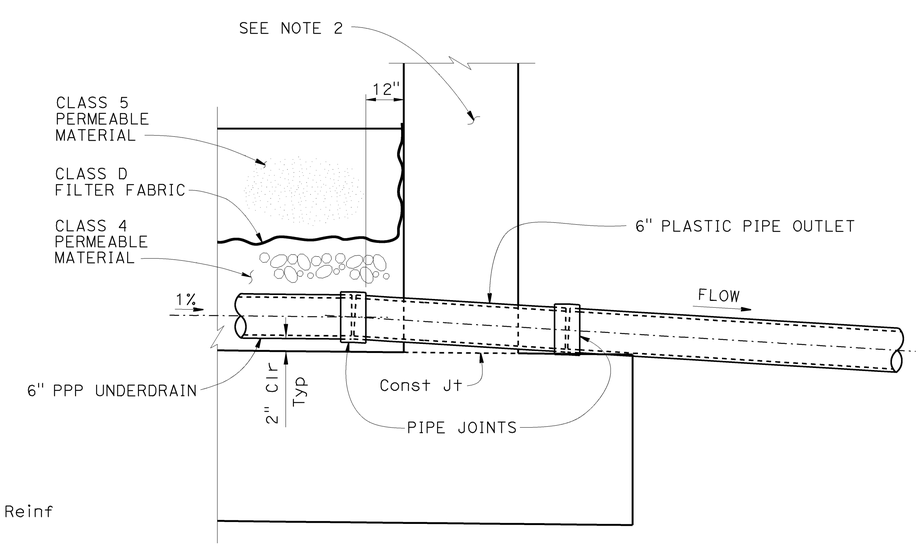

SECTION C-C

WATER POLLUTION CONTROL DETAILS
AUSTIN VAULT SAND FILTER
DETAILS No. 1

NO SCALE

WD-20

STATE OF CALIFORNIA - DEPARTMENT OF TRANSPORTATION
DIVISION OF DESIGN
OFFICE OF STORM WATER MANAGEMENT
Caltrans

FUNCTIONAL SUPERVISOR: TIMOTHY B. SOBELMAN
CALCULATED-DESIGNED BY: D. WANG
CHECKED BY: L. HE
REVISED BY
DATE REVISED

LAST REVISION 04-12-13
DATE PLOTTED => 25-JUN-2015
TIME PLOTTED => 08:58

Dist	COUNTY	ROUTE	POST MILES TOTAL PROJECT	SHEET No.	TOTAL SHEETS
07	Ven	33, 101	0.9/T5.8 2.3/13.8	88	239

Timothy G Sobelman 11-16-12
REGISTERED CIVIL ENGINEER DATE

6-29-15
PLANS APPROVAL DATE

REGISTERED PROFESSIONAL ENGINEER TIMOTHY B. SOBELMAN No. 59249 Exp. 6-30-17 CIVIL STATE OF CALIFORNIA

THE STATE OF CALIFORNIA OR ITS OFFICERS OR AGENTS SHALL NOT BE RESPONSIBLE FOR THE ACCURACY OR COMPLETENESS OF SCANNED COPIES OF THIS PLAN SHEET.

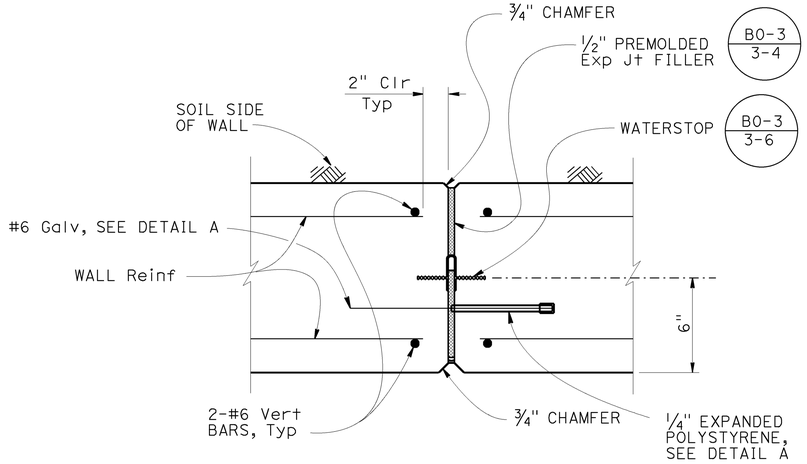

WALL EXPANSION JOINT DETAIL - PLAN SECTION

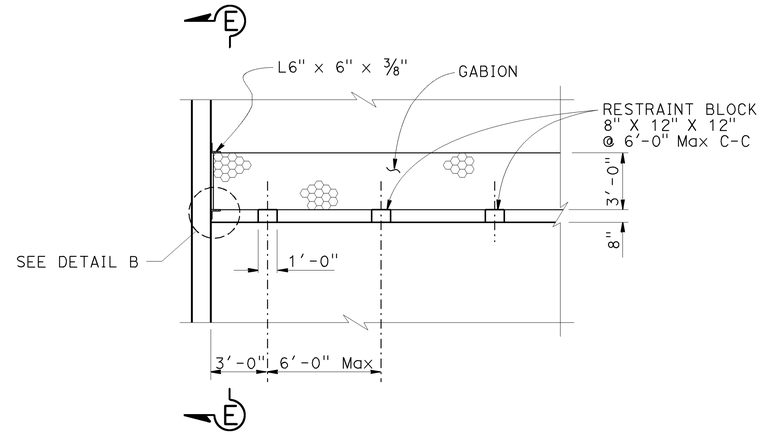

RESTRAINT BLOCK DETAIL

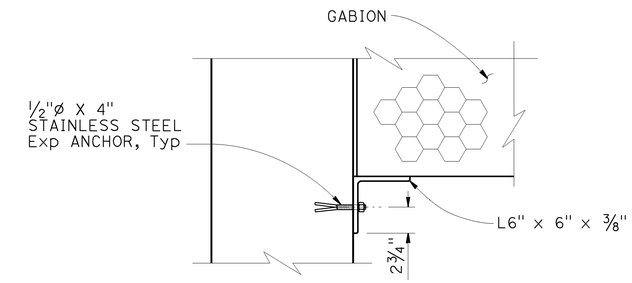

DETAIL B

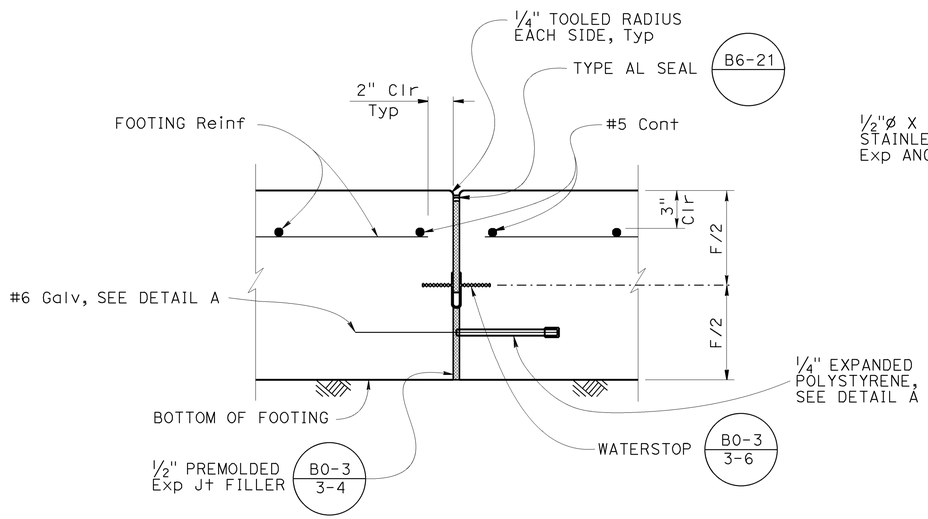

FOOTING EXPANSION JOINT DETAIL

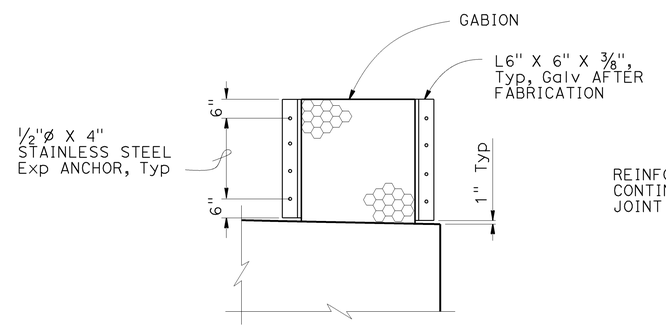

SECTION E-E

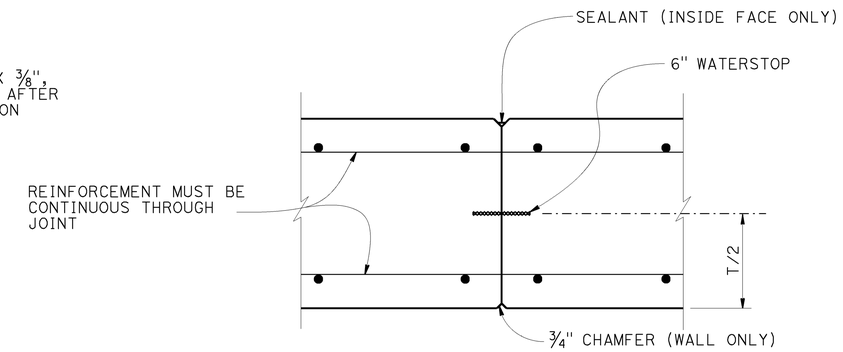

WALL CONSTRUCTION JOINT DETAIL

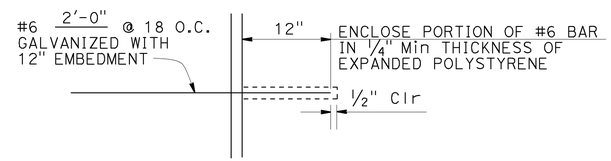

DETAIL A

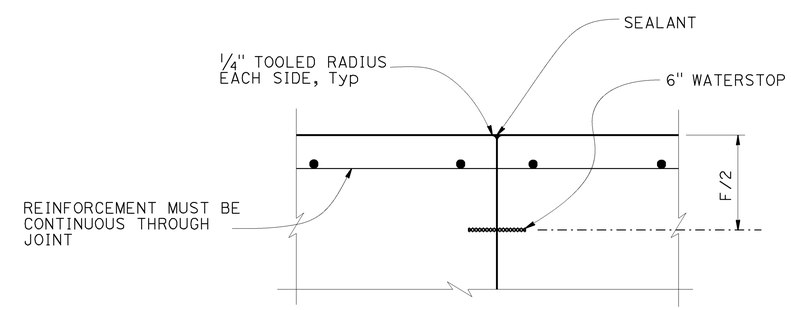

FOOTING CONSTRUCTION JOINT DETAIL

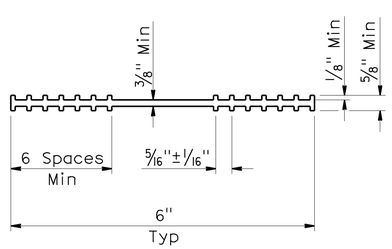

6" WATERSTOP DETAIL

WATER POLLUTION CONTROL DETAILS
AUSTIN VAULT SAND FILTER
DETAILS No. 2

NO SCALE

WD-21

STATE OF CALIFORNIA - DEPARTMENT OF TRANSPORTATION
DIVISION OF DESIGN
OFFICE OF STORM WATER MANAGEMENT

FUNCTIONAL SUPERVISOR: TIMOTHY B. SOBELMAN
CALCULATED-DESIGNED BY: D. WANG
CHECKED BY: L. HE
REVISED BY
DATE REVISED

LAST REVISION 04-12-13
DATE PLOTTED => 25-JUN-2015
TIME PLOTTED => 08:58

Dist	COUNTY	ROUTE	POST MILES TOTAL PROJECT	SHEET No.	TOTAL SHEETS
07	Ven	33, 101	0.9/T5.8 2.3/13.8	89	239

Timothy G Sobelman 11-16-12
REGISTERED CIVIL ENGINEER DATE

6-29-15
PLANS APPROVAL DATE

REGISTERED PROFESSIONAL ENGINEER
TIMOTHY B. SOBELMAN
No. 59249
Exp. 6-30-17
CIVIL
STATE OF CALIFORNIA

THE STATE OF CALIFORNIA OR ITS OFFICERS OR AGENTS SHALL NOT BE RESPONSIBLE FOR THE ACCURACY OR COMPLETENESS OF SCANNED COPIES OF THIS PLAN SHEET.

NOTES (THIS SHEET ONLY):

1. All angles, screws and perforated metal must be galvanized.
2. Paint all weld joints with zinc rich paint or galvanize after welding.
3. Dimension "D1" is to be equal to inside diameter of overflow pipe.

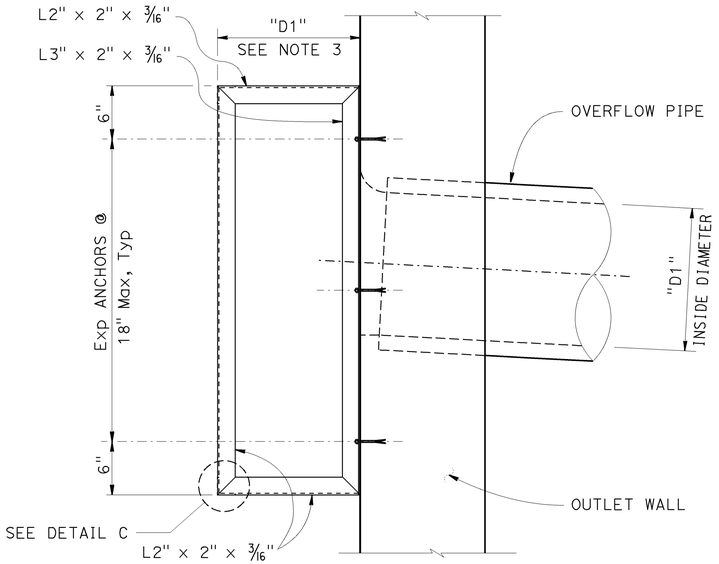

ELEVATION

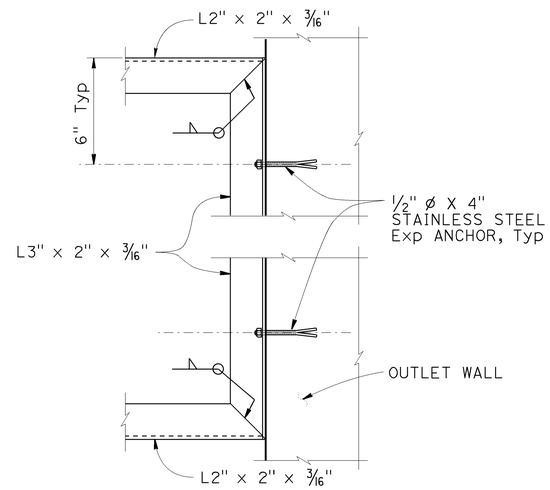

SECTION F - F

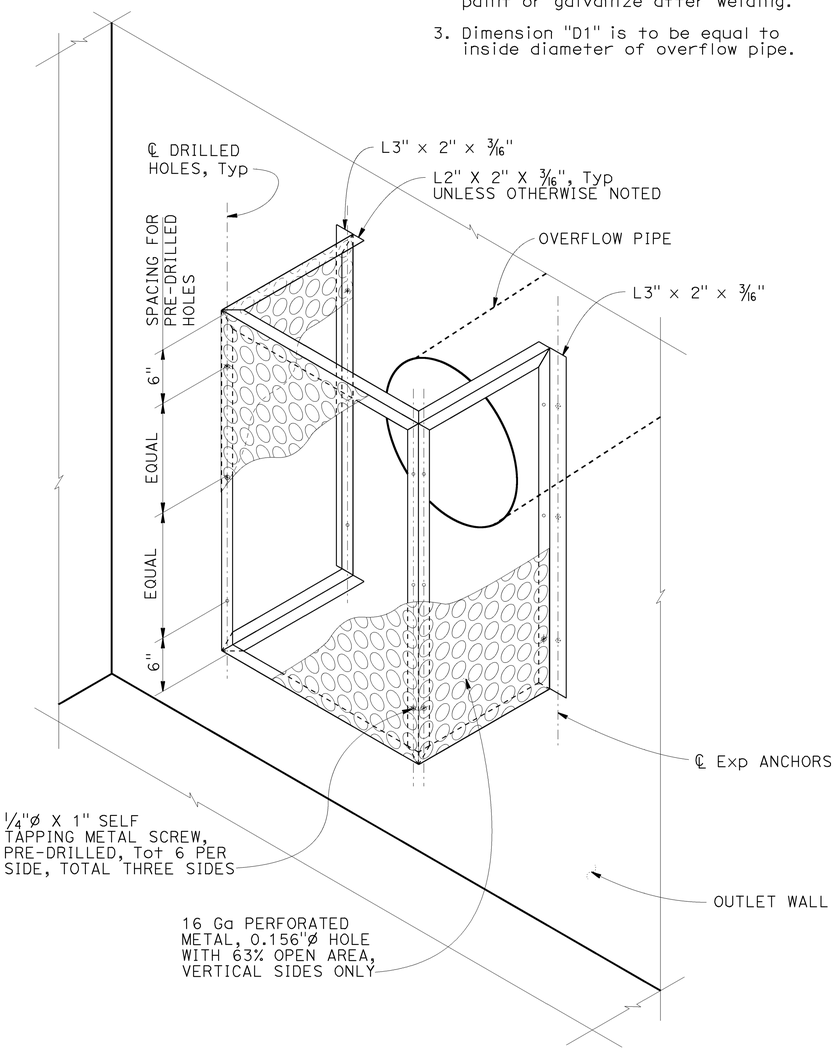

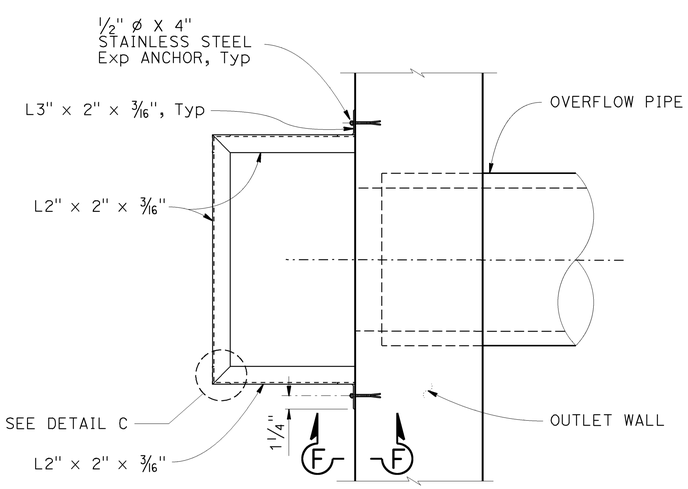

PLAN

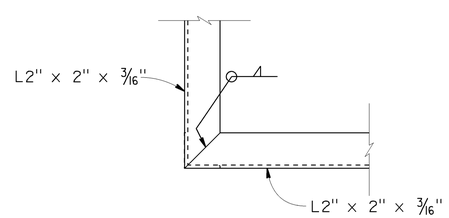

DETAIL C
TYPICAL CORNER DETAIL

WATER POLLUTION CONTROL DETAILS
AUSTIN VAULT SAND FILTER
TRASH SCREEN DETAILS

NO SCALE

WD-22

STATE OF CALIFORNIA - DEPARTMENT OF TRANSPORTATION
DIVISION OF DESIGN
OFFICE OF STORM WATER MANAGEMENT
Caltrans

FUNCTIONAL SUPERVISOR: TIMOTHY B. SOBELMAN
CALCULATED-DESIGNED BY: D. WANG
CHECKED BY: L. HE
REVISED BY
DATE REVISED

LAST REVISION 04-12-13
DATE PLOTTED => 25-JUN-2015
TIME PLOTTED => 08:58

Dist	COUNTY	ROUTE	POST MILES TOTAL PROJECT	SHEET No.	TOTAL SHEETS
07	Ven	33, 101	0.9/T5.8 2.3/13.8	90	239

Timothy G Sobelman 11-16-12
REGISTERED CIVIL ENGINEER DATE

6-29-15
PLANS APPROVAL DATE

REGISTERED PROFESSIONAL ENGINEER TIMOTHY B. SOBELMAN No. 59249 Exp. 6-30-17 CIVIL STATE OF CALIFORNIA

THE STATE OF CALIFORNIA OR ITS OFFICERS OR AGENTS SHALL NOT BE RESPONSIBLE FOR THE ACCURACY OR COMPLETENESS OF SCANNED COPIES OF THIS PLAN SHEET.

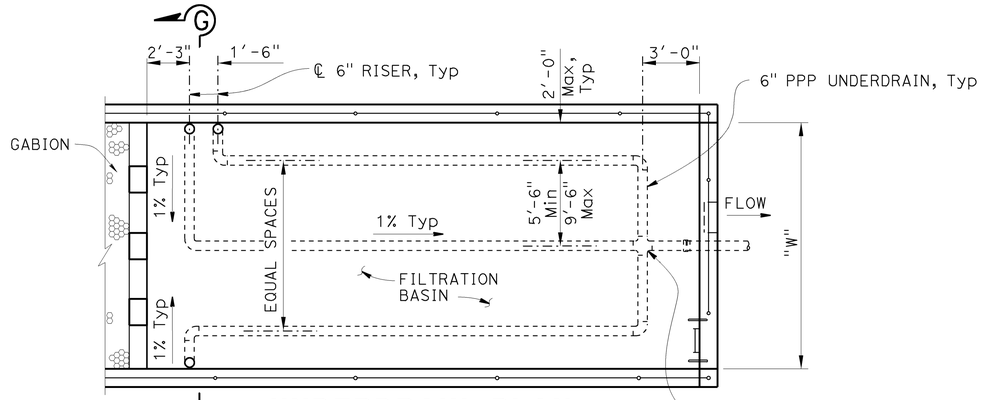

UNDERDRAIN PLAN (FILTRATION BASIN)

"W" = 15' or 21'
AVSF Type = (S or L 3,500)

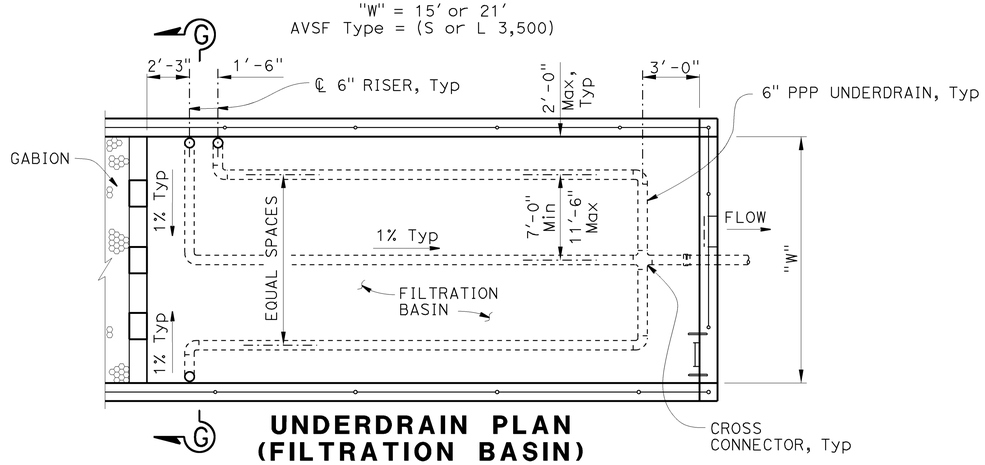

UNDERDRAIN PLAN (FILTRATION BASIN)

"W" = 18', 24' or 27'
AVSF Type = (S or L 5,000, L 10,000)

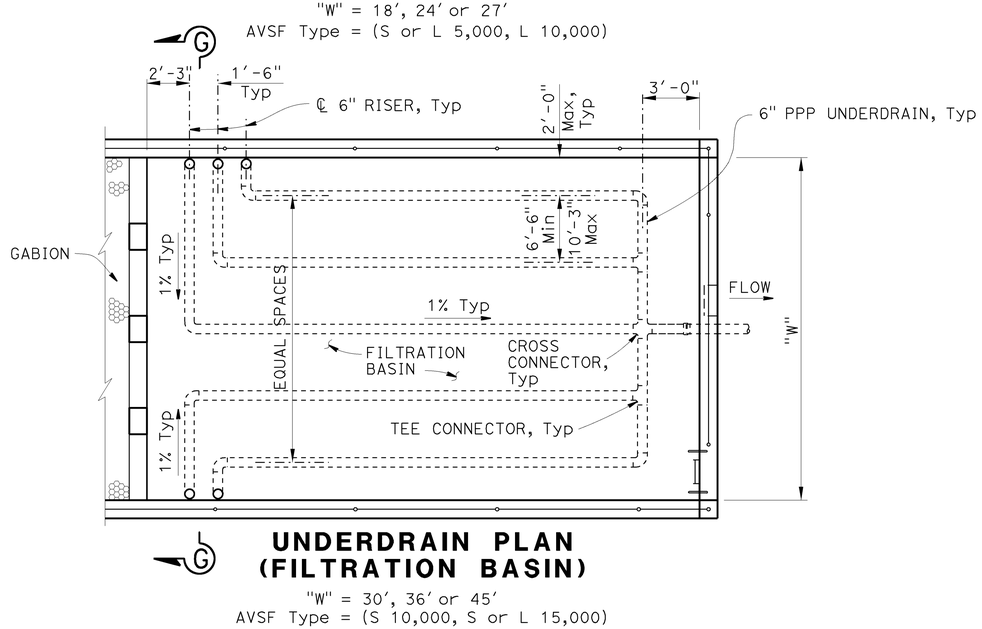

UNDERDRAIN PLAN (FILTRATION BASIN)

"W" = 30', 36' or 45'
AVSF Type = (S 10,000, S or L 15,000)

NOTE (THIS SHEET ONLY):

1. For typical cover and depth of permeable material, see "Austin Vault Sand Filter Layout No. 2" sheet.

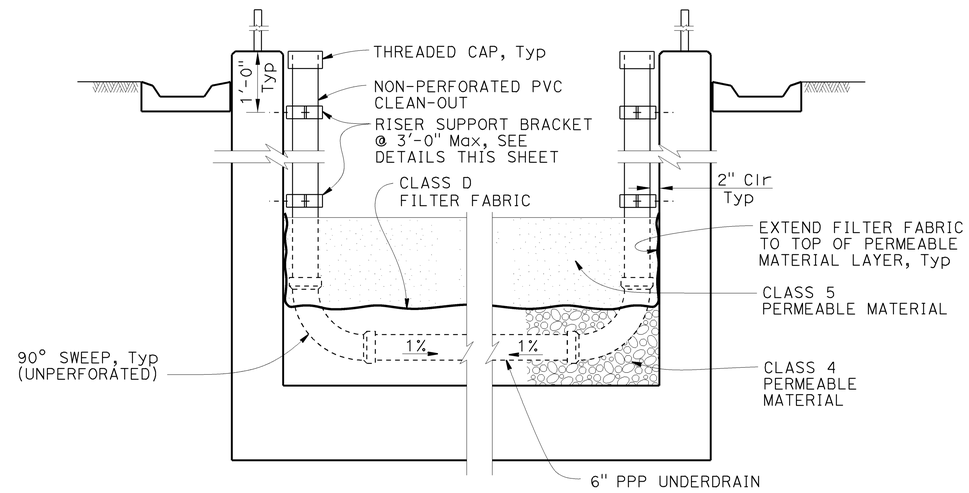

SECTION G - G

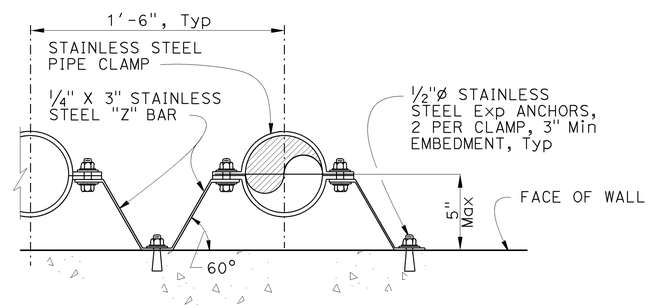

RISER SUPPORT BRACKET DETAIL

WATER POLLUTION CONTROL DETAILS
AUSTIN VAULT SAND FILTER UNDERDRAIN DETAILS

NO SCALE

WD-23

STATE OF CALIFORNIA - DEPARTMENT OF TRANSPORTATION
DIVISION OF DESIGN
OFFICE OF STORM WATER MANAGEMENT
Caltrans

FUNCTIONAL SUPERVISOR: TIMOTHY B. SOBELMAN
CALCULATED-DESIGNED BY: D. WANG
CHECKED BY: L. HE
REVISED BY
DATE REVISED

LAST REVISION 04-12-13
DATE PLOTTED => 25-JUN-2015
TIME PLOTTED => 08:58

Dist	COUNTY	ROUTE	POST MILES TOTAL PROJECT	SHEET No.	TOTAL SHEETS
07	Ven	33, 101	0.9/T5.8 2.3/13.8	91	239

Timothy G Sobelman 11-16-12
REGISTERED CIVIL ENGINEER DATE

6-29-15
PLANS APPROVAL DATE

REGISTERED PROFESSIONAL ENGINEER TIMOTHY B SOBELMAN No. 59249 Exp. 6-30-17 CIVIL STATE OF CALIFORNIA

THE STATE OF CALIFORNIA OR ITS OFFICERS OR AGENTS SHALL NOT BE RESPONSIBLE FOR THE ACCURACY OR COMPLETENESS OF SCANNED COPIES OF THIS PLAN SHEET.

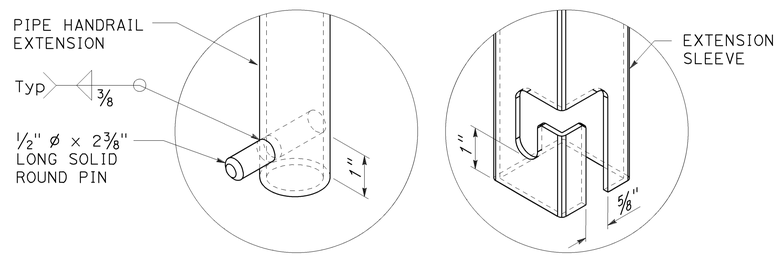

EXTENDABLE HANDRAIL LATCH

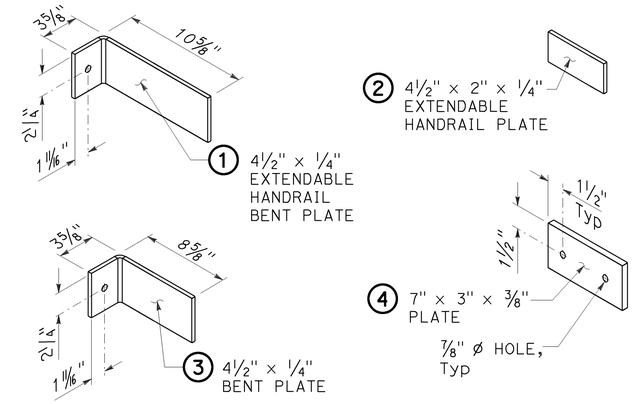

BRACKET DETAILS

NOTES (THIS SHEET ONLY):

1. Rungs must be skid resistant.
2. Use wall mounted handrail for vault depths between 4'-0" and 6'-6". For deeper vaults use extendable handrail detail. Vault depth is distance between top of wall and either top of floor slab or top of filter media material (use which ever distance is less). Ladders must not extend into filter media material.
3. No handrail required for Linear Radial GSRD 4'-0" depth, due to grate conflict.

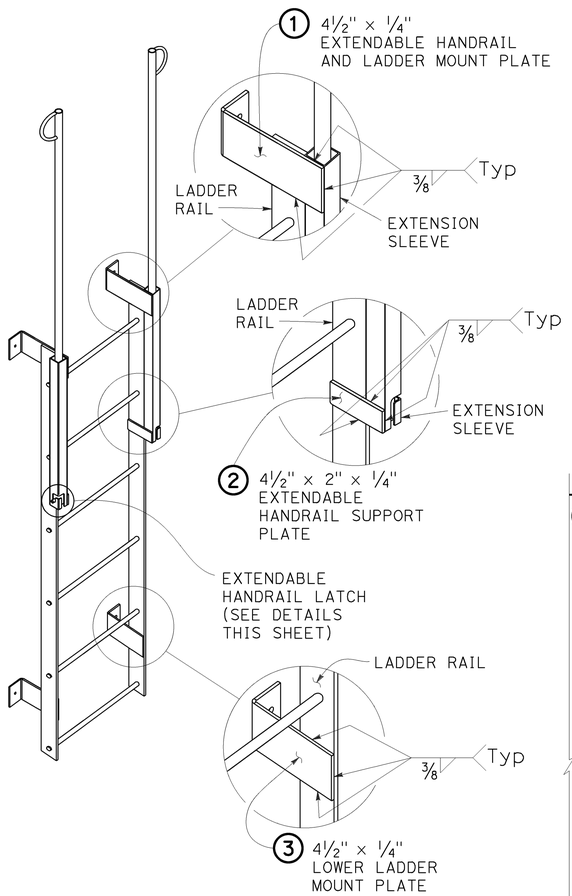

LADDER

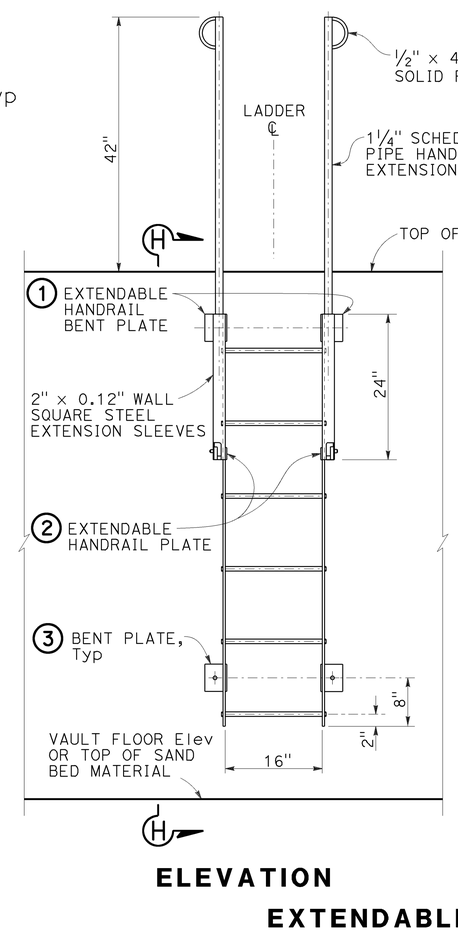

ELEVATION

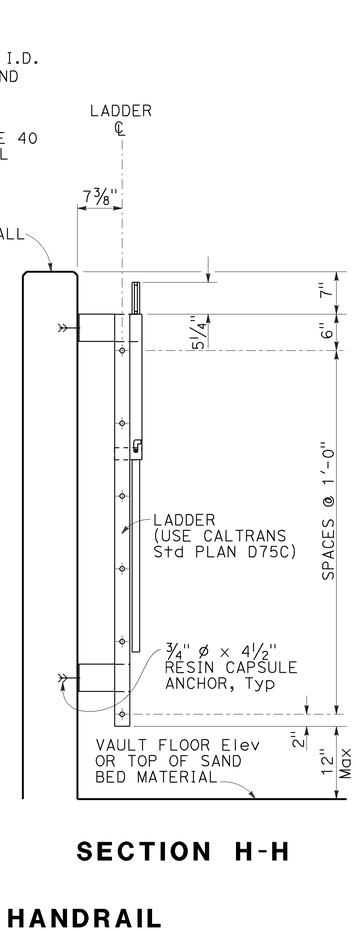

SECTION H-H

EXTENDABLE HANDRAIL

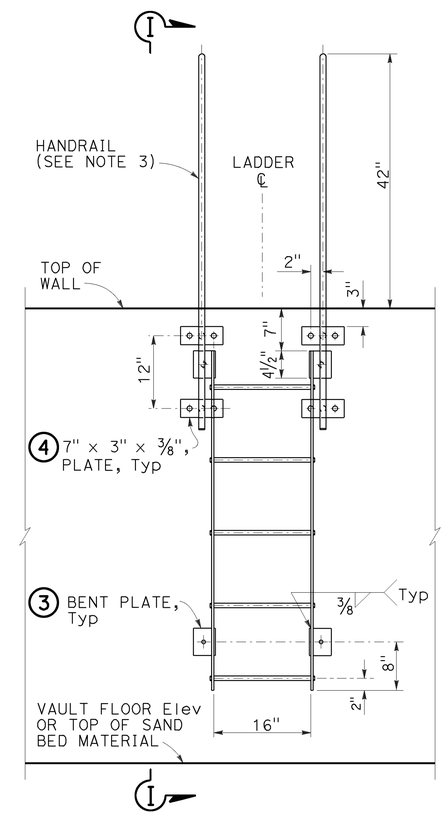

ELEVATION

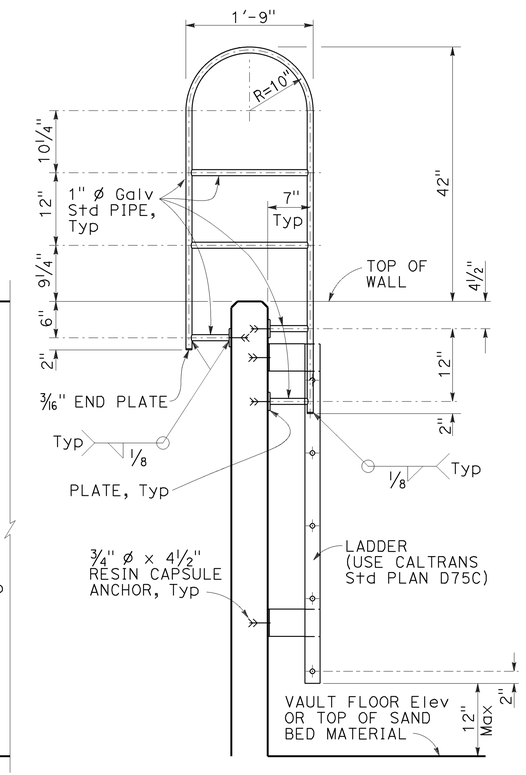

SECTION I-I

WALL MOUNTED HANDRAIL

WATER POLLUTION CONTROL DETAILS
AUSTIN VAULT SAND FILTER
LADDER DETAILS

NO SCALE

WD-24

STATE OF CALIFORNIA - DEPARTMENT OF TRANSPORTATION
Caltrans
DIVISION OF DESIGN
OFFICE OF STORM WATER MANAGEMENT

FUNCTIONAL SUPERVISOR: TIMOTHY B. SOBELMAN
CALCULATED-DESIGNED BY: D. WANG
CHECKED BY: L. HE
REVISED BY
DATE REVISED

LAST REVISION 04-12-13
DATE PLOTTED => 25-JUN-2015
TIME PLOTTED => 08:58

Dist	COUNTY	ROUTE	POST MILES TOTAL PROJECT	SHEET No.	TOTAL SHEETS
07	Ven	33, 101	0.9/T5.8 2.3/13.8	92	239

REGISTERED CIVIL ENGINEER 6/19/15 DATE

6-29-15
PLANS APPROVAL DATE

REGISTERED PROFESSIONAL ENGINEER
DOUGLAS DUNRUD
No. 47240
Exp. 12/31/15
CIVIL
STATE OF CALIFORNIA

THE STATE OF CALIFORNIA OR ITS OFFICERS OR AGENTS SHALL NOT BE RESPONSIBLE FOR THE ACCURACY OR COMPLETENESS OF SCANNED COPIES OF THIS PLAN SHEET.

GENERAL NOTES

Designation:
Partial Austin Vault Sand Filters (AVSFs) are open air reinforced concrete vaults utilizing both sedimentation and sand filtration basins. Type designation is based on length configuration, water quality volume to be drained in a 24 hour period, and average depth of water.

Standard configurations are noted for the following design water quality volumes (WQV): 5,000, 10,000, and 15,000 cubic feet. Length configurations are either short (S) or long (L). The average water depth can be either 3 ft, 4.5 ft, or 6 ft as designed in Design Water Quality Volumes (WQV) table.

Special Reinforcement Coverage:
AVSF Standard Details are not to be used in a corrosive environment or where there is a severe abrasive flow condition or in freeze-thaw locations.

Special Design:
Required for the following conditions:
ground water conditions above bottom of AVSF, surcharge loads exceeding HS20 truck load, design bearing pressures or sizes greater than those on this plan, inlet velocities which exceed 8.0 ft/sec at gabion wall, and settlement due to liquefaction.

DESIGN NOTES

DESIGN: AASHTO LRFD Bridge Design Specifications, 4th Edition with California Amendments

LS: Surcharge on level ground surface

SEISMIC: $k_h = 0.2$, $k_v = 0.0$

SOIL: $\phi = 34°$, $\gamma = 120$ pcf

REINFORCED CONCRETE: $f'c = 4{,}000$ psi
$fy = 60{,}000$ psi

LOAD COMBINATIONS AND LIMIT STATES:

Service I	$Q = 1.00DC+1.00EV+1.00EH+1.00LS$
Strength I	$Q = \alpha DC+\beta EV+\eta EH+1.75LS$
Extreme I	$Q = 1.00DC+1.00EV+1.00EH+1.00EQD+1.00EQE$
Extreme II	$Q = 1.00DC+1.00EV+1.00EH+1.00CT$

Where:

Q:	Force Effects
α:	1.25 or 0.90, Whichever Controls Design
β:	1.35 or 1.00, Whichever Controls Design
η:	1.50 or 0.90, Whichever Controls Design
DC:	Dead Load of Structure Components
EH:	Horizontal Earth Fill Pressure
EV:	Vertical Earth Pressure from Earth Fill Weight
LS:	Live Load Surcharge
EQE:	Seismic Earth Pressure
EQD:	Soil and Structural and Nonstructural Components Inertia
CT:	Vehicular Collision Force

ABBREVIATIONS

AVSF	-	AUSTIN VAULT SAND FILTER
EWT&B	-	EACH WAY TOP AND BOTTOM
H_W	-	GABION WALL HEIGHT (TYPICALLY SET AT DESIGN WATER DEPTH)
L_f	-	LENGTH OF FILTRATION BASIN
L_s	-	LENGTH OF SEDIMENT BASIN
T	-	WALL THICKNESS
W	-	WIDTH OF AVSF
WQV	-	WATER QUALITY VOLUME

LEGEND

DESIGN WATER DEPTH

STANDARD PLAN SHEET No.

DETAIL No.

NOTES

Expansion joints:
Inverts and sidewalls - Place ½" expansion joint filler and waterstop where indicated. See "Austin Vault Sand Filter Details No. 2" sheet for specific wall & invert details.

Construction Joints:
Must be placed where indicated on plans.

Backfill:
See Standard Specifications, except the difference in backfill must not exceed 8'-0" between side walls and inlet and outlet walls. Contractor shall backfill and compact around AVSF before putting unit in operation.

Earthwork:
Limits of payment for excavation and backfill.

DESIGN WATER QUALITY VOLUMES (WQV)

AVSF Type*	WQV (ft^3)	W(ft)	L_s(ft)	L_f(ft)	H_W(ft)
S-3500-3	3,500	21	14	38	3
L-3500-3	3,500	15	18	53	3
S-3500-4.5	4,380	21	14	38	4.5
L-3500-4.5	4,380	15	18	53	4.5
S-3500-6	5,260	21	14	38	6
L-3500-6	5,260	15	18	53	6
S-5000-3	5,000	27	15	42	3
L-5000-3	5,000	18	21	63	3
S-5000-4.5	6,250	27	15	42	4.5
L-5000-4.5	6,250	18	21	63	4.5
S-5000-6	7,500	27	15	42	6
L-5000-6	7,500	18	21	63	6
S-10000-3	10,000	36	21	63	3
L-10000-3	10,000	24	30	94	3
S-10000-4.5	12,500	36	21	63	4.5
L-10000-4.5	12,500	24	30	94	4.5
S-10000-6	15,000	36	21	63	6
L-10000-6	15,000	24	30	94	6
S-15000-3	15,000	45	25	76	3
L-15000-3	15,000	30	37	115	3
S-15000-4.5	18,750	45	25	76	4.5
L-15000-4.5	18,750	30	37	115	4.5
S-15000-6	22,500	45	25	76	6
L-15000-6	22,500	30	37	115	6

* AVSF TYPE = LENGTH CONFIGURATION (S OR L) - WATER QUALITY VOLUME (CF) - DESIGN WATER DEPTH (H_W ELEVATION)

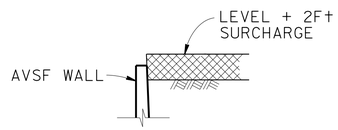

CASE I

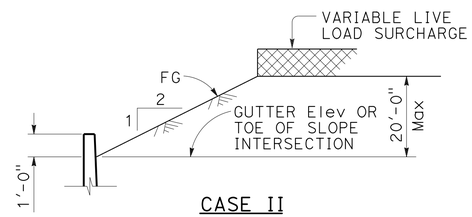

CASE II

DETAIL OF DESIGN LOADING CASE

CASE I LEVEL + 2FT SURCHARGE, AVSF EMPTY

CASE II 2:1 SLOPE (MAX. 20 FT) + 2FT SURCHARGE, AVSF EMPTY

UNIT STRESSES:
f'_c = 4,000 psi
f_y = 60,000 psi

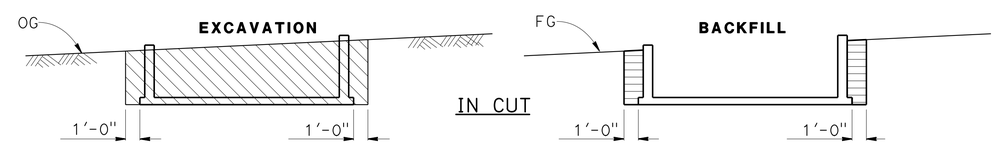

LEGEND:

STRUCTURE EXCAVATION

STRUCTURE BACKFILL

NOTES:

1. Slope or shore excavation sides as necessary.
2. Dimensions shown are minimum.
3. 95% compaction 1'-0" below floor slabs.

AUSTIN VAULT SAND FILTER

WATER POLLUTION CONTROL DETAILS
AUSTIN VAULT SAND FILTER
LEGEND
NO SCALE

WD-25

STATE OF CALIFORNIA - DEPARTMENT OF TRANSPORTATION
Caltrans HYDRAULICS

FUNCTIONAL SUPERVISOR: TIMOTHY B. SOBELMAN
CALCULATED-DESIGNED BY: D. WANG
CHECKED BY: L. HE
REVISED BY
DATE REVISED

LAST REVISION 04-12-13
DATE PLOTTED => 11-SEP-2015
TIME PLOTTED => 11:02

Dist	COUNTY	ROUTE	POST MILES TOTAL PROJECT	SHEET No.	TOTAL SHEETS
07	Ven	33, 101	0.9/T5.8 2.3/13.8	93	239

REGISTERED CIVIL ENGINEER 6/19/15 DATE

6-29-15
PLANS APPROVAL DATE

REGISTERED PROFESSIONAL ENGINEER
DOUGLAS DUNRUD
No. 47240
Exp. 12/31/15
CIVIL
STATE OF CALIFORNIA

THE STATE OF CALIFORNIA OR ITS OFFICERS OR AGENTS SHALL NOT BE RESPONSIBLE FOR THE ACCURACY OR COMPLETENESS OF SCANNED COPIES OF THIS PLAN SHEET.

REINFORCING STEEL AND DATA FOR WALLS (CASE I)

Design "H"	6′	8′	10′	12′	14′	16′	18′	20′	22′	24′
"T"	12"	12"	12"	12"	14"	14"	16"	16"	18"	18"
"F"	1′-6"	1′-6"	1′-6"	1′-8"	1′-10"	1′-10"	1′-10"	2′-1"	2′-1"	2′-4"
ⓐ bars ⌊	#6 @ 12	#6 @ 12	#6 @ 8	#7 @ 8	#8 @ 8	#8 @ 6	#8 @ 6	#9 @ 6	#9 @ 6	#10 @ 6
ⓑ bars ⌋	#6 @ 12	#6 @ 12	#6 @ 8	#7 @ 8	#8 @ 8	#8 @ 6	#8 @ 6	#9 @ 6	#9 @ 6	#10 @ 6
ⓒ bars	#6 @ 12	#6 @ 12	#6 @ 8	#6 @ 8	#7 @ 8	#7 @ 6	#7 @ 6	#8 @ 6	#8 @ 6	#9 @ 6
ⓓ bars ⌣	#6 @ 12	#6 @ 12	#6 @ 8	#6 @ 8	#7 @ 8	#7 @ 6	#7 @ 6	#8 @ 6	#8 @ 6	#9 @ 6

REINFORCING STEEL AND DATA FOR WALLS (CASE II)

Design "H"	6′	8′	10′	12′	14′	16′	18′	20′	22′	24′
"T"	12"	12"	12"	12"	14"	16"	21"	22"	24"	26"
"F"	1′-6"	1′-6"	1′-6"	1′-8"	1′-10"	2′-0"	2′-4"	2′-4"	2′-6"	2′-8"
ⓐ bars ⌊	#6 @ 12	#6 @ 12	#6 @ 8	#7 @ 8	#8 @ 6	#8 @ 6	#8 @ 6	#9 @ 6	#10 @ 6	#11 @ 6
ⓑ bars ⌋	#6 @ 12	#6 @ 12	#6 @ 8	#7 @ 8	#8 @ 6	#8 @ 6	#8 @ 6	#9 @ 6	#10 @ 6	#11 @ 6
ⓒ bars	#6 @ 12	#6 @ 12	#6 @ 8	#7 @ 8	#7 @ 6	#8 @ 6	#8 @ 6	#9 @ 6	#10 @ 6	#11 @ 6
ⓓ bars ⌣	#6 @ 12	#6 @ 12	#6 @ 8	#7 @ 8	#7 @ 6	#8 @ 6	#8 @ 6	#9 @ 6	#10 @ 6	#11 @ 6

NOTES (THIS SHEET ONLY):

1. For dimensions "W", "Ls", "Lf" and "Hw", see Design WQV table on "Austin Vault Sand Filter Legend" sheet.
2. For footing details not shown, see "Austin Wall Sand Filter Details No. 1 and No. 2" sheets.
3. The contractor has the option of matching the Sedimentation Basin wall thickness with the Filtration Basin wall thickness. Thicker design wall must be used at no additional cost to the Department.
4. For additional corner reinforcement not shown see Typical Corner Detail on "Austin Wall Sand Filter Details No. 1" sheet.
5. * - For details see "Drainage Plans".
6. For project specific AVFS elevations, see Wall Design Elevation Table on the drainage profile sheets.

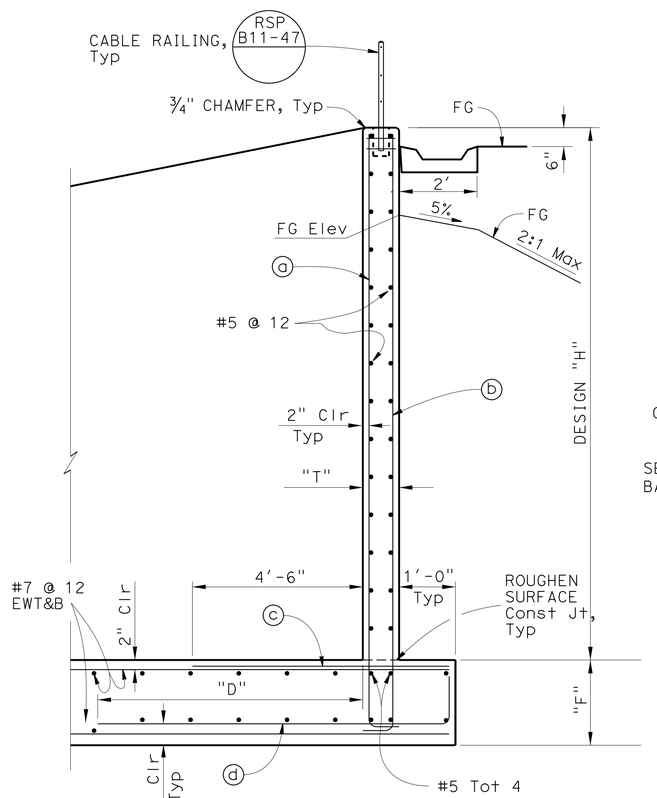

TYPICAL SECTION

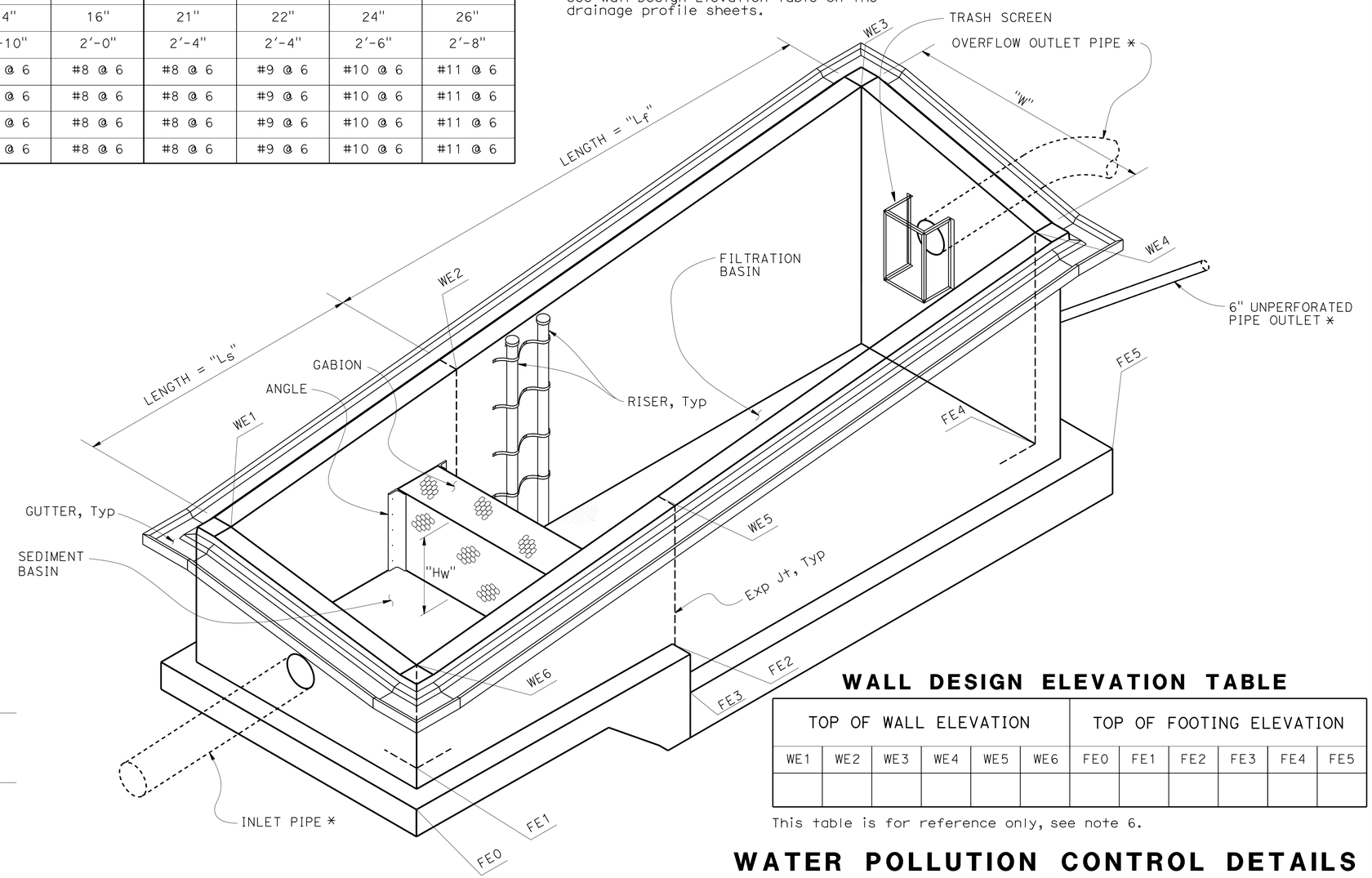

AUSTIN VAULT SAND FILTER DRAINAGE SYSTEM

NOTE: Steel ladders and cable railings not shown for clarity.

WALL DESIGN ELEVATION TABLE

TOP OF WALL ELEVATION						TOP OF FOOTING ELEVATION					
WE1	WE2	WE3	WE4	WE5	WE6	FE0	FE1	FE2	FE3	FE4	FE5

This table is for reference only, see note 6.

WATER POLLUTION CONTROL DETAILS
AUSTIN VAULT SAND FILTER
LAYOUT No. 1

NO SCALE

WD-26

STATE OF CALIFORNIA - DEPARTMENT OF TRANSPORTATION
Caltrans® HYDRAULICS

FUNCTIONAL SUPERVISOR: TIMOTHY B. SOBELMAN
CALCULATED-DESIGNED BY: D. WANG
CHECKED BY: L. HE
REVISED BY
DATE REVISED

LAST REVISION 04-12-13
DATE PLOTTED => 11-SEP-2015
TIME PLOTTED => 11:02

Dist	COUNTY	ROUTE	POST MILES TOTAL PROJECT	SHEET No.	TOTAL SHEETS
07	Ven	33, 101	0.9/T5.8 2.3/13.8	94	239

REGISTERED CIVIL ENGINEER 6/19/15 DATE

6-29-15
PLANS APPROVAL DATE

REGISTERED PROFESSIONAL ENGINEER DOUGLAS DUNRUD No. 47240 Exp. 12/31/15 CIVIL STATE OF CALIFORNIA

THE STATE OF CALIFORNIA OR ITS OFFICERS OR AGENTS SHALL NOT BE RESPONSIBLE FOR THE ACCURACY OR COMPLETENESS OF SCANNED COPIES OF THIS PLAN SHEET.

NOTE (THIS SHEET ONLY):

1. For typical cover and depth of permeable material, see "Austin Vault Sand Filter Layout No. 2" sheet.

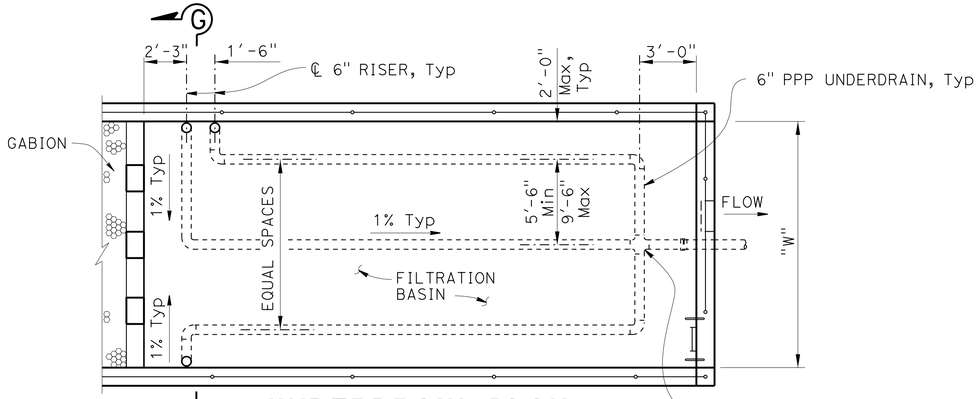

UNDERDRAIN PLAN (FILTRATION BASIN)

"W" = 15' or 21'
AVSF Type = (S or L 3,500)

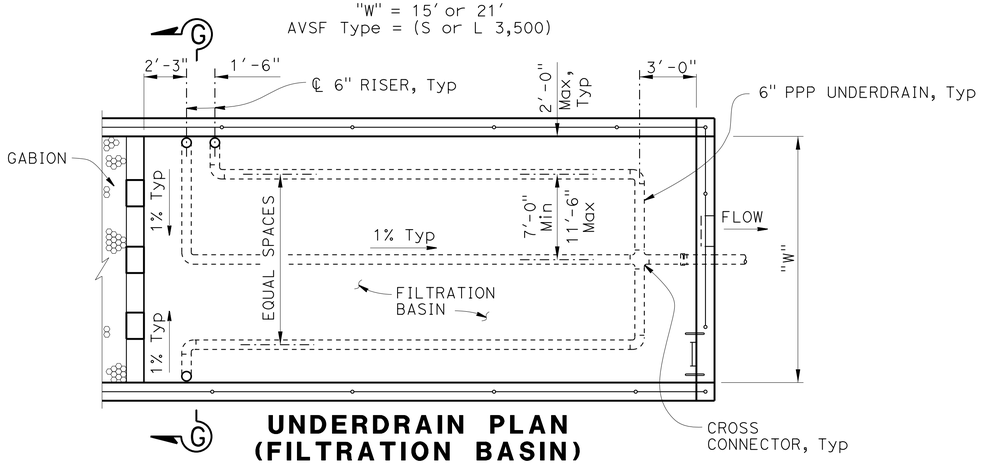

UNDERDRAIN PLAN (FILTRATION BASIN)

"W" = 18', 24' or 27'
AVSF Type = (S or L 5,000, L 10,000)

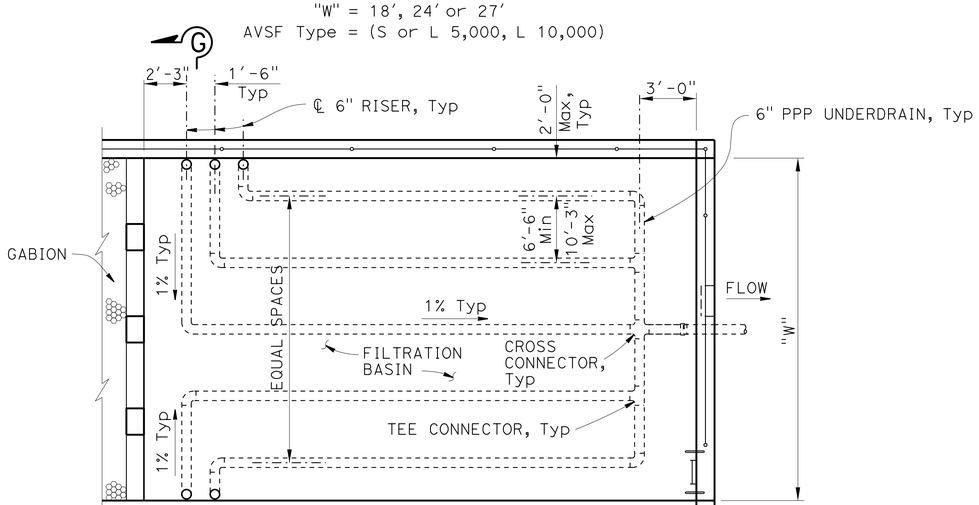

UNDERDRAIN PLAN (FILTRATION BASIN)

"W" = 30', 36' or 45'
AVSF Type = (S 10,000, S or L 15,000)

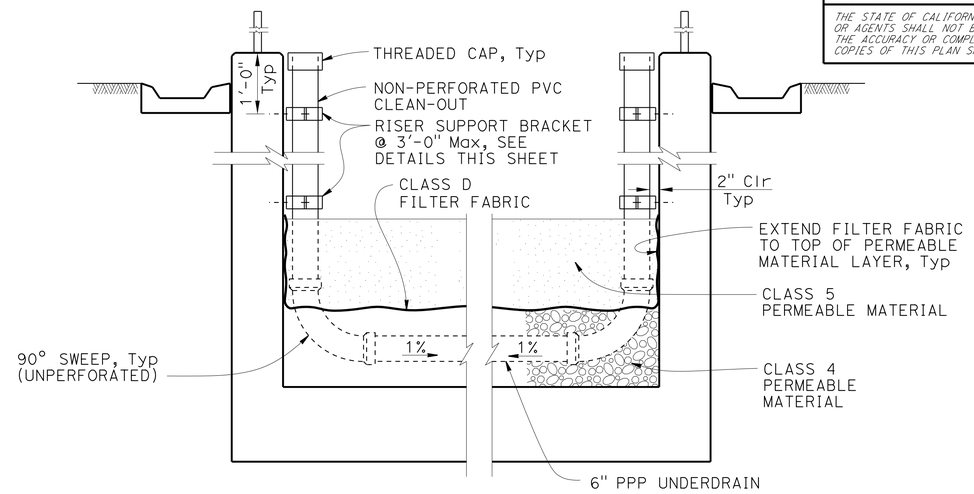

SECTION G - G

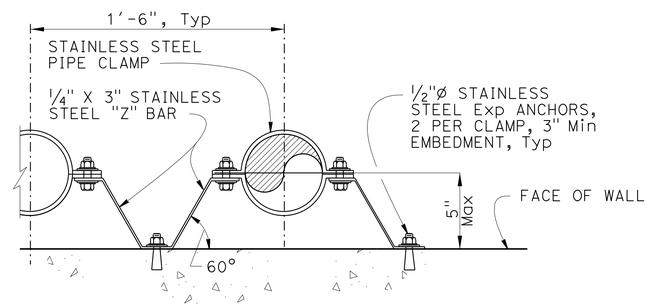

RISER SUPPORT BRACKET DETAIL

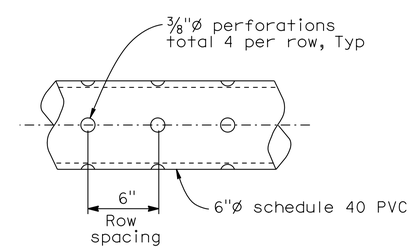

PERFORATED UNDERDRAIN PIPE

No Scale

WATER POLLUTION CONTROL DETAILS
AUSTIN VAULT SAND FILTER UNDERDRAIN DETAILS

NO SCALE

WD-27

STATE OF CALIFORNIA - DEPARTMENT OF TRANSPORTATION
Caltrans®
HYDRAULICS

FUNCTIONAL SUPERVISOR: TIMOTHY B. SOBELMAN
CALCULATED-DESIGNED BY: D. WANG
CHECKED BY: L. HE
REVISED BY
DATE REVISED

LAST REVISION 04-12-13
DATE PLOTTED => 11-SEP-2015
TIME PLOTTED => 11:02

Dist	COUNTY	ROUTE	POST MILES TOTAL PROJECT	SHEET No.	TOTAL SHEETS
07	Ven	33, 101	0.9/T5.8 2.3/13.8	95	239

REGISTERED CIVIL ENGINEER 6/19/15 DATE

6-29-15
PLANS APPROVAL DATE

REGISTERED PROFESSIONAL ENGINEER
DOUGLAS DUNRUD
No. 47240
Exp. 12/31/15
CIVIL
STATE OF CALIFORNIA

THE STATE OF CALIFORNIA OR ITS OFFICERS OR AGENTS SHALL NOT BE RESPONSIBLE FOR THE ACCURACY OR COMPLETENESS OF SCANNED COPIES OF THIS PLAN SHEET.

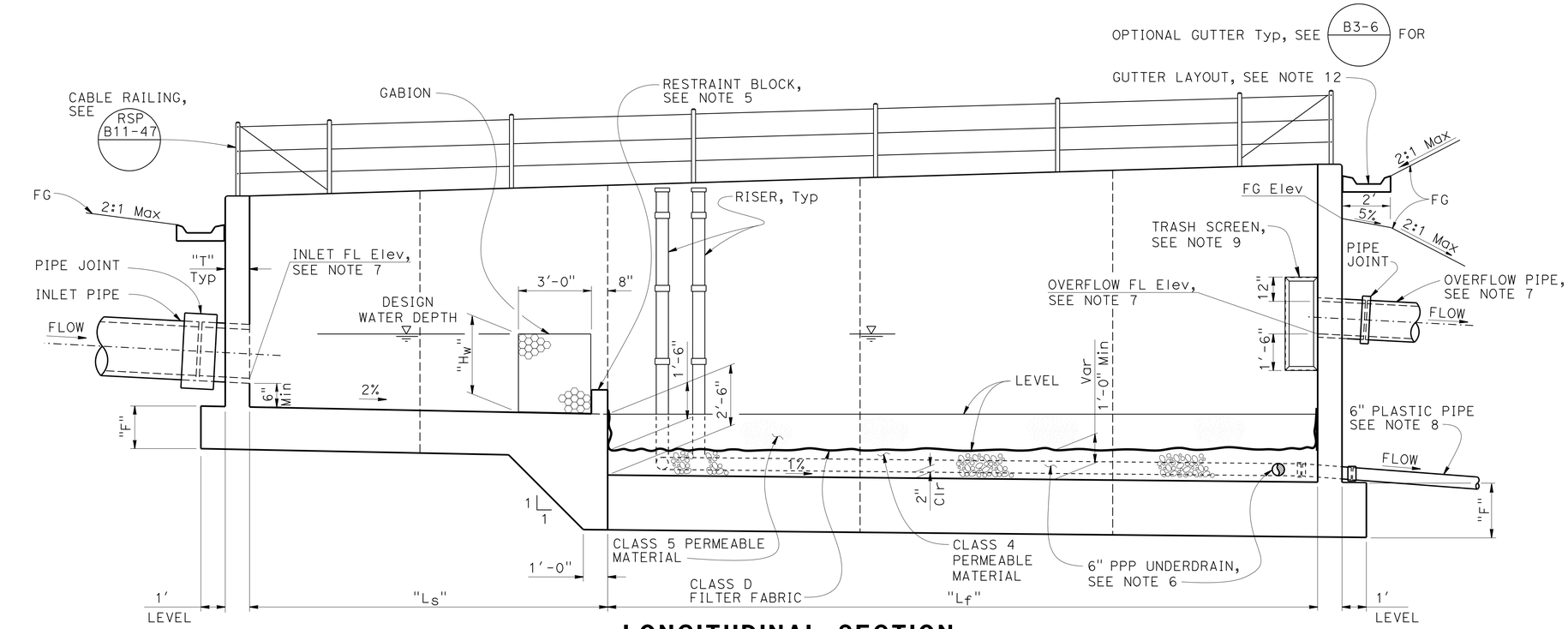

LONGITUDINAL SECTION

NOTE: Ladder not shown for clarity.

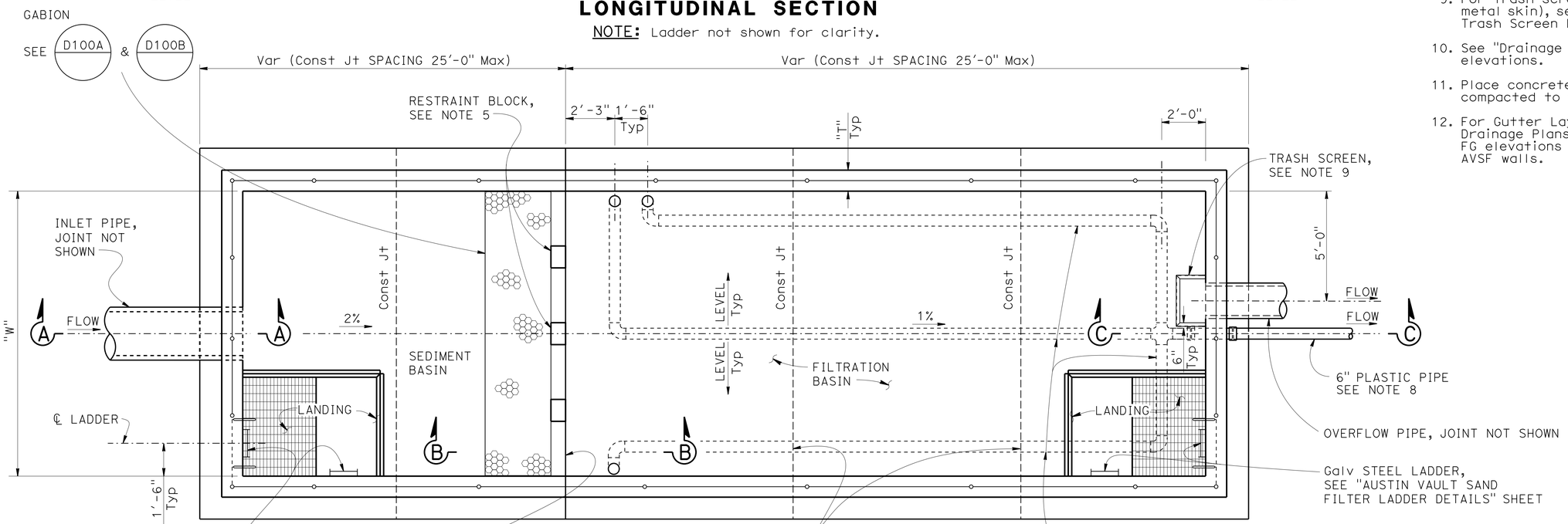

PLAN

NOTE: Gutter not shown for clarity.

NOTES (THIS SHEET ONLY)

1. For dimensions "W", "Ls", "Lf" and "Hw", see Design WQV table on "Austin Vault Sand Filter Legend" sheet.
2. For dimensions "T" and "F", see "Austin Vault Sand Filter Layout No. 1" sheet.
3. For Typical Section, see "Austin Vault Sand Filter Layout No. 1" sheet.
4. For Section A-A, B-B and C-C, see "Austin Vault Sand Filter Details No. 1" sheet.
5. For restraint block details, see "Austin Vault Sand Filter Details No. 1" and "Details No. 2" sheets.
6. For details of PPP underdrain system, see "Austin Vault Sand Filter Underdrain Details" sheet.
7. For Layout and FL elevations of inlet and overflow pipe, see "Drainage Plans and Drainage Profiles" sheets.
8. For slope of outlet plastic pipe, see "Drainage Profiles".
9. For trash screen details (frame and perforated metal skin), see "Austin Vault Sand Filter Trash Screen Details" sheet.
10. See "Drainage Profiles" for top of wall elevations.
11. Place concrete on base or native material compacted to 95% relative compaction.
12. For Gutter Layout and FL elevations, see Drainage Plans and Drainage Profiles. Show FG elevations at all grade breaks along the AVSF walls.

WATER POLLUTION CONTROL DETAILS
AUSTIN VAULT SAND FILTER
LAYOUT No. 2

NO SCALE

WD-28

REVISED BY	DATE REVISED

CALCULATED-DESIGNED BY: D. WANG
CHECKED BY: L. HE
FUNCTIONAL SUPERVISOR: TIMOTHY B. SOBELMAN

STATE OF CALIFORNIA - DEPARTMENT OF TRANSPORTATION
HYDRAULICS
Caltrans

LAST REVISION 04-12-13
DATE PLOTTED => 11-SEP-2015
TIME PLOTTED => 11:02

Dist	COUNTY	ROUTE	POST MILES TOTAL PROJECT	SHEET No.	TOTAL SHEETS
07	Ven	33, 101	0.9/T5.8 2.3/13.8	96	239

REGISTERED CIVIL ENGINEER 6/19/15 DATE

6-29-15
PLANS APPROVAL DATE

REGISTERED PROFESSIONAL ENGINEER DOUGLAS DUNRUD No. 47240 Exp. 12/31/15 CIVIL STATE OF CALIFORNIA

THE STATE OF CALIFORNIA OR ITS OFFICERS OR AGENTS SHALL NOT BE RESPONSIBLE FOR THE ACCURACY OR COMPLETENESS OF SCANNED COPIES OF THIS PLAN SHEET.

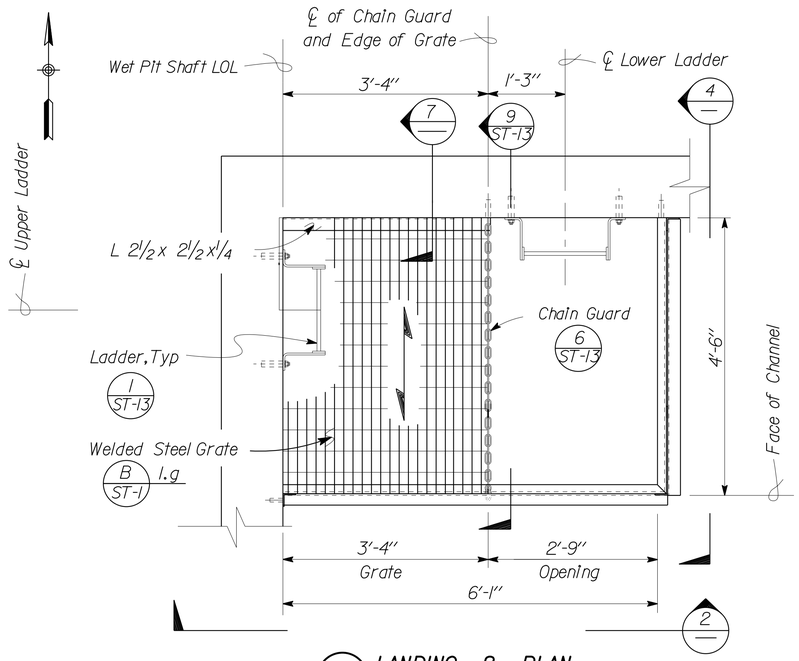

1 LANDING 2 PLAN
Scale ¾" = 1' - 0"

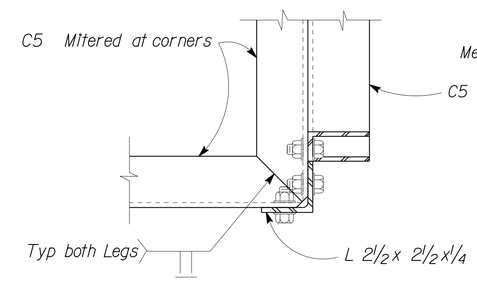

3 C 5 MITER JOINT
Scale 3" = 1' - 0"

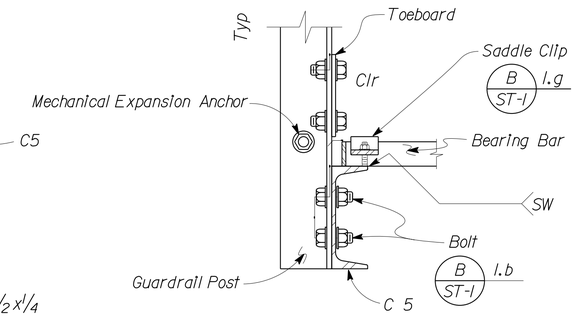

5 GRATE SUPPORT DETAIL
Scale 3" = 1' - 0"

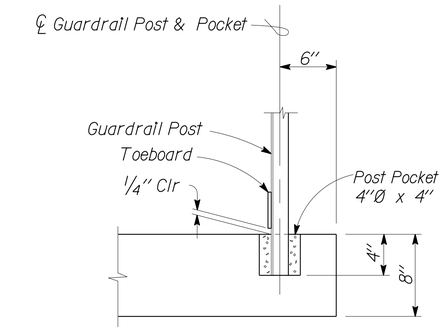

NOTE
Pack with Epoxy Grout, Typ

6 RAILING POST POCKET DETAIL
Scale 1½" = 1'-0"

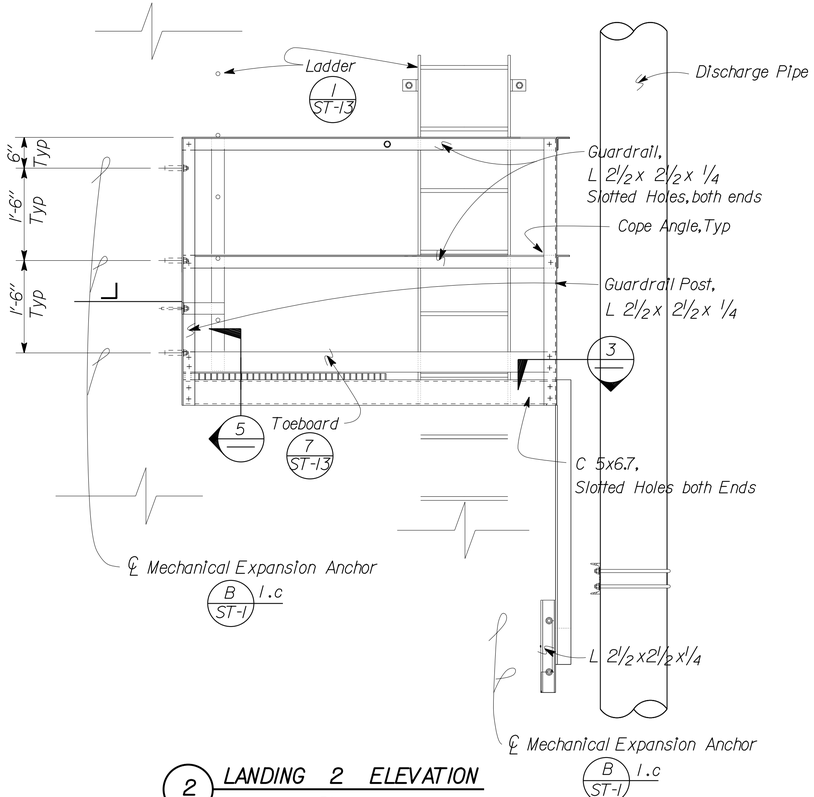

2 LANDING 2 ELEVATION
Scale ¾" = 1' - 0"

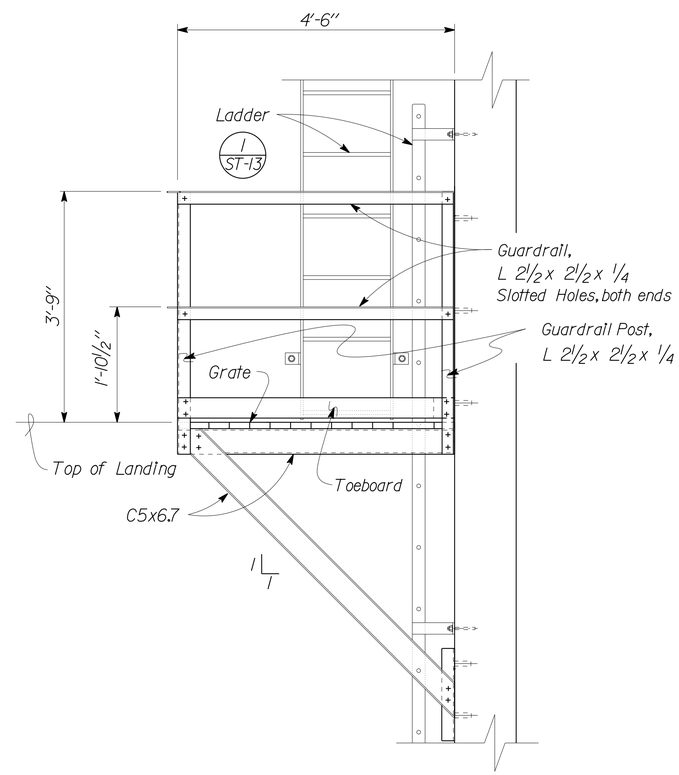

4 LANDING 2 SIDE ELEVATION
Scale ¾" = 1' - 0"

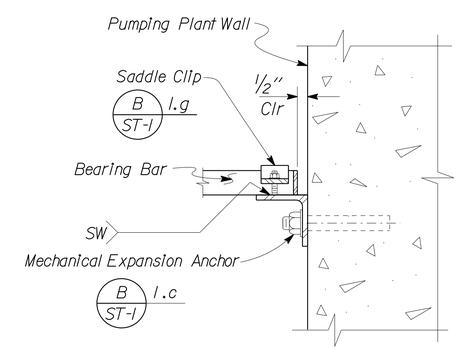

7 GRATE SUPPORT DETAIL
Scale 3" = 1' - 0"

WATER POLLUTION CONTROL DETAILS
LANDING DETAILS
NO SCALE

WD-29

STATE OF CALIFORNIA - DEPARTMENT OF TRANSPORTATION
Caltrans® HYDRAULICS
FUNCTIONAL SUPERVISOR: TIMOTHY B. SOBELMAN
CALCULATED-DESIGNED BY: D. WANG
CHECKED BY: L. HE
REVISED BY / DATE REVISED

LAST REVISION 04-12-13 | DATE PLOTTED => 11-SEP-2015 | TIME PLOTTED => 11:02

Dist	COUNTY	ROUTE	POST MILES TOTAL PROJECT	SHEET No.	TOTAL SHEETS
07	Ven	33, 101	0.9/T5.8 2.3/13.8	97	239

Paul Fong 6/20/15
REGISTERED CIVIL ENGINEER DATE

6-29-15
PLANS APPROVAL DATE

REGISTERED PROFESSIONAL ENGINEER
PAUL FONG
No. C67053
Exp. 9/30/16
CIVIL
STATE OF CALIFORNIA

THE STATE OF CALIFORNIA OR ITS OFFICERS OR AGENTS SHALL NOT BE RESPONSIBLE FOR THE ACCURACY OR COMPLETENESS OF SCANNED COPIES OF THIS PLAN SHEET.

NOTES:

1. PIPE JOINTS ARE STANDARD OR AS NOTED ON PLANS.
2. (N) NOT A SEPARATE PAY ITEM, FOR INFORMATION ONLY.

SUMMARY OF DRAINAGE QUANTITIES

DRAINAGE SHEET	DRAINAGE SYSTEM No. ⬡	DRAINAGE UNIT ○	HEIGHT OF INLET H OR V (N) F†	MINOR CONCRETE (MINOR STRUCTURE) CY	MINOR CONCRETE (BACKFILL) CY	MISCELLANEOUS IRON AND STEEL LB	ROCK SLOPE PROTECTION (FACING, METHOD B) CY	ROCK SLOPE PROTECTION FABRIC (CLASS 8) SQYD	DITCH EXCAVATION CY	REMOVE INLET EA	REMOVE PIPE LF	REMOVE FLARED END SECTION EA	CAP INLET EA	18" CORRUGATED STEEL PIPE (0.109" THICK) LF	24" CORRUGATED STEEL PIPE (0.109" THICK) LF	18" REINFORCED CONCRETE PIPE LF	24" REINFORCED CONCRETE PIPE LF	18" STEEL FLARED END SECTION EA	24" STEEL FLARED END SECTION EA	36" PRECAST Conc PIPE MANHOLE LF	10" WELDED STEEL PIPE (0.250" THICK) LF	6" NON-PERFORATED PLASTIC PIPE UNDERDRAIN LF	HOT MIX ASPHALT (TYPE A) * TON	PLACE HOT MIX (MISC AREA) * SQYD	ANCHOR ASSEMBLY EA	TYPE 24-12 FRAME AND GRATE (N) EA	MANHOLE FRAME AND COVER (N) EA	MAXIMUM COVER (N) F†	AUSTIN VAULT SAND FILTER/GROSS SOLIDS REMOVAL DEVICE: STRUCTURE EXCAVATION CY	STRUCTURE BACKFILL CY	STRUCTURAL CONCRETE CY	BAR REINFORCING STEEL LB	CLASS 4 PERMEABLE MATERIAL CY	CLASS 5 PERMEABLE MATERIAL CY	GABION CY	CABLE RAILING LF	CLASS D FILTER FABRIC SQYD	6" NON-PERFORATED PLASTIC PIPE UNDERDRAIN LF	6" PERFORATED PLASTIC PIPE UNDERDRAIN LF	JOINT SEAL (TYPE AL) LF	MISCELLANEOUS METAL LB	MISCELLANEOUS METAL (INCLINED SCREEN) LB	DESCRIPTION	STATION
W-1	1	a							1.4														1.55	9.32																			AC OVERSIDE DRAIN	44.20′ R†, 226+00.00, "VE 33" LINE
		b					2.25	8.2																																			RSP (FACING, METHOD B)	66.50′ R†, 226+00.00, "VE 33" LINE
W-2	2	a									12																																REMOVE 12" CSP	
		b	5	1.92		580																					2																GD-1 INLET	42.21′ L†, 281+70.00, "VE 33" LINE
		c													15.4													3															24" CSP	
		d																											26	11	7	2,770				27				430	170	INCLINED SCREEN TYPE A GSRD	57.58′ L†, 281+70.00, "VE 33" LINE
		e													9.8													4.7															24" CSP	
		f																1																									24" STEEL FES	74.22′ L†, 281+70.00, "VE 33" LINE
		g					2.9	10																																			RSP (FACING, METHOD B)	74.22′ L†, 281+70.00, "VE 33" LINE
	3	a	5	1.92		580																					2																GD-1 INLET	41.21′ L†, 285+75.00, "VE 33" LINE
		b													15.4													3															24" CSP	
		c																											28	12	7	2,890				27				440	170	INCLINED SCREEN TYPE A GSRD	56.58′ L†, 285+75.00, "VE 33" LINE
		d													10.5													5.3															24" CSP	
		e																1																									24" STEEL FES	73.89′ L†, 285+75.00, "VE 33" LINE
		f					2.90	10																																			RSP (FACING, METHOD B)	73.89′ L†, 285+75.00, "VE 33" LINE
SHEET TOTAL				3.84		1,160	8.05	28.2	1.4		12				51.1			2					1.55	9.32		4			54	23	14	5,660				54				870	340		

* INCLUDED IN HIGHWAY QUANTITIES

WATER POLLUTION CONTROL QUANTITIES

WQ-1

STATE OF CALIFORNIA - DEPARTMENT OF TRANSPORTATION
Caltrans HYDRAULICS

FUNCTIONAL SUPERVISOR: DAVE BHALLA
CALCULATED-DESIGNED BY: PAUL FONG
CHECKED BY
REVISED BY: ROMULO D. ROBENIOL
DATE REVISED

LAST REVISION 00-00-00
DATE PLOTTED => 11-SEP-2015
TIME PLOTTED => 11:02

Dist	COUNTY	ROUTE	POST MILES TOTAL PROJECT	SHEET No.	TOTAL SHEETS
07	Ven	33, 101	0.9/T5.8 2.3/13.8	98	239

Paul Fong 6/20/15
REGISTERED CIVIL ENGINEER DATE

6-29-15
PLANS APPROVAL DATE

REGISTERED PROFESSIONAL ENGINEER PAUL FONG No. C67053 Exp. 9/30/16 CIVIL STATE OF CALIFORNIA

THE STATE OF CALIFORNIA OR ITS OFFICERS OR AGENTS SHALL NOT BE RESPONSIBLE FOR THE ACCURACY OR COMPLETENESS OF SCANNED COPIES OF THIS PLAN SHEET.

NOTES:

1. PIPE JOINTS ARE STANDARD OR AS NOTED ON PLANS.
2. (N) NOT A SEPARATE PAY ITEM, FOR INFORMATION ONLY.

SUMMARY OF DRAINAGE QUANTITIES

DRAINAGE SHEET	DRAINAGE SYSTEM No. ⬡	DRAINAGE UNIT ○	HEIGHT OF INLET H OR V (N) F†	MINOR CONCRETE (MINOR STRUCTURE) CY	MINOR CONCRETE (BACKFILL) CY	MISCELLANEOUS IRON AND STEEL LB	ROCK SLOPE PROTECTION (FACING, METHOD B) CY	ROCK SLOPE PROTECTION FABRIC (CLASS 8) SQYD	DITCH EXCAVATION CY	REMOVE INLET EA	REMOVE PIPE LF	REMOVE FLARED END SECTION EA	CAP INLET EA	18" CORRUGATED STEEL PIPE (0.109" THICK) LF	24" CORRUGATED STEEL PIPE (0.109" THICK) LF	18" REINFORCED CONCRETE PIPE LF	24" REINFORCED CONCRETE PIPE LF	18" STEEL FLARED END SECTION EA	24" STEEL FLARED END SECTION EA	36" PRECAST Conc PIPE MANHOLE LF	10" WELDED STEEL PIPE (0.250" THICK) LF	6" NON-PERFORATED PLASTIC PIPE UNDERDRAIN LF	HOT MIX ASPHALT (TYPE A) * TON	PLACE HOT MIX (MISC AREA) * SQYD	ANCHOR ASSEMBLY EA	TYPE 24-12 FRAME AND GRATE (N) EA	MANHOLE FRAME AND COVER (N) EA	MAXIMUM COVER (N) F†	AUSTIN VAULT SAND FILTER/GROSS SOLIDS REMOVAL DEVICE: STRUCTURE EXCAVATION CY	STRUCTURE BACKFILL CY	STRUCTURAL CONCRETE CY	BAR REINFORCING STEEL LB	CLASS 4 PERMEABLE MATERIAL CY	CLASS 5 PERMEABLE MATERIAL CY	GABION CY	CABLE RAILING LF	CLASS D FILTER FABRIC SQYD	6" NON-PERFORATED PLASTIC PIPE UNDERDRAIN LF	6" PERFORATED PLASTIC PIPE UNDERDRAIN LF	JOINT SEAL (TYPE AL) LF	MISCELLANEOUS METAL LB	MISCELLANEOUS METAL (INCLINED SCREEN) LB	DESCRIPTION	STATION
W-3	4	a									12																																	REMOVE 12" CSP	
		b	4.4	1.75		580																					2																	GD-1 INLET	41.85′ L†, 291+10.00, "VE 33" LINE
		c													15.2														2.4															24" CSP	
		d																												26	11	7	2,770				27					430	170	INCLINED SCREEN TYPE A GSRD	57.02′ L†, 291+10.00, "VE 33" LINE
		e													10.1														4.7															24" CSP	
		f																	1																									24" STEEL FES	74.00′ L†, 291+10.00, "VE 33" LINE
		g					2.90	10																																				RSP (FACING, METHOD B)	74.00′ L†, 291+10.00, "VE 33" LINE
	5	a									12																																	REMOVE 12" CSP	
		b	3.6	1.52		580																					2																	GD-1 INLET	41.42′ L†, 298+10.00, "VE 33" LINE
		c												15.2															2.1															18" CSP	
		d																												24	10	7	2,730				27					430	170	INCLINED SCREEN TYPE A GSRD	57.58′ L†, 298+10.00, "VE 33" LINE
		e													10.1														4															24" CSP	
		f																	1																									24" STEEL FES	74.50′ L†, 298+10.00, "VE 33" LINE
		g					2.9	10																																				RSP (FACING, METHOD B)	74.50′ L†, 298+10.00, "VE 33" LINE
W-4	6	a					2.40	8.6																																				RSP (FACING, METHOD B)	117.40′ R†, 336+80.00, "VE 33" LINE
		b																1																										18" STEEL FES	117.40′ R†, 336+80.00, "VE 33" LINE
		c												48												1			2.1															18" CSP	
		d	3.5	1.06		326																					1																	TYPE G-1 INLET	63.50′ R†, 336+87.98, "VE 33" LINE
		e														144													2.1															18" RCP	
SHEET TOTAL				4.33		1,486	8.20	28.6			24			63.2	35.4	144		1	2							1	5			50	21	14	5,500				54					860	340		

* INCLUDED IN HIGHWAY QUANTITIES

WATER POLLUTION CONTROL QUANTITIES

WQ-2

STATE OF CALIFORNIA - DEPARTMENT OF TRANSPORTATION
Caltrans HYDRAULICS

FUNCTIONAL SUPERVISOR: DAVE BHALLA
CALCULATED-DESIGNED BY: ROMULO D. ROBENIOL
CHECKED BY: PAUL FONG
REVISED BY
DATE REVISED

LAST REVISION 00-00-00
DATE PLOTTED => 11-SEP-2015
TIME PLOTTED => 11:02

Dist	COUNTY	ROUTE	POST MILES TOTAL PROJECT	SHEET No.	TOTAL SHEETS
07	Ven	33, 101	0.9/T5.8 2.3/13.8	99	239

Paul Fong 6/20/15
REGISTERED CIVIL ENGINEER DATE

6-29-15
PLANS APPROVAL DATE

REGISTERED PROFESSIONAL ENGINEER
PAUL FONG
No. C67053
Exp. 9/30/16
CIVIL
STATE OF CALIFORNIA

THE STATE OF CALIFORNIA OR ITS OFFICERS OR AGENTS SHALL NOT BE RESPONSIBLE FOR THE ACCURACY OR COMPLETENESS OF SCANNED COPIES OF THIS PLAN SHEET.

NOTES:

1. PIPE JOINTS ARE STANDARD OR AS NOTED ON PLANS.
2. (N) NOT A SEPARATE PAY ITEM, FOR INFORMATION ONLY.

SUMMARY OF DRAINAGE QUANTITIES

DRAINAGE SHEET	DRAINAGE SYSTEM No. ⬡	DRAINAGE UNIT ○	HEIGHT OF INLET H OR V (N) F†	MINOR CONCRETE (MINOR STRUCTURE) CY	MINOR CONCRETE (BACKFILL) CY	MISCELLANEOUS IRON AND STEEL LB	ROCK SLOPE PROTECTION (FACING, METHOD B) CY	ROCK SLOPE PROTECTION FABRIC (CLASS 8) SQYD	DITCH EXCAVATION CY	REMOVE INLET EA	REMOVE PIPE LF	REMOVE FLARED END SECTION EA	CAP INLET EA	18" CORRUGATED STEEL PIPE (0.109" THICK) LF	24" CORRUGATED STEEL PIPE (0.109" THICK) LF	18" REINFORCED CONCRETE PIPE LF	24" REINFORCED CONCRETE PIPE LF	18" STEEL FLARED END SECTION EA	24" STEEL FLARED END SECTION EA	36" PRECAST Conc PIPE MANHOLE LF	10" WELDED STEEL PIPE (0.250" THICK) LF	6" NON-PERFORATED PLASTIC PIPE UNDERDRAIN LF	HOT MIX ASPHALT (TYPE A) * TON	PLACE HOT MIX (MISC AREA) * SQYD	ANCHOR ASSEMBLY EA	TYPE 24-12 FRAME AND GRATE (N) EA	MANHOLE FRAME AND COVER (N) EA	MAXIMUM COVER (N) F†	AUSTIN VAULT SAND FILTER/GROSS SOLIDS REMOVAL DEVICE: STRUCTURE EXCAVATION CY	STRUCTURE BACKFILL CY	STRUCTURAL CONCRETE CY	BAR REINFORCING STEEL LB	CLASS 4 PERMEABLE MATERIAL CY	CLASS 5 PERMEABLE MATERIAL CY	GABION CY	CABLE RAILING LF	CLASS D FILTER FABRIC SQYD	6" NON-PERFORATED PLASTIC PIPE UNDERDRAIN LF	6" PERFORATED PLASTIC PIPE UNDERDRAIN LF	JOINT SEAL (TYPE AL) LF	MISCELLANEOUS METAL LB	MISCELLANEOUS METAL (INCLINED SCREEN) LB	DESCRIPTION	STATION
W-4	6	f								1																																			REMOVE INLET	64.80′ R†, 338+34.22, "VE 33" LINE
		g	3.6	1.08		326																				1																			TYPE G-1 INLET	64.80′ R†, 338+34.22, "VE 33" LINE
W-5	7	a									18.7																																		REMOVE 18" CSP	
		b												14.4															2																18" CSP	
		c																												26	11	7	2,770				27					430	170	INCLINED SCREEN TYPE A GSRD	80.52′ L†, 344+85.70, "VE 33" LINE
W-6	8	a																					0.77	4.7																					AC OVERSIDE DRAIN	64.10′ R†, 377+70.00, "VE 33" LINE
		b					2.25	8.2																																					RSP (FACING, METHOD B)	75.50′ R†, 377+70.00, "VE 33" LINE
	9	a									18.2																																		REMOVE 18" CSP	
		b													14														4.1																24" CSP	
		c																												28	12	7	2,870				27					440	170	INCLINED SCREEN TYPE A GSRD	79.30′ L†, 384+60.62, "VE 33" LINE
		d											1																																CAP INLET	64.10′ R†, 384+60.62, "VE 33" LINE
W-7	10	a									18																																		REMOVE 18" CSP	
		b													13.5														2.1																24" CSP	
		c																												26	12	7	2,890				27					440	170	INCLINED SCREEN TYPE A GSRD	78.93′ L†, 450+36.50, "VE 33" LINE
SHEET TOTAL				1.08		326	2.25	8.2		1	54.9		1	14.4	27.5								0.77	4.7		1				80	35	21	8,530				81					1,310	510		

* INCLUDED IN HIGHWAY QUANTITIES

WATER POLLUTION CONTROL QUANTITIES

WQ-3

STATE OF CALIFORNIA - DEPARTMENT OF TRANSPORTATION
Caltrans HYDRAULICS

FUNCTIONAL SUPERVISOR: DAVE BHALLA
CALCULATED-DESIGNED BY: ROMULO D. ROBENIOL
CHECKED BY: PAUL FONG
REVISED BY
DATE REVISED

LAST REVISION 00-00-00
DATE PLOTTED => 11-SEP-2015
TIME PLOTTED => 11:02

Dist	COUNTY	ROUTE	POST MILES TOTAL PROJECT	SHEET No.	TOTAL SHEETS
07	Ven	33, 101	0.9/T5.8 2.3/13.8	100	239

Paul Fong 6/20/15
REGISTERED CIVIL ENGINEER DATE

6-29-15
PLANS APPROVAL DATE

REGISTERED PROFESSIONAL ENGINEER
PAUL FONG
No. C67053
Exp. 9/30/16
CIVIL
STATE OF CALIFORNIA

THE STATE OF CALIFORNIA OR ITS OFFICERS OR AGENTS SHALL NOT BE RESPONSIBLE FOR THE ACCURACY OR COMPLETENESS OF SCANNED COPIES OF THIS PLAN SHEET.

NOTES:

1. PIPE JOINTS ARE STANDARD OR AS NOTED ON PLANS.
2. (N) NOT A SEPARATE PAY ITEM, FOR INFORMATION ONLY.

SUMMARY OF DRAINAGE QUANTITIES

DRAINAGE SHEET	⬡ DRAINAGE SYSTEM No.	○ DRAINAGE UNIT	HEIGHT OF INLET H OR V (N)	MINOR CONCRETE (MINOR STRUCTURE)	MINOR CONCRETE (BACKFILL)	MISCELLANEOUS IRON AND STEEL	ROCK SLOPE PROTECTION (FACING, METHOD B)	ROCK SLOPE PROTECTION FABRIC (CLASS 8)	DITCH EXCAVATION	REMOVE INLET	REMOVE PIPE	REMOVE FLARED END SECTION	CAP INLET	18" CORRUGATED STEEL PIPE (0.109" THICK)	24" CORRUGATED STEEL PIPE (0.109" THICK)	18" REINFORCED CONCRETE PIPE	24" REINFORCED CONCRETE PIPE	18" STEEL FLARED END SECTION	24" STEEL FLARED END SECTION	36" PRECAST Conc PIPE MANHOLE	10" WELDED STEEL PIPE (0.250" THICK)	6" NON-PERFORATED PLASTIC PIPE UNDERDRAIN	HOT MIX ASPHALT (TYPE A) *	PLACE HOT MIX (MISC AREA) *	ANCHOR ASSEMBLY	TYPE 24-12 FRAME AND GRATE (N)	MANHOLE FRAME AND COVER (N)	MAXIMUM COVER (N)	AUSTIN VAULT SAND FILTER / GROSS SOLIDS REMOVAL DEVICE: STRUCTURE EXCAVATION	STRUCTURE BACKFILL	STRUCTURAL CONCRETE	BAR REINFORCING STEEL	CLASS 4 PERMEABLE MATERIAL	CLASS 5 PERMEABLE MATERIAL	GABION	CABLE RAILING	CLASS D FILTER FABRIC	6" NON-PERFORATED PLASTIC PIPE UNDERDRAIN	6" PERFORATED PLASTIC PIPE UNDERDRAIN	JOINT SEAL (TYPE AL)	MISCELLANEOUS METAL	MISCELLANEOUS METAL (INCLINED SCREEN)	DESCRIPTION	STATION
			F†	CY	CY	LB	CY	SQYD	CY	EA	LF	EA	EA	LF	LF	LF	LF	EA	EA	LF	LF	LF	TON	SQYD	EA	EA	EA	F†	CY	CY	CY	LB	CY	CY	CY	LF	SQYD	LF	LF	LF	LB	LB		
W-8	11	a	3.5	1.06		326																				1																		TYPE G-1 INLET	63.50′ R†, 461+80.00, "VE 33" LINE
		b												48											1			2.1																18" CSP	
		c																1																										18" STEEL FES	123.85′ R†, 461+72.40, "VE 33" LINE
		d					2.4	8.6																																				RSP (FACING, METHOD B)	123.85′ R†, 461+72.40, "VE 33" LINE
W-9	12	a		2.22																																								CONCRETE PAD	65.50′ R†, 479+27.00, "VE 33" LINE
		b					2.25	8.2																																				RSP (FACING, METHOD B)	71.50′ R†, 479+20.00, "VE 33" LINE
W-10	13	a																1																										18" STEEL FES	126.25′ L†, 118+85.75 "VE 101" LINE
		b												40														3.6																18" CSP	
		c	7.1	4		435														1.3							1																MANHOLE No. 1	121.65′ L†, 118+44.11 "VE 101" LINE
		d																				14.5						5.5																6" PLASTIC PIPE	
		e												15														0.2																18" CSP	
		f																											1,000	225	200	59,752	44	37	8	169	112	43	155	184	115		AVSF TYPE L-3500-4.5	
		g														14												3.4																18" RCP	
		h	6.0	3.52		435														1.3							1																MANHOLE No. 1	121.65′ L†, 117+44.11 "VE 101" LINE
		i														15												5.3																18" RCP	
		j	9.0	6.06		435														1.3							1																MANHOLE No. 1	103.93′ L†, 117+44.11 "VE 101" LINE
		k														110												7.1																18" RCP	
		l	4.0	2.65		435														1.3							1																MANHOLE No. 1	100.08′ L†, 118+56.11 "VE 101" LINE
		m												12														2.1																18" CSP	
SHEET TOTAL				19.51		2,066	4.65	16.8						115		139		2		5.2		14.5			1	1	4		1,000	225	200	59,752	44	37	8	169	112	43	155	184	115			

* INCLUDED IN HIGHWAY QUANTITIES

WATER POLLUTION CONTROL QUANTITIES

WQ-4

STATE OF CALIFORNIA - DEPARTMENT OF TRANSPORTATION
Caltrans HYDRAULICS

FUNCTIONAL SUPERVISOR: DAVE BHALLA
CALCULATED-DESIGNED BY: ROMULO D. ROBENIOL
CHECKED BY: PAUL FONG
REVISED BY
DATE REVISED

LAST REVISION 00-00-00
DATE PLOTTED => 11-SEP-2015
TIME PLOTTED => 11:02