Dist	COUNTY	ROUTE	POST MILES TOTAL PROJECT	SHEET No.	TOTAL SHEETS
07	LA	5	R87.8/R88.6	1	47

IM-005-3(046)E

STATE OF CALIFORNIA
DEPARTMENT OF TRANSPORTATION

PROJECT PLANS FOR CONSTRUCTION ON
STATE HIGHWAY

IN LOS ANGELES COUNTY
NEAR GORMAN
FROM 0.4 MILE NORTH OF TEJON PASS OVERCROSSING
TO FRAZIER MOUNTAIN UNDERCROSSING

TO BE SUPPLEMENTED BY STANDARD PLANS DATED MAY 2006

INDEX OF PLANS

SHEET No.	DESCRIPTION
1	TITLE AND LOCATION MAP
2-3	TYPICAL CROSS SECTIONS
4-7	LAYOUTS
8-11	PROFILES
12	CONSTRUCTION DETAILS
13-23	DRAINAGE PLANS, PROFILES, DETAILS AND QUANTITIES
24-25	UTILITY PLANS
26	CONSTRUCTION AREA SIGNS
27-29	TRAFFIC HANDLING PLANS AND QUANTITIES
30	PAVEMENT DELINEATION QUANTITIES
31	SUMMARY OF QUANTITIES
32-47	REVISED AND NEW STANDARD PLANS

THE STANDARD PLANS LIST APPLICABLE TO THIS CONTRACT IS INCLUDED IN THE NOTICE TO BIDDERS AND SPECIAL PROVISIONS BOOK.

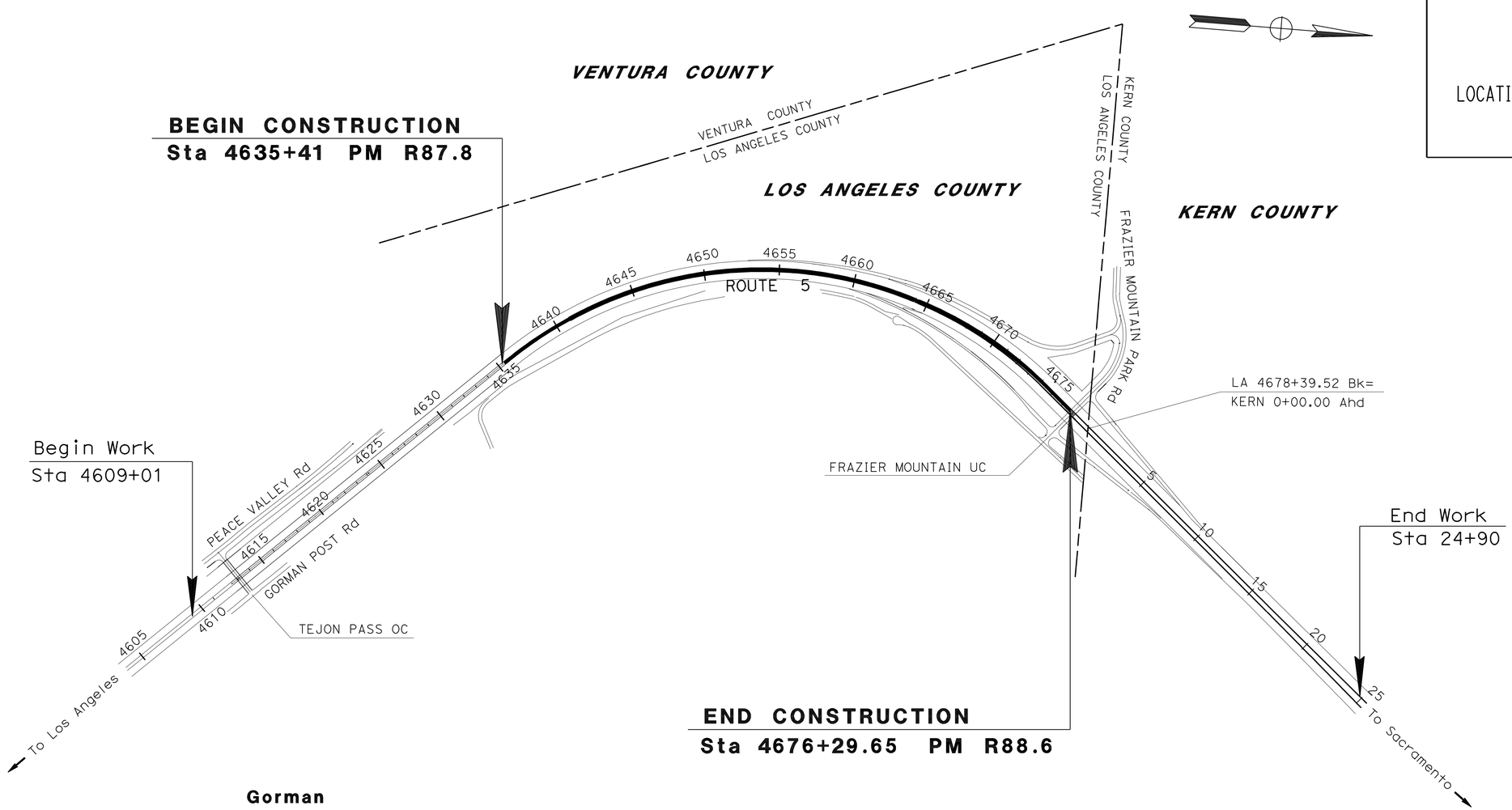

NO SCALE

THE CONTRACTOR SHALL POSSESS THE CLASS (OR CLASSES) OF LICENSE AS SPECIFIED IN THE "NOTICE TO BIDDERS."

PROJECT MANAGER: DENNIS SNYDER

DESIGN ENGINEER: LEWEN KUO

Lewen Kuo 3-9-11
PROJECT ENGINEER REGISTERED CIVIL ENGINEER — DATE

May 23, 2011
PLANS APPROVAL DATE

REGISTERED PROFESSIONAL ENGINEER — LEWEN KUO — No. C52464 — Exp. 12/31/12 — CIVIL — STATE OF CALIFORNIA

THE STATE OF CALIFORNIA OR ITS OFFICERS OR AGENTS SHALL NOT BE RESPONSIBLE FOR THE ACCURACY OR COMPLETENESS OF SCANNED COPIES OF THIS PLAN SHEET.

CONTRACT No.	07-266404
PROJECT ID	0700000499

LAST REVISION 03-8-11 — DATE PLOTTED => 06-JUL-2011 — TIME PLOTTED => 06:00

NOTES:
1. DIMENSIONS OF THE PAVEMENT (STRUCTURAL SECTIONS) ARE SUBJECT TO TOLERANCES SPECIFIED IN THE STANDARD SPECIFICATIONS.
2. THE MARKER PLACED ON THE TOP OF CONCRETE BARRIER SHALL BE 48" C-C.

Dist	COUNTY	ROUTE	POST MILES TOTAL PROJECT	SHEET No.	TOTAL SHEETS
07	LA	5	R87.8/R88.6	2	47

REGISTERED CIVIL ENGINEER 3-9-11 DATE
5-23-11
PLANS APPROVAL DATE

REGISTERED PROFESSIONAL ENGINEER LEWEN KUO No. C52464 Exp. 12/31/12 CIVIL STATE OF CALIFORNIA

THE STATE OF CALIFORNIA OR ITS OFFICERS OR AGENTS SHALL NOT BE RESPONSIBLE FOR THE ACCURACY OR COMPLETENESS OF SCANNED COPIES OF THIS PLAN SHEET.

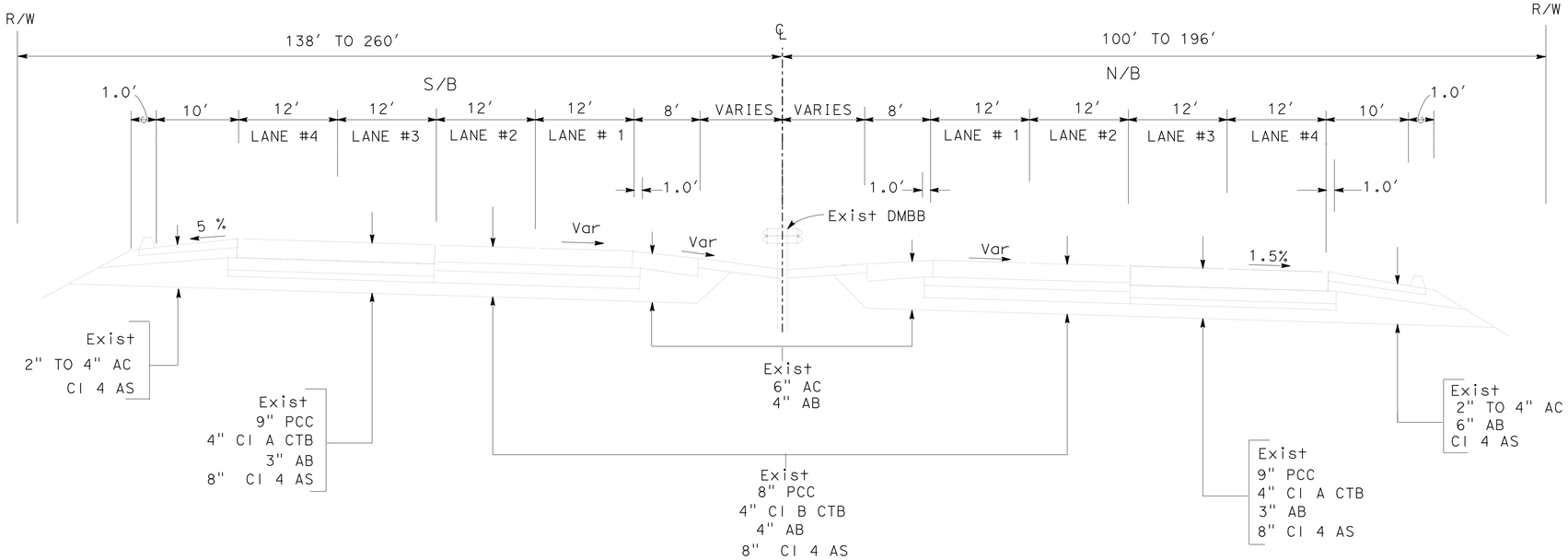

ROUTE 5

Sta 4635+41 TO Sta 4676+29.65

TYPICAL PAVEMENT STRUCTURAL SECTIONS

1
- 1.00' JPCP
- 0.50' LCB
- 0.70' Cl 3 AB

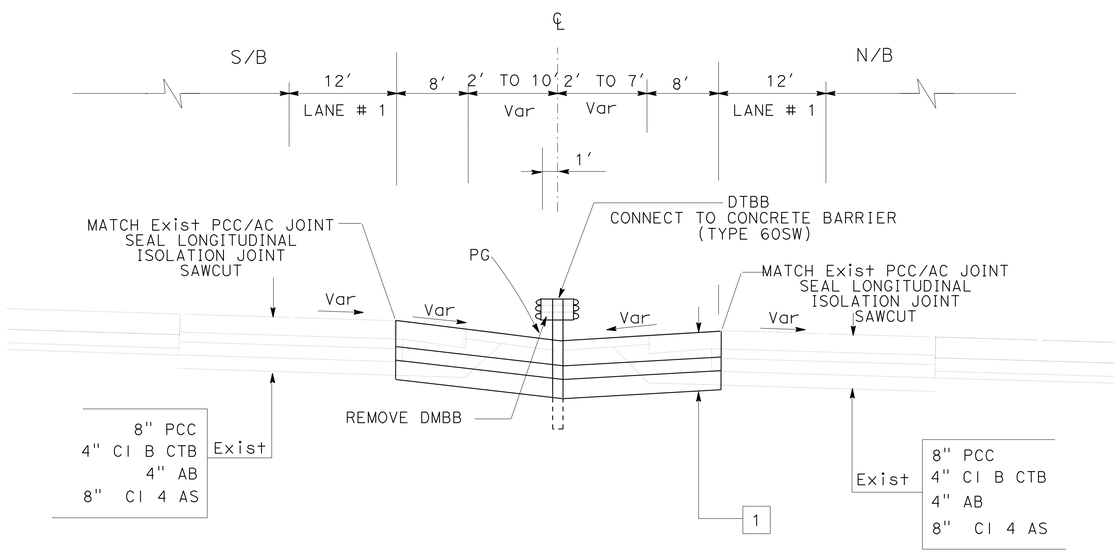

ROUTE 5

Sta 4635+41 TO Sta 4635+64.87

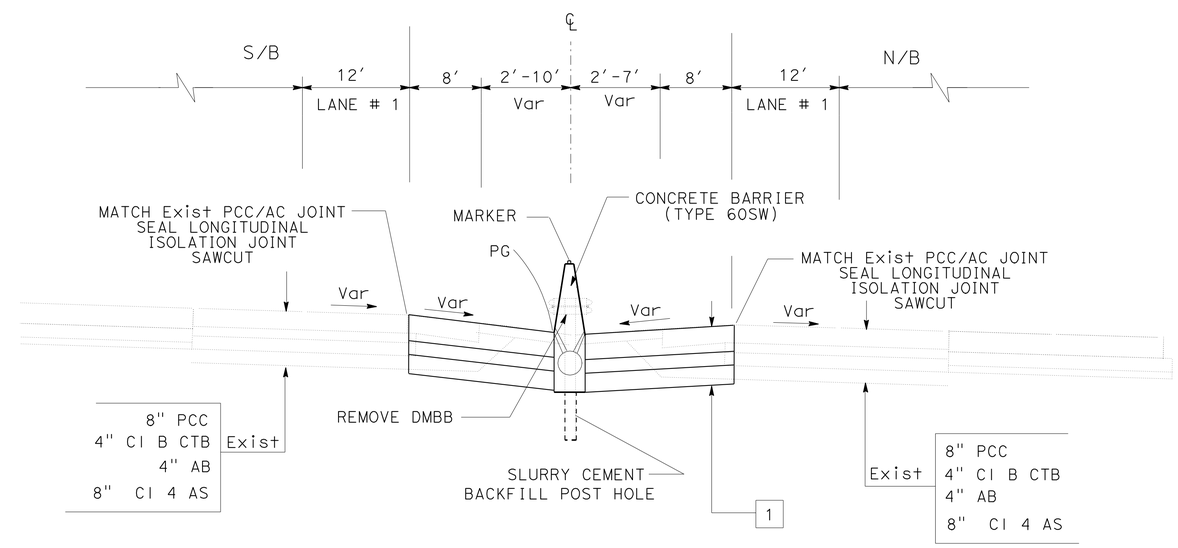

ROUTE 5

Sta 4635+64.87 TO Sta 4636+00

TYPICAL CROSS SECTIONS

NO SCALE

X-1

REVISED BY | DATE REVISED
APOLINAR RAMIRO | LEWEN KUO
CALCULATED-DESIGNED BY | CHECKED BY
FUNCTIONAL SUPERVISOR
OJI KALU

STATE OF CALIFORNIA - DEPARTMENT OF TRANSPORTATION
Caltrans® OFFICE OF DESIGN B

LAST REVISION 02-17-11
DATE PLOTTED => 20-MAY-2011
TIME PLOTTED => 14:39

Dist	COUNTY	ROUTE	POST MILES TOTAL PROJECT	SHEET No.	TOTAL SHEETS
07	LA	5	R87.8/R88.6	3	47

REGISTERED CIVIL ENGINEER 3-9-11 DATE

5-23-11
PLANS APPROVAL DATE

REGISTERED PROFESSIONAL ENGINEER LEWEN KUO No. C52464 Exp. 12/31/12 CIVIL STATE OF CALIFORNIA

THE STATE OF CALIFORNIA OR ITS OFFICERS OR AGENTS SHALL NOT BE RESPONSIBLE FOR THE ACCURACY OR COMPLETENESS OF SCANNED COPIES OF THIS PLAN SHEET.

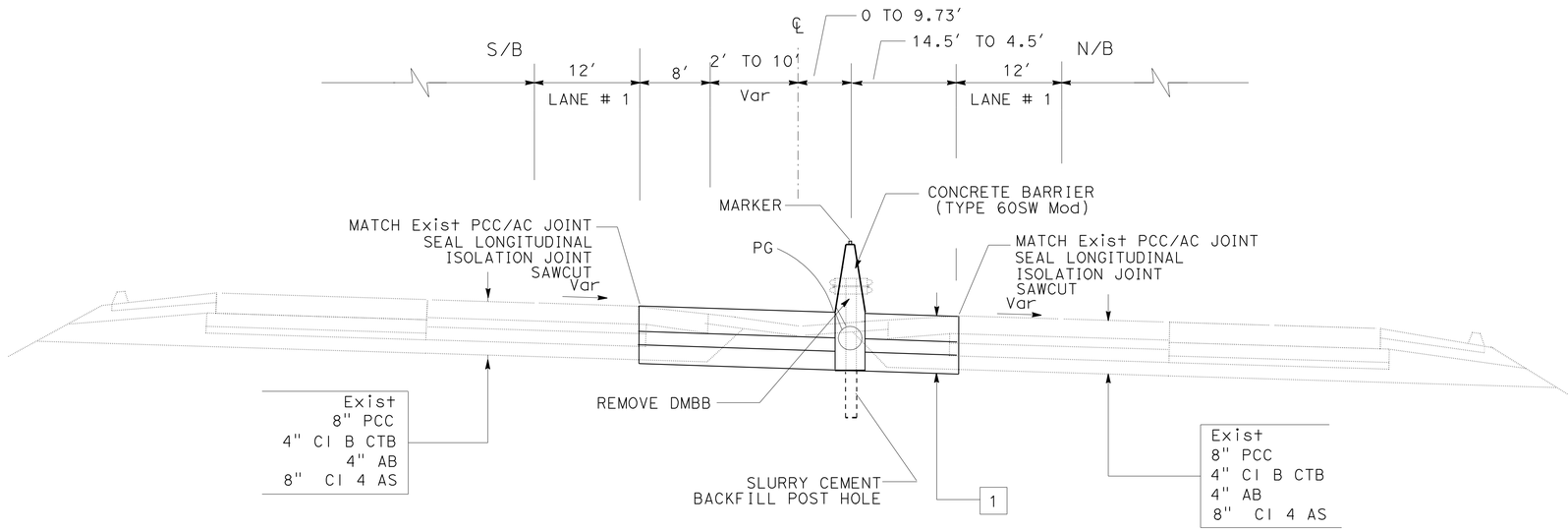

ROUTE 5

Sta 4674+25 TO Sta 4676+29.65

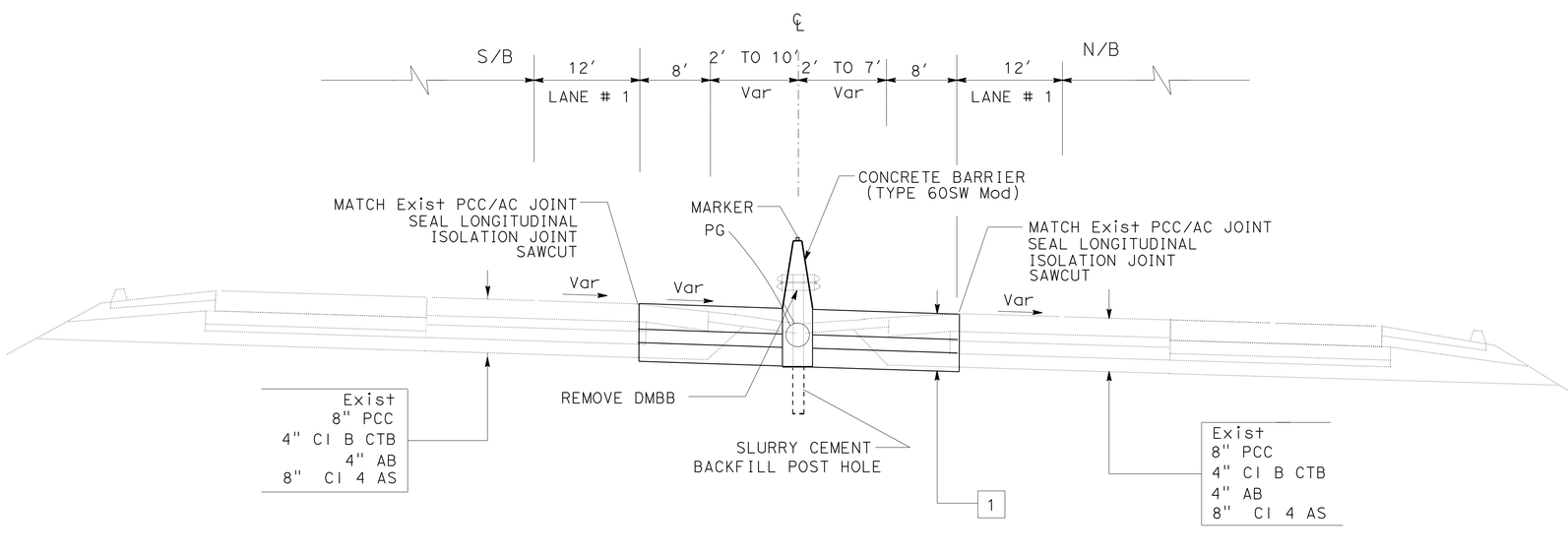

ROUTE 5

Sta 4636+00 TO Sta 4674+25

TYPICAL CROSS SECTIONS

NO SCALE

X-2

STATE OF CALIFORNIA - DEPARTMENT OF TRANSPORTATION
Caltrans® OFFICE OF DESIGN B

FUNCTIONAL SUPERVISOR: OJI KALU
CALCULATED-DESIGNED BY: APOLINAR RAMIRO
CHECKED BY: LEWEN KUO
REVISED BY / DATE REVISED

LAST REVISION 02-17-11
DATE PLOTTED => 20-MAY-2011
TIME PLOTTED => 14:39

Dist	COUNTY	ROUTE	POST MILES TOTAL PROJECT	SHEET No.	TOTAL SHEETS
07	LA	5	R87.8/R88.6	4	47

Lewen Kuo 3-9-11
REGISTERED CIVIL ENGINEER DATE

5-23-11
PLANS APPROVAL DATE

REGISTERED PROFESSIONAL ENGINEER
LEWEN KUO
No. C52464
Exp. 12-31-12
CIVIL
STATE OF CALIFORNIA

THE STATE OF CALIFORNIA OR ITS OFFICERS OR AGENTS SHALL NOT BE RESPONSIBLE FOR THE ACCURACY OR COMPLETENESS OF SCANNED COPIES OF THIS PLAN SHEET.

NOTE:

FOR COMPLETE RIGHT OF WAY DATA, CONTACT RIGHT OF WAY ENGINEERING AT THE DISTRICT OFFICE.

CURVE DATA

No.	R	△	T	L
1	2600.00′	84°30′16″	2361.85′	3834.69′

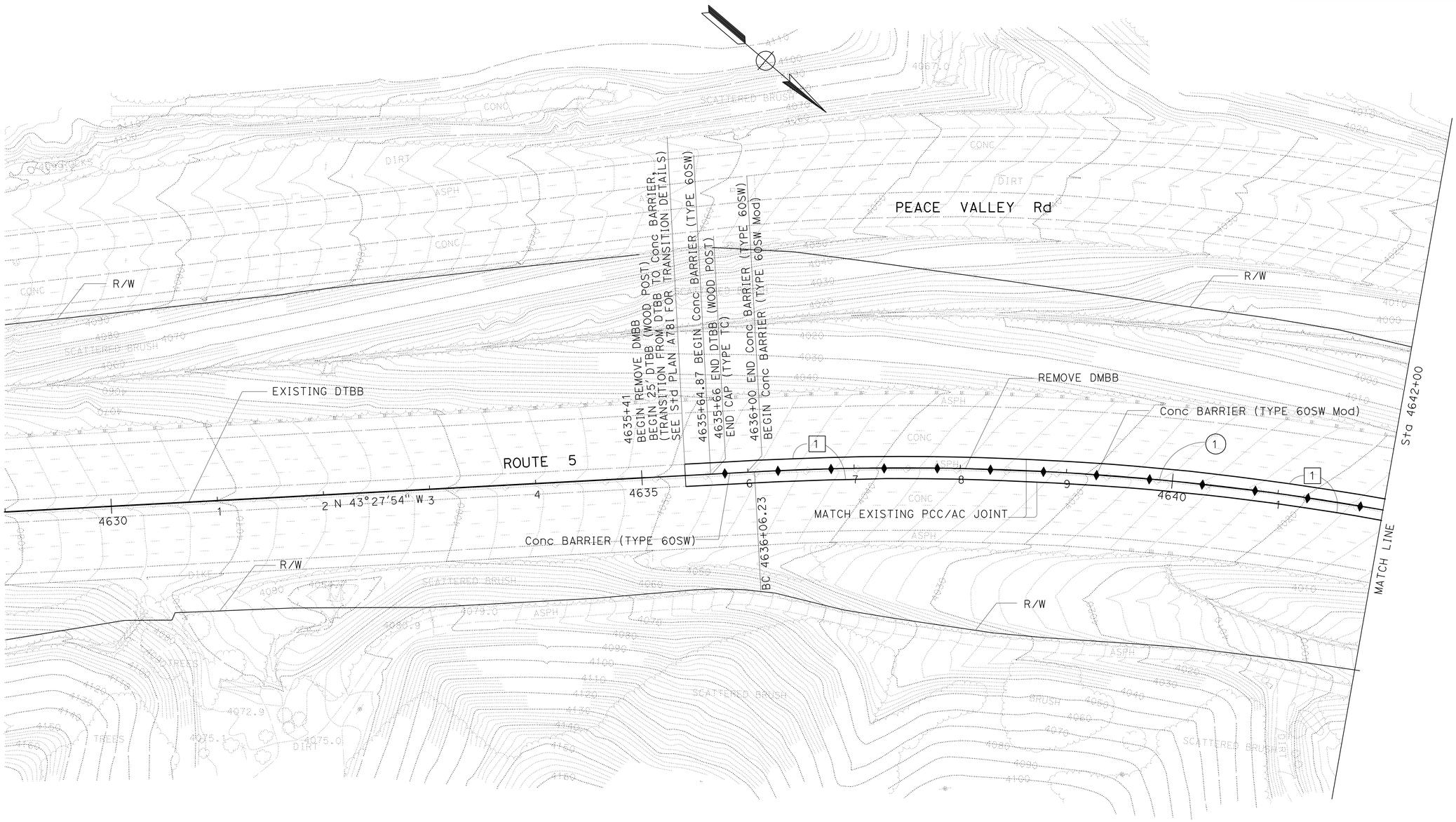

LAYOUT

SCALE: 1″ = 50′

L-1

STATE OF CALIFORNIA - DEPARTMENT OF TRANSPORTATION
Caltrans® OFFICE OF DESIGN B

FUNCTIONAL SUPERVISOR: OJI KALU

APOLINAR RAMIRO
LEWEN KUO

CALCULATED-DESIGNED BY
CHECKED BY

REVISED BY
DATE REVISED

LAST REVISION 3-8-11
DATE PLOTTED => 23-MAY-2011
TIME PLOTTED => 08:18

Dist	COUNTY	ROUTE	POST MILES TOTAL PROJECT	SHEET No.	TOTAL SHEETS
07	LA	5	R87.8/R88.6	5	47

REGISTERED CIVIL ENGINEER 3-9-11 DATE

5-23-11
PLANS APPROVAL DATE

REGISTERED PROFESSIONAL ENGINEER
LEWEN KUO
No. C52464
Exp. 12/31/12
CIVIL
STATE OF CALIFORNIA

THE STATE OF CALIFORNIA OR ITS OFFICERS OR AGENTS SHALL NOT BE RESPONSIBLE FOR THE ACCURACY OR COMPLETENESS OF SCANNED COPIES OF THIS PLAN SHEET.

NOTE:

FOR COMPLETE RIGHT OF WAY DATA CONTACT
RIGHT OF WAY ENGINEERING AT DISTRICT OFFICE.

CURVE DATA

No.	R	△	T	L
1	2600.00′	84°30′16″	2361.85′	3834.69′

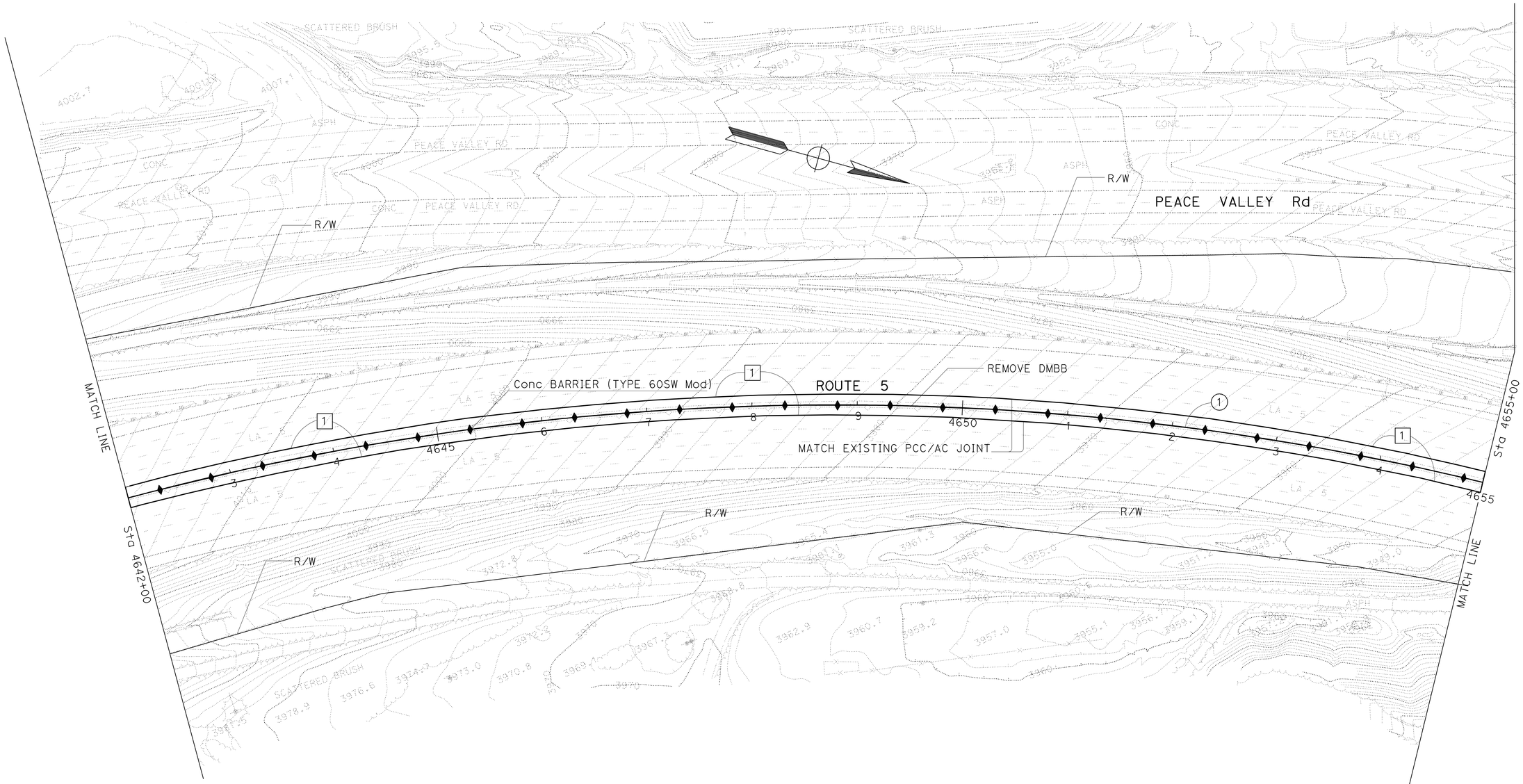

LAYOUT
SCALE: 1" = 50′

L-2

STATE OF CALIFORNIA - DEPARTMENT OF TRANSPORTATION
Caltrans® OFFICE OF DESIGN B

FUNCTIONAL SUPERVISOR: OJI KALU
CALCULATED-DESIGNED BY: APOLINAR RAMIRO
CHECKED BY: LEWEN KUO
REVISED BY
DATE REVISED

LAST REVISION 3-8-11
DATE PLOTTED => 20-MAY-2011
TIME PLOTTED => 17:20

Dist	COUNTY	ROUTE	POST MILES TOTAL PROJECT	SHEET No.	TOTAL SHEETS
07	LA	5	R87.8/R88.6	6	47

REGISTERED CIVIL ENGINEER 3-9-11 DATE

5-23-11
PLANS APPROVAL DATE

REGISTERED PROFESSIONAL ENGINEER
LEWEN KUO
No. C52464
Exp. 12/31/12
CIVIL
STATE OF CALIFORNIA

THE STATE OF CALIFORNIA OR ITS OFFICERS OR AGENTS SHALL NOT BE RESPONSIBLE FOR THE ACCURACY OR COMPLETENESS OF SCANNED COPIES OF THIS PLAN SHEET.

NOTE:

FOR COMPLETE RIGHT OF WAY DATA, CONTACT RIGHT OF WAY ENGINEERING AT THE DISTRICT OFFICE.

CURVE DATA				
No.	R	△	T	L
1	2600.00′	84°30′16"	2361.85′	3834.69′

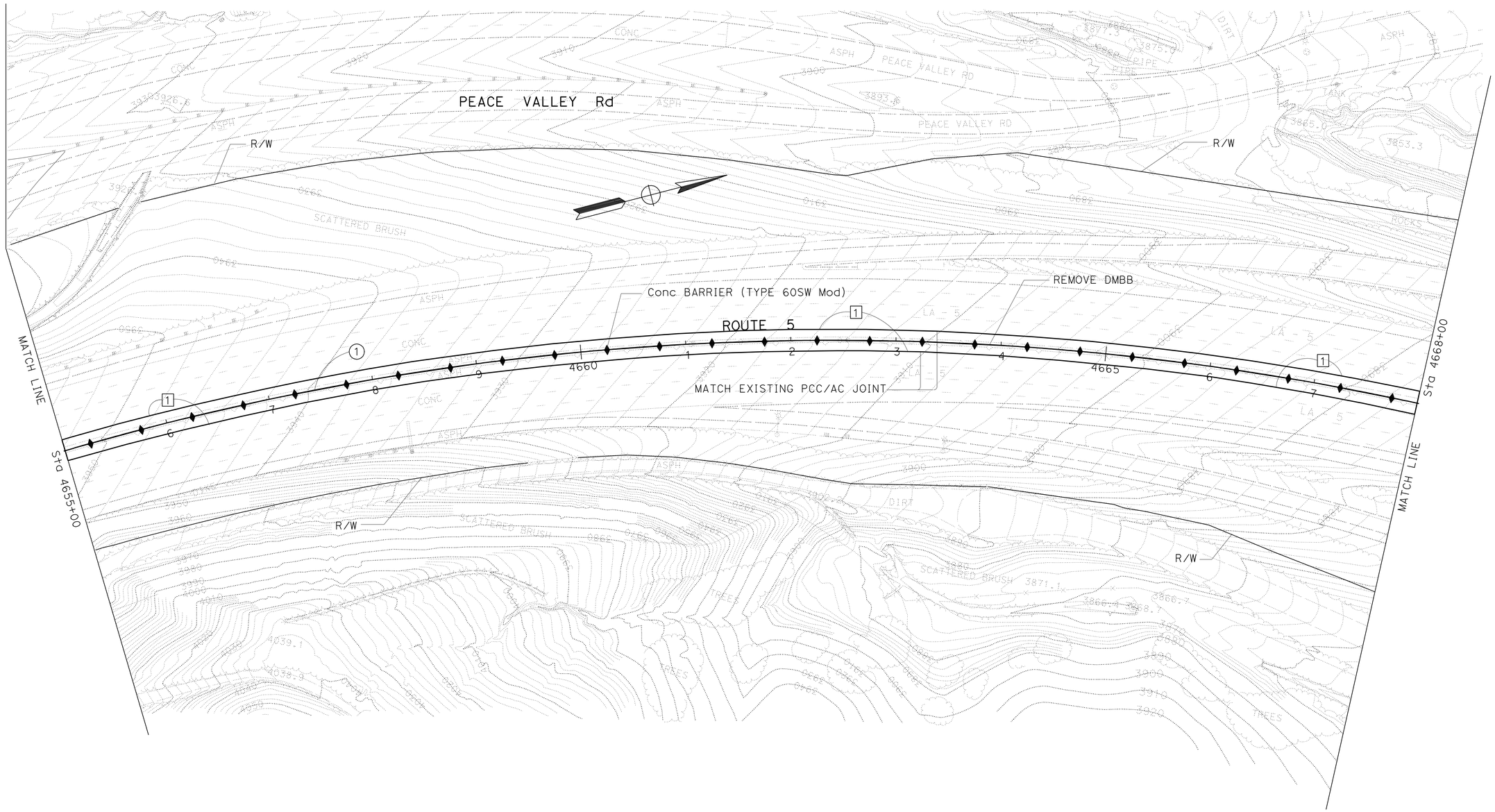

LAYOUT

SCALE: 1" = 50′

L-3

STATE OF CALIFORNIA - DEPARTMENT OF TRANSPORTATION
Caltrans® OFFICE OF DESIGN B

FUNCTIONAL SUPERVISOR: OJI KALU

CALCULATED-DESIGNED BY: APOLINAR RAMIRO
CHECKED BY: LEWEN KUO

REVISED BY
DATE REVISED

LAST REVISION 3-8-11
DATE PLOTTED => 20-MAY-2011
TIME PLOTTED => 17:20

Dist	COUNTY	ROUTE	POST MILES TOTAL PROJECT	SHEET No.	TOTAL SHEETS
07	LA	5	R87.8/R88.6	7	47

REGISTERED CIVIL ENGINEER 3-9-11 DATE

5-23-11
PLANS APPROVAL DATE

REGISTERED PROFESSIONAL ENGINEER LEWEN KUO No. C52464 Exp. 12/31/12 CIVIL STATE OF CALIFORNIA

THE STATE OF CALIFORNIA OR ITS OFFICERS OR AGENTS SHALL NOT BE RESPONSIBLE FOR THE ACCURACY OR COMPLETENESS OF SCANNED COPIES OF THIS PLAN SHEET.

NOTE:

FOR COMPLETE RIGHT OF WAY DATA, CONTACT RIGHT OF WAY ENGINEERING AT THE DISTRICT OFFICE.

CURVE DATA

No.	R	△	T	L
1	2600.00′	84°30′16"	2361.85′	3834.69′

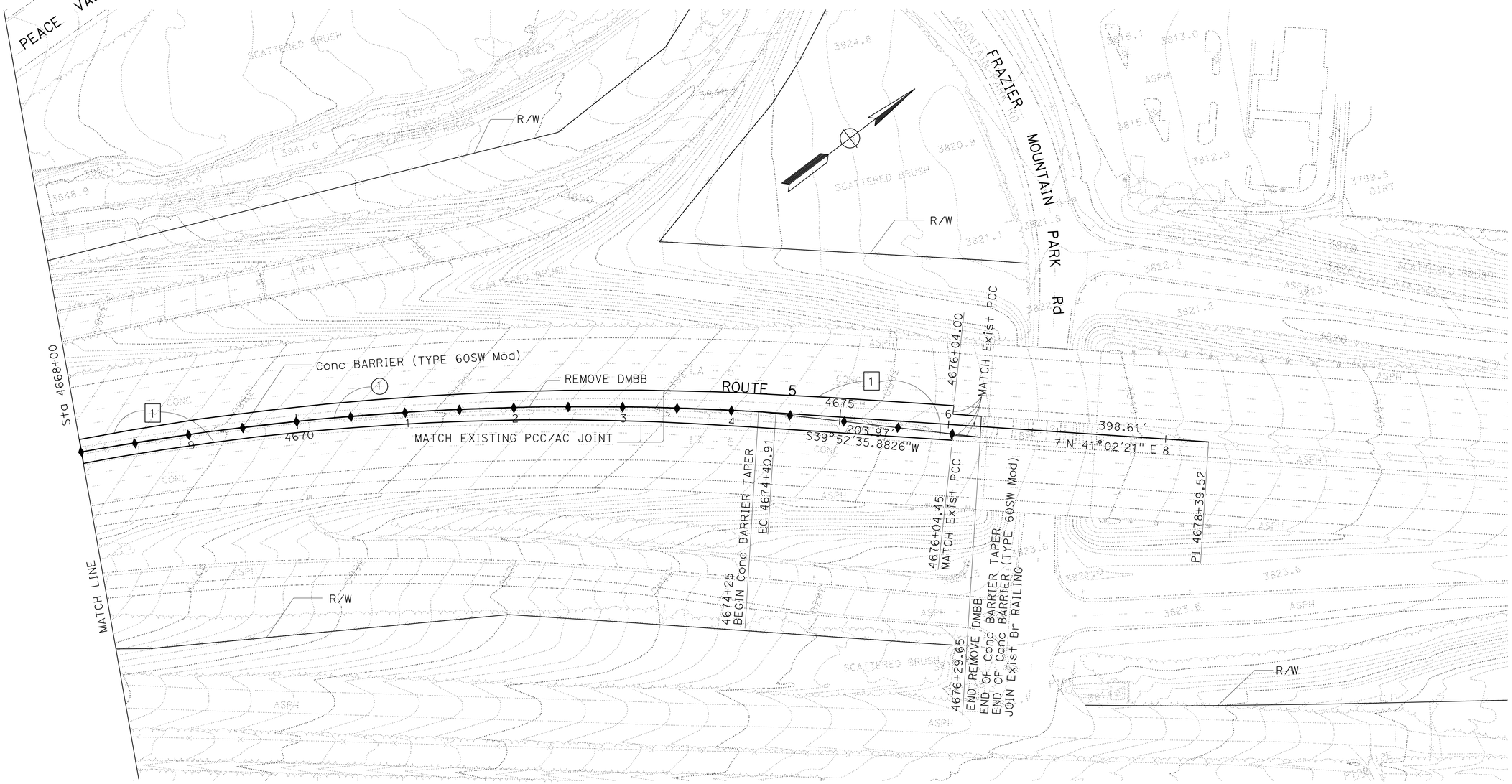

LAYOUT

SCALE: 1" = 50′

L-4

STATE OF CALIFORNIA - DEPARTMENT OF TRANSPORTATION
Caltrans OFFICE OF DESIGN B

FUNCTIONAL SUPERVISOR: OJI KALU
CALCULATED-DESIGNED BY: APOLINAR ROMIRO
CHECKED BY: LEWEN KUO
REVISED BY
DATE REVISED

LAST REVISION 3-8-11
DATE PLOTTED => 20-MAY-2011
TIME PLOTTED => 17:21

Dist	COUNTY	ROUTE	POST MILES TOTAL PROJECT	SHEET No.	TOTAL SHEETS
07	LA	5	R87.8/R88.6	8	47

REGISTERED CIVIL ENGINEER — DATE: 3-9-11

5-23-11
PLANS APPROVAL DATE

REGISTERED PROFESSIONAL ENGINEER — LEWEN KUO — No. C52464 — Exp. 12/31/12 — CIVIL — STATE OF CALIFORNIA

THE STATE OF CALIFORNIA OR ITS OFFICERS OR AGENTS SHALL NOT BE RESPONSIBLE FOR THE ACCURACY OR COMPLETENESS OF SCANNED COPIES OF THIS PLAN SHEET.

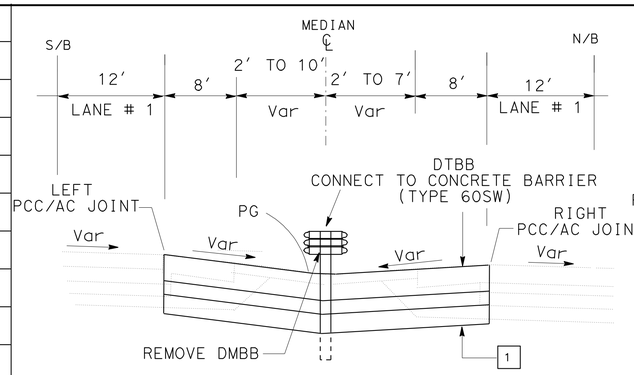

Sta 4635+41 TO 4635+64.87

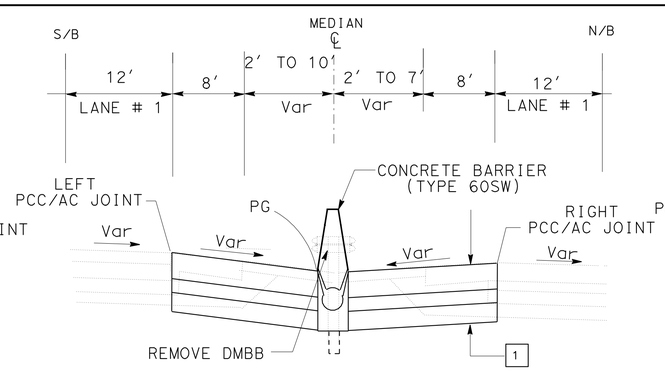

Sta 4635+64.87 TO 4636+00

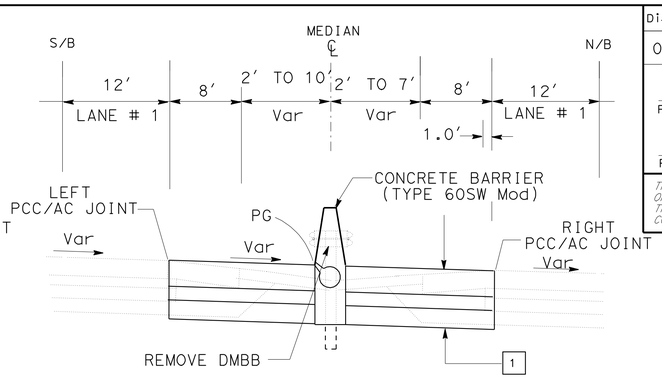

Sta 4636+00 TO 4645+00

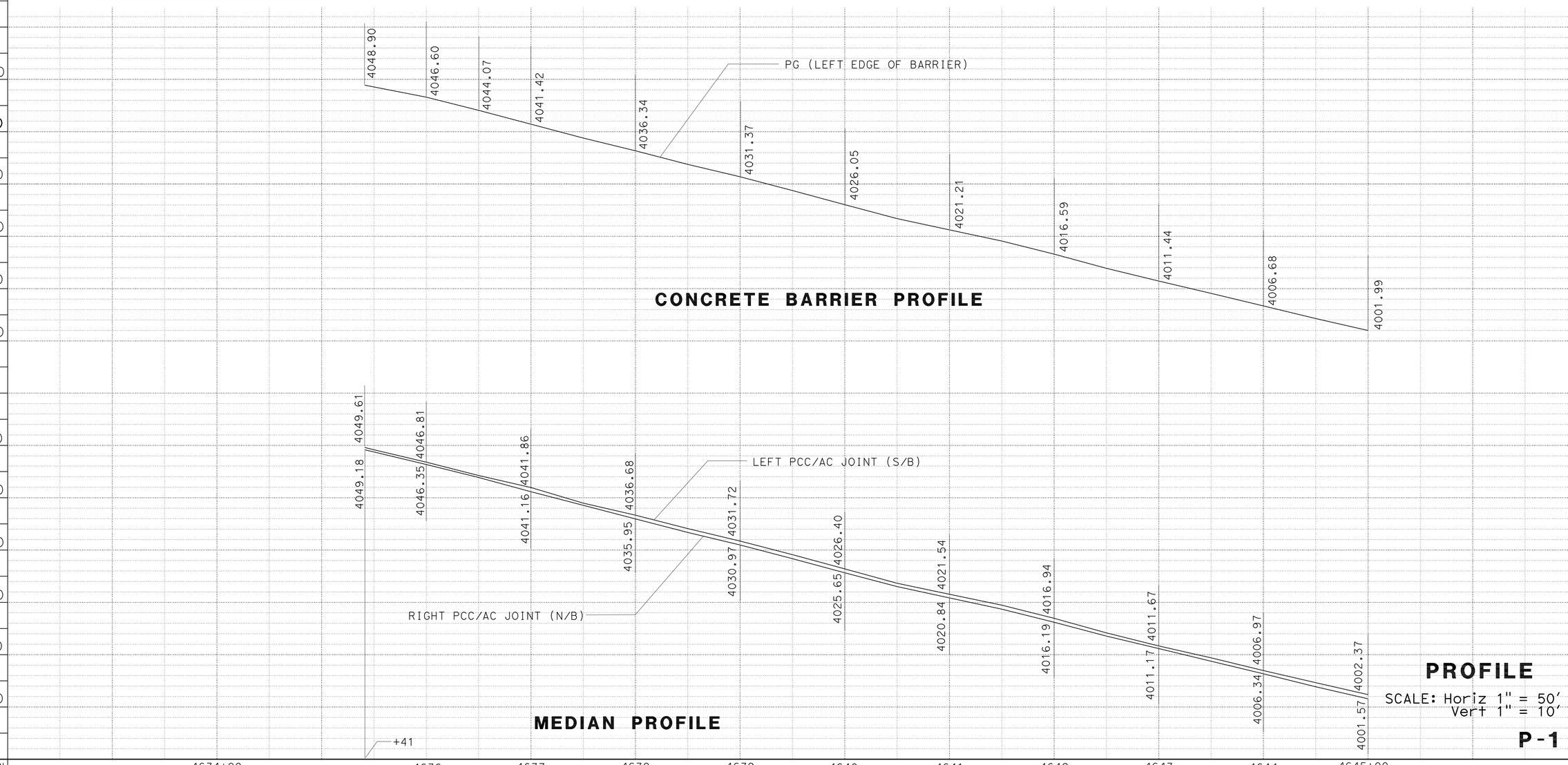

PROFILE

SCALE: Horiz 1" = 50′
Vert 1" = 10′

P-1

STATE OF CALIFORNIA - DEPARTMENT OF TRANSPORTATION
Caltrans® **OFFICE OF DESIGN B**

FUNCTIONAL SUPERVISOR: OJI KALU

CALCULATED-DESIGNED BY: APOLINAR RAMIRO
CHECKED BY: LEWEN KUO

REVISED BY
DATE REVISED

LAST REVISION 03-11-11
DATE PLOTTED => 20-MAY-2011
TIME PLOTTED => 17:21

Dist	COUNTY	ROUTE	POST MILES TOTAL PROJECT	SHEET No.	TOTAL SHEETS
07	LA	5	R87.8/R88.6	9	47

REGISTERED CIVIL ENGINEER 3-9-11 DATE

5-23-11
PLANS APPROVAL DATE

REGISTERED PROFESSIONAL ENGINEER LEWEN KUO No. C52464 Exp. 12/31/12 CIVIL STATE OF CALIFORNIA

THE STATE OF CALIFORNIA OR ITS OFFICERS OR AGENTS SHALL NOT BE RESPONSIBLE FOR THE ACCURACY OR COMPLETENESS OF SCANNED COPIES OF THIS PLAN SHEET.

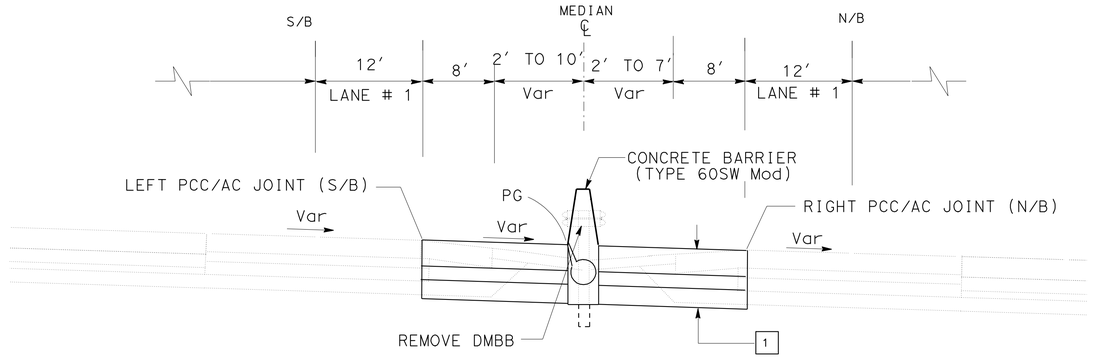

Sta 4645+00 TO 4657+00

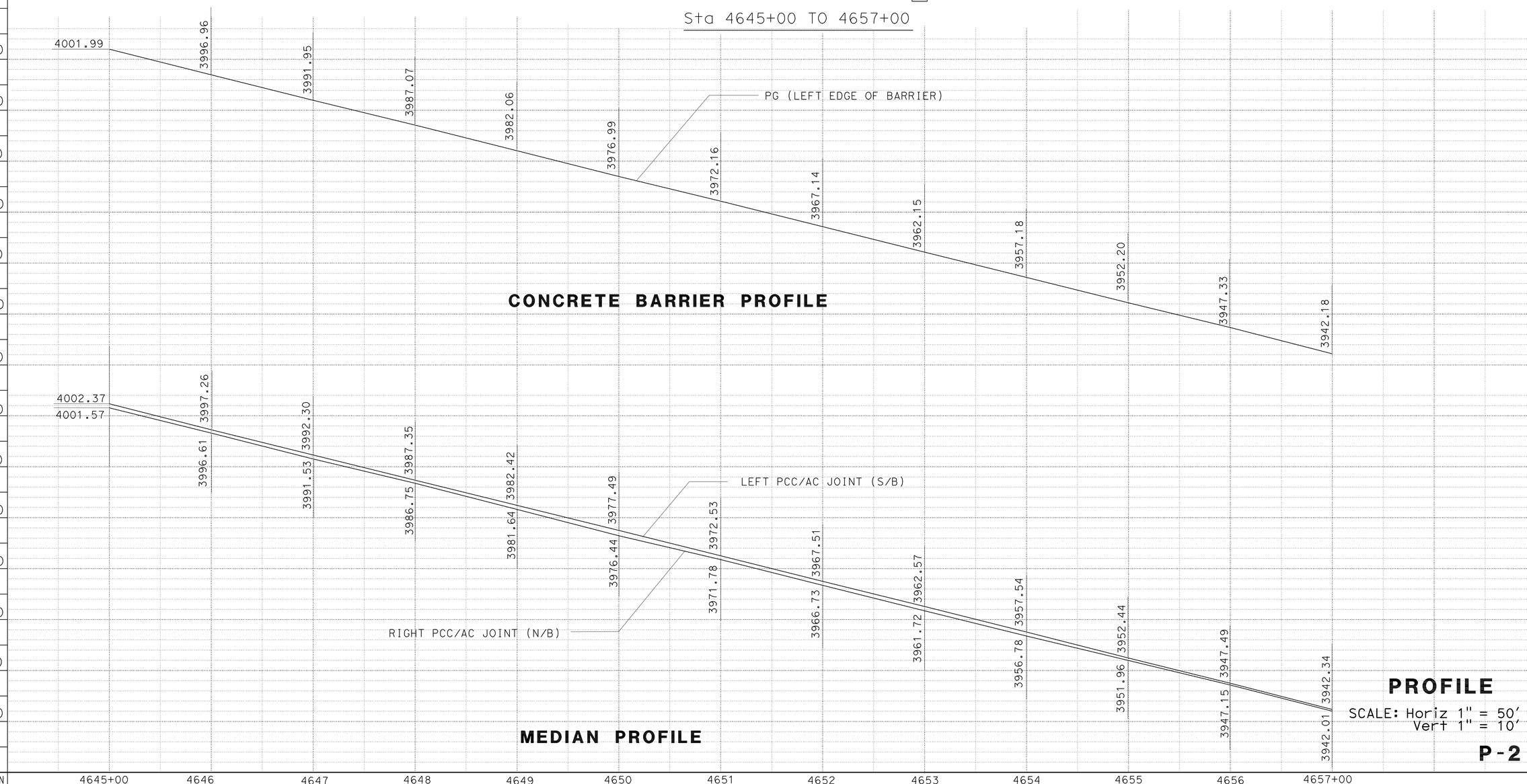

STATION	4645+00	4646	4647	4648	4649	4650	4651	4652	4653	4654	4655	4656	4657+00	TOTAL
CY Exc														
CY Emb														

STATE OF CALIFORNIA - DEPARTMENT OF TRANSPORTATION
Caltrans® OFFICE OF DESIGN B

FUNCTIONAL SUPERVISOR: OJI KALU
CALCULATED-DESIGNED BY: APOLINAR RAMIRO
CHECKED BY: LEWEN KUO
REVISED BY
DATE REVISED

LAST REVISION 03-8-11
DATE PLOTTED => 20-MAY-2011
TIME PLOTTED => 17:21

Dist	COUNTY	ROUTE	POST MILES TOTAL PROJECT	SHEET No.	TOTAL SHEETS
07	LA	5	R87.8/R88.6	10	47

REGISTERED CIVIL ENGINEER 3-9-11 DATE

5-23-11
PLANS APPROVAL DATE

REGISTERED PROFESSIONAL ENGINEER LEWEN KUO No. C52464 Exp. 12/31/12 CIVIL STATE OF CALIFORNIA

THE STATE OF CALIFORNIA OR ITS OFFICERS OR AGENTS SHALL NOT BE RESPONSIBLE FOR THE ACCURACY OR COMPLETENESS OF SCANNED COPIES OF THIS PLAN SHEET.

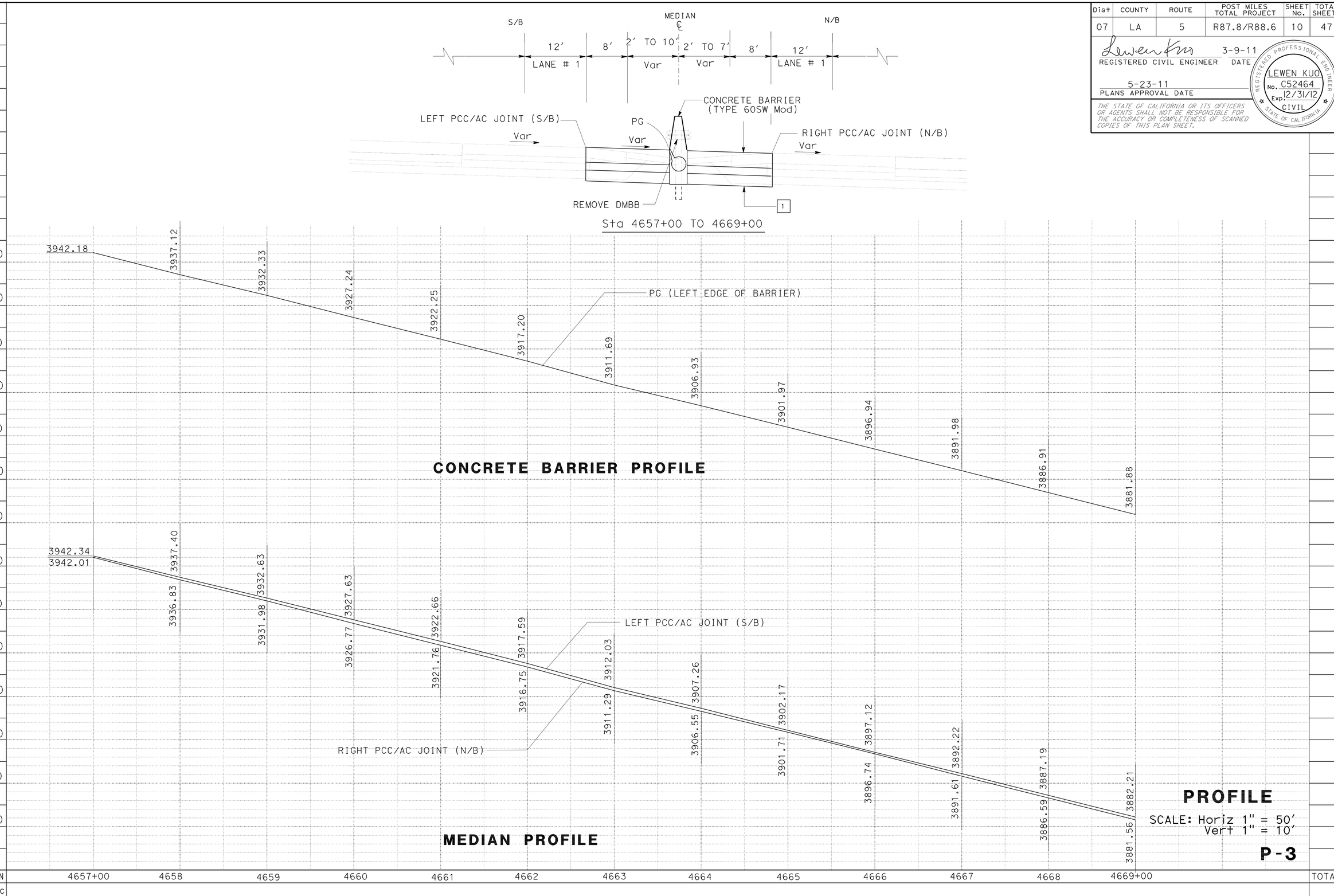

PROFILE

SCALE: Horiz 1" = 50′
Vert 1" = 10′

P-3

STATE OF CALIFORNIA - DEPARTMENT OF TRANSPORTATION
Caltrans® OFFICE OF DESIGN B

FUNCTIONAL SUPERVISOR: OJI KALU

CALCULATED-DESIGNED BY: APOLINAR RAMIRO

CHECKED BY: LEWEN KUO

REVISED BY

DATE REVISED

LAST REVISION 02-18-11

DATE PLOTTED => 20-MAY-2011
TIME PLOTTED => 17:21

Dist	COUNTY	ROUTE	POST MILES TOTAL PROJECT	SHEET No.	TOTAL SHEETS
07	LA	5	R87.8/R88.6	11	47

REGISTERED CIVIL ENGINEER 3-9-11 DATE

5-23-11
PLANS APPROVAL DATE

REGISTERED PROFESSIONAL ENGINEER LEWEN KUO No. C52464 Exp. 12/31/12 CIVIL STATE OF CALIFORNIA

THE STATE OF CALIFORNIA OR ITS OFFICERS OR AGENTS SHALL NOT BE RESPONSIBLE FOR THE ACCURACY OR COMPLETENESS OF SCANNED COPIES OF THIS PLAN SHEET.

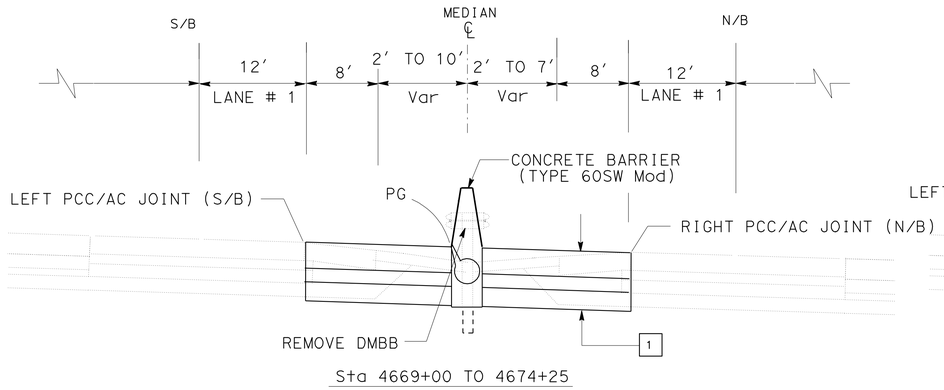

Sta 4669+00 TO 4674+25

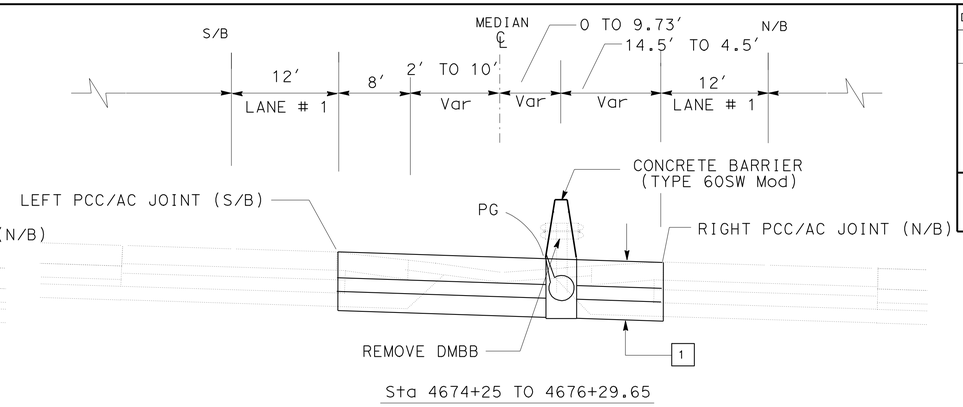

Sta 4674+25 TO 4676+29.65

CONCRETE BARRIER PROFILE

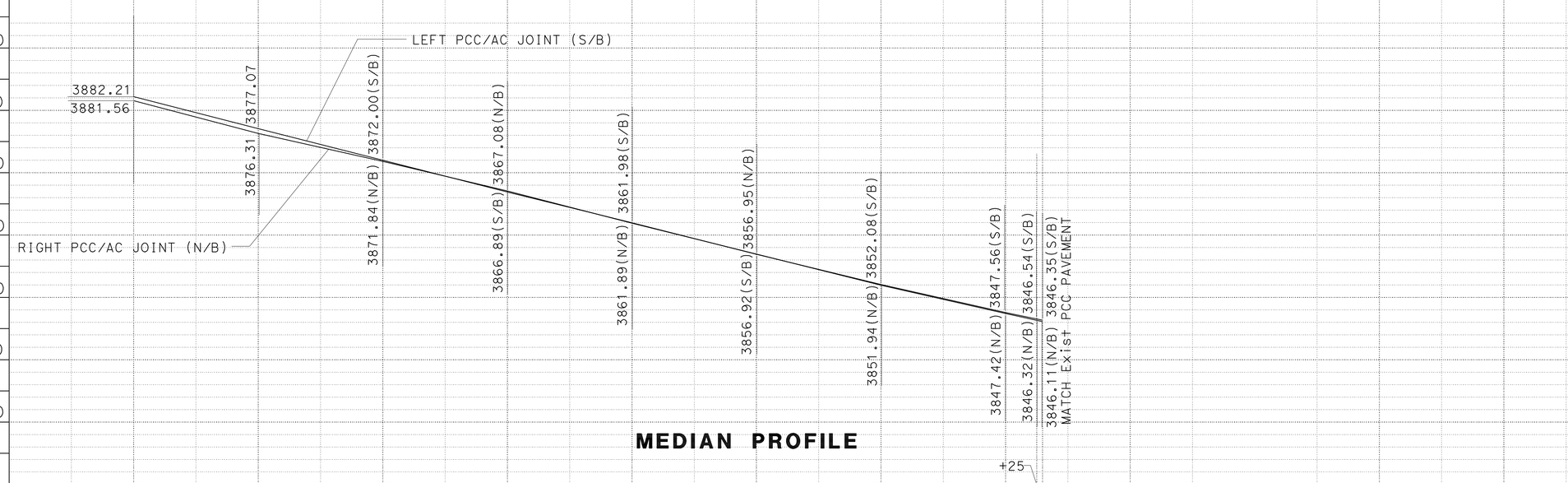

MEDIAN PROFILE

PROFILE

SCALE: Horiz 1" = 50′
Vert 1" = 10′

P-4

STATION	4669+00	4670	4671	4672	4673	4674	4675	4676	+29.65 4677	4678+00	TOTAL
CY Exc											
CY Emb											

STATE OF CALIFORNIA - DEPARTMENT OF TRANSPORTATION
Caltrans® OFFICE OF DESIGN B

FUNCTIONAL SUPERVISOR: OJI KALU
CALCULATED-DESIGNED BY: APOLINAR RAMIRO
CHECKED BY: LEWEN KUO
REVISED BY
DATE REVISED

LAST REVISION 02-18-11
DATE PLOTTED => 20-MAY-2011
TIME PLOTTED => 17:21

Dist	COUNTY	ROUTE	POST MILES TOTAL PROJECT	SHEET No.	TOTAL SHEETS
07	LA	5	R87.8/R88.6	12	47

Keith Sellers
LICENSED LANDSCAPE ARCHITECT

5-23-11
PLANS APPROVAL DATE

LICENSED LANDSCAPE ARCHITECT
KEITH SELLERS
NO. 5288
Keith Sellers
Signature
04-30-11
Renewal Date
03-06-11
Date
STATE OF CALIFORNIA

THE STATE OF CALIFORNIA OR ITS OFFICERS OR AGENTS SHALL NOT BE RESPONSIBLE FOR THE ACCURACY OR COMPLETENESS OF SCANNED COPIES OF THIS PLAN SHEET.

NOTES:
1. THE CONTRACTOR SHALL VERIFY ALL CONTROLLING FIELD DIMENSIONS BEFORE ORDERING OR FABRICATING ANY MATERIAL.
2. DETAIL SHOWN ALONG SLOPING SURFACE OF CONCRETE BARRIER.

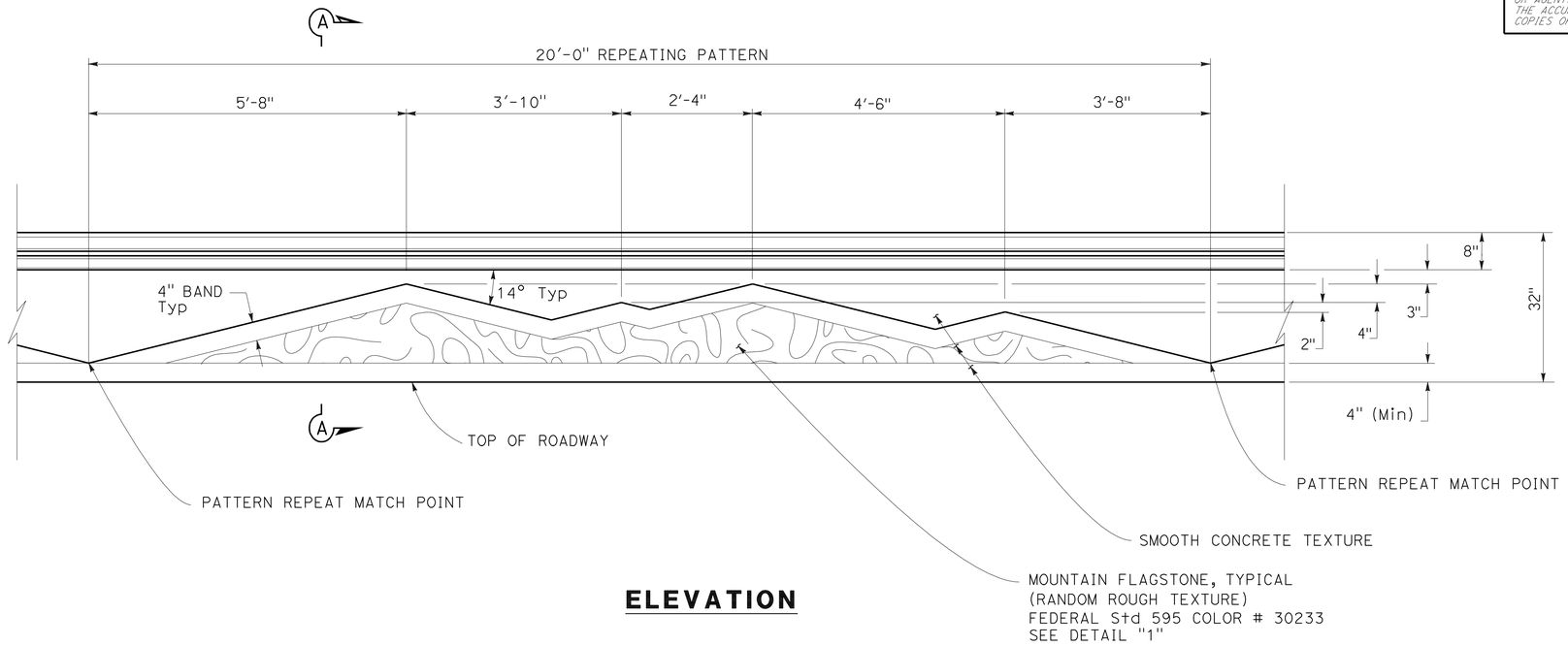

ELEVATION

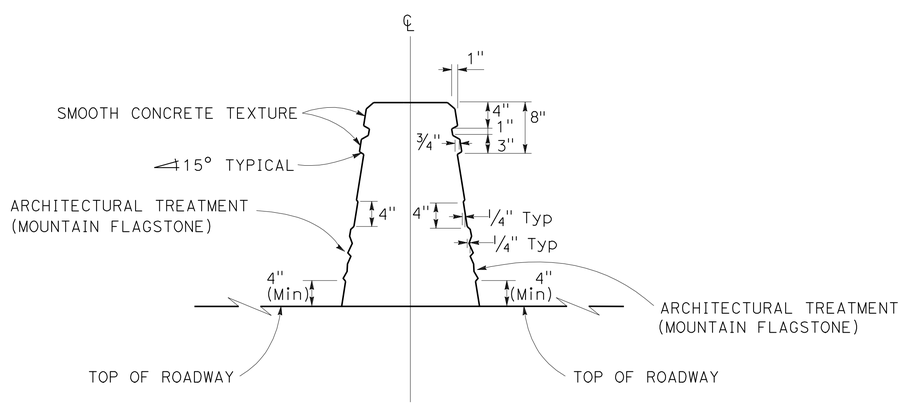

SECTION A-A

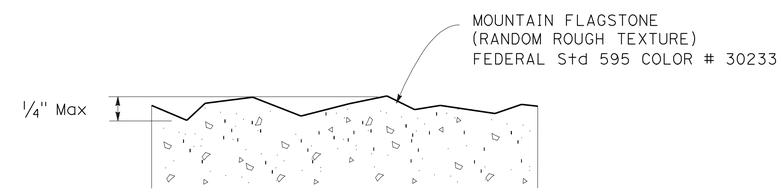

DETAIL 1
MOUNTAIN FLAGSTONE DETAIL

CONSTRUCTION DETAILS
ARCHITECTURAL TREATMENT
NO SCALE

C-1

STATE OF CALIFORNIA - DEPARTMENT OF TRANSPORTATION
Caltrans® LANDSCAPE ARCHITECTURE

SENIOR LANDSCAPE ARCHITECT: PATTY WATANABE
CALCULATED-DESIGNED BY: KATHLEEN LEDESMA
CHECKED BY: KEITH SELLERS
REVISED BY
DATE REVISED

LAST REVISION 00-00-00
DATE PLOTTED => 20-MAY-2011
TIME PLOTTED => 17:21

Dist	COUNTY	ROUTE	POST MILES TOTAL PROJECT	SHEET No.	TOTAL SHEETS
07	LA	5	R87.8/R88.6	13	47

Paul Fong 02/17/11
REGISTERED CIVIL ENGINEER DATE

5-23-11
PLANS APPROVAL DATE

REGISTERED PROFESSIONAL ENGINEER
PAUL FONG
No. C67053
Exp 9/30/12
CIVIL
STATE OF CALIFORNIA

THE STATE OF CALIFORNIA OR ITS OFFICERS OR AGENTS SHALL NOT BE RESPONSIBLE FOR THE ACCURACY OR COMPLETENESS OF SCANNED COPIES OF THIS PLAN SHEET.

NOTES:

1. FOR ACCURATE RIGHT OF WAY DATA, CONTACT RIGHT OF WAY ENGINEERING AT THE DISTRICT OFFICE.
2. CONTRACTOR SHALL VERIFY ELEVATIONS OF PROPOSED DRAINAGE WORK AND EXISTING DRAINAGE CONDITIONS BEFORE COMMENCEMENT OF WORK.

LEGEND:

X DRAINAGE SYSTEM No.

X DRAINAGE UNIT

DRAINAGE PLAN

SCALE: 1" = 50'

D-1

THIS PLAN ACCURATE FOR DRAINAGE WORK ONLY.

STATE OF CALIFORNIA - DEPARTMENT OF TRANSPORTATION
Caltrans
HYDRAULICS

FUNCTIONAL SUPERVISOR: DAVE BHALLA
CALCULATED-DESIGNED BY: PAUL FONG
CHECKED BY: FUSUNG CHANG
REVISED BY
DATE REVISED

LAST REVISION
DATE PLOTTED => 20-MAY-2011
TIME PLOTTED => 17:21

Dist	COUNTY	ROUTE	POST MILES TOTAL PROJECT	SHEET No.	TOTAL SHEETS
07	LA	5	R87.8/R88.6	14	47

Paul Fong 02/17/11
REGISTERED CIVIL ENGINEER DATE

5-23-11
PLANS APPROVAL DATE

REGISTERED PROFESSIONAL ENGINEER
PAUL FONG
No. C67053
Exp 9/30/12
CIVIL
STATE OF CALIFORNIA

THE STATE OF CALIFORNIA OR ITS OFFICERS OR AGENTS SHALL NOT BE RESPONSIBLE FOR THE ACCURACY OR COMPLETENESS OF SCANNED COPIES OF THIS PLAN SHEET.

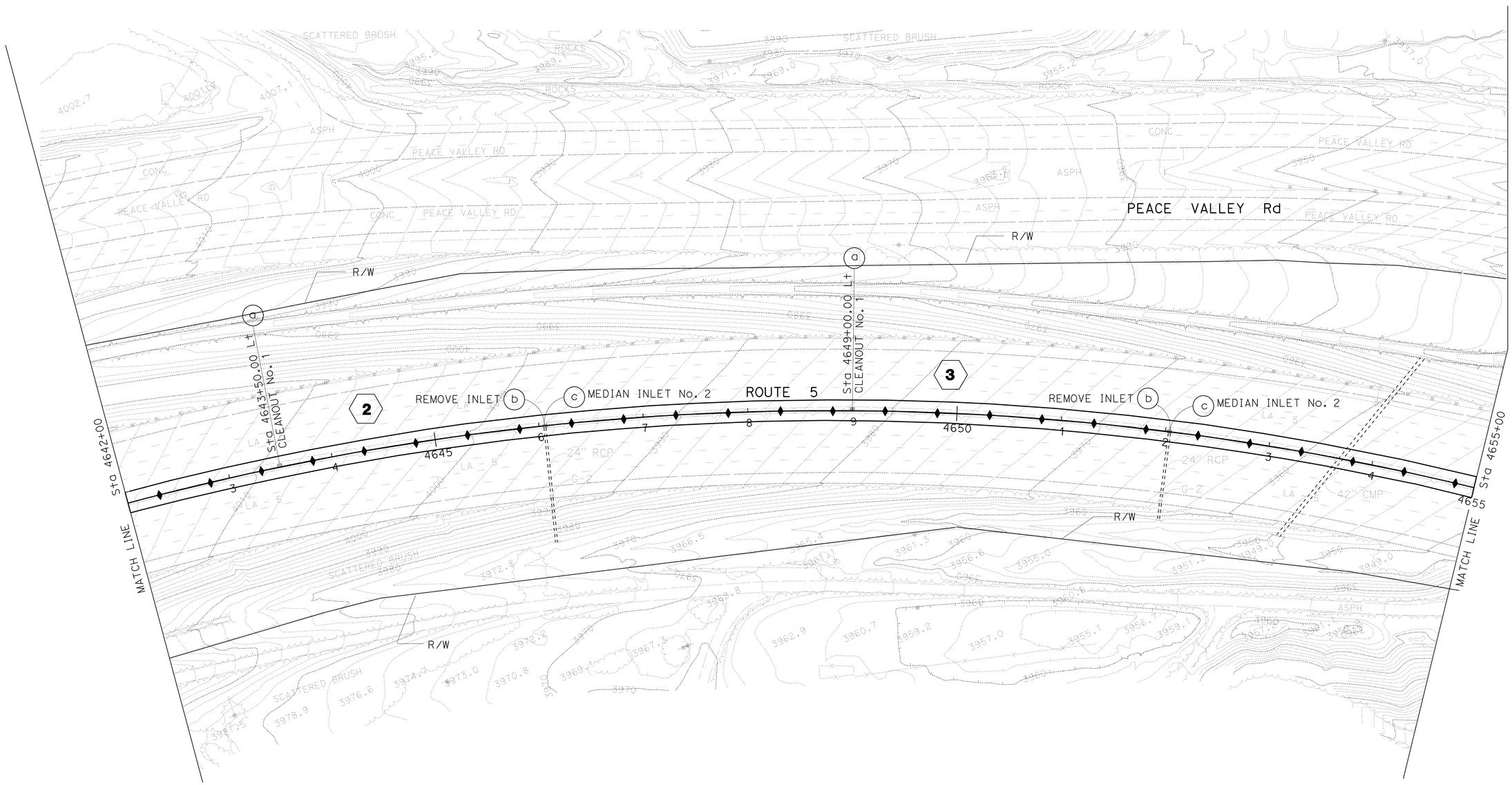

DRAINAGE PLAN

SCALE: 1" = 50'

D-2

THIS PLAN ACCURATE FOR DRAINAGE WORK ONLY.

STATE OF CALIFORNIA - DEPARTMENT OF TRANSPORTATION
Caltrans
HYDRAULICS

FUNCTIONAL SUPERVISOR: DAVE BHALLA
CALCULATED-DESIGNED BY: PAUL FONG
CHECKED BY: FUSUNG CHANG
REVISED BY
DATE REVISED

LAST REVISION
DATE PLOTTED => 20-MAY-2011
TIME PLOTTED => 17:21

Dist	COUNTY	ROUTE	POST MILES TOTAL PROJECT	SHEET No.	TOTAL SHEETS
07	LA	5	R87.8/R88.6	15	47

Paul Fong 02/17/11
REGISTERED CIVIL ENGINEER DATE

5-23-11
PLANS APPROVAL DATE

REGISTERED PROFESSIONAL ENGINEER
PAUL FONG
No. C67053
Exp 9/30/12
CIVIL
STATE OF CALIFORNIA

THE STATE OF CALIFORNIA OR ITS OFFICERS OR AGENTS SHALL NOT BE RESPONSIBLE FOR THE ACCURACY OR COMPLETENESS OF SCANNED COPIES OF THIS PLAN SHEET.

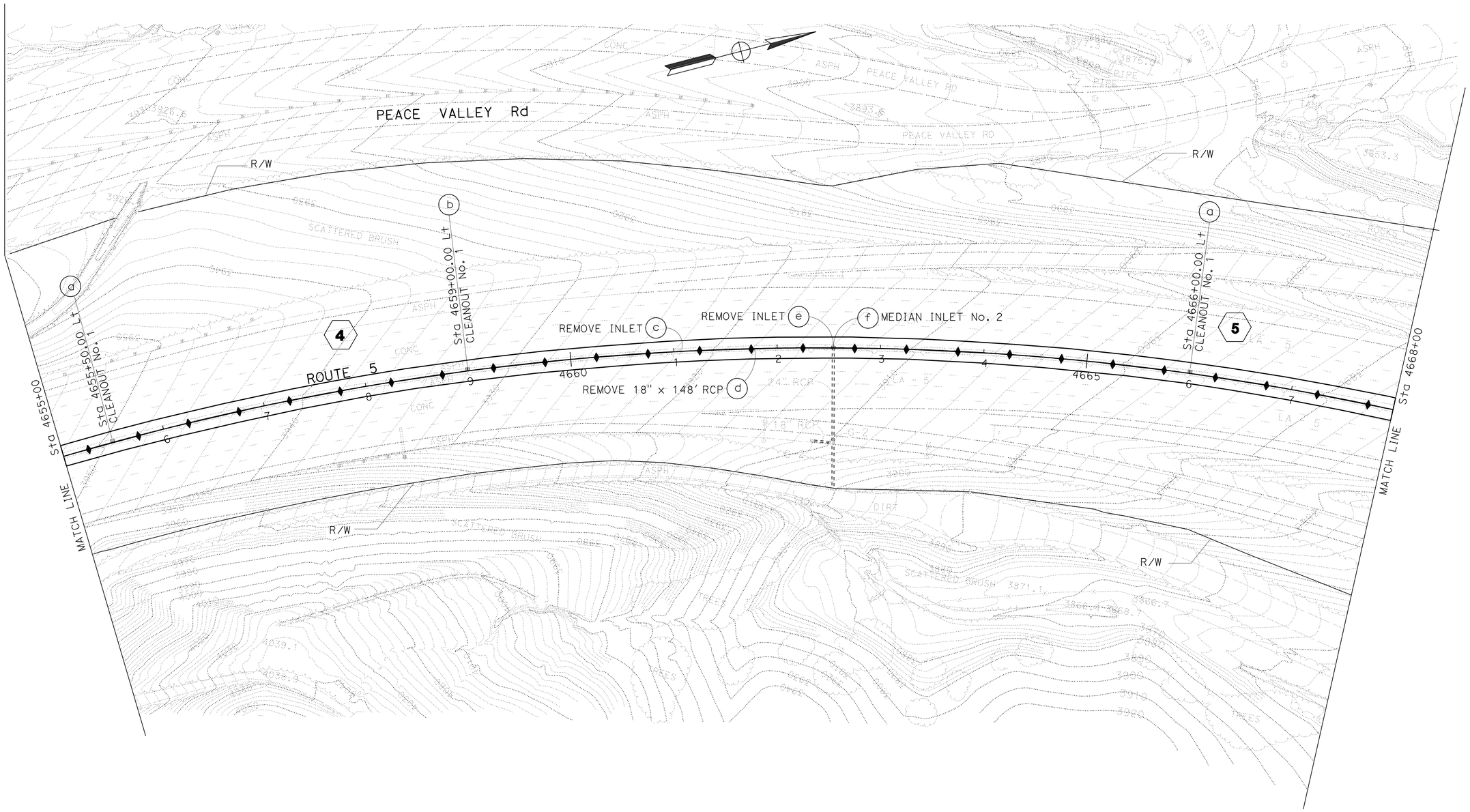

THIS PLAN ACCURATE FOR DRAINAGE WORK ONLY.

DRAINAGE PLAN

SCALE: 1" = 50'

D-3

STATE OF CALIFORNIA - DEPARTMENT OF TRANSPORTATION
Caltrans
HYDRAULICS

FUNCTIONAL SUPERVISOR: DAVE BHALLA

CALCULATED-DESIGNED BY: PAUL FONG
CHECKED BY: FUSUNG CHANG

REVISED BY
DATE REVISED

LAST REVISION
DATE PLOTTED => 20-MAY-2011
TIME PLOTTED => 17:21

Dist	COUNTY	ROUTE	POST MILES TOTAL PROJECT	SHEET No.	TOTAL SHEETS
07	LA	5	R87.8/R88.6	16	47

Paul Fong 02/17/11
REGISTERED CIVIL ENGINEER DATE

5-23-11
PLANS APPROVAL DATE

REGISTERED PROFESSIONAL ENGINEER
PAUL FONG
No. C67053
Exp 9/30/12
CIVIL
STATE OF CALIFORNIA

THE STATE OF CALIFORNIA OR ITS OFFICERS OR AGENTS SHALL NOT BE RESPONSIBLE FOR THE ACCURACY OR COMPLETENESS OF SCANNED COPIES OF THIS PLAN SHEET.

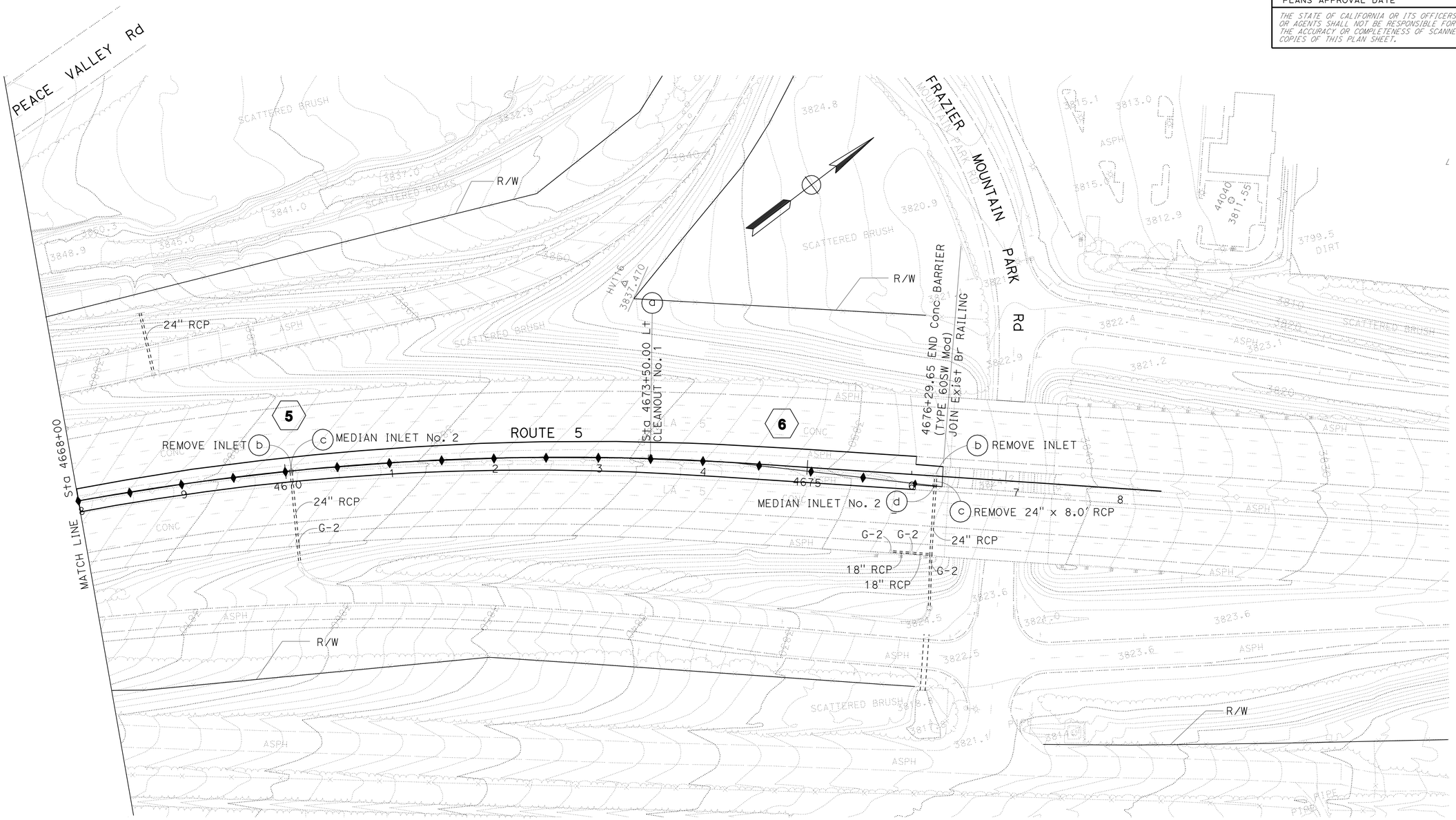

DRAINAGE PLAN

SCALE: 1" = 50'

D-4

THIS PLAN ACCURATE FOR DRAINAGE WORK ONLY.

STATE OF CALIFORNIA - DEPARTMENT OF TRANSPORTATION
Caltrans
HYDRAULICS

FUNCTIONAL SUPERVISOR: DAVE BHALLA

CALCULATED-DESIGNED BY: PAUL FONG
CHECKED BY: FUSUNG CHANG

REVISED BY
DATE REVISED

LAST REVISION
DATE PLOTTED => 20-MAY-2011
TIME PLOTTED => 17:21

Dist	COUNTY	ROUTE	POST MILES TOTAL PROJECT	SHEET No.	TOTAL SHEETS
07	LA	5	R87.8/R88.6	17	47

Paul Fong 02/17/11
REGISTERED CIVIL ENGINEER DATE

5-23-11
PLANS APPROVAL DATE

REGISTERED PROFESSIONAL ENGINEER
PAUL FONG
No. C67053
Exp. 9/30/12
CIVIL
STATE OF CALIFORNIA

THE STATE OF CALIFORNIA OR ITS OFFICERS OR AGENTS SHALL NOT BE RESPONSIBLE FOR THE ACCURACY OR COMPLETENESS OF SCANNED COPIES OF THIS PLAN SHEET.

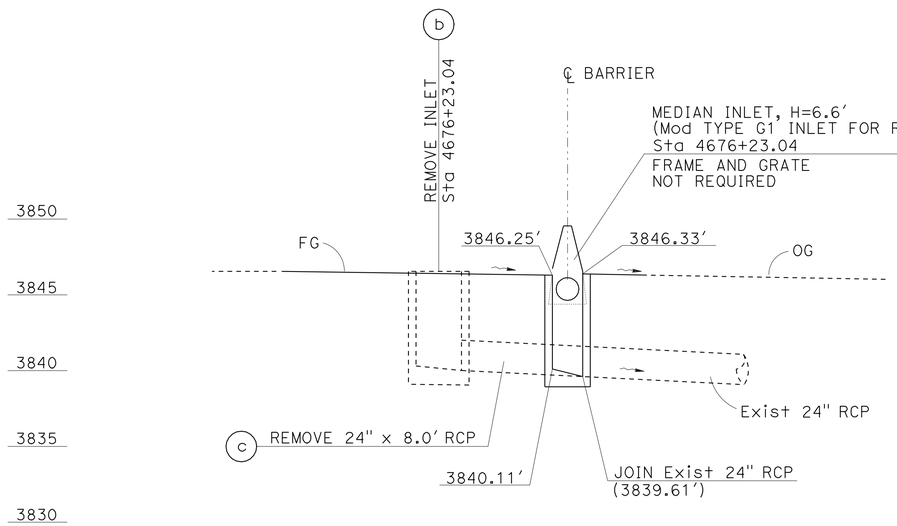

DRAINAGE SYSTEM 6

SCALE: Horiz 1" = 5′
Vert 1" = 5′

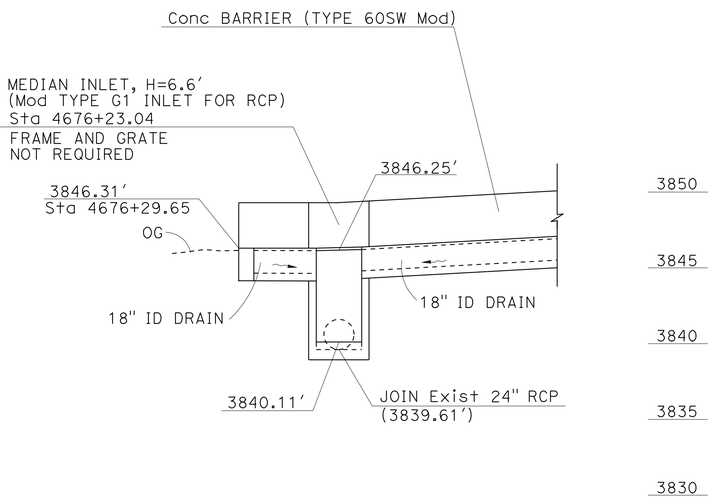

DRAINAGE SYSTEM 6

SCALE: Horiz 1" = 5′
Vert 1" = 5′

DRAINAGE PROFILE

DP-1

REVISED BY	DATE REVISED

CALCULATED-DESIGNED BY: PAUL FONG
CHECKED BY: FUSUNG CHANG
FUNCTIONAL SUPERVISOR: DAVE BHALLA

STATE OF CALIFORNIA - DEPARTMENT OF TRANSPORTATION
Caltrans
HYDRAULICS

LAST REVISION
DATE PLOTTED => 20-MAY-2011
TIME PLOTTED => 17:22

Dist	COUNTY	ROUTE	POST MILES TOTAL PROJECT	SHEET No.	TOTAL SHEETS
07	LA	5	R87.8/R88.6	18	47

Paul Fong 02/17/11
REGISTERED CIVIL ENGINEER DATE

5-23-11
PLANS APPROVAL DATE

REGISTERED PROFESSIONAL ENGINEER
PAUL FONG
No. C67053
Exp. 9/30/12
CIVIL
STATE OF CALIFORNIA

THE STATE OF CALIFORNIA OR ITS OFFICERS OR AGENTS SHALL NOT BE RESPONSIBLE FOR THE ACCURACY OR COMPLETENESS OF SCANNED COPIES OF THIS PLAN SHEET.

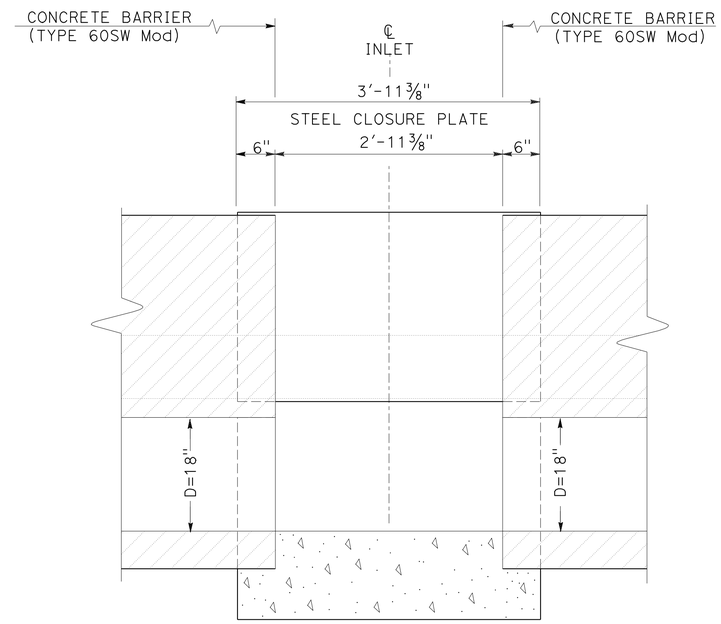

SECTION B-B

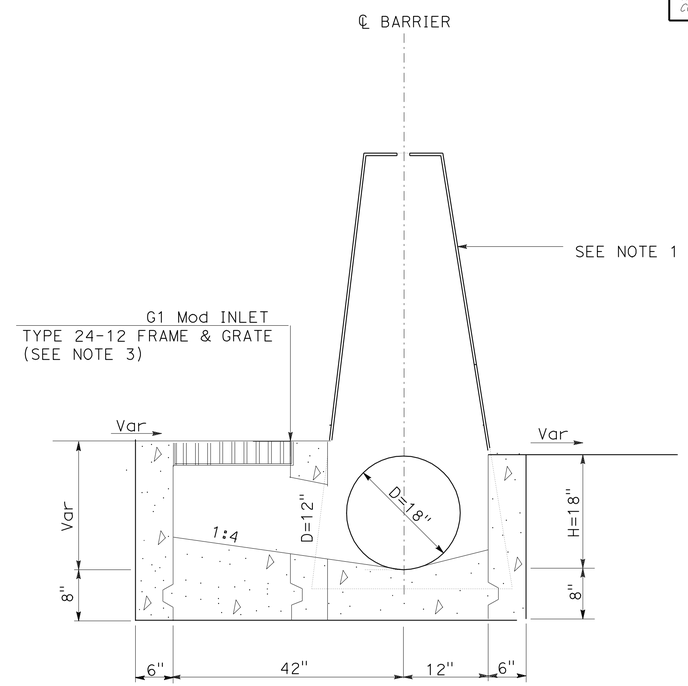

SECTION A-A

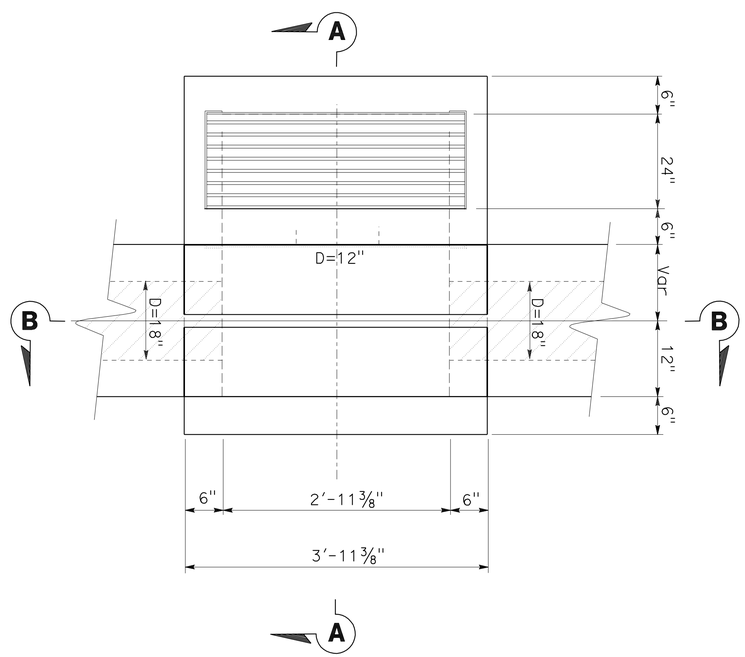

INTERMEDIATE CLEANOUT

NOTES:

1. FOR STEEL CLOSURE PLATE DETAILS, REFER TO SHEET DD-3.
2. ELEVATIONS OF PAVEMENT ON OPPOSITE SIDES OF CONCRETE BARRIER MAY VARY.
3. FOR FRAME AND GRATE INSTALLATION, REFER TO TYPE G1 INLET ON STANDARD PLAN D73.

PLAN

CLEANOUT No. 1

DRAINAGE DETAILS

NO SCALE

DD-1

STATE OF CALIFORNIA - DEPARTMENT OF TRANSPORTATION
Caltrans
HYDRAULICS

FUNCTIONAL SUPERVISOR: DAVE BHALLA
CALCULATED-DESIGNED BY: PAUL FONG
CHECKED BY: FUSUNG CHANG
REVISED BY
DATE REVISED

LAST REVISION
DATE PLOTTED => 20-MAY-2011
TIME PLOTTED => 17:22

Dist	COUNTY	ROUTE	POST MILES TOTAL PROJECT	SHEET No.	TOTAL SHEETS
07	LA	5	R87.8/R88.6	19	47

Paul Fong 02/17/11
REGISTERED CIVIL ENGINEER DATE

5-23-11
PLANS APPROVAL DATE

REGISTERED PROFESSIONAL ENGINEER
PAUL FONG
No. C67053
Exp. 9/30/12
CIVIL
STATE OF CALIFORNIA

THE STATE OF CALIFORNIA OR ITS OFFICERS OR AGENTS SHALL NOT BE RESPONSIBLE FOR THE ACCURACY OR COMPLETENESS OF SCANNED COPIES OF THIS PLAN SHEET.

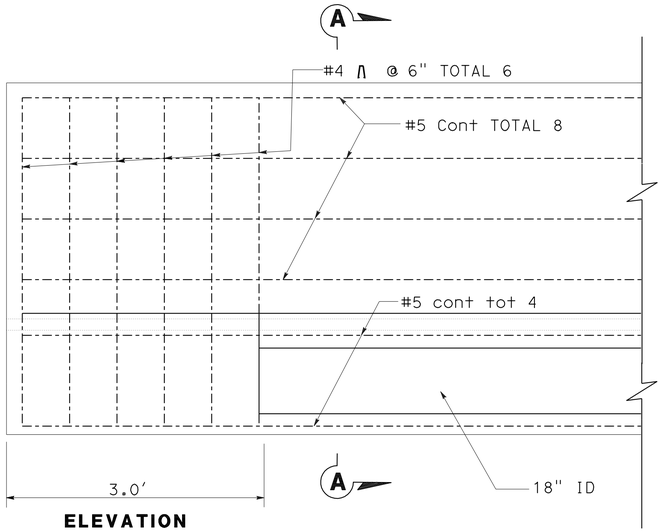

ELEVATION

BEGIN CONCRETE BARRIER ANCHOR

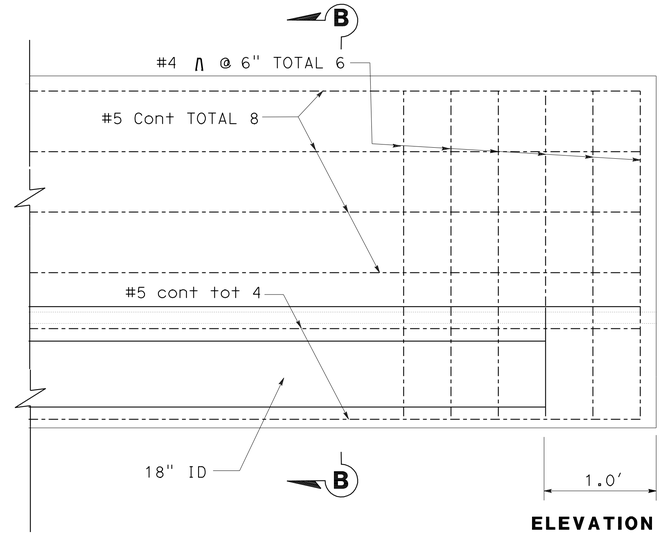

ELEVATION

CONCRETE BARRIER END ANCHOR

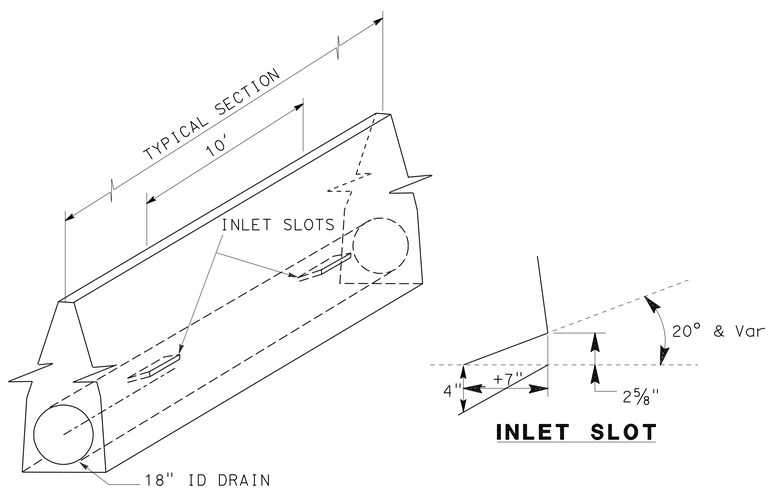

INLET SLOT

(WATER-CARRYING CONCRETE BARRIER)

CONCRETE BARRIER (TYPE 60SW) AND (TYPE 60SW Mod)
(WATER-CARRYING CONCRETE BARRIER)

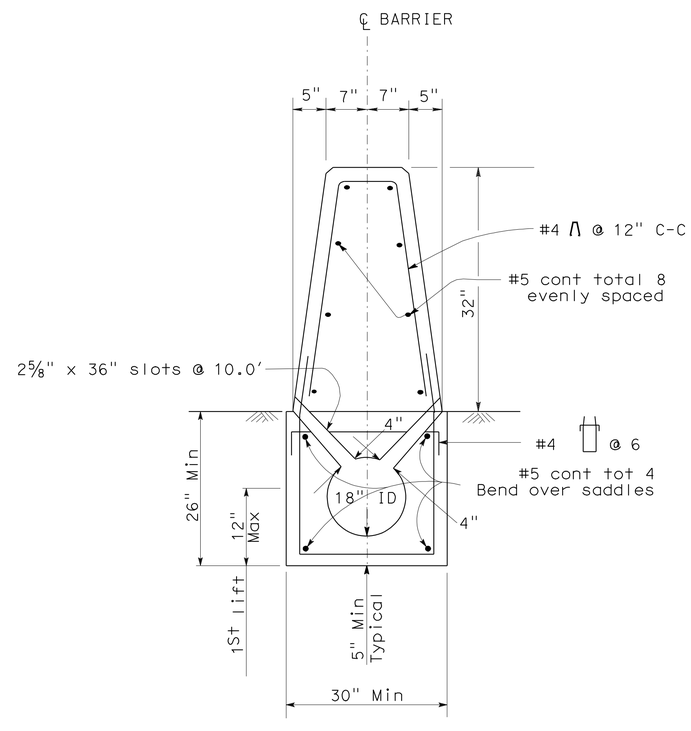

SECTION A-A

CONCRETE BARRIER (TYPE 60SW)
DOUBLE SLOT SECTION CAST IN PLACE

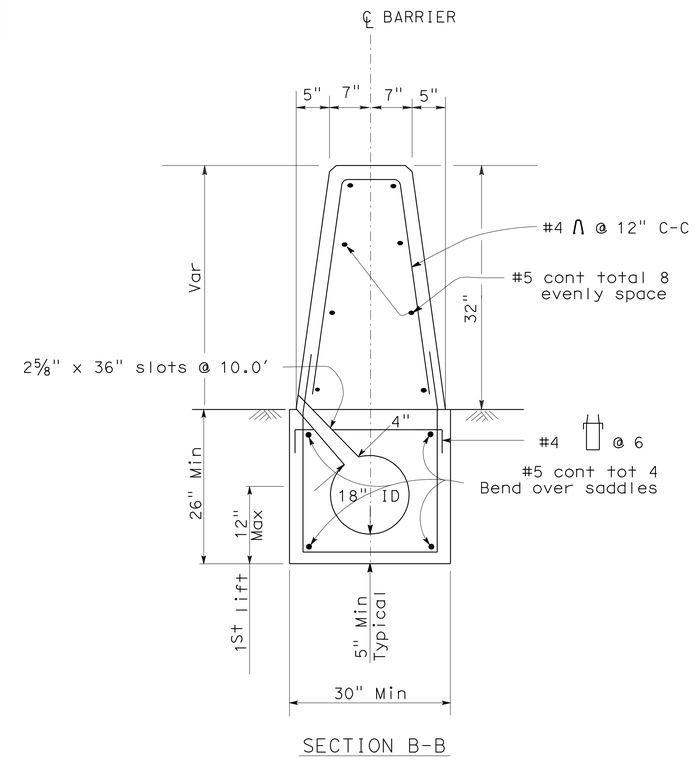

SECTION B-B

CONCRETE BARRIER (TYPE 60SW Mod)
SINGLE SLOT SECTION CAST IN PLACE

DRAINAGE DETAILS

NO SCALE

DD-2

REVISED BY	DATE REVISED

CALCULATED-DESIGNED BY	CHECKED BY	FUNCTIONAL SUPERVISOR
PAUL FONG	FUSUNG CHANG	DAVE BHALLA

STATE OF CALIFORNIA - DEPARTMENT OF TRANSPORTATION
Caltrans
HYDRAULICS

LAST REVISION
DATE PLOTTED => 20-MAY-2011
TIME PLOTTED => 17:22

Dist	COUNTY	ROUTE	POST MILES TOTAL PROJECT	SHEET No.	TOTAL SHEETS
07	LA	5	R87.8/R88.6	20	47

Paul Fong 02/17/11
REGISTERED CIVIL ENGINEER DATE

5-23-11
PLANS APPROVAL DATE

REGISTERED PROFESSIONAL ENGINEER
PAUL FONG
No. C67053
Exp. 9/30/12
CIVIL
STATE OF CALIFORNIA

THE STATE OF CALIFORNIA OR ITS OFFICERS OR AGENTS SHALL NOT BE RESPONSIBLE FOR THE ACCURACY OR COMPLETENESS OF SCANNED COPIES OF THIS PLAN SHEET.

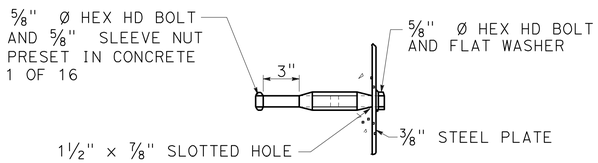

DETAIL "F"

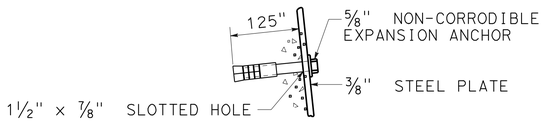

ALTERNATE DETAIL "F"

STEEL PLATE CLOSURE ANCHOR BOLT DETAILS

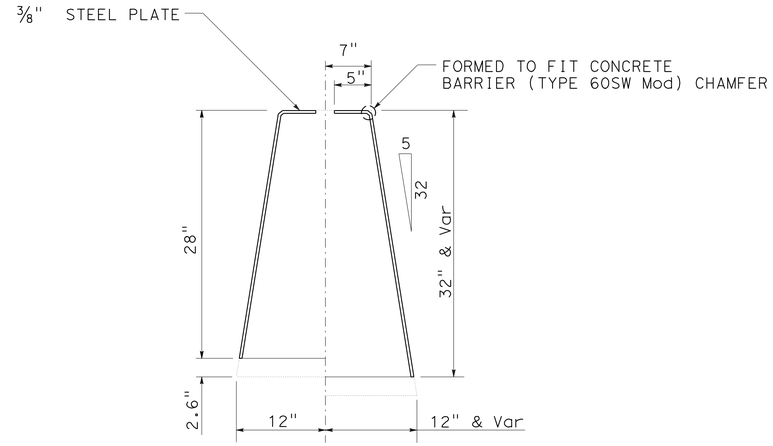

DETAIL "G"

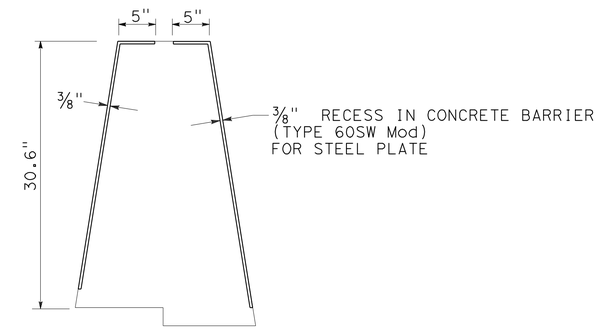

RECESS DETAIL

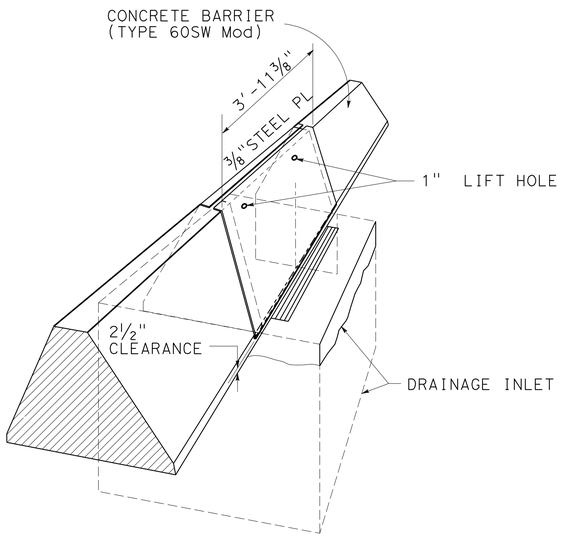

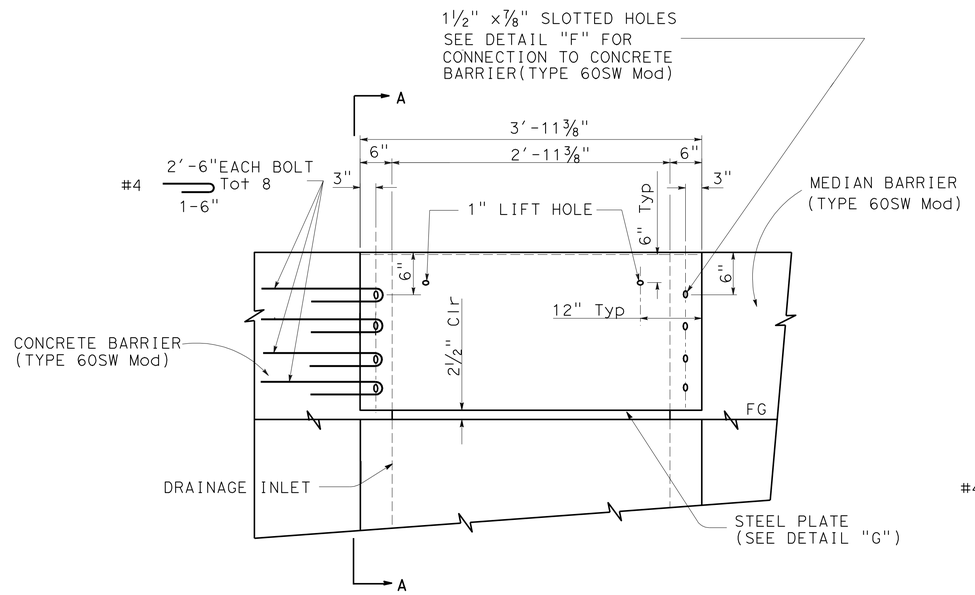

ELEVATION

STEEL PLATE CLOSURE DETAIL

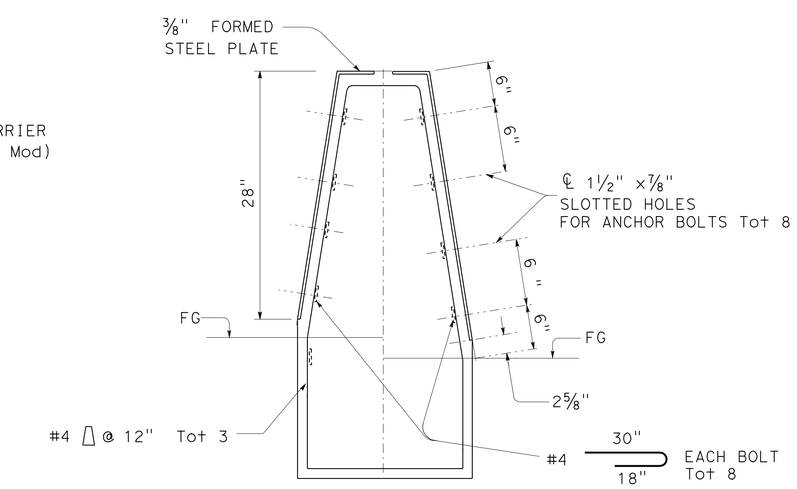

SECTION A-A

DETAILS OF CONCRETE BARRIER

(TYPE 60SW Mod) OVER INLET

DRAINAGE DETAILS

NO SCALE

DD-3

REVISED BY	
DATE REVISED	
CALCULATED-DESIGNED BY	PAUL FONG
CHECKED BY	FUSUNG CHANG
FUNCTIONAL SUPERVISOR	DAVE BHALLA

STATE OF CALIFORNIA - DEPARTMENT OF TRANSPORTATION
Caltrans®
HYDRAULICS

LAST REVISION
DATE PLOTTED => 20-MAY-2011
TIME PLOTTED => 17:22

Dist	COUNTY	ROUTE	POST MILES TOTAL PROJECT	SHEET No.	TOTAL SHEETS
07	LA	5	R87.8/R88.6	21	47

Paul Fong 02/17/11
REGISTERED CIVIL ENGINEER DATE

5-23-11
PLANS APPROVAL DATE

REGISTERED PROFESSIONAL ENGINEER
PAUL FONG
No. C67053
Exp. 9/30/12
CIVIL
STATE OF CALIFORNIA

THE STATE OF CALIFORNIA OR ITS OFFICERS OR AGENTS SHALL NOT BE RESPONSIBLE FOR THE ACCURACY OR COMPLETENESS OF SCANNED COPIES OF THIS PLAN SHEET.

TABLE FOR MEDIAN INLET

DRAINAGE SYSTEM No.	STATION	Elev 'A'	H_1	H_2	DRAINAGE SHEET No.
			FT		
1-d	4640+04.66	4021.58'	4.2	4.1	D-1
2-c	4646+05.66	3991.83'	4.9	4.8	D-2
3-c	4652+03.94	3961.99'	5.0	4.9	D-2
4-f	4662+54.34	3909.01'	5.2	5.1	D-3
5-c	4670+05.63	3871.77'	4.8	4.7	D-4
6-d	4676+23.04	3839.61'	6.6	6.7	D-4

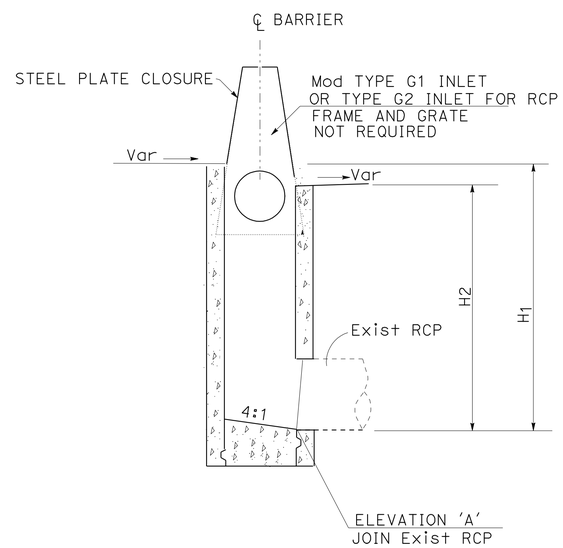

MEDIAN INLET No. 2

FOR INLET DETAILS AND INFORMATION NOT SHOWN SEE Std PLAN D73

DRAINAGE DETAILS

NO SCALE

DD-4

STATE OF CALIFORNIA - DEPARTMENT OF TRANSPORTATION
Caltrans
HYDRAULICS

FUNCTIONAL SUPERVISOR: DAVE BHALLA
CALCULATED-DESIGNED BY: PAUL FONG
CHECKED BY: FUSUNG CHANG
REVISED BY
DATE REVISED

LAST REVISION
DATE PLOTTED => 20-MAY-2011
TIME PLOTTED => 17:22

Dist	COUNTY	ROUTE	POST MILES TOTAL PROJECT	SHEET No.	TOTAL SHEETS
07	LA	5	R87.8/R88.6	22	47

Paul Fong 02/17/11
REGISTERED CIVIL ENGINEER DATE

5-23-11
PLANS APPROVAL DATE

REGISTERED PROFESSIONAL ENGINEER
PAUL FONG
No. C67053
Exp. 9/30/12
CIVIL
STATE OF CALIFORNIA

THE STATE OF CALIFORNIA OR ITS OFFICERS OR AGENTS SHALL NOT BE RESPONSIBLE FOR THE ACCURACY OR COMPLETENESS OF SCANNED COPIES OF THIS PLAN SHEET.

NOTE:

(N) NOT A SEPARATE PAY ITEM, FOR INFORMATION ONLY.

DRAINAGE SHEET No	DRAINAGE SYSTEM No ⬡	DRAINAGE UNIT No ○	HEIGHT OF INLET "H" OR "V"	MINOR CONCRETE (MINOR STRUCTURE)	MISCELLANEOUS IRON AND STEEL	REMOVE INLET	REMOVE PIPE	TYPE 24-12 FRAME & GRATE (N)	STEEL PLATE CLOSURE (N)	MAXIMUM COVER (N)	DESCRIPTION	STATION
			FT	CY	LB	EA	LF	EA	EA	FT		
D-1	1	a		0.9	326			1	1		L+, CLEANOUT No. 1	4636+00.00 ROUTE 5
		b		0.9	326			1	1		L+, CLEANOUT No. 1	4638+00.00 ROUTE 5
		c				1					REMOVE INLET	4640+04.66 ROUTE 5
		d	4.2	1.7					1		MEDIAN INLET No. 2	4640+04.66 ROUTE 5
D-2	2	a		0.9	326			1	1		L+, CLEANOUT No. 1	4643+50.00 ROUTE 5
		b				1					REMOVE INLET	4646+05.66 ROUTE 5
		c	4.9	1.8					1		MEDIAN INLET No. 2	4646+05.66 ROUTE 5
D-2	3	a		0.9	326			1	1		L+, CLEANOUT No. 1	4649+00.00 ROUTE 5
		b				1					REMOVE INLET	4652+03.94 ROUTE 5
		c	5.0	1.9					1		MEDIAN INLET No. 2	4652+03.94 ROUTE 5
D-3	4	a		0.9	326			1	1		L+, CLEANOUT No. 1	4655+50.00 ROUTE 5
		b		0.9	326			1	1		L+, CLEANOUT No. 1	4659+00.00 ROUTE 5
		c				1					REMOVE INLET	4661+07.39 ROUTE 5
		d					148.0			2.9	REMOVE 18" RCP	
		e				1					REMOVE INLET	4662+54.34 ROUTE 5
		f	5.2	2.0					1		MEDIAN INLET No. 2	4662+54.34 ROUTE 5
SHEET TOTAL				12.8	1956	5	148.0	6	10			

DRAINAGE QUANTITIES
DQ-1

STATE OF CALIFORNIA - DEPARTMENT OF TRANSPORTATION
Caltrans
HYDRAULICS

FUNCTIONAL SUPERVISOR: DAVE BHALLA
CALCULATED-DESIGNED BY: PAUL FONG
CHECKED BY: FUSUNG CHANG
REVISED BY
DATE REVISED

LAST REVISION
DATE PLOTTED => 20-MAY-2011
TIME PLOTTED => 15:21

Dist	COUNTY	ROUTE	POST MILES TOTAL PROJECT	SHEET No.	TOTAL SHEETS
07	LA	5	R87.8/R88.6	23	47

Paul Fong 02/17/11
REGISTERED CIVIL ENGINEER DATE

5-23-11
PLANS APPROVAL DATE

REGISTERED PROFESSIONAL ENGINEER
PAUL FONG
No. C67053
Exp. 9/30/12
CIVIL
STATE OF CALIFORNIA

THE STATE OF CALIFORNIA OR ITS OFFICERS OR AGENTS SHALL NOT BE RESPONSIBLE FOR THE ACCURACY OR COMPLETENESS OF SCANNED COPIES OF THIS PLAN SHEET.

NOTE:

(N) NOT A SEPARATE PAY ITEM, FOR INFORMATION ONLY.

DRAINAGE SHEET No	DRAINAGE SYSTEM No ⬡	DRAINAGE UNIT No ○	HEIGHT OF INLET "H" OR "V" FT	MINOR CONCRETE (MINOR STRUCTURE) CY	MISCELLANEOUS IRON AND STEEL LB	REMOVE INLET EA	REMOVE PIPE LF	TYPE 24-12 FRAME & GRATE (N) EA	STEEL PLATE CLOSURE (N) EA	MAXIMUM COVER (N) FT	DESCRIPTION	STATION
D-3	5	a		0.9	326			1	1		Lt, CLEANOUT No. 1	4666+00.00 ROUTE 5
D-4		b				1					REMOVE INLET	4670+05.63 ROUTE 5
		c	4.8	1.8					1		MEDIAN INLET No. 2	4670+05.63 ROUTE 5
D-4	6	a		0.9	326			1	1		Lt, CLEANOUT No. 1	4673+50.00 ROUTE 5
		b				1					REMOVE INLET	4676+23.04 ROUTE 5
		c					8.0				REMOVE 24" RCP	
		d	6.7	2.3					1		MEDIAN INLET No. 2	4676+23.04 ROUTE 5
SHEET TOTAL				5.9	652	2	8.0	2	4			
TOTAL				18.7	2608	7	156.0	8	14			

DRAINAGE QUANTITIES

DQ-2

STATE OF CALIFORNIA - DEPARTMENT OF TRANSPORTATION
Caltrans HYDRAULICS

FUNCTIONAL SUPERVISOR: DAVE BHALLA
CALCULATED-DESIGNED BY: PAUL FONG
CHECKED BY: FUSUNG CHANG
REVISED BY
DATE REVISED

LAST REVISION
DATE PLOTTED => 20-MAY-2011
TIME PLOTTED => 15:21

Dist	COUNTY	ROUTE	POST MILES TOTAL PROJECT	SHEET No.	TOTAL SHEETS
07	LA	5	R87.8/R88.6	24	47

REGISTERED CIVIL ENGINEER 3-3-11 DATE

5-23-11
PLANS APPROVAL DATE

REGISTERED PROFESSIONAL ENGINEER MEHRDAD MELOLAEI No. C54400 Exp. 12/31/11 CIVIL STATE OF CALIFORNIA

THE STATE OF CALIFORNIA OR ITS OFFICERS OR AGENTS SHALL NOT BE RESPONSIBLE FOR THE ACCURACY OR COMPLETENESS OF SCANNED COPIES OF THIS PLAN SHEET.

NOTES:

1. FOR ACCURATE RIGHT OF WAY DATA, CONTACT RIGHT OF WAY ENGINEERING AT THE DISTRICT OFFICE.
2. UTILITY OWNERSHIP ON THIS PROJECT:
   GAS - SOUTHERN CALIFORNIA GAS

ABBREVIATION:

So Calif Gas - SOUTHERN CALIFORNIA GAS LINE
H So Calif Gas - HIGH PRESSURE SOUTHERN CALIFORNIA GAS LINE

CURVE DATA

No.	R	△	T	L
1	2600.00′	84°30′16″	2361.85′	3834.69′

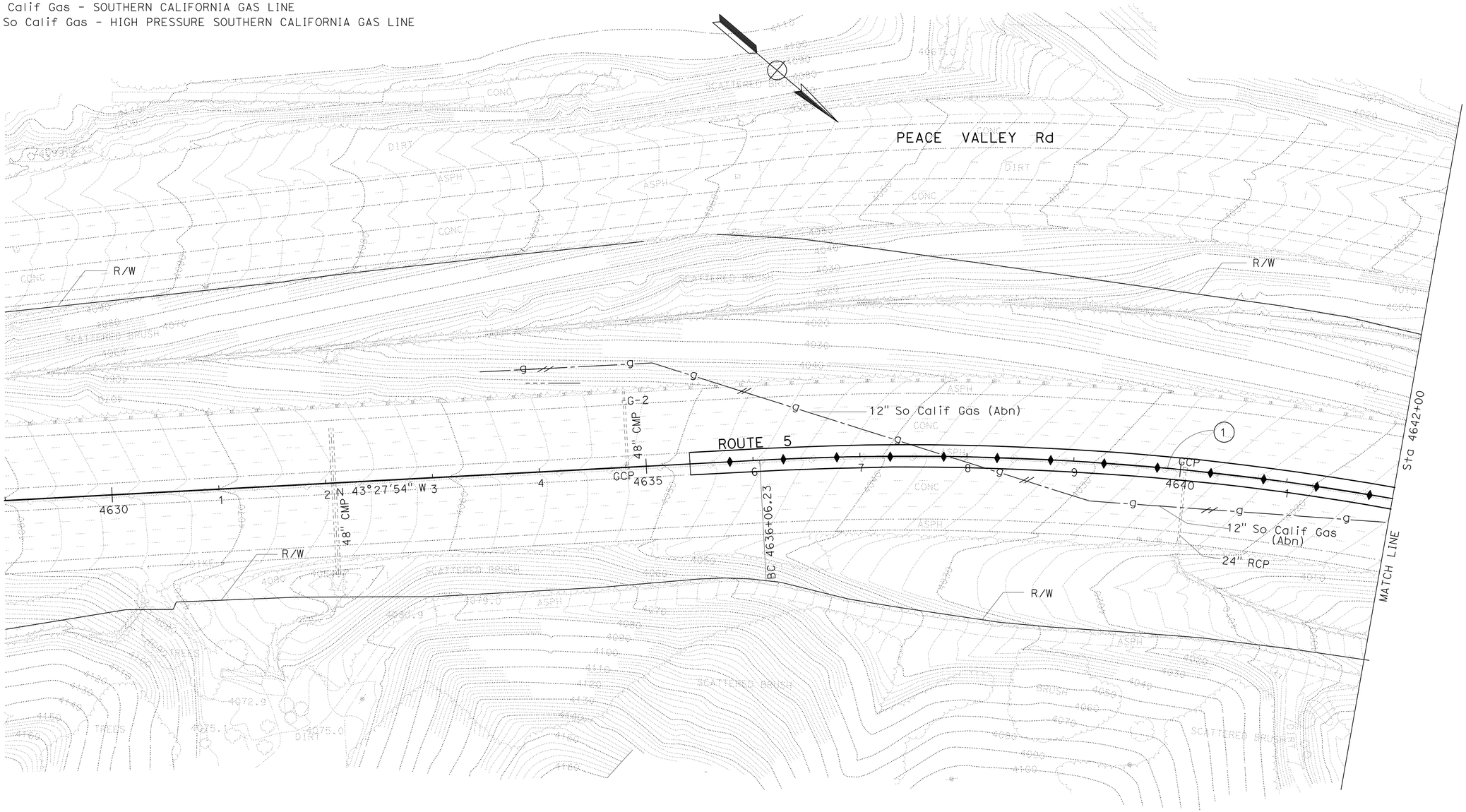

UTILITY PLAN

SCALE: 1″ = 50′

U-1

THIS PLAN ACCURATE FOR UTILITY INFORMATION ONLY.

STATE OF CALIFORNIA - DEPARTMENT OF TRANSPORTATION
Caltrans® OFFICE OF DESIGN A

FUNCTIONAL SUPERVISOR: PARVIZ YEGANEH
CALCULATED-DESIGNED BY: MEHRDAD MELOLAEI
CHECKED BY: PARVIZ YEGANEH
REVISED BY
DATE REVISED

LAST REVISION 02-18-11
DATE PLOTTED => 20-MAY-2011
TIME PLOTTED => 15:21

Dist	COUNTY	ROUTE	POST MILES TOTAL PROJECT	SHEET No.	TOTAL SHEETS
07	LA	5	R87.8/R88.6	25	47

REGISTERED CIVIL ENGINEER 3-3-11 DATE

5-23-11
PLANS APPROVAL DATE

REGISTERED PROFESSIONAL ENGINEER MEHRDAD MOLAEI No. C 54400 Exp. 12/31/11 CIVIL STATE OF CALIFORNIA

THE STATE OF CALIFORNIA OR ITS OFFICERS OR AGENTS SHALL NOT BE RESPONSIBLE FOR THE ACCURACY OR COMPLETENESS OF SCANNED COPIES OF THIS PLAN SHEET.

NOTE:

FOR ACCURATE RIGHT OF WAY DATA, CONTACT RIGHT OF WAY ENGINEERING AT DISTRICT OFFICE.

CURVE DATA

No.	R	△	T	L
1	2600.00′	84°30′16"	2361.85′	3834.69′

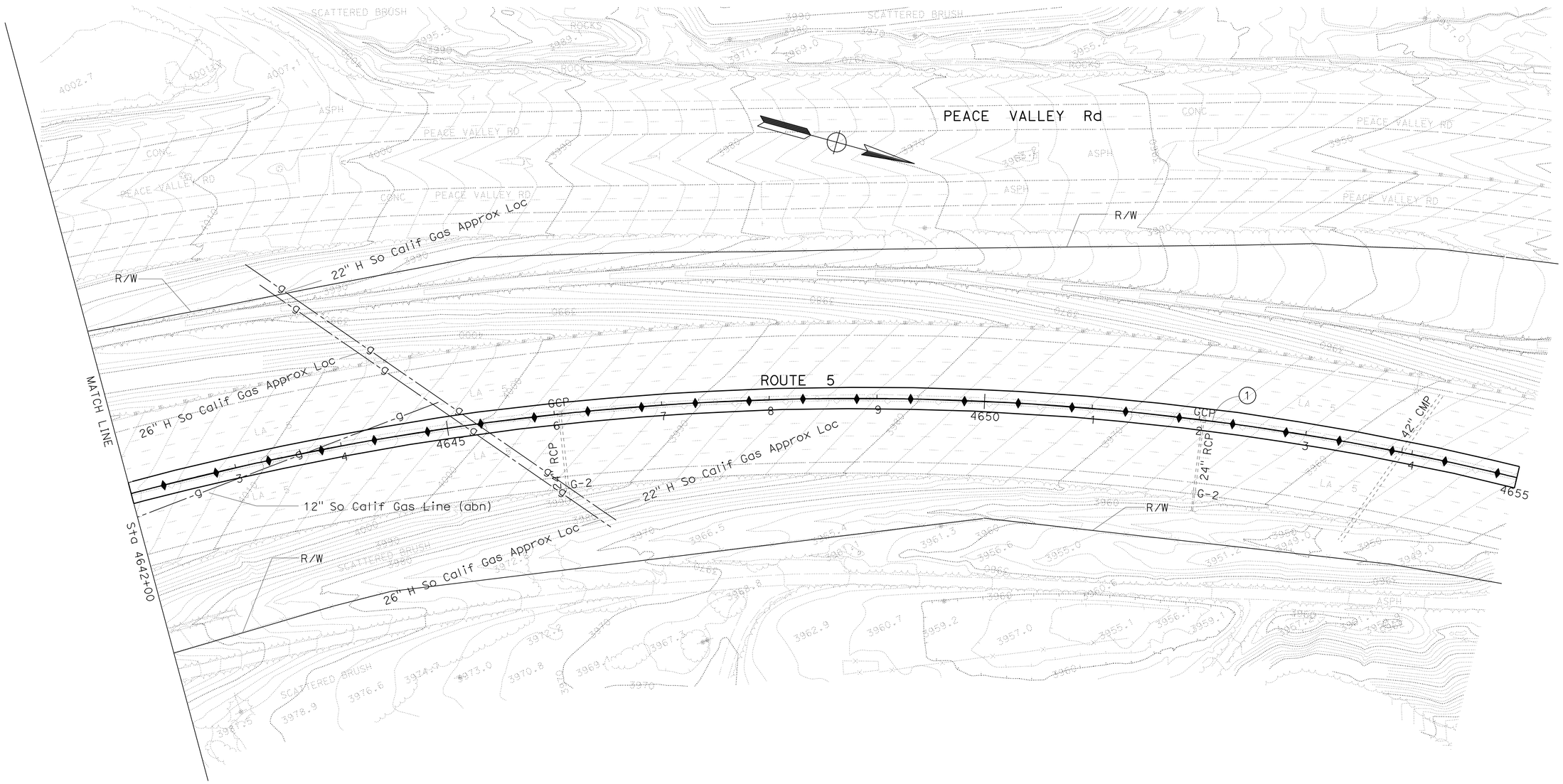

UTILITY PLAN

SCALE: 1" = 50′

U-2

THIS PLAN ACCURATE FOR UTILITY INFORMATION ONLY.

STATE OF CALIFORNIA - DEPARTMENT OF TRANSPORTATION
Caltrans OFFICE OF DESIGN A

FUNCTIONAL SUPERVISOR: PARVIZ YEGANEH
CALCULATED-DESIGNED BY: MEHRDAD MOLAEI
CHECKED BY: PARVIZ YEGANEH
REVISED BY
DATE REVISED

LAST REVISION 02-18-11
DATE PLOTTED => 20-MAY-2011
TIME PLOTTED => 15:21

Dist	COUNTY	ROUTE	POST MILES TOTAL PROJECT	SHEET No.	TOTAL SHEETS
07	LA	5	R87.8/R88.6	26	47

REGISTERED CIVIL ENGINEER 3-3-11 DATE

5-23-11
PLANS APPROVAL DATE

REGISTERED PROFESSIONAL ENGINEER
LEWEN KUO
No. 52464
Exp. 12/31/12
CIVIL
STATE OF CALIFORNIA

THE STATE OF CALIFORNIA OR ITS OFFICERS OR AGENTS SHALL NOT BE RESPONSIBLE FOR THE ACCURACY OR COMPLETENESS OF SCANNED COPIES OF THIS PLAN SHEET.

NOTES:

1. SIGN LOCATIONS SHOWN ARE APPROXIMATE. EXACT LOCATIONS WILL BE DETERMINED BY THE ENGINEER.
2. "TRAFFIC FINES DOUBLED IN CONSTRUCTION ZONES" SIGNS SHALL BE PLACED APPROXIMATELY 500 FEET IN ADVANCE OF "ROAD WORK AHEAD" SIGNS OR AS DETERMINED BY THE ENGINEER.

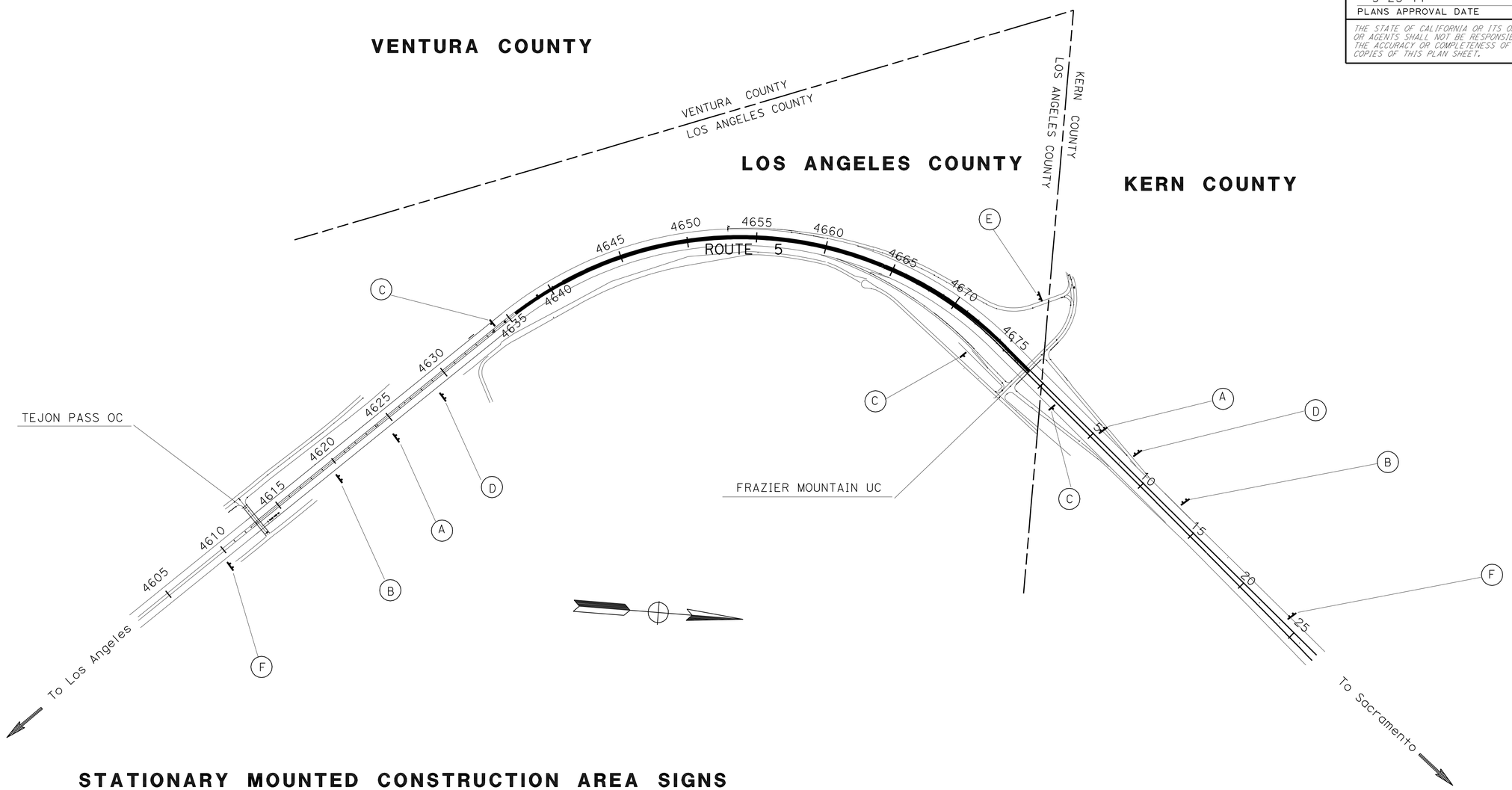

STATIONARY MOUNTED CONSTRUCTION AREA SIGNS

SIGN No.	SIGN CODE	PANEL SIZE	SIGN MESSAGE	No. OF POSTS AND SIZE	No. OF SIGNS
A	W20-1	60" x 60"	ROAD WORK AHEAD	2 - 6" x 6"	2
B	C40	144" x 60"	TRAFFIC FINES DOUBLED IN CONSTRUCTION ZONES	2 - 6" x 8"	2
C	G20-2	48" x 24"	END ROAD WORK	1 - 4" x 6"	3
D	W21-5b	48" x 48"	LEFT SHOULDER CLOSED 5000 FT	2 - 4" x 6"	2
E	W20-1	48" x 48"	ROAD WORK AHEAD	2 - 4" x 6"	1
F		132" x 84"	CONSTRUCTION PROJECT FUNDING IDENTIFICATION SIGN	2 - 6" x 8"	2

THIS PLAN ACCURATE FOR CONSTRUCTION AREA SIGNS WORK ONLY

CONSTRUCTION AREA SIGNS

NO SCALE

CS-1

STATE OF CALIFORNIA - DEPARTMENT OF TRANSPORTATION
Caltrans® OFFICE OF DESIGN B

FUNCTIONAL SUPERVISOR: OJI KALU
CALCULATED-DESIGNED BY: APOLINAR RAMIRO
CHECKED BY: LEWEN KUO
REVISED BY
DATE REVISED

LAST REVISION 3-8-11
DATE PLOTTED => 20-MAY-2011
TIME PLOTTED => 15:24

Dist	COUNTY	ROUTE	POST MILES TOTAL PROJECT	SHEET No.	TOTAL SHEETS
07	LA	5	R87.8/R88.6	27	47

REGISTERED CIVIL ENGINEER 3-9-11 DATE

5-23-11
PLANS APPROVAL DATE

REGISTERED PROFESSIONAL ENGINEER LEWEN KUO No. C52464 Exp. 12/31/12 CIVIL STATE OF CALIFORNIA

THE STATE OF CALIFORNIA OR ITS OFFICERS OR AGENTS SHALL NOT BE RESPONSIBLE FOR THE ACCURACY OR COMPLETENESS OF SCANNED COPIES OF THIS PLAN SHEET.

NOTE:

1. CONFLICTING STRIPING SHALL BE REMOVED.

LEGENDS:

DETAIL XX - STRIPING DETAIL PER STANDARD PLANS
CHANGE IN STRIPE DETAIL
(1) PAINT TRAFFIC STRIPE (2-COAT), NON-REFLECTIVE AND/OR RETROREFLECTIVE PAVEMENT MARKERS

CONSTRUCTION AREA
CHANNELIZER (SURFACE MOUNTED)
TEMPORARY CRASH CUSHION ARRAY
TEMPORARY RAILING (TYPE K)
DIRECTION OF TRAFFIC
13M DETAIL 13 (MODIFIED)

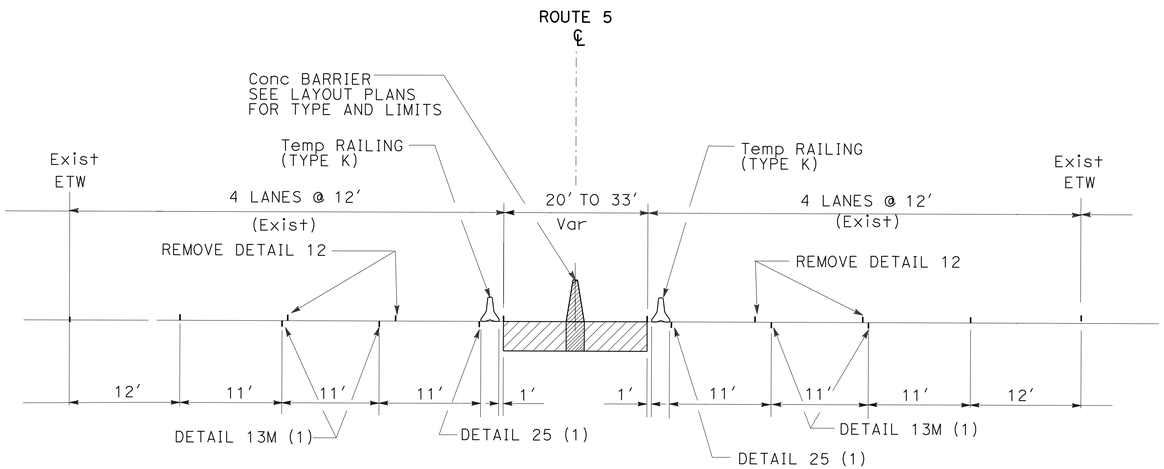

SOUTHBOUND
Sta 4634+00 TO Sta 4677+34

NORTHBOUND
Sta 4633+45 TO Sta 4677+34

TYPICAL SECTION
NO SCALE

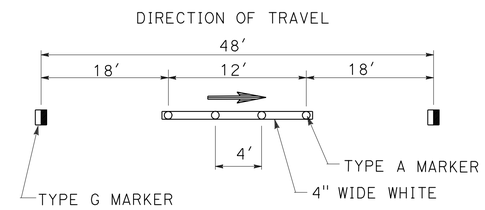

DETAIL 13M
NO SCALE

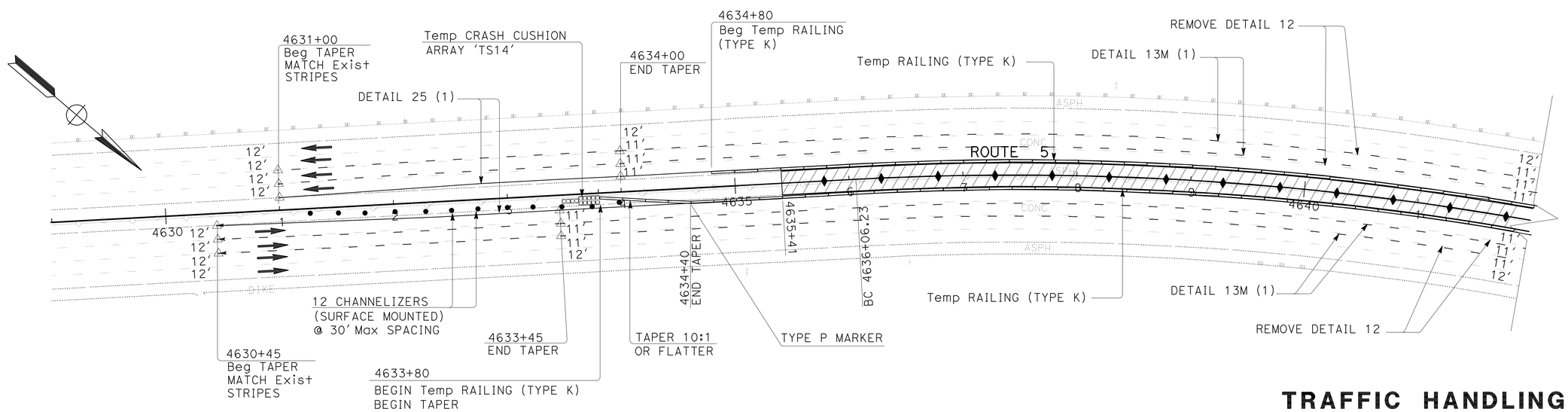

THIS PLAN ACCURATE FOR TRAFFIC HANDLING ONLY.

TRAFFIC HANDLING PLAN

SCALE: 1" = 50′

TH-1

STATE OF CALIFORNIA - DEPARTMENT OF TRANSPORTATION
Caltrans OFFICE OF DESIGN B

FUNCTIONAL SUPERVISOR: OJI KALU
CALCULATED-DESIGNED BY: APOLINAR RAMIRO
CHECKED BY: LEWEN KUO
REVISED BY
DATE REVISED

LAST REVISION 3-8-11
DATE PLOTTED => 20-MAY-2011
TIME PLOTTED => 15:25

Dist	COUNTY	ROUTE	POST MILES TOTAL PROJECT	SHEET No.	TOTAL SHEETS
07	LA	5	R87.8/R88.6	28	47

REGISTERED CIVIL ENGINEER 3-9-11 DATE

5-23-11
PLANS APPROVAL DATE

REGISTERED PROFESSIONAL ENGINEER
LEWEN KUO
No. C52464
Exp. 12/31/12
CIVIL
STATE OF CALIFORNIA

THE STATE OF CALIFORNIA OR ITS OFFICERS OR AGENTS SHALL NOT BE RESPONSIBLE FOR THE ACCURACY OR COMPLETENESS OF SCANNED COPIES OF THIS PLAN SHEET.

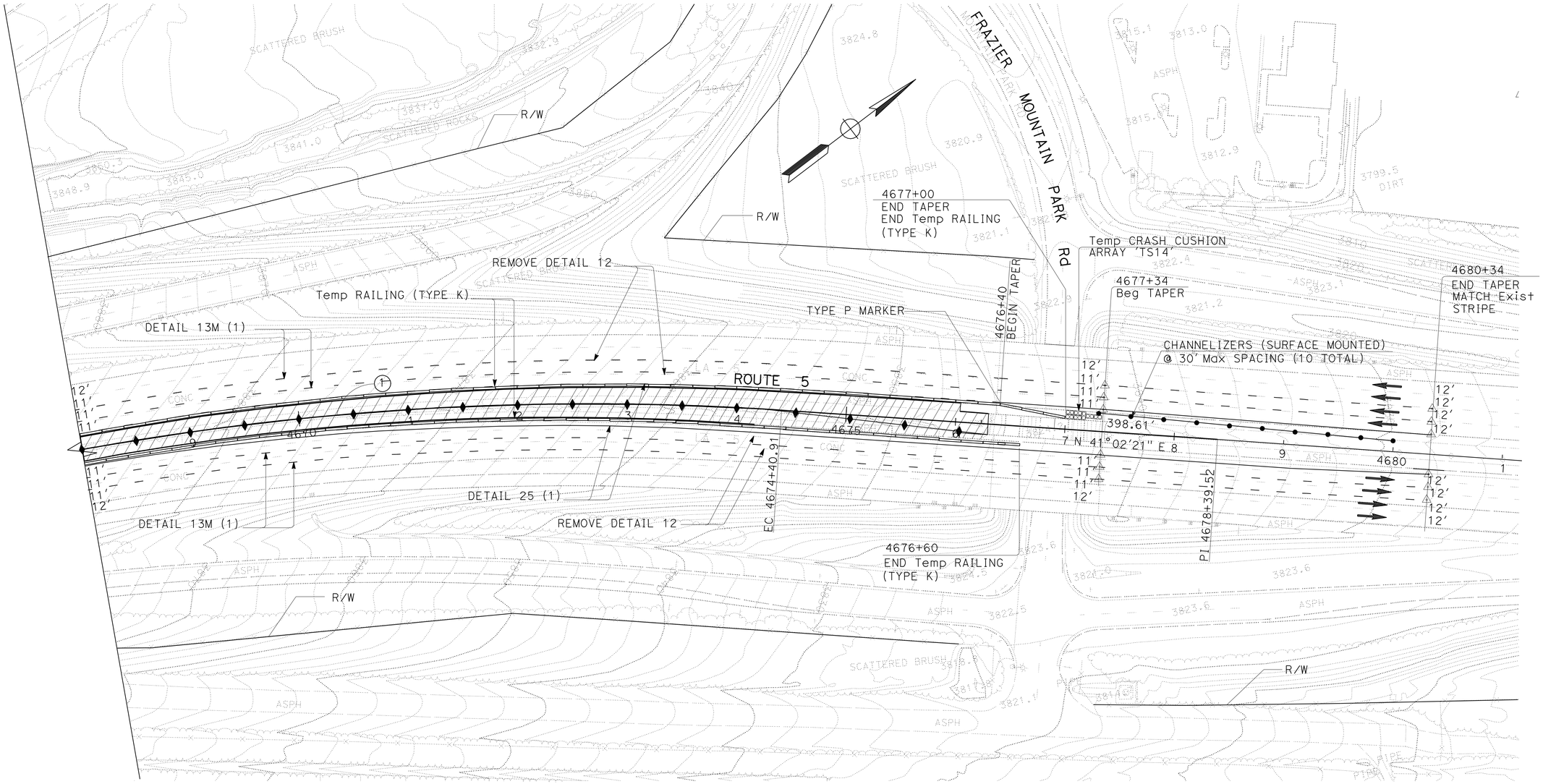

TRAFFIC HANDLING PLAN

SCALE: 1" = 50'

THIS PLAN ACCURATE FOR TRAFFIC HANDLING ONLY.

TH-2

STATE OF CALIFORNIA - DEPARTMENT OF TRANSPORTATION
Caltrans® OFFICE OF DESIGN B

FUNCTIONAL SUPERVISOR: OJI KALU
CALCULATED-DESIGNED BY: APOLINAR ROMIRO
CHECKED BY: LEWEN KUO
REVISED BY
DATE REVISED

LAST REVISION 2-18-11
DATE PLOTTED => 20-MAY-2011
TIME PLOTTED => 15:25

Dist	COUNTY	ROUTE	POST MILES TOTAL PROJECT	SHEET No.	TOTAL SHEETS
07	LA	5	R87.8/R88.6	29	47

REGISTERED CIVIL ENGINEER 3-3-11 DATE

5-23-11
PLANS APPROVAL DATE

REGISTERED PROFESSIONAL ENGINEER
LEWEN KUO
No. 52464
Exp. 12/31/12
CIVIL
STATE OF CALIFORNIA

THE STATE OF CALIFORNIA OR ITS OFFICERS OR AGENTS SHALL NOT BE RESPONSIBLE FOR THE ACCURACY OR COMPLETENESS OF ELECTRONIC COPIES OF THIS PLAN SHEET.

LOCATION	STATION	REMOVE PAVEMENT DELINEATION		TEMPORARY TRAFFIC STRIPE (PAINT)		TEMPORARY PAVEMENT MARKER			TEMPORARY RAILING (TYPE K)	CHANNELIZER (SURFACE MOUNTED)	TEMPORARY CRASH CUSHION MODULE
		REMOVE PAVEMENT MARKER	REMOVE PAINTED TRAFFIC STRIPE	4" BROKEN WHITE	4" SOLID YELLOW	NON-REFLECTIVE	RETROREFLECTIVE				
		RETROREFLECTIVE TYPE G	4" BROKEN WHITE			TYPE A	TYPE G	TYPE H			
		DETAIL 12		DETAIL 13M	DETAIL 25	DETAIL 13M		DETAIL 25			
		EA	LF	LF	LF	EA	EA	EA	LF	EA	EA
N/B	4630+45 TO 4690+34	210	2495	9978	4989	840	210	105	4280	12	14
S/B	4631+00 TO 4680+34	208	2467	9868	4934	832	208	104	4220	10	14
SUBTOTAL		418	4962	19846	9923	1672	418	209	8500	22	28
TOTAL		418	4962	29769		2299			8500	22	28

TRAFFIC HANDLING QUANTITIES

THQ-1

REVISED BY | DATE REVISED
APOLINAR RAMIRO | LEWEN KUO
CALCULATED-DESIGNED BY | CHECKED BY
FUNCTIONAL SUPERVISOR: OJI KALU

STATE OF CALIFORNIA - DEPARTMENT OF TRANSPORTATION
Caltrans OFFICE OF DESIGN B

LAST REVISION 2-08-11
DATE PLOTTED => 20-MAY-2011
TIME PLOTTED => 15:25

Dist	COUNTY	ROUTE	POST MILES TOTAL PROJECT	SHEET No.	TOTAL SHEETS
07	LA	5	R87.8/R88.6	30	47

REGISTERED CIVIL ENGINEER DATE 3-9-11

5-23-11
PLANS APPROVAL DATE

REGISTERED PROFESSIONAL ENGINEER
LEWEN KUO
No. 52464
Exp. 12/31/12
CIVIL
STATE OF CALIFORNIA

THE STATE OF CALIFORNIA OR ITS OFFICERS OR AGENTS SHALL NOT BE RESPONSIBLE FOR THE ACCURACY OR COMPLETENESS OF ELECTRONIC COPIES OF THIS PLAN SHEET.

LOCATION	STATION	PAINT TRAFFIC STRIPE (2-COAT)		PAVEMENT MARKER	
		4" BROKEN WHITE	4" SOLID YELLOW	RETROREFLECTIVE-RECESSED	RETROREFLECTIVE
				TYPE G	TYPE H
		DETAIL 12	DETAIL 25	DETAIL 12	DETAIL 25
		LF	LF	EA	EA
N/B	4630+45 to 4680+34	9978	4989	210	105
S/B	4631+00 to 4680+34	9868	4934	208	104
SUBTOTAL		19846	9923	418	209
TOTAL		29769		418	209

PAVEMENT DELINEATION QUANTITIES

PDQ-1

STATE OF CALIFORNIA - DEPARTMENT OF TRANSPORTATION
Caltrans OFFICE OF DESIGN B

FUNCTIONAL SUPERVISOR: OJI KALU
CALCULATED-DESIGNED BY: APOLINAR RAMIRO
CHECKED BY: LEWEN KUO
REVISED BY
DATE REVISED

LAST REVISION 2-18-11
DATE PLOTTED => 20-MAY-2011
TIME PLOTTED => 15:25

Dist	COUNTY	ROUTE	POST MILES TOTAL PROJECT	SHEET No.	TOTAL SHEETS
07	LA	5	R87.8/R88.6	31	47

REGISTERED CIVIL ENGINEER 3-9-11 DATE

5-23-11
PLANS APPROVAL DATE

REGISTERED PROFESSIONAL ENGINEER LEWEN KUO No. 52464 Exp. 12/31/12 CIVIL STATE OF CALIFORNIA

THE STATE OF CALIFORNIA OR ITS OFFICERS OR AGENTS SHALL NOT BE RESPONSIBLE FOR THE ACCURACY OR COMPLETENESS OF ELECTRONIC COPIES OF THIS PLAN SHEET.

ROADWAY QUANTITIES

LOCATION	STATION	ROADWAY EXCAVATION	REMOVE DMBB	CLASS 3 AGGREGATE BASE	LEAN CONCRETE BASE	JOINTED PLAIN CONCRETE PAVEMENT	CONCRETE BARRIER (TYPE 60SW)	CONCRETE BARRIER (TYPE 60SW Mod)	DOUBLE THRIE BEAM BARRIER (WOOD POST)	END CAP (TYPE TC)	DOWEL BAR (N)	SEAL LONGITUDINAL ISOLATION JOINT	ARCHITECTURAL TREATMENT	SLURRY CEMENT BACKFILL
		CY	LF	CY	CY	CY	LF	LF	LF	EA	EA	LF	LF	CY
L-1	4635+41 TO 4642+00	987	659	305	218	435	35	600	25	1		1318	1270	2.7
L-2	4642+00 TO 4655+00	1983	1300	598	427	854		1300				2600	2600	5.3
L-3	4655+00 TO 4668+00	2000	1300	612	437	874		1300				2600	2600	5.3
L-4	4668+00 TO 4676+29.65	1494	830	519	371	742		830				1660	1660	3.4
	TOTAL	6464	4089	2034	1453	2905	35	4030	25	1	5980	8178	8130	16.7

(N) - NOT A SEPARATE PAY ITEM, FOR INFORMATION ONLY.

TEMPORARY WATER POLLUTION CONTROL QUANTITIES

	TEMPORARY GRAVEL BAG BERM	TEMPORARY CONSTRUCTION ENTRANCE	TEMPORARY COVER	TEMPORARY DRAINAGE INLET PROTECTION
	LF	EA	SQYD	EA
TOTAL	600	2	200	10

SUMMARY OF QUANTITIES

Q-1

REVISED BY | DATE REVISED
APOLINAR RAMIRO | LEWEN KUO
CALCULATED-DESIGNED BY | CHECKED BY
FUNCTIONAL SUPERVISOR
OJI KALU

STATE OF CALIFORNIA - DEPARTMENT OF TRANSPORTATION
Caltrans OFFICE OF DESIGN B

LAST REVISION 3-8-11 | DATE PLOTTED => 20-MAY-2011 TIME PLOTTED => 15:25

DIST	COUNTY	ROUTE	POST MILES TOTAL PROJECT	SHEET NO.	TOTAL SHEETS
07	LA	5	R87.8/R88.6	32	47

Randell D. Hiatt
REGISTERED CIVIL ENGINEER

June 6, 2008
PLANS APPROVAL DATE

REGISTERED PROFESSIONAL ENGINEER
Randell D. Hiatt
No. C50200
Exp. 6-30-09
CIVIL
STATE OF CALIFORNIA

The State of California or its officers or agents shall not be responsible for the accuracy or completeness of electronic copies of this plan sheet.

To accompany plans dated 5-23-11

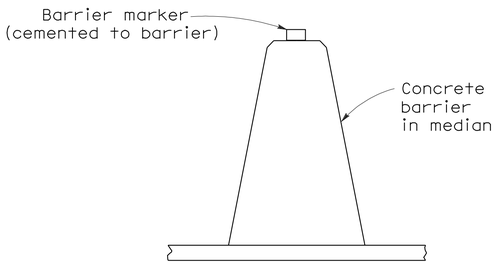

CONCRETE BARRIER TYPE 60 DELINEATION

See Notes 7 and 8

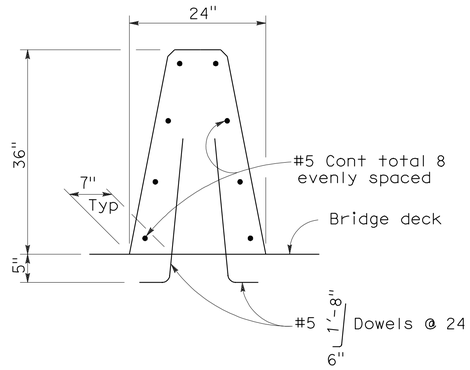

CONCRETE BARRIER TYPE 60A

Details similar to Type 60 except as noted.

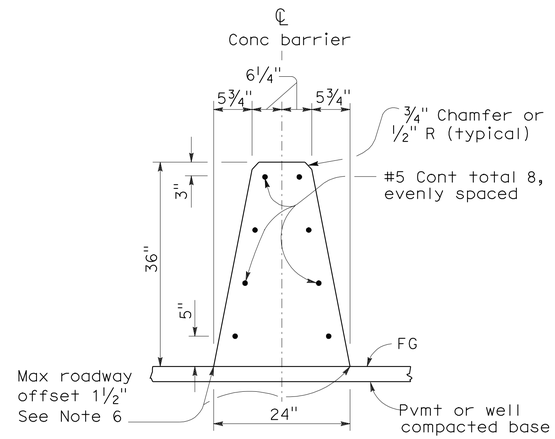

CONCRETE BARRIER TYPE 60

NOTES:

1. See Standard Plan A76B for details of Concrete Barrier Type 60 end anchors, connection to structures and transitions to Concrete Barrier Type 50 and Concrete Barrier Type 60S.
2. See Standard Plan A76C for Concrete Barrier Type 60 transitions at bridge column and sign pedestals.
3. Where glare screen is required on Concrete Barrier Type 60, use Concrete Barrier Type 60G.
4. Where the concrete barrier is added to the face of existing concrete structure, match existing weep holes.
5. Expansion joints in concrete barrier shall be located at all deck, pavement and principal wall joints. Expansion joint filler material shall be the same size as joint or ½" minimum.
6. Where roadway offset is greater than 1½", see Concrete Barrier Type 60C.
7. Barrier delineation to be used when required by the Special Provisions.
8. Spacing of barrier markers to match spacing of raised pavement markers on the adjacent median edgeline pavement delineation.
9. Reinforcing stirrup not required for roadway offsets less than 1'-0".
10. For roadway surfaces offset greater than 1½" to 3", no rebars required. For roadway surfaces offset greater than 3" to 8" use two #4 rebars at 3" above the lower roadway surface. For roadway surfaces offset greater than 8" to 12", use two #4 rebars at 3" above the lower roadway surface and two #4 rebars at 8" above the lower roadway surface. For roadway surfaces offset greater than 12" to 36", use two #4 rebars at 3" above the lower roadway surface and two #4 rebars at every 8" increment vertical spacing above the first two #4 rebars.

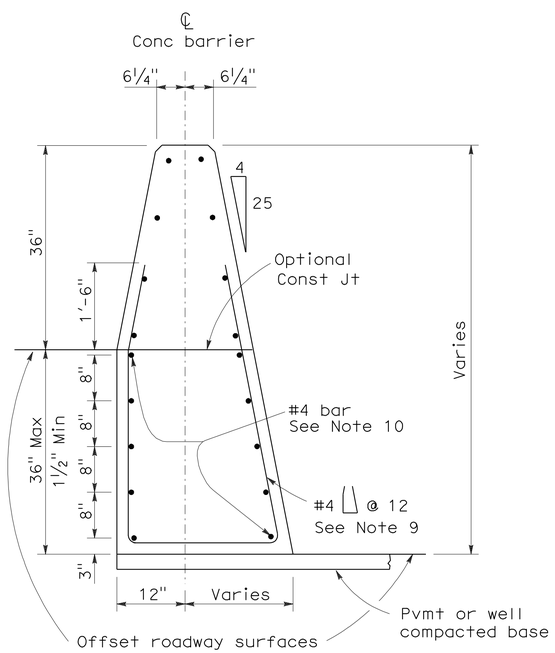

CONCRETE BARRIER TYPE 60C

Details similar to Type 60 except as noted.
Concrete barrier end anchor when necessary.
36" roadway surfaces offset shown.

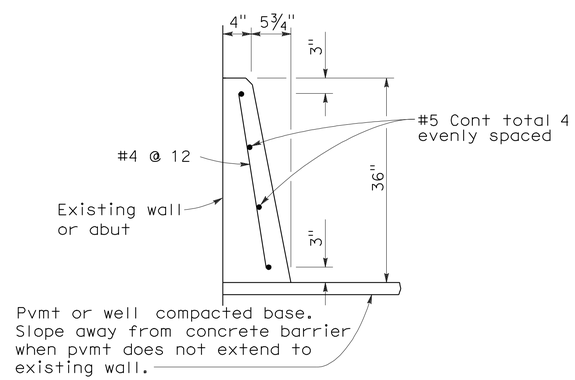

CONCRETE BARRIER TYPE 60D

STATE OF CALIFORNIA
DEPARTMENT OF TRANSPORTATION

CONCRETE BARRIER TYPE 60

NO SCALE

RSP A76A DATED JUNE 6, 2008 SUPERSEDES STANDARD PLAN A76A
DATED MAY 1, 2006 - PAGE 29 OF THE STANDARD PLANS BOOK DATED MAY 2006.

REVISED STANDARD PLAN RSP A76A

2006 REVISED STANDARD PLAN RSP A76A

5-21-08

DIST	COUNTY	ROUTE	POST MILES TOTAL PROJECT	SHEET No.	TOTAL SHEETS
07	LA	5	R87.8/R88.6	33	47

Randell D. Hiatt
REGISTERED CIVIL ENGINEER

June 6, 2008
PLANS APPROVAL DATE

REGISTERED PROFESSIONAL ENGINEER
Randell D. Hiatt
No. C50200
Exp. 6-30-09
CIVIL
STATE OF CALIFORNIA

The State of California or its officers or agents shall not be responsible for the accuracy or completeness of electronic copies of this plan sheet.

To accompany plans dated 5-23-11

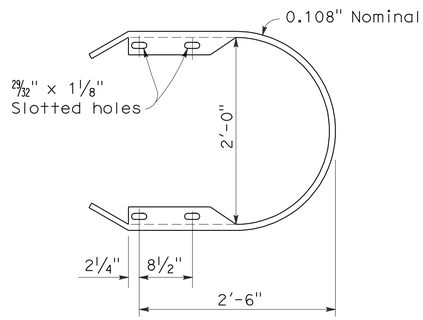

RETURN CAP
(TYPE TA)

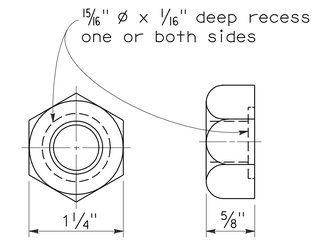

5/8" ø RECESS NUT

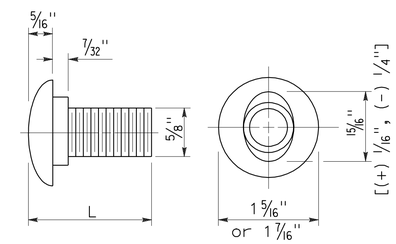

5/8" ø BUTTON HEAD BOLT

L	THREAD LENGTH
1 1/4"	full thread length
2"	full thread length
9 1/2"	4" Min thread length
18"	4" Min thread length

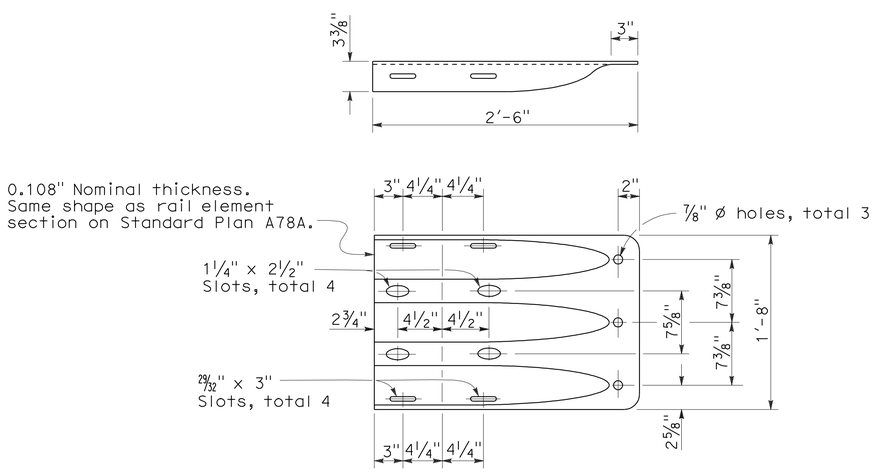

END CAP
(TYPE TC)

STATE OF CALIFORNIA
DEPARTMENT OF TRANSPORTATION

THRIE BEAM BARRIER STANDARD HARDWARE DETAILS

NO SCALE

RSP A78C1 DATED JUNE 6, 2008 SUPERSEDES STANDARD PLAN A78C1
DATED MAY 1, 2006 - PAGE 85 OF THE STANDARD PLANS BOOK DATED MAY 2006.

REVISED STANDARD PLAN RSP A78C1

2006 REVISED STANDARD PLAN RSP A78C1

4-21-08

To accompany plans dated 5-23-11

DIST	COUNTY	ROUTE	POST MILES TOTAL PROJECT	SHEET NO.	TOTAL SHEETS
07	LA	5	R87.8/R88.6	34	47

Randell D. Hiatt
REGISTERED CIVIL ENGINEER

June 6, 2008
PLANS APPROVAL DATE

REGISTERED PROFESSIONAL ENGINEER
Randell D. Hiatt
No. C50200
Exp. 6-30-09
CIVIL
STATE OF CALIFORNIA

The State of California or its officers or agents shall not be responsible for the accuracy or completeness of electronic copies of this plan sheet.

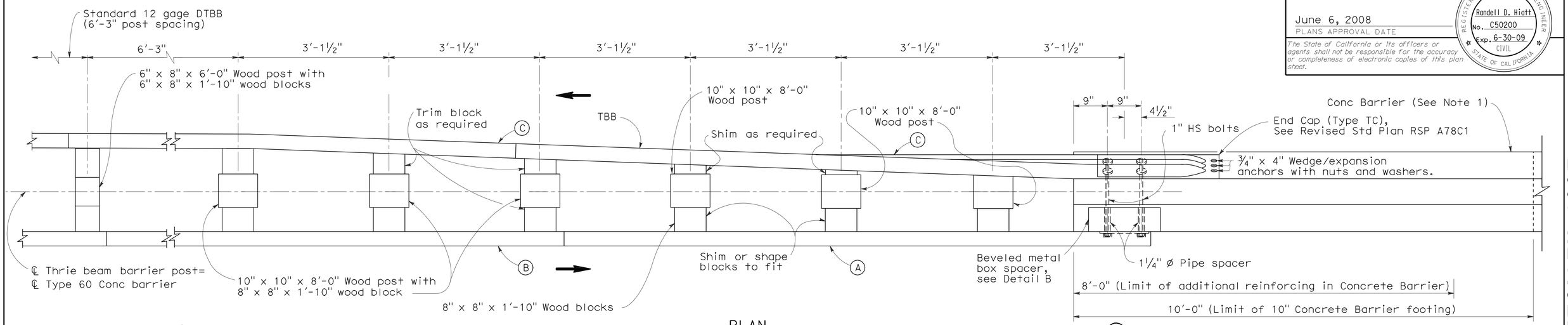

PLAN

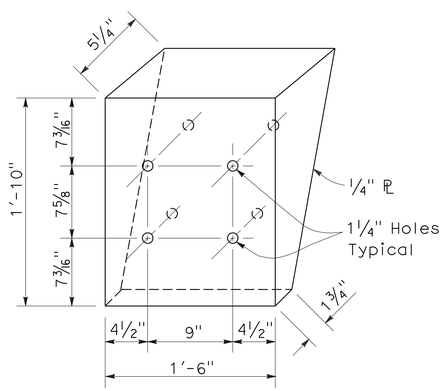

DETAIL B

Beveled metal box spacer
See Note 3

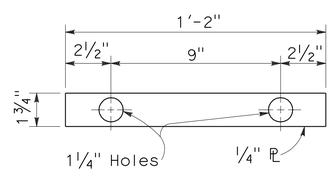

DETAIL C

PLATE 'A'

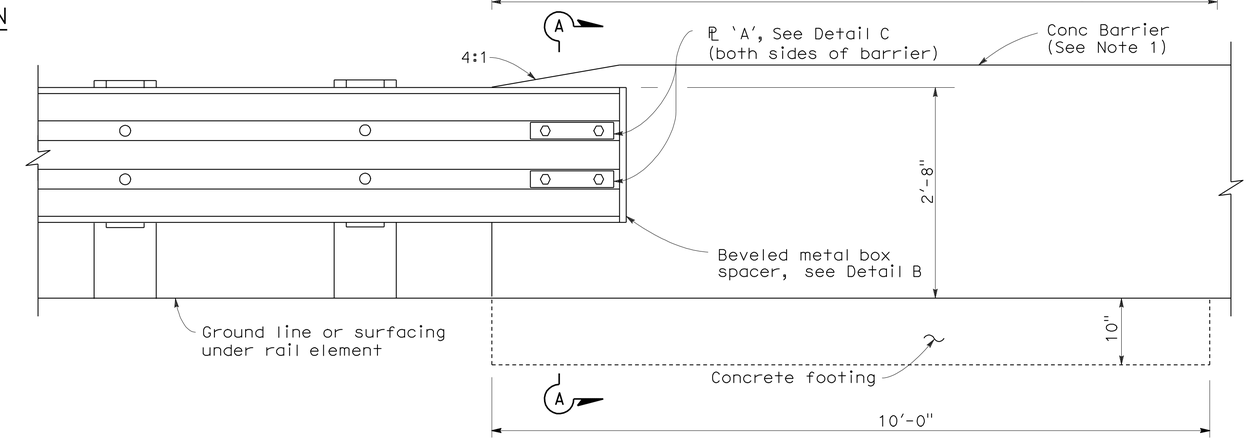

ELEVATION

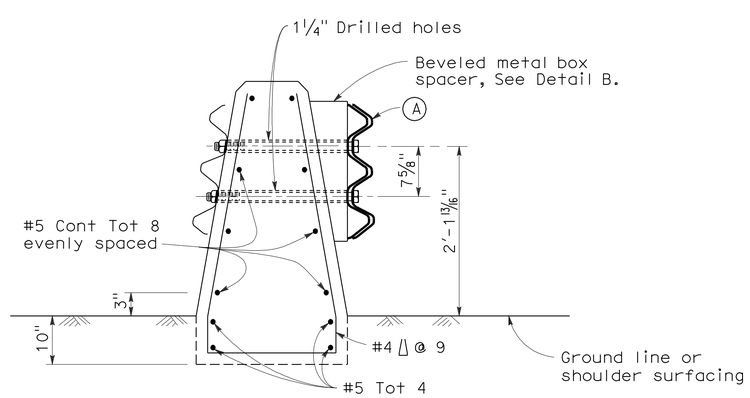

SECTION A-A

(Type 60 Conc Barrier shown)

LEGEND

(A) Nested thrie beam elements (one 12 gage element nested over one 10 gage element).

(B) One 10 gage thrie beam element.

(C) One 12 gage thrie beam element.

10 gage = 0.135" thick

12 gage = 0.108" thick

NOTES:

1. For details of Concrete Barrier Type 60, see Revised Standard Plan RSP A76A. Thrie beam barrier connections to Concrete Barrier Type 60S and Type 60G are similar to details shown on this plan.
2. For additional thrie beam barrier details, see Standard Plan A78A, Revised Standard Plans RSPs A78B and A78C1, and Standard Plan A78C2.
3. Where beveled metal box spacer is installed, place 1¼" Ø x 3¼" and 1¼" Ø x 2" pipe spacers on 1" HS bolts passing through interior of box.
4. Direction of traffic indicated by ➡.

STATE OF CALIFORNIA
DEPARTMENT OF TRANSPORTATION

DOUBLE THRIE BEAM BARRIER CONNECTION TO CONCRETE BARRIER

NO SCALE

RSP A78I DATED JUNE 6, 2008 SUPERSEDES STANDARD PLAN A78I
DATED MAY 1, 2006 - PAGE 96 OF THE STANDARD PLANS BOOK DATED MAY 2006.

REVISED STANDARD PLAN RSP A78I

2006 REVISED STANDARD PLAN RSP A78I

5-1-08

DIST	COUNTY	ROUTE	POST MILES TOTAL PROJECT	SHEET NO.	TOTAL SHEETS
07	LA	5	R87.8/R88.6	35	47

William K. Farnbach
REGISTERED CIVIL ENGINEER

May 15, 2009
PLANS APPROVAL DATE

REGISTERED PROFESSIONAL ENGINEER
William K. Farnbach
No. C49042
Exp. 9-30-10
CIVIL
STATE OF CALIFORNIA

The State of California or its officers or agents shall not be responsible for the accuracy or completeness of electronic copies of this plan sheet.

To accompany plans dated 5-23-11

2006 REVISED STANDARD PLAN RSP P1

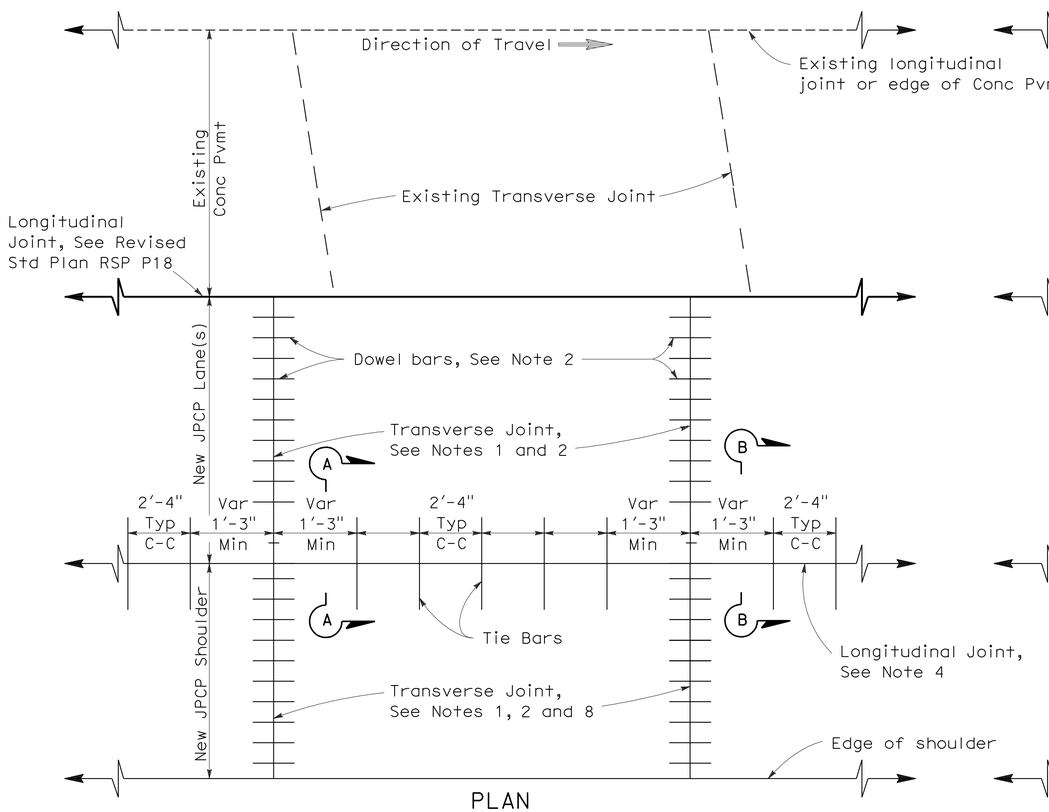

PLAN

LANE/SHOULDER ADDITION OR RECONSTRUCTION

See Notes 6 and 7

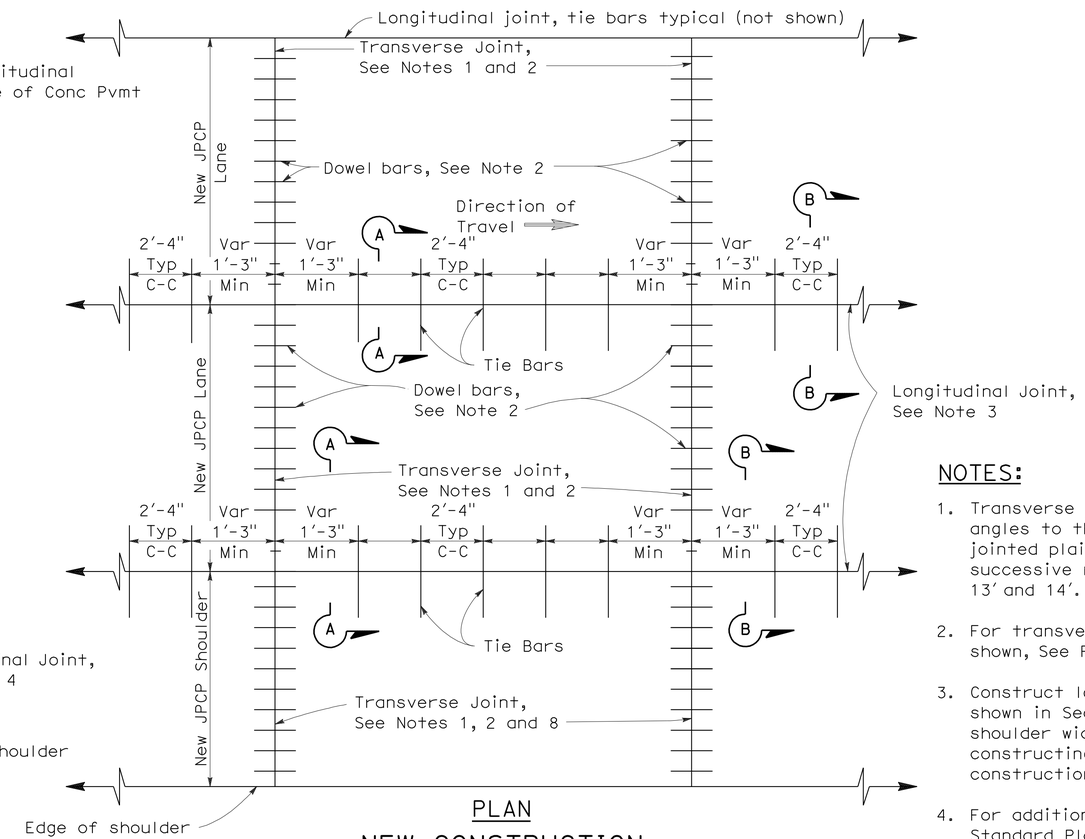

PLAN

NEW CONSTRUCTION

See Notes 6 and 7

NOTES:

1. Transverse joints shall be constructed at right angles to the longitudinal pavement joints in new jointed plain concrete pavement and spaced at successive repeated intervals of 12', 15', 13' and 14'.
2. For transverse joint and dowel bar details not shown, See Revised Standard Plan RSP P10.
3. Construct longitudinal contraction joints as shown in Section A-A when more than one lane or shoulder widths are placed at one time. If constructing one lane at a time, use longitudinal construction joint, as shown in Section B-B.
4. For additional longitudinal joint details, see Revised Standard Plan RSP P18.
5. If fresh concrete is placed adjacent to existing concrete, the top corner of the new hardened concrete does not need to be rounded to the 1/4" radius as shown.
6. Joint spacing patterns do not apply to intersections.
7. Details can also apply to inside widening.
8. Dowel bars may be omitted from shoulders when the shoulder cross slope is not the same as the adjacent traffic lane.

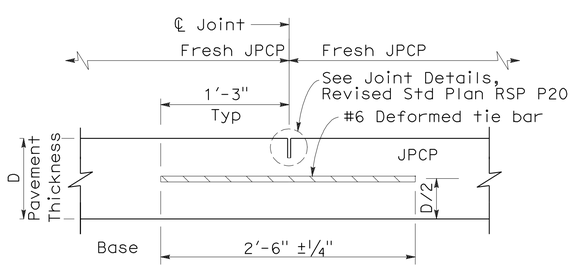

SECTION A-A

LONGITUDINAL CONTRACTION JOINT

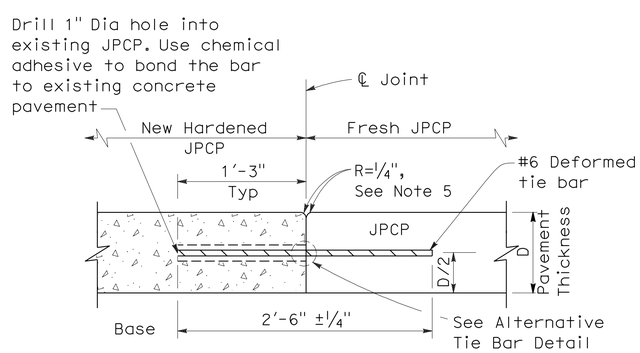

SECTION B-B

LONGITUDINAL CONSTRUCTION JOINT

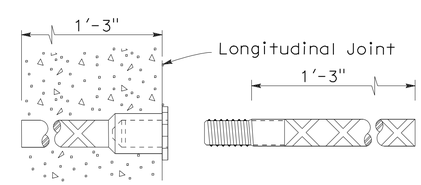

ALTERNATIVE TIE BAR SPLICE DETAIL

(Splice Coupler)

TIE BAR DETAILS

STATE OF CALIFORNIA
DEPARTMENT OF TRANSPORTATION

JOINTED PLAIN CONCRETE PAVEMENT

NO SCALE

RSP P1 DATED MAY 15, 2009 SUPERSEDES STANDARD PLAN P1
DATED MAY 1, 2006 - PAGE 119 OF THE STANDARD PLANS BOOK DATED MAY 2006.

REVISED STANDARD PLAN RSP P1

5-8-09

DIST	COUNTY	ROUTE	POST MILES TOTAL PROJECT	SHEET NO.	TOTAL SHEETS
07	LA	5	R87.8/R88.6	36	47

REGISTERED CIVIL ENGINEER

May 15, 2009
PLANS APPROVAL DATE

REGISTERED PROFESSIONAL ENGINEER — William K. Farnbach — No. C49042 — Exp. 9-30-10 — CIVIL — STATE OF CALIFORNIA

The State of California or its officers or agents shall not be responsible for the accuracy or completeness of electronic copies of this plan sheet.

To accompany plans dated 5-23-11

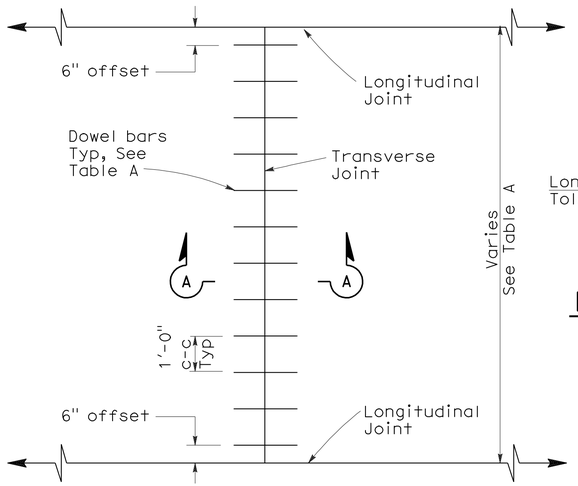

TRANSVERSE JOINT DOWEL BAR LAYOUT

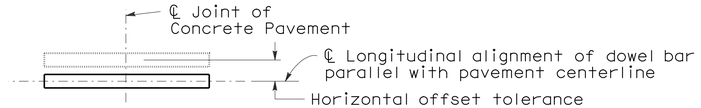

PLAN

HORIZONTAL OFFSET TOLERANCE

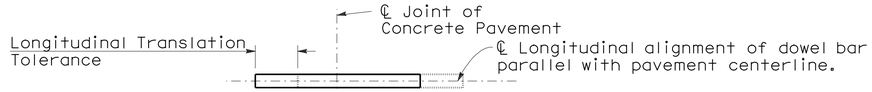

PLAN

LONGITUDINAL TRANSLATION TOLERANCE

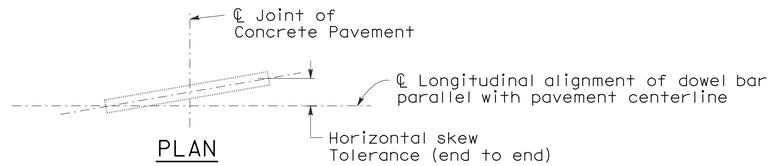

PLAN

HORIZONTAL SKEW TOLERANCE

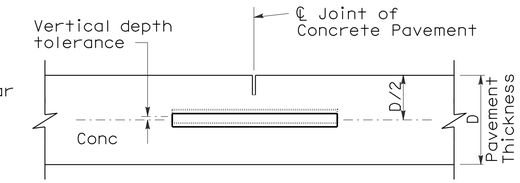

ELEVATION

VERTICAL DEPTH TOLERANCE

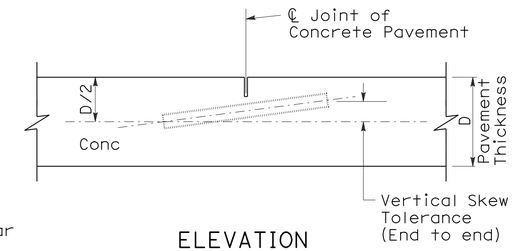

ELEVATION

VERTICAL SKEW TOLERANCE

NOTES:

1. See Revised Standard Plan RSP P1 for typical dowel bar placement and locations.
2. 1½" Dia smooth dowel bars are to be used with a pavement thickness, D, equal to or greater than 0.70 feet. For pavement thickness, D, less than 0.70 feet, use 1¼" Dia smooth dowel bars.
3. For widths not shown, see Project Plans.
4. If fresh concrete pavement is placed adjacent to existing concrete pavement, the top corner of the existing concrete pavement does not need to be rounded to the ¼" radius, as shown.

TABLE A (See Note 3)

Dowel Bar Transverse Spacing Table	
Width between Longitudinal Joints	Number of Dowels between Longitudinal Joints
14'-0"	14
13'-0"	13
12'-0"	12
11'-0"	11
10'-0"	10
8'-0"	8
5'-0"	5
4'-0"	4

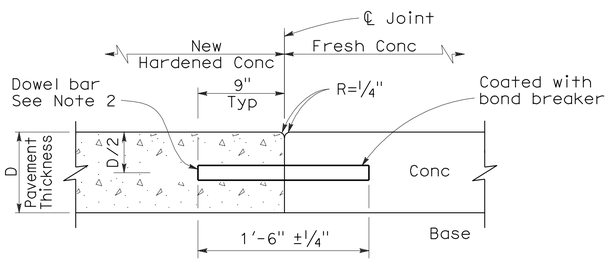

SECTION A-A

TRANSVERSE CONSTRUCTION JOINT DETAIL

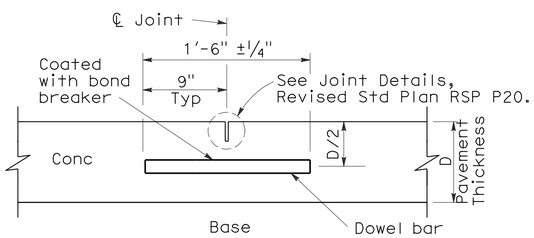

TRANSVERSE CONTRACTION JOINT

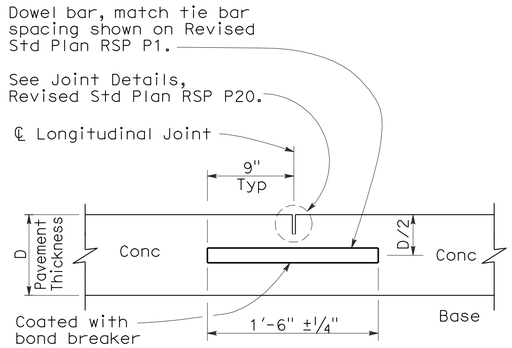

LONGITUDINAL CONTRACTION JOINT WITH DOWEL BARS

(See Revised Std Plan RSP P18)

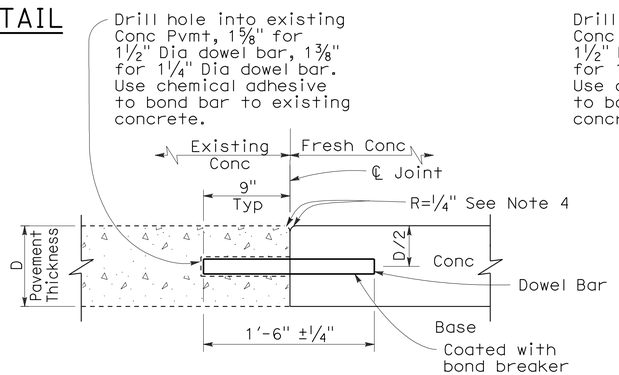

TRANSVERSE CONSTRUCTION JOINT FOR EXISTING CONCRETE PAVEMENT

(Drill and bond locations)

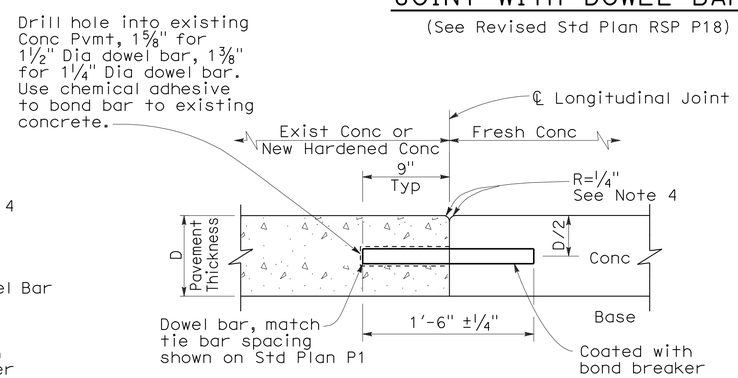

LONGITUDINAL CONSTRUCTION JOINT WITH DOWEL BARS

(See Revised Std Plan RSP P18)

STATE OF CALIFORNIA
DEPARTMENT OF TRANSPORTATION

CONCRETE PAVEMENT-DOWEL BAR DETAILS

NO SCALE

RSP P10 DATED MAY 15, 2009 SUPERSEDES STANDARD PLAN P10 DATED MAY 1, 2006 - PAGE 124 OF THE STANDARD PLANS BOOK DATED MAY 2006.

REVISED STANDARD PLAN RSP P10

2006 REVISED STANDARD PLAN RSP P10

5-8-09

DIST	COUNTY	ROUTE	POST MILES TOTAL PROJECT	SHEET NO.	TOTAL SHEETS
07	LA	5	R87.8/R88.6	37	47

William K. Farnbach
REGISTERED CIVIL ENGINEER

May 15, 2009
PLANS APPROVAL DATE

REGISTERED PROFESSIONAL ENGINEER
William K. Farnbach
No. C49042
Exp. 9-30-10
CIVIL
STATE OF CALIFORNIA

The State of California or its officers or agents shall not be responsible for the accuracy or completeness of electronic copies of this plan sheet.

To accompany plans dated 5-23-11

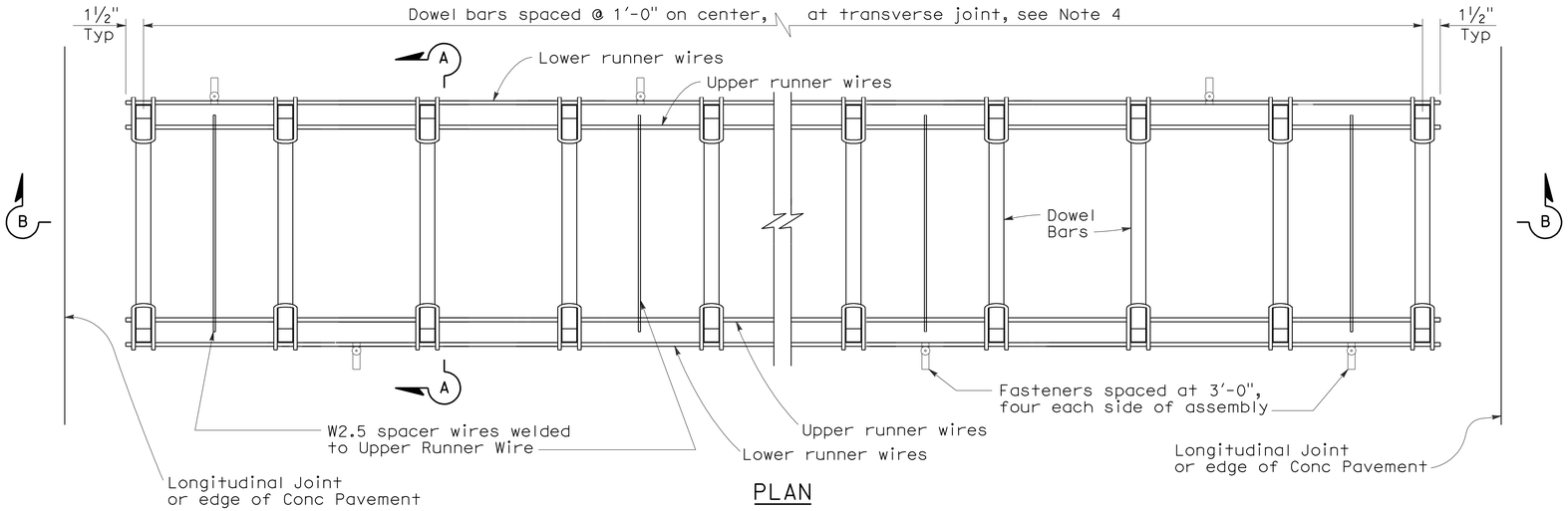

PLAN

DOWEL BAR BASKET (TRANSVERSE JOINT)

See Note 1

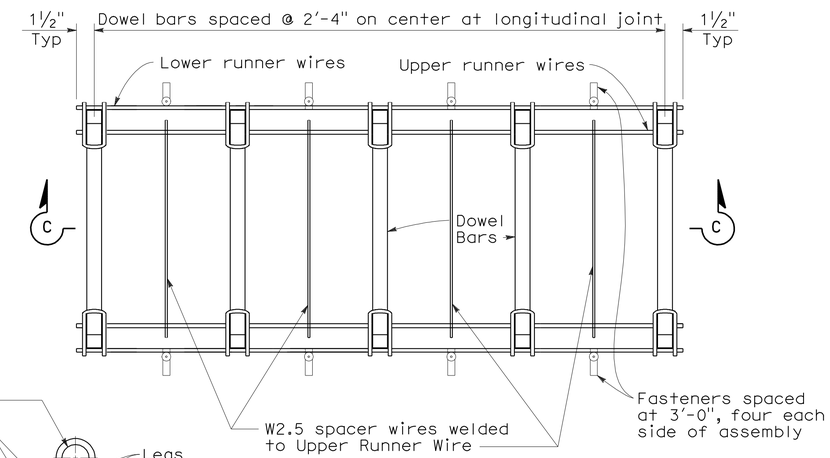

PLAN

DOWEL BAR BASKET (LONGITUDINAL JOINT)

See Note 1

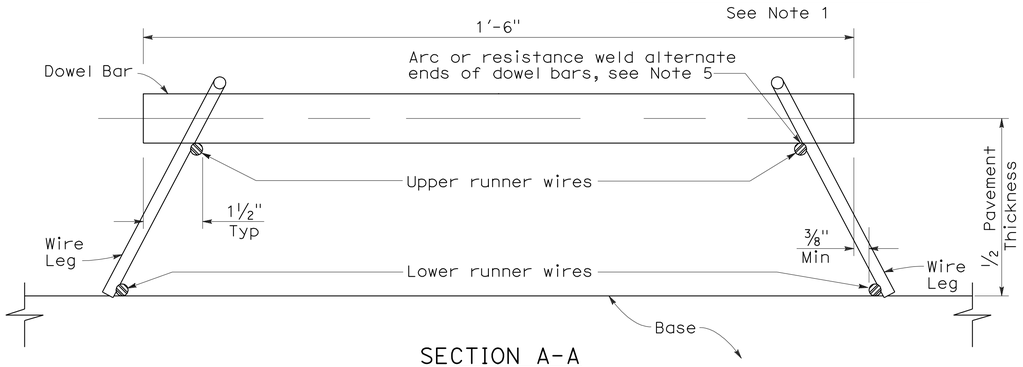

SECTION A-A

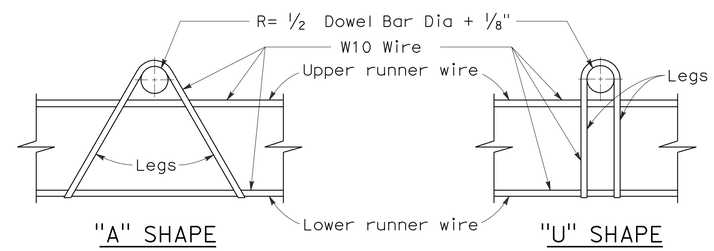

ASSEMBLY FRAME DETAILS

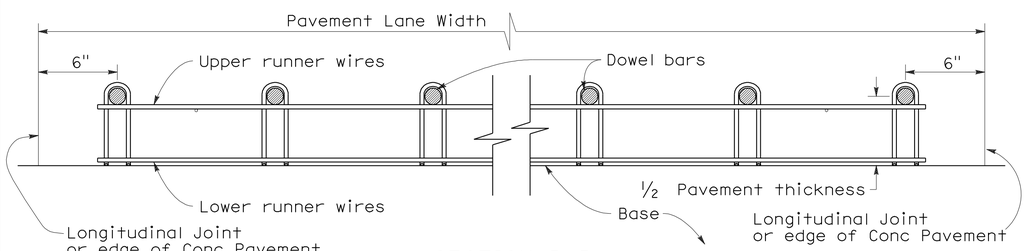

SECTION B-B

See Note 1

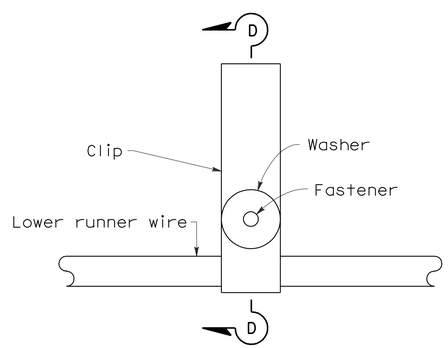

PLAN

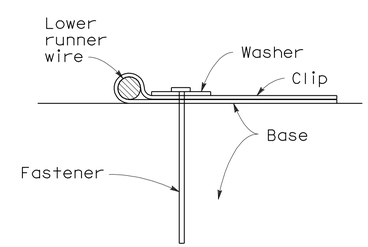

SECTION D-D

FASTENER DETAIL

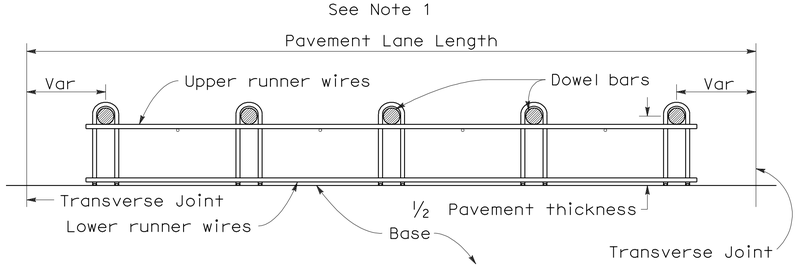

SECTION C-C

See Notes 1 and 4

NOTES:

1. "U" frame shape assembly shown. "U" frame shape or "A" frame shape are acceptable.
2. Wire sizes shown are minimum required.
3. All wire intersections are to be resistance welded.
4. Use tie bar spacing for longitudinal dowel bar locations. See Revised Std Plans RSPs P1, P2, and P3 for tie bar requirements.
5. Weld may be at top or bottom of dowel bar.

STATE OF CALIFORNIA
DEPARTMENT OF TRANSPORTATION

CONCRETE PAVEMENT-DOWEL BAR BASKET DETAILS

NO SCALE

RSP P12 DATED MAY 15, 2009 SUPERSEDES RSP P12 DATED NOVEMBER 17, 2006 AND STANDARD PLAN P12 DATED MAY 1, 2006 - PAGE 125 OF THE STANDARD PLANS BOOK DATED MAY 2006.

REVISED STANDARD PLAN RSP P12

2006 REVISED STANDARD PLAN RSP P12

5-8-09

DIST	COUNTY	ROUTE	POST MILES TOTAL PROJECT	SHEET NO.	TOTAL SHEETS
07	LA	5	R87.8/R88.6	38	47

REGISTERED CIVIL ENGINEER

June 5, 2009
PLANS APPROVAL DATE

REGISTERED PROFESSIONAL ENGINEER — William K. Farnbach — No. C49042 — Exp. 9-30-10 — CIVIL — STATE OF CALIFORNIA

The State of California or its officers or agents shall not be responsible for the accuracy or completeness of electronic copies of this plan sheet.

To accompany plans dated 5-23-11

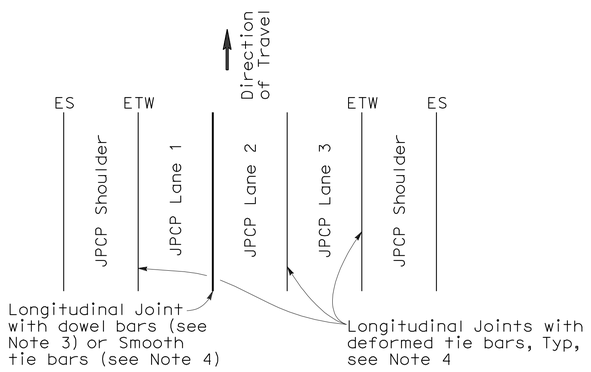

3 LANES WITH TIED CONCRETE SHOULDERS
PLAN

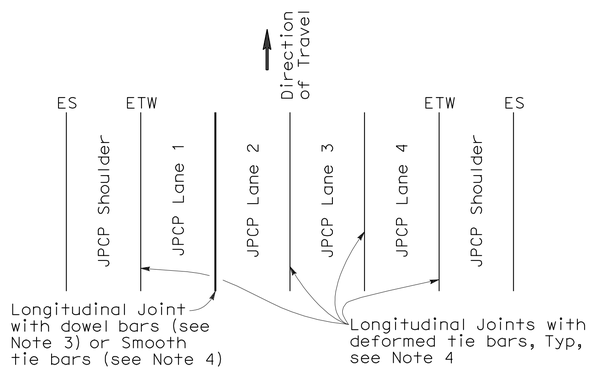

4 LANES WITH TIED CONCRETE SHOULDERS
PLAN

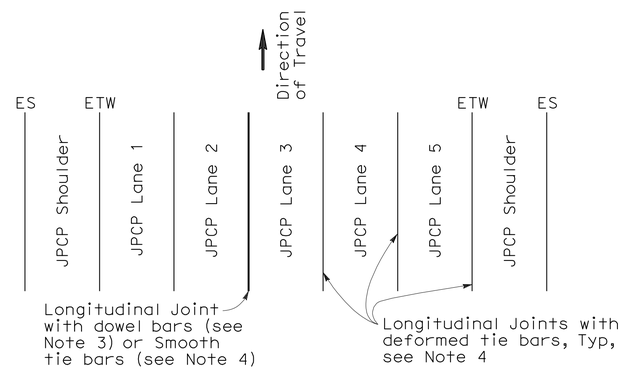

5 LANES WITH TIED CONCRETE SHOULDERS
PLAN

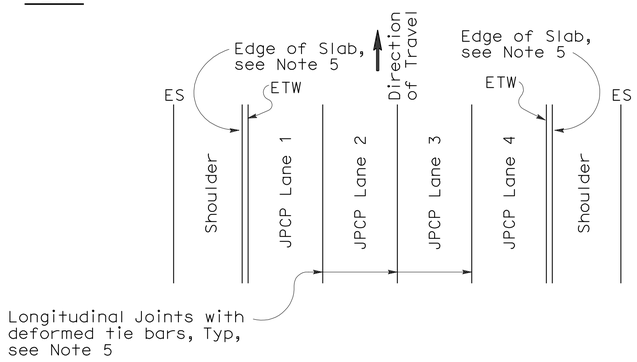

4 LANES OR LESS WITH WIDENED SLAB
PLAN

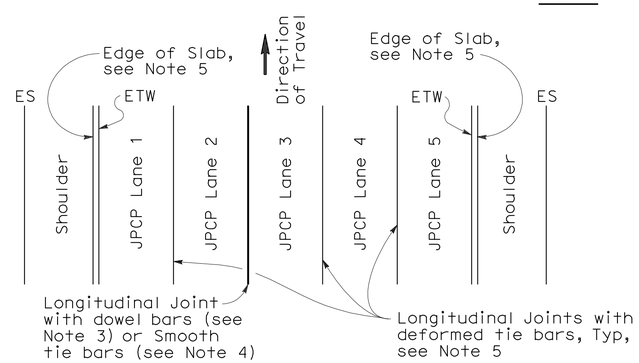

5 LANES WITH WIDENED SLAB
PLAN

NEW CONSTRUCTION

Location of Longitudinal Joints
(For JPCP)

NOTES:

1. Where Lean Concrete Base is not used as base material, the joint filler material used for the longitudinal isolation joint shall only extend to the bottom of the new concrete slab. See Detail A.
2. Use 5/8" ±1/16" dimension for silicone sealant.
3. See Revised Standard Plan RSP P10 for longitudinal joint with dowel bars.
4. See Revised Standard Plan RSP P1.
5. See Revised Standard Plan RSP P2.

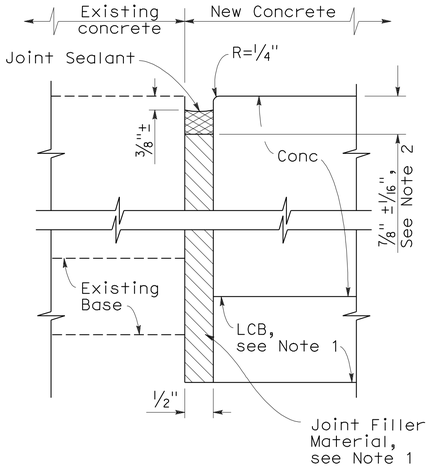

DETAIL A

ISOLATION JOINT

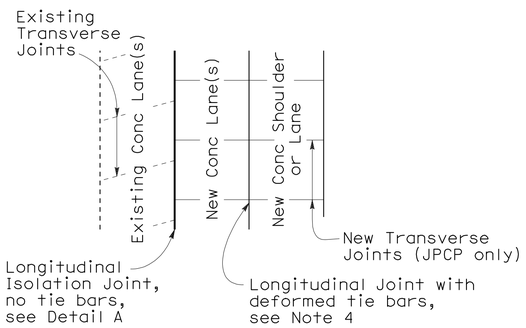

CASE 1
PLAN

Transverse Joints do not align between new and existing

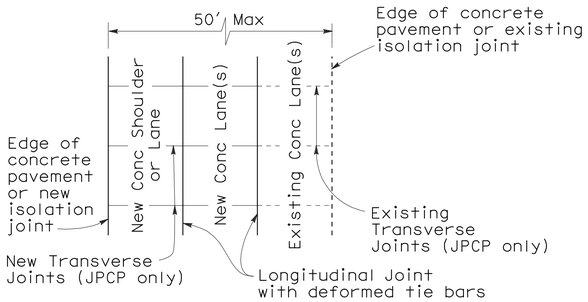

CASE 2
PLAN

Transverse Joints align between new and existing

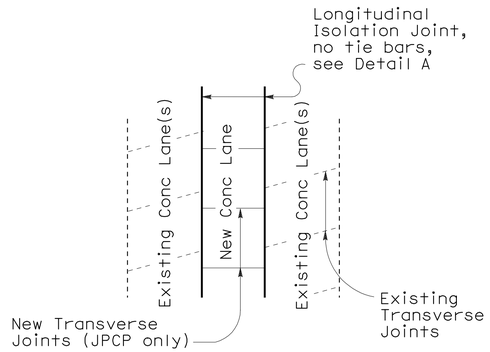

CASE 3 (INTERIOR LANE REPLACEMENT)
PLAN

Transverse Joints do not align between new and existing

LANE/SHOULDER ADDITION OR RECONSTRUCTION

(For JPCP and CRCP)

STATE OF CALIFORNIA
DEPARTMENT OF TRANSPORTATION

CONCRETE PAVEMENT-LANE SCHEMATICS AND ISOLATION JOINT DETAIL

NO SCALE

RSP P18 DATED JUNE 5, 2009 SUPERSEDES RSP P18 DATED MAY 15, 2009, RSP P18 DATED NOVEMBER 17, 2006 AND STANDARD PLAN P18 DATED MAY 1, 2006 - PAGE 127 OF THE STANDARD PLANS BOOK DATED MAY 2006.

REVISED STANDARD PLAN RSP P18

2006 REVISED STANDARD PLAN RSP P18

5-14-09

NOTE:

1. Tie bars, dowel bars, and reinforcement are not shown in joint seal details, see Revised Standard Plans RSP P1, RSP P3, RSP P10, RSP P35, RSP P45, or RSP P46 as applicable.

DIST	COUNTY	ROUTE	POST MILES TOTAL PROJECT	SHEET NO.	TOTAL SHEETS
07	LA	5	R87.8/R88.6	39	47

William K. Farnbach
REGISTERED CIVIL ENGINEER

May 15, 2009
PLANS APPROVAL DATE

REGISTERED PROFESSIONAL ENGINEER William K. Farnbach No. C49042 Exp. 9-30-10 CIVIL STATE OF CALIFORNIA

The State of California or its officers or agents shall not be responsible for the accuracy or completeness of electronic copies of this plan sheet.

To accompany plans dated 5-23-11

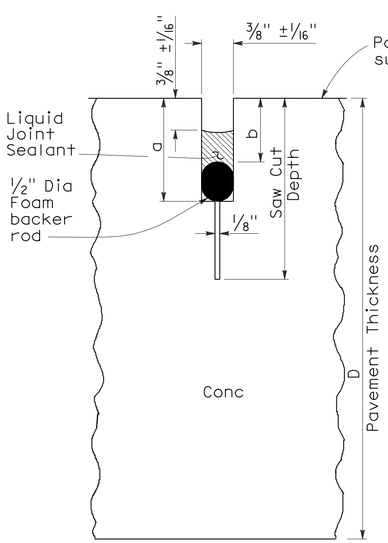

LIQUID SEALANT

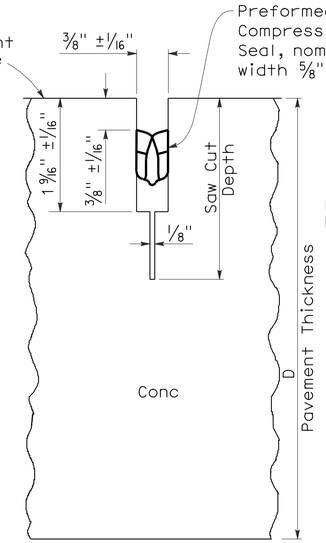

COMPRESSION SEAL

TYPE A1

Transverse Contraction Joints

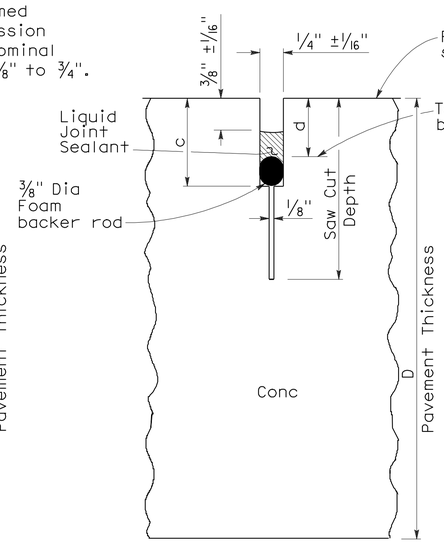

LIQUID SEALANT

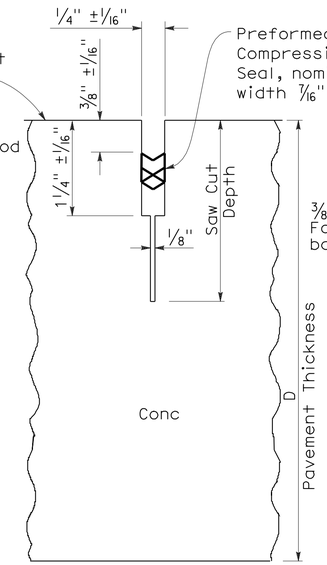

COMPRESSION SEAL

TYPE A2

Longitudinal Contraction Joints

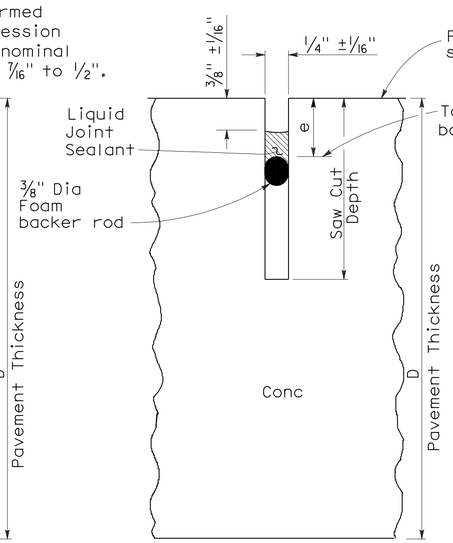

LIQUID SEALANT

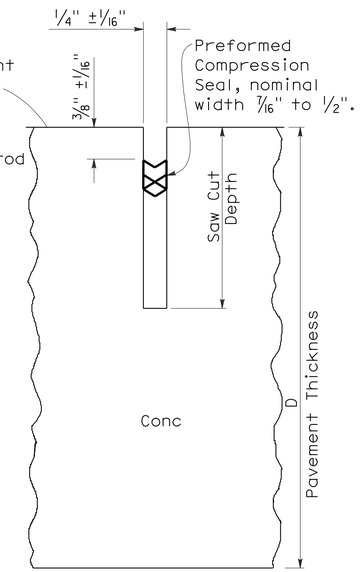

COMPRESSION SEAL

TYPE B

Longitudinal or Transverse Contraction Joint

LIQUID SEALANT RESERVOIR DEPTH

LIQUID SEALANT MATERIAL	3/8" Joint Width Type A1		1/4" Joint Width Type A2		1/4" Joint Width Type B
	DIMENSION		DIMENSION		DIMENSION
	a	b	c	d	e
SILCONE	1" ±1/16"	5/8" ±1/16"	15/16" ±1/16"	9/16" ±1/16"	9/16" ±1/16"
ASPHALT RUBBER	1 3/16" ±1/16"	3/4" ±1/16"	1 1/16" ±1/16"	11/16" ±1/16"	11/16" ±1/16"

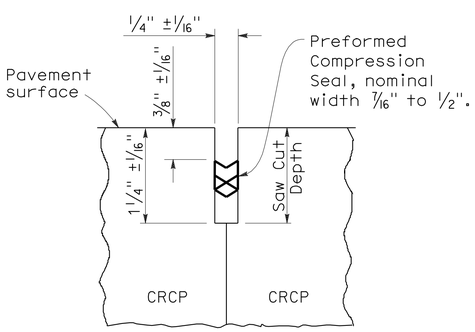

COMPRESSION SEAL

TYPE C

Transverse and Longitudinal Construction Joints (For CRCP)

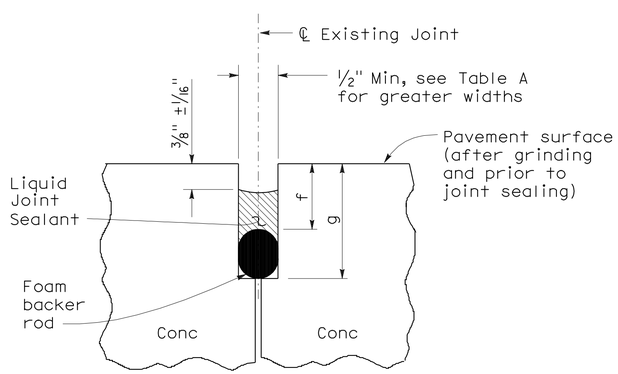

LIQUID SEALANT

TYPE R

Retrofit Transverse and Longitudinal Joints

TABLE A (TYPE R JOINT)

Sawn Joint Width	Backer Rod Diameter ± 1/16"	DIMENSION "f"	DIMENSION "g"
1"	1 5/16"	7/8"	2 1/4"
7/8"	1 3/16"	13/16"	2"
3/4"	1"	3/4"	1 3/4"
5/8"	7/8"	11/16"	1 1/2"
1/2"	11/16"	5/8"	1 1/4"

STATE OF CALIFORNIA
DEPARTMENT OF TRANSPORTATION

CONCRETE PAVEMENT-JOINT DETAILS

NO SCALE

RSP P20 DATED MAY 15, 2009 SUPERSEDES STANDARD PLAN P20
DATED MAY 1, 2006 - PAGE 128 OF THE STANDARD PLANS BOOK DATED MAY 2006.

REVISED STANDARD PLAN RSP P20

2006 REVISED STANDARD PLAN RSP P20

5-8-09

DIST	COUNTY	ROUTE	POST MILES TOTAL PROJECT	SHEET NO.	TOTAL SHEETS
07	LA	5	R87.8/R88.6	40	47

William K. Farnbach
REGISTERED CIVIL ENGINEER

May 15, 2009
PLANS APPROVAL DATE

REGISTERED PROFESSIONAL ENGINEER
William K. Farnbach
No. C49042
Exp. 9-30-10
CIVIL
STATE OF CALIFORNIA

The State of California or its officers or agents shall not be responsible for the accuracy or completeness of electronic copies of this plan sheet.

To accompany plans dated 5-23-11

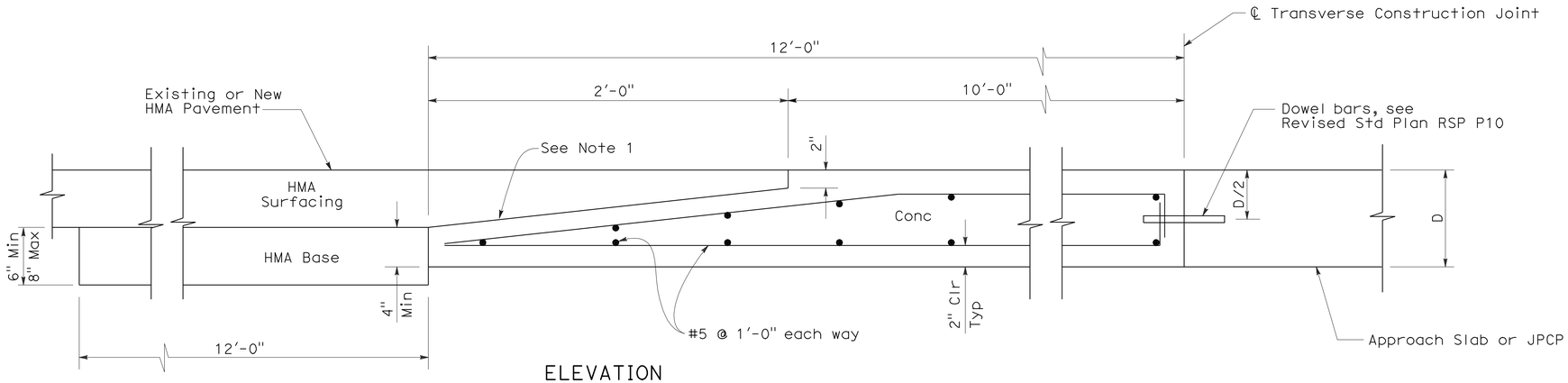

ELEVATION

CONCRETE PAVEMENT TO HOT MIXED ASPHALT PAVEMENT TRANSITION PANEL

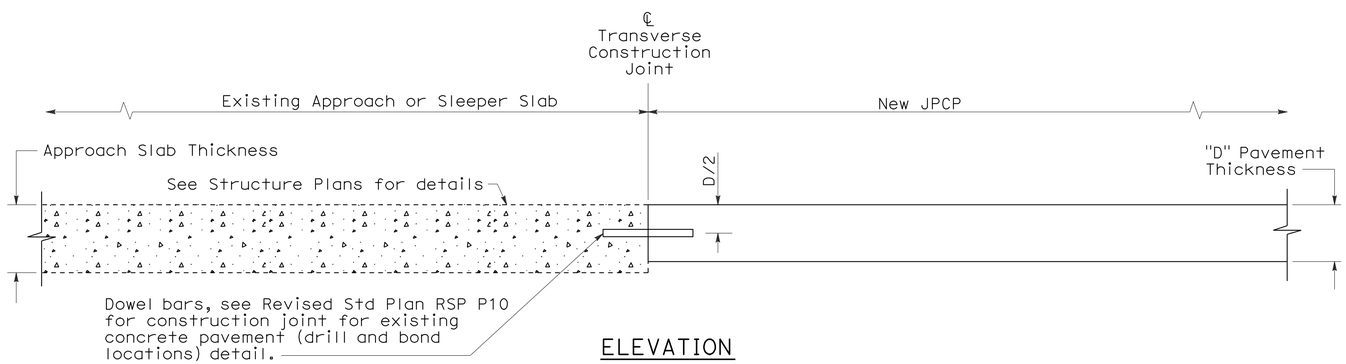

ELEVATION

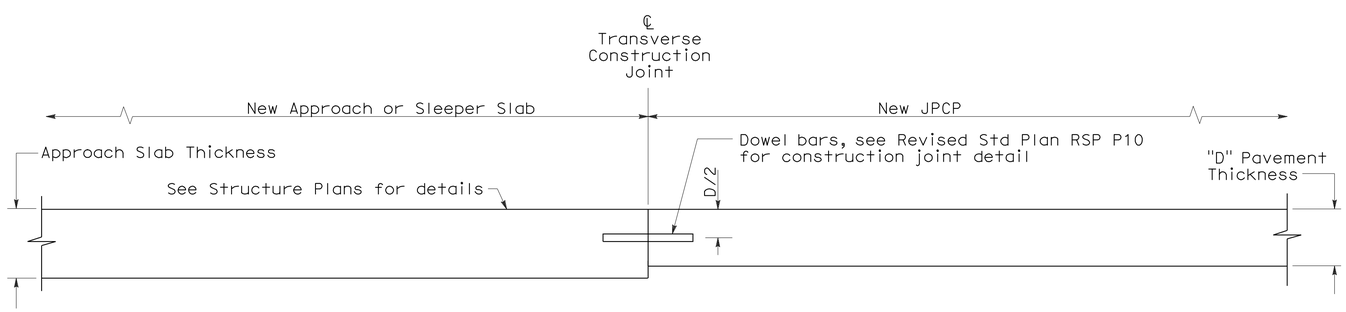

ELEVATION

CONCRETE PAVEMENT TRANSITION TO APPROACH OR SLEEPER SLAB

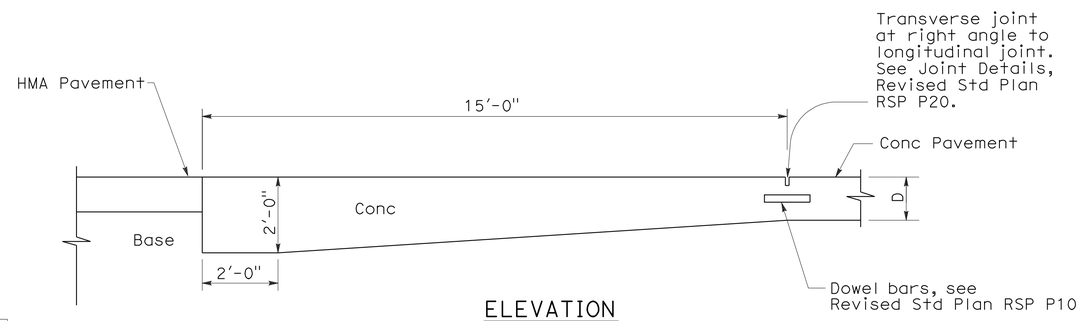

ELEVATION

PAVEMENT END ANCHOR

NOTE:

1. Heavy broom finish.

STATE OF CALIFORNIA
DEPARTMENT OF TRANSPORTATION

JOINTED PLAIN CONCRETE PAVEMENT-END PANEL PAVEMENT TRANSITIONS

NO SCALE

RSP P30 DATED MAY 15, 2009 SUPERSEDES STANDARD PLAN P30
DATED MAY 1, 2006 - PAGE 129 OF THE STANDARD PLANS BOOK DATED MAY 2006.

REVISED STANDARD PLAN RSP P30

2006 REVISED STANDARD PLAN RSP P30

5-8-09

DIST	COUNTY	ROUTE	POST MILES TOTAL PROJECT	SHEET NO.	TOTAL SHEETS
07	LA	5	R87.8/R88.6	41	47

Raymond Don Tsztoo
REGISTERED CIVIL ENGINEER

January 18, 2008
PLANS APPROVAL DATE

REGISTERED PROFESSIONAL ENGINEER
Raymond Don Tsztoo
No. C37332
Exp. 6-30-08
CIVIL
STATE OF CALIFORNIA

The State of California or its officers or agents shall not be responsible for the accuracy or completeness of electronic copies of this plan sheet.

To accompany plans dated 5-23-11

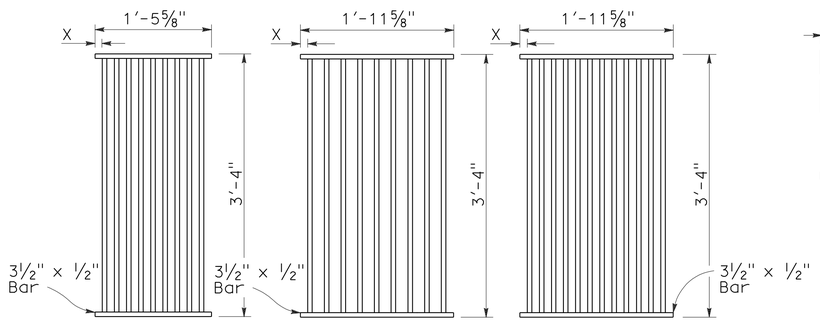

TYPE 18-9

1⅜" Clear spacing. Use within the roadbed on highways where bicycles and pedestrians are excluded.

TYPE 24-9

2" Clear spacing. Use in locations off the roadbed on all types of highways.

TYPE 24-12

1⅜" Clear spacing. Use within the roadbed on highways where bicycles and pedestrians are excluded.

RECTANGULAR GRATE DETAILS

(See table below)

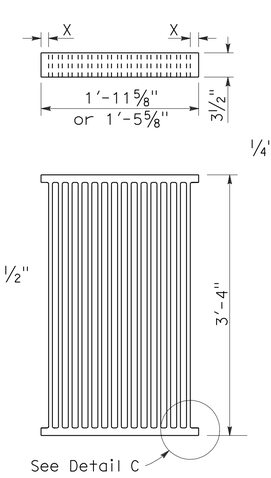

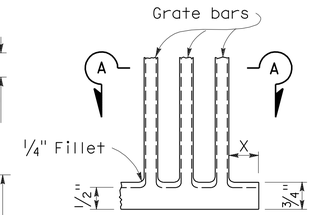

DETAIL C

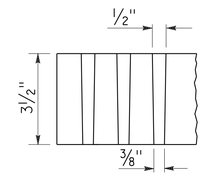

SECTION A-A

ALTERNATIVE CAST NODULAR IRON GRATE OR CAST STEEL GRATE

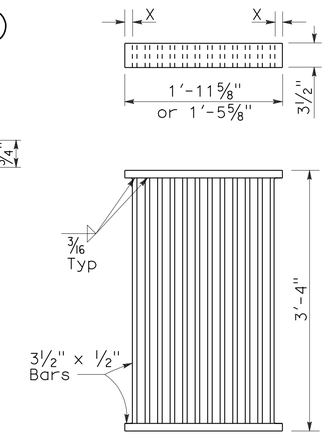

ALTERNATIVE WELDED GRATE

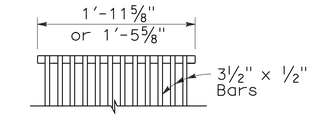

CAST END BLOCK

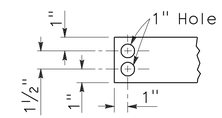

END OF BAR

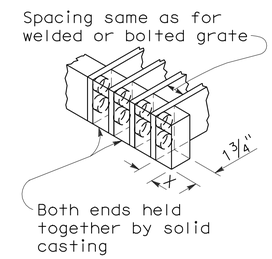

ALTERNATIVE CAST NODULAR IRON OR CAST STEEL END BLOCK GRATE

NOTES:

1. Grate type numbers refer to approximate width of grate in inches and number of bars, respectively.
2. Contractor has the option of using cast nodular iron, cast steel, welded, bolted, or cast end block grate.
3. See Special Provisions for requirements pertaining to galvanizing or asphalt dipping of grates and frames.
4. Rounded top of bars optional on all grates.
5. Pipe inlets with a grate shall be placed so that bars parallel direction of principle surface flow.
6. Full penetration butt welds may be substituted for the fillet welds on all anchors.
7. Standard square, hexagon, round or equivalent headed anchors may be substituted for the right angle hooks on the anchors shown on this plan.
8. Grate and frame weights are based on welded grates (weights of face angles, steps, protection bars, etc. are not included).

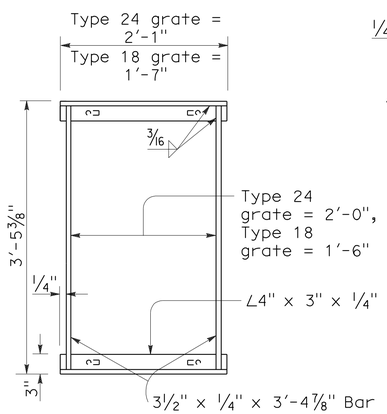

TYPICAL FRAME

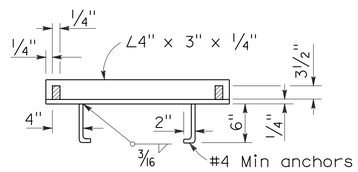

CROSS SECTION

(Thru frame)

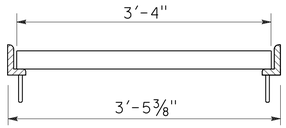

LONGITUDINAL SECTION

(Thru frame and grate)

RECTANGULAR FRAME DETAILS

(For all rectangular grates)

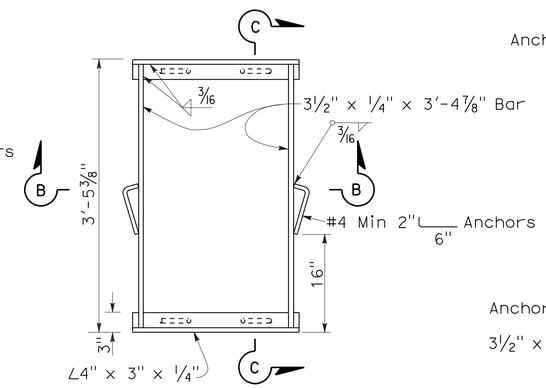

TYPICAL FRAME

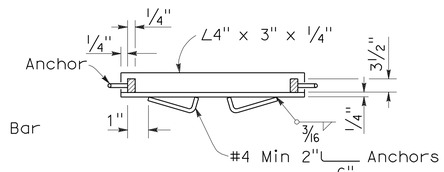

SECTION B-B

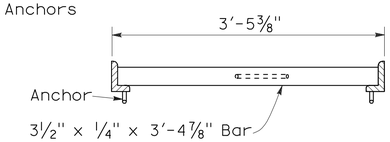

SECTION C-C

ALTERNATIVE ANCHOR FOR RECTANGULAR FRAME

(For details not shown, See Rectangular Frame Details)

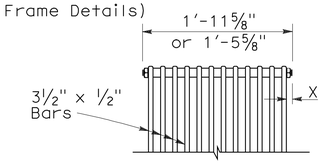

BOLTED END BLOCK

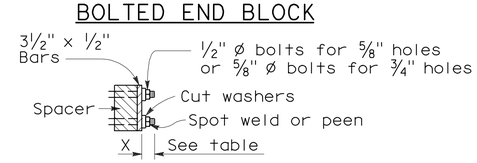

BOLTING DETAIL

ALTERNATIVE BOLTED GRATE

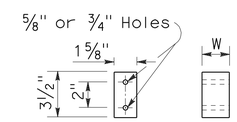

BAR SPACER

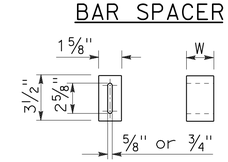

ALTERNATIVE SPACER

W = 1⅜" or 2"

GRATE BAR SPACING TABLE

TYPE	No. OF BARS	CLEAR BAR SPACING	X
18-9	9	1⅜"	1 1/16"
24-9	9	2"	1 9/16"
24-12	12	1⅜"	1¼"

INLET TYPE	COVER TYPE	WEIGHT LB
OS	PLATE	174
OL-7	PLATE	170
OL-10	PLATE	170
OL-14	PLATE	170
OL-21	PLATE	170
OCP	PLATE	112
OCPI	PLATE	112
OCPI	REDWOOD	42
OMP	PLATE	177
OMPI	PLATE	177

INLET TYPE	GRATE TYPE	No. OF GRATES	WEIGHT LB
GDO	24-12	2	634
GOL-7	24-12	1	326
GOL-10	24-12	1	326
GO,G1,G2,G3,G4 (TYPE 24)	24-9	1	263
	24-12	1	326
G4 (TYPE 18),G5,G6	18-9	1	249
GT1	18-9	2	498
GT2	18-9	2	498
GT3	24-12	2	652
GT4	24-12	2	652
TRASH RACK			22

BASIS FOR MISC IRON & STEEL FINAL PAY WEIGHTS FOR DRAINAGE INLETS

(See General Notes, No 8)

STATE OF CALIFORNIA
DEPARTMENT OF TRANSPORTATION

GRATE DETAILS

NO SCALE

RSP D77A DATED JANUARY 18, 2008 SUPERSEDES STANDARD PLAN D77A DATED MAY 1, 2006 - PAGE 155 OF THE STANDARD PLANS BOOK DATED MAY 2006.

REVISED STANDARD PLAN RSP D77A

2006 REVISED STANDARD PLAN RSP D77A

12-14-07

DIST	COUNTY	ROUTE	POST MILES TOTAL PROJECT	SHEET NO.	TOTAL SHEETS
07	LA	5	R87.8/R88.6	42	47

Randell D. Hiatt
REGISTERED CIVIL ENGINEER

June 6, 2008
PLANS APPROVAL DATE

REGISTERED PROFESSIONAL ENGINEER
Randell D. Hiatt
No. C50200
Exp. 6-30-09
CIVIL
STATE OF CALIFORNIA

The State of California or its officers or agents shall not be responsible for the accuracy or completeness of electronic copies of this plan sheet.

To accompany plans dated 5-23-11

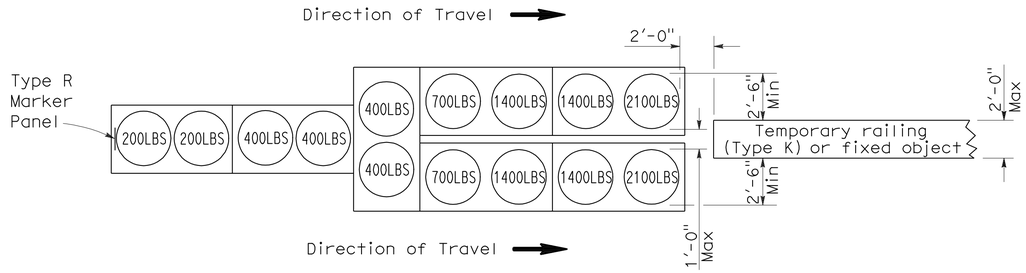

ARRAY 'TU14'

Approach speed 45 mph or more

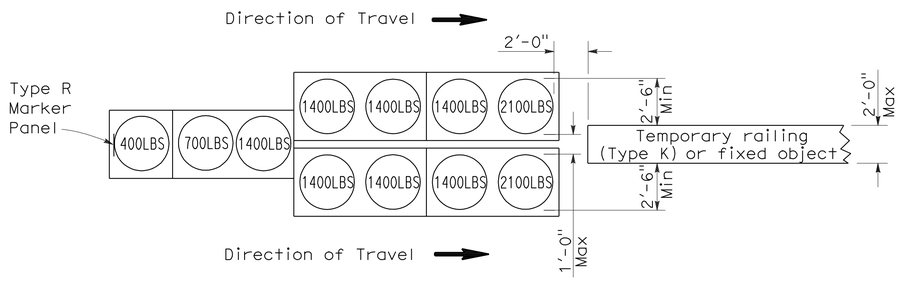

ARRAY 'TU11'

Approach speed less than 45 mph

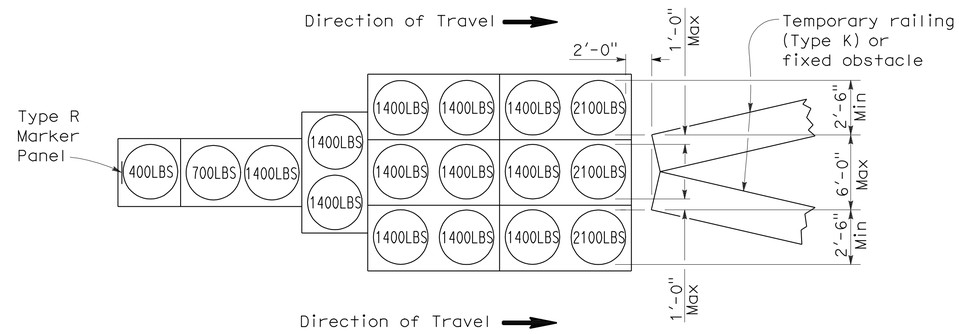

ARRAY 'TU17'

Approach speed less than 45 mph

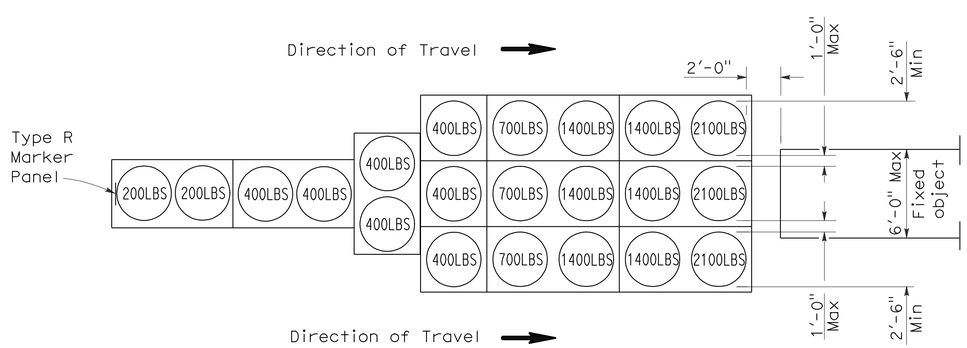

ARRAY 'TU21'

Approach speed 45 mph or more

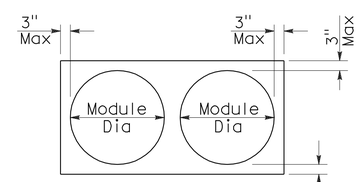

PLAN

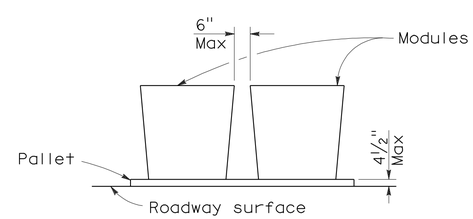

ELEVATION

CRASH CUSHION PALLET DETAIL

See Note 7

NOTES:

1. (XXX) Indicates sand filled module location and weight of sand in pounds for each module. Module spacing is based on the greater diameter of the module.
2. All sand weights are nominal.
3. Temporary crash cushion arrays shall not encroach on the traveled way.
4. Place the top of Type R marker panel 1" below the module lid.
5. Refer to Standard Plan A73B for marker details.
6. Approach speeds indicated conform to NCHRP 350 Report criteria.
7. Use of pallets is optional.

STATE OF CALIFORNIA
DEPARTMENT OF TRANSPORTATION

TEMPORARY CRASH CUSHION, SAND FILLED (UNIDIRECTIONAL)

NO SCALE

RSP T1A DATED JUNE 6, 2008 SUPERSEDES STANDARD PLAN T1A
DATED MAY 1, 2006 - PAGE 211 OF THE STANDARD PLANS BOOK DATED MAY 2006.

REVISED STANDARD PLAN RSP T1A

2006 REVISED STANDARD PLAN RSP T1A

5-15-08

DIST	COUNTY	ROUTE	POST MILES TOTAL PROJECT	SHEET NO.	TOTAL SHEETS
07	LA	5	R87.8/R88.6	43	47

Randell D. Hiatt
REGISTERED CIVIL ENGINEER

June 6, 2008
PLANS APPROVAL DATE

REGISTERED PROFESSIONAL ENGINEER
Randell D. Hiatt
No. C50200
Exp. 6-30-09
CIVIL
STATE OF CALIFORNIA

The State of California or its officers or agents shall not be responsible for the accuracy or completeness of electronic copies of this plan sheet.

To accompany plans dated 5-23-11

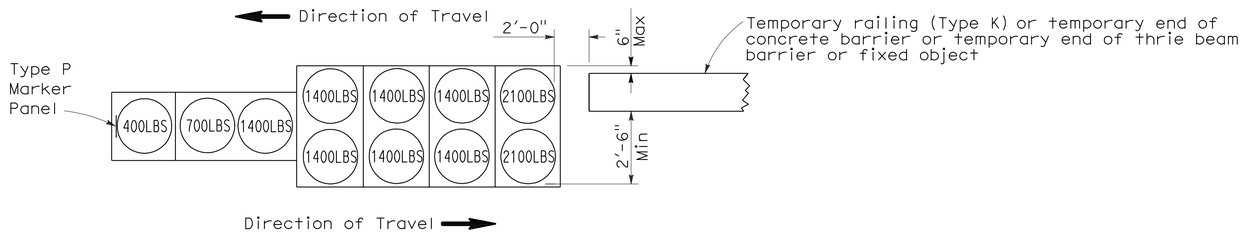

ARRAY 'TB11'

Approach speed less than 45 mph

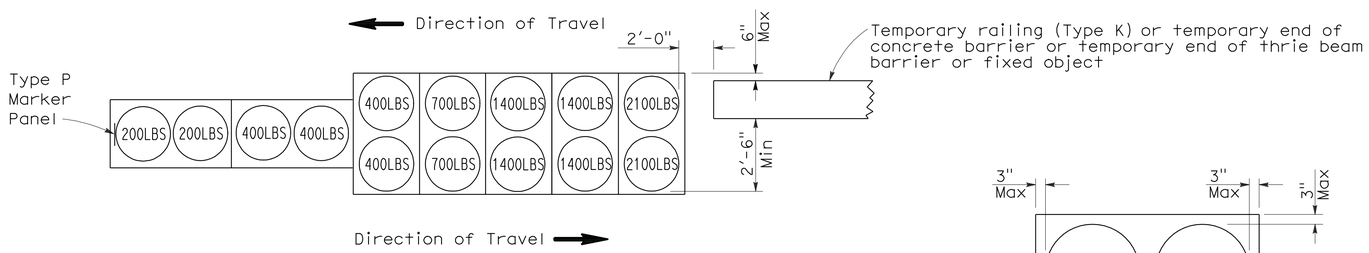

ARRAY 'TB14'

Approach speed 45 mph or more

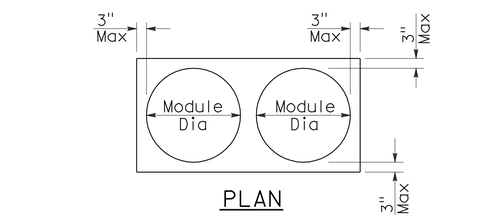

PLAN

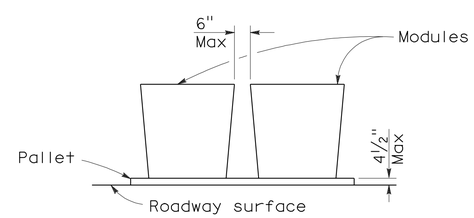

ELEVATION

CRASH CUSHION PALLET DETAIL

See Note 7

NOTES:

1. (XXX) Indicates sand filled module location and weight of sand in pounds for each module. Module spacing is based on the greater diameter of the module.
2. All sand weights are nominal.
3. Temporary crash cushion arrays shall not encroach on the traveled way.
4. Place the Type P marker panel so that the bottom of the panel rests upon the pallet.
5. Refer to Standard Plan A73B for marker details.
6. Approach speeds indicated conform to NCHRP 350 Report criteria.
7. Use of pallets is optional.

STATE OF CALIFORNIA
DEPARTMENT OF TRANSPORTATION

TEMPORARY CRASH CUSHION, SAND FILLED (BIDIRECTIONAL)

NO SCALE

RSP T1B DATED JUNE 6, 2008 SUPERSEDES STANDARD PLAN T1B
DATED MAY 1, 2006 - PAGE 212 OF THE STANDARD PLANS BOOK DATED MAY 2006.

REVISED STANDARD PLAN RSP T1B

2006 REVISED STANDARD PLAN RSP T1B

DIST	COUNTY	ROUTE	POST MILES TOTAL PROJECT	SHEET NO.	TOTAL SHEETS
07	LA	5	R87.8/R88.6	44	47

Randell D. Hiatt
REGISTERED CIVIL ENGINEER

June 6, 2008
PLANS APPROVAL DATE

REGISTERED PROFESSIONAL ENGINEER
Randell D. Hiatt
No. C50200
Exp. 6-30-09
CIVIL
STATE OF CALIFORNIA

The State of California or its officers or agents shall not be responsible for the accuracy or completeness of electronic copies of this plan sheet.

To accompany plans dated 5-23-11

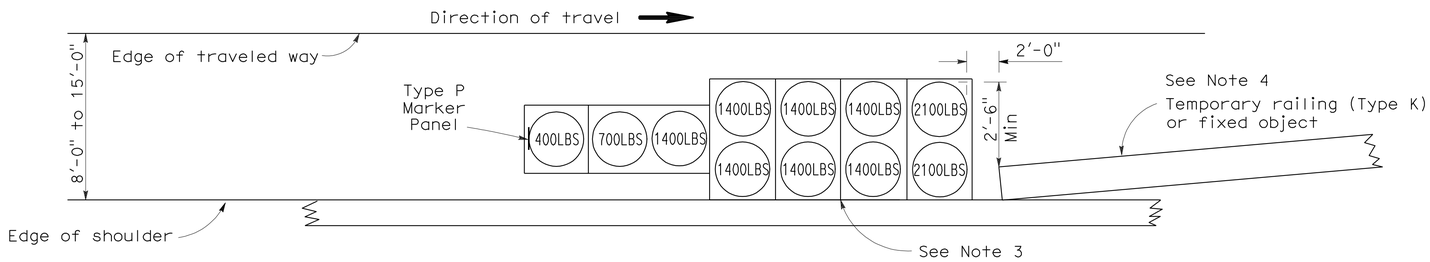

ARRAY 'TS11'

Approach speed less than 45 mph
See Note 9

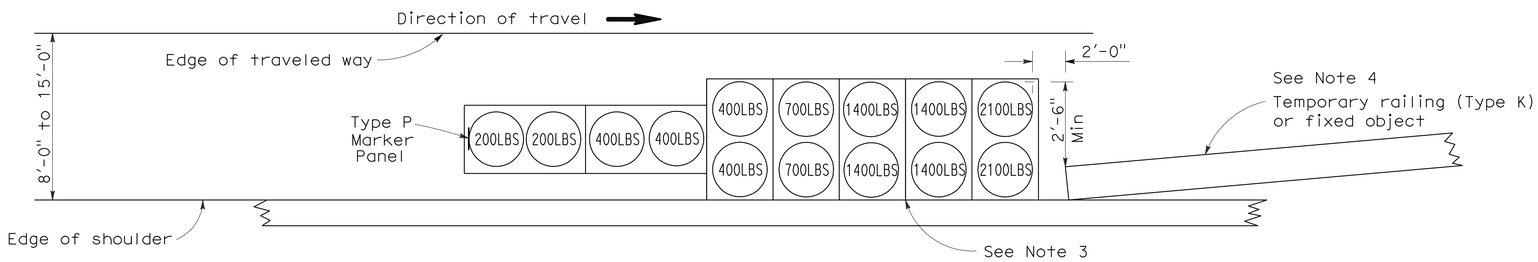

ARRAY 'TS14'

Approach speed 45 mph or more
See Note 9

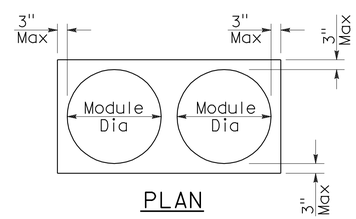

PLAN

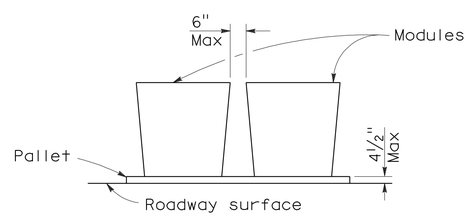

ELEVATION

CRASH CUSHION PALLET DETAIL

See Note 11

NOTES:

1. (XXX) Indicates sand filled module location and weight of sand in pounds for each module. Module spacing is based on the greater diameter of the module.
2. All sand weights are nominal.
3. The temporary crash cushion arrays shown on this plan shall be used only in locations where there will be traffic on one side of the temporary crash cushion array.
4. If the fixed object or approach end of the temporary railing is less than 15'-0" from the edge of traveled way, a temporary crash cushion is required in a construction or work zone.
5. Temporary crash cushion arrays shall not encroach on the traveled way.
6. Arrays for median shoulders shall conform to details shown on this plan for outside shoulders.
7. Place the Type P marker panel so that the bottom of the panel rests upon the pallet and faces traffic.
8. Refer to Standard Plan A73B for marker details.
9. For shoulder widths less than 8'-0", appropriate approved crash cushion protection, other than sand filled modules, shall be provided at fixed objects and at approach ends of temporary railing. The specific type of crash cushion shall be as shown on the project plans or as specified in the Special Provisions, or if not shown on the project plans or specified in the Special Provisions, shall be as approved by the Engineer.
10. Approach speeds indicated conform to NCHRP 350 Report criteria.
11. Use of pallets is optional.

STATE OF CALIFORNIA
DEPARTMENT OF TRANSPORTATION

TEMPORARY CRASH CUSHION, SAND FILLED (SHOULDER INSTALLATIONS)

NO SCALE

RSP T2 DATED JUNE 6, 2008 SUPERSEDES STANDARD PLAN T2
DATED MAY 1, 2006 - PAGE 213 OF THE STANDARD PLANS BOOK DATED MAY 2006.

REVISED STANDARD PLAN RSP T2

2006 REVISED STANDARD PLAN RSP T2

5-15-08

DIST	COUNTY	ROUTE	POST MILES TOTAL PROJECT	SHEET NO.	TOTAL SHEETS
07	LA	5	R87.8/R88.6	45	47

REGISTERED CIVIL ENGINEER

November 17, 2006
PLANS APPROVAL DATE

REGISTERED PROFESSIONAL ENGINEER
Greg W. Edwards
No. C36386
Exp. 6-30-08
CIVIL
STATE OF CALIFORNIA

The State of California or its officers or agents shall not be responsible for the accuracy or completeness of electronic copies of this plan sheet.

To accompany plans dated 5-23-11

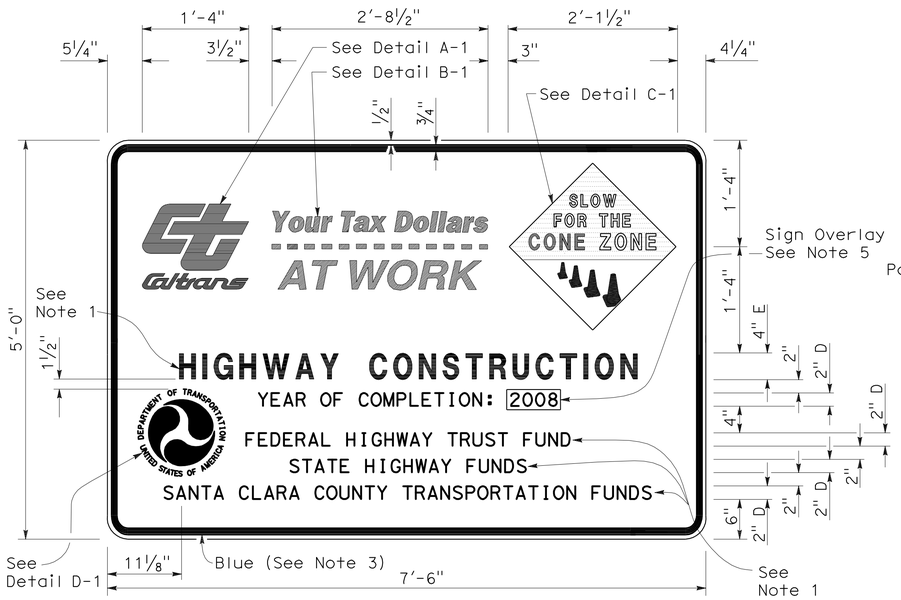

TYPE 1

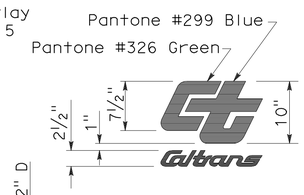

DETAIL A-1

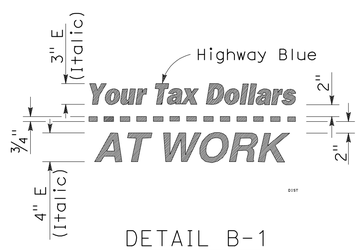

DETAIL B-1
(See Note 3)

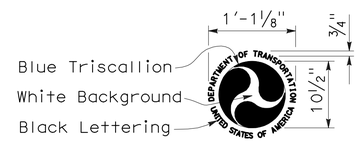

DETAIL D-1
(See Note 6)

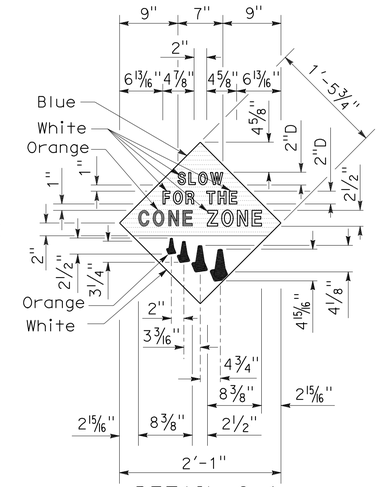

DETAIL C-1
(See Note 4)

NOTES:

1. The sign messages shown for type of project and fund types are examples only. See the Special Provisions for the applicable type of project and fund type messages to be used.
2. Except as otherwise shown, the legend of sign shall be black on a white background (non-reflective).
3. The border of the signs and details "B-1" and "B-2" shall be blue (non-reflective).
4. The diamond in details "C-1" and "C-2" shall be blue for the background of message, " SLOW FOR THE CONE ZONE", and white background for the orange cones. The color and type of font for the "SLOW FOR THE CONE ZONE" message shall be: "SLOW" white D; "FOR THE" white D; "CONE" orange Arial font; "ZONE" white Arial font.
5. Year of completion of project construction shown on the overlay is an example only. See the Special Provisions.
6. Use when the Project involves Federal Highway Trust Fund.

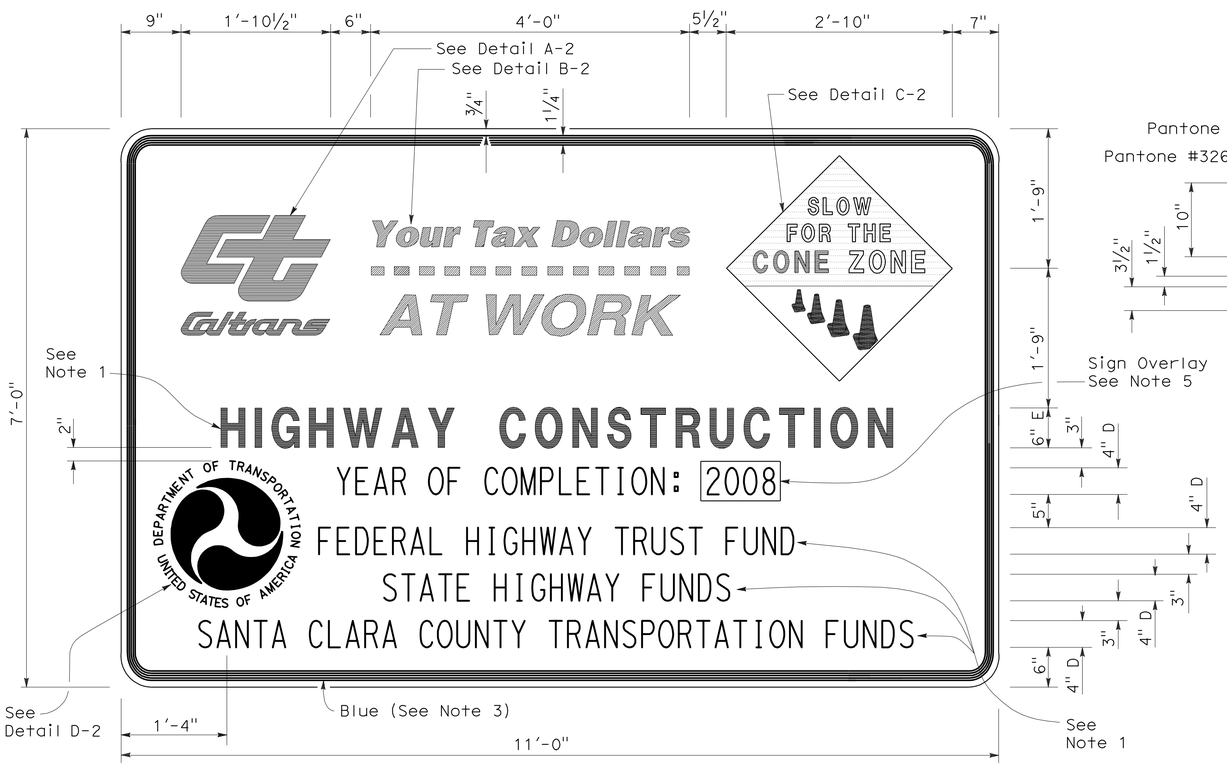

TYPE 2

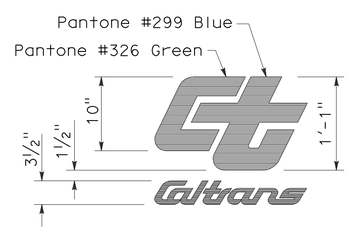

DETAIL A-2

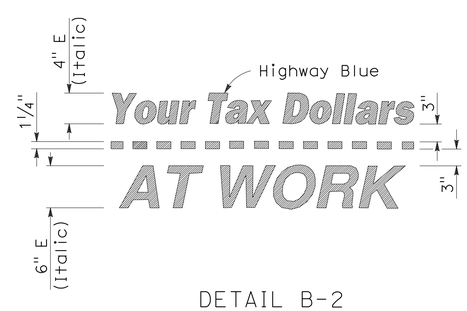

DETAIL B-2
(See Note 3)

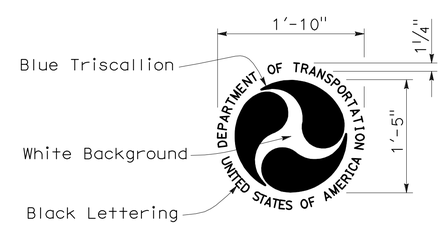

DETAIL D-2
(See Note 6)

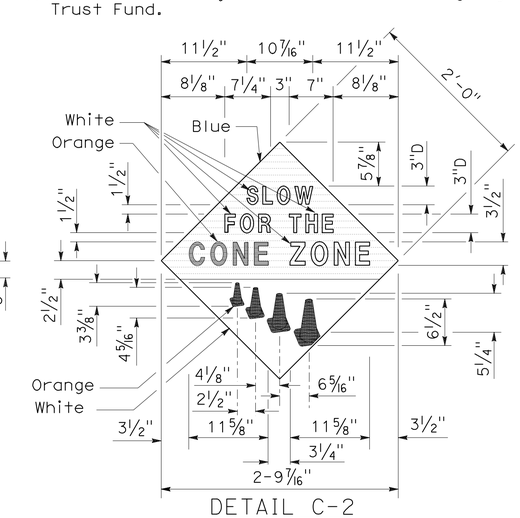

DETAIL C-2
(See Note 4)

STATE OF CALIFORNIA
DEPARTMENT OF TRANSPORTATION

CONSTRUCTION PROJECT FUNDING IDENTIFICATION SIGNS

NO SCALE

RSP T7 DATED NOVEMBER 17, 2006 SUPERSEDES STANDARD PLAN T7
DATED MAY 1, 2006 - PAGE 217 OF THE STANDARD PLANS BOOK DATED MAY 2006.

REVISED STANDARD PLAN RSP T7

2006 REVISED STANDARD PLAN RSP T7

9-7-06

DIST	COUNTY	ROUTE	POST MILES TOTAL PROJECT	SHEET NO.	TOTAL SHEETS
07	LA	5	R87.8/R88.6	46	47

LICENSED LANDSCAPE ARCHITECT

August 15, 2008
PLANS APPROVAL DATE

The State of California or its officers or agents shall not be responsible for the accuracy or completeness of electronic copies of this plan sheet.

LICENSED LANDSCAPE ARCHITECT — Robert B. Schott — Signature — 11-04-08 Renewal Date — 08-11-08 Date — STATE OF CALIFORNIA

To accompany plans dated 5-23-11

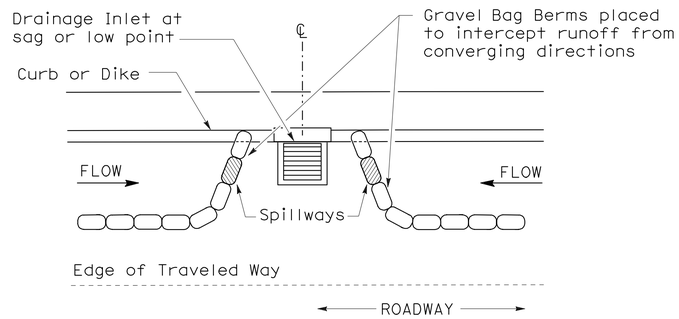

PLAN

CONFIGURATION FOR SAG POINT INLET (GRAVEL BAG BERM)

GRAVEL BAG BERM (TYPE 3A) SPACING TABLE

SLOPE OF ROADWAY (PERCENT)	1 to 3.9	4 to 5.9	6 to 7.9	8 to 10	10+
INTERVAL BETWEEN BERM	100′	75′	50′	25′	12′

For slope of less than 1%, install barriers only if erosion/sediment is prevalent

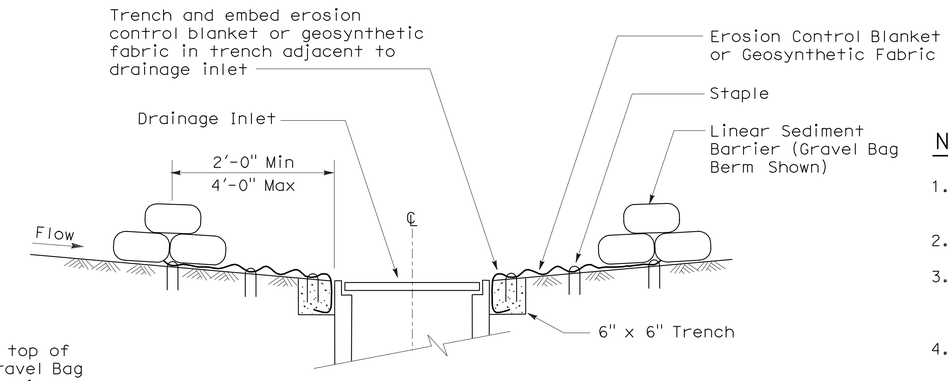

SECTION A-A

NOTES:

1. Place safety cones adjacent to drainage inlet protection.
2. Dimensions may vary to fit field conditions.
3. Install a minimum of 3 gravel bag berms upstream of each drainage inlet to be protected.
4. Position erosion control blanket or geosynthetic fabric at edge of concrete apron and secure in trench.
5. Erosion control blanket or geosynthetic fabric is not required if the area adjacent to the drainage inlet is vegetated or paved.

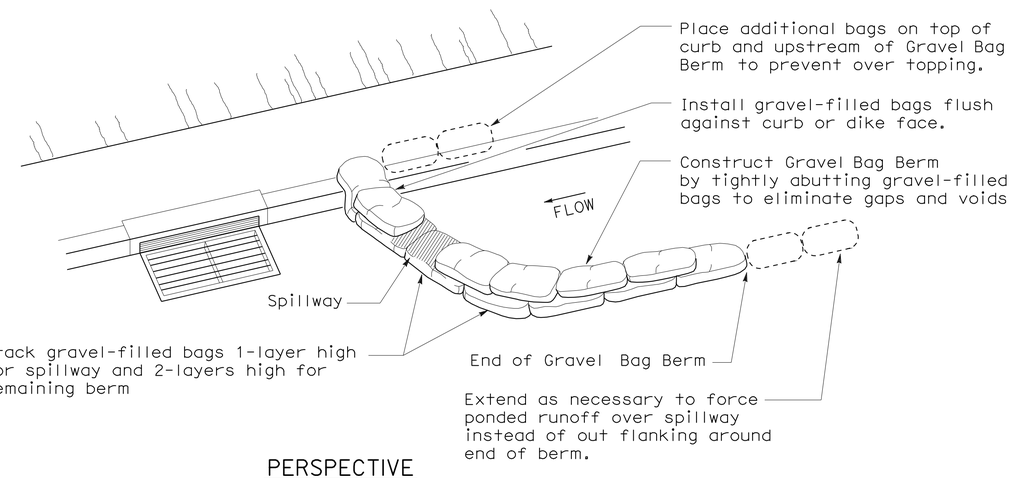

PERSPECTIVE

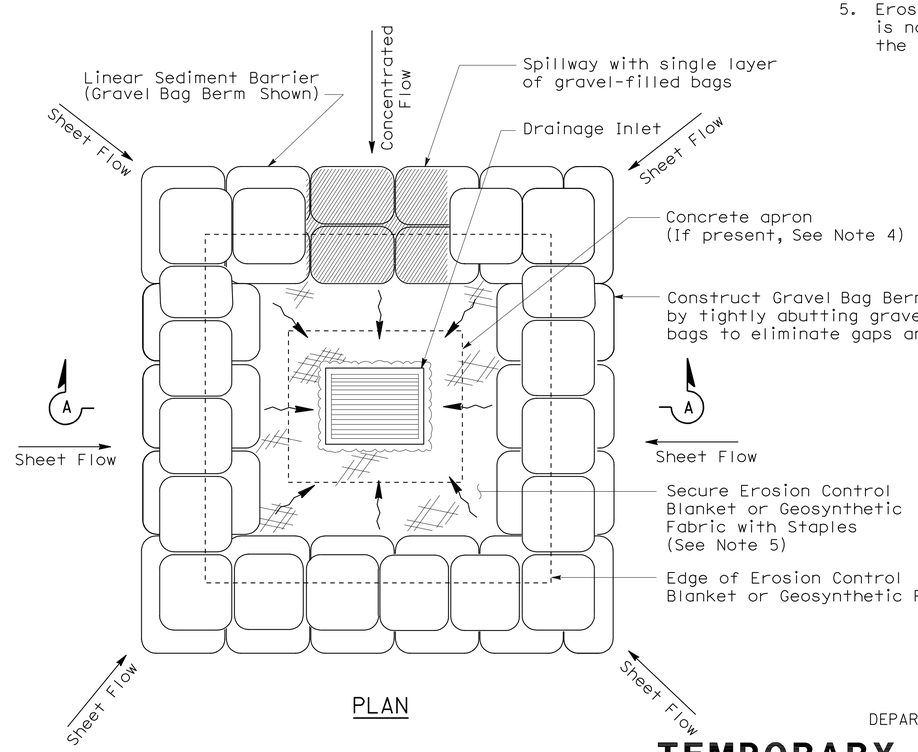

PLAN

TEMPORARY DRAINAGE INLET PROTECTION (TYPE 3B)

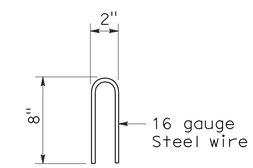

STAPLE DETAIL

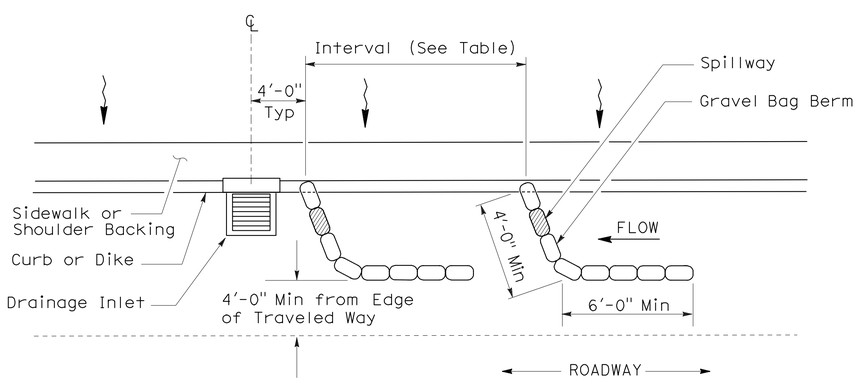

PLAN

TEMPORARY DRAINAGE INLET PROTECTION (TYPE 3A) (GRAVEL BAG BERM)

STATE OF CALIFORNIA
DEPARTMENT OF TRANSPORTATION

TEMPORARY WATER POLLUTION CONTROL DETAILS (TEMPORARY DRAINAGE INLET PROTECTION)

NO SCALE

NSP T62 DATED AUGUST 15, 2008 SUPPLEMENTS THE STANDARD PLANS BOOK DATED MAY 2006.

NEW STANDARD PLAN NSP T62

2006 NEW STANDARD PLAN NSP T62

7-11-08

DIST	COUNTY	ROUTE	POST MILES TOTAL PROJECT	SHEET NO.	TOTAL SHEETS
07	LA	5	R87.8/R88.6	47	47

LICENSED LANDSCAPE ARCHITECT

August 15, 2008
PLANS APPROVAL DATE

LICENSED LANDSCAPE ARCHITECT ROBERT B. SCHOTT 3025 Signature 11-04-08 Renewal Date 08-11-08 Date STATE OF CALIFORNIA

The State of California or its officers or agents shall not be responsible for the accuracy or completeness of electronic copies of this plan sheet.

To accompany plans dated 5-23-11

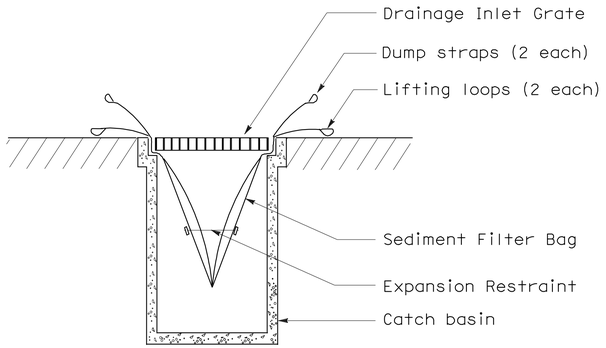

SECTION B-B

SEDIMENT FILTER BAG DETAIL

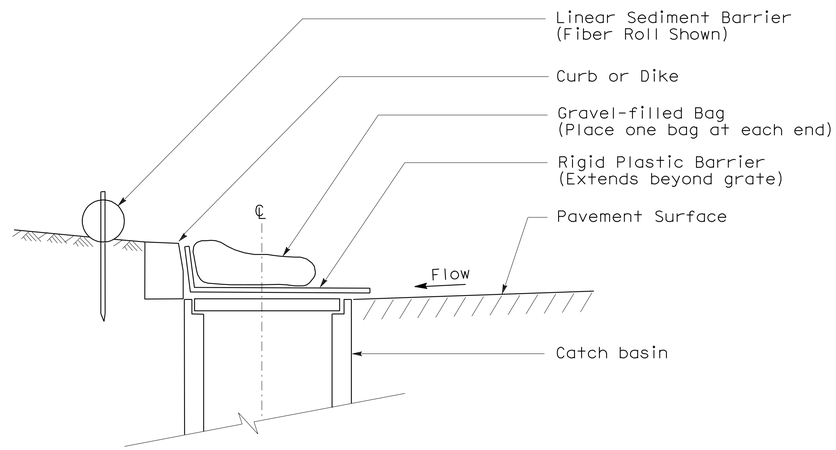

SECTION

TEMPORARY DRAINAGE INLET PROTECTION (TYPE 6A) (CATCH BASIN WITH GRATE)

NOTES:

1. See Standard Plan T51 for Temporary Silt Fence.
2. Dimensions may vary to fit field conditions.

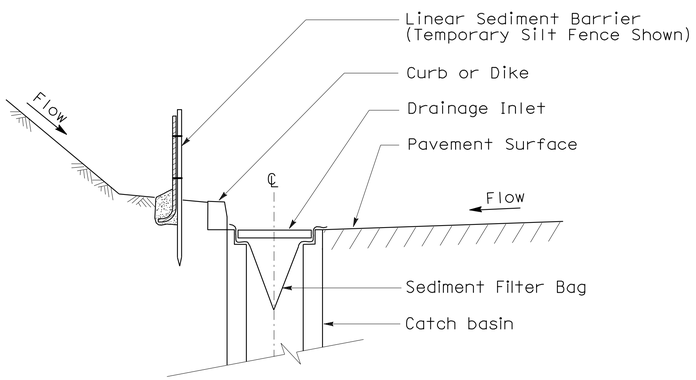

SECTION A-A

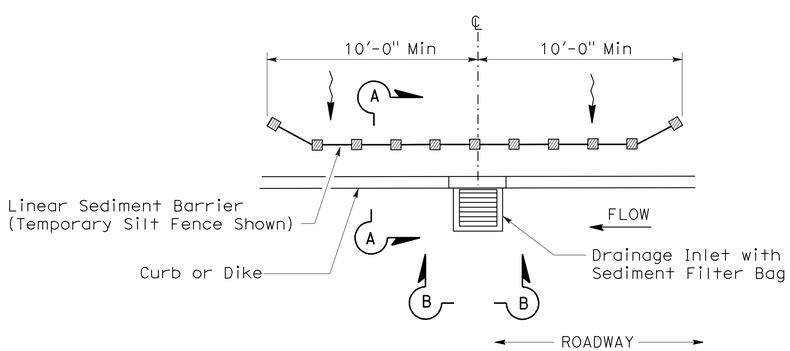

PLAN

TEMPORARY DRAINAGE INLET PROTECTION (TYPE 5) (SEDIMENT FILTER BAG)

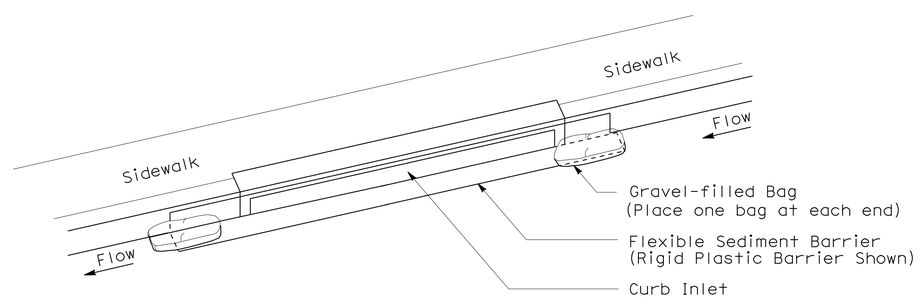

PERSPECTIVE

TEMPORARY DRAINAGE INLET PROTECTION (TYPE 6B) (CURB INLET WITHOUT GRATE)

STATE OF CALIFORNIA
DEPARTMENT OF TRANSPORTATION

TEMPORARY WATER POLLUTION CONTROL DETAILS (TEMPORARY DRAINAGE INLET PROTECTION)

NO SCALE

NSP T64 DATED AUGUST 15, 2008 SUPPLEMENTS
THE STANDARD PLANS BOOK DATED MAY 2006.

NEW STANDARD PLAN NSP T64

2006 NEW STANDARD PLAN NSP T64

7-11-08