Dist	COUNTY	ROUTE	POST MILES TOTAL PROJECT	SHEET No.	TOTAL SHEETS
07	LA	60,170	R4.4, R16.3,R19.8	1	68

ACNH-X037(144)E

STATE OF CALIFORNIA
DEPARTMENT OF TRANSPORTATION

PROJECT PLANS FOR CONSTRUCTION ON
STATE HIGHWAY
IN LOS ANGELES COUNTY
IN MONTEBELLO ON
ROUTE 60 AT ATLANTIC BOULEVARD UNDERCROSSING
AND IN LOS ANGELES ON
ROUTE 170 AT BURBANK BOULEVARD UNDERCROSSING
AND ROSCOE BOULEVARD UNDERCROSSING

TO BE SUPPLEMENTED BY STANDARD PLANS DATED MAY 2006

INDEX OF PLANS

SHEET No.	DESCRIPTION
1	TITLE AND LOCATION MAP
2-4	LAYOUTS
5-15	CONSTRUCTION DETAILS
16-30	DRAINAGE PLANS, PROFILES, DETAILS AND QUANTITIES
31-33	UTILITY PLANS
34-35	CONSTRUCTION AREA SIGNS
36-43	TRAFFIC HANDLING PLAN, DETAILS AND QUANTITIES
44	SUMMARY OF QUANTITIES
45	PLANT LIST
46-48	PLANTING PLAN
49-51	IRRIGATION PLAN
52-53	LANDSCAPE DETAILS
54-68	REVISED AND NEW STANDARD PLANS

THE STANDARD PLANS LIST APPLICABLE TO THIS CONTRACT IS INCLUDED IN THE NOTICE TO BIDDERS AND SPECIAL PROVISIONS BOOK.

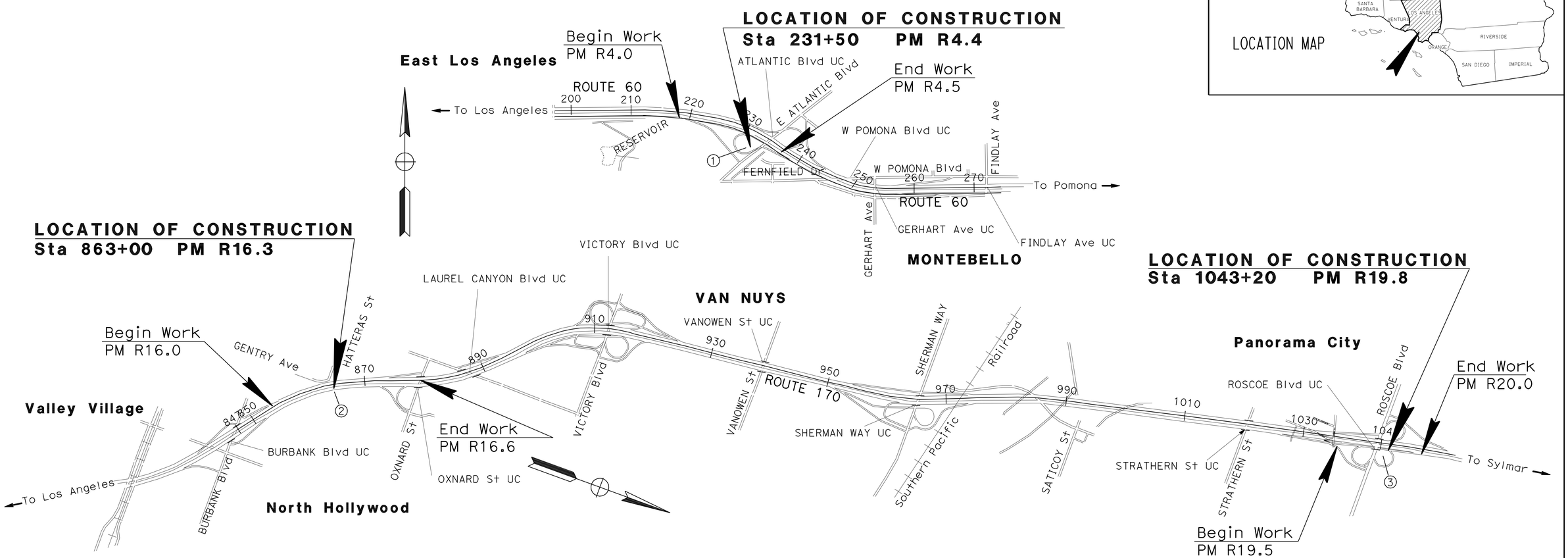

LOCATIONS OF CONSTRUCTION

LOCATION	ROUTE	DIRECTION	PM	LOCAL STREET	DEVICE TYPE
1	60	EB	R4.40	E.ATLANTIC Blvd	MEDIA FILTER (S-5000-3)
2	170	NB	R16.30	BURBANK Blvd	MEDIA FILTER (S-10000-3)
3	170	NB	R19.76	ROSCOE Blvd	MEDIA FILTER (S-5000-6)

NO SCALE

THE BIDDER SHALL POSSESS THE CLASS (OR CLASSES) OF LICENSE AS SPECIFIED IN THE "NOTICE TO BIDDERS."

PROJECT MANAGER OJAS SHETH

DESIGN ENGINEER EUGENE Y. LEIBMAN

PROJECT ENGINEER REGISTERED CIVIL ENGINEER — DATE 2-22-09

REGISTERED PROFESSIONAL ENGINEER EUGENE YEHUDA LEIBMAN No. C58077 Exp. 06/30/10 CIVIL STATE OF CALIFORNIA

May 11, 2009
PLANS APPROVAL DATE

THE STATE OF CALIFORNIA OR ITS OFFICERS OR AGENTS SHALL NOT BE RESPONSIBLE FOR THE ACCURACY OR COMPLETENESS OF ELECTRONIC COPIES OF THIS PLAN SHEET.

LAST REVISION 00-00-00 DATE PLOTTED => 01-SEP-2009 TIME PLOTTED => 10:15

CONTRACT No. 07-258924

NOTE: FOR COMPLETE RIGHT OF WAY AND ACCURATE ACCESS DATA, SEE RIGHT OF WAY RECORD MAPS AT DISTRICT OFFICE.

Dist	COUNTY	ROUTE	POST MILES TOTAL PROJECT	SHEET No.	TOTAL SHEETS
07	LA	60,170	R4.4, R16.3,R19.8	2	68

REGISTERED CIVIL ENGINEER 2-18-09 DATE

5-11-09
PLANS APPROVAL DATE

REGISTERED PROFESSIONAL ENGINEER EUGENE YEHUDA LEIBMAN No. C58077 Exp. 06/30/10 CIVIL STATE OF CALIFORNIA

THE STATE OF CALIFORNIA OR ITS OFFICERS OR AGENTS SHALL NOT BE RESPONSIBLE FOR THE ACCURACY OR COMPLETENESS OF SCANNED COPIES OF THIS PLAN SHEET.

CURVE DATA

No.	R	Δ	T	L
1	4000.00′	34°14′53"	1232.40′	2390.97′
2	185.00′	188°14′37"	2567.17′	607.82′
3	23.41′	155°7′51"	106.18′	63.39′
4	35.29′	52°23′53"	17.37′	32.28′
5	28.11′	72°28′47"	20.60′	35.56′

SECTION A-A
SCALE: Vert 1"=5′, Horiz 1"=20′

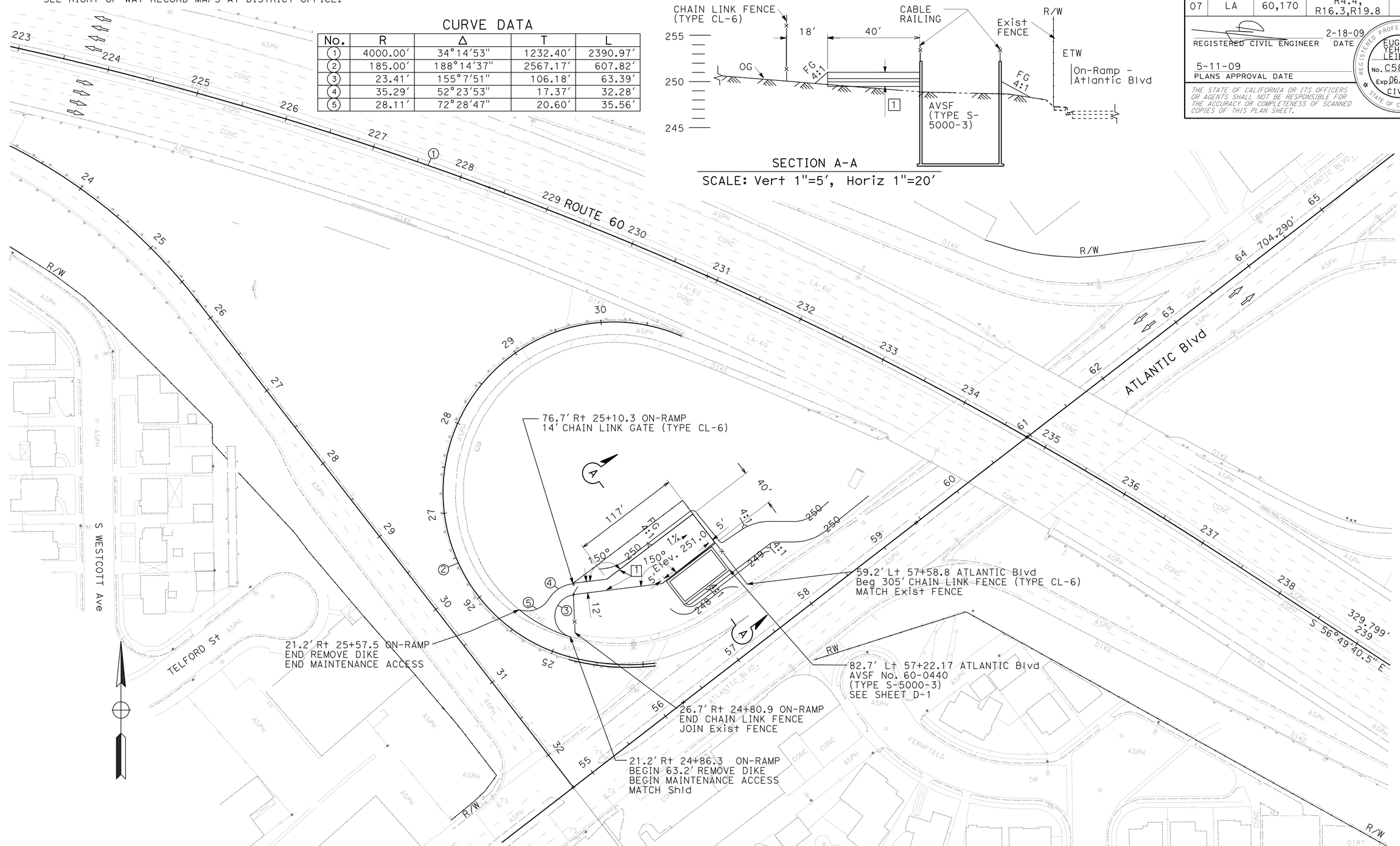

ABBREVIATIONS:
AVSF - AUSTIN VAULT SAND FILTER

STRUCTURAL SECTION

1 0.70′ - CONCRETE PAVEMENT
0.35′ - LEAN CONCRETE BASE (LCB)
0.50′ - CLASS 3 AGGREGATE BASE (AB)

LOCATION 1 LAYOUT

SCALE: 1"=50′

L-1

STATE OF CALIFORNIA - DEPARTMENT OF TRANSPORTATION
DESIGN

FUNCTIONAL SUPERVISOR: GREGORY B. DAMICO
CALCULATED-DESIGNED BY: EUGENE YEHUDA LEIBMAN
CHECKED BY: GREGORY B. DAMICO
REVISED BY
DATE REVISED

LAST REVISION 00-00-00 | DATE PLOTTED => 01-SEP-2009 | TIME PLOTTED => 10:16

NOTE: FOR COMPLETE RIGHT OF WAY AND ACCURATE ACCESS DATA, SEE RIGHT OF WAY RECORD MAPS AT DISTRICT OFFICE.

Dist	COUNTY	ROUTE	POST MILES TOTAL PROJECT	SHEET No.	TOTAL SHEETS
07	LA	60,170	R4.4, R16.3,R19.8	3	68

REGISTERED CIVIL ENGINEER 2-18-09 DATE

5-11-09
PLANS APPROVAL DATE

REGISTERED PROFESSIONAL ENGINEER EUGENE YEHUDA LEIBMAN No. C58077 Exp 06/30/10 CIVIL STATE OF CALIFORNIA

THE STATE OF CALIFORNIA OR ITS OFFICERS OR AGENTS SHALL NOT BE RESPONSIBLE FOR THE ACCURACY OR COMPLETENESS OF SCANNED COPIES OF THIS PLAN SHEET.

CURVE DATA

No.	R	Δ	T	L
6	3199.97′	29°28′36″	841.79′	1646.28′

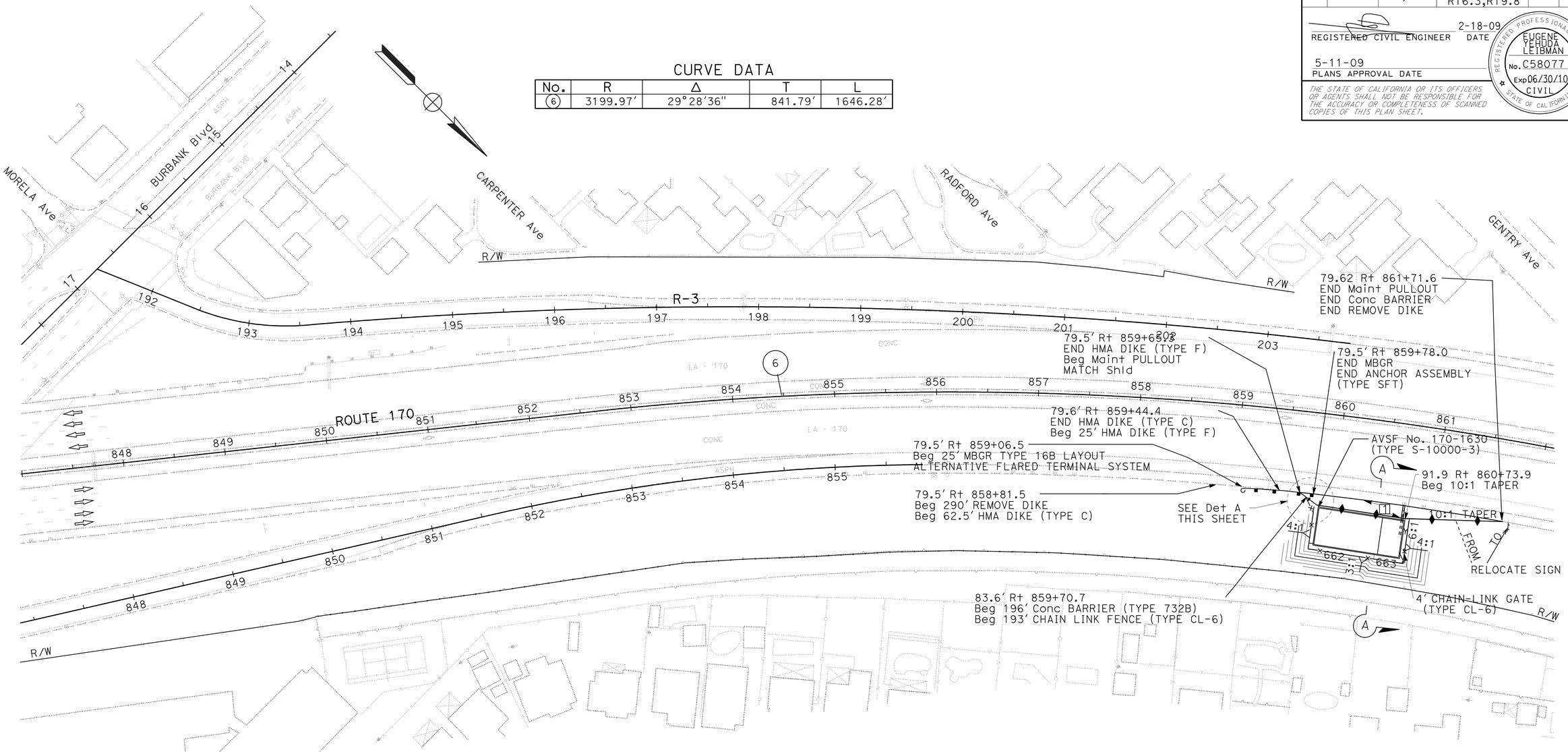

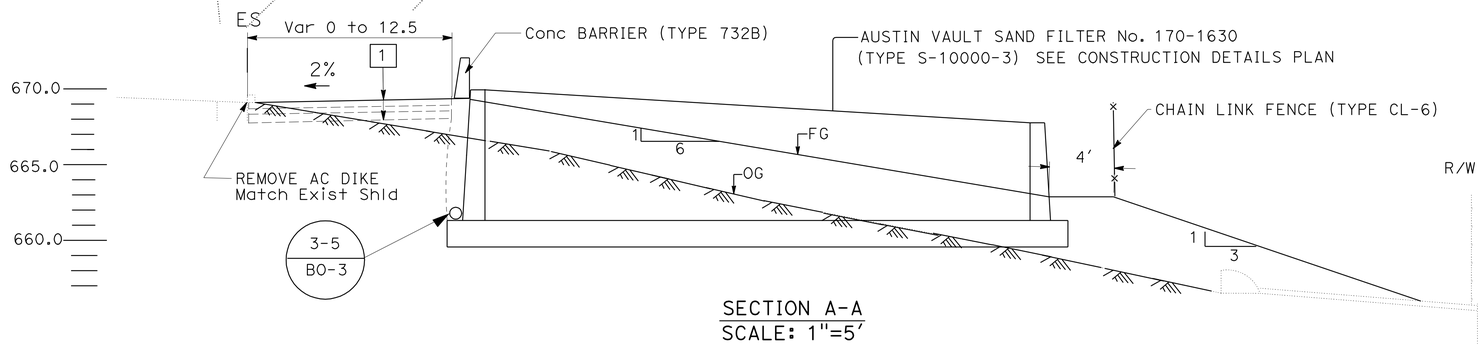

SECTION A-A
SCALE: 1"=5′

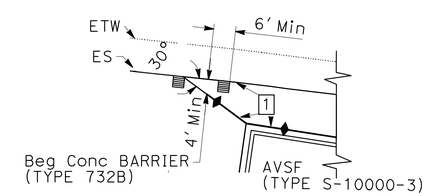

DETAIL A
SCALE: 1"=20′

LOCATION 2 LAYOUT

SCALE: 1"=50′

L-2

STATE OF CALIFORNIA - DEPARTMENT OF TRANSPORTATION
Caltrans DESIGN

FUNCTIONAL SUPERVISOR: GREGORY B. DAMICO
CALCULATED-DESIGNED BY: EUGENE YEHUDA LEIBMAN
CHECKED BY: GREGORY B. DAMICO
REVISED BY
DATE REVISED

LAST REVISION 00-00-00 | DATE PLOTTED => 01-SEP-2009 | TIME PLOTTED => 10:16

BORDER LAST REVISED 4/11/2008 | RELATIVE BORDER SCALE IS IN INCHES 0 1 2 3 | USERNAME => trmikesl | DGN FILE => 725892ea002.dgn | CU 07273 | EA 258921

NOTE: FOR COMPLETE RIGHT OF WAY AND ACCURATE ACCESS DATA, SEE RIGHT OF WAY RECORD MAPS AT DISTRICT OFFICE.

Dist	COUNTY	ROUTE	POST MILES TOTAL PROJECT	SHEET No.	TOTAL SHEETS
07	LA	60,170	R4.4, R16.3,R19.8	4	68

REGISTERED CIVIL ENGINEER 2-18-09 DATE

5-11-09
PLANS APPROVAL DATE

REGISTERED PROFESSIONAL ENGINEER EUGENE YEHUDA LEIBMAN No. C58077 Exp. 06/30/10 CIVIL STATE OF CALIFORNIA

THE STATE OF CALIFORNIA OR ITS OFFICERS OR AGENTS SHALL NOT BE RESPONSIBLE FOR THE ACCURACY OR COMPLETENESS OF SCANNED COPIES OF THIS PLAN SHEET.

CURVE DATA

No.	R	Δ	T	L
7	52.48′	49°23′28″	24.13′	45.24′
8	64.48′	67°1′19″	42.70′	75.43′
9	12.51′	118°4′21″	20.85′	25.78′
10	17.22′	63°40′21″	10.69′	19.13′
11	8.30′	104°42′17″	10.76′	15.17′

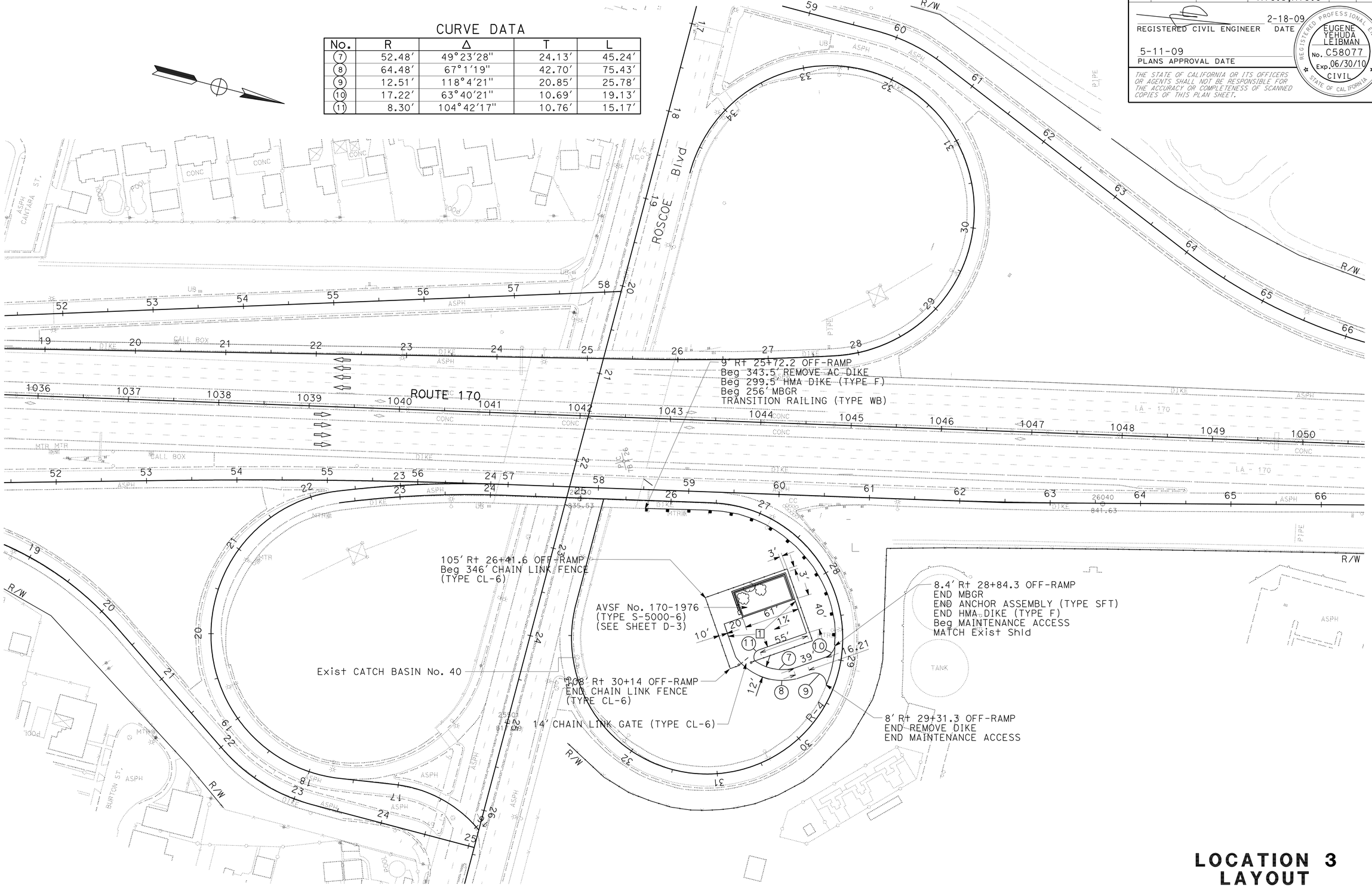

LOCATION 3 LAYOUT

SCALE: 1″=50′

L-3

STATE OF CALIFORNIA - DEPARTMENT OF TRANSPORTATION
Caltrans DESIGN

FUNCTIONAL SUPERVISOR: GREGORY B. DAMICO
CALCULATED-DESIGNED BY: EUGENE YEHUDA LEIBMAN
CHECKED BY: GREGORY B. DAMICO
REVISED BY / DATE REVISED

LAST REVISION 00-00-00 | DATE PLOTTED => 01-SEP-2009 | TIME PLOTTED => 10:16

BORDER LAST REVISED 4/11/2008 | RELATIVE BORDER SCALE IS IN INCHES 0 1 2 3 | USERNAME => trmikesl | DGN FILE => 725892ea003.dgn | CU 07273 | EA 258921

Dist	COUNTY	ROUTE	POST MILES TOTAL PROJECT	SHEET No.	TOTAL SHEETS
07	LA	60,170	R4.4, R16.3,R19.8	5	68

REGISTERED CIVIL ENGINEER — DATE 10-23-08

5-11-09
PLANS APPROVAL DATE

REGISTERED PROFESSIONAL ENGINEER — TIMOTHY B. SOBELMAN No. 59249 Exp. 6-30-09 CIVIL — STATE OF CALIFORNIA

THE STATE OF CALIFORNIA OR ITS OFFICERS OR AGENTS SHALL NOT BE RESPONSIBLE FOR THE ACCURACY OR COMPLETENESS OF SCANNED COPIES OF THIS PLAN SHEET.

GENERAL NOTES

Designation:
Partial Austin Vault Sand Filters (AVSFs) are open air reinforced concrete vaults utilizing both sedimentation and sand filtration basins. Type designation is based on length configuration, water quality volume to be drained in a 24 hour period, and average depth of water.

Standard configurations are noted for the following design water quality volumes (WQV): 5,000, 10,000, and 15,000 cubic feet. Length configurations are either short (S) or long (L). The average water depth can be either 3 ft, 4.5 ft, or 6 ft as designed in Design Water Quality Volumes (WQV) table.

Special Reinforcement Coverage:
AVSF Standard Details are not to be used in a corrosive environment or where there is a severe abrasive flow condition or in freeze-thaw locations.

Special Design:
Required for the following conditions: ground water conditions above bottom of AVSF, surcharge loads exceeding HS20 truck load, design bearing pressures or sizes greater than those on this plan, inlet velocities which exceed 8.0 ft/sec at gabion wall, and settlement due to liquefaction.

DESIGN WATER QUALITY VOLUMES (WQV)

AVSF Type*	WQV (ft^3)	W(ft)	Ls(ft)	Lf(ft)	Hw(ft)
S-5000-3	5,000	27	15	42	3
L-5000-3	5,000	18	21	63	3
S-5000-4.5	6,250	27	15	42	4.5
L-5000-4.5	6,250	18	21	63	4.5
S-5000-6	7,500	27	15	42	6
L-5000-6	7,500	18	21	63	6
S-10000-3	10,000	36	21	63	3
L-10000-3	10,000	24	30	94	3
S-10000-4.5	12,500	36	21	63	4.5
L-10000-4.5	12,500	24	30	94	4.5
S-10000-6	15,000	36	21	63	6
L-10000-6	15,000	24	30	94	6
S-15000-3	15,000	45	25	76	3
L-15000-3	15,000	30	37	115	3
S-15000-4.5	18,750	45	25	76	4.5
L-15000-4.5	18,750	30	37	115	4.5
S-15000-6	22,500	45	25	76	6
L-15000-6	22,500	30	37	115	6

* AVSF Type = Length configuration (S or L) - water quality volume (CF) - design water depth (Hw elevation)

DESIGN NOTES

Specifications:
Design:
Bridge Design Specification April 2000 (LFD)
(1996 AASHTO) with interims and revisions by Caltrans

Wall & Footing (LFD): 1.5 D + 1.5 E + 1.5 W
Where D = Dead Load
E = Earth Load
W = Water Load
Capacity reduction factor is included.

Earth Load:
140 lb/ft^3 vertical,

Water Load:
62.4 lb/ft^3 horizontal/vertical,

Equivalent Fluid Pressure =
100 lb/ft^3 horizontal (Case I).

Earth pressure for 2:1 unlimited slope determined from Rankine's formula with ø = 33°42′ (Case II).

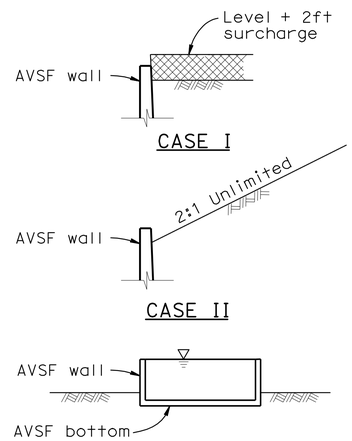

DETAIL OF DESIGN LOADING CASES

CASE I Level + 2ft surcharge, AVSF empty
CASE II 2:1 Unlimited slope, AVSF empty
CASE III AVSF full of water, no soil pressure

Design Conditions:
Design H may be exceeded by 6" before going to the next size.

Unit Stresses:
f'_c = 3,600 psi
y = 60,000 psi

Shear:
Maximum allowable shear, Vc = 3.0 $\sqrt{f'c}$ psi

Design Bearing Pressure = 3.0 ksf (service)

CONSTRUCTION NOTES

Expansion joints:
Inverts and sidewalls - Place ½" expansion joint filler at 30′-0"± centers with waterstop, see "Details No. 2" sheet for specific wall & invert details.

Construction Joints:
Temporary joints may be permitted if normal (or radial) to ℄ of AVSF. Otherwise, the contractor is to submit a proposal for consideration.

Backfill:
See Standard Specifications, except the difference in backfill shall not exceed 8′-0" between side walls and inlet and outlet walls.

Earthwork:
Limits of payment for excavation and backfill.

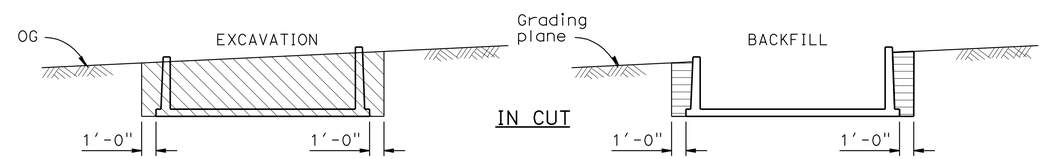

LEGEND:
Structure excavation (Austin Vault)
Structure backfill (Austin Vault)
Original ground, OG

NOTES:
1. Slope or shore excavation sides as necessary.
2. Dimensions shown are minimum.

STANDARD PLANS DATED MAY 2006

BO-3	BRIDGE DETAILS (Details No. 2)
B3-9	RETAINING WALL DETAILS No. 2 (Details No. 1)
RSP B6-21	JOINT SEALS (MAXIMUM MOVEMENT RATING = 2") (Details No. 2)
B11-47	CABLE RAILING
D100A	GABION BASKET DETAILS No. 1
D100B	GABION BASKET DETAILS No. 2

STANDARD PLAN SHEET No.
DETAIL No.

AUSTIN VAULT SAND FILTER GENERAL NOTES

CONSTRUCTION DETAILS

NO SCALE

C-1

REVISED BY | DATE REVISED
D. WANG | L. HE
CALCULATED-DESIGNED BY | CHECKED BY
FUNCTIONAL SUPERVISOR: TIMOTHY B. SOBELMAN
STATE OF CALIFORNIA - DEPARTMENT OF TRANSPORTATION
Caltrans STORM WATER

10:17 01-SEP-2009 trmikesl S:\projects\258921\resubmit1\725892ga001.dgn

LAST REVISION 00-00-00 | DATE PLOTTED => 01-SEP-2009 | TIME PLOTTED => 10:17

Dist	COUNTY	ROUTE	POST MILES TOTAL PROJECT	SHEET No.	TOTAL SHEETS
07	LA	60,170	R4.4, R16.3,R19.8	6	68

Timothy B Sobelman 10-23-08
REGISTERED CIVIL ENGINEER DATE

5-11-09
PLANS APPROVAL DATE

REGISTERED PROFESSIONAL ENGINEER TIMOTHY B. SOBELMAN No. 59249 Exp. 6-30-09 CIVIL STATE OF CALIFORNIA

THE STATE OF CALIFORNIA OR ITS OFFICERS OR AGENTS SHALL NOT BE RESPONSIBLE FOR THE ACCURACY OR COMPLETENESS OF SCANNED COPIES OF THIS PLAN SHEET.

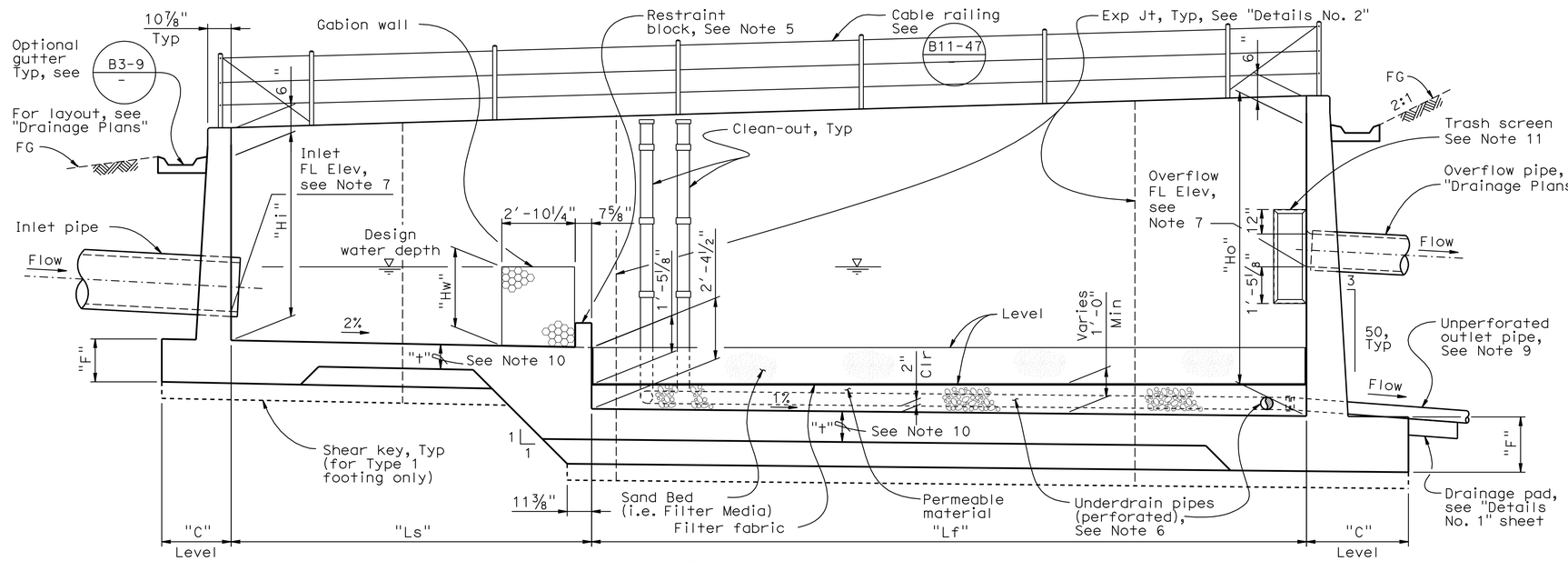

LONGITUDINAL SECTION (Type 2 footing shown, Type 1 similar), See Note 8

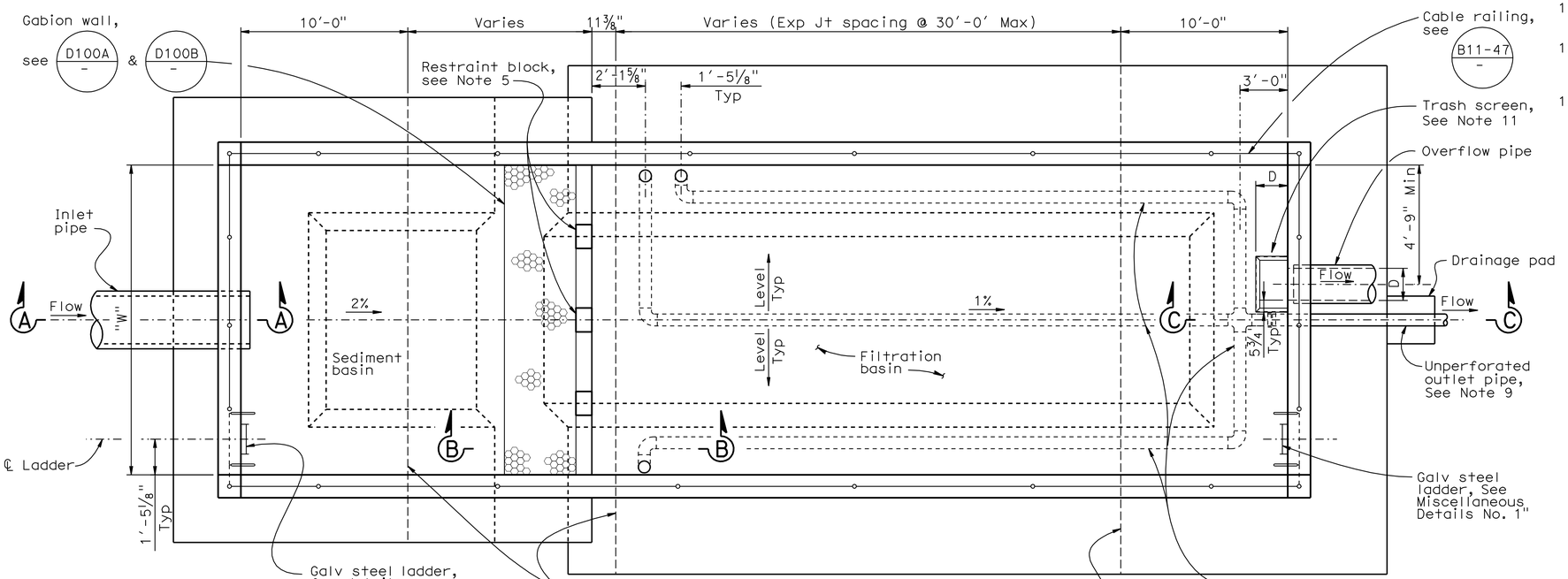

PLAN (Type 2 Footing only), See Note 8

Note: Gutter and shear key not shown for clarity.

NOTES:

1. For dimensions "W", "Ls", "Lf" and "Hw", see Design WQV table on "General Notes" sheet.
2. For dimensions "C" and "F", see "Wall Details" sheet.
3. For Typical Section, see "Wall Details" sheet.
4. For Section A - A, B - B and C - C, see "Details No. 1" sheet.
5. For restraint block details, see "Details No. 1" and "Details No. 2" sheets.
6. For details of underdrain (sand filter), see "Details No. 4" sheet.
7. For inlet and overflow FL elevation, see "Drainage Plans". Invert elevation of inflow pipe should be no lower than 0.9 diameters below HW elevation.
8. For Type 1 and Type 2 footing, see "Footing Details" sheet.
9. For slope of unperforated outlet pipe, see "Drainage Plans".
10. For dimension "t", see "Footing Details" sheet.
11. For trash screen details (frame and perforated metal skin), see "Details No 3" sheet.
12. For typical gutter detail, see Std Plan B3-9. The distance between top of wall and top of gutter shall be the dimension shown on this plan.
13. The flow may enter the AVSF through any of the three walls of either the forebay or sedimentation chamber, above the gabion wall. When flow is parallel to gabion wall, a minimum of 2-ft separation is recommended between the inlet and gabion wall.

Austin Type	Allowable Wall Heights	
	Sediment Basin	Filtration Basin
S-5000-3	6'-12'	10'-16'
L-5000-3	6'-12'	10'-16'
S-5000-4.5	8'-12'	12'-16'
L-5000-4.5	8'-12'	12'-16'
S-5000-6	10'-12'	14'-16'
L-5000-6	10'-12'	14'-16'
S-10000-3	6'-12'	10'-16'
L-10000-3	6'-12'	10'-16'
S-10000-4.5	8'-12'	12'-16'
L-10000-4.5	8'-12'	12'-16'
S-10000-6	10'-12'	14'-16'
L-10000-6	10'-12'	14'-16'
S-15000-3	6'-12'	10'-16'
L-15000-3	6'-12'	10'-16'
S-15000-4.5	8'-12'	12'-16'
L-15000-4.5	8'-12'	12'-16'
S-15000-6	10'-12'	14'-16'
L-15000-6	10'-12'	14'-16'

AUSTIN VAULT SAND FILTER
LAYOUT No. 1

CONSTRUCTION DETAILS

NO SCALE

C-2

REVISED BY | DATE REVISED
D. WANG | L. HE
CALCULATED-DESIGNED BY | CHECKED BY
FUNCTIONAL SUPERVISOR
TIMOTHY B. SOBELMAN
STATE OF CALIFORNIA - DEPARTMENT OF TRANSPORTATION
STORM WATER
Caltrans

10:17 01-SEP-2009 trmikesl S:\projects\258921\resubmit1\725892ga002.dgn

LAST REVISION 00-00-00 | DATE PLOTTED => 01-SEP-2009 | TIME PLOTTED => 10:17

BORDER LAST REVISED 4/11/2008 | RELATIVE BORDER SCALE IS IN INCHES 0 1 2 3 | USERNAME => trmikesl | DGN FILE => 725892ga002.dgn | CU 53227 | EA 258921

Dist	COUNTY	ROUTE	POST MILES TOTAL PROJECT	SHEET No.	TOTAL SHEETS
07	LA	60,170	R4.4, R16.3,R19.8	7	68

Timothy B Sobelman 10-23-08
REGISTERED CIVIL ENGINEER DATE

5-11-09
PLANS APPROVAL DATE

REGISTERED PROFESSIONAL ENGINEER TIMOTHY B. SOBELMAN No. 59249 Exp. 6-30-09 CIVIL STATE OF CALIFORNIA

THE STATE OF CALIFORNIA OR ITS OFFICERS OR AGENTS SHALL NOT BE RESPONSIBLE FOR THE ACCURACY OR COMPLETENESS OF SCANNED COPIES OF THIS PLAN SHEET.

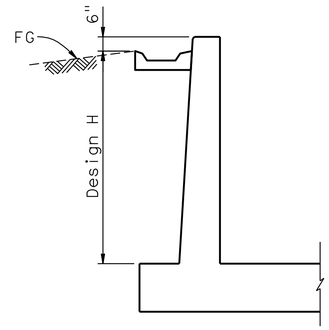

TYPICAL WALL SECTION
(INLET, OUTLET, AND SIDEWALL)

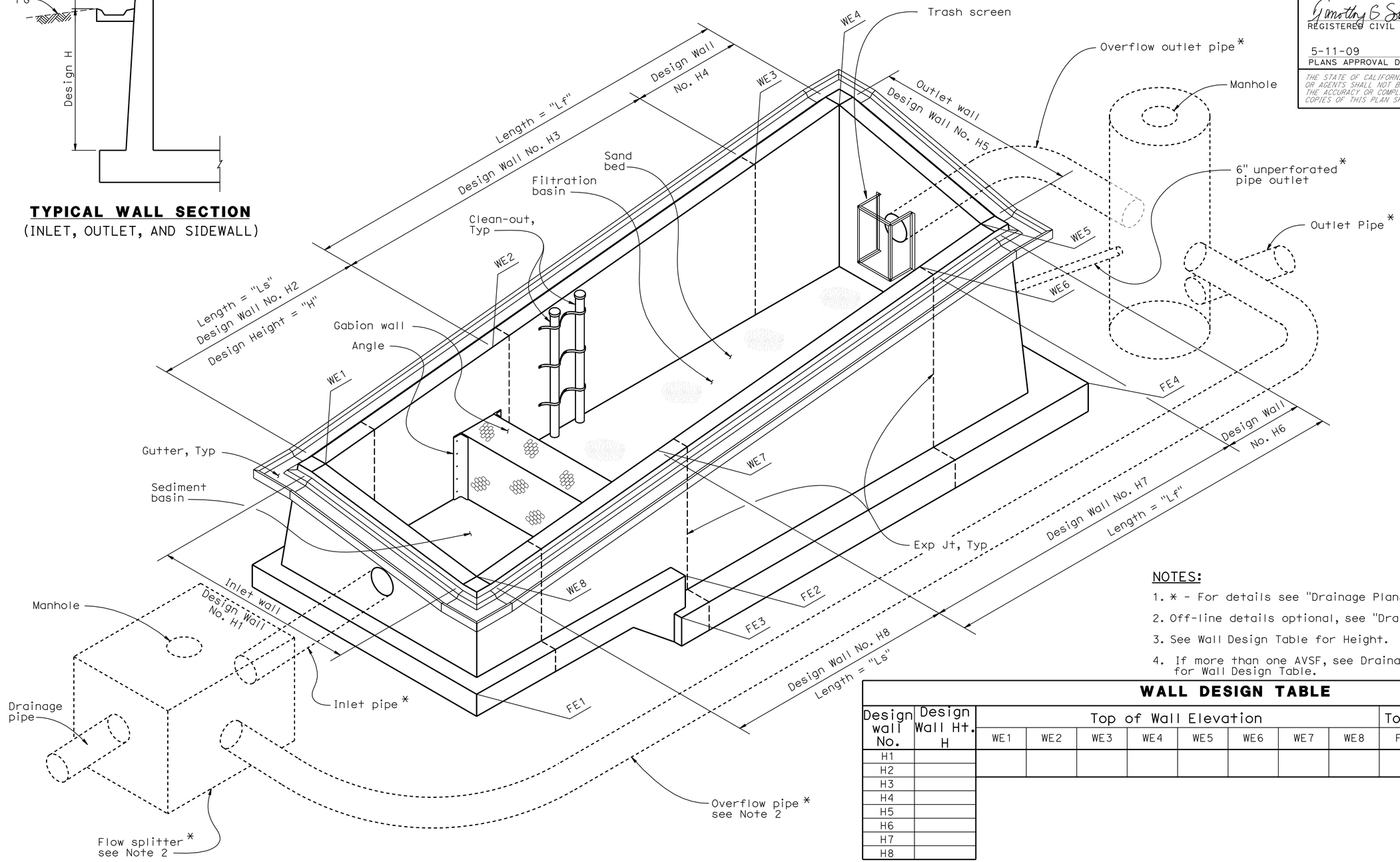

ISOMETRIC VIEW - AUSTIN VAULT SAND FILTER DRAINAGE SYSTEM

NOTE: Steel ladders and cable railings not shown for clarity.

NOTES:

1. * - For details see "Drainage Plans".
2. Off-line details optional, see "Drainage Plans".
3. See Wall Design Table for Height.
4. If more than one AVSF, see Drainage/Layout Plans for Wall Design Table.

WALL DESIGN TABLE

Design wall No.	Design Wall Ht. H	Top of Wall Elevation								Top of Footing Elevation			
		WE1	WE2	WE3	WE4	WE5	WE6	WE7	WE8	FE1	FE2	FE3	FE4
H1													
H2													
H3													
H4													
H5													
H6													
H7													
H8													

AUSTIN VAULT SAND FILTER
LAYOUT No. 2

CONSTRUCTION DETAILS
NO SCALE

C-3

REVISED BY | DATE REVISED
D. WANG | L. HE
CALCULATED-DESIGNED BY | CHECKED BY
FUNCTIONAL SUPERVISOR: TIMOTHY B. SOBELMAN
STATE OF CALIFORNIA - DEPARTMENT OF TRANSPORTATION
Caltrans
STORM WATER

10:17 01-SEP-2009 trmikesl S:\projects\258921\resubmit1\725892ga003.dgn

LAST REVISION 00-00-00 | DATE PLOTTED => 01-SEP-2009 | TIME PLOTTED => 10:17

BORDER LAST REVISED 4/11/2008 | RELATIVE BORDER SCALE IS IN INCHES 0 1 2 3 | USERNAME => trmikesl | DGN FILE => 725892ga003.dgn | CU 53227 | EA 258921

Dist	COUNTY	ROUTE	POST MILES TOTAL PROJECT	SHEET No.	TOTAL SHEETS
07	LA	60,170	R4.4, R16.3,R19.8	8	68

Timothy G Sobelman 10-23-08
REGISTERED CIVIL ENGINEER DATE

5-11-09
PLANS APPROVAL DATE

REGISTERED PROFESSIONAL ENGINEER TIMOTHY B. SOBELMAN No. 59249 Exp. 6-30-09 CIVIL STATE OF CALIFORNIA

THE STATE OF CALIFORNIA OR ITS OFFICERS OR AGENTS SHALL NOT BE RESPONSIBLE FOR THE ACCURACY OR COMPLETENESS OF SCANNED COPIES OF THIS PLAN SHEET.

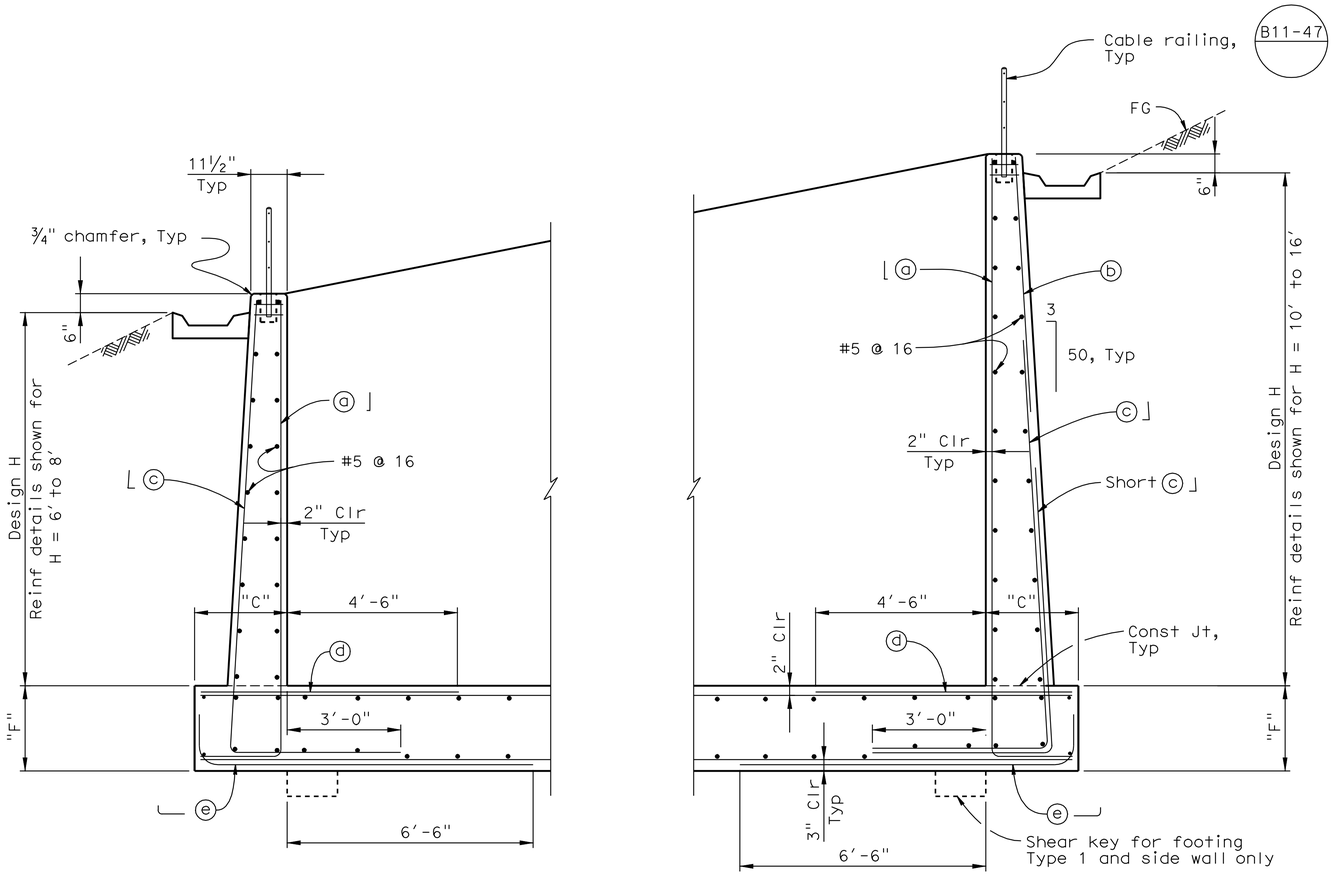

TYPICAL SECTION
½" = 1′-0"

NOTES:

1. For dimension W, see "General Notes" sheet.
2. Design "H" may exceed by 6" before going to next size.
3. For footing details not shown, see "Footing Details" sheet.
4. Concrete and steel quantities noted are based on foot of wall length.

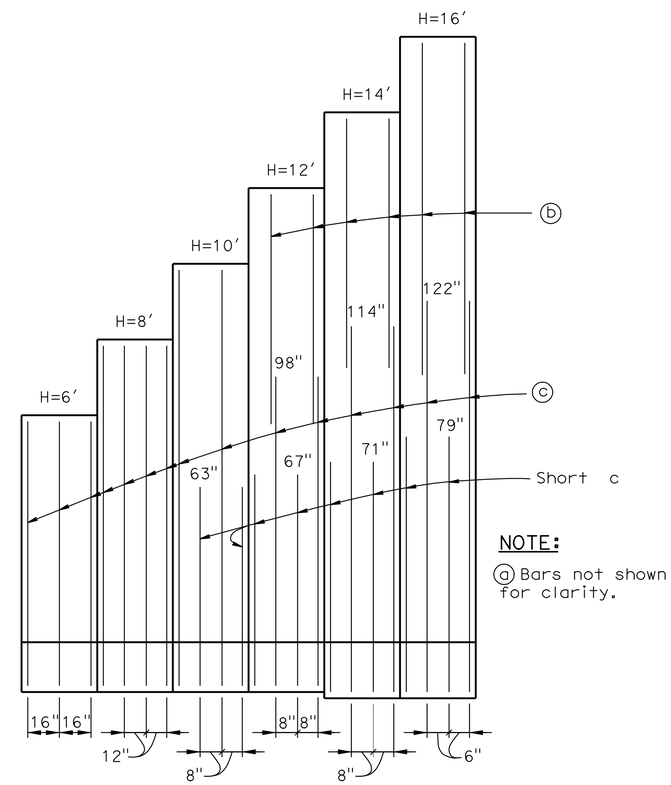

NOTE:
ⓐ Bars not shown for clarity.

ELEVATION
No Scale

TABLE OF REINFORCING STEEL DIMENSIONS AND DATA FOR WALL

Design H	6′	8′	10′	12′	14′	16′
Batter H:V	6:100	6:100	6:100	6:100	6:100	6:100
C	2′-6"	2′-6"	2′-6"	2′-6"	2′-9"	2′-9"
F	1′-9"	1′-9"	1′-9"	1′-9"	2′-3"	2′-3"
⌋ ⓐ bars # @ "	5 @ 16	5 @ 12	6 @16	5 @ 8	6 @ 8	5 @ 6
ⓑ bars # @ "	-	-	-	5 @ 16	5 @ 16	5 @ 12
⌊ ⓒ bars # @ "	5 @ 16	6 @ 12	6 @ 8	7 @ 8	8 @ 8	8 @ 6
ⓓ bars # @ "	6 @ 16	6 @ 12	5 @ 8	6 @ 8	6 @ 8	6 @ 6
⌊ ⓔ bars # @ "	6 @ 16	6 @ 12	7 @ 8	8 @ 8	8 @ 8	9 @ 6
Concrete (CY/ft)	0.28	0.38	0.50	0.62	0.75	0.89
* Steel (LB/ft)	50	78	111	152	193	263

* Including all wall stem reinforcement and footing slab ⓓ, ⓔ bars.

AUSTIN VAULT SAND FILTER WALL DETAILS

CONSTRUCTION DETAILS

C-4

STATE OF CALIFORNIA - DEPARTMENT OF TRANSPORTATION
Caltrans
STORM WATER

FUNCTIONAL SUPERVISOR: TIMOTHY B. SOBELMAN
CALCULATED-DESIGNED BY: D. WANG
CHECKED BY: L. HE
REVISED BY / DATE REVISED

LAST REVISION 00-00-00
DATE PLOTTED => 01-SEP-2009
TIME PLOTTED => 10:17

Dist	COUNTY	ROUTE	POST MILES TOTAL PROJECT	SHEET No.	TOTAL SHEETS
07	LA	60,170	R4.4, R16.3,R19.8	9	68

REGISTERED CIVIL ENGINEER DATE 10-23-08

5-11-09
PLANS APPROVAL DATE

REGISTERED PROFESSIONAL ENGINEER TIMOTHY B. SOBELMAN No. 59249 Exp. 6-30-09 CIVIL STATE OF CALIFORNIA

THE STATE OF CALIFORNIA OR ITS OFFICERS OR AGENTS SHALL NOT BE RESPONSIBLE FOR THE ACCURACY OR COMPLETENESS OF SCANNED COPIES OF THIS PLAN SHEET.

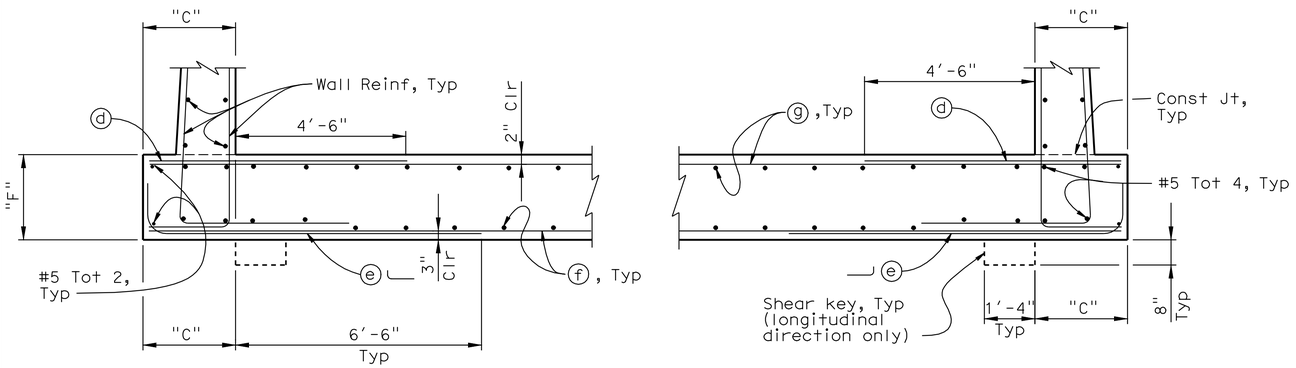

TYPICAL FOOTING (TYPE 1)

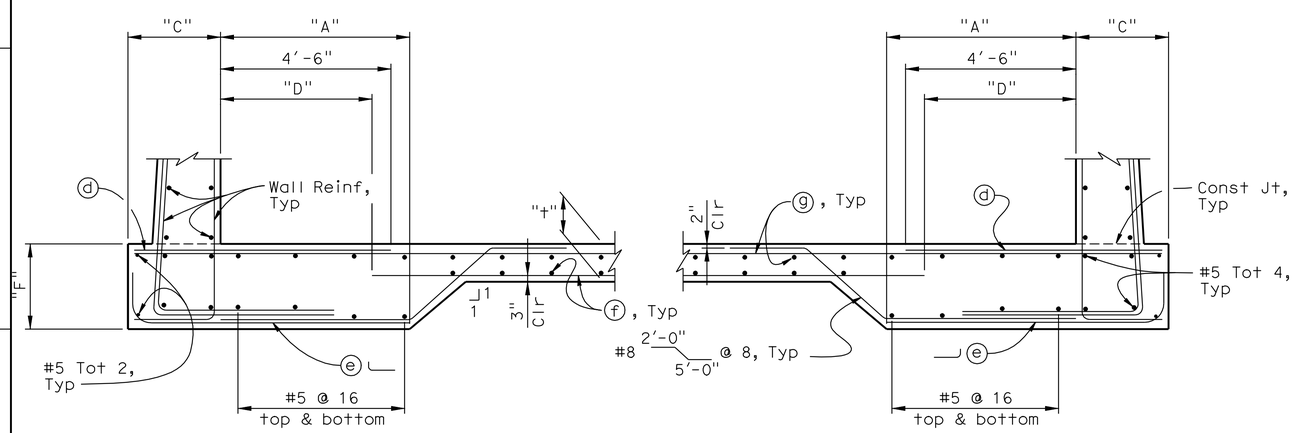

TYPICAL FOOTING (TYPE 2)

"t" - 1'-3" for Sediment Basin
1'-3" for Filtration Basin if all adjacent walls H ≤ 12'
1'-9" for Filtration Basin if any adjacent walls H = 14' or 16'

TABLE OF REINFORCING STEEL DIMENSIONS AND DATA FOR INVERT

W		18'	24'	27'	30'	36'	45'
A		-	-	6'-0"	6'-0"	6'-0"	6'-0"
D		4'-0"	4'-0"	4'-0"	4'-0"	4'-0"	4'-0"
Footing Type		1	1	2	2	2	2
Sediment basin	(f) bars # @ "	6 @ 8	6 @ 8	6 @ 8	6 @ 8	6 @ 8	6 @ 8
	(g) bars # @ "	5 @ 8	5 @ 8	5 @ 8	5 @ 8	5 @ 8	5 @ 8
Filtration basin	(f) bars # @ "	9 @ 6	9 @ 6	7 @ 6	7 @ 6	7 @ 6	7 @ 6
	(g) bars # @ "	6 @ 6	6 @ 6	5 @ 6	5 @ 6	5 @ 6	5 @ 6
Concrete (CY/basin type) see Note 2	Sediment basin	41	69	42	88	66	91
	Filtration basin if H ≤ 12'	102	188	84	233	152	216
	Filtration basin if H = 14' or 16'	133	244	112	314	204	291
Steel (LB/basin type) see Note 2	Sediment basin	4,659	7,711	4,697	11,512	8,158	11,642
	Filtration basin if H ≤ 12'	27,676	52,388	14,397	44,419	29,105	43,717
	Filtration basin if H = 14' or 16'	28,048	52,931	14,586	44,903	29,396	44,077

NOTES:

1. For dimensions "C" and "F", and reinforcement "d" and "e", see "Wall Details" sheet.
2. Quantities noted are for the full length and width of each basin type. For total invert quantities of each AVSF type, combine quantities of sedimentation basin and appropriate filtration basin.

AUSTIN VAULT SAND FILTER
FOOTING DETAILS

CONSTRUCTION DETAILS

SCALE: ½" = 1'-0"

C-5

REVISED BY | DATE REVISED
D. WANG | L. HE
CALCULATED-DESIGNED BY | CHECKED BY
FUNCTIONAL SUPERVISOR
TIMOTHY B. SOBELMAN

STATE OF CALIFORNIA - DEPARTMENT OF TRANSPORTATION
Caltrans STORM WATER

10:17 01-SEP-2009 trmikesl S:\projects\258921\resubmit\725892ga005.dgn

LAST REVISION 00-00-00 | DATE PLOTTED => 01-SEP-2009 | TIME PLOTTED => 10:17

BORDER LAST REVISED 4/11/2008 | RELATIVE BORDER SCALE IS IN INCHES 0 1 2 3 | USERNAME => trmikesl | DGN FILE => 725892ga005.dgn | CU 53227 | EA 258921

Dist	COUNTY	ROUTE	POST MILES TOTAL PROJECT	SHEET No.	TOTAL SHEETS
07	LA	60,170	R4.4, R16.3,R19.8	10	68

Timothy B Sobelman 10-23-08
REGISTERED CIVIL ENGINEER DATE

5-11-09
PLANS APPROVAL DATE

REGISTERED PROFESSIONAL ENGINEER TIMOTHY B. SOBELMAN No. 59249 Exp. 6-30-09 CIVIL STATE OF CALIFORNIA

THE STATE OF CALIFORNIA OR ITS OFFICERS OR AGENTS SHALL NOT BE RESPONSIBLE FOR THE ACCURACY OR COMPLETENESS OF SCANNED COPIES OF THIS PLAN SHEET.

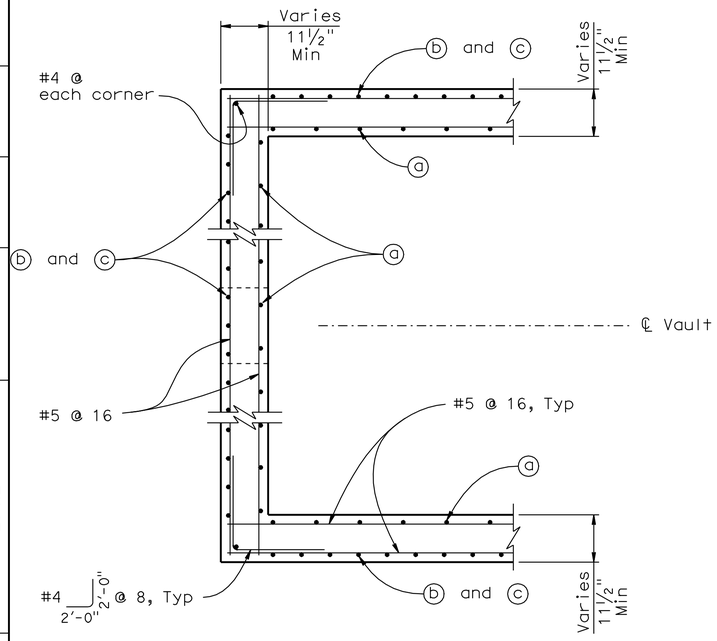

PARTIAL PLAN

SCALE: ½" = 1'-0"

NOTE: Inlet wall shown, outlet wall similar.

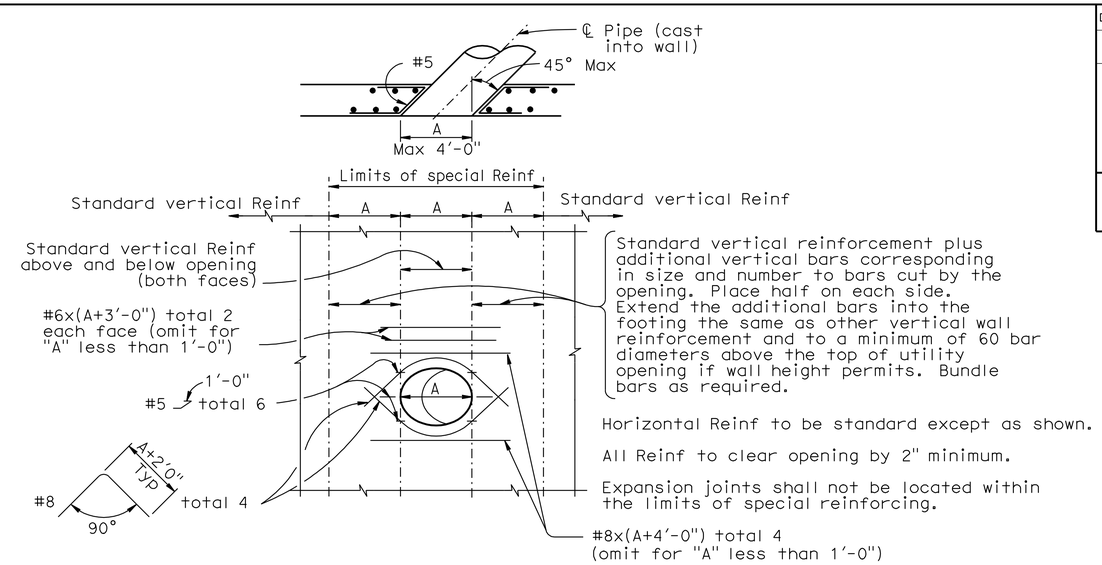

WALL OPENING DETAIL

NO SCALE

To be used at inlet, outlet and overflow pipe locations

NOTE: The rebar lengths shown are maximum and shall be adjusted due to the limitations of space.

NOTES:

1. For section locations, see "Layout No. 1 " sheet.
2. For wall and footing reinforcement details, see Typical Section on "Wall Details" sheet.

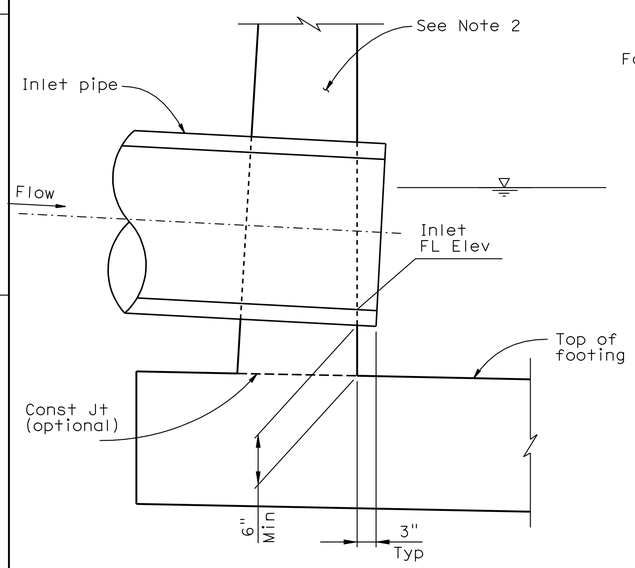

SECTION A - A

SCALE: 1" = 1'-0"

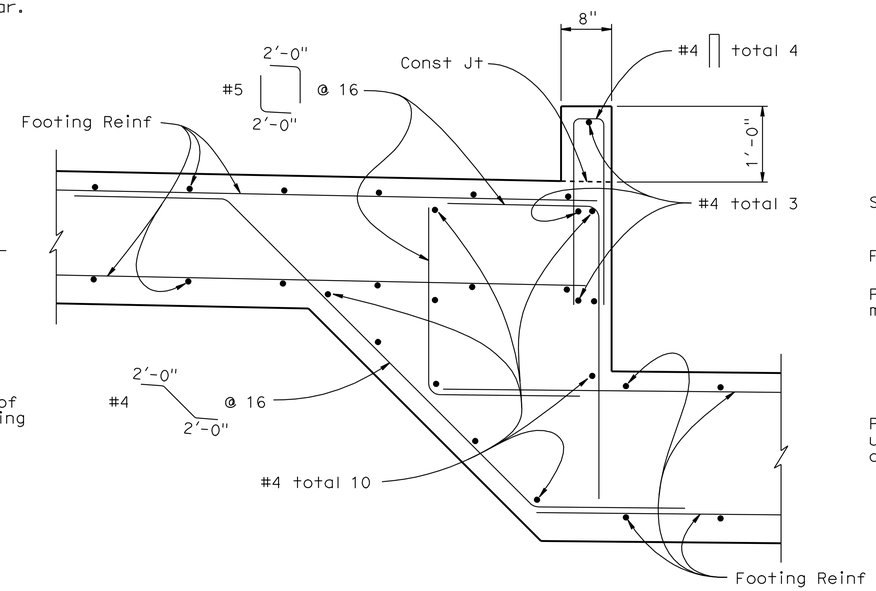

SECTION B - B

SCALE: 1" = 1'-0"

(Gabion wall and other details not shown for clarity)

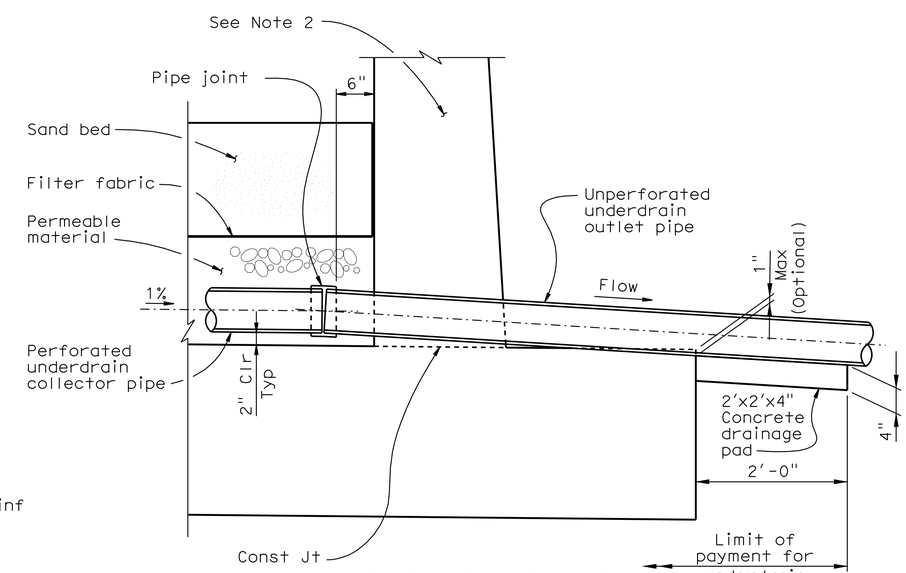

SECTION C - C

SCALE: 1" = 1'-0"

AUSTIN VAULT SAND FILTER DETAILS No. 1

CONSTRUCTION DETAILS

C-6

STATE OF CALIFORNIA - DEPARTMENT OF TRANSPORTATION
STORM WATER
FUNCTIONAL SUPERVISOR: TIMOTHY B. SOBELMAN
CALCULATED-DESIGNED BY: D. WANG
CHECKED BY: L. HE
REVISED BY / DATE REVISED

10:18 01-SEP-2009 trmikesl S:\projects\258921\resubmitt\725892ga006.dgn

LAST REVISION 00-00-00
DATE PLOTTED => 01-SEP-2009
TIME PLOTTED => 10:18

Dist	COUNTY	ROUTE	POST MILES TOTAL PROJECT	SHEET No.	TOTAL SHEETS
07	LA	60,170	R4.4, R16.3,R19.8	11	68

Timothy B Sobelman 10-23-08
REGISTERED CIVIL ENGINEER DATE

5-11-09
PLANS APPROVAL DATE

REGISTERED PROFESSIONAL ENGINEER TIMOTHY B. SOBELMAN No. 59249 Exp. 6-30-09 CIVIL STATE OF CALIFORNIA

THE STATE OF CALIFORNIA OR ITS OFFICERS OR AGENTS SHALL NOT BE RESPONSIBLE FOR THE ACCURACY OR COMPLETENESS OF SCANNED COPIES OF THIS PLAN SHEET.

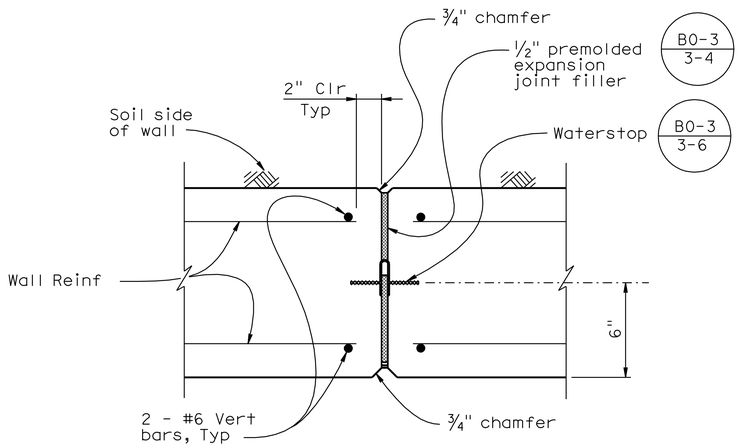

WALL EXPANSION JOINT DETAIL - PLAN SECTION

NO SCALE

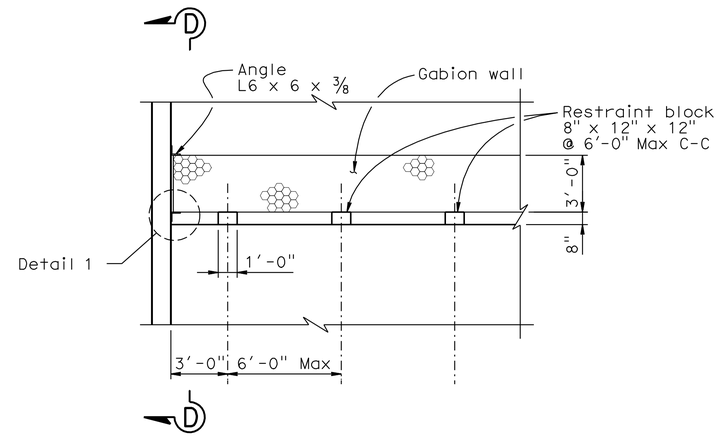

RESTRAINT BLOCK DETAIL

SCALE: 1/4" = 1'-0"

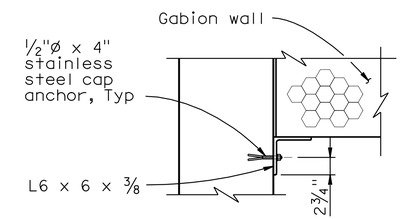

DETAIL 1

SCALE: 1" = 1'-0"

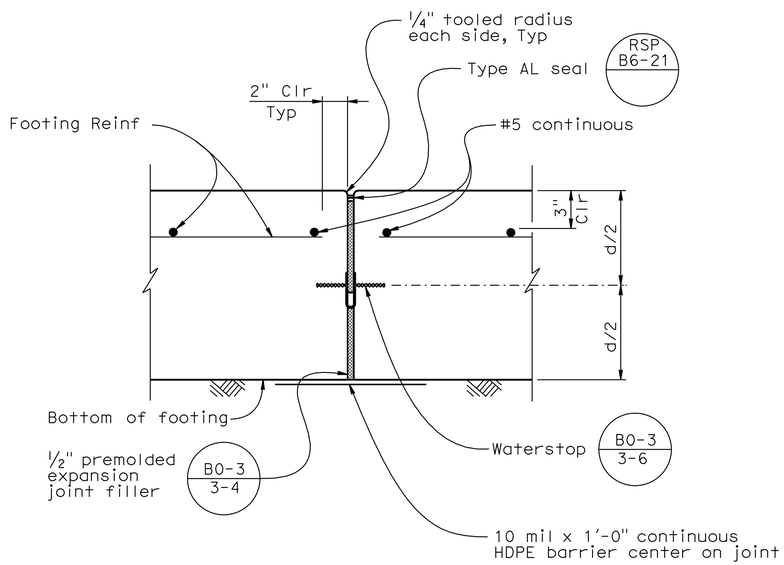

FOOTING EXPANSION JOINT DETAIL

NO SCALE

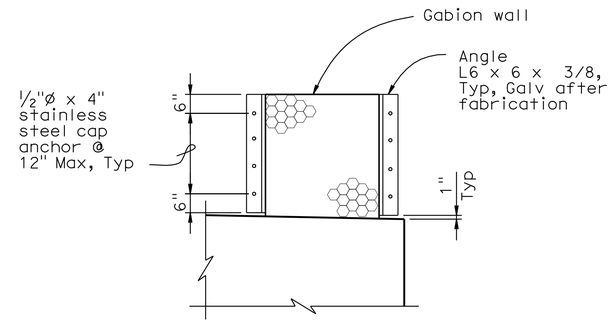

SECTION D - D

SCALE: 1/2" = 1'-0"

AUSTIN VAULT SAND FILTER
DETAILS No. 2

CONSTRUCTION DETAILS

C-7

STATE OF CALIFORNIA - DEPARTMENT OF TRANSPORTATION
STORM WATER
Caltrans

FUNCTIONAL SUPERVISOR: TIMOTHY B. SOBELMAN
CALCULATED-DESIGNED BY: D. WANG
CHECKED BY: L. HE
REVISED BY
DATE REVISED

10:18 01-SEP-2009 trmikesl S:\projects\258921\resubmit1\725892ga007.dgn

LAST REVISION 00-00-00
DATE PLOTTED => 01-SEP-2009
TIME PLOTTED => 10:18

Dist	COUNTY	ROUTE	POST MILES TOTAL PROJECT	SHEET No.	TOTAL SHEETS
07	LA	60,170	R4.4, R16.3,R19.8	12	68

REGISTERED CIVIL ENGINEER — DATE: 10-23-08

5-11-09
PLANS APPROVAL DATE

REGISTERED PROFESSIONAL ENGINEER — TIMOTHY B. SOBELMAN — No. 59249 — Exp. 6-30-09 — CIVIL — STATE OF CALIFORNIA

THE STATE OF CALIFORNIA OR ITS OFFICERS OR AGENTS SHALL NOT BE RESPONSIBLE FOR THE ACCURACY OR COMPLETENESS OF SCANNED COPIES OF THIS PLAN SHEET.

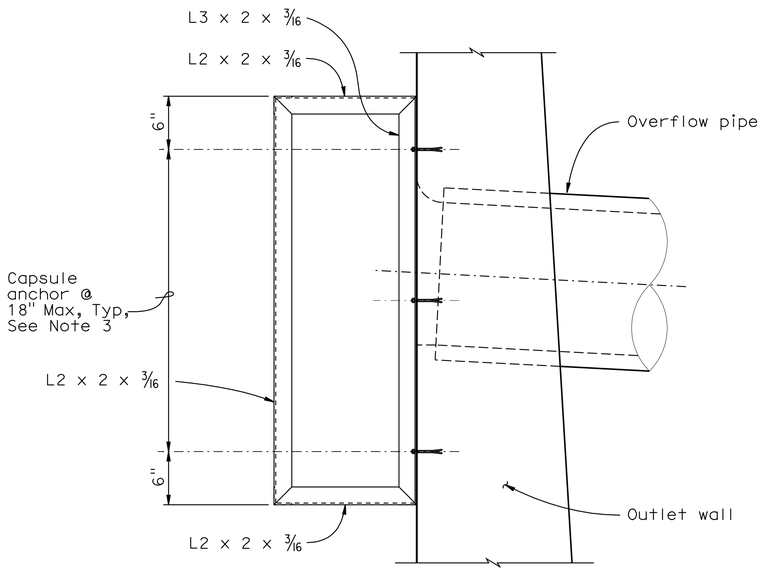

TRASH SCREEN - SIDE ELEVATION

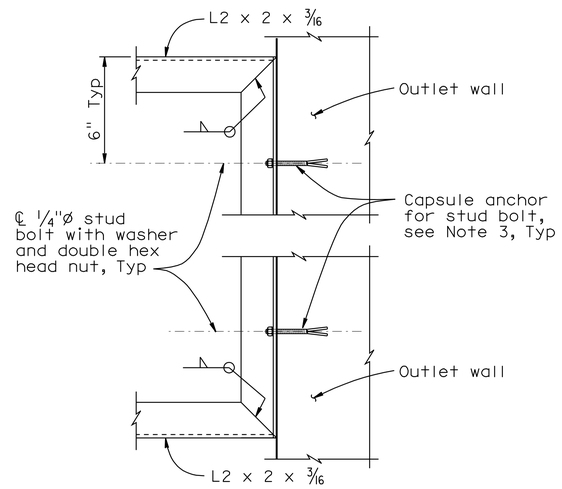

SECTION F - F

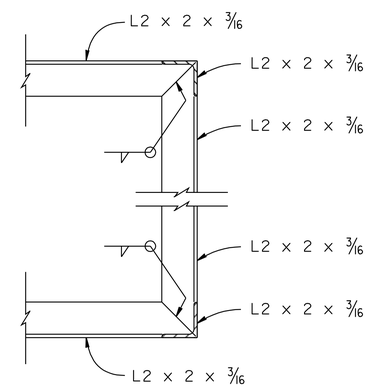

SECTION E - E

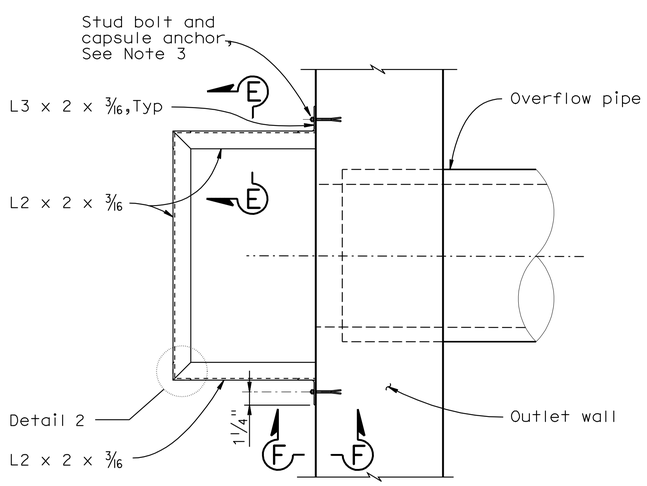

TRASH SCREEN - PLAN

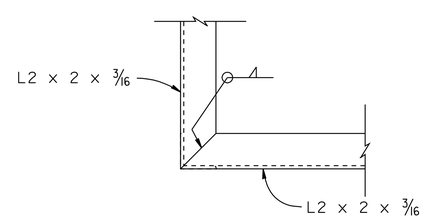

DETAIL 2

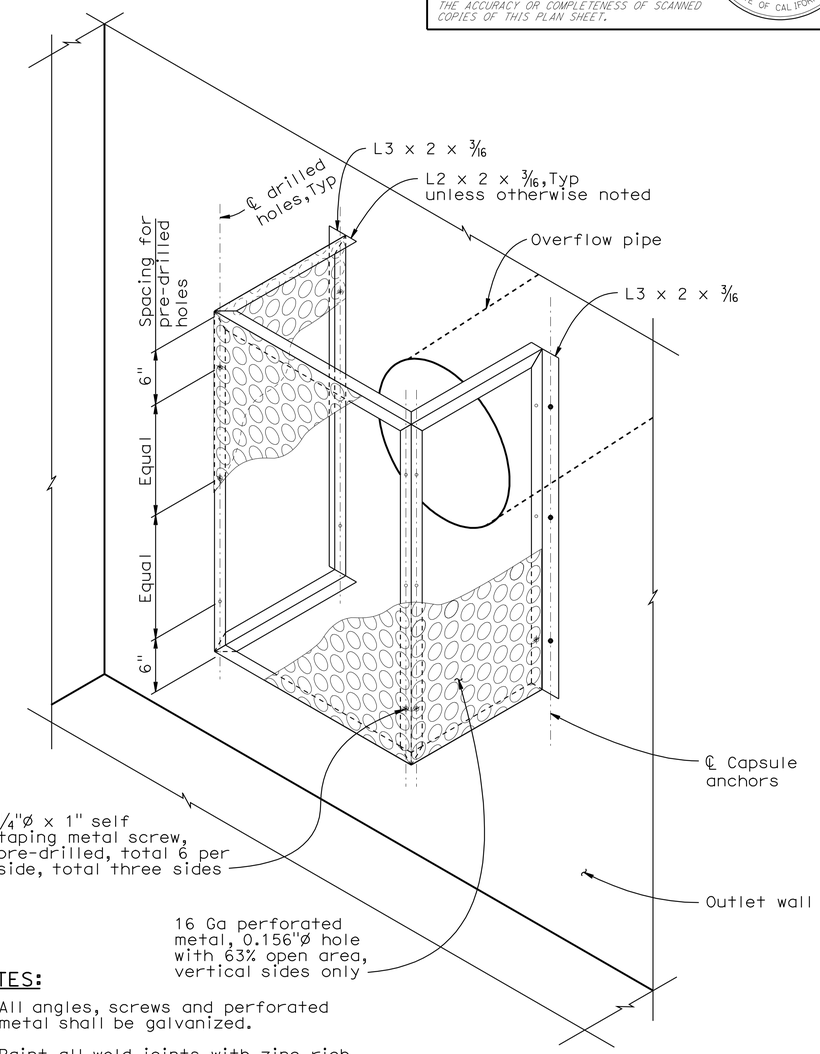

NOTES:

1. All angles, screws and perforated metal shall be galvanized.
2. Paint all weld joints with zinc rich paint or galvanize after welding.
3. Resin capsule type bolt anchorage is subject to approval by the Engineer. Installation procedures shall comply with the manufacturers instructions.

ISOMETRIC VIEW - TRASH SCREEN

NOTE: Metal hole Ø exaggerated for emphasis.

AUSTIN VAULT SAND FILTER
DETAILS No. 3

CONSTRUCTION DETAILS
NO SCALE

C-8

STATE OF CALIFORNIA - DEPARTMENT OF TRANSPORTATION
STORM WATER
FUNCTIONAL SUPERVISOR: TIMOTHY B. SOBELMAN
CALCULATED-DESIGNED BY: D. WANG
CHECKED BY: L. HE
REVISED BY
DATE REVISED

10:18 01-SEP-2009 trmikesl S:\projects\258921\resubmitt\725892ga008.dgn

LAST REVISION 00-00-00 | DATE PLOTTED => 01-SEP-2009 | TIME PLOTTED => 10:18

BORDER LAST REVISED 4/11/2008 | RELATIVE BORDER SCALE IS IN INCHES 0 1 2 3 | USERNAME => trmikesl | DGN FILE => 725892ga008.dgn | CU 53227 | EA 258921

Dist	COUNTY	ROUTE	POST MILES TOTAL PROJECT	SHEET No.	TOTAL SHEETS
07	LA	60,170	R4.4, R16.3,R19.8	13	68

REGISTERED CIVIL ENGINEER 10-23-08 DATE

5-11-09
PLANS APPROVAL DATE

REGISTERED PROFESSIONAL ENGINEER TIMOTHY B. SOBELMAN No. 59249 Exp. 6-30-09 CIVIL STATE OF CALIFORNIA

THE STATE OF CALIFORNIA OR ITS OFFICERS OR AGENTS SHALL NOT BE RESPONSIBLE FOR THE ACCURACY OR COMPLETENESS OF SCANNED COPIES OF THIS PLAN SHEET.

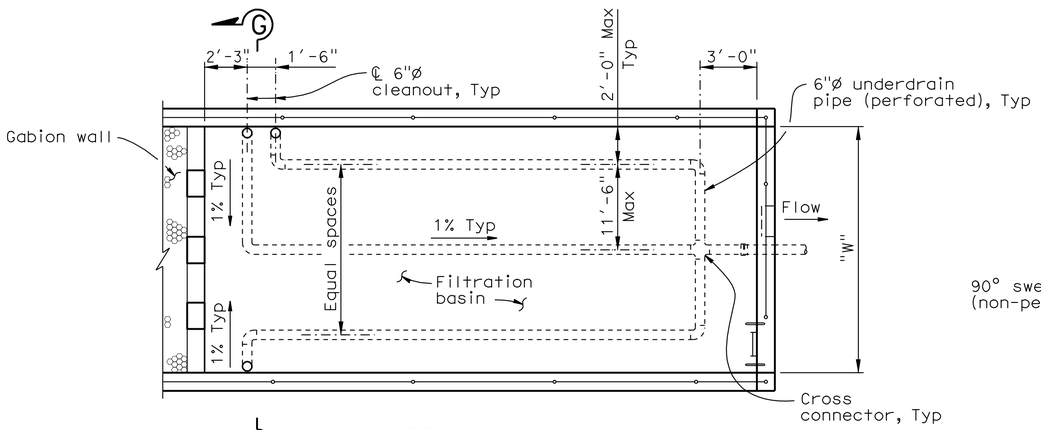

UNDERDRAIN PLAN (FILTRATION BASIN)

"W" = 18' - 24' - 27'

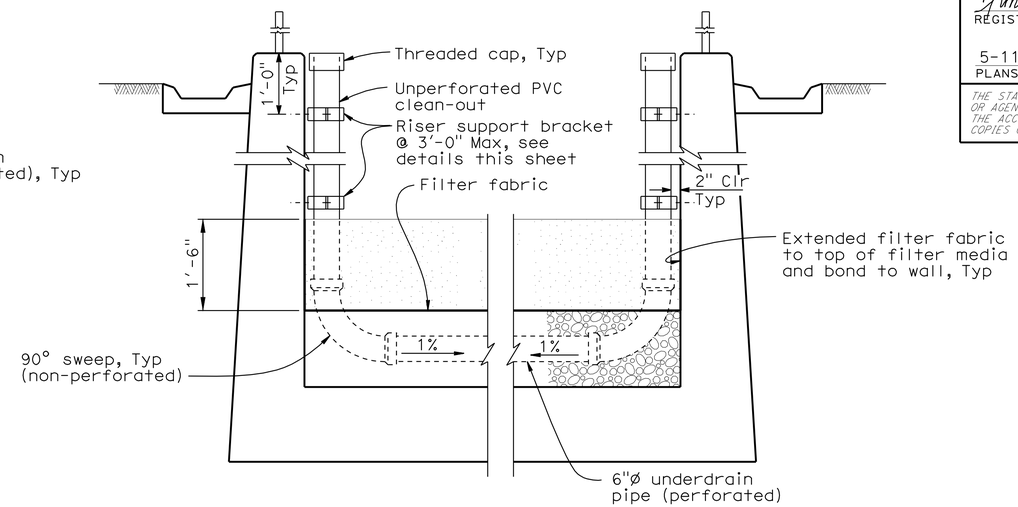

SECTION G - G

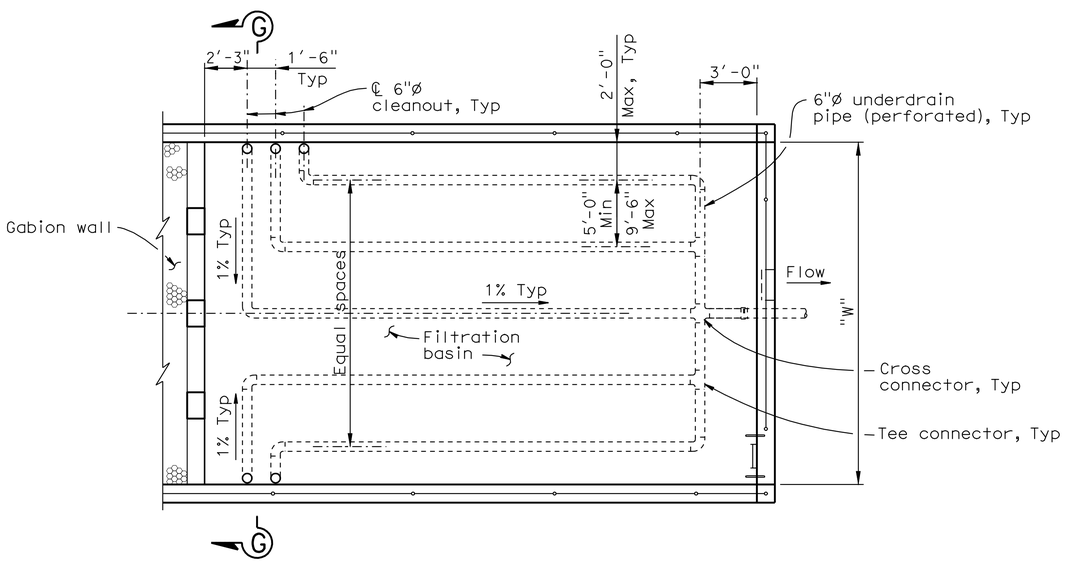

UNDERDRAIN PLAN (FILTRATION BASIN)

"W" = 30' - 36' - 45'

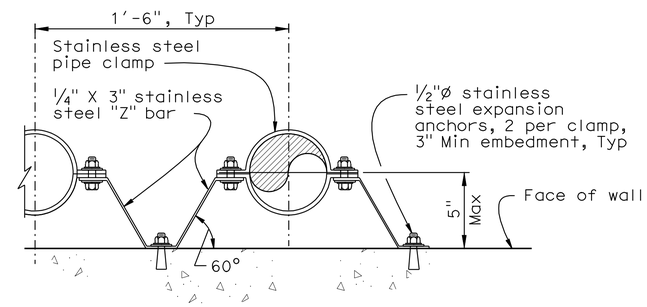

RISER SUPPORT BRACKET DETAIL

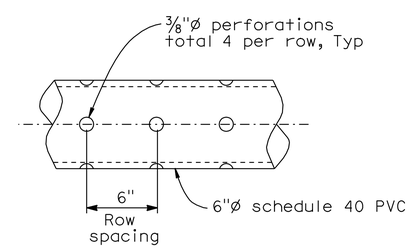

PERFORATED UNDERDRAIN PIPE

NOTE:

1. See "Layout No. 1" sheet for Typical cover and depth of sand bed.

AUSTIN VAULT SAND FILTER
DETAILS No. 4

CONSTRUCTION DETAILS

NO SCALE

C-9

STATE OF CALIFORNIA - DEPARTMENT OF TRANSPORTATION
Caltrans
STORM WATER

FUNCTIONAL SUPERVISOR: TIMOTHY B. SOBELMAN
CALCULATED-DESIGNED BY: D. WANG
CHECKED BY: L. HE
REVISED BY
DATE REVISED

01-SEP-2009 trmikesl S:\projects\258921\resubmitt\725892ga009.dgn 10:18

LAST REVISION 00-00-00
DATE PLOTTED => 01-SEP-2009
TIME PLOTTED => 10:18

Dist	COUNTY	ROUTE	POST MILES TOTAL PROJECT	SHEET No.	TOTAL SHEETS
07	LA	60,170	R4.4, R16.3,R19.8	14	68

Timothy B Sobelman 10-23-08
REGISTERED CIVIL ENGINEER DATE

5-11-09
PLANS APPROVAL DATE

REGISTERED PROFESSIONAL ENGINEER TIMOTHY B. SOBELMAN No. 59249 Exp. 6-30-09 CIVIL STATE OF CALIFORNIA

THE STATE OF CALIFORNIA OR ITS OFFICERS OR AGENTS SHALL NOT BE RESPONSIBLE FOR THE ACCURACY OR COMPLETENESS OF SCANNED COPIES OF THIS PLAN SHEET.

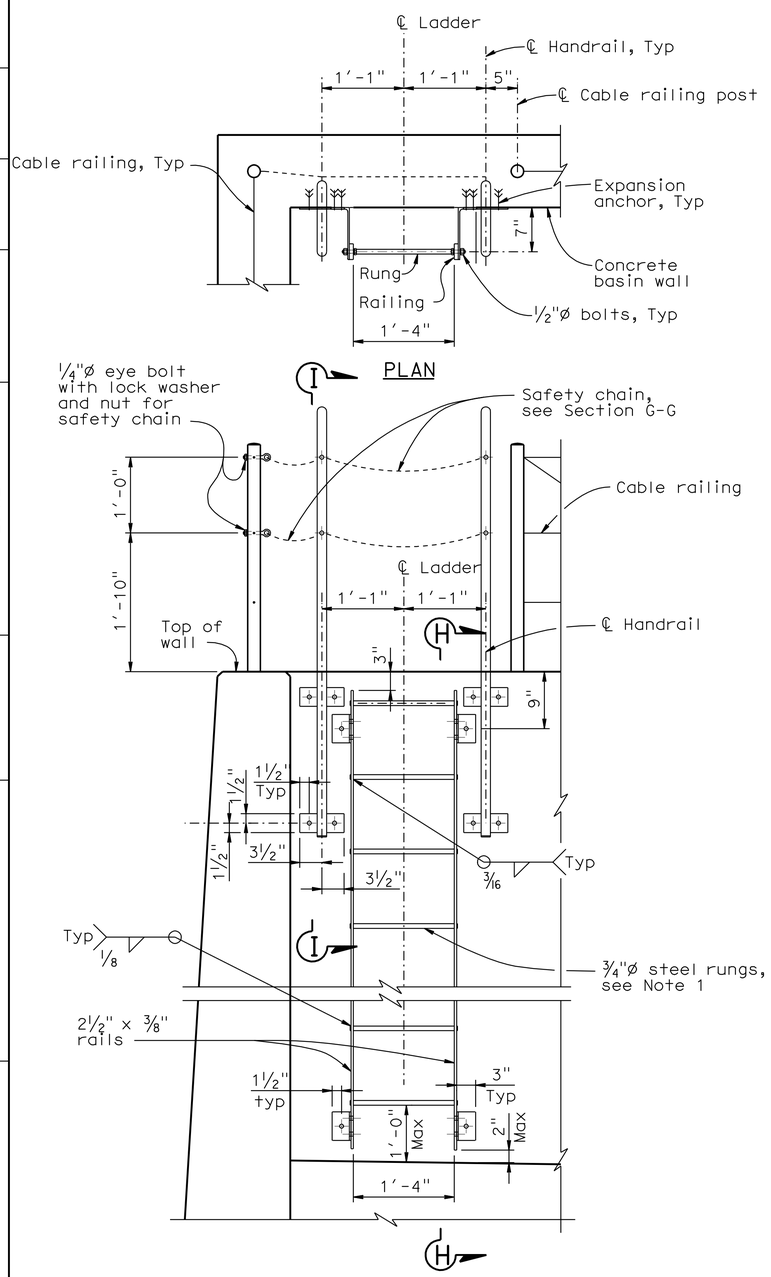

ELEVATION

LADDER

NOTE: Cable railing not shown for clarity.

NOTES:

1. The distance between rungs shall not exceed 1′-0" and shall be uniform throughout the length of wall.
2. Hardware shall be galvanized after fabrication.
3. Grind exposed corners to 3/16" radius.

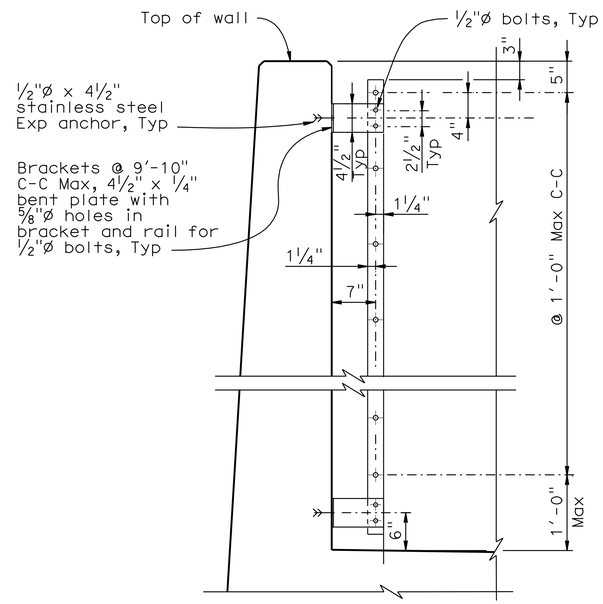

SECTION H - H

NOTE: Handrail and cable railing not shown for clarity.

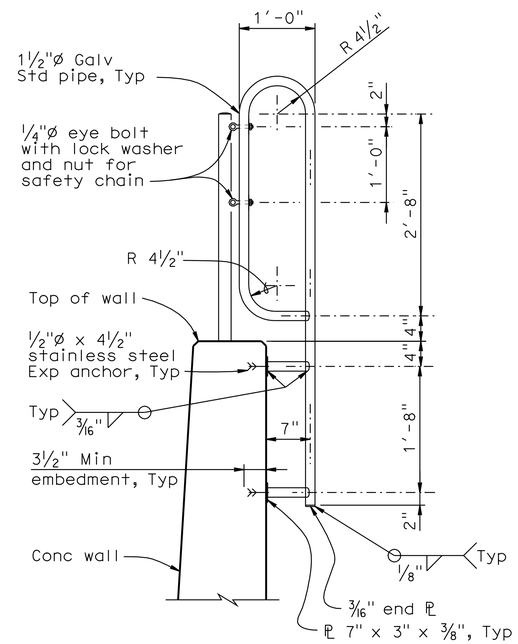

SECTION I - I

AUSTIN VAULT SAND FILTER
MISCELLANEOUS DETAILS No. 1

CONSTRUCTION DETAILS

SCALE: 1" = 1′-0"

C-10

REVISED BY | DATE REVISED
D. WANG | L. HE
CALCULATED-DESIGNED BY | CHECKED BY
FUNCTIONAL SUPERVISOR: TIMOTHY B. SOBELMAN
STATE OF CALIFORNIA - DEPARTMENT OF TRANSPORTATION
STORM WATER
Caltrans

10:19 01-SEP-2009 trmikesl S:\projects\258921\resubmitt\725892ga010.dgn

LAST REVISION 00-00-00 | DATE PLOTTED => 01-SEP-2009 | TIME PLOTTED => 10:19

Dist	COUNTY	ROUTE	POST MILES TOTAL PROJECT	SHEET No.	TOTAL SHEETS
07	LA	60,170	R4.4, R16.3,R19.8	15	68

Timothy B Sobelman 10-23-08
REGISTERED CIVIL ENGINEER DATE

5-11-09
PLANS APPROVAL DATE

REGISTERED PROFESSIONAL ENGINEER
TIMOTHY B. SOBELMAN
No. 59249
Exp. 6-30-09
CIVIL
STATE OF CALIFORNIA

THE STATE OF CALIFORNIA OR ITS OFFICERS OR AGENTS SHALL NOT BE RESPONSIBLE FOR THE ACCURACY OR COMPLETENESS OF SCANNED COPIES OF THIS PLAN SHEET.

MISCELLANEOUS ITEMS

Austin Vault Type	Gabion (CY)	Cable Railing (LF)	Filter Media (Austin Vault) (CY)	Permeable Material (Austin Vault) (CY)	Filter Fabric (Austin Vault) (SQYD)	Perforated Plastic Pipe Underdrain (Austin Vault) (LF)	* Plastic Pipe Underdrain (Austin Vault) (LF)
S-5000-3	9	165	63	51	149	152	33
L-5000-3	6	201	63	55	153	203	33
S-5000-4.5	14	165	63	51	149	152	33
L-5000-4.5	9	201	63	55	153	203	33
S-5000-6	18	165	63	51	149	152	33
L-5000-6	12	201	63	55	153	203	33
S-10000-3	12	237	126	110	285	354	33
L-10000-3	8	293	125	123	290	304	33
S-10000-4.5	18	237	126	110	285	354	33
L-10000-4.5	12	293	125	123	290	304	33
S-10000-6	24	237	126	110	285	354	33
L-10000-6	16	293	125	123	290	304	33
S-15000-3	15	289	190	175	420	442	53
L-15000-3	10	361	192	201	432	605	53
S-15000-4.5	23	289	190	175	420	442	53
L-15000-4.5	15	361	192	201	432	605	53
S-15000-6	30	289	190	175	420	442	53
L-15000-6	20	361	192	201	432	605	53

NOTES:

1. For Invert concrete and reinforcing steel quantities, see "Footing Details" sheet.
2. For wall concrete and reinforcing steel quantities, see "Wall Details" sheet.
3. Misc metal & steel = 115 LB for all vault configurations. Includes trash screen only and is based on a 24" ø overflow outlet pipe.

* (Plastic Pipe Underdrain (Austin Vault) lengths are based on a 10 foot wall height. PE to calculate quantities based on actual wall height.)

AUSTIN VAULT SAND FILTER
MISCELLANEOUS QUANTITIES

CONSTRUCTION DETAILS

C-11

REVISED BY: D. WANG
DATE REVISED: L. HE
CALCULATED-DESIGNED BY
CHECKED BY
FUNCTIONAL SUPERVISOR: TIMOTHY B. SOBELMAN

STATE OF CALIFORNIA - DEPARTMENT OF TRANSPORTATION
Caltrans
STORM WATER

10:19 01-SEP-2009 trmikesl S:\projects\258921\resubmit\725892ga011.dgn

LAST REVISION 00-00-00 | DATE PLOTTED => 01-SEP-2009 | TIME PLOTTED => 10:19

NOTE:

FOR COMPLETE RIGHT OF WAY AND ACCURATE ACCESS DATA, SEE RIGHT OF WAY RECORD MAPS AT DISTRIST OFFICE.

CURVE DATA

No.	R	Δ	T	L
1	45.00′	41°59′02″	17.27′	32.97′
2	45.00′	37°36′24″	15.32′	29.54′
3	5.00′	32°7′27″	1.44′	2.80′

Dist	COUNTY	ROUTE	POST MILES TOTAL PROJECT	SHEET No.	TOTAL SHEETS
07	LA	60,170	R4.4, R16.3,R19.8	16	68

REGISTERED CIVIL ENGINEER — DATE 3-3-09

5-11-09
PLANS APPROVAL DATE

REGISTERED PROFESSIONAL ENGINEER RALPH M. SASAKI No. 30849 Exp. 3/31/10 CIVIL STATE OF CALIFORNIA

THE STATE OF CALIFORNIA OR ITS OFFICERS OR AGENTS SHALL NOT BE RESPONSIBLE FOR THE ACCURACY OR COMPLETENESS OF SCANNED COPIES OF THIS PLAN SHEET.

LEGEND:

SYSTEM No.

SYSTEM UNIT

ABBREVIATIONS:

AVSF -- AUSTIN VAULT SAND FILTER
GSRD -- GROSS SOLIDS REMOVAL DEVICE

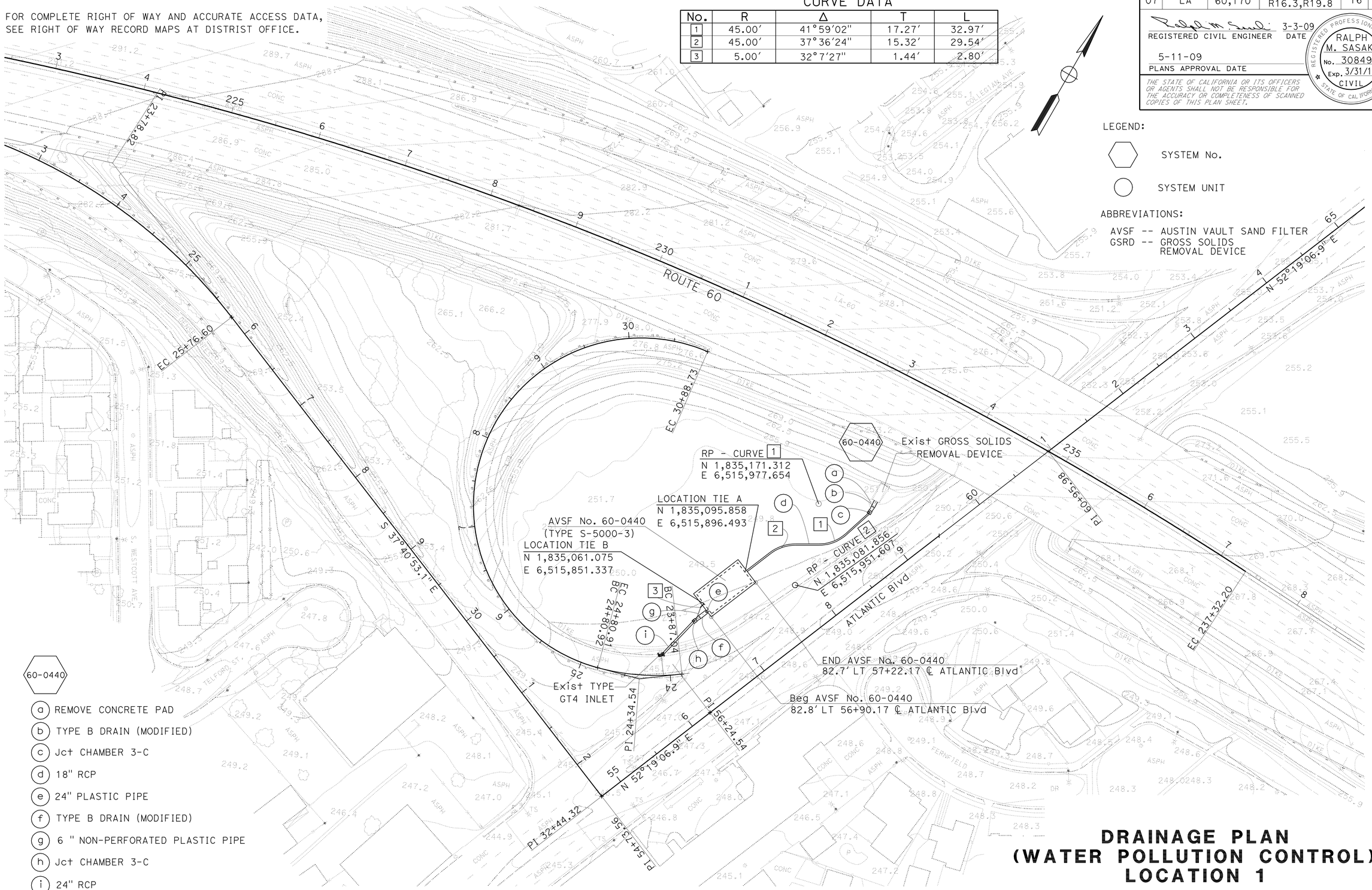

60-0440

- (a) REMOVE CONCRETE PAD
- (b) TYPE B DRAIN (MODIFIED)
- (c) Jct CHAMBER 3-C
- (d) 18" RCP
- (e) 24" PLASTIC PIPE
- (f) TYPE B DRAIN (MODIFIED)
- (g) 6 " NON-PERFORATED PLASTIC PIPE
- (h) Jct CHAMBER 3-C
- (i) 24" RCP

THIS PLAN ACCURATE FOR DRAINAGE WORK ONLY

DRAINAGE PLAN (WATER POLLUTION CONTROL) LOCATION 1

SCALE: 1"=50′

D-1

STATE OF CALIFORNIA - DEPARTMENT OF TRANSPORTATION
Caltrans® HYDRAULICS

FUNCTIONAL SUPERVISOR: JAI P. THAKUR

CALCULATED-DESIGNED BY: MAY P. FUNG
CHECKED BY: RALPH M. SASAKI

REVISED BY / DATE REVISED

LAST REVISION 00-00-00 — DATE PLOTTED => 01-SEP-2009 — TIME PLOTTED => 10:19

Dist	COUNTY	ROUTE	POST MILES TOTAL PROJECT	SHEET No.	TOTAL SHEETS
07	LA	60,170	R4.4, R16.3,R19.8	17	68

REGISTERED CIVIL ENGINEER 3-3-09 DATE

5-11-09
PLANS APPROVAL DATE

REGISTERED PROFESSIONAL ENGINEER RALPH M. SASAKI No. 30849 Exp. 3/31/10 CIVIL STATE OF CALIFORNIA

THE STATE OF CALIFORNIA OR ITS OFFICERS OR AGENTS SHALL NOT BE RESPONSIBLE FOR THE ACCURACY OR COMPLETENESS OF SCANNED COPIES OF THIS PLAN SHEET.

NOTE:

FOR COMPLETE RIGHT OF WAY AND ACCURATE ACCESS DATA, SEE RIGHT OF WAY RECORD MAPS AT DISTRIST OFFICE.

CURVE DATA

No.	R	Δ	T	L
1	22.50	62° 26′ 52"	13.64	24.52
2	2.50	45° 0′ 0"	1.04	1.96

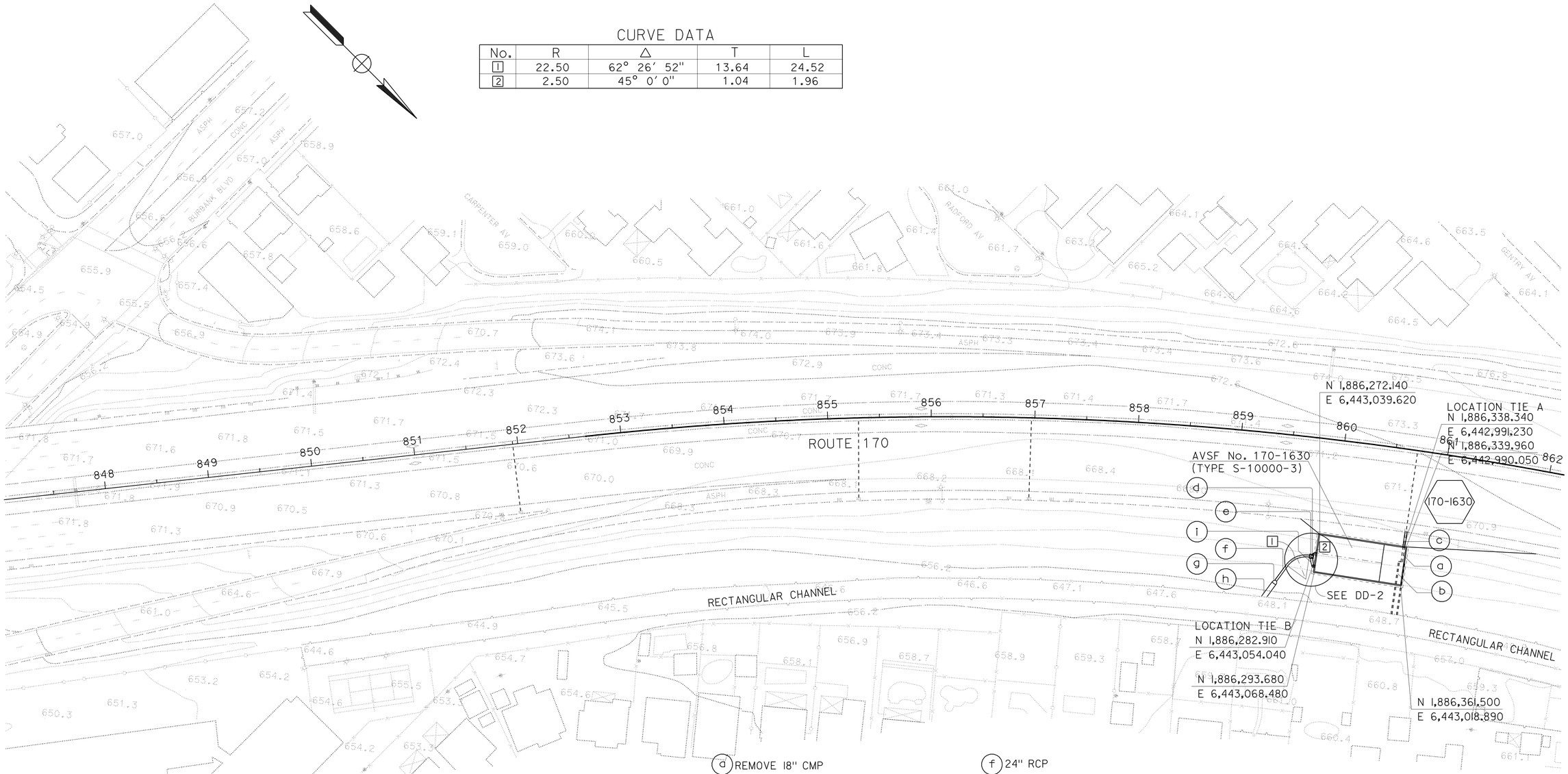

170-1630

- (d) REMOVE 18" CMP
- (b) REMOVE TRAPEZOIDAL CHANNEL
- (c) 24" CSP
- (d) 6" NON-PERFORATED PLASTIC PIPE
- (e) Jct CHAMBER 3
- (f) 24" RCP
- (g) 24" STEEL FES
- (h) 4′ x 8" TRAPEZOIDAL CHANNEL
- (i) 24" PLASTIC PIPE

THIS PLAN ACCURATE FOR DRAINAGE WORK ONLY

DRAINAGE PLAN (WATER POLLUTION CONTROL) LOCATION 2

SCALE: 1"=50′

D-2

STATE OF CALIFORNIA - DEPARTMENT OF TRANSPORTATION
Caltrans HYDRAULICS

FUNCTIONAL SUPERVISOR: JAI P. THAKUR
CALCULATED-DESIGNED BY: LITA T. SOTTO
CHECKED BY: RALPH M. SASAKI
REVISED BY
DATE REVISED

LAST REVISION 00-00-00
DATE PLOTTED => 01-SEP-2009
TIME PLOTTED => 10:19

Dist	COUNTY	ROUTE	POST MILES TOTAL PROJECT	SHEET No.	TOTAL SHEETS
07	LA	60,170	R4.4, R16.3,R19.8	18	68

REGISTERED CIVIL ENGINEER 3-3-09 DATE

5-11-09
PLANS APPROVAL DATE

REGISTERED PROFESSIONAL ENGINEER RALPH M. SASAKI No. 30849 Exp. 3/31/10 CIVIL STATE OF CALIFORNIA

THE STATE OF CALIFORNIA OR ITS OFFICERS OR AGENTS SHALL NOT BE RESPONSIBLE FOR THE ACCURACY OR COMPLETENESS OF SCANNED COPIES OF THIS PLAN SHEET.

NOTE:

FOR COMPLETE RIGHT OF WAY AND ACCURATE ACCESS DATA, SEE RIGHT OF WAY RECORD MAPS AT DISTRIST OFFICE.

CURVE DATA

No.	R	Δ	T	L	N (RP)	E (RP)
1	5.00′	46°0′00"	2.12′	4.01′	1903516.185	6437846.407
2	45.00′	20°22′18"	8.09′	16.00′	1903484.436	6437817.736
3	45.00′	20°22′18"	8.09′	16.00′	1903497.426	6437907.175
4	90.00′	33°13′40"	26.85′	52.19′	1903562.013	6437778.506

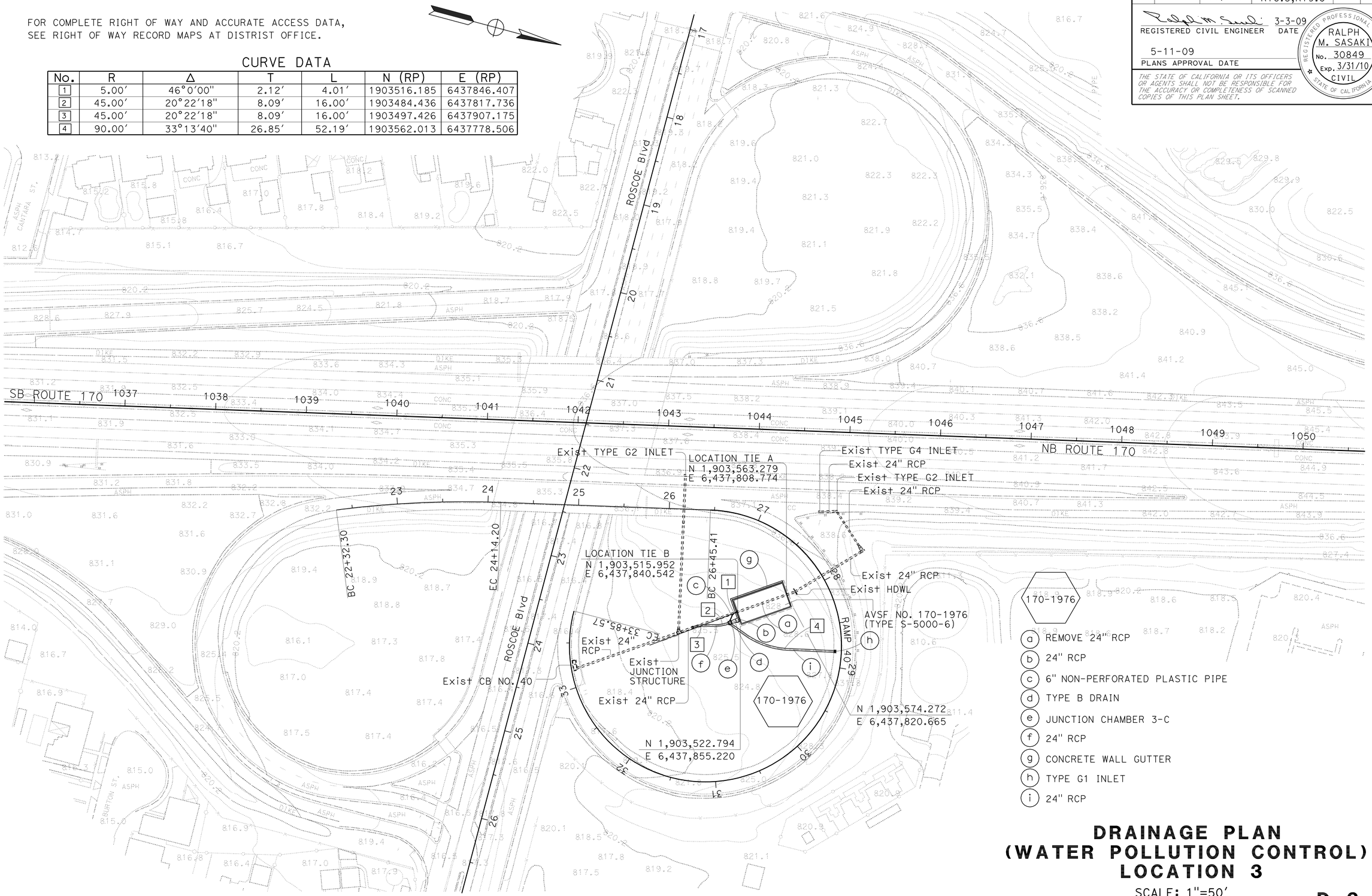

170-1976

- (a) REMOVE 24" RCP
- (b) 24" RCP
- (c) 6" NON-PERFORATED PLASTIC PIPE
- (d) TYPE B DRAIN
- (e) JUNCTION CHAMBER 3-C
- (f) 24" RCP
- (g) CONCRETE WALL GUTTER
- (h) TYPE G1 INLET
- (i) 24" RCP

THIS PLAN ACCURATE FOR DRAINAGE WORK ONLY

DRAINAGE PLAN (WATER POLLUTION CONTROL) LOCATION 3

SCALE: 1"=50′

D-3

STATE OF CALIFORNIA - DEPARTMENT OF TRANSPORTATION
Caltrans® HYDRAULICS

FUNCTIONAL SUPERVISOR: JAI P. THAKUR
CALCULATED-DESIGNED BY: SIEW MEI TAN
CHECKED BY: RALPH M. SASAKI
REVISED BY
DATE REVISED

LAST REVISION 00-00-00 | DATE PLOTTED => 01-SEP-2009 | TIME PLOTTED => 10:19

BORDER LAST REVISED 4/11/2008 | RELATIVE BORDER SCALE IS IN INCHES 0 1 2 3 | USERNAME => trmikesi | DGN FILE => 725892ia003.dgn | CU 07312 | EA 258921

Dist	COUNTY	ROUTE	POST MILES TOTAL PROJECT	SHEET No.	TOTAL SHEETS
07	LA	60,170	R4.4, R16.3,R19.8	19	68

REGISTERED CIVIL ENGINEER 3-3-09 DATE

5-11-09
PLANS APPROVAL DATE

REGISTERED PROFESSIONAL ENGINEER RALPH M. SASAKI No. 30849 Exp. 3/31/10 CIVIL STATE OF CALIFORNIA

THE STATE OF CALIFORNIA OR ITS OFFICERS OR AGENTS SHALL NOT BE RESPONSIBLE FOR THE ACCURACY OR COMPLETENESS OF SCANNED COPIES OF THIS PLAN SHEET.

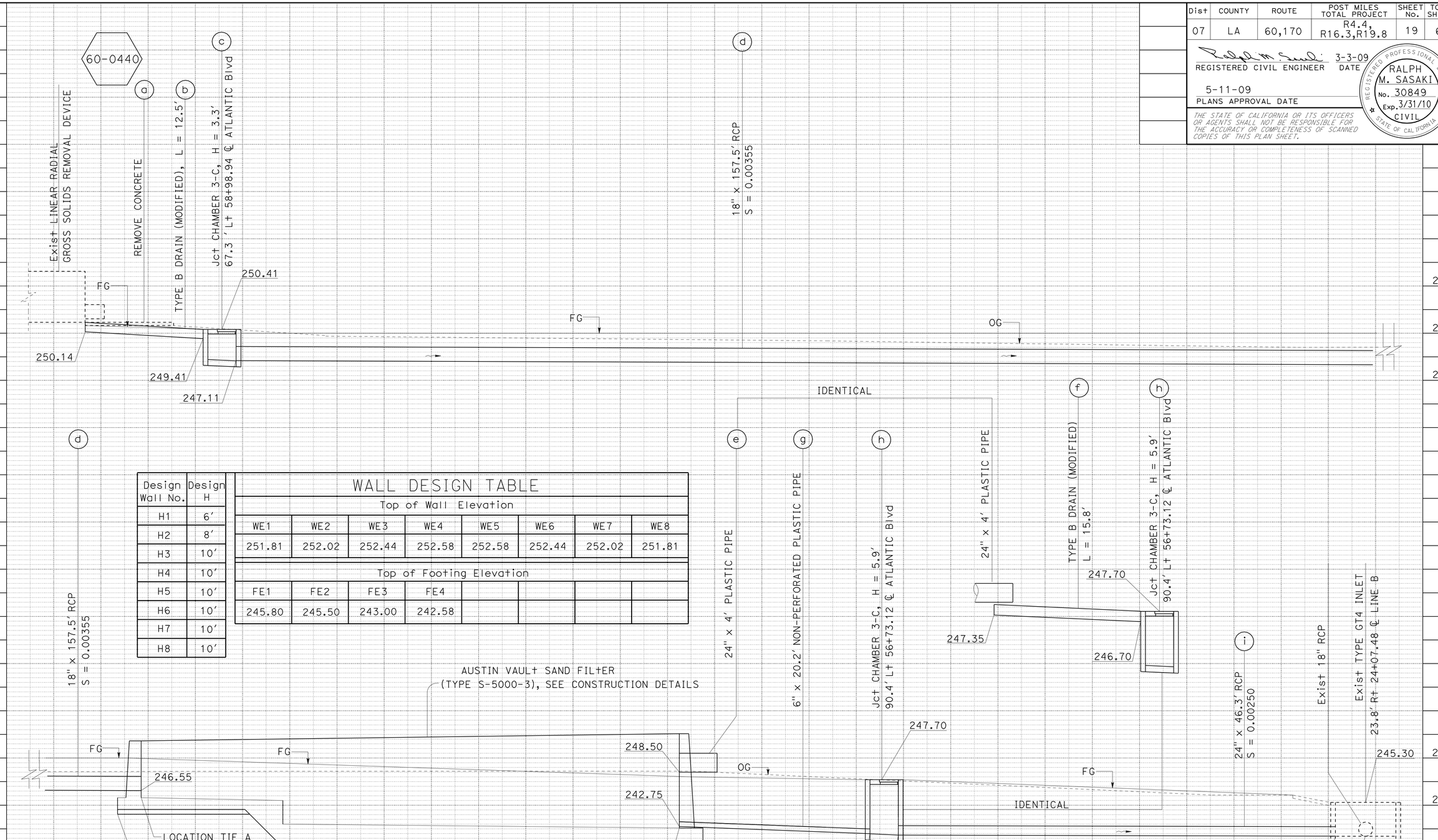

Design Wall No.	Design H
H1	6'
H2	8'
H3	10'
H4	10'
H5	10'
H6	10'
H7	10'
H8	10'

WALL DESIGN TABLE

Top of Wall Elevation							
WE1	WE2	WE3	WE4	WE5	WE6	WE7	WE8
251.81	252.02	252.44	252.58	252.58	252.44	252.02	251.81
Top of Footing Elevation							
FE1	FE2	FE3	FE4				
245.80	245.50	243.00	242.58				

AVSF No. 60-0440 (ATLANTIC Blvd)
LOCATION 1
SCALE: 1"=5' Horiz
1"=5' Vert

DRAINAGE PROFILES (WATER POLLUTION CONTROL)
DP-1

REVISED BY | DATE REVISED
MAY P. FUNG | RALPH M. SASAKI
CALCULATED-DESIGNED BY | CHECKED BY
FUNCTIONAL SUPERVISOR: JAI P. THAKUR
STATE OF CALIFORNIA - DEPARTMENT OF TRANSPORTATION
Caltrans HYDRAULICS

LAST REVISION 00-00-00 | DATE PLOTTED => 01-SEP-2009 | TIME PLOTTED => 10:20

Dist	COUNTY	ROUTE	POST MILES TOTAL PROJECT	SHEET No.	TOTAL SHEETS
07	LA	60,170	R4.4, R16.3,R19.8	20	68

REGISTERED CIVIL ENGINEER 3-3-09 DATE

5-11-09
PLANS APPROVAL DATE

REGISTERED PROFESSIONAL ENGINEER RALPH M. SASAKI No. 30849 Exp. 3/31/10 CIVIL STATE OF CALIFORNIA

THE STATE OF CALIFORNIA OR ITS OFFICERS OR AGENTS SHALL NOT BE RESPONSIBLE FOR THE ACCURACY OR COMPLETENESS OF SCANNED COPIES OF THIS PLAN SHEET.

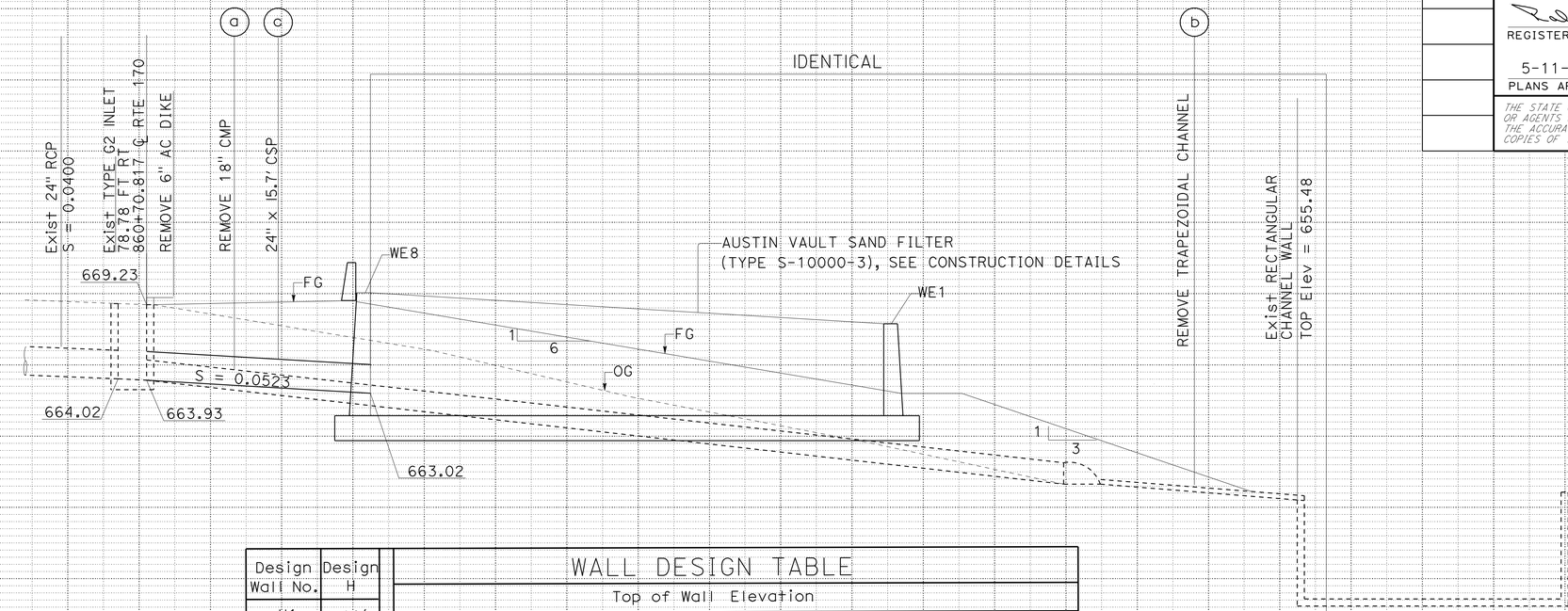

Design Wall No.	Design H
H1	10'
H2	10'
H3	10'
H4	10'
H5	12'
H6	12'
H7	12'
H8	10'

WALL DESIGN TABLE

Top of Wall Elevation							
WE1	WE2	WE3	WE4	WE5	WE6	WE7	WE8
667.88	667.88	667.88	667.88	670.06	670.06	670.06	670.06

Top of Footing Elevation							
FE1	FE2	FE3	FE4				
661.43	661.02	658.53	657.88				

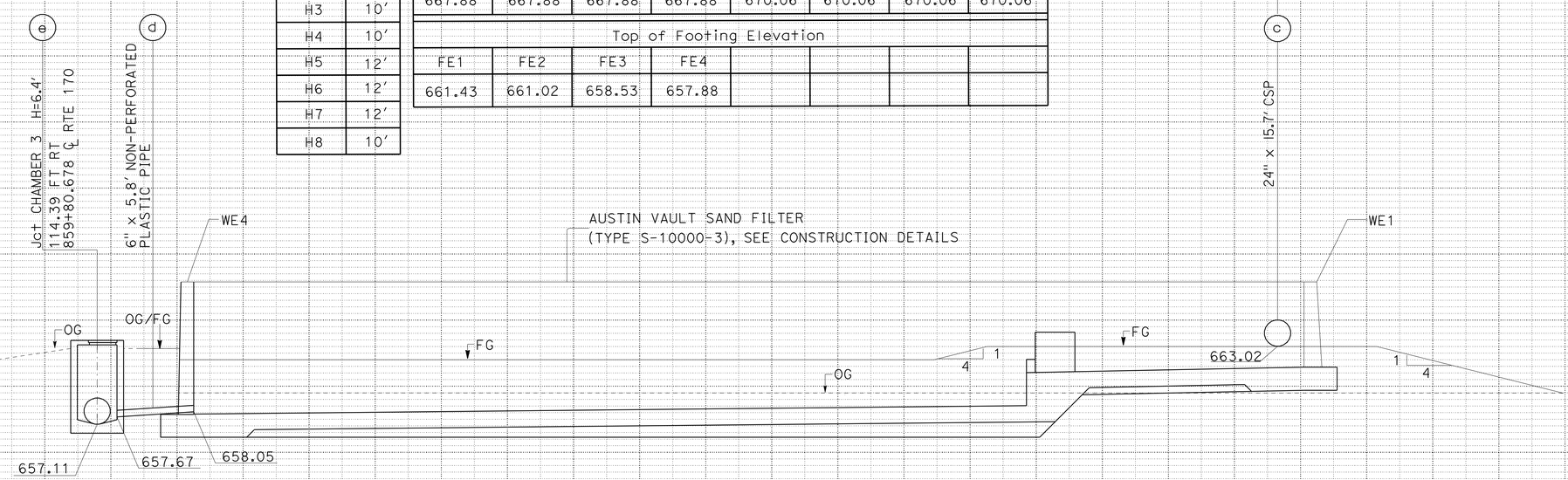

AVSF No. 170-1630

LOCATION 2
SCALE: 1"=5' Horiz
1"=5' Vert

DRAINAGE PROFILES (WATER POLLUTION CONTROL)

DP-2

REVISED BY | DATE REVISED

LITA T. SOTTO | RALPH M. SASAKI

CALCULATED-DESIGNED BY | CHECKED BY

FUNCTIONAL SUPERVISOR: JAI P. THAKUR

STATE OF CALIFORNIA - DEPARTMENT OF TRANSPORTATION
Caltrans HYDRAULICS

LAST REVISION 00-00-00 | DATE PLOTTED => 01-SEP-2009 | TIME PLOTTED => 10:20

Dist	COUNTY	ROUTE	POST MILES TOTAL PROJECT	SHEET No.	TOTAL SHEETS
07	LA	60,170	R4.4, R16.3,R19.8	21	68

REGISTERED CIVIL ENGINEER 3-3-09 DATE

5-11-09
PLANS APPROVAL DATE

REGISTERED PROFESSIONAL ENGINEER RALPH M. SASAKI No. 30849 Exp. 3/31/10 CIVIL STATE OF CALIFORNIA

THE STATE OF CALIFORNIA OR ITS OFFICERS OR AGENTS SHALL NOT BE RESPONSIBLE FOR THE ACCURACY OR COMPLETENESS OF SCANNED COPIES OF THIS PLAN SHEET.

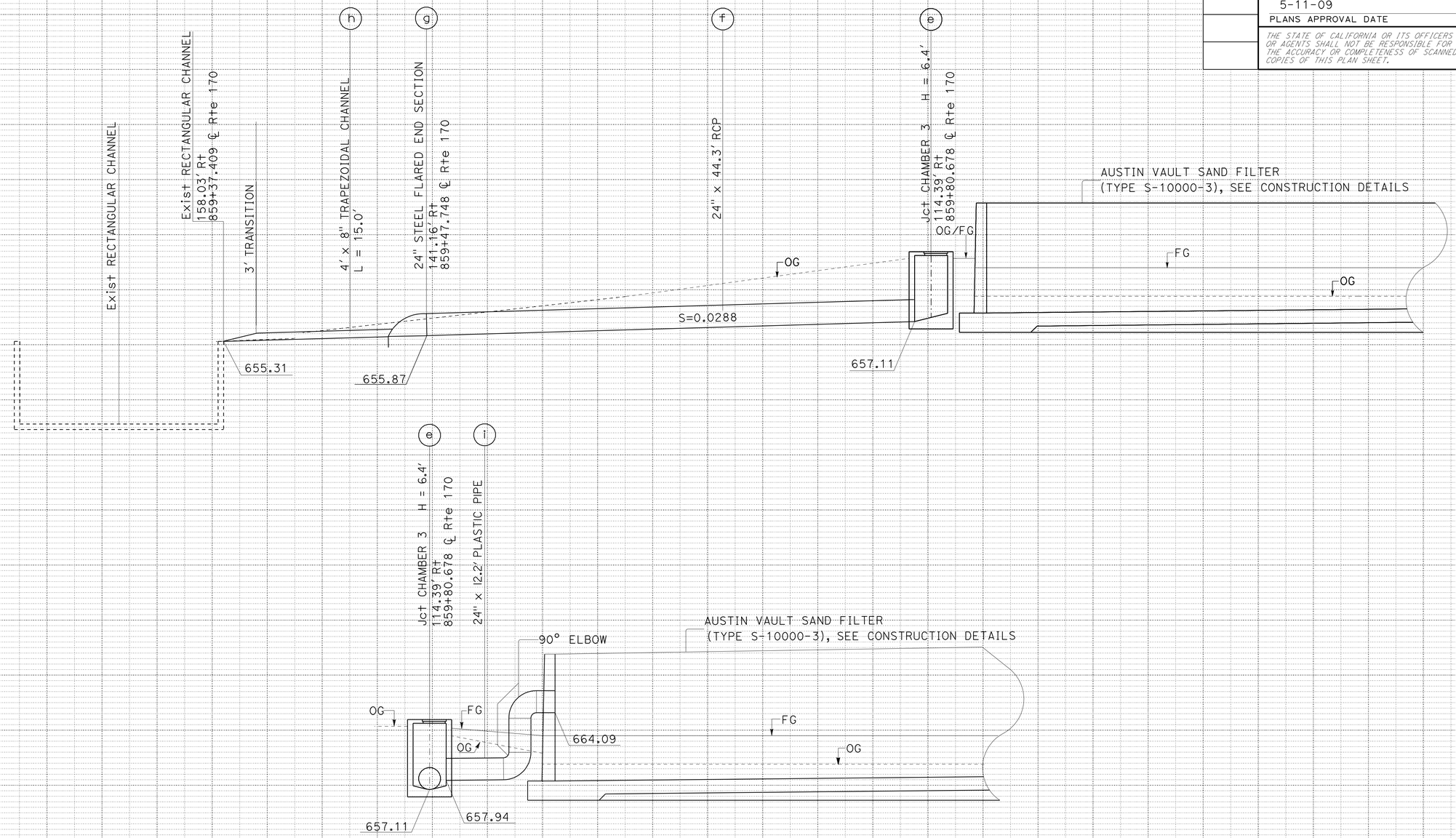

AVSF No. 170-1630 (BURBANK Blvd)

LOCATION 2
SCALE: 1"=5' Horiz
1"=5' Vert

DRAINAGE PROFILES (WATER POLLUTION CONTROL) DP-3

STATE OF CALIFORNIA - DEPARTMENT OF TRANSPORTATION
Caltrans HYDRAULICS

FUNCTIONAL SUPERVISOR: JAI P. THAKUR
CALCULATED-DESIGNED BY: LITA T. SOTTO
CHECKED BY: RALPH M. SASAKI
REVISED BY
DATE REVISED

LAST REVISION 00-00-00 | DATE PLOTTED => 01-SEP-2009 | TIME PLOTTED => 10:20

Dist	COUNTY	ROUTE	POST MILES TOTAL PROJECT	SHEET No.	TOTAL SHEETS
07	LA	60,170	R4.4, R16.3,R19.8	22	68

REGISTERED CIVIL ENGINEER 3-3-09 DATE

5-11-09
PLANS APPROVAL DATE

REGISTERED PROFESSIONAL ENGINEER RALPH M. SASAKI No. 30849 Exp. 3/31/10 CIVIL STATE OF CALIFORNIA

THE STATE OF CALIFORNIA OR ITS OFFICERS OR AGENTS SHALL NOT BE RESPONSIBLE FOR THE ACCURACY OR COMPLETENESS OF SCANNED COPIES OF THIS PLAN SHEET.

Design Wall No.	Design H
H1	10'
H2	12'
H3	12'
H4	12'
H5	12'
H6	12'
H7	12'
H8	12'

WALL DESIGN TABLE

Top of Wall Elevation

WE1	WE2	WE3	WE4	WE5	WE6	WE7	WE8
830.90	830.58	830.13	829.68	829.68	830.13	830.58	830.90

Top of Footing Elevation

FE1	FE2	FE3	FE4				
820.90	818.10	820.60	817.68				

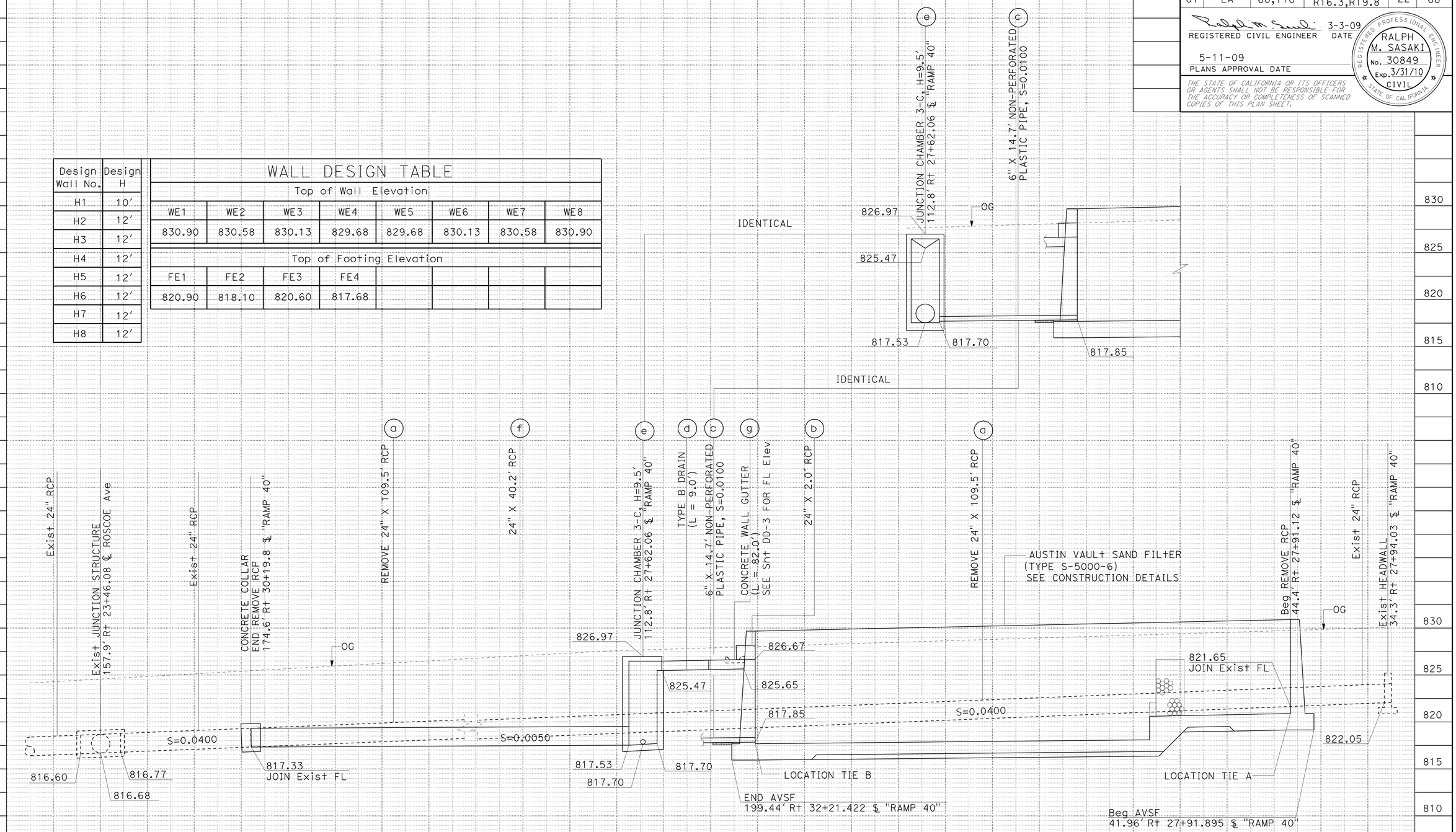

AVSF No. 170-1976 (ROSCOE Blvd)

LOCATION 3
SCALE: 1"=5' Horiz
1"=5' Vert

DRAINAGE PROFILES (WATER POLLUTION CONTROL)

DP-4

STATE OF CALIFORNIA - DEPARTMENT OF TRANSPORTATION
Caltrans® HYDRAULICS

FUNCTIONAL SUPERVISOR: JAI P. THAKUR
CALCULATED-DESIGNED BY: SIEW MEI TAN
CHECKED BY: RALPH M. SASAKI
REVISED BY
DATE REVISED

LAST REVISION 00-00-00
DATE PLOTTED => 01-SEP-2009
TIME PLOTTED => 10:20

Dist	COUNTY	ROUTE	POST MILES TOTAL PROJECT	SHEET No.	TOTAL SHEETS
07	LA	60,170	R4.4, R16.3,R19.8	23	68

REGISTERED CIVIL ENGINEER 3-3-09 DATE

5-11-09
PLANS APPROVAL DATE

REGISTERED PROFESSIONAL ENGINEER RALPH M. SASAKI No. 30849 Exp. 3/31/10 CIVIL STATE OF CALIFORNIA

THE STATE OF CALIFORNIA OR ITS OFFICERS OR AGENTS SHALL NOT BE RESPONSIBLE FOR THE ACCURACY OR COMPLETENESS OF SCANNED COPIES OF THIS PLAN SHEET.

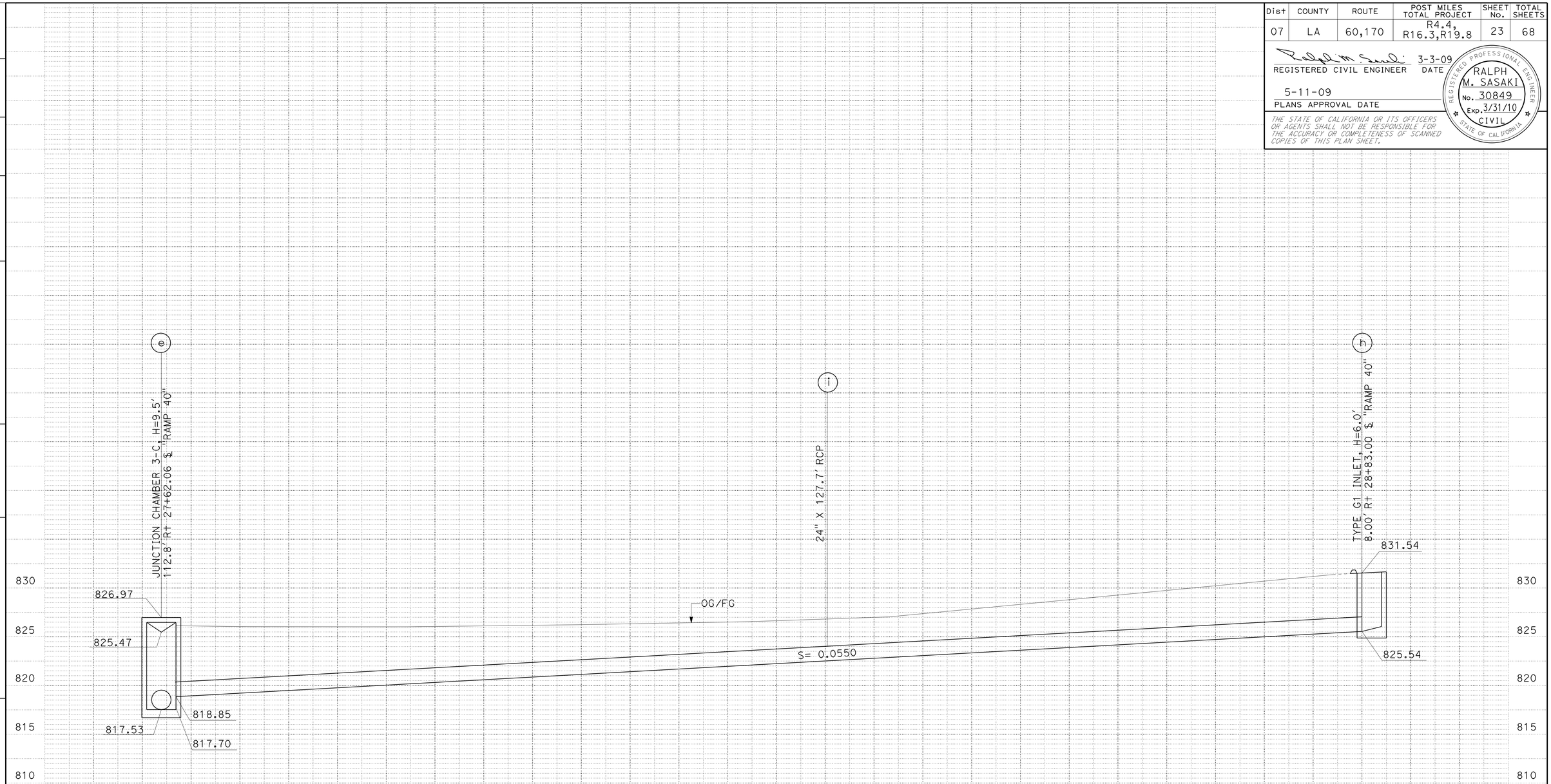

AVSF No. 170-1976 (ROSCOE Blvd)

LOCATION 3
SCALE: 1"=5' Horiz
1"=5' Vert

DRAINAGE PROFILES (WATER POLLUTION CONTROL)

DP-5

STATE OF CALIFORNIA - DEPARTMENT OF TRANSPORTATION
Caltrans® **HYDRAULICS**

FUNCTIONAL SUPERVISOR: JAI P. THAKUR
CALCULATED-DESIGNED BY: SIEW MEI TAN
CHECKED BY: RALPH M. SASAKI
REVISED BY
DATE REVISED

LAST REVISION 00-00-00
DATE PLOTTED => 01-SEP-2009
TIME PLOTTED => 10:20

Dist	COUNTY	ROUTE	POST MILES TOTAL PROJECT	SHEET No.	TOTAL SHEETS
07	LA	60,170	R4.4, R16.3,R19.8	24	68

REGISTERED CIVIL ENGINEER 3-3-09 DATE

5-11-09
PLANS APPROVAL DATE

REGISTERED PROFESSIONAL ENGINEER RALPH M. SASAKI No. 30849 Exp. 3/31/10 CIVIL STATE OF CALIFORNIA

THE STATE OF CALIFORNIA OR ITS OFFICERS OR AGENTS SHALL NOT BE RESPONSIBLE FOR THE ACCURACY OR COMPLETENESS OF SCANNED COPIES OF THIS PLAN SHEET.

ABBREVIATIONS:

AVSF - AUSTN VAULT SAND FILTER
GSRD - GROSS SOLIDS REMOVAL DEVICE

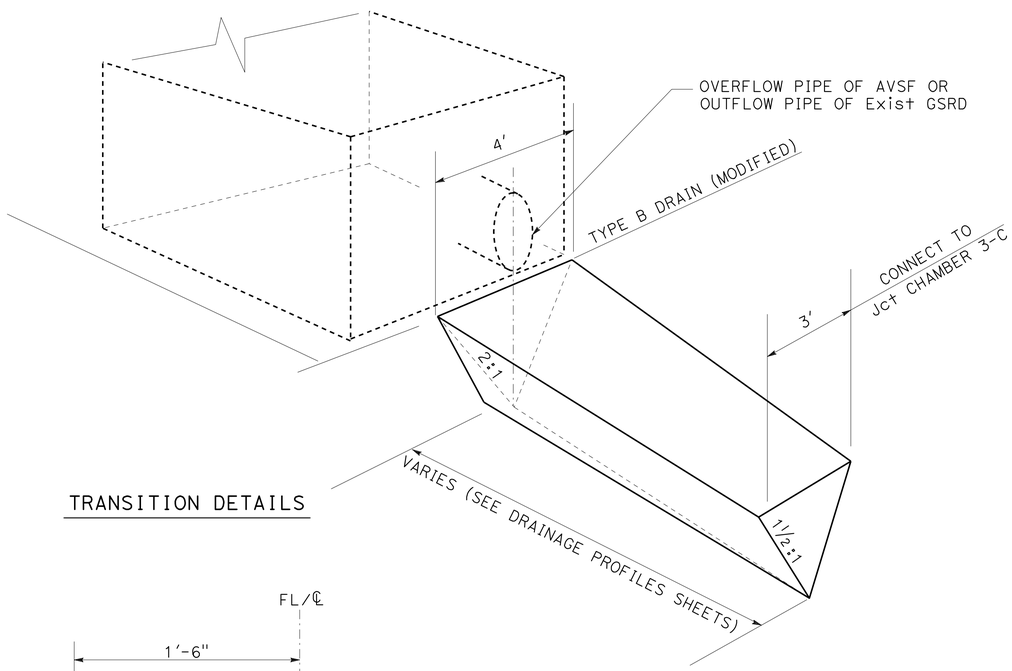

TRANSITION DETAILS

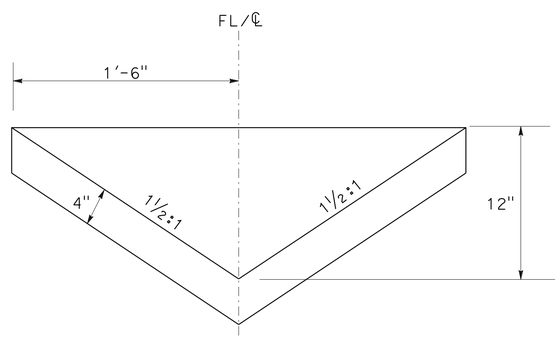

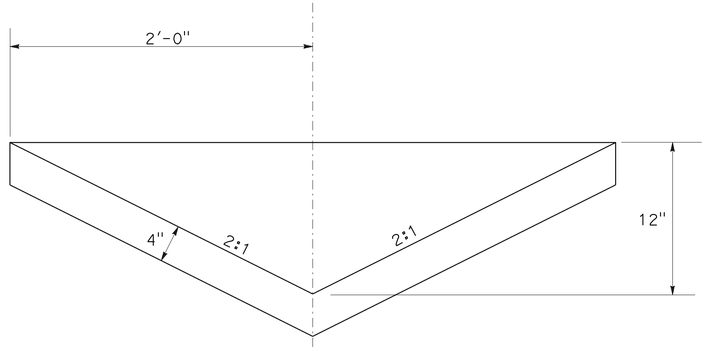

TRANSITION SECTIONS

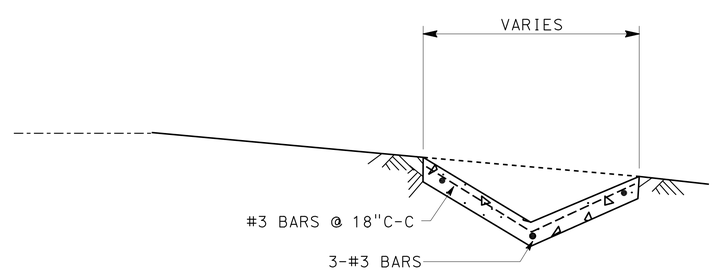

TYPICAL SECTION

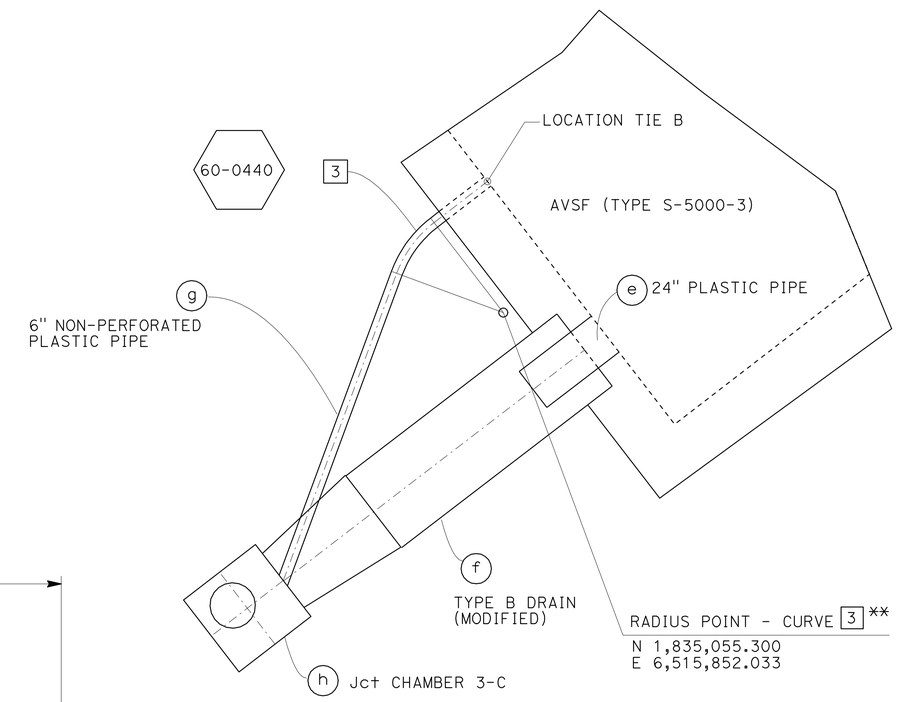

** REFER TO SHEET D-1 FOR CURVE DATA

TYPE B DRAIN (MODIFIED)

60-0440

AVSF No. 60-0440
LOCATION 1

DRAINAGE DETAILS (WATER POLLUTION CONTROL)

NO SCALE

DD-1

STATE OF CALIFORNIA - DEPARTMENT OF TRANSPORTATION
Caltrans HYDRAULICS

FUNCTIONAL SUPERVISOR: JAI P. THAKUR
CALCULATED-DESIGNED BY: MAY P. FUNG
CHECKED BY: RALPH M. SASAKI
REVISED BY
DATE REVISED

LAST REVISION 00-00-00 DATE PLOTTED => 01-SEP-2009 TIME PLOTTED => 10:21

Dist	COUNTY	ROUTE	POST MILES TOTAL PROJECT	SHEET No.	TOTAL SHEETS
07	LA	60,170	R4.4, R16.3,R19.8	25	68

REGISTERED CIVIL ENGINEER 3-3-09 DATE

5-11-09
PLANS APPROVAL DATE

REGISTERED PROFESSIONAL ENGINEER RALPH M. SASAKI No. 30849 Exp. 3/31/10 CIVIL STATE OF CALIFORNIA

THE STATE OF CALIFORNIA OR ITS OFFICERS OR AGENTS SHALL NOT BE RESPONSIBLE FOR THE ACCURACY OR COMPLETENESS OF SCANNED COPIES OF THIS PLAN SHEET.

NOTE:

1. REFER TO SHEET D-2 FOR CURVE DATA

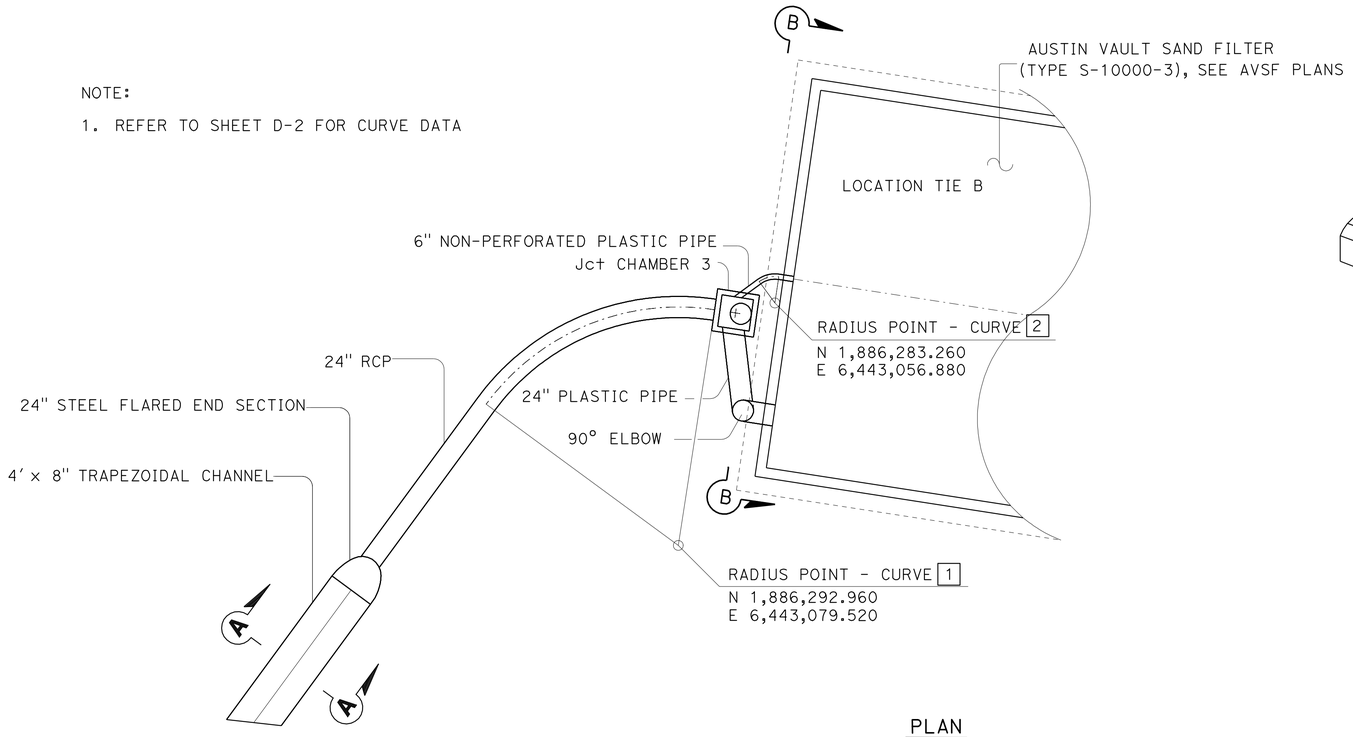

PLAN

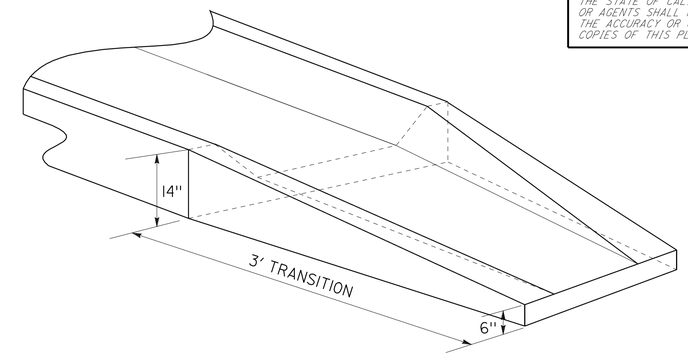

TRANSITION DETAIL
TRAPEZOIDAL CHANNEL

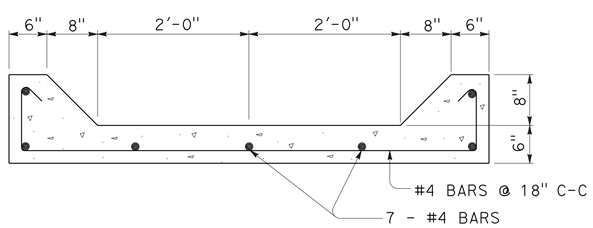

SECTION A-A
TRAPEZOIDAL CHANNEL

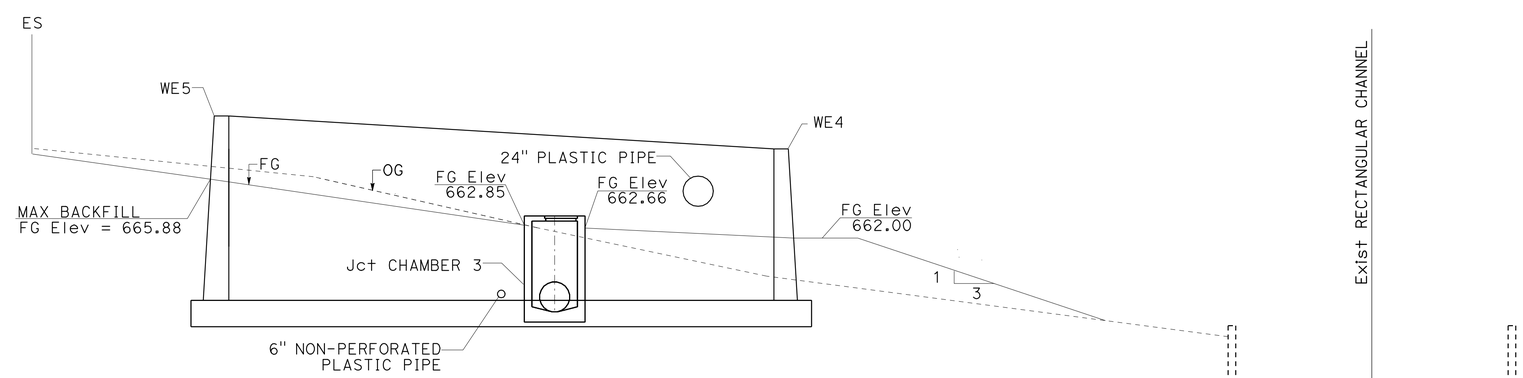

SECTION B-B
GRADING

AVSF No. 170-1630
LOCATION 2

DRAINAGE DETAILS (WATER POLLUTION CONTROL)

NO SCALE

DD-2

STATE OF CALIFORNIA - DEPARTMENT OF TRANSPORTATION
Caltrans® HYDRAULICS

FUNCTIONAL SUPERVISOR: JAI P. THAKUR
CALCULATED-DESIGNED BY: MAY P. FUNG
CHECKED BY: RALPH M. SASAKI
REVISED BY
DATE REVISED

LAST REVISION 00-00-00
DATE PLOTTED => 01-SEP-2009
TIME PLOTTED => 10:21

Dist	COUNTY	ROUTE	POST MILES TOTAL PROJECT	SHEET No.	TOTAL SHEETS
07	LA	60,170	R4.4, R16.3,R19.8	26	68

REGISTERED CIVIL ENGINEER 3-3-09 DATE

5-11-09
PLANS APPROVAL DATE

REGISTERED PROFESSIONAL ENGINEER RALPH M. SASAKI No. 30849 Exp. 3/31/10 CIVIL STATE OF CALIFORNIA

THE STATE OF CALIFORNIA OR ITS OFFICERS OR AGENTS SHALL NOT BE RESPONSIBLE FOR THE ACCURACY OR COMPLETENESS OF SCANNED COPIES OF THIS PLAN SHEET.

NOTE:

1. FOR WALL GUTTER DETAILS NOT SHOWN, SEE STANDARD PLANS.

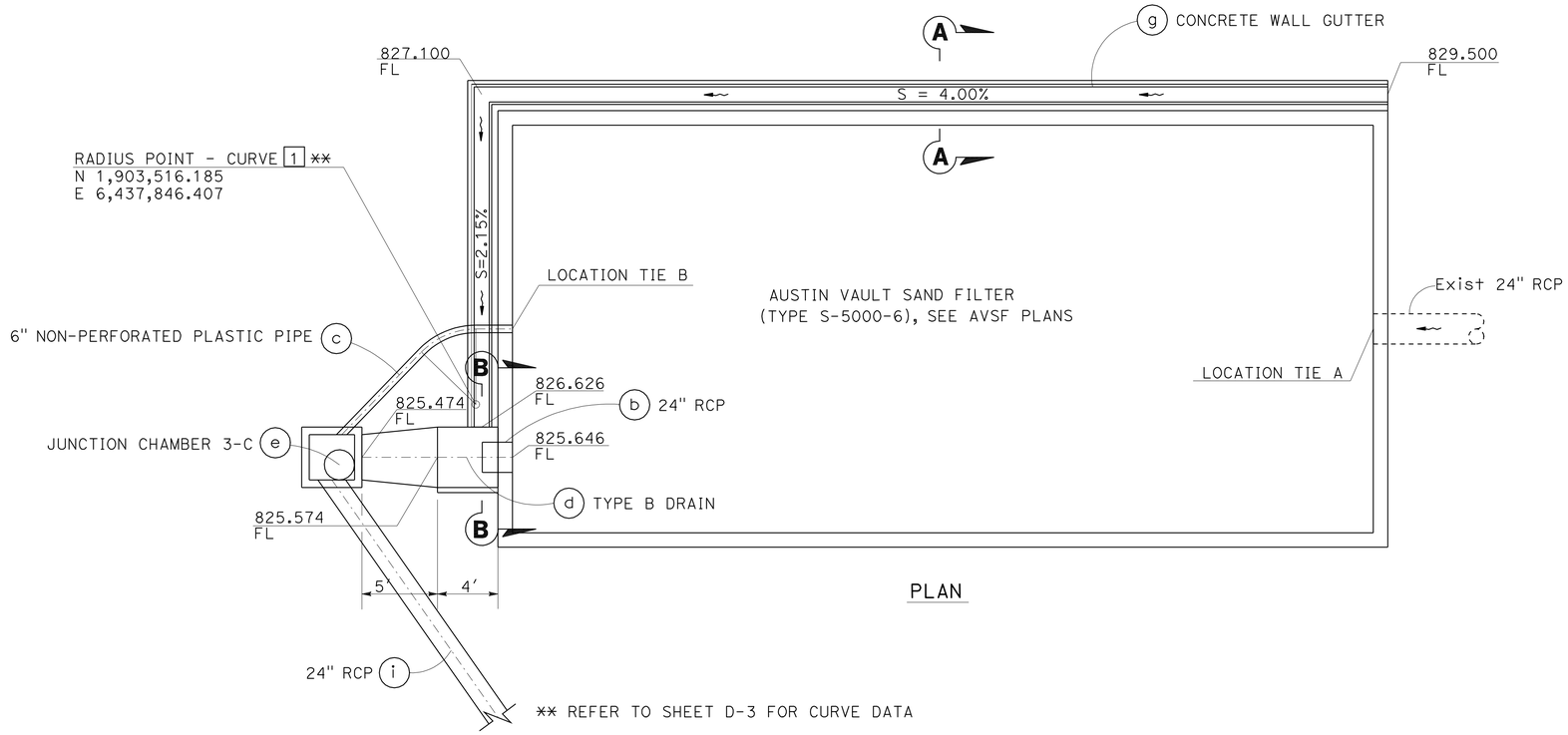

PLAN

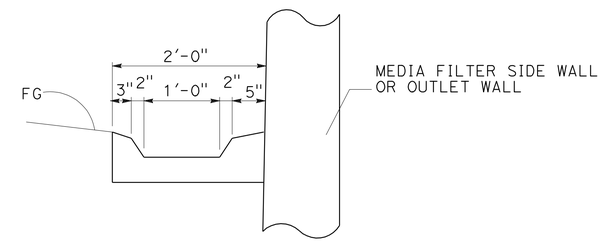

SECTION A-A

WALL GUTTER

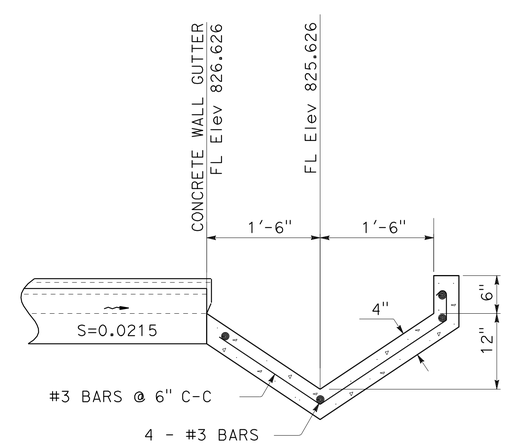

SECTION B-B

TYPE B DRAIN

170-1976

AVSF No. 170-1976

LOCATION 3

DRAINAGE DETAILS (WATER POLLUTION CONTROL)

NO SCALE

DD-3

STATE OF CALIFORNIA - DEPARTMENT OF TRANSPORTATION

Caltrans® **HYDRAULICS**

FUNCTIONAL SUPERVISOR: JAI P. THAKUR

CALCULATED-DESIGNED BY: SIEW MEI TAN

CHECKED BY: RALPH M. SASAKI

REVISED BY

DATE REVISED

LAST REVISION 00-00-00

DATE PLOTTED => 01-SEP-2009

TIME PLOTTED => 10:21

Dist	COUNTY	ROUTE	POST MILES TOTAL PROJECT	SHEET No.	TOTAL SHEETS
07	LA	60,170	R4.4, R16.3,R19.8	27	68

REGISTERED CIVIL ENGINEER 3-3-09 DATE

5-11-09
PLANS APPROVAL DATE

REGISTERED PROFESSIONAL ENGINEER RALPH M. SASAKI No. 30849 Exp. 3/31/10 CIVIL STATE OF CALIFORNIA

THE STATE OF CALIFORNIA OR ITS OFFICERS OR AGENTS SHALL NOT BE RESPONSIBLE FOR THE ACCURACY OR COMPLETENESS OF SCANNED COPIES OF THIS PLAN SHEET.

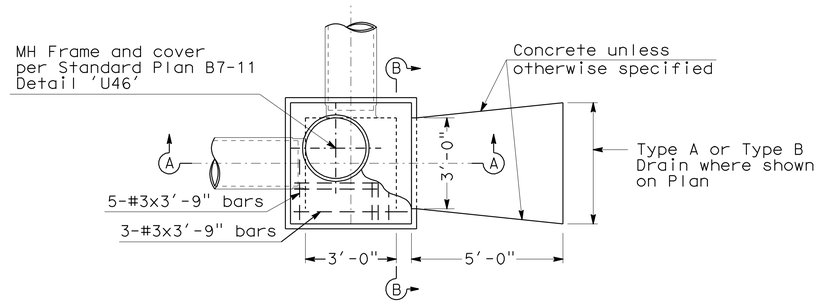

PLAN

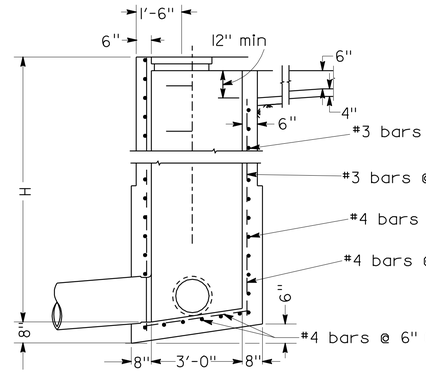

SECTION A-A

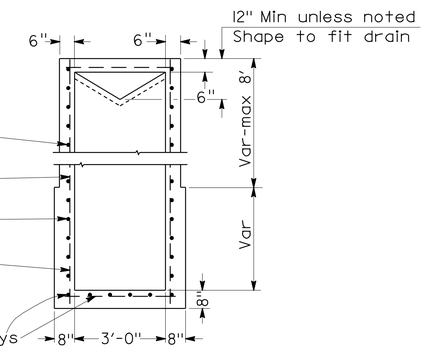

SECTION B-B

JUNCTION CHAMBER No. 3-C (JC 3-C)

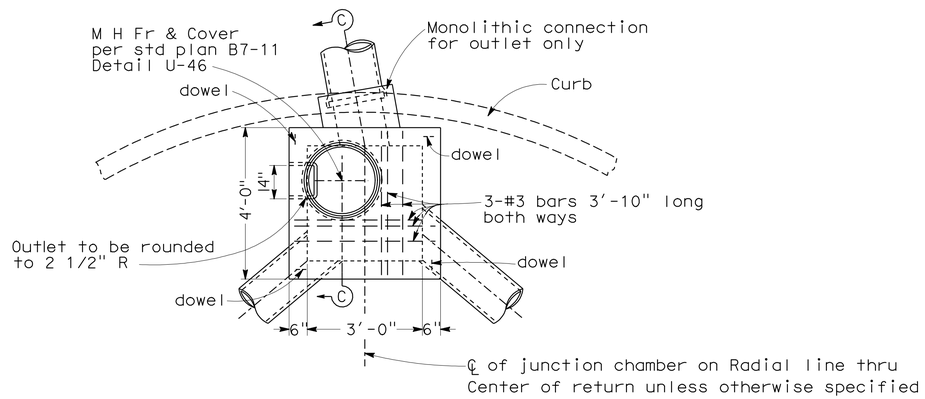

PLAN

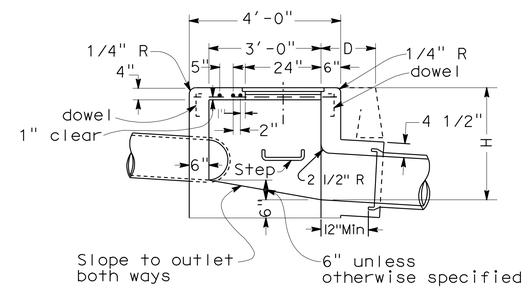

SECTION C-C

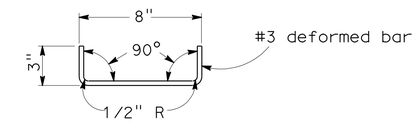

DETAIL OF DOWEL

One at each corner to be used
when top is poured separate

JUNCTION CHAMBER No. 3 (JC 3)

NOTES

1. Connection pipes may be placed in any position around the walls provided they point in the proper direction and the position is otherwise consistent with the Water Pollution Control Plan.
2. DIMENSIONS: D=18" unless otherwise specified.
   H=3'-6" unless otherwise specified.
3. Exposed sufrace of the Junction Chamber shall conform in slope, grade, color, finish and scoring to existing sidewalk adjacent to the Junction Chamber. Where no sidewalk exists, the top shall be finished to conform to standard sidewalk slope and finish, and scoring lines shall conform as nearly as possible to 20" squares.
4. Floor of chamber shall be given a steel-troweled finish and shall slope from all directions to outlet.
5. Manhole shall be placed in corner nearest outlet.
6. Outlet pipe shall be connected to Junction Chamber with Monolithic Connection.
7. Reinforcing steel not required in walls when H=6' or less.
8. STEPS: None required where H=3'-6" or less.
   Install one step 16"± above floor when H is more than 3'-6" and less than 5'-0".
   Where H is more than 5'-0" steps shall be evenly spaced at 12"± intervals from 16"± above floor to within 12"± of the top of the box.

DRAINAGE DETAILS (WATER POLLUTION CONTROL)

NO SCALE

DD-4

REVISED BY | DATE REVISED
MAY P. FUNG | RALPH M. SASAKI
CALCULATED-DESIGNED BY | CHECKED BY
FUNCTIONAL SUPERVISOR
JAI P. THAKUR

STATE OF CALIFORNIA - DEPARTMENT OF TRANSPORTATION
Caltrans
HYDRAULICS

LAST REVISION 00-00-00 | DATE PLOTTED => 01-SEP-2009 | TIME PLOTTED => 10:21

Dist	COUNTY	ROUTE	POST MILES TOTAL PROJECT	SHEET No.	TOTAL SHEETS
07	LA	60,170	R4.4, R16.3,R19.8	28	68

REGISTERED CIVIL ENGINEER 3-3-09 DATE

5-11-09
PLANS APPROVAL DATE

REGISTERED PROFESSIONAL ENGINEER RALPH M. SASAKI No. 30849 Exp. 3/31/10 CIVIL STATE OF CALIFORNIA

THE STATE OF CALIFORNIA OR ITS OFFICERS OR AGENTS SHALL NOT BE RESPONSIBLE FOR THE ACCURACY OR COMPLETENESS OF SCANNED COPIES OF THIS PLAN SHEET.

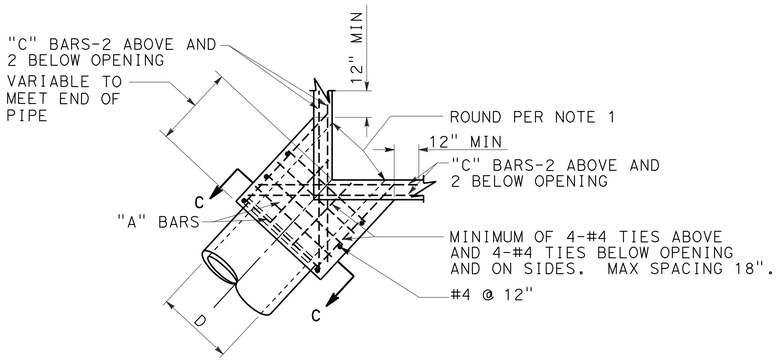

PLAN
CORNER CONNECTION

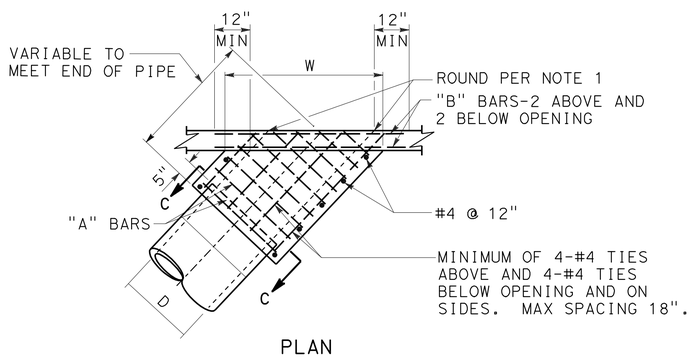

PLAN
SIDE CONNECTION

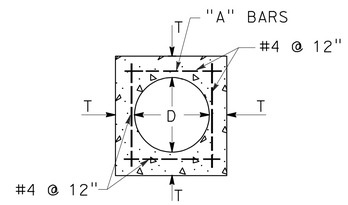

SECTION C-C

D	T	"A"	"B"-"C"
12"	4-½"	#4 @ 6"	#5
15"	4-½"		
18"	5"		
21"	5-½"		
24"	6"		
27"	6-½"		
30"	7"		
33"	7"		
36"	7-½"		
39"	8"		
42"	8"		
45"	8"	#5 @ 6"	#6
48"	8"		
51"	8"		
54"	8"		
57"	10"		
60"	10"		
63"	10"		
66"	11"		
69"	11"		
72"	11"		

NOTES

1. ROUND EDGE OF OUTLET TO 3" RADIUS.
2. REINFORCEMENT SHALL BE 1½" CLEAR FROM THE FACE OF CONCRETE.
3. IN CONNECTING TO AN EXISTING STRUCTURE BREAK OUT PORTIONS OF THE EXISTING STRUCTURE SIX INCHES OUTSIDE ITS INTERSECTION WITH THE NEW CONNECTION. BEND ENDS OF #4 BARS OVER CONNECTION OPENING AS REQUIRED.

MONOLITHIC CONNECTION
FOR PIPES 12" TO 72" INCLUSIVE

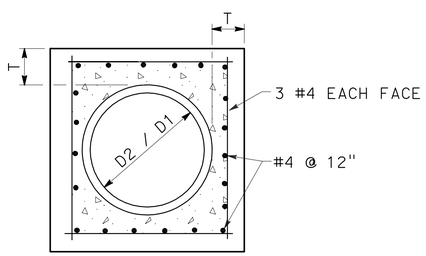

SECTION B-B

D	L	T
12"	1.0'	4"
18"	1.0'	5"
24"	1.0'	6"
36"	1.5'	8"
48"	1.5'	10"
54"	1.5'	10"
60"	1.75'	11"
66"	1.75'	11"
72"	2.0'	12"

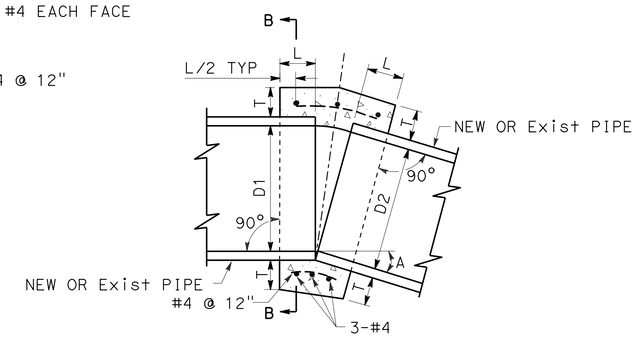

CONCRETE COLLAR

NOTES

1. WHERE PIPES OF DIFFERENT DIAMETERS ARE JOINED WITH A CONCRETE COLLAR, 'L' AND 'T' SHALL BE THOSE OF THE LARGER PIPE. D=D1 OR D2, WHICHEVER IS GREATER.
2. FOR PIPE SIZE NOT LISTED USE NEXT SIZE LARGER.
3. OMIT REINFORCING ON PIPES 24" AND LESS IN DIAMETER AND ON ALL PIPES WHERE ANGLE A IS LESS THAN 10°.
4. JOIN PIPES AT INVERTS.
5. REINFORCEMENT SHALL BE PLACED 1½" CLEAR FROM OUTSIDE DIAMETER OF PIPE.

DRAINAGE DETAILS (WATER POLLUTION CONTROL)

NO SCALE

DD-5

STATE OF CALIFORNIA - DEPARTMENT OF TRANSPORTATION
Caltrans HYDRAULICS

FUNCTIONAL SUPERVISOR: JAI P. THAKUR
CALCULATED-DESIGNED BY: MAY P. FUNG
CHECKED BY: RALPH M. SASAKI
REVISED BY
DATE REVISED

LAST REVISION 00-00-00
DATE PLOTTED => 01-SEP-2009
TIME PLOTTED => 10:27

Dist	COUNTY	ROUTE	POST MILES TOTAL PROJECT	SHEET No.	TOTAL SHEETS
07	LA	60,170	R4.4, R16.3,R19.8	29	68

REGISTERED CIVIL ENGINEER 3-3-09 DATE

5-11-09
PLANS APPROVAL DATE

REGISTERED PROFESSIONAL ENGINEER RALPH M. SASAKI No. 30849 Exp. 3/31/10 CIVIL STATE OF CALIFORNIA

THE STATE OF CALIFORNIA OR ITS OFFICERS OR AGENTS SHALL NOT BE RESPONSIBLE FOR THE ACCURACY OR COMPLETENESS OF SCANNED COPIES OF THIS PLAN SHEET.

NOTE:

JOINTS ARE STANDARD JOINT TYPE.

SUMMARY OF DRAINAGE QUANTITIES

DRAINAGE PLAN SHEET No.	DRAINAGE SYSTEM No./ AUSTIN VAULT SAND FILTER No.	DRAINAGE UNIT	"H" OR "V"	MINOR CONCRETE (MINOR STRUCTURE)	MINOR CONCRETE (DITCH LINING)	MINOR CONCRETE (CHANNEL LINING)	MINOR CONCRETE (GUTTER LINING)	MISCELLANEOUS IRON AND STEEL	6" NON-PERFORATED PLASTIC PIPE UNDERDRAIN	18" REINFORCED CONCRETE PIPE	24" REINFORCED CONCRETE PIPE	24" PLASTIC PIPE	24" CORRUGATED STEEL PIPE (0.079" THICK)	24" STEEL FLARED END SECTION	REMOVE PIPE	REMOVE CONCRETE	TYPE 24-12 FRAME AND GRATE (N)	TYPE U46 MANHOLE FRAME AND COVER (N)	MAXIMUM COVER	DESCRIPTION	STATION
			FT	CY	CY	CY	CY	LB	LF	LF	LF	LF	LF	EA	LF	CY	EA	EA	LF		
D-1	60-0440	a														0.48				REMOVE CONCRETE PAD	
		b			0.47															TYPE B DRAIN (MODIFIED), L=12.5′	
		c	3.3	1.45				235										1		Jct CHAMBER 3-C	67.3′ LT 58+98.94 ℄ ATLANTIC Blvd
		d								157.5									1.9	18" RCP	
		e										4.0								24" PLASTIC PIPE	
		f			0.59															TYPE B DRAIN (MODIFIED), L=15.8′	
		g							20.2											6" NON-PERFORATED PLASTIC PIPE	
		h	5.9	2.12				235										1		Jct CHAMBER 3-C	90.4′ LT 56+73.12 ℄ ATLANTIC Blvd
		i									46.3								3.9	24" RCP	
D-2	170-1630	a													36.0					REMOVE 18" CMP	
		b														5.28				REMOVE TRAPEZOIDAL CHANNEL	
		c											15.7						3.3	24" CORRUGATED STEEL PIPE	
		d							5.8											6" NON-PERFORATED PLASTIC PIPE	
		e	6.4	2.31				235										1		Jct CHAMBER 3	114.5′ RT 859+82.69 ℄ Rte 170
		f									44.3								3.3	24" RCP	
		g												1						24" STEEL FLARED END SECTION	141.2′ RT 859+47.75 ℄ Rte 170
		h				2.98														4′ x 8" TRAPEZOIDAL CHANNEL	
		i										12.2							2.5	24" PLASTIC PIPE	
SHEET TOTAL				5.88	1.06	2.98		705	26.0	157.5	90.6	16.2	15.7	1	36.0	5.76		3			

(N) NOT A SEPARATE PAY ITEM, FOR INFORMATION ONLY

DRAINAGE QUANTITIES (WATER POLLUTION CONTROL)

DQ-1

STATE OF CALIFORNIA - DEPARTMENT OF TRANSPORTATION
Caltrans HYDRAULICS

FUNCTIONAL SUPERVISOR: JAI P. THAKUR
CALCULATED-DESIGNED BY: MAY P. FUNG
CHECKED BY: RALPH M. SASAKI
REVISED BY
DATE REVISED

LAST REVISION 00-00-00 | DATE PLOTTED => 01-SEP-2009 | TIME PLOTTED => 10:21

Dist	COUNTY	ROUTE	POST MILES TOTAL PROJECT	SHEET No.	TOTAL SHEETS
07	LA	60,170	R4.4, R16.3,R19.8	30	68

REGISTERED CIVIL ENGINEER 3-3-09 DATE

5-11-09
PLANS APPROVAL DATE

REGISTERED PROFESSIONAL ENGINEER RALPH M. SASAKI No. 30849 Exp. 3/31/10 CIVIL STATE OF CALIFORNIA

THE STATE OF CALIFORNIA OR ITS OFFICERS OR AGENTS SHALL NOT BE RESPONSIBLE FOR THE ACCURACY OR COMPLETENESS OF SCANNED COPIES OF THIS PLAN SHEET.

NOTE:

JOINTS ARE STANDARD JOINT TYPE.

SUMMARY OF DRAINAGE QUANTITIES

DRAINAGE PLAN SHEET No.	DRAINAGE SYSTEM No./ AUSTIN VAULT SAND FILTER No.	DRAINAGE UNIT	"H" OR "V"	MINOR CONCRETE (MINOR STRUCTURE)	MINOR CONCRETE (DITCH LINING)	MINOR CONCRETE (CHANNEL LINING)	MINOR CONCRETE (GUTTER LINING)	MISCELLANEOUS IRON AND STEEL	6" NON-PERFORATED PLASTIC PIPE UNDERDRAIN	18" REINFORCED CONCRETE PIPE	24" REINFORCED CONCRETE PIPE	24" PLASTIC PIPE	24" CORRUGATED STEEL PIPE (0.079" THICK)	24" STEEL FLARED END SECTION	REMOVE PIPE	REMOVE CONCRETE	TYPE 24-12 FRAME AND GRATE (N)	TYPE U46 MANHOLE FRAME AND COVER (N)	MAXIMUM COVER	DESCRIPTION	STATION
			FT	CY	CY	CY	CY	LB	LF	LF	LF	LF	LF	EA	LF	CY	EA	EA	LF		
D-3	170-1976	a													109.5					REMOVE 24" RCP	
		b									2.0									24" RCP	
		c							14.7											6" NON-PERFORATED PLASTIC PIPE	
		d			0.41															TYPE B DRAIN, L=9.0′	
		e	9.5	4.00				235										1		Jct CHAMBER 3-C	112.8′ RT 27+62.06 ℄ "RAMP 40"
		f									40.2								7.5	24" RCP	
		g					2.70													CONCRETE WALL GUTTER	
		h	6.0	1.61				326									1			TYPE G1 INLET	8.00′ RT 28+83.00 ℄ "RAMP 40"
		i									127.7								6.6	24" RCP	
SHEET TOTAL				5.61	0.41		2.70	561	14.7		169.9				109.5		1	1			
GRAND TOTAL				11.49	1.47	2.98	2.70	1266	40.7	157.5	260.5	16.2	15.7	1	145.5	5.76	1	4			

(N) NOT A SEPARATE PAY ITEM, FOR INFORMATION ONLY

DRAINAGE QUANTITIES (WATER POLLUTION CONTROL)

DQ-2

REVISED BY | DATE REVISED

SIEW MEI TAN | RALPH M. SASAKI

CALCULATED-DESIGNED BY | CHECKED BY

FUNCTIONAL SUPERVISOR: JAI P. THAKUR

STATE OF CALIFORNIA - DEPARTMENT OF TRANSPORTATION

Caltrans® HYDRAULICS

LAST REVISION 00-00-00 | DATE PLOTTED => 01-SEP-2009 | TIME PLOTTED => 10:27

Dist	COUNTY	ROUTE	POST MILES TOTAL PROJECT	SHEET No.	TOTAL SHEETS
07	LA	60,170	R4.4, R16.3,R19.8	31	68

REGISTERED CIVIL ENGINEER 2-18-09 DATE

5-11-09
PLANS APPROVAL DATE

REGISTERED PROFESSIONAL ENGINEER UGO ANAKWENZE No. C41703 Exp. 03/31/10 CIVIL STATE OF CALIFORNIA

THE STATE OF CALIFORNIA OR ITS OFFICERS OR AGENTS SHALL NOT BE RESPONSIBLE FOR THE ACCURACY OR COMPLETENESS OF SCANNED COPIES OF THIS PLAN SHEET.

Utility Ownership
Gas - Southern Calif Gas Company
Power - Los Angeles Department of Water & Power
Water - California Water Service
Telephone - AT&T

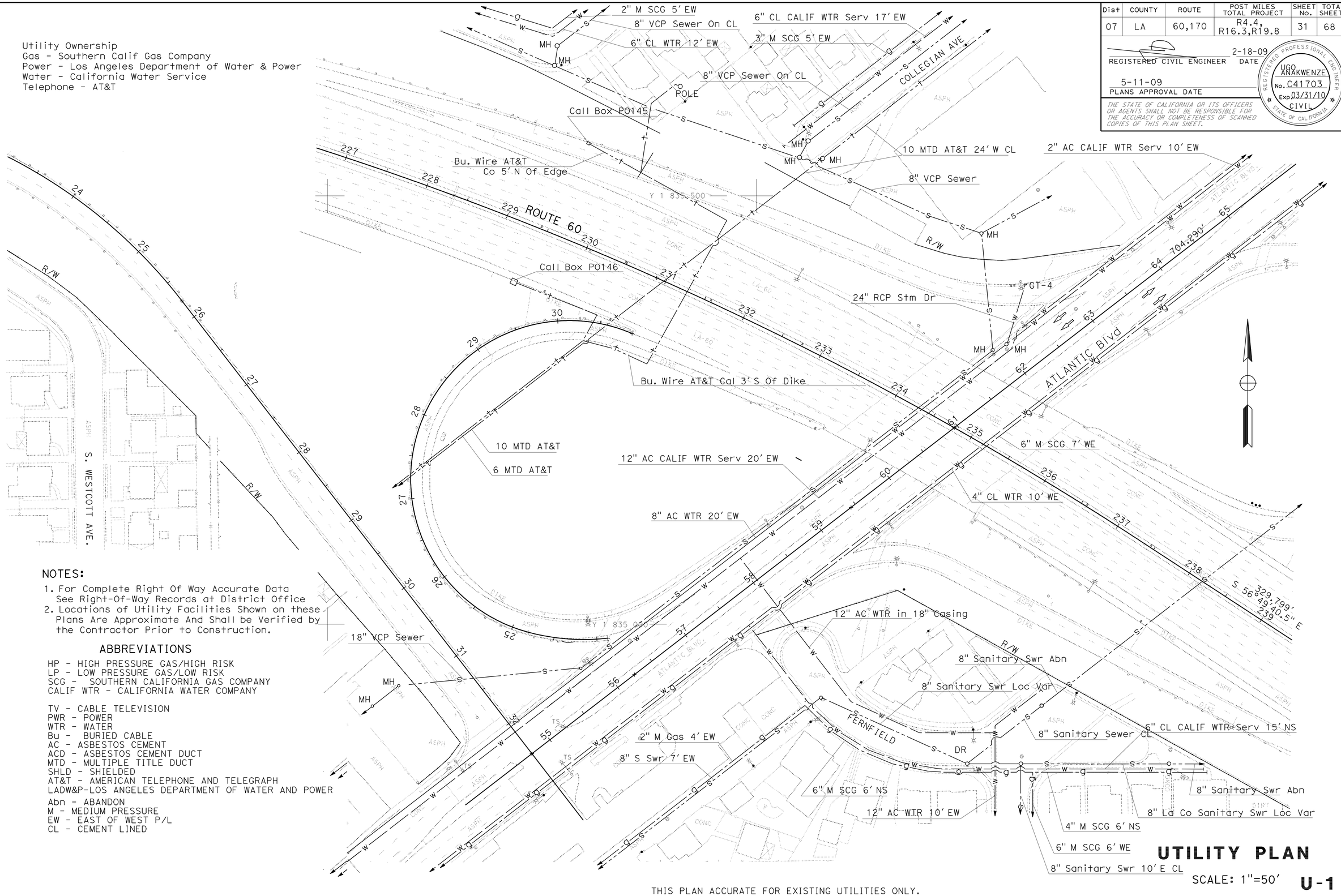

NOTES:

1. For Complete Right Of Way Accurate Data See Right-Of-Way Records at District Office
2. Locations of Utility Facilities Shown on these Plans Are Approximate And Shall be Verified by the Contractor Prior to Construction.

ABBREVIATIONS

HP - HIGH PRESSURE GAS/HIGH RISK
LP - LOW PRESSURE GAS/LOW RISK
SCG - SOUTHERN CALIFORNIA GAS COMPANY
CALIF WTR - CALIFORNIA WATER COMPANY

TV - CABLE TELEVISION
PWR - POWER
WTR - WATER
Bu - BURIED CABLE
AC - ASBESTOS CEMENT
ACD - ASBESTOS CEMENT DUCT
MTD - MULTIPLE TITLE DUCT
SHLD - SHIELDED
AT&T - AMERICAN TELEPHONE AND TELEGRAPH
LADW&P-LOS ANGELES DEPARTMENT OF WATER AND POWER

Abn - ABANDON
M - MEDIUM PRESSURE
EW - EAST OF WEST P/L
CL - CEMENT LINED

THIS PLAN ACCURATE FOR EXISTING UTILITIES ONLY.

UTILITY PLAN

SCALE: 1"=50'

U-1

STATE OF CALIFORNIA - DEPARTMENT OF TRANSPORTATION
DESIGN A
FUNCTIONAL SUPERVISOR: UGO ANAKWENZE
CALCULATED-DESIGNED BY: EUGENE YEHUDA LEIBMAN
CHECKED BY: GREGORY B. DAMICO
REVISED BY / DATE REVISED

LAST REVISION 00-00-00
DATE PLOTTED => 01-SEP-2009
TIME PLOTTED => 10:22

Dist	COUNTY	ROUTE	POST MILES TOTAL PROJECT	SHEET No.	TOTAL SHEETS
07	LA	60,170	R4.4, R16.3,R19.8	32	68

REGISTERED CIVIL ENGINEER 2-18-09 DATE

5-11-09
PLANS APPROVAL DATE

REGISTERED PROFESSIONAL ENGINEER UGO ANAKWENZE No. C41703 Exp 03/31/10 CIVIL STATE OF CALIFORNIA

THE STATE OF CALIFORNIA OR ITS OFFICERS OR AGENTS SHALL NOT BE RESPONSIBLE FOR THE ACCURACY OR COMPLETENESS OF SCANNED COPIES OF THIS PLAN SHEET.

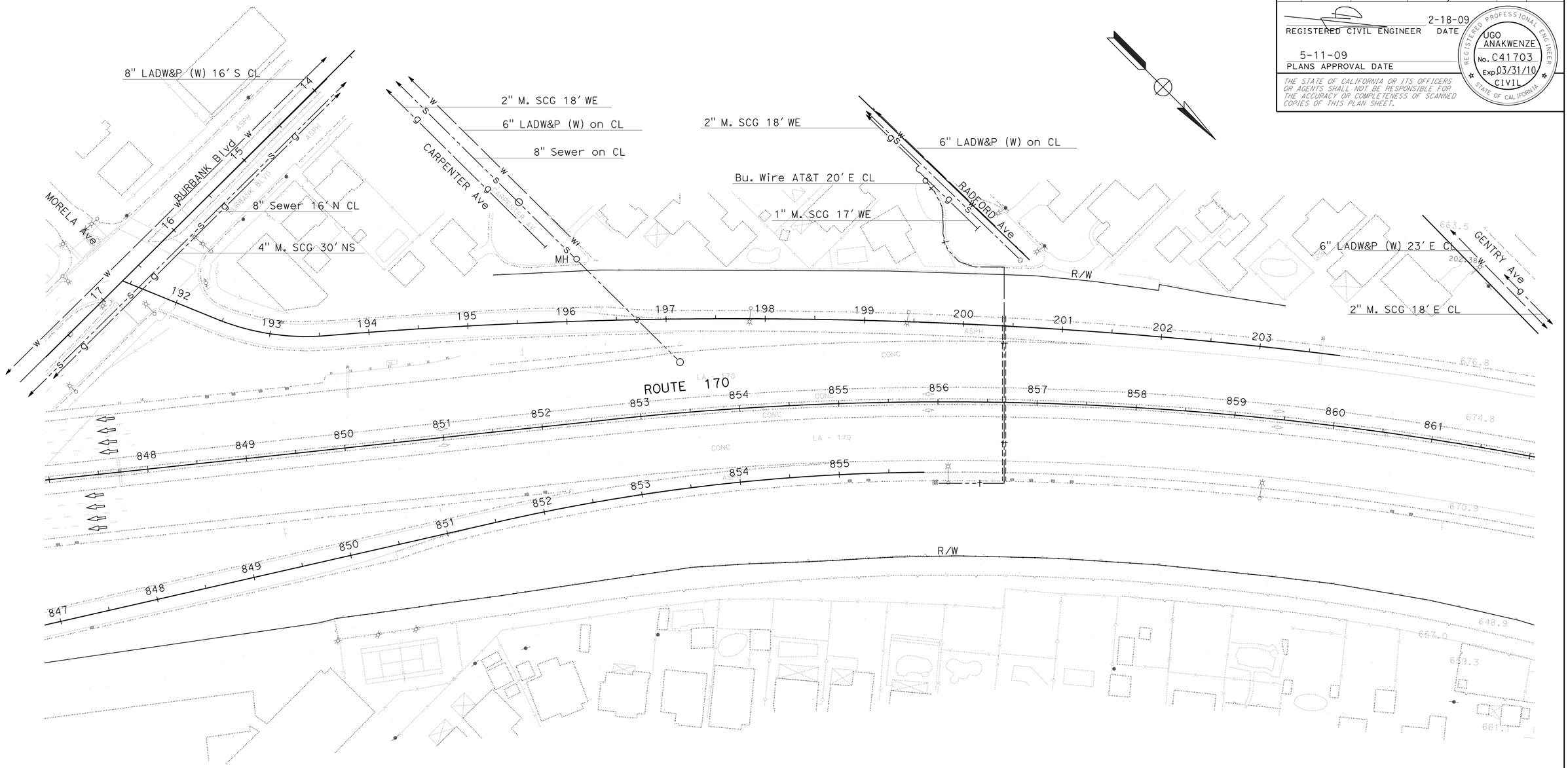

THIS PLAN ACCURATE FOR EXISTING UTILITIES ONLY.

UTILITY PLAN

SCALE 1"=50' **U-2**

STATE OF CALIFORNIA - DEPARTMENT OF TRANSPORTATION
Caltrans
DESIGN A

FUNCTIONAL SUPERVISOR: UGO ANAKWENZE
CALCULATED-DESIGNED BY: EUGENE YEHUDA LEIBMAN
CHECKED BY: GREGORY B. DAMICO
REVISED BY
DATE REVISED

LAST REVISION 00-00-00
DATE PLOTTED => 01-SEP-2009
TIME PLOTTED => 10:22

Dist	COUNTY	ROUTE	POST MILES TOTAL PROJECT	SHEET No.	TOTAL SHEETS
07	LA	60,170	R4.4, R16.3,R19.8	33	68

REGISTERED CIVIL ENGINEER 2-18-09 DATE

5-11-09
PLANS APPROVAL DATE

REGISTERED PROFESSIONAL ENGINEER UGO ANAKWENZE No. C41703 Exp 03/31/10 CIVIL STATE OF CALIFORNIA

THE STATE OF CALIFORNIA OR ITS OFFICERS OR AGENTS SHALL NOT BE RESPONSIBLE FOR THE ACCURACY OR COMPLETENESS OF SCANNED COPIES OF THIS PLAN SHEET.

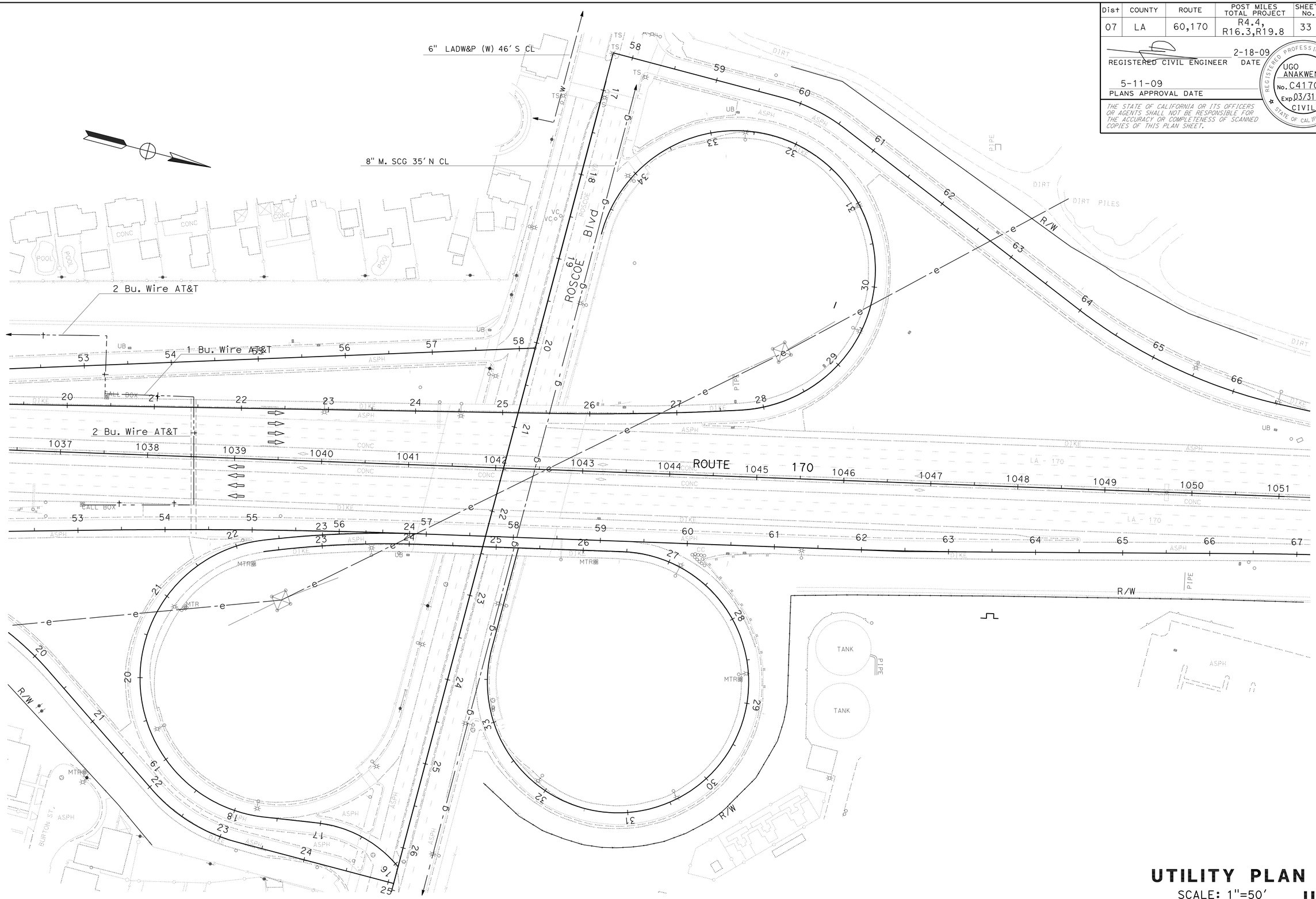

THIS PLAN ACCURATE FOR EXISTING UTILITIES ONLY.

UTILITY PLAN

SCALE: 1"=50'

U-3

STATE OF CALIFORNIA - DEPARTMENT OF TRANSPORTATION

Caltrans

DESIGN A

FUNCTIONAL SUPERVISOR: UGO ANAKWENZE

CALCULATED-DESIGNED BY: EUGENE YEHUDA LEIBMAN

CHECKED BY: GREGORY B. DAMICO

REVISED BY

DATE REVISED

LAST REVISION 00-00-00

DATE PLOTTED => 01-SEP-2009

TIME PLOTTED => 10:22

Dist	COUNTY	ROUTE	POST MILES TOTAL PROJECT	SHEET No.	TOTAL SHEETS
07	LA	60,170	R4.4, R16.3,R19.8	34	68

REGISTERED CIVIL ENGINEER 2-18-09 DATE

5-11-09
PLANS APPROVAL DATE

REGISTERED PROFESSIONAL ENGINEER
EUGENE YEHUDA LEIBMAN
No. C58077
Exp. 06/30/10
CIVIL
STATE OF CALIFORNIA

THE STATE OF CALIFORNIA OR ITS OFFICERS OR AGENTS SHALL NOT BE RESPONSIBLE FOR THE ACCURACY OR COMPLETENESS OF SCANNED COPIES OF THIS PLAN SHEET.

CONSTRUCTION AREA SIGNS STATIONARY MOUNTED

SIGN No.	SIGN CODE	DESCRIPTION	PANEL SIZE	No. OF POSTS AND SIZE	No. OF SIGNS
A	W20-1	ROAD WORK AHEAD	48" X 48"	1-6" X 6"	4
B	C30A(CA)	SHOULDER CLOSED	48" X 48"	1-6" X 6"	3
C	C40(CA)	TRAFFIC FINES DOUBLED IN CONSTRUCTION ZONES	72" X 36"	2-4" X 6"	4
D	G20-2	END ROAD WORK	36" X 18"	1-4" X 4"	4
				TOTAL	15

NOTES:

1. SIGN LOCATIONS SHOWN ARE APPROXIMATE. EXACT LOCATIONS WILL BE DETERMINED BY THE ENGINEER.
2. SEE TRAFFIC HANDLING PLANS FOR ADDITIONAL CONSTRUCTION AREA SIGNS.

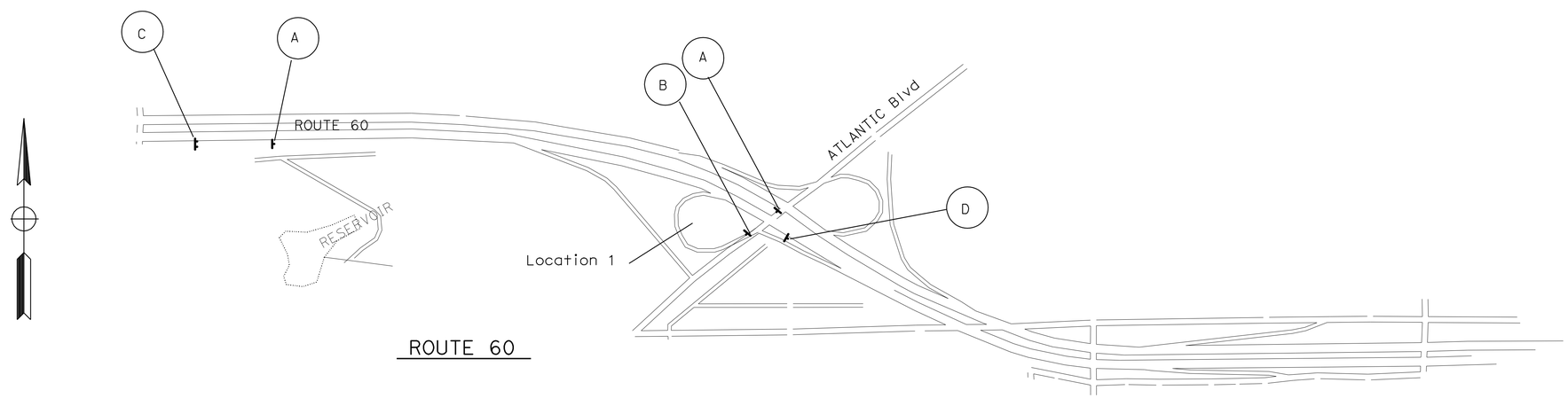

THIS PLAN ACCURATE FOR CONSTRUCTION AREA SIGNS WORK ONLY.

CONSTRUCTION AREA SIGNS

NO SCALE

CS-1

REVISED BY | DATE REVISED

EUGENE YEHUDA LEIBMAN

CALCULATED-DESIGNED BY: GREGORY B. DAMICO

CHECKED BY

FUNCTIONAL SUPERVISOR: GREGORY B. DAMICO

STATE OF CALIFORNIA - DEPARTMENT OF TRANSPORTATION

Caltrans DESIGN

LAST REVISION 00-00-00 | DATE PLOTTED => 01-SEP-2009 | TIME PLOTTED => 10:22

Dist	COUNTY	ROUTE	POST MILES TOTAL PROJECT	SHEET No.	TOTAL SHEETS
07	LA	60,170	R4.4, R16.3,R19.8	35	68

REGISTERED CIVIL ENGINEER 2-18-09 DATE

5-11-09
PLANS APPROVAL DATE

REGISTERED PROFESSIONAL ENGINEER
EUGENE YEHUDA LEIBMAN
No. C58077
Exp. 06/30/10
CIVIL
STATE OF CALIFORNIA

THE STATE OF CALIFORNIA OR ITS OFFICERS OR AGENTS SHALL NOT BE RESPONSIBLE FOR THE ACCURACY OR COMPLETENESS OF SCANNED COPIES OF THIS PLAN SHEET.

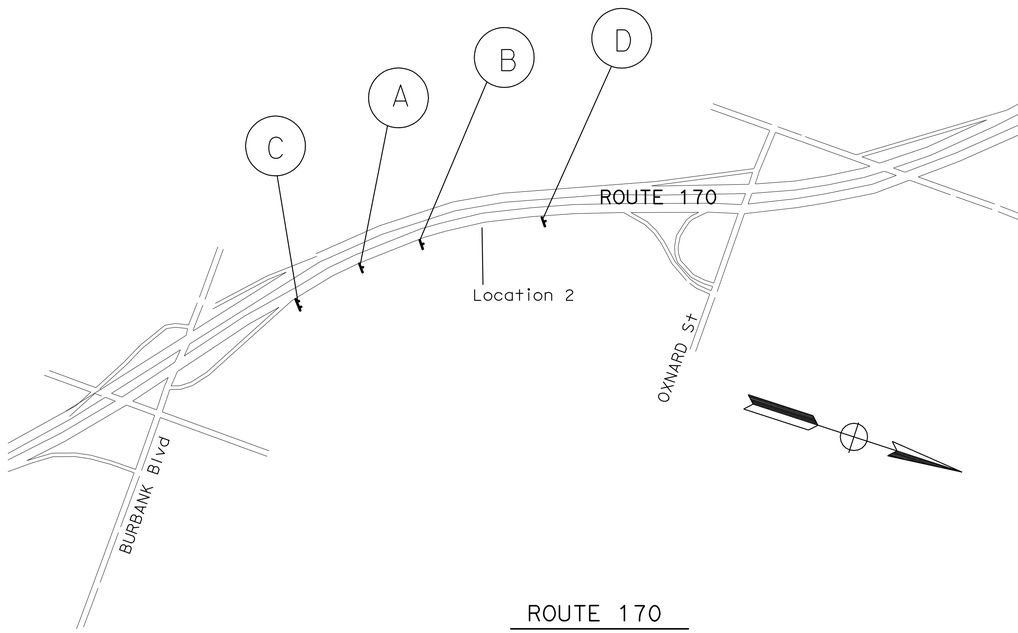

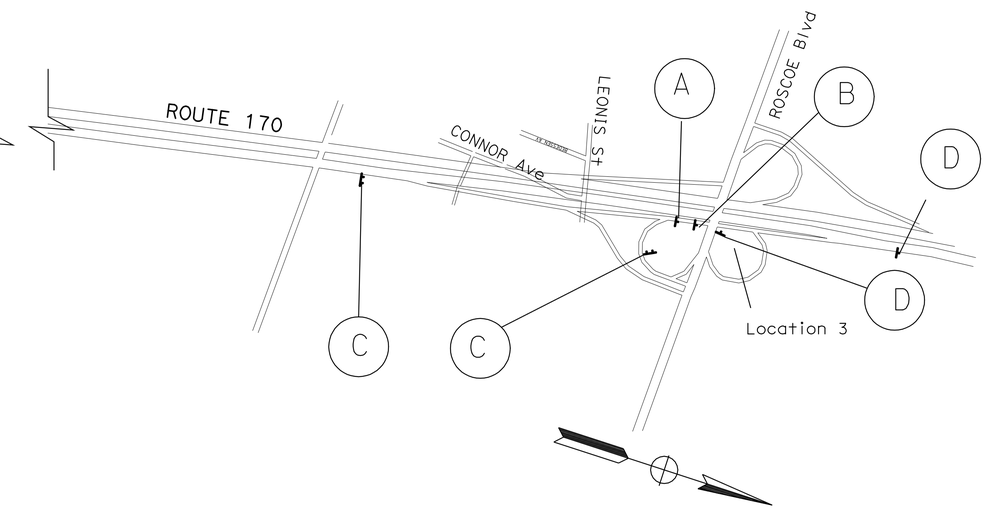

ROUTE 170

THIS PLAN ACCURATE FOR CONSTRUCTION AREA SIGNS WORK ONLY.

CONSTRUCTION AREA SIGNS

NO SCALE

CS-2

STATE OF CALIFORNIA - DEPARTMENT OF TRANSPORTATION
Caltrans
DESIGN

FUNCTIONAL SUPERVISOR: GREGORY B. DAMICO

CALCULATED-DESIGNED BY: EUGENE YEHUDA LEIBMAN
CHECKED BY: GREGORY B. DAMICO

REVISED BY
DATE REVISED

LAST REVISION 00-00-00
DATE PLOTTED => 01-SEP-2009
TIME PLOTTED => 10:22

Dist	COUNTY	ROUTE	POST MILES TOTAL PROJECT	SHEET No.	TOTAL SHEETS
07	LA	60,170	R4.4, R16.3,R19.8	36	68

REGISTERED CIVIL ENGINEER 2-18-09 DATE

5-11-09
PLANS APPROVAL DATE

REGISTERED PROFESSIONAL ENGINEER
EUGENE YEHUDA LEIBMAN
No. C58077
Exp. 06/30/10
CIVIL
STATE OF CALIFORNIA

THE STATE OF CALIFORNIA OR ITS OFFICERS OR AGENTS SHALL NOT BE RESPONSIBLE FOR THE ACCURACY OR COMPLETENESS OF SCANNED COPIES OF THIS PLAN SHEET.

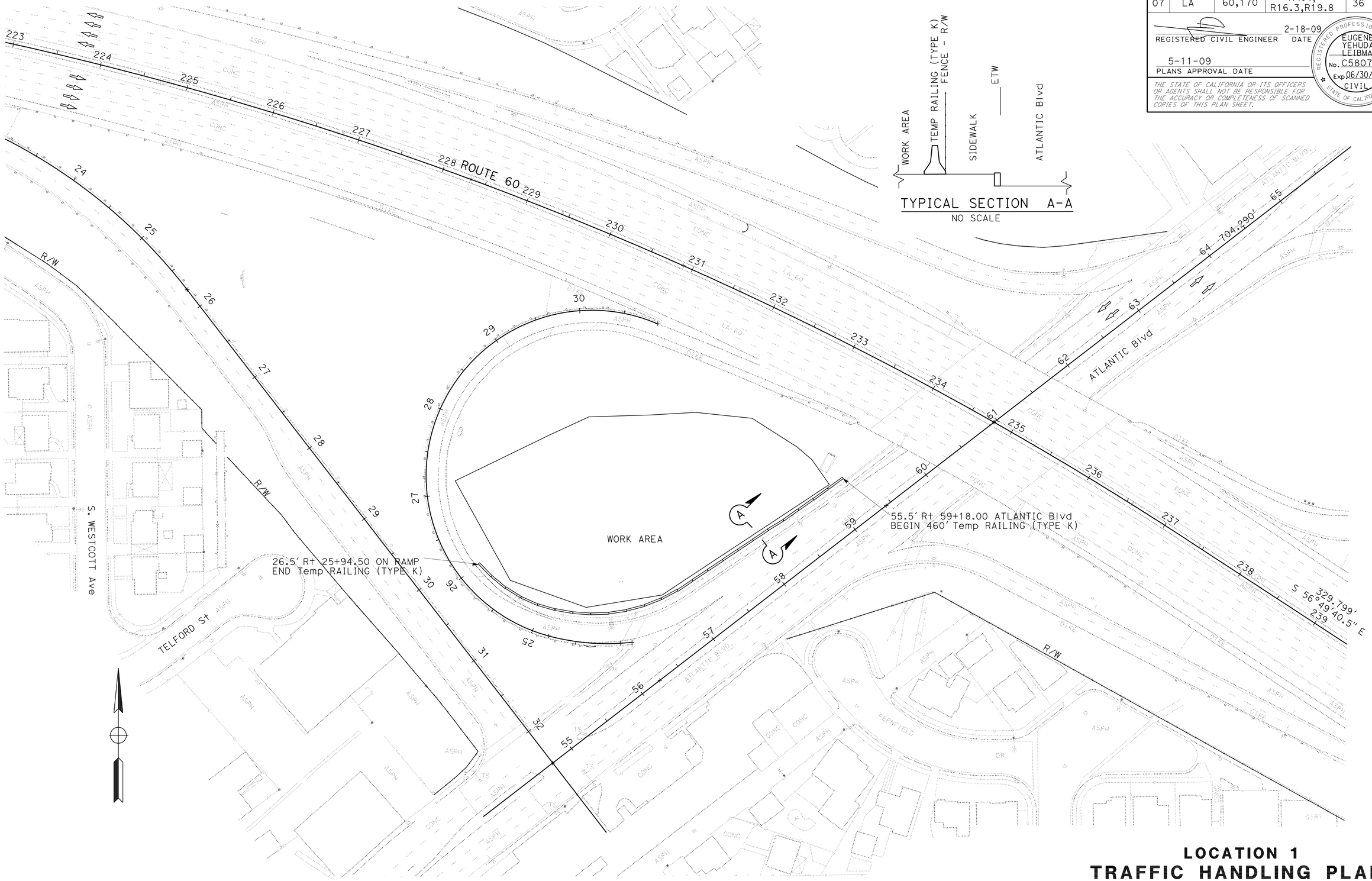

LOCATION 1
TRAFFIC HANDLING PLAN

SCALE: 1"=50'

TH-1

THIS PLAN ACCURATE FOR TRAFFIC HANDLING WORK ONLY.

STATE OF CALIFORNIA - DEPARTMENT OF TRANSPORTATION
Caltrans® **DESIGN**

FUNCTIONAL SUPERVISOR: GREGORY B. DAMICO
CALCULATED-DESIGNED BY: EUGENE YEHUDA LEIBMAN
CHECKED BY: GREGORY B. DAMICO
REVISED BY
DATE REVISED

LAST REVISION 00-00-00
DATE PLOTTED => 01-SEP-2009
TIME PLOTTED => 10:22

Dist	COUNTY	ROUTE	POST MILES TOTAL PROJECT	SHEET No.	TOTAL SHEETS
07	LA	60,170	R4.4, R16.3,R19.8	37	68

REGISTERED CIVIL ENGINEER 2-18-09 DATE

5-11-09
PLANS APPROVAL DATE

REGISTERED PROFESSIONAL ENGINEER
EUGENE YEHUDA LEIBMAN
No. C58077
Exp. 06/30/10
CIVIL
STATE OF CALIFORNIA

THE STATE OF CALIFORNIA OR ITS OFFICERS OR AGENTS SHALL NOT BE RESPONSIBLE FOR THE ACCURACY OR COMPLETENESS OF SCANNED COPIES OF THIS PLAN SHEET.

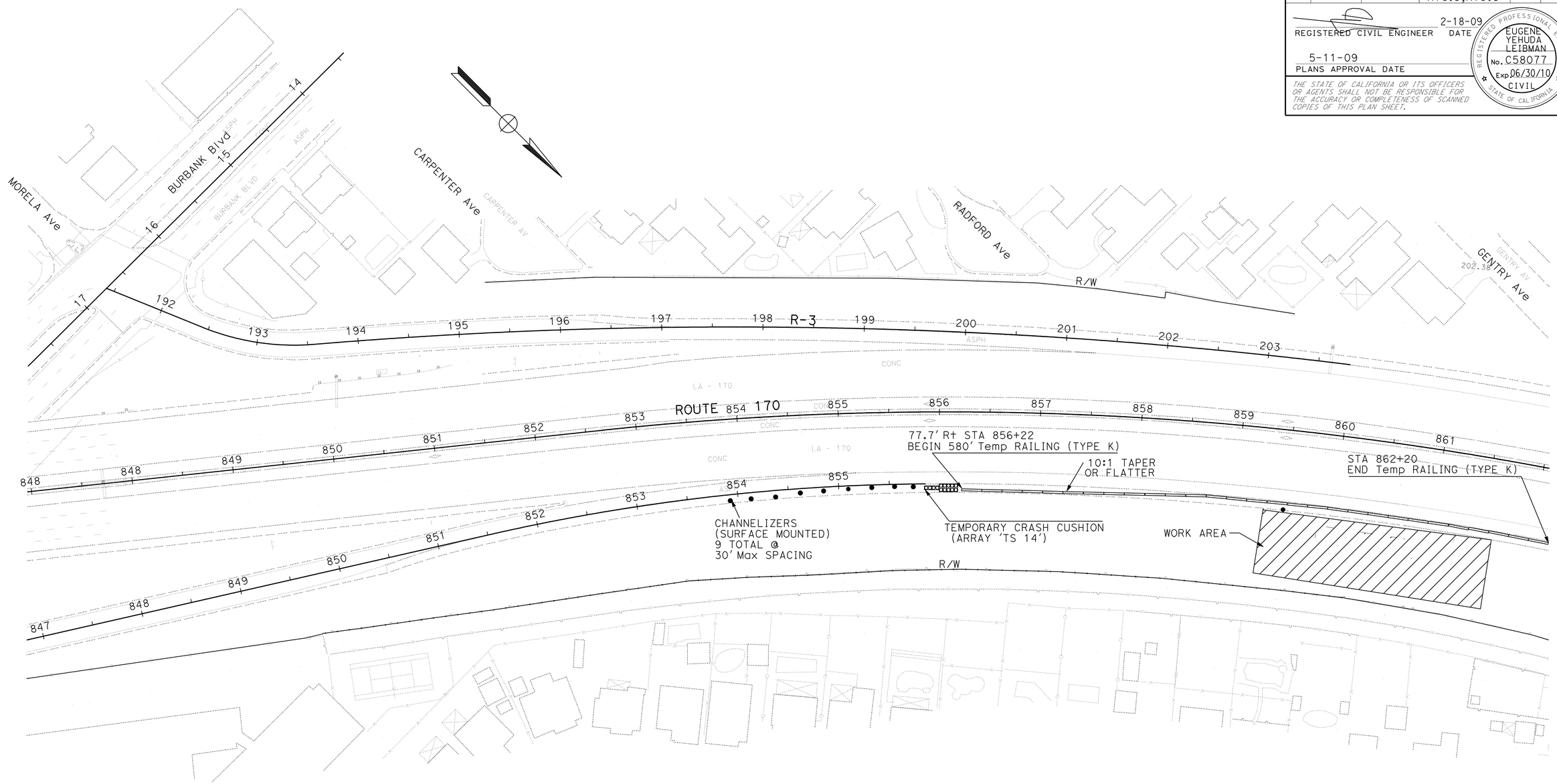

THIS PLAN ACCURATE FOR TRAFFIC HANDLING WORK ONLY.

LOCATION 2
TRAFFIC HANDLING PLAN

SCALE: 1"=50'

TH-2

STATE OF CALIFORNIA - DEPARTMENT OF TRANSPORTATION
Caltrans
DESIGN

FUNCTIONAL SUPERVISOR: GREGORY B. DAMICO
CALCULATED-DESIGNED BY: EUGENE YEHUDA LEIBMAN
CHECKED BY: GREGORY B. DAMICO
REVISED BY
DATE REVISED

LAST REVISION 00-00-00
DATE PLOTTED => 01-SEP-2009
TIME PLOTTED => 10:23

Dist	COUNTY	ROUTE	POST MILES TOTAL PROJECT	SHEET No.	TOTAL SHEETS
07	LA	60,170	R4.4, R16.3,R19.8	38	68

REGISTERED CIVIL ENGINEER 2-18-09 DATE

5-11-09
PLANS APPROVAL DATE

REGISTERED PROFESSIONAL ENGINEER
EUGENE YEHUDA LEIBMAN
No. C58077
Exp 06/30/10
CIVIL
STATE OF CALIFORNIA

THE STATE OF CALIFORNIA OR ITS OFFICERS OR AGENTS SHALL NOT BE RESPONSIBLE FOR THE ACCURACY OR COMPLETENESS OF SCANNED COPIES OF THIS PLAN SHEET.

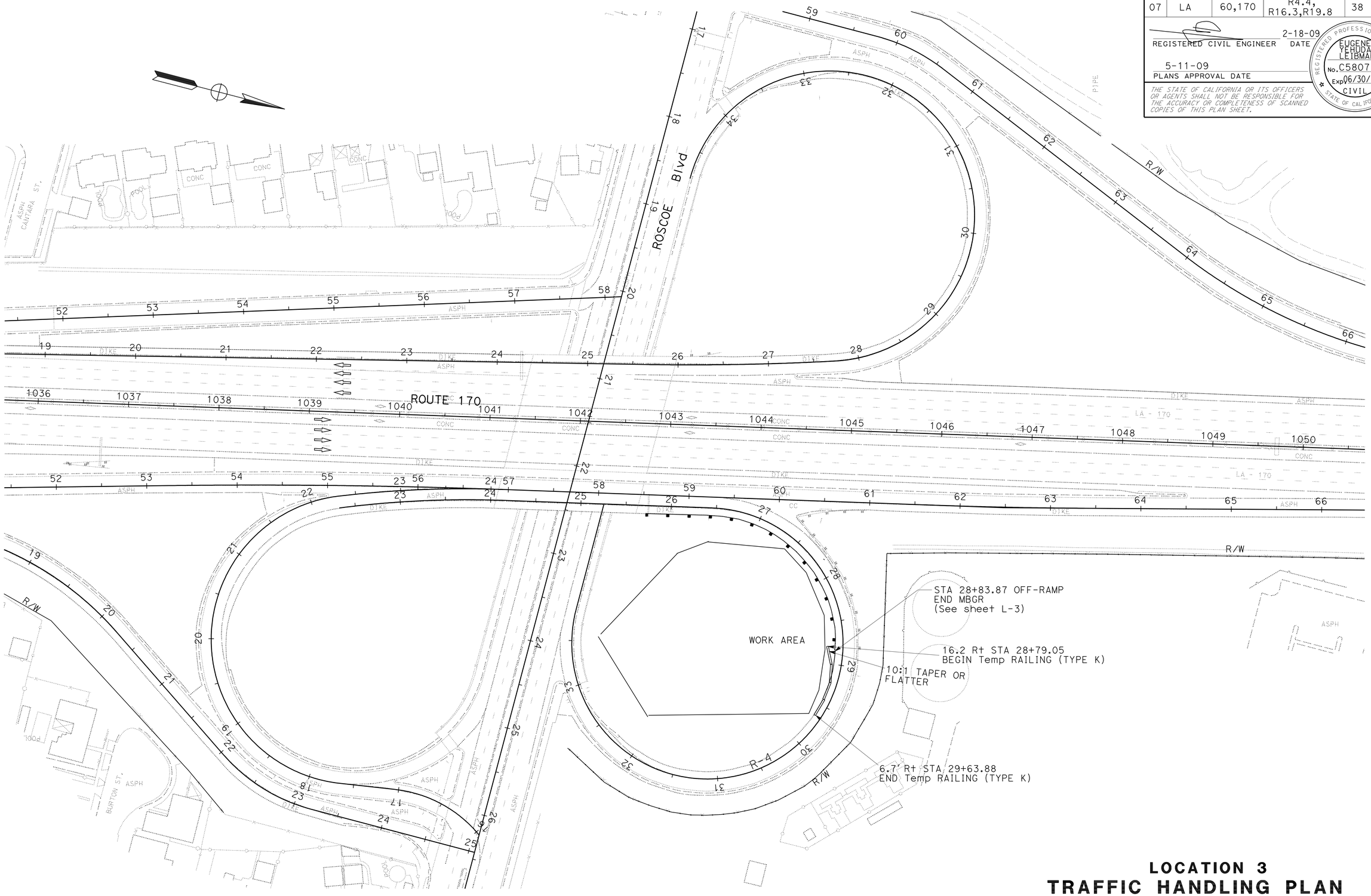

THIS PLAN ACCURATE FOR TRAFFIC HANDLING WORK ONLY.

LOCATION 3
TRAFFIC HANDLING PLAN

SCALE: 1"=50'

TH-3

STATE OF CALIFORNIA - DEPARTMENT OF TRANSPORTATION
Caltrans
DESIGN

FUNCTIONAL SUPERVISOR: GREGORY B. DAMICO
CALCULATED-DESIGNED BY: EUGENE YEHUDA LEIBMAN
CHECKED BY: GREGORY B. DAMICO
REVISED BY
DATE REVISED

LAST REVISION 00-00-00
DATE PLOTTED => 01-SEP-2009
TIME PLOTTED => 10:23

Dist	COUNTY	ROUTE	POST MILES TOTAL PROJECT	SHEET No.	TOTAL SHEETS
07	LA	60,170	R4.4, R16.3,R19.8	39	68

Denis Katayama 11-18-08
REGISTERED CIVIL ENGINEER DATE

5-11-09
PLANS APPROVAL DATE

REGISTERED PROFESSIONAL ENGINEER D.S. KATAYAMA No. 50648 Exp. 9-30-09 CIVIL STATE OF CALIFORNIA

THE STATE OF CALIFORNIA OR ITS OFFICERS OR AGENTS SHALL NOT BE RESPONSIBLE FOR THE ACCURACY OR COMPLETENESS OF SCANNED COPIES OF THIS PLAN SHEET.

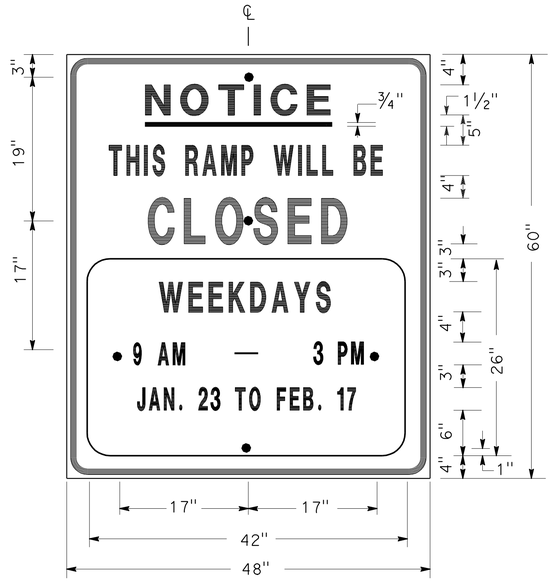

SIGN SP-1

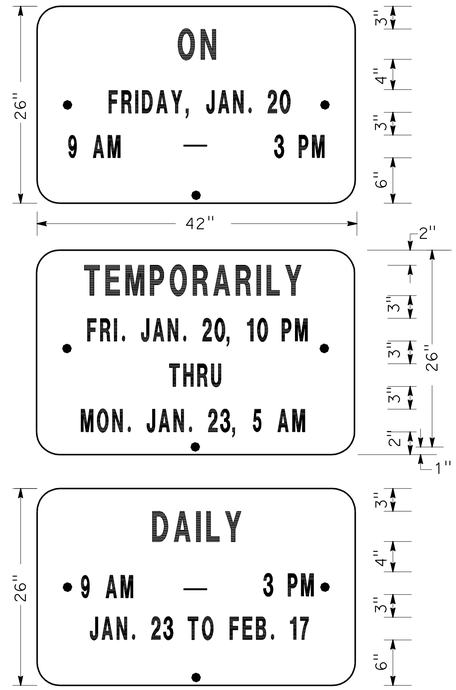

ALTERNATE OVERLAY PANELS (TYPICAL)

NOTES: (SIGN SP-1)

1. SIGNS SHALL HAVE ORANGE RETROREFLECTORIZED BACKGROUND WITH BLACK BORDER AND LETTERS.
2. BOLT HOLES SHALL BE 3/8" DIAMETER.
3. BASE MATERIAL SHALL BE ALUMINUM (MINIMUM 0.06").
4. SIGNS SHALL BE MOUNTED WITH BOTTOMS OF SIGNS A MINIMUM OF 6' ABOVE GROUND.

SIZE	BORDER WIDTH	MARGIN WIDTH	LETTER SIZE					CORNER RADIUS
			LINE 1	LINE 2*	LINE 3	LINE 4	LINE 5,6 & 7*	
48"x60"	1 1/4"	3/4"	4E	4D	6E	4D		3"
42"x26"	OVERLAY						3D	1 1/2"
* CONDENSED SPACING IF NECESSARY								

SPECIAL ADVANCE NOTICE PUBLICITY SIGN

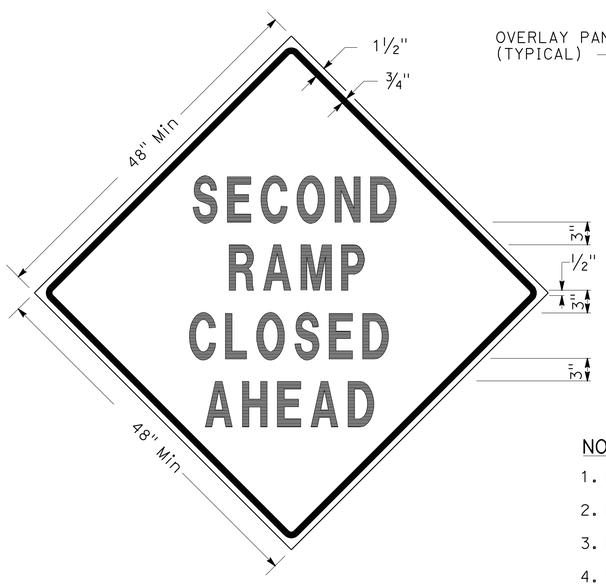

SIGN SP-3

SIGN SP-5

NOTES: (SIGNS SP-3 & SP-5)

1. LETTERS - 6" SERIES D.
2. LETTERS AND BORDERS - BLACK ON RETROREFLECTORIZED ORANGE BACKGROUND.
3. BASE MATERIAL SHALL BE ALUMINUM (MINIMUM 0.06").
4. SIGNS SHALL BE MOUNTED WITH BOTTOMS OF SIGNS A MINIMUM OF 6' ABOVE GROUND.

SPECIAL SIGN FOR EXIT RAMP CLOSURES

SIGN SP-4

NOTES: (SIGN SP-4)

1. LETTERS - 6" SERIES C.
2. LETTERS AND BORDERS - BLACK ON RETROREFLECTORIZED WHITE BACKGROUND.
3. BASE MATERIAL SHALL BE ALUMINUM (MINIMUM 0.06").
4. SIGNS SHALL BE PLACED AT RAMP ENTRANCES IN ADDITION TO SIGNS POSTED IN ACCORDANCE WITH STANDARD PLAN T14.

SPECIAL SIGN FOR ENTRANCE RAMP CLOSURES

TRAFFIC HANDLING DETAILS
TRAFFIC CONTROL SYSTEM FOR RAMP CLOSURES, DETOUR SIGNS AND MISCELLANEOUS DETAILS
SHEET 1 OF 2

NO SCALE

THD-1

JC	JC	JC
9/08	8/08	7/08
REVISED BY	DATE REVISED	
ALBERT K YU	JOCELYN C CHIANG	
CALCULATED-DESIGNED BY	CHECKED BY	
FUNCTIONAL SUPERVISOR	JOHN YANG	

STATE OF CALIFORNIA - DEPARTMENT OF TRANSPORTATION
Caltrans DTM

LAST REVISION 00-00-00 | DATE PLOTTED => 01-SEP-2009 | TIME PLOTTED => 10:23

Dist	COUNTY	ROUTE	POST MILES TOTAL PROJECT	SHEET No.	TOTAL SHEETS
07	LA	60,170	R4.4, R16.3,R19.8	40	68

Denis Katayama 11-18-08
REGISTERED CIVIL ENGINEER DATE

5-11-09
PLANS APPROVAL DATE

REGISTERED PROFESSIONAL ENGINEER D.S. KATAYAMA No. 50648 Exp. 9-30-09 CIVIL STATE OF CALIFORNIA

THE STATE OF CALIFORNIA OR ITS OFFICERS OR AGENTS SHALL NOT BE RESPONSIBLE FOR THE ACCURACY OR COMPLETENESS OF SCANNED COPIES OF THIS PLAN SHEET.

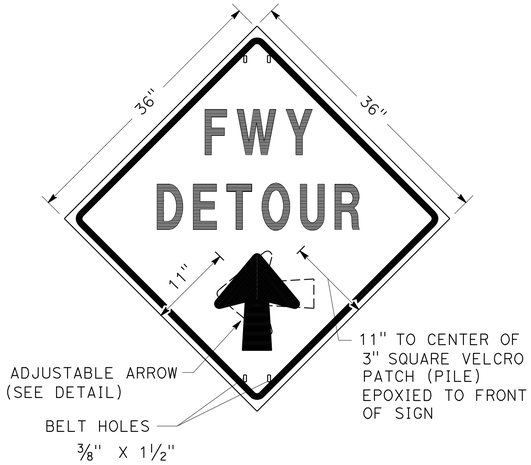

SIGN SP-2

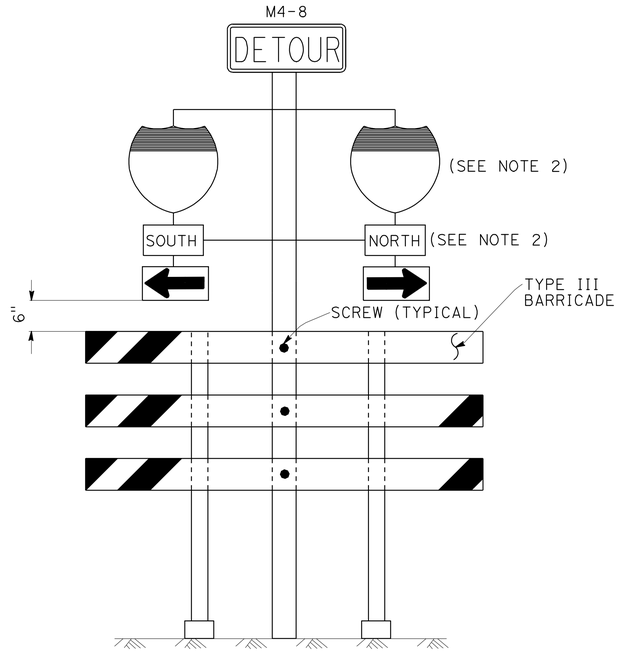

SIGN SP-6 (SEE NOTE 1)

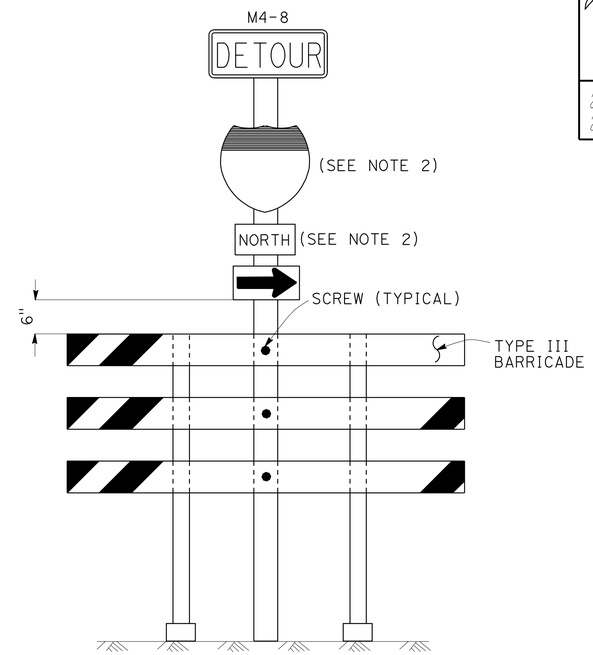

SIGN SP-7 (SEE NOTE 1)

NOTES: (SIGN SP-2)

1. LETTERS -6" SERIES E.
2. LETTERS, BORDER AND ARROW - BLACK ON RETROREFLECTORIZED ORANGE BACKGROUND.
3. BASE MATERIAL FOR SIGNS AND ARROWS SHALL BE ALUMINUM (MINIMUM 0.06").
4. BELTS (LUGGAGE STRAPS) SHALL BE 1" WIDE BY 48" LONG, MADE OF COTTON OR POLYPROPYLENE WEB MATERIAL.
5. SIGNS SHALL BE MOUNTED WITH BOTTOMS OF SIGNS A MINIMUM OF 6' ABOVE GROUND EXCEPT AS OTHERWISE SHOWN ON OTHER TRAFFIC HANDLING DETAILS PLANS.

ABBREVIATION

(CA) CALIFORNIA CODE

NOTES: (SIGNS SP-6 & SP-7)

1. IN LIEU OF PLACING SIGNS ON TYPE III BARRICADES, SIGNS, INCLUDING POSTS, MAY BE PLACED INTO THE GROUND OR FASTENED ONTO ELECTROLIERS.
2. USE APPROPRIATE ROUTE SHIELD [G26-2(CA), G27-2(CA), G28-2(CA)] AND CARDINAL DIRECTION [NORTH (M3-1), SOUTH (M3-3), EAST (M3-2), WEST (M3-4)]

SPECIAL PORTABLE FREEWAY DETOUR SIGNS

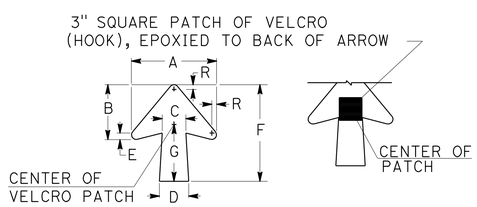

DIMENSIONS							
A	B	C	D	E	F	G	R
11 1/4"	7 1/4"	3 1/8"	4"	7/8"	13"	7 1/2"	5/8"

SPECIAL PORTABLE FREEWAY DETOUR SIGN

ADJUSTABLE ARROW DETAIL

TRAFFIC HANDLING DETAILS

TRAFFIC CONTROL SYSTEM FOR RAMP CLOSURES, DETOUR SIGNS AND MISCELLANEOUS DETAILS

SHEET 2 OF 2

NO SCALE

THD-2

REVISED BY	DATE REVISED
JC	7/08
JC	9/08

ALBERT K YU
JOCELYN C CHIANG
CALCULATED-DESIGNED BY
CHECKED BY
FUNCTIONAL SUPERVISOR
JOHN YANG

STATE OF CALIFORNIA - DEPARTMENT OF TRANSPORTATION
Caltrans
DTM

LAST REVISION 00-00-00
DATE PLOTTED => 01-SEP-2009
TIME PLOTTED => 10:23

Dist	COUNTY	ROUTE	POST MILES TOTAL PROJECT	SHEET No.	TOTAL SHEETS
07	LA	60,170	R4.4, R16.3,R19.8	41	68

Denis Katayama 11-18-08
REGISTERED CIVIL ENGINEER DATE

5-11-09
PLANS APPROVAL DATE

REGISTERED PROFESSIONAL ENGINEER D.S. KATAYAMA No. 50648 Exp. 9-30-09 CIVIL STATE OF CALIFORNIA

THE STATE OF CALIFORNIA OR ITS OFFICERS OR AGENTS SHALL NOT BE RESPONSIBLE FOR THE ACCURACY OR COMPLETENESS OF SCANNED COPIES OF THIS PLAN SHEET.

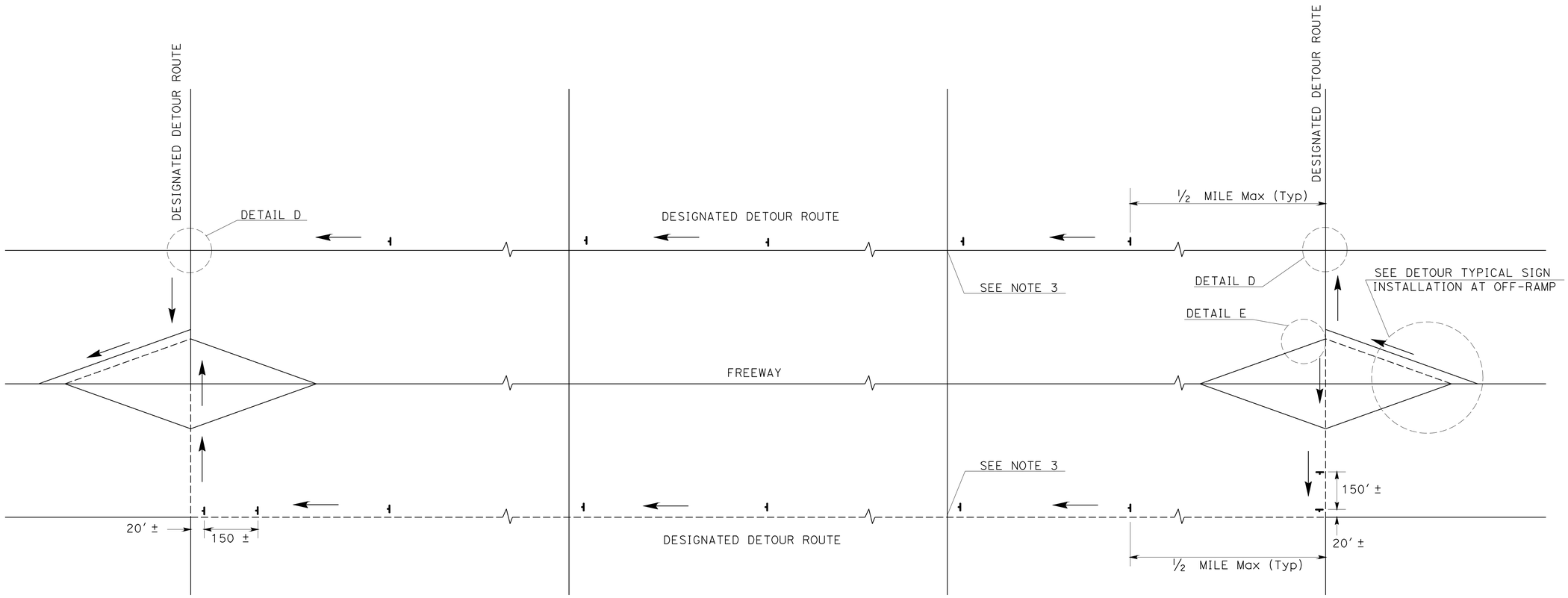

TYPICAL DETOUR SIGN INSTALLATION ALONG DESIGNATED DETOUR ROUTE

LEGEND

- SIGN SP-2
- AND/OR DESIGNATED DETOUR ROUTE
- DIRECTION OF TRAVEL

NOTES:

1. SP-2 SIGNS SHALL NOT BE INSTALLED ON BARRICADES EXCEPT AS OTHERWISE SHOWN.
2. SIGN LOCATIONS ARE APPROXIMATE. EXACT LOCATIONS WILL BE DETERMINED BY THE ENGINEER.
3. SP-2 SIGNS SHALL BE POSTED AT SIGNALIZED INTERSECTIONS ALONG THE DESIGNATED DETOUR ROUTE OR ½ MILE MAXIMUM APART.

TRAFFIC HANDLING DETAILS

TRAFFIC CONTROL SYSTEM FOR DETOUR SIGN INSTALLATION ALONG DESIGNATED DETOUR ROUTE

SHEET 1 OF 2

NO SCALE

THD-3

JC	9/08		
JC	7/08		
REVISED BY	DATE REVISED		
ALBERT K YU	JOCELYN C CHIANG	CALCULATED-DESIGNED BY	CHECKED BY
FUNCTIONAL SUPERVISOR	JOHN YANG		

STATE OF CALIFORNIA - DEPARTMENT OF TRANSPORTATION
Caltrans
DTM

LAST REVISION 00-00-00 DATE PLOTTED => 01-SEP-2009 TIME PLOTTED => 10:24

Dist	COUNTY	ROUTE	POST MILES TOTAL PROJECT	SHEET No.	TOTAL SHEETS
07	LA	60,170	R4.4, R16.3,R19.8	42	68

Denis Katayama 11-18-08
REGISTERED CIVIL ENGINEER DATE

5-11-09
PLANS APPROVAL DATE

REGISTERED PROFESSIONAL ENGINEER D.S. KATAYAMA No. 50648 Exp. 9-30-09 CIVIL STATE OF CALIFORNIA

THE STATE OF CALIFORNIA OR ITS OFFICERS OR AGENTS SHALL NOT BE RESPONSIBLE FOR THE ACCURACY OR COMPLETENESS OF SCANNED COPIES OF THIS PLAN SHEET.

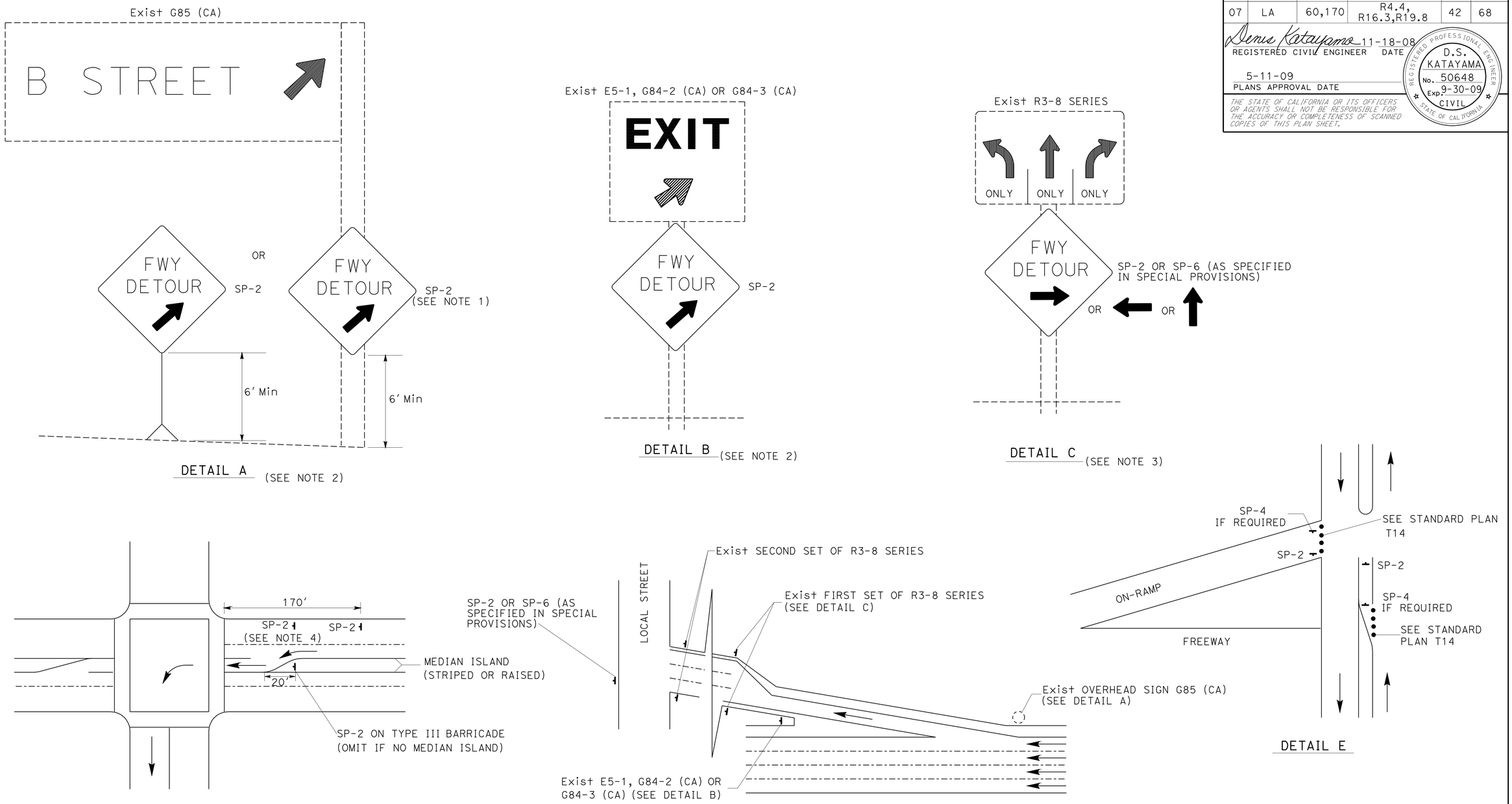

TYPICAL DETOUR SIGN INSTALLATION AT OFF-RAMP

NOTES:

1. SP-2 MAY BE STRAPPED ON EXISTING ELECTROLIER SIGNAL POSTS OR SIGN POSTS.
2. OMIT DETAIL A AND DETAIL B FOR FULL FREEWAY CLOSURES.
3. SEE TRAFFIC HANDLING DETAILS PLAN-TRAFFIC CONTROL SYSTEM FOR RAMP CLOSURES, DETOUR SIGNS AND MISCELLANEOUS DETAILS SHEET 2 OF 2 FOR SP-6.
4. OMIT IF MEDIAN ISLAND EXIST.

ABBREVIATIONS

(CA) CALIFORNIA CODE

LEGENDS

- CONE
- PORTABLE SIGN
- DIRECTION OF TRAVEL
- EXISTING OVERHEAD SIGN

TRAFFIC HANDLING DETAILS
TRAFFIC CONTROL SYSTEM FOR DETOUR SIGN INSTALLATION ALONG DESIGNATED DETOUR ROUTE
SHEET 2 OF 2

NO SCALE

THD-4

ALBERT K YU	JC	9/08	
JOCELYN C CHIANG	JC	7/08	
CALCULATED-DESIGNED BY	REVISED BY	DATE REVISED	
CHECKED BY			
FUNCTIONAL SUPERVISOR			
JOHN YANG			

STATE OF CALIFORNIA - DEPARTMENT OF TRANSPORTATION
Caltrans DTM

LAST REVISION 00-00-00
DATE PLOTTED => 01-SEP-2009
TIME PLOTTED => 10:24

Dist	COUNTY	ROUTE	POST MILES TOTAL PROJECT	SHEET No.	TOTAL SHEETS
07	LA	60,170	R4.4, R16.3,R19.8	43	68

REGISTERED CIVIL ENGINEER 2-18-09 DATE

5-11-09
PLANS APPROVAL DATE

REGISTERED PROFESSIONAL ENGINEER
EUGENE YEHUDA LEIBMAN
No. C58077
Exp. 06/30/10
CIVIL
STATE OF CALIFORNIA

THE STATE OF CALIFORNIA OR ITS OFFICERS OR AGENTS SHALL NOT BE RESPONSIBLE FOR THE ACCURACY OR COMPLETENESS OF SCANNED COPIES OF THIS PLAN SHEET.

TRAFFIC HANDLING QUANTITIES

LOCATION AND DESCRIPTION	TEMPORARY RAILING (TYPE K)	TEMPORARY CRASH CUSHION MODULE	CHANNELIZER (SURFACE MOUNTED)
	LF	EA	EA
LOC 1, SHEET TH-1	460		
LOC 2, SHEET TH-2	580	14	9
LOC 3, SHEET TH-3	80		
TOTAL	1120	14	9

TRAFFIC HANDLING QUANTITIES

THQ-1

CALCULATED-DESIGNED BY: EUGENE YEHUDA LEIBMAN
CHECKED BY: GREGORY B. DAMICO
REVISED BY
DATE REVISED
FUNCTIONAL SUPERVISOR: GREGORY B. DAMICO

STATE OF CALIFORNIA - DEPARTMENT OF TRANSPORTATION
Caltrans
DESIGN

LAST REVISION 00-00-00
DATE PLOTTED => 01-SEP-2009
TIME PLOTTED => 10:24

Dist	COUNTY	ROUTE	POST MILES TOTAL PROJECT	SHEET No.	TOTAL SHEETS
07	LA	60,170	R4.4, R16.3,R19.8	44	68

REGISTERED CIVIL ENGINEER 2-18-09 DATE

5-11-09
PLANS APPROVAL DATE

REGISTERED PROFESSIONAL ENGINEER EUGENE YEHUDA LEIBMAN No. C58077 Exp. 06/30/10 CIVIL STATE OF CALIFORNIA

THE STATE OF CALIFORNIA OR ITS OFFICERS OR AGENTS SHALL NOT BE RESPONSIBLE FOR THE ACCURACY OR COMPLETENESS OF SCANNED COPIES OF THIS PLAN SHEET.

ROADWAY QUANTITIES

LOCATION AND DESCRIPTION	14' CHAIN LINK GATE (TYPE CL-6)	4' CHAIN LINK GATE (TYPE CL-6)	CHAIN LINK FENCE (TYPE CL-6)	ROADWAY EXCAVATION	IMPORTED BORROW	REMOVE AC DIKE	CONCRETE BARRIER (TYPE 732B)	CONCRETE PAVEMENT	LEAN CONCRETE BASE	CLASS 3 AGGREGATE BASE	ALTERNATIVE FLARED TERMINAL SYSTEM	END ANCHOR ASSEMBLY (TYPE SFT)	METAL BEAM GUARD RAILING	TRANSITION RAILING (TYPE WB)	PLACE HMA DIKE (TYPE C)	PLACE HMA DIKE (TYPE F)	SEAL PAVEMENT JOINT	RELOCATE ROADSIDE SIGN	MINOR CONCRETE (GUTTER)	HOT MIX ASPHALT (TYPE B)	PERMEABLE MATERIAL	8" PSP UNDERDRAIN (0.064" THICK)
	EA	EA	LF	CY	CY	LF	LF	CY	CY	CY	EA	EA	LF	EA	LF	LF	LF	EA	CY	TON	CY	LF
SHEET L-1, Loc 1	1		305	319.7	402	63.2		144.4	72.2	103.1							160		4.5			
SHEET L-2, Loc 2		1	193	153.2	1687	290	196	44.7	22.3	31.9	1	1	25		62.5	25	140	1	6.5	1.5	28.8	99
SHEET L-3, Loc 3	1		346	311.4		343.5		106.3	53.2	76.0		1	256	1		299.5	180		4.6	4.6		
TOTAL	2	1	844	784.3	2089	696.7	196	295.4	147.7	211.0	1	2	281	1	62.5	324.5	480	1	15.7	6.1	28.8	99

AUSTIN VAULT SAND FILTER QUANTITIES

LOCATION AND DESCRIPTION	Austin Vault Type	STRUCTURE EXCAVATION (AUSTIN VAULT) (TYPE X)	STRUCTURE BACKFILL (AUSTIN VAULT)	STRUCTURAL CONCRETE (AUSTIN VAULT)	BAR REINFORCING STEEL	MISCELLANEOUS METAL (AUSTIN VAULT)	GABION	CABLE RAILING	FILTER MEDIA (AUSTIN VAULT)	PERMEABLE MATERIAL (AUSTIN VAULT)	FILTER FABRIC (AUSTIN VAULT)	6" PERFORATED PLASTIC PIPE UNDERDRAIN (AUSTIN VAULT)	6" PLASTIC PIPE UNDERDRAIN (AUSTIN VAULT)
		(CY)	(CY)	(CY)	(LB)	(LB)	(CY)	(LF)	(CY)	(CY)	(SQYD)	(LF)	(LF)
SHEET L-1, Loc 1	S-5000-3	534.6	59.1	202.2	35600	115	9	165	63	51	149	152	33
SHEET L-2, Loc 2	S-10000-3	487.4	50.4	349.9	67962	115	12	237	126	110	285	354	33
SHEET L-3, Loc 3	S-5000-6	978.9	82.4	226.92	43523	115	18	165	63	51	149	152	33
TOTAL		2000.9	191.9	779.02	147,085	345	39	567	252	212	583	658	99

SUMMARY OF QUANTITIES

Q-1

EUGENE YEHUDA LEIBMAN — REVISED BY
GREGORY B. DAMICO — DATE REVISED
CALCULATED-DESIGNED BY
CHECKED BY
FUNCTIONAL SUPERVISOR
GREGORY B. DAMICO

STATE OF CALIFORNIA - DEPARTMENT OF TRANSPORTATION
Caltrans® DESIGN

LAST REVISION 00-00-00 DATE PLOTTED => 01-SEP-2009 TIME PLOTTED => 10:24

Dist	COUNTY	ROUTE	POST MILES TOTAL PROJECT	SHEET No.	TOTAL SHEETS
07	LA	60,170	R4.4, R16.3,R19.8	45	68

George Olguin
LICENSED LANDSCAPE ARCHITECT

5-11-09
PLANS APPROVAL DATE

LICENSED LANDSCAPE ARCHITECT GEORGE OLGUIN NO. 4335 STATE OF CALIFORNIA
George Olguin Signature
08-31-10 Renewal Date
10-10-08 Date

THE STATE OF CALIFORNIA OR ITS OFFICERS OR AGENTS SHALL NOT BE RESPONSIBLE FOR THE ACCURACY OR COMPLETENESS OF SCANNED COPIES OF THIS PLAN SHEET.

ABBREVIATIONS

AMEND — amendment
B & B — balled and burlapped
Dia — diameter
EA — each
LB — pound
Oz — ounce
Ft — foot/feet
SQFT — square feet
SQYD — square yard
CF — cubic feet
Max — maximum
Min — minimum
NCN — no common name
No. — number
Pkt — packet
PLT ESTB — plant establishment
Pvmt — pavement
R/W — right of way
SF — state furnished
TRVD — traveled

PLANT LIST AND PLANTING SPECIFICATIONS

PLANT GROUP	PLANT No.	SYMBOL	BOTANICAL NAME	COMMON NAME	SIZE	QUANTITY EACH	HOLE SIZE (INCH) Dia	HOLE SIZE (INCH) DEPTH	BASIN TYPE	IRON SULFATE ①	SOIL AMEND ①	COMMERCIAL FERTILIZER ① PLANTING	COMMERCIAL FERTILIZER ① PLT ESTB	BASIN MULCH	STAKING	PLANTING LIMITS MINIMUM DISTANCE (Ft) FROM TRVD WAY	PVMT	FENCE	WALL	PAVED DITCH	EARTH DITCH	ON CENTER (Ft)	REMARKS
A	1		ACACIA REDOLENS	DESERT CARPET	No. 1	121	②	②	I	—	1 CF	4 Oz	4 Oz	1.4 CF	—	—	20	20	20	20	22	15	SHRUB
	2		PARTHENOCISSUS TRICUSPIDATA	BOSTON IVY	No. 1	12	②	②	I	—	1 CF	4 Oz	4 Oz	1.4 CF	—	—	—	—	—	13	15	10	VINE
B	3		HETEROMELES ARBUTIFOLIA	TOYON	No. 5	16	②	②	I	—	1 CF	4 Oz	4 Oz	1.4 CF	—	—	15	10	10	10	12	10	SHRUB
	4		FREMONTODENDRON 'SAN GABRIEL'	NCN	No. 5	17	②	②	I	—	1 CF	4 Oz	4 Oz	1.4 CF	—	—	15	15	15	15	17	10	SHRUB
	5		SAMBUCUS MEXICANA	MEXICAN ELDERBERRY	No. 5	31	②	②	I	—	1 CF	4 Oz	4 Oz	1.4 CF	—	—	15	10	10	10	12	12	SHRUB
U	6		PLATANUS RACEMOSA	CALIFORNIA SYCAMORE	No. 15	28	②	②	I	—	2 CF	8 Oz	8 Oz	2.1 CF	⑥	40		20	20	10	12	—	TREE
	7		QUERCUS AGRIFOLIA	COAST LIVE OAK	No. 15	9	②	②	I	—	2 CF	8 Oz	8 Oz	2.1 CF	⑥	30	—	20	15	15	17	—	TREE

APPLICABLE WHEN CIRCLED:

① - Quantities shown are "per plant" unless shown as SQFT or SQYD application rates.
② - Sufficient to receive root ball.
3 - Does not apply to mulch areas.
4 - As shown on plans.
5 - Unless otherwise shown on plans.
⑥ - See detail.
7 - See Special Provisions.

LEGEND

MULCH (3" Thick)

RC — SQFT ROADSIDE CLEARING (Remove Exist Plants, trees, shrubs and groundcover) (Unless otherwise noted.)

ROCK BLANKET

NOTE:

Underlined portions of botanical name indicate abbreviations used on Planting Plans.

PLANT LIST

PL-1

REVISED BY | DATE REVISED
BONGKOD LOHMONGKOL | GEORGE OLGUIN
CALCULATED-DESIGNED BY | CHECKED BY
SENIOR LANDSCAPE ARCHITECT | JENNIFER TAIRA
STATE OF CALIFORNIA - DEPARTMENT OF TRANSPORTATION
Caltrans LANDSCAPE ARCHITECTURE

LAST REVISION 00-00-00 | DATE PLOTTED => 01-SEP-2009 | TIME PLOTTED => 10:24

Dist	COUNTY	ROUTE	POST MILES TOTAL PROJECT	SHEET No.	TOTAL SHEETS
07	LA	60,170	R4.4, R16.3,R19.8	46	68

George Olguin
LICENSED LANDSCAPE ARCHITECT

5-11-09
PLANS APPROVAL DATE

LICENSED LANDSCAPE ARCHITECT
GEORGE OLGUIN
NO. 4333
George Olguin
Signature
08-31-10
Renewal Date
10-10-08
Date
STATE OF CALIFORNIA

THE STATE OF CALIFORNIA OR ITS OFFICERS OR AGENTS SHALL NOT BE RESPONSIBLE FOR THE ACCURACY OR COMPLETENESS OF SCANNED COPIES OF THIS PLAN SHEET.

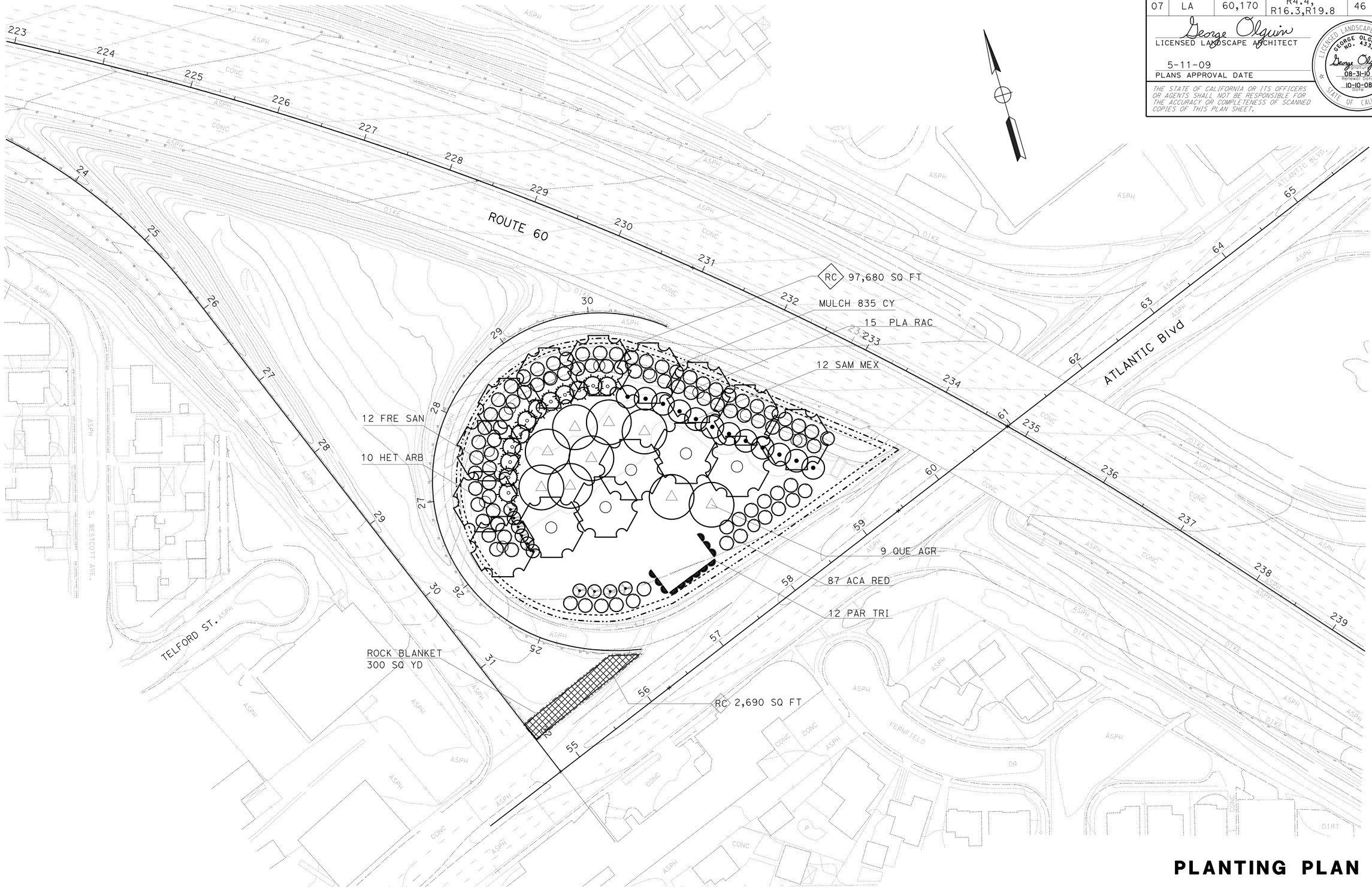

THIS PLAN ACCURATE FOR LANDSCAPE WORK ONLY

PLANTING PLAN

SCALE: 1"=50'

PP-1

STATE OF CALIFORNIA - DEPARTMENT OF TRANSPORTATION
Caltrans® LANDSCAPE ARCHITECTURE

SENIOR LANDSCAPE ARCHITECT: JENNIFER TAIRA

CALCULATED-DESIGNED BY: BONGKOD LOHMONGKOL
CHECKED BY: GEORGE OLGUIN

REVISED BY
DATE REVISED

LAST REVISION 00-00-00
DATE PLOTTED => 01-SEP-2009
TIME PLOTTED => 10:24

Dist	COUNTY	ROUTE	POST MILES TOTAL PROJECT	SHEET No.	TOTAL SHEETS
07	LA	60,170	R4.4, R16.3,R19.8	47	68

George Olguin
LICENSED LANDSCAPE ARCHITECT

5-11-09
PLANS APPROVAL DATE

LICENSED LANDSCAPE ARCHITECT
GEORGE OLGUIN
NO. 4333
George Olguin
Signature
08-31-10
Renewal Date
10-10-08
Date
STATE OF CALIFORNIA

THE STATE OF CALIFORNIA OR ITS OFFICERS OR AGENTS SHALL NOT BE RESPONSIBLE FOR THE ACCURACY OR COMPLETENESS OF SCANNED COPIES OF THIS PLAN SHEET.

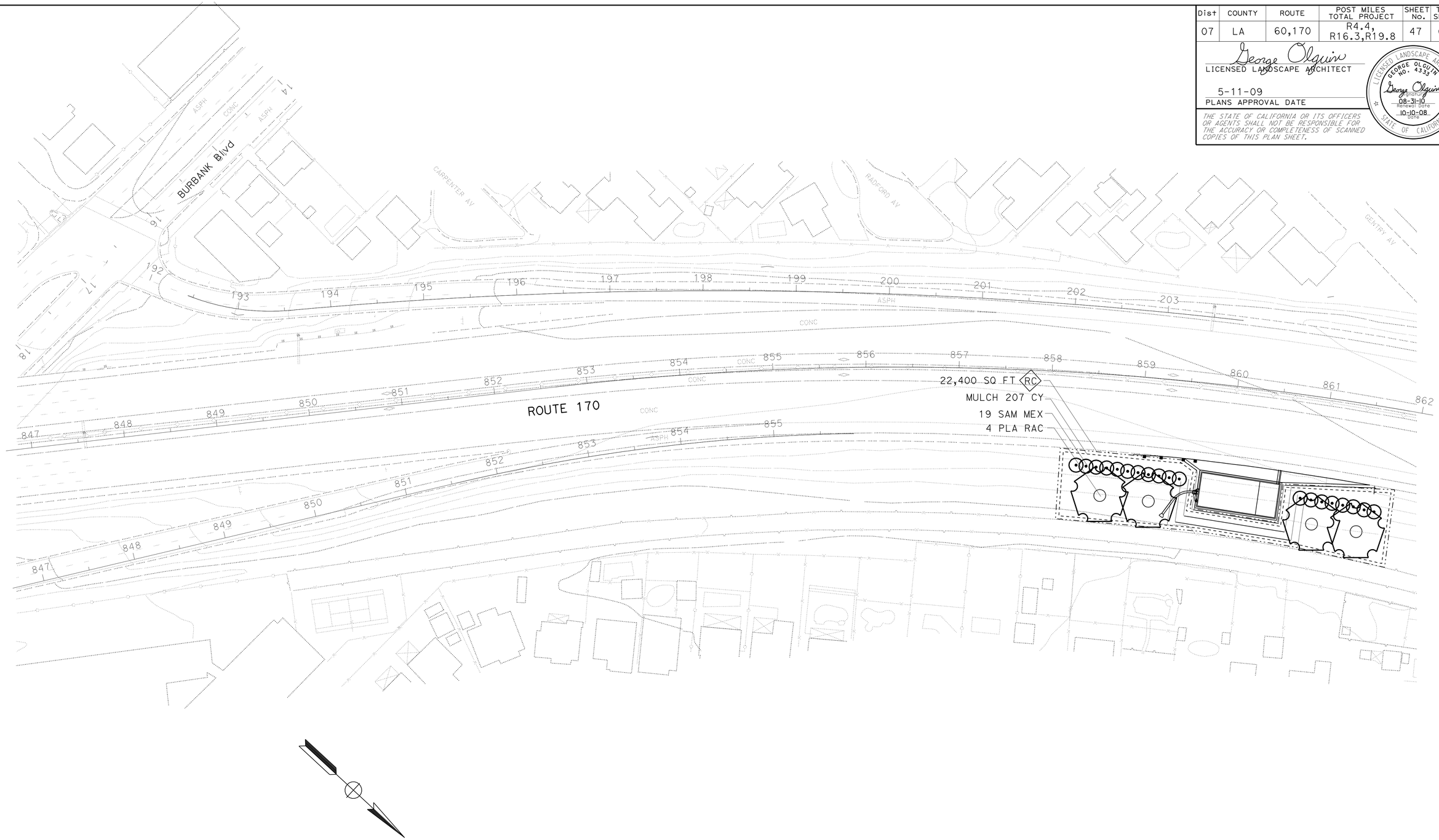

PLANTING PLAN

SCALE: 1"=50'

PP-2

THIS PLAN IS ACCURATE FOR LANDSCAPE WORK ONLY

REVISED BY	DATE REVISED

BONGKOD LOHMONGKOL
GEORGE OLGUIN

CALCULATED-DESIGNED BY
CHECKED BY

SENIOR LANDSCAPE ARCHITECT
JENNIFER TAIRA

STATE OF CALIFORNIA - DEPARTMENT OF TRANSPORTATION
Caltrans LANDSCAPE ARCHITECTURE

LAST REVISION 00-00-00
DATE PLOTTED => 01-SEP-2009
TIME PLOTTED => 10:25

Dist	COUNTY	ROUTE	POST MILES TOTAL PROJECT	SHEET No.	TOTAL SHEETS
07	LA	60,170	R4.4, R16.3,R19.8	48	68

George Olguin
LICENSED LANDSCAPE ARCHITECT

5-11-09
PLANS APPROVAL DATE

LICENSED LANDSCAPE ARCHITECT
GEORGE OLGUIN
NO. 4333
George Olguin
Signature
08-31-10
Renewal Date
10-10-08
Date
STATE OF CALIFORNIA

THE STATE OF CALIFORNIA OR ITS OFFICERS OR AGENTS SHALL NOT BE RESPONSIBLE FOR THE ACCURACY OR COMPLETENESS OF SCANNED COPIES OF THIS PLAN SHEET.

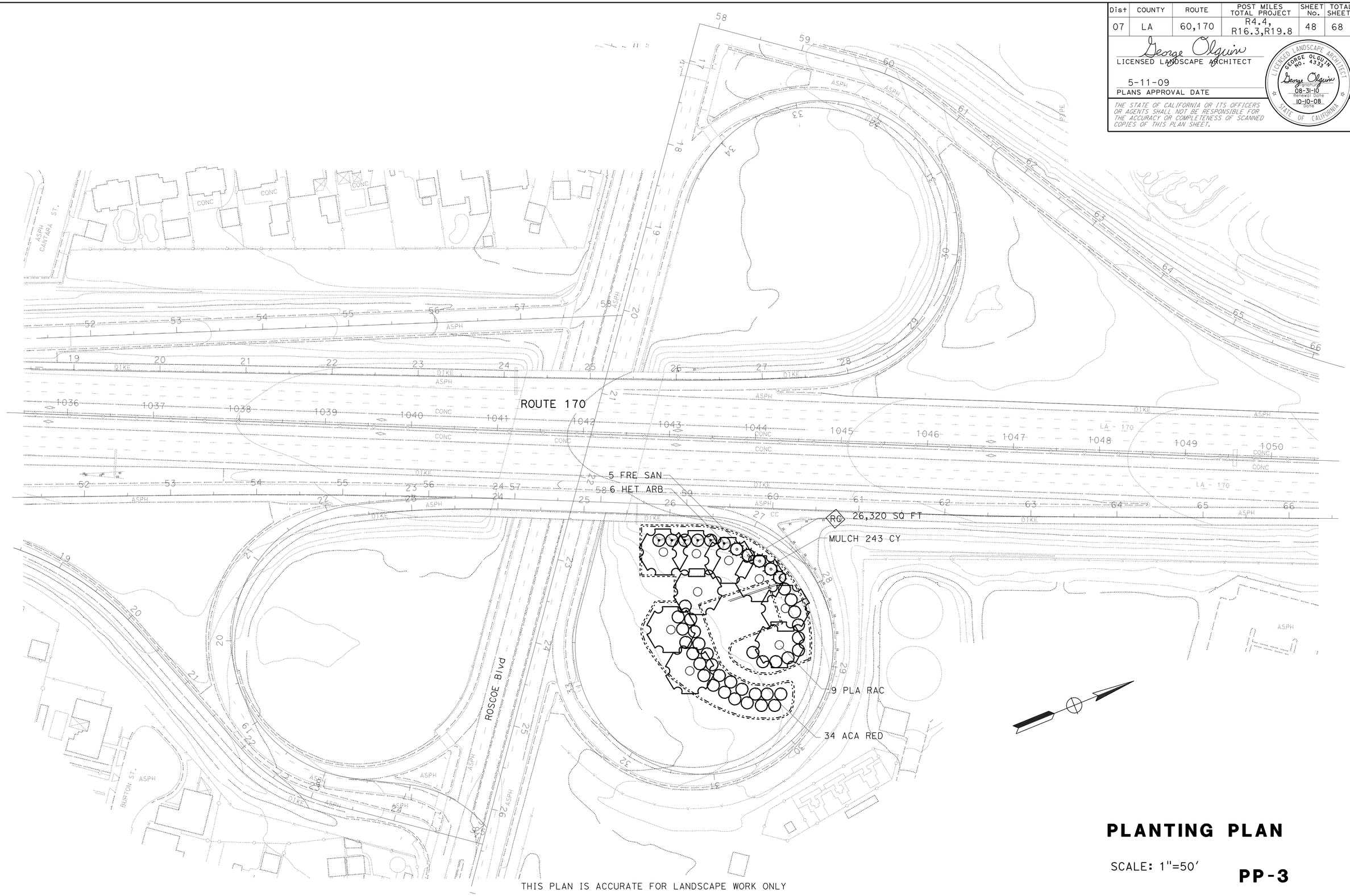

THIS PLAN IS ACCURATE FOR LANDSCAPE WORK ONLY

PLANTING PLAN

SCALE: 1"=50'

PP-3

STATE OF CALIFORNIA - DEPARTMENT OF TRANSPORTATION
Caltrans
LANDSCAPE ARCHITECTURE

SENIOR LANDSCAPE ARCHITECT: JENNIFER TAIRA

CALCULATED-DESIGNED BY: BONGKOD LOHMONGKOL
CHECKED BY: GEORGE OLGUIN

REVISED BY
DATE REVISED

LAST REVISION 00-00-00
DATE PLOTTED => 01-SEP-2009
TIME PLOTTED => 10:25

Dist	COUNTY	ROUTE	POST MILES TOTAL PROJECT	SHEET No.	TOTAL SHEETS
07	LA	60,170	R4.4, R16.3,R19.8	49	68

George Olguin
LICENSED LANDSCAPE ARCHITECT

5-11-09
PLANS APPROVAL DATE

LICENSED LANDSCAPE ARCHITECT
GEORGE OLGUIN
NO. 4333
George Olguin
Signature
08-31-10
Renewal Date
10-10-08
Date
STATE OF CALIFORNIA

THE STATE OF CALIFORNIA OR ITS OFFICERS OR AGENTS SHALL NOT BE RESPONSIBLE FOR THE ACCURACY OR COMPLETENESS OF SCANNED COPIES OF THIS PLAN SHEET.

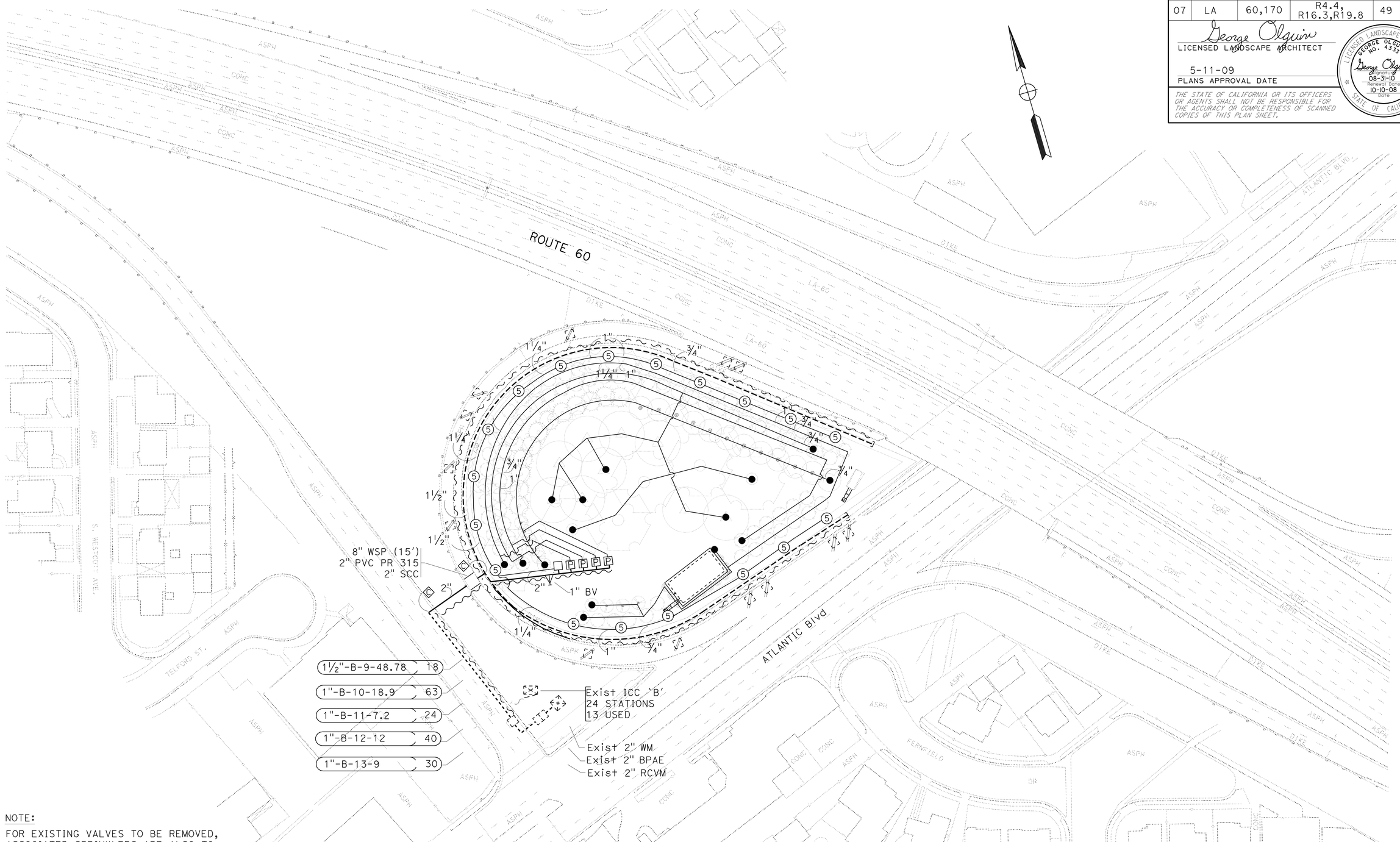

NOTE:

FOR EXISTING VALVES TO BE REMOVED, ASSOCIATED SPRINKLERS ARE ALSO TO BE REMOVED.

THIS PLAN IS ACCURATE FOR IRRIGATION WORK ONLY

IRRIGATION PLAN

SCALE: 1"=50'

IP-1

STATE OF CALIFORNIA - DEPARTMENT OF TRANSPORTATION
Caltrans® LANDSCAPE ARCHITECTURE

SENIOR LANDSCAPE ARCHITECT: JENNIFER TAIRA

CALCULATED-DESIGNED BY: BONGKOD LOHMONGKOL
CHECKED BY: GEORGE OLGUIN

REVISED BY
DATE REVISED

LAST REVISION 00-00-00
DATE PLOTTED => 01-SEP-2009
TIME PLOTTED => 10:25

Dist	COUNTY	ROUTE	POST MILES TOTAL PROJECT	SHEET No.	TOTAL SHEETS
07	LA	60,170	R4.4, R16.3,R19.8	50	68

George Olguin
LICENSED LANDSCAPE ARCHITECT

5-11-09
PLANS APPROVAL DATE

LICENSED LANDSCAPE ARCHITECT
GEORGE OLGUIN
NO. 4333
George Olguin
Signature
08-31-10
Renewal Date
10-10-08
Date
STATE OF CALIFORNIA

THE STATE OF CALIFORNIA OR ITS OFFICERS OR AGENTS SHALL NOT BE RESPONSIBLE FOR THE ACCURACY OR COMPLETENESS OF SCANNED COPIES OF THIS PLAN SHEET.

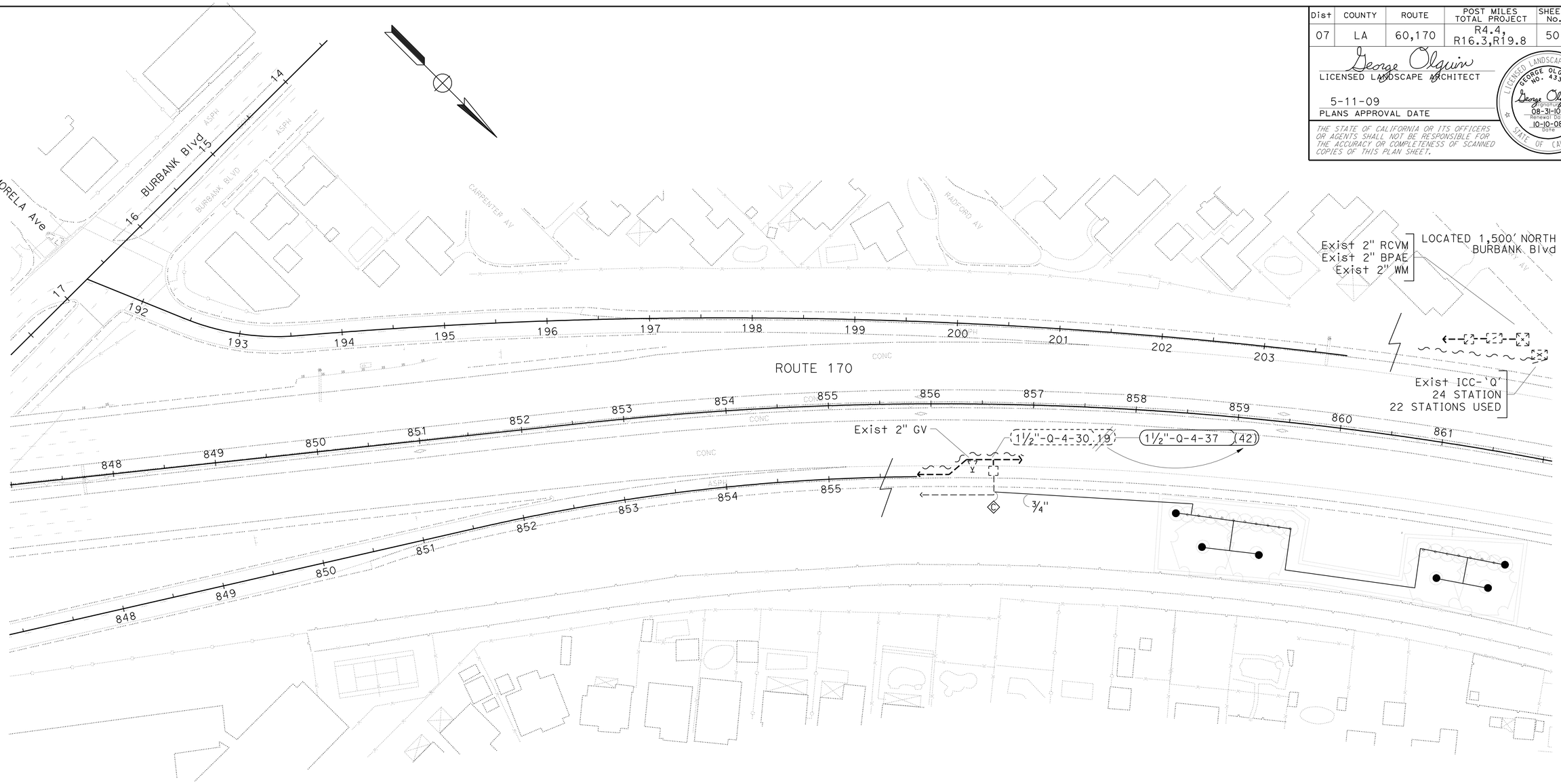

IRRIGATION PLAN

SCALE: 1"=50'

IP-2

THIS PLAN IS ACCURATE FOR IRRIGATION WORK ONLY

STATE OF CALIFORNIA - DEPARTMENT OF TRANSPORTATION
Caltrans® LANDSCAPE ARCHITECTURE

SENIOR LANDSCAPE ARCHITECT: JENNIFER TAIRA
CALCULATED-DESIGNED BY: BONGKOD LOHMONGKOL
CHECKED BY: GEORGE OLGUIN
REVISED BY
DATE REVISED

LAST REVISION 00-00-00
DATE PLOTTED => 01-SEP-2009
TIME PLOTTED => 10:25

Dist	COUNTY	ROUTE	POST MILES TOTAL PROJECT	SHEET No.	TOTAL SHEETS
07	LA	60,170	R4.4, R16.3,R19.8	51	68

George Olguin
LICENSED LANDSCAPE ARCHITECT

5-11-09
PLANS APPROVAL DATE

LICENSED LANDSCAPE ARCHITECT
GEORGE OLGUIN
NO. 4333
George Olguin
Signature
08-31-10
Renewal Date
10-10-08
Date
STATE OF CALIFORNIA

THE STATE OF CALIFORNIA OR ITS OFFICERS OR AGENTS SHALL NOT BE RESPONSIBLE FOR THE ACCURACY OR COMPLETENESS OF SCANNED COPIES OF THIS PLAN SHEET.

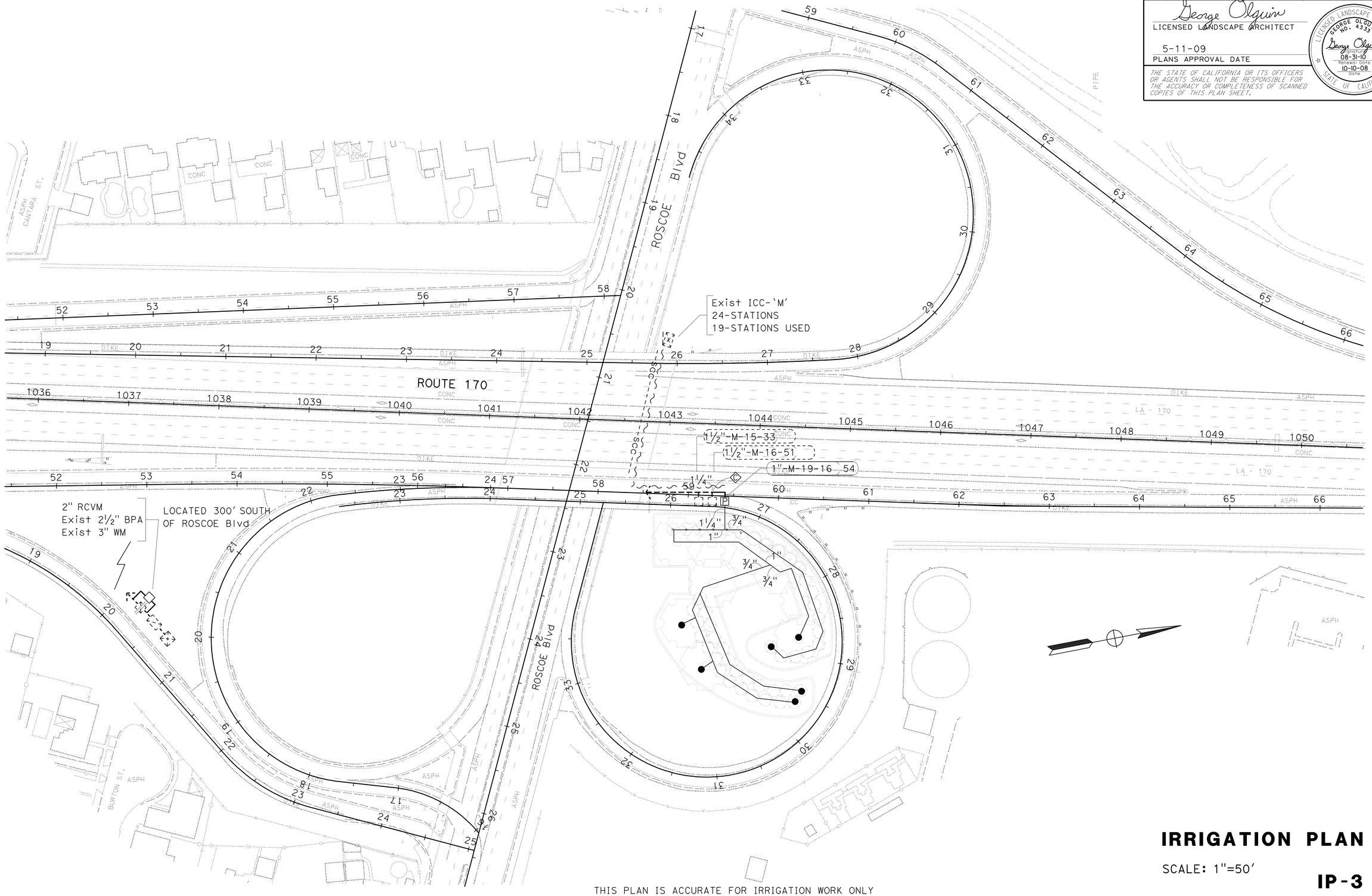

IRRIGATION PLAN

SCALE: 1"=50'

IP-3

THIS PLAN IS ACCURATE FOR IRRIGATION WORK ONLY

STATE OF CALIFORNIA - DEPARTMENT OF TRANSPORTATION
Caltrans® LANDSCAPE ARCHITECTURE

SENIOR LANDSCAPE ARCHITECT: JENNIFER TAIRA
CALCULATED-DESIGNED BY: BONGKOD LOHMONGKOL
CHECKED BY: GEORGE OLGUIN
REVISED BY
DATE REVISED

LAST REVISION 00-00-00
DATE PLOTTED => 01-SEP-2009
TIME PLOTTED => 10:26

Dist	COUNTY	ROUTE	POST MILES TOTAL PROJECT	SHEET No.	TOTAL SHEETS
07	LA	60,170	R4.4, R16.3,R19.8	52	68

George Olguin
LICENSED LANDSCAPE ARCHITECT

5-11-09
PLANS APPROVAL DATE

LICENSED LANDSCAPE ARCHITECT
GEORGE OLGUIN
NO. 4333
George Olguin
Signature
08-31-10
Renewal Date
10-10-08
Date
STATE OF CALIFORNIA

THE STATE OF CALIFORNIA OR ITS OFFICERS OR AGENTS SHALL NOT BE RESPONSIBLE FOR THE ACCURACY OR COMPLETENESS OF SCANNED COPIES OF THIS PLAN SHEET.

SPRINKLER SCHEDULE

SYMBOL	TYPE	DESCRIPTION	SPRAY PATTERN	OPERATING PRESSURE (PSI)	PRESSURE COMPENSATING	PLUS/MINUS 5% ② DISCHARGE: GALLONS PER MINUTE (GPM)	DISCHARGE: GALLONS PER HOUR (GPH)	RADIUS (Ft)	WIDTH x LENGTH (Ft)	MATERIAL	INLET CONNECTION (NPT INCH)	POSITIVE-LOCKING ADJ ARC STOP	BACKSPLASH PREVENTER	DIFFUSER PIN	DISTANCE CONTROL FLAP	ADJ DISCHARGE	RISER: TYPE	RISER: MATERIAL: PLASTIC	RISER: MATERIAL: GALVANIZED	RISER: SIZE (IPS INCH)	RISER: HEIGHT (INCH)	RISER: FLOW SHUTOFF DEVICE	⑤ SWING JOINT (TYPE)	RISER SUPPORT	SPRINKLER PROTECTOR (TYPE)	REMARKS
●	C-3	SPRAY	P	25	X	0.3	—	10	—	PL	½"	—	—	—	—	—	III	X	—	½"	4	—	—	—	—	②
⑤	A-5	GEAR DRIVEN	H	35	—	2.71	—	34	—	PL	¾"	—	—	—	—	—	IV	—	X	¾"	18	X	—	—	—	

X IN BOX DENOTES REQUIREMENT

APPLICABLE WHEN CIRCLED BELOW:

1 - See Special Provisions.
② - If a pressure compensating device is specified, the discharge and radii shown reflect its use.
3 - Arc Stop shall be fitted with a nut and bolt.
4 - Vinyl-coated cast iron housing.
5 - Swing Joints required adjacent to shoulders, curbs, sidewalks, and dikes.
6 - Unless otherwise shown on plans.

ABBREVIATIONS

F — full circle
P — part circle
F/P — full/part circle
Q — quarter circle
T — third circle
H — half circle
TT — two third circle
TQ — three quarter circle
CST — center strip
SST — side strip
EST — end strip
Ft — feet/foot
GPM — gallons per minute
GPH — gallons per hour
Adj — adjustable
PL — plastic
B/B — brass/bronze
B/PL — brass/plastic
B/B/PL — brass/bronze/plastic
NPT — national pipe thread
IPS — iron pipe size
PSI — pounds per square inch

SPRINKLERS SIZING CHART (C-3)

NUMBER OF SPRINKLERS	SIZE OF PIPE
1----30	¾ In
31---50	1 In
51---60	1¼ In

EXISTING	PROPOSED	ITEM DESCRIPTION
		WATER METER (BY OTHERS) (WM)
		BACKFLOW PREVENTER ASSEMBLY IN ENCLOSURE (BPAE)
		CONTROL AND NEUTRAL CONDUCTORS (CNC)
		CONDUIT (COND)
		PLASTIC PIPE (PR 200) (SUPPLY LINE) (MAIN)
		PLASTIC PIPE (PR 200) (SUPPLY LINE) (LATERAL)
		REMOTE CONTROL VALVE (RCV) REMOTE CONTROL VALVE (MASTER) (RCVM)
		GATE VALVE (GV)
		BALL VALVE (BV)
		REMOVE EXISTING VALVE
		REMOTE CONTROL VALVE (WITH PRESSURE REGULATOR)

VALVE CODE

2½"-A-2b-500 -60

- RCV SIZE (INCH)
- IRRIGATION CONTROLLER
- CONTROLLER STATION
- VALVE IN PARALLEL (IF APPLICABLE)
- GPM
- QUANTITY OF SPRINKLERS (WHEN SHOWN)

LANDSCAPE DETAILS

LD-1

STATE OF CALIFORNIA - DEPARTMENT OF TRANSPORTATION
Caltrans® LANDSCAPE ARCHITECTURE
SENIOR LANDSCAPE ARCHITECT: JENNIFER TAIRA
CALCULATED-DESIGNED BY: BONGKOD LOHMONGKOL
CHECKED BY: GEORGE OLGUIN
REVISED BY
DATE REVISED

LAST REVISION 00-00-00
DATE PLOTTED => 01-SEP-2009
TIME PLOTTED => 10:26

Dist	COUNTY	ROUTE	POST MILES TOTAL PROJECT	SHEET No.	TOTAL SHEETS
07	LA	60,170	R4.4, R16.3,R19.8	53	68

George Olguin
LICENSED LANDSCAPE ARCHITECT

5-11-09
PLANS APPROVAL DATE

LICENSED LANDSCAPE ARCHITECT
GEORGE OLGUIN
NO. 4333
George Olguin
Signature
08-31-10
Renewal Date
10-10-08
Date
STATE OF CALIFORNIA

THE STATE OF CALIFORNIA OR ITS OFFICERS OR AGENTS SHALL NOT BE RESPONSIBLE FOR THE ACCURACY OR COMPLETENESS OF SCANNED COPIES OF THIS PLAN SHEET.

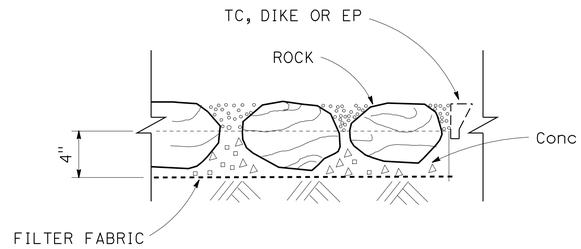

SECTION

ROCK BLANKET

NOTES:

1. EMBED ROCKS IN CONCRETE.
2. SET ROCKS LEVEL WITH CURB, DIKE OR EP.
3. MAINTAIN POSITIVE DRAINAGE FLOW.
4. DISTANCE BETWEEN ROCKS SHALL NOT EXCEED 0.5".

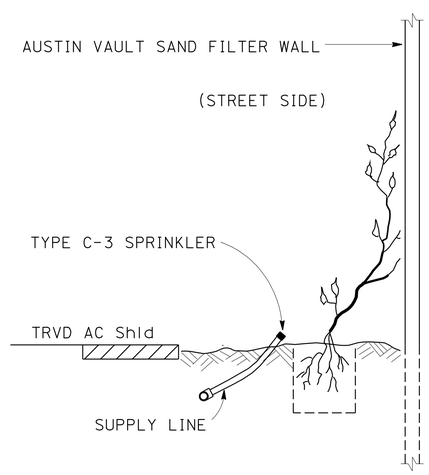

SECTION

VINE PLANTING

LANDSCAPE DETAILS

NO SCALE

LD-2

REVISED BY	
DATE REVISED	
CALCULATED-DESIGNED BY	BONGKOD LOHMONGKOL
CHECKED BY	GEORGE OLGUIN
SENIOR LANDSCAPE ARCHITECT	JENNIFER TAIRA

STATE OF CALIFORNIA - DEPARTMENT OF TRANSPORTATION
Caltrans LANDSCAPE ARCHITECTURE

LAST REVISION 00-00-00
DATE PLOTTED => 01-SEP-2009
TIME PLOTTED => 10:26

DIST	COUNTY	ROUTE	POST MILES TOTAL PROJECT	SHEET NO.	TOTAL SHEETS
07	LA	60,170	R4.4, R16.3,R19.8	54	68

REGISTERED CIVIL ENGINEER

November 17, 2006
PLANS APPROVAL DATE

REGISTERED PROFESSIONAL ENGINEER Dallas Forester No. C37765 Exp. 12-31-06 CIVIL STATE OF CALIFORNIA

The State of California or its officers or agents shall not be responsible for the accuracy or completeness of electronic copies of this plan sheet.

To accompany plans dated 5-11-09

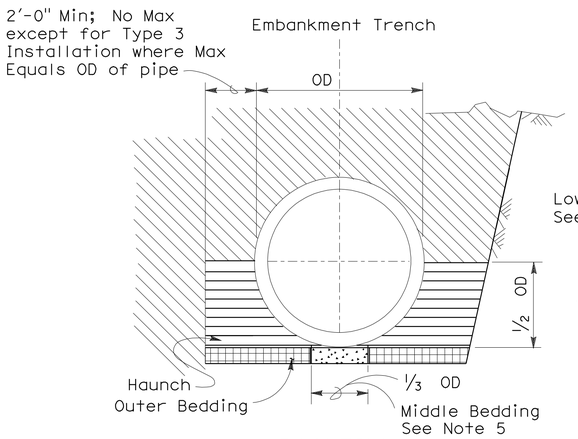

BACKFILL

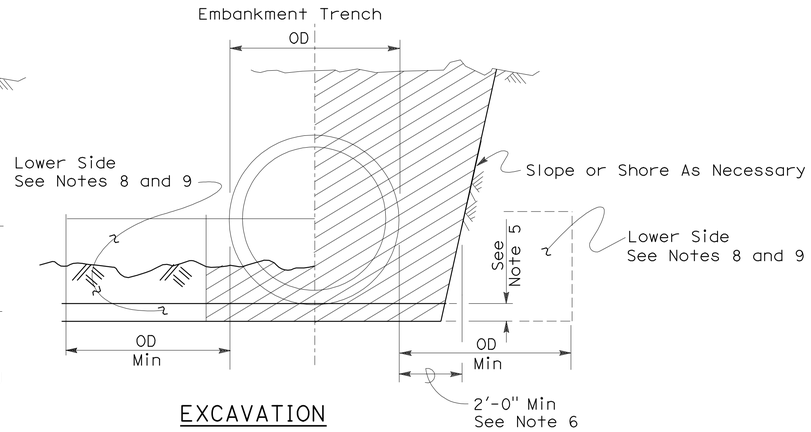

EXCAVATION

Roadway Embankment

Structure Backfill (Culvert) See Note 6

Structure Backfill (Culvert) See Note 6

Loose Backfill

Excavation Structure (Culvert)

TYPE 1 INSTALLATION:

The haunch and outer bedding shall be compacted to a minimum 90 percent relative compaction. In addition, the minimum sand equivalent in these areas shall be 30 and the maximum percentage passing the 75 μm sieve size shall be 12.

TYPE 2 INSTALLATION:

The haunch and outer bedding shall be compacted to a minimum 90 percent relative compaction. In addition, the minimum sand equivalent in these areas shall be 25.

TYPE 3 INSTALLATION:

The haunch and outer bedding shall be compacted to a minimum 85 percent relative compaction. 90 percent relative compaction will be required where the fill over the pipe is less than 4'-0" or 1/2 OD.

NOTES:

1. Unless otherwise shown on the plans or specified in the special provision, the Contractor shall have the option of selecting the class of RCP and the type of installation to be used, provided the height of cover does not exceed the value shown for the RCP selected.
   Example: 24" RCP culvert with maximum cover of 19'-0" the options are:
   a) Class III or stronger with Installation Type 1.
   b) Class III Special or stronger with Installation Type 2.
   c) Class IV Special or stronger with Installation Type 3.
   Cover is defined as the maximum vertical distance from top of the pipe to finished grade within the length of any given culvert.
2. The class of RCP and Installation Type selected shall be the same throughout the length of any given culvert.
3. The "length of any culvert" is defined as the culvert between:
   a) Successive drainage structure (inlets, junction boxes, headwalls, etc.).
   b) A drainage structure and the inlet or outlet end of the culvert.
   c) The inlet and outlet end of the culvert when there are no intervening drainage structures.
4. Oval and arch shaped RCP shall not be used.
5. 1/25 OD Min, not less than 3".
6. Slurry cement backfill may be substituted for backfill in the outer bedding and haunch areas. If slurry is used the outer and middle beddings shall be omitted. Prior to installation the soil under the middle 1/3 of the outside diameter of the pipe shall be softened by scarifying or other means to a minimum depth of 1/25 OD, but not less than 3". Where slurry cement backfill is used clear distance to trench wall may be reduced as set forth in Section 19-3.062 of the Standard Specifications.
7. Backfill shall be placed full width of excavation except where dimensions are shown for backfill width or thickness. Dimensions shown are minimums.
8. Lower side shall be suitable material as determined by the Engineer. Otherwise it shall be considered unsuitable as set forth in Section 19-2.02 of the Standard Specifications. See Note 9.
9. Where the pipe is placed in a trench, if the trench walls are sloped at 5 vertical to 1 horizontal or steeper for at least 90 percent of the trench height or up to not less than 12" from the grading plane, the firmness of the soil in the lower side need not be considered.
10. Non-reinforced precast concrete pipe sizes 3'-0" or smaller may be placed under installation Types 1, 2 or 3.

INSTALLATION TYPE 1

MINIMUM CLASS AND D-LOAD	COVER	
	108" Dia AND SMALLER	OVER 108" Dia
Class II 1000D	14.9'	12.9'
Class III 1350D	15.0' - 20.9'	13.0' - 18.9'
Class III Special 1700D	21.0' - 26.9'	19.0' - 24.9'
Class IV 2000D	27.0' - 31.9'	25.0' - 29.9'
Class IV Special 2500D	32.0' - 40.9'	30.0' - 38.9'
Class V 3000D	41.0' - 49.9'	39.0' - 46.9'
Class V Special 3600D	50.0' - 59.0'	47.0' - 58.0'

INSTALLATION TYPE 2

MINIMUM CLASS AND D-LOAD	COVER
Class II 1000D	9.9'
Class III 1350D	10.0'- 14.9'
Class III Special 1700D	15.0' - 19.9'
Class IV 2000D	20.0' - 24.9'
Class IV Special 2500D	25.0' - 31.9'
Class V 3000D	32.0' - 38.9'
Class V Special 3600D	39.0' - 47.0'

INSTALLATION TYPE 3

MINIMUM CLASS AND D-LOAD	COVER	
	48" Dia AND SMALLER	OVER 48" Dia
Class II 1000D	7.9'	5.9'
Class III 1350D	8.0' - 10.9'	6.0' - 8.9'
Class III Special 1700D	11.0' - 14.9'	9.0' - 12.9'
Class IV 2000D	15.0' - 17.9'	13.0' - 15.9'
Class IV Special 2500D	18.0' - 21.9'	16.0' - 19.9'
Class V 3000D	22.0' - 26.9'	20.0' - 24.9'
Class V Special 3600D	30.0' - 33.0'	25.0' - 31.0'

STATE OF CALIFORNIA
DEPARTMENT OF TRANSPORTATION

EXCAVATION AND BACKFILL CONCRETE PIPE CULVERTS

NO SCALE

RSP A62DA DATED NOVEMBER 17, 2006 SUPERSEDES STANDARD PLAN A62DA DATED MAY 1, 2006 - PAGE 20 OF THE STANDARD PLANS BOOK DATED MAY 2006.

REVISED STANDARD PLAN RSP A62DA

2006 REVISED STANDARD PLAN RSP A62DA

10-26-06

DIST	COUNTY	ROUTE	POST MILES TOTAL PROJECT	SHEET NO.	TOTAL SHEETS
07	LA	60,170	R4.4, R16.3,R19.8	55	68

Randell D. Hiatt
REGISTERED CIVIL ENGINEER

June 6, 2008
PLANS APPROVAL DATE

REGISTERED PROFESSIONAL ENGINEER
Randell D. Hiatt
No. C50200
Exp. 6-30-09
CIVIL
STATE OF CALIFORNIA

The State of California or its officers or agents shall not be responsible for the accuracy or completeness of electronic copies of this plan sheet.

To accompany plans dated 5-11-09

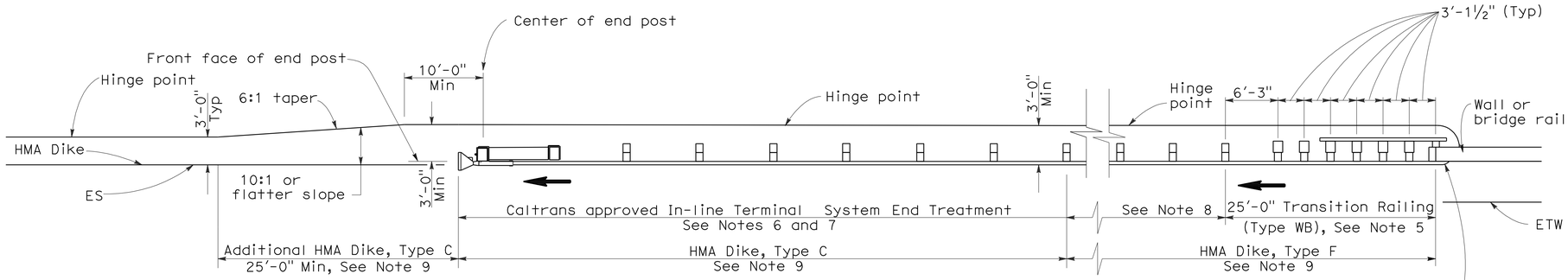

TYPE 12AA LAYOUT

(GUARD RAILING INSTALLATION AT STRUCTURE DEPARTURE WITH AN IN-LINE END TREATMENT AT TRAILING END OF RAILING)
See Notes 9 and 10

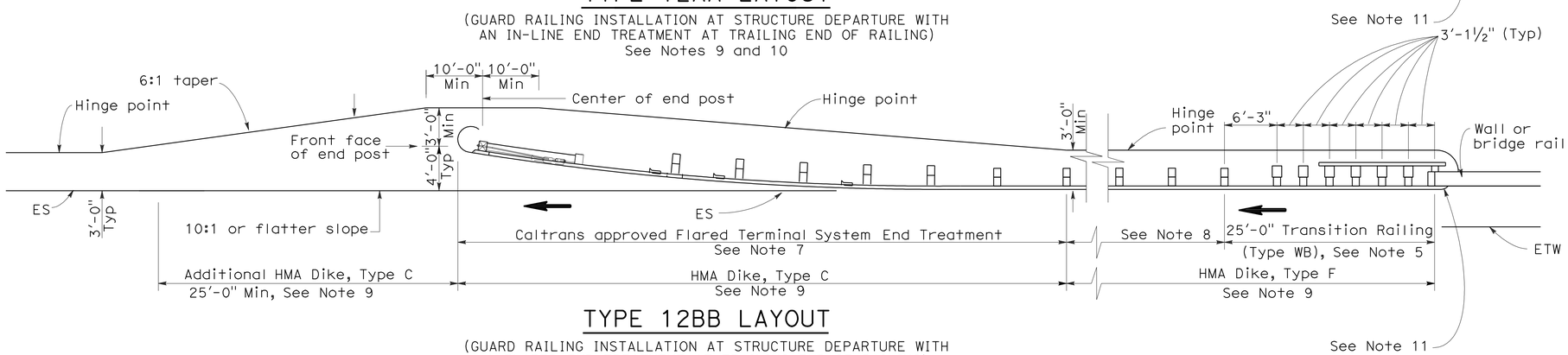

TYPE 12BB LAYOUT

(GUARD RAILING INSTALLATION AT STRUCTURE DEPARTURE WITH A FLARED END TREATMENT AT TRAILING END OF RAILING)
See Notes 9 and 10

NOTES:

1. Line post, blocks and hardware to be used are shown on Standard Plans A77A1, A77A2, A77B1, A77C1 and A77C2.
2. Guard rail post spacing to be 6'-3" center to center, except as otherwise noted.
3. Except as noted, line posts are 6" x 8" x 6'-0" wood with 6" x 8" x 1'-2" wood blocks. W6 x 9 steel posts, 6'-0" in length, with 6" x 8" x 1-2" notched wood blocks or notched recycled plastic blocks may be used for 6" x 8" x 6'-0" wood posts with 6" x 8" x 1'-2" wood blocks where applicable and when specified.
4. Direction of adjacent traffic indicated by ➡.
5. For Transition Railing (Type WB) details for Types 12AA and 12BB Layouts, see Standard Plan A77J4.
6. In-line Terminal System Treatments are used where site conditions will not accommodate a flared end treatment.
7. The type of terminal system to be used will be shown on the Project Plans.
8. Dependent on site conditions (embankment height, side slopes, other fixed objects), it may be advisable to construct additional guard railing (a length equal to multiples of 12'-6" with 6'-3" post spacing) between the transition railing and end treatments.
9. Where placement of dike is required with guard railing installations, see Revised Standard Plan RSP A77C4 for dike positioning details.
10. Type 12AA or Type 12BB Layouts are typically used to the right of traffic departing a structure on two-way conventional highways where the roadbed width across the structure is less than 40 feet.
11. For additional details of typical connections to bridge rail, see Connection Detail CC on Revised Standard Plan RSP A77J2 and Connection Detail HH on Standard Plans A77k2.

STATE OF CALIFORNIA
DEPARTMENT OF TRANSPORTATION

METAL BEAM GUARD RAILING TYPICAL LAYOUTS FOR STRUCTURE DEPARTURE

NO SCALE

RSP A77F4 DATED JUNE 6, 2008 SUPERSEDES STANDARD PLAN A77F4
DATED MAY 1, 2006 - PAGE 57 OF THE STANDARD PLANS BOOK DATED MAY 2006.

REVISED STANDARD PLAN RSP A77F4

2006 REVISED STANDARD PLAN RSP A77F4

12-10-07

DIST	COUNTY	ROUTE	POST MILES TOTAL PROJECT	SHEET NO.	TOTAL SHEETS
07	LA	60,170	R4.4, R16.3,R19.8	56	68

Randell D. Hiatt
REGISTERED CIVIL ENGINEER

June 6, 2008
PLANS APPROVAL DATE

REGISTERED PROFESSIONAL ENGINEER
Randell D. Hiatt
No. C50200
Exp. 6-30-09
CIVIL
STATE OF CALIFORNIA

The State of California or its officers or agents shall not be responsible for the accuracy or completeness of electronic copies of this plan sheet.

To accompany plans dated 5-11-09

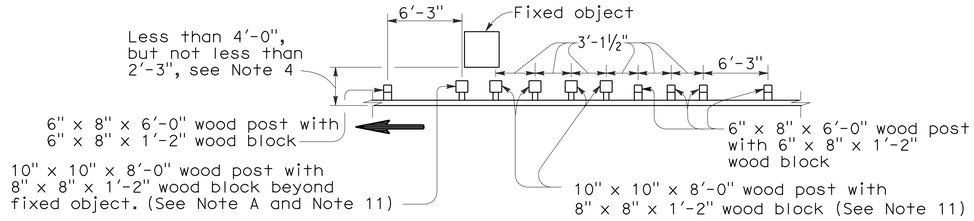

Note A. For a series of fixed objects (bridge columns, overhead sign supports, etc.) additional 10" x 10" x 8'-0" wood post with 8" x 8" x 1'-2" wood blocks at 3'-1½" center to center spacing are to be used between fixed object(s).

STRENGTHENED RAILING SECTIONS FOR FIXED OBJECT

Use strengthened railing sections with Layout Type 16H where minimum clearance between the face of the guard railing and fixed object(s) is less than 4'-0", but not less than 2'-3". See Note 4.

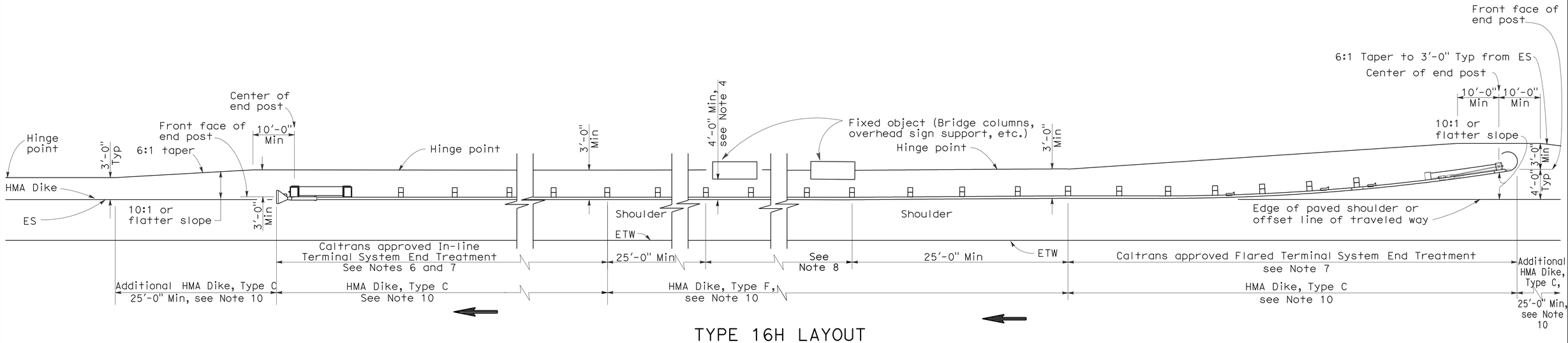

TYPE 16H LAYOUT

(GUARD RAILING INSTALLATION AT ROADSIDE FIXED OBJECT OR OBJECTS WITH A FLARED END TREATMENT AND AN IN-LINE TREATMENT AT THE ENDS OF RAILING)
See Note 9

NOTES:

1. Line post, blocks and hardware to be used are shown on Standard Plans A77A1, A77A2, A77B1, A77C1 and A77C2.
2. Guard railing post spacing to be 6'-3" center to center, except as otherwise noted.
3. Except as noted, line posts are 6" x 8" x 6'-0" wood with 6" x 8" x 1'-2" wood blocks. W6 x 9 steel posts, 6'-0" in length, with 6" x 8" x 1'-2" notched wood blocks or notched recycled plastic blocks may be used for 6" x 8" x 6'-0" wood posts with 6" x 8" x 1'-2" wood blocks where applicable and when specified.
4. A 4'-0" minimum clearance is required between the face of the railing and the face of a fixed object located directly behind standard guard railing sections with post spacing at 6'-3". Construct guard railing as shown in the detail "Strengthened Railing Sections for Fixed Objects" on this plan, where the clearance between the face of the railing and the face of a fixed object is less than 4'-0", but not less than 2'-3". Where the clearance is less than 2'-3", a concrete wall or barrier should be constructed to shield the fixed object(s).
5. Direction of adjacent traffic indicated by ⟶ .
6. In-line Terminal System End Treatments are used where site conditions will not accommodate a flared end treatment.
7. The type of terminal system to be used will be shown on the Project Plans.
8. As site conditions dictate, construct additional guard railing to shield fixed object(s). Additional guard railing length equal to multiples of 12'-6". Post spacing at 6'-3", except as specified in Note 4.
9. Layout Types 16D through 16L, shown on the A77G Series of Revised Standard PLans, typically used where guard railing is recommended to shield roadside fixed object(s) and a crashworthy end treatment is required for both directions of traffic.
10. Where placement of dike is required with guard railing, see Revised Standard Plan RSP A77C4 for dike positioning details.
11. W6 x 15 steel post, 8'-0" in length, with 8" x 8" x 1'-2" notched wood block or notched recycled plastic blocks may be used in place of the 10" x 10" x 8'-0" wood post with 8" x 8" x 1'-2" wood block shown in the "Strengthened Railing Sections Detail".

STATE OF CALIFORNIA
DEPARTMENT OF TRANSPORTATION

METAL BEAM GUARD RAILING TYPICAL LAYOUTS FOR ROADSIDE FIXED OBJECTS

NO SCALE

RSP A77G6 DATED JUNE 6, 2008 SUPERSEDES STANDARD PLAN A77G6
DATED MAY 1, 2006 - PAGE 64 OF THE STANDARD PLANS BOOK DATED MAY 2006.

REVISED STANDARD PLAN RSP A77G6

2006 REVISED STANDARD PLAN RSP A77G6

12-10-07

DIST	COUNTY	ROUTE	POST MILES TOTAL PROJECT	SHEET NO.	TOTAL SHEETS
07	LA	60,170	R4.4, R16.3,R19.8	57	68

Randell D. Hiatt
REGISTERED CIVIL ENGINEER

June 6, 2008
PLANS APPROVAL DATE

REGISTERED PROFESSIONAL ENGINEER Randell D. Hiatt No. C50200 Exp. 6-30-09 CIVIL STATE OF CALIFORNIA

The State of California or its officers or agents shall not be responsible for the accuracy or completeness of electronic copies of this plan sheet.

To accompany plans dated 5-11-09

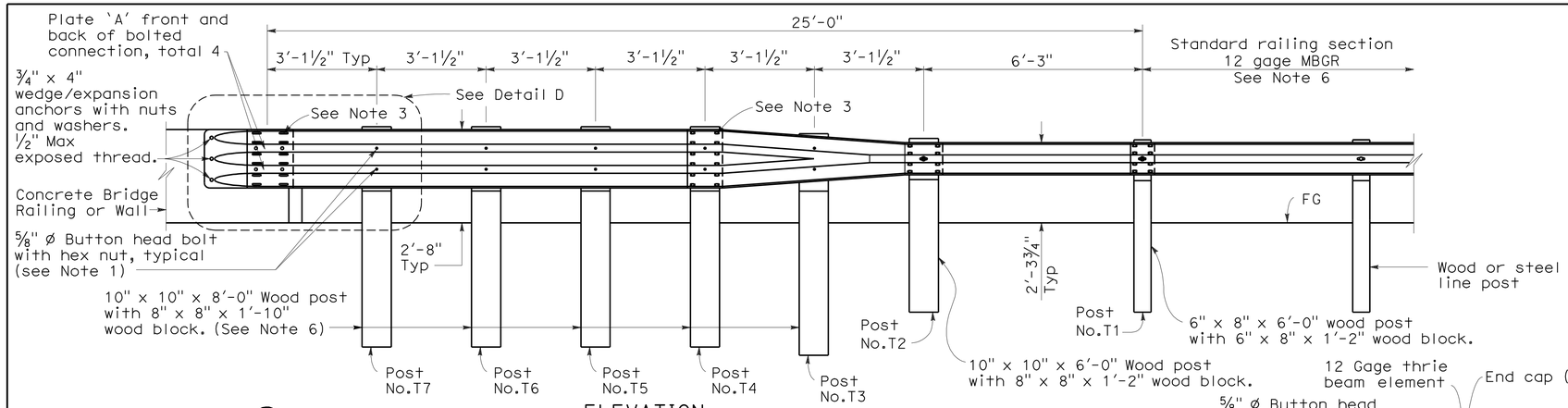

ELEVATION

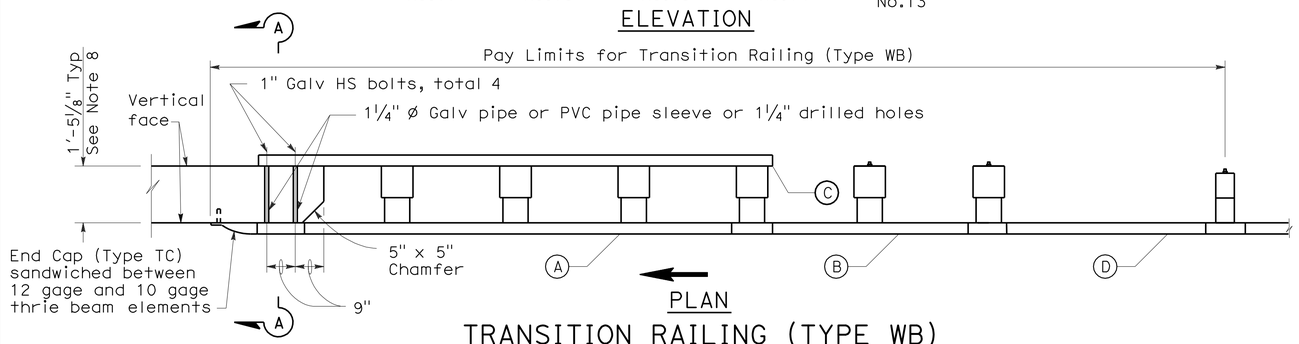

PLAN

TRANSITION RAILING (TYPE WB)

(No Blockout Attachment)

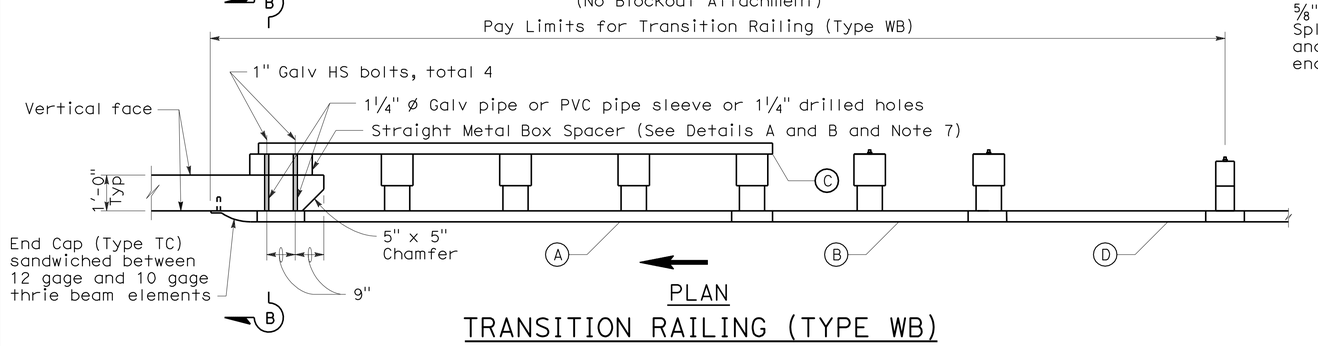

PLAN

TRANSITION RAILING (TYPE WB)

(Blockout Attachment)

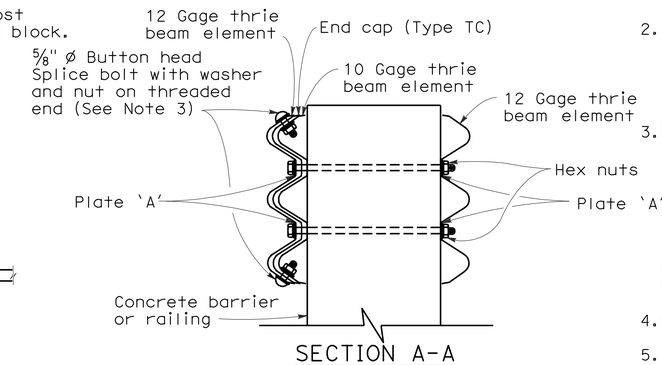

SECTION A-A

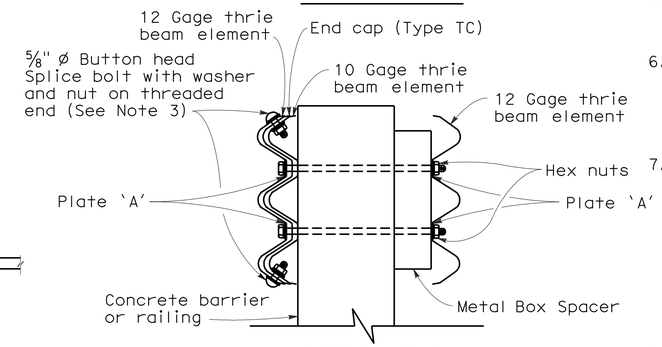

SECTION B-B

NOTES:

1. Use ⅝" Ø Button head bolts and hex nuts for connections to posts. No washer on rail face for bolted connections to post.
2. The nested rail elements, end cap, and 'W' beam to thrie beam element may be spliced together prior to bolting the elements to the wood post and concrete barrier or railing.
3. Exterior splice bolt holes for rail element splices at Post No.T4 and the connection to the concrete barrier or railing shall be the standard 29/32" x 1⅛" slot size. Interior splice bolt holes at these locations may be increased up to 1¼" Ø. Only the top 2 and the bottom 2 splice bolts with washers and nuts are required for rail splices at Post No.T4 and the connection to the concrete barrier or railing.
4. Direction of adjacent traffic indicated by →.
5. The top elevation of Post Nos.T2 through T7 shall not project more than 1" above the top elevation of the rail element.
6. Typically, the railing connected to Transition Railing (Type WB) will be either standard railing section of metal beam guard railing or an approved Caltrans end treatment attached to Post No.T1.
7. The depth of the metal box spacer varies from the 5⅛" to 1½" and is dependent on the width of the concrete railing or wall. The combined dimension for the depth of the metal box spacer plus the width of railing or wall is typically 17⅛". Where the space between the backside of the concrete railing or wall and the rear thrie beam element is less than 1½", metal plates similar to Plate 'A' are to be used as spacers.
8. Where the width of the concrete railing or wall is greater than 17⅛", wood blocks are to be used to fill the space created between the backside of Posts No.4 through No.7 and the rear thrie beam element. These wood blocks shall be 8" in width and 1'-2" in length. The dimension between the front thrie beam element and the rear thrie beam element is to match the width of the concrete railing or wall.

LEGEND

(A) Nested thrie beam elements (one 12 gage element nested over one 10 gage element).

(B) One 10 gage "W" beam to thrie beam element.

(C) One 12 gage thrie beam element.

(D) One 10 gage "W" beam rail element (7'-3½" length)

10 gage = 0.135" thick

12 gage = 0.108" thick

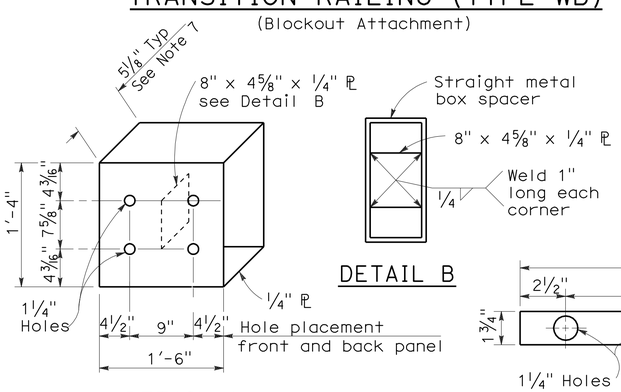

DETAIL A

STRAIGHT METAL BOX SPACER

DETAIL B

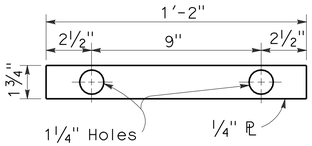

DETAIL C

PLATE 'A'

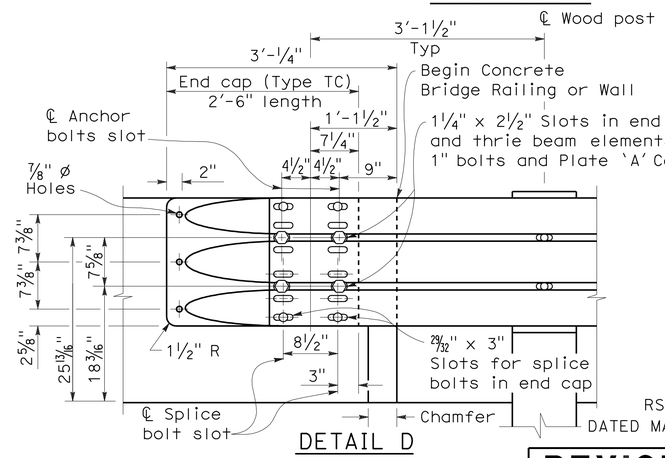

DETAIL D

STATE OF CALIFORNIA
DEPARTMENT OF TRANSPORTATION

METAL BEAM GUARD RAILING TRANSITION RAILING (TYPE WB)

NO SCALE

RSP A77J4 DATED JUNE 6, 2008 SUPERSEDES STANDARD PLAN A77J4 DATED MAY 1, 2006 - PAGE 75 OF THE STANDARD PLANS BOOK DATED MAY 2006.

REVISED STANDARD PLAN RSP A77J4

2006 REVISED STANDARD PLAN RSP A77J4

4-21-08

DIST	COUNTY	ROUTE	POST MILES TOTAL PROJECT	SHEET NO.	TOTAL SHEETS
07	LA	60,170	R4.4, R16.3,R19.8	58	68

REGISTERED CIVIL ENGINEER

November 17, 2006
PLANS APPROVAL DATE

REGISTERED PROFESSIONAL ENGINEER Michael Janzen No. 44788 Exp. 03-31-08 CIVIL STATE OF CALIFORNIA

The State of California or its officers or agents shall not be responsible for the accuracy or completeness of electronic copies of this plan sheet.

To accompany plans dated 5-11-09

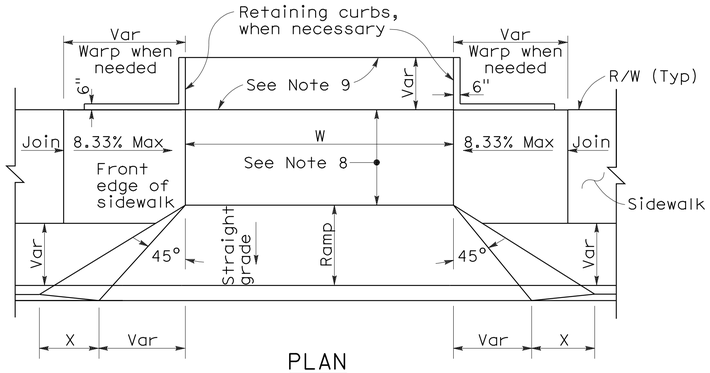

PLAN

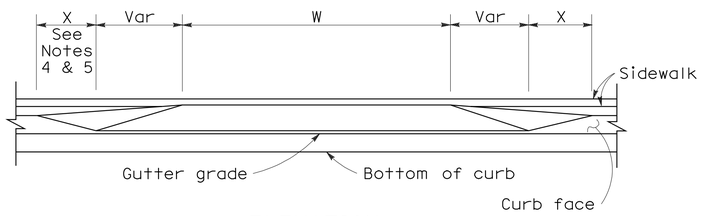

ELEVATION

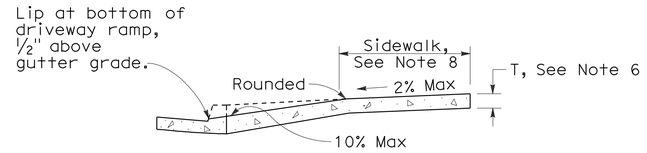

CASE A

Typical driveway, sidewalk not depressed

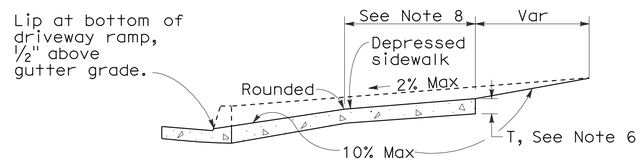

CASE B

Driveway with depressed sidewalk

SECTIONS

DRIVEWAYS

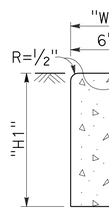

TYPE A1 CURBS

See Table A

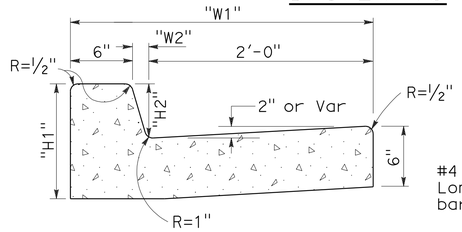

TYPE A2 CURBS

See Table A

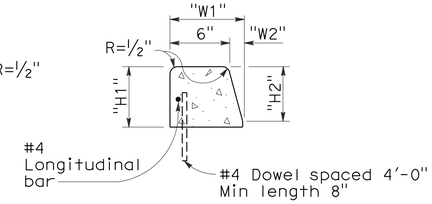

TYPE A3 CURBS

Superimposed on existing pavement
See Table A

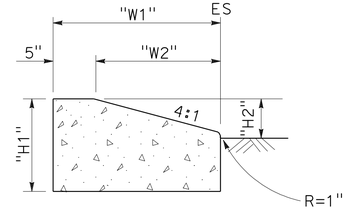

TYPE D CURBS

See Table A

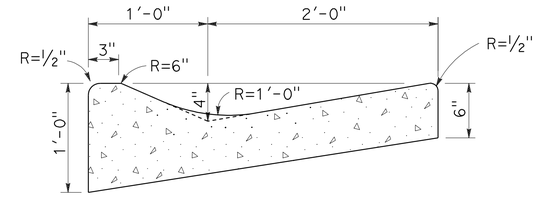

TYPE E CURB

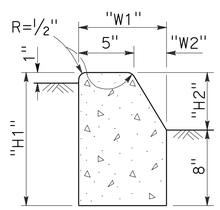

TYPE B1 CURBS

See Table A

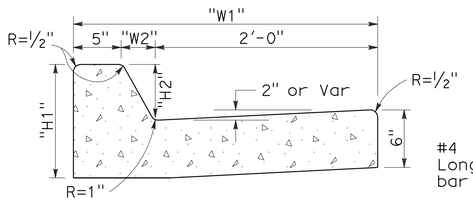

TYPE B2 CURBS

See Table A

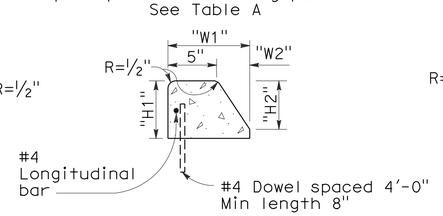

TYPE B3 CURBS

Superimposed on existing pavement
See Table A

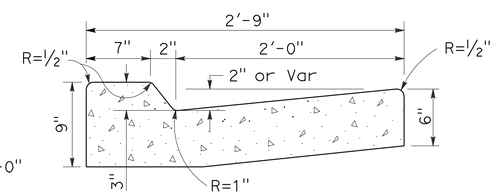

TYPE B4 CURBS

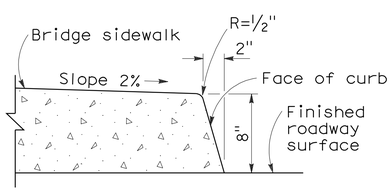

TYPE H CURB

On Bridges

CURBS

CURB QUANTITIES

TYPE	CUBIC YARDS PER LINEAR FOOT
A1-6	0.02585
A1-8	0.03084
A2-6	0.05903
A2-8	0.06379
A3-6	0.01036
A3-8	0.01435
B1-4	0.02185
B1-6	0.02930
B2-4	0.05515
B2-6	0.06171
B3-4	0.00641
B3-6	0.01074
B4	0.05709
D-4	0.04083
D-6	0.06804
E	0.06661

TABLE A

CURB TYPE	DIMENSIONS "H1"	"H2"	"W1"	"W2"
A1-6	1'-2"	6"	7½"	1½"
A1-8	1'-4"	8"	8"	2"
A2-6	1'-0"	6"	2'-7½"	1½"
A2-8	1'-2"	8"	2'-8"	2"
A3-6	6"	5"	7¼"	1¼"
A3-8	8"	7"	7¾"	1¾"
B1-4	1'-0"	4"	7½"	2½"
B1-6	1'-2"	6"	9"	4"
B2-4	10"	4"	2'-7½"	2½"
B2-6	1'-0"	6"	2'-9"	4"
B3-4	4"	3"	7"	2"
B3-6	6"	5"	8½"	3½"
D-4	10"	4"	1'-6"	1'-1"
D-6	1'-0"	6"	2'-2"	1'-8"

NOTES:

1. Case A driveway section typically applies.
2. Use Case B driveway section when ramp slopes would exceed 10% in Case A.
3. Use Case B driveway section when sidewalk cross slope would exceed 2% in Case A.
4. X=3'-0" except for curb heights over 10" where 4:1 slopes shall be used on curb slope.
5. X is a variable when sidewalk is located where wheelchairs may traverse the surface. Slopes shall not exceed 8.33%.
6. Sidewalk and ramp thickness "T" at driveway shall be 4" for residental and 6" for commercial.
7. Difference in slope of the driveway ramp and the slope of a line between the gutter and a point on the roadway 5'-0" from gutter line shall not exceed 15%. Reduce driveway ramp slope, not gutter slope, where required.
8. Minimum width of clear passageway for sidewalk shall be 4'-0".
9. Retaining curbs and acquisition of construction easement may be necessary for narrow sidewalks or curb heights in excess of 6".
10. Across the pedestrian route at curb ramp locations, the gutter pan slope shall not exceed 1" of depth for each 2'-0" of width.

STATE OF CALIFORNIA
DEPARTMENT OF TRANSPORTATION

CURBS AND DRIVEWAYS

NO SCALE

RSP A87A DATED NOVEMBER 17, 2006 SUPERSEDES STANDARD PLAN A87A DATED MAY 1, 2006 - PAGE 113 OF THE STANDARD PLANS BOOK DATED MAY 2006.

REVISED STANDARD PLAN RSP A87A

2006 REVISED STANDARD PLAN RSP A87A

10-25-06

DIST	COUNTY	ROUTE	POST MILES TOTAL PROJECT	SHEET NO.	TOTAL SHEETS
07	LA	60,170	R4.4, R16.3,R19.8	59	68

William K. Farnbach
REGISTERED CIVIL ENGINEER

November 17, 2006
PLANS APPROVAL DATE

REGISTERED PROFESSIONAL ENGINEER
William K. Farnbach
No. C49042
Exp. 9-30-08
CIVIL
STATE OF CALIFORNIA

The State of California or its officers or agents shall not be responsible for the accuracy or completeness of electronic copies of this plan sheet.

To accompany plans dated 5-11-09

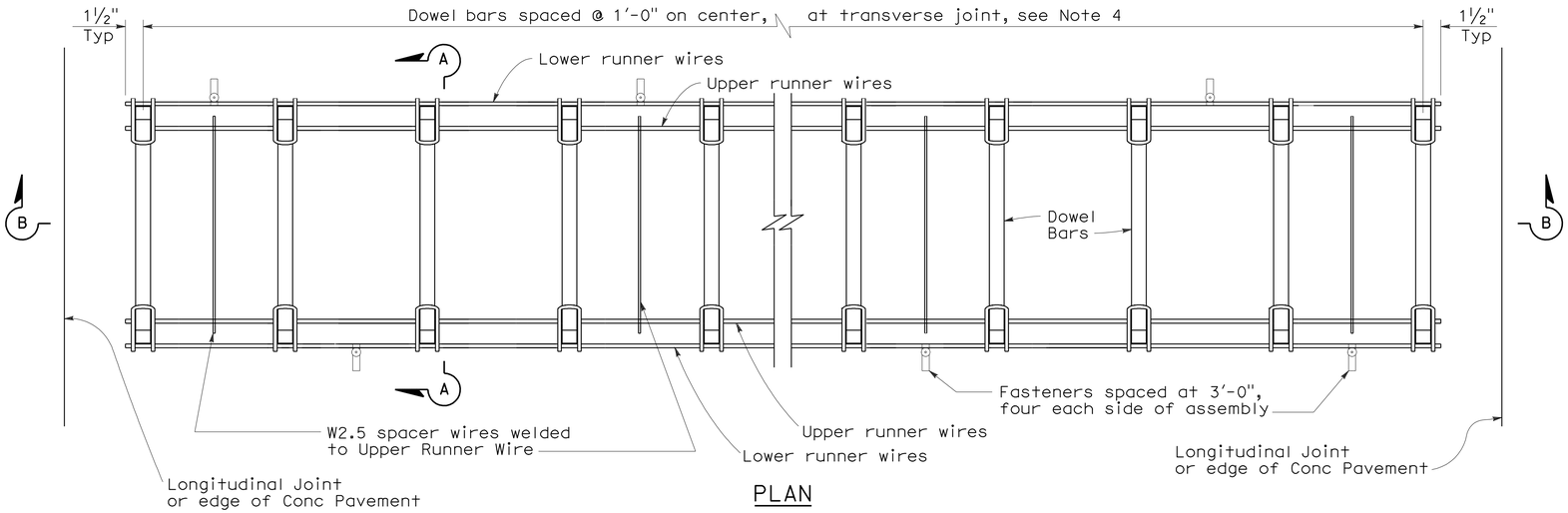

PLAN

DOWEL BAR BASKET (TRANSVERSE JOINT)

See Note 1

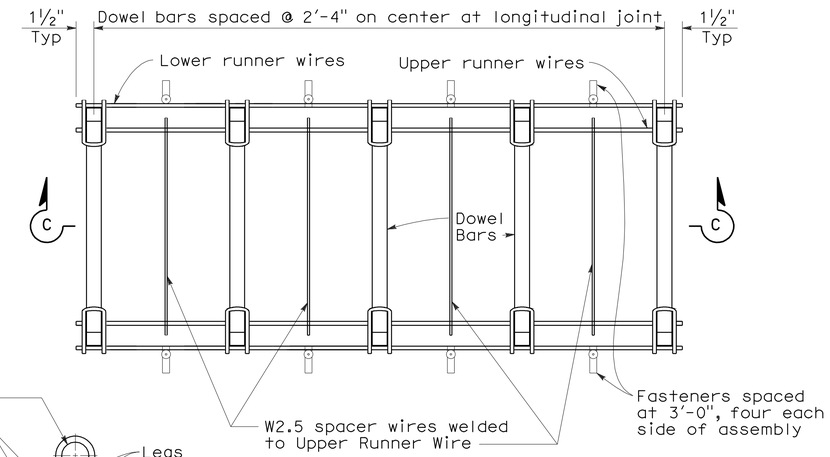

PLAN

DOWEL BAR BASKET (LONGITUDINAL JOINT)

See Note 1

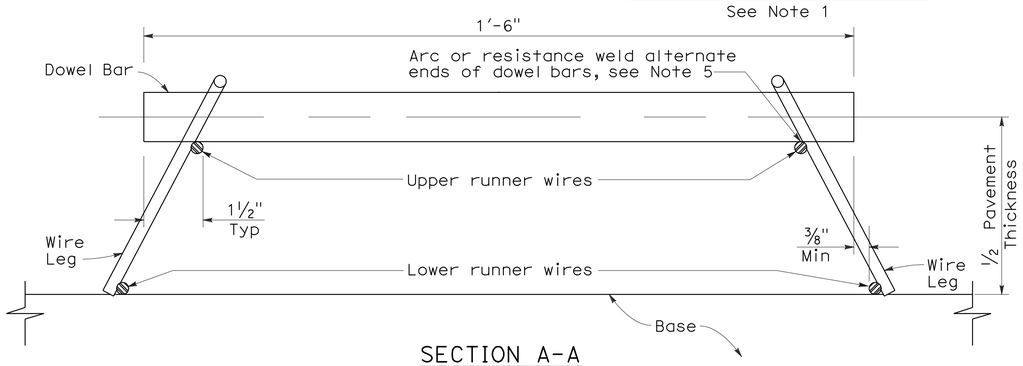

SECTION A-A

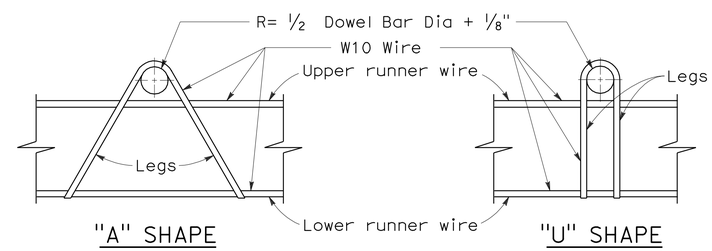

ASSEMBLY FRAME DETAILS

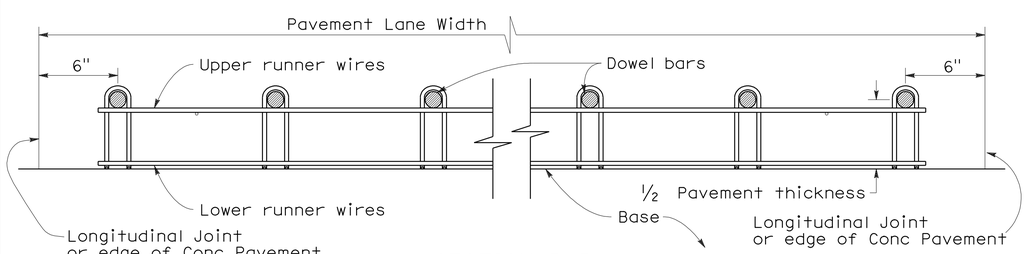

SECTION B-B

See Note 1

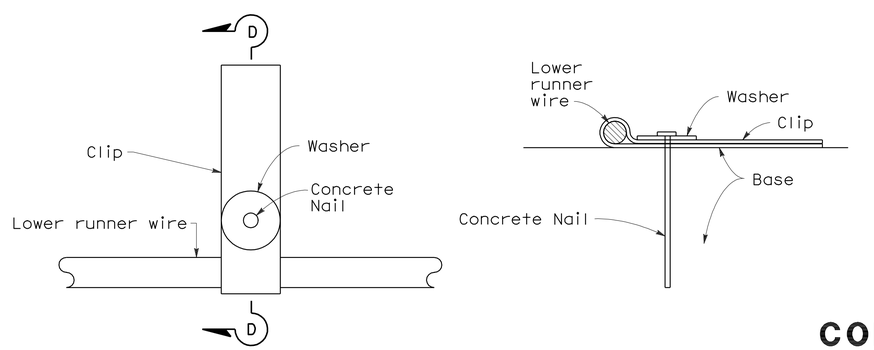

PLAN

SECTION D-D

FASTENER DETAIL

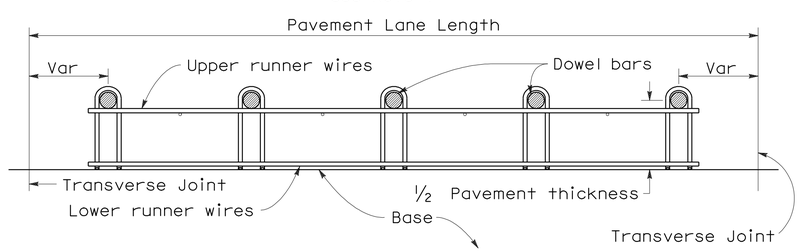

SECTION C-C

See Notes 1 and 4

NOTES:

1. "U" frame shape assembly shown. "U" frame shape or "A" frame shape are acceptable.
2. Wire sizes shown are minimum required.
3. All wire intersections are to be resistance welded.
4. Use tie bar spacing for longitudinal dowel bar locations. See Std Plans P1 and P2, and Revised Std Plan RSP P3 for tie bar requirements.
5. Weld may be at top or bottom of dowel bar.

STATE OF CALIFORNIA
DEPARTMENT OF TRANSPORTATION

CONCRETE PAVEMENT-DOWEL BAR BASKET DETAILS

NO SCALE

RSP P12 DATED NOVEMBER 17, 2006 SUPERSEDES STANDARD PLAN P12 DATED MAY 1, 2006 - PAGE 125 OF THE STANDARD PLANS BOOK DATED MAY 2006.

REVISED STANDARD PLAN RSP P12

2006 REVISED STANDARD PLAN RSP P12

10-24-06

DIST	COUNTY	ROUTE	POST MILES TOTAL PROJECT	SHEET NO.	TOTAL SHEETS
07	LA	60,170	R4.4, R16.3,R19.8	60	68

William K. Farnbach
REGISTERED CIVIL ENGINEER

November 17, 2006
PLANS APPROVAL DATE

REGISTERED PROFESSIONAL ENGINEER
William K. Farnbach
No. C49042
Exp. 9-30-08
CIVIL
STATE OF CALIFORNIA

The State of California or its officers or agents shall not be responsible for the accuracy or completeness of electronic copies of this plan sheet.

To accompany plans dated 5-11-09

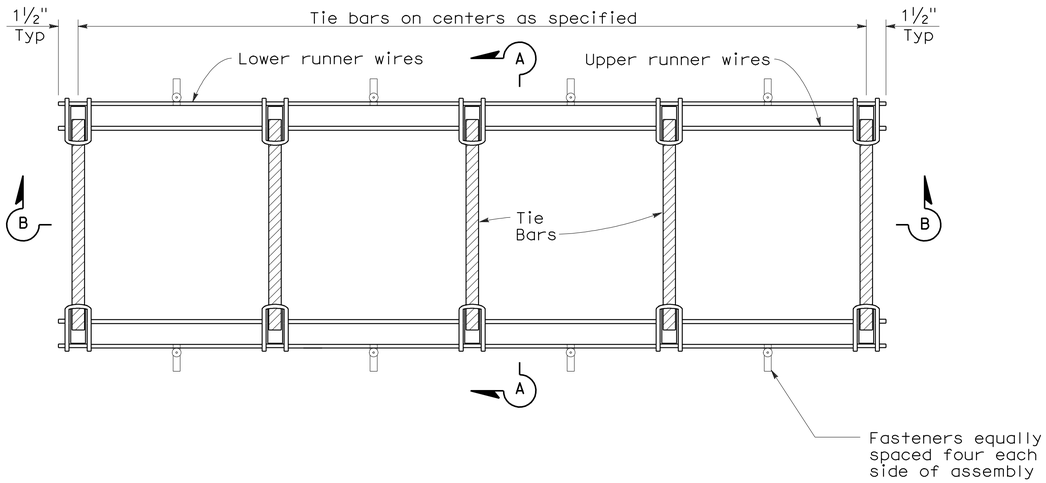

PLAN

TIE BAR BASKET

(TIE BARS AT LONGITUDINAL JOINT)
See Note 1

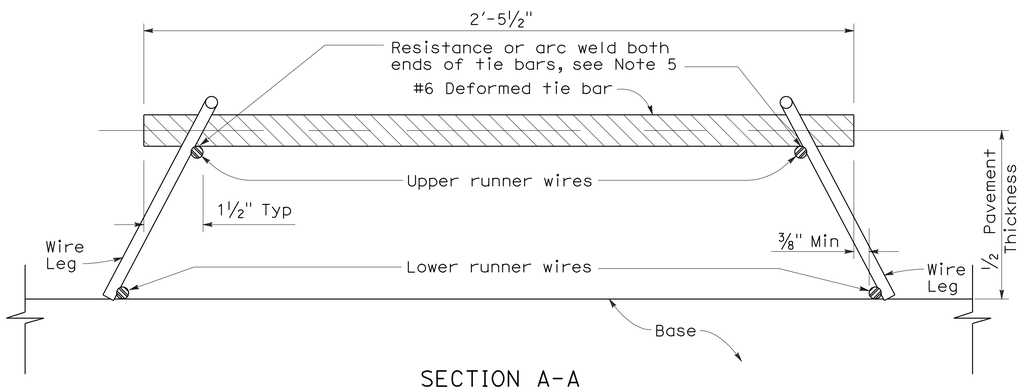

SECTION A-A

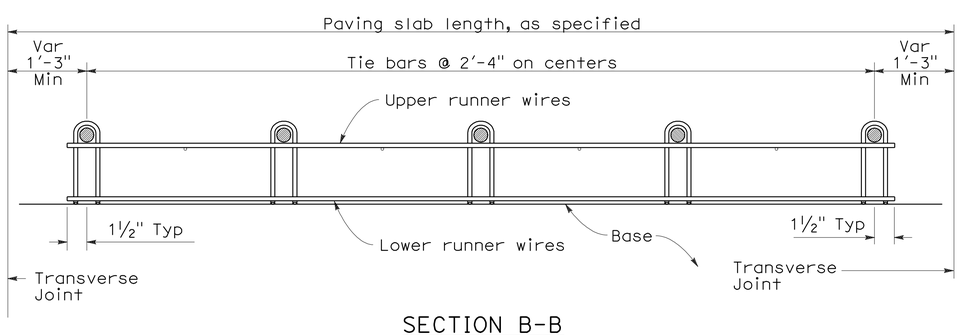

SECTION B-B
See Note 1

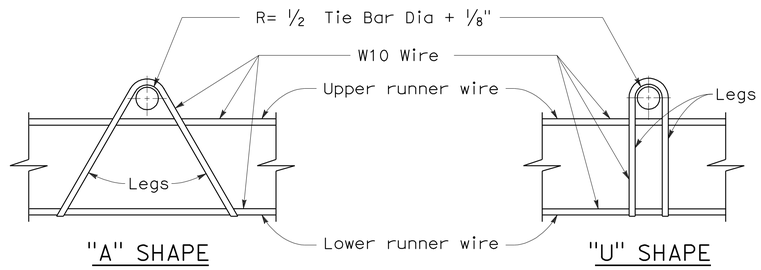

ASSEMBLY FRAME DETAILS

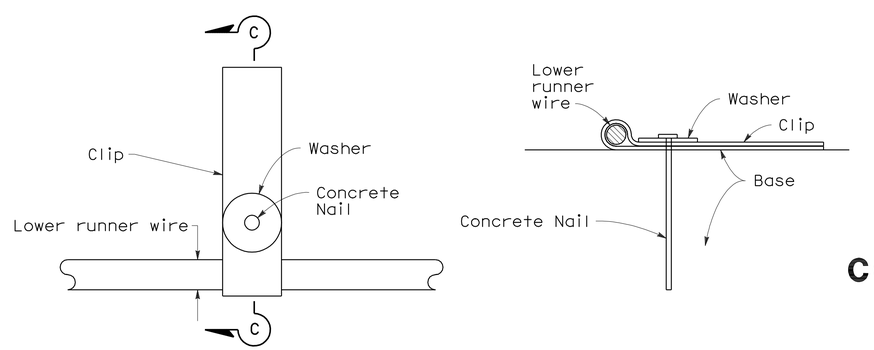

PLAN

SECTION C-C

FASTENER DETAIL

NOTES:

1. "U" frame shape assembly shown. "U" frame shape or "A" frame shape are acceptable.
2. Wire sizes shown are minimum required.
3. All wire intersections are to be resistance welded.
4. Not for use on nondoweled skewed jointed plain concrete pavement.
5. Weld may be at top or bottom of tie bar.

STATE OF CALIFORNIA
DEPARTMENT OF TRANSPORTATION

CONCRETE PAVEMENT-TIE BAR BASKET DETAILS

NO SCALE

RSP P17 DATED NOVEMBER 17, 2006 SUPERSEDES STANDARD PLAN P17
DATED MAY 1, 2006 - PAGE 126 OF THE STANDARD PLANS BOOK DATED MAY 2006.

REVISED STANDARD PLAN RSP P17

2006 REVISED STANDARD PLAN RSP P17

8-3-06

DIST	COUNTY	ROUTE	POST MILES TOTAL PROJECT	SHEET NO.	TOTAL SHEETS
07	LA	60,170	R4.4, R16.3,R19.8	61	68

Randell D. Hiatt
REGISTERED CIVIL ENGINEER

June 6, 2008
PLANS APPROVAL DATE

REGISTERED PROFESSIONAL ENGINEER
Randell D. Hiatt
No. C50200
Exp. 6-30-09
CIVIL
STATE OF CALIFORNIA

The State of California or its officers or agents shall not be responsible for the accuracy or completeness of electronic copies of this plan sheet.

To accompany plans dated 5-11-09

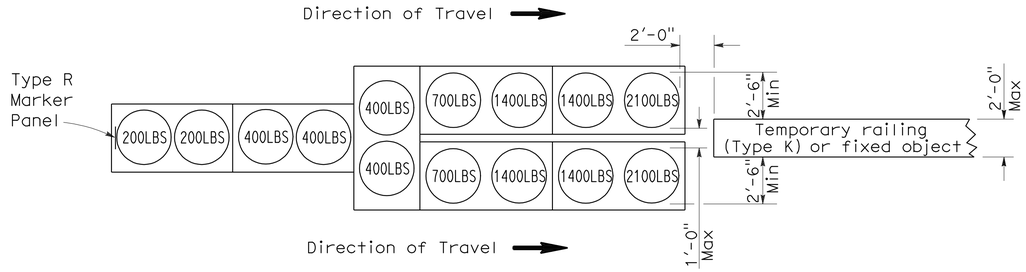

ARRAY 'TU14'

Approach speed 45 mph or more

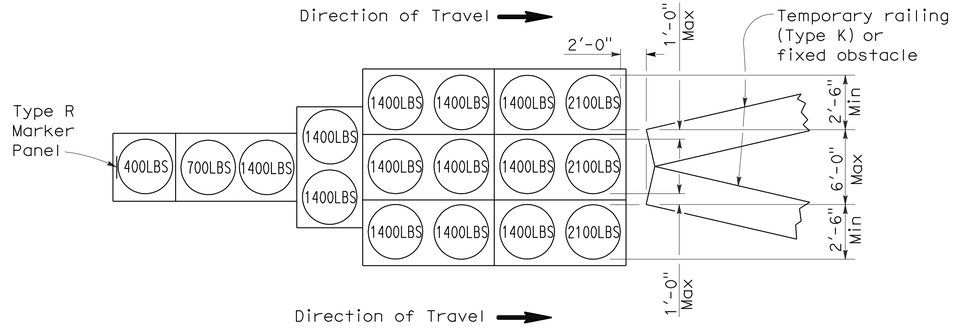

ARRAY 'TU17'

Approach speed less than 45 mph

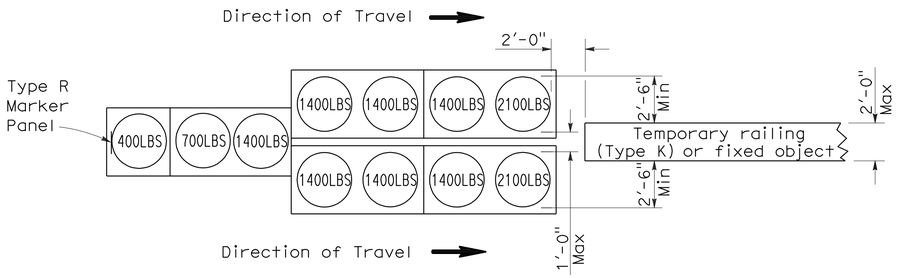

ARRAY 'TU11'

Approach speed less than 45 mph

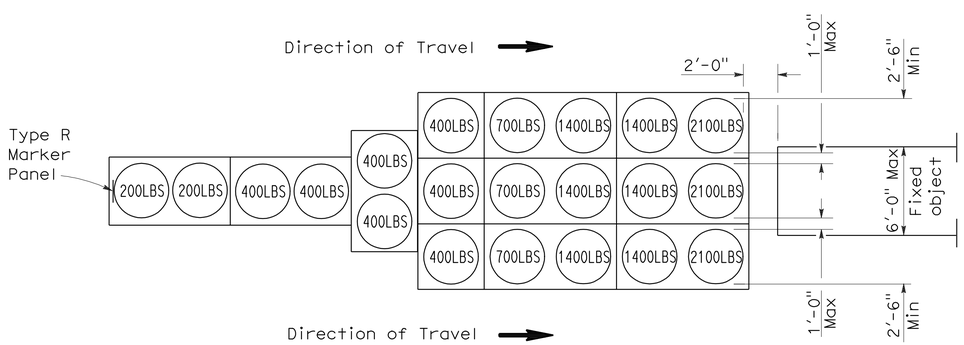

ARRAY 'TU21'

Approach speed 45 mph or more

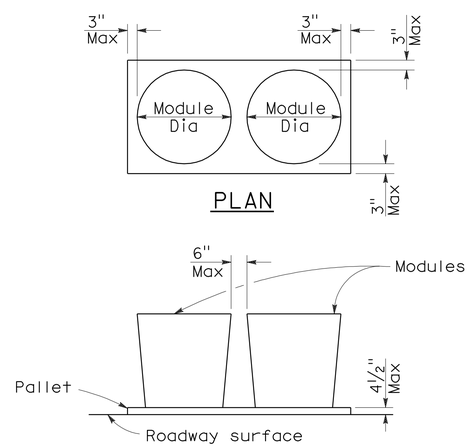

ELEVATION

CRASH CUSHION PALLET DETAIL

See Note 7

NOTES:

1. (XXX) Indicates sand filled module location and weight of sand in pounds for each module. Module spacing is based on the greater diameter of the module.
2. All sand weights are nominal.
3. Temporary crash cushion arrays shall not encroach on the traveled way.
4. Place the top of Type R marker panel 1" below the module lid.
5. Refer to Standard Plan A73B for marker details.
6. Approach speeds indicated conform to NCHRP 350 Report criteria.
7. Use of pallets is optional.

STATE OF CALIFORNIA
DEPARTMENT OF TRANSPORTATION

TEMPORARY CRASH CUSHION, SAND FILLED (UNIDIRECTIONAL)

NO SCALE

RSP T1A DATED JUNE 6, 2008 SUPERSEDES STANDARD PLAN T1A
DATED MAY 1, 2006 - PAGE 211 OF THE STANDARD PLANS BOOK DATED MAY 2006.

REVISED STANDARD PLAN RSP T1A

2006 REVISED STANDARD PLAN RSP T1A

5-15-08

DIST	COUNTY	ROUTE	POST MILES TOTAL PROJECT	SHEET NO.	TOTAL SHEETS
07	LA	60,170	R4.4, R16.3,R19.8	62	68

Randell D. Hiatt
REGISTERED CIVIL ENGINEER

June 6, 2008
PLANS APPROVAL DATE

REGISTERED PROFESSIONAL ENGINEER
Randell D. Hiatt
No. C50200
Exp. 6-30-09
CIVIL
STATE OF CALIFORNIA

The State of California or its officers or agents shall not be responsible for the accuracy or completeness of electronic copies of this plan sheet.

To accompany plans dated 5-11-09

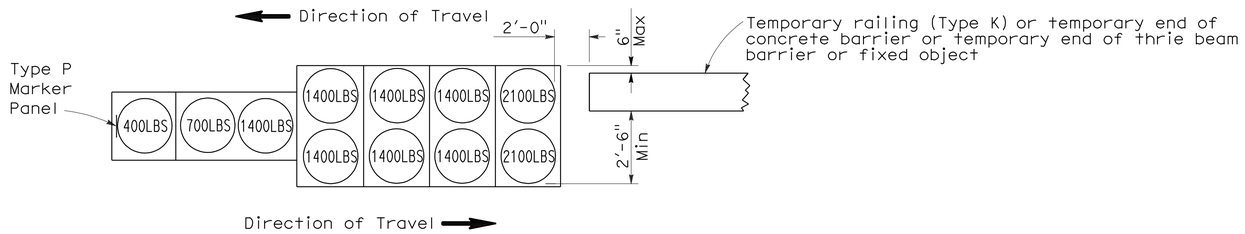

ARRAY 'TB11'

Approach speed less than 45 mph

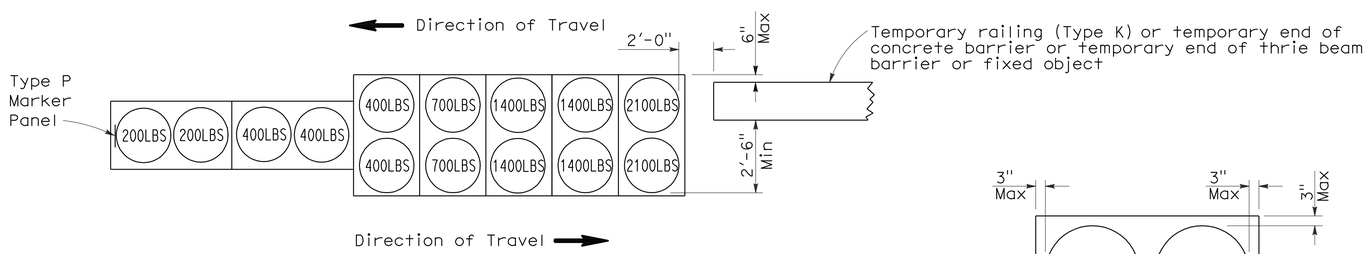

ARRAY 'TB14'

Approach speed 45 mph or more

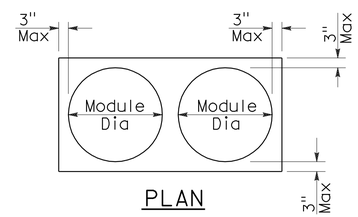

PLAN

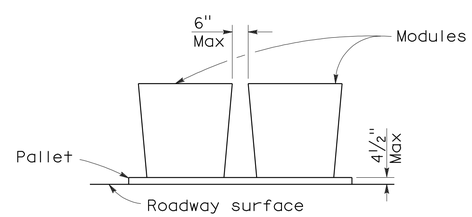

ELEVATION

CRASH CUSHION PALLET DETAIL

See Note 7

NOTES:

1. (XXX) Indicates sand filled module location and weight of sand in pounds for each module. Module spacing is based on the greater diameter of the module.
2. All sand weights are nominal.
3. Temporary crash cushion arrays shall not encroach on the traveled way.
4. Place the Type P marker panel so that the bottom of the panel rests upon the pallet.
5. Refer to Standard Plan A73B for marker details.
6. Approach speeds indicated conform to NCHRP 350 Report criteria.
7. Use of pallets is optional.

STATE OF CALIFORNIA
DEPARTMENT OF TRANSPORTATION

TEMPORARY CRASH CUSHION, SAND FILLED (BIDIRECTIONAL)

NO SCALE

RSP T1B DATED JUNE 6, 2008 SUPERSEDES STANDARD PLAN T1B
DATED MAY 1, 2006 - PAGE 212 OF THE STANDARD PLANS BOOK DATED MAY 2006.

REVISED STANDARD PLAN RSP T1B

2006 REVISED STANDARD PLAN RSP T1B

5-15-08

DIST	COUNTY	ROUTE	POST MILES TOTAL PROJECT	SHEET NO.	TOTAL SHEETS
07	LA	60,170	R4.4, R16.3,R19.8	63	68

Randell D. Hiatt
REGISTERED CIVIL ENGINEER

June 6, 2008
PLANS APPROVAL DATE

REGISTERED PROFESSIONAL ENGINEER
Randell D. Hiatt
No. C50200
Exp. 6-30-09
CIVIL
STATE OF CALIFORNIA

The State of California or its officers or agents shall not be responsible for the accuracy or completeness of electronic copies of this plan sheet.

To accompany plans dated 5-11-09

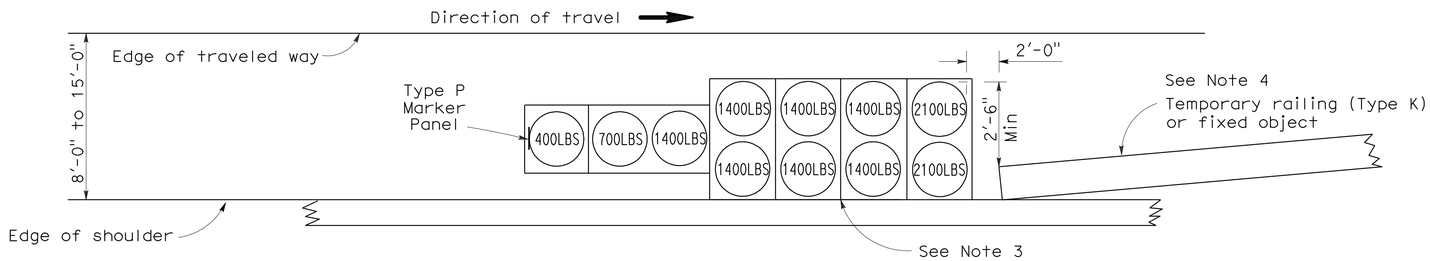

ARRAY 'TS11'

Approach speed less than 45 mph
See Note 9

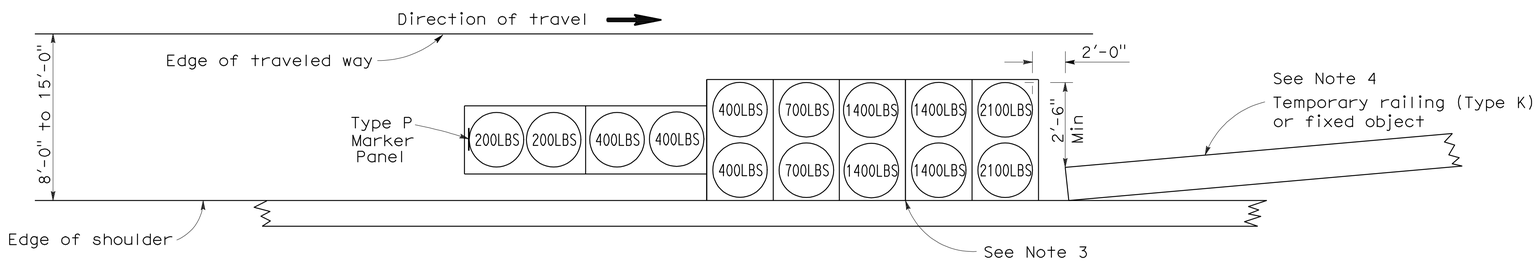

ARRAY 'TS14'

Approach speed 45 mph or more
See Note 9

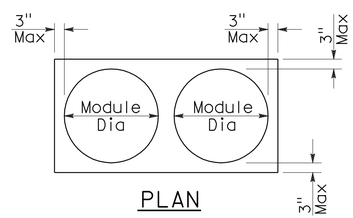

PLAN

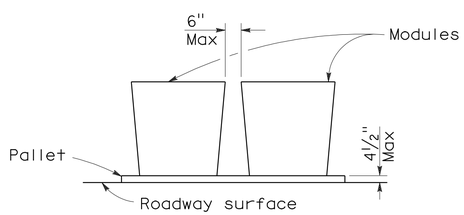

ELEVATION

CRASH CUSHION PALLET DETAIL

See Note 11

NOTES:

1. (XXX) Indicates sand filled module location and weight of sand in pounds for each module. Module spacing is based on the greater diameter of the module.
2. All sand weights are nominal.
3. The temporary crash cushion arrays shown on this plan shall be used only in locations where there will be traffic on one side of the temporary crash cushion array.
4. If the fixed object or approach end of the temporary railing is less than 15'-0" from the edge of traveled way, a temporary crash cushion is required in a construction or work zone.
5. Temporary crash cushion arrays shall not encroach on the traveled way.
6. Arrays for median shoulders shall conform to details shown on this plan for outside shoulders.
7. Place the Type P marker panel so that the bottom of the panel rests upon the pallet and faces traffic.
8. Refer to Standard Plan A73B for marker details.
9. For shoulder widths less than 8'-0", appropriate approved crash cushion protection, other than sand filled modules, shall be provided at fixed objects and at approach ends of temporary railing. The specific type of crash cushion shall be as shown on the project plans or as specified in the Special Provisions, or if not shown on the project plans or specified in the Special Provisions, shall be as approved by the Engineer.
10. Approach speeds indicated conform to NCHRP 350 Report criteria.
11. Use of pallets is optional.

STATE OF CALIFORNIA
DEPARTMENT OF TRANSPORTATION

TEMPORARY CRASH CUSHION, SAND FILLED (SHOULDER INSTALLATIONS)

NO SCALE

RSP T2 DATED JUNE 6, 2008 SUPERSEDES STANDARD PLAN T2
DATED MAY 1, 2006 - PAGE 213 OF THE STANDARD PLANS BOOK DATED MAY 2006.

REVISED STANDARD PLAN RSP T2

2006 REVISED STANDARD PLAN RSP T2

5-15-08

DIST	COUNTY	ROUTE	POST MILES TOTAL PROJECT	SHEET NO.	TOTAL SHEETS
07	LA	60,170	R4.4, R16.3,R19.8	64	68

REGISTERED CIVIL ENGINEER

November 17, 2006
PLANS APPROVAL DATE

REGISTERED PROFESSIONAL ENGINEER
Greg W. Edwards
No. C36386
Exp. 6-30-08
CIVIL
STATE OF CALIFORNIA

The State of California or its officers or agents shall not be responsible for the accuracy or completeness of electronic copies of this plan sheet.

To accompany plans dated 5-11-09

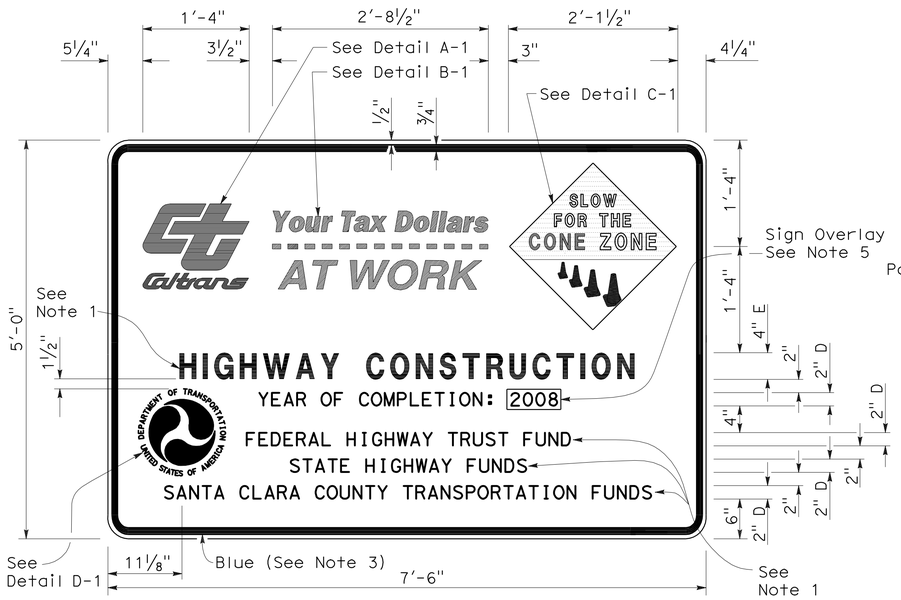

TYPE 1

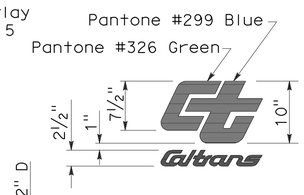

DETAIL A-1

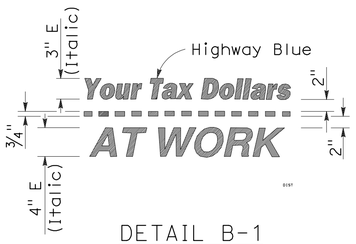

DETAIL B-1
(See Note 3)

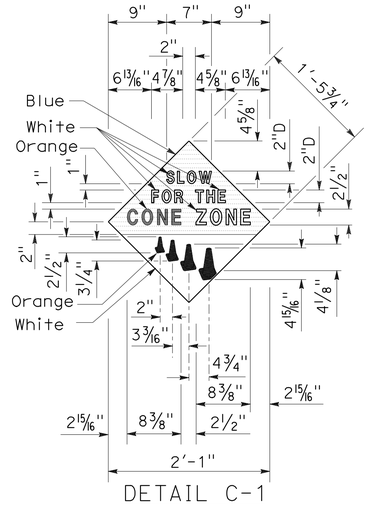

DETAIL C-1
(See Note 4)

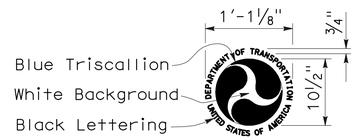

DETAIL D-1
(See Note 6)

NOTES:

1. The sign messages shown for type of project and fund types are examples only. See the Special Provisions for the applicable type of project and fund type messages to be used.
2. Except as otherwise shown, the legend of sign shall be black on a white background (non-reflective).
3. The border of the signs and details "B-1" and "B-2" shall be blue (non-reflective).
4. The diamond in details "C-1" and "C-2" shall be blue for the background of message, " SLOW FOR THE CONE ZONE", and white background for the orange cones. The color and type of font for the "SLOW FOR THE CONE ZONE" message shall be: "SLOW" white D; "FOR THE" white D; "CONE" orange Arial font; "ZONE" white Arial font.
5. Year of completion of project construction shown on the overlay is an example only. See the Special Provisions.
6. Use when the Project involves Federal Highway Trust Fund.

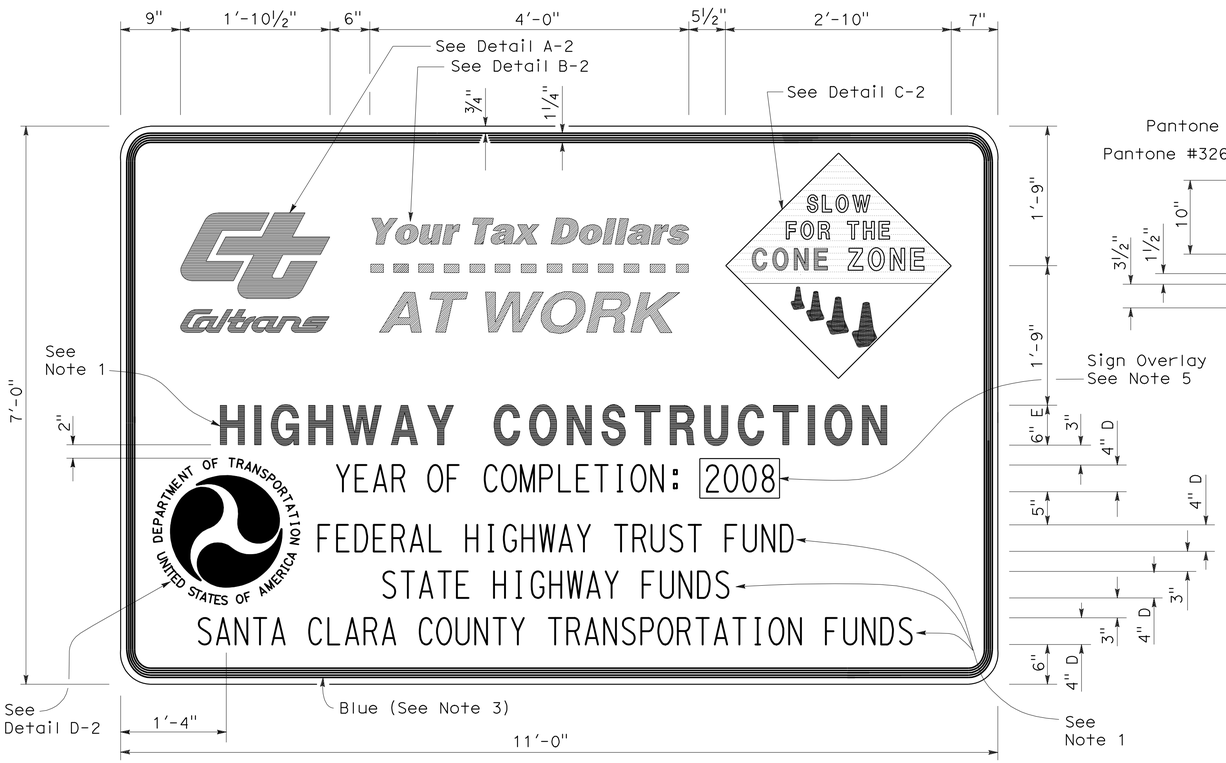

TYPE 2

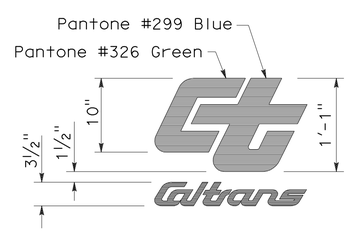

DETAIL A-2

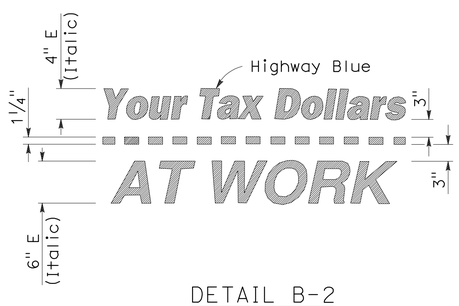

DETAIL B-2
(See Note 3)

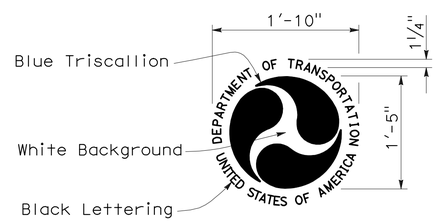

DETAIL D-2
(See Note 6)

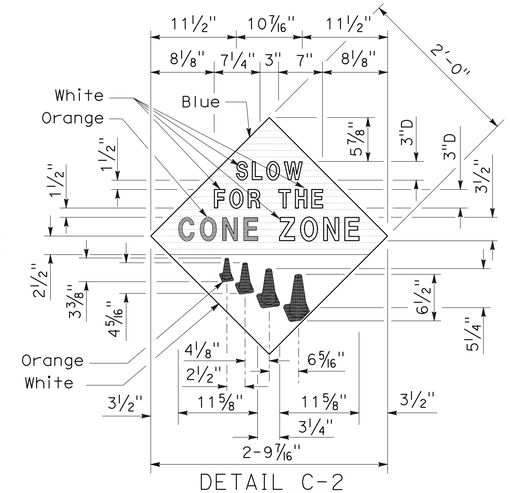

DETAIL C-2
(See Note 4)

STATE OF CALIFORNIA
DEPARTMENT OF TRANSPORTATION

CONSTRUCTION PROJECT FUNDING IDENTIFICATION SIGNS

NO SCALE

RSP T7 DATED NOVEMBER 17, 2006 SUPERSEDES STANDARD PLAN T7
DATED MAY 1, 2006 - PAGE 217 OF THE STANDARD PLANS BOOK DATED MAY 2006.

REVISED STANDARD PLAN RSP T7

2006 REVISED STANDARD PLAN RSP T7

9-7-06

DIST	COUNTY	ROUTE	POST MILES TOTAL PROJECT	SHEET NO.	TOTAL SHEETS
07	LA	60,170	R4.4, R16.3,R19.8	65	68

LICENSED LANDSCAPE ARCHITECT

April 3, 2009
PLANS APPROVAL DATE

The State of California or its officers or agents shall not be responsible for the accuracy or completeness of electronic copies of this plan sheet.

LICENSED LANDSCAPE ARCHITECT — Robert B. Schott — 3625 — Registration Date 11-30-10 — Renewal Date 2-25-09 — Date — STATE OF CALIFORNIA

To accompany plans dated 5-11-09

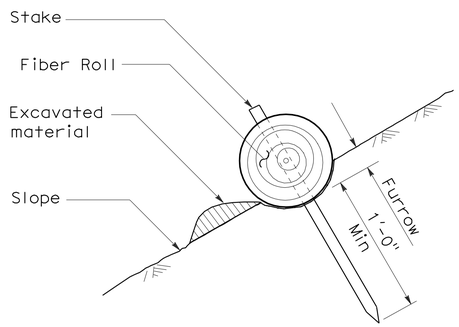

SECTION

TEMPORARY FIBER ROLL (TYPE 1)

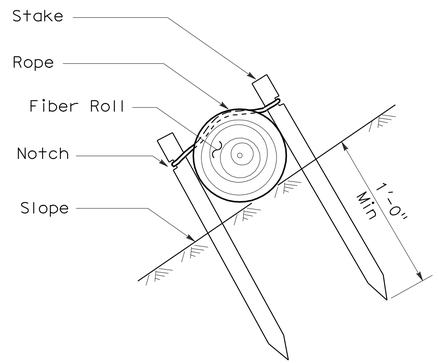

SECTION

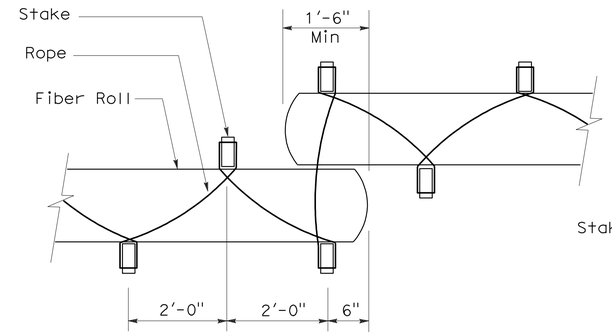

PLAN

TEMPORARY FIBER ROLL (TYPE 2)

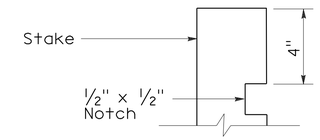

ELEVATION

STAKE NOTCH DETAIL

NOTES:

1. Temporary fiber roll spacing varies depending upon slope inclination.
2. Installations shown in the perspectives are for slope inclination of 10:1 and steeper.

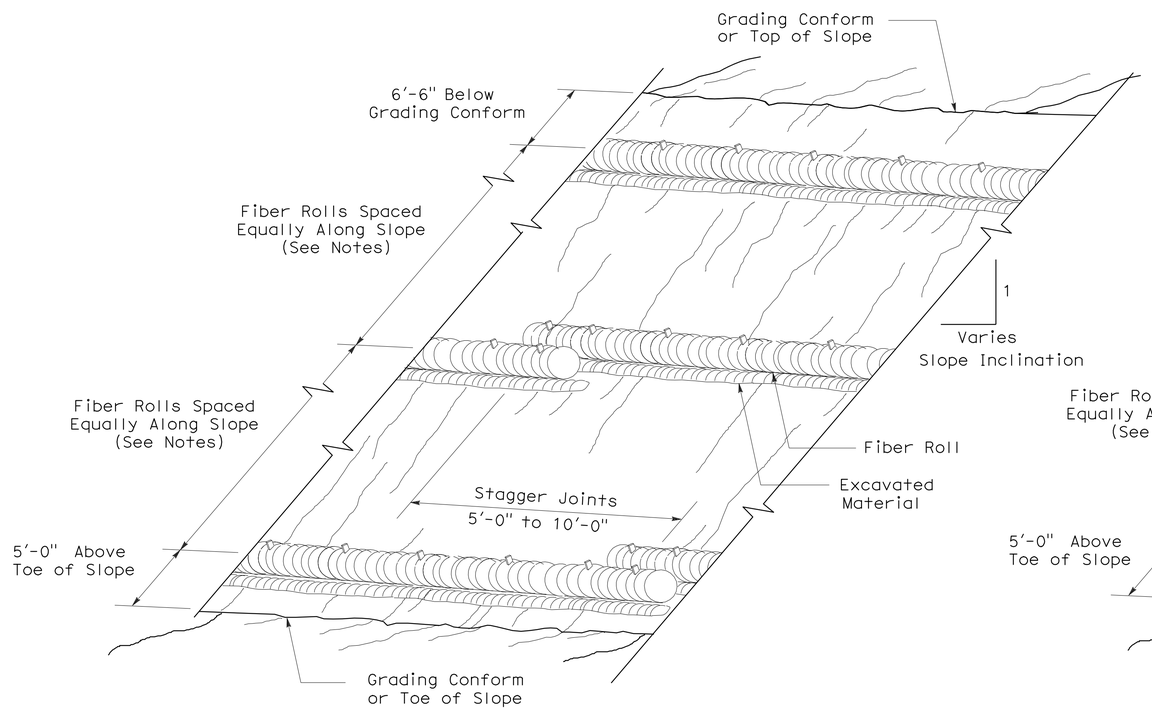

PERSPECTIVE

TEMPORARY FIBER ROLL (TYPE 1)

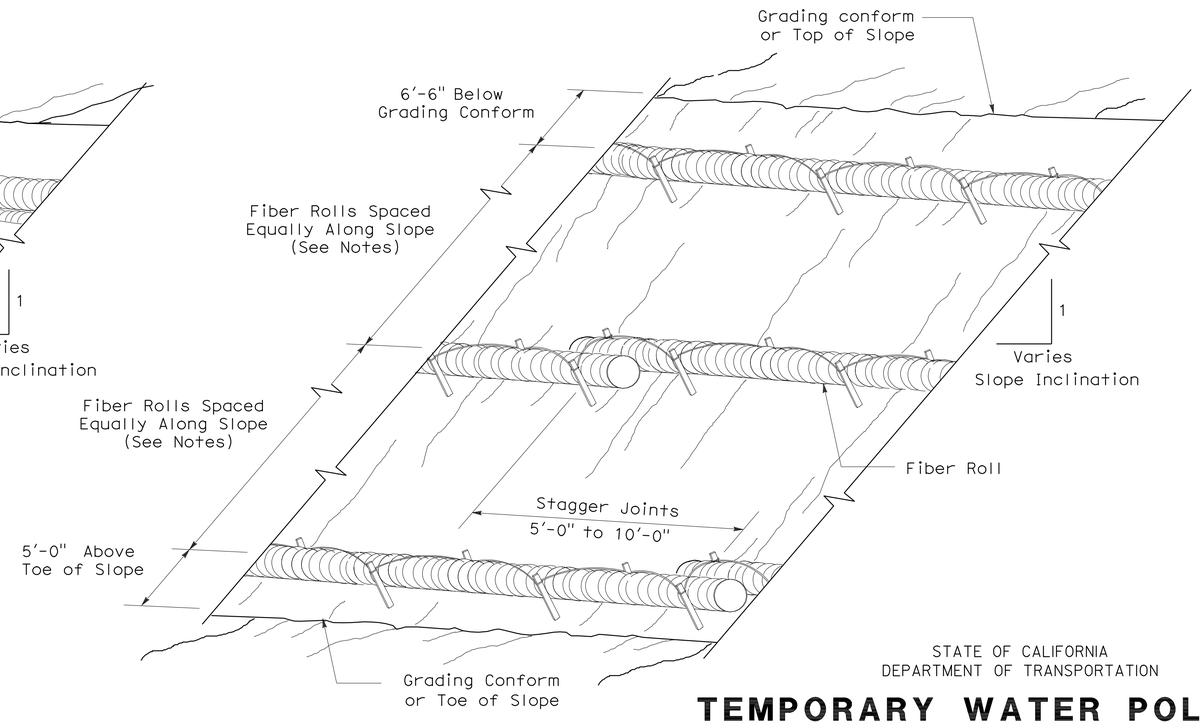

PERSPECTIVE

TEMPORARY FIBER ROLL (TYPE 2)

STATE OF CALIFORNIA
DEPARTMENT OF TRANSPORTATION

TEMPORARY WATER POLLUTION CONTROL DETAILS (TEMPORARY FIBER ROLL)

NO SCALE

RSP T56 DATED APRIL 3, 2009 SUPERSEDES STANDARD PLAN T56
DATED MAY 1, 2006 - PAGE 232 OF THE STANDARD PLANS BOOK DATED MAY 2006.

REVISED STANDARD PLAN RSP T56

2006 REVISED STANDARD PLAN RSP T56

DIST	COUNTY	ROUTE	POST MILES TOTAL PROJECT	SHEET NO.	TOTAL SHEETS
07	LA	60,170	R4.4, R16.3,R19.8	66	68

LICENSED LANDSCAPE ARCHITECT

April 3, 2009
PLANS APPROVAL DATE

The State of California or its officers or agents shall not be responsible for the accuracy or completeness of electronic copies of this plan sheet.

LICENSED LANDSCAPE ARCHITECT — Robert B. Schott 3625 — Signature — 11-30-10 Renewal Date — 2-25-09 Date — STATE OF CALIFORNIA

To accompany plans dated 5-11-09

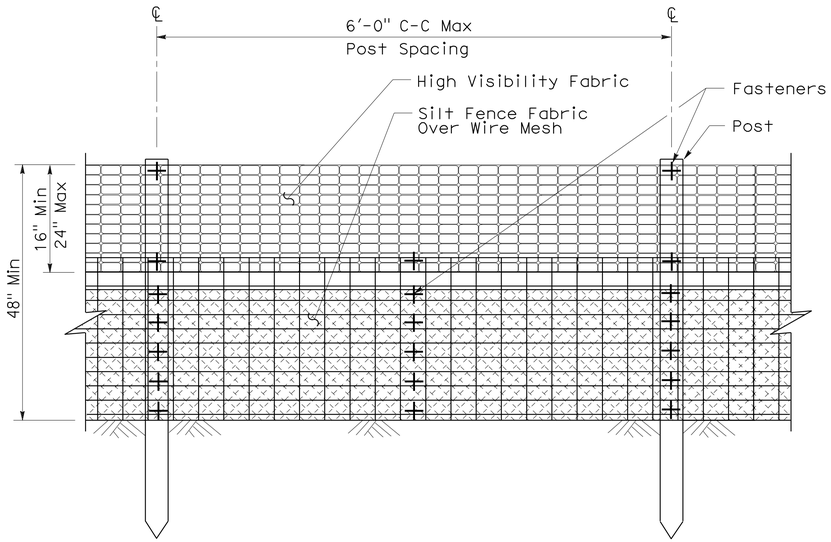

ELEVATION

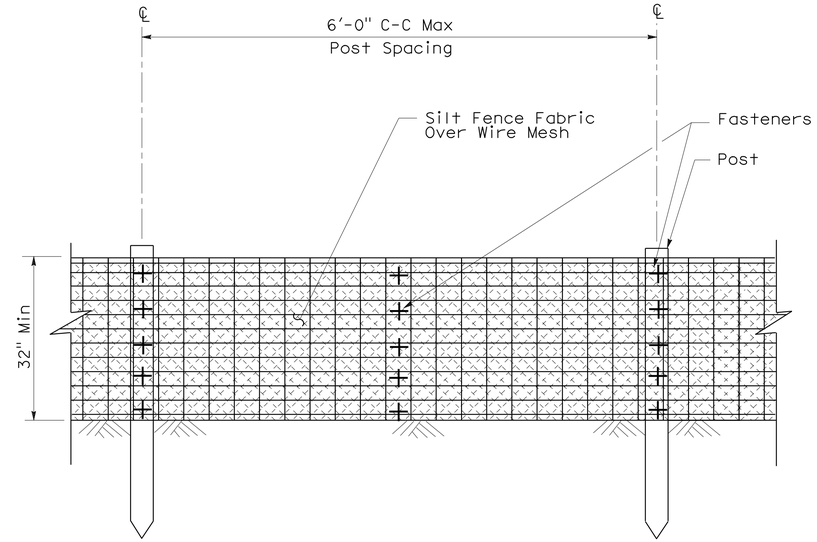

ELEVATION

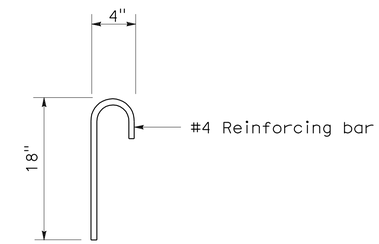

ANCHOR

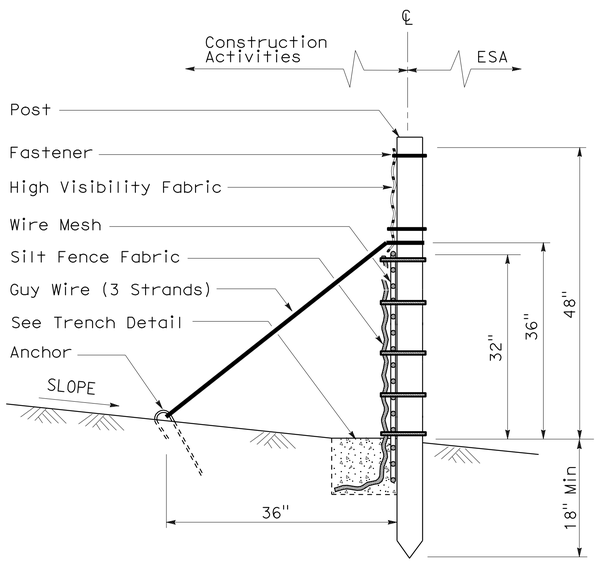

SECTION

TEMPORARY REINFORCED SILT FENCE (TYPE 1)

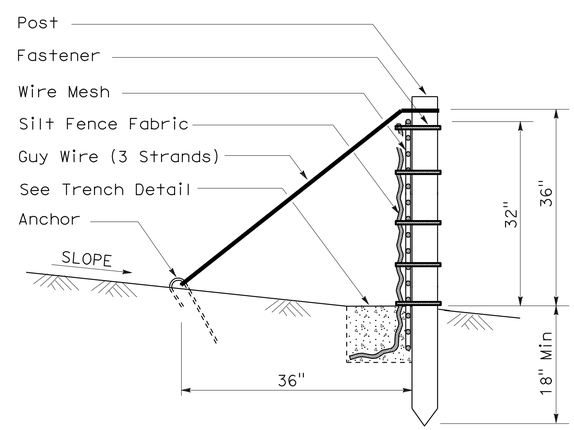

SECTION

TEMPORARY REINFORCED SILT FENCE (TYPE 2)

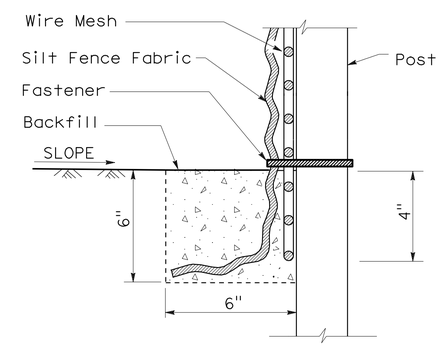

SECTION

TRENCH DETAIL

STATE OF CALIFORNIA
DEPARTMENT OF TRANSPORTATION

TEMPORARY WATER POLLUTION CONTROL DETAILS (TEMPORARY REINFORCED SILT FENCE)

NO SCALE

NSP T60 DATED APRIL 3, 2009 SUPPLEMENTS
THE STANDARD PLANS BOOK DATED MAY 2006.

NEW STANDARD PLAN NSP T60

2006 NEW STANDARD PLAN NSP T60

1-7-09

DIST	COUNTY	ROUTE	POST MILES TOTAL PROJECT	SHEET NO.	TOTAL SHEETS
07	LA	60,170	R4.4, R16.3,R19.8	67	68

LICENSED LANDSCAPE ARCHITECT

August 15, 2008
PLANS APPROVAL DATE

LICENSED LANDSCAPE ARCHITECT
Robert B. Schott 3625
Signature
11-04-08
Renewal Date
08-11-08
Date
STATE OF CALIFORNIA

The State of California or its officers or agents shall not be responsible for the accuracy or completeness of electronic copies of this plan sheet.

To accompany plans dated 5-11-09

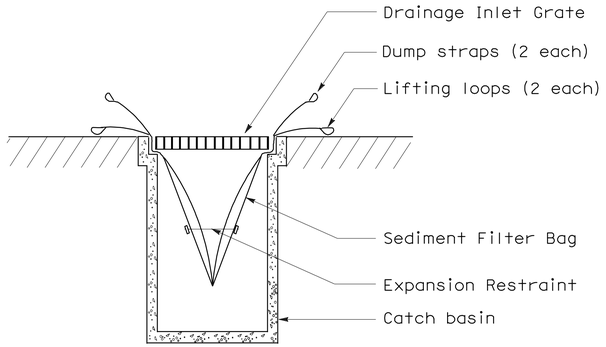

SECTION B-B

SEDIMENT FILTER BAG DETAIL

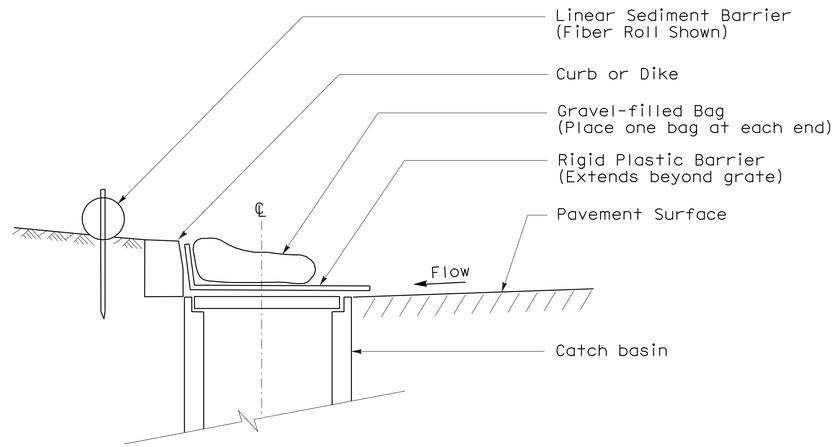

SECTION

TEMPORARY DRAINAGE INLET PROTECTION (TYPE 6A) (CATCH BASIN WITH GRATE)

NOTES:

1. See Standard Plan T51 for Temporary Silt Fence.
2. Dimensions may vary to fit field conditions.

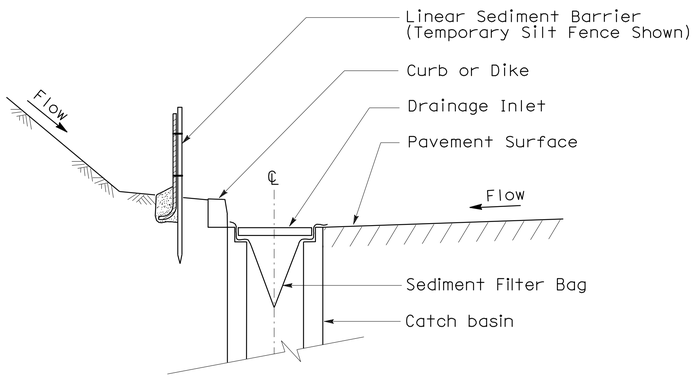

SECTION A-A

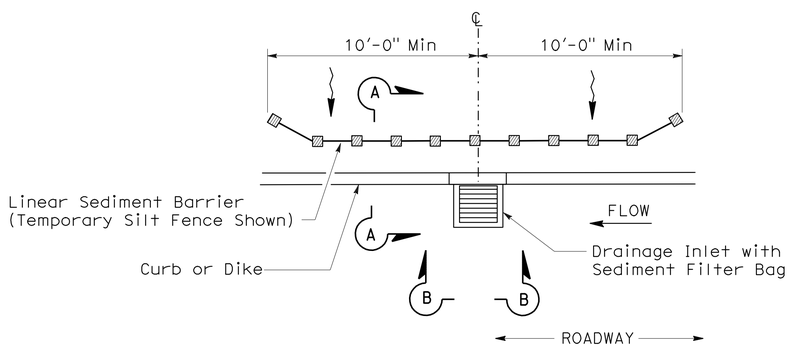

PLAN

TEMPORARY DRAINAGE INLET PROTECTION (TYPE 5) (SEDIMENT FILTER BAG)

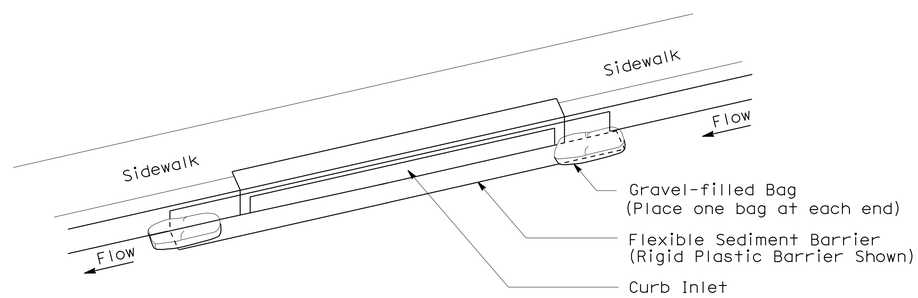

PERSPECTIVE

TEMPORARY DRAINAGE INLET PROTECTION (TYPE 6B) (CURB INLET WITHOUT GRATE)

STATE OF CALIFORNIA
DEPARTMENT OF TRANSPORTATION

TEMPORARY WATER POLLUTION CONTROL DETAILS (TEMPORARY DRAINAGE INLET PROTECTION)

NO SCALE

NSP T64 DATED AUGUST 15, 2008 SUPPLEMENTS
THE STANDARD PLANS BOOK DATED MAY 2006.

NEW STANDARD PLAN NSP T64

2006 NEW STANDARD PLAN NSP T64

7-11-08

DIST	COUNTY	ROUTE	POST MILES TOTAL PROJECT	SHEET NO.	TOTAL SHEETS
07	LA	60,170	R4.4, R16.3,R19.8	68	68

REGISTERED CIVIL ENGINEER

October 5, 2007
PLANS APPROVAL DATE

REGISTERED PROFESSIONAL ENGINEER Efthymios Delis No. C51434 Exp. 6-30-08 CIVIL STATE OF CALIFORNIA

The State of California or its officers or agents shall not be responsible for the accuracy or completeness of electronic copies of this plan sheet.

To accompany plans dated 5-11-09

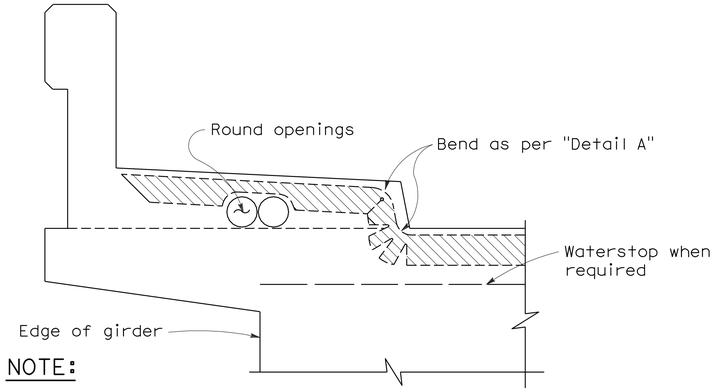

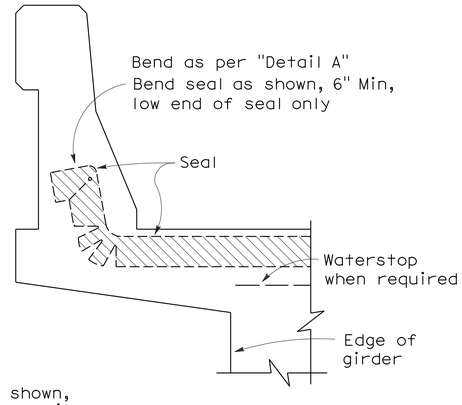

NOTE:

Type "B" seal shown. Type "A" seals to comform to the general path of seal shown, cuts for bending not required. Bend Type "A" seals 3" up into curb or barrier rail on only the low end of the seal.

CONCRETE BARRIER AND SIDEWALK

CONCRETE BARRIER

JOINT SEALS DETAILS

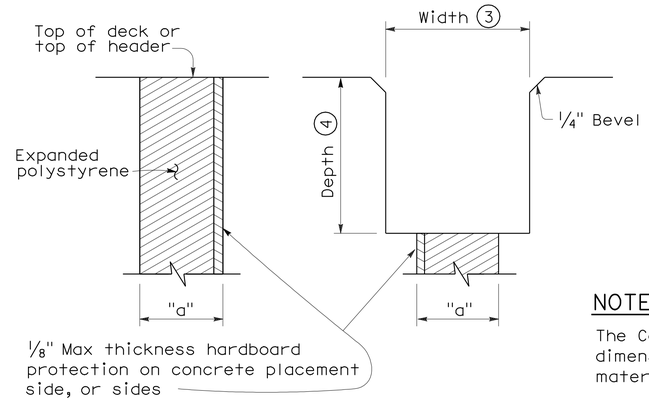

FORMING DETAIL

SAWCUT DETAIL

NOTE:

The Contractor shall verify all controlling field dimensions before ordering or fabricatiing any material.

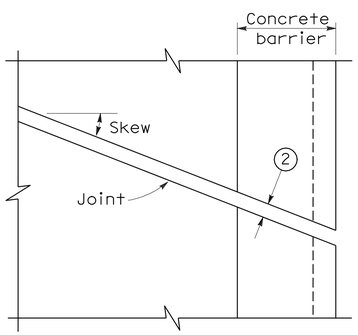

PLAN OF JOINT (SKEW ≤ 20°)

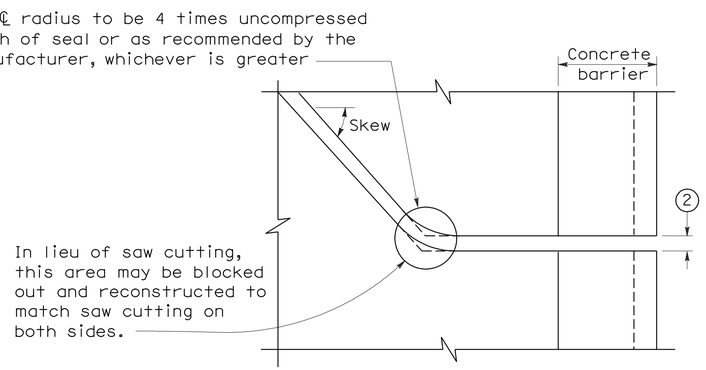

PLAN OF JOINT (SKEW > 20°)

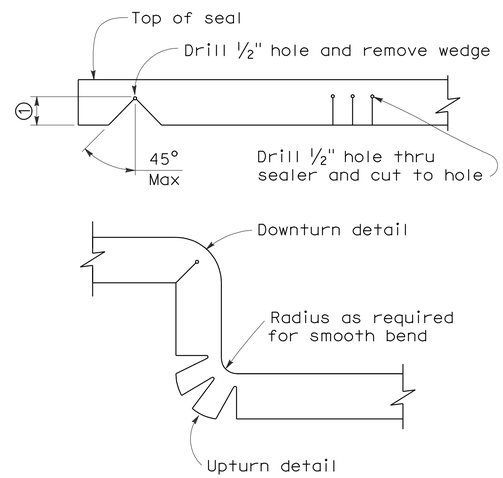

DETAIL A

NOTES:

1. Make smooth cuts from the bottom of seal to 1½" clear of top leaving at least one complete cell between the top of the cut and top of the seal. When necessary cut back of seal to clear conduit and round openings.
2. Opening in barrier to match width of sawn deck joint.
3. Sawcut groove widths shall be as ordered by the Engineer.
4. Depth of sawcut: Type A - Depth to be 2" minimum.
   Type B - Depth to be equal to or greater than the depth of seal measured along the contact surface, when compressed to minimum width position (W_2) plus dimensions shown.
5. MR (movement rating) as shown on other plan sheets.
6. Other depths must be approved by the Engineer.

DIMENSIONS "a" OF JOINT REQUIRED

Movement Rating (MR) (5)	Bridge Type	"a" Dimension Deck Concrete Placed		
		Winter	Fall-Spring	Summer
2"	All except CIP/PS	1½"	1¼"	¾"
	CIP/PS	1¼"	1"	½"
1½"	All except CIP/PS	1¼"	1"	½"
	CIP/PS	1"	¾"	½"
1"	All except CIP/PS	1"	¾"	½"
	CIP/PS	¾"	½"	½"
½"	All except CIP/PS	¾"	¾"	½"
	CIP/PS	½"	½"	½"

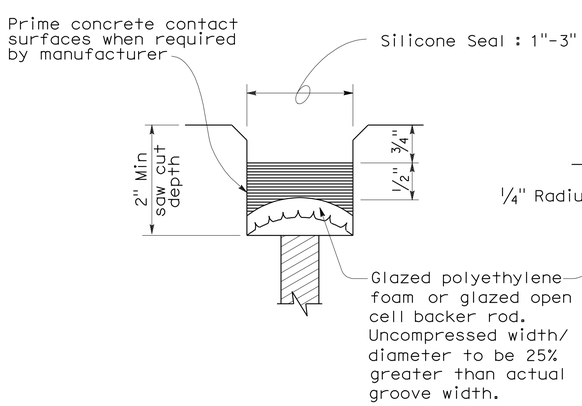

TYPE A SEAL

Movement rating : Silicone = 1" Max

TYPE AL SEAL

Longitudinal joints only

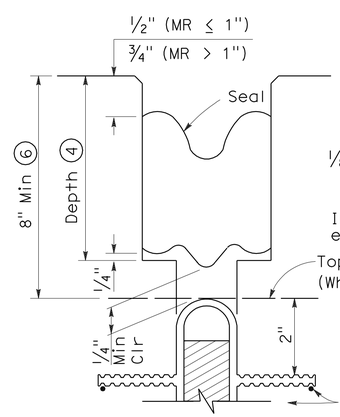

TYPE B JOINT SEAL IN MINIMUM WIDTH POSITION (W_2)

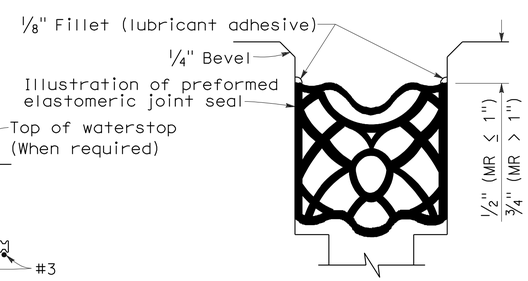

TYPE B SEAL

Movement Rating ≤ 2"

STATE OF CALIFORNIA
DEPARTMENT OF TRANSPORTATION

JOINT SEALS (MAXIMUM MOVEMENT RATING = 2")

NO SCALE

RSP B6-21 DATED OCTOBER 5, 2007 SUPERSEDES STANDARD PLAN B6-21 DATED MAY 1, 2006 - PAGE 258 OF THE STANDARD PLANS BOOK DATED MAY 2006.

REVISED STANDARD PLAN RSP B6-21

2006 REVISED STANDARD PLAN RSP B6-21

5-8-07