NH-P014(068)E

Dist	COUNTY	ROUTE	POST MILES TOTAL PROJECT	SHEET No.	TOTAL SHEETS
07	LA	14	R52.6/R59.2	1	58

STATE OF CALIFORNIA
DEPARTMENT OF TRANSPORTATION

PROJECT PLANS FOR CONSTRUCTION ON
STATE HIGHWAY

IN LOS ANGELES COUNTY IN AND NEAR PALMDALE FROM 0.4 MILE NORTH OF SIERRA HIGHWAY OVERCROSSING TO ANAVERDE CREEK

INDEX OF PLANS

SHEET No.	DESCRIPTION
1	TITLE AND LOCATION MAP
2-3	TYPICAL CROSS SECTIONS
4	PROFILES
5-10	CONSTRUCTION DETAILS
11	CONSTRUCTION AREA SIGNS
12-18	TRAFFIC HANDLING DETAILS
19-21	PAVEMENT DELINEATION DETAILS
22-23	PAVEMENT DELINEATION QUANTITIES
24-26	SUMMARY OF QUANTITIES
27-30	ELECTRICAL PLANS
31-54	REVISED AND NEW STANDARD PLANS

STRUCTURE PLANS

55-58	ROUTE 14 BRIDGES

THE STANDARD PLANS LIST APPLICABLE TO THIS CONTRACT IS INCLUDED IN THE NOTICE TO BIDDERS AND SPECIAL PROVISIONS BOOK.

TO BE SUPPLEMENTED BY STANDARD PLANS DATED MAY 2006

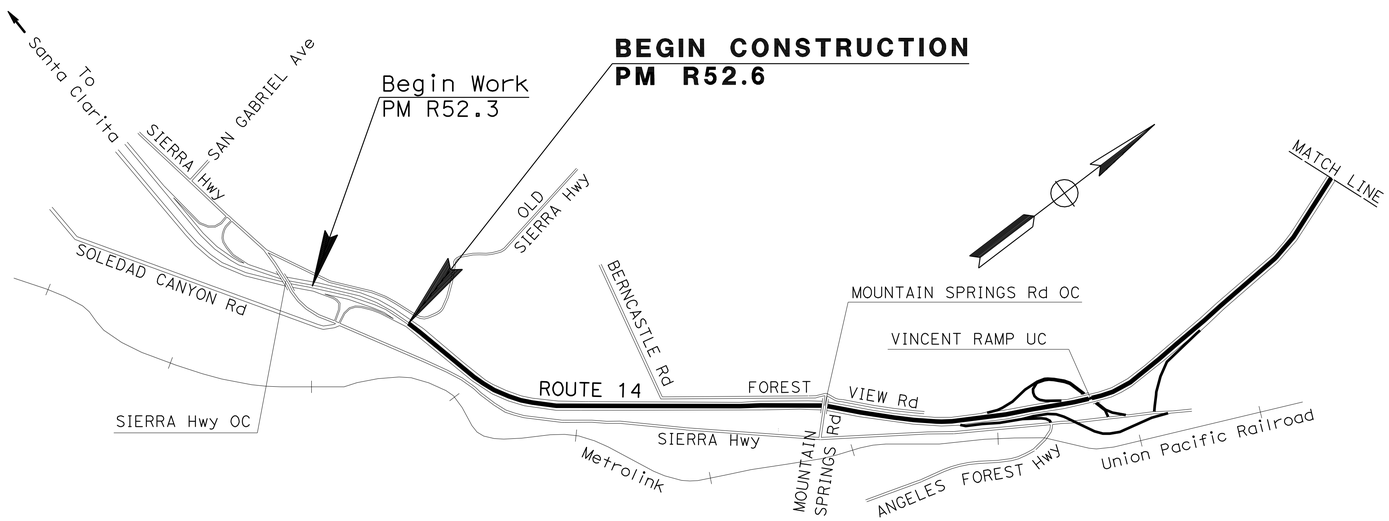

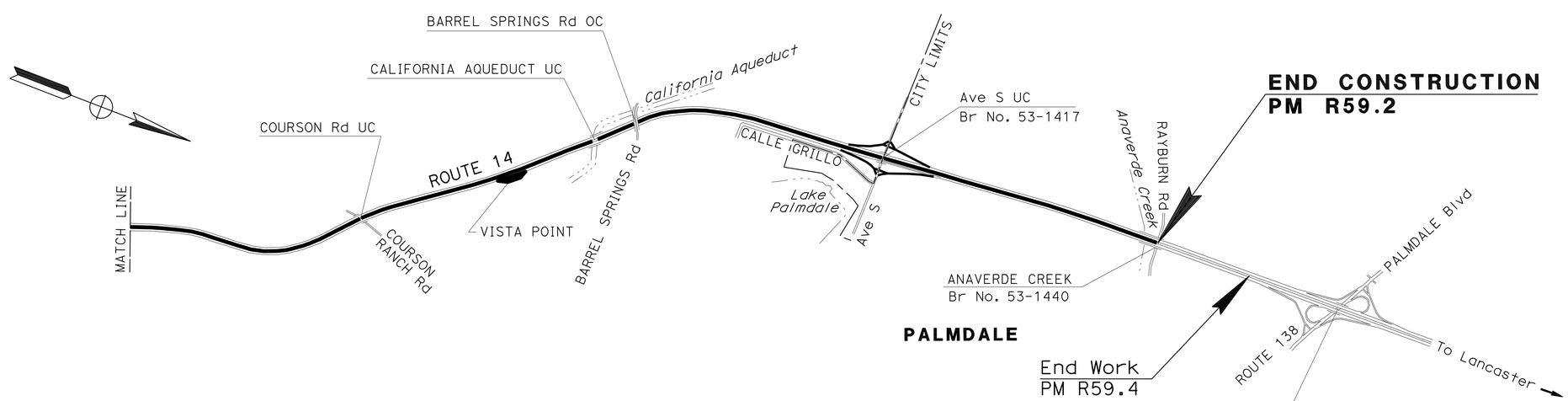

LOCATION MAP

Caltrans

PROJECT MANAGER ASHRAF HABBAK
DESIGN MANAGER MANSOOR KHAN
DESIGN ENGINEER HOSS FARASAT

THE CONTRACTOR SHALL POSSESS THE CLASS (OR CLASSES) OF LICENSE AS SPECIFIED IN THE "NOTICE TO BIDDERS."

NO SCALE

H. Farasat 5-17-11
PROJECT ENGINEER REGISTERED CIVIL ENGINEER — DATE

REGISTERED PROFESSIONAL ENGINEER HOSS FARASAT No. C45672 Exp. 12-31-12 CIVIL STATE OF CALIFORNIA

JUNE 20, 2011
PLANS APPROVAL DATE

THE STATE OF CALIFORNIA OR ITS OFFICERS OR AGENTS SHALL NOT BE RESPONSIBLE FOR THE ACCURACY OR COMPLETENESS OF SCANNED COPIES OF THIS PLAN SHEET.

CONTRACT No.	07-254904
PROJECT ID	0700000464

LAST REVISION 00-00-00 DATE PLOTTED => 09-SEP-2011 TIME PLOTTED => 10:57

Dist	COUNTY	ROUTE	POST MILES TOTAL PROJECT	SHEET No.	TOTAL SHEETS
07	LA	14	R52.6/R59.2	2	58

REGISTERED CIVIL ENGINEER 5-17-11 DATE

6-20-11
PLANS APPROVAL DATE

REGISTERED PROFESSIONAL ENGINEER HOSS FARASAT No. C45672 Exp. 12-31-12 CIVIL STATE OF CALIFORNIA

THE STATE OF CALIFORNIA OR ITS OFFICERS OR AGENTS SHALL NOT BE RESPONSIBLE FOR THE ACCURACY OR COMPLETENESS OF SCANNED COPIES OF THIS PLAN SHEET.

TYPICAL PAVEMENT STRUCTURAL SECTIONS

NOTES:

1. DIMENSIONS OF THE PAVEMENT STRUCTURES (STRUCTURAL SECTIONS) ARE SUBJECTED TO TOLERANCES SPECIFIED IN THE STANDARD SPECIFICATIONS.
2. SUPERELEVATION AS SHOWN OR AS DIRECTED BY THE ENGINEER.
3. EXACT LOCATION OF INDIVIDUAL SLAB REPLACEMENT (RSC) OR JOINTED PLAIN CONCRETE PAVEMENT (RSC) WILL BE DETERMINED BY THE ENGINEER.
4. OMIT COLD PLANING AND AC OVERLAY ON BRIDGE DECKS, APPROACH SLABS, PCC PAVEMENT AND RAMP TRMINI.
5. OMIT GRINDING ON BRIDGE DECKS, APPROACH SLABS, HOV LANES AND AC PAVEMENT.
6. EXISTING UTILITY FACILITIES AND DRAINAGE INLETS HAVE NOT BEEN PLOTTED ON THESE PLANS.
7. FOR ACCURATE RIGHT OF WAY DATA, CONTACT RIGHT OF WAY ENGINEERING AT THE DISTRICT OFFICE.
8. SEE SUMMARY OF QUANTITIES SHEETS FOR LOCATIONS AND QUANTITIES OF INDIVIDUAL SLAB REPLACEMENT (RSC) OR JOINTED PLAIN CONCRETE PAVEMENT (RSC).
9. GRIND CONCRETE PAVEMENT IN ALL LANES. EXACT LOCATION WILL BE DETERMINED BY THE ENGINEER.

1
- Exist
- 0.25′ AC (TYPE B)
- Var RM CTB UNTREATED
- 0.67′ AS

2
- Exist
- 1.13′ AC (TYPE B)
- 0.35′ CLASS 3 AB
- Var AS

3
- Exist
- 0.67′ PCC
- 0.33′ CTB (CLASS B)
- 0.33′ RM CTB UNTREATED
- 0.67′ AS

4
- Exist
- 0.75′ PCC
- 0.39′ LCB
- 0.61′ CLASS 3 AB

5
- Exist
- 0.94′ PCC
- 0.50′ LCB
- 0.70′ CLASS 3 AB

6
- Exist
- 0.30-0.50′ AC (TYPE B)
- 0.67′ PCC
- 0.33′ CTB (CLASS B)
- 0.33′ RM CTB UNTREATED
- 0.67′ AS

7
- Exist
- 0.04′ RAC (TYPE G)
- 0.33′ AC (TYPE B)
- 0.67′ CLASS 2 AB
- 0.50′ AS

8
- Exist
- 0.04′ RAC (TYPE G)
- 0.33′ AC (TYPE B)
- 0.50′ CTB (CLASS B)
- 0.17′ RM CTB UNTREATED
- 0.50′ AS

9
- Exist
- 0.04 RAC (TYPE G)
- 0.17′ TO 0.33′ AC (TYPE B)
- Var AB
- 0.50′ AS

10
- 0.97′-1.17′ JOINTED PLAIN Conc Pvmt (RSC)

11
- 0.90′ JOINTED PLAIN CONCRETE PAVEMENT (RSC)
- BOND BREAKER
- 0.50′ LCBRS
- 0.70′ CLASS 3 AB

12
- 0.67′ INDIVIDUAL SLAB REPLACEMENT (RSC)

13
- 0.94′ JOINTED PLAIN CONC PAVEMENT (RSC)
- BOND BRAKER
- 0′ TO 0.50′ LCBRS

14
- 0.97′ TO 1.17′ JOINTED PLAIN Conc Pvmt (RSC)
- BOND BRAKER
- 0′ TO 0.50′ LCBRS

15
- 0.25′ COLD PLANE AC PAVEMENT
- 0.25′ HMA (TYPE B)

16
- 0.20′ COLD PLANE AC PAVEMENT
- 0.20′ RHMA-G

ABBREVIATIONS:

RSC	RAPID STRENGTH CONCRETE
RHMA-G	RUBBERIZED HOT MIX ASPHALT (GAP GRADED)
LCBRS	LEAN CONCRETE BASE RAPID SETTING
RAC	RUBBERIZED ASPHALT CONCRETE
HOV	HIGH OCCUPANCY VEHICLE

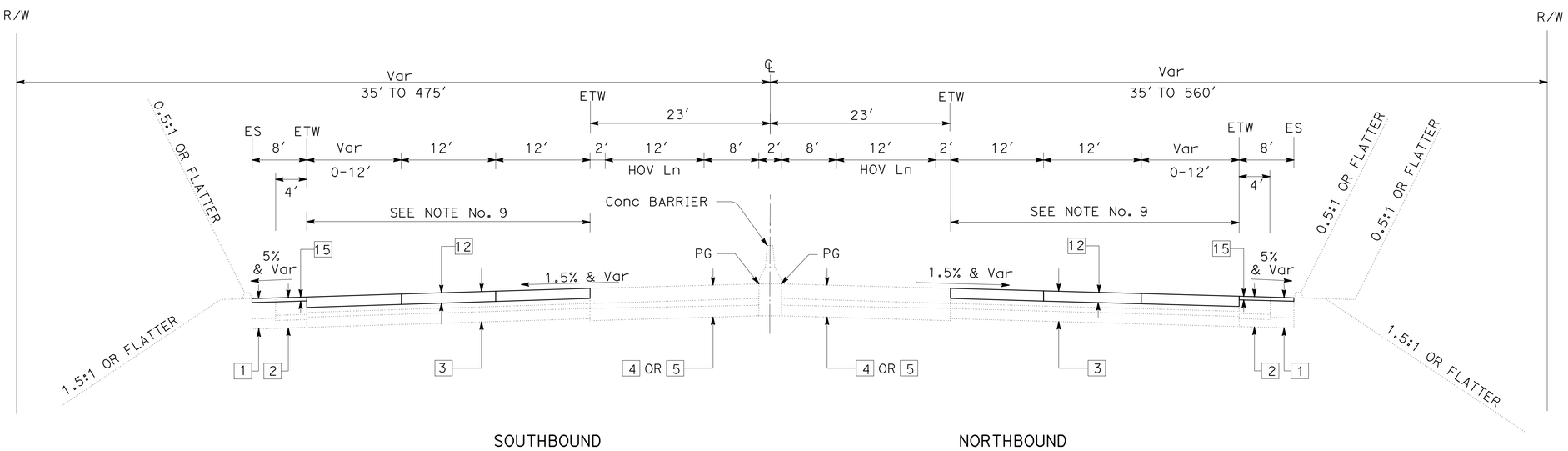

ROUTE 14

R52.60/R58.10

TYPICAL CROSS SECTIONS

NO SCALE

X-1

STATE OF CALIFORNIA - DEPARTMENT OF TRANSPORTATION
Caltrans® OFFICE OF DESIGN B

FUNCTIONAL SUPERVISOR: MANSOOR KHAN
CALCULATED-DESIGNED BY: HOSS FARASAT
CHECKED BY: MANSOOR KHAN
REVISED BY
DATE REVISED

LAST REVISION 00-00-00
DATE PLOTTED => 09-SEP-2011
TIME PLOTTED => 10:57

Dist	COUNTY	ROUTE	POST MILES TOTAL PROJECT	SHEET No.	TOTAL SHEETS
07	LA	14	R52.6/R59.2	3	58

REGISTERED CIVIL ENGINEER 5-17-11 DATE

6-20-11
PLANS APPROVAL DATE

REGISTERED PROFESSIONAL ENGINEER HOSS FARASAT No. C45672 Exp. 12-31-12 CIVIL STATE OF CALIFORNIA

THE STATE OF CALIFORNIA OR ITS OFFICERS OR AGENTS SHALL NOT BE RESPONSIBLE FOR THE ACCURACY OR COMPLETENESS OF SCANNED COPIES OF THIS PLAN SHEET.

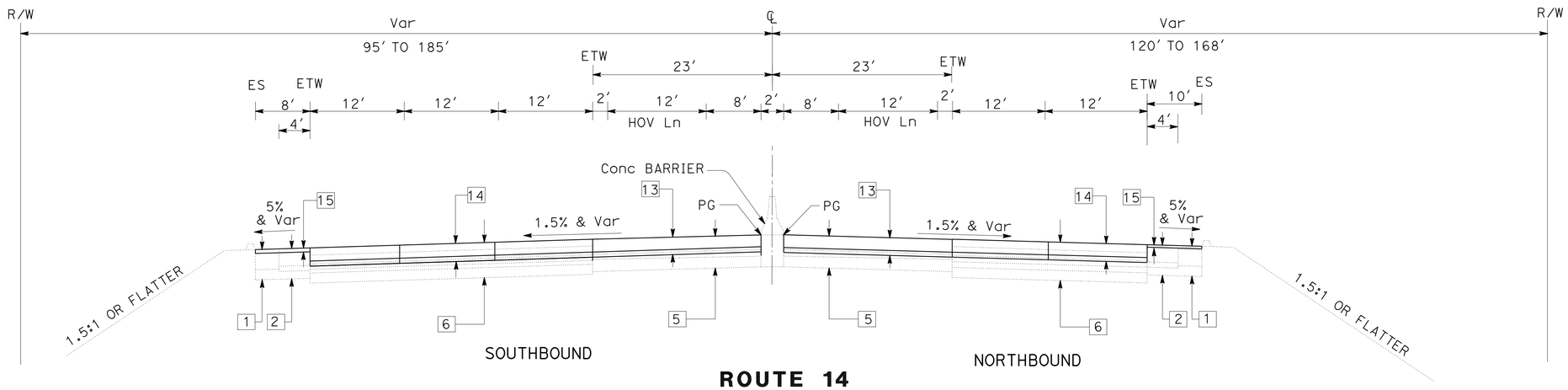

ROUTE 14
PM R59.07/R59.11

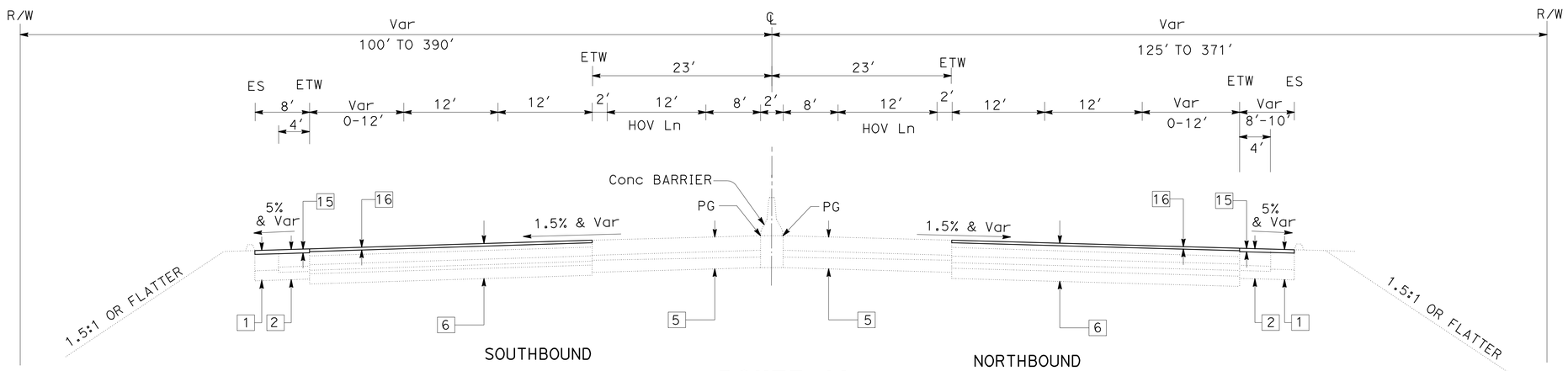

ROUTE 14
PM R58.17/R59.07

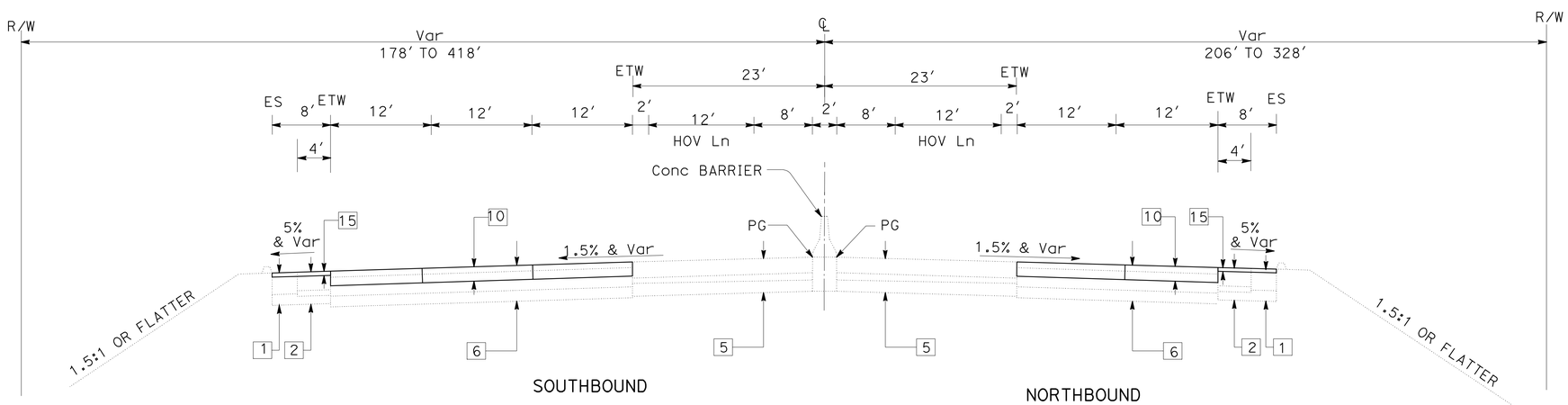

ROUTE 14
PM R58.10/R58.17

TYPICAL CROSS SECTIONS
NO SCALE

X-2

STATE OF CALIFORNIA - DEPARTMENT OF TRANSPORTATION
Caltrans® OFFICE OF DESIGN B

FUNCTIONAL SUPERVISOR: MANSOOR KHAN
CALCULATED-DESIGNED BY: HOSS FARASAT
CHECKED BY: MANSOOR KHAN
REVISED BY
DATE REVISED

LAST REVISION 00-00-00
DATE PLOTTED => 09-SEP-2011
TIME PLOTTED => 10:57

Dist	COUNTY	ROUTE	POST MILES TOTAL PROJECT	SHEET No.	TOTAL SHEETS
07	LA	14	R52.6/R59.2	4	58

REGISTERED CIVIL ENGINEER 5-17-11 DATE

6-20-11
PLANS APPROVAL DATE

REGISTERED PROFESSIONAL ENGINEER HOSS FARASAT No. C45672 Exp. 12-31-12 CIVIL STATE OF CALIFORNIA

THE STATE OF CALIFORNIA OR ITS OFFICERS OR AGENTS SHALL NOT BE RESPONSIBLE FOR THE ACCURACY OR COMPLETENESS OF SCANNED COPIES OF THIS PLAN SHEET.

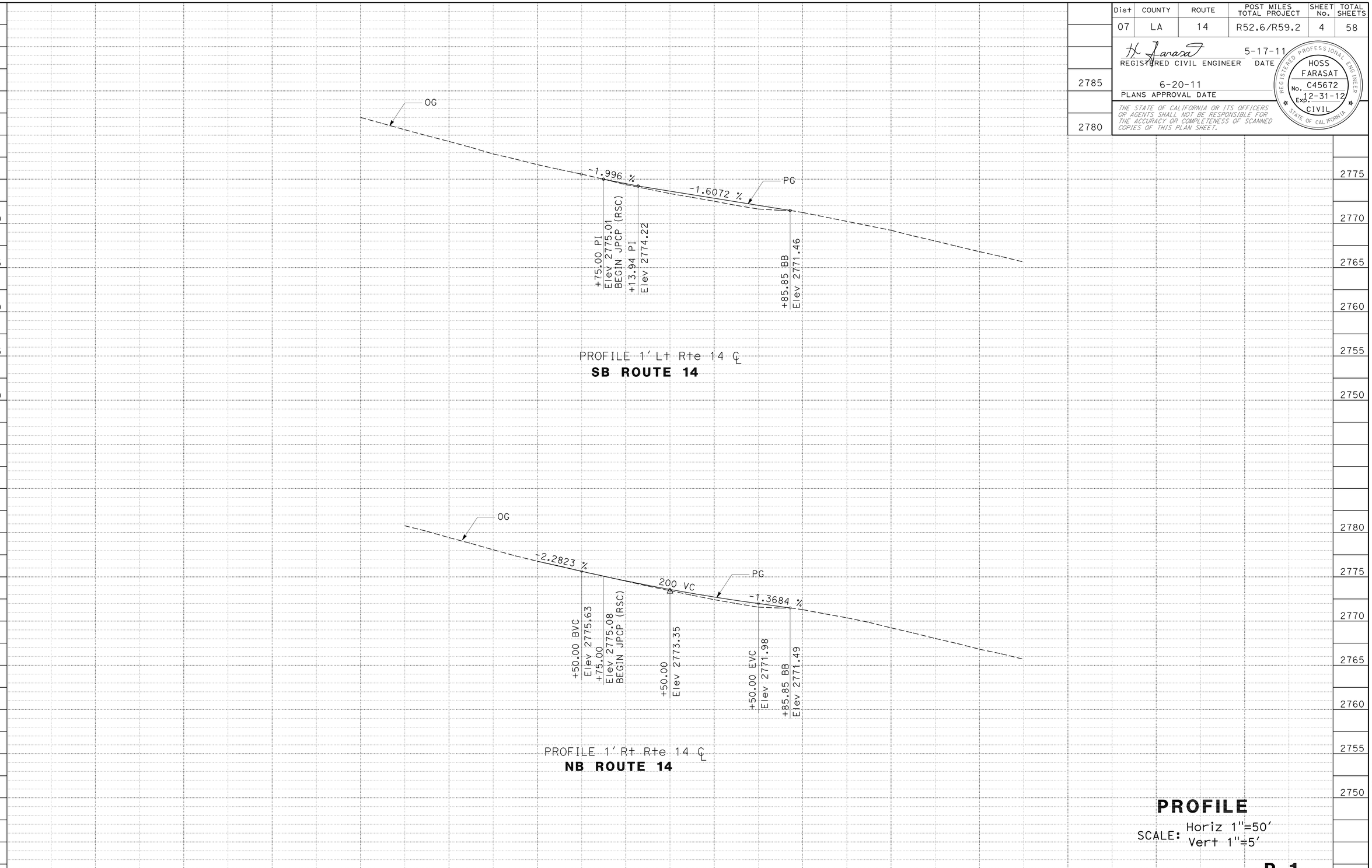

PROFILE

SCALE: Horiz 1"=50'
Vert 1"=5'

P-1

REVISED BY | DATE REVISED

HOSS FARASAT | MANSOOR KHAN

CALCULATED-DESIGNED BY | CHECKED BY

FUNCTIONAL SUPERVISOR: MANSOOR KHAN

STATE OF CALIFORNIA - DEPARTMENT OF TRANSPORTATION
Caltrans OFFICE OF DESIGN B

LAST REVISION 00-00-00 | DATE PLOTTED => 09-SEP-2011 | TIME PLOTTED => 10:57

Dist	COUNTY	ROUTE	POST MILES TOTAL PROJECT	SHEET No.	TOTAL SHEETS
07	LA	14	R52.6/R59.2	5	58

H. Farasat 5-17-11
REGISTERED CIVIL ENGINEER DATE

6-20-11
PLANS APPROVAL DATE

REGISTERED PROFESSIONAL ENGINEER HOSS FARASAT No. C45672 Exp. 12-31-12 CIVIL STATE OF CALIFORNIA

THE STATE OF CALIFORNIA OR ITS OFFICERS OR AGENTS SHALL NOT BE RESPONSIBLE FOR THE ACCURACY OR COMPLETENESS OF SCANNED COPIES OF THIS PLAN SHEET.

NOTES:

1. FOR ACCURATE RIGHT OF WAY DATA, CONTACT RIGHT OF WAY ENGINEERING AT THE DISTRICT OFFICE.
2. EXISTING UTILITY FACILITIES HAVE NOT BEEN PLOTTED ON THESE PLANS.
3. EXACT PAVING LIMITS WILL BE DETERMINED BY THE ENGINEER.
4. FOR TYPICAL STRUCTURAL SECTIONS SEE SHEET X-1.
5. DIMENSIONS OF PAVEMENT STRUCTURES (STRUCTURAL SECTIONS) ARE SUBJECT TO TOLERANCES SPECIFIED IN THE STANDARD SPECIFICATIONS.
6. SUPERELEVATION AS SHOWN OR AS DIRECTED BY THE ENGINEER.

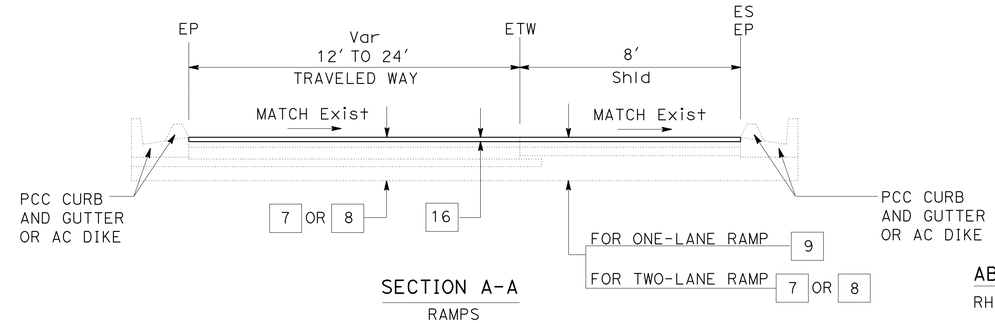

SECTION A-A
RAMPS

ABBREVIATION:

RHMA-G RUBBERIZED HOT MIX ASPHALT (GAP GRADED)

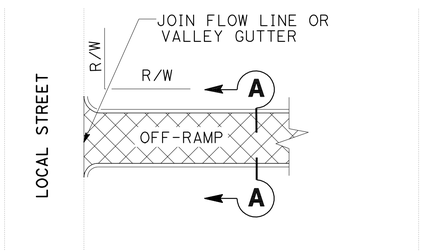

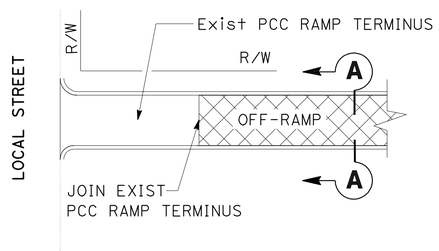

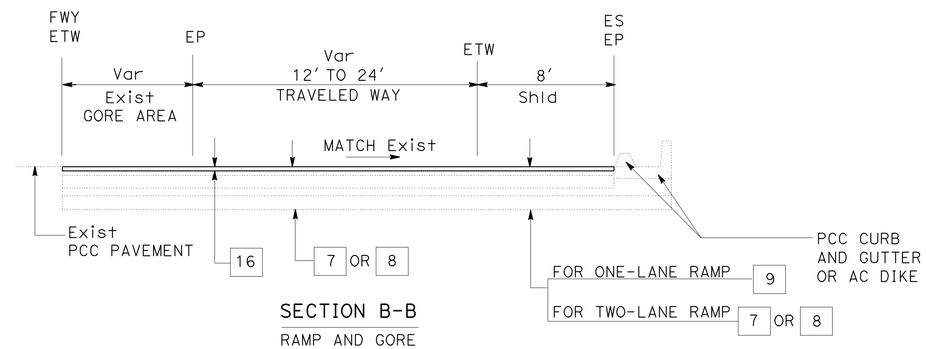

SECTION B-B
RAMP AND GORE

LEGEND:

COLD PLANE AC PAVEMENT AND PLACE RHMA-G

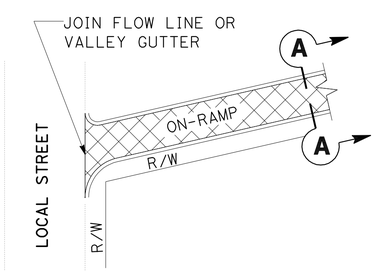

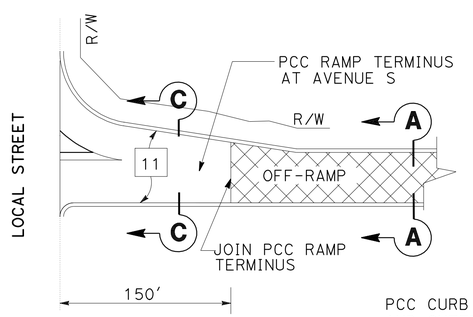

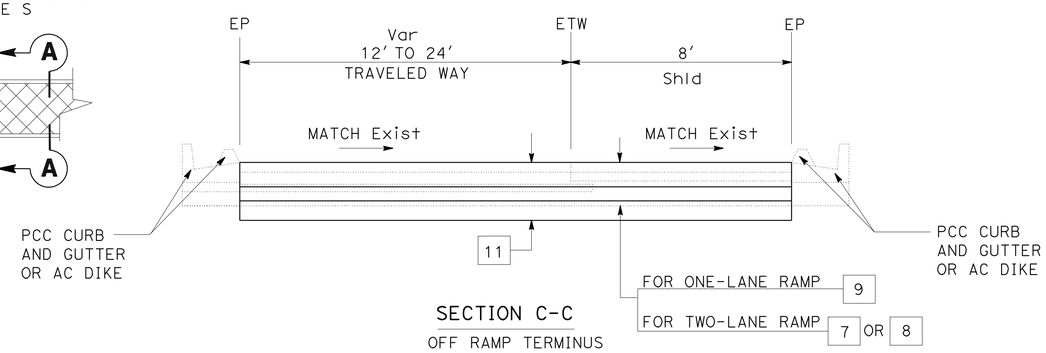

SECTION C-C
OFF RAMP TERMINUS

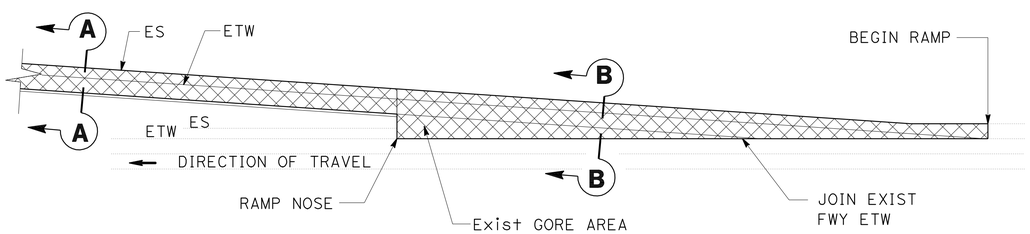

OFF-RAMP

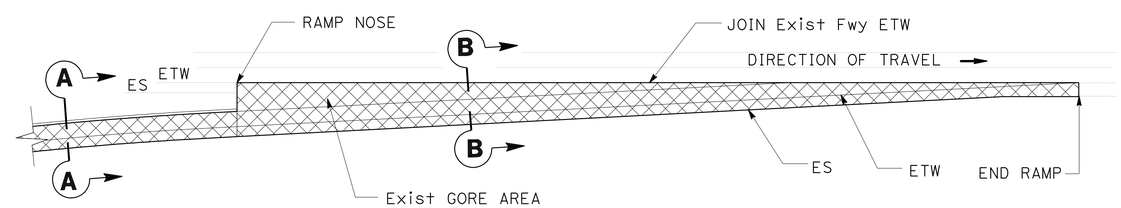

ON-RAMP

TYPICAL RAMP PAVING DETAILS

CONSTRUCTION DETAILS

NO SCALE

C-1

STATE OF CALIFORNIA - DEPARTMENT OF TRANSPORTATION
Caltrans® OFFICE OF DESIGN B

FUNCTIONAL SUPERVISOR: MANSOOR KHAN
CALCULATED-DESIGNED BY: HOSS FARASAT
CHECKED BY: MANSOOR KHAN
REVISED BY
DATE REVISED

LAST REVISION 00-00-00
DATE PLOTTED => 09-SEP-2011
TIME PLOTTED => 10:57

Dist	COUNTY	LOCATION CODE	POST MILES TOTAL PROJECT	SHEET No.	TOTAL SHEETS
07	LA	14	R52.6/R59.2	6	58

H. Farasat 5-17-11
REGISTERED CIVIL ENGINEER DATE

6-20-11
PLANS APPROVAL DATE

REGISTERED PROFESSIONAL ENGINEER HOSS FARASAT No. C45672 Exp 12-31-12 CIVIL STATE OF CALIFORNIA

THE STATE OF CALIFORNIA OR ITS OFFICERS OR AGENTS SHALL NOT BE RESPONSIBLE FOR THE ACCURACY OR COMPLETENESS OF SCANNED COPIES OF THIS PLAN SHEET.

LEGEND:

APPROXIMATE PAVING LIMITS

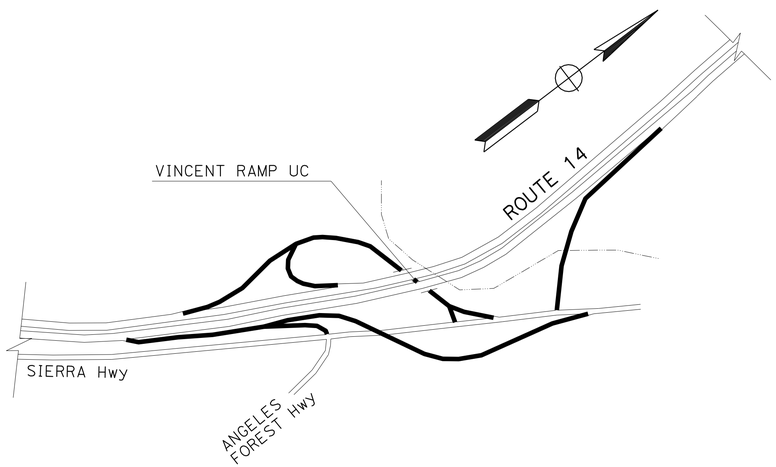

R54.19/R54.87

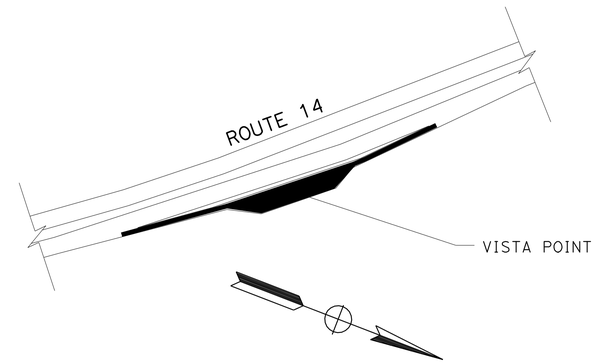

R56.79/R56.85

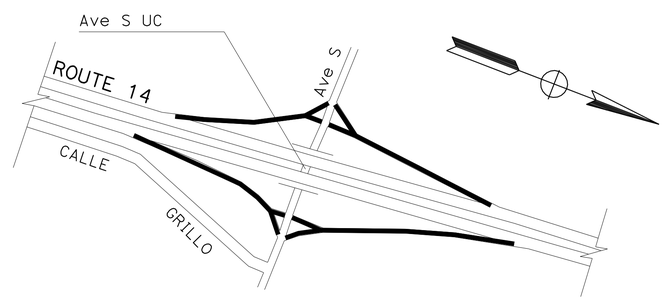

R57.97/R58.41

PAVING LOCATIONS

CONSTRUCTION DETAILS

NO SCALE

C-2

STATE OF CALIFORNIA - DEPARTMENT OF TRANSPORTATION
Caltrans OFFICE OF DESIGN B

FUNCTIONAL SUPERVISOR: MANSOOR KHAN
CALCULATED-DESIGNED BY: HOSS FARASAT
CHECKED BY: MANSOOR KHAN
REVISED BY
DATE REVISED

LAST REVISION 00-00-00
DATE PLOTTED => 09-SEP-2011
TIME PLOTTED => 10:58

Dist	COUNTY	LOCATION CODE	POST MILES TOTAL PROJECT	SHEET No.	TOTAL SHEETS
07	LA	14	R52.6/R59.2	7	58

H. Farasat 5-17-11
REGISTERED CIVIL ENGINEER DATE

6-20-11
PLANS APPROVAL DATE

REGISTERED PROFESSIONAL ENGINEER HOSS FARASAT No. C45672 Exp 12-31-12 CIVIL STATE OF CALIFORNIA

THE STATE OF CALIFORNIA OR ITS OFFICERS OR AGENTS SHALL NOT BE RESPONSIBLE FOR THE ACCURACY OR COMPLETENESS OF SCANNED COPIES OF THIS PLAN SHEET.

ABBREVIATIONS:

RSC	RAPID STRENGTH CONCRETE
LCBRS	LEAN CONCRETE BASE RAPID SETTING
ISR	INDIVIDUAL SLAB REPLACEMENT

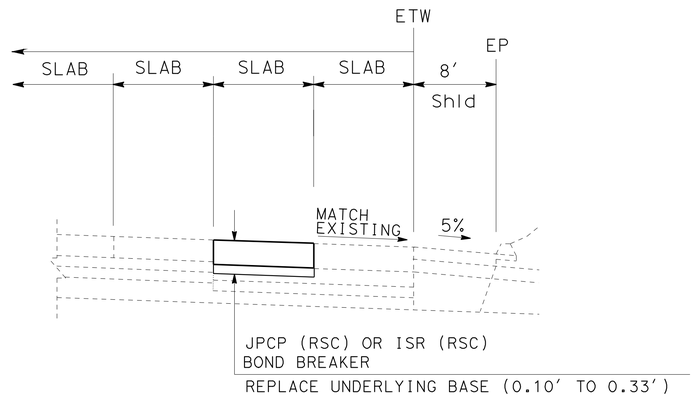

TYPICAL DETAIL FOR MAINLINE LOCALLY DAMAGED BASE

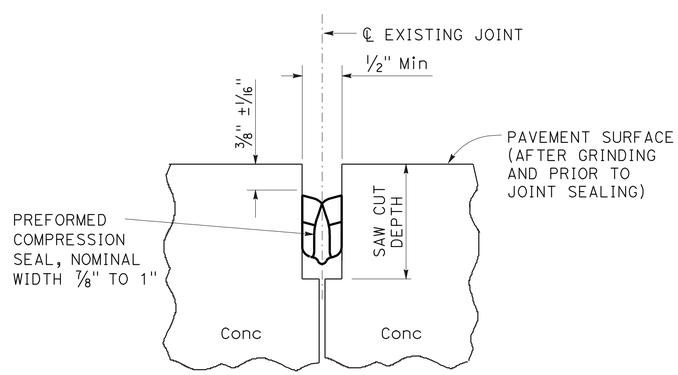

COMPRESSION SEAL

TYPE R (Mod)

USE AT ALL TRANSVERSE AND LONGITUDINAL JOINTS OF EXISTING PCC & INDIVIDUAL SLAB REPLACEMENTS.
FOR INFORMATION NOT SHOWN SEE RSP P20.

CONSTRUCTION DETAILS

NO SCALE

C-3

STATE OF CALIFORNIA - DEPARTMENT OF TRANSPORTATION
Caltrans® OFFICE OF DESIGN B

FUNCTIONAL SUPERVISOR: MANSOOR KHAN
CALCULATED-DESIGNED BY: HOSS FARASAT
CHECKED BY: MANSOOR KHAN
REVISED BY
DATE REVISED

LAST REVISION 00-00-00
DATE PLOTTED => 09-SEP-2011
TIME PLOTTED => 10:58

Dist	COUNTY	LOCATION CODE	POST MILES TOTAL PROJECT	SHEET No.	TOTAL SHEETS
07	LA	14	R52.6/R59.2	8	58

H. Farasat 5-17-11
REGISTERED CIVIL ENGINEER DATE

6-20-11
PLANS APPROVAL DATE

REGISTERED PROFESSIONAL ENGINEER HOSS FARASAT No. C45672 Exp 12-31-12 CIVIL STATE OF CALIFORNIA

THE STATE OF CALIFORNIA OR ITS OFFICERS OR AGENTS SHALL NOT BE RESPONSIBLE FOR THE ACCURACY OR COMPLETENESS OF SCANNED COPIES OF THIS PLAN SHEET.

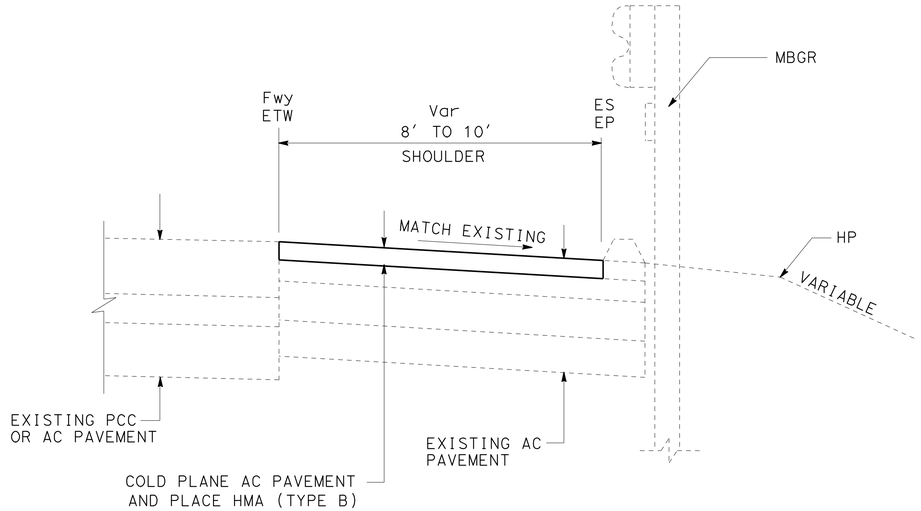

TYPICAL AT METAL BEAM GUARD RAILING

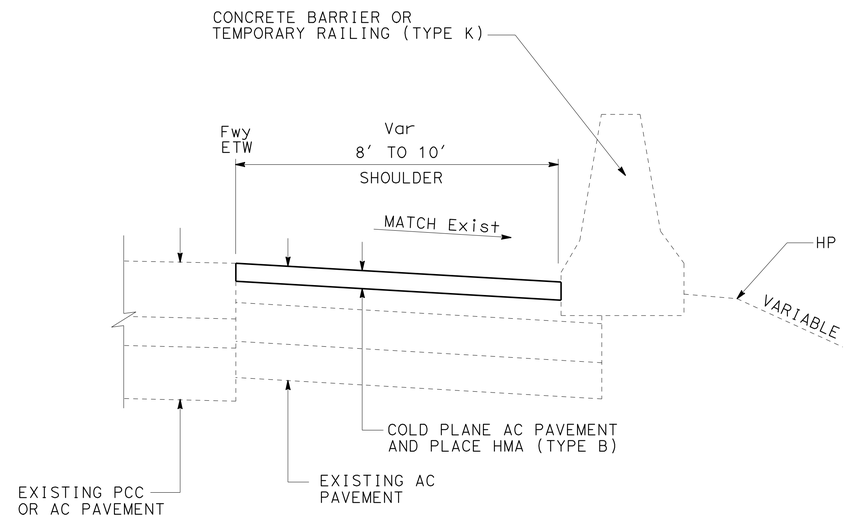

TYPICAL AT CONCRETE BARRIER, CONCRETE BARRIER (TYPE K), OR RETAINING WALL

ABBREVIATION:

RHMA-G RUBBERIZED HOT MIX ASPHALT (GAP GRADED)

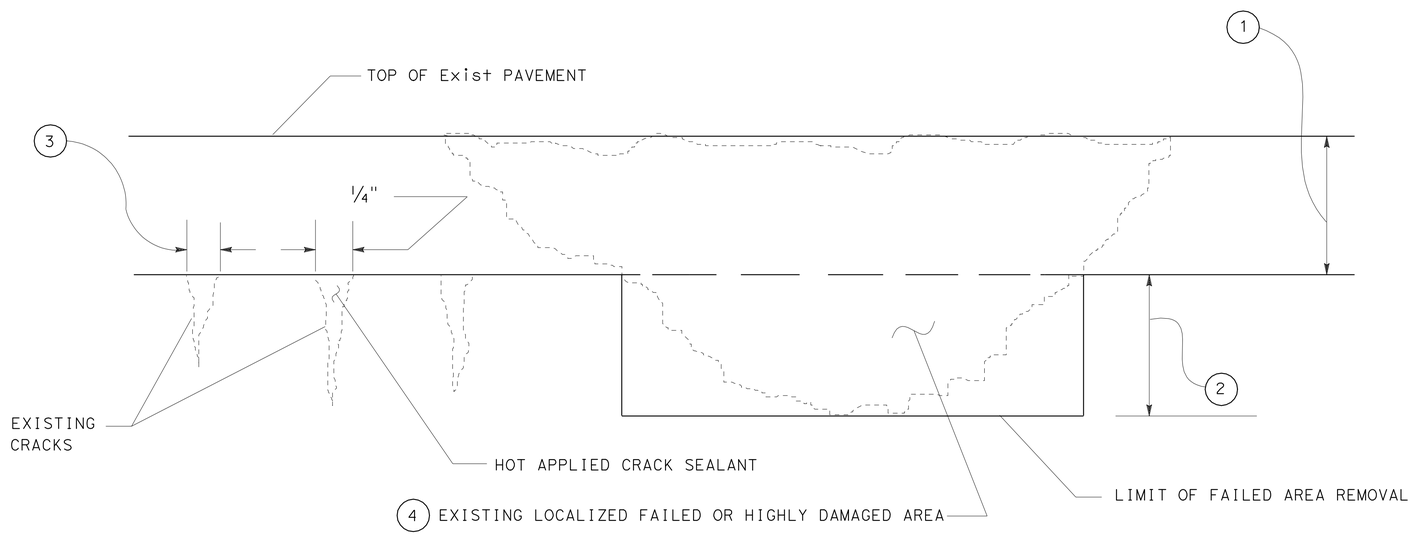

STEPS:

1. COLD PLANE AC PAVEMENT.
2. REMOVE LOCALIZED FAILED AREAS AND REPLACE WITH MINIMUM 0.15' HMA (TYPE B) OR RHMA-G.
3. SEAL CRACKS GREATER THAN 1/4" WITH HOT APPLIED CRACK SEALANT.
4. REPLACE AC SURFACING WITH THE PLANNED THICKNESS OF HMA (TYPE B) OR RHMA-G AFTER CRACK SEALANT HAS BEEN APPLIED FOR THE EXISTING CRACKS AND LOCALIZED FAILED AREAS HAVE BEEN REPAIRED.

TYPICAL DETAIL FOR SEAL RANDOM CRACKS & REPAIR FAILED AREA

CONSTRUCTION DETAILS

NO SCALE

C-4

REVISED BY | DATE REVISED
HOSS FARASAT | MANSOOR KHAN
CALCULATED-DESIGNED BY | CHECKED BY
FUNCTIONAL SUPERVISOR | MANSOOR KHAN
STATE OF CALIFORNIA - DEPARTMENT OF TRANSPORTATION
Caltrans® OFFICE OF DESIGN B

LAST REVISION 00-00-00 | DATE PLOTTED => 09-SEP-2011 | TIME PLOTTED => 10:58

Dist	COUNTY	LOCATION CODE	POST MILES TOTAL PROJECT	SHEET No.	TOTAL SHEETS
07	LA	14	R52.6/R59.2	9	58

REGISTERED CIVIL ENGINEER 5-17-11 DATE

6-20-11
PLANS APPROVAL DATE

REGISTERED PROFESSIONAL ENGINEER HOSS FARASAT No. C45672 Exp 12-31-12 CIVIL STATE OF CALIFORNIA

THE STATE OF CALIFORNIA OR ITS OFFICERS OR AGENTS SHALL NOT BE RESPONSIBLE FOR THE ACCURACY OR COMPLETENESS OF SCANNED COPIES OF THIS PLAN SHEET.

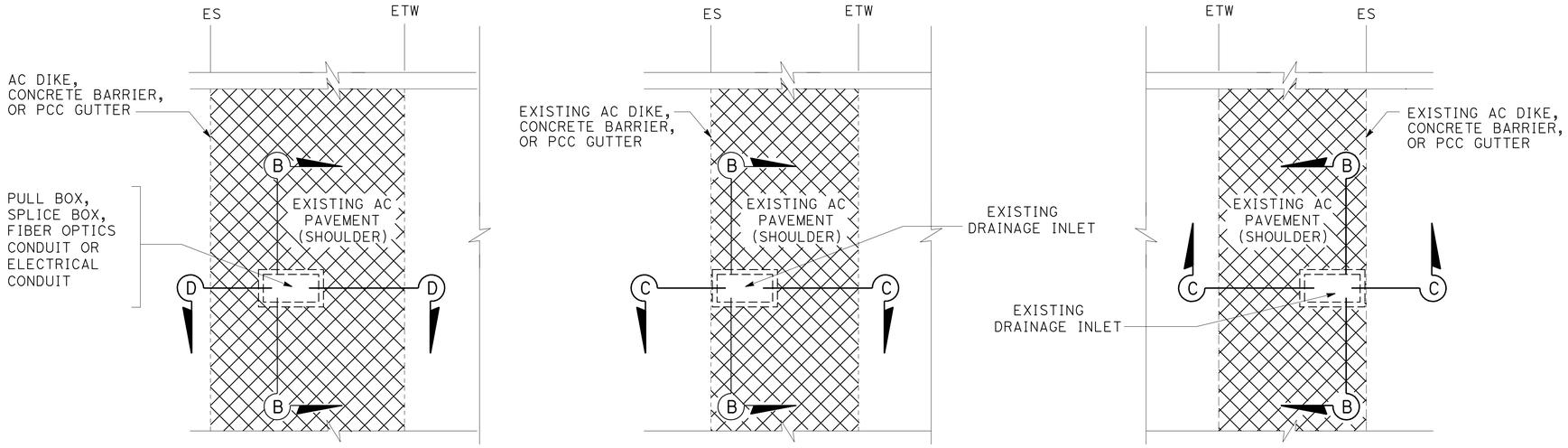

LEGEND:

COLD PLANE AC PAVEMENT AND PLACE HMA (TYPE B)

FIBER OPTIC PULL BOX, DRAINAGE INLET OR SPLICE BOX (VARIOUS LOCATIONS)

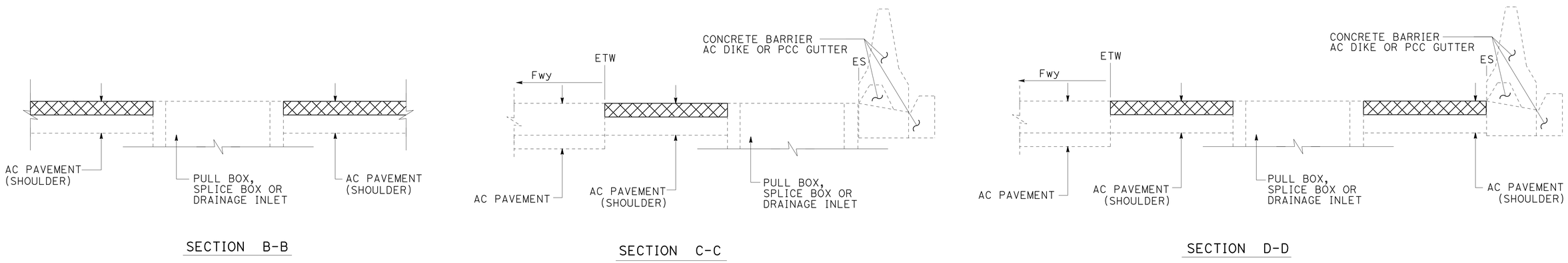

TYPICAL FIBER OPTIC PULL BOX, SPLICE BOX OR DRAINAGE INLET

CONSTRUCTION DETAILS

NO SCALE

C-5

STATE OF CALIFORNIA - DEPARTMENT OF TRANSPORTATION
Caltrans OFFICE OF DESIGN B

FUNCTIONAL SUPERVISOR: MANSOOR KHAN
CALCULATED-DESIGNED BY: HOSS FARASAT
CHECKED BY: MANSOOR KHAN
REVISED BY / DATE REVISED

LAST REVISION 00-00-00 | DATE PLOTTED => 09-SEP-2011 | TIME PLOTTED => 10:58

Dist	COUNTY	LOCATION CODE	POST MILES TOTAL PROJECT	SHEET No.	TOTAL SHEETS
07	LA	14	R52.6/R59.2	10	58

REGISTERED CIVIL ENGINEER 5-17-11 DATE

6-20-11
PLANS APPROVAL DATE

REGISTERED PROFESSIONAL ENGINEER HOSS FARASAT No. C45672 Exp 12-31-12 CIVIL STATE OF CALIFORNIA

THE STATE OF CALIFORNIA OR ITS OFFICERS OR AGENTS SHALL NOT BE RESPONSIBLE FOR THE ACCURACY OR COMPLETENESS OF SCANNED COPIES OF THIS PLAN SHEET.

NOTE:

1. FOR ACCURATE RIGHT OF WAY DATA, CONTACT RIGHT OF WAY ENGINEERING AT THE DISTRICT OFFICE.

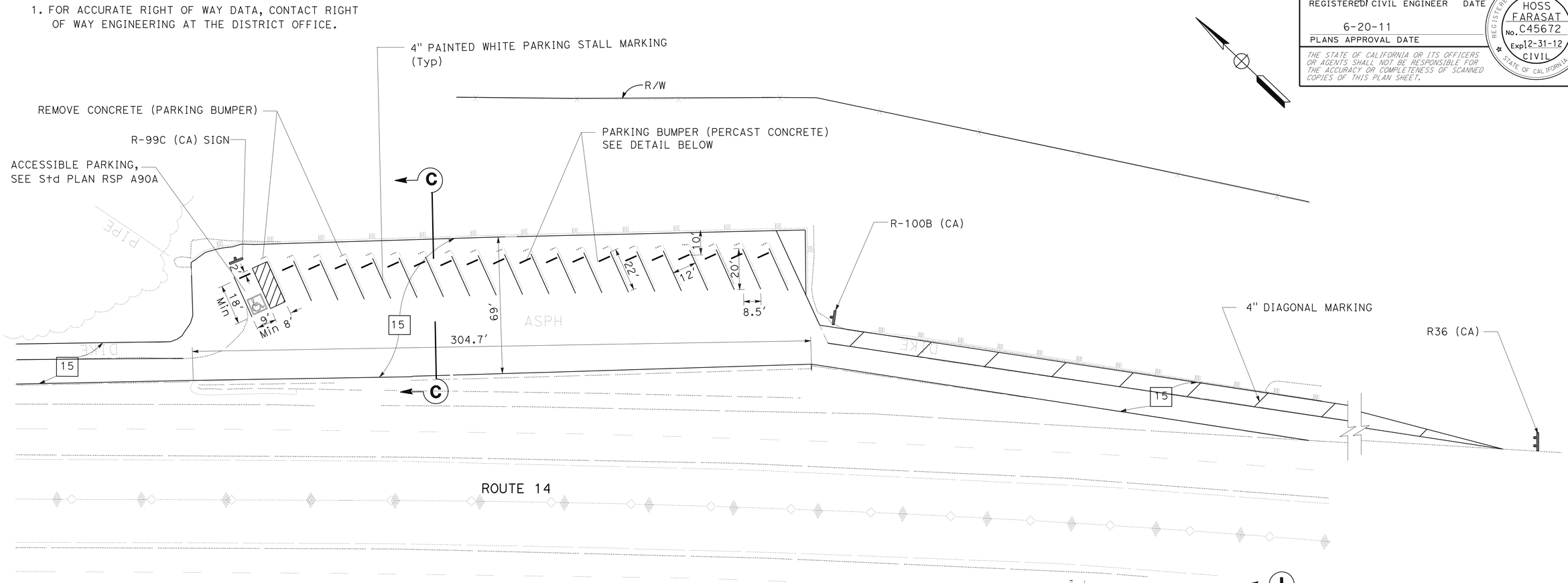

VISTA POINT PLAN

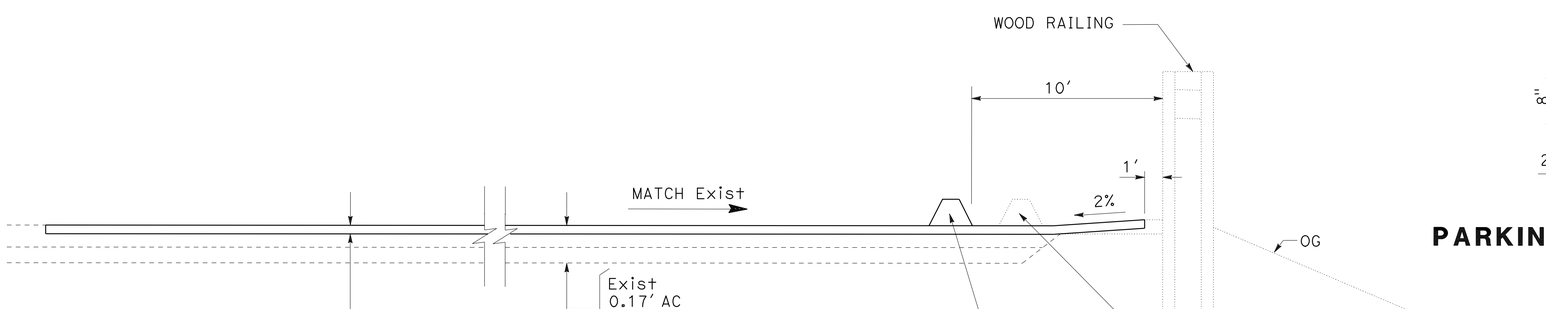

SECTION C-C

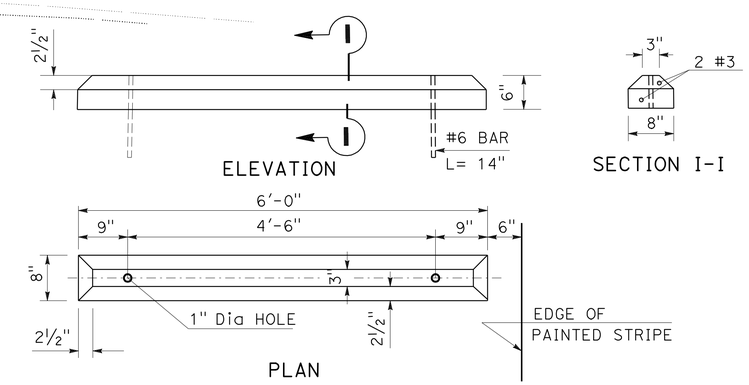

PARKING BUMPER (PRECAST CONCRETE) DETAIL

CONSTRUCTION DETAILS

NO SCALE

C-6

STATE OF CALIFORNIA - DEPARTMENT OF TRANSPORTATION
Caltrans OFFICE OF DESIGN B

FUNCTIONAL SUPERVISOR: MANSOOR KHAN
CALCULATED-DESIGNED BY: HOSS FARASAT
CHECKED BY: MAOSOOR KHAN
REVISED BY
DATE REVISED

LAST REVISION 00-00-00
DATE PLOTTED => 09-SEP-2011
TIME PLOTTED => 09:58

Dist	COUNTY	LOCATION CODE	POST MILES TOTAL PROJECT	SHEET No.	TOTAL SHEETS
07	LA	14	R52.6/R59.2	11	58

REGISTERED CIVIL ENGINEER 5-17-11 DATE

6-20-11
PLANS APPROVAL DATE

REGISTERED PROFESSIONAL ENGINEER HOSS FARASAT No. C45672 Exp 12-31-12 CIVIL STATE OF CALIFORNIA

THE STATE OF CALIFORNIA OR ITS OFFICERS OR AGENTS SHALL NOT BE RESPONSIBLE FOR THE ACCURACY OR COMPLETENESS OF SCANNED COPIES OF THIS PLAN SHEET.

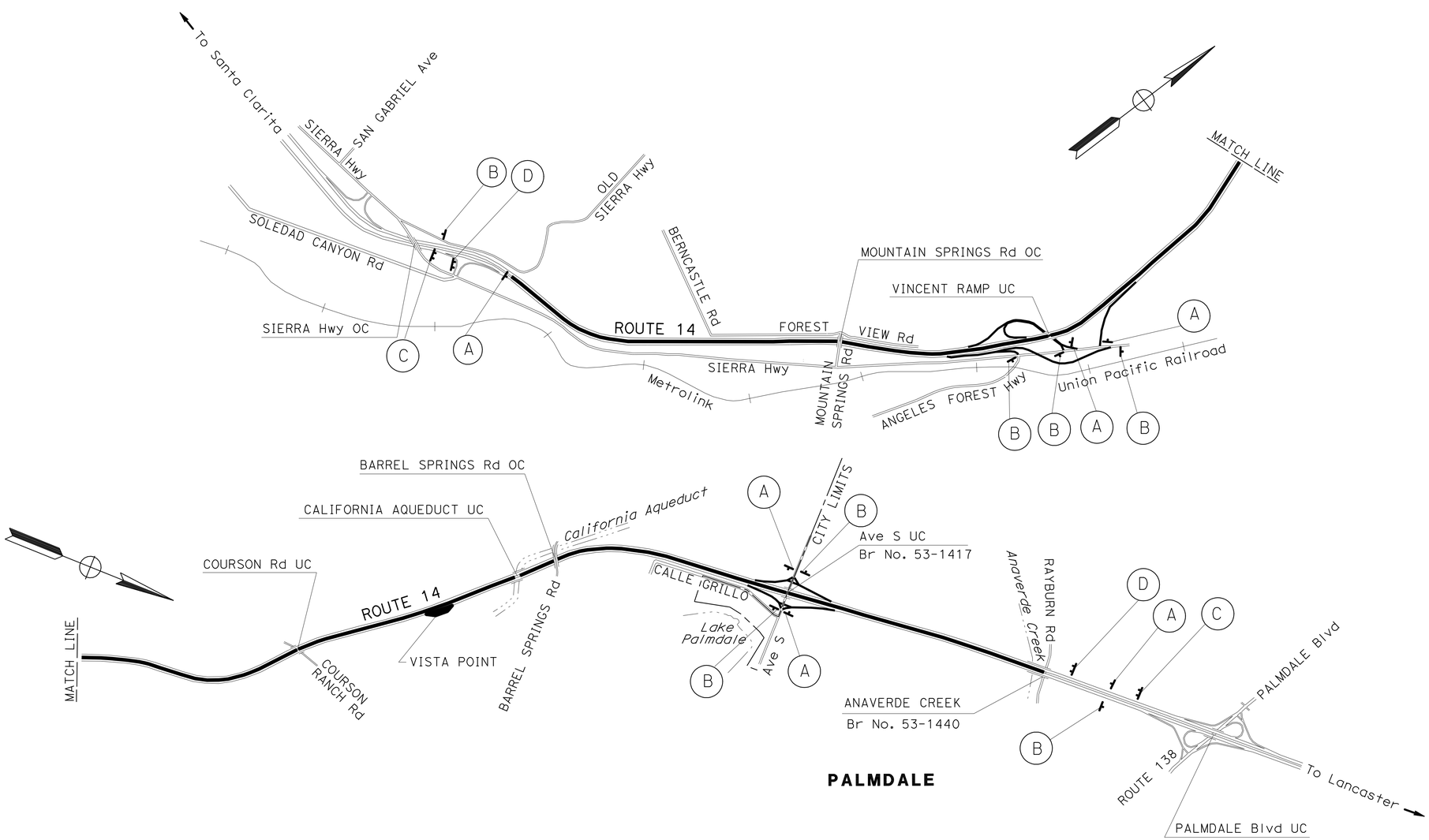

STATIONARY MOUNTED CONSTRUCTION AREA SIGNS

SIGN No.	SIGN CODE	PANEL SIZE	SIGN MESSAGE	No. OF POSTS & SIZE	No. OF SIGNS
A	W20-1	48"X48"	ROAD WORK AHEAD	1-6"X6"	6
B	G20-2	48"X24"	END ROAD WORK	1-4"X6"	7
C	C40(CA)	144"X60"	TRAFFIC FINES DOUBLED IN CONSTRUCTION ZONES	2-6"X6"	2
D	SEE RSP T7	132"X84"	SEE RSP T7	2-6"X6"	2
				TOTAL	17

NOTES:

1. LOCATIONS OF CONSTRUCITON AREA SIGNS SHOWN ARE APPROXIMATE. EXACT LOCATION WILL BE DETERMINED BY THE ENGINEER.
2. "TRAFFIC FINES DOUBLED IN CONSTRUCTION ZONES" SIGNS SHALL BE PLACED APPROXIMATELY 500 FEET IN ADVANCE OF "ROAD WORK AHEAD" SIGN OR AS DETERMINED BY THE ENGINEER.

CONSTRUCTION AREA SIGNS

NO SCALE

CS-1

THIS PLAN ACCURATE FOR CONSTRUCTION AREA SIGN WORK ONLY.

STATE OF CALIFORNIA - DEPARTMENT OF TRANSPORTATION
Caltrans OFFICE OF DESIGN B

FUNCTIONAL SUPERVISOR: MANSOOR KHAN
CALCULATED-DESIGNED BY: HOSS FARASAT
CHECKED BY: MANSOOR KHAN
REVISED BY
DATE REVISED

LAST REVISION 00-00-00
DATE PLOTTED => 09-SEP-2011
TIME PLOTTED => 10:58

Dist	COUNTY	ROUTE	POST MILES TOTAL PROJECT	SHEET No.	TOTAL SHEETS
07	LA	14	R52.6/R59.2	12	58

REGISTERED CIVIL ENGINEER 01-31-11 DATE

06-20-11
PLANS APPROVAL DATE

REGISTERED PROFESSIONAL ENGINEER MARTIN OREGEL No. C56816 Exp. 6-30-11 CIVIL STATE OF CALIFORNIA

THE STATE OF CALIFORNIA OR ITS OFFICERS OR AGENTS SHALL NOT BE RESPONSIBLE FOR THE ACCURACY OR COMPLETENESS OF SCANNED COPIES OF THIS PLAN SHEET.

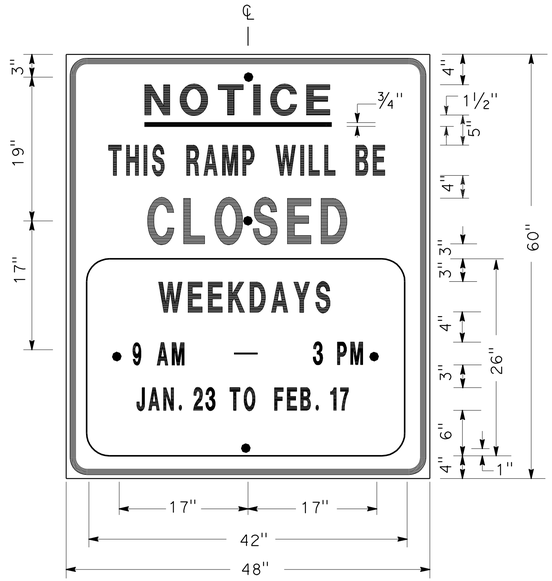

SIGN SP-1

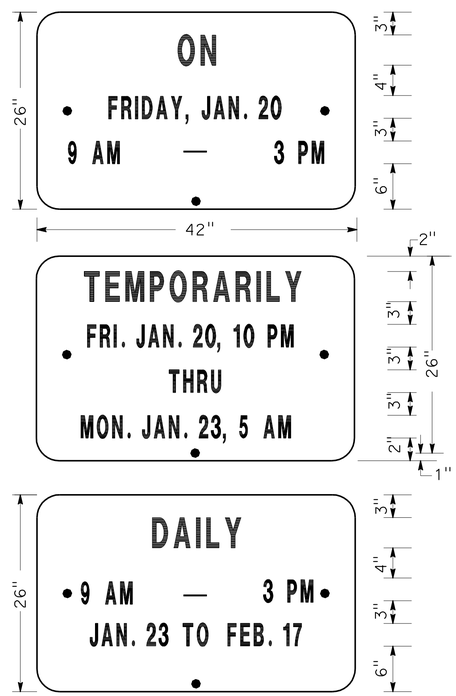

ALTERNATE OVERLAY PANELS (TYPICAL)

SPECIAL ADVANCE NOTICE PUBLICITY SIGN

NOTES: (SIGN SP-1)

1. SIGNS SHALL HAVE ORANGE RETROREFLECTORIZED BACKGROUND WITH BLACK BORDER AND LETTERS.
2. BOLT HOLES SHALL BE 3/8" DIAMETER.
3. BASE MATERIAL SHALL BE ALUMINUM (MINIMUM 0.06").
4. SIGNS SHALL BE MOUNTED WITH BOTTOMS OF SIGNS A MINIMUM OF 6' ABOVE GROUND.

SIZE	BORDER WIDTH	MARGIN WIDTH	LETTER SIZE					CORNER RADIUS
			LINE 1	LINE 2*	LINE 3	LINE 4	LINE 5,6 & 7*	
48"x60"	1 1/4"	3/4"	4E	4D	6E	4D		3"
42"x26"	OVERLAY						3D	1 1/2"
* CONDENSED SPACING IF NECESSARY								

SIGN SP-4

NOTES: (SIGN SP-4)

1. LETTERS - 6" SERIES C.
2. LETTERS AND BORDERS - BLACK ON RETROREFLECTORIZED WHITE BACKGROUND.
3. BASE MATERIAL SHALL BE ALUMINUM (MINIMUM 0.06").
4. SIGNS SHALL BE PLACED AT RAMP ENTRANCES IN ADDITION TO SIGNS POSTED IN ACCORDANCE WITH STANDARD PLAN T14.

SPECIAL SIGN FOR ENTRANCE RAMP CLOSURES

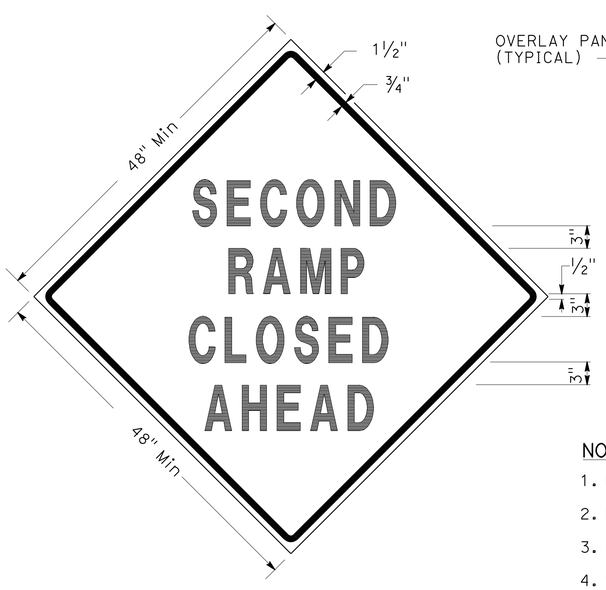

SIGN SP-3

SIGN SP-5

NOTES: (SIGNS SP-3 & SP-5)

1. LETTERS - 6" SERIES D.
2. LETTERS AND BORDERS - BLACK ON RETROREFLECTORIZED ORANGE BACKGROUND.
3. BASE MATERIAL SHALL BE ALUMINUM (MINIMUM 0.06").
4. SIGNS SHALL BE MOUNTED WITH BOTTOMS OF SIGNS A MINIMUM OF 6' ABOVE GROUND.

SPECIAL SIGN FOR EXIT RAMP CLOSURES

TRAFFIC HANDLING DETAILS
TRAFFIC CONTROL SYSTEM FOR RAMP CLOSURES, DETOUR SIGNS AND MISCELLANEOUS DETAILS
SHEET 1 OF 2

NO SCALE

THD-1

STATE OF CALIFORNIA - DEPARTMENT OF TRANSPORTATION
Caltrans® DTM

FUNCTIONAL SUPERVISOR: MARTIN OREGEL
CALCULATED-DESIGNED BY: ALBERT K YU
CHECKED BY: JOCELYN C CHIANG
REVISED BY: JC
DATE REVISED: 7/10

LAST REVISION 01-31-11
DATE PLOTTED => 09-SEP-2011
TIME PLOTTED => 10:58

Dist	COUNTY	ROUTE	POST MILES TOTAL PROJECT	SHEET No.	TOTAL SHEETS
07	LA	14	R52.6/R59.2	13	58

REGISTERED CIVIL ENGINEER 01-31-11 DATE

06-20-11
PLANS APPROVAL DATE

REGISTERED PROFESSIONAL ENGINEER MARTIN OREGEL No. C56816 Exp. 6-30-11 CIVIL STATE OF CALIFORNIA

THE STATE OF CALIFORNIA OR ITS OFFICERS OR AGENTS SHALL NOT BE RESPONSIBLE FOR THE ACCURACY OR COMPLETENESS OF SCANNED COPIES OF THIS PLAN SHEET.

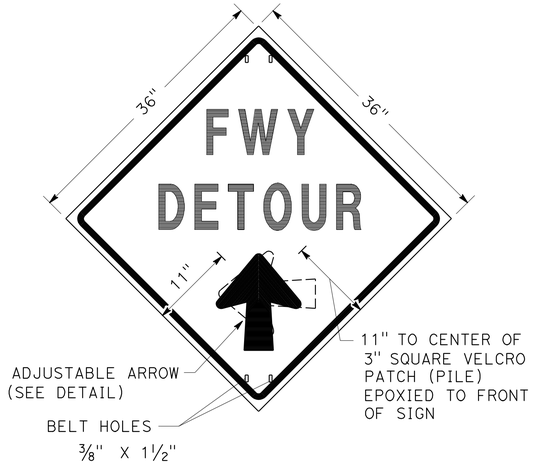

SIGN SP-2

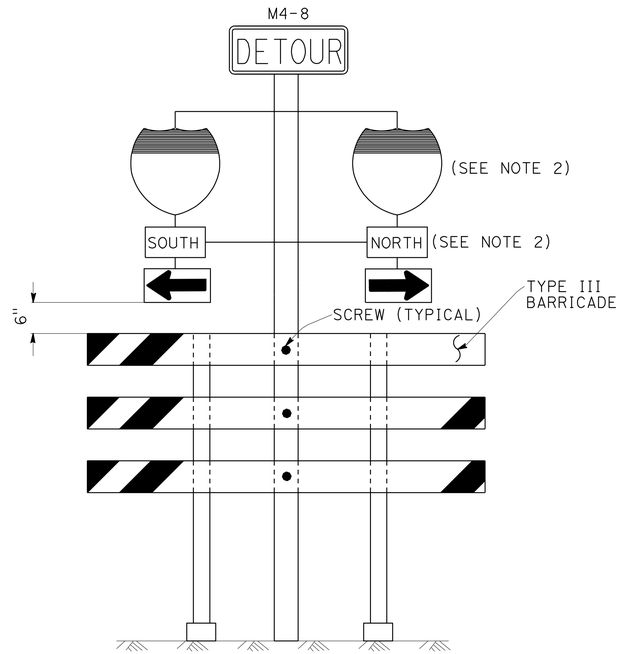

SIGN SP-6 (SEE NOTE 1)

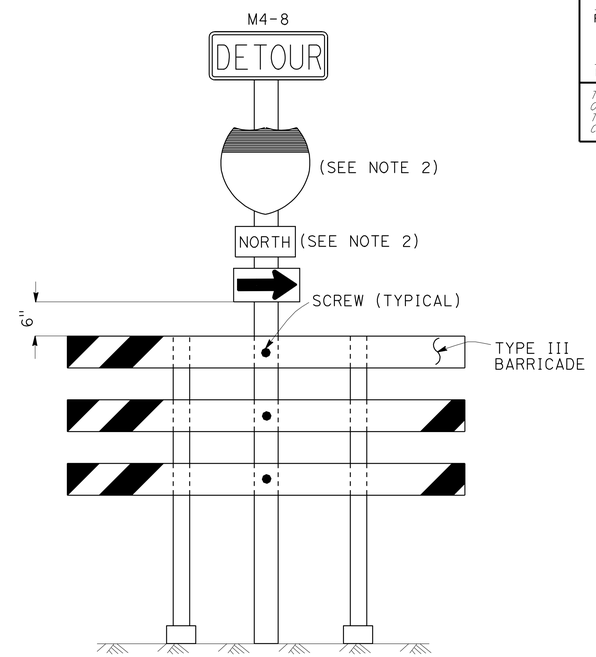

SIGN SP-7 (SEE NOTE 1)

NOTES: (SIGN SP-2)

1. LETTERS -6" SERIES E.
2. LETTERS, BORDER AND ARROW - BLACK ON RETROREFLECTORIZED ORANGE BACKGROUND.
3. BASE MATERIAL FOR SIGNS AND ARROWS SHALL BE ALUMINUM (MINIMUM 0.06").
4. BELTS (LUGGAGE STRAPS) SHALL BE 1" WIDE BY 48" LONG, MADE OF COTTON OR POLYPROPYLENE WEB MATERIAL.
5. SIGNS SHALL BE MOUNTED WITH BOTTOMS OF SIGNS A MINIMUM OF 6' ABOVE GROUND EXCEPT AS OTHERWISE SHOWN ON OTHER TRAFFIC HANDLING DETAILS PLANS.

ABBREVIATION

(CA) CALIFORNIA CODE

NOTES: (SIGNS SP-6 & SP-7)

1. IN LIEU OF PLACING SIGNS ON TYPE III BARRICADES, SIGNS, INCLUDING POSTS, MAY BE PLACED INTO THE GROUND OR FASTENED ONTO ELECTROLIERS.
2. USE APPROPRIATE ROUTE SHIELD [G26-2(CA), G27-2(CA), G28-2(CA)] AND CARDINAL DIRECTION [NORTH (M3-1), SOUTH (M3-3), EAST (M3-2), WEST (M3-4)]

SPECIAL PORTABLE FREEWAY DETOUR SIGNS

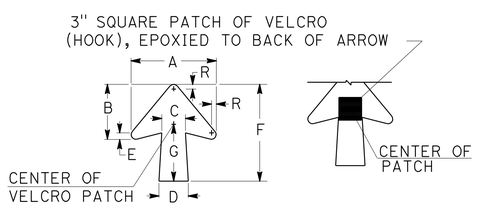

DIMENSIONS							
A	B	C	D	E	F	G	R
11 1/4"	7 1/4"	3 1/8"	4"	7/8"	13"	7 1/2"	5/8"

SPECIAL PORTABLE FREEWAY DETOUR SIGN

ADJUSTABLE ARROW DETAIL

TRAFFIC HANDLING DETAILS

TRAFFIC CONTROL SYSTEM FOR RAMP CLOSURES, DETOUR SIGNS AND MISCELLANEOUS DETAILS

SHEET 2 OF 2

NO SCALE

THD-2

STATE OF CALIFORNIA - DEPARTMENT OF TRANSPORTATION
Caltrans DTM

FUNCTIONAL SUPERVISOR: MARTIN OREGEL
CALCULATED-DESIGNED BY: ALBERT K YU
CHECKED BY: JOCELYN C CHIANG
REVISED BY: JC
DATE REVISED: 7/10

LAST REVISION 01-31-11 | DATE PLOTTED => 09-SEP-2011 | TIME PLOTTED => 10:58

Dist	COUNTY	ROUTE	POST MILES TOTAL PROJECT	SHEET No.	TOTAL SHEETS
07	LA	14	R52.6/R59.2	14	58

REGISTERED CIVIL ENGINEER 01-31-11 DATE

06-20-11
PLANS APPROVAL DATE

REGISTERED PROFESSIONAL ENGINEER MARTIN OREGEL No. C56816 Exp. 6-30-11 CIVIL STATE OF CALIFORNIA

THE STATE OF CALIFORNIA OR ITS OFFICERS OR AGENTS SHALL NOT BE RESPONSIBLE FOR THE ACCURACY OR COMPLETENESS OF SCANNED COPIES OF THIS PLAN SHEET.

NOTES:

1. LANE CLOSURES SHALL NOT BE PLACED ON CREST VERTICAL CURVES OR ON HORIZONTAL CURVES.
2. PCMS SHALL BE ACTIVATED PRIOR TO TRAFFIC CONTROL ACTIVITIES ON THE HOV LANE.
3. A MINIMUM SIGHT DISTANCE OF 1500′ SHALL BE PROVIDED IN ADVANCE OF PCMS.
4. VEHICLE-MOUNTED SIGN PANELS SHALL BE TYPE III OR IV RETROREFLECTORIZED SHEETING, BLACK ON WHITE OR BLACK ON ORANGE WITH 8" MINIMUM SERIES D LETTERS PER CALTRANS SIGN SPECIFICATIONS.
5. PLACE PCMS ON THE MEDIAN SHOULDER WHERE SUFFICIENT ROOM (SUCH AS CHP ENFORCEMENT AREAS) EXISTS.

LEGEND

V1, V2	SHADOW VEHICLE
V3	WORK/APPLICATION VEHICLE
	PORTABLE CHANGEABLE MESSAGE SIGN (PCMS)
	DIRECTION OF TRAVEL
	HOV LANE

ABBREVIATIONS

FAS	FLASHING ARROW SIGN
IAV	IMPACT ATTENUATOR VEHICLE
CMS	CHANGEABLE MESSAGE SIGN
(CA)	CALIFORNIA CODE
PCMS	PORTABLE CHANGEABLE MESSAGE SIGN
HOV	HIGH OCCUPANCY VEHICLE

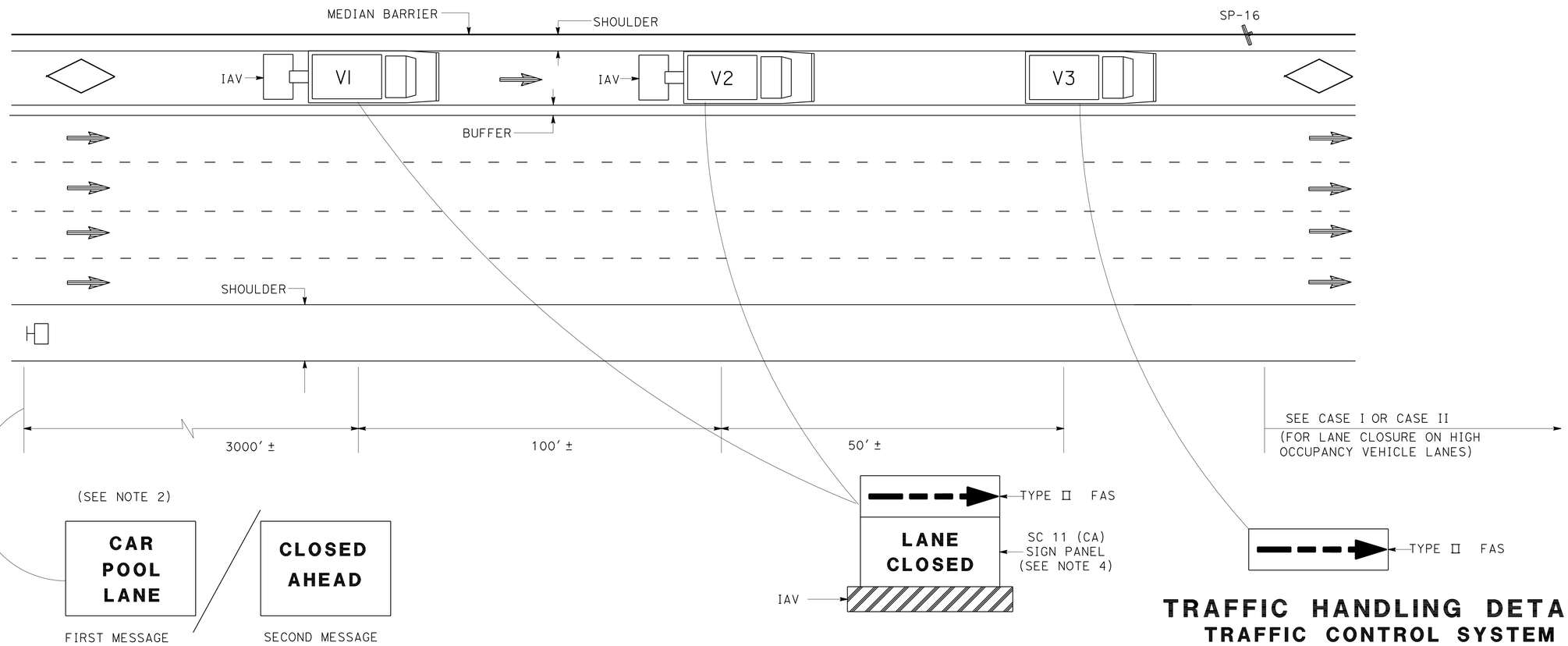

PCMS/TRUCK MOUNTED CMS
(SEE NOTE 5)

TRAFFIC HANDLING DETAILS
TRAFFIC CONTROL SYSTEM FOR HIGH OCCUPANCY VEHICLE LANES WITH MEDIAN SHOULDERS LESS THAN 8 FEET

NO SCALE

THD-3

STATE OF CALIFORNIA - DEPARTMENT OF TRANSPORTATION
Caltrans
DTM

FUNCTIONAL SUPERVISOR: MARTIN OREGEL
CALCULATED-DESIGNED BY: ALBERT K YU
CHECKED BY: JOCELYN C CHIANG
REVISED BY: JC
DATE REVISED: 7/10

LAST REVISION 01-31-11
DATE PLOTTED => 09-SEP-2011
TIME PLOTTED => 10:58

Dist	COUNTY	ROUTE	POST MILES TOTAL PROJECT	SHEET No.	TOTAL SHEETS
07	LA	14	R52.6/R59.2	15	58

REGISTERED CIVIL ENGINEER 01-31-11 DATE

06-20-11
PLANS APPROVAL DATE

REGISTERED PROFESSIONAL ENGINEER MARTIN OREGEL No. C56816 Exp. 6-30-11 CIVIL STATE OF CALIFORNIA

THE STATE OF CALIFORNIA OR ITS OFFICERS OR AGENTS SHALL NOT BE RESPONSIBLE FOR THE ACCURACY OR COMPLETENESS OF SCANNED COPIES OF THIS PLAN SHEET.

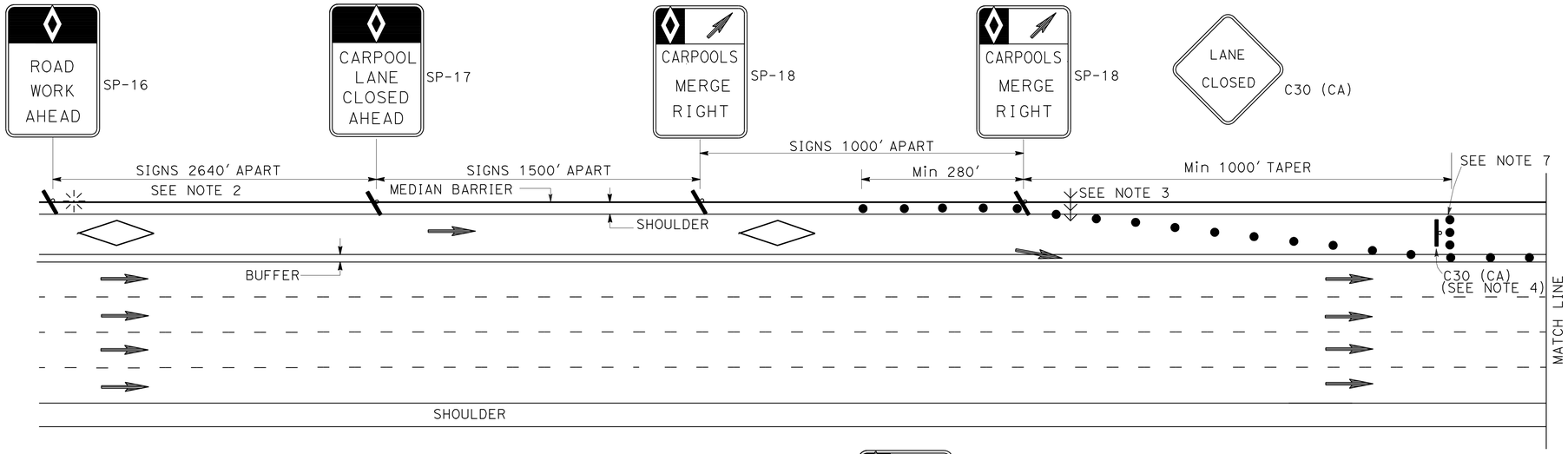

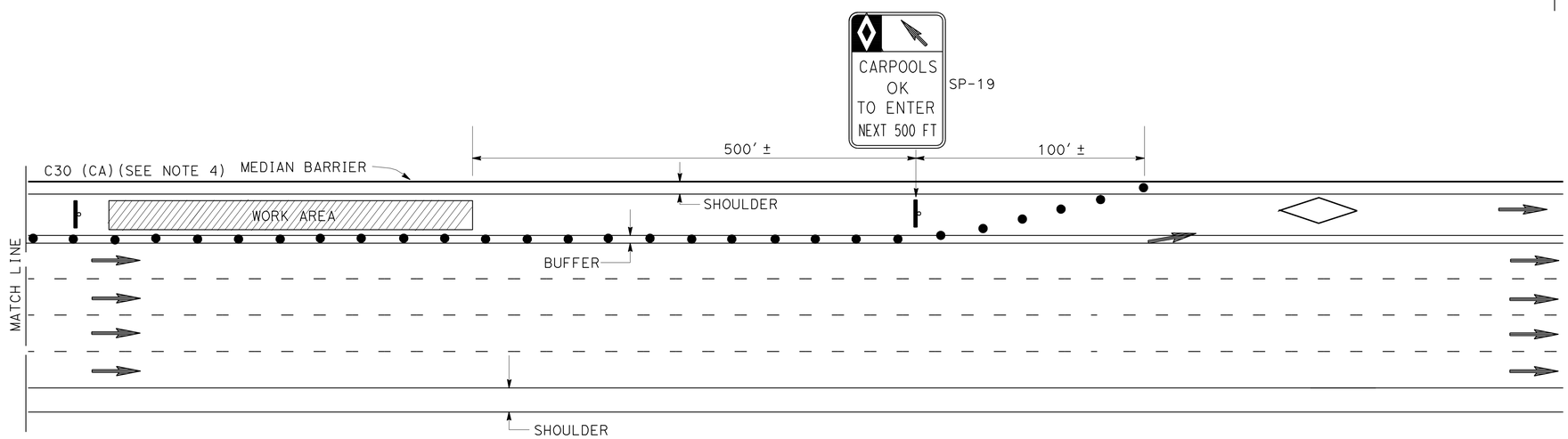

ABBREVIATIONS

(CA) CALIFORNIA CODE

HOV HIGH OCCUPANCY VEHICLE

NOTES: FOR CASE I AND CASE II

1. AT LEAST ONE PERSON SHALL BE ASSIGNED TO FULL TIME MAINTENANCE OF TRAFFIC CONTROL DEVICES ON NIGHT LANE CLOSURES OR DAY-TIME CLOSURES EXCEEDING 1 MILE LENGTH, INCLUDING TAPERS.
2. ADVANCE WARNING SIGN INSTALLATIONS SHALL BE EQUIPPED WITH FLAGS FOR DAYTIME CLOSURES. TYPE B HIGH INTENSITY FLASHING WARNING LIGHTS SHALL BE USED ON SP-16 SIGNS DURING NIGHT LANE CLOSURES. FLAGS AND WARNING LIGHTS SHALL BE ATTACHED TO SIGNS AS APPROVED BY THE ENGINEER.
3. THE FLASHING ARROW SIGN SHALL BE TYPE I.
4. PLACE C30 (CA) SIGNS EVERY 2000' THROUGHOUT THE LENGTH OF LANE CLOSURE.
5. A MINIMUM 1500' OF SIGHT DISTANCE SHALL BE PROVIDED WHERE POSSIBLE FOR VEHICLES APPROACHING THE FLASHING ARROW SIGN. LANE CLOSURES SHALL NOT BE PLACED ON CREST VERTICAL CURVES OR ON HORIZONTAL CURVES.
6. PORTABLE DELINEATORS PLACED AT ONE-HALF THE SPACING INDICATED FOR TRAFFIC CONES MAY BE USED INSTEAD OF CONES FOR DAYTIME CLOSURES.
7. A MINIMUM OF 3 CONES SHALL BE PLACED TRANSVERSELY ACROSS CLOSED LANES WHERE TAPERS END AND EVERY 2000'. TWO TYPE II BARRICADES MAY BE USED INSTEAD OF 3 CONES. THE ALIGNMENT OF CONES OR BARRICADES MAY BE SHIFTED FROM THE TRANSVERSE ALIGNMENT TO PROVIDE ACCESS TO WORK.
8. IF AN INGRESS/EGRESS AREA IS WITHIN 5250' UPSTREAM OR DOWNSTREAM OF THE WORK AREA, LANE CLOSURES SHALL BE EXTENDED TO THAT AREA AS SHOWN IN CASE II.
9. SIGNS SP-16, 17, 18, AND 19 MAY BE OVERLAID ON EXISTING CARPOOL SIGNS IN MEDIANS AS APPROVED BY THE ENGINEER.
10. SIGNS SP-16, 17, 18, AND C30 (CA) SHALL BE BLACK ON ORANGE BACKGROUND. SIGN SP-19 SHALL BE BLACK ON WHITE BACKGROUND. DIAMONDS ON SIGNS SHALL BE WHITE.
11. FOR CLOSURE OF LANE(S) ADJACENT TO HOV LANES, SEE CASE II.
12. THE MAXIMUM SPACING BETWEEN CONES SHALL BE APPROXIMATELY 50' IN TAPERS AND 100' ON TANGENTS.

LEGEND

- CONE
- FLASHING BEACON
- HOV LANE
- FLASHING ARROW SIGN
- PORTABLE SIGN
- DIRECTION OF TRAVEL

SIGN PANEL

SIZE (MIN)

SP-16 36" X 54"
SP-17 36" X 54"
SP-18 36" X 48"
SP-19 36" X 60"
C30 (CA) 30" X 30"
G20-2 48" X 24"

TRAFFIC HANDLING DETAILS
TRAFFIC CONTROL SYSTEM FOR HIGH OCCUPANCY VEHICLE LANES AT NON-INGRESS/EGRESS AREAS
CASE I
NO SCALE

THD-4

STATE OF CALIFORNIA - DEPARTMENT OF TRANSPORTATION
Caltrans DTM

FUNCTIONAL SUPERVISOR: MARTIN OREGEL
CALCULATED-DESIGNED BY: ALBERT K YU
CHECKED BY: JOCELYN C CHIANG
REVISED BY: JC
DATE REVISED: 7/10

LAST REVISION 01-31-11 | DATE PLOTTED => 09-SEP-2011 | TIME PLOTTED => 10:58

Dist	COUNTY	ROUTE	POST MILES TOTAL PROJECT	SHEET No.	TOTAL SHEETS
07	LA	14	R52.6/R59.2	16	58

REGISTERED CIVIL ENGINEER 01-31-11 DATE

06-20-11
PLANS APPROVAL DATE

REGISTERED PROFESSIONAL ENGINEER MARTIN OREGEL No. C56816 Exp. 6-30-11 CIVIL STATE OF CALIFORNIA

THE STATE OF CALIFORNIA OR ITS OFFICERS OR AGENTS SHALL NOT BE RESPONSIBLE FOR THE ACCURACY OR COMPLETENESS OF SCANNED COPIES OF THIS PLAN SHEET.

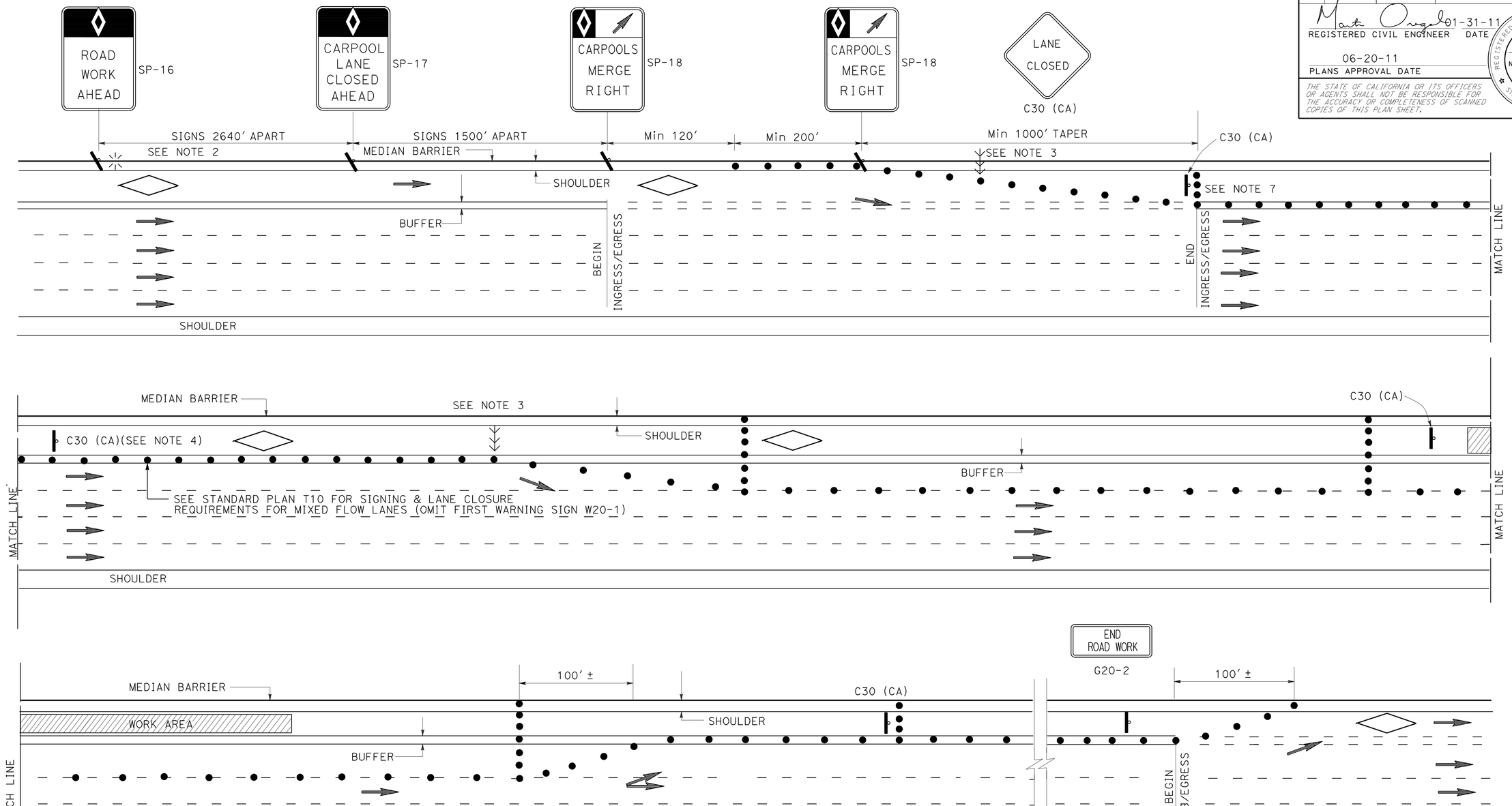

NOTES:

1. SEE CASE I FOR NOTES, LEGENDS AND ABBREVIATIONS FOR THIS SHEET.
2. CLOSURES OF ONE MIXED FLOW TRAFFIC LANE ADJACENT TO HOV LANE SHOWN. MULTIPLE MIXED FLOW LANE CLOSURES ARE SIMILAR.

TRAFFIC HANDLING DETAILS
TRAFFIC CONTROL SYSTEM FOR HIGH OCCUPANCY VEHICLE LANES AND ADJACENT FREEWAY LANES BETWEEN INGRESS/EGRESS AREAS
CASE II

NO SCALE

THD-5

REVISED BY	DATE REVISED
JC	7/10

ALBERT K YU
JOCELYN C CHIANG

CALCULATED-DESIGNED BY
CHECKED BY

FUNCTIONAL SUPERVISOR
MARTIN OREGEL

STATE OF CALIFORNIA - DEPARTMENT OF TRANSPORTATION
DTM
Caltrans

LAST REVISION 01-31-11
DATE PLOTTED => 09-SEP-2011
TIME PLOTTED => 10:58

Dist	COUNTY	ROUTE	POST MILES TOTAL PROJECT	SHEET No.	TOTAL SHEETS
07	LA	14	R52.6/R59.2	17	58

REGISTERED CIVIL ENGINEER 01-31-11 DATE

06-20-11
PLANS APPROVAL DATE

REGISTERED PROFESSIONAL ENGINEER MARTIN OREGEL No. C56816 Exp. 6-30-11 CIVIL STATE OF CALIFORNIA

THE STATE OF CALIFORNIA OR ITS OFFICERS OR AGENTS SHALL NOT BE RESPONSIBLE FOR THE ACCURACY OR COMPLETENESS OF SCANNED COPIES OF THIS PLAN SHEET.

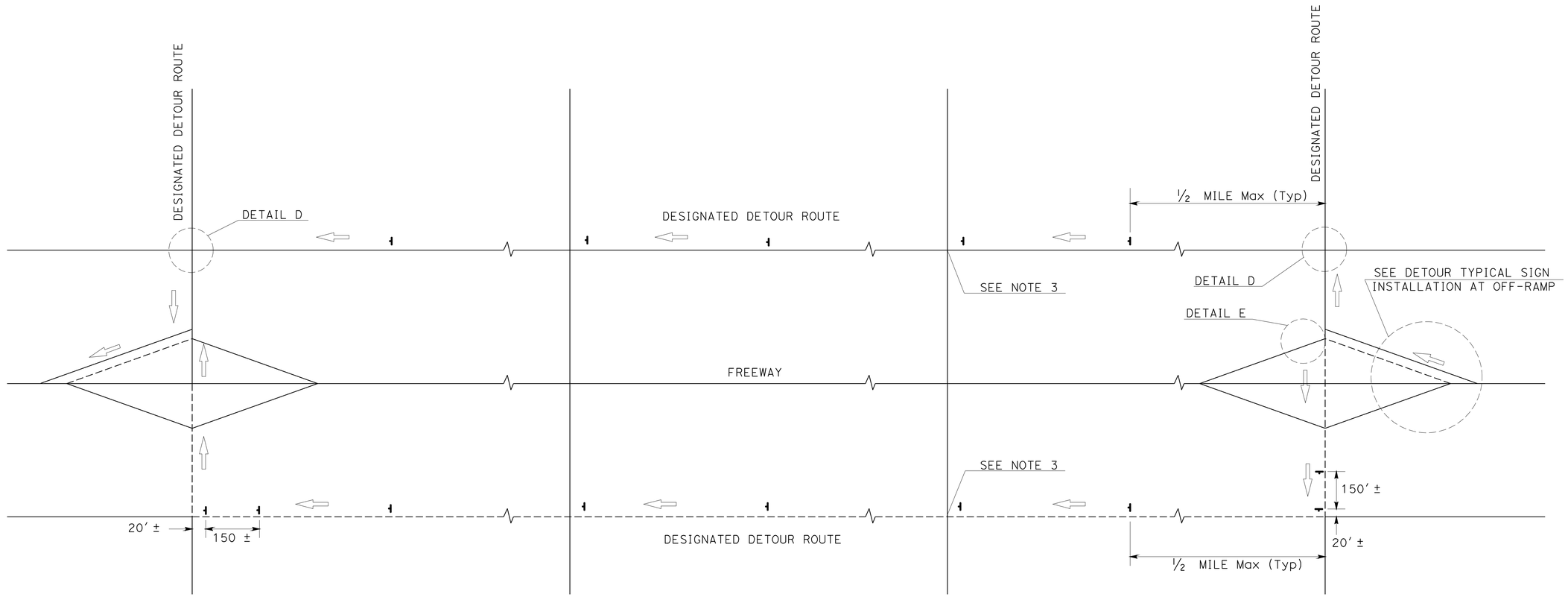

TYPICAL DETOUR SIGN INSTALLATION ALONG DESIGNATED DETOUR ROUTE

LEGEND

- TEMPORARY SIGN (SP-2)
- AND/OR DESIGNATED DETOUR ROUTE
- DIRECTION OF TRAVEL

NOTES:

1. SP-2 SIGNS SHALL NOT BE INSTALLED ON BARRICADES EXCEPT AS OTHERWISE SHOWN.
2. SIGN LOCATIONS ARE APPROXIMATE. EXACT LOCATIONS WILL BE DETERMINED BY THE ENGINEER.
3. SP-2 SIGNS SHALL BE POSTED AT SIGNALIZED INTERSECTIONS ALONG THE DESIGNATED DETOUR ROUTE OR ½ MILE MAXIMUM APART.

TRAFFIC HANDLING DETAILS

TRAFFIC CONTROL SYSTEM FOR DETOUR SIGN INSTALLATION ALONG DESIGNATED DETOUR ROUTE

SHEET 1 OF 2

NO SCALE

THD-6

STATE OF CALIFORNIA - DEPARTMENT OF TRANSPORTATION
Caltrans DTM

FUNCTIONAL SUPERVISOR: MARTIN OREGEL
CALCULATED-DESIGNED BY: ALBERT K YU
CHECKED BY: JOCELYN C CHIANG
REVISED BY: JC
DATE REVISED: 7/10

LAST REVISION 01-31-11
DATE PLOTTED => 09-SEP-2011
TIME PLOTTED => 10:58

Dist	COUNTY	ROUTE	POST MILES TOTAL PROJECT	SHEET No.	TOTAL SHEETS
07	LA	14	R52.6/R59.2	18	58

REGISTERED CIVIL ENGINEER 01-31-11 DATE

06-20-11
PLANS APPROVAL DATE

REGISTERED PROFESSIONAL ENGINEER MARTIN OREGEL No. C56816 Exp. 6-30-11 CIVIL STATE OF CALIFORNIA

THE STATE OF CALIFORNIA OR ITS OFFICERS OR AGENTS SHALL NOT BE RESPONSIBLE FOR THE ACCURACY OR COMPLETENESS OF SCANNED COPIES OF THIS PLAN SHEET.

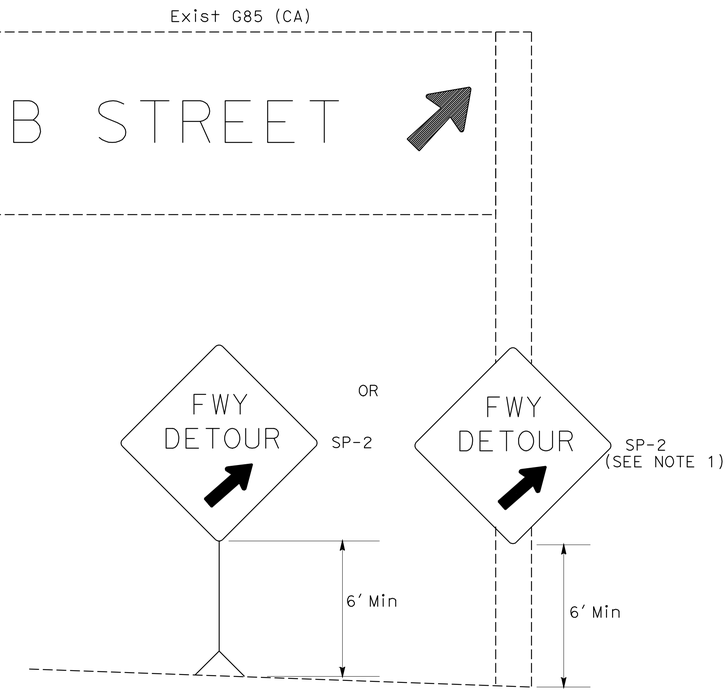

DETAIL A

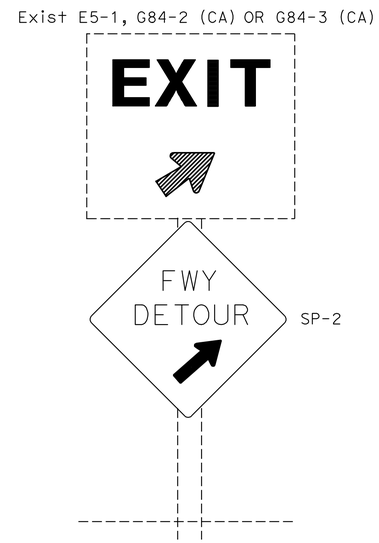

DETAIL B

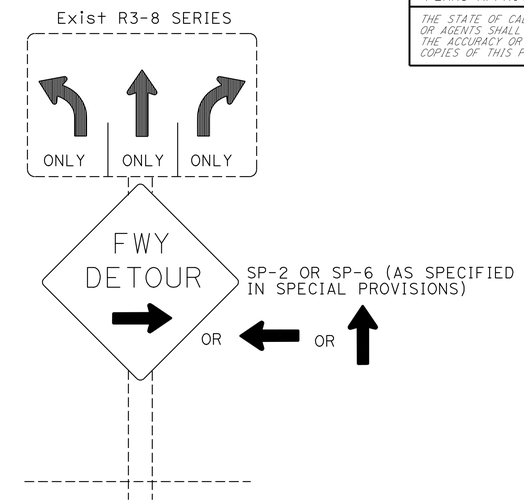

DETAIL C

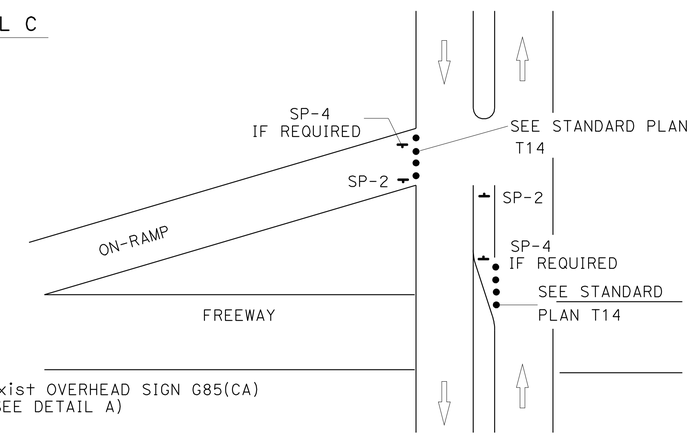

DETAIL E

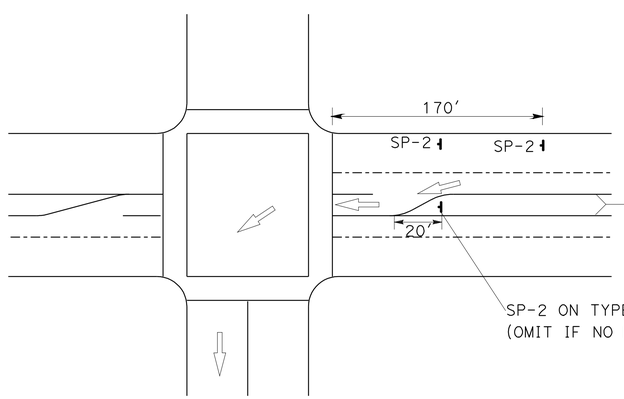

DETAIL D

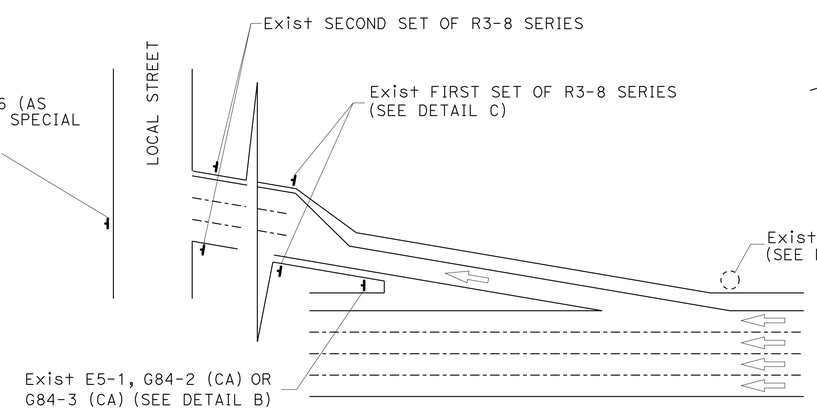

TYPICAL DETOUR SIGN INSTALLATION AT OFF-RAMP

NOTES:

1. TEMPORARY SIGNS MAY BE STRAPPED ON EXISTING ELECTROLIER, SIGNAL POSTS, OR SIGN POSTS.
2. OMIT DETAIL A AND DETAIL B FOR FULL FREEWAY CLOSURES.
3. SEE TRAFFIC HANDLING DETAILS PLAN-TRAFFIC CONTROL SYSTEM FOR RAMP CLOSURES, DETOUR SIGNS AND MISCELLANEOUS DETAILS SHEET 2 OF 2 FOR SP-6.

ABBREVIATIONS

(CA) CALIFORNIA CODE

LEGENDS

- TRAFFIC CONE
- TEMPORARY SIGN
- DIRECTION OF TRAVEL
- EXISTING OVERHEAD SIGN

TRAFFIC HANDLING DETAILS
TRAFFIC CONTROL SYSTEM FOR DETOUR SIGN INSTALLATION ALONG DESIGNATED DETOUR ROUTE
SHEET 2 OF 2
NO SCALE

THD-7

STATE OF CALIFORNIA - DEPARTMENT OF TRANSPORTATION
Caltrans DTM

FUNCTIONAL SUPERVISOR: MARTIN OREGEL
CALCULATED-DESIGNED BY: ALBERT K YU
CHECKED BY: JOCELYN C CHIANG
REVISED BY: JC
DATE REVISED: 8/10

LAST REVISION 01-31-11
DATE PLOTTED => 09-SEP-2011
TIME PLOTTED => 10:58

Dist	COUNTY	ROUTE	POST MILES TOTAL PROJECT	SHEET No.	TOTAL SHEETS
07	LA	14	R52.6/R59.2	19	58

REGISTERED CIVIL ENGINEER 5-17-11 DATE

6-20-11
PLANS APPROVAL DATE

REGISTERED PROFESSIONAL ENGINEER HOSS FARASAT No. C45672 Exp. 12-31-12 CIVIL STATE OF CALIFORNIA

THE STATE OF CALIFORNIA OR ITS OFFICERS OR AGENTS SHALL NOT BE RESPONSIBLE FOR THE ACCURACY OR COMPLETENESS OF SCANNED COPIES OF THIS PLAN SHEET.

LEGEND:

- 4" PAINTED WHITE STRIPE
- 4" PAINTED BLACK CONTRAST STRIPE
- TYPE G ONE-WAY CLEAR RETROREFLECTIVE-RECESSED MARKER
- DIRECTION OF TRAVEL
- 4" PAINTED BLACK CONTRAST STRIPE (2-COAT)

ABBREVIATION:

HOV HIGH OCCUPANCY VEHICLE LANE

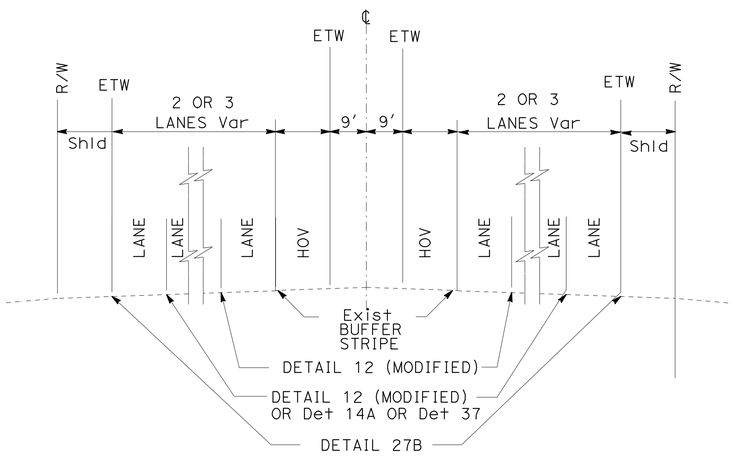

TYPICAL FREEWAY DELINATION

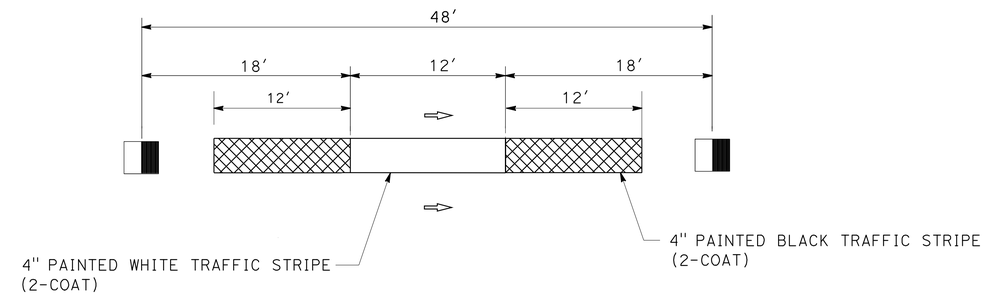

DETAIL 12 (MODIFIED)

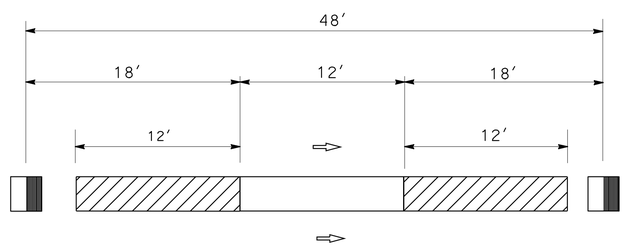

TEMPORARY LANE LINE PAVEMENT DELINEATION

PAVEMENT DELINEATION DETAILS

NO SCALE

PDD-1

REVISED BY	DATE REVISED

CALCULATED-DESIGNED BY: HOSS FARASAT
CHECKED BY: MANSOOR KHAN
FUNCTIONAL SUPERVISOR: MANSOOR KHAN

STATE OF CALIFORNIA - DEPARTMENT OF TRANSPORTATION
Caltrans® OFFICE OF DESIGN B

LAST REVISION 00-00-00
DATE PLOTTED => 09-SEP-2011
TIME PLOTTED => 10:58

Dist	COUNTY	ROUTE	POST MILES TOTAL PROJECT	SHEET No.	TOTAL SHEETS
07	LA	14	R52.6/R59.2	20	58

REGISTERED CIVIL ENGINEER 5-17-11 DATE

6-20-11
PLANS APPROVAL DATE

REGISTERED PROFESSIONAL ENGINEER
HOSS FARASAT
No. C45672
Exp. 12-31-12
CIVIL
STATE OF CALIFORNIA

THE STATE OF CALIFORNIA OR ITS OFFICERS OR AGENTS SHALL NOT BE RESPONSIBLE FOR THE ACCURACY OR COMPLETENESS OF SCANNED COPIES OF THIS PLAN SHEET.

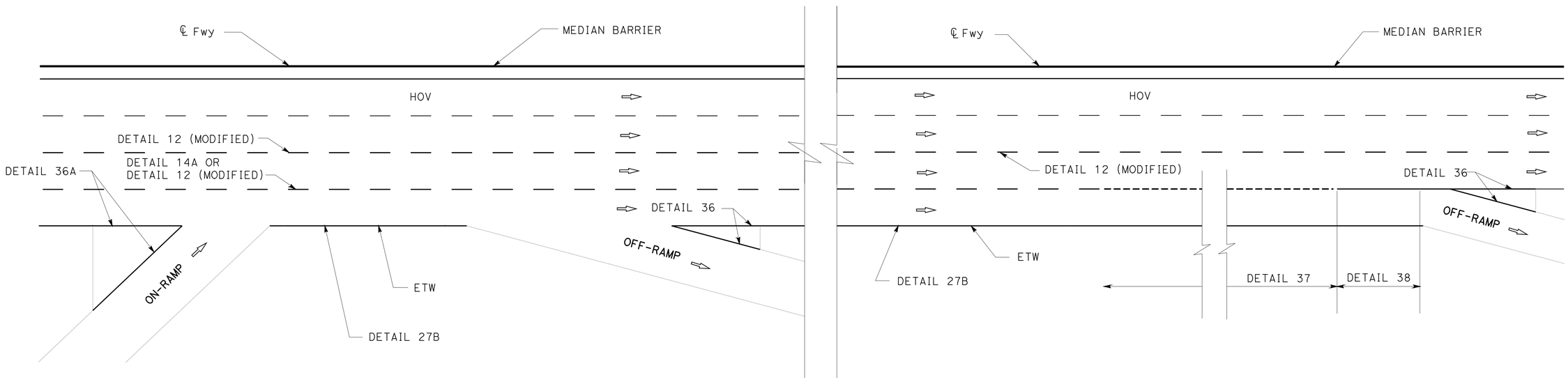

RAMPS

MAINLINE LANE DROP TO A ONE LANE EXIT

PAVEMENT DELINEATION DETAILS

NO SCALE

PDD-2

STATE OF CALIFORNIA - DEPARTMENT OF TRANSPORTATION
Caltrans® OFFICE OF DESIGN B

FUNCTIONAL SUPERVISOR: MANSOOR KHAN
CALCULATED-DESIGNED BY: HOSS FARASAT
CHECKED BY: MANSOOR KHAN
REVISED BY
DATE REVISED

LAST REVISION 00-00-00
DATE PLOTTED => 09-SEP-2011
TIME PLOTTED => 10:58

Dist	COUNTY	LOCATION CODE	POST MILES TOTAL PROJECT	SHEET No.	TOTAL SHEETS
07	LA	14	R52.6/R59.2	21	58

H. Farasat 5-17-11
REGISTERED CIVIL ENGINEER DATE

6-20-11
PLANS APPROVAL DATE

REGISTERED PROFESSIONAL ENGINEER HOSS FARASAT No. C45672 Exp. 12-31-12 CIVIL STATE OF CALIFORNIA

THE STATE OF CALIFORNIA OR ITS OFFICERS OR AGENTS SHALL NOT BE RESPONSIBLE FOR THE ACCURACY OR COMPLETENESS OF SCANNED COPIES OF THIS PLAN SHEET.

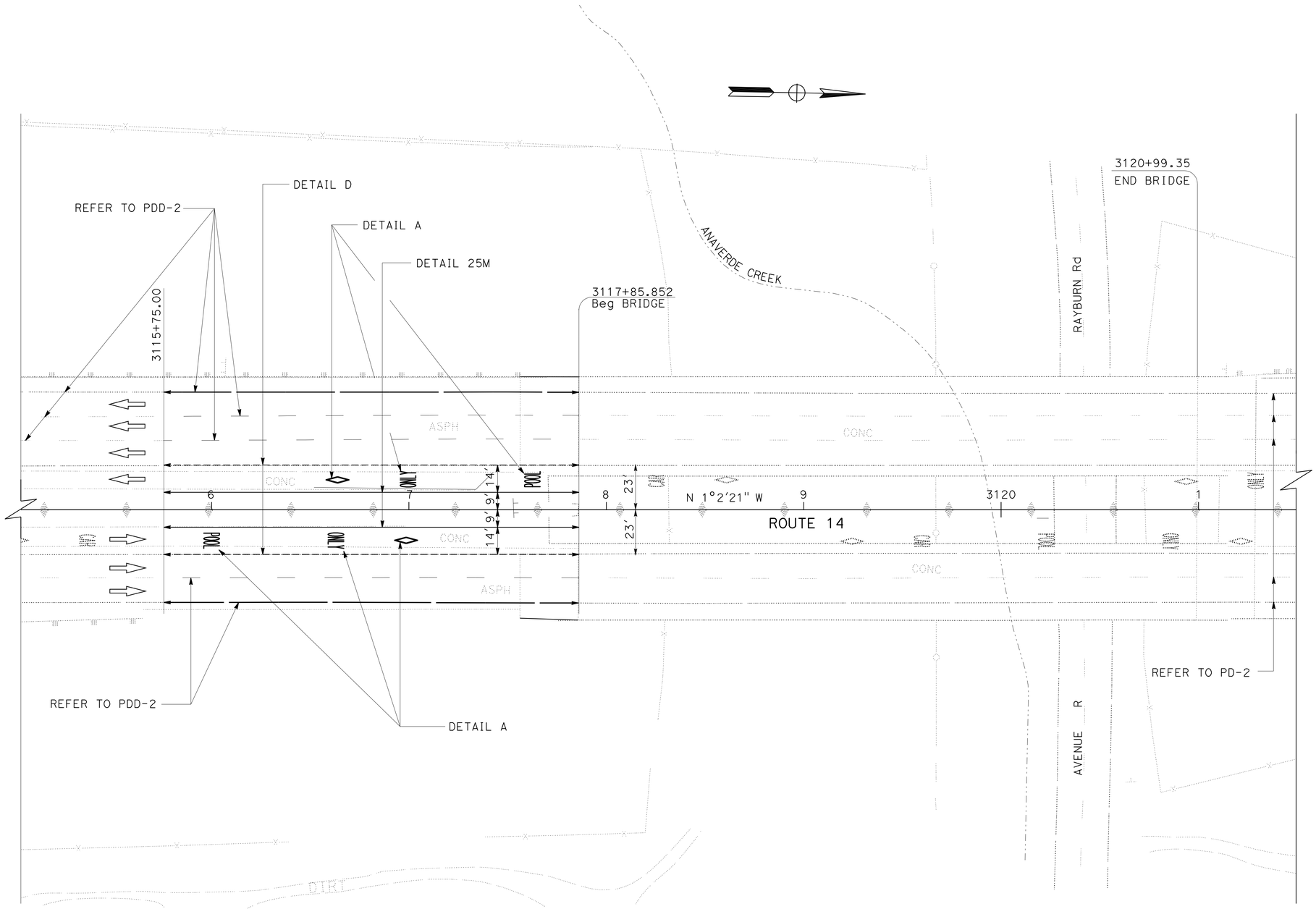

ANAVERDE CREEK STRIPING

Sta 3115+75.852 TO Sta 3117+85.852

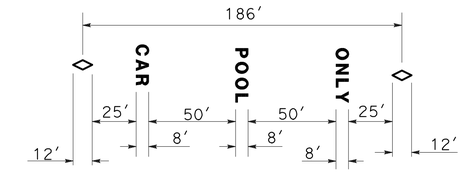

DETAIL A

INGRESS/EGRESS MARKING

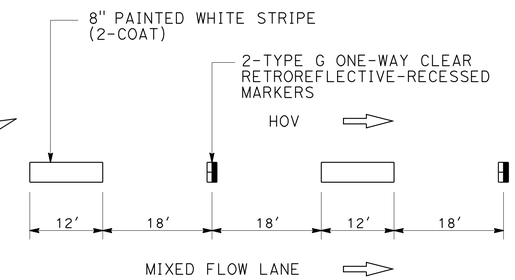

DETAIL D

INGRESS/EGRESS STRIPING DETAIL

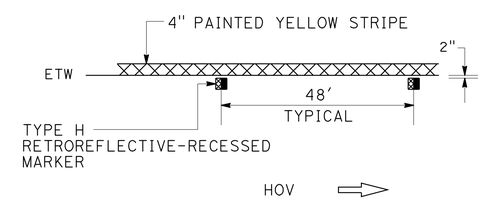

DETAIL 25M

PAVEMENT DELINEATION DETAILS

NO SCALE

PDD-3

STATE OF CALIFORNIA - DEPARTMENT OF TRANSPORTATION
Caltrans® OFFICE OF DESIGN B

FUNCTIONAL SUPERVISOR: MANSOOR KHAN
CALCULATED-DESIGNED BY: HOSS FARASAT
CHECKED BY: MANSOOR KHAN
REVISED BY
DATE REVISED

LAST REVISION 00-00-00
DATE PLOTTED => 09-SEP-2011
TIME PLOTTED => 10:58

Dist	COUNTY	ROUTE	POST MILES TOTAL PROJECT	SHEET No.	TOTAL SHEETS
07	LA	14	R52.6/R59.2	22	58

REGISTERED CIVIL ENGINEER 5-17-11 DATE

6-20-11
PLANS APPROVAL DATE

REGISTERED PROFESSIONAL ENGINEER HOSS FARASAT No. C45672 Exp. 12-31-12 CIVIL STATE OF CALIFORNIA

THE STATE OF CALIFORNIA OR ITS OFFICERS OR AGENTS SHALL NOT BE RESPONSIBLE FOR THE ACCURACY OR COMPLETENESS OF SCANNED COPIES OF THIS PLAN SHEET.

PAVEMENT DELINEATION QUANTITIES

LOCATION (MAINLINE)	DIRECTION		PAINT TRAFFIC STRIPE (2-COAT)					PAVEMENT MARKER (RETROREFLECTIVE -RECESSED)		REMOVE PAVEMENT MARKER
			Det 12 (Mod) 4" WHITE & 4" BLACK	Det 27B 4" WHITE	Det 25M 4" YELLOW	Det D 8" WHITE (BROKEN)	WORDS & SYMBOLS	TYPE G	TYPE H	
	NB	SB	LF	LF	LF	LF	SQFT	EA	EA	EA
BEGIN CONSTRUCTION TO VINCENT RAMP UC (PM R52.60-R54.57)	X		20,808	10,404				435		435
		X	10,365	10,365				217		217
VINCENT RAMP UC TO COURSON ROAD UC (PM R54.59-R56.32)	X		9,295	9,295				195		195
		X	18,524	9,262				387		387
COURSON ROAD UC TO CALIFORNIA AQUEDUCT (PM R56.33-R57.17)	X		4,423	4,423				93		93
		X	8,906	4,453				187		187
CALIFORNIA AQUEDUCT 53-1833 TO AVENUE S UC 53-1417 PM R57.19-R58.19	X		5,380	5,380				113		113
		X	10,702	5,351				224		224
AVENUE S UC TO 210′ S/O ANAVERDE UC (PM R58.20-R59.07)	X		5,152	5,152				109		109
		X	10,304	5,152				216		216
FROM 210′ SOUTH OF ANAVERDE UC TO BEGINING OF ANAVERDE UC (PM R59.07-R59.11)	X		211	211	211	211	56	8	4	12
		X	422	211	211	211	56	8	4	12
SUBTOTAL			104,492	69,659	422	422	112	2,192	8	2,200

PAVEMENT DELINEATION QUANTITIES

PDQ-1

STATE OF CALIFORNIA - DEPARTMENT OF TRANSPORTATION
Caltrans OFFICE OF DESIGN B

FUNCTIONAL SUPERVISOR: MANSOOR KHAN
CALCULATED-DESIGNED BY: HOSS FARASAT
CHECKED BY: MANSOOR KHAN
REVISED BY
DATE REVISED

LAST REVISION 00-00-00
DATE PLOTTED => 09-SEP-2011
TIME PLOTTED => 10:58

Dist	COUNTY	ROUTE	POST MILES TOTAL PROJECT	SHEET No.	TOTAL SHEETS
07	LA	14	R52.6/R59.2	23	58

REGISTERED CIVIL ENGINEER 5-17-11 DATE

6-20-11
PLANS APPROVAL DATE

REGISTERED PROFESSIONAL ENGINEER HOSS FARASAT No. C45672 Exp. 12-31-12 CIVIL STATE OF CALIFORNIA

THE STATE OF CALIFORNIA OR ITS OFFICERS OR AGENTS SHALL NOT BE RESPONSIBLE FOR THE ACCURACY OR COMPLETENESS OF SCANNED COPIES OF THIS PLAN SHEET.

PAVEMENT DELINEATION QUANTITIES (COMBINED)

RAMP LOCATION (POST MILE)	DECRIPTION	PAVEMENT MARKER (RETROREFLECTIVE-RECESSED)		PAINT TRAFFIC STRIPE (2-COAT)									PAINT PAVEMENT MARKING (2-COAT)					REMOVE PAVEMENT MARKER
				4" SOLID YELLOW	4" SOLID WHITE		4" (BROKEN 17-7)		4" WHITE AND 4" BLACK	8" (BROKEN 18-12)	8" SOLID WHITE		DIAGONAL STRIPE AND PARKING STALL	12" CROSSWALK AND LIMIT LINES	WORDS & SYMBOLS	ARROWS		
																TYPE V III (L) III (R)	TYPE I(24'-0")	
		TYPE G	TYPE H	DETAIL 25M	WHITE LINE	DETAIL 27B	DETAIL 8	DETAIL 9	DETAIL 12(Mod)	DETAIL D	DETAIL 36	DETAIL 36A						
		EA	EA	LF	LF	LF	LF	LF	LF	LF	LF	LF	SQFT	SQFT	SQFT	SQFT	SQFT	EA
SIERRA HIGHWAY (R54.19/R54.87)	SB ON-RAMP	73	83	1,970		4,000		1,100				920	192				62	156
	SB OFF-RAMP	47	75	1,780	100	2,080		950			600		378	34	150	150		122
	NB ON-RAMP	40	40	932	100	3,025	280	530				650	280				62	80
	NB OFF-RAMP	74	124	2,945		3,655		1,215			1,130		571	95	97	120		198
AVENUE S (R57.97/R58.41)	SB ON-RAMP	20	20	450		1,670	240					455	270				62	40
	SB OFF-RAMP	30	31	725		1,185					700		150	42	87	117		61
	NB ON-RAMP	35	32	740		2,405	90					820	118				62	67
	NB OFF-RAMP	32	28	655		1,185					740		220	44	75	150		60
VISTA POINT (R56.79/R56.85)	PARKING AREA			307									191	56	23			
	NB ON-RAMP	14				1,211						304	159					14
	NB OFF-RAMP	23				458					497		114					23
SUBTOTAL		388	433	10,504	200	20,874	610	3,795			3,667	3,149	2,643	271	432	537	248	821
SUBTOTAL FROM PDQ-1		2,192	8	422		69,659			104,492	422					112			2,200
SUBTOTAL (COMBINED)		2,580	441	10,926	200	90,533	610	3,795	104,492	422	3,667	3,149	2,643	271	544	537	248	**3,021**
GRAND TOTAL		3,021		**218,165**									**4,243**					**3,021**

PAVEMENT DELINEATION QUANTITIES

PDQ-2

STATE OF CALIFORNIA - DEPARTMENT OF TRANSPORTATION
Caltrans® OFFICE OF DESIGN B

FUNCTIONAL SUPERVISOR: MANSOOR KHAN
CALCULATED-DESIGNED BY: HOSS FARASAT
CHECKED BY: MANSOOR KHAN
REVISED BY
DATE REVISED

LAST REVISION 00-00-00
DATE PLOTTED => 09-SEP-2011
TIME PLOTTED => 10:59

Dist	COUNTY	ROUTE	POST MILES TOTAL PROJECT	SHEET No.	TOTAL SHEETS
07	LA	14	R52.6/R59.2	24	58

REGISTERED CIVIL ENGINEER 5-17-11 DATE

6-20-11
PLANS APPROVAL DATE

REGISTERED PROFESSIONAL ENGINEER HOSS FARASAT No. C45672 Exp. 12-31-12 CIVIL STATE OF CALIFORNIA

THE STATE OF CALIFORNIA OR ITS OFFICERS OR AGENTS SHALL NOT BE RESPONSIBLE FOR THE ACCURACY OR COMPLETENESS OF SCANNED COPIES OF THIS PLAN SHEET.

NOTES:

1. A SLAB CONSTITUTES A PAVEMENT PIECE FROM ONE WEAKEND PLANE JOINT TO THE NEXT WEAKENED PLANE JOINT.

ABBRIVIATIONS:

ISR INDIVIDUAL SLAB REPLACEMENT
RSC RAPID STRENGTH CONCRETE

SUMMARY OF QUANTITIES (MAINLINE)

TABLE A

DIRECTION	LOCATION FROM PM	LOCATION TO PM	(N) NUMBER OF SLABS HOV	No. 1 LANE	No. 2 LANE	No. 3 LANE	ISR (RSC) INDIVIDUAL SLAB REPLACEMENT (RAPID STRENGTH CONCRETE)	DAMAGED BASES REPLACE UNDERLYING BASE	DOWEL BAR (DRILL AND BOND)	JPCP (RSC) JOINTED PLAIN Conc PAVEMENT (RAPID STRENGTH CONCRETE)	DAMAGED BASES LEAN CONCRETE BASE RAPID SETTING	(N) DOWEL BAR	(N) TIE BAR	ROADWAY EXCAVATION	REMOVE CONCRETE
			EA	EA	EA	EA	CY	CY	EA	CY	CY	EA	EA	CY	CY
NB	R52.60	R53.80		16	109	68	862		3,860						
	R53.80	R56.70		4	294		1,331	265	5,960						
	R56.70	R58.10		3	111		509		2,280						
	R58.10	R58.17		27	27					353	23	1,080	756	376	217
	R58.17	R59.07													
	R59.07	R59.11	26	13	13					322	84	624	260	416	247
	R59.11	R59.20													
SB	R52.17	R53.81			17	189	920		4,120						
	R53.81	R54.55			9	78	389	355	1,740						
	R54.55	R57.14			5	381	1,724		7,720						
	R57.14	R57.38			3	125	572		2,560						
	R57.38	R58.10													
	R58.10	R58.17		27	27	27				529	33	1,620	1,134	562	326
	R58.17	R59.07													
	R59.07	R59.11	26	13	13	13				431	95	780	325	526	300
SUBTOTAL			52	103	628	881	6,307	620	28,240	1,635	235	4,104	2,475	1,880	1,090
			TOTAL	1,641	(N)										

(N) NOT A SEPARATE PAY ITEM, FOR INFORMATION ONLY.

TABLE B

LOCATION	DIRECTION NB	DIRECTION SB	REPLACE ASPHALT CONCRETE SURFACING (REPAIR FAILED AREA)	CRACK TREATMENT	HOT MIX ASPHALT (TYPE B)	COLD PLANE ASPHALT CONCRETE PAVEMENT	GRIND EXISTING CONCRETE PAVEMENT	RUBBERIZED HOT MIX ASPHALT (GAP GRADED)	PREFORMED COMPRESSION JOINT SEAL: SEAL PAVEMENT JOINT	PREFORMED COMPRESSION JOINT SEAL: REPLACE SEAL JOINT (Exist Conc Pvmt)	PREFORMED COMPRESSION JOINT SEAL: SEAL ISOLATION JOINT	REPAIR SPALLED JOINTS (POLYESTER GROUT)	TACK COAT
	NB	SB	CY	LNMI	TON	SQYD	SQYD	TON	LF	LF		SQYD	TON
BEGIN CONSTRUCTION TO VINCENT RAMP UC (PM R52.60-R54.54)	X		30	17.2	1,404	9,152	41,184		254,793	3,000	375	27
		X			1,399	9,119	27,357					
VINCENT RAMP UC TO COURSON ROAD UC (PM R54.59-R56.32)	X				1,250	8,151	24,453					
		X			1,246	8,124	31,674					
COURSON UC TO CALIFORNIA AQUEDUCT PM R56.33-R57.14)	X				584	3,806	11,419					
		X			588	3,835	17,256					
CALIFORNIA AQUEDUCT TO SOUTH OF AVENUE S UC (PM R57.19-R58.10)	X				705	4,596	12,781					
		X			701	4,572	19,064					
(PM R58.10-R58.17)	X						1,008		1,377			
		X					1,512		2,066			
AVENUE S UC TO SOUTH OF ANAVERDE CREEK (PM R58.20-R59.07)	X				643	16,757		1,542				
		X			643	23,041		2,314				
(PM R59.07-R59.11)	X						1,078		1,428			
		X					1,360		1,786			
SUBTOTAL			30	17.2	9,163	91,153	190,146	3,856	6,657	254,793	3,000	375	27

SUMMARY OF QUANTITIES

Q-1

STATE OF CALIFORNIA - DEPARTMENT OF TRANSPORTATION
Caltrans® OFFICE OF DESIGN B

FUNCTIONAL SUPERVISOR: MANSOOR KHAN
CALCULATED-DESIGNED BY: HOSS FARASAT
CHECKED BY: MANSOOR KHAN
REVISED BY
DATE REVISED

LAST REVISION 00-00-00
DATE PLOTTED => 09-SEP-2011
TIME PLOTTED => 10:59

Dist	COUNTY	ROUTE	POST MILES TOTAL PROJECT	SHEET No.	TOTAL SHEETS
07	LA	14	R52.6/R59.2	25	58

REGISTERED CIVIL ENGINEER 5-17-11 DATE

6-20-11
PLANS APPROVAL DATE

REGISTERED PROFESSIONAL ENGINEER HOSS FARASAT No. C45672 Exp. 12-31-12 CIVIL STATE OF CALIFORNIA

THE STATE OF CALIFORNIA OR ITS OFFICERS OR AGENTS SHALL NOT BE RESPONSIBLE FOR THE ACCURACY OR COMPLETENESS OF SCANNED COPIES OF THIS PLAN SHEET.

SUMMARY OF QUANTITIES (RAMPS AND MAINLINE COMBINED)

SUMMARY OF QUANTITIES FOR RAMPS, GORE AREAS AND VISTA POINT

RAMP LOCATION (POST MILE)	RAMP	RAMP TERMINI: JOINTED PLAIN CONCRETE PAVEMENT (RAPID STRENGTH CONCRETE)	LEAN CONCRETE BASE RAPID SETTING	CLASS 3 AGGREGATE BASE	ROADWAY EXCAVATION	SEAL PAVEMENT JOINT (PERFORMED COMPRESSION JOINT SEAL)	DOWEL BAR	TIE BAR (N)	GRIND EXISTING CONCRETE PAVEMENT (N)	COLD PLANE CONCRETE PAVEMENT	RUBBERIZED HOT MIX ASPHALT (GAP GRADED)	REPLACE ASPHALT CONCRETE SURFACING (REPAIR FAILED AREA)	TACK COAT	REMOVE CONCRETE (PARKING BUMPER)	PARKING BUMPER (PRECAST CONCRETE)	REMOVE CONCRETE	HOT MIX ASPHALT (TYPE B)	CRACK TREATMENT	REPAIR SPALLED JOINTS (POLYESTER GROUT)	INDIVIDUAL SLAB REPLACEMENT (RAPID STRENGTH CONCRETE)	REPLACE UNDERLYING BASE	DOWEL BAR (DRILL AND BOND)	SEAL ISOLATION JOINT (PERFORMED COMPRESSION JOINT SEAL)	REPLACE SEAL JOINT (Exist Conc Pvmt) (PERFORMED COMPRESSION JOINT SEAL)
		CY	CY	CY	CY	LF	EA	EA	SQYD	SQYD	TON	CY	TON	EA	EA	CY	TON	LNMI	SQYD	CY	CY	EA	LF	LF
SIERRA HIGHWAY (R54.19/R54.87)	SB ON-RAMP									11,389	1,517													
	SB OFF-RAMP									6,779	903													
	NB ON-RAMP									6,617	881													
	NB OFF-RAMP									11,393	1,518													
AVENUE S (R57.97/R58.41)	SB ON-RAMP									3,631	484													
	SB OFF-RAMP	147	82	115	197	805	990	275	490	2,593	345	28	14					8.8						
	NB ON-RAMP									6,551	873													
	NB OFF-RAMP	195	108	152	260	805	990	275	650	2,443	321													
VISTA POINT (R56.79/R56.85)	PARKING AREA									2,878				20	20		384							
	NB ON-RAMP									3,399							453							
	NB OFF-RAMP									1,062							142							
SUB-TOTAL		342	190	267	457	1,610	1,980	550	1,140	58,913	6,842	28	14	20	20		979	8.8						
SUB-TOTAL FROM Sht Q-1 (TABLE A)		1,635	235		1,880		4,104	2,475								1,090				6,307	620	28,240		
SUB-TOTAL FROM Sht Q-1 (TABLE B)						6,657			190,146	91,153	3,856	30	27				9,163	17.2	375				3,000	254,793
GRAND TOTAL		1,977	425	267	2,327	8,267	6,084	3,025	191,286	150,066	10,698	58	41	20	20	1,090	10,142	26	375	6,307	620	28,240	3,000	254,793

(N) NOT A SEPARATE PAY ITEM, FOR INFORMATION ONLY.

SUMMARY OF QUANTITIES

Q-2

STATE OF CALIFORNIA - DEPARTMENT OF TRANSPORTATION
Caltrans® OFFICE OF DESIGN B

FUNCTIONAL SUPERVISOR: MANSOOR KHAN
CALCULATED-DESIGNED BY: SHAO CHIANG LIU
CHECKED BY: MANSOOR KHAN
REVISED BY
DATE REVISED

LAST REVISION 00-00-00
DATE PLOTTED => 09-SEP-2011
TIME PLOTTED => 10:59

Dist	COUNTY	ROUTE	POST MILES TOTAL PROJECT	SHEET No.	TOTAL SHEETS
07	LA	14	R52.6/R59.2	26	58

H. Farasat 5-17-11
REGISTERED CIVIL ENGINEER DATE

6-20-11
PLANS APPROVAL DATE

REGISTERED PROFESSIONAL ENGINEER
HOSS FARASAT
No. C45672
Exp. 12-31-12
CIVIL
STATE OF CALIFORNIA

THE STATE OF CALIFORNIA OR ITS OFFICERS OR AGENTS SHALL NOT BE RESPONSIBLE FOR THE ACCURACY OR COMPLETENESS OF SCANNED COPIES OF THIS PLAN SHEET.

ROADSIDE SIGNS

SHEET No.	SIGN CODE	PANEL SIZE (INCH)	No. OF POSTS AND SIZE	ROADSIDE SIGN-ONE POST (EA)	ROADSIDE SIGN-TWO POST (EA)	FURNISH SINGLE SHEET ALUMINUM SIGN (0.063"-UNFRAMED) (SQFT)	GRAFFITI FILM PREMIUM
C-6	R99C (CA)	24"X12"	1-6"x 6"	1		2	X
C-6	R100B (CA)	24"X24"	1-6"x 6"	1		4	X
C-6	R36 (CA)	60"X60"	2-6"x 6"		1	25	X
			TOTAL	2	1	31	

TEMPORARY DRAINAGE INLET PROTECTION

LOCATION	(EA)
AVENUE "S" RAMPS	2
TOTAL	2

SUMMARY OF QUANTITIES

Q-3

STATE OF CALIFORNIA - DEPARTMENT OF TRANSPORTATION
Caltrans® OFFICE OF DESIGN B

FUNCTIONAL SUPERVISOR: MANSOOR KHAN
CALCULATED-DESIGNED BY: HOSS FARASAT
CHECKED BY: MANSOOR KHAN
REVISED BY
DATE REVISED

LAST REVISION 00-00-00
DATE PLOTTED => 09-SEP-2011
TIME PLOTTED => 10:59

Dist	COUNTY	ROUTE	POST MILES TOTAL PROJECT	SHEET No.	TOTAL SHEETS
07	LA	14	R52.6/R59.2	27	58

REGISTERED ELECTRICAL ENGINEER 5-17-11 DATE

6-20-11
PLANS APPROVAL DATE

REGISTERED PROFESSIONAL ENGINEER JESSE RUELAS No. E015604 Exp. 12/31/11 ELECTRICAL STATE OF CALIFORNIA

THE STATE OF CALIFORNIA OR ITS OFFICERS OR AGENTS SHALL NOT BE RESPONSIBLE FOR THE ACCURACY OR COMPLETENESS OF SCANNED COPIES OF THIS PLAN SHEET.

MODIFY TRAFFIC MONITORING STATION

	PM	LOCATION	SEE DETAIL D THIS SHEET FOR TYPICAL LOCATION OF INDUCTIVE LOOP DETECTORS															No. OF STUBOUTS (REPLACE)
			1	2	3	4	5	6	7	8	9	10	11	12	13	14	15	
1	R54.79	VINCENT UC NB ON RAMP														X	X	1
2	R54.42	VINCENT UC SB ON RAMP										X						1
3	R54.40	VINCENT UC SB OFF RAMP											X					1
4	R54.37	VINCENT UC NB OFF RAMP												X	X			1
5	R58.04	SB OFF RAMP WEST Ave S											X					1
6	R58.09	SB ON RAMP WEST Ave S										X						1
7	R58.35	NB ON RAMP EAST Ave S														X		1
8	R58.40	NB OFF RAMP EAST Ave S												X				1
	PM	MAIN LINE LOOP																
9	R58.05	SB ROUTE 14 AT ON RAMP EAST Ave S	X	X	X	X												1
10	R58.15	NB ROUTE 14 AT OFF RAMP EAST Ave S					X	X	X									1
11	R54.32	SB ROUTE 14 AT VINCENT UC SB OFF RAMP								X	X							1
12	R54.83	NB ROUTE 14 AT VINCENT UC NB ON RAMP					X	X	X									1

X - ABANDON EXISTING INDUCTIVE LOOP DETECTOR AND INSTALL TYPE E INDUCTIVE LOOP DETECTOR AT THE SAME LOCATION.

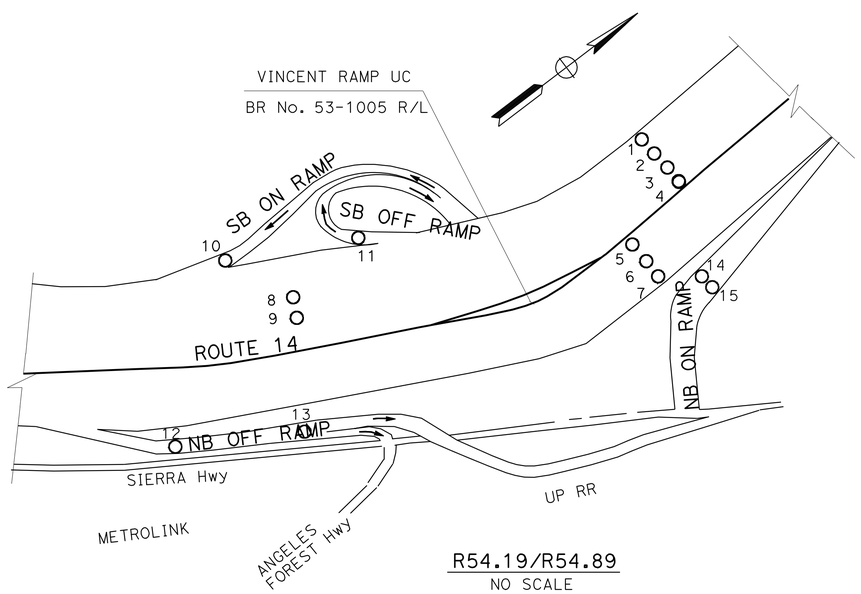

R54.19/R54.89
NO SCALE

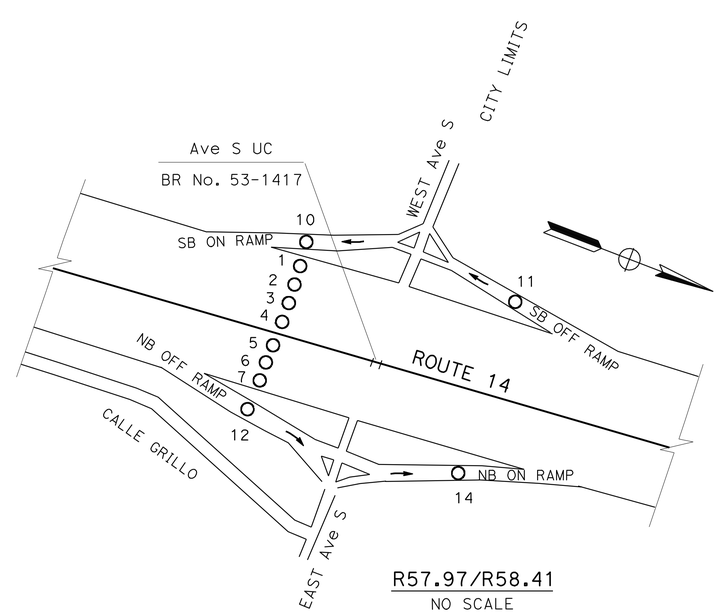

R57.97/R58.41
NO SCALE

DETAIL D
NO SCALE

NOTES: (THIS SHEET ONLY)

1. ABANDON EXISTING STUBOUT, INSTALL NEW 2"C STUBOUT.
2. PRIOR TO CONSTRUCTION, THE CONTRACTOR SHALL LOCATE EXISTING INDUCTIVE LOOP DETECTORS.
3. NEW INDUCTIVE LOOP DETECTOR SHALL BE SPLICED TO EXISTING dlc IN THE PULL BOX.
4. TAG EXISTING dlc IN THE PULL BOX AND IN CONTROLLER CABINET.
5. ALL THE ON AND OFF RAMP INDUCTIVE LOOP DETECTORS SHOULD BE INSTALLED IN A SINGLE 12' WIDE LANE.

MODIFY TRAFFIC MONITORING STATION

NO SCALE

E-1

STATE OF CALIFORNIA - DEPARTMENT OF TRANSPORTATION
Caltrans TRAFFIC DESIGN

FUNCTIONAL SUPERVISOR: YI TSAU
CALCULATED-DESIGNED BY: KARINE PARTAMIAN
CHECKED BY: JESSE RUELAS
REVISED BY
DATE REVISED

LAST REVISION 00-00-00
DATE PLOTTED => 09-SEP-2011
TIME PLOTTED => 10:59

Dist	COUNTY	ROUTE	POST MILES TOTAL PROJECT	SHEET No.	TOTAL SHEETS
07	LA	14	R52.6/R59.2	28	58

REGISTERED ELECTRICAL ENGINEER 5-17-11 DATE

6-20-11
PLANS APPROVAL DATE

REGISTERED PROFESSIONAL ENGINEER JESSE RUELAS No. E015604 Exp. 12/31/11 ELECTRICAL STATE OF CALIFORNIA

THE STATE OF CALIFORNIA OR ITS OFFICERS OR AGENTS SHALL NOT BE RESPONSIBLE FOR THE ACCURACY OR COMPLETENESS OF SCANNED COPIES OF THIS PLAN SHEET.

MODIFY SIGNAL

	PM	LOCATION	SEE DETAIL B THIS SHEET FOR TYPICAL LOCATION OF INDUCTIVE LOOP DETECTORS												No. OF STUBOUTS (REPLACE)
			1	2	3	4	5	6	7						
1	R58.201	SB OFF RAMP EAST Ave S	Y	Y	X	X	X	X							1
2	R58.175	NB OFF RAMP WEST Ave S	X		X		X		X						1

X - ABANDON EXISTING INDUCTIVE LOOP DETECTOR AND INSTALL TYPE E INDUCTIVE LOOP DETECTOR AT THE SAME LOCATION.

Y - ABANDON EXISTING INDUCTIVE LOOP DETECTOR AND INSTALL TYPE D INDUCTIVE LOOP DETECTOR AT THE SAME LOCATION.

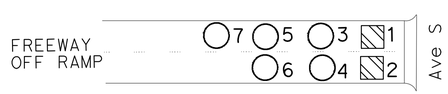

DETAIL B
NO SCALE

NOTES: (THIS SHEET ONLY)

1. ABANDON EXISTING STUBOUT, INSTALL NEW 2"C STUBOUT.
2. PRIOR TO CONSTRUCTION, THE CONTRACTOR SHALL LOCATE EXISTING INDUCTIVE LOOP DETECTORS.
3. NEW INDUCTIVE LOOP DETECTOR SHALL BE SPLICED TO EXISTING dlc IN THE PULL BOX.
4. TAG EXISTING dlc IN THE PULL BOX AND IN THE CONTROLLER CABINET.

MODIFY SIGNAL
NO SCALE

E-2

REVISED BY | DATE REVISED
KARINE PARTAMIAN | JESSE RUELAS
CALCULATED-DESIGNED BY | CHECKED BY
FUNCTIONAL SUPERVISOR
YI TSAU

STATE OF CALIFORNIA - DEPARTMENT OF TRANSPORTATION
Caltrans TRAFFIC DESIGN

LAST REVISION 00-00-00 | DATE PLOTTED => 09-SEP-2011 | TIME PLOTTED => 10:59

Dist	COUNTY	ROUTE	POST MILES TOTAL PROJECT	SHEET No.	TOTAL SHEETS
07	LA	14	R52.6/R59.2	29	58

REGISTERED ELECTRICAL ENGINEER 5-17-11 DATE

6-20-11
PLANS APPROVAL DATE

REGISTERED PROFESSIONAL ENGINEER JESSE RUELAS No. E015604 Exp. 12/31/11 ELECTRICAL STATE OF CALIFORNIA

THE STATE OF CALIFORNIA OR ITS OFFICERS OR AGENTS SHALL NOT BE RESPONSIBLE FOR THE ACCURACY OR COMPLETENESS OF SCANNED COPIES OF THIS PLAN SHEET.

PROJECT NOTES: (THIS SHEET ONLY)

1. INSTALL 3 INDUCTIVE LOOP DETECTORS, 6 PIEZOELECTRIC AXLE SENSORS. FOR INSTALLATION DETAILS SEE E-4.
2. RC 3 EXISTING dlc AND 6 stc.
3. RC EXISTING 6 dlc AND 12 stc.
4. INSTALL 2"C STUBOUT FOR INDUCTIVE LOOP DETECTORS AND PIEZOELECTRIC AXLE SENSOR.
5. SC FOR INDUCTIVE LOOP DETECTORS AND DLC ONLY.

GENERAL NOTE: (THIS SHEET ONLY)

1. TAG DLC IN ADJACENT PULL BOX AND AT CONTROLLER CABINET.

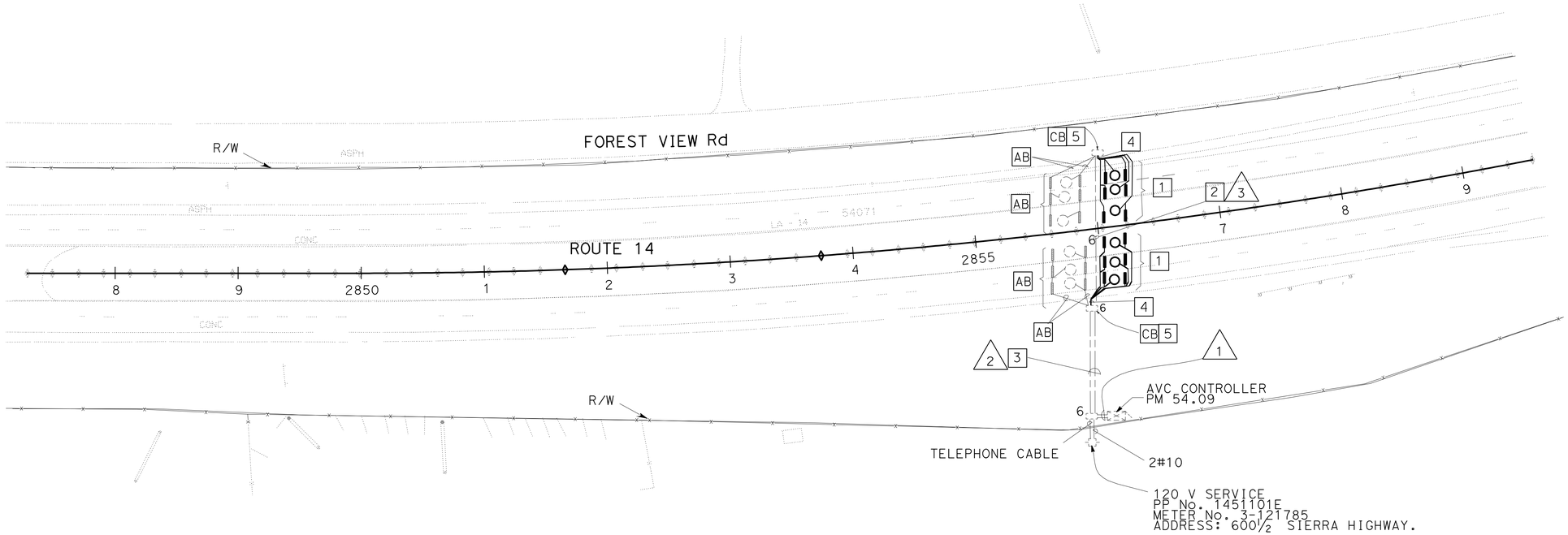

CONDUCTOR AND CONDUIT SCHEDULE

AWG OR CABLE	CONDUCTOR RUN	1	2	3
DLC	NB LOOP DETECTORS	3	3	-
	SB LOOP DETECTORS	3	3	3
STC	NB PIEZOELECTRIC AXLE SENSORS	6(N)	6(N)	-
	SB PIEZOELECTRIC AXLE SENSORS	6(N)	6(N)	6(N)
#10	120 V SERVICE	2	-	-
4#18	SHIELDED TELEPHONE CABLE	1	-	-
	CONDUIT	2-2"	2-2"	3"

ALL CONDUCTORS ARE EXISTING, UNLESS OTHERWISE NOTED.

LEGEND: (E-3, E-4)

PIEZOELECTRIC AXLE SENSOR

ABBREVIATION: (THIS SHEET ONLY)

STC SCREENED TRANSMISSION CABLE.

FOR PIEZOELECTRIC AXLE SENSOR INSTALLATION DETAILS SEE E-4.

THIS PLAN IS ACCURATE FOR ELECTRICAL WORK ONLY.

MODIFY AUTOMATIC VEHICLE CLASSIFICATION STATION

NO SCALE

E-3

STATE OF CALIFORNIA - DEPARTMENT OF TRANSPORTATION
Caltrans® TRAFFIC DESIGN

FUNCTIONAL SUPERVISOR: YI TSAU
CALCULATED-DESIGNED BY: KARINE PARTAMIAN
CHECKED BY: JESSE RUELAS
REVISED BY
DATE REVISED

LAST REVISION 00-00-00
DATE PLOTTED => 09-SEP-2011
TIME PLOTTED => 10:59

Dist	COUNTY	ROUTE	POST MILES TOTAL PROJECT	SHEET No.	TOTAL SHEETS
07	LA	14	R52.6/R59.2	30	58

REGISTERED ELECTRICAL ENGINEER 5-17-11 DATE

6-20-11
PLANS APPROVAL DATE

REGISTERED PROFESSIONAL ENGINEER JESSE RUELAS No. E015604 Exp. 12/31/11 ELECTRICAL STATE OF CALIFORNIA

THE STATE OF CALIFORNIA OR ITS OFFICERS OR AGENTS SHALL NOT BE RESPONSIBLE FOR THE ACCURACY OR COMPLETENESS OF SCANNED COPIES OF THIS PLAN SHEET.

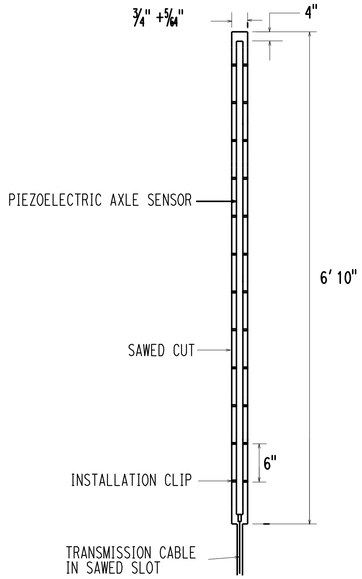

DETAIL A
NO SCALE

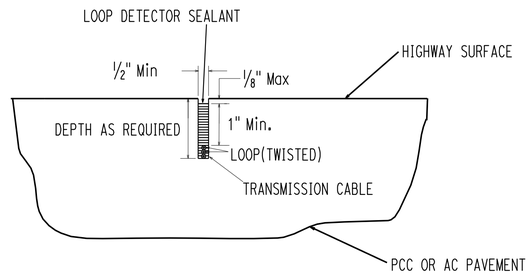

SECTION A-A
NO SCALE

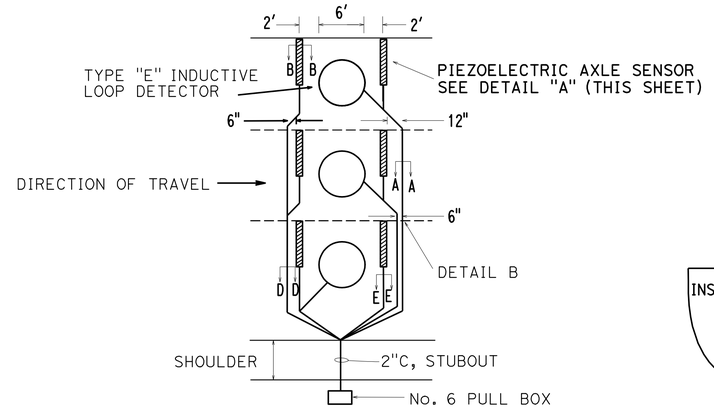

TYPICAL AXLE SENSOR INSTALLATION
NO SCALE

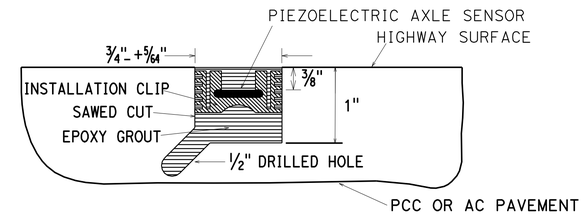

SECTION B-B
NO SCALE

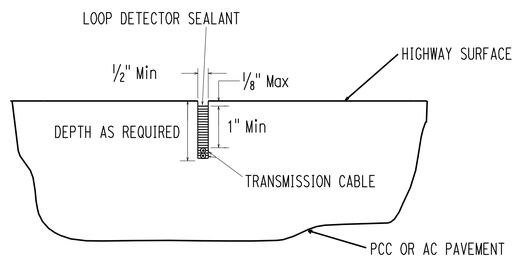

SECTION D-D
NO SCALE

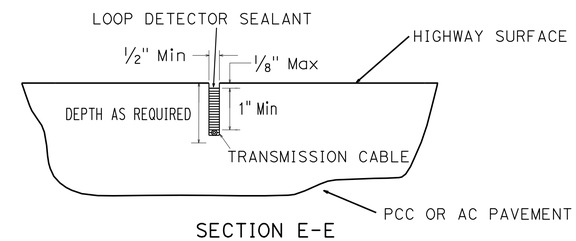

SECTION E-E
NO SCALE

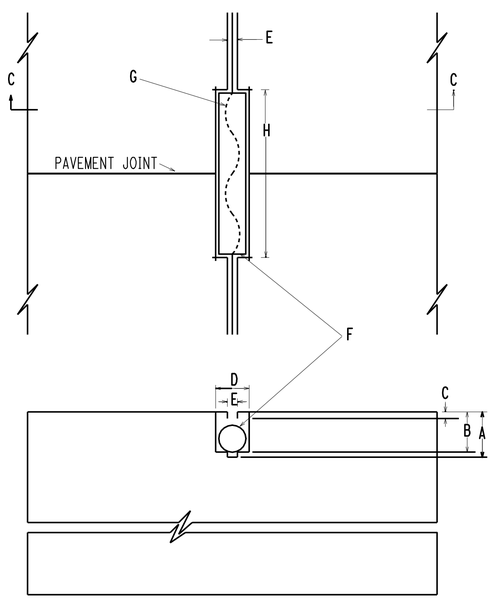

SECTION C-C

A. SAW CUT DEPTH TO ACCOMODATE SPECIFIED NUMBER OF CONDUCTORS WITH A MINIMUM OF 1" FROM TOP OF WIRE TO PAVEMENT SURFACE (3 1/4" Max).

B. SLOT SAW-CUT DEPTH TO ACCOMODATE 1" TYPE 3 CONDUIT WITH 1/2" MINIMUM FROM TOP OF CONDUIT TO PAVEMENT SURFACE.

C. 1/2" MINIMUM BETWEEN TOP OF CONDUIT AND PAVEMENT SURFACE.

D. SAW-CUT WIDTH TO ACCOMODATE 1" TYPE 3 CONDUIT WITH 1/8" CLEARANCE.

E. SAW-CUT 3/8" WIDE (Max).

F. 1" TYPE 3 CONDUIT, 6" LONG. PLUG BOTH ENDS WITH CAULKING COMPOUND TO KEEP OUT EPOXY.

G. CONDUCTORS WITH 1/2" MINIMUM SLACK INSIDE CONDUIT.

H. SAW-CUT LENGTH OF SLOT 1/8" LONGER THAN CONDUIT.

DETAIL B (TYPICAL LEAD-IN AT PAVEMENT JOINT)
NO SCALE

AXLE SENSOR INSTALLATION PROCEDURE

1. MARK THE POSITION OF THE AXLE SENSORS AS DIRECTED BY THE ENGINEER. AXLE SENSOR CHANNELS MUST BE PERPENDICULAR TO TRAFFIC.
2. MARK THE POSITION OF THE LOOP DETECTORS. THE DETECTORS MUST BE CENTERED IN THE LANE AND BETWEEN THE AXLE SENSORS.
3. MARK THE HOME RUN CUTS AS SHOWN IN THE AXLE SENSOR INSTALLATION DETAIL.
4. USING A CONCRETE SAW CUT THE AXLE SENSOR CHANNELS 3/4" WIDE BY 1" DEEP IN A SINGLE PASS. CUTS MUST BE STRAIGHT AND TRUE.
5. SAW CUT LOOP DETECTORS AND HOME RUNS.
6. DRILL 1/2" HOLES, 1" DEEP, AT A 45 DEGREE ANGLE AT THE BOTTOM CORNERS OF EACH CHANNEL. HOLES SHALL BE 12" APART AND ON ALTERNATING SIDES OF THE CHANNEL.
7. WASH OUT THE CHANNELS AND ALL SAW CUTS THOROUGHLY WITH HIGH PRESSURE WATER. DRY COMPLETELY WITH AN AIR COMPRESSOR. IN PCC PAVEMENT ONLY, WIPE OUT THE CHANNELS WITH LACQUER THINNER AND CLEAN COTTON RAGS.
8. PLACE 4" DUCT TAPE STRIPS ON THE PAVEMENT AROUND THE CHANNELS.
9. ENSURE THAT EACH SENSOR IS STRAIGHT AND FLAT. BEND EACH END DOWN SLIGHTLY AND PLACE THE INSTALLATION CLIPS ON THE SENSOR.
10. BLOCK OFF THE CABLE END OF THE CHANNEL WITH DUCT SEAL TO PREVENT THE GROUT FLOWING OUT OF THE CHANNEL.
11. PRE-MIX THE EPOXY GROUT UNTIL A UNIFORM CONSISTENCY IS OBTAINED, A MINIMUM OF 4 MINUTES, SCRAPING BOTH THE SIDES AND BOTTOM OF THE CONTAINER. ADD THE HARDENER POWDER AND MIX FOR 1 MINUTE.
12. WHILE WEARING PROTECTIVE GLOVES, HALF FILL THE CHANNEL WITH EPOXY GROUT. ENSURE THAT THE BOTTOM OF THE CHANNEL IS COMPLETELY COVERED, AND THAT THE HOLES DRILLED IN STEP 6 ARE FILLED.
13. PLACE THE SENSOR IN THE CHANNEL WITH THE BRASS ELEMENT 3/8" BELOW THE ROAD SURFACE, WITH NO VOIDS BENEATH THE SENSOR.
14. COMPLETELY FILL THE CHANNEL WITH GROUT. SMOOTH OUT THE GROUT ON TOP OF THE SENSOR TO ROAD LEVEL, WITH NO TROUGH ON TOP.
15. WHEN GROUT HAS BEGUN TO SET, REMOVE THE DUCT TAPE FROM THE PAVEMENT. REMOVE THE DUCT SEAL FROM THE END OF THE CHANNEL.
16. INSTALL THE LOOP DETECTORS.
17. INSTALL TYPE 3 CONDUIT AT THE EXPANSION JOINT CROSSINGS. PULL CABLES THROUGH STUB-OUT CONDUIT AND COIL IN PULL BOX.
18. SEAL ALL SAW CUTS. ELASTOMERIC SEALANT ONLY MUST BE USED IN ALL CUTS CONTAINING SCREENED TRANSMISSION CABLE.
19. REMOVE ANY HIGH SPOTS IN THE EPOXY GROUT WITH A HAND GRINDER.
20. CLEAN UP THE SITE. WHEN ALL GROUT AND SEALANT ARE COMPLETELY CURED, LANES MAY BE OPENED TO TRAFFIC.

MODIFY AUTOMATIC VEHICLE CLASSIFICATION STATION (DETAIL)

NO SCALE

E-4

REVISED BY	DATE REVISED

KARINE PARTAMIAN
JESSE RUELAS
CALCULATED-DESIGNED BY
CHECKED BY
FUNCTIONAL SUPERVISOR
YI TSAU

STATE OF CALIFORNIA - DEPARTMENT OF TRANSPORTATION
Caltrans
TRAFFIC DESIGN

LAST REVISION 00-00-00
DATE PLOTTED => 09-SEP-2011
TIME PLOTTED => 10:59

DIST	COUNTY	ROUTE	POST MILES TOTAL PROJECT	SHEET NO.	TOTAL SHEETS
07	LA	14	R52.6/R59.2	31	58

REGISTERED CIVIL ENGINEER

June 6, 2008
PLANS APPROVAL DATE

REGISTERED PROFESSIONAL ENGINEER Donald E. Howe No. C46402 Exp. 3-31-09 CIVIL STATE OF CALIFORNIA

The State of California or its officers or agents shall not be responsible for the accuracy or completeness of electronic copies of this plan sheet.

To accompany plans dated 6-20-11

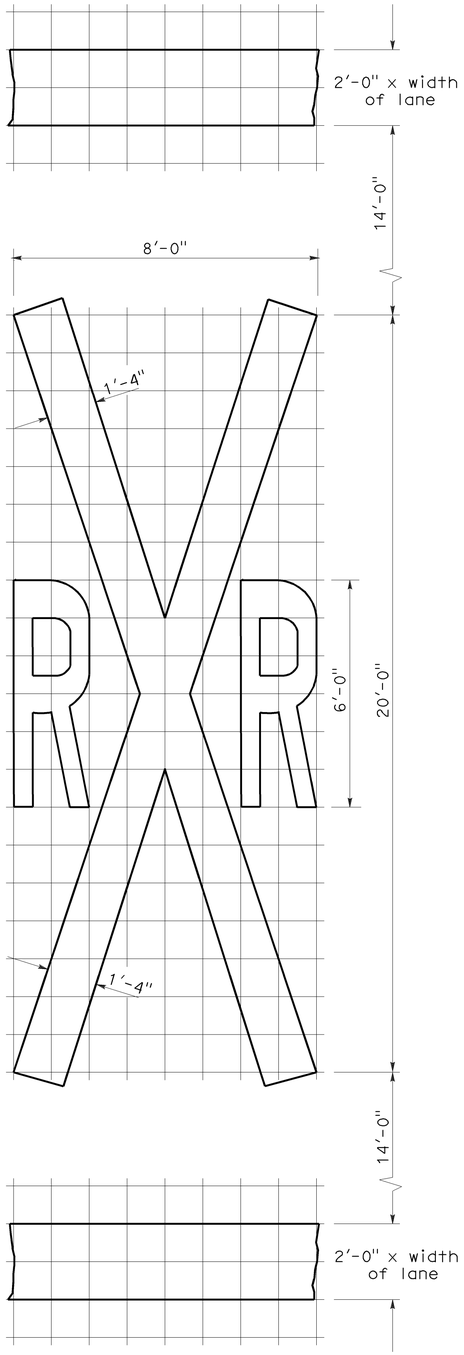

RAILROAD CROSSING SYMBOL

✳70 sq ft DOES NOT INCLUDE THE 2'-0" x VARIABLE WIDTH TRANSVERSE LINES.

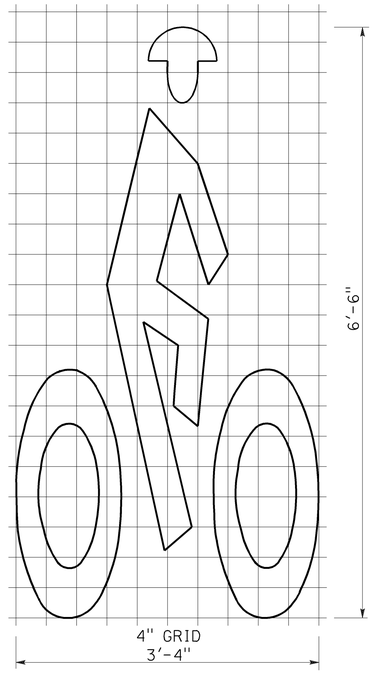

BIKE LANE SYMBOL

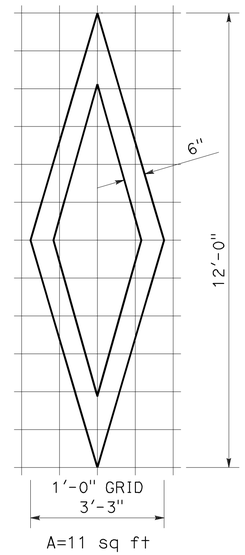

DIAMOND SYMBOL

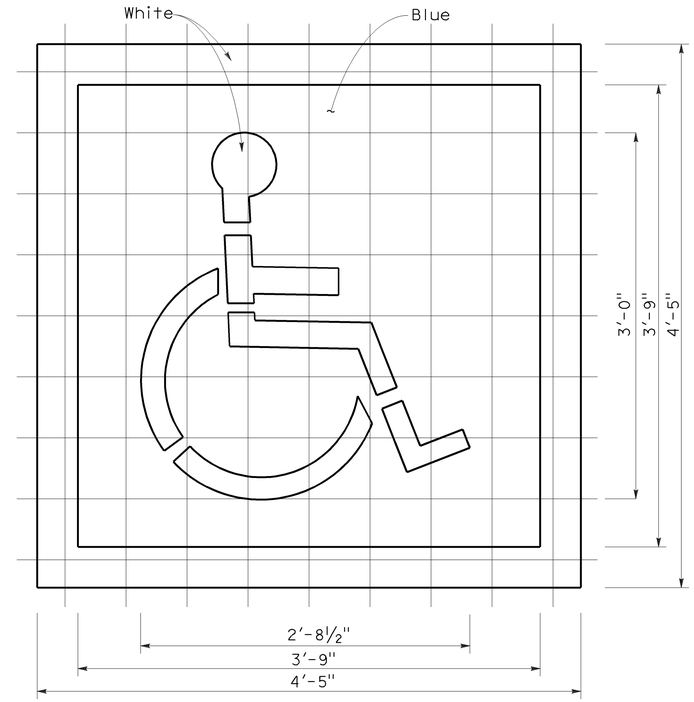

INTERNATIONAL SYMBOL OF ACCESSIBILITY MARKING

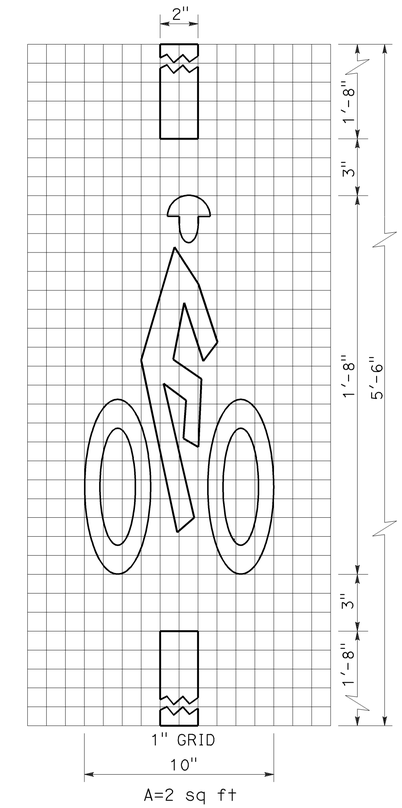

BICYCLE LOOP DETECTOR SYMBOL

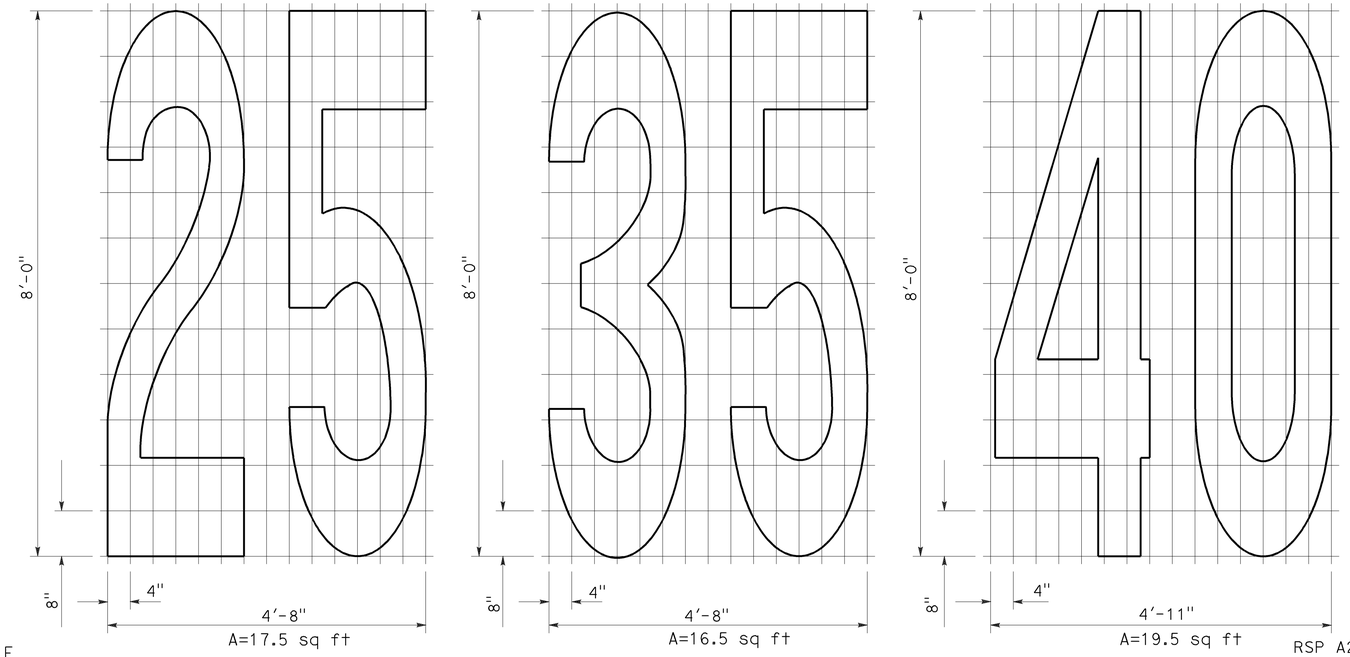

NUMERALS

NOTE:

1. Minor variations in dimensions may be accepted by the Engineer.

STATE OF CALIFORNIA
DEPARTMENT OF TRANSPORTATION

PAVEMENT MARKINGS SYMBOLS AND NUMERALS

NO SCALE

RSP A24C DATED JUNE 6, 2008 SUPERSEDES STANDARD PLAN A24C DATED MAY 1, 2006 - PAGE 11 OF THE STANDARD PLANS BOOK DATED MAY 2006.

REVISED STANDARD PLAN RSP A24C

2006 REVISED STANDARD PLAN RSP A24C

5-27-08

DIST	COUNTY	ROUTE	POST MILES TOTAL PROJECT	SHEET NO.	TOTAL SHEETS
07	LA	14	R52.6/R59.2	32	58

REGISTERED CIVIL ENGINEER

June 6, 2008
PLANS APPROVAL DATE

REGISTERED PROFESSIONAL ENGINEER Hector David Cordova No. C41957 Exp. 3-31-10 CIVIL STATE OF CALIFORNIA

The State of California or its officers or agents shall not be responsible for the accuracy or completeness of electronic copies of this plan sheet.

To accompany plans dated 6-20-11

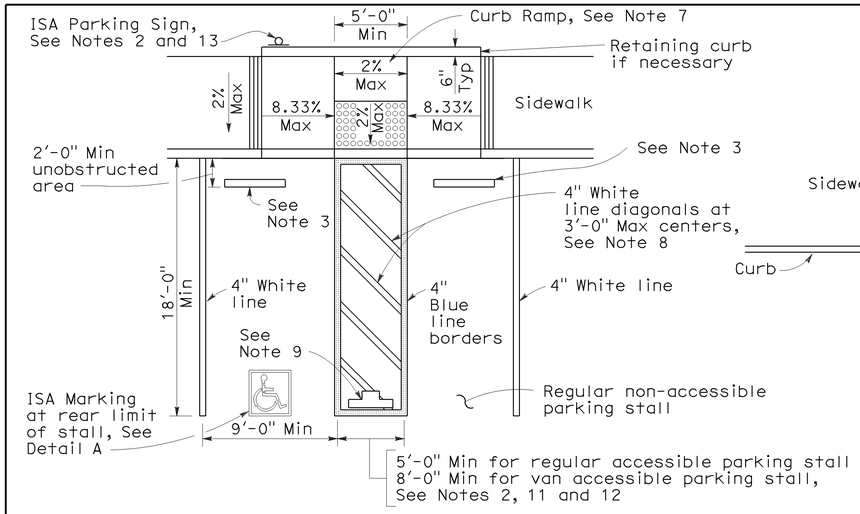

SINGLE PARKING STALL

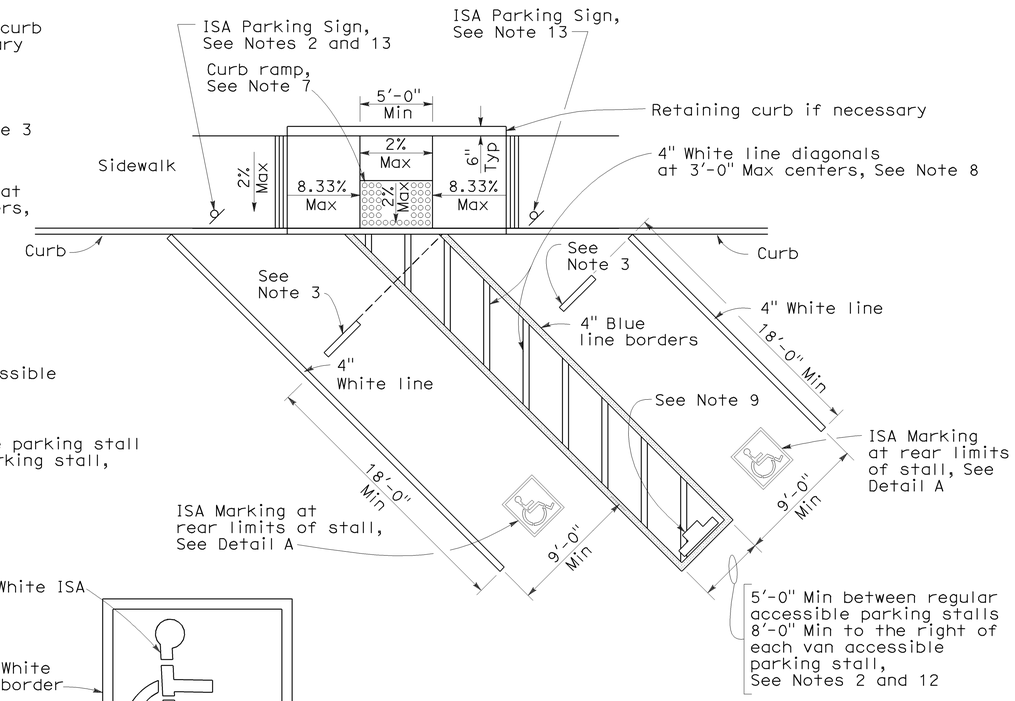

DIAGONAL DOUBLE PARKING STALLS

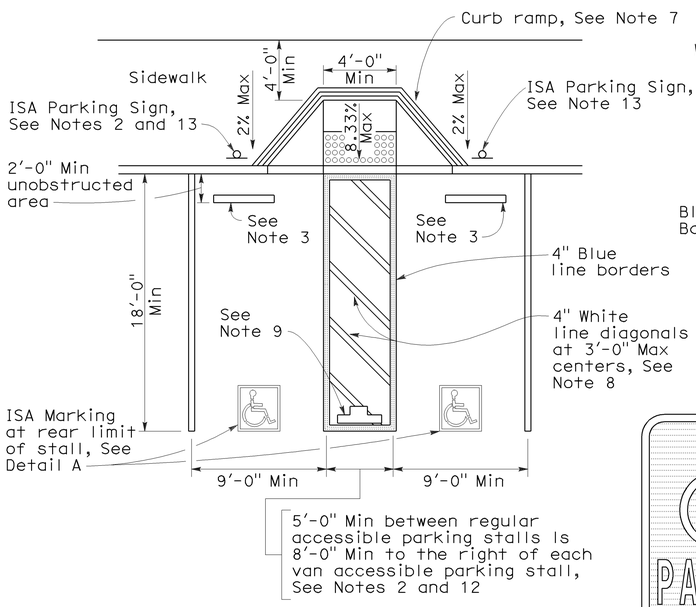

DOUBLE PARKING STALL

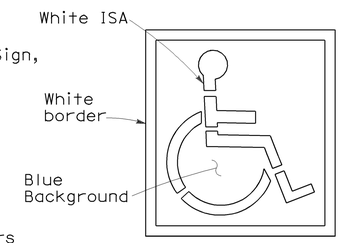

ISA MARKING
See Revised Std Plan RSP A24C

DETAIL A

TABLE A

Total Number of Parking Spaces or Stalls	Minimum Number of Disabled Accessible Parking Spaces or Stalls
1-25	1
26-50	2
51-75	3
76-100	4
101-150	5
151-200	6
201-300	7
301-400	8
401-500	9
501-1000	2 percent of total
Greater than 1001	20 plus 1 for each 100 or fraction thereof over 1001

SIGN R99 (CA)

PLAQUE R99B (CA)

SIGN R99 (CA) with PLAQUE R99B (CA)
See Note 6

SIGN R99C (CA)
See Note 6

UNAUTHORIZED VEHICLES PARKED IN DESIGNATED ACCESSIBLE SPACES NOT DISPLAYING DISTINGUISHING PLACARDS OR SPECIAL LICENSE PLATES ISSUED FOR PERSONS WITH DISABILITIES WILL BE TOWED AWAY AT THE OWNER'S EXPENSE

TOWED VEHICLES MAY BE RECLAIMED AT
(Insert Address)

OR BY TELEPHONING
(Insert Telephone Number)

SIGN R100B (CA)
See Note 10

SIGN R7-8b
See Notes 2 and 6

OFF-STREET PARKING SIGNS
(Parking lot or garage)
See Note 6

ISA = International Symbol of Accessibility

NOTES:

1. Accessible parking spaces serving a particular building shall be located on the shortest accessible route of travel from adjacent parking to an accessible entrance. In parking facilities that do not serve a particular building, accessible parking shall be located on the shortest accessible route of travel to an accessible pedestrian entrance of the parking facility.
2. One in every eight accessible off-street parking stalls, but not less than one, shall be served by an accessible aisle of 8'-0" minimum width and shall be signed van accessible. The R7-8b sign shall be mounted below the R99B (CA) plaque or the R99C (CA) sign.
3. In each parking stall, a curb or bumper shall be provided and located to prevent encroachment of vehicles over the required width of walkways. Parking stalls shall be so located that persons with disabilities are not compelled to wheel or walk behind parked cars other than their own.
4. Surface slopes of accessible off-street parking stalls shall be the minimum possible and shall not exceed 2 percent in any direction.
5. Table A shall be used to determine the required number of accessible parking stalls in each parking lot or garage.
6. Where Plaque R99B (CA), Sign R99C (CA) or Sign R7-8b are installed, the bottom of the sign or plaque panel shall be a minimum of 7'-0" above the surrounding surface.
7. Curb ramps shall conform to the details shown on Revised Standard Plan RSP A88A.
8. Blue paint, instead of white may be used for marking accessibility aisles in areas where snow may cause white markings to not be visible.
9. The words "NO PARKING", shall be painted in white letters no less than 1'-0" high and located so that it is visible to traffic enforcement officials. See Revised Standard Plan RSP A90B for details of the "NO PARKING" pavement marking.
10. A R100B (CA) sign shall be posted in a conspicuous place at each entrance to off-street parking facilities or immediately adjacent to and visible from each stall. The sign shall include the address where the towed vehicle may be reclaimed and the telephone number of the local traffic law enforcement agency.
11. Where a single (non-van) accessible parking space is provided, the loading and unloading access aisle shall be on the passenger side of the vehicle as the vehicle is going forward into the parking space.
12. Where a van accessible parking space is provided, the loading and unloading access aisle shall be 8'-0" wide minimum, and shall be on the passenger side of the vehicle as the vehicle is going forward into the parking space.
13. Accessible Parking Only Sign shall be Sign R99C (CA) or Sign R99 (CA) with Plaque R99B (CA).

STATE OF CALIFORNIA
DEPARTMENT OF TRANSPORTATION

ACCESSIBLE PARKING OFF-STREET

NO SCALE

RSP A90A DATED JUNE 6, 2008 SUPERSEDES STANDARD PLAN A90A
DATED MAY 1, 2006 - PAGE 117 OF THE STANDARD PLANS BOOK DATED MAY 2006.

REVISED STANDARD PLAN RSP A90A

2006 REVISED STANDARD PLAN RSP A90A

6-3-08

DIST	COUNTY	ROUTE	POST MILES TOTAL PROJECT	SHEET NO.	TOTAL SHEETS
07	LA	14	R52.6/R59.2	33	58

William K. Farnbach
REGISTERED CIVIL ENGINEER

May 15, 2009
PLANS APPROVAL DATE

REGISTERED PROFESSIONAL ENGINEER
William K. Farnbach
No. C49042
Exp. 9-30-10
CIVIL
STATE OF CALIFORNIA

The State of California or its officers or agents shall not be responsible for the accuracy or completeness of electronic copies of this plan sheet.

To accompany plans dated 6-20-11

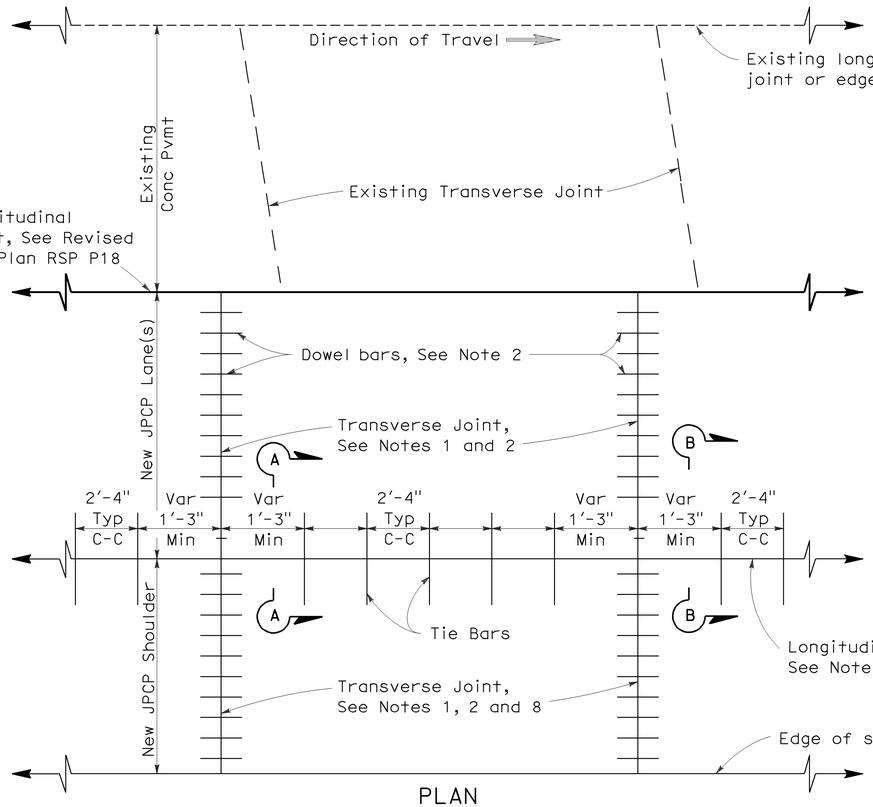

PLAN

LANE/SHOULDER ADDITION OR RECONSTRUCTION

See Notes 6 and 7

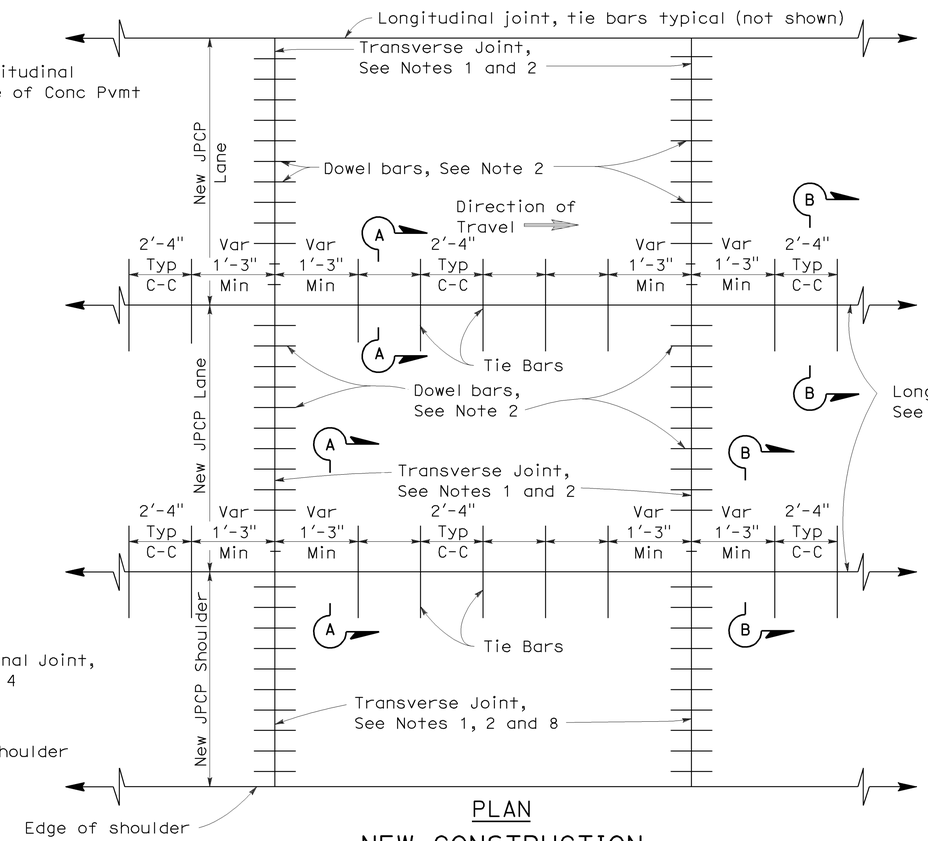

PLAN

NEW CONSTRUCTION

See Notes 6 and 7

NOTES:

1. Transverse joints shall be constructed at right angles to the longitudinal pavement joints in new jointed plain concrete pavement and spaced at successive repeated intervals of 12', 15', 13' and 14'.
2. For transverse joint and dowel bar details not shown, See Revised Standard Plan RSP P10.
3. Construct longitudinal contraction joints as shown in Section A-A when more than one lane or shoulder widths are placed at one time. If constructing one lane at a time, use longitudinal construction joint, as shown in Section B-B.
4. For additional longitudinal joint details, see Revised Standard Plan RSP P18.
5. If fresh concrete is placed adjacent to existing concrete, the top corner of the new hardened concrete does not need to be rounded to the 1/4" radius as shown.
6. Joint spacing patterns do not apply to intersections.
7. Details can also apply to inside widening.
8. Dowel bars may be omitted from shoulders when the shoulder cross slope is not the same as the adjacent traffic lane.

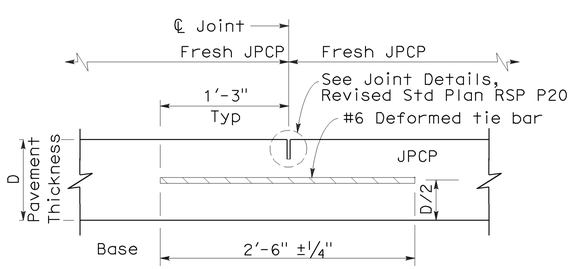

SECTION A-A

LONGITUDINAL CONTRACTION JOINT

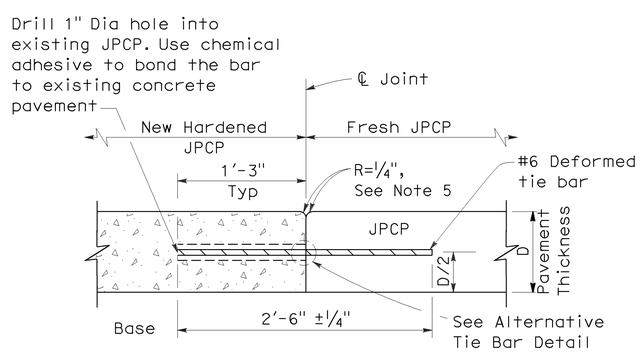

SECTION B-B

LONGITUDINAL CONSTRUCTION JOINT

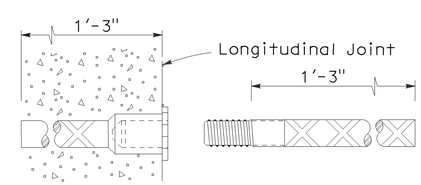

ALTERNATIVE TIE BAR SPLICE DETAIL

(Splice Coupler)

TIE BAR DETAILS

STATE OF CALIFORNIA
DEPARTMENT OF TRANSPORTATION

JOINTED PLAIN CONCRETE PAVEMENT

NO SCALE

RSP P1 DATED MAY 15, 2009 SUPERSEDES STANDARD PLAN P1
DATED MAY 1, 2006 - PAGE 119 OF THE STANDARD PLANS BOOK DATED MAY 2006.

REVISED STANDARD PLAN RSP P1

2006 REVISED STANDARD PLAN RSP P1

5-8-09

DIST	COUNTY	ROUTE	POST MILES TOTAL PROJECT	SHEET NO.	TOTAL SHEETS
07	LA	14	R52.6/R59.2	34	58

William K. Farnbach
REGISTERED CIVIL ENGINEER

June 5, 2009
PLANS APPROVAL DATE

REGISTERED PROFESSIONAL ENGINEER
William K. Farnbach
No. C49042
Exp. 9-30-10
CIVIL
STATE OF CALIFORNIA

The State of California or its officers or agents shall not be responsible for the accuracy or completeness of electronic copies of this plan sheet.

To accompany plans dated 6-20-11

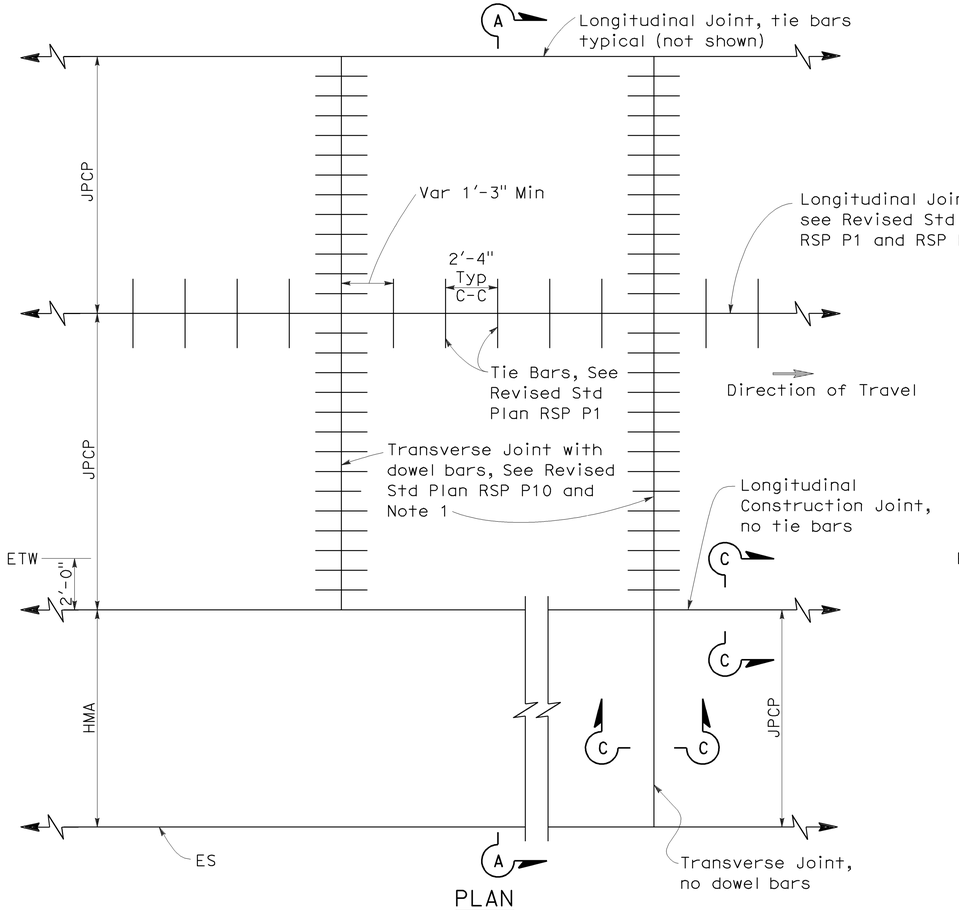

PLAN

NEW CONSTRUCTION

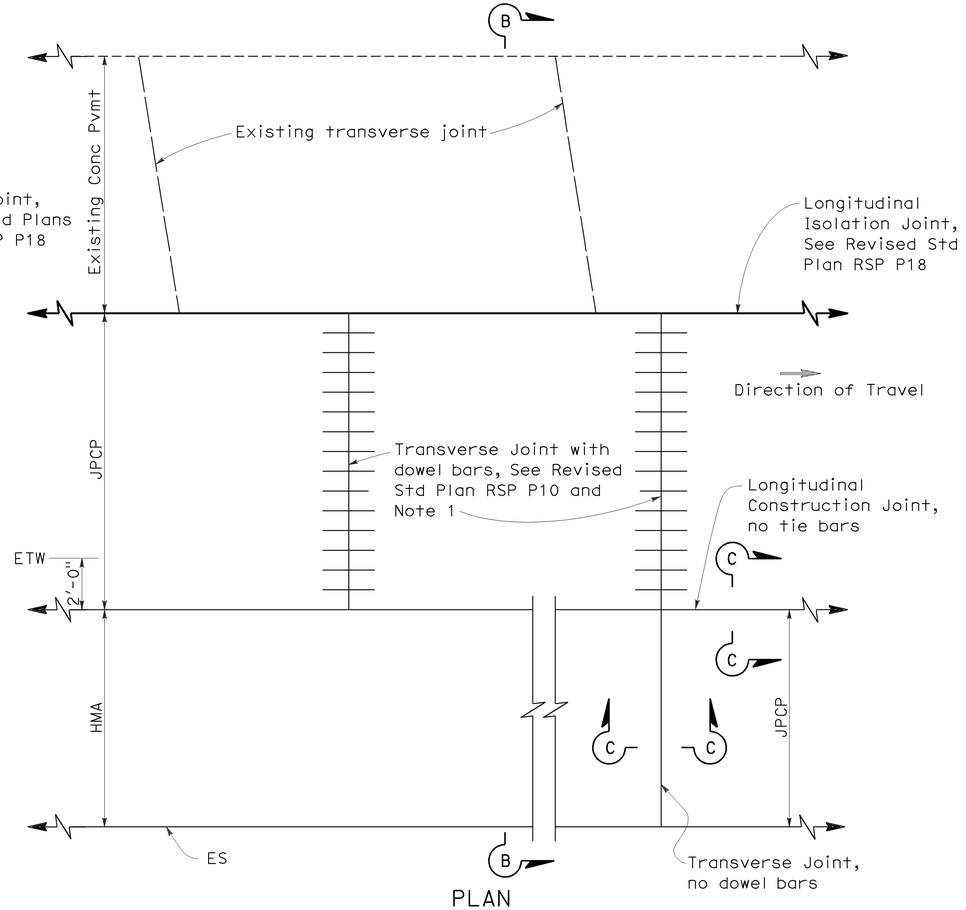

PLAN

LANE/SHOULDER ADDITION OR RECONSTRUCTION

NOTES:

1. Transverse joints shall be constructed at right angles to the longitudinal pavement joints in new Jointed Plain Concrete Pavement and spaced at successive repeated intervals of 12', 15', 13' and 14'.
2. For locations of rumble strips, see project plans. For rumble strip details not shown, see Standard Plans A40A and A40B.
3. Joint spacing patterns do not apply to intersections.

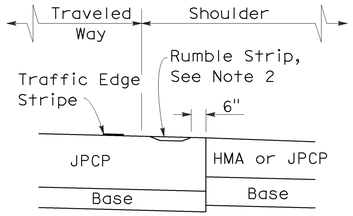

DETAIL "A"

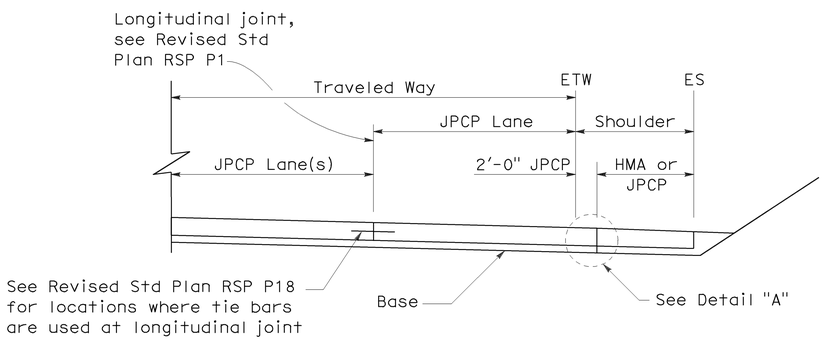

SECTION A-A

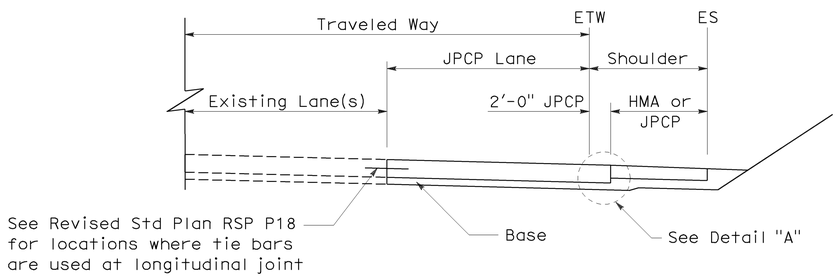

SECTION B-B

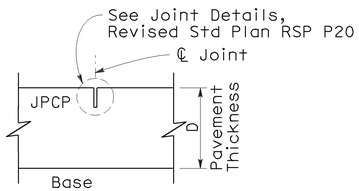

SECTION C-C

TRANSVERSE/LONGITUDINAL JOINT

(no dowel bars/tie bars)

STATE OF CALIFORNIA
DEPARTMENT OF TRANSPORTATION

JOINTED PLAIN CONCRETE PAVEMENT-WIDENED SLAB DETAILS

NO SCALE

RSP P2 DATED JUNE 5, 2009 SUPERCEDES STANDARD PLAN P2
DATED MAY 1, 2006 - PAGE 120 OF THE STANDARD PLANS BOOK DATED MAY 2006.

REVISED STANDARD PLAN RSP P2

2006 REVISED STANDARD PLAN RSP P2

5-19-09

DIST	COUNTY	ROUTE	POST MILES TOTAL PROJECT	SHEET NO.	TOTAL SHEETS
07	LA	14	R52.6/R59.2	35	58

William K. Farnbach
REGISTERED CIVIL ENGINEER

May 15, 2009
PLANS APPROVAL DATE

REGISTERED PROFESSIONAL ENGINEER
William K. Farnbach
No. C49042
Exp. 9-30-10
CIVIL
STATE OF CALIFORNIA

The State of California or its officers or agents shall not be responsible for the accuracy or completeness of electronic copies of this plan sheet.

To accompany plans dated 6-20-11

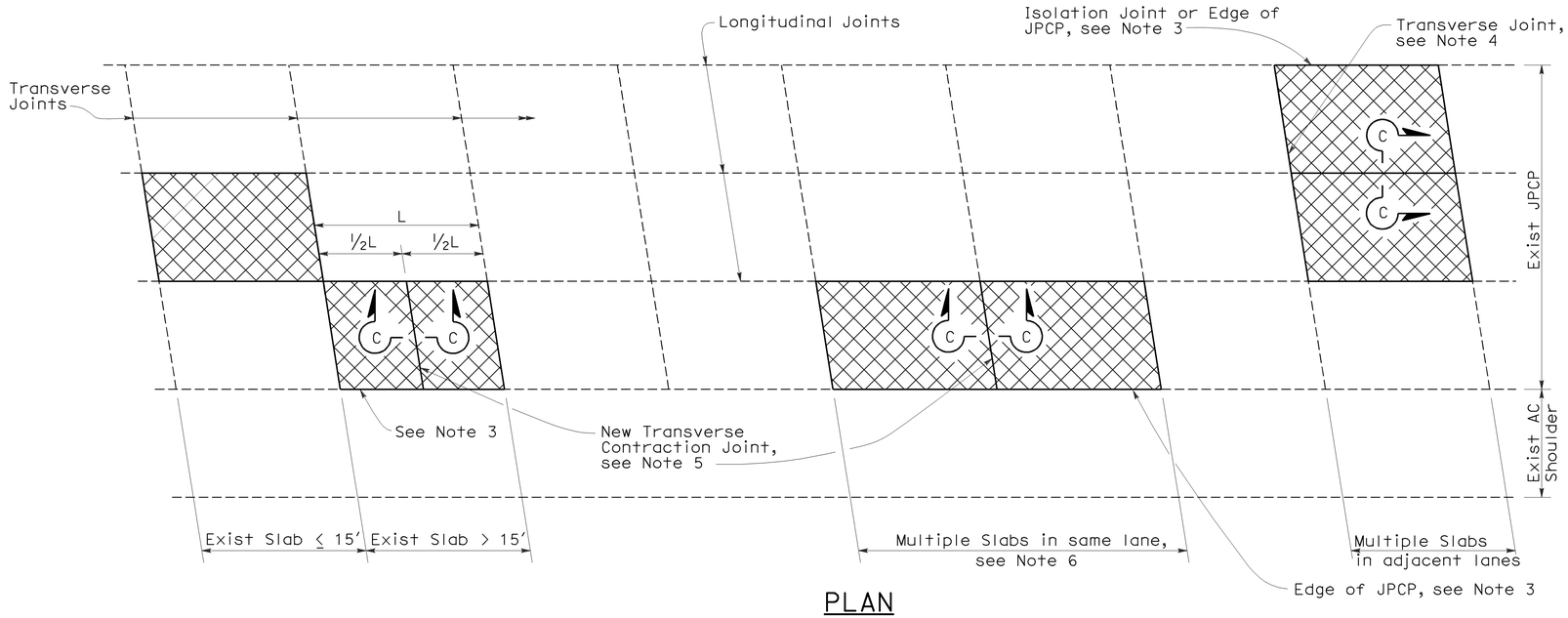

PLAN

NOTES:

1. For details not shown, see Revised Standard Plan RSP P10.
2. Where the existing outer shoulder pavement is asphalt concrete pavement, the "a" dimension shall be 1′-0" and the "b" dimension shall be 2′-0".
3. Side forms shall be used where edge of pavement is adjacent to asphalt concrete.
4. For detail, see Transverse Construction Joint for existing concrete pavement detail on Revised Standard Plan RSP P10.
5. Transverse joint to match skew of existing joint. Omit dowel bars.
6. This Standard Plan only applicable when replacing multiple slabs in the same lane is less than 100′.

LEGEND

Replace Concrete Pavement (See Slab Layout Detail)

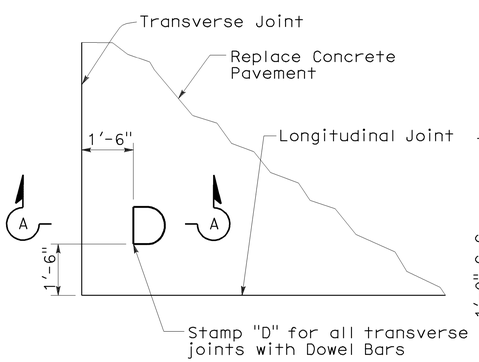

DOWEL STAMP DETAIL

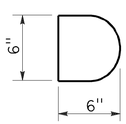

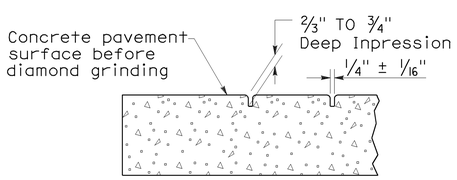

SECTION A-A

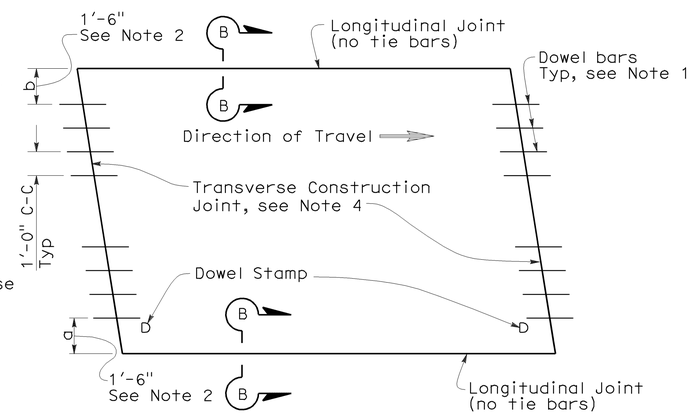

TYPE I
(traffic lane lines match longitudinal joints)

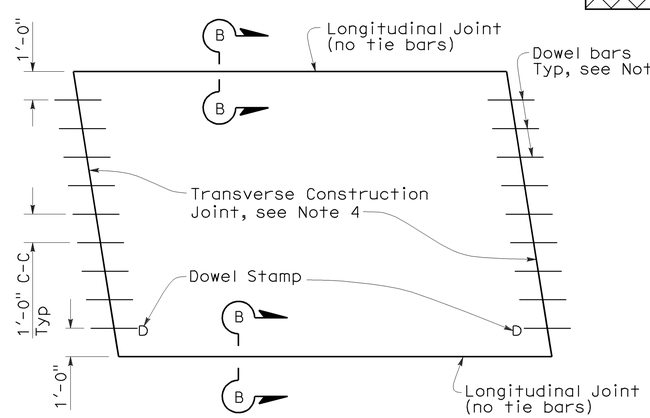

TYPE II
(traffic lane lines do not match longitudinal joints)

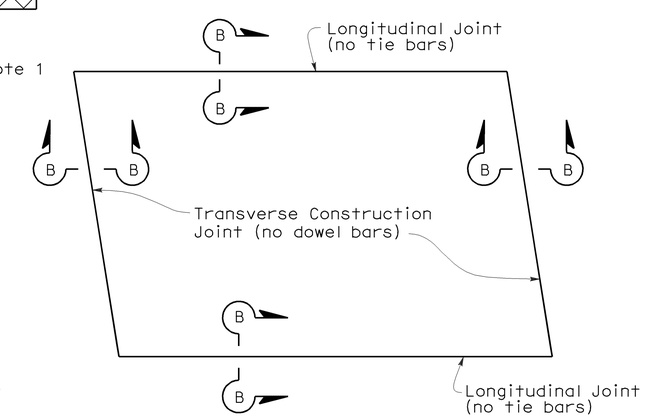

TYPE III
(for short term repairs < 5 yrs design life or for slab replacements with a cracking and seating operation)

SLAB LAYOUT

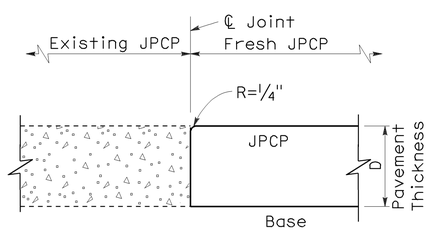

SECTION B-B

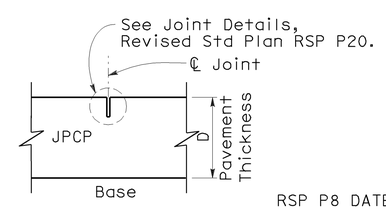

SECTION C-C

STATE OF CALIFORNIA
DEPARTMENT OF TRANSPORTATION

JOINTED PLAIN CONCRETE PAVEMENT-INDIVIDUAL SLAB REPLACEMENT

NO SCALE

RSP P8 DATED MAY 15, 2009 SUPERSEDES RSP P8 DATED SEPTEMBER 1, 2006 AND STANDARD PLAN P8 DATED MAY 1, 2006 - PAGE 123 OF THE STANDARD PLANS BOOK DATED MAY 2006.

REVISED STANDARD PLAN RSP P8

2006 REVISED STANDARD PLAN RSP P8

5-8-09

DIST	COUNTY	ROUTE	POST MILES TOTAL PROJECT	SHEET NO.	TOTAL SHEETS
07	LA	14	R52.6/R59.2	36	58

REGISTERED CIVIL ENGINEER

May 15, 2009
PLANS APPROVAL DATE

The State of California or its officers or agents shall not be responsible for the accuracy or completeness of electronic copies of this plan sheet.

REGISTERED PROFESSIONAL ENGINEER — William K. Farnbach — No. C49042 — Exp. 9-30-10 — CIVIL — STATE OF CALIFORNIA

To accompany plans dated 6-20-11

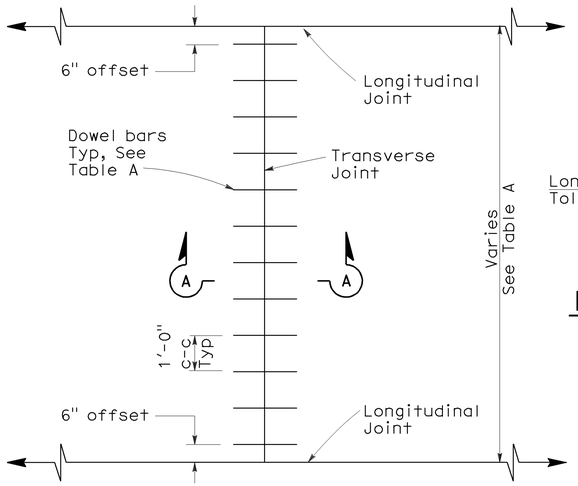

TRANSVERSE JOINT DOWEL BAR LAYOUT

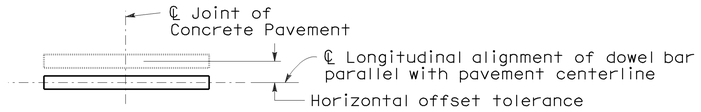

PLAN

HORIZONTAL OFFSET TOLERANCE

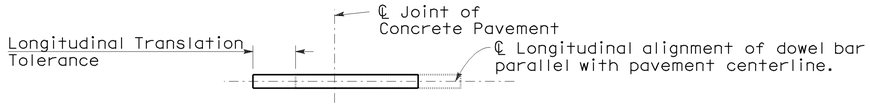

PLAN

LONGITUDINAL TRANSLATION TOLERANCE

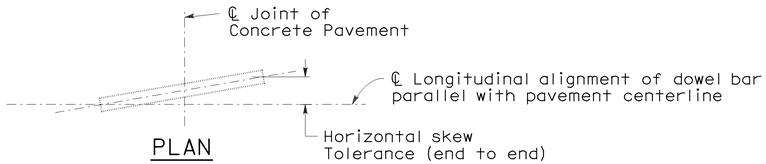

PLAN

HORIZONTAL SKEW TOLERANCE

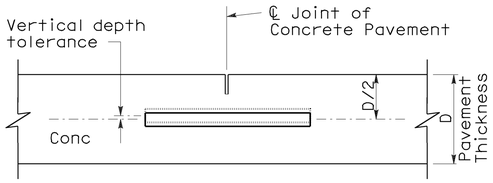

ELEVATION

VERTICAL DEPTH TOLERANCE

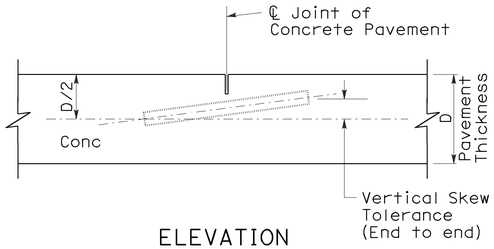

ELEVATION

VERTICAL SKEW TOLERANCE

NOTES:

1. See Revised Standard Plan RSP P1 for typical dowel bar placement and locations.
2. 1½" Dia smooth dowel bars are to be used with a pavement thickness, D, equal to or greater than 0.70 feet. For pavement thickness, D, less than 0.70 feet, use 1¼" Dia smooth dowel bars.
3. For widths not shown, see Project Plans.
4. If fresh concrete pavement is placed adjacent to existing concrete pavement, the top corner of the existing concrete pavement does not need to be rounded to the ¼" radius, as shown.

TABLE A (See Note 3)

Dowel Bar Transverse Spacing Table	
Width between Longitudinal Joints	Number of Dowels between Longitudinal Joints
14'-0"	14
13'-0"	13
12'-0"	12
11'-0"	11
10'-0"	10
8'-0"	8
5'-0"	5
4'-0"	4

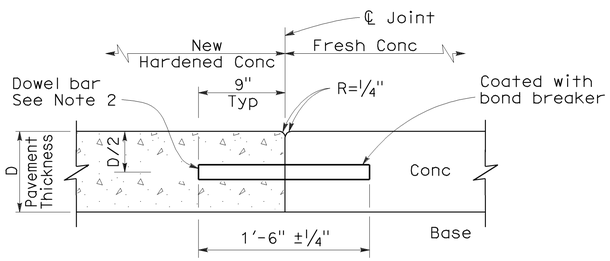

SECTION A-A

TRANSVERSE CONSTRUCTION JOINT DETAIL

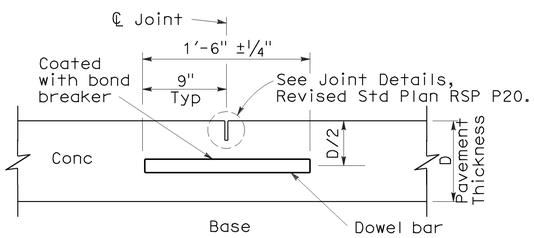

TRANSVERSE CONTRACTION JOINT

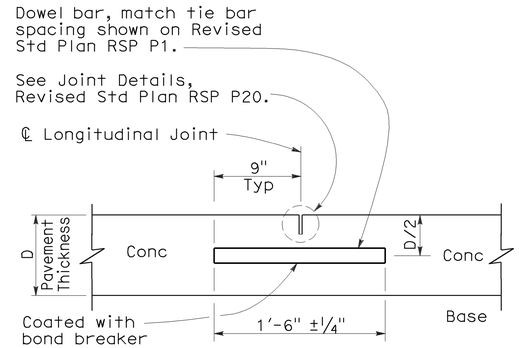

LONGITUDINAL CONTRACTION JOINT WITH DOWEL BARS

(See Revised Std Plan RSP P18)

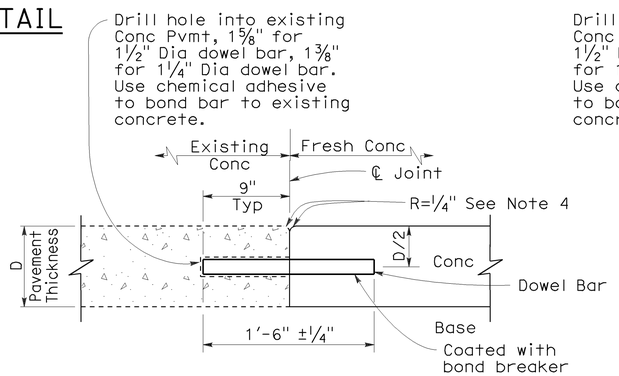

TRANSVERSE CONSTRUCTION JOINT FOR EXISTING CONCRETE PAVEMENT

(Drill and bond locations)

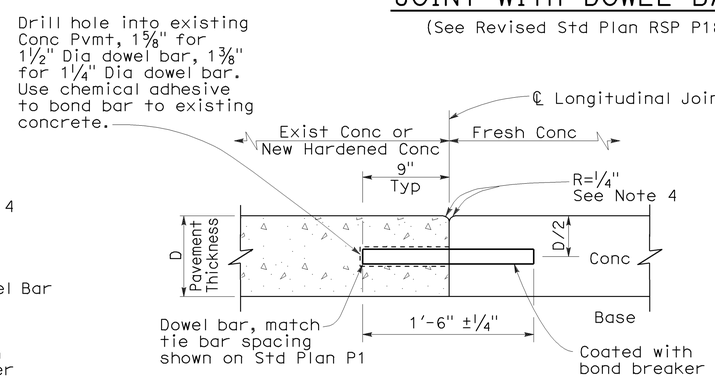

LONGITUDINAL CONSTRUCTION JOINT WITH DOWEL BARS

(See Revised Std Plan RSP P18)

STATE OF CALIFORNIA
DEPARTMENT OF TRANSPORTATION

CONCRETE PAVEMENT-DOWEL BAR DETAILS

NO SCALE

RSP P10 DATED MAY 15, 2009 SUPERSEDES STANDARD PLAN P10
DATED MAY 1, 2006 - PAGE 124 OF THE STANDARD PLANS BOOK DATED MAY 2006.

REVISED STANDARD PLAN RSP P10

2006 REVISED STANDARD PLAN RSP P10

5-8-09

DIST	COUNTY	ROUTE	POST MILES TOTAL PROJECT	SHEET NO.	TOTAL SHEETS
07	LA	14	R52.6/R59.2	37	58

William K. Farnbach
REGISTERED CIVIL ENGINEER

May 15, 2009
PLANS APPROVAL DATE

REGISTERED PROFESSIONAL ENGINEER
William K. Farnbach
No. C49042
Exp. 9-30-10
CIVIL
STATE OF CALIFORNIA

The State of California or its officers or agents shall not be responsible for the accuracy or completeness of electronic copies of this plan sheet.

To accompany plans dated 6-20-11

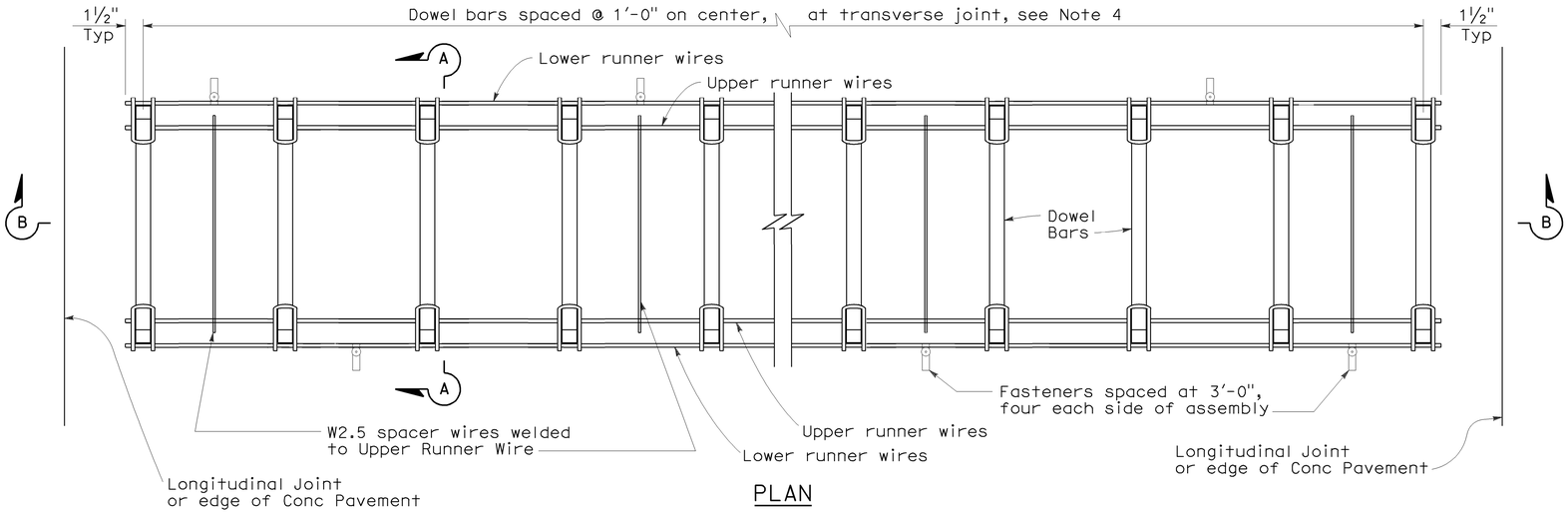

PLAN

DOWEL BAR BASKET (TRANSVERSE JOINT)

See Note 1

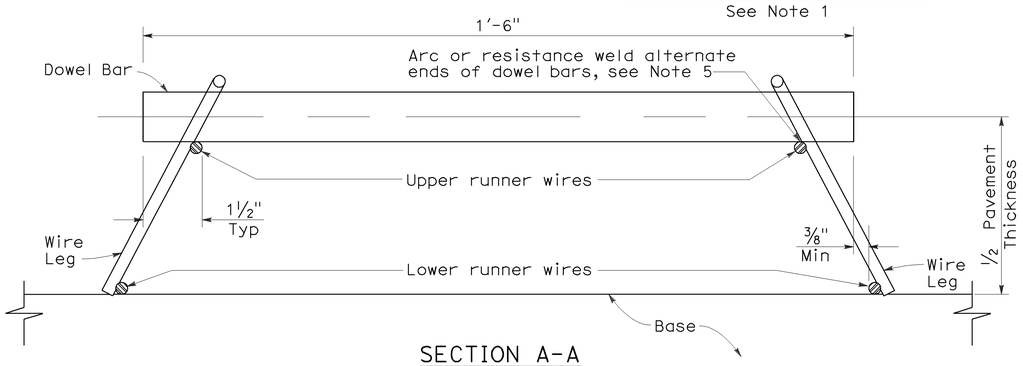

SECTION A-A

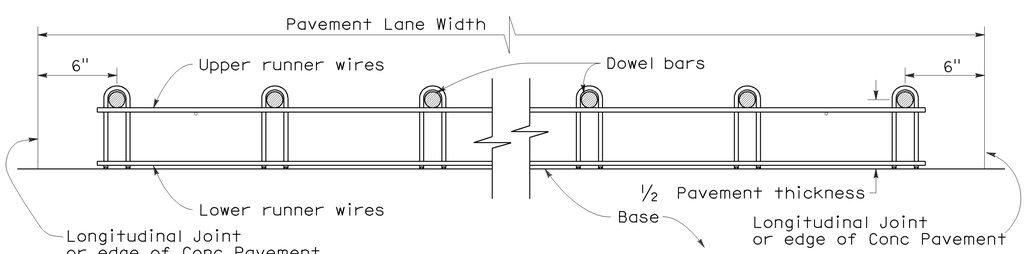

SECTION B-B

See Note 1

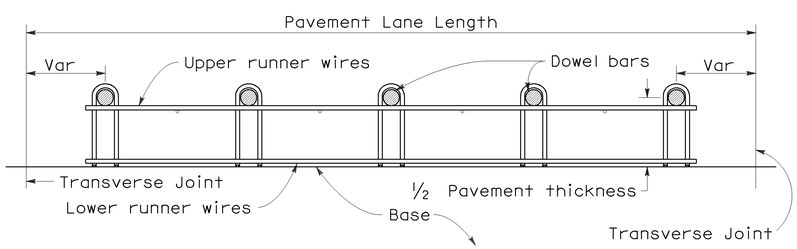

SECTION C-C

See Notes 1 and 4

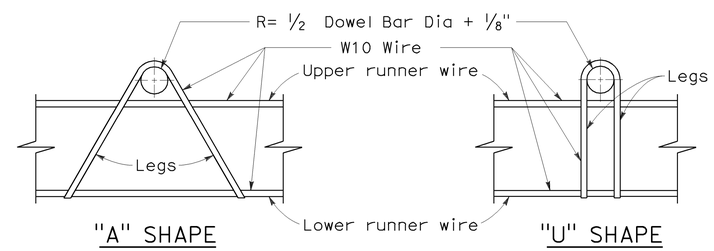

ASSEMBLY FRAME DETAILS

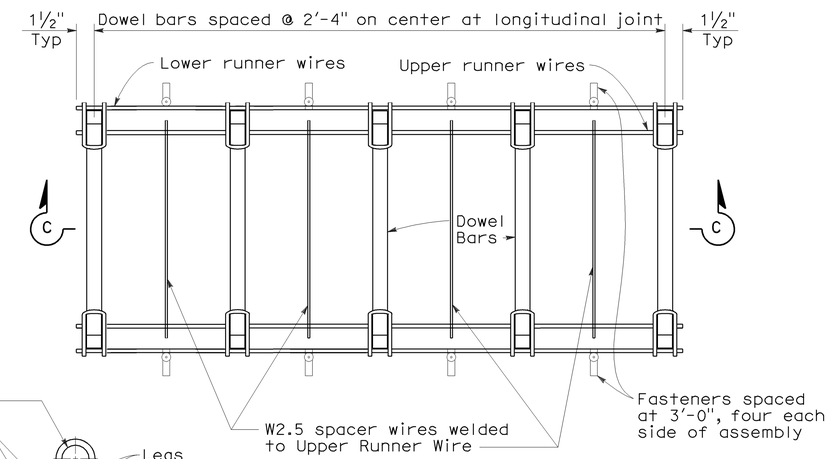

PLAN

DOWEL BAR BASKET (LONGITUDINAL JOINT)

See Note 1

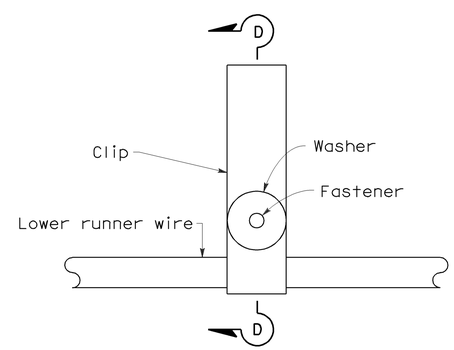

PLAN

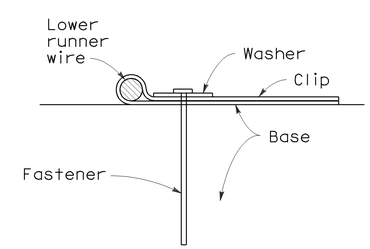

SECTION D-D

FASTENER DETAIL

NOTES:

1. "U" frame shape assembly shown. "U" frame shape or "A" frame shape are acceptable.
2. Wire sizes shown are minimum required.
3. All wire intersections are to be resistance welded.
4. Use tie bar spacing for longitudinal dowel bar locations. See Revised Std Plans RSPs P1, P2, and P3 for tie bar requirements.
5. Weld may be at top or bottom of dowel bar.

STATE OF CALIFORNIA
DEPARTMENT OF TRANSPORTATION

CONCRETE PAVEMENT-DOWEL BAR BASKET DETAILS

NO SCALE

RSP P12 DATED MAY 15, 2009 SUPERSEDES RSP P12 DATED NOVEMBER 17, 2006 AND STANDARD PLAN P12 DATED MAY 1, 2006 - PAGE 125 OF THE STANDARD PLANS BOOK DATED MAY 2006.

REVISED STANDARD PLAN RSP P12

2006 REVISED STANDARD PLAN RSP P12

5-8-09

DIST	COUNTY	ROUTE	POST MILES TOTAL PROJECT	SHEET NO.	TOTAL SHEETS
07	LA	14	R52.6/R59.2	38	58

William K. Farnbach
REGISTERED CIVIL ENGINEER

May 15, 2009
PLANS APPROVAL DATE

REGISTERED PROFESSIONAL ENGINEER
William K. Farnbach
No. C49042
Exp. 9-30-10
CIVIL
STATE OF CALIFORNIA

The State of California or its officers or agents shall not be responsible for the accuracy or completeness of electronic copies of this plan sheet.

To accompany plans dated 6-20-11

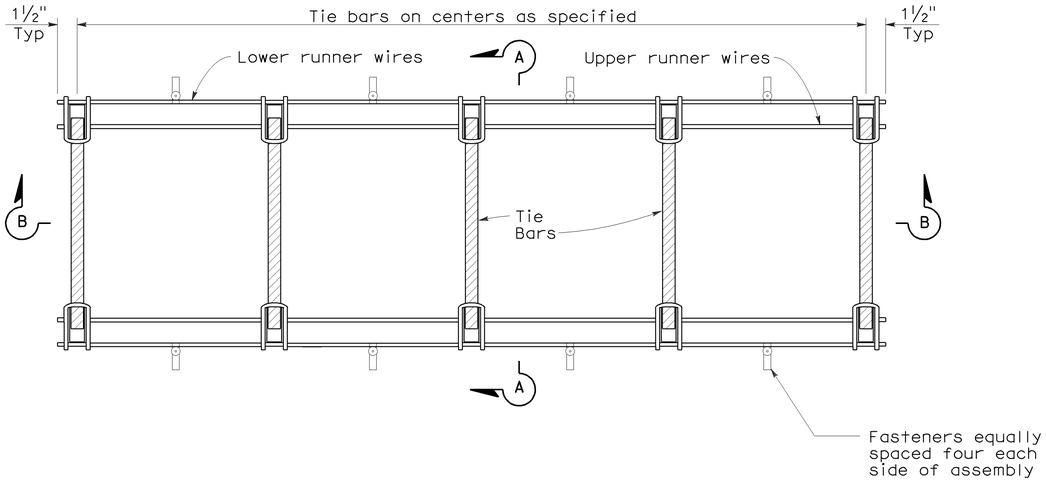

PLAN

TIE BAR BASKET

(TIE BARS AT LONGITUDINAL JOINT)
See Note 1

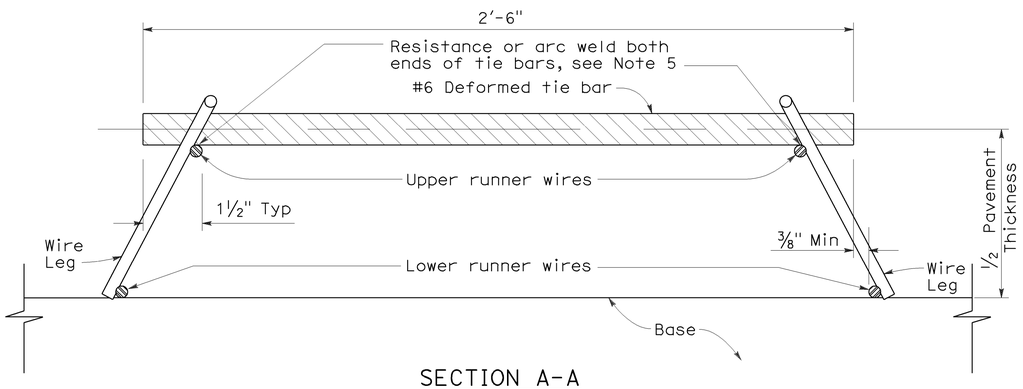

SECTION A-A

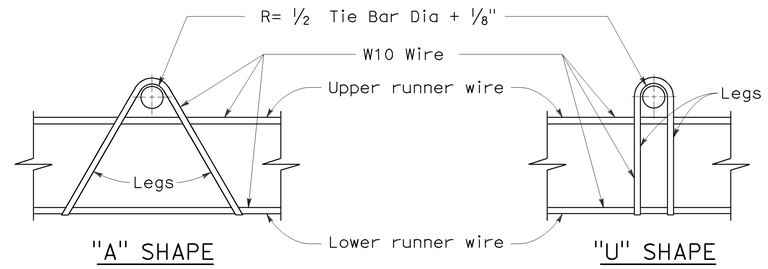

ASSEMBLY FRAME DETAILS

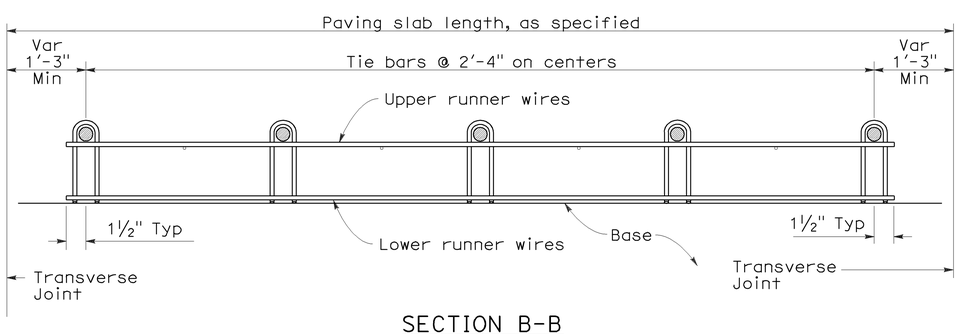

SECTION B-B
See Note 1

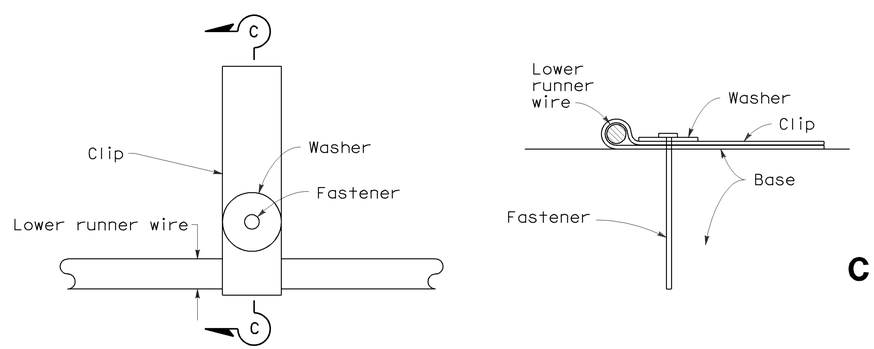

PLAN

SECTION C-C

FASTENER DETAIL

NOTES:

1. "U" frame shape assembly shown. "U" frame shape or "A" frame shape are acceptable.
2. Wire sizes shown are minimum required.
3. All wire intersections are to be resistance welded.
4. Not for use on nondoweled skewed jointed plain concrete pavement.
5. Weld may be at top or bottom of tie bar.

STATE OF CALIFORNIA
DEPARTMENT OF TRANSPORTATION

CONCRETE PAVEMENT-TIE BAR BASKET DETAILS

NO SCALE

RSP P17 DATED MAY 15, 2009 SUPERSEDES RSP P17 DATED NOVEMBER 17, 2006 AND STANDARD PLAN P17 DATED MAY 1, 2006 - PAGE 126 OF THE STANDARD PLANS BOOK DATED MAY 2006.

REVISED STANDARD PLAN RSP P17

2006 REVISED STANDARD PLAN RSP P17

5-8-09

DIST	COUNTY	ROUTE	POST MILES TOTAL PROJECT	SHEET NO.	TOTAL SHEETS
07	LA	14	R52.6/R59.2	39	58

William K. Farnbach
REGISTERED CIVIL ENGINEER

June 5, 2009
PLANS APPROVAL DATE

REGISTERED PROFESSIONAL ENGINEER William K. Farnbach No. C49042 Exp. 9-30-10 CIVIL STATE OF CALIFORNIA

The State of California or its officers or agents shall not be responsible for the accuracy or completeness of electronic copies of this plan sheet.

To accompany plans dated 6-20-11

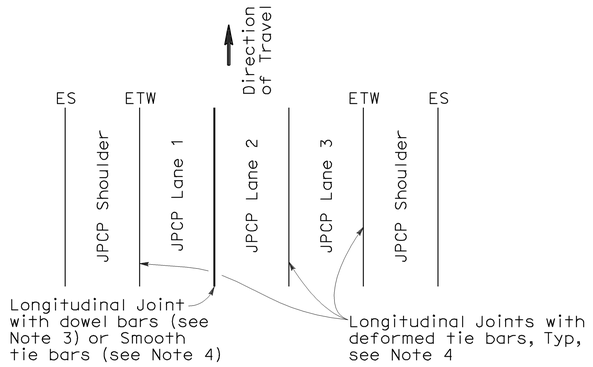

3 LANES WITH TIED CONCRETE SHOULDERS
PLAN

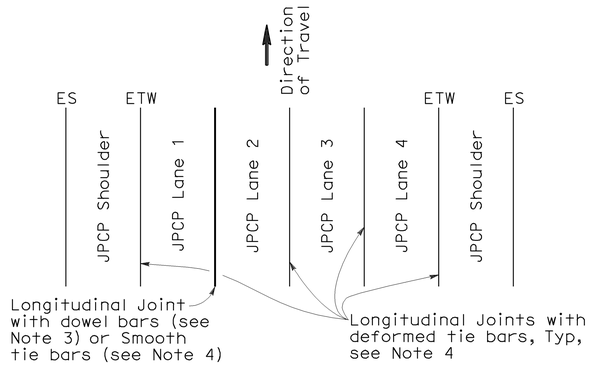

4 LANES WITH TIED CONCRETE SHOULDERS
PLAN

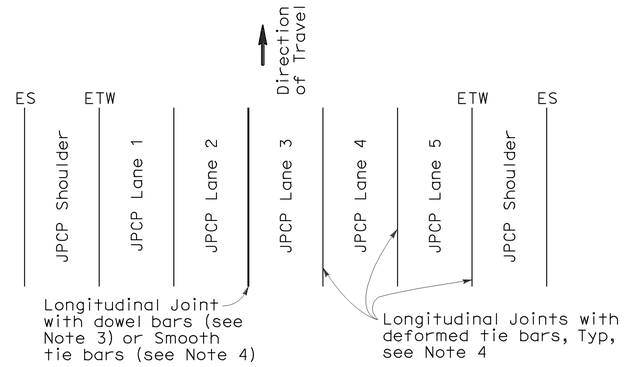

5 LANES WITH TIED CONCRETE SHOULDERS
PLAN

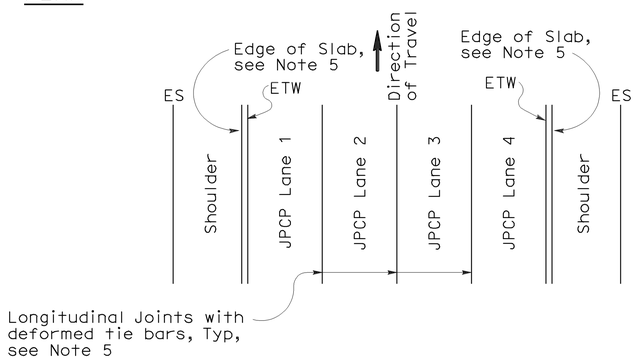

4 LANES OR LESS WITH WIDENED SLAB
PLAN

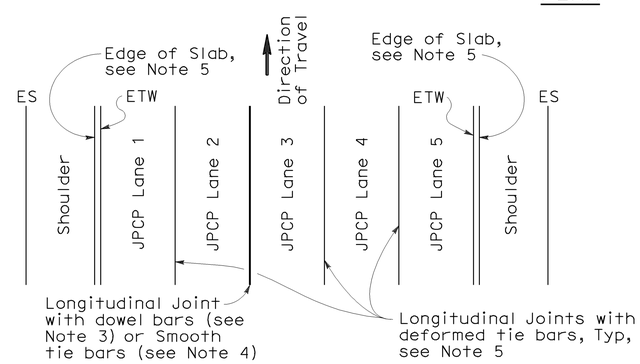

5 LANES WITH WIDENED SLAB
PLAN

NEW CONSTRUCTION

Location of Longitudinal Joints
(For JPCP)

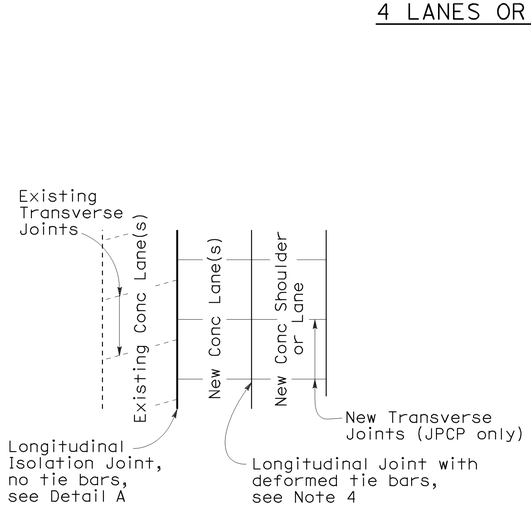

CASE 1
PLAN

Transverse Joints do not align between new and existing

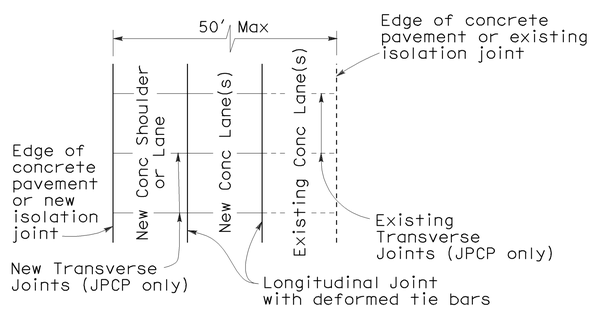

CASE 2
PLAN

Transverse Joints align between new and existing

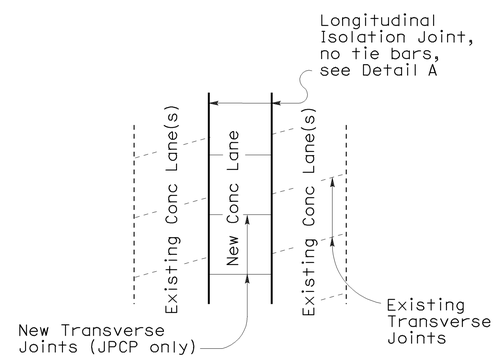

CASE 3 (INTERIOR LANE REPLACEMENT)
PLAN

Transverse Joints do not align between new and existing

LANE/SHOULDER ADDITION OR RECONSTRUCTION

(For JPCP and CRCP)

NOTES:

1. Where Lean Concrete Base is not used as base material, the joint filler material used for the longitudinal isolation joint shall only extend to the bottom of the new concrete slab. See Detail A.
2. Use 5/8" ±1/16" dimension for silicone sealant.
3. See Revised Standard Plan RSP P10 for longitudinal joint with dowel bars.
4. See Revised Standard Plan RSP P1.
5. See Revised Standard Plan RSP P2.

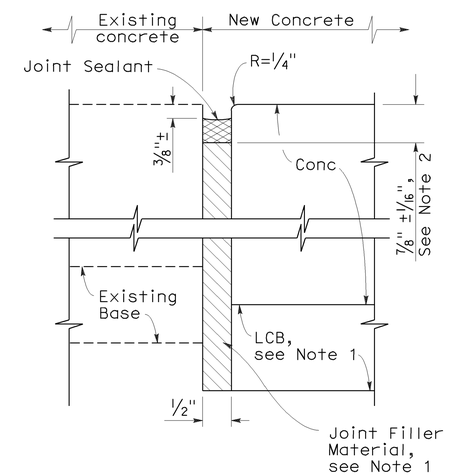

DETAIL A

ISOLATION JOINT

STATE OF CALIFORNIA
DEPARTMENT OF TRANSPORTATION

CONCRETE PAVEMENT-LANE SCHEMATICS AND ISOLATION JOINT DETAIL

NO SCALE

RSP P18 DATED JUNE 5, 2009 SUPERSEDES RSP P18 DATED MAY 15, 2009, RSP P18 DATED NOVEMBER 17, 2006 AND STANDARD PLAN P18 DATED MAY 1, 2006 - PAGE 127 OF THE STANDARD PLANS BOOK DATED MAY 2006.

REVISED STANDARD PLAN RSP P18

2006 REVISED STANDARD PLAN RSP P18

5-14-09

DIST	COUNTY	ROUTE	POST MILES TOTAL PROJECT	SHEET NO.	TOTAL SHEETS
07	LA	14	R52.6/R59.2	40	58

William K. Farnbach
REGISTERED CIVIL ENGINEER

May 15, 2009
PLANS APPROVAL DATE

REGISTERED PROFESSIONAL ENGINEER
William K. Farnbach
No. C49042
Exp. 9-30-10
CIVIL
STATE OF CALIFORNIA

The State of California or its officers or agents shall not be responsible for the accuracy or completeness of electronic copies of this plan sheet.

To accompany plans dated 6-20-11

NOTE:

1. Tie bars, dowel bars, and reinforcement are not shown in joint seal details, see Revised Standard Plans RSP P1, RSP P3, RSP P10, RSP P35, RSP P45, or RSP P46 as applicable.

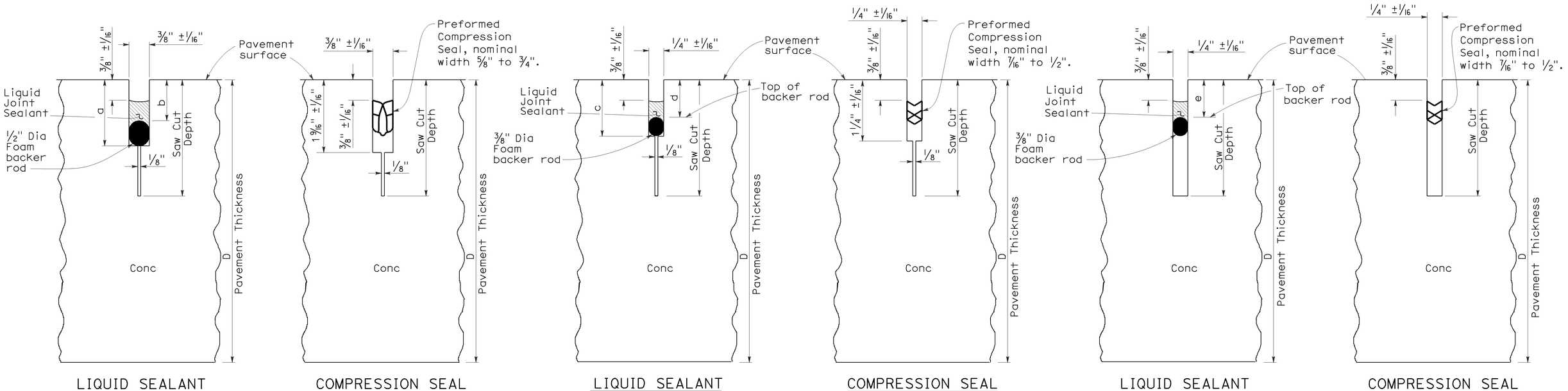

TYPE A1
Transverse Contraction Joints

TYPE A2
Longitudinal Contraction Joints

TYPE B
Longitudinal or Transverse Contraction Joint

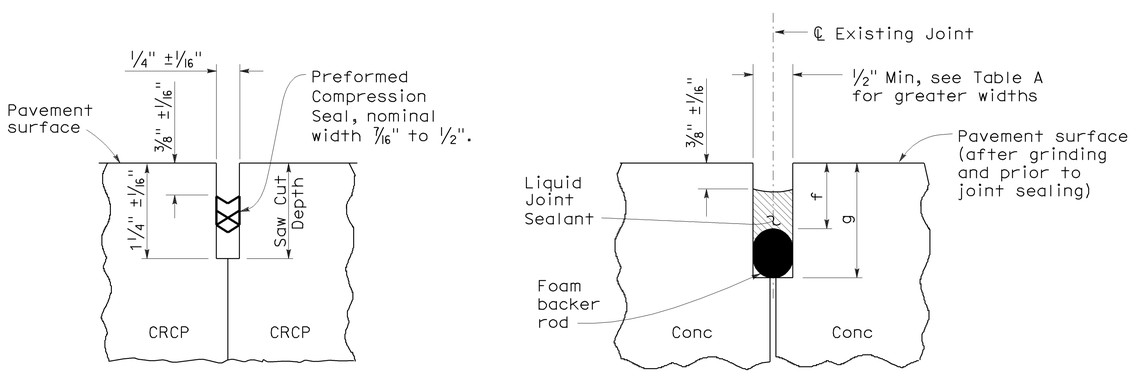

TYPE C
Transverse and Longitudinal Construction Joints
(For CRCP)

TYPE R
Retrofit Transverse and Longitudinal Joints

LIQUID SEALANT RESERVOIR DEPTH

LIQUID SEALANT MATERIAL	3/8" Joint Width Type A1		1/4" Joint Width Type A2		1/4" Joint Width Type B
	DIMENSION		DIMENSION		DIMENSION
	a	b	c	d	e
SILCONE	1" ±1/16"	5/8" ±1/16"	15/16" ±1/16"	9/16" ±1/16"	9/16" ±1/16"
ASPHALT RUBBER	1 3/16" ±1/16"	3/4" ±1/16"	1 1/16" ±1/16"	11/16" ±1/16"	11/16" ±1/16"

TABLE A (TYPE R JOINT)

Sawn Joint Width	Backer Rod Diameter ± 1/16"	DIMENSION "f"	DIMENSION "g"
1"	1 5/16"	7/8"	2 1/4"
7/8"	1 3/16"	13/16"	2"
3/4"	1"	3/4"	1 3/4"
5/8"	7/8"	11/16"	1 1/2"
1/2"	11/16"	5/8"	1 1/4"

STATE OF CALIFORNIA
DEPARTMENT OF TRANSPORTATION

CONCRETE PAVEMENT-JOINT DETAILS

NO SCALE

RSP P20 DATED MAY 15, 2009 SUPERSEDES STANDARD PLAN P20
DATED MAY 1, 2006 - PAGE 128 OF THE STANDARD PLANS BOOK DATED MAY 2006.

REVISED STANDARD PLAN RSP P20

2006 REVISED STANDARD PLAN RSP P20

5-8-09

DIST	COUNTY	ROUTE	POST MILES TOTAL PROJECT	SHEET NO.	TOTAL SHEETS
07	LA	14	R52.6/R59.2	41	58

Randell D. Hiatt
REGISTERED CIVIL ENGINEER

June 6, 2008
PLANS APPROVAL DATE

REGISTERED PROFESSIONAL ENGINEER
Randell D. Hiatt
No. C50200
Exp. 6-30-09
CIVIL
STATE OF CALIFORNIA

The State of California or its officers or agents shall not be responsible for the accuracy or completeness of electronic copies of this plan sheet.

To accompany plans dated 6-20-11

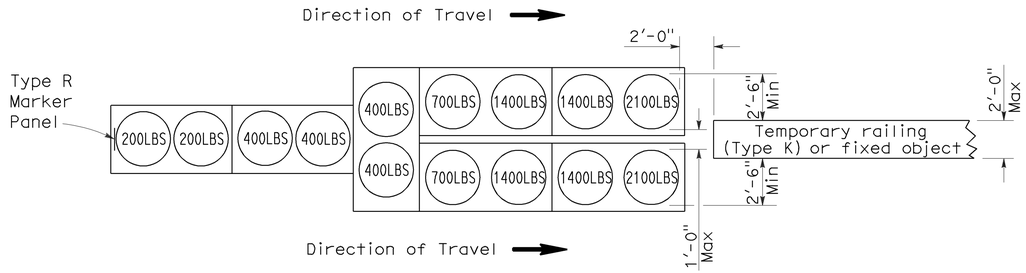

ARRAY 'TU14'

Approach speed 45 mph or more

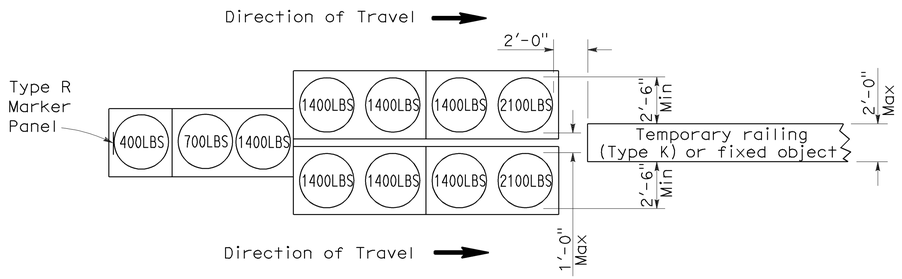

ARRAY 'TU11'

Approach speed less than 45 mph

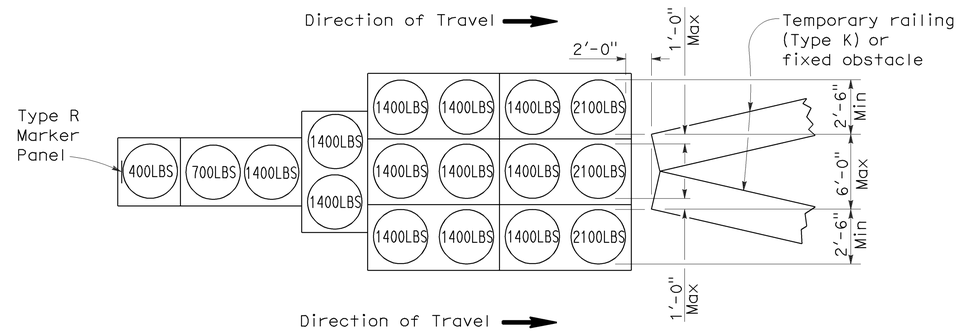

ARRAY 'TU17'

Approach speed less than 45 mph

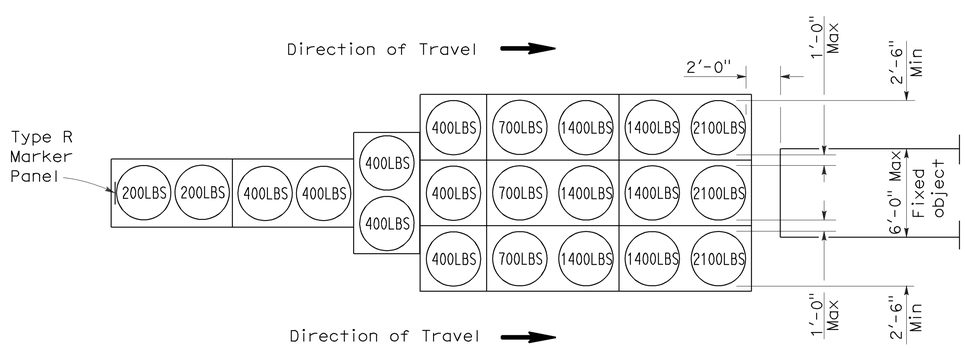

ARRAY 'TU21'

Approach speed 45 mph or more

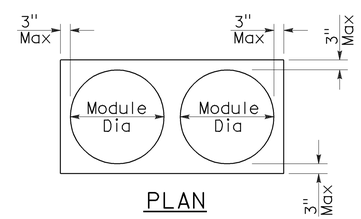

PLAN

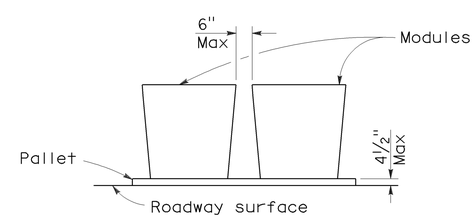

ELEVATION

CRASH CUSHION PALLET DETAIL

See Note 7

NOTES:

1. (XXX) Indicates sand filled module location and weight of sand in pounds for each module. Module spacing is based on the greater diameter of the module.
2. All sand weights are nominal.
3. Temporary crash cushion arrays shall not encroach on the traveled way.
4. Place the top of Type R marker panel 1" below the module lid.
5. Refer to Standard Plan A73B for marker details.
6. Approach speeds indicated conform to NCHRP 350 Report criteria.
7. Use of pallets is optional.

STATE OF CALIFORNIA
DEPARTMENT OF TRANSPORTATION

TEMPORARY CRASH CUSHION, SAND FILLED (UNIDIRECTIONAL)

NO SCALE

RSP T1A DATED JUNE 6, 2008 SUPERSEDES STANDARD PLAN T1A
DATED MAY 1, 2006 - PAGE 211 OF THE STANDARD PLANS BOOK DATED MAY 2006.

REVISED STANDARD PLAN RSP T1A

2006 REVISED STANDARD PLAN RSP T1A

DIST	COUNTY	ROUTE	POST MILES TOTAL PROJECT	SHEET NO.	TOTAL SHEETS
07	LA	14	R52.6/R59.2	42	58

Randell D. Hiatt
REGISTERED CIVIL ENGINEER

June 6, 2008
PLANS APPROVAL DATE

REGISTERED PROFESSIONAL ENGINEER
Randell D. Hiatt
No. C50200
Exp. 6-30-09
CIVIL
STATE OF CALIFORNIA

The State of California or its officers or agents shall not be responsible for the accuracy or completeness of electronic copies of this plan sheet.

To accompany plans dated 6-20-11

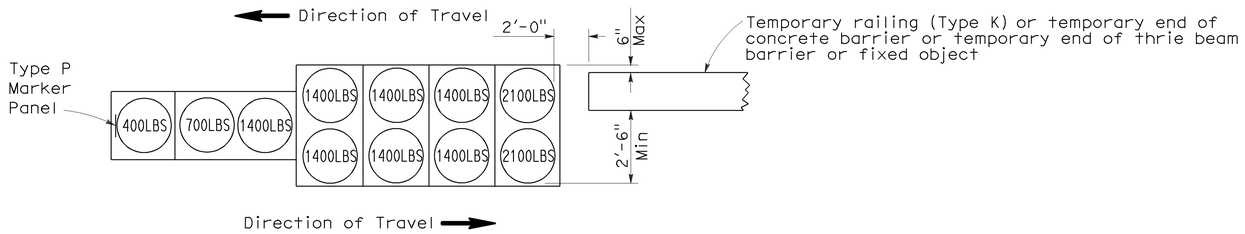

ARRAY 'TB11'

Approach speed less than 45 mph

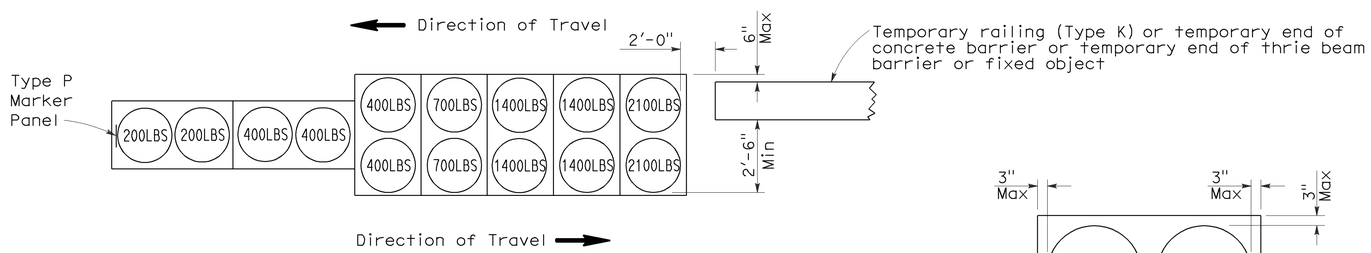

ARRAY 'TB14'

Approach speed 45 mph or more

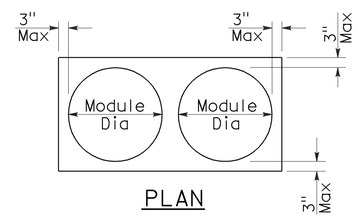

PLAN

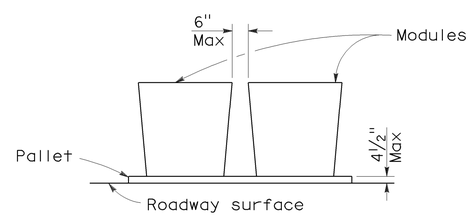

ELEVATION

CRASH CUSHION PALLET DETAIL

See Note 7

NOTES:

1. (XXX) Indicates sand filled module location and weight of sand in pounds for each module. Module spacing is based on the greater diameter of the module.
2. All sand weights are nominal.
3. Temporary crash cushion arrays shall not encroach on the traveled way.
4. Place the Type P marker panel so that the bottom of the panel rests upon the pallet.
5. Refer to Standard Plan A73B for marker details.
6. Approach speeds indicated conform to NCHRP 350 Report criteria.
7. Use of pallets is optional.

STATE OF CALIFORNIA
DEPARTMENT OF TRANSPORTATION

TEMPORARY CRASH CUSHION, SAND FILLED (BIDIRECTIONAL)

NO SCALE

RSP T1B DATED JUNE 6, 2008 SUPERSEDES STANDARD PLAN T1B
DATED MAY 1, 2006 - PAGE 212 OF THE STANDARD PLANS BOOK DATED MAY 2006.

REVISED STANDARD PLAN RSP T1B

2006 REVISED STANDARD PLAN RSP T1B

5-15-08

DIST	COUNTY	ROUTE	POST MILES TOTAL PROJECT	SHEET NO.	TOTAL SHEETS
07	LA	14	R52.6/R59.2	43	58

Randell D. Hiatt
REGISTERED CIVIL ENGINEER

June 6, 2008
PLANS APPROVAL DATE

REGISTERED PROFESSIONAL ENGINEER
Randell D. Hiatt
No. C50200
Exp. 6-30-09
CIVIL
STATE OF CALIFORNIA

The State of California or its officers or agents shall not be responsible for the accuracy or completeness of electronic copies of this plan sheet.

To accompany plans dated 6-20-11

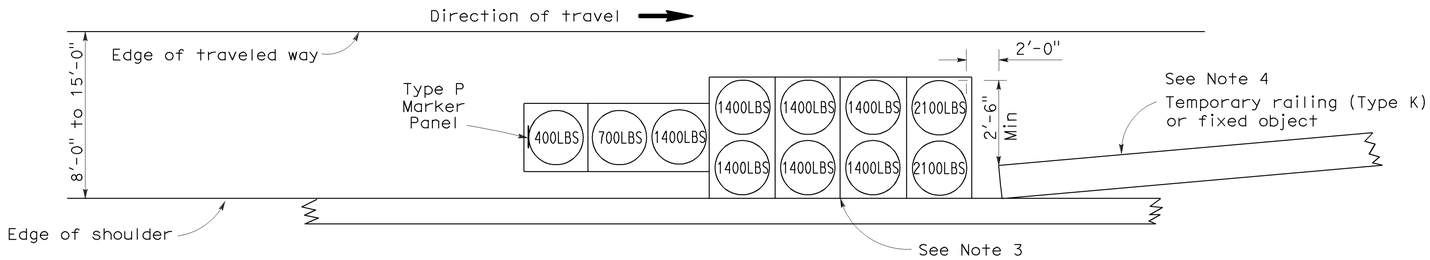

ARRAY 'TS11'

Approach speed less than 45 mph
See Note 9

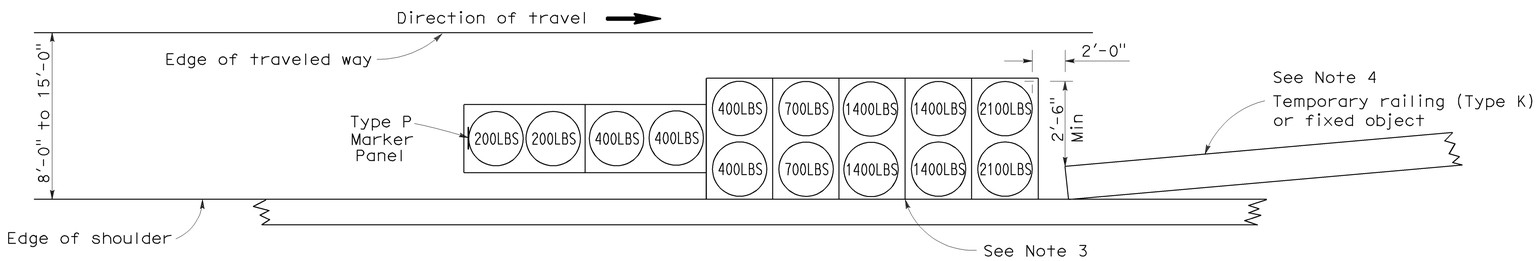

ARRAY 'TS14'

Approach speed 45 mph or more
See Note 9

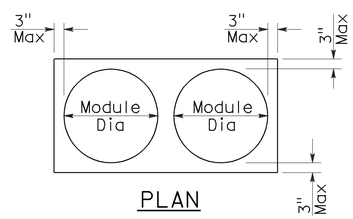

PLAN

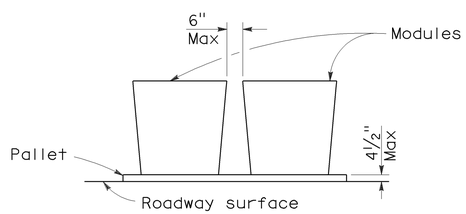

ELEVATION

CRASH CUSHION PALLET DETAIL

See Note 11

NOTES:

1. (XXX) Indicates sand filled module location and weight of sand in pounds for each module. Module spacing is based on the greater diameter of the module.
2. All sand weights are nominal.
3. The temporary crash cushion arrays shown on this plan shall be used only in locations where there will be traffic on one side of the temporary crash cushion array.
4. If the fixed object or approach end of the temporary railing is less than 15'-0" from the edge of traveled way, a temporary crash cushion is required in a construction or work zone.
5. Temporary crash cushion arrays shall not encroach on the traveled way.
6. Arrays for median shoulders shall conform to details shown on this plan for outside shoulders.
7. Place the Type P marker panel so that the bottom of the panel rests upon the pallet and faces traffic.
8. Refer to Standard Plan A73B for marker details.
9. For shoulder widths less than 8'-0", appropriate approved crash cushion protection, other than sand filled modules, shall be provided at fixed objects and at approach ends of temporary railing. The specific type of crash cushion shall be as shown on the project plans or as specified in the Special Provisions, or if not shown on the project plans or specified in the Special Provisions, shall be as approved by the Engineer.
10. Approach speeds indicated conform to NCHRP 350 Report criteria.
11. Use of pallets is optional.

STATE OF CALIFORNIA
DEPARTMENT OF TRANSPORTATION

TEMPORARY CRASH CUSHION, SAND FILLED (SHOULDER INSTALLATIONS)

NO SCALE

RSP T2 DATED JUNE 6, 2008 SUPERSEDES STANDARD PLAN T2
DATED MAY 1, 2006 - PAGE 213 OF THE STANDARD PLANS BOOK DATED MAY 2006.

REVISED STANDARD PLAN RSP T2

2006 REVISED STANDARD PLAN RSP T2

5-15-08

Dist	COUNTY	ROUTE	POST MILES TOTAL PROJECT	SHEET No.	TOTAL SHEETS
07	LA	14	R52.6/R59.2	44	58

Randell D. Hiatt
REGISTERED CIVIL ENGINEER

May 20, 2011
PLANS APPROVAL DATE

REGISTERED PROFESSIONAL ENGINEER
Randell D. Hiatt
No. C50200
Exp. 6-30-11
CIVIL
STATE OF CALIFORNIA

The State of California or its officers or agents shall not be responsible for the accuracy or completeness of electronic copies of this plan sheet.

To accompany plans dated 6-20-11

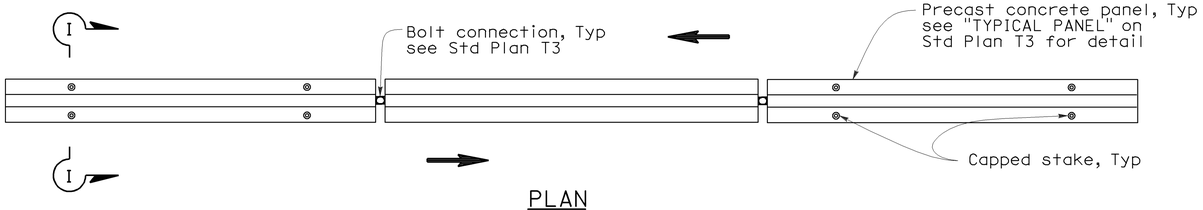

PLAN

RAILING STAKING CONFIGURATION FOR TWO-WAY TRAFFIC

See Note 1

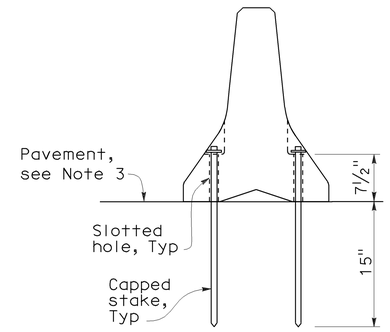

SECTION I-I

NOTES:

1. Where Type K Temporary Railing is placed as a temporary or long term barrier in two-way traffic on highways with less than 24" from the edge of traveled way, use four capped stakes per every other panel with end panels staked.
2. Where Type K Temporary Railing is placed 3" to 24" from the edge of an excavation on highways, use two capped stakes per panel along the traffic side.
3. Staked Type K Temporary Railing must be supported by at least 4" thick concrete, hot mix asphalt or existing asphalt concrete pavement.
4. The minimum yield strength for the washer must be 60,000 psi.
5. Direction of adjacent traffic indicated by ⟹.

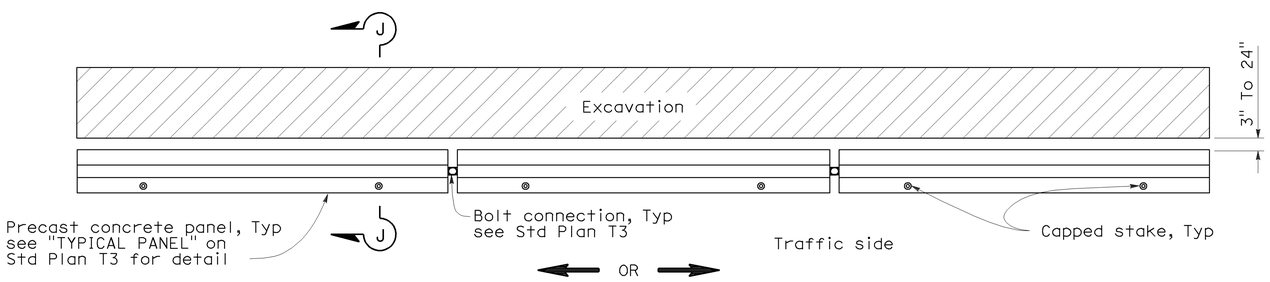

PLAN

RAILING STAKING CONFIGURATION ADJACENT TO AN EXCAVATION

See Note 2

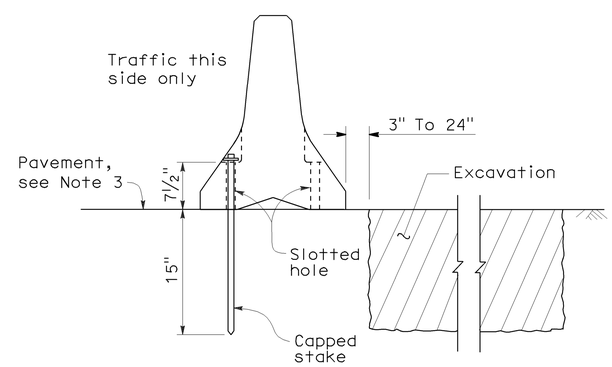

SECTION J-J

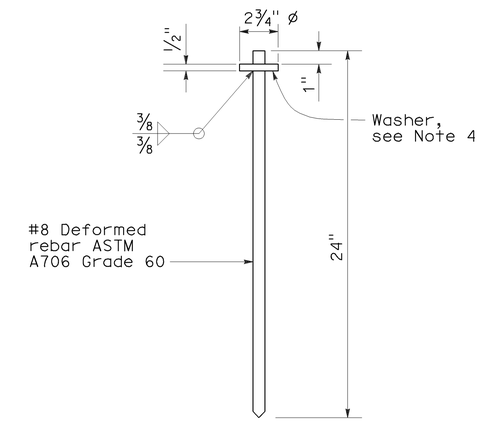

CAPPED STAKE DETAIL

STATE OF CALIFORNIA
DEPARTMENT OF TRANSPORTATION

TEMPORARY RAILING (TYPE K)

NO SCALE

NSP T3A DATED MAY 20, 2011 SUPPLEMENTS
THE STANDARD PLANS BOOK DATED MAY 2006.

NEW STANDARD PLAN NSP T3A

2006 NEW STANDARD PLAN NSP T3A

DIST	COUNTY	ROUTE	POST MILES TOTAL PROJECT	SHEET NO.	TOTAL SHEETS
07	LA	14	R52.6/R59.2	45	58

REGISTERED CIVIL ENGINEER

November 17, 2006
PLANS APPROVAL DATE

REGISTERED PROFESSIONAL ENGINEER
Greg W. Edwards
No. C36386
Exp. 6-30-08
CIVIL
STATE OF CALIFORNIA

The State of California or its officers or agents shall not be responsible for the accuracy or completeness of electronic copies of this plan sheet.

To accompany plans dated 6-20-11

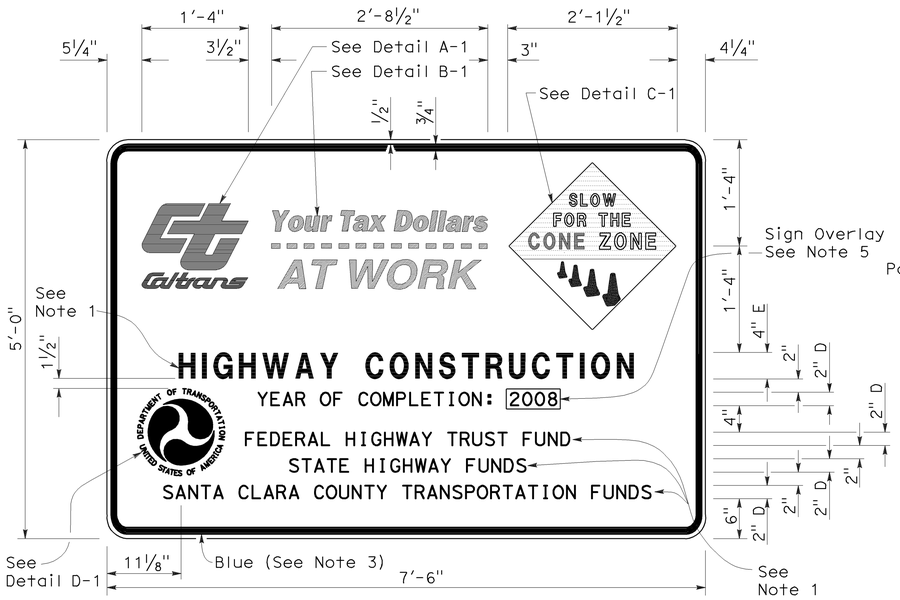

TYPE 1

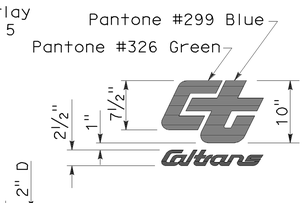

DETAIL A-1

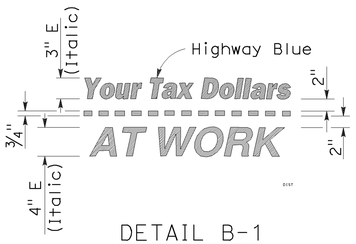

DETAIL B-1
(See Note 3)

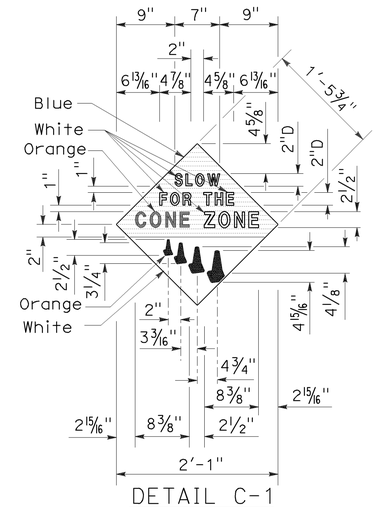

DETAIL C-1
(See Note 4)

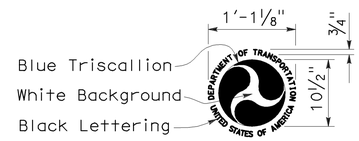

DETAIL D-1
(See Note 6)

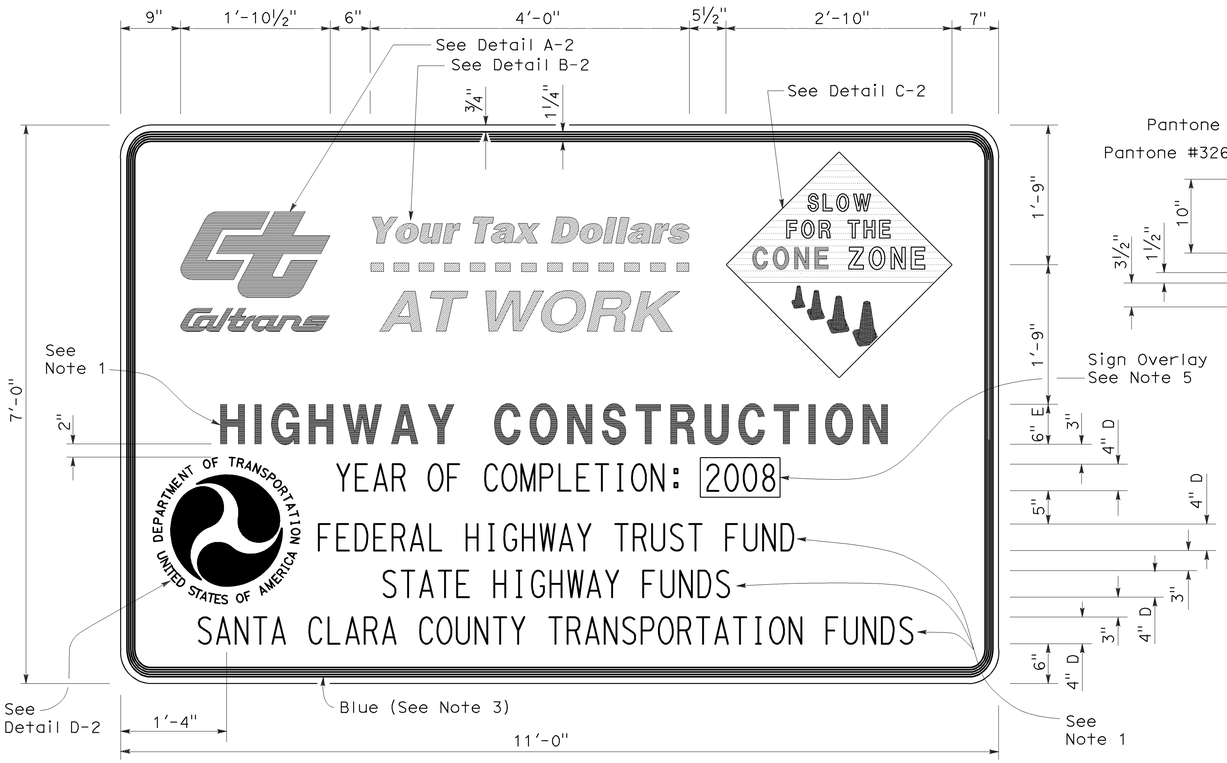

TYPE 2

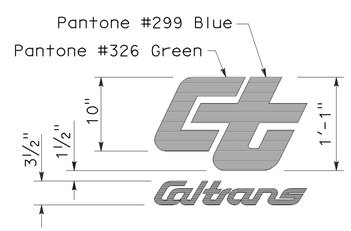

DETAIL A-2

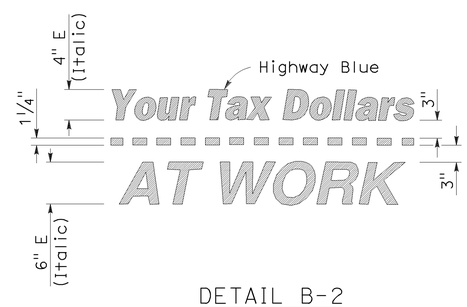

DETAIL B-2
(See Note 3)

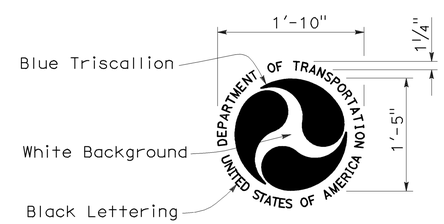

DETAIL D-2
(See Note 6)

NOTES:

1. The sign messages shown for type of project and fund types are examples only. See the Special Provisions for the applicable type of project and fund type messages to be used.
2. Except as otherwise shown, the legend of sign shall be black on a white background (non-reflective).
3. The border of the signs and details "B-1" and "B-2" shall be blue (non-reflective).
4. The diamond in details "C-1" and "C-2" shall be blue for the background of message, " SLOW FOR THE CONE ZONE", and white background for the orange cones. The color and type of font for the "SLOW FOR THE CONE ZONE" message shall be: "SLOW" white D; "FOR THE" white D; "CONE" orange Arial font; "ZONE" white Arial font.
5. Year of completion of project construction shown on the overlay is an example only. See the Special Provisions.
6. Use when the Project involves Federal Highway Trust Fund.

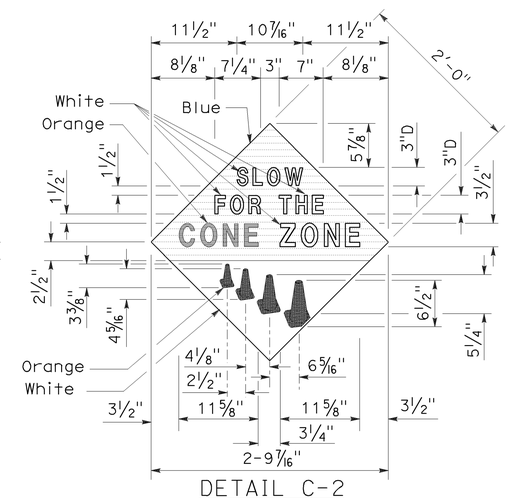

DETAIL C-2
(See Note 4)

STATE OF CALIFORNIA
DEPARTMENT OF TRANSPORTATION

CONSTRUCTION PROJECT FUNDING IDENTIFICATION SIGNS

NO SCALE

RSP T7 DATED NOVEMBER 17, 2006 SUPERSEDES STANDARD PLAN T7 DATED MAY 1, 2006 - PAGE 217 OF THE STANDARD PLANS BOOK DATED MAY 2006.

REVISED STANDARD PLAN RSP T7

2006 REVISED STANDARD PLAN RSP T7

9-7-06

DIST	COUNTY	ROUTE	POST MILES TOTAL PROJECT	SHEET NO.	TOTAL SHEETS
07	LA	14	R52.6/R59.2	46	58

LICENSED LANDSCAPE ARCHITECT

August 15, 2008
PLANS Approval DATE

The State of California or its officers or agents shall not be responsible for the accuracy or completeness of electronic copies of this plan sheet.

LICENSED LANDSCAPE ARCHITECT Robert B. Schott 3635 Signature 11-04-08 Renewal Date 08-11-08 Date STATE OF CALIFORNIA

To accompany plans dated 6-20-11

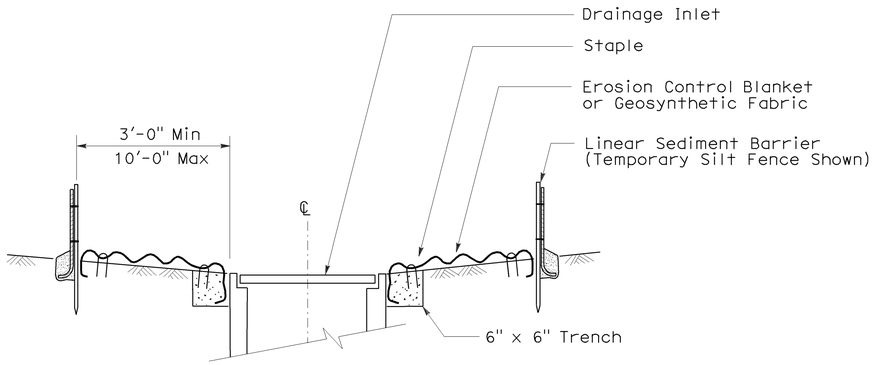

SECTION A-A

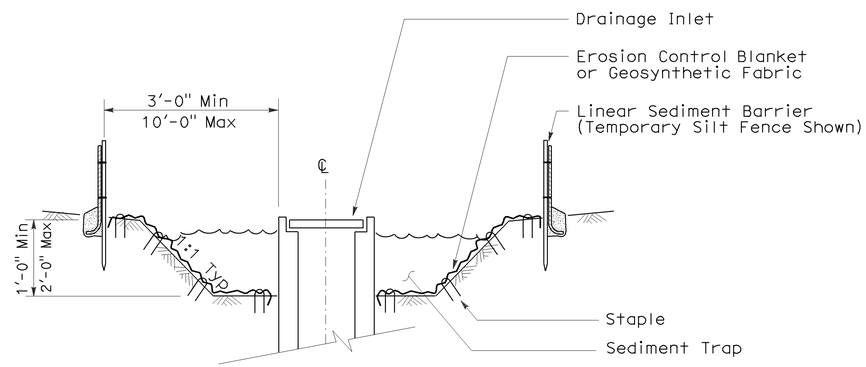

SECTION B-B

NOTES:

1. See Standard Plan T51 for Temporary Silt Fence.
2. Dimensions may vary to fit field conditions.

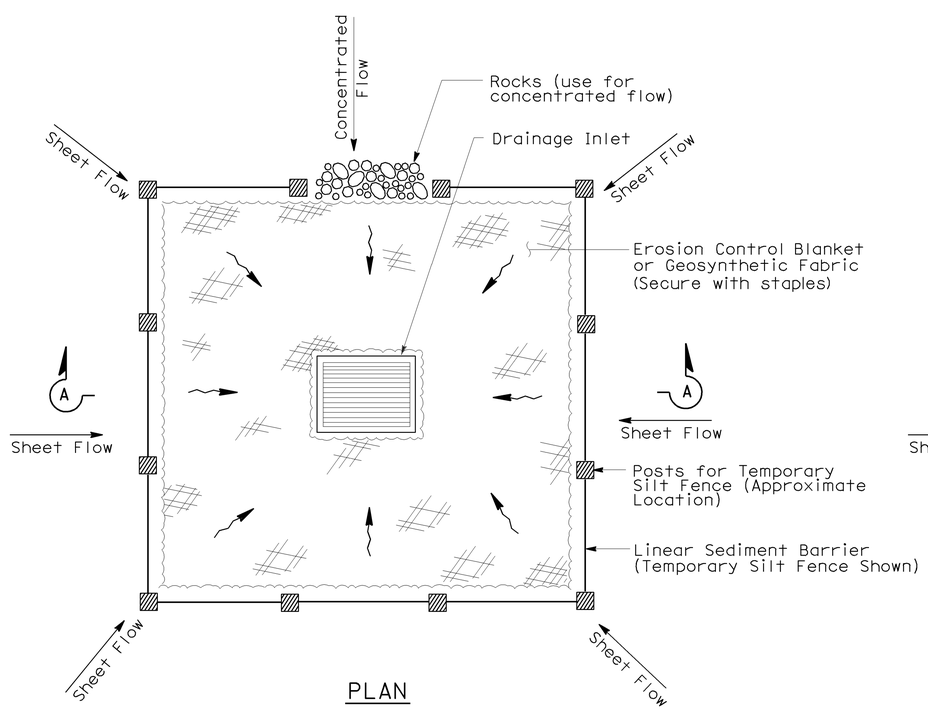

PLAN

TEMPORARY DRAINAGE INLET PROTECTION (TYPE 1)

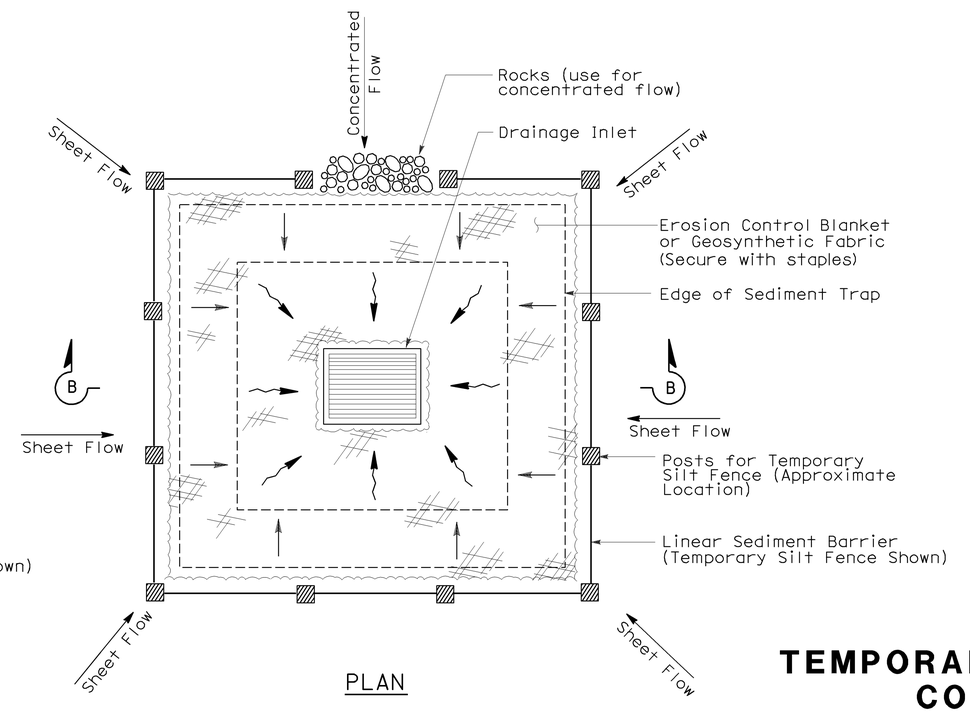

PLAN

TEMPORARY DRAINAGE INLET PROTECTION (TYPE 2) (EXCAVATED SEDIMENT TRAP)

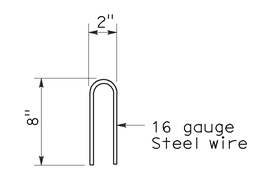

STAPLE DETAIL

STATE OF CALIFORNIA
DEPARTMENT OF TRANSPORTATION

TEMPORARY WATER POLLUTION CONTROL DETAILS (TEMPORARY DRAINAGE INLET PROTECTION)

NO SCALE

Nsp t61 dated august 15, 2008 supplements the standard plans book dated may 2006.

NEW STANDARD PLAN NSP T61

2006 NEW STANDARD PLAN NSP T61

7-11-08

DIST	COUNTY	ROUTE	POST MILES TOTAL PROJECT	SHEET NO.	TOTAL SHEETS
07	LA	14	R52.6/R59.2	47	58

LICENSED LANDSCAPE ARCHITECT

August 15, 2008
PLANS APPROVAL DATE

The State of California or its officers or agents shall not be responsible for the accuracy or completeness of electronic copies of this plan sheet.

LICENSED LANDSCAPE ARCHITECT Robert B. Schott 3635 Signature 11-04-08 Renewal Date 08-11-08 Date STATE OF CALIFORNIA

To accompany plans dated 6-20-11

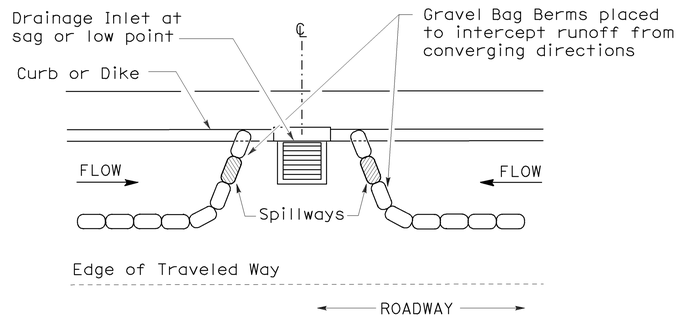

PLAN

CONFIGURATION FOR SAG POINT INLET (GRAVEL BAG BERM)

GRAVEL BAG BERM (TYPE 3A) SPACING TABLE

SLOPE OF ROADWAY (PERCENT)	1 to 3.9	4 to 5.9	6 to 7.9	8 to 10	10+
INTERVAL BETWEEN BERM	100′	75′	50′	25′	12′

For slope of less than 1%, install barriers only if erosion/sediment is prevalent

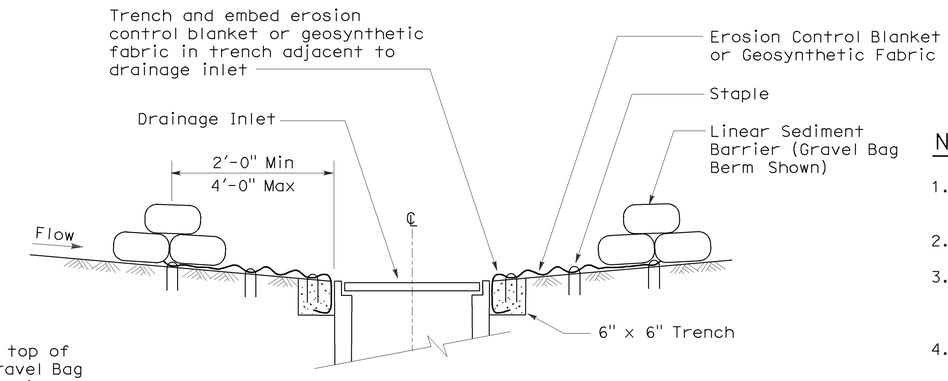

SECTION A-A

NOTES:

1. Place safety cones adjacent to drainage inlet protection.
2. Dimensions may vary to fit field conditions.
3. Install a minimum of 3 gravel bag berms upstream of each drainage inlet to be protected.
4. Position erosion control blanket or geosynthetic fabric at edge of concrete apron and secure in trench.
5. Erosion control blanket or geosynthetic fabric is not required if the area adjacent to the drainage inlet is vegetated or paved.

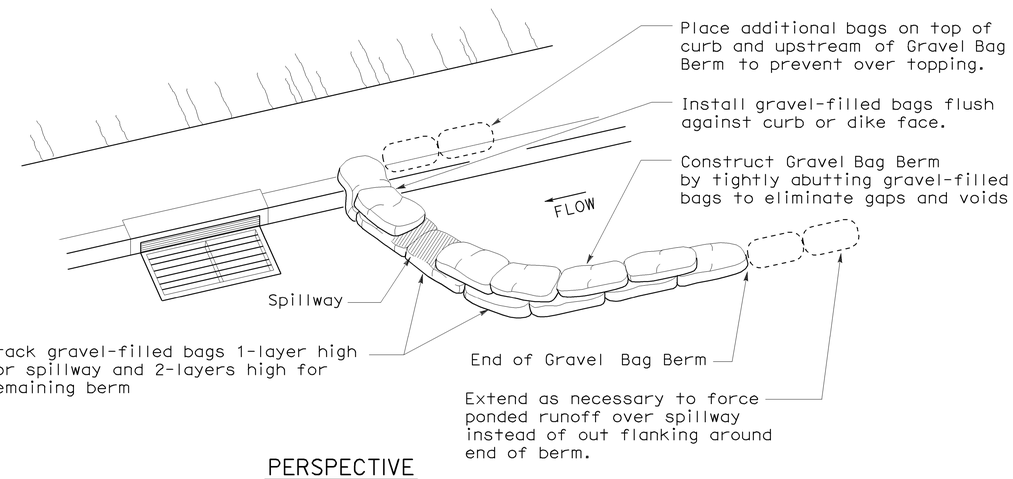

PERSPECTIVE

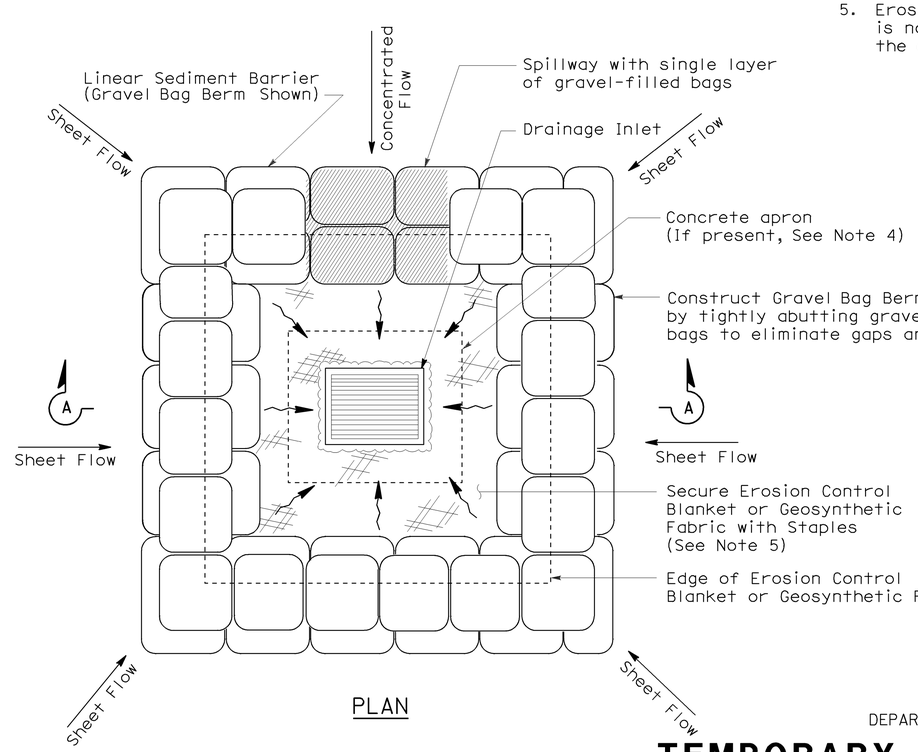

PLAN

TEMPORARY DRAINAGE INLET PROTECTION (TYPE 3B)

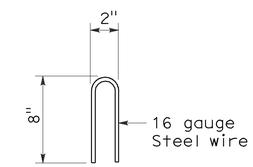

STAPLE DETAIL

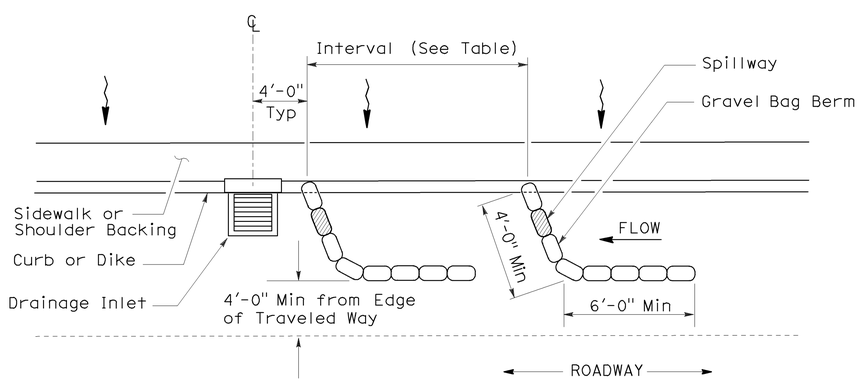

PLAN

TEMPORARY DRAINAGE INLET PROTECTION (TYPE 3A) (GRAVEL BAG BERM)

STATE OF CALIFORNIA
DEPARTMENT OF TRANSPORTATION

TEMPORARY WATER POLLUTION CONTROL DETAILS (TEMPORARY DRAINAGE INLET PROTECTION)

NO SCALE

NSP T62 DATED AUGUST 15, 2008 SUPPLEMENTS THE STANDARD PLANS BOOK DATED MAY 2006.

NEW STANDARD PLAN NSP T62

2006 NEW STANDARD PLAN NSP T62

7-11-08

DIST	COUNTY	ROUTE	POST MILES TOTAL PROJECT	SHEET NO.	TOTAL SHEETS
07	LA	14	R52.6/R59.2	48	58

LICENSED LANDSCAPE ARCHITECT

August 15, 2008
PLANS APPROVAL DATE

The State of California or its officers or agents shall not be responsible for the accuracy or completeness of electronic copies of this plan sheet.

LICENSED LANDSCAPE ARCHITECT — Robert B. Schott — 3835 — Signature — 11-04-08 Renewal Date — 08-11-08 Date — STATE OF CALIFORNIA

To accompany plans dated 6-20-11

FLEXIBLE SEDIMENT BARRIER SPACING TABLE

SLOPE OF ROADWAY (PERCENT)	0 to 0.9	1 to 1.9	2 to 2.9	3 to 4	5+
INTERVAL BETWEEN BARRIERS	50′	35′	30′	25′	20′
ANGLE FROM FACE OF CURB	70°	70°	70°	45°	45°
SUGGESTED BARRIER LENGTH	6′	6′	6′	6′	6′

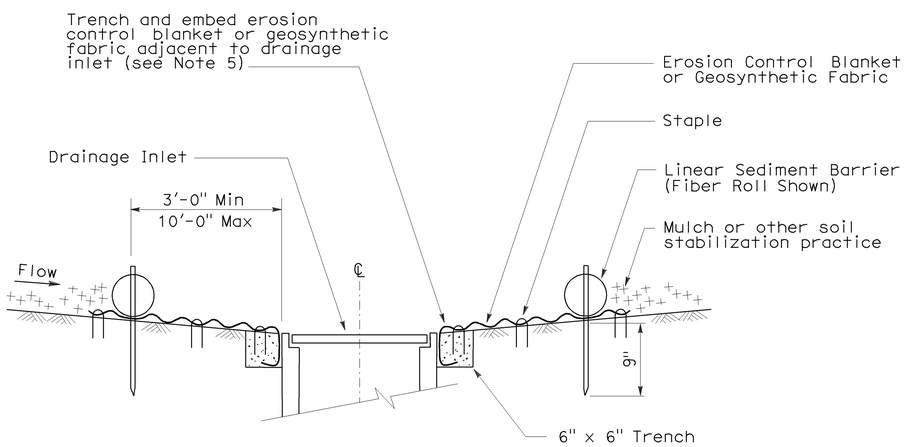

SECTION A-A

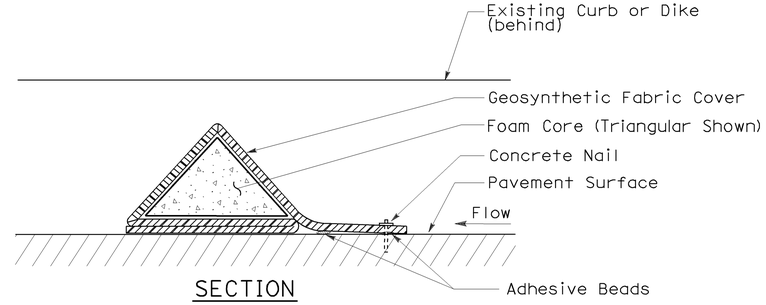

SECTION

FLEXIBLE SEDIMENT BARRIER DETAIL (FOAM BARRIER SHOWN)

NOTES:

1. See Standard Plan T51 for Temporary Silt Fence.
2. Dimensions may vary to fit field conditions.
3. Install a minimum of 3 flexible sediment barriers upstream of each drainage inlet to be protected.
4. Position erosion control blanket or geosynthetic fabric at edge of concrete apron and secure in trench.
5. Erosion control blanket or geosynthetic fabric is not required if the area adjacent to the drainage inlet is vegetated.

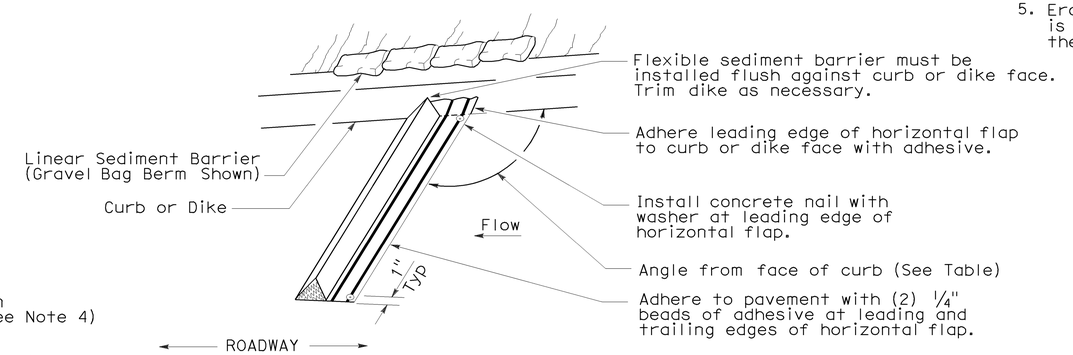

PERSPECTIVE

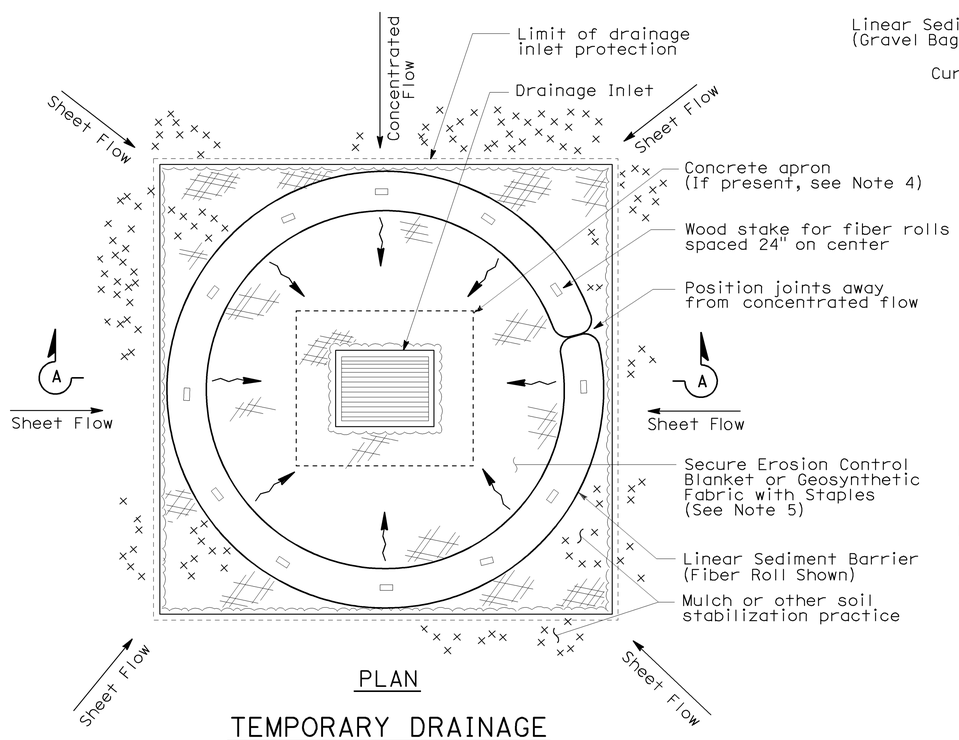

PLAN

TEMPORARY DRAINAGE INLET PROTECTION (TYPE 4A)

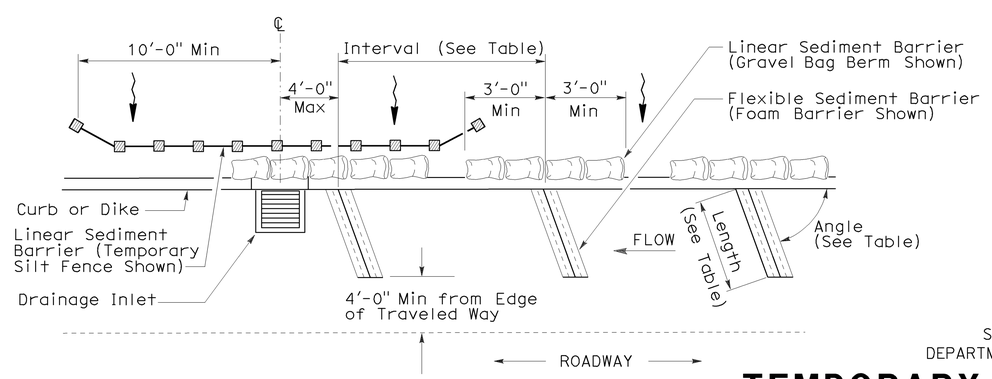

PLAN

TEMPORARY DRAINAGE INLET PROTECTION (TYPE 4B) FLEXIBLE SEDIMENT BARRIER

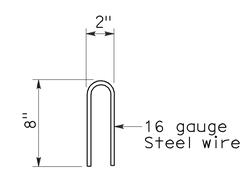

STAPLE DETAIL

STATE OF CALIFORNIA
DEPARTMENT OF TRANSPORTATION

TEMPORARY WATER POLLUTION CONTROL DETAILS (TEMPORARY DRAINAGE INLET PROTECTION)

NO SCALE

NSP T63 DATED AUGUST 15, 2008 SUPPLEMENTS THE STANDARD PLANS BOOK DATED MAY 2006.

NEW STANDARD PLAN NSP T63

2006 NEW STANDARD PLAN NSP T63

7-11-08

DIST	COUNTY	ROUTE	POST MILES TOTAL PROJECT	SHEET NO.	TOTAL SHEETS
07	LA	14	R52.6/R59.2	49	58

LICENSED LANDSCAPE ARCHITECT

August 15, 2008
PLANS APPROVAL DATE

The State of California or its officers or agents shall not be responsible for the accuracy or completeness of electronic copies of this plan sheet.

LICENSED LANDSCAPE ARCHITECT Robert B. Schott 3635 Signature 11-04-08 Renewal Date 08-11-08 Date STATE OF CALIFORNIA

To accompany plans dated 6-20-11

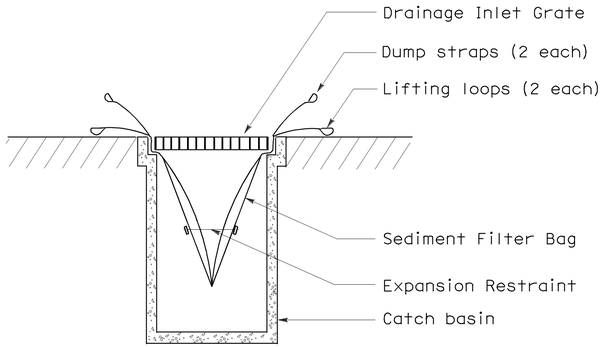

SECTION B-B

SEDIMENT FILTER BAG DETAIL

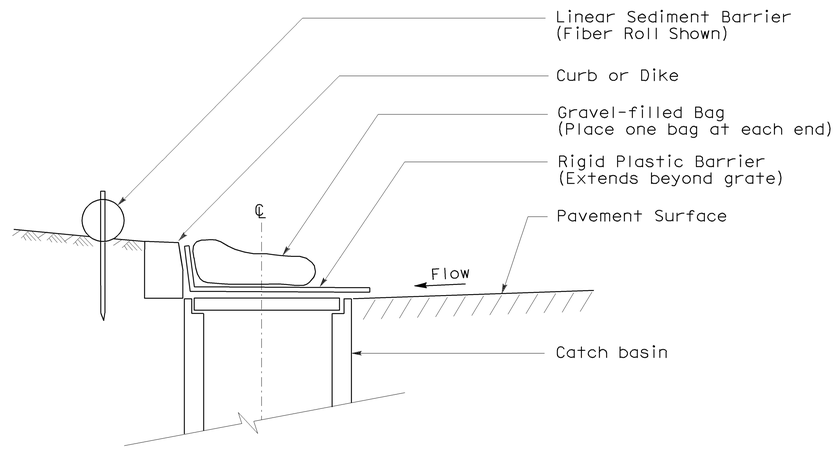

SECTION

TEMPORARY DRAINAGE INLET PROTECTION (TYPE 6A) (CATCH BASIN WITH GRATE)

NOTES:

1. See Standard Plan T51 for Temporary Silt Fence.
2. Dimensions may vary to fit field conditions.

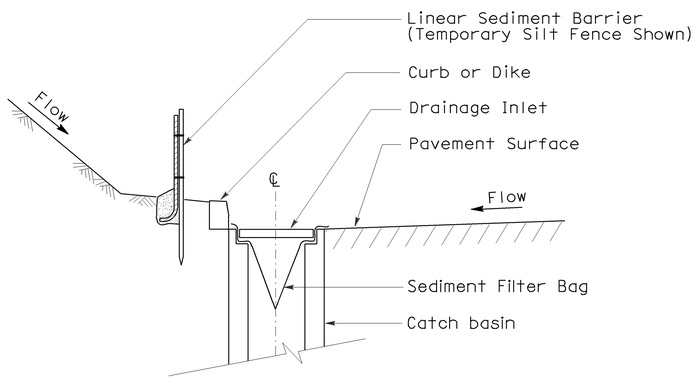

SECTION A-A

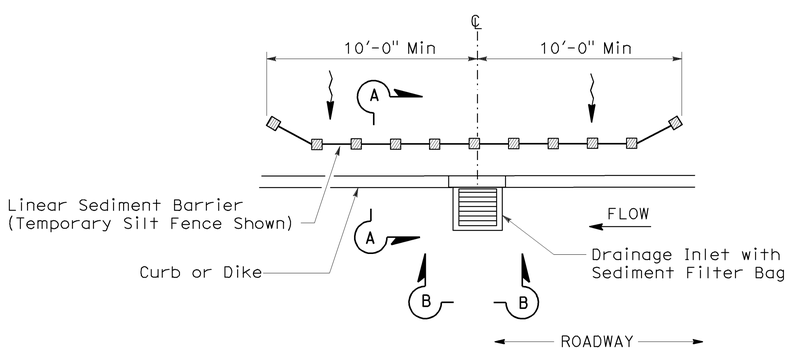

PLAN

TEMPORARY DRAINAGE INLET PROTECTION (TYPE 5) (SEDIMENT FILTER BAG)

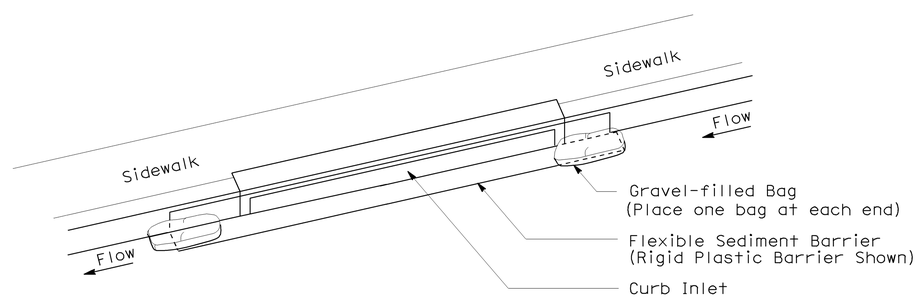

PERSPECTIVE

TEMPORARY DRAINAGE INLET PROTECTION (TYPE 6B) (CURB INLET WITHOUT GRATE)

STATE OF CALIFORNIA
DEPARTMENT OF TRANSPORTATION

TEMPORARY WATER POLLUTION CONTROL DETAILS (TEMPORARY DRAINAGE INLET PROTECTION)

NO SCALE

NSP T64 DATED AUGUST 15, 2008 SUPPLEMENTS THE STANDARD PLANS BOOK DATED MAY 2006.

NEW STANDARD PLAN NSP T64

2006 NEW STANDARD PLAN NSP T64

7-11-08

DIST	COUNTY	ROUTE	POST MILES TOTAL PROJECT	SHEET NO.	TOTAL SHEETS
07	LA	14	R52.6/R59.2	50	58

REGISTERED CIVIL ENGINEER

October 5, 2007
PLANS APPROVAL DATE

REGISTERED PROFESSIONAL ENGINEER Efthymios Delis No. C51434 Exp. 6-30-08 CIVIL STATE OF CALIFORNIA

The State of California or its officers or agents shall not be responsible for the accuracy or completeness of electronic copies of this plan sheet.

To accompany plans dated 6-20-11

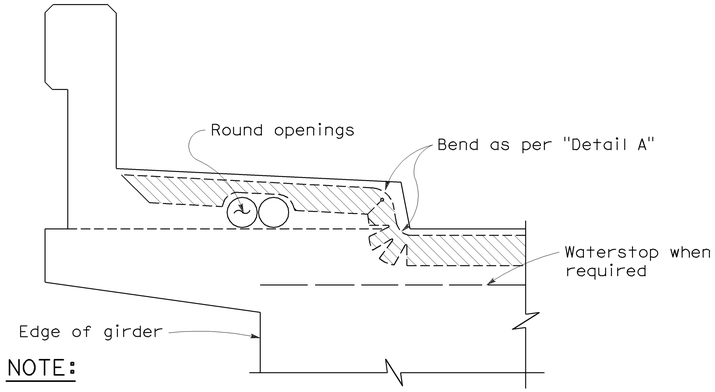

NOTE:

Type "B" seal shown. Type "A" seals to comform to the general path of seal shown, cuts for bending not required. Bend Type "A" seals 3" up into curb or barrier rail on only the low end of the seal.

CONCRETE BARRIER AND SIDEWALK

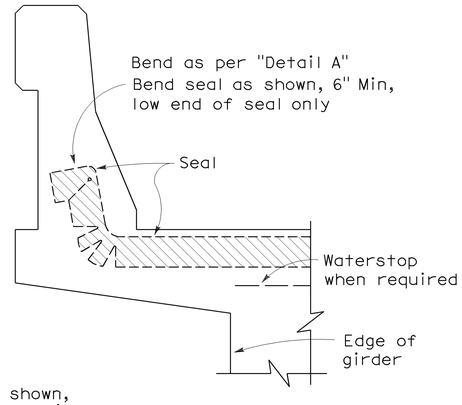

CONCRETE BARRIER

JOINT SEALS DETAILS

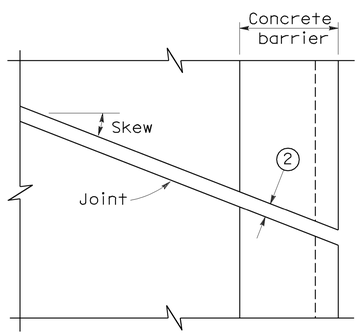

PLAN OF JOINT (SKEW ≤ 20°)

Min ℄ radius to be 4 times uncompressed width of seal or as recommended by the manufacturer, whichever is greater

In lieu of saw cutting, this area may be blocked out and reconstructed to match saw cutting on both sides.

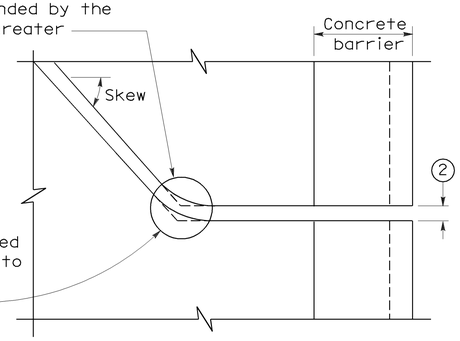

PLAN OF JOINT (SKEW > 20°)

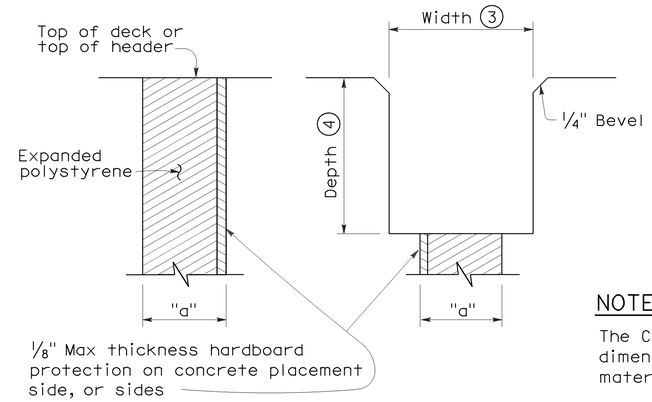

FORMING DETAIL SAWCUT DETAIL

NOTE:

The Contractor shall verify all controlling field dimensions before ordering or fabricatiing any material.

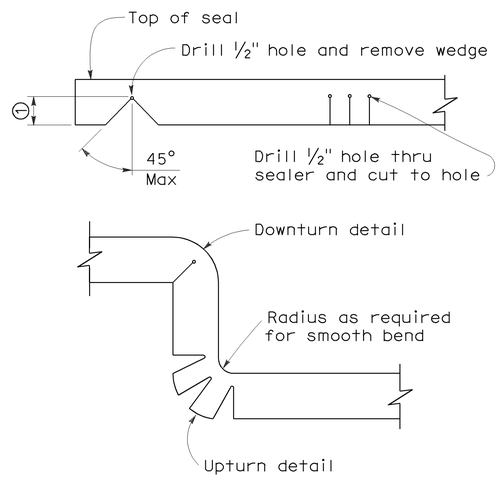

DETAIL A

NOTES:

1. Make smooth cuts from the bottom of seal to 1½" clear of top leaving at least one complete cell between the top of the cut and top of the seal. When necessary cut back of seal to clear conduit and round openings.
2. Opening in barrier to match width of sawn deck joint.
3. Sawcut groove widths shall be as ordered by the Engineer.
4. Depth of sawcut: Type A - Depth to be 2" minimum.
   Type B - Depth to be equal to or greater than the depth of seal measured along the contact surface, when compressed to minimum width position (W_2) plus dimensions shown.
5. MR (movement rating) as shown on other plan sheets.
6. Other depths must be approved by the Engineer.

DIMENSIONS "a" OF JOINT REQUIRED

Movement Rating (MR) 5	Bridge Type	"a" Dimension Deck Concrete Placed		
		Winter	Fall-Spring	Summer
2"	All except CIP/PS	1½"	1¼"	¾"
	CIP/PS	1¼"	1"	½"
1½"	All except CIP/PS	1¼"	1"	½"
	CIP/PS	1"	¾"	½"
1"	All except CIP/PS	1"	¾"	½"
	CIP/PS	¾"	½"	½"
½"	All except CIP/PS	¾"	¾"	½"
	CIP/PS	½"	½"	½"

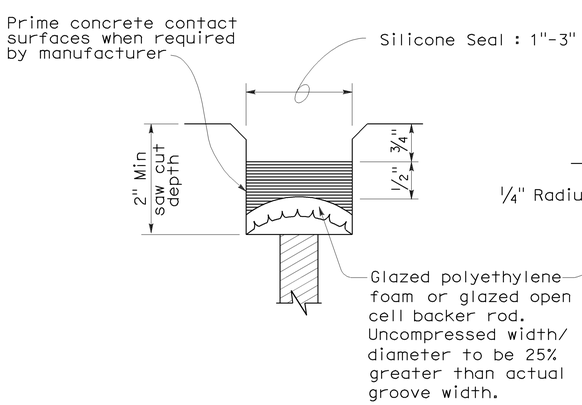

TYPE A SEAL

Movement rating : Silicone = 1" Max

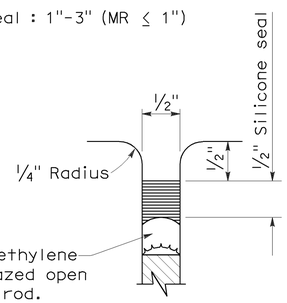

TYPE AL SEAL

Longitudinal joints only

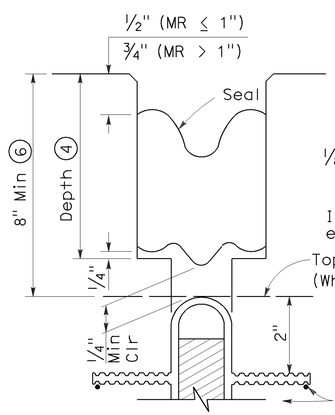

TYPE B JOINT SEAL
IN MINIMUM WIDTH POSITION (W_2)

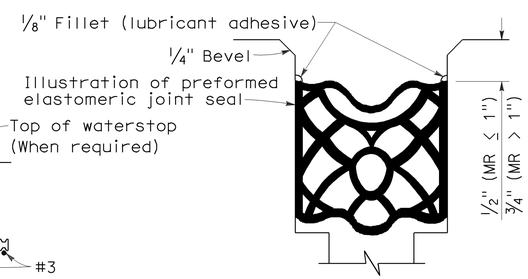

TYPE B SEAL

Movement Rating ≤ 2"

STATE OF CALIFORNIA
DEPARTMENT OF TRANSPORTATION

JOINT SEALS (MAXIMUM MOVEMENT RATING = 2")

NO SCALE

RSP B6-21 DATED OCTOBER 5, 2007 SUPERSEDES STANDARD PLAN B6-21 DATED MAY 1, 2006 - PAGE 258 OF THE STANDARD PLANS BOOK DATED MAY 2006.

REVISED STANDARD PLAN RSP B6-21

2006 REVISED STANDARD PLAN RSP B6-21

5-8-07

DIST	COUNTY	ROUTE	POST MILES TOTAL PROJECT	SHEET NO.	TOTAL SHEETS
07	LA	14	R52.6/R59.2	51	58

REGISTERED ELECTRICAL ENGINEER

October 5, 2007
PLANS APPROVAL DATE

REGISTERED PROFESSIONAL ENGINEER Jeffery G. McRae No. E14512 Exp. 6-30-08 ELECTRICAL STATE OF CALIFORNIA

The State of California or its officers or agents shall not be responsible for the accuracy or completeness of electronic copies of this plan sheet.

To accompany plans dated 6-20-11

ELECTROLIERS

STANDARD TYPES
15, 15D
15 STRUCTURE
21, 21D STRUCTURE
30
31
32
35
36-20A

High mast light pole

Double Arm lighting standard

Existing electrolier

Electrolier foundation (Future installation)

NOTES:

1. Luminaires shall be 310 W HPS when installed on Type 21, 21D, 30, 31, 32, 35 and 36-20A Standards, unless otherwise specified. Luminaires shall be 200 W HPS when installed on other type standards or poles, unless otherwise specified.
2. Luminaires shall be the cutoff type, ANSI Type III medium cutoff lighting distribution, unless otherwise specified.
3. Variations noted adjacent to symbol on project plans.

Electrolier (see project notes or project plans)

Luminaire on wood pole

STANDARD NOTES:

- AB Abandon. If applied to conduit, remove conductors.
- BC Install pull box in existing conduit run.
- BP Pedestrian barricade, type as indicated on plan.
- CB Install conduit into existing pull box.
- CC Connect new and existing conduit. Remove existing conductors and install conductors as indicated.
- CF Conduit to remain for future use. Remove conductors. Install pull wire or rope.
- DH Detector handhole.
- FA Foundation to be abandoned.
- IS Install sign on signal mast arm.
- NS No slip base on standard.
- PEC Photoelectric control.
- PEU Photoelectric unit.
- RC Equipment or material to be removed and become the property of the Contractor.
- RE Remove electrolier, fuses and ballast. Tape ends of conductors.
- RL Relocate equipment.
- RR Remove and reuse equipment.
- RS Remove and salvage equipment.
- SC Splice new to existing conductors.
- SD Service disconnect.
- SF Standard to remain for future use. Remove luminaire, pole conductors, fuses and ballast.
- TSP Telephone service point.

ABBREVIATIONS AND EQUIPMENT DESIGNATIONS

PROPOSED	EXISTING	
BBS	bbs	Battery backup system
BC	bc	Bolt circle
C	C	Conduit
CCTV	cctv	Closed circuit television
CKT	ckt	Circuit
CMS	cms	Changeable message sign
DLC	dlc	Loop detector lead-in cable
EMS	ems	Extinguishable message sign
EVC	evc	Emergency vehicle cable
EVD	evd	Emergency vehicle detector
FB	fb	Flashing beacon
FBCA	fbca	Flashing beacon control assembly
FBS	fbs	Flashing beacon with slip base
FO	fo	Fiber optic
G	G	Ground (Equipment Grounding Conductor)
GFCI	GFCI	Ground fault circuit interrupt
HAR	har	Highway advisory radio
HEX	hex	Hexagonal
HPS	hps	High pressure sodium
IISNS	iisns	Internally illuminated street name sign
ISL	isl	Induction sign lighting
LED	led	Light emitting diode
LMA	lma	Luminaire mast arm
LPS	lps	Low pressure sodium
LTG	ltg	Lighting
LUM	lum	Luminaire
MAT	mat	Mast arm mounting vehicle signal faces, top attachment
MAS	mas	Mast arm mounting vehicle signal faces, side attachment
MAS-4A	mas-4A	Mast arm mounting vehicle signal faces, side attachment - 4 signal section
MAS-4B	mas-4B	
MAS-4C	mas-4C	
MAS-5A	mas-5A	Mast arm mounting vehicle signal faces, side attachment - 5 signal section
MAS-5B	mas-5B	
MC	mc	Mercury contactor
M/M	m/m	Multiple to multiple transformer
MT	mt	Conduit with pull wire or rope only
MTG	mtg	Mounting
	mv	Mercury vapor lighting fixture
N	N	Neutral (Grounded Conductor)
NC	NC	Normally closed
NO	NO	Normally open
PB	pb	Pull box
PEC	pec	Photoelectric control (Type I, II, III, IV or V as shown)
PED	ped	Pedestrian
PEU	peu	Photoelectric unit
PPB	ppb	Pedestrian push button
RL		Relocated equipment
RM	rm	Ramp metering
SB	sb	Slip base
SIC	sic	Signal interconnect cable
SIG	sig	Signal
SMA	sma	Signal mast arm
SNS	sns	Street name sign
SP	sp	Service point
TDC	tdc	Telephone demarcation cabinet
TMS	tms	Traffic monitoring station
TOS	tos	Traffic Operations System
VEH	veh	Vehicle
XFMR	xfmr	Transformer
COMM	comm	Communication
RWIS	rwis	Roadway weather information system

SOFFIT AND WALL MOUNTED LUMINAIRES

Pendant, 70 W HPS unless otherwise specified.

Flush, 70 W HPS unless otherwise specified.

Wall surface, 70 W HPS unless otherwise specified.

Existing soffit or wall luminaire to remain unmodified.

Existing soffit or wall luminaire to be modified as specified.

NOTE:

Arrow indicates "street side" of luminaire.

STATE OF CALIFORNIA
DEPARTMENT OF TRANSPORTATION

ELECTRICAL SYSTEMS (SYMBOLS AND ABBREVIATIONS)

NO SCALE

RSP ES-1A DATED OCTOBER 5, 2007 SUPERSEDES STANDARD PLAN ES-1A DATED MAY 1, 2006 - PAGE 400 OF THE STANDARD PLANS BOOK DATED MAY 2006.

REVISED STANDARD PLAN RSP ES-1A

2006 REVISED STANDARD PLAN RSP ES-1A

DIST	COUNTY	ROUTE	POST MILES TOTAL PROJECT	SHEET NO.	TOTAL SHEETS
07	LA	14	R52.6/R59.2	52	58

REGISTERED ELECTRICAL ENGINEER

October 5, 2007
PLANS APPROVAL DATE

REGISTERED PROFESSIONAL ENGINEER Jeffery G. McRae No. E14512 Exp. 6-30-08 ELECTRICAL STATE OF CALIFORNIA

The State of California or its officers or agents shall not be responsible for the accuracy or completeness of electronic copies of this plan sheet.

To accompany plans dated 6-20-11

CONDUIT

PROPOSED	EXISTING	
		Lighting Conduit, unless otherwise indicated or noted
		Traffic signal conduit
C	c	Communication conduit
T	t	Telephone conduit
F	f	Fire alarm conduit
FO	fo	Fiber optic conduit
		Conduit termination (RSP ES-9A C)
R	r	Conduit riser in/on structure or service pole

SERVICE EQUIPMENT

PROPOSED	EXISTING	
OH	oh	Overhead lines
U	U	Wood pole "U" indicates utility owned
		Pole guy with anchor
		Utility transformer - ground mounted
III		Service equipment enclosure type
		Service equipment enclosure door indicates front of enclosure
T	t	Telephone demarcation cabinet

POLE-MOUNTED SERVICE DESIGNATION

Type of installation

TYPE H SERVICE - 28'-10" ← Pole height above grade

ILLUMINATED OVERHEAD SIGN

PROPOSED	EXISTING	
		Overhead sign - Single post
		Overhead sign - Two post
		Overhead sign - Mounted on structure
		Overhead sign with electrolier

SIGNAL EQUIPMENT

PROPOSED	EXISTING	
		Pedestrian signal face
		Pedestrian push button post
		Pedestrian barricade
		Vehicle signal face (with backplate, 3-Section: red, yellow and green)
		Vehicle signal face with angle visors
PV	PV	Modifications of basic symbols: "L" indicates all non-arrow sections louvered; "LG" indicates louvered green section only; "PV" indicates 12" programmed visibility sections; "8" indicates all 8" sections (only when specified)
		Type 15TS and Vehicle signal face
		Vehicle signal face with red, yellow and green left arrow sections
		Vehicle signal face with red and yellow sections and up green arrow
		Vehicle signal face (5 Section) with red, yellow and green sections and yellow and green right arrows
		Type 1 Standard and attached vehicle signal faces
		Standard with signal mast arm only and attached vehicle signal faces and internally illuminated street name sign
		Type 33 Standard, Left-turn vehicle signal face and sign
		Standard with luminaire and signal mast arms and attached vehicle signal faces
		Cantilever flashing beacon Type 9 Frame, with a sign unless otherwise specified or indicated
		Type 15-FBS Standard with two vehicle signal face sections with lens, backplate and visor with a sign
R	Y	Flashing beacon. One vehicle signal face section with lens, backplate and visor. "R" indicates red indication, "Y" indicates yellow indication
		Controller assembly. Door indicates front of cabinet

SIGNAL EQUIPMENT Cont

PROPOSED	EXISTING	
		Guard post
		Type 1 Standard with "Meter On" sign
		Emergency Vehicle detector

NOTES:

1. All signal sections shall be 12" unless shown otherwise.
2. Signal heads shall be provided with backplates unless shown otherwise.
3. Signal indication shall be LED.

STATE OF CALIFORNIA
DEPARTMENT OF TRANSPORTATION

ELECTRICAL SYSTEMS (SYMBOLS AND ABBREVIATIONS)

NO SCALE

RSP ES-1B DATED OCTOBER 5, 2007 SUPERCEDES STANDARD PLAN ES-1B DATED MAY 1, 2006 - PAGE 401 OF THE STANDARD PLANS BOOK DATED MAY 2006.

REVISED STANDARD PLAN RSP ES-1B

2006 REVISED STANDARD PLAN RSP ES-1B

7-10-07

DIST	COUNTY	ROUTE	POST MILES TOTAL PROJECT	SHEET NO.	TOTAL SHEETS
07	LA	14	R52.6/R59.2	53	58

REGISTERED ELECTRICAL ENGINEER

October 5, 2007
PLANS APPROVAL DATE

REGISTERED PROFESSIONAL ENGINEER Jeffery G. McRae No. E14512 Exp. 6-30-08 ELECTRICAL STATE OF CALIFORNIA

The State of California or its officers or agents shall not be responsible for the accuracy or completeness of electronic copies of this plan sheet.

To accompany plans dated 6-20-11

EQUIPMENT IDENTIFICATION

ILLUMINATED SIGN IDENTIFICATION NUMBER:

Sign No. 12345

10 ISL SCI 1.0

- Sign number - Place on post or structure
- Transformer rating (kVA)
- Lighting control type
- Number and type of fixtures

Do NOT place on standard or structure

ELECTROLIER OR EQUIPMENT IDENTIFICATION NUMBER:

12345 - 15'-0"

- Mast arm length, if shown. Do not place on standard or structure.
- Equipment number - Place on standard or structure. Existing equipment numbers are shown in parenthesis

CONDUIT AND CONDUCTOR IDENTIFICATION:

1½"C, 2#10, 15#14, 2 DLC

- Number and size of conductors and cables
- Size of conduit in inches

Ø1, Ø2, Ø2P, etc.	Traffic phase identification for signal faces, detectors and phase diagrams
1 2 3	Project note numbers
A B C	Equipment description, installation or item numbers
1 2 3	Conduit run numbers

SIGNAL AND LIGHTING STANDARD (TYPICAL DESIGNATION):

19A - 3 - 100

- Wind velocity = 100 mph
- Case 3 arm loading
- Standard type
- Standard Plan sheet number
- Detail number or letter

MISCELLANEOUS EQUIPMENT

PROPOSED	EXISTING	
CMS	cms	Changeable message sign
		Closed circuit television camera
		Highway advisory radio pole and antenna
EMS	ems	Extinguishable message sign
M V	m v	Detection device M = Microwave sensor V = Video image sensor

WIRING DIAGRAM LEGEND

P	Pole
CB	Circuit breaker
A	Ampere
V	Volt
M	Metered
UM	Unmetered
NB	Neutral bus
GB	Ground bus
G	Equipment grounding conductor
N	Grounded conductor (Neutral)

- External conductor
- Conductor or bus
- Tie point
- Contactor coil
- Contactor, Contact NO
- Terminal blocks
- Contactor, Contact NC
- Enclosure bond
- Grounding electrode
- Circuit breaker
- Receptacle

PULL BOXES

PROPOSED EXISTING

Pull box-No. 5 unless otherwise indicated or noted.

3 9A(21)

Pull box-Additional designations or descriptions

3 = No. 3½ pull box
5 = No. 5 pull box
6 = No. 6 pull box
7 = No. 7 (Ceiling pull box)
8 = No. 8 (Pendant soffit pull box)
9 = No. 9 pull box
9A = No. 9A pull box

(C) = Communications pull box
(E) = Pull box with extension
(S) = Sprinkler control pull box
(21) = Anchor bolts and conduit for future installation of Type 21 Standard
(T) = Traffic pull box

VEHICLE DETECTORS

5 J 9 U

- U = Upper
- L = Lower
- Slot number in input file
- Input file (I or J)
- Phase

PROPOSED	EXISTING	
		Type A detector loop. Outline of sawcut shown.
		Type B detector loop. Outline of sawcut shown.
		Type C detector loop. Outline of sawcut shown.
		Type D detector loop. Outline of sawcut shown.
		Type E detector loop. Outline of sawcut shown.
		Type Q detector loop. Outline of sawcut shown.
		Magnetic detector
DH	dh	Detector handhole
		Microwave or video detection zone

STATE OF CALIFORNIA
DEPARTMENT OF TRANSPORTATION

ELECTRICAL SYSTEMS (SYMBOLS AND ABBREVIATIONS)

NO SCALE

RSP ES-1C DATED OCTOBER 5, 2007 SUPERCEDES STANDARD PLAN ES-1C DATED MAY 1, 2006 - PAGE 402 OF THE STANDARD PLANS BOOK DATED MAY 2006.

REVISED STANDARD PLAN RSP ES-1C

2006 REVISED STANDARD PLAN RSP ES-1C

DIST	COUNTY	ROUTE	POST MILES TOTAL PROJECT	SHEET NO.	TOTAL SHEETS
07	LA	14	R52.6/R59.2	54	58

REGISTERED ELECTRICAL ENGINEER

October 5, 2007
PLANS APPROVAL DATE

REGISTERED PROFESSIONAL ENGINEER Jeffery G. McRae No. E14512 Exp. 6-30-08 ELECTRICAL STATE OF CALIFORNIA

The State of California or its officers or agents shall not be responsible for the accuracy or completeness of electronic copies of this plan sheet.

To accompany plans dated 6-20-11

2006 REVISED STANDARD PLAN RSP ES-5A

LOOP INSTALLATION PROCEDURE

1. Loops shall be centered in lanes.
2. Saw slots in pavement for loop conductors as shown in details.
3. Distance between side of loop and a lead-in saw cut from adjacent detectors shall be 2'-0" minimum. Distance between lead-in saw cuts shall be 6" minimum.
4. Bottom of saw slot shall be smooth with no sharp edges.
5. Slots shall be washed until clean, blown out and thoroughly dried before installing loop conductors.
6. Adjacent loops on the same sensor unit channel shall be wound in opposite directions.
7. Identify and tag loop circuit pairs in the pull box with loop number, start (S) and finish (F) of conductor. Identify and tag lead-in-cable with sensor number and phase.
8. Install loop conductor in slot using a 3/16" to 1/4" thick wood paddle. Hold loop conductors with wood paddles (at the bottom of the sawed slot) during sealant placement.
9. No more than 2 twisted pairs shall be installed in one sawed slot.
10. Allow additional 5'-0" of slack length of conductor for the lead-in run to pull box.
11. The additional length of each conductor for each loop shall be twisted together into a pair (6 turns per 3'-4" minimum) before being placed in the slot and conduit leading to pull box.
12. Test each loop circuit for continuity, circuit resistance and insulation resistance at the pull box before filling slots.
13. Fill slots as shown in details.
14. Splice loop conductors to lead-in-cable. Splices shall be soldered.
15. End of lead-in-cable and Type 2 loop conductor shall be waterproofed prior to installing in conduit to prevent moisture from entering the cable.
16. Lead-in-cable shall not be spliced between the pull box and the controller cabinet terminals.
17. Test each loop circuit for continuity, circuit resistance and insulation resistance at the controller cabinet location.
18. Where loop conductors are not to be spliced to a lead-in-cable, the ends of the conductors shall be taped and waterproofed with electrical insulating coating.

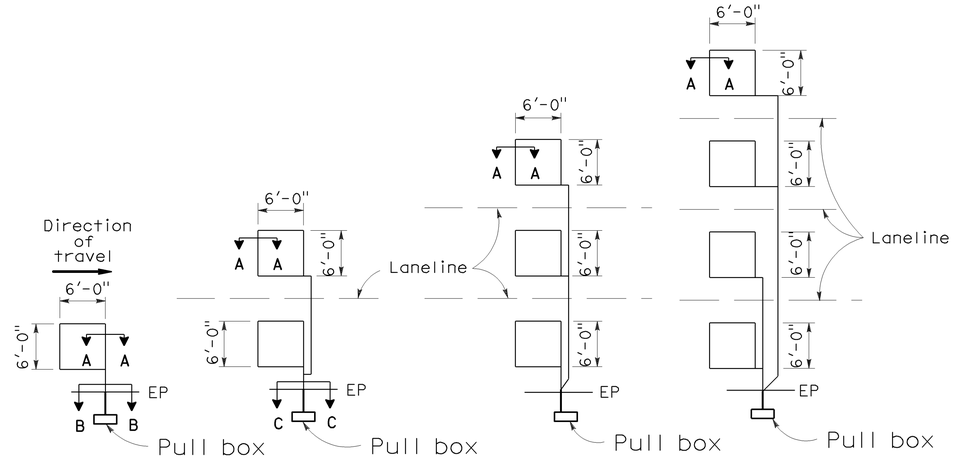

TYPE 1A INSTALLATION | TYPE 2A INSTALLATION | TYPE 3A INSTALLATION | TYPE 4A INSTALLATION

SAWCUT DETAILS

(Type A loop detector configurations illustrated)

1. 1A thru 4A = 1 Type A loop configuration in each lane.
2. 1B thru 4B = 1 Type B loop configuration in each lane.
3. 1C = 1 Type C loop configuration entering lanes as required.
4. 1D thru 4D = 1 Type D loop configuration in each lane.
5. 1E thru 4E = 1 Type E loop configuration in each lane.
6. 1Q thru 4Q = 1 Type Q loop configuration in each lane. (Use Type A, B, C, D, E or Q loop detector configurations only when specified or shown on plans)

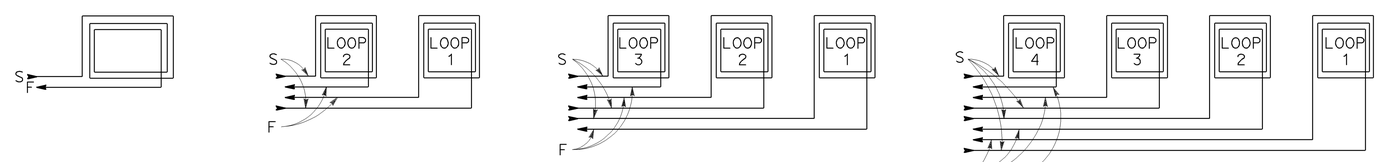

WINDING DETAILS

See Notes 6 and 7

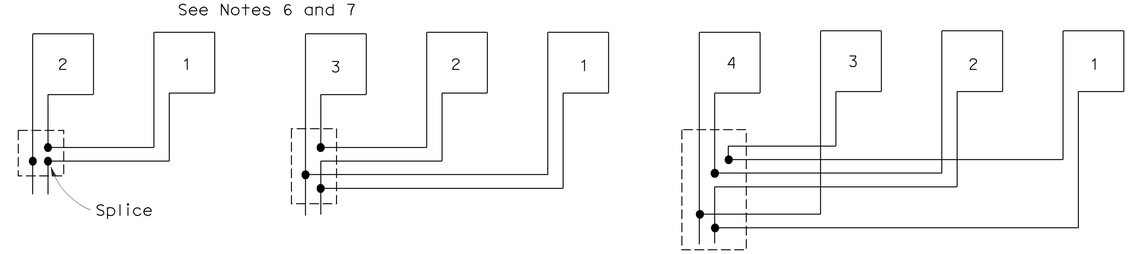

TYPICAL LOOP CONNECTIONS

(Dashed lines represent the pull box)

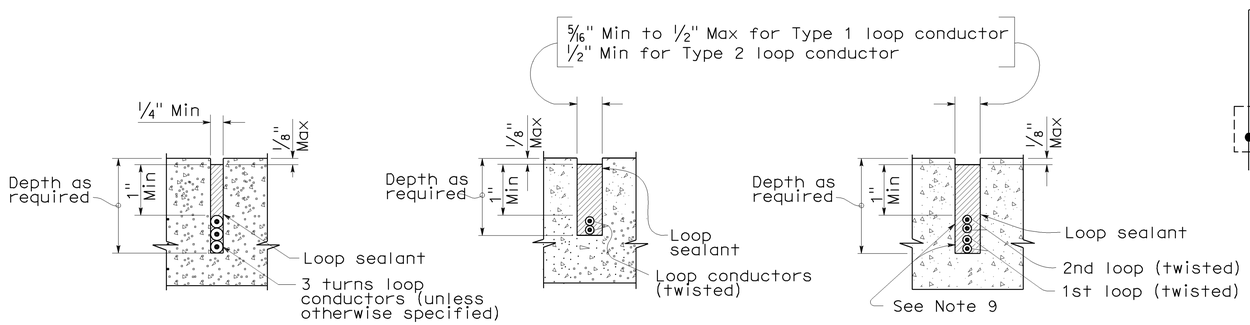

SECTION A-A | SECTION B-B | SECTION C-C

SLOT DETAILS - TYPE 1 AND TYPE 2 LOOP CONDUCTOR

STATE OF CALIFORNIA
DEPARTMENT OF TRANSPORTATION

ELECTRICAL SYSTEMS (DETECTORS)

NO SCALE

RSP ES-5A DATED OCTOBER 5, 2007 SUPERCEDES STANDARD PLAN ES-5A DATED MAY 1, 2006 - PAGE 423 OF THE STANDARD PLANS BOOK DATED MAY 2006.

REVISED STANDARD PLAN RSP ES-5A

DIST	COUNTY	ROUTE	POST MILES TOTAL PROJECT	SHEET No.	TOTAL SHEETS
07	LA	14	R52.6 / R59.2	55	58

REGISTERED CIVIL ENGINEER 03-09-11 DATE

6-20-11
PLANS APPROVAL DATE

REGISTERED PROFESSIONAL ENGINEER RUI WANG No. C 52910 Exp. 12-31-12 CIVIL STATE OF CALIFORNIA

The State of California or its officers or agents shall not be responsible for the accuracy or completeness of electronic copies of this plan sheet.

NOTES:

1. For details not shown, see RSP B6-21
2. Limits of year 2006 HOV project.

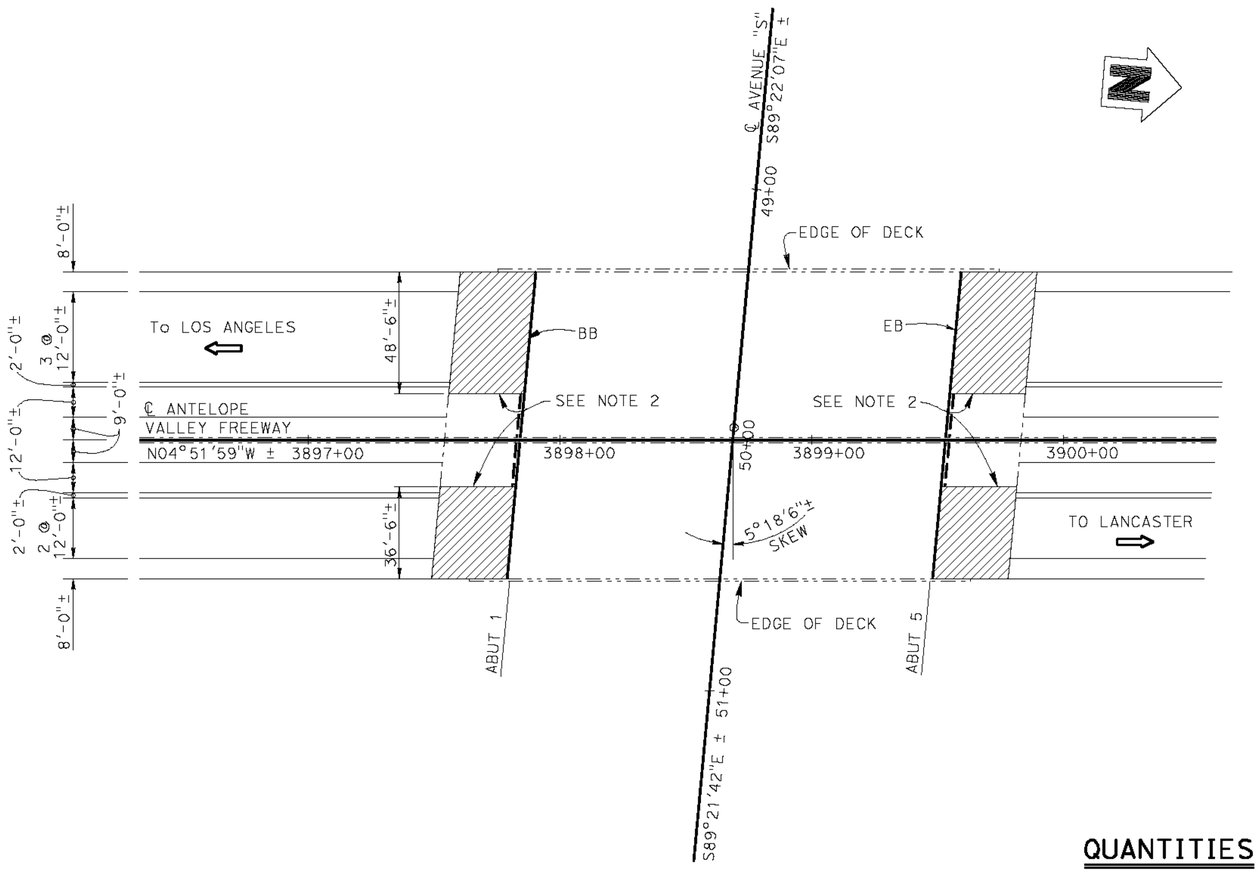

Br No. 53-1417R/L, PM= R58.17

AVENUE "S" UNDERCROSSING

1" = 30'

STANDARD PLANS DATED MAY 2006

A10A	ACRONYMS AND ABBREVIATIONS (A-L)
A10B	ACRONYMS AND ABBREVIATIONS (M-Z)
RSP B6-21	JOINT SEALS (MAXIMUM MOVEMENT RATING = 2")
RSP P-10	CONCRETE PAVEMENT - BAR DETAILS

STANDARD PLAN SHEET NO.

DETAIL NO.

INDEX TO PLANS

NO.	SHEET NAME
1.	GENERAL PLAN NO. 1
2.	GENERAL PLAN NO. 2
9.	JOINT SEAL DETAILS
10.	STRUCTURE APPROACH TYPE R(30D)

LEGEND

—·—·—	Indicates Existing Structure
———	Indicates limits of install new joint seal. Repair joint spalls prior to placement of new joint seal. For details see "JOINT SEAL DETAILS" sheet.
▨	Indicates limits of removal of existing Section and Installation of new Structure Approach Slab Type R(30D). For details, see "STRUCTURE APPROACH TYPE R(30D)" sheet.
⇨	Indicates Direction of Traffic
— — —	Indicates limits of Clean Expansion Joint prior to installing new joint seal.

QUANTITIES

REMOVE UNSOUND CONCRETE	2 CF
AGGREGATE BASE (APPROACH SLAB)	19 CY
STRUCTURAL CONCRETE, APPROACH SLAB (TYPE R)	189 CY
PAVING NOTCH EXTENSION	127 CF
CLEAN EXPANSION JOINT	74 LF
RAPID SETTING CONCRETE (PATCH)	2 CF
JOINT SEAL (MR 1½")	250 LF

NOTE:

THE CONTRACTOR SHALL VERIFY ALL CONTROLLING FIELD DIMENSIONS BEFORE ORDERING OR FABRICATING ANY MATERIAL.

PAUL CHUNG
DESIGN ENGINEER

	BY	CHECKED		BY	CHECKED
DESIGN	RUI WANG	CESAR SANCHEZ			
DETAILS	HENGAMEH MAHBOOBI	RUI WANG	LAYOUT	RUI WANG	CESAR SANCHEZ
QUANTITIES	RUI WANG	CESAR SANCHEZ	SPECIFICATIONS	DAVE KLEIN	PLANS AND SPECS COMPARED DAVE KLEIN

ORIGINAL SCALE IN INCHES FOR REDUCED PLANS 0 1 2 3

STATE OF CALIFORNIA
DEPARTMENT OF TRANSPORTATION

DIVISION OF ENGINEERING SERVICES
STRUCTURE DESIGN
DESIGN BRANCH 19

BRIDGE NO. 53-1417R/L
POST MILE R58.17

ROUTE 14 BRIDGES
GENERAL PLAN NO. 1

UNIT: 3621
PROJECT NUMBER & PHASE: 0700000464 1 CONTRACT NO.: 07-254901

DISREGARD PRINTS BEARING EARLIER REVISION DATES

REVISION DATES			SHEET	OF
12-30-10	06-09-11	03-09-11	1	4

FILE => 01_EA 07-254901-a-gp.dgn

USERNAME => s120514 DATE PLOTTED => 09-JUN-2011 TIME PLOTTED => 09:11

STRUCTURES DESIGN GENERAL PLAN SHEET (ENGLISH) (REV.09-01-10)

DIST	COUNTY	ROUTE	POST MILES TOTAL PROJECT	SHEET No.	TOTAL SHEETS
07	LA	14	R52.6 / R59.2	56	58

REGISTERED CIVIL ENGINEER 03-09-11 DATE

6-20-11
PLANS APPROVAL DATE

REGISTERED PROFESSIONAL ENGINEER RUI WANG No. C 52910 Exp. 12-31-12 CIVIL STATE OF CALIFORNIA

The State of California or its officers or agents shall not be responsible for the accuracy or completeness of electronic copies of this plan sheet.

NOTE:

1. For details not shown, see RSP B6-21

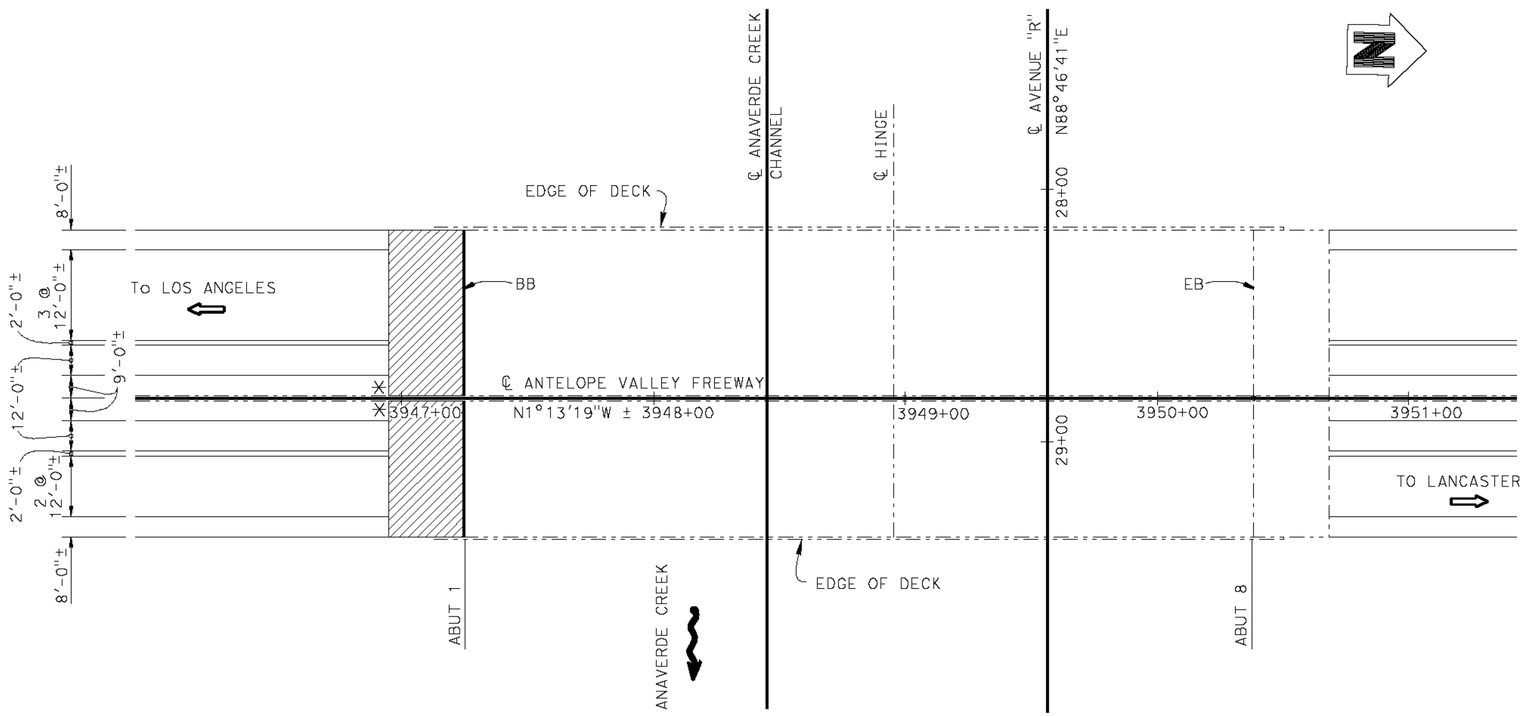

Br No. 53-1440R/L, PM=R59.11

ANAVERDE CREEK BRIDGE

1" = 30'

QUANTITIES

AGGREGATE BASE (APPROACH SLAB)	14 CY
STRUCTURAL CONCRETE, APPROACH SLAB (TYPE R)	136 CY
PAVING NOTCH EXTENSION	65 CF
JOINT SEAL (MR 1½")	124 LF

LEGEND

- - - - Indicates Existing Structure

——— Indicates limits of install new joint seal. Repair joint spalls prior to placement of new joint seal. For details see "JOINT SEAL DETAILS" sheet.

▨ Indicates limits of removal of existing Section and Installation of new Structure Approach Slab Type R(30D). For details, see "STRUCTURE APPROACH TYPE R(30D)" sheet.

⇨ Indicates Direction of Traffic

✳ Approach slab extends to toe of median barrier.

NOTE:

THE CONTRACTOR SHALL VERIFY ALL CONTROLLING FIELD DIMENSIONS BEFORE ORDERING OR FABRICATING ANY MATERIAL.

PAUL CHUNG
DESIGN ENGINEER

	BY	CHECKED		BY	CHECKED
DESIGN	RUI WANG	CESAR SANCHEZ			
DETAILS	HENGAMEH MAHBOOBI	RUI WANG	LAYOUT	RUI WANG	CESAR SANCHEZ
QUANTITIES	RUI WANG	CESAR SANCHEZ	SPECIFICATIONS	DAVE KLEIN	PLANS AND SPECS COMPARED DAVE KLEIN

ORIGINAL SCALE IN INCHES FOR REDUCED PLANS 0 1 2 3

STATE OF CALIFORNIA
DEPARTMENT OF TRANSPORTATION

DIVISION OF ENGINEERING SERVICES
STRUCTURE DESIGN
DESIGN BRANCH 19

BRIDGE NO. 53-1440R/L
POST MILE R59.11

ROUTE 14 BRIDGES
GENERAL PLAN NO. 2

UNIT: 3621
PROJECT NUMBER & PHASE: 0700000464 1 CONTRACT NO.: 07-254901

DISREGARD PRINTS BEARING EARLIER REVISION DATES

REVISION DATES: 12-20-10 05-09-11 03-09-11

SHEET 2 OF 4

FILE => 02_EA 07-254901-a-gp.dgn

STRUCTURES DESIGN GENERAL PLAN SHEET (ENGLISH) (REV.09-01-10)

USERNAME => s120514 DATE PLOTTED => 09-JUN-2011 TIME PLOTTED => 09:11

DIST	COUNTY	ROUTE	POST MILES TOTAL PROJECT	SHEET No.	TOTAL SHEETS
07	LA	14	R52.6 / R59.2	57	58

REGISTERED CIVIL ENGINEER 03-09-11 DATE

6-20-11
PLANS APPROVAL DATE

REGISTERED PROFESSIONAL ENGINEER RUI WANG No. C 52910 Exp. 12-31-12 CIVIL STATE OF CALIFORNIA

The State of California or its officers or agents shall not be responsible for the accuracy or completeness of electronic copies of this plan sheet.

NOTES:

The following notes apply to JOINT SEAL TYPE B:

1. Seal must satisfy both minimum Movement Rating (MR) and minimum W1 requirements.
2. Minimum W1 is the calculated maximum width of the joint based on field measurements. After the joints have been cleaned, minimum W1 is to be recalculated by the Engineer.
3. W1 shall be the smaller of the values determined as follows:
   A) 0.85 times the manufacturer's designed minimum uncompressed width of the seal.
   B) The width of the seal on the third successive test cycle of the pressure deflection test when compressed to an average presure of 3.0 Psi.
4. Bend Type B joint seal 6 inches up into curb or rail on the low side of the deck where deck joint matches curb or rail joint.

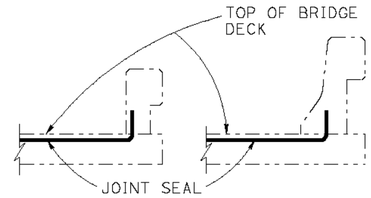

JOINT SEAL AT LOW SIDE OF DECK

DETAILS SHOWN FOR ILLUSTRATION PURPOSE ONLY.
FOR USE ONLY WHERE DECK JOINT MATCHES THE SIDEWALK, CURB OR BARRIER RAIL JOINT.

NO SCALE

LEGEND

PN Indicates Paving Notch
BW Indicates Backwall

JOINT SEAL TABLE

BRIDGE NO. & NAME	LOCATION	MINIMUM "MR" (INCH)	CLEAN JOINT LENGTH (FEET)	APPROX LENGTH (FEET)	EXISTING WATERSTOP (Y/N)	APPROX DEPTH OF EXP JOINT CLEANING (INCH)	APPROX DEPTH OF JOINT SPALLS (INCH)	APPROX WIDTH OF JOINT SPALLS (INCH)	APPROX LENGTH OF JOINT SPALLS (IFEET)
BR NO. 53-1417 AVENUE "S" UC	ABUT 1 PN	1.5	37	125	N	12	3	6	5
	ABUT 5 PN	1.5	37	125	N	12	3	6	5
BR NO. 53-1440 ANAVERDE CREEK (RAYBURN ROAD)	ABUT 1 PN	1.5	0	124	N	N/A	N/A	N/A	N/A

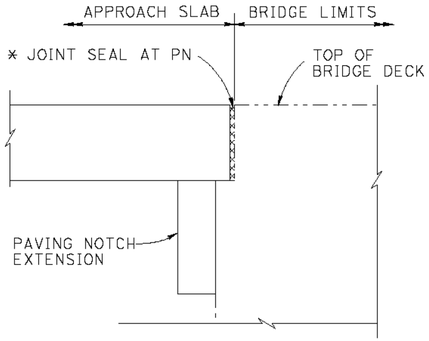

DIAPHRAGM ABUTMENT

* LOCATION OF JOINT SEAL CLEANING

JOINT SEAL DETAIL

NO SCALE

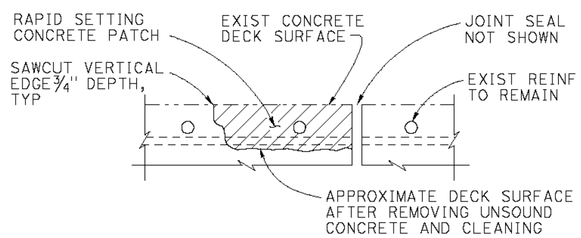

JOINT SPALL REPAIR DETAIL

REINFORCEMENT MAY BE ENCOUNTERED
DURING DECK CONCRETE REMOVAL
AND IS TO REMAIN UNDAMAGED.
LOCATIONS TO BE DETERMINED BY THE FIELD ENGINEER.

NO SCALE

NOTE:
THE CONTRACTOR SHALL VERIFY ALL CONTROLLING FIELD DIMENSIONS BEFORE ORDERING OR FABRICATING ANY MATERIAL.

	BY	CHECKED
DESIGN	RUI WANG	CESAR SANCHEZ
DETAILS	HENGAMEH MAHBOOBI	RUI WANG
QUANTITIES	RUI WANG	CESAR SANCHEZ

STATE OF CALIFORNIA
DEPARTMENT OF TRANSPORTATION

DIVISION OF ENGINEERING SERVICES
STRUCTURE DESIGN
DESIGN BRANCH 19

BRIDGE NO. VARIOUS
POST MILE VARIOUS

ROUTE 14 BRIDGES
JOINT SEAL DETAILS

STRUCTURES DESIGN DETAIL SHEET (ENGLISH) (REV. 09-01-10)

ORIGINAL SCALE IN INCHES FOR REDUCED PLANS 0 1 2 3

UNIT: 3621
PROJECT NUMBER & PHASE: 0700000464 1 CONTRACT NO.: 07-254901

DISREGARD PRINTS BEARING EARLIER REVISION DATES → REVISION DATES ~~12-20-10~~ 06-08-11 ~~03-09-11~~

SHEET 3 OF 4

FILE => 03_EA07-254901-m-det.dgn

USERNAME => s120514 DATE PLOTTED => 09-JUN-2011 TIME PLOTTED => 09:11

DIST	COUNTY	ROUTE	POST MILES TOTAL PROJECT	SHEET No.	TOTAL SHEETS
07	LA	14	R52.6 / R59.2	58	58

REGISTERED CIVIL ENGINEER 03-09-11 DATE

6-20-11
PLANS APPROVAL DATE

REGISTERED PROFESSIONAL ENGINEER RUI WANG No. C 52910 Exp. 12/31/12 CIVIL STATE OF CALIFORNIA

The State of California or its officers or agents shall not be responsible for the accuracy or completeness of electronic copies of this plan sheet.

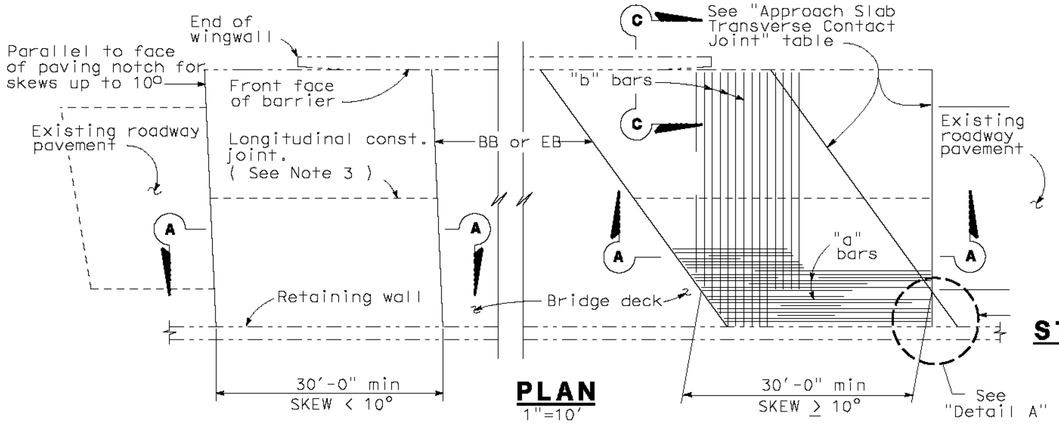

PLAN
1"=10'

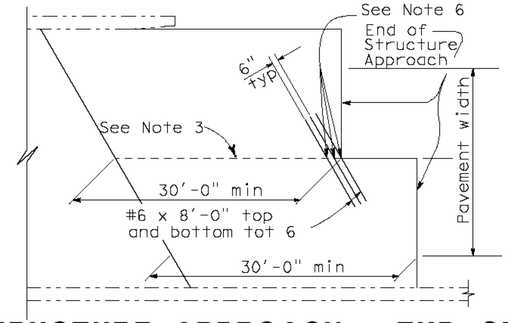

STRUCTURE APPROACH - END STAGGER DETAIL
No Scale

APPROACH SLAB TRANSVERSE CONTACT JOINT		
APPROACH SKEW	WITH AC ROADWAY PAVEMENT	WITH PCC ROADWAY PAVEMENT
< 10°	Parallel to face of paving notch	Parallel to face of paving notch
10° - 45°	Parallel to face of P N use (Detail A)	Stagger lines 24' to 36' apart
> 45°	Parallel to face of P N use (Detail A)	Stagger at each lane line

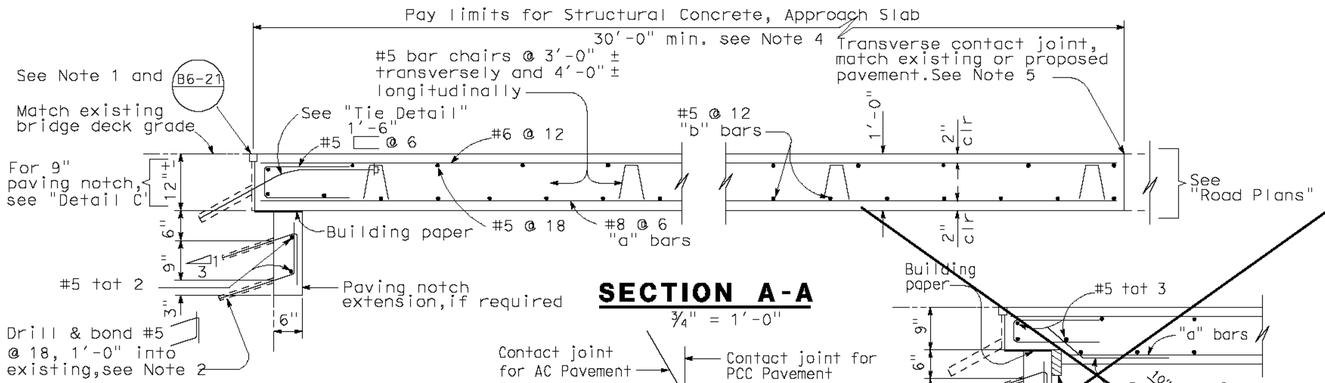

SECTION A-A
¾" = 1'-0"

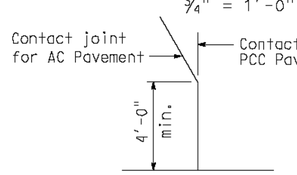

DETAIL A
No Scale

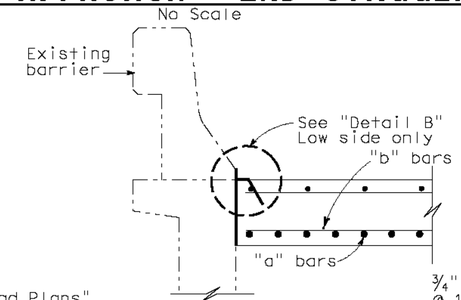

SECTION C-C
¾" = 1'-0"

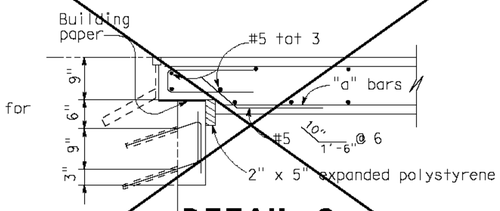

DETAIL C
¾" = 1'-0"

NOTE: For details not shown, see "Section A-A".

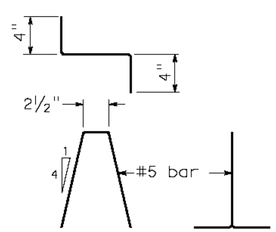

BAR CHAIR DETAIL
1½" = 1'-0"

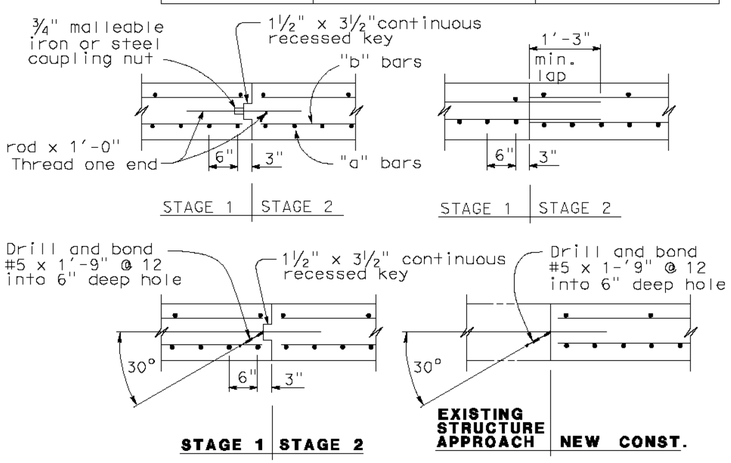

LONGITUDINAL CONSTRUCTION JOINT ALTERNATIVES
¾" = 1'-0"

NOTES:

1. For details not shown or noted, see Structure Plans. Adjust bar reinforcement to clear a sawcut for sealed joint, when required.
2. Space to avoid existing prestress anchorages and main reinforcement.
3. Longitudinal construction joints, when permitted by the Engineer, shall be located on lane lines.
4. Transverse contact joint shall be a minimum of 5'-0" from an existing or constructed weakened plane joint.
5. For transverse contact joint with new PCC paving, refer to Standard Plan P10.
6. Couplers are required for stage construction.
7. End angle or plate at beginning of barrier transition, end of wingwall or end of structure approach as applicable.

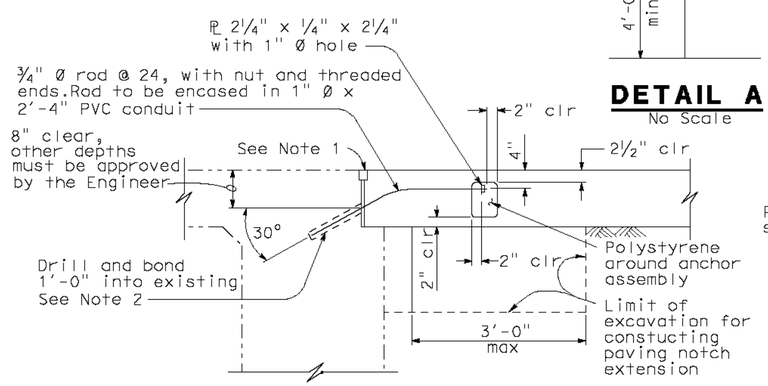

TIE DETAIL
¾" = 1'-0"

NOTE:
THE CONTRACTOR SHALL VERIFY ALL CONTROLLING FIELD DIMENSIONS BEFORE ORDERING OR FABRICATING ANY MATERIAL.

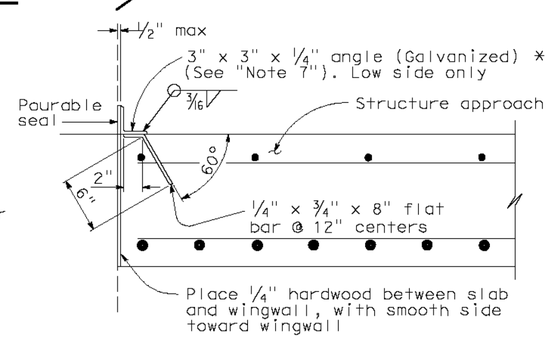

2 *(TO BE USED WITH TYPE 1 CONCRETE BARRIER)

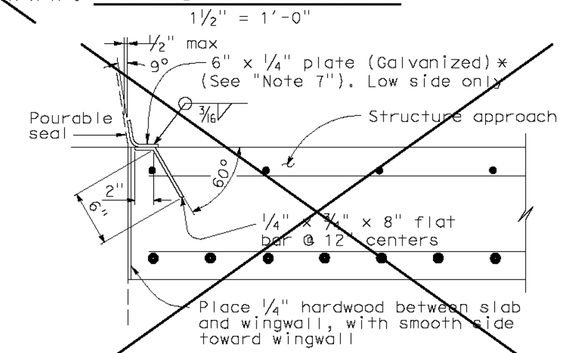

1 *(TO BE USED WITH TYPE 732 OR TYPE 736 CONCRETE BARRIER)

DETAIL B
1½" = 1'-0"

STANDARD DRAWING

FILE NO. xs3-140e

APPROVED BY X (RESPONSIBLE TECHNICAL SPECIALIST)
APPROVAL DATE X-X-X

RELEASED BY (RESPONSIBLE OFFICE CHIEF)
RELEASE DATE 03-14-05

1 Deleted Details
2 Revised Detail

STATE OF CALIFORNIA
DEPARTMENT OF TRANSPORTATION

DIVISION OF ENGINEERING SERVICES

BRIDGE NO. VARIOUS
POST MILE VARIOUS

ROUTE 14 BRIDGES
STRUCTURE APPROACH TYPE R(30D)

DS OSD 2147A (ENGLISH STANDARD DRAWING "XS" BORDER REV. (08-10-10)

ORIGINAL SCALE IN INCHES FOR REDUCED PLANS 0 1 2 3

UNIT: 3621
PROJECT NUMBER & PHASE: 0700000464 1 CONTRACT NO.: 07-254901

DISREGARD PRINTS BEARING EARLIER REVISION DATES

REVISION DATES: 12-20-10 06-03-11 03-09-11

SHEET 4 OF 4

FILE => 04_EA07-254901-s-sa.dgn

USERNAME => s8120514 DATE PLOTTED => 09-JUN-2011 TIME PLOTTED => 09:12