Dist	COUNTY	ROUTE	POST MILES TOTAL PROJECT	SHEET No.	TOTAL SHEETS
07	LA	14	R32.1/R52.6	1	65

STATE OF CALIFORNIA
DEPARTMENT OF TRANSPORTATION

NH-P014 (069) E

PROJECT PLANS FOR CONSTRUCTION ON
STATE HIGHWAY

IN LOS ANGELES COUNTY IN SANTA CLARITA
FROM 0.3 MILE NORTH OF SANTA CLARA RIVER BRIDGE TO 0.4 MILE NORTH OF SIERRA HIGHWAY OVERCROSSING

TO BE SUPPLEMENTED BY STANDARD PLANS DATED MAY 2006

INDEX OF PLANS

SHEET No.	DESCRIPTION
1	TITLE AND LOCATION MAP
2-4	TYPICAL CROSS SECTION
5-8	CONSTRUCTION DETAILS
9	CONSTRUCTION AREA SIGNS
10-20	TRAFFIC HANDLING DETAILS
21-26	PAVEMENT DELINEATION QUANTITIES
27-28	SUMMARY OF QUANTITIES
29-31	ELECTRICAL PLANS
32-55	REVISED AND NEW STANDARD PLANS
	STRUCTURE PLANS
56-65	ROUTE 14 BRIDGE PLANS

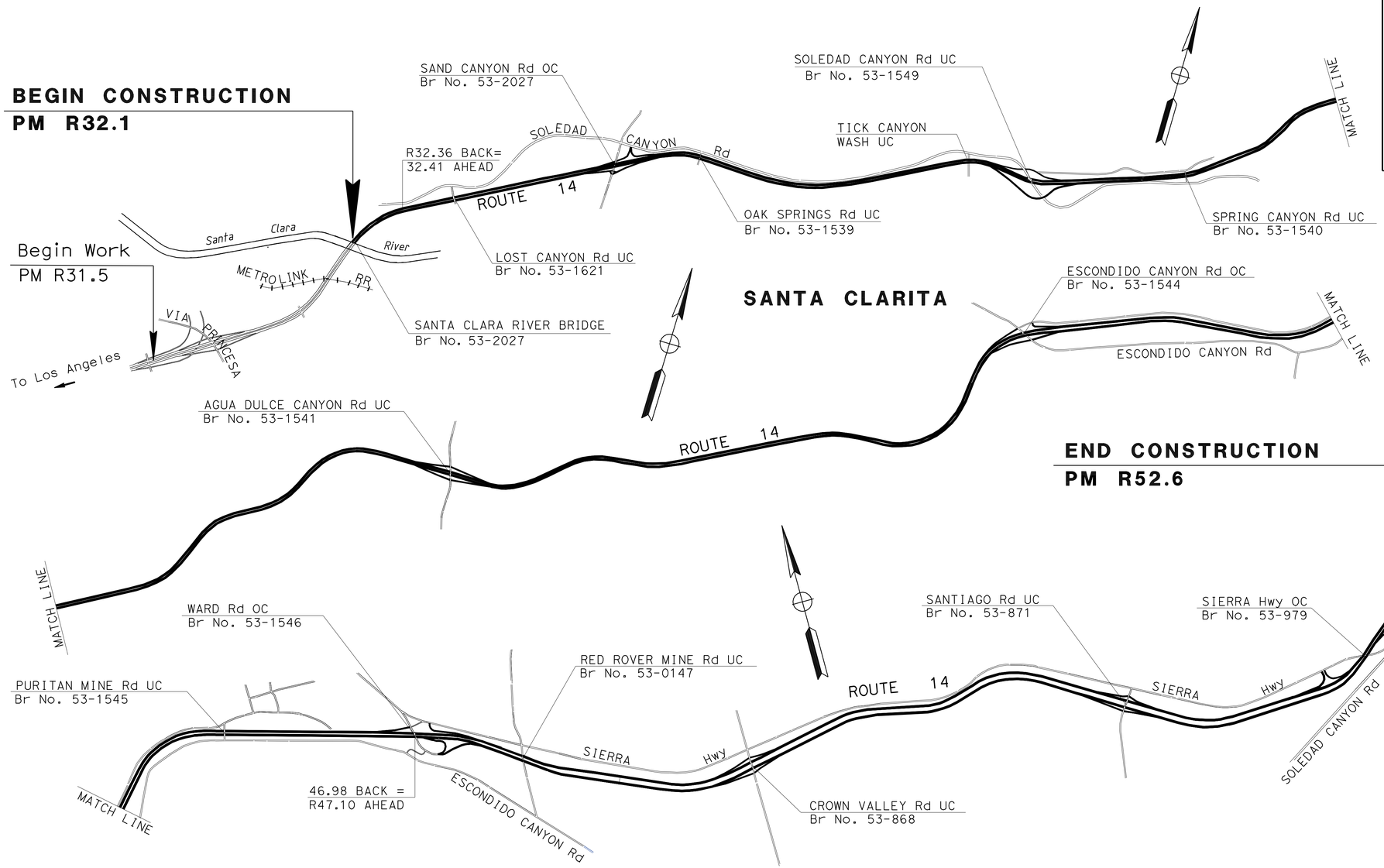

NO SCALE

THE CONTRACTOR SHALL POSSESS THE CLASS (OR CLASSES) OF LICENSE AS SPECIFIED IN THE "NOTICE TO BIDDERS."

PROJECT MANAGER: ASHRAF HABBAK
DESIGN ENGINEER: OJI KALU

PROJECT ENGINEER REGISTERED CIVIL ENGINEER — DATE 5-5-2011

REGISTERED PROFESSIONAL ENGINEER — CASIMIRO BAUTISTA — No. C 65169 — Exp. 9-30-11 — CIVIL — STATE OF CALIFORNIA

June 27, 2011
PLANS APPROVAL DATE

THE STATE OF CALIFORNIA OR ITS OFFICERS OR AGENTS SHALL NOT BE RESPONSIBLE FOR THE ACCURACY OR COMPLETENESS OF SCANNED COPIES OF THIS PLAN SHEET.

CONTRACT No.	07-251604
PROJECT ID	0700020848

LAST REVISION 00-00-00 — DATE PLOTTED => 23-AUG-2011 — TIME PLOTTED => 16:15

Dist	COUNTY	ROUTE	POST MILES TOTAL PROJECT	SHEET No.	TOTAL SHEETS
07	LA	14	R32.1/R52.6	2	65

REGISTERED CIVIL ENGINEER 5-5-11 DATE

6-27-11
PLANS APPROVAL DATE

REGISTERED PROFESSIONAL ENGINEER CASIMIRO BAUTISTA No. C 65169 Exp. 9-30-11 CIVIL STATE OF CALIFORNIA

THE STATE OF CALIFORNIA OR ITS OFFICERS OR AGENTS SHALL NOT BE RESPONSIBLE FOR THE ACCURACY OR COMPLETENESS OF SCANNED COPIES OF THIS PLAN SHEET.

NOTES:

1. DIMENSIONS OF THE PAVEMENT STRUCTURES (STRUCTURAL SECTIONS) ARE SUBJECT TO TOLERANCES SPECIFIED IN THE STANDARD SPECIFICATIONS.
2. SUPERELEVATION AS SHOWN OR AS DIRECTED BY THE ENGINEER.
3. FOR ACCURATE RIGHT OF WAY DATA, CONTACT RIGHT OF WAY ENGINEERING AT THE DISTRICT OFFICE.
4. EXISTING UTILITY FACILITIES AND DRAINAGE INLETS HAVE NOT BEEN PLOTTED ON THESE PLANS.
5. EXACT LOCATIONS AND STRUCTURAL SECTION OF INDIVIDUAL SLAB REPLACEMENT (RSC) WILL BE DETERMINED BY THE ENGINEER. SEE QUANTITY SHEETS FOR LIMITS.
6. SEE QUANTITY SHEETS FOR LIMITS OF GRIND EXISTING CONCRETE PAVEMENT. EXACT LOCATIONS WILL BE DETERMINED BY THE ENGINEER. APPROACH SLABS AND BRIDGE DECKS ARE EXCLUDED FROM GRINDING.

ACRONYMS:

LCBRS - LEAN CONCRETE BASE RAPID SETTING
JPCP - JOINTED PLAIN CONCRETE PAVEMENT
ISR - INDIVIDUAL SLAB REPLACEMENT
RSC - RAPID STRENGTH CONCRETE
HMA - HOT MIX ASPHALT

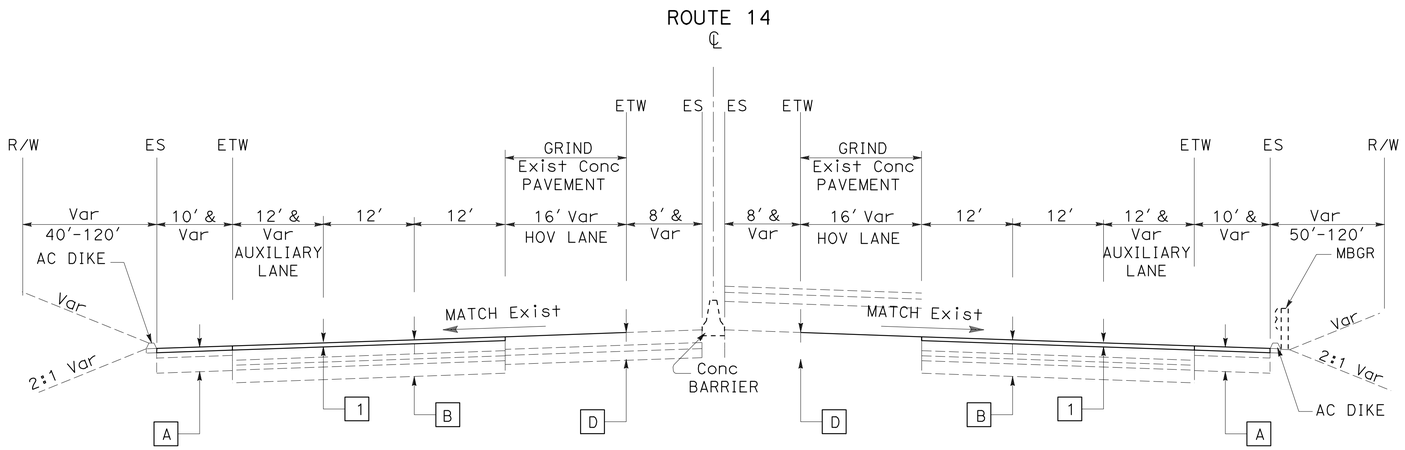

SOUTHBOUND

PM 32.70 TO PM 32.90
PM 36.00 TO PM 36.05

NORTHBOUND

PM 32.77 TO PM 32.80
PM 34.50 TO PM 34.60
PM 38.20 TO PM 38.50

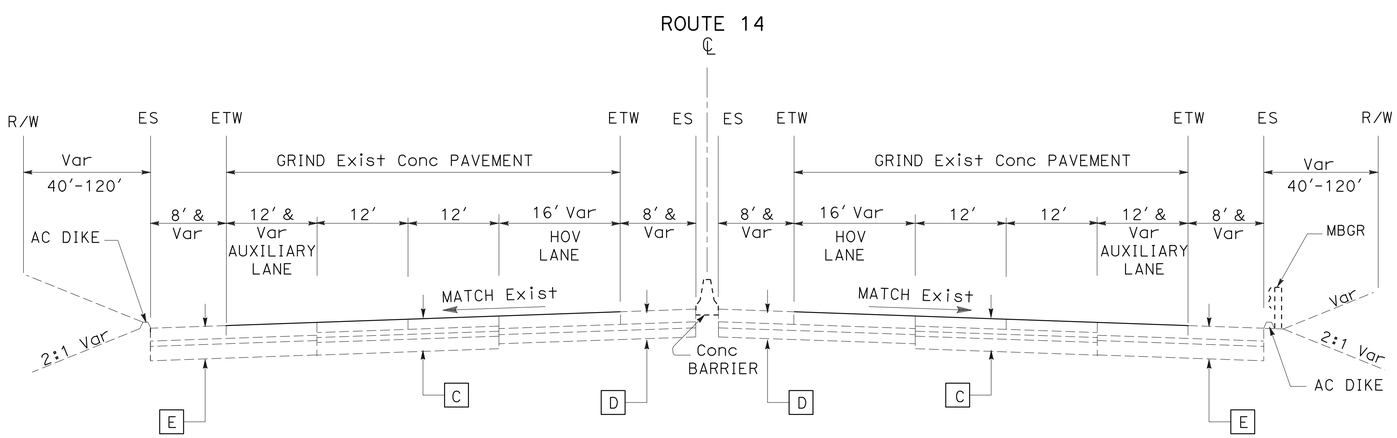

SOUTHBOUND

PM R32.10 TO PM 32.70

NORTHBOUND

PM R32.10 TO PM 32.40

PROPOSED STRUCTURAL SECTION

1
- 0.25' COLD PLANE AC PAVEMENT
- 0.25' HMA (USE W/ QC/QA)

2
- 0.65' ISR (RSC)
- BOND BREAKER

3
- 0.75' ISR (RSC)
- BOND BREAKER

4
- 0.85' ISR (RSC)
- BOND BREAKER

5
- 0.15' HMA (USE W/ QC/QA)
- 0.15' COLD PLANE AC PAVEMENT

6
- 0.85' JPCP (RAMP TERMINI WITH RSC)
- BOND BREAKER
- 0.50' LCBRS
- 0.70' CLASS 3 AGGREGATE BASE

EXISTING STRUCTURAL SECTION

A
- 0.25' AC
- 0.42' AB CLASS 2
- Var AS CLASS 2

B
- 0.25 AC
- 0.67' PCC
- 0.33' CTB (CLASS B)
- 0.17' AB (CLASS 2)
- 0.83' AS (CLASS 2)

C
- 0.67' PCC
- 0.33' CTB (CLASS B)
- 0.17' AB (CLASS 2)
- 0.83' AS (CLASS 2)

D
- 0.75' PCC
- 0.40' LCB
- 0.60' AB (CLASS 3)

E
- 0.85' PCC
- 0.35' CTB
- 0.95' AB (CLASS 3)

F
- 0.33' AC (TYPE B)
- 0.67' CLASS 2 AB
- 1.00' CLASS 2 AS

TYPICAL CROSS SECTIONS

NO SCALE

X-1

STATE OF CALIFORNIA - DEPARTMENT OF TRANSPORTATION
Caltrans
DESIGN

FUNCTIONAL SUPERVISOR: OJI KALU
CALCULATED-DESIGNED BY: CASIMIRO BAUTISTA
CHECKED BY: ANDY LIAO
REVISED BY
DATE REVISED

LAST REVISION 00-00-00
DATE PLOTTED => 23-AUG-2011
TIME PLOTTED => 16:15

Dist	COUNTY	ROUTE	POST MILES TOTAL PROJECT	SHEET No.	TOTAL SHEETS
07	LA	14	R32.1/R52.6	3	65

REGISTERED CIVIL ENGINEER 5-5-11 DATE

6-27-11
PLANS APPROVAL DATE

REGISTERED PROFESSIONAL ENGINEER CASIMIRO BAUTISTA No. C 65169 Exp. 9-30-11 CIVIL STATE OF CALIFORNIA

THE STATE OF CALIFORNIA OR ITS OFFICERS OR AGENTS SHALL NOT BE RESPONSIBLE FOR THE ACCURACY OR COMPLETENESS OF SCANNED COPIES OF THIS PLAN SHEET.

ROUTE 14

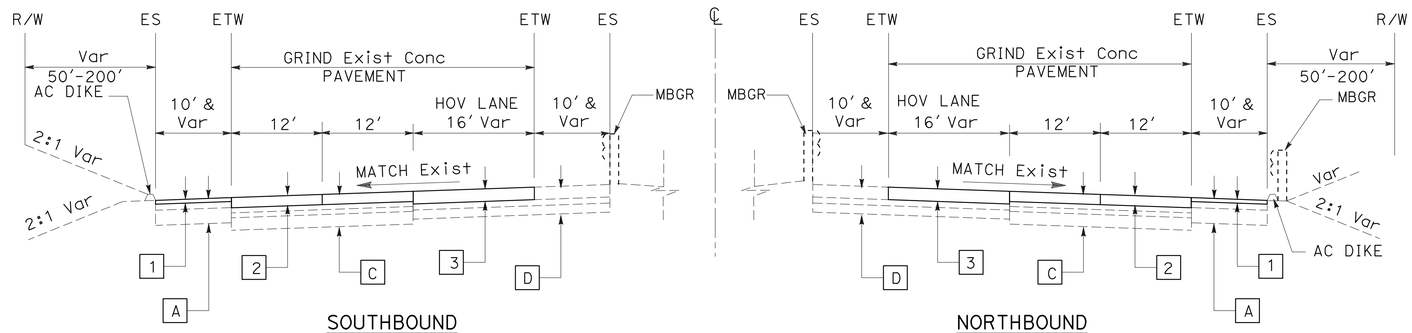

SOUTHBOUND

PM 36.60 TO PM 38.90
PM 44.07 TO PM R52.60

NORTHBOUND

PM 44.26 TO PM R52.60

ROUTE 14

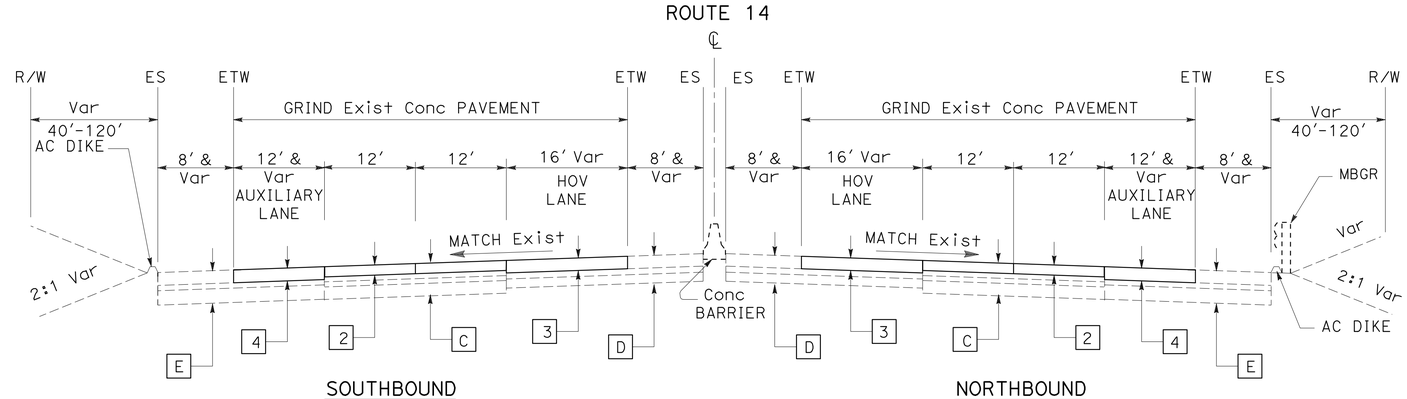

SOUTHBOUND

PM 33.30 TO PM 36.00
PM 36.10 TO PM 36.60
PM 38.90 TO PM 40.10
PM 42.80 TO PM 44.07

NORTHBOUND

PM 33.17 TO PM 33.98
PM 33.98 TO PM 38.00
PM 38.20 TO PM 44.26

ROUTE 14

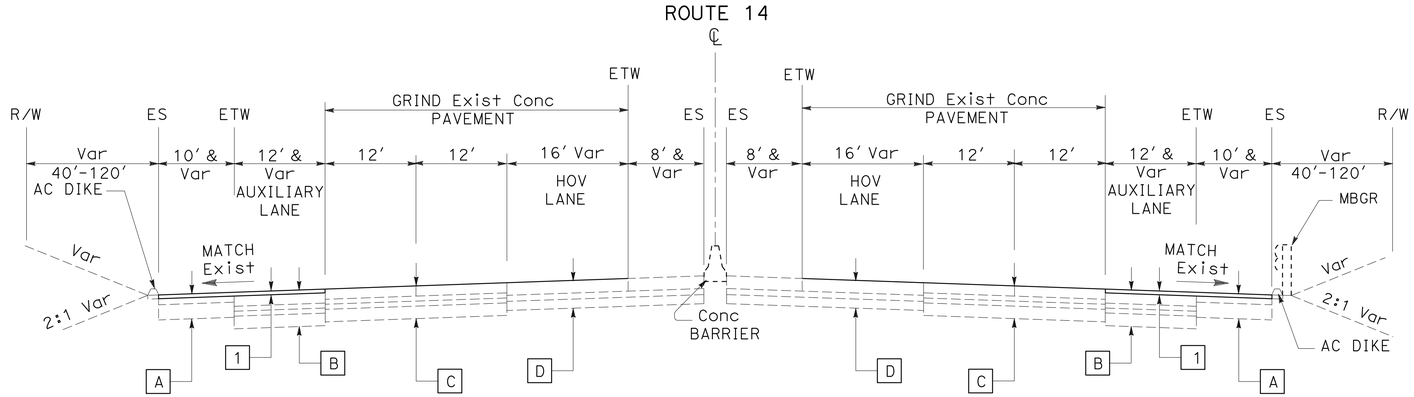

SOUTHBOUND

PM 32.90 TO PM 33.30

NORTHBOUND

PM 32.40 TO PM 32.77

TYPICAL CROSS SECTIONS

NO SCALE

X-2

STATE OF CALIFORNIA - DEPARTMENT OF TRANSPORTATION
Caltrans®
DESIGN

FUNCTIONAL SUPERVISOR: OJI KALU
CALCULATED-DESIGNED BY: CASIMIRO BAUTISTA
CHECKED BY: ANDY LIAO
REVISED BY
DATE REVISED

LAST REVISION 00-00-00
DATE PLOTTED => 23-AUG-2011
TIME PLOTTED => 16:15

Dist	COUNTY	ROUTE	POST MILES TOTAL PROJECT	SHEET No.	TOTAL SHEETS
07	LA	14	R32.1/R52.6	4	65

REGISTERED CIVIL ENGINEER 5-5-11 DATE

6-27-11
PLANS APPROVAL DATE

REGISTERED PROFESSIONAL ENGINEER CASIMIRO BAUTISTA No. C 65169 Exp. 9-30-11 CIVIL STATE OF CALIFORNIA

THE STATE OF CALIFORNIA OR ITS OFFICERS OR AGENTS SHALL NOT BE RESPONSIBLE FOR THE ACCURACY OR COMPLETENESS OF SCANNED COPIES OF THIS PLAN SHEET.

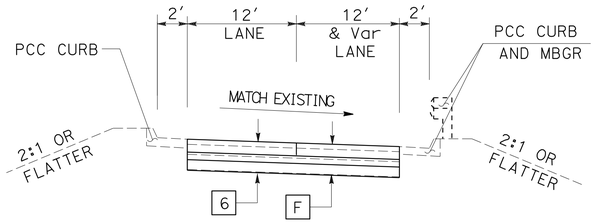

ESCONDIDO CANYON Rd OC
NB OFF-RAMP TERMINUS

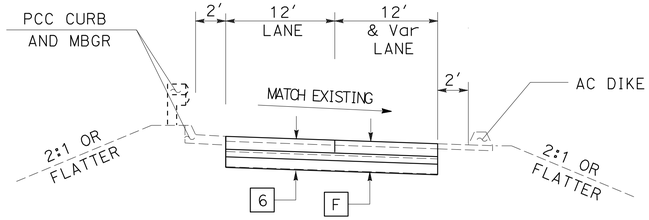

ESCONDIDO CANYON Rd OC
SB OFF-RAMP TERMINUS

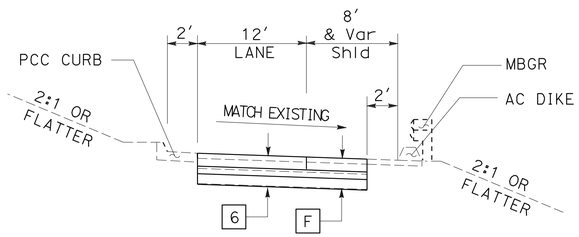

AGUA DULCE CANYON Rd UC
NB OFF-RAMP TERMINUS

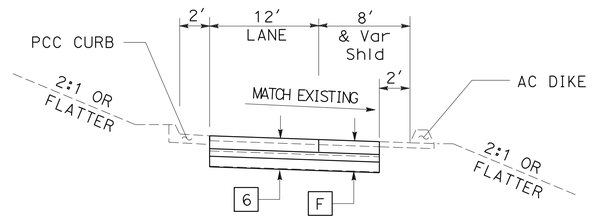

AGUA DULCE CANYON Rd UC
SB OFF-RAMP TERMINUS

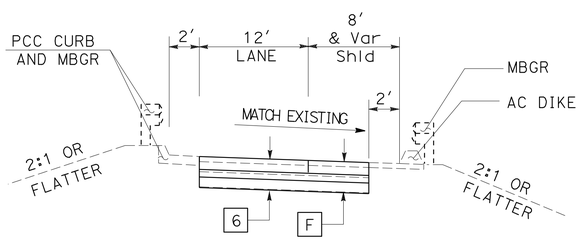

SOLEDAD CANYON Rd UC
NB OFF-RAMP TERMINUS

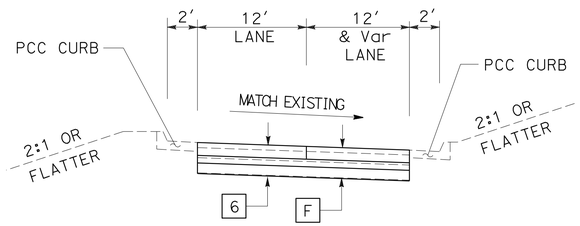

SOLEDAD CANYON Rd UC
SB OFF-RAMP TERMINUS

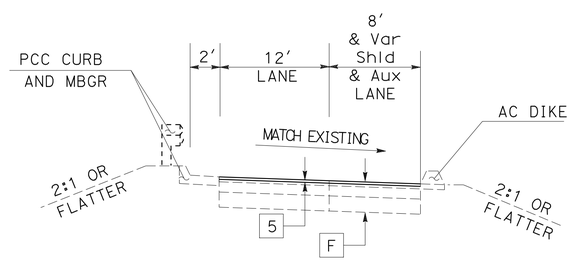

OFF-RAMPS & ON-RAMPS

SAND CANYON Rd OC NB & SB
SOLEDAD CANYON Rd UC NB & SB
AGUA DULCE CANYON Rd UC NB & SB
ESCONDIDO CANYON Rd OC NB & SB
WARD Rd OC NB & SB
CROWN VALLEY Rd UC NB & SB
SANTIAGO Rd UC NB & SB
SIERRA Highway OC NB & SB

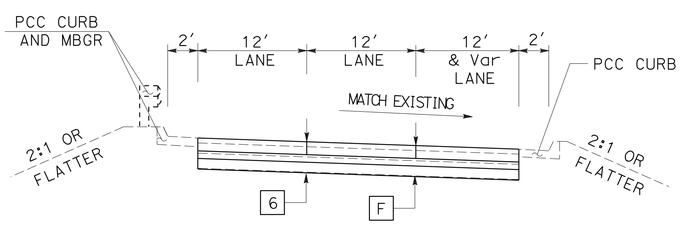

SAND CANYON Rd OC
NB OFF-RAMP TERMINUS

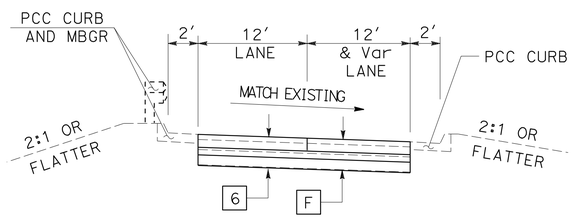

SAND CANYON Rd OC
SB OFF-RAMP TERMINUS

TYPICAL CROSS SECTIONS

NO SCALE

X-3

STATE OF CALIFORNIA - DEPARTMENT OF TRANSPORTATION
Caltrans® DESIGN

FUNCTIONAL SUPERVISOR: OJI KALU
CALCULATED-DESIGNED BY: CASIMIRO BAUTISTA
CHECKED BY: ANDY LIAO
REVISED BY
DATE REVISED

LAST REVISION 00-00-00
DATE PLOTTED => 23-AUG-2011
TIME PLOTTED => 16:16

Dist	COUNTY	ROUTE	POST MILES TOTAL PROJECT	SHEET No.	TOTAL SHEETS
07	LA	14	R32.1/R52.6	5	65

REGISTERED CIVIL ENGINEER 5-5-11 DATE

6-27-11
PLANS APPROVAL DATE

REGISTERED PROFESSIONAL ENGINEER CASIMIRO BAUTISTA No. C 65169 Exp. 9-30-11 CIVIL STATE OF CALIFORNIA

THE STATE OF CALIFORNIA OR ITS OFFICERS OR AGENTS SHALL NOT BE RESPONSIBLE FOR THE ACCURACY OR COMPLETENESS OF SCANNED COPIES OF THIS PLAN SHEET.

NOTES:

1. Exist UTILITY FACILITIES AND DRAINAGE INLETS HAVE NOT BEEN PLOTTED ON THESE PLANS.
2. EXACT PAVING LIMITS WILL BE DETERMINED BY THE ENGINEER.
3. OMIT COLD PLANING AND AC PAVING ON BRIDGE DECKS.

LEGEND:

0.15' COLD PLANE AC PAVEMENT
0.15' HOT MIX ASPHALT (USE W/ QC/QA)

PROPOSED STRUCTURAL SECTION

5 — 0.15' COLD PLANE AC PAVEMENT
0.15' HOT MIX ASPHALT (USE W/ QC/QA)

EXISTING STRUCTURAL SECTION

F — 0.33' AC (TYPE B)
0.67' CLASS 2 AB
1.00' CLASS 2 AS

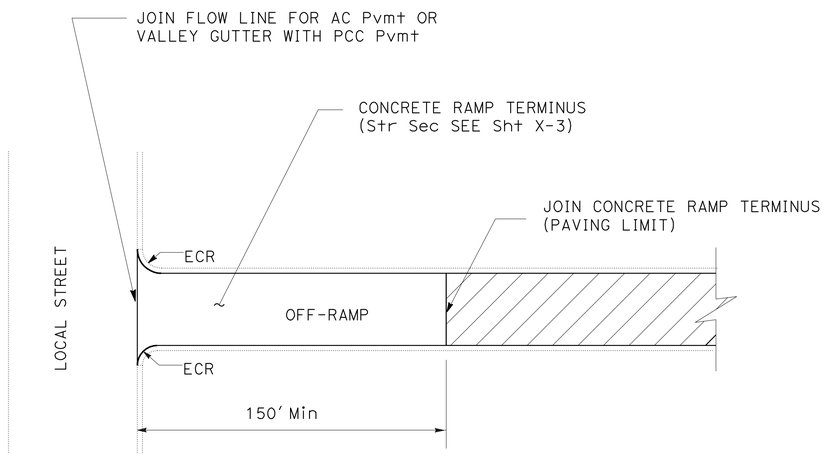

PCC OFF-RAMP TERMINUS

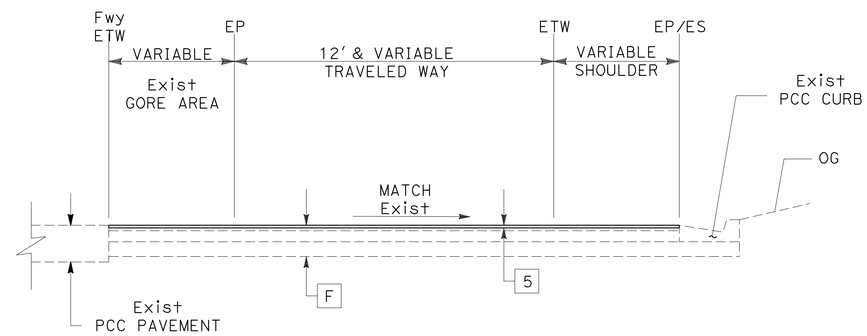

SECTION A-A

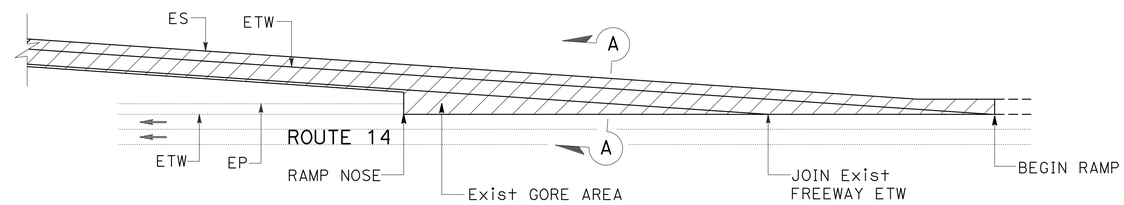

OFF-RAMP

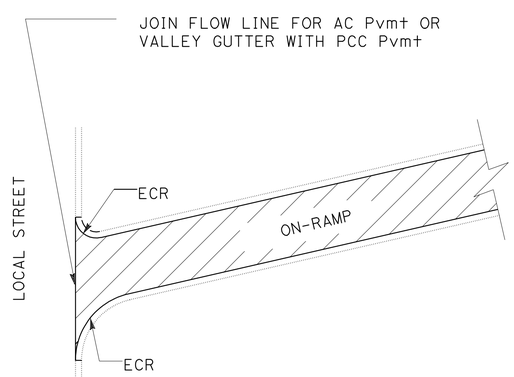

ON-RAMP

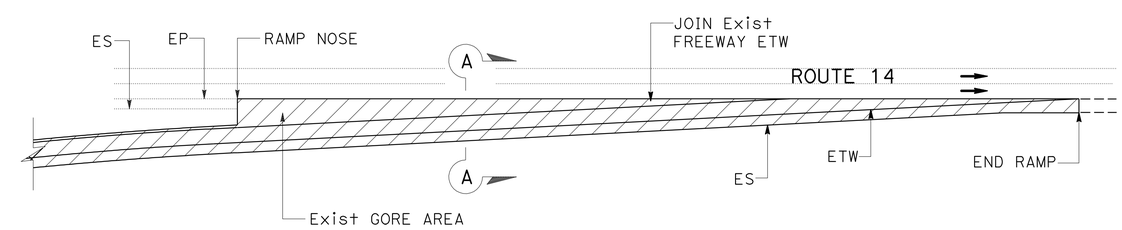

ON-RAMP

TYPICAL RAMP PAVING DETAILS

CONSTRUCTION DETAILS

NO SCALE

C-1

STATE OF CALIFORNIA - DEPARTMENT OF TRANSPORTATION
Caltrans
DESIGN

FUNCTIONAL SUPERVISOR: OJI KALU
CALCULATED-DESIGNED BY: CASIMIRO BAUTISTA
CHECKED BY: ANDY LIAO
REVISED BY
DATE REVISED

LAST REVISION 00-00-00
DATE PLOTTED => 23-AUG-2011
TIME PLOTTED => 16:16

Dist	COUNTY	ROUTE	POST MILES TOTAL PROJECT	SHEET No.	TOTAL SHEETS
07	LA	14	R32.1/R52.6	6	65

REGISTERED CIVIL ENGINEER 5-5-11 DATE

6-27-11
PLANS APPROVAL DATE

REGISTERED PROFESSIONAL ENGINEER CASIMIRO BAUTISTA No. C 65169 Exp 9-30-11 CIVIL STATE OF CALIFORNIA

THE STATE OF CALIFORNIA OR ITS OFFICERS OR AGENTS SHALL NOT BE RESPONSIBLE FOR THE ACCURACY OR COMPLETENESS OF SCANNED COPIES OF THIS PLAN SHEET.

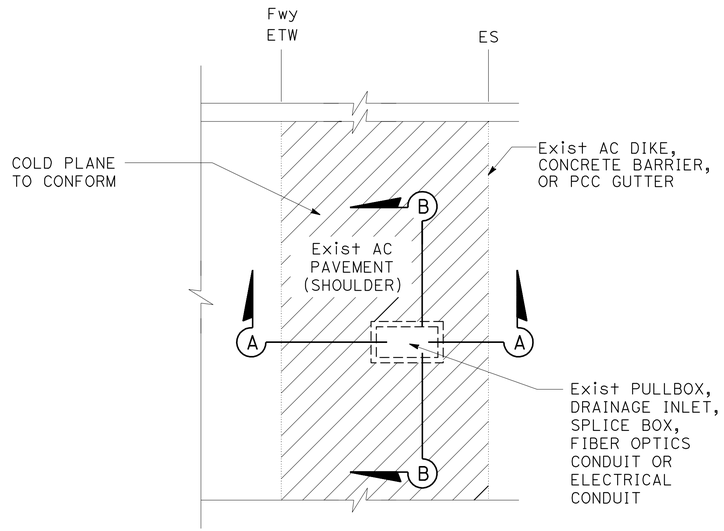

FIBER OPTIC PULLBOX, DRAINAGE INLET OR SPLICEBOX (VARIOUS LOCATIONS)

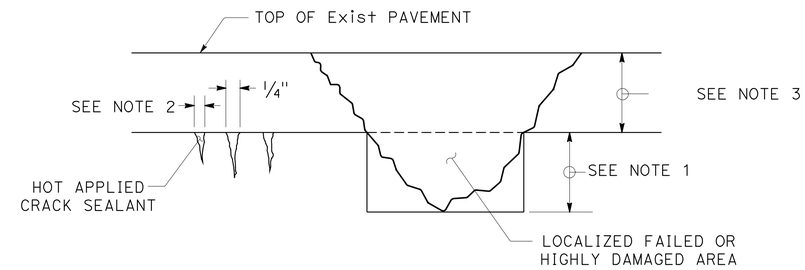

TYPICAL DETAIL FOR SEAL RANDOM CRACKS AND REPAIR FAILED AREAS

NOTES:

1. REMOVE LOCALIZED FAILED AREAS AND REPLACE AC SURFACING WITH MINIMUM 0.15' HMA (TYPE B).
2. SEAL CRACKS GREATER THAN 1/4" WITH HOT APPLIED CRACK SEALANT.
3. PLACE HMA (TYPE B) AFTER CRACK SEALANT HAS BEEN APPLIED AND LOCALIZED FAILED AREAS HAVE BEEN REPAIRED.

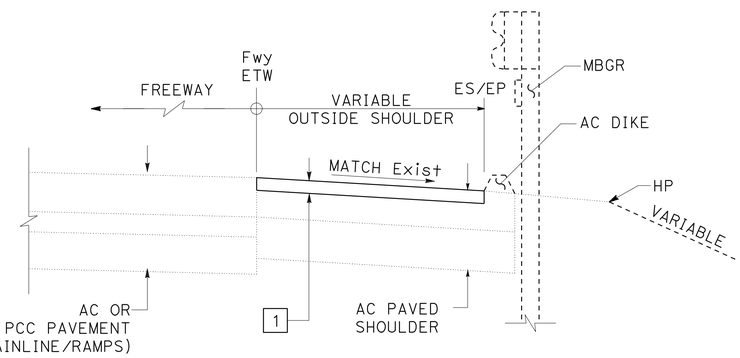

TYPICAL AT METAL BEAM GUARD RAILING

PROPOSED STRUCTURAL SECTION

1 — 0.25' COLD PLANE AC PAVEMENT
0.25' HOT MIX ASPHALT (USE W/ QC/QA)

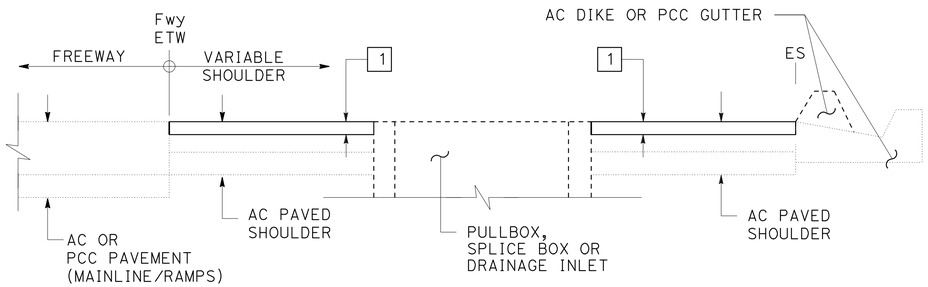

SECTION A-A

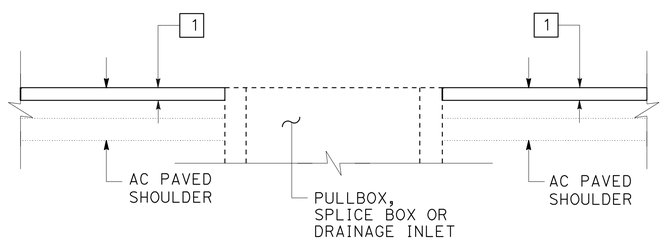

SECTION B-B

TYPICAL FIBER OPTIC PULLBOX, SPLICE BOX OR DRAINAGE INLET

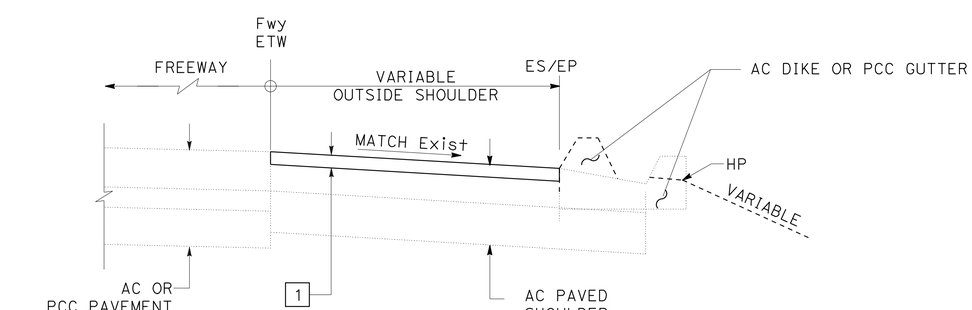

TYPICAL AT CONCRETE BARRIER

CONSTRUCTION DETAILS

NO SCALE

C-2

STATE OF CALIFORNIA - DEPARTMENT OF TRANSPORTATION
DESIGN
FUNCTIONAL SUPERVISOR: OJI KALU
CALCULATED-DESIGNED BY: CASIMIRO BAUTISTA
CHECKED BY: ANDY LIAO
REVISED BY
DATE REVISED

LAST REVISION 00-00-00
DATE PLOTTED => 23-AUG-2011
TIME PLOTTED => 16:16

Dist	COUNTY	ROUTE	POST MILES TOTAL PROJECT	SHEET No.	TOTAL SHEETS
07	LA	14	R32.1/R52.6	7	65

REGISTERED CIVIL ENGINEER 5-5-11 DATE

6-27-11
PLANS APPROVAL DATE

REGISTERED PROFESSIONAL ENGINEER CASIMIRO BAUTISTA No. C 65169 Exp. 9-30-11 CIVIL STATE OF CALIFORNIA

THE STATE OF CALIFORNIA OR ITS OFFICERS OR AGENTS SHALL NOT BE RESPONSIBLE FOR THE ACCURACY OR COMPLETENESS OF SCANNED COPIES OF THIS PLAN SHEET.

NOTES:

1. TRANSVERSE JOINTS SHALL MATCH THE SKEWED OFFSET AND SPACING OF THE ADJACENT EXISTING TRANSVERSE JOINTS AS SHOWN.
2. TRANSVERSE JOINTS DOWELS BARS SHALL BE INSTALLED PARALLEL TO THE DIRECTION OF TRAVEL. FOR DOWEL BAR BASKET DETAILS, SEE REVISED STANDARD PLAN RSP P12
3. SIDE FORM SHALL BE USED WHERE EDGE OF PAVEMENT IS ADJACENT TO ASPHALT CONCRETE.
4. SLAB LOCATIONS ARE APPROXIMATE. EXACT LOCATIONS WILL BE DETERMINED BY THE ENGINEER.

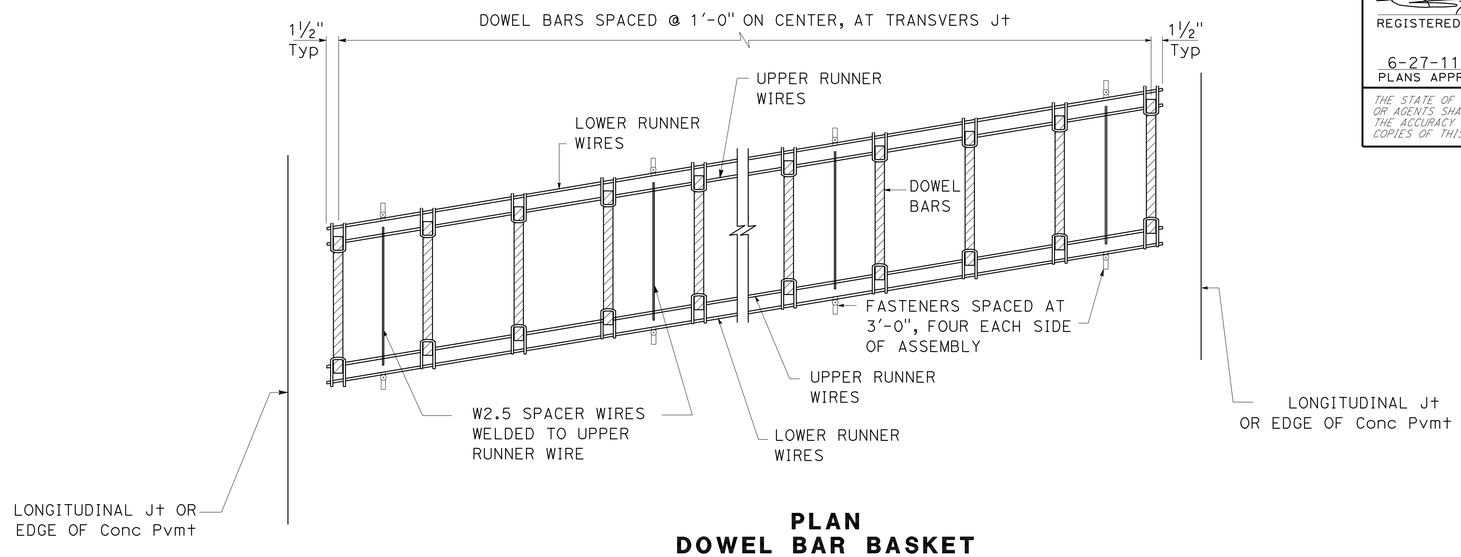

PLAN
DOWEL BAR BASKET
(SKEWED TRANSVERSE JOINT)

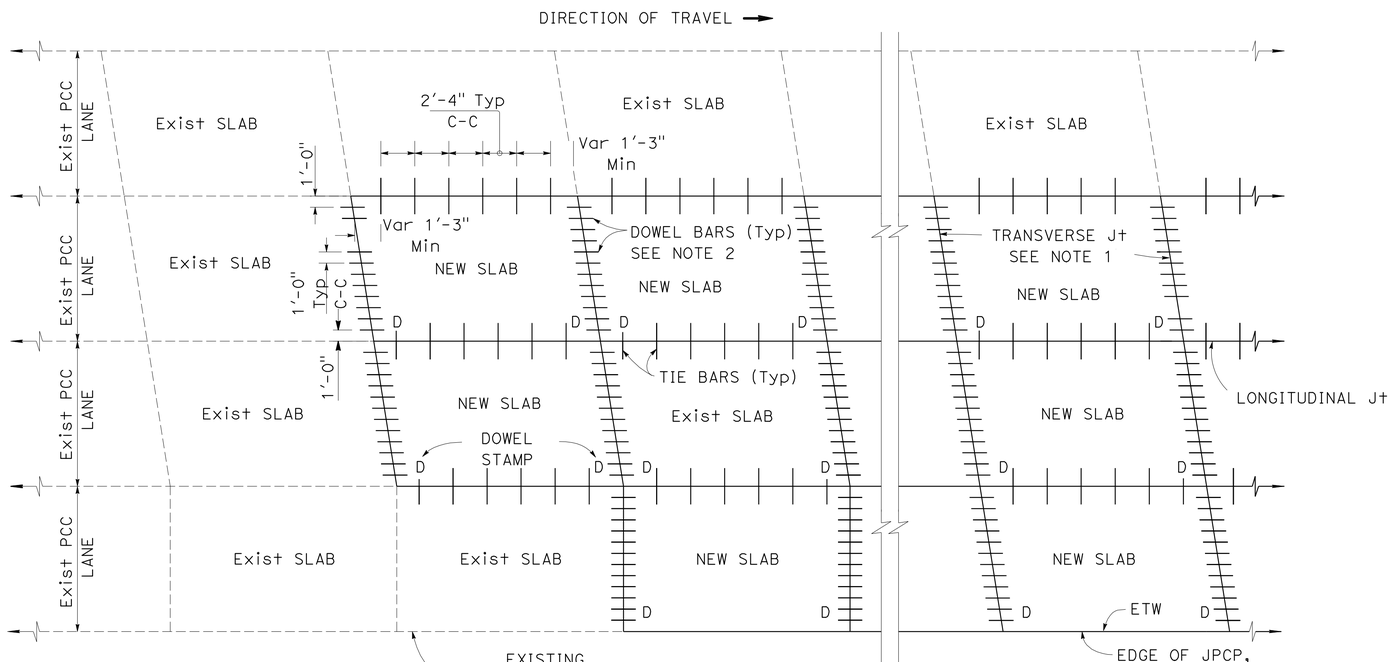

PLAN

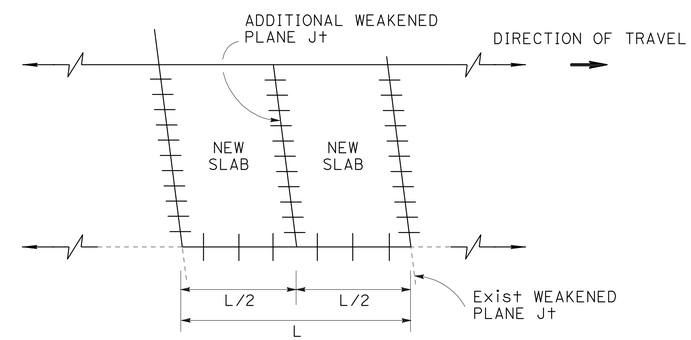

ADDITIONAL WEAKENED PLANE JOINT ON NEW SLAB REPLACEMENT (LENGTH GREATER THAN 15')

CONSTRUCTION DETAILS

NO SCALE

C-3

STATE OF CALIFORNIA - DEPARTMENT OF TRANSPORTATION
Caltrans®
DESIGN

FUNCTIONAL SUPERVISOR: OJI KALU
CALCULATED-DESIGNED BY: CASIMIRO BAUTISTA
CHECKED BY: ANDY LIAO
REVISED BY
DATE REVISED

LAST REVISION 00-00-00
DATE PLOTTED => 23-AUG-2011
TIME PLOTTED => 16:16

Dist	COUNTY	ROUTE	POST MILES TOTAL PROJECT	SHEET No.	TOTAL SHEETS
07	LA	14	R32.1/R52.6	8	65

REGISTERED CIVIL ENGINEER 5-5-11 DATE

6-27-11
PLANS APPROVAL DATE

REGISTERED PROFESSIONAL ENGINEER CASIMIRO BAUTISTA No. C 65169 Exp. 9-30-11 CIVIL STATE OF CALIFORNIA

THE STATE OF CALIFORNIA OR ITS OFFICERS OR AGENTS SHALL NOT BE RESPONSIBLE FOR THE ACCURACY OR COMPLETENESS OF SCANNED COPIES OF THIS PLAN SHEET.

NOTE

LOCATIONS OF UTILITY FACILITIES SHOWN ON THIS PLAN ARE APPROXIMATE AND SHALL BE VERIFIED ON THE FIELD.

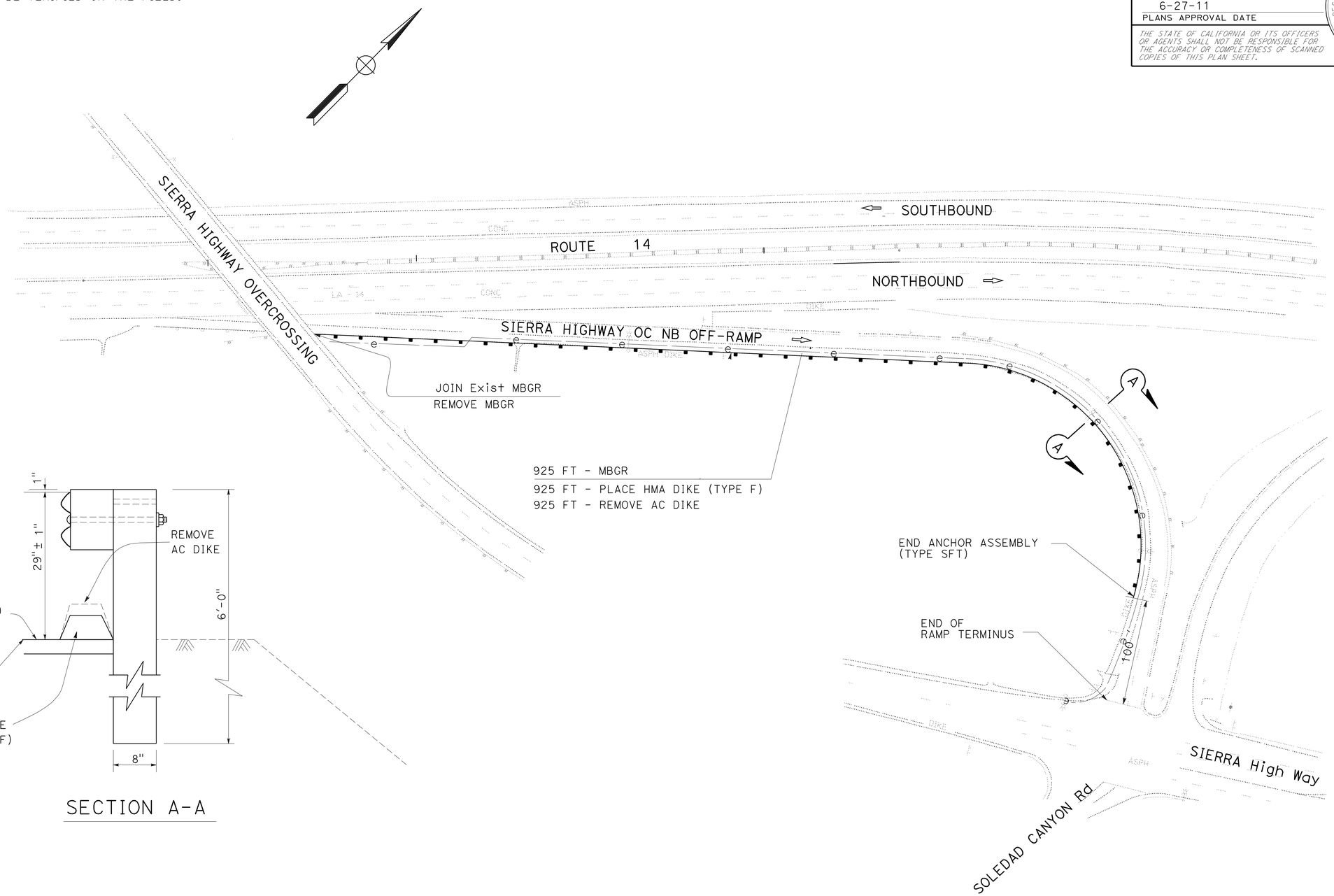

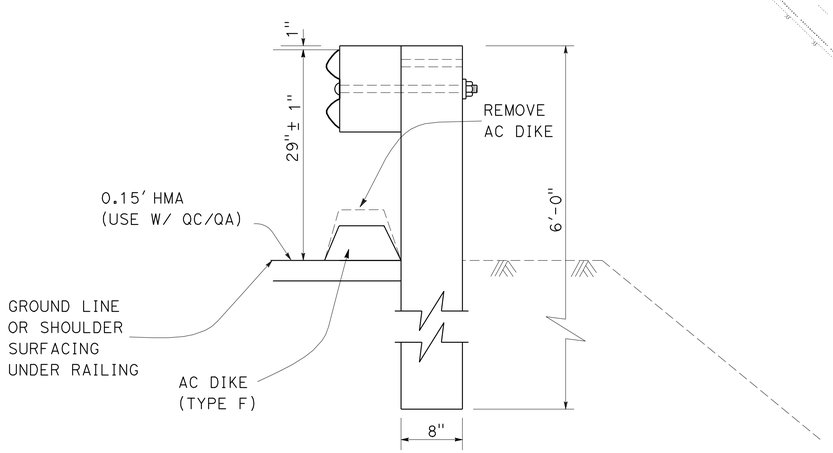

SECTION A-A

METAL BEAM GUARD RAILING DETAILS

CONSTRUCTION DETAILS

NO SCALE

C-4

STATE OF CALIFORNIA - DEPARTMENT OF TRANSPORTATION
Caltrans
DESIGN

FUNCTIONAL SUPERVISOR: OJI KALU
CALCULATED-DESIGNED BY: CASIMIRO BAUTISTA
CHECKED BY: ANDY LIAO
REVISED BY
DATE REVISED

LAST REVISION 00-00-00
DATE PLOTTED => 23-AUG-2011
TIME PLOTTED => 16:16

Dist	COUNTY	ROUTE	POST MILES TOTAL PROJECT	SHEET No.	TOTAL SHEETS
07	LA	14	R32.1/R52.6	9	65

REGISTERED CIVIL ENGINEER 5-15-11 DATE

6-27-11
PLANS APPROVAL DATE

REGISTERED PROFESSIONAL ENGINEER CASIMIRO BAUTISTA No. C 65169 Exp. 9/30/11 CIVIL STATE OF CALIFORNIA

THE STATE OF CALIFORNIA OR ITS OFFICERS OR AGENTS SHALL NOT BE RESPONSIBLE FOR THE ACCURACY OR COMPLETENESS OF SCANNED COPIES OF THIS PLAN SHEET.

NOTES:

1. LOCATIONS OF CONSTRUCTION AREA SIGNS SHOWN ARE APPROXIMATE. EXACT LOCATIONS WILL BE DETERMINED BY THE ENGINEER.

STATIONARY MOUNTED CONSTRUCTION AREA SIGNS

SIGN NUMBER	CODE	SIGN MESSAGE	PANEL SIZE	NUMBER OF POSTS AND SIZE	NUMBER OF SIGNS
1	W20-1	ROAD WORK AHEAD	48" x 48"	1 - 6" x 6"	24
2	G20-2	END ROAD WORK	48" x 24"	1 - 4" x 6"	23
3	C40(CA)	TRAFFIC FINES DOUBLED IN CONSTRUCTION ZONES	144" x 60"	2 - 6" x 8"	2
				TOTAL	49

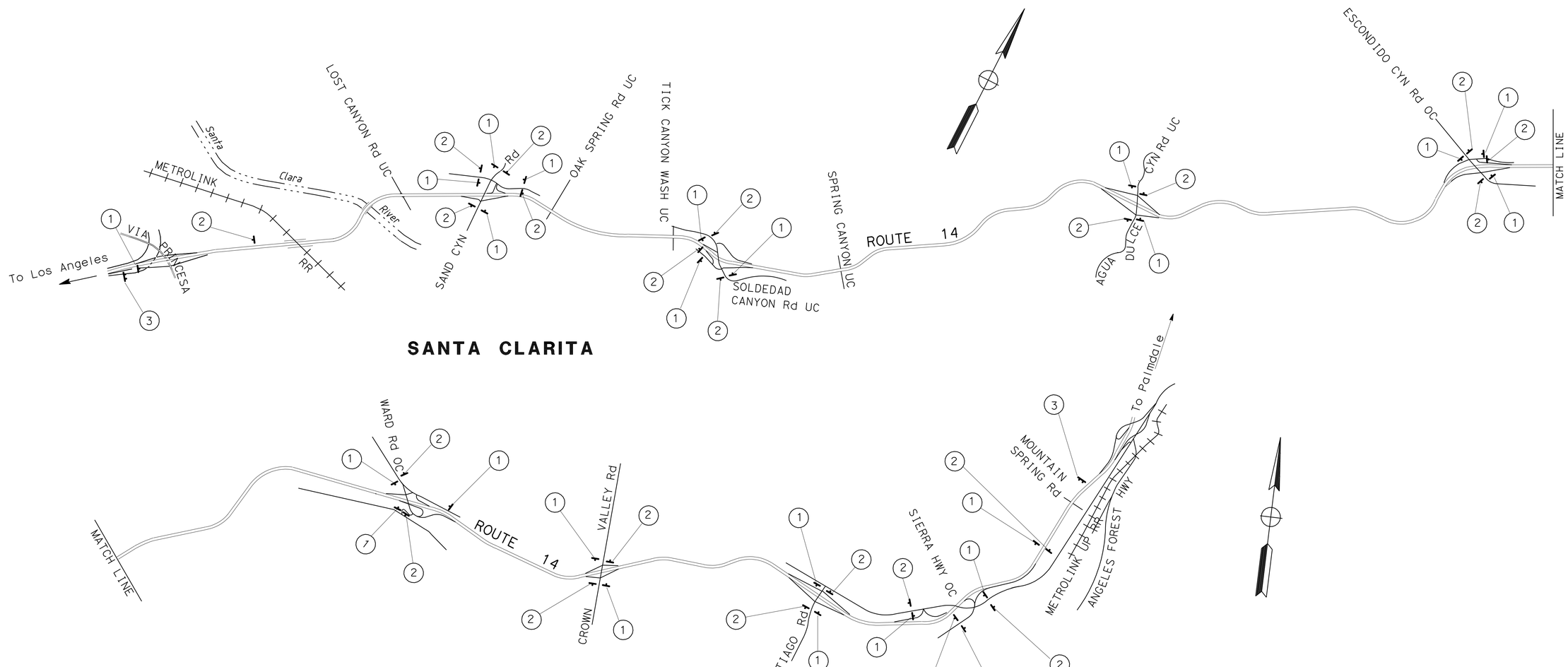

THIS PLAN ACCURATE FOR CONSTRUCTION AREA SIGNS ONLY

CONSTRUCTION AREA SIGNS

NO SCALE

CS-1

STATE OF CALIFORNIA - DEPARTMENT OF TRANSPORTATION
Caltrans® DESIGN

FUNCTIONAL SUPERVISOR: OJI KALU
CALCULATED-DESIGNED BY: CASIMIRO BAUTISTA
CHECKED BY: ANDY LIAO
REVISED BY / DATE REVISED

LAST REVISION 00-00-00
DATE PLOTTED => 23-AUG-2011
TIME PLOTTED => 16:16

Dist	COUNTY	ROUTE	POST MILES TOTAL PROJECT	SHEET No.	TOTAL SHEETS
07	LA	14	R32.1/R52.6	10	65

REGISTERED CIVIL ENGINEER 5-15-11 DATE

6-27-11
PLANS APPROVAL DATE

REGISTERED PROFESSIONAL ENGINEER MARTIN OREGEL No. C56816 Exp. 6-30-11 CIVIL STATE OF CALIFORNIA

THE STATE OF CALIFORNIA OR ITS OFFICERS OR AGENTS SHALL NOT BE RESPONSIBLE FOR THE ACCURACY OR COMPLETENESS OF SCANNED COPIES OF THIS PLAN SHEET.

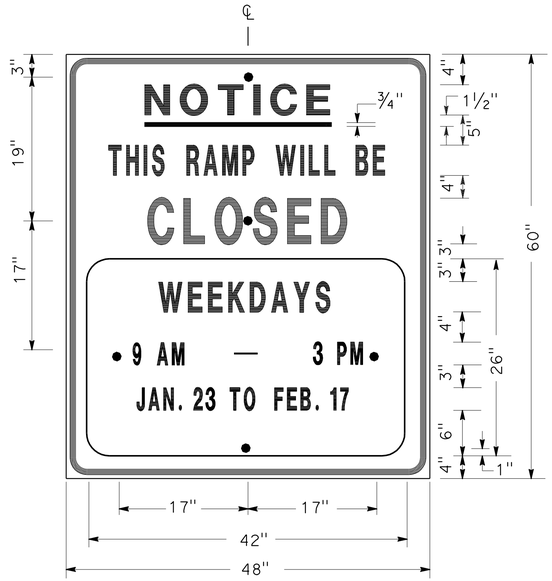

SIGN SP-1

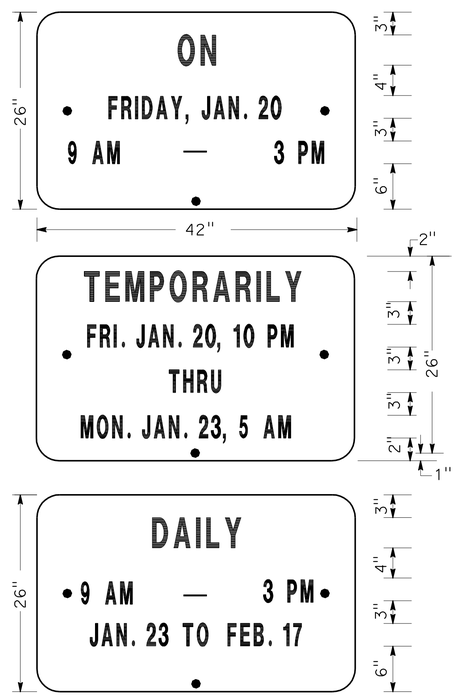

ALTERNATE OVERLAY PANELS (TYPICAL)

SPECIAL ADVANCE NOTICE PUBLICITY SIGN

NOTES: (SIGN SP-1)

1. SIGNS SHALL HAVE ORANGE RETROREFLECTORIZED BACKGROUND WITH BLACK BORDER AND LETTERS.
2. BOLT HOLES SHALL BE 3/8" DIAMETER.
3. BASE MATERIAL SHALL BE ALUMINUM (MINIMUM 0.06").
4. SIGNS SHALL BE MOUNTED WITH BOTTOMS OF SIGNS A MINIMUM OF 6' ABOVE GROUND.

SIZE	BORDER WIDTH	MARGIN WIDTH	LETTER SIZE					CORNER RADIUS
			LINE 1	LINE 2*	LINE 3	LINE 4	LINE 5,6 & 7*	
48"x60"	1 1/4"	3/4"	4E	4D	6E	4D		3"
42"x26"	OVERLAY						3D	1 1/2"
* CONDENSED SPACING IF NECESSARY								

SIGN SP-4

NOTES: (SIGN SP-4)

1. LETTERS - 6" SERIES C.
2. LETTERS AND BORDERS - BLACK ON RETROREFLECTORIZED WHITE BACKGROUND.
3. BASE MATERIAL SHALL BE ALUMINUM (MINIMUM 0.06").
4. SIGNS SHALL BE PLACED AT RAMP ENTRANCES IN ADDITION TO SIGNS POSTED IN ACCORDANCE WITH STANDARD PLAN T14.

SPECIAL SIGN FOR ENTRANCE RAMP CLOSURES

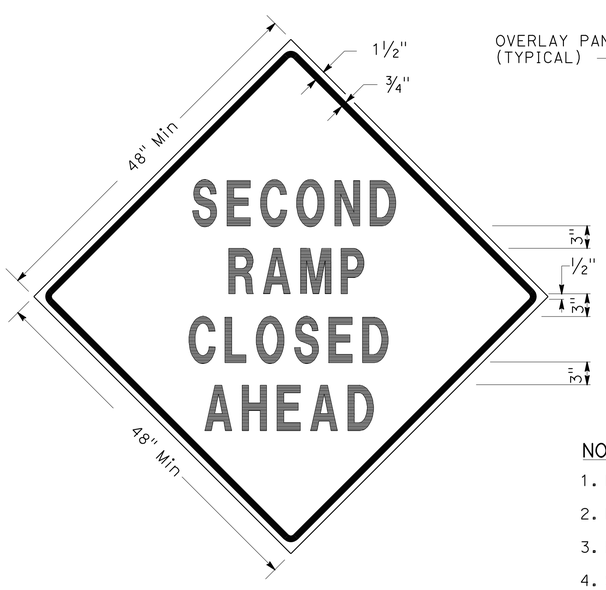

SIGN SP-3

SIGN SP-5

NOTES: (SIGNS SP-3 & SP-5)

1. LETTERS - 6" SERIES D.
2. LETTERS AND BORDERS - BLACK ON RETROREFLECTORIZED ORANGE BACKGROUND.
3. BASE MATERIAL SHALL BE ALUMINUM (MINIMUM 0.06").
4. SIGNS SHALL BE MOUNTED WITH BOTTOMS OF SIGNS A MINIMUM OF 6' ABOVE GROUND.

SPECIAL SIGN FOR EXIT RAMP CLOSURES

TRAFFIC HANDLING DETAILS
TRAFFIC CONTROL SYSTEM FOR RAMP CLOSURES, DETOUR SIGNS AND MISCELLANEOUS DETAILS
SHEET 1 OF 2
NO SCALE

THD-1

STATE OF CALIFORNIA - DEPARTMENT OF TRANSPORTATION
Caltrans DTM

FUNCTIONAL SUPERVISOR: JOHN YANG
CALCULATED-DESIGNED BY: ALBERT K YU
CHECKED BY: JOCELYN C CHIANG
REVISED BY: JC
DATE REVISED: 7/10

LAST REVISION DATE PLOTTED => 23-AUG-2011
TIME PLOTTED => 16:17
00-00-00

Dist	COUNTY	ROUTE	POST MILES TOTAL PROJECT	SHEET No.	TOTAL SHEETS
07	LA	14	R32.1/R52.6	11	65

REGISTERED CIVIL ENGINEER 5-15-11 DATE

6-27-11
PLANS APPROVAL DATE

REGISTERED PROFESSIONAL ENGINEER MARTIN OREGEL No. C56816 Exp. 6-30-11 CIVIL STATE OF CALIFORNIA

THE STATE OF CALIFORNIA OR ITS OFFICERS OR AGENTS SHALL NOT BE RESPONSIBLE FOR THE ACCURACY OR COMPLETENESS OF SCANNED COPIES OF THIS PLAN SHEET.

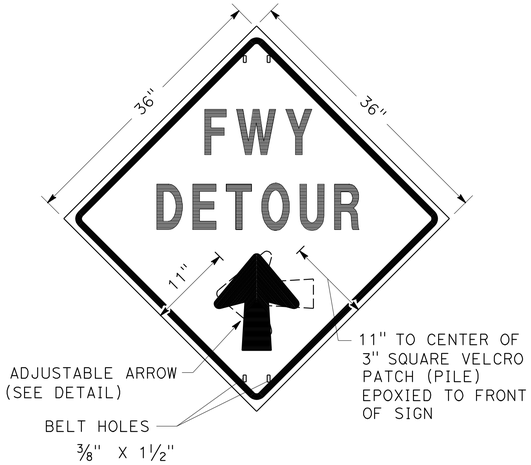

SIGN SP-2

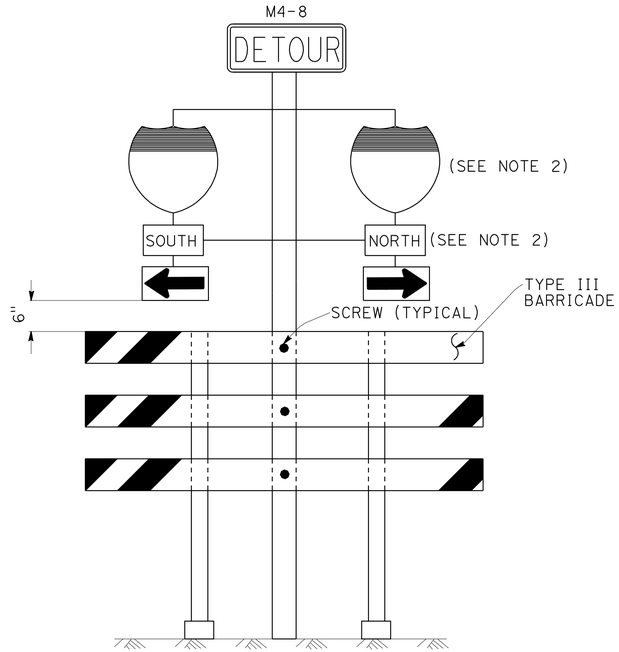

SIGN SP-6 (SEE NOTE 1)

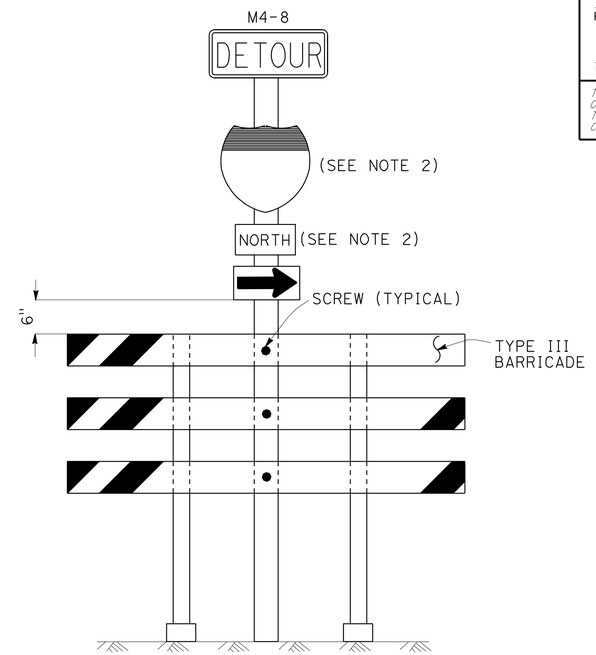

SIGN SP-7 (SEE NOTE 1)

NOTES: (SIGN SP-2)

1. LETTERS -6" SERIES E.
2. LETTERS, BORDER AND ARROW - BLACK ON RETROREFLECTORIZED ORANGE BACKGROUND.
3. BASE MATERIAL FOR SIGNS AND ARROWS SHALL BE ALUMINUM (MINIMUM 0.06").
4. BELTS (LUGGAGE STRAPS) SHALL BE 1" WIDE BY 48" LONG, MADE OF COTTON OR POLYPROPYLENE WEB MATERIAL.
5. SIGNS SHALL BE MOUNTED WITH BOTTOMS OF SIGNS A MINIMUM OF 6' ABOVE GROUND EXCEPT AS OTHERWISE SHOWN ON OTHER TRAFFIC HANDLING DETAILS PLANS.

ABBREVIATION

(CA) CALIFORNIA CODE

NOTES: (SIGNS SP-6 & SP-7)

1. IN LIEU OF PLACING SIGNS ON TYPE III BARRICADES, SIGNS, INCLUDING POSTS, MAY BE PLACED INTO THE GROUND OR FASTENED ONTO ELECTROLIERS.
2. USE APPROPRIATE ROUTE SHIELD [G26-2(CA), G27-2(CA), G28-2(CA)] AND CARDINAL DIRECTION [NORTH (M3-1), SOUTH (M3-3), EAST (M3-2), WEST (M3-4)]

SPECIAL PORTABLE FREEWAY DETOUR SIGNS

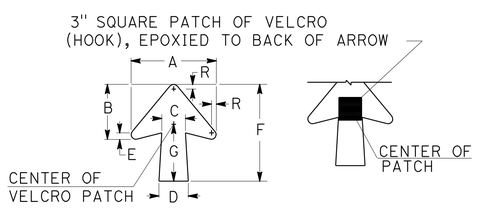

DIMENSIONS							
A	B	C	D	E	F	G	R
11 1/4"	7 1/4"	3 1/8"	4"	7/8"	13"	7 1/2"	5/8"

SPECIAL PORTABLE FREEWAY DETOUR SIGN

ADJUSTABLE ARROW DETAIL

TRAFFIC HANDLING DETAILS

TRAFFIC CONTROL SYSTEM FOR RAMP CLOSURES, DETOUR SIGNS AND MISCELLANEOUS DETAILS

SHEET 2 OF 2

NO SCALE

THD-2

STATE OF CALIFORNIA - DEPARTMENT OF TRANSPORTATION
Caltrans DTM

FUNCTIONAL SUPERVISOR: JOHN YANG
CALCULATED-DESIGNED BY: ALBERT K YU
CHECKED BY: JOCELYN C CHIANG
REVISED BY: JC
DATE REVISED: 7/10

LAST REVISION: DATE PLOTTED => 23-AUG-2011
00-00-00 TIME PLOTTED => 16:17

Dist	COUNTY	ROUTE	POST MILES TOTAL PROJECT	SHEET No.	TOTAL SHEETS
07	LA	14	R32.1/R52.6	12	65

REGISTERED CIVIL ENGINEER 5-15-11 DATE

6-27-11
PLANS APPROVAL DATE

REGISTERED PROFESSIONAL ENGINEER MARTIN OREGEL No. C56816 Exp. 6-30-11 CIVIL STATE OF CALIFORNIA

THE STATE OF CALIFORNIA OR ITS OFFICERS OR AGENTS SHALL NOT BE RESPONSIBLE FOR THE ACCURACY OR COMPLETENESS OF SCANNED COPIES OF THIS PLAN SHEET.

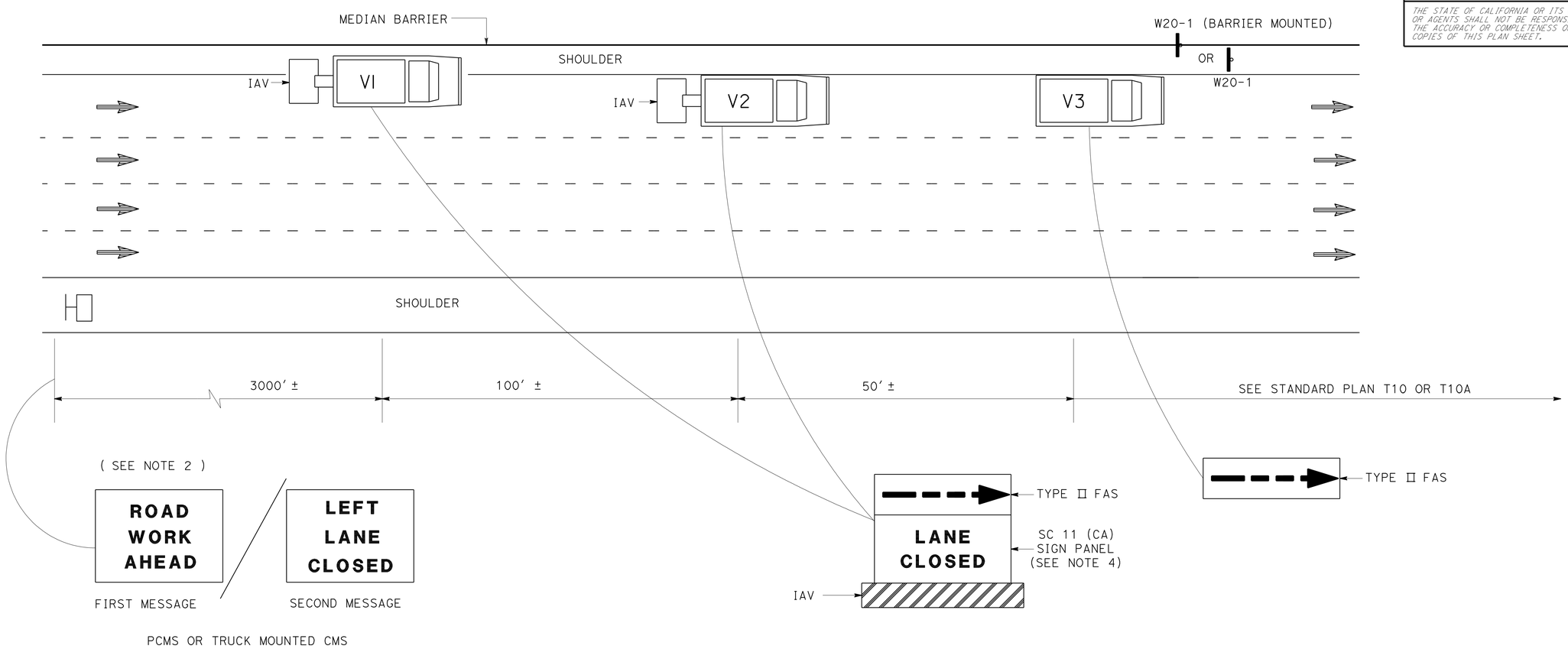

NOTES:

1. LANE CLOSURES SHALL NOT BE PLACED ON CREST VERTICAL CURVES OR ON HORIZONTAL CURVES.
2. PCMS SHALL BE ACTIVATED PRIOR TO TRAFFIC CONTROL ACTIVITIES ON THE LANE.
3. A MINIMUM SIGHT DISTANCE OF 1500′ SHALL BE PROVIDED IN ADVANCE OF PCMS.
4. VEHICLE-MOUNTED SIGN PANELS SHALL BE TYPE III OR IV RETROREFLECTORIZED SHEETING, BLACK ON WHITE OR BLACK ON ORANGE WITH 8" MINIMUM SERIES D LETTERS PER CALTRANS SIGN SPECIFICATIONS.

LEGEND

V1, V2	SHADOW VEHICLE
V3	WORK/APPLICATION VEHICLE
	PORTABLE CHANGEABLE MESSAGE SIGN (PCMS)
	DIRECTION OF TRAVEL
	CONSTRUCTION AREA SIGN

ABBREVIATIONS

FAS	FLASHING ARROW SIGN
IAV	IMPACT ATTENUATOR VEHICLE
CMS	CHANGEABLE MESSAGE SIGN
PCMS	PORTABLE CHANGEABLE MESSAGE SIGN
(CA)	CALIFORNIA CODE

TRAFFIC HANDLING DETAILS
TRAFFIC CONTROL SYSTEM FOR MEDIAN SHOULDERS LESS THAN 8 FEET

NO SCALE

THD-3

STATE OF CALIFORNIA - DEPARTMENT OF TRANSPORTATION
Caltrans DTM

FUNCTIONAL SUPERVISOR: JOHN YANG
CALCULATED-DESIGNED BY: ALBERT K YU
CHECKED BY: JOCELYN C CHIANG
REVISED BY: JC
DATE REVISED: 7/10

LAST REVISION 00-00-00
DATE PLOTTED => 23-AUG-2011
TIME PLOTTED => 16:17

Dist	COUNTY	ROUTE	POST MILES TOTAL PROJECT	SHEET No.	TOTAL SHEETS
07	LA	14	R32.1/R52.6	13	65

REGISTERED CIVIL ENGINEER 5-15-11 DATE

6-27-11
PLANS APPROVAL DATE

REGISTERED PROFESSIONAL ENGINEER MARTIN OREGEL No. C56816 Exp. 6-30-11 CIVIL STATE OF CALIFORNIA

THE STATE OF CALIFORNIA OR ITS OFFICERS OR AGENTS SHALL NOT BE RESPONSIBLE FOR THE ACCURACY OR COMPLETENESS OF SCANNED COPIES OF THIS PLAN SHEET.

NOTES:

1. LANE CLOSURES SHALL NOT BE PLACED ON CREST VERTICAL CURVES OR ON HORIZONTAL CURVES.
2. PCMS SHALL BE ACTIVATED PRIOR TO TRAFFIC CONTROL ACTIVITIES ON THE HOV LANE.
3. A MINIMUM SIGHT DISTANCE OF 1500′ SHALL BE PROVIDED IN ADVANCE OF PCMS.
4. VEHICLE-MOUNTED SIGN PANELS SHALL BE TYPE III OR IV RETROREFLECTORIZED SHEETING, BLACK ON WHITE OR BLACK ON ORANGE WITH 8" MINIMUM SERIES D LETTERS PER CALTRANS SIGN SPECIFICATIONS.
5. PLACE PCMS ON THE MEDIAN SHOULDER WHERE SUFFICIENT ROOM (SUCH AS CHP ENFORCEMENT AREAS) EXISTS.

LEGEND

V1, V2	SHADOW VEHICLE
V3	WORK/APPLICATION VEHICLE
	PORTABLE CHANGEABLE MESSAGE SIGN (PCMS)
	DIRECTION OF TRAVEL
	HOV LANE

ABBREVIATIONS

FAS	FLASHING ARROW SIGN
IAV	IMPACT ATTENUATOR VEHICLE
CMS	CHANGEABLE MESSAGE SIGN
(CA)	CALIFORNIA CODE
PCMS	PORTABLE CHANGEABLE MESSAGE SIGN
HOV	HIGH OCCUPANCY VEHICLE

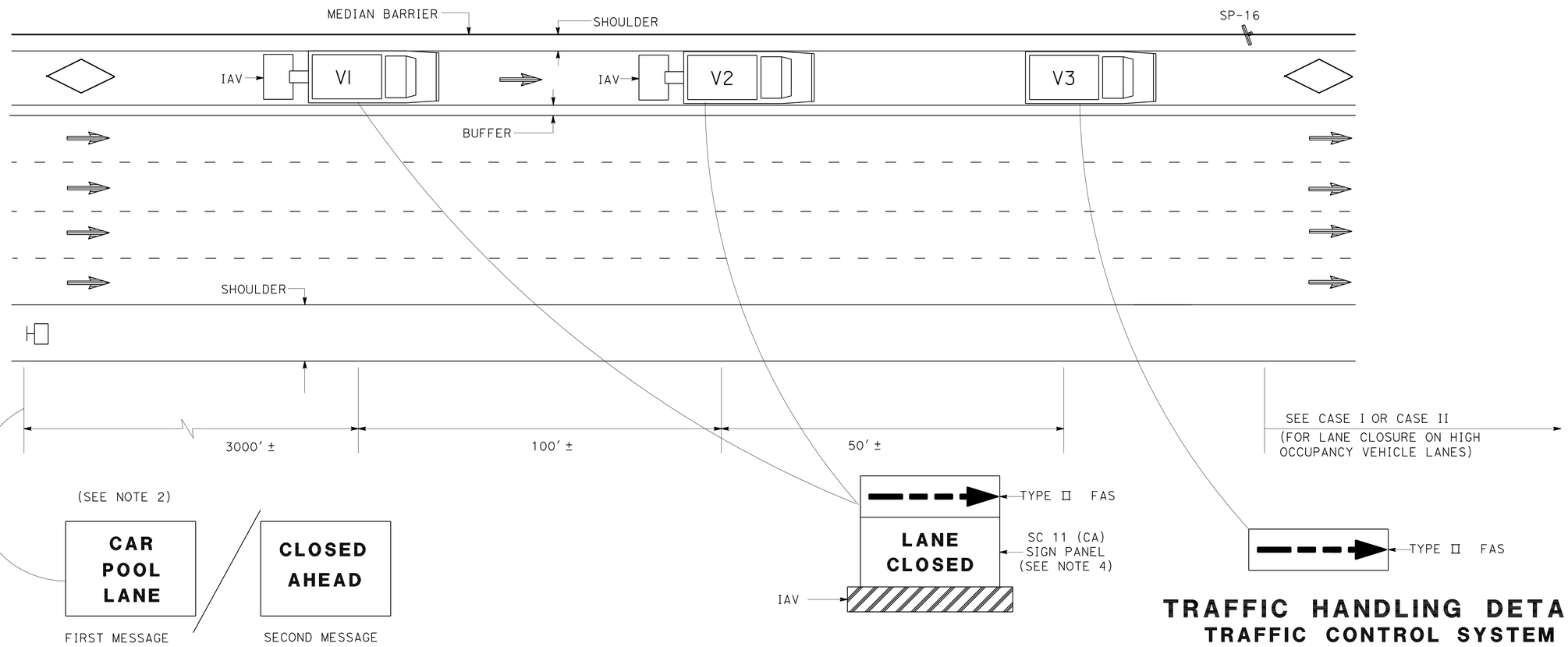

PCMS/TRUCK MOUNTED CMS
(SEE NOTE 5)

TRAFFIC HANDLING DETAILS
TRAFFIC CONTROL SYSTEM FOR HIGH OCCUPANCY VEHICLE LANES WITH MEDIAN SHOULDERS LESS THAN 8 FEET

NO SCALE

THD-4

STATE OF CALIFORNIA - DEPARTMENT OF TRANSPORTATION
Caltrans
DTM

FUNCTIONAL SUPERVISOR: JOHN YANG
CALCULATED-DESIGNED BY: ALBERT K YU
CHECKED BY: JOCELYN C CHIANG
REVISED BY: JC
DATE REVISED: 7/10

LAST REVISION 00-00-00
DATE PLOTTED => 23-AUG-2011
TIME PLOTTED => 16:17

Dist	COUNTY	ROUTE	POST MILES TOTAL PROJECT	SHEET No.	TOTAL SHEETS
07	LA	14	R32.1/R52.6	14	65

REGISTERED CIVIL ENGINEER 5-15-11 DATE

6-27-11
PLANS APPROVAL DATE

REGISTERED PROFESSIONAL ENGINEER MARTIN OREGEL No. C56816 Exp. 6-30-11 CIVIL STATE OF CALIFORNIA

THE STATE OF CALIFORNIA OR ITS OFFICERS OR AGENTS SHALL NOT BE RESPONSIBLE FOR THE ACCURACY OR COMPLETENESS OF SCANNED COPIES OF THIS PLAN SHEET.

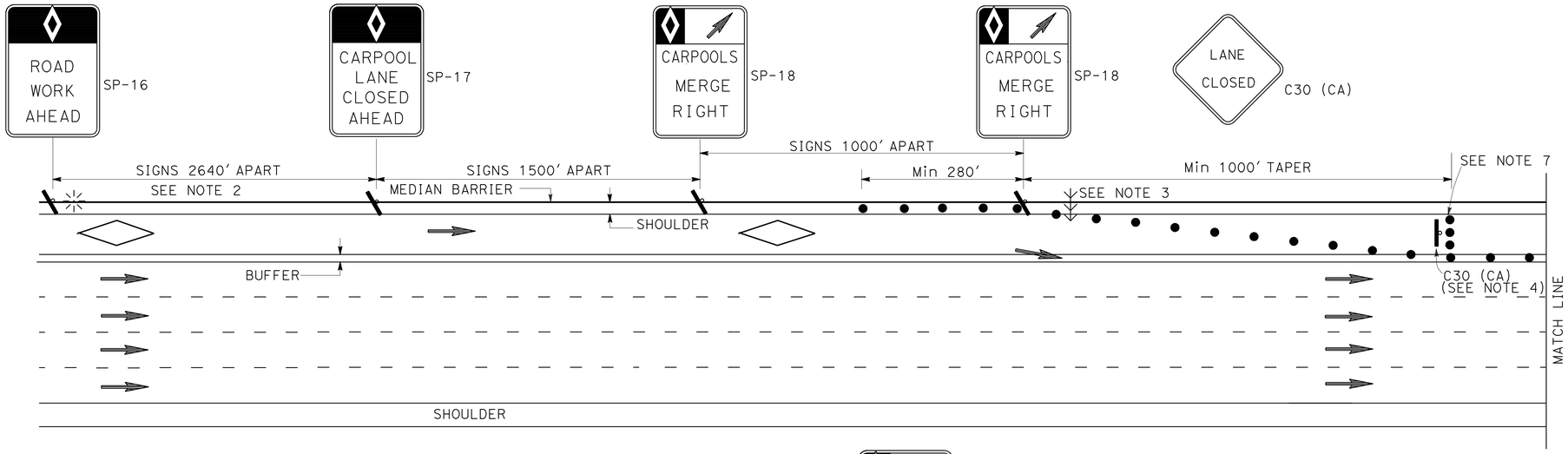

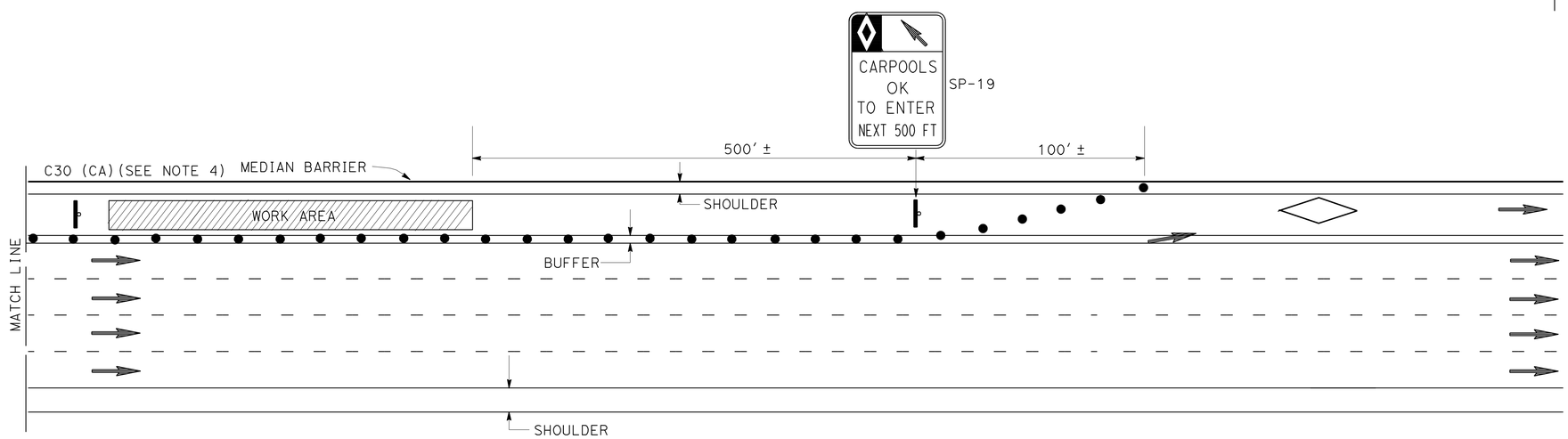

ABBREVIATIONS

(CA) CALIFORNIA CODE

HOV HIGH OCCUPANCY VEHICLE

NOTES: FOR CASE I AND CASE II

1. AT LEAST ONE PERSON SHALL BE ASSIGNED TO FULL TIME MAINTENANCE OF TRAFFIC CONTROL DEVICES ON NIGHT LANE CLOSURES OR DAY-TIME CLOSURES EXCEEDING 1 MILE LENGTH, INCLUDING TAPERS.
2. ADVANCE WARNING SIGN INSTALLATIONS SHALL BE EQUIPPED WITH FLAGS FOR DAYTIME CLOSURES. TYPE B HIGH INTENSITY FLASHING WARNING LIGHTS SHALL BE USED ON SP-16 SIGNS DURING NIGHT LANE CLOSURES. FLAGS AND WARNING LIGHTS SHALL BE ATTACHED TO SIGNS AS APPROVED BY THE ENGINEER.
3. THE FLASHING ARROW SIGN SHALL BE TYPE I.
4. PLACE C30 (CA) SIGNS EVERY 2000' THROUGHOUT THE LENGTH OF LANE CLOSURE.
5. A MINIMUM 1500' OF SIGHT DISTANCE SHALL BE PROVIDED WHERE POSSIBLE FOR VEHICLES APPROACHING THE FLASHING ARROW SIGN. LANE CLOSURES SHALL NOT BE PLACED ON CREST VERTICAL CURVES OR ON HORIZONTAL CURVES.
6. PORTABLE DELINEATORS PLACED AT ONE-HALF THE SPACING INDICATED FOR TRAFFIC CONES MAY BE USED INSTEAD OF CONES FOR DAYTIME CLOSURES.
7. A MINIMUM OF 3 CONES SHALL BE PLACED TRANSVERSELY ACROSS CLOSED LANES WHERE TAPERS END AND EVERY 2000'. TWO TYPE II BARRICADES MAY BE USED INSTEAD OF 3 CONES. THE ALIGNMENT OF CONES OR BARRICADES MAY BE SHIFTED FROM THE TRANSVERSE ALIGNMENT TO PROVIDE ACCESS TO WORK.
8. IF AN INGRESS/EGRESS AREA IS WITHIN 5250' UPSTREAM OR DOWNSTREAM OF THE WORK AREA, LANE CLOSURES SHALL BE EXTENDED TO THAT AREA AS SHOWN IN CASE II.
9. SIGNS SP-16, 17, 18, AND 19 MAY BE OVERLAID ON EXISTING CARPOOL SIGNS IN MEDIANS AS APPROVED BY THE ENGINEER.
10. SIGNS SP-16, 17, 18, AND C30 (CA) SHALL BE BLACK ON ORANGE BACKGROUND. SIGN SP-19 SHALL BE BLACK ON WHITE BACKGROUND. DIAMONDS ON SIGNS SHALL BE WHITE.
11. FOR CLOSURE OF LANE(S) ADJACENT TO HOV LANES, SEE CASE II.
12. THE MAXIMUM SPACING BETWEEN CONES SHALL BE APPROXIMATELY 50' IN TAPERS AND 100' ON TANGENTS.

LEGEND

- CONE
- FLASHING BEACON
- HOV LANE
- FLASHING ARROW SIGN
- PORTABLE SIGN
- DIRECTION OF TRAVEL

SIGN PANEL

SIZE (MIN)

SP-16 36" X 54"
SP-17 36" X 54"
SP-18 36" X 48"
SP-19 36" X 60"
C30 (CA) 30" X 30"
G20-2 48" X 24"

TRAFFIC HANDLING DETAILS
TRAFFIC CONTROL SYSTEM FOR HIGH OCCUPANCY VEHICLE LANES AT NON-INGRESS/EGRESS AREAS
CASE I
NO SCALE

THD-5

CALCULATED-DESIGNED BY	CHECKED BY	REVISED BY	DATE REVISED	FUNCTIONAL SUPERVISOR
ALBERT K YU	JOCELYN C CHIANG	JC	7/10	JOHN YANG

STATE OF CALIFORNIA - DEPARTMENT OF TRANSPORTATION
Caltrans DTM

LAST REVISION 00-00-00 | DATE PLOTTED => 23-AUG-2011 | TIME PLOTTED => 16:17

Dist	COUNTY	ROUTE	POST MILES TOTAL PROJECT	SHEET No.	TOTAL SHEETS
07	LA	14	R32.1/R52.6	15	65

REGISTERED CIVIL ENGINEER 5-15-11 DATE

6-27-11
PLANS APPROVAL DATE

REGISTERED PROFESSIONAL ENGINEER MARTIN OREGEL No. C56816 Exp. 6-30-11 CIVIL STATE OF CALIFORNIA

THE STATE OF CALIFORNIA OR ITS OFFICERS OR AGENTS SHALL NOT BE RESPONSIBLE FOR THE ACCURACY OR COMPLETENESS OF SCANNED COPIES OF THIS PLAN SHEET.

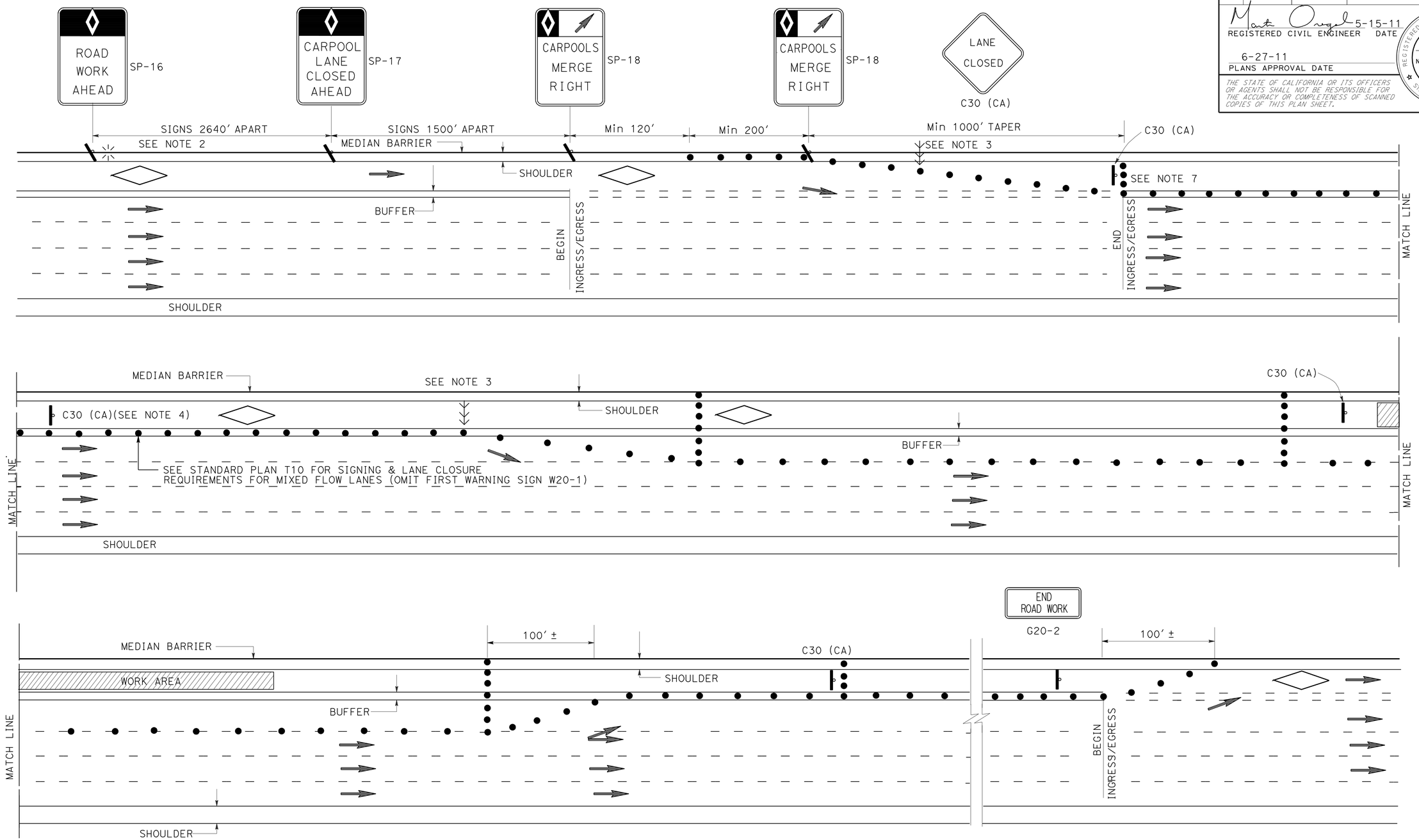

NOTES:

1. SEE CASE I FOR NOTES, LEGENDS AND ABBREVIATIONS FOR THIS SHEET.
2. CLOSURES OF ONE MIXED FLOW TRAFFIC LANE ADJACENT TO HOV LANE SHOWN. MULTIPLE MIXED FLOW LANE CLOSURES ARE SIMILAR.

TRAFFIC HANDLING DETAILS
TRAFFIC CONTROL SYSTEM FOR HIGH OCCUPANCY VEHICLE LANES AND ADJACENT FREEWAY LANES BETWEEN INGRESS/EGRESS AREAS
CASE II

NO SCALE

THD-6

REVISED BY	DATE REVISED
JC	7/10

CALCULATED-DESIGNED BY: ALBERT K YU
CHECKED BY: JOCELYN C CHIANG
FUNCTIONAL SUPERVISOR: JOHN YANG

STATE OF CALIFORNIA - DEPARTMENT OF TRANSPORTATION
DTM
Caltrans

LAST REVISION 00-00-00
DATE PLOTTED => 23-AUG-2011
TIME PLOTTED => 16:18

Dist	COUNTY	ROUTE	POST MILES TOTAL PROJECT	SHEET No.	TOTAL SHEETS
07	LA	14	R32.1/R52.6	16	65

REGISTERED CIVIL ENGINEER 5-15-11 DATE

6-27-11
PLANS APPROVAL DATE

REGISTERED PROFESSIONAL ENGINEER MARTIN OREGEL No. C56816 Exp. 6-30-11 CIVIL STATE OF CALIFORNIA

THE STATE OF CALIFORNIA OR ITS OFFICERS OR AGENTS SHALL NOT BE RESPONSIBLE FOR THE ACCURACY OR COMPLETENESS OF SCANNED COPIES OF THIS PLAN SHEET.

NOTES:

1. WORDING DISPLAYED ON PCMS WILL BE APPROVED BY THE ENGINEER.
2. EXACT LOCATIONS OF PCMS WILL BE DETERMINED BY THE ENGINEER.
3. CHANGE PCMS MESSAGE AT THE BEGINNING OF CURE PERIOD TO REFLECT NUMBER OF CLOSED LANES.

ABBREVIATIONS

PCMS PORTABLE CHANGEABLE MESSAGE SIGN

(CA) CALIFORNIA CODE

LEGEND

- CONE
- PORTABLE SIGN
- DIRECTION OF TRAVEL
- PORTABLE CHANGEABLE MESSAGE SIGN (PCMS)
- (CA) CALIFORNIA CODE

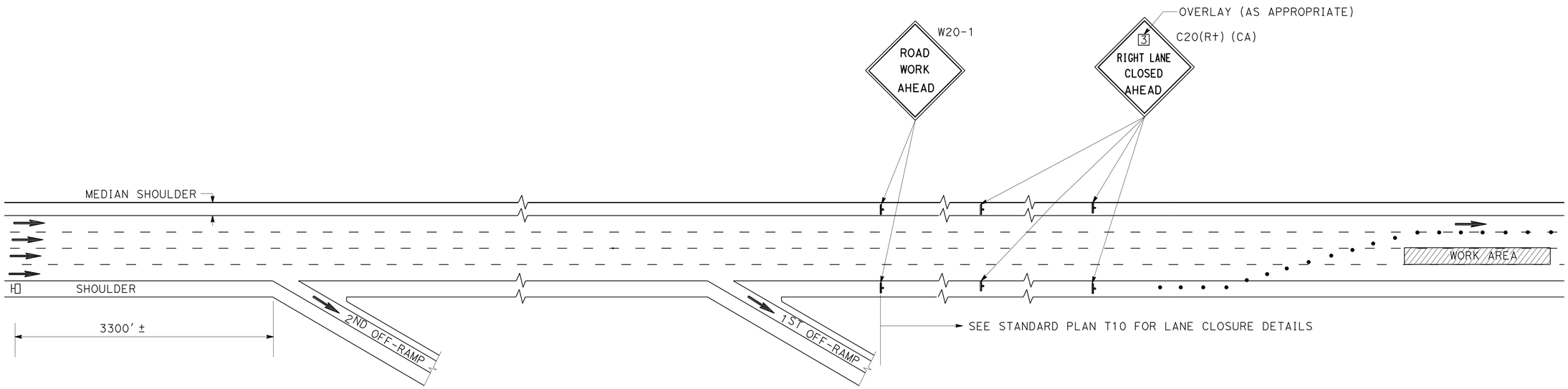

FIRST FLASH MESSAGE	X (NO OF LANES)RIGHT/LEFT	1ST LINE (TYPICAL)
	LANES	2ND LINE (TYPICAL)
	CLOSED	3RD LINE (TYPICAL)
SECOND FLASH MESSAGE	A ST	LIMIT OF CLOSURE (TYPICAL)
	TO	
	B DR	LIMIT OF CLOSURE (TYPICAL)

WORDING FOR PORTABLE CHANGEABLE MESSAGE SIGN

TRAFFIC HANDLING DETAILS
TRAFFIC CONTROL SYSTEM FOR CONCRETE PAVEMENT AND APPROACH SLAB REPLACEMENT
NO SCALE

THD-7

STATE OF CALIFORNIA - DEPARTMENT OF TRANSPORTATION
Caltrans DTM

FUNCTIONAL SUPERVISOR: JOHN YANG
CALCULATED-DESIGNED BY: JOCELYN C CHIANG
CHECKED BY: ALBERT K YU
REVISED BY: JC
DATE REVISED: 7/10

LAST REVISION 00-00-00
DATE PLOTTED => 23-AUG-2011
TIME PLOTTED => 16:18

Dist	COUNTY	ROUTE	POST MILES TOTAL PROJECT	SHEET No.	TOTAL SHEETS
07	LA	14	R32.1/R52.6	17	65

REGISTERED CIVIL ENGINEER 5-15-11 DATE

6-27-11
PLANS APPROVAL DATE

REGISTERED PROFESSIONAL ENGINEER MARTIN OREGEL No. C56816 Exp. 6-30-11 CIVIL STATE OF CALIFORNIA

THE STATE OF CALIFORNIA OR ITS OFFICERS OR AGENTS SHALL NOT BE RESPONSIBLE FOR THE ACCURACY OR COMPLETENESS OF SCANNED COPIES OF THIS PLAN SHEET.

LEGEND

- IAV V1 — TRAFFIC CONTROL CREW No. 1
- IAV V2 — TRAFFIC CONTROL CREW No. 2
- CHP — CALIFORNIA HIGHWAY PATROL CAR
- ● CONES FOR INITIAL LANE CLOSURE
- △ CONES FOR SECOND STAGE LANE CLOSURE
- 1 → DIRECTION OF TRAVEL FOR INITIAL LANE CLOSURE
- 2 → DIRECTION OF TRAVEL FOR SECOND STAGE LANE CLOSURE
- FLASHING ARROW SIGN
- PORTABLE SIGN
- PORTABLE CHANGEABLE MESSAGE SIGN (PCMS)

NOTES:

1. SEE STANDARD PLAN T10 FOR LANE CLOSURE DETAILS NOT SHOWN.
2. ACTIVATE PCMS ONLY DURING SECOND STAGE LANE CLOSURE INSTALLATION.
3. THE MESSAGE FOR PCMS IS: "SLOW - PREPARE/TO/STOP".

ABBREVIATIONS

(CA) CALIFORNIA CODE

PCMS PORTABLE CHANGEABLE MESSAGE SIGN

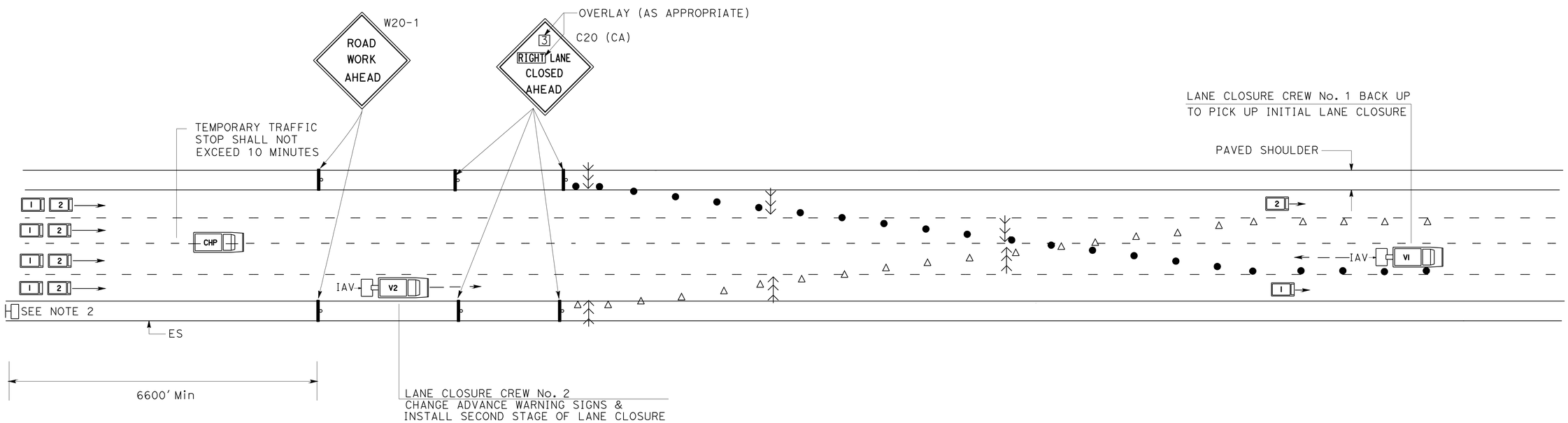

TRAFFIC HANDLING DETAILS
TRAFFIC CONTROL SYSTEM FOR "FLIP-FLOP" OPERATIONS
NO SCALE

THD-8

STATE OF CALIFORNIA - DEPARTMENT OF TRANSPORTATION
Caltrans DTM

FUNCTIONAL SUPERVISOR: JOHN YANG
CALCULATED-DESIGNED BY: ALBERT K YU
CHECKED BY: JOCELYN C CHIANG
REVISED BY: JC
DATE REVISED: 7/10

LAST REVISION DATE PLOTTED => 23-AUG-2011
00-00-00 TIME PLOTTED => 16:18

Dist	COUNTY	ROUTE	POST MILES TOTAL PROJECT	SHEET No.	TOTAL SHEETS
07	LA	14	R32.1/R52.6	18	65

REGISTERED CIVIL ENGINEER 5-15-11 DATE

6-27-11
PLANS APPROVAL DATE

REGISTERED PROFESSIONAL ENGINEER
MARTIN OREGEL
No. C56816
Exp. 6-30-11
CIVIL
STATE OF CALIFORNIA

THE STATE OF CALIFORNIA OR ITS OFFICERS OR AGENTS SHALL NOT BE RESPONSIBLE FOR THE ACCURACY OR COMPLETENESS OF SCANNED COPIES OF THIS PLAN SHEET.

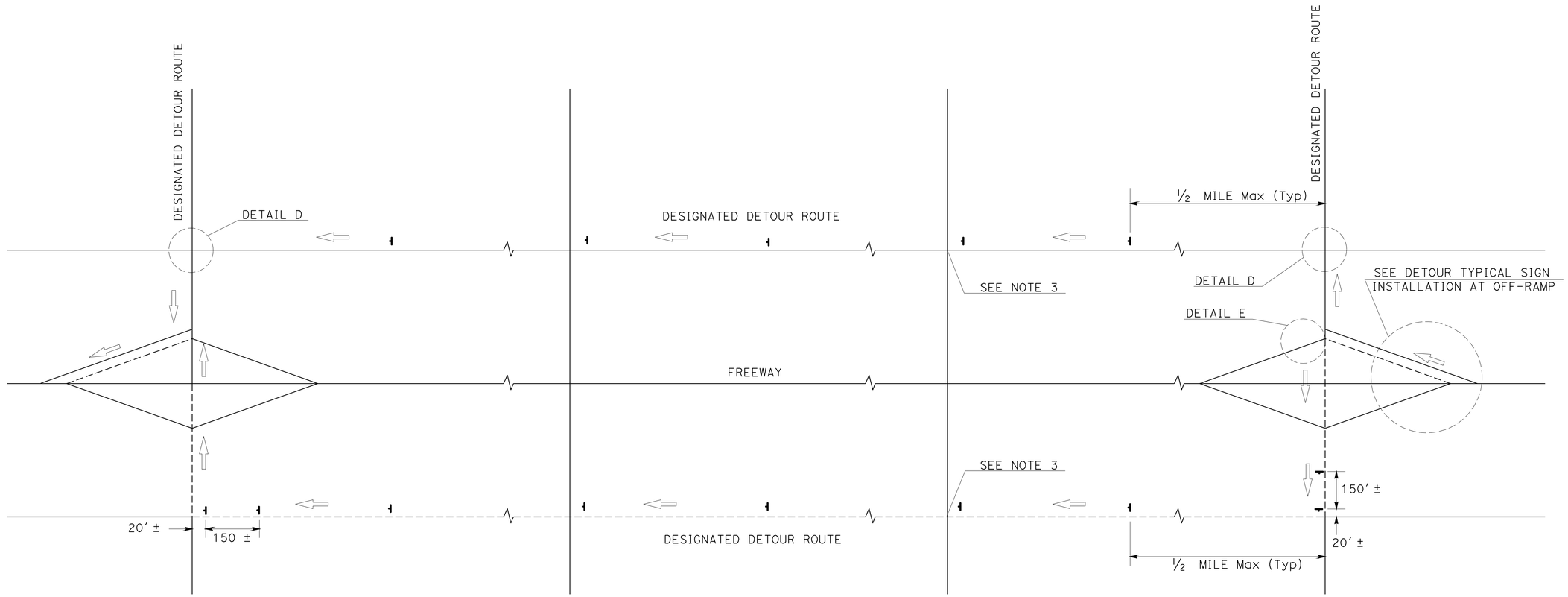

TYPICAL DETOUR SIGN INSTALLATION ALONG DESIGNATED DETOUR ROUTE

LEGEND

- TEMPORARY SIGN (SP-2)
- AND/OR DESIGNATED DETOUR ROUTE
- DIRECTION OF TRAVEL

NOTES:

1. SP-2 SIGNS SHALL NOT BE INSTALLED ON BARRICADES EXCEPT AS OTHERWISE SHOWN.
2. SIGN LOCATIONS ARE APPROXIMATE. EXACT LOCATIONS WILL BE DETERMINED BY THE ENGINEER.
3. SP-2 SIGNS SHALL BE POSTED AT SIGNALIZED INTERSECTIONS ALONG THE DESIGNATED DETOUR ROUTE OR ½ MILE MAXIMUM APART.

TRAFFIC HANDLING DETAILS

TRAFFIC CONTROL SYSTEM FOR DETOUR SIGN INSTALLATION ALONG DESIGNATED DETOUR ROUTE

SHEET 1 OF 2

NO SCALE

THD-9

STATE OF CALIFORNIA - DEPARTMENT OF TRANSPORTATION
DTM
Caltrans

FUNCTIONAL SUPERVISOR: JOHN YANG
CALCULATED-DESIGNED BY: ALBERT K YU
CHECKED BY: JOCELYN C CHIANG
REVISED BY: JC
DATE REVISED: 7/10

LAST REVISION 00-00-00
DATE PLOTTED => 23-AUG-2011
TIME PLOTTED => 16:18

Dist	COUNTY	ROUTE	POST MILES TOTAL PROJECT	SHEET No.	TOTAL SHEETS
07	LA	14	R32.1/R52.6	19	65

REGISTERED CIVIL ENGINEER 5-15-11 DATE

6-27-11
PLANS APPROVAL DATE

REGISTERED PROFESSIONAL ENGINEER MARTIN OREGEL No. C56816 Exp. 6-30-11 CIVIL STATE OF CALIFORNIA

THE STATE OF CALIFORNIA OR ITS OFFICERS OR AGENTS SHALL NOT BE RESPONSIBLE FOR THE ACCURACY OR COMPLETENESS OF SCANNED COPIES OF THIS PLAN SHEET.

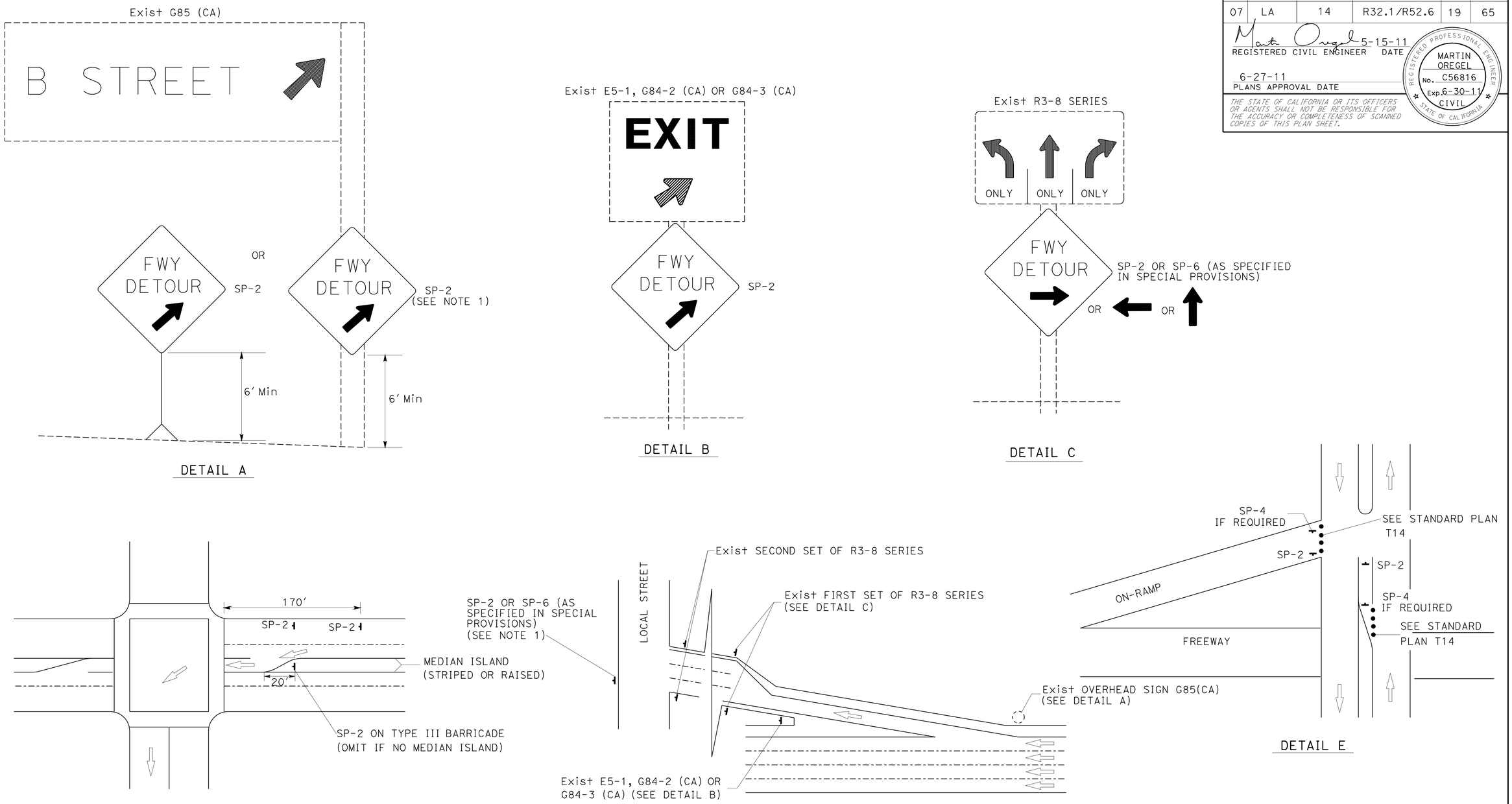

TYPICAL DETOUR SIGN INSTALLATION AT OFF-RAMP

NOTES:

1. TEMPORARY SIGNS MAY BE STRAPPED ON EXISTING ELECTROLIER, SIGNAL POSTS, OR SIGN POSTS.

ABBREVIATIONS

(CA) CALIFORNIA CODE

LEGENDS

- TRAFFIC CONE
- TEMPORARY SIGN
- DIRECTION OF TRAVEL
- EXISTING OVERHEAD SIGN

TRAFFIC HANDLING DETAILS
TRAFFIC CONTROL SYSTEM FOR DETOUR SIGN INSTALLATION ALONG DESIGNATED DETOUR ROUTE
SHEET 2 OF 2
NO SCALE

THD-10

STATE OF CALIFORNIA - DEPARTMENT OF TRANSPORTATION
Caltrans® DTM

FUNCTIONAL SUPERVISOR: JOHN YANG
CALCULATED-DESIGNED BY: ALBERT K YU
CHECKED BY: JOCELYN C CHIANG
REVISED BY: JC
DATE REVISED: 7/10

LAST REVISION 00-00-00
DATE PLOTTED => 23-AUG-2011
TIME PLOTTED => 16:18

Dist	COUNTY	ROUTE	POST MILES TOTAL PROJECT	SHEET No.	TOTAL SHEETS
07	LA	14	R32.1/R52.6	20	65

REGISTERED CIVIL ENGINEER 5-15-11 DATE

6-27-11
PLANS APPROVAL DATE

REGISTERED PROFESSIONAL ENGINEER MARTIN OREGEL No. C56816 Exp. 6-30-11 CIVIL STATE OF CALIFORNIA

THE STATE OF CALIFORNIA OR ITS OFFICERS OR AGENTS SHALL NOT BE RESPONSIBLE FOR THE ACCURACY OR COMPLETENESS OF SCANNED COPIES OF THIS PLAN SHEET.

LEGEND:

- CONE
- PORTABLE SIGN
- DIRECTION OF TRAVEL
- PORTABLE CHANGEABLE MESSAGE SIGN (PCMS)
- HOV LANE
- FLASHING ARROW SIGN (FAS)
- FAS SUPPORT OR TRAILER

NOTES:

1. WORDING DISPLAYED ON PCMS WILL BE APPROVED BY THE ENGINEER.
2. EXACT LOCATIONS OF PCMS WILL BE DETERMINED BY THE ENGINEER.
3. CHANGE PCMS MESSAGE AT THE BEGINNING OF CURE PERIOD TO REFLECT NUMBER OF CLOSED LANES.

ABBREVIATIONS:

PCMS PORTABLE CHANGEABLE MESSAGE SIGN
(CA) CALIFORNIA CODE

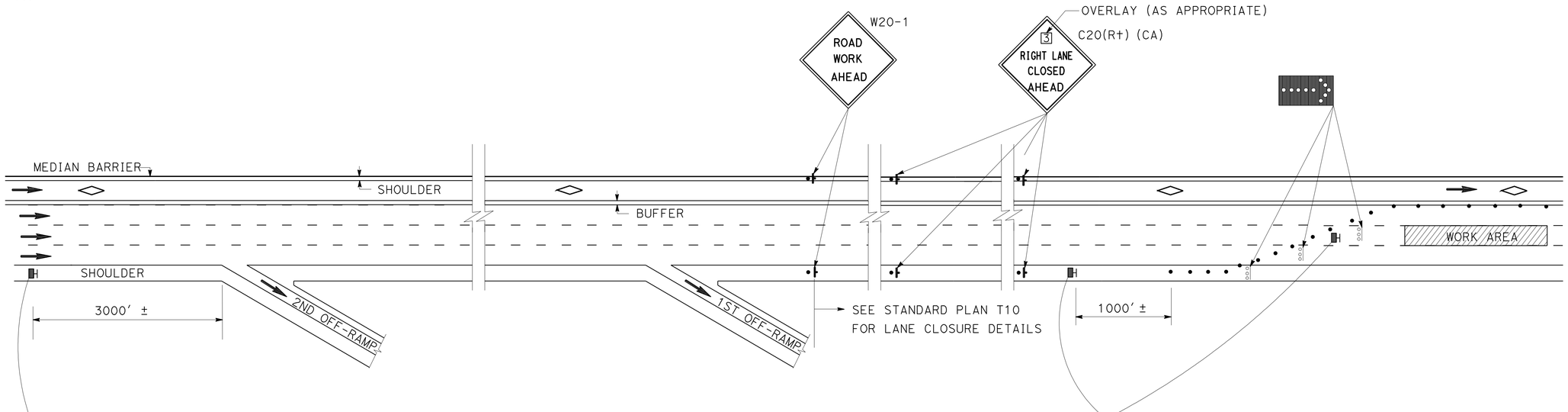

FIRST FLASH MESSAGE	**X (NO OF LANES)RIGHT/LEFT**	1ST LINE (TYPICAL)
	LANES	2ND LINE (TYPICAL)
	CLOSED	3RD LINE (TYPICAL)
SECOND FLASH MESSAGE	**A ST**	LIMIT OF CLOSURE (TYPICAL)
	TO	
	B DR	LIMIT OF CLOSURE (TYPICAL)

FIRST FLASH MESSAGE	**ALL**	1ST LINE (TYPICAL)
	TRAFFIC	2ND LINE (TYPICAL)
SECOND FLASH MESSAGE	**OK USE**	1ST LINE (TYPICAL)
	CARPOOL	2ND LINE (TYPICAL)
	LANE	3RD LINE (TYPICAL)

TRAFFIC HANDLING DETAILS
TRAFFIC CONTROL SYSTEM
WITH HIGH OCCUPANCY VEHICLE LANES
FOR PORTABLE CHANGEABLE MESSAGE SIGN LOCATIONS
FOR CONCRETE PAVEMENT AND APPROACH SLAB REPLACEMENT

NO SCALE

THD-11

STATE OF CALIFORNIA - DEPARTMENT OF TRANSPORTATION
Caltrans
DTM
FUNCTIONAL SUPERVISOR: JOHN YANG
CALCULATED-DESIGNED BY: A HEDAYATI
CHECKED BY: M OREGEL
REVISED BY: DV
DATE REVISED: 3/09

LAST REVISION 00-00-00
DATE PLOTTED => 23-AUG-2011
TIME PLOTTED => 16:19

Dist	COUNTY	ROUTE	POST MILES TOTAL PROJECT	SHEET No.	TOTAL SHEETS
07	LA	14	R32.1/R52.6	21	65

REGISTERED CIVIL ENGINEER 5/06/11 DATE

6-27-11
PLANS APPROVAL DATE

REGISTERED PROFESSIONAL ENGINEER DARA LOEUNG No. 65470 Exp. 9/30/11 CIVIL STATE OF CALIFORNIA

THE STATE OF CALIFORNIA OR ITS OFFICERS OR AGENTS SHALL NOT BE RESPONSIBLE FOR THE ACCURACY OR COMPLETENESS OF SCANNED COPIES OF THIS PLAN SHEET.

NOTES:

1. THE CONTRACTOR SHALL VERIFY ALL PAVEMENT DELINEATION DETAILS PRIOR TO CONSTRUCTION. DETAILS SHOWN IN QUANITY TABLES ARE FOR ESTIMATING QUANTITIES ONLY.
2. RECESSED MARKERS SHALL NOT BE CONSTRUCTED ON BRIDGE DECKS, BRIDGE APPROACH SLABS, OR THROUGH INTERSECTIONS AT PUBLIC OR PRIVATE ROAD APPROACHES.
3. ALL LIMIT LINES, CROSSWALKS, CHEVRONS AND DIAGONALS SHALL BE 12" SOLID.
4. CHEVRON AND DIAGONAL MARKINGS SHALL BE APPLIED AT A 45 DEGREE ANGLE FROM THE EDGE OF TRAVELED WAY.
5. USE TYPE HR RED-YELLOW RETROREFLECTIVE MARKERS ON BUFFER STRIPES AT SEGMENTS WITHIN LIMITS OF DETAIL 14M.

NORTHBOUND PAVEMENT DELINEATION QUANTITIES

LOCATION NORTHBOUND		THERMOPLASTIC TRAFFIC STRIPE																	THERMOPLASTIC PAVEMENT MARKING				PAVEMENT MARKER				
		4" (BROKEN 17-7)	4" (BROKEN 17-7)	4" (BROKEN 36-12)	4" (BROKEN 36-12)	4" (BROKEN 36-12)	4" SOLID YELLOW	4" SOLID YELLOW	4" SOLID WHITE	HOV BUFFER 4" SOLID WHITE	HOV BUFFER 4" SOLID YELLOW (2 EACH)	HOV BUFFER 4" SOLID YELLOW (4 EACH)	8" (BROKEN 36-11.5)	8" SOLID WHITE	8" SOLID WHITE	8" SOLID WHITE	8" SOLID WHITE	8" (BROKEN 12-3)	ARROWS / SYMBOLS	WORDS	DIAGONALS, CROSSWALKS AND LIMIT LINES	CHEVRONS	(NON-REFLECTIVE)	(RETROREFLECTIVE)			
FROM (PM)	TO (PM)	DETAIL 8	DETAIL 9	DETAIL 12	DETAIL 13M	DETAIL 14M	DETAIL 25A	DETAIL 25	DETAIL 27B	HOV BUFFER	HOV BUFFER	HOV BUFFER	INGRESS/ EGRESS	DETAIL 36	DETAIL 36A	DETAIL 38	DETAIL 38A	DETAIL 37					TYPE A	TYPE C	TYPE G	TYPE H	TYPE HR
		LF	LF	LF	LF	LF	LF	LF	LF	LF	LF	LF	LF	LF	LF	LF	LF	LF	SQFT	SQFT	SQFT	SQFT	EA	EA	EA	EA	EA
R32.10	R32.24			1,489				744	744	744		2,978													31	512	
R32.24	R32.35			1,151				576	576	576		2,302													24	396	
R32.35	33.16			4,213	1,531			4,272	4,272	3,004	3,062	5,892	1,267					2,640	44	124			128		342	1,326	
33.16	33.23				370			370	370	370	739												31		7	69	
33.23	33.47				1,267			1,267	1,267	1,267	2,534								11				106		26	238	
33.47	33.64				898			898	1,795	898	1,795								11				75		18	168	
33.64	33.68				211			211	211	211	422												18		4	40	
33.68	33.78				528	144		528	528	528	1,056												56	4	11	95	8
33.78	33.88				528			528	528	528	1,056												44		11	99	
33.88	33.99				581	144		581	581	581	1,162												60	4	12	105	8
33.99	35.86				9,874			9,874	9,874	8,554	17,107		1,320						44	186		60	823		260	1,631	
35.86	35.97				581			581	581	581	1,162									62			48		12	109	
35.97	35.94			45,408	317			15,682	15,998	2,059	4,118								308	186		110	26		952	670	
35.94	39.05			1,162				581	581	581	1,162								44	62					24	109	
39.05	39.72			7,075		288		3,538	3,538	3,538	7,075												24	8	147	655	16
39.72	39.83			1,162				581	581	581	1,162														24	109	
39.83	40.50			7,867		144		3,538	5,122	2,746	5,491				1,584				253	124		132	12	4	230	527	8
NB ON-RAMP SANDS CANYON Rd		222					500		860						310	158			31		120				20	21	
NB OFF-RAMP SANDS CANYON Rd							525		525					640		158			215	88	130				34	22	
NB ON-RAMP SOLEDAD Cyn Rd							900		1,250						320				31		200				13	38	
NB OFF-RAMP SOLEDAD Cyn Rd							520		520					610			122		115	128	88	36			25	22	
NB ON-RAMP AGUA DULCE Rd			140				700		1,044						328				62	44	52				17	29	
NB OFF-RAMP AGUA DULCE Rd							700		740					422					159	106	40				18	29	
NB ON-RAMP ESCONDIDO Cyn Rd			140				860								320				62		140				16	36	
NB OFF-RAMP ESCONDIDO Cyn Rd							710		710								82		128	93						30	
SUB-TOTAL PDQ-1		222	280	69,527	16,686	720	5,415	44,350	52,796	27,347	49,103	11,172	2,587	1,672	2,862	316	204	2,640	1,518	1,203	770	338	1,450	20	2,278	7,085	40
TOTAL PDQ-1		502		86,933			190,183						2,587	5,054				2,640	3,829				1,450	9,423			

PAVEMENT DELINEATION QUANTITIES
PDQ-1

STATE OF CALIFORNIA - DEPARTMENT OF TRANSPORTATION
Caltrans® TRAFFIC DESIGN

FUNCTIONAL SUPERVISOR: CRICORIS BIGLARIAN
CALCULATED-DESIGNED BY: SYED ALI SHAH
CHECKED BY: DARA LOEUNG
REVISED BY / DATE REVISED

LAST REVISION 00-00-00
DATE PLOTTED => 23-AUG-2011
TIME PLOTTED => 16:19

Dist	COUNTY	ROUTE	POST MILES TOTAL PROJECT	SHEET No.	TOTAL SHEETS
07	LA	14	R32.1/R52.6	22	65

REGISTERED CIVIL ENGINEER 5/06/11 DATE

6-27-11
PLANS APPROVAL DATE

REGISTERED PROFESSIONAL ENGINEER DARA LOEUNG No. 65470 Exp. 9/30/11 CIVIL STATE OF CALIFORNIA

THE STATE OF CALIFORNIA OR ITS OFFICERS OR AGENTS SHALL NOT BE RESPONSIBLE FOR THE ACCURACY OR COMPLETENESS OF SCANNED COPIES OF THIS PLAN SHEET.

SOUTHBOUND PAVEMENT DELINEATION QUANTITIES

LOCATION SOUTHBOUND FROM (PM)	TO (PM)	THERMOPLASTIC TRAFFIC STRIPE 4" (BROKEN 17-7) DETAIL 8 LF	4" (BROKEN 17-7) DETAIL 9 LF	4" (BROKEN 36-12) DETAIL 12 LF	4" (BROKEN 36-12) DETAIL 13M LF	4" (BROKEN 36-12) DETAIL 14M LF	4" SOLID YELLOW DETAIL 25A LF	4" SOLID YELLOW DETAIL 25 LF	4" SOLID WHITE DETAIL 27B LF	HOV BUFFER 4" SOLID WHITE HOV BUFFER DET 27B LF	HOV BUFFER 4" SOLID YELLOW (2 EACH) HOV BUFFER LF	HOV BUFFER 4" SOLID YELLOW (4 EACH) HOV BUFFER LF	8" (BROKEN 36-11.5) INGRESS/ EGRESS LF	8" SOLID WHITE DETAIL 36 LF	8" SOLID WHITE DETAIL 36A LF	8" SOLID WHITE DETAIL 38 LF	8" SOLID WHITE DETAIL 38A LF	8" (BROKEN 12-3) DETAIL 37 LF	THERMOPLASTIC PAVEMENT MARKING ARROWS / SYMBOL SQFT	WORDS SQFT	DIAGONALS, CROSSWALKS & LIMIT LINES SQFT	CHEVRONS SQFT	PAVEMENT MARKER (NON-REFLECTIVE) TYPE A EA	(RETROREFLECTIVE) TYPE C EA	TYPE G EA	TYPE H EA	TYPE HR EA
R32.10	R32.34			2,534				1,267	1,267	1,267		5,069							11						53	871	
R32.34	33.19			5,650	3,326			4,488	4,488	3,221	3,485	5,914	1,267						88	248			277		240	1369	
33.19	33.34			792	792			792	792	792	1,584												66		33	149	
33.34	33.63				1,531			1,531	1,531	259	517		1,272						66	186			128		85	75	
33.63	33.69				264			264	264	264	528												22		5	49	
33.68	33.78				384	144		528	528	528	1,056												44	4	5	99	8
33.78	33.89				581			581	581	581	1,162												48		12	109	
33.89	33.99				528			528	528	528	1,056												44		11	99	
33.99	35.86				9,586	288		9,874	9,874	8,522	17,044		1,352						110	310			823	8	250	1626	16
35.86	35.97				437	144		581	581	581	1,162												48	4	6	109	8
35.97	38.93			14,734	607	288		15,629	15,629	12,989	25,978		2,640						198	558			75	8	430	2490	16
38.93	39.08			792				792	792	792	1584								22	62					17	149	
39.08	39.72			6,758				3,379	3,379	3,379	6,758								148	62					141	634	
39.72	39.83			581				581	581	581	1,162														12	109	
39.83	40.50			1,598	1,795	144		3,538	3,538	3,538	7,075								22	62			162	4	71	663	8
SB ON-RAMP SANDS Cyn Rd			135				600		1,045						445	75			62		180				24	25	
SB OFF-RAMP SANDS Cyn Rd			360				660		660					910		110			181	126					50	28	
SB ON-RAMP SOLEDAD Cyn Rd			210				710		410						300		135		62		44				17	30	
SB OFF-RAMP SOLEDAD Cyn Rd			285				790		790							100			153	150	40				10	33	
SB ON-RAMP AGUA DULCE Cyn Rd			150				705		1,023						318				62		187				16	29	
SB OFF-RAMP AGUA DULCE Cyn Rd							730		730					600					106	75	35				25	30	
SUB-TOTAL PDQ-2			1,140	33,439	19,831	1,008	4,195	44,353	49,011	37,822	70,151	10,983	6,531	1,510	1,063	285	135		1,291	1,839	486		1,737	28	1,513	8,775	56
TOTAL PDQ-2		1,140		54,278			216,515						6,531	2,993					3,616				1,737	10,372			
TOTAL PDQ-1		502		86,933			190,183						2,587	5,054				2,640	3,829				1,450	9,423			
GRAND TOTAL		1,642		141,211			406,698						9,118	8,047				2,640	7,445				3,187	19,795			

PAVEMENT DELINEATION QUANTITIES
PDQ-2

STATE OF CALIFORNIA - DEPARTMENT OF TRANSPORTATION
Caltrans® TRAFFIC DESIGN

FUNCTIONAL SUPERVISOR: CRICORIS BIGLARIAN
CALCULATED-DESIGNED BY: EUGENE BRAVO
CHECKED BY: DARA LOUENG
REVISED BY
DATE REVISED

LAST REVISION 00-00-00 DATE PLOTTED => 23-AUG-2011 TIME PLOTTED => 16:19

Dist	COUNTY	ROUTE	POST MILES TOTAL PROJECT	SHEET No.	TOTAL SHEETS
07	LA	14	R32.1/R52.6	23	65

REGISTERED CIVIL ENGINEER 5/06/11 DATE

6-27-11
PLANS APPROVAL DATE

REGISTERED PROFESSIONAL ENGINEER DARA LOEUNG No. 65470 Exp. 9/30/11 CIVIL STATE OF CALIFORNIA

THE STATE OF CALIFORNIA OR ITS OFFICERS OR AGENTS SHALL NOT BE RESPONSIBLE FOR THE ACCURACY OR COMPLETENESS OF SCANNED COPIES OF THIS PLAN SHEET.

NORTHBOUND PAVEMENT DELINEATION QUANTITIES

LOCATION NORTHBOUND		PAINT TRAFFIC STRIPE (2-COAT)																PAINT PAVEMENT MARKING (2-COAT)				PAVEMENT MARKER			
		4" (BROKEN 17-7)	4" (BROKEN 17-7)	4" (BROKEN 36-12)	4" (BROKEN 36-12)	4" (BROKEN 36-12)	4" SOLID YELLOW	4" SOLID YELLOW	4" SOLID WHITE	HOV BUFFER 4" SOLID WHITE	HOV BUFFER 4" SOLID YELLOW (2 EACH)	HOV BUFFER 4" SOLID YELLOW (4 EACH)	8"(BROKEN 36-11.5)	8" SOLID WHITE	8" SOLID WHITE	8" SOLID WHITE	8" SOLID WHITE	ARROWS / SYMBOLS	WORDS	DIAGONALS, CROSSWALKS AND LIMIT LINES	CHEVRONS	RECESSED (RETROREFLECTIVE)			
FROM (PM)	TO (PM)	DETAIL 8	DETAIL 9	DETAIL 12	DETAIL 13M	DETAIL 14M	DETAIL 25A	DETAIL 25	DETAIL 27B	HOV BUFFER	HOV BUFFER	HOV BUFFER	INGRESS/ EGRESS	DETAIL 36	DETAIL 36A	DETAIL 38	DETAIL 38A					TYPE C	TYPE G	TYPE H	TYPE HR
		LF	LF	LF	LF	LF	LF	LF	LF	LF	LF	LF	LF	LF	LF	LF	LF	SQFT	SQFT	SQFT	SQFT	EA	EA	EA	EA
40.50	41.17			10,613		144		3,538	3,538													4	221	70	8
41.17	41.29			1,901				634	634														40	13	
41.29	43.32			26,717				10,718	10,718	5,438	5,438							33	62		44		556	1,130	
43.32	43.36			422				211	211	211	211												9	40	
43.36	44.15			8,342		144		4,171	4,858	4,171	4,171										200	4	173	778	8
44.15	44.35			2,112		144		1,056	1,056	1,056	1,056											4	44	194	8
44.35	44.59			2,534				1,267	1,267				1,267					44	124				106	26	
44.59	45.41			8,659				4,330	4,330	4,330	4,330		264					126					191	812	
45.41	45.56			792				792	792	792	792							22	62				17	149	
45.56	45.93			1,954				1,954	1,954	1,954	1,954												41	366	
45.93	46.26			1,742				1,742	1,742	1,742	1,742												36	327	
46.26	46.32			317				317	317	317	317												7	59	
46.32	R47.66			7,075		144		7,075	7,550	7,075	7,075							44	124		66	4	147	1,323	8
R47.66	R47.90			1,267		144		1,267	1,267	422	422		845					66	186			4	62	93	8
R47.90	R49.40			7,920		432		7,920	8448	7,920	7,920							66	124		180	12	164	1,473	24
R49.40	R49.56			845				845	845				845					44	124				53	18	
R49.56	R49.64			422				422	422				422					22	62				26	9	
R49.64	R50.13			4,224		144		2,587	2,587	2,112	2,112		475									4	108	402	8
R50.13	R50.22			950		144		475	475	475	475							126				4	20	85	8
R50.22	R50.31			475				475	475	475	475							22	62		50		10	89	
R50.31	R51.45			6,019				6,019	6,547	6,019	6,019							22	62		90		125	1,129	
R51.45	R51.76			1,637		144		1,637	1,637	475	475		1,162					66	186			4	82	109	8
R51.76	R51.93			898		144		898	898	898	898											4	19	164	8
R51.93	R52.08			792		144		792	792	792	792											4	16	144	8
R52.08	R52.19			1,162		144		581	581	581	581											4	24	105	8
R52.19	R52.60			4,330		144		2,165	2,165	2,165	2,165							44	124			4	90	402	8
SUB-TOTAL SHEET PDQ-3				104,121		2,160		63,888	66,106	49,420	49,420		5,280					747	1,302		630	60	2,387	9,509	120
TOTAL SHEET PDQ-3		340,395																2,679				12,076			

PAVEMENT DELINEATION QUANTITIES
PDQ-3

REVISED BY | DATE REVISED
SYED ALI SHAH | DARA LOEUNG
CALCULATED-DESIGNED BY | CHECKED BY
FUNCTIONAL SUPERVISOR
CRICORIS BIGLARIAN

STATE OF CALIFORNIA - DEPARTMENT OF TRANSPORTATION
Caltrans® TRAFFIC DESIGN

LAST REVISION 00-00-00 | DATE PLOTTED => 23-AUG-2011 | TIME PLOTTED => 16:19

Dist	COUNTY	ROUTE	POST MILES TOTAL PROJECT	SHEET No.	TOTAL SHEETS
07	LA	14	R32.1/R52.6	24	65

REGISTERED CIVIL ENGINEER 5/06/11 DATE

6-27-11
PLANS APPROVAL DATE

REGISTERED PROFESSIONAL ENGINEER DARA LOEUNG No. 65470 Exp. 9/30/11 CIVIL STATE OF CALIFORNIA

THE STATE OF CALIFORNIA OR ITS OFFICERS OR AGENTS SHALL NOT BE RESPONSIBLE FOR THE ACCURACY OR COMPLETENESS OF SCANNED COPIES OF THIS PLAN SHEET.

NORTHBOUND PAVEMENT DELINEATION QUANTITIES

LOCATION NORTHBOUND	PAINT TRAFFIC STRIPE (2-COAT)																PAINT PAVEMENT MARKING (2-COAT)				PAVEMENT MARKER			
	4" (BROKEN 17-7)	4" (BROKEN 17-7)	4" (BROKEN 36-12)	4" (BROKEN 36-12)	4" (BROKEN 36-12)	4" SOLID YELLOW	4" SOLID YELLOW	4" SOLID WHITE	HOV BUFFER 4" SOLID WHITE	HOV BUFFER 4" SOLID YELLOW (2 EACH)	HOV BUFFER 4" SOLID YELLOW (4 EACH)	8"(BROKEN 36-11.5)	8" SOLID WHITE	8" SOLID WHITE	8" SOLID WHITE	8" SOLID WHITE	ARROWS / SYMBOL	WORDS	DIAGONALS, CROSSWALKS AND LIMIT LINES	CHEVRONS	RECESSED (RETROREFLECTIVE)			
	DETAIL 8	DETAIL 9	DETAIL 12	DETAIL 13M	DETAIL 14M	DETAIL 25A	DETAIL 25	DETAIL 27B	HOV BUFFER	HOV BUFFER	HOV BUFFER	INGRESS/ EGRESS	DETAIL 36	DETAIL 36A	DETAIL 38	DETAIL 38A					TYPE C	TYPE G	TYPE H	TYPE HR
	LF	LF	LF	LF	LF	LF	LF	LF	LF	LF	LF	LF	LF	LF	LF	LF	SQFT	SQFT	SQFT	SQFT	EA	EA	EA	EA
NB ON-RAMP WARD Rd/ SIERRA Hwy	140					790								320			31		102			13	33	
NB OFF-RAMP WARD Rd/ SIERRA Hwy						860		860					650			210	150	128	126	120		27	36	
NB ON-RAMP CROWN VALLEY Rd	200					590								362			31		70			16	25	
NB OFF-RAMP CROWN VALLEY Rd						520		520					610			122	115	128	88	36		25	22	
NB ON-RAMP SANTIGO Rd	222					500		860						377			31		108			15	21	
NB OFF-RAMP SANTIGO Rd						525		525					640			230	215	88	130			27	22	
NB ON-RAMP SOLEDAD Cyn Rd						900		1,250						411			31		200			17	38	
NB OFF-RAMP SOLEDAD Cyn Rd						750		750					706		110		128	106	160			34	31	
SUB-TOTAL SHEET PDQ-4	562					5,435		4,765					2,606	1,470	110	562	732	450	984	156		174	228	
TOTAL SHEET PDQ-4	15,510																2,322				402			

STATE OF CALIFORNIA - DEPARTMENT OF TRANSPORTATION
Caltrans TRAFFIC DESIGN

FUNCTIONAL SUPERVISOR: CRICORIS BIGLARIAN
CALCULATED-DESIGNED BY: SYED ALI SHAH
CHECKED BY: DARA LOEUNG
REVISED BY
DATE REVISED

PAVEMENT DELINEATION QUANTITIES
PDQ-4

LAST REVISION 00-00-00
DATE PLOTTED => 23-AUG-2011
TIME PLOTTED => 16:20

Dist	COUNTY	ROUTE	POST MILES TOTAL PROJECT	SHEET No.	TOTAL SHEETS
07	LA	14	R32.1/R52.6	25	65

REGISTERED CIVIL ENGINEER 5/06/11 DATE

6-27-11
PLANS APPROVAL DATE

REGISTERED PROFESSIONAL ENGINEER DARA LOEUNG No. 65470 Exp. 9/30/11 CIVIL STATE OF CALIFORNIA

THE STATE OF CALIFORNIA OR ITS OFFICERS OR AGENTS SHALL NOT BE RESPONSIBLE FOR THE ACCURACY OR COMPLETENESS OF SCANNED COPIES OF THIS PLAN SHEET.

SOUTHBOUND PAVEMENT DELINEATION QUANTITIES

LOCATION SOUTHBOUND FROM (PM)	TO (PM)	PAINT TRAFFIC STRIPE (2-COAT) 4" (BROKEN 17-7) DETAIL 8 LF	4" (BROKEN 17-7) DETAIL 9 LF	4" (BROKEN 36-12) DETAIL 12 LF	4" (BROKEN 36-12) DETAIL 13M LF	4" (BROKEN 36-12) DETAIL 14M LF	4" SOLID YELLOW DETAIL 25A LF	4" SOLID YELLOW DETAIL 25 LF	4" SOLID WHITE DETAIL 27B LF	HOV BUFFER 4" SOLID WHITE HOV BUFFER LF	HOV BUFFER 4" SOLID YELLOW (2 EACH) HOV BUFFER LF	HOV BUFFER 4" SOLID YELLOW (4 EACH) HOV BUFFER LF	8" (BROKEN 36-11.5) INGRESS/ EGRESS LF	8" SOLID WHITE DETAIL 36 LF	8" SOLID WHITE DETAIL 36A LF	8" SOLID WHITE DETAIL 38 LF	8" SOLID WHITE DETAIL 38A LF	PAINT PAVEMENT MARKING (2-COAT) ARROWS / SYMBOL SQFT	WORDS SQFT	DIAGONALS, CROSSWALKS & LIMIT LINES SQFT	CHEVRONS SQFT	PAVEMENT MARKER RECESSED (RETROREFLECTIVE) TYPE C EA	TYPE G EA	TYPE H EA	TYPE HR EA
40.50	41.16			3,197		288		3,485	3,485	3,485	3,485							22	62			8	67	653	16
41.16	41.31			792				792	792	792	792												17	149	
41.31	42.79			15,629				7,814	7,814	6,325	6,325		1,489					214	248				388	1,217	
42.79	42.81			106				106	106	106	106												2	20	
42.81	43.32			2,693				2,693	2,693	2,693	2,693							22	62				56	505	
43.32	43.36			211				211	211	211	211												4	40	
43.36	43.95			2,827		288		3,115	3,115	3,115	3,115							44	124			8	53	584	16
43.95	44.15			912		144		1,056	1,056	1,056	1,056											4	19	198	8
44.15	44.22			226		144		370	370				370									4	20	8	8
44.22	44.47			1,320				1,320	1,320	370	370							66	186				28	89	
44.47	45.93			7,709				7,709	7,709	7,709	7,709							44	124				161	1,445	
45.93	45.99			317				317	317	317	317												7	59	
45.99	46.32			1,742				1,742	1,742	1,742	1,742												36	327	
46.32	46.48			845				845	845	845	845							22	62				18	158	
46.48	R47.53			5,400		144		5,544	5,544	5,544	5,544							22	62			4	113	1,040	8
R47.53	R47.78			1,176		144		1,320	1,320				1,320					66	186			4	80	28	8
R47.78	R49.30			7,594		432		8,026	8,026	8,026	8,026							44	124			12	158	1,505	24
R49.30	R49.54			1,123		144		1,267	1,267				1,267					66	186			4	76	26	8
R49.54	R50.22			3,590				3,590	3,590	3,590	3,590							22	62				75	673	
R50.22	R50.29			370				370	370	370	370												8	69	
R50.29	R50.37			422				422	422	422	422												9	79	
R50.37	R51.14			3,922		144		4,066	4,066	4,066	4,066							22	62			4	82	762	8
R51.14	R51.45			1,493		144		1,637	1,637				1,637						303			4	99	34	8
R51.45	R52.03	315		2,918		144		3,062	3,062	3,062	3,062			680				22	62			4	89	574	8
R52.03	R52.08			120		144		264	264	264	264									55		4	2	49	8
R52.08	R52.60			2,602		144		2,746	2,746	2,746	2,746							11	62			4	54	515	8
SUB-TOTAL SHEET 5		315		69,256		2,448		63,889	63,889	56,856	56,856		6,083	680				709	1,977	55		68	1721	10,806	136
TOTAL SHEET 5		320,272																2,741				12,731			

PAVEMENT DELINEATION QUANTITIES
PDQ-5

STATE OF CALIFORNIA - DEPARTMENT OF TRANSPORTATION
Caltrans® TRAFFIC DESIGN

FUNCTIONAL SUPERVISOR: CRICORIS BIGLARIAN
CALCULATED-DESIGNED BY: EUGENE BRAVO
CHECKED BY: DARA LOUENG
REVISED BY
DATE REVISED

LAST REVISION 00-00-00
DATE PLOTTED => 23-AUG-2011
TIME PLOTTED => 16:20

Dist	COUNTY	ROUTE	POST MILES TOTAL PROJECT	SHEET No.	TOTAL SHEETS
07	LA	14	R32.1/R52.6	26	65

REGISTERED CIVIL ENGINEER DATE 5/06/11

PLANS APPROVAL DATE 6-27-11

REGISTERED PROFESSIONAL ENGINEER DARA LOEUNG No. 65470 Exp. 9/30/11 CIVIL STATE OF CALIFORNIA

THE STATE OF CALIFORNIA OR ITS OFFICERS OR AGENTS SHALL NOT BE RESPONSIBLE FOR THE ACCURACY OR COMPLETENESS OF SCANNED COPIES OF THIS PLAN SHEET.

SOUTHBOUND PAVEMENT DELINEATION QUANTITIES

LOCATION SOUTHBOUND FROM (PM) TO (PM)	PAINT TRAFFIC STRIPE (2-COAT)																PAINT PAVEMENT MARKING (2-COAT)				PAVEMENT MARKER			
	4" (BROKEN 17-7)	4" (BROKEN 17-7)	4" (BROKEN 36-12)	4" (BROKEN 36-12)	4" (BROKEN 36-12)	4" SOLID YELLOW	4" SOLID YELLOW	4" SOLID WHITE	HOV BUFFER 4" SOLID WHITE	HOV BUFFER 4" SOLID YELLOW (2 EACH)	HOV BUFFER 4" SOLID YELLOW (4 EACH)	8" (BROKEN 36-11.5)	8" SOLID WHITE	8" SOLID WHITE	8" SOLID WHITE	8" SOLID WHITE	ARROWS / SYMBOL	WORDS	DIAGONALS, CROSSWALKS & LIMIT LINES	CHEVRONS	RECESSED (RETROREFLECTIVE)			
	DETAIL 8	DETAIL 9	DETAIL 12	DETAIL 13M	DETAIL 14M	DETAIL 25A	DETAIL 25	DETAIL 27B	HOV BUFFER	HOV BUFFER	HOV BUFFER	INGRESS/ EGRESS	DETAIL 36	DETAIL 36A	DETAIL 38	DETAIL 38A					TYPE C	TYPE G	TYPE H	TYPE HR
	LF	LF	LF	LF	LF	LF	LF	LF	LF	LF	LF	LF	LF	LF	LF	LF	SQFT	SQFT	SQFT	SQFT	EA	EA	EA	EA
SB ON-RAMP ESCONDIDO Cyn Rd		130				880								300			31		99			15	37	
SB OFF-RAMP ESCONDIDO Cyn Rd						700		700					530			70	117	97	170			22	29	
SB ON-RAMP WARD Rd/ SIERRA Hwy	160					810		1,150						340			31		77			14	34	
SB OFF-RAMP WARD Rd/ SIERRA Hwy						894		894					670			230	150	150	197	170		28	37	
SB ON-RAMP CROWN VALLEY Rd	220					620								336			31		110			14	26	
SB OFF-RAMP CROWN VALLEY Rd						510		510					650			120	120	97	234	36		27	21	
SB ON-RAMP SANTIGO Rd	214					520		870						350			31		99			15	22	
SB OFF-RAMP SANTIGO Rd						565		565					670				252	97	175			28	24	
SB ON-RAMP SOLEDAD Cyn Rd						880		1,230						350			31		198			15	37	
SB OFF-RAMP SOLEDAD Cyn Rd						770		770							50		117	75	158			2	32	
SUB-TOTAL SHEET 6	594	130				7149		6,689					2,520	1,676	50	420	911	516	1,517	206		180	299	
TOTAL SHEET 6	19,228																3,150				479			
TOTAL SHEET 5	320,272																2,741				12,731			
TOTAL SHEET 4	15,510																2,322				402			
TOTAL SHEET 3	340,395																2,679				12,076			
GRAND TOTAL	695,405																10,892				25,688			

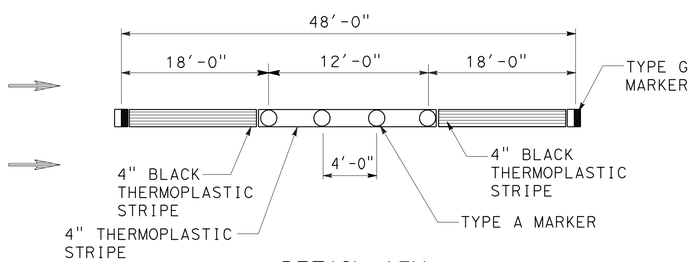

DETAIL 13M

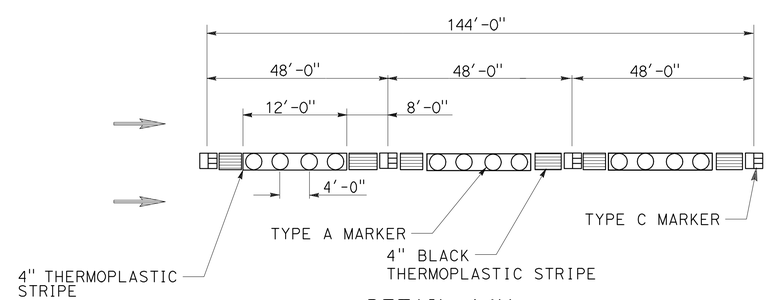

DETAIL 14M

PAVEMENT DELINEATION QUANTITIES
PDQ-6

STATE OF CALIFORNIA - DEPARTMENT OF TRANSPORTATION
Caltrans TRAFFIC DESIGN

FUNCTIONAL SUPERVISOR: CRICORIS BIGLARIAN
CALCULATED-DESIGNED BY: EUGENE BRAVO
CHECKED BY: DARA LOUENG
REVISED BY
DATE REVISED

LAST REVISION 00-00-00
DATE PLOTTED => 23-AUG-2011
TIME PLOTTED => 16:20

Dist	COUNTY	ROUTE	POST MILES TOTAL PROJECT	SHEET No.	TOTAL SHEETS
07	LA	14	R32.1/R52.6	27	65

REGISTERED CIVIL ENGINEER 5-15-11 DATE

6-27-11
PLANS APPROVAL DATE

REGISTERED PROFESSIONAL ENGINEER CASIMIRO BAUTISTA No. C 65169 Exp. 9/30/11 CIVIL STATE OF CALIFORNIA

THE STATE OF CALIFORNIA OR ITS OFFICERS OR AGENTS SHALL NOT BE RESPONSIBLE FOR THE ACCURACY OR COMPLETENESS OF SCANNED COPIES OF THIS PLAN SHEET.

NOTES:
1. WEAKENED PLANE JOINT TO WEAKENED PLANE JOINT CONSTITUTES ONE SLAB.
2. SLAB LOCATIONS ARE APPROXIMATE. EXACT LOCATIONS WILL BE DETERMINED BY THE ENGINEER.

LEGEND:
- NO LANE AT THIS LOCATION
LNMI - LANE MILE
RSC - RAPID STRENGTH CONCRETE
(N) - NOT A SEPARATE PAY ITEM, FOR INFORMATION ONLY

ROADWAY QUANTITIES

MAINLINE LOCATION			NUMBER OF SLABS (N) (EACH)				INDIVIDUAL SLAB REPLACEMENT (RSC)	REPLACE UNDERLYING BASE	LEAN CONCRETE BASE RAPID SETTING	TIE BAR	DOWEL BAR (DRILL AND BOND)	GRIND EXISTING CONCRETE PAVEMENT	SEAL JOINT (EXISTING CONCRETE PAVEMENT)	SEAL PAVEMENT JOINT	SEAL ISOLATION JOINT	REPAIR SPALLED JOINTS (POLYESTER GROUT)	REPLACE AC SURFACING	COLD PLANE ASPHALT CONCRETE PAVEMENT (SQYD)		TACK COAT	HOT MIX ASPHALT (USE W/ QC/QA)
LANDMARK	FROM TO	DIRECTION	HOV LANE	MIXED FLOW LANE#1	MIXED FLOW LANE#2	MIXED FLOW LANE#3	CY	CY	CY	EA	EA	SQYD	LF	LF	LF	SQYD	CY	MAINLINE	SHOULDER	TON	TON
LOST CANYON Rd UC	PM R32.10 - PM 33.30	NB										36,620	28,170				40	7,840	4,650	3.1	2,300
		SB										28,990	45,620				40	5,640	7,750	3.3	2,470
SAND CANYON RD OC OAK SPRING Rd UC	PM 33.30 - PM 33.98	NB		22	349		1,660	83	83	3,270	5,350	20,750	14,840	11,130	5,240	23					
		SB	2	242	274		2,320	116	116	4,550	7,460	20,750	10,470	15,480	4,140	31					
TICK CANYON WASH UC SOLEDAD CANYON RD UC	PM 33.98 - PM 36.14	NB	3	262	139		1,810	91	91	3,550	5,820	50,690	70,120	12,030	2,130	25	10	2,400	540	0.7	555
		SB	1	371	91		2,070	104	104	4,070	6,670	50,690	68,360	13,860	1,380	28					
SPRING CANYON Rd UC AGUA DULCE CANYON RD UC	PM 36.14 - PM 41.30	NB	5	22	542	443	5,060	253	253	6,940	14,580	157,420	117,070	16,920	8,210	34	10	2,400	540	0.7	555
		SB	1	346	654		4,480	224	224	8,810	14,420	121090	117,400	30,000	9,830	60	50		17,970	4.4	3,300
ESCONDIDO CANYON RD UC	PM 41.30 - PM 44.07	NB		10	630	551	5,990	300	300	8,060	17,160	84,510	43,600	19,200	9,450	39					
		SB		64	152	262	2,450	123	123	3,060	6,890	84,510	64,780	6,480	2,280	13	20		6,430	1.6	1,180
PURITAN MINE Rd UC	PM 44.07 - PM 45.70	NB		16	186		910	46	46	1,780	2,910	49,730	40,480	6,060	2,790	13	30		8,420	2.1	1,550
		SB		55	396		2,020	101	101	3,970	6,500	38,260	33,080	13,530	5,940	28	30		10,520	2.6	1,930
WARD Rd UC RED ROVER MINE UC	PM 45.70 - PM R47.30	NB		9	234		1,090	55	55	2,140	3,500	37,550	38,400	7,290	3,510	15	30		10,330	2.5	1,900
		SB		13	281		1,320	66	66	2,590	4,240	37,550	31,180	8,820	4,220	18	30		10,330	2.5	1,900
CROWN VALLEY RD UC	PM R47.30 - PM R49.81	NB	4	15	241		1,170	60	60	2,280	3,750	58,910	63,840	7,680	3,680	16	50		16,200	3.9	2,970
		SB	9	6	210		1,010	52	52	1,950	3,240	58,910	64,880	6,480	3,290	13	50		16,200	3.9	2,970
SANTIAGO RD UC	PM R49.81 - PM R51.80	NB		8	41		250	11	11	440	700	46,700	55,280	1,470	620	3	40		12,850	3.1	2,360
		SB	1	5	41		250	11	11	440	680	46,700	55,340	1,380	630	3	40		12,850	3.1	2,360
SIERRA HIGHWAY OC	PM R51.80 - PM R52.60	NB		13	87	54	760	38	38	1,120	2,220	24,410	10,630	3,000	1,310	6	20		5,170	1.3	950
		SB		14	151		1,380	70	70	1,460	2,380	18,780	10,300	4,950	2,270	10	20		5,170	1.3	950
		TOTAL	7,528				36,000	1,800	1,800	60,480	108,470	1,073,510	983,840	185,760	70,920	378	510	164,200		40.1	30,200

CRACK TREATMENT	
LOCATION	LNMI
R32.10-R52.6	30

TEMPORARY CONSTRUCTION ENTRANCE	
LOCATION	EA
R32.10-R52.6	10

TEMPORARY DRAINAGE INLET PROTECTION	
LOCATION	EA
R32.10-R52.6	80

SUMMARY OF QUANTITIES

Q-1

REVISED BY | DATE REVISED
CASIMIRO BAUTISTA | ANDY LIAO
CALCULATED-DESIGNED BY | CHECKED BY
FUNCTIONAL SUPERVISOR | OJI KALU
STATE OF CALIFORNIA - DEPARTMENT OF TRANSPORTATION
Caltrans
DESIGN

LAST REVISION 00-00-00 | DATE PLOTTED => 23-AUG-2011 | TIME PLOTTED => 16:20

Dist	COUNTY	ROUTE	POST MILES TOTAL PROJECT	SHEET No.	TOTAL SHEETS
07	LA	14	R32.1/R52.6	28	65

REGISTERED CIVIL ENGINEER 5-15-11 DATE

6-27-11
PLANS APPROVAL DATE

REGISTERED PROFESSIONAL ENGINEER CASIMIRO BAUTISTA No. C 65169 Exp. 9/30/11 CIVIL STATE OF CALIFORNIA

THE STATE OF CALIFORNIA OR ITS OFFICERS OR AGENTS SHALL NOT BE RESPONSIBLE FOR THE ACCURACY OR COMPLETENESS OF SCANNED COPIES OF THIS PLAN SHEET.

RAMP QUANTITIES

PM	RAMPS LOCATION DESCRIPTION	DIRECTION NB	DIRECTION SB	REPLACE AC SURFACING CY	COLD PLANE ASPHALT CONCRETE PAVEMENT SQYD	HOT MIX ASPHALT (USE W/ QC/QA) TON	TACK COAT TON	LEAN CONCRETE BASE RAPID SETTING CY	ROADWAY EXCAVATION CY	CLASS 3 AGGREGATE BASE CY	JOINTED PLAIN CONCRETE PAVEMENT (RAMP TERMINI WITH RSC) CY	(N) TIE BAR EA	(N) DOWEL BAR EA	REMOVE END ANCHOR ASSEMBLY (TYPE SFT) EA	END ANCHOR ASSEMBLY (TYPE SFT) EA	REMOVE AC DIKE LF	AC DIKE (TYPE F) LF	METAL BEAM GUARD RAILING (WOOD POST) LF
33.2 TO 33.6	SAND CANYON Rd ONRAMP	X	X	20	4,530	460	1.0											
	SAND CANYON Rd OFFRAMP	X	X	20	5,030	510	1.1											
	SAND CANYON Rd RAMP TERMINI	X	X					200	790	280	330	200	130					
35.5 TO 36.0	SOLEDAD CANYON Rd ONRAMP	X	X	20	6,050	650	1.3											
	SOLEDAD CANYON Rd ONRAMP	X	X	20	4,650	500	1.0											
	SOLEDAD CANYON Rd RAMP TERMINI	X	X					180	730	250	310	140	100					
39.7 TO 40.1	AGUA DULCE CANYON Rd ONRAMP	X	X	20	6,040	610	1.3											
	AGUA DULCE CANYON Rd OFFRAMP	X	X	20	4,650	470	1.0											
	AGUA DULCE CANYON Rd RAMP TERMINI	X	X					150	560	200	240	140	100					
43.0 TO 43.5	ESCONDIDO CANYON Rd ONRAMP	X	X	20	5,360	540	1.2											
	ESCONDIDO CANYON Rd OFFRAMP	X	X	20	5,430	550	1.2											
	ESCONDIDO CANYON Rd RAMP TERMINI	X	X					180	720	250	300	140	100					
46.5 TO R47.1	WARD Rd ONRAMP	X	X	20	7,880	790	1.7											
	WARD Rd OFFRAMP	X	X	20	7,190	720	1.6											
R48.4 TO R48.8	CROWN VALLEY Rd ONRAMP	X	X	20	5,950	600	1.3											
	CROWN VALLEY Rd OFFRAMP	X	X	20	5,800	590	1.3											
R50.5 TO R50.9	SANTIAGO Rd ONRAMP	X	X	20	5,180	530	1.1											
	SANTIAGO Rd OFFRAMP	X	X	20	6,150	630	1.3											
R51.7 TO R52.5	SIERRA HIGHWAY ONRAMP	X	X	20	6,540	660	1.4											
	SIERRA HIGHWAY OFFRAMP	X	X	20	5,770	590	1.3							1	1	931	931	931
		TOTAL		320	92,200	9,400	20.0	710	2,800	980	1,180	620	430	1	1	931	931	931

SUMMARY OF QUANTITIES

SHEET	REPLACE AC SURFACING CY	COLD PLANE ASPHALT CONCRETE PAVEMENT SQYD	HOT MIX ASPHALT (USE W/ QC/QA) TON	TACK COAT TON	LEAN CONCRETE BASE RAPID SETTING CY
(MAINLINE) TOTAL Sht Q-1	510	164,200	30,200	40.1	1,800
(RAMPS) TOTAL Sht Q-2	320	92,200	9,400	20.0	710
GRAND TOTAL	830	256,400	39,600	60.1	2,510

SUMMARY OF QUANTITIES

Q-2

REVISED BY | DATE REVISED
CASIMIRO BAUTISTA | ANDY LIAO
CALCULATED-DESIGNED BY | CHECKED BY
FUNCTIONAL SUPERVISOR | OJI KALU
STATE OF CALIFORNIA - DEPARTMENT OF TRANSPORTATION
Caltrans® DESIGN

LAST REVISION 00-00-00 | DATE PLOTTED => 23-AUG-2011 | TIME PLOTTED => 16:20

Dist	COUNTY	ROUTE	POST MILES TOTAL PROJECT	SHEET No.	TOTAL SHEETS
07	LA	14	R32.1/R52.6	29	65

REGISTERED ELECTRICAL ENGINEER 5-19-11 DATE

6-27-11
PLANS APPROVAL DATE

REGISTERED PROFESSIONAL ENGINEER J. RUELAS No. E015604 Exp. 12-31-11 ELECTRICAL STATE OF CALIFORNIA

THE STATE OF CALIFORNIA OR ITS OFFICERS OR AGENTS SHALL NOT BE RESPONSIBLE FOR THE ACCURACY OR COMPLETENESS OF SCANNED COPIES OF THIS PLAN SHEET.

SUMMARY OF RAMP INDUCTIVE LOOPS

No.	PM	DESCRIPTIONS	QUANTITY		LOOP LOCATION SEE DETAIL A (THIS SHEET)	No. OF 2"C STUBOUTS (REPLACE)
			PULL BOX	LOOPS		
1	33.4	SB ON RAMP FROM SAND CANYON ROAD	1	1	2	1
2	33.4	SB OFF RAMP TO SAND CANYON ROAD	1	1	1	1
3	33.4	NB ON RAMP FROM SAND CANYON ROAD	1	1	11	1
4	33.4	NB OFF RAMP TO SAND CANYON ROAD	1	1	12	1
5	35.8	SB ON RAMP FROM SOLEDAD CANYON	1	1	2	1
6	35.8	SB OFF RAMP TO SOLEDAD CANYON	1	1	1	1
7	35.8	NB ON RAMP FROM SOLEDAD CANYON	1	1	11	1
8	35.8	NB OFF RAMP TO SOLEDAD CANYON	1	1	12	1
9	39.9	SB ON RAMP FROM AGUA DULCE CANYON ROAD	1	1	2	1
10	39.9	SB OFF RAMP TO AGUA DULCE CANYON ROAD	1	1	1	1
11	39.9	NB ON RAMP FROM AGUA DULCE CANYON ROAD	1	1	11	1
12	39.9	NB OFF RAMP TO AGUA DULCE CANYON ROAD	1	1	12	1
13	43.3	SB ON RAMP FROM ESCONDIDO CANYON ROAD	1	1	2	1
14	43.3	SB OFF RAMP TO ESCONDIDO CANYON ROAD	1	1	1	1
15	43.3	NB ON RAMP FROM ESCONDIDO CANYON ROAD	1	1	11	1
16	43.3	NB OFF RAMP TO ESCONDIDO CANYON ROAD	1	1	12	1
17	46.8	SB ON RAMP FROM WARD ROAD	1	1	2	1
18	46.8	SB OFF RAMP FROM SIERRA HIGHWAY	1	1	1	1
19	46.8	NB ON RAMP FROM WARD ROAD	1	1	11	1
20	46.8	NB OFF RAMP TO WARD ROAD	1	1	12	1
21	R48.6	SB ON RAMP FROM CROWN VALLEY ROAD	1	1	2	1
22	R48.6	SB OFF RAMP TO CROWN VALLEY ROAD	1	1	1	1
23	R48.6	NB ON RAMP FROM CROWN VALLEY ROAD	1	1	11	1
24	R48.6	NB OFF RAMP TO CROWN VALLEY ROAD	1	1	12	1
25	R50.7	SB ON RAMP FROM SANTIAGO ROAD	1	1	2	1
26	R50.7	SB OFF RAMP TO SANTIAGO ROAD	1	1	1	1
27	R50.7	NB ON RAMP FROM SANTIAGO ROAD	1	1	11	1
28	R50.7	NB OFF RAMP TO SANTIAGO ROAD	1	1	12	1
29	R52.1	SB ON RAMP FROM SIERRA HIGHWAY	1	1	2	1
30	R52.1	SB OFF RAMP TO SIERRA HIGHWAY	1	1	1	1
31	R52.1	NB ON RAMP FROM SIERRA HIGHWAY	1	1	11	1
32	R52.1	NB OFF RAMP TO SIERRA HIGHWAY	1	1	12	1

NOTES: (THIS SHEET)

1. FOR NEW INDUCTIVE LOOP INSTALL SC TO dlc IN THE PULL BOX.
2. RC PULL BOX AND INSTALL NEW PULL BOX AT THE SAME LOCATION.
3. AB INDUCTIVE LOOP AND INSTALL THE NEW INDUCTIVE LOOP AT THE SAME LOCATION.
4. ALL THE ON-RAMP AND OFF-RAMP LOOPS SHOULD BE CONSTRUCTED IN A 12 FOOT WIDE LANE.

SUMMARY OF MAIN LINE INDUCTIVE LOOPS

No.	PM	DESCRIPTIONS	QUANTITY		LOOP LOCATIONS SEE DETAIL A (THIS SHEET)								No. OF STUBOUTS (REPLACE)
			PULL BOX	LOOPS									
1	R32.29	ROUTE 14 AT PM 32.2	2	8	3	4	5	6	7	8	9	10	2
2	33.4	ROUTE 14 AT SAND CANYON ROAD	2	6	4	5	6	7	8	9			2
3	35.8	ROUTE 14 AT SOLEDAD CANYON ROAD	2	6	4	5	6	7	8	9			2
4	39.9	ROUTE 14 AT AGUA DULCE CANYON ROAD	2	6	4	5	6	7	8	9			2
5	43.4	ROUTE 14 AT ESCONDIDO CANYON ROAD	2	6	4	5	6	7	8	9			2
6	46.8	ROUTE 14 AT WARD ROAD	2	6	4	5	6	7	8	9			2
7	R48.6	ROUTE 14 AT CROWN VALLEY ROAD	2	6	4	5	6	7	8	9			2
8	R50.7	ROUTE 14 AT SANTIAGO ROAD	2	6	4	5	6	7	8	9			2
9	R52.1	ROUTE 14 AT SIERRA HIGHWAY ROAD	2	6	4	5	6	7	8	9			2

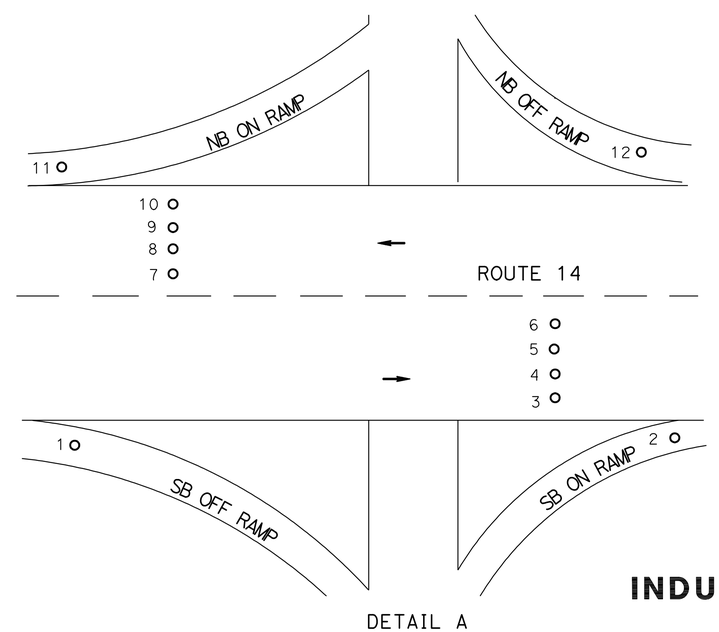

DETAIL A

DETAIL FOR TYPICAL FREEWAY CONNECTOR

INDUCTIVE LOOP DETECTOR (REPLACEMENT)

NO SCALE

E-1

STATE OF CALIFORNIA - DEPARTMENT OF TRANSPORTATION
Caltrans® TRAFFIC DESIGN

FUNCTIONAL SUPERVISOR: YI TSAU
CALCULATED-DESIGNED BY: HOSSAIN KIAN
CHECKED BY: JESSE RUELAS
REVISED BY
DATE REVISED

LAST REVISION 00-00-00
DATE PLOTTED => 23-AUG-2011
TIME PLOTTED => 16:20

Dist	COUNTY	ROUTE	POST MILES TOTAL PROJECT	SHEET No.	TOTAL SHEETS
07	LA	14	R32.1/R52.6	30	65

REGISTERED ELECTRICAL ENGINEER 5-19-11 DATE

6-27-11
PLANS APPROVAL DATE

REGISTERED PROFESSIONAL ENGINEER J. RUELAS No. E015604 Exp. 12-31-11 ELECTRICAL STATE OF CALIFORNIA

THE STATE OF CALIFORNIA OR ITS OFFICERS OR AGENTS SHALL NOT BE RESPONSIBLE FOR THE ACCURACY OR COMPLETENESS OF SCANNED COPIES OF THIS PLAN SHEET.

NOTE:

FOR ACCURATE RIGHT OF WAY DATA, CONTACT
RIGHT OF WAY ENGINEERING AT THE DISTRICT OFFICE.

PROJECT NOTE: (THIS SHEET)

1. INSTALL STATE-FURNISHED MODEL 2070 CONTROLLER UNIT WITH STATE FURNISHED MODEL 2070-6B MODEM AND STATE FURNISHED MODEL 170E CONTROLLER UNIT. INSTALL MODEL 400B MODEM. INSTALL TRAFFIC SIGNAL INTERCONNECT AND WIRELESS DATA SERVICE SYSTEM IN CABINET.
(FOR INSTALLATION OF TRAFFIC SIGNAL INTERCONNECT AND WIRELESS DATA SERVICE SYSTEM SEE DETAILS ON SHEET E-3).
2. AB FRONT LIMIT LINE DETECTOR LOOP. INSTALL TYPE D DETECTOR LOOP AT THE SAME LOCATION.
3. AB INDUCTIVE LOOP DETECTOR AND INSTALL TYPE E INDUCTIVE LOOP DETECTOR.
4. RC PULL BOXES AND STUBOUTS. INSTALL NEW PULL BOXES AND NEW 2"C STUBOUTS.
5. EXISTING 12-PAIR SIC. GROUND SIC SHIELDS AND DRAIN WIRES ONLY AT ONE CABINET LOCATION. CONNECT SIC TO TB0 TERMINALS 5 THROUGH 12. SEAL EACH SPARE CONDUCTOR WITH WATERTIGHT TAPE. SUBMIT LIST OF SPARE AND CONNECTED SIC CONDUCTORS ON TB0 TERMINAL BLOCK. (SEE DETAILS D AND B ON SHEET E-3).
6. EXISTING 12-PAIR SIC. GROUND SIC SHIELDS AND DRAIN WIRES ONLY AT ONE CABINET LOCATION. DISCONNECT SIC FROM TERMINALS 1,2, 3 AND 4 IN TB0 TERMINAL BLOCK. SEAL EACH SPARE CONDUCTOR WITH WATERTIGHT TAPE. SUBMIT LIST OF SPARE AND CONNECTED SIC CONDUCTORS ON TB0 TERMINAL BLOCK. (SEE DETAILS H AND A ON SHEET E-3).
7. EXISTING 7-WIRE CABLE. SEAL EACH CONDUCTOR WITH WATERTIGHT TAPE.
8. VERIFY SIC CONTINUITY BETWEEN LOCATION 1 AND LOCATION 2. SUBMIT CONTINUITY REPORT FOR EACH SIC PAIR-CONNECTED ON TB0 TERMINAL BLOCK.

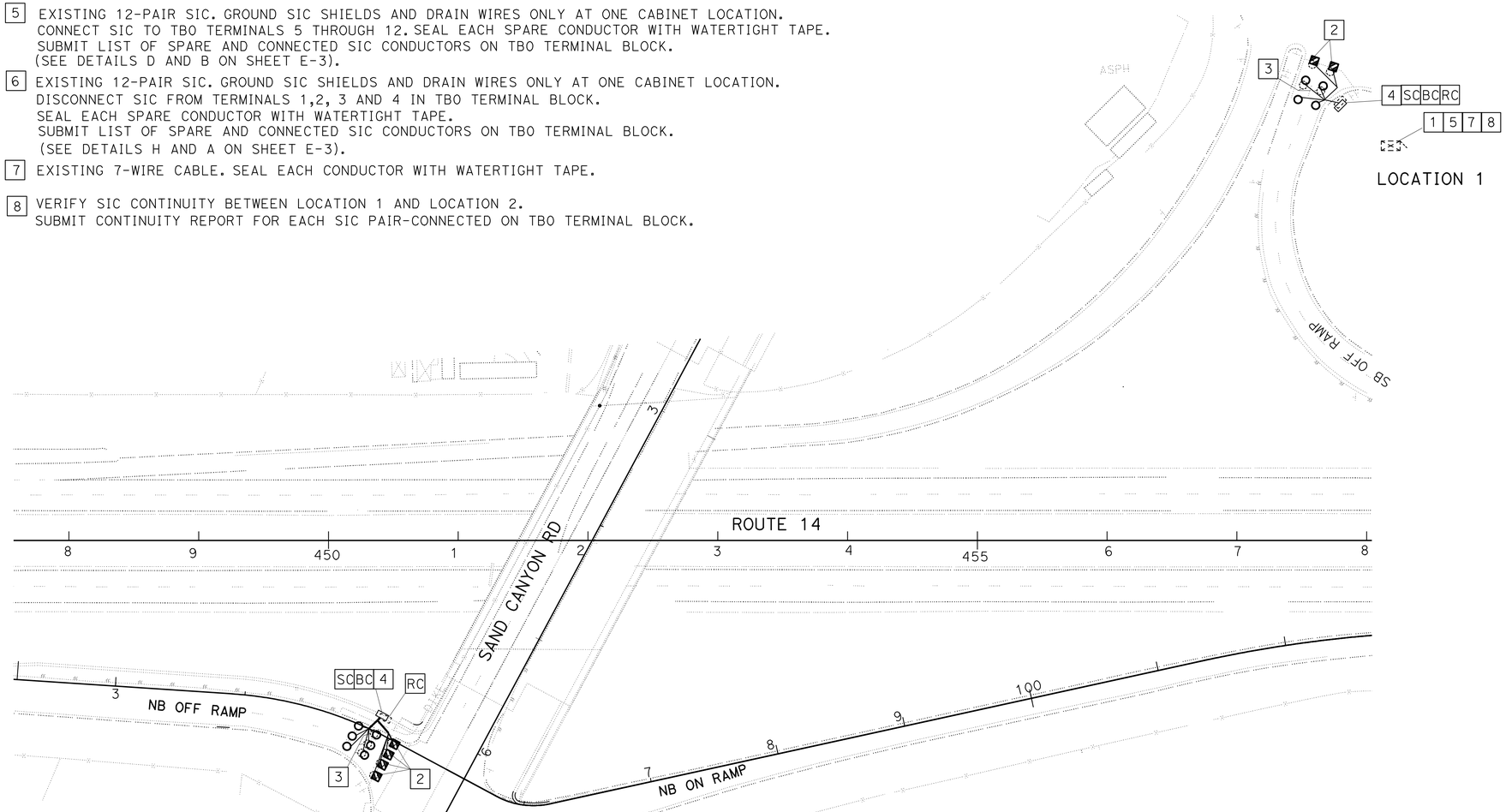

THIS PLAN IS ACCURATE FOR ELECTRICAL WORK ONLY.

MODIFY SIGNAL

SCALE: 1"=50'

E-2

REVISED BY	DATE REVISED

CALCULATED-DESIGNED BY	CHECKED BY
HOSSAIN KIAN	JESSE RUELAS

FUNCTIONAL SUPERVISOR: YI TSAU

STATE OF CALIFORNIA - DEPARTMENT OF TRANSPORTATION
Caltrans® TRAFFIC DESIGN

LAST REVISION 00-00-00 | DATE PLOTTED => 23-AUG-2011 | TIME PLOTTED => 16:21

Dist	COUNTY	ROUTE	POST MILES TOTAL PROJECT	SHEET No.	TOTAL SHEETS
07	LA	14	R32.1/R52.6	31	65

REGISTERED ELECTRICAL ENGINEER 5-19-11 DATE

6-27-11
PLANS APPROVAL DATE

REGISTERED PROFESSIONAL ENGINEER JORGE FUENTES No. E13875 Exp. 06-30-12 ELECTRICAL STATE OF CALIFORNIA

THE STATE OF CALIFORNIA OR ITS OFFICERS OR AGENTS SHALL NOT BE RESPONSIBLE FOR THE ACCURACY OR COMPLETENESS OF SCANNED COPIES OF THIS PLAN SHEET.

LEGEND (THIS SHEET)

PDA	POWER DISTRIBUTION ASSEMBLY
CTNET	CALTRANS TRAFFIC SIGNAL NETWORK.
LARTMC	LOS ANGELES REGIONAL TRAFFIC MANAGEMENT CENTER.
VPN	VIRTUAL PRIVATE NETWORK
GPRS	GENERAL PACKET RADIO SERVICE
IP	INTERNET PROTOCOL
TOS	TRAFFIC OPERATION SYSTEM
GPS	GLOBAL POSITIONING SYSTEM
DB9F	SERIES D SUBMINIATURE CONNECTOR E SIZE SHELL, 9 PIN SOCKET FEMALE
DB9M	SERIES D SUBMINIATURE CONNECTOR E SIZE SHELL, 9 PIN PLUG MALE
TNC	THREADED NEILL-CONCELMAN
BNC	BAYONET NEILL-CONCELMAN
SIC	SIGNAL INTERCONNECT CABLE

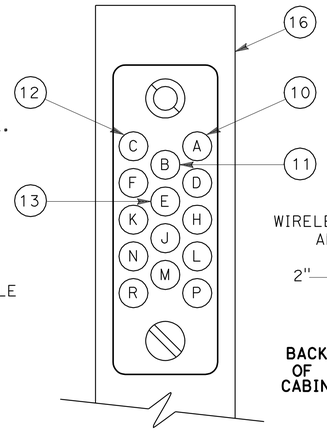

CONNECTOR C2P DETAIL

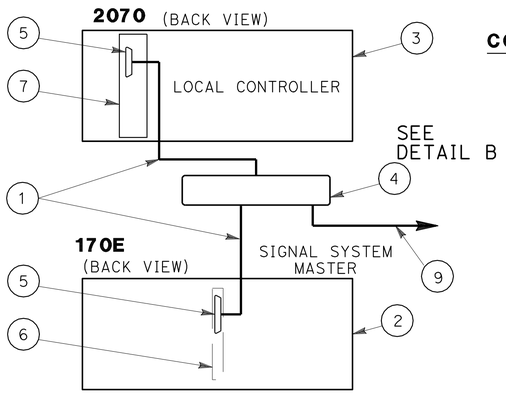

DETAIL D

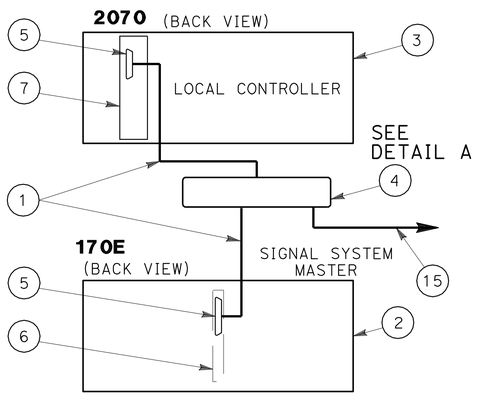

DETAIL H

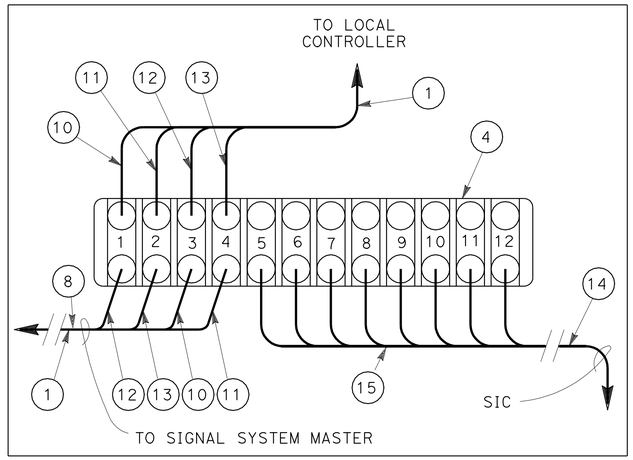

DETAIL A

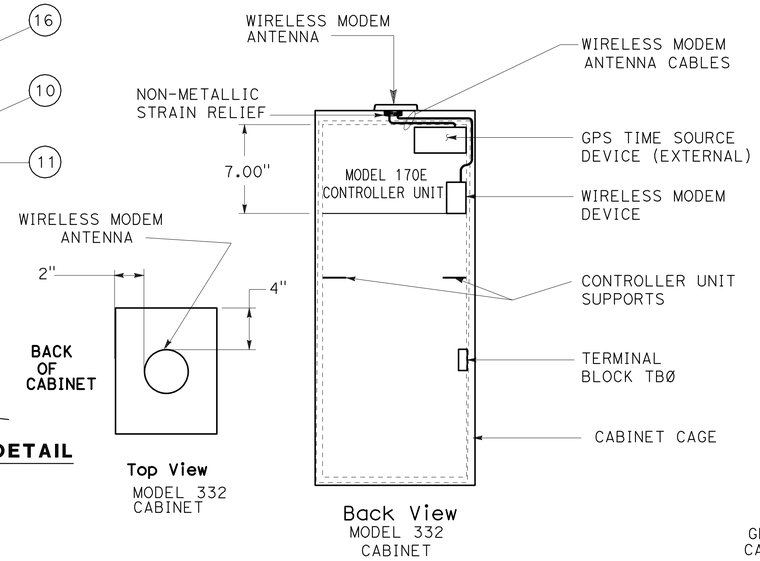

WIRELESS MODEM DEVICE, GPS TIME SOURCE DEVICE, AND WIRELESS MODEM ANTENNA PLACEMENT DETAIL

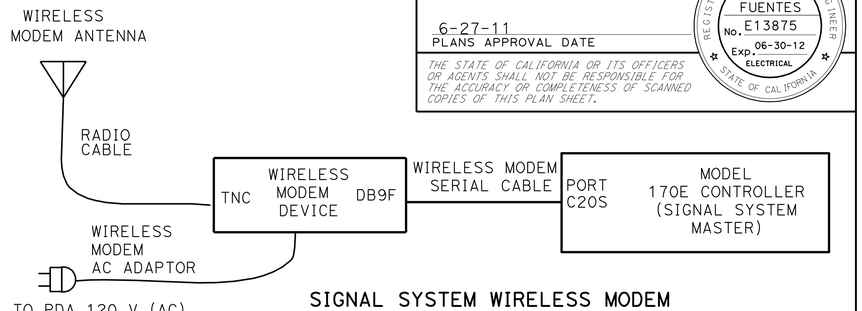

SIGNAL SYSTEM WIRELESS MODEM CONNECTION DETAIL

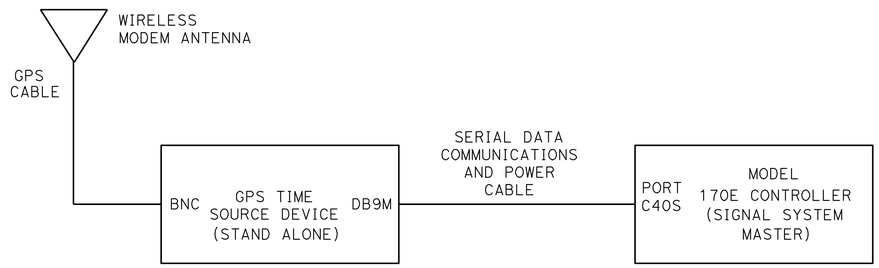

GPS TIME SOURCE DEVICE CONNECTION DETAIL

NOTES: THIS SHEET ONLY

1. C2 MODEM HARNESS
2. MODEL 170E CONTROLLER
3. MODEL 2070 CONTROLLER
4. TERMINAL BLOCK 0 (TB0)
5. C2S PORT
6. MODEL 400B MODEM IN MODEM SLOT 1
7. MODEL 2070-6B MODEM IN SLOT A2
8. NOT CONNECTED TO SIC
9. PROPOSED WIRING
10. C2 A SIGNAL (WHITE)
11. C2 B SIGNAL (GREEN)
12. C2 C SIGNAL (RED)
13. C2 E SIGNAL (BLACK)
14. SIC TO OTHER CABINET(S)
15. EXISTING WIRING
16. CONNECTOR C2P (C2 PLUG)

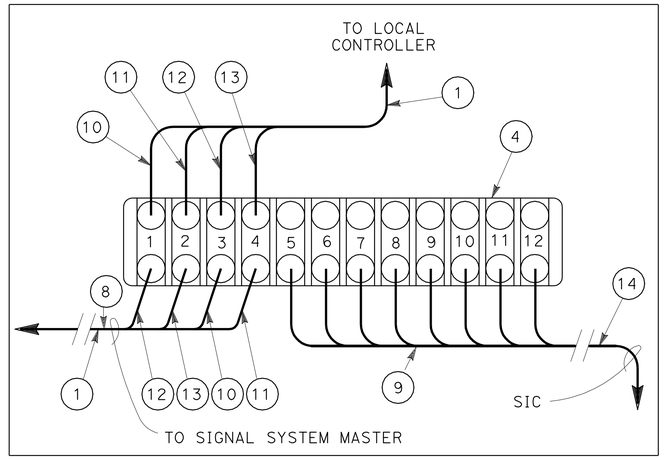

DETAIL B

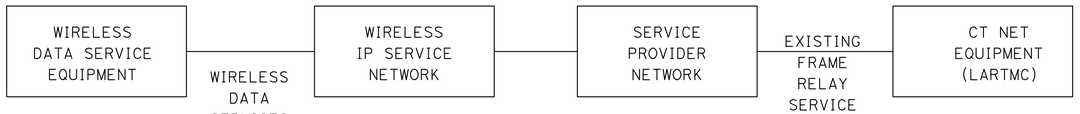

WIRELESS CONNECTIVITY DETAIL

MODIFY SIGNAL
(TRAFFIC SIGNAL INTERCONNECT AND WIRELESS DATA SERVICE SYSTEM DETAILS)

NO SCALE

E-3

STATE OF CALIFORNIA - DEPARTMENT OF TRANSPORTATION
Caltrans® OFFICE OF ITS

FUNCTIONAL SUPERVISOR: JORGE FUENTES
CALCULATED-DESIGNED BY: HOSSAIN KIAN
CHECKED BY: JORGE FUENTES
REVISED BY / DATE REVISED

LAST REVISION 00-00-00
DATE PLOTTED => 23-AUG-2011
TIME PLOTTED => 16:21

DIST	COUNTY	ROUTE	POST MILES TOTAL PROJECT	SHEET NO.	TOTAL SHEETS
07	LA	14	R32.1/R52.6	32	65

REGISTERED CIVIL ENGINEER

June 6, 2008
PLANS APPROVAL DATE

REGISTERED PROFESSIONAL ENGINEER Donald E. Howe No. C46402 Exp. 3-31-09 CIVIL STATE OF CALIFORNIA

The State of California or its officers or agents shall not be responsible for the accuracy or completeness of electronic copies of this plan sheet.

To accompany plans dated 6-27-11

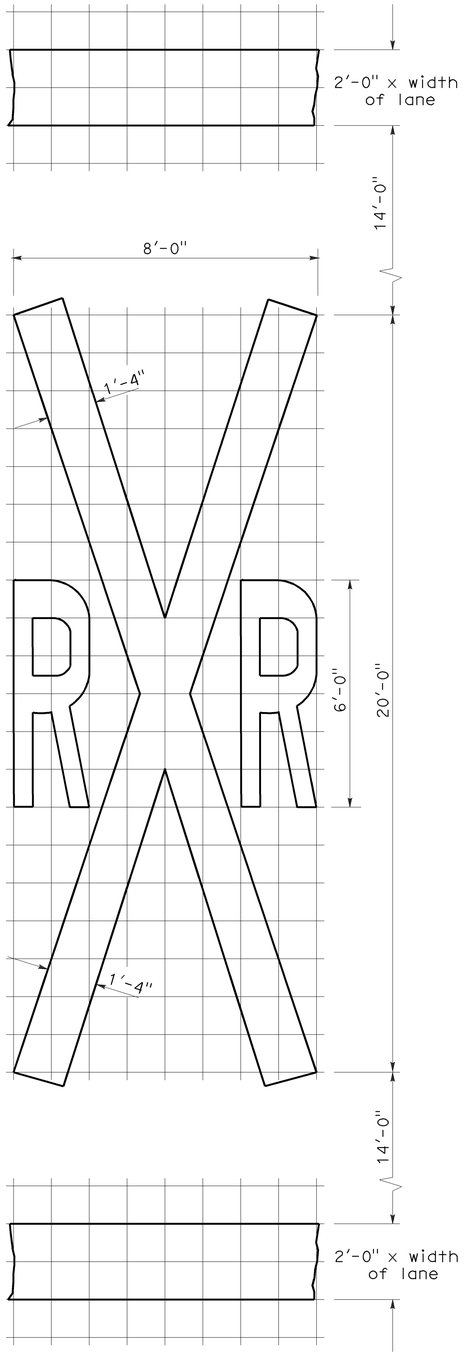

RAILROAD CROSSING SYMBOL

✳70 sq ft DOES NOT INCLUDE THE 2'-0" x VARIABLE WIDTH TRANSVERSE LINES.

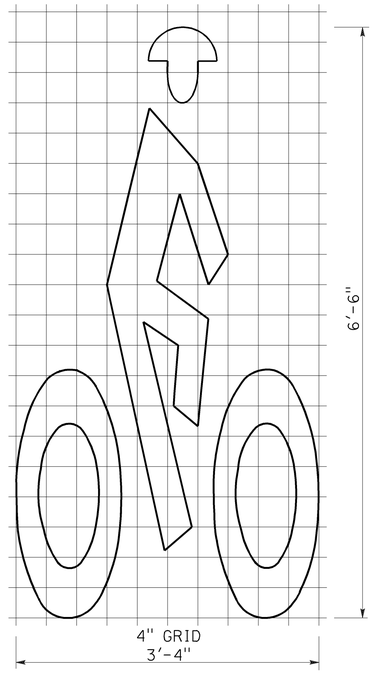

BIKE LANE SYMBOL

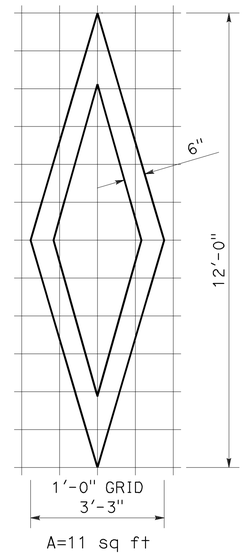

DIAMOND SYMBOL

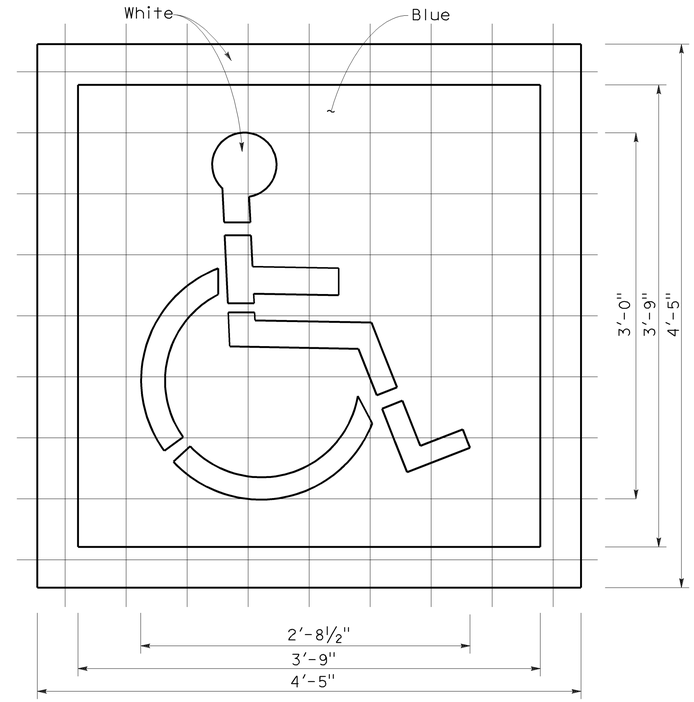

INTERNATIONAL SYMBOL OF ACCESSIBILITY MARKING

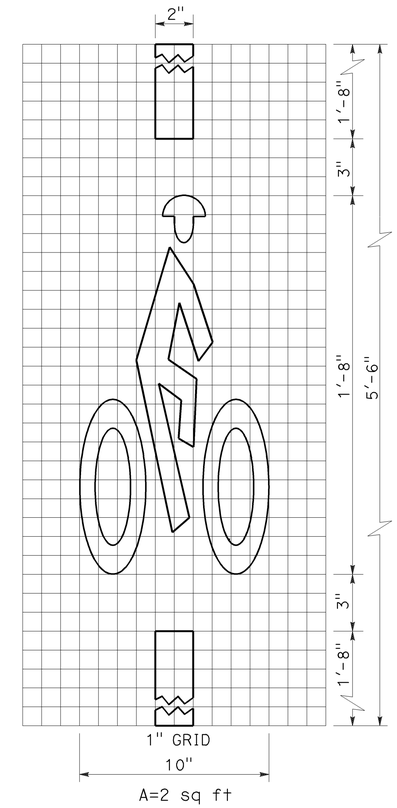

BICYCLE LOOP DETECTOR SYMBOL

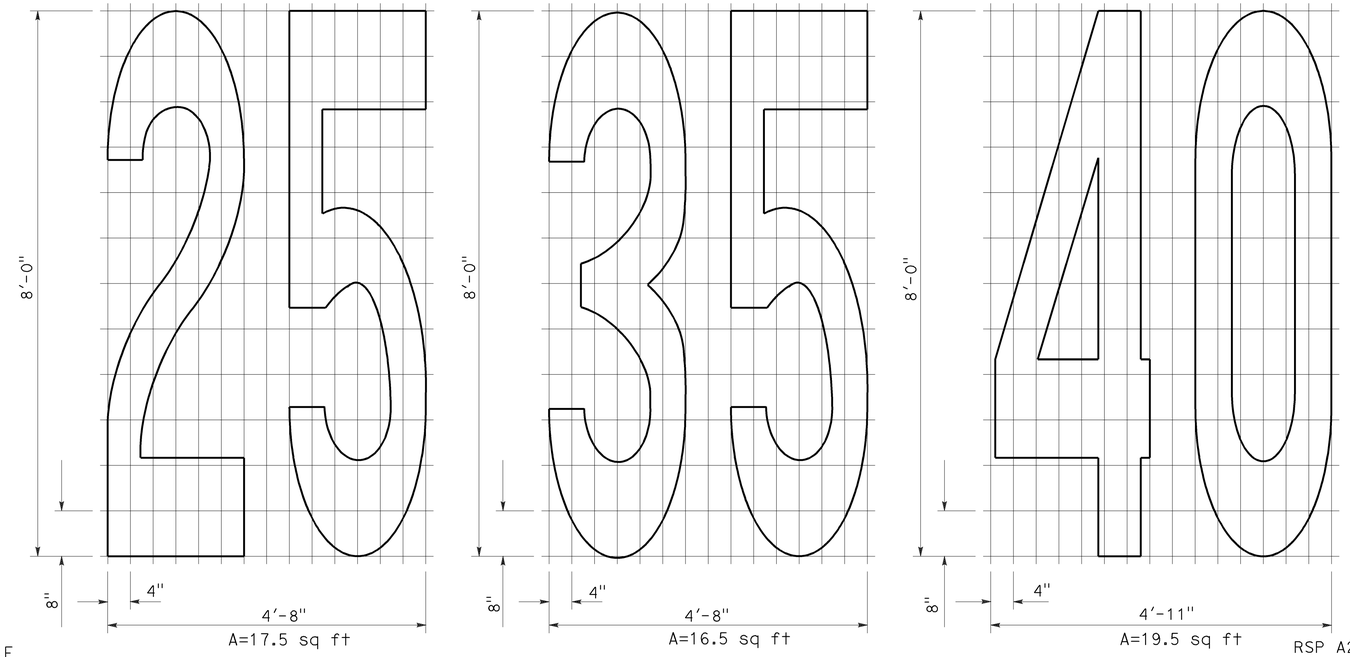

NUMERALS

NOTE:

1. Minor variations in dimensions may be accepted by the Engineer.

STATE OF CALIFORNIA
DEPARTMENT OF TRANSPORTATION

PAVEMENT MARKINGS SYMBOLS AND NUMERALS

NO SCALE

RSP A24C DATED JUNE 6, 2008 SUPERSEDES STANDARD PLAN A24C DATED MAY 1, 2006 - PAGE 11 OF THE STANDARD PLANS BOOK DATED MAY 2006.

REVISED STANDARD PLAN RSP A24C

2006 REVISED STANDARD PLAN RSP A24C

5-27-08

Dist	COUNTY	ROUTE	POST MILES TOTAL PROJECT	SHEET No.	TOTAL SHEETS
07	LA	14	R32.1/R52.6	33	65

Randell D. Hiatt
REGISTERED CIVIL ENGINEER

May 20, 2011
PLANS APPROVAL DATE

REGISTERED PROFESSIONAL ENGINEER
Randell D. Hiatt
No. C50200
Exp. 6-30-11
CIVIL
STATE OF CALIFORNIA

The State of California or its officers or agents shall not be responsible for the accuracy or completeness of electronic copies of this plan sheet.

To accompany plans dated 6-27-11

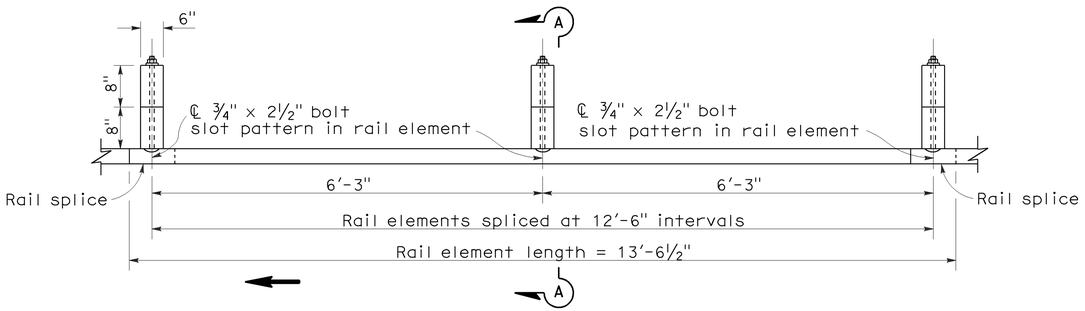

PLAN

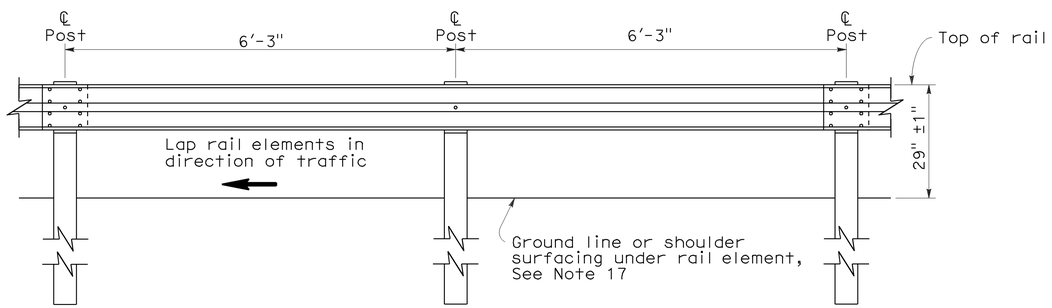

ELEVATION

METAL BEAM GUARD RAILING WITH WOOD POST AND BLOCKS

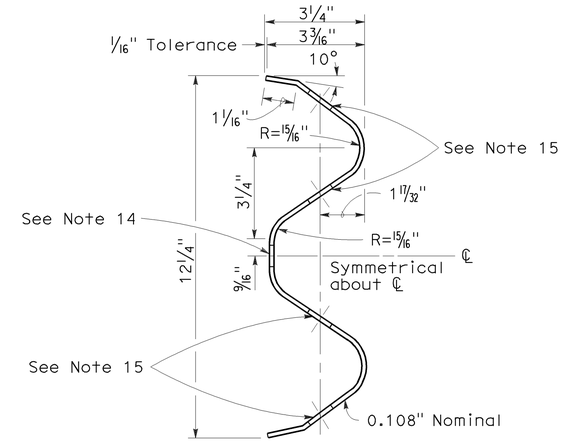

SECTION THRU RAIL ELEMENT

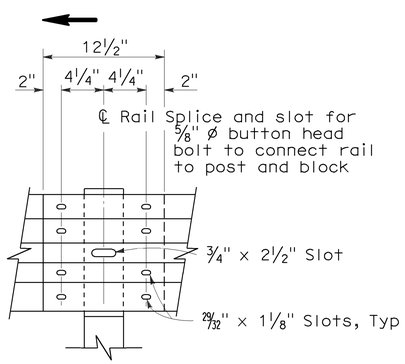

ELEVATION

RAIL ELEMENT SPLICE DETAIL

a) Connect the over lapped end of the rail elements with ⅝" ø x 1⅜" button head oval shoulder splice bolts inserted into the 29⁄32" x 1⅛" slots and bolted together with ⅝" ø recessed hex nuts. Recess of hex nut points toward rail element. A total of 8 bolts and nuts are to be used at each rail splice connection.

b) The ends of the rail elements are to be overlapped in the direction of traffic (see details).

c) Where end cap is to be attached to the end of a rail element, a total of 4 of the above described splice bolts and nuts are to be used.

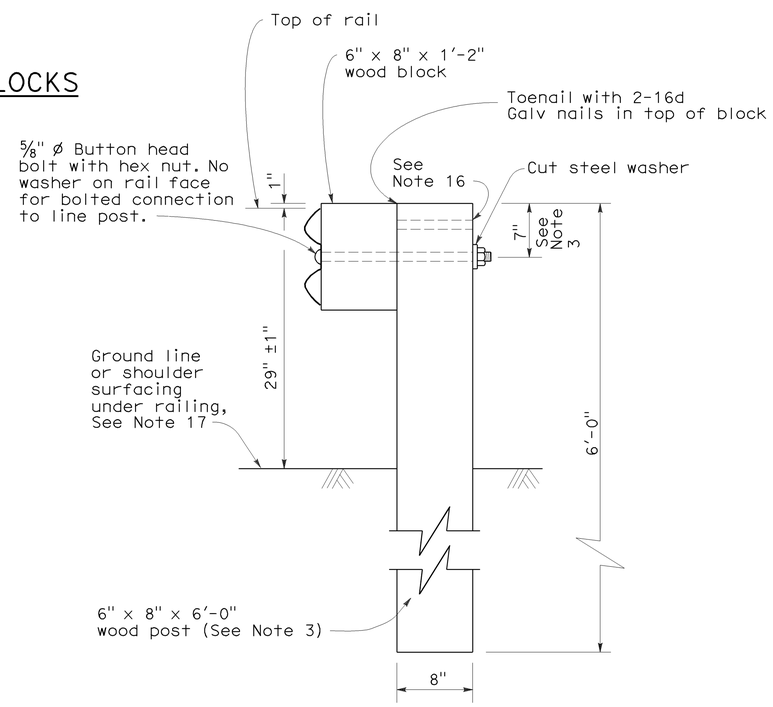

SECTION A-A

TYPICAL WOOD LINE POST INSTALLATION

See Note 4

NOTES:

1. For details of steel post installations, see Standard Plan A77A2.
2. For details of standard hardware used to construct guard railing, see Standard Plan A77B1.
3. For details of wood posts and wood blocks used to construct guard railing, see Standard Plan A77C1.
4. For additional installation details, see Standard Plan A77C3.
5. Guard railing post spacing to be 6'-3" center to center, except as otherwise noted.
6. For guard railing typical layouts, see the A77E, A77F and A77G Series of Standard Plans.
7. For terminal system end treatment details, see the A77L Series of Standard Plans. To connect railing to terminal system end treatment, transition the top of railing height at a ratio of 120:1 to terminal system end treatment height plus one 12'-6" standard railing section at the transitioned height for a horizontal connection to the end treatment.
8. For guard railing end anchor details, see Standard Plans A77H1 and A77I2.
9. For details of guard railing transition to bridge railing, see Standard Plan A77J4.
10. For additional details of guard railing connection to bridge railings, see Standard Plans A77J1, A77J2 and A77K1.
11. For guard railing connection details to abutments and walls, see Standard Plan A77J3.
12. Direction of adjacent traffic indicated by ➡.
13. For typical guard railing delineation and dike positioning details, see Standard Plan A77C4.
14. Slotted hole for bolted connection of rail element to block and post. See "Section Thru Rail Element".
15. Slotted holes for splice bolts to overlap ends of rail element. See "Section Thru Rail Element".
16. Additional hole in uppermost portion of line post is for potential future adjustments of railing height. See Standard Plan A77C1.
17. Install posts in soil.

STATE OF CALIFORNIA
DEPARTMENT OF TRANSPORTATION

METAL BEAM GUARD RAILING STANDARD RAILING SECTION (WOOD POST WITH WOOD BLOCK)

NO SCALE

RSP A77A1 DATED MAY 20, 2011 SUPERSEDES STANDARD PLAN A77A1
DATED MAY 1, 2006 - PAGE 41 OF THE STANDARD PLANS BOOK DATED MAY 2006.

REVISED STANDARD PLAN RSP A77A1

2006 REVISED STANDARD PLAN RSP A77A1

3-10-11

Dist	COUNTY	ROUTE	POST MILES TOTAL PROJECT	SHEET No.	TOTAL SHEETS
07	LA	14	R32.1/R52.6	34	65

Randell D. Hiatt
REGISTERED CIVIL ENGINEER

May 20, 2011
PLANS APPROVAL DATE

REGISTERED PROFESSIONAL ENGINEER
Randell D. Hiatt
No. C50200
Exp. 6-30-11
CIVIL
STATE OF CALIFORNIA

The State of California or its officers or agents shall not be responsible for the accuracy or completeness of electronic copies of this plan sheet.

To accompany plans dated 6-27-11

NOTES:

1. When necessary to place dike in front of face of guard railing, only Type C dike may be used. For dike details, see Standard Plan A87B.
2. For standard railing post embedment, see Standard Plans A77C3.
3. Guard railing delineation to be used where shown on the Project Plans.
4. When dike or curb is placed under guard railing, the maximum height of the dike or curb shall be 4". Mountable dike should not be used. For dike and curb details, see Standard Plans A87A and A87B.
5. For details of typical distance between the face of rail and hinge point, see Standard Plan A77C3.
6. For steel line posts, use 1/4 - 20 self-tapping screws in 0.22" diameter holes or 1/4" bolts in 9/32" diameter holes.

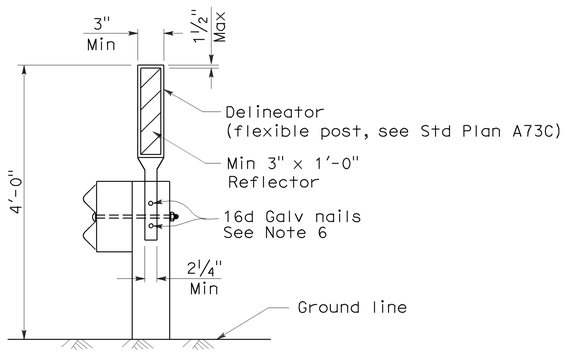

GUARD RAILING DELINEATION

See Note 3

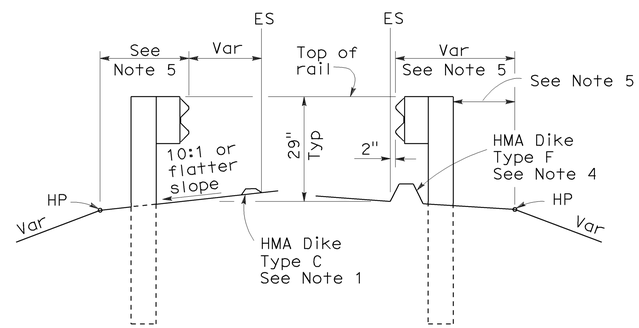

DIKE POSITIONING

See Note 1

STATE OF CALIFORNIA
DEPARTMENT OF TRANSPORTATION

METAL BEAM GUARD RAILING TYPICAL RAILING DELINEATION AND DIKE POSITIONING DETAILS

NO SCALE

RSP A77C4 DATED MAY 20, 2011 SUPERSEDES RSP A77C4 DATED JUNE 6, 2008 AND STANDARD PLAN A77C4 DATED MAY 1, 2006 - PAGE 47 OF THE STANDARD PLANS BOOK DATED MAY 2006.

REVISED STANDARD PLAN RSP A77C4

2006 REVISED STANDARD PLAN RSP A77C4

3-10-11

Dist	COUNTY	ROUTE	POST MILES TOTAL PROJECT	SHEET No.	TOTAL SHEETS
07	LA	14	R32.1/R52.6	35	65

Randell D. Hiatt
REGISTERED CIVIL ENGINEER

May 20, 2011
PLANS APPROVAL DATE

REGISTERED PROFESSIONAL ENGINEER
Randell D. Hiatt
No. C50200
Exp. 6-30-11
CIVIL
STATE OF CALIFORNIA

The State of California or its officers or agents shall not be responsible for the accuracy or completeness of electronic copies of this plan sheet.

To accompany plans dated 6-27-11

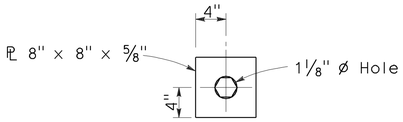

DETAIL A
CABLE CONNECTION
END PLATE

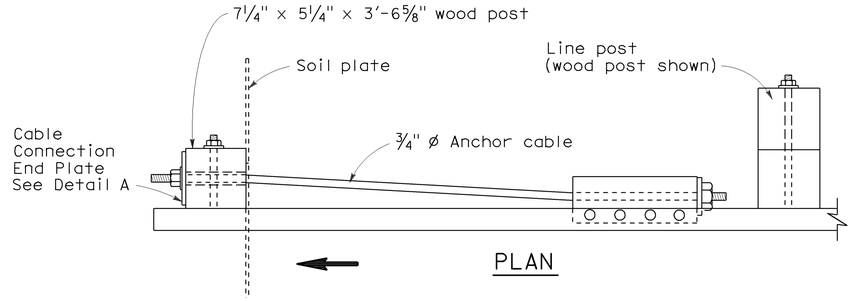

PLAN

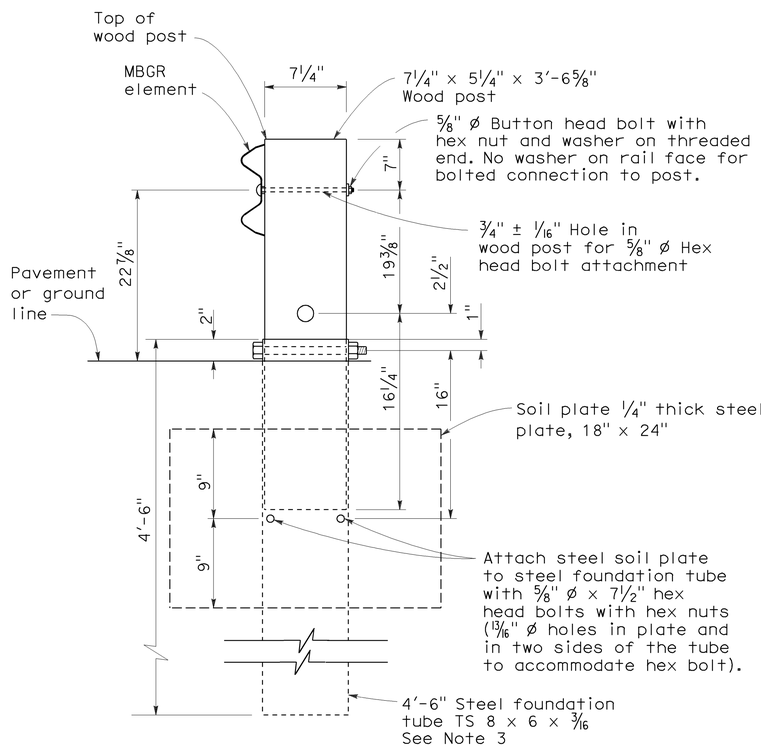

SECTION A-A

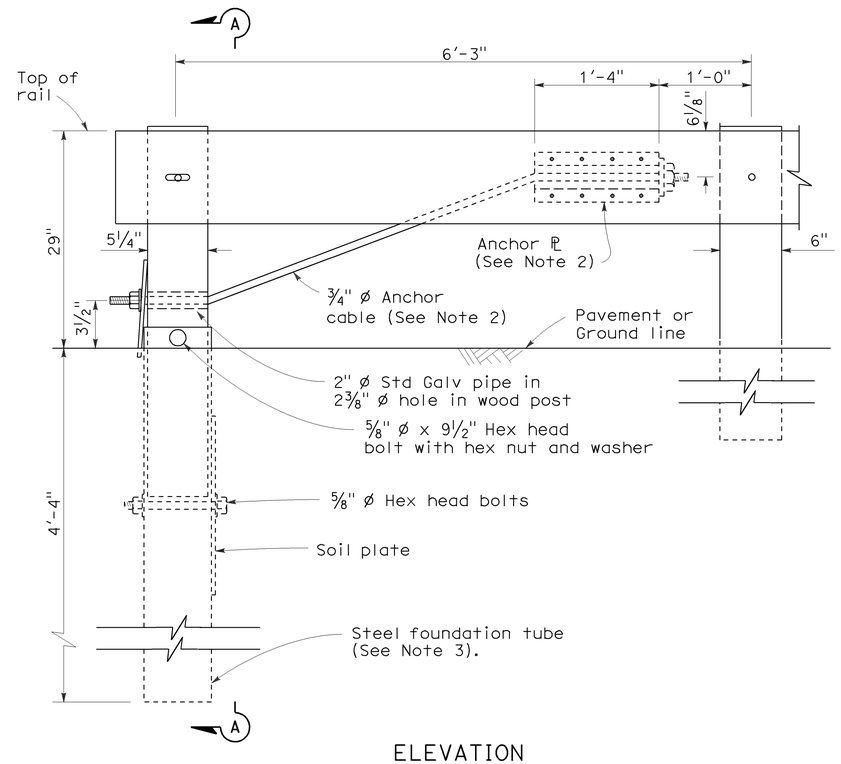

ELEVATION
END ANCHOR
ASSEMBLY (TYPE SFT)
See Note 1

NOTES:

1. See the A77E, A77F and A77G series of Standard Plans for typical use of End Anchor Assembly (Type SFT).
2. For details of the anchor plate and 3/4" cable, see Standard Plan A77H3.
3. A 6'-0" length steel foundation tube, TS 8 x 6 x 3/16, without a soil plate, may be furnished and installed in place of the 4'-6" length steel foundation tube and soil plate shown. Minimum embedment of the 6'-0" length tube shall be 5'-9". A 5/8" ø hex head bolt and nut shall be installed in the hole in the 6'-0" length tube to keep the wood post from dropping into the tube.
4. Direction of traffic indicated by ⟶.
5. Install line post, steel foundation tube and soil plate in soil.

STATE OF CALIFORNIA
DEPARTMENT OF TRANSPORTATION

METAL RAILING END ANCHOR ASSEMBLY (TYPE SFT)

NO SCALE

RSP A77H1 DATED MAY 20, 2011 SUPERSEDES STANDARD PLAN A77H1
DATED MAY 1, 2006 - PAGE 67 OF THE STANDARD PLANS BOOK DATED MAY 2006.

REVISED STANDARD PLAN RSP A77H1

2006 REVISED STANDARD PLAN RSP A77H1

DIST	COUNTY	ROUTE	POST MILES TOTAL PROJECT	SHEET NO.	TOTAL SHEETS
07	LA	14	R32.1/R52.6	36	65

William K. Farnbach
REGISTERED CIVIL ENGINEER

May 15, 2009
PLANS APPROVAL DATE

REGISTERED PROFESSIONAL ENGINEER William K. Farnbach No. C49042 Exp. 9-30-10 CIVIL STATE OF CALIFORNIA

The State of California or its officers or agents shall not be responsible for the accuracy or completeness of electronic copies of this plan sheet.

To accompany plans dated 6-27-11

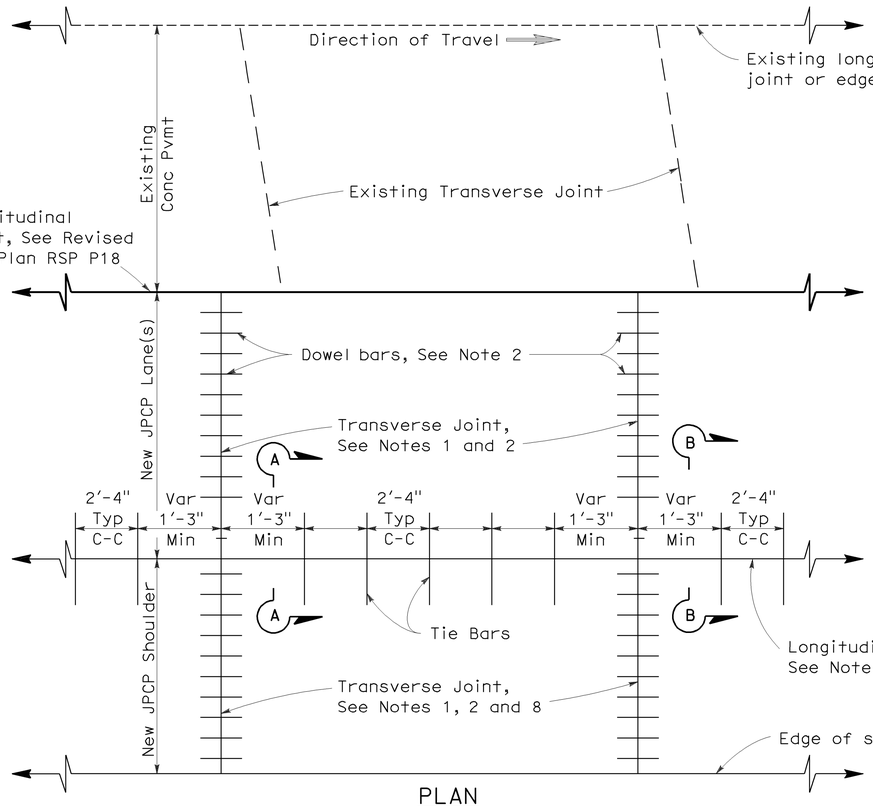

PLAN

LANE/SHOULDER ADDITION OR RECONSTRUCTION

See Notes 6 and 7

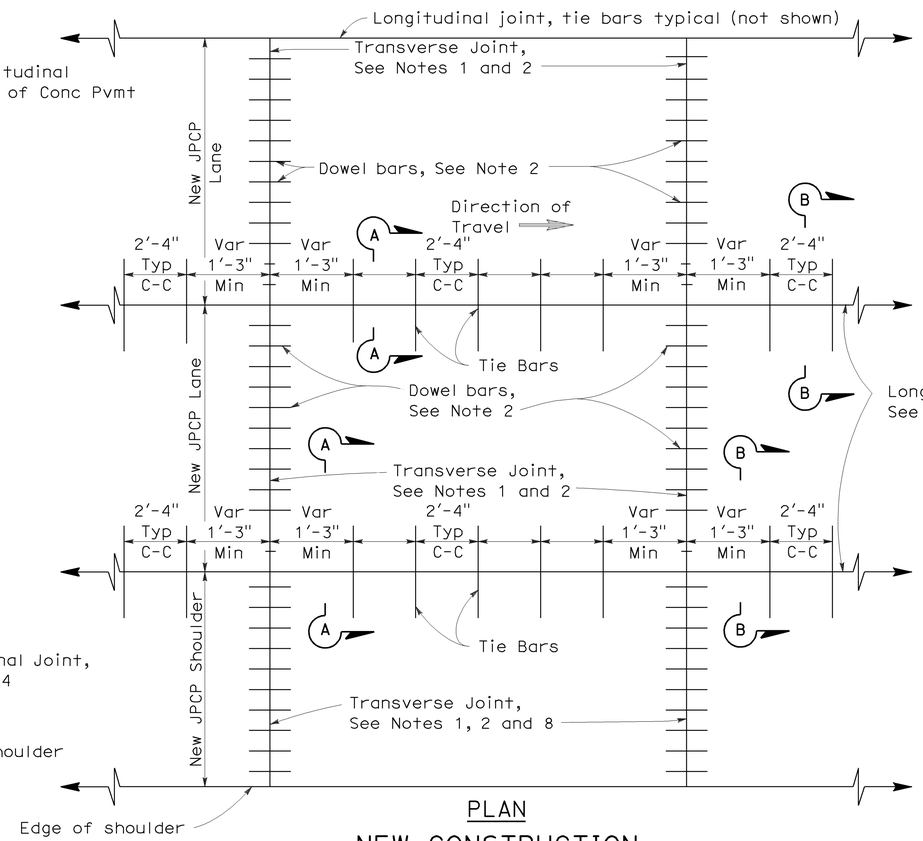

PLAN

NEW CONSTRUCTION

See Notes 6 and 7

NOTES:

1. Transverse joints shall be constructed at right angles to the longitudinal pavement joints in new jointed plain concrete pavement and spaced at successive repeated intervals of 12', 15', 13' and 14'.
2. For transverse joint and dowel bar details not shown, See Revised Standard Plan RSP P10.
3. Construct longitudinal contraction joints as shown in Section A-A when more than one lane or shoulder widths are placed at one time. If constructing one lane at a time, use longitudinal construction joint, as shown in Section B-B.
4. For additional longitudinal joint details, see Revised Standard Plan RSP P18.
5. If fresh concrete is placed adjacent to existing concrete, the top corner of the new hardened concrete does not need to be rounded to the 1/4" radius as shown.
6. Joint spacing patterns do not apply to intersections.
7. Details can also apply to inside widening.
8. Dowel bars may be omitted from shoulders when the shoulder cross slope is not the same as the adjacent traffic lane.

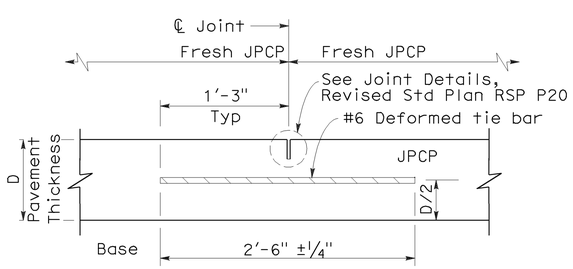

SECTION A-A

LONGITUDINAL CONTRACTION JOINT

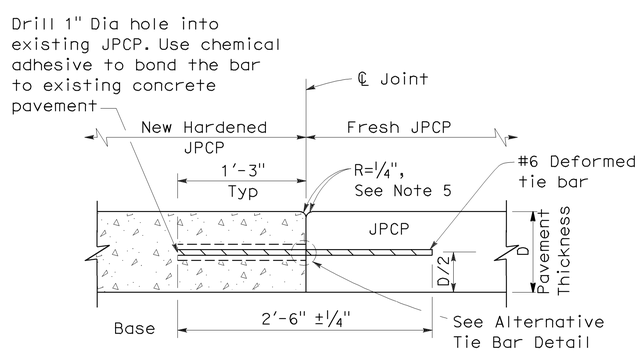

SECTION B-B

LONGITUDINAL CONSTRUCTION JOINT

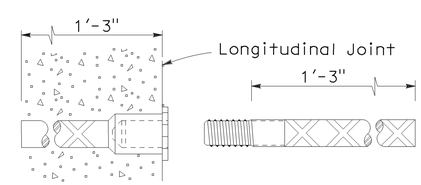

ALTERNATIVE TIE BAR SPLICE DETAIL

(Splice Coupler)

TIE BAR DETAILS

STATE OF CALIFORNIA
DEPARTMENT OF TRANSPORTATION

JOINTED PLAIN CONCRETE PAVEMENT

NO SCALE

RSP P1 DATED MAY 15, 2009 SUPERSEDES STANDARD PLAN P1
DATED MAY 1, 2006 - PAGE 119 OF THE STANDARD PLANS BOOK DATED MAY 2006.

REVISED STANDARD PLAN RSP P1

2006 REVISED STANDARD PLAN RSP P1

5-8-09

DIST	COUNTY	ROUTE	POST MILES TOTAL PROJECT	SHEET NO.	TOTAL SHEETS
07	LA	14	R32.1/R52.6	37	65

William K. Farnbach
REGISTERED CIVIL ENGINEER

May 15, 2009
PLANS APPROVAL DATE

REGISTERED PROFESSIONAL ENGINEER William K. Farnbach No. C49042 Exp. 9-30-10 CIVIL STATE OF CALIFORNIA

The State of California or its officers or agents shall not be responsible for the accuracy or completeness of electronic copies of this plan sheet.

To accompany plans dated 6-27-11

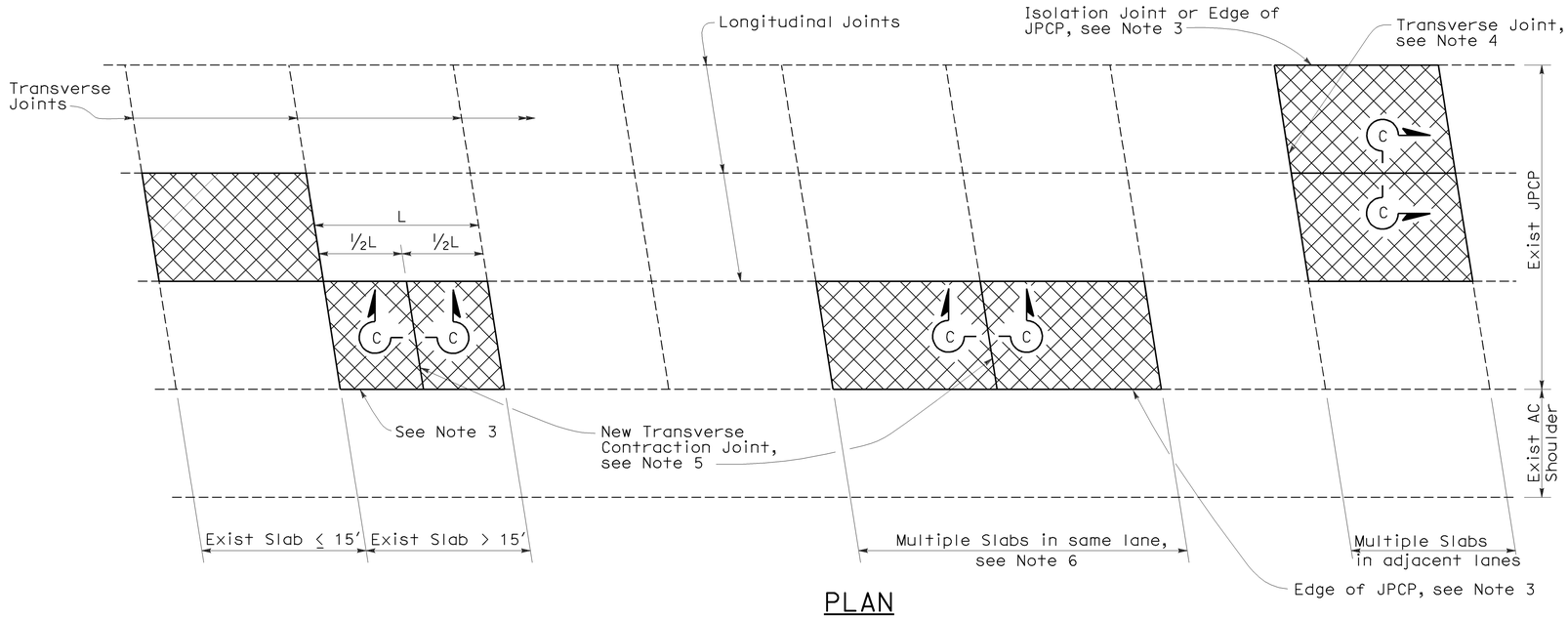

PLAN

NOTES:

1. For details not shown, see Revised Standard Plan RSP P10.
2. Where the existing outer shoulder pavement is asphalt concrete pavement, the "a" dimension shall be 1′-0" and the "b" dimension shall be 2′-0".
3. Side forms shall be used where edge of pavement is adjacent to asphalt concrete.
4. For detail, see Transverse Construction Joint for existing concrete pavement detail on Revised Standard Plan RSP P10.
5. Transverse joint to match skew of existing joint. Omit dowel bars.
6. This Standard Plan only applicable when replacing multiple slabs in the same lane is less than 100′.

LEGEND

Replace Concrete Pavement (See Slab Layout Detail)

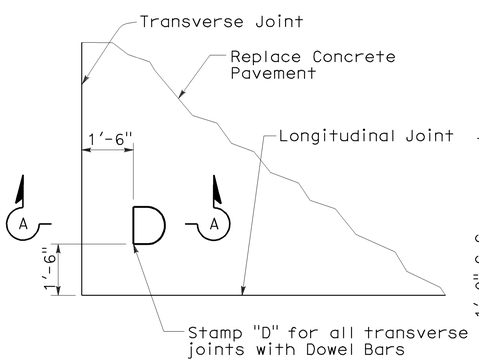

DOWEL STAMP DETAIL

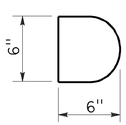

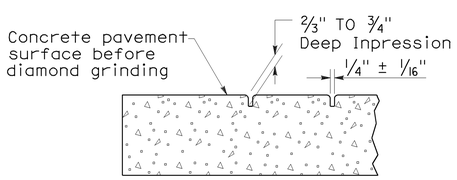

SECTION A-A

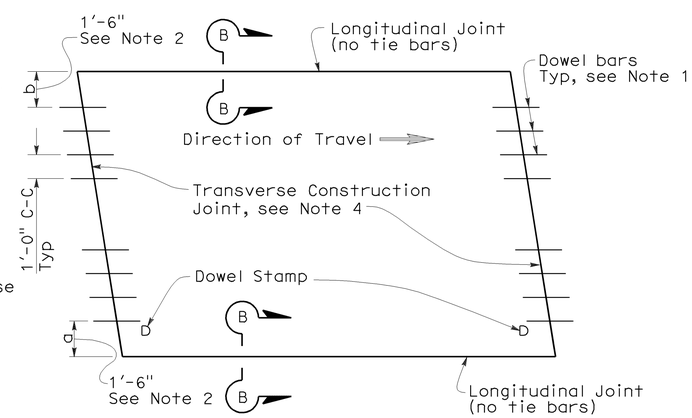

TYPE I
(traffic lane lines match longitudinal joints)

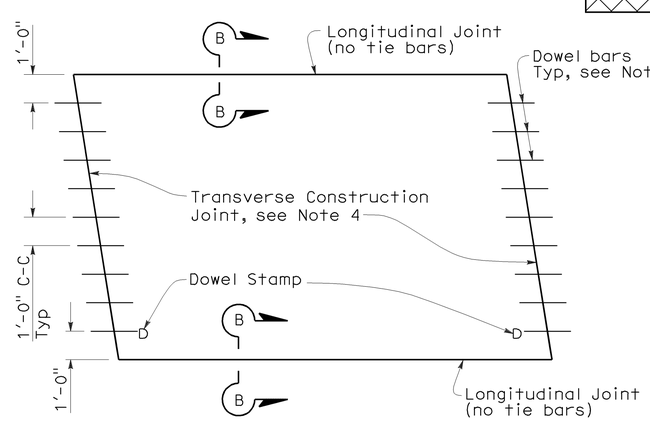

TYPE II
(traffic lane lines do not match longitudinal joints)

SLAB LAYOUT

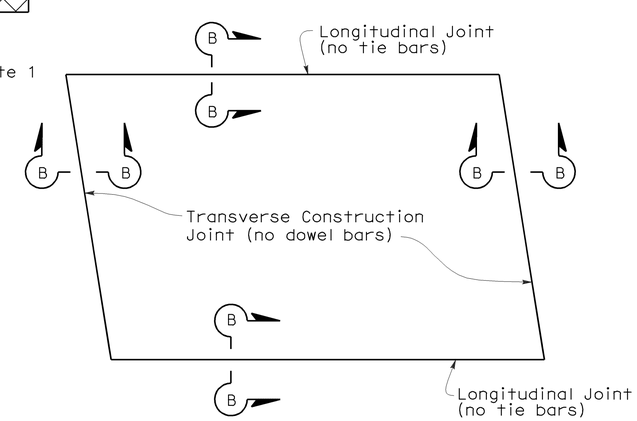

TYPE III
(for short term repairs < 5 yrs design life or for slab replacements with a cracking and seating operation)

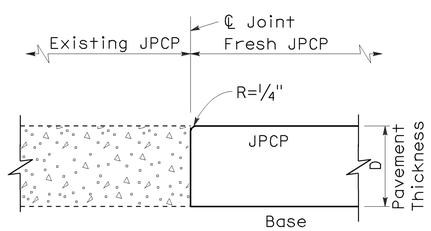

SECTION B-B

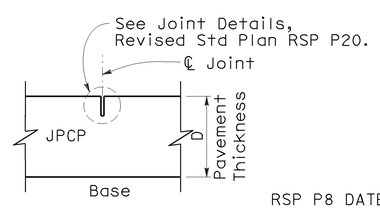

SECTION C-C

STATE OF CALIFORNIA
DEPARTMENT OF TRANSPORTATION

JOINTED PLAIN CONCRETE PAVEMENT-INDIVIDUAL SLAB REPLACEMENT

NO SCALE

RSP P8 DATED MAY 15, 2009 SUPERSEDES RSP P8 DATED SEPTEMBER 1, 2006 AND STANDARD PLAN P8 DATED MAY 1, 2006 - PAGE 123 OF THE STANDARD PLANS BOOK DATED MAY 2006.

REVISED STANDARD PLAN RSP P8

2006 REVISED STANDARD PLAN RSP P8

5-8-09

DIST	COUNTY	ROUTE	POST MILES TOTAL PROJECT	SHEET NO.	TOTAL SHEETS
07	LA	14	R32.1/R52.6	38	65

William K. Farnbach
REGISTERED CIVIL ENGINEER

May 15, 2009
PLANS APPROVAL DATE

REGISTERED PROFESSIONAL ENGINEER William K. Farnbach No. C49042 Exp. 9-30-10 CIVIL STATE OF CALIFORNIA

The State of California or its officers or agents shall not be responsible for the accuracy or completeness of electronic copies of this plan sheet.

To accompany plans dated 6-27-11

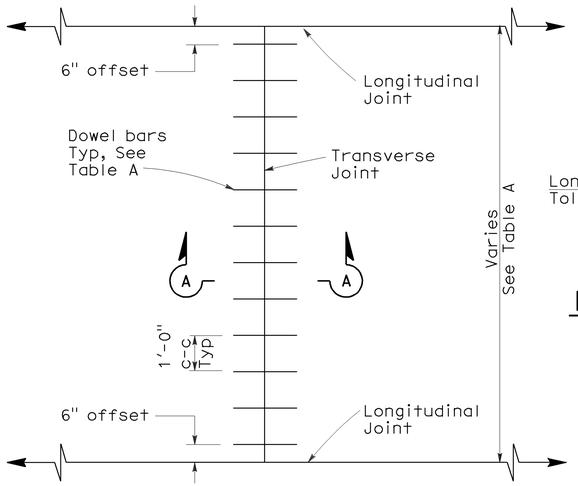

TRANSVERSE JOINT DOWEL BAR LAYOUT

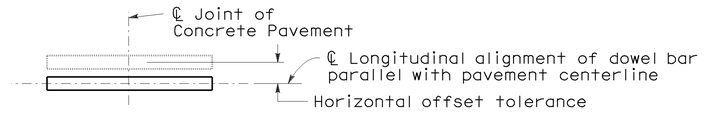

PLAN

HORIZONTAL OFFSET TOLERANCE

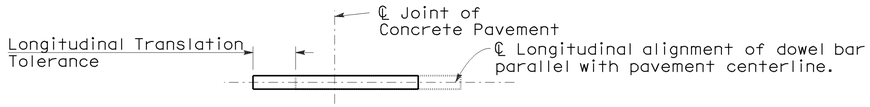

PLAN

LONGITUDINAL TRANSLATION TOLERANCE

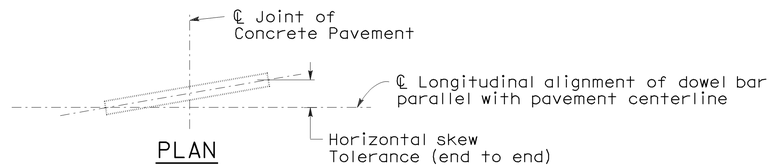

PLAN

HORIZONTAL SKEW TOLERANCE

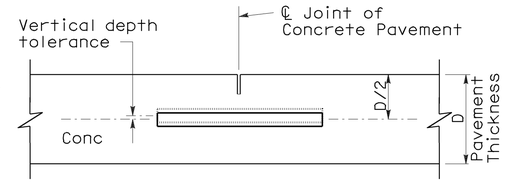

ELEVATION

VERTICAL DEPTH TOLERANCE

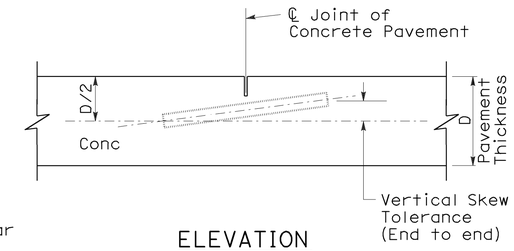

ELEVATION

VERTICAL SKEW TOLERANCE

NOTES:

1. See Revised Standard Plan RSP P1 for typical dowel bar placement and locations.
2. 1½" Dia smooth dowel bars are to be used with a pavement thickness, D, equal to or greater than 0.70 feet. For pavement thickness, D, less than 0.70 feet, use 1¼" Dia smooth dowel bars.
3. For widths not shown, see Project Plans.
4. If fresh concrete pavement is placed adjacent to existing concrete pavement, the top corner of the existing concrete pavement does not need to be rounded to the ¼" radius, as shown.

TABLE A (See Note 3)

Dowel Bar Transverse Spacing Table	
Width between Longitudinal Joints	Number of Dowels between Longitudinal Joints
14'-0"	14
13'-0"	13
12'-0"	12
11'-0"	11
10'-0"	10
8'-0"	8
5'-0"	5
4'-0"	4

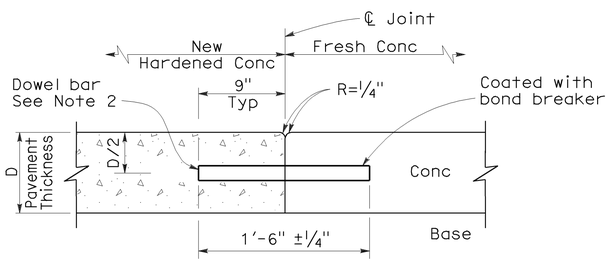

SECTION A-A

TRANSVERSE CONSTRUCTION JOINT DETAIL

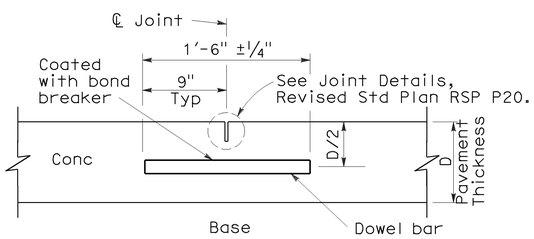

TRANSVERSE CONTRACTION JOINT

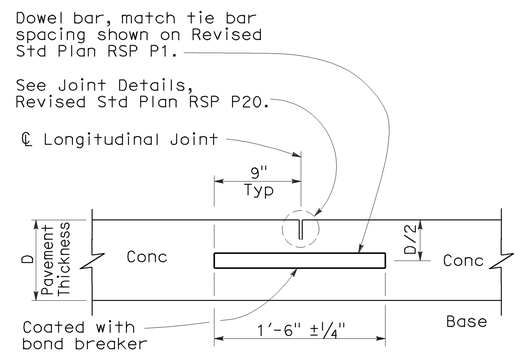

LONGITUDINAL CONTRACTION JOINT WITH DOWEL BARS

(See Revised Std Plan RSP P18)

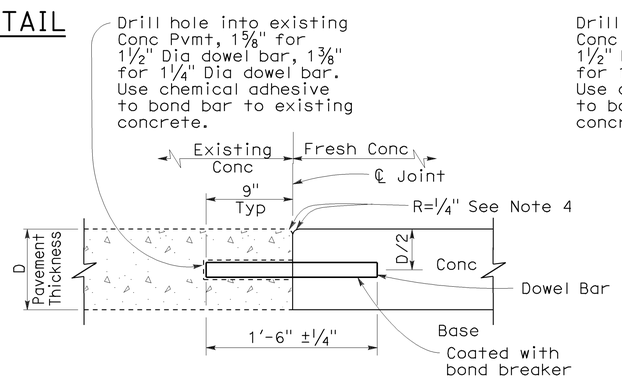

TRANSVERSE CONSTRUCTION JOINT FOR EXISTING CONCRETE PAVEMENT

(Drill and bond locations)

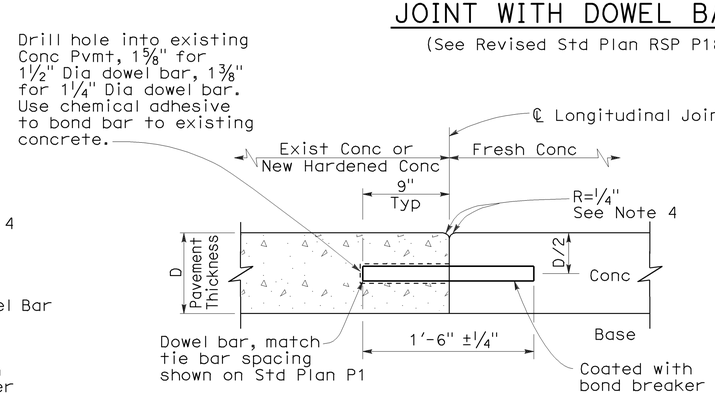

LONGITUDINAL CONSTRUCTION JOINT WITH DOWEL BARS

(See Revised Std Plan RSP P18)

STATE OF CALIFORNIA
DEPARTMENT OF TRANSPORTATION

CONCRETE PAVEMENT-DOWEL BAR DETAILS

NO SCALE

RSP P10 DATED MAY 15, 2009 SUPERSEDES STANDARD PLAN P10 DATED MAY 1, 2006 - PAGE 124 OF THE STANDARD PLANS BOOK DATED MAY 2006.

REVISED STANDARD PLAN RSP P10

2006 REVISED STANDARD PLAN RSP P10

5-8-09

DIST	COUNTY	ROUTE	POST MILES TOTAL PROJECT	SHEET NO.	TOTAL SHEETS
07	LA	14	R32.1/R52.6	39	65

William K. Farnbach
REGISTERED CIVIL ENGINEER

May 15, 2009
PLANS APPROVAL DATE

REGISTERED PROFESSIONAL ENGINEER
William K. Farnbach
No. C49042
Exp. 9-30-10
CIVIL
STATE OF CALIFORNIA

The State of California or its officers or agents shall not be responsible for the accuracy or completeness of electronic copies of this plan sheet.

To accompany plans dated 6-27-11

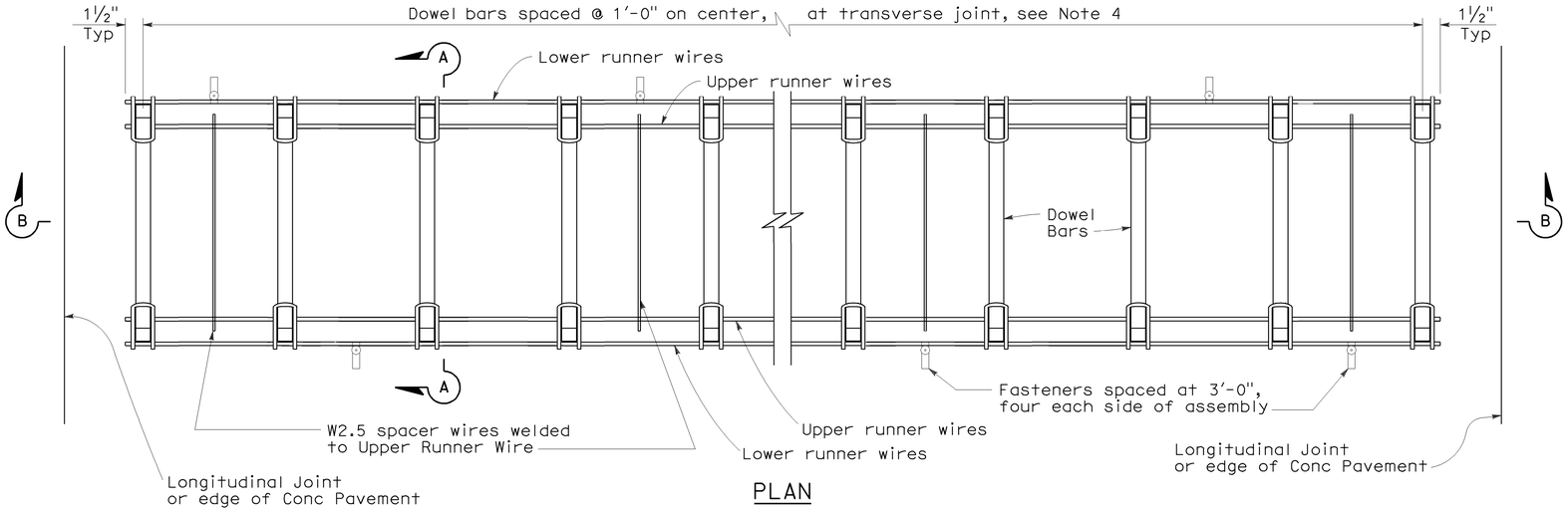

PLAN
DOWEL BAR BASKET (TRANSVERSE JOINT)
See Note 1

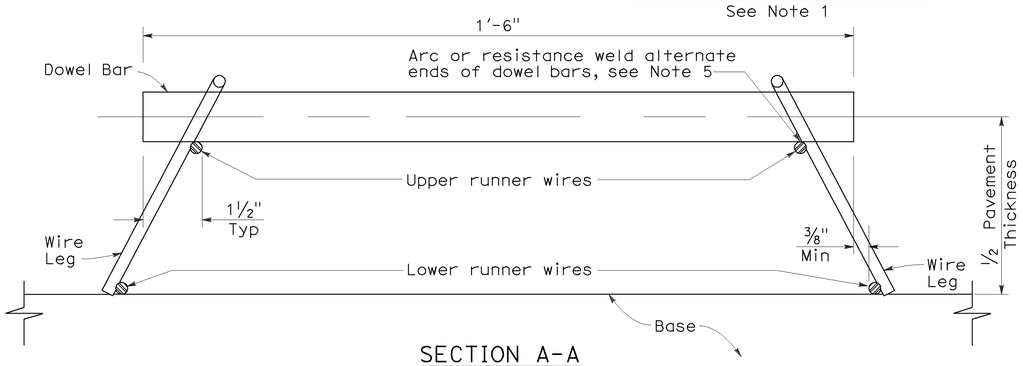

SECTION A-A

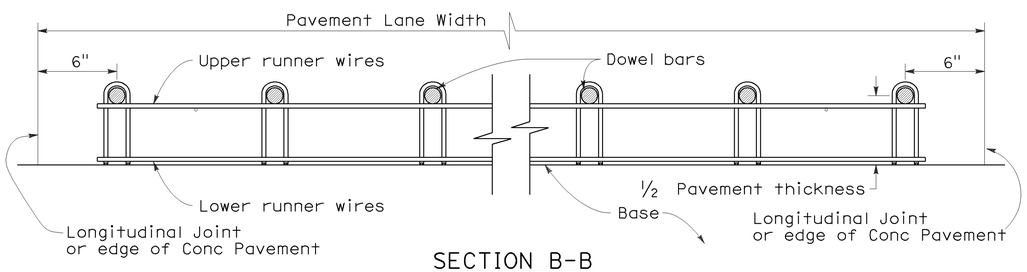

SECTION B-B
See Note 1

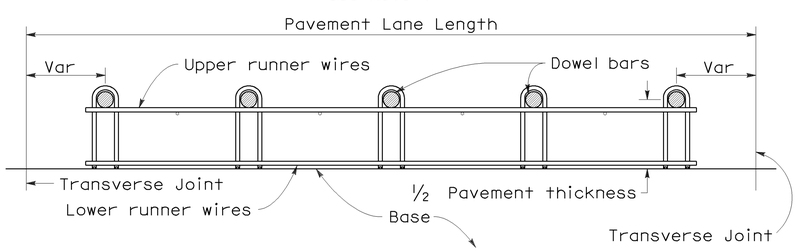

SECTION C-C
See Notes 1 and 4

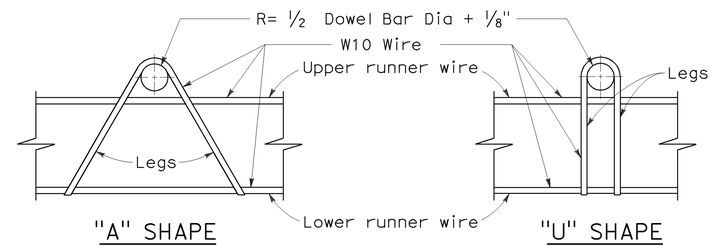

"A" SHAPE "U" SHAPE

ASSEMBLY FRAME DETAILS

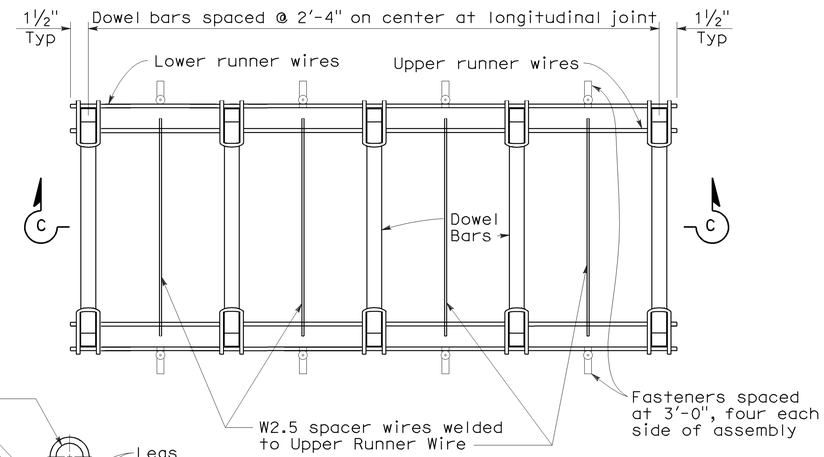

PLAN
DOWEL BAR BASKET (LONGITUDINAL JOINT)
See Note 1

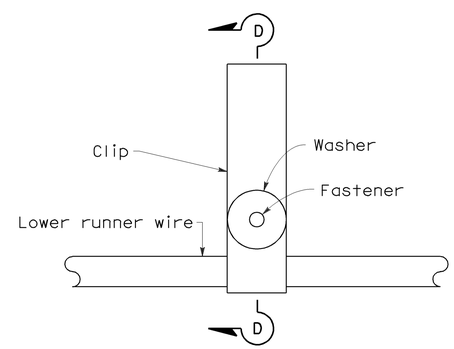

PLAN

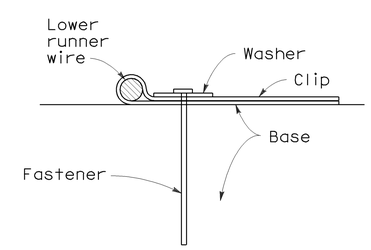

SECTION D-D

FASTENER DETAIL

NOTES:

1. "U" frame shape assembly shown. "U" frame shape or "A" frame shape are acceptable.
2. Wire sizes shown are minimum required.
3. All wire intersections are to be resistance welded.
4. Use tie bar spacing for longitudinal dowel bar locations. See Revised Std Plans RSPs P1, P2, and P3 for tie bar requirements.
5. Weld may be at top or bottom of dowel bar.

STATE OF CALIFORNIA
DEPARTMENT OF TRANSPORTATION

CONCRETE PAVEMENT-DOWEL BAR BASKET DETAILS

NO SCALE

RSP P12 DATED MAY 15, 2009 SUPERSEDES RSP P12 DATED NOVEMBER 17, 2006 AND STANDARD PLAN P12 DATED MAY 1, 2006 - PAGE 125 OF THE STANDARD PLANS BOOK DATED MAY 2006.

REVISED STANDARD PLAN RSP P12

2006 REVISED STANDARD PLAN RSP P12

5-8-09

DIST	COUNTY	ROUTE	POST MILES TOTAL PROJECT	SHEET NO.	TOTAL SHEETS
07	LA	14	R32.1/R52.6	40	65

William K. Farnbach
REGISTERED CIVIL ENGINEER

May 15, 2009
PLANS APPROVAL DATE

REGISTERED PROFESSIONAL ENGINEER
William K. Farnbach
No. C49042
Exp. 9-30-10
CIVIL
STATE OF CALIFORNIA

The State of California or its officers or agents shall not be responsible for the accuracy or completeness of electronic copies of this plan sheet.

To accompany plans dated 6-27-11

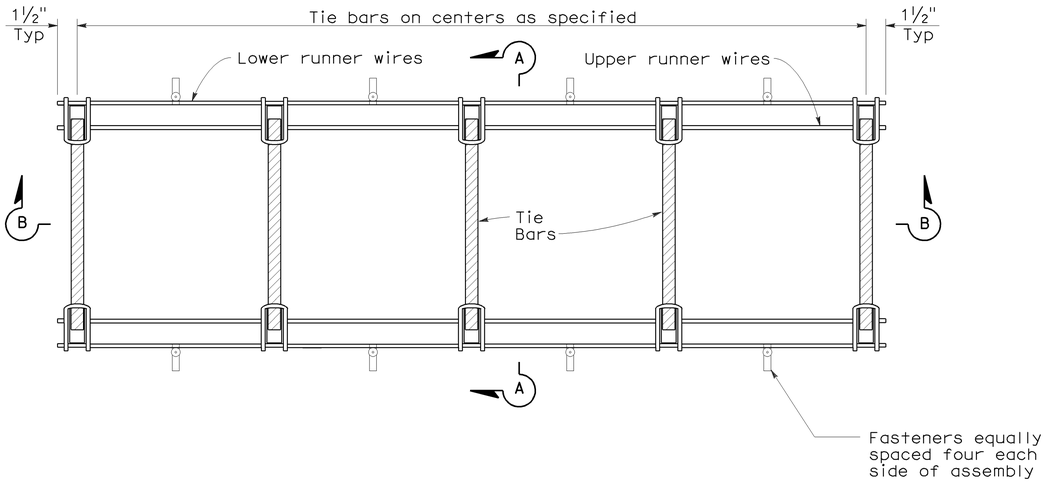

PLAN

TIE BAR BASKET

(TIE BARS AT LONGITUDINAL JOINT)
See Note 1

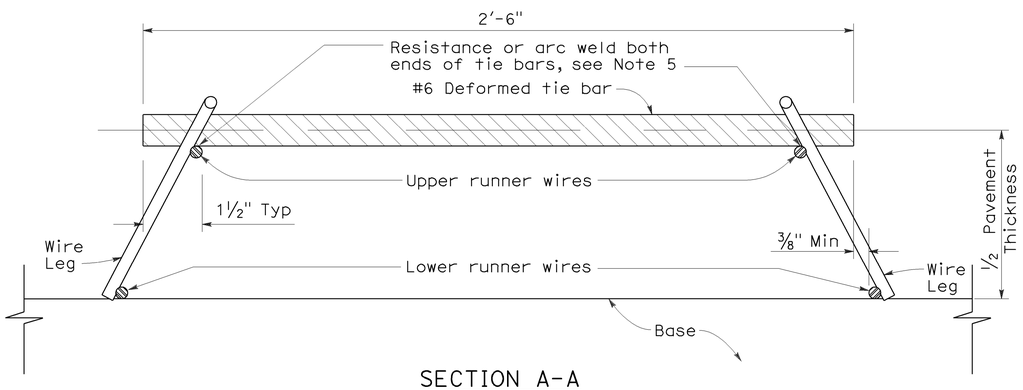

SECTION A-A

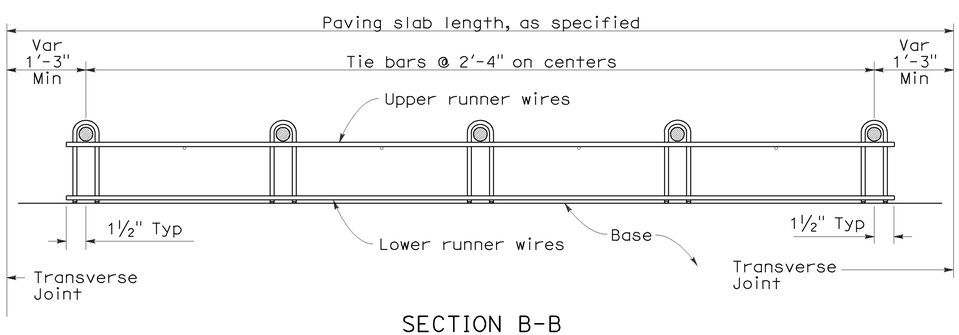

SECTION B-B
See Note 1

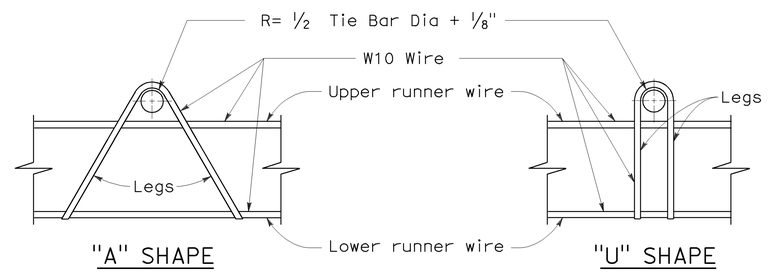

ASSEMBLY FRAME DETAILS

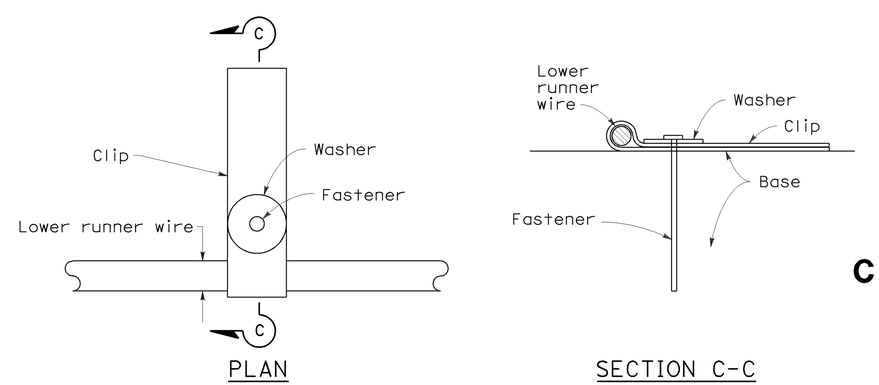

PLAN

SECTION C-C

FASTENER DETAIL

NOTES:

1. "U" frame shape assembly shown. "U" frame shape or "A" frame shape are acceptable.
2. Wire sizes shown are minimum required.
3. All wire intersections are to be resistance welded.
4. Not for use on nondoweled skewed jointed plain concrete pavement.
5. Weld may be at top or bottom of tie bar.

STATE OF CALIFORNIA
DEPARTMENT OF TRANSPORTATION

CONCRETE PAVEMENT-TIE BAR BASKET DETAILS

NO SCALE

RSP P17 DATED MAY 15, 2009 SUPERSEDES RSP P17 DATED NOVEMBER 17, 2006 AND STANDARD PLAN P17 DATED MAY 1, 2006 - PAGE 126 OF THE STANDARD PLANS BOOK DATED MAY 2006.

REVISED STANDARD PLAN RSP P17

2006 REVISED STANDARD PLAN RSP P17

5-8-09

DIST	COUNTY	ROUTE	POST MILES TOTAL PROJECT	SHEET NO.	TOTAL SHEETS
07	LA	14	R32.1/R52.6	41	65

William K. Farnbach
REGISTERED CIVIL ENGINEER

May 15, 2009
PLANS APPROVAL DATE

REGISTERED PROFESSIONAL ENGINEER
William K. Farnbach
No. C49042
Exp. 9-30-10
CIVIL
STATE OF CALIFORNIA

The State of California or its officers or agents shall not be responsible for the accuracy or completeness of electronic copies of this plan sheet.

To accompany plans dated 6-27-11

NOTE:

1. Tie bars, dowel bars, and reinforcement are not shown in joint seal details, see Revised Standard Plans RSP P1, RSP P3, RSP P10, RSP P35, RSP P45, or RSP P46 as applicable.

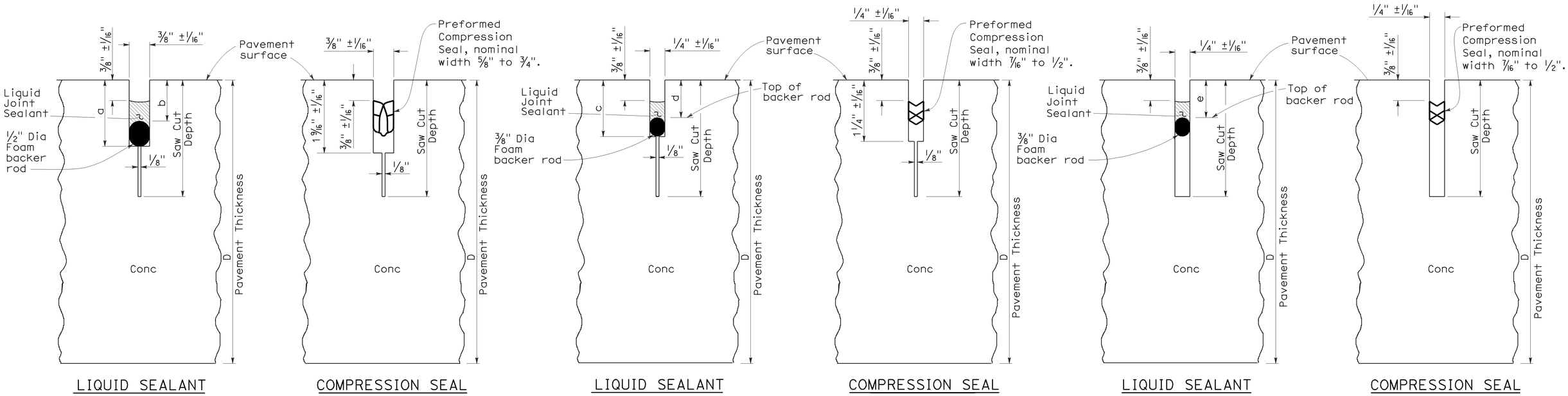

TYPE A1
Transverse Contraction Joints

TYPE A2
Longitudinal Contraction Joints

TYPE B
Longitudinal or Transverse Contraction Joint

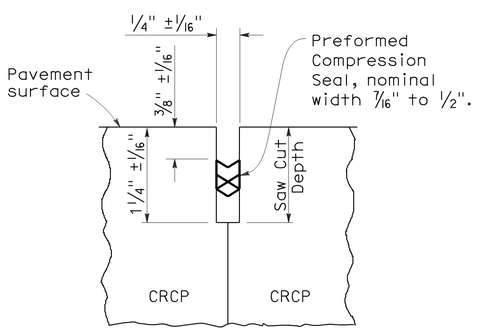

COMPRESSION SEAL

TYPE C
Transverse and Longitudinal Construction Joints (For CRCP)

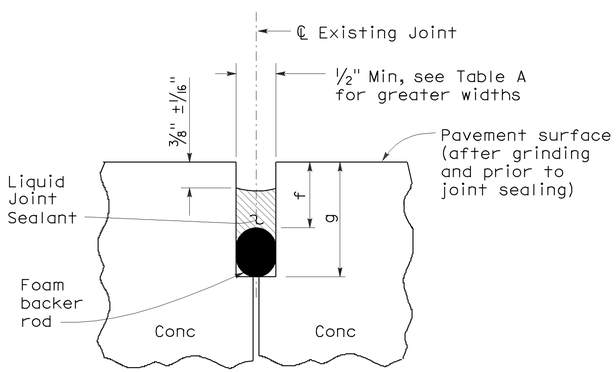

LIQUID SEALANT

TYPE R
Retrofit Transverse and Longitudinal Joints

LIQUID SEALANT RESERVOIR DEPTH

LIQUID SEALANT MATERIAL	3/8" Joint Width Type A1		1/4" Joint Width Type A2		1/4" Joint Width Type B
	DIMENSION		DIMENSION		DIMENSION
	a	b	c	d	e
SILCONE	1" ±1/16"	5/8" ±1/16"	15/16" ±1/16"	9/16" ±1/16"	9/16" ±1/16"
ASPHALT RUBBER	1 3/16" ±1/16"	3/4" ±1/16"	1 1/16" ±1/16"	11/16" ±1/16"	11/16" ±1/16"

TABLE A (TYPE R JOINT)

Sawn Joint Width	Backer Rod Diameter ± 1/16"	DIMENSION "f"	DIMENSION "g"
1"	1 5/16"	7/8"	2 1/4"
7/8"	1 3/16"	13/16"	2"
3/4"	1"	3/4"	1 3/4"
5/8"	7/8"	11/16"	1 1/2"
1/2"	11/16"	5/8"	1 1/4"

STATE OF CALIFORNIA
DEPARTMENT OF TRANSPORTATION

CONCRETE PAVEMENT-JOINT DETAILS

NO SCALE

RSP P20 DATED MAY 15, 2009 SUPERSEDES STANDARD PLAN P20
DATED MAY 1, 2006 - PAGE 128 OF THE STANDARD PLANS BOOK DATED MAY 2006.

REVISED STANDARD PLAN RSP P20

2006 REVISED STANDARD PLAN RSP P20

5-8-09

DIST	COUNTY	ROUTE	POST MILES TOTAL PROJECT	SHEET NO.	TOTAL SHEETS
07	LA	14	R32.1/R52.6	42	65

William K. Farnbach
REGISTERED CIVIL ENGINEER

June 5, 2009
PLANS APPROVAL DATE

REGISTERED PROFESSIONAL ENGINEER
William K. Farnbach
No. C49042
Exp. 9-30-10
CIVIL
STATE OF CALIFORNIA

The State of California or its officers or agents shall not be responsible for the accuracy or completeness of electronic copies of this plan sheet.

To accompany plans dated 6-27-11

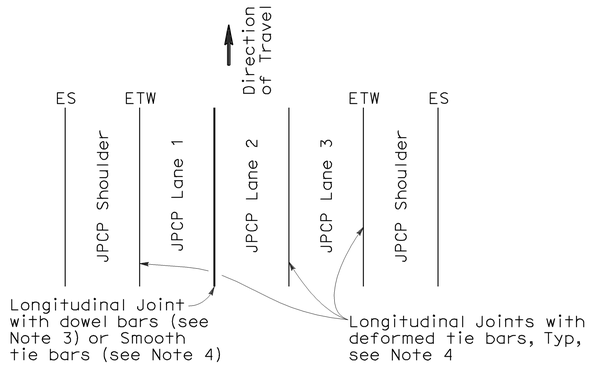

3 LANES WITH TIED CONCRETE SHOULDERS
PLAN

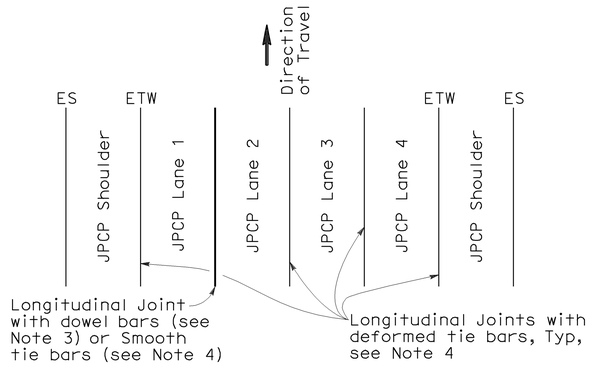

4 LANES WITH TIED CONCRETE SHOULDERS
PLAN

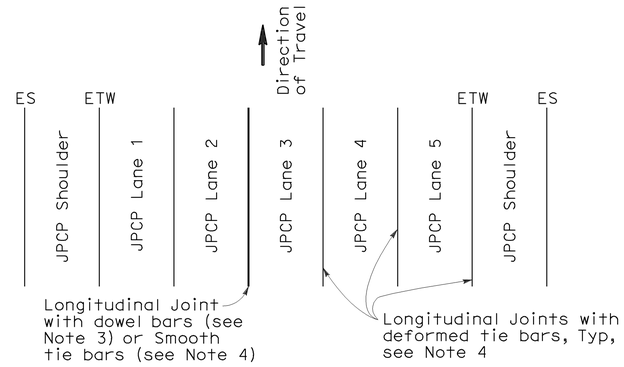

5 LANES WITH TIED CONCRETE SHOULDERS
PLAN

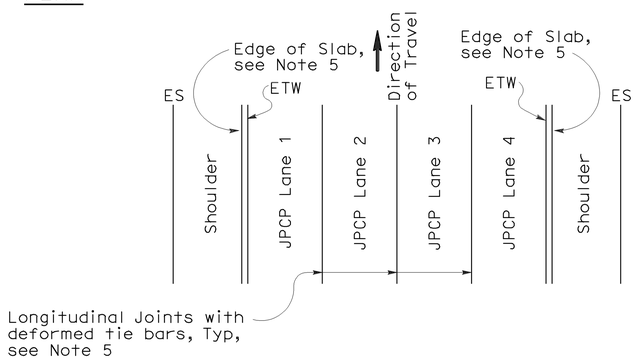

4 LANES OR LESS WITH WIDENED SLAB
PLAN

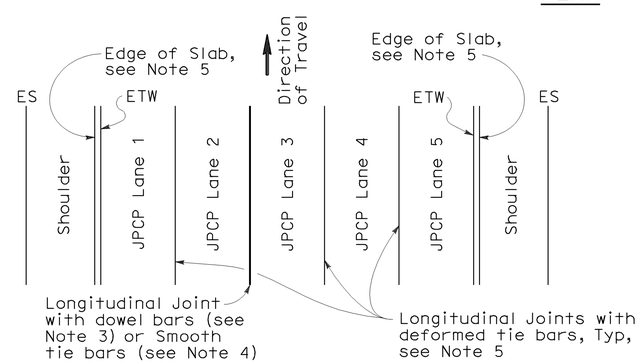

5 LANES WITH WIDENED SLAB
PLAN

NEW CONSTRUCTION

Location of Longitudinal Joints
(For JPCP)

CASE 1
PLAN

Transverse Joints do not align between new and existing

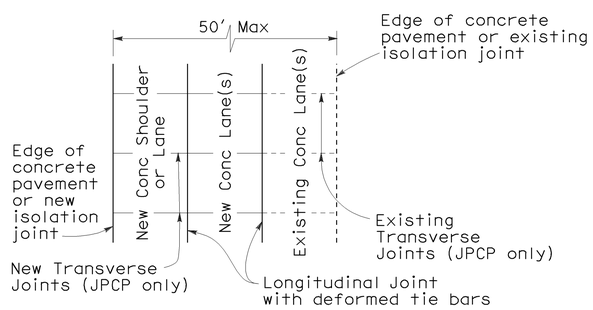

CASE 2
PLAN

Transverse Joints align between new and existing

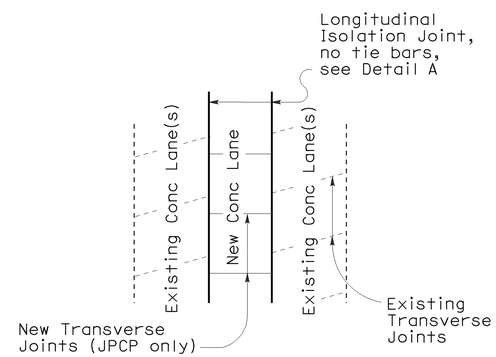

CASE 3 (INTERIOR LANE REPLACEMENT)
PLAN

Transverse Joints do not align between new and existing

LANE/SHOULDER ADDITION OR RECONSTRUCTION

(For JPCP and CRCP)

NOTES:

1. Where Lean Concrete Base is not used as base material, the joint filler material used for the longitudinal isolation joint shall only extend to the bottom of the new concrete slab. See Detail A.
2. Use 5/8" ±1/16" dimension for silicone sealant.
3. See Revised Standard Plan RSP P10 for longitudinal joint with dowel bars.
4. See Revised Standard Plan RSP P1.
5. See Revised Standard Plan RSP P2.

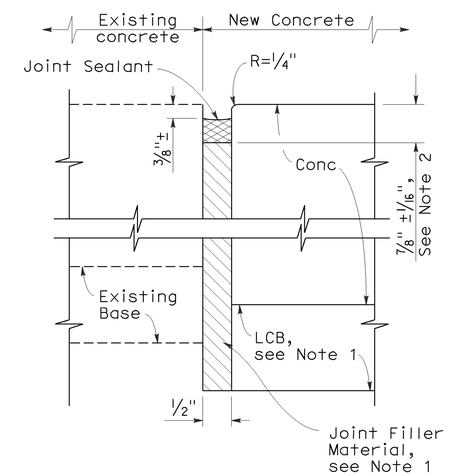

DETAIL A

ISOLATION JOINT

STATE OF CALIFORNIA
DEPARTMENT OF TRANSPORTATION

CONCRETE PAVEMENT-LANE SCHEMATICS AND ISOLATION JOINT DETAIL

NO SCALE

RSP P18 DATED JUNE 5, 2009 SUPERSEDES RSP P18 DATED MAY 15, 2009, RSP P18 DATED NOVEMBER 17, 2006 AND STANDARD PLAN P18 DATED MAY 1, 2006 - PAGE 127 OF THE STANDARD PLANS BOOK DATED MAY 2006.

REVISED STANDARD PLAN RSP P18

2006 REVISED STANDARD PLAN RSP P18

5-14-09

DIST	COUNTY	ROUTE	POST MILES TOTAL PROJECT	SHEET NO.	TOTAL SHEETS
07	LA	14	R32.1/R52.6	43	65

Randell D. Hiatt
REGISTERED CIVIL ENGINEER

June 6, 2008
PLANS APPROVAL DATE

REGISTERED PROFESSIONAL ENGINEER
Randell D. Hiatt
No. C50200
Exp. 6-30-09
CIVIL
STATE OF CALIFORNIA

The State of California or its officers or agents shall not be responsible for the accuracy or completeness of electronic copies of this plan sheet.

To accompany plans dated 6-27-11

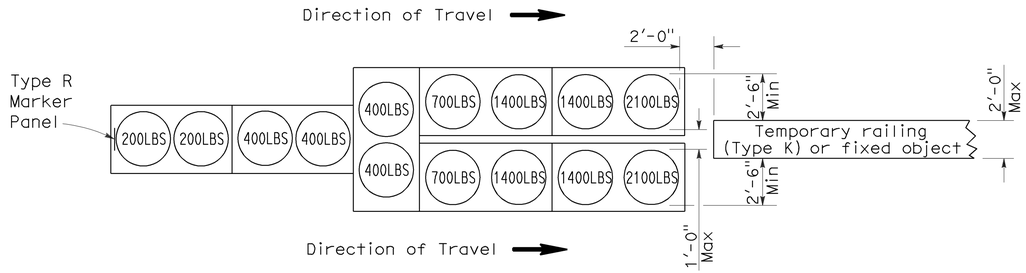

ARRAY 'TU14'

Approach speed 45 mph or more

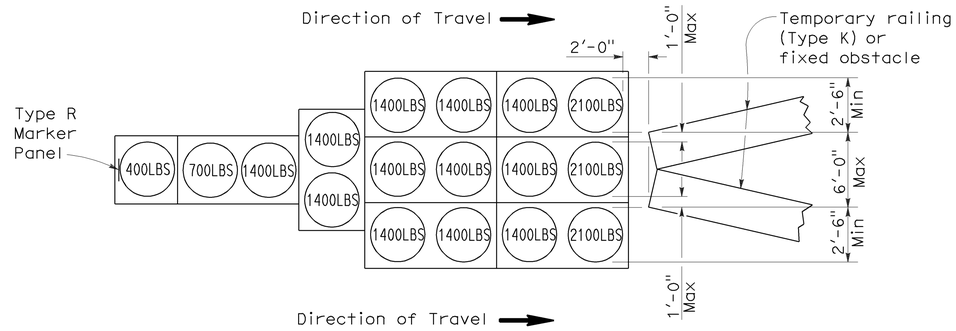

ARRAY 'TU17'

Approach speed less than 45 mph

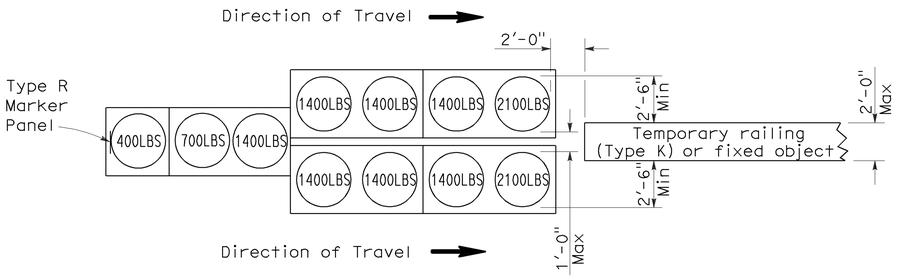

ARRAY 'TU11'

Approach speed less than 45 mph

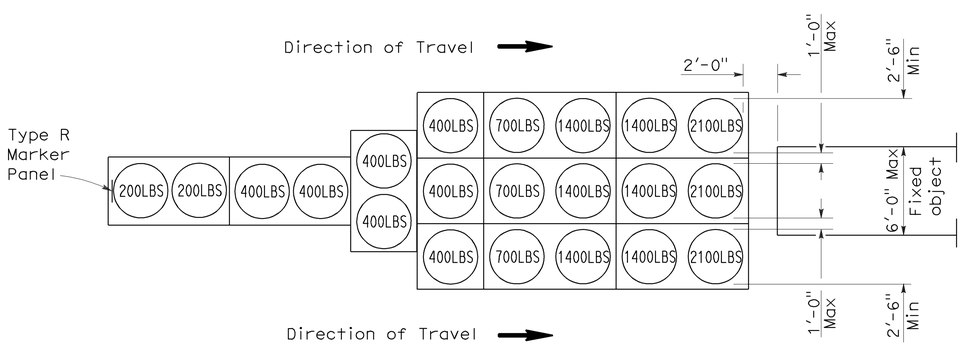

ARRAY 'TU21'

Approach speed 45 mph or more

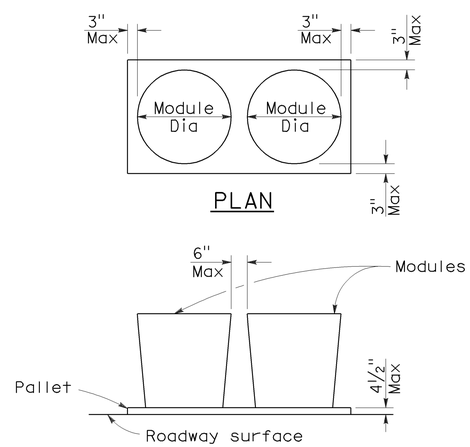

ELEVATION

CRASH CUSHION PALLET DETAIL

See Note 7

NOTES:

1. (XXX) Indicates sand filled module location and weight of sand in pounds for each module. Module spacing is based on the greater diameter of the module.
2. All sand weights are nominal.
3. Temporary crash cushion arrays shall not encroach on the traveled way.
4. Place the top of Type R marker panel 1" below the module lid.
5. Refer to Standard Plan A73B for marker details.
6. Approach speeds indicated conform to NCHRP 350 Report criteria.
7. Use of pallets is optional.

STATE OF CALIFORNIA
DEPARTMENT OF TRANSPORTATION

TEMPORARY CRASH CUSHION, SAND FILLED (UNIDIRECTIONAL)

NO SCALE

RSP T1A DATED JUNE 6, 2008 SUPERSEDES STANDARD PLAN T1A
DATED MAY 1, 2006 - PAGE 211 OF THE STANDARD PLANS BOOK DATED MAY 2006.

REVISED STANDARD PLAN RSP T1A

2006 REVISED STANDARD PLAN RSP T1A

5-15-08

DIST	COUNTY	ROUTE	POST MILES TOTAL PROJECT	SHEET NO.	TOTAL SHEETS
07	LA	14	R32.1/R52.6	44	65

Randell D. Hiatt
REGISTERED CIVIL ENGINEER

June 6, 2008
PLANS APPROVAL DATE

REGISTERED PROFESSIONAL ENGINEER
Randell D. Hiatt
No. C50200
Exp. 6-30-09
CIVIL
STATE OF CALIFORNIA

The State of California or its officers or agents shall not be responsible for the accuracy or completeness of electronic copies of this plan sheet.

To accompany plans dated 6-27-11

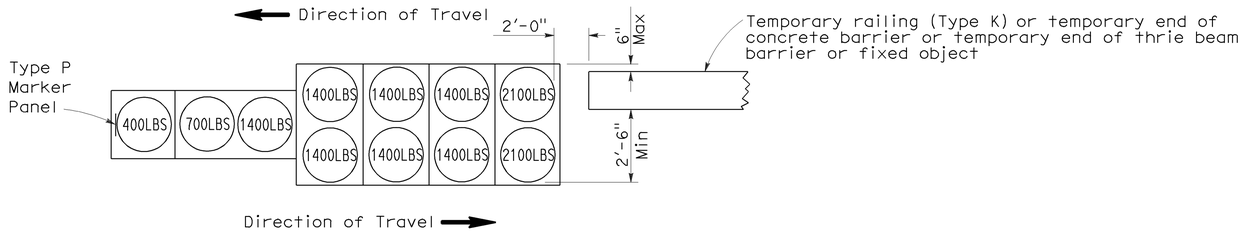

ARRAY 'TB11'

Approach speed less than 45 mph

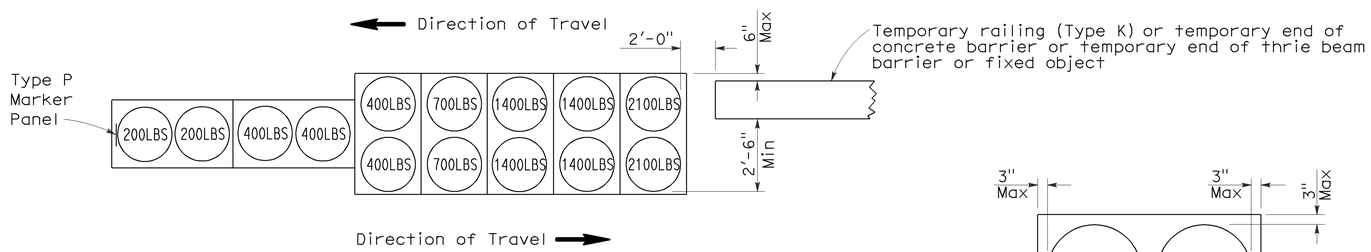

ARRAY 'TB14'

Approach speed 45 mph or more

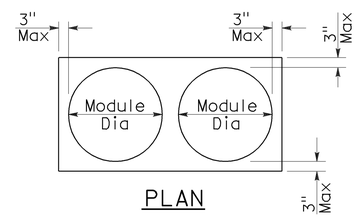

PLAN

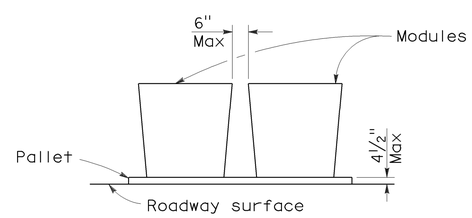

ELEVATION

CRASH CUSHION PALLET DETAIL

See Note 7

NOTES:

1. (XXX) Indicates sand filled module location and weight of sand in pounds for each module. Module spacing is based on the greater diameter of the module.
2. All sand weights are nominal.
3. Temporary crash cushion arrays shall not encroach on the traveled way.
4. Place the Type P marker panel so that the bottom of the panel rests upon the pallet.
5. Refer to Standard Plan A73B for marker details.
6. Approach speeds indicated conform to NCHRP 350 Report criteria.
7. Use of pallets is optional.

STATE OF CALIFORNIA
DEPARTMENT OF TRANSPORTATION

TEMPORARY CRASH CUSHION, SAND FILLED (BIDIRECTIONAL)

NO SCALE

RSP T1B DATED JUNE 6, 2008 SUPERSEDES STANDARD PLAN T1B
DATED MAY 1, 2006 - PAGE 212 OF THE STANDARD PLANS BOOK DATED MAY 2006.

REVISED STANDARD PLAN RSP T1B

2006 REVISED STANDARD PLAN RSP T1B

5-15-08

DIST	COUNTY	ROUTE	POST MILES TOTAL PROJECT	SHEET NO.	TOTAL SHEETS
07	LA	14	R32.1/R52.6	45	65

Randell D. Hiatt
REGISTERED CIVIL ENGINEER

June 6, 2008
PLANS APPROVAL DATE

REGISTERED PROFESSIONAL ENGINEER
Randell D. Hiatt
No. C50200
Exp. 6-30-09
CIVIL
STATE OF CALIFORNIA

The State of California or its officers or agents shall not be responsible for the accuracy or completeness of electronic copies of this plan sheet.

To accompany plans dated 6-27-11

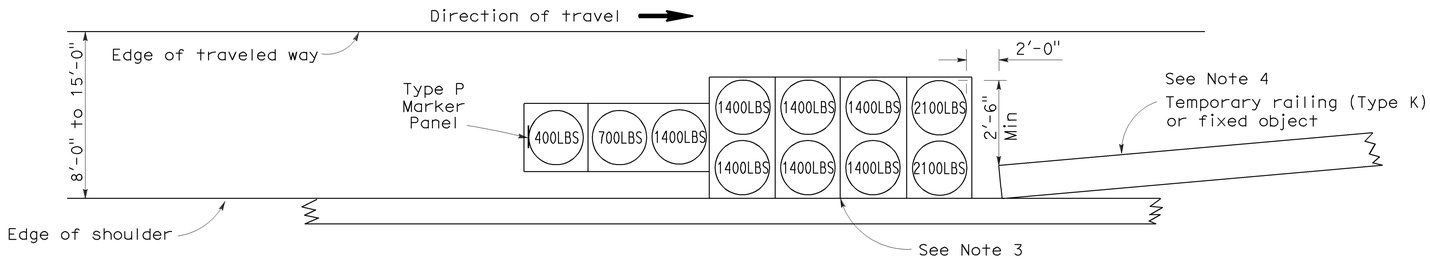

ARRAY 'TS11'

Approach speed less than 45 mph
See Note 9

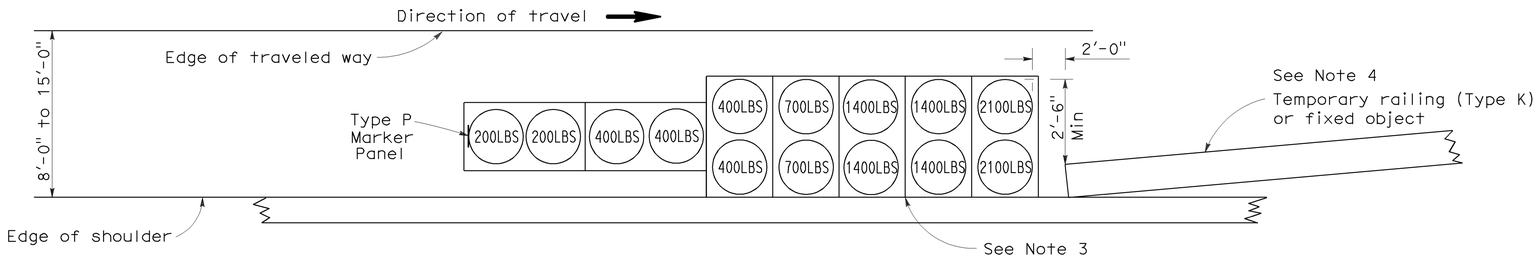

ARRAY 'TS14'

Approach speed 45 mph or more
See Note 9

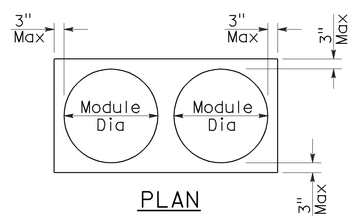

PLAN

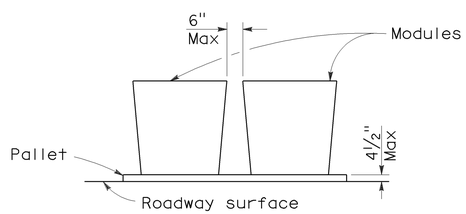

ELEVATION

CRASH CUSHION PALLET DETAIL

See Note 11

NOTES:

1. (XXX) Indicates sand filled module location and weight of sand in pounds for each module. Module spacing is based on the greater diameter of the module.
2. All sand weights are nominal.
3. The temporary crash cushion arrays shown on this plan shall be used only in locations where there will be traffic on one side of the temporary crash cushion array.
4. If the fixed object or approach end of the temporary railing is less than 15'-0" from the edge of traveled way, a temporary crash cushion is required in a construction or work zone.
5. Temporary crash cushion arrays shall not encroach on the traveled way.
6. Arrays for median shoulders shall conform to details shown on this plan for outside shoulders.
7. Place the Type P marker panel so that the bottom of the panel rests upon the pallet and faces traffic.
8. Refer to Standard Plan A73B for marker details.
9. For shoulder widths less than 8'-0", appropriate approved crash cushion protection, other than sand filled modules, shall be provided at fixed objects and at approach ends of temporary railing. The specific type of crash cushion shall be as shown on the project plans or as specified in the Special Provisions, or if not shown on the project plans or specified in the Special Provisions, shall be as approved by the Engineer.
10. Approach speeds indicated conform to NCHRP 350 Report criteria.
11. Use of pallets is optional.

STATE OF CALIFORNIA
DEPARTMENT OF TRANSPORTATION

TEMPORARY CRASH CUSHION, SAND FILLED (SHOULDER INSTALLATIONS)

NO SCALE

RSP T2 DATED JUNE 6, 2008 SUPERSEDES STANDARD PLAN T2
DATED MAY 1, 2006 - PAGE 213 OF THE STANDARD PLANS BOOK DATED MAY 2006.

REVISED STANDARD PLAN RSP T2

2006 REVISED STANDARD PLAN RSP T2

5-15-08

Dist	COUNTY	ROUTE	POST MILES TOTAL PROJECT	SHEET No.	TOTAL SHEETS
07	LA	14	R32.1/R52.6	46	65

Randell D. Hiatt
REGISTERED CIVIL ENGINEER

May 20, 2011
PLANS APPROVAL DATE

REGISTERED PROFESSIONAL ENGINEER
Randell D. Hiatt
No. C50200
Exp. 6-30-11
CIVIL
STATE OF CALIFORNIA

The State of California or its officers or agents shall not be responsible for the accuracy or completeness of electronic copies of this plan sheet.

To accompany plans dated 6-27-11

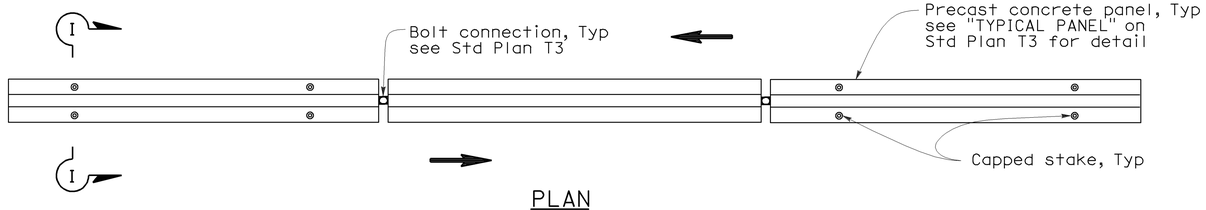

PLAN

RAILING STAKING CONFIGURATION FOR TWO-WAY TRAFFIC

See Note 1

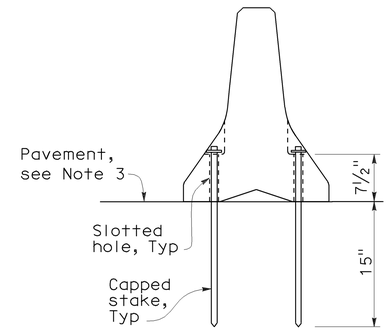

SECTION I-I

NOTES:

1. Where Type K Temporary Railing is placed as a temporary or long term barrier in two-way traffic on highways with less than 24" from the edge of traveled way, use four capped stakes per every other panel with end panels staked.
2. Where Type K Temporary Railing is placed 3" to 24" from the edge of an excavation on highways, use two capped stakes per panel along the traffic side.
3. Staked Type K Temporary Railing must be supported by at least 4" thick concrete, hot mix asphalt or existing asphalt concrete pavement.
4. The minimum yield strength for the washer must be 60,000 psi.
5. Direction of adjacent traffic indicated by ⟹.

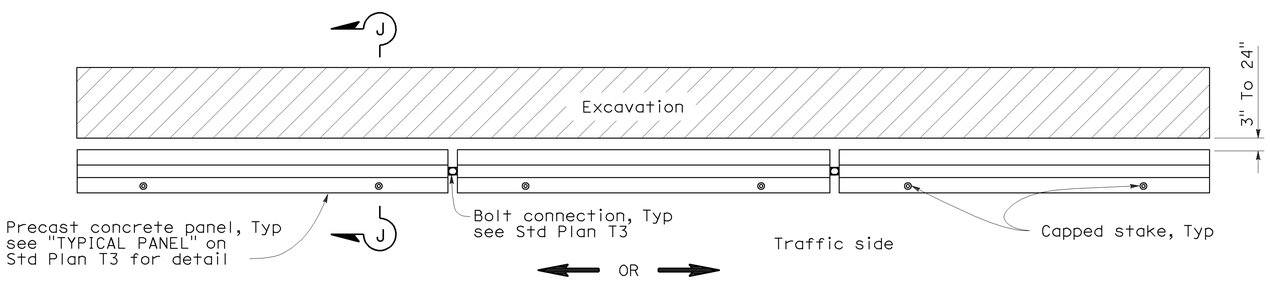

PLAN

RAILING STAKING CONFIGURATION ADJACENT TO AN EXCAVATION

See Note 2

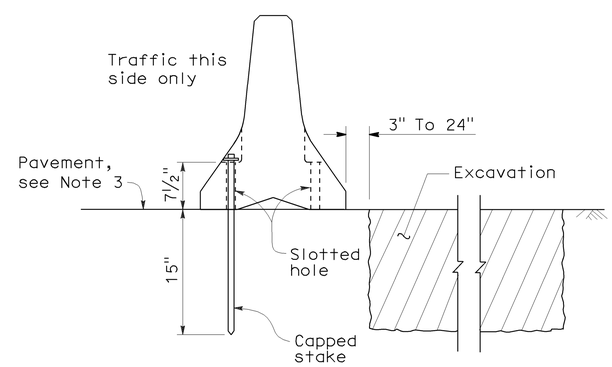

SECTION J-J

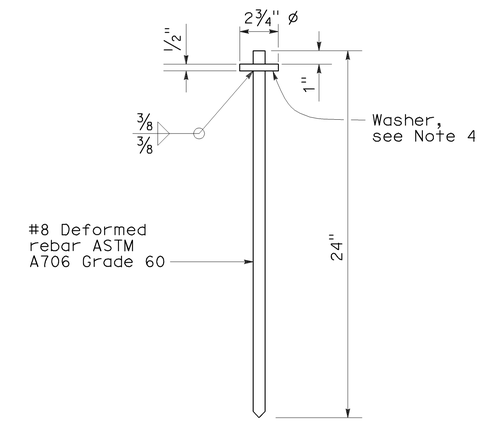

CAPPED STAKE DETAIL

STATE OF CALIFORNIA
DEPARTMENT OF TRANSPORTATION

TEMPORARY RAILING (TYPE K)

NO SCALE

NSP T3A DATED MAY 20, 2011 SUPPLEMENTS
THE STANDARD PLANS BOOK DATED MAY 2006.

NEW STANDARD PLAN NSP T3A

2006 NEW STANDARD PLAN NSP T3A

DIST	COUNTY	ROUTE	POST MILES TOTAL PROJECT	SHEET NO.	TOTAL SHEETS
07	LA	14	R32.1/R52.6	47	65

LICENSED LANDSCAPE ARCHITECT

August 15, 2008
PLANS Approval DATE

The State of California or its officers or agents shall not be responsible for the accuracy or completeness of electronic copies of this plan sheet.

LICENSED LANDSCAPE ARCHITECT
Robert B. Schott 3635
Signature
11-04-08
Renewal Date
08-11-08
Date
STATE OF CALIFORNIA

To accompany plans dated 6-27-11

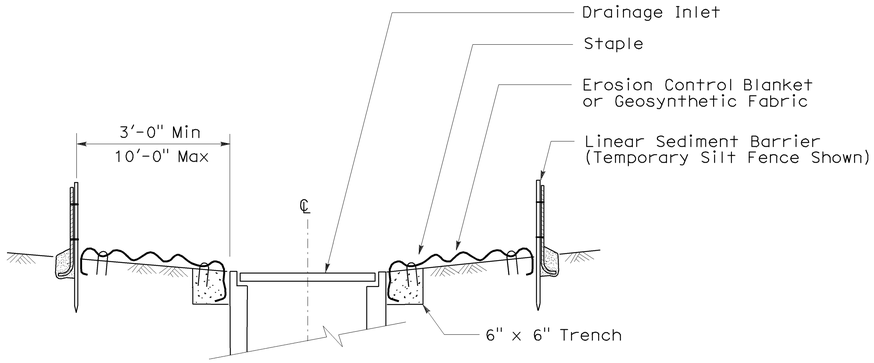

SECTION A-A

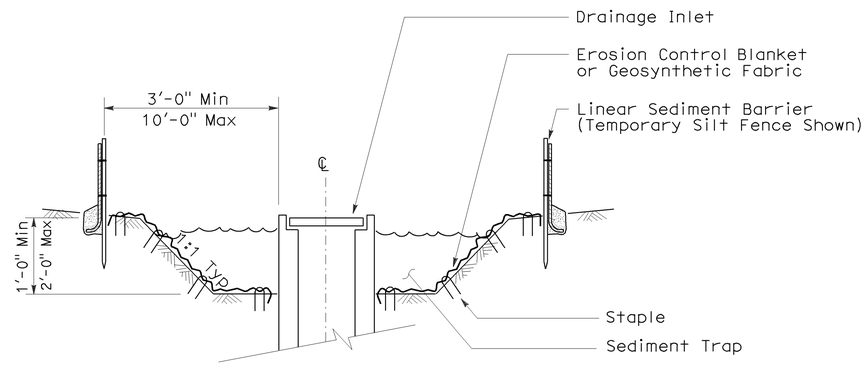

SECTION B-B

NOTES:

1. See Standard Plan T51 for Temporary Silt Fence.
2. Dimensions may vary to fit field conditions.

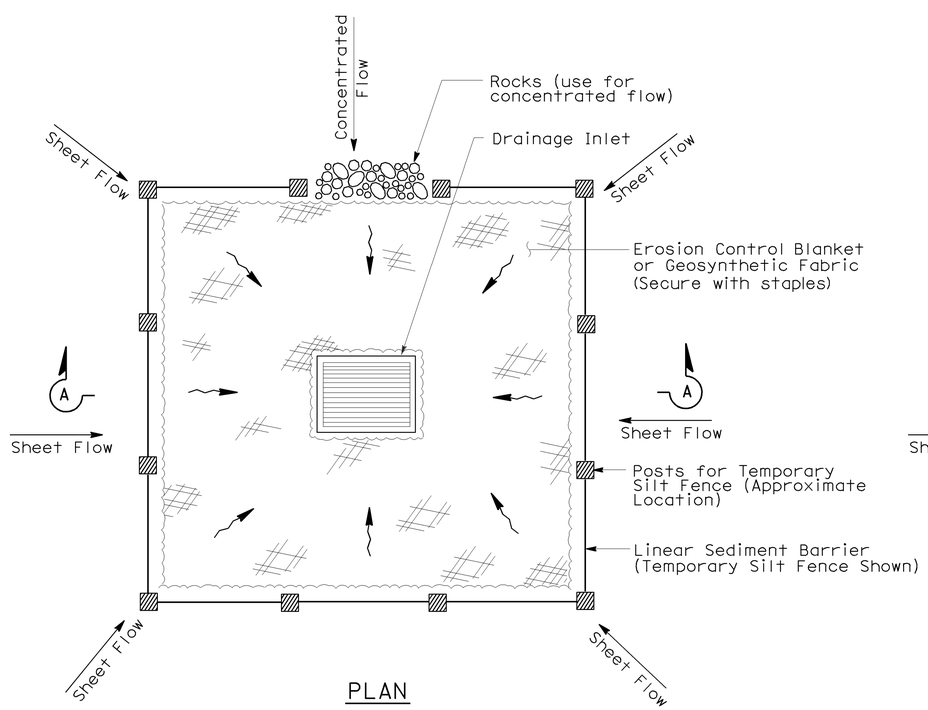

PLAN

TEMPORARY DRAINAGE INLET PROTECTION (TYPE 1)

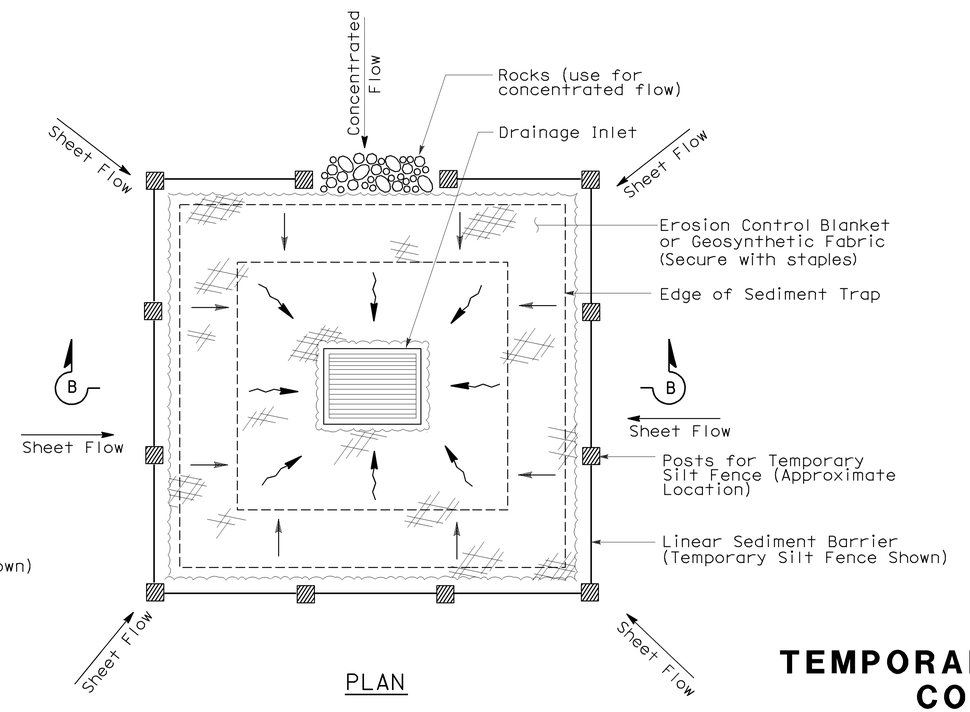

PLAN

TEMPORARY DRAINAGE INLET PROTECTION (TYPE 2) (EXCAVATED SEDIMENT TRAP)

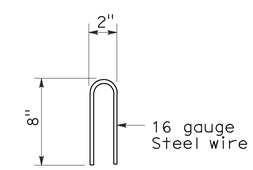

STAPLE DETAIL

STATE OF CALIFORNIA
DEPARTMENT OF TRANSPORTATION

TEMPORARY WATER POLLUTION CONTROL DETAILS (TEMPORARY DRAINAGE INLET PROTECTION)

NO SCALE

Nsp t61 dated august 15, 2008 supplements the standard plans book dated may 2006.

NEW STANDARD PLAN NSP T61

2006 NEW STANDARD PLAN NSP T61

7-11-08

DIST	COUNTY	ROUTE	POST MILES TOTAL PROJECT	SHEET NO.	TOTAL SHEETS
07	LA	14	R32.1/R52.6	48	65

LICENSED LANDSCAPE ARCHITECT

August 15, 2008
PLANS APPROVAL DATE

The State of California or its officers or agents shall not be responsible for the accuracy or completeness of electronic copies of this plan sheet.

LICENSED LANDSCAPE ARCHITECT Robert B. Schott 3695 STATE OF CALIFORNIA
Signature 11-04-08 Renewal Date 08-11-08 Date

To accompany plans dated 6-27-11

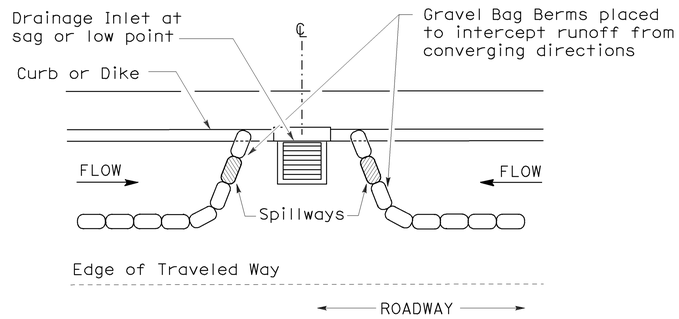

PLAN

CONFIGURATION FOR SAG POINT INLET (GRAVEL BAG BERM)

GRAVEL BAG BERM (TYPE 3A) SPACING TABLE

SLOPE OF ROADWAY (PERCENT)	1 to 3.9	4 to 5.9	6 to 7.9	8 to 10	10+
INTERVAL BETWEEN BERM	100′	75′	50′	25′	12′

For slope of less than 1%, install barriers only if erosion/sediment is prevalent

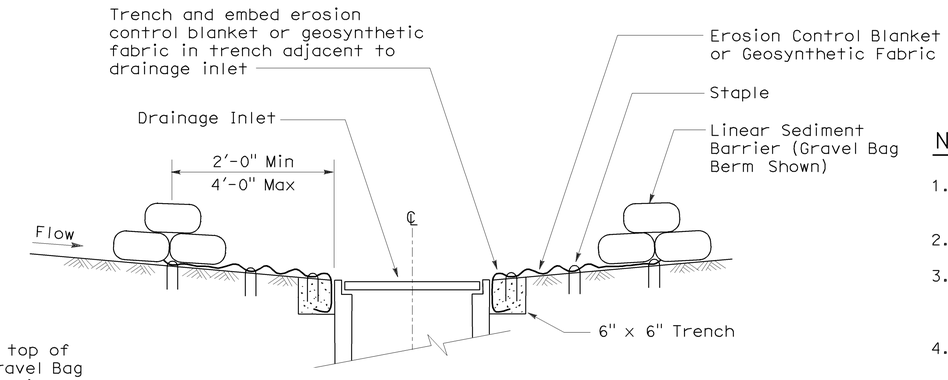

SECTION A-A

NOTES:

1. Place safety cones adjacent to drainage inlet protection.
2. Dimensions may vary to fit field conditions.
3. Install a minimum of 3 gravel bag berms upstream of each drainage inlet to be protected.
4. Position erosion control blanket or geosynthetic fabric at edge of concrete apron and secure in trench.
5. Erosion control blanket or geosynthetic fabric is not required if the area adjacent to the drainage inlet is vegetated or paved.

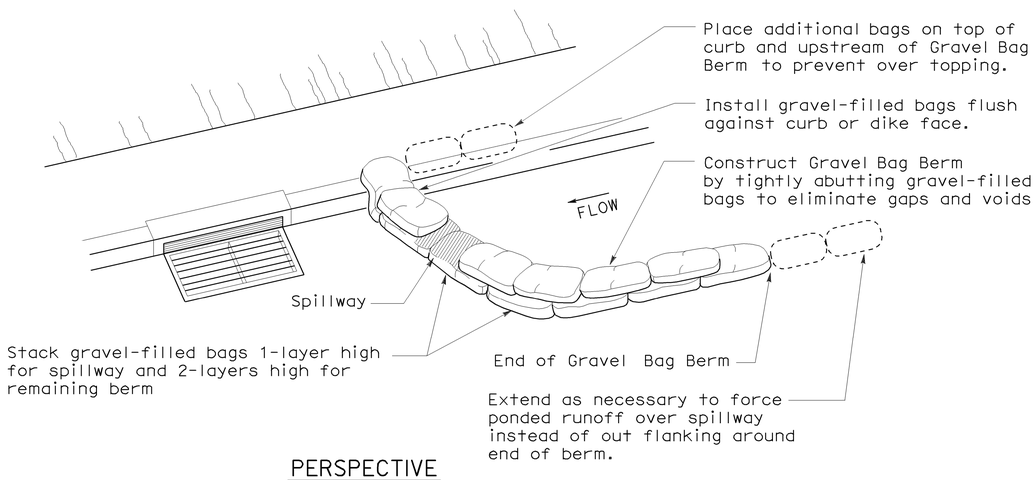

PERSPECTIVE

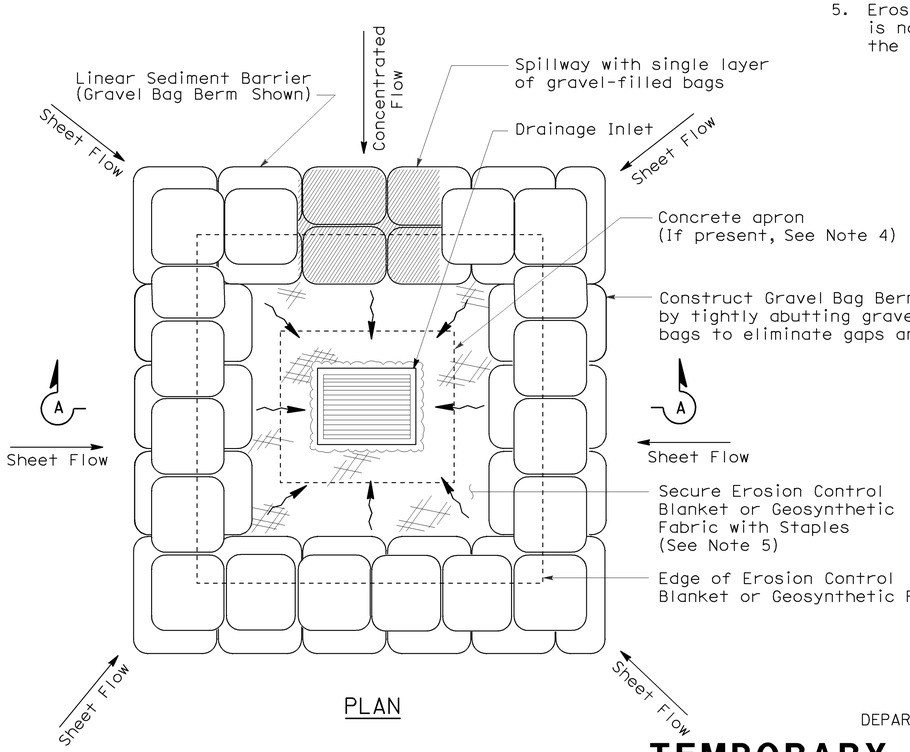

PLAN

TEMPORARY DRAINAGE INLET PROTECTION (TYPE 3B)

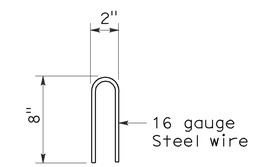

STAPLE DETAIL

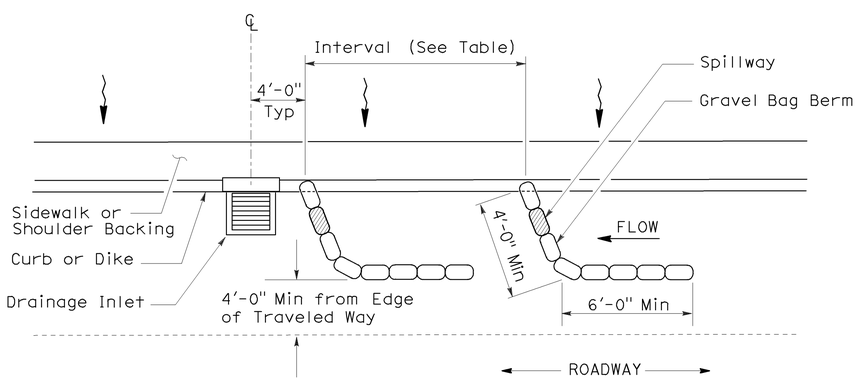

PLAN

TEMPORARY DRAINAGE INLET PROTECTION (TYPE 3A) (GRAVEL BAG BERM)

STATE OF CALIFORNIA
DEPARTMENT OF TRANSPORTATION

TEMPORARY WATER POLLUTION CONTROL DETAILS (TEMPORARY DRAINAGE INLET PROTECTION)

NO SCALE

NSP T62 DATED AUGUST 15, 2008 SUPPLEMENTS THE STANDARD PLANS BOOK DATED MAY 2006.

NEW STANDARD PLAN NSP T62

2006 NEW STANDARD PLAN NSP T62

7-11-08

DIST	COUNTY	ROUTE	POST MILES TOTAL PROJECT	SHEET NO.	TOTAL SHEETS
07	LA	14	R32.1/R52.6	49	65

Robert B Schott
LICENSED LANDSCAPE ARCHITECT

August 15, 2008
PLANS APPROVAL DATE

LICENSED LANDSCAPE ARCHITECT Robert B. Schott 3895 STATE OF CALIFORNIA
Robert B Schott
Signature
11-04-08
Renewal Date
08-11-08
Date

The State of California or its officers or agents shall not be responsible for the accuracy or completeness of electronic copies of this plan sheet.

To accompany plans dated 6-27-11

FLEXIBLE SEDIMENT BARRIER SPACING TABLE

SLOPE OF ROADWAY (PERCENT)	0 to 0.9	1 to 1.9	2 to 2.9	3 to 4	5+
INTERVAL BETWEEN BARRIERS	50′	35′	30′	25′	20′
ANGLE FROM FACE OF CURB	70°	70°	70°	45°	45°
SUGGESTED BARRIER LENGTH	6′	6′	6′	6′	6′

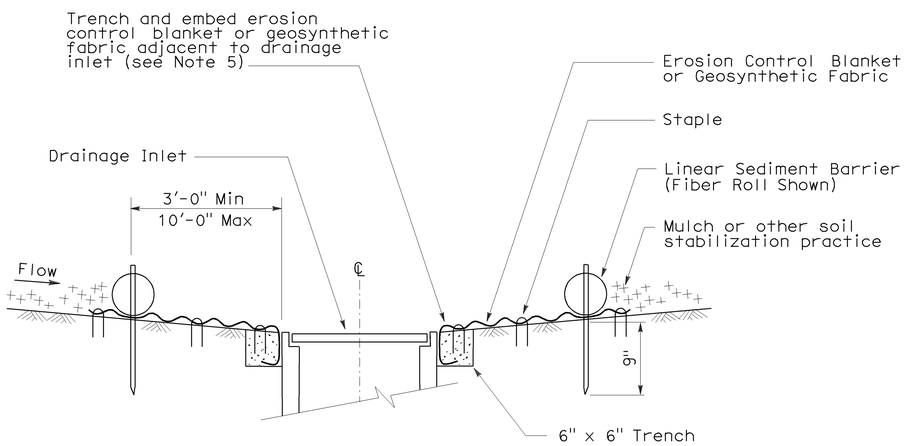

SECTION A-A

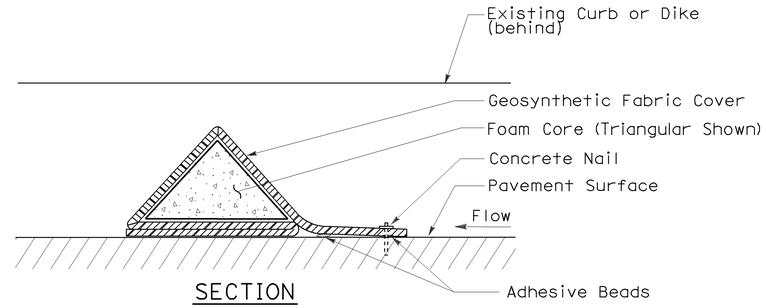

SECTION

FLEXIBLE SEDIMENT BARRIER DETAIL (FOAM BARRIER SHOWN)

NOTES:

1. See Standard Plan T51 for Temporary Silt Fence.
2. Dimensions may vary to fit field conditions.
3. Install a minimum of 3 flexible sediment barriers upstream of each drainage inlet to be protected.
4. Position erosion control blanket or geosynthetic fabric at edge of concrete apron and secure in trench.
5. Erosion control blanket or geosynthetic fabric is not required if the area adjacent to the drainage inlet is vegetated.

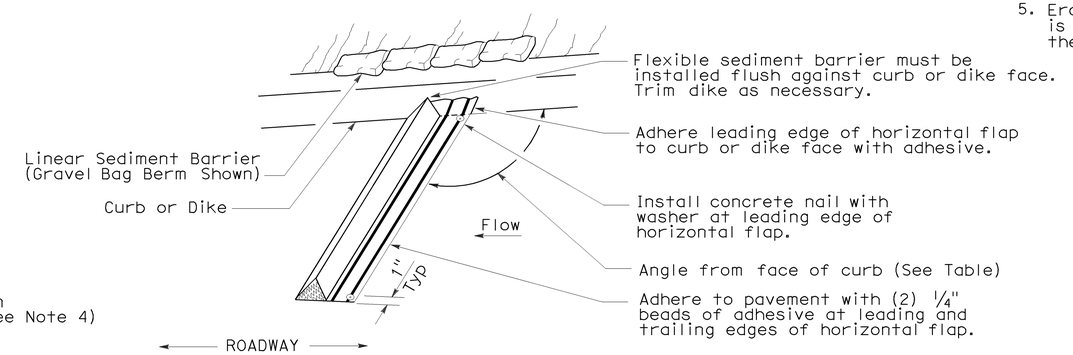

PERSPECTIVE

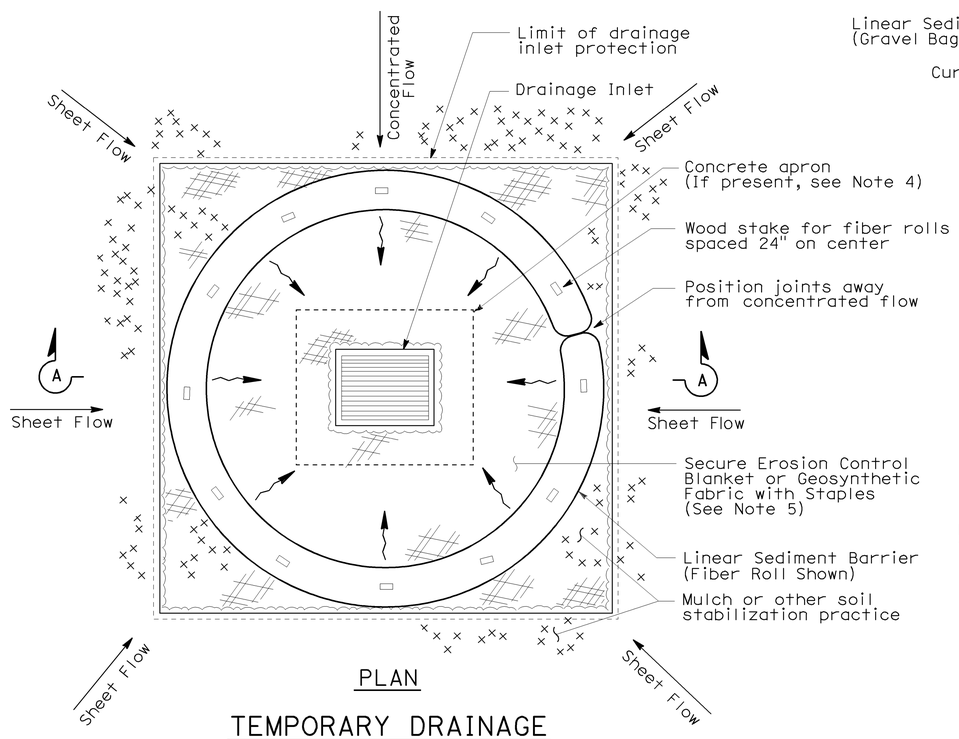

PLAN

TEMPORARY DRAINAGE INLET PROTECTION (TYPE 4A)

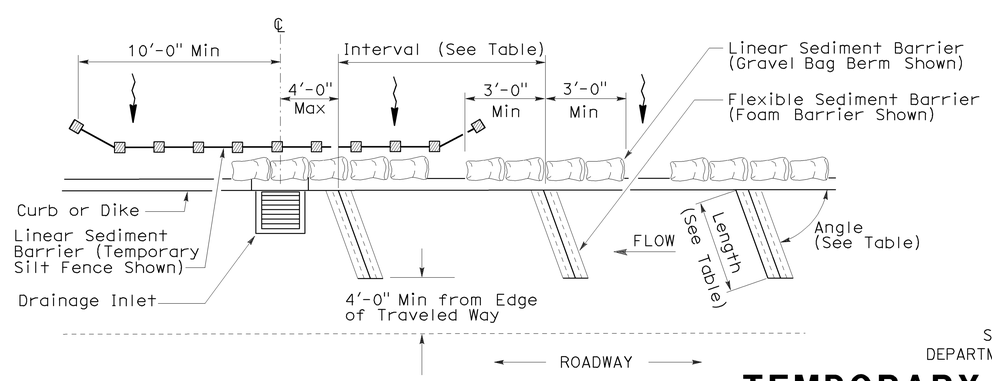

PLAN

TEMPORARY DRAINAGE INLET PROTECTION (TYPE 4B) FLEXIBLE SEDIMENT BARRIER

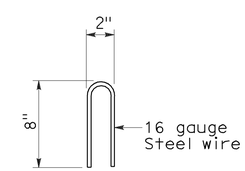

STAPLE DETAIL

STATE OF CALIFORNIA
DEPARTMENT OF TRANSPORTATION

TEMPORARY WATER POLLUTION CONTROL DETAILS (TEMPORARY DRAINAGE INLET PROTECTION)

NO SCALE

NSP T63 DATED AUGUST 15, 2008 SUPPLEMENTS THE STANDARD PLANS BOOK DATED MAY 2006.

NEW STANDARD PLAN NSP T63

2006 NEW STANDARD PLAN NSP T63

7-11-08

DIST	COUNTY	ROUTE	POST MILES TOTAL PROJECT	SHEET NO.	TOTAL SHEETS
07	LA	14	R32.1/R52.6	50	65

LICENSED LANDSCAPE ARCHITECT

August 15, 2008
PLANS APPROVAL DATE

The State of California or its officers or agents shall not be responsible for the accuracy or completeness of electronic copies of this plan sheet.

LICENSED LANDSCAPE ARCHITECT Robert B. Schott 3635 Signature 11-04-08 Renewal Date 08-11-08 Date STATE OF CALIFORNIA

To accompany plans dated 6-27-11

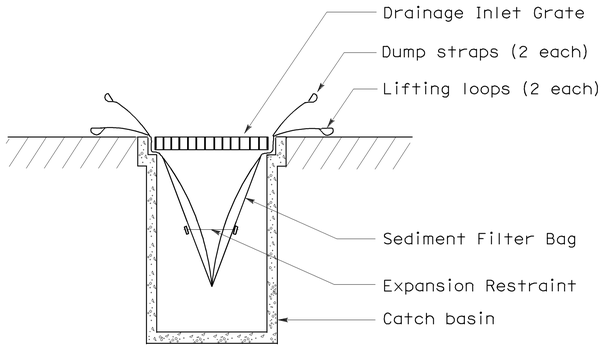

SECTION B-B

SEDIMENT FILTER BAG DETAIL

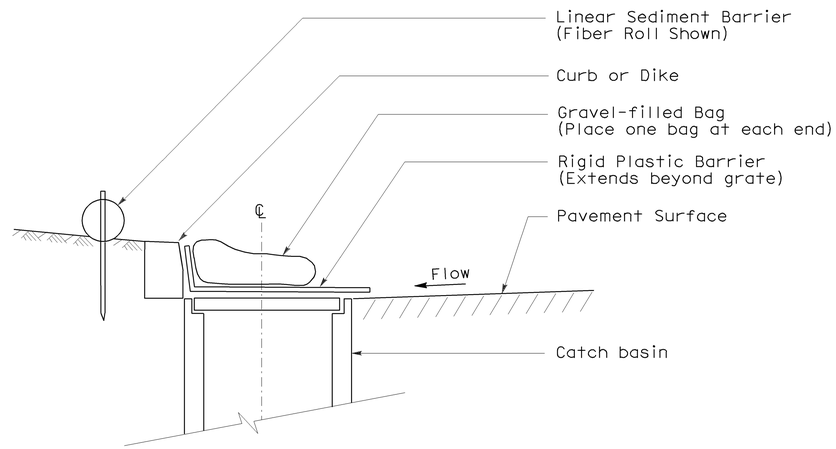

SECTION

TEMPORARY DRAINAGE INLET PROTECTION (TYPE 6A) (CATCH BASIN WITH GRATE)

NOTES:

1. See Standard Plan T51 for Temporary Silt Fence.
2. Dimensions may vary to fit field conditions.

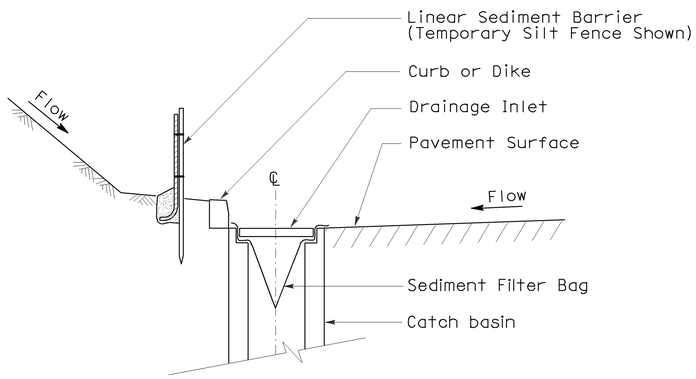

SECTION A-A

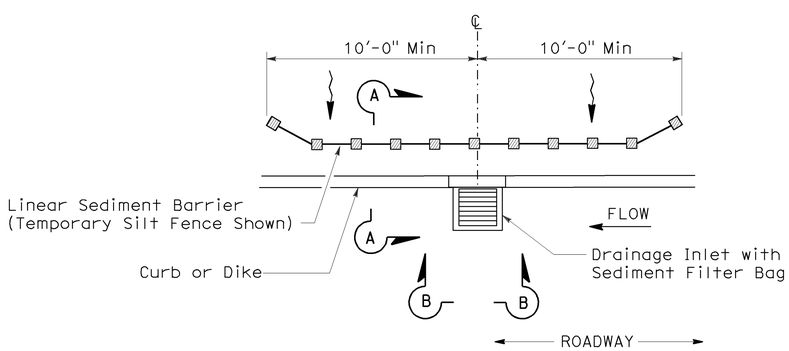

PLAN

TEMPORARY DRAINAGE INLET PROTECTION (TYPE 5) (SEDIMENT FILTER BAG)

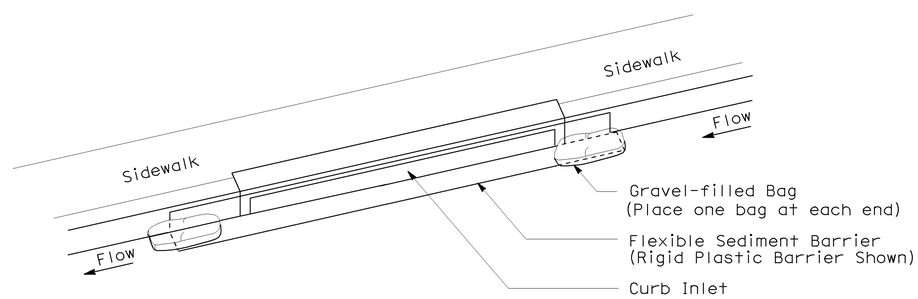

PERSPECTIVE

TEMPORARY DRAINAGE INLET PROTECTION (TYPE 6B) (CURB INLET WITHOUT GRATE)

STATE OF CALIFORNIA
DEPARTMENT OF TRANSPORTATION

TEMPORARY WATER POLLUTION CONTROL DETAILS (TEMPORARY DRAINAGE INLET PROTECTION)

NO SCALE

NSP T64 DATED AUGUST 15, 2008 SUPPLEMENTS THE STANDARD PLANS BOOK DATED MAY 2006.

NEW STANDARD PLAN NSP T64

2006 NEW STANDARD PLAN NSP T64

7-11-08

DIST	COUNTY	ROUTE	POST MILES TOTAL PROJECT	SHEET NO.	TOTAL SHEETS
07	LA	14	R32.1/R52.6	51	65

REGISTERED CIVIL ENGINEER

October 5, 2007
PLANS APPROVAL DATE

REGISTERED PROFESSIONAL ENGINEER Efthymios Delis No. C51434 Exp. 6-30-08 CIVIL STATE OF CALIFORNIA

The State of California or its officers or agents shall not be responsible for the accuracy or completeness of electronic copies of this plan sheet.

To accompany plans dated 6-27-11

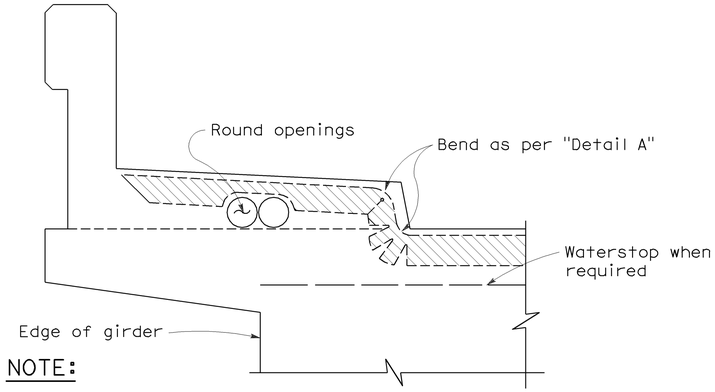

NOTE:

Type "B" seal shown. Type "A" seals to comform to the general path of seal shown, cuts for bending not required. Bend Type "A" seals 3" up into curb or barrier rail on only the low end of the seal.

CONCRETE BARRIER AND SIDEWALK

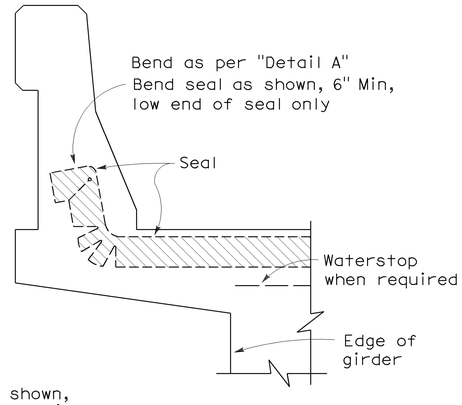

CONCRETE BARRIER

JOINT SEALS DETAILS

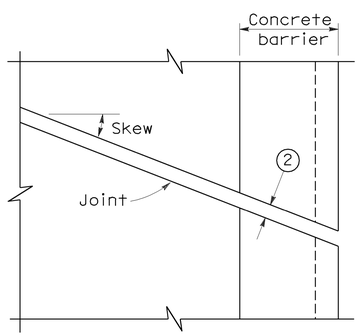

PLAN OF JOINT (SKEW ≤ 20°)

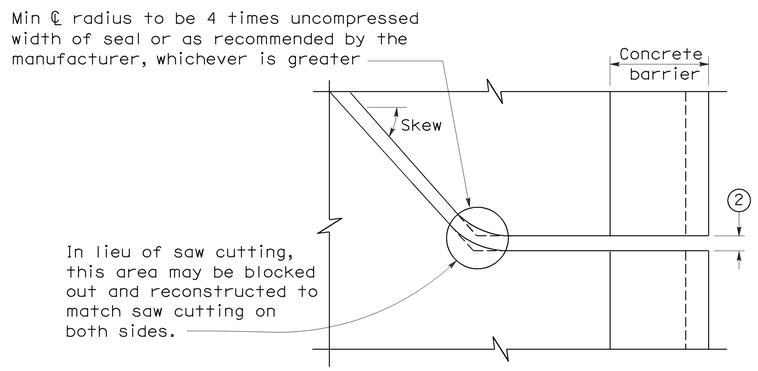

PLAN OF JOINT (SKEW > 20°)

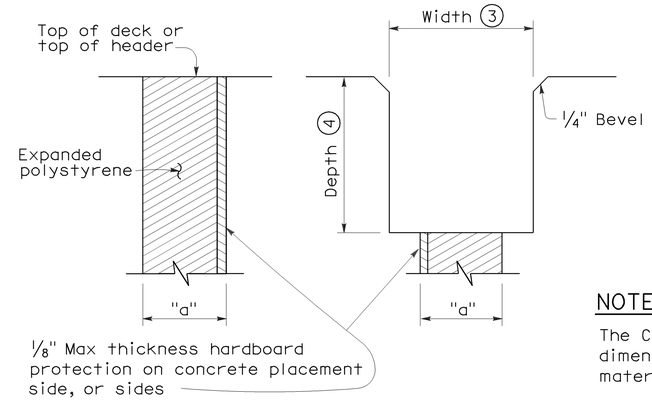

FORMING DETAIL SAWCUT DETAIL

NOTE:

The Contractor shall verify all controlling field dimensions before ordering or fabricatiing any material.

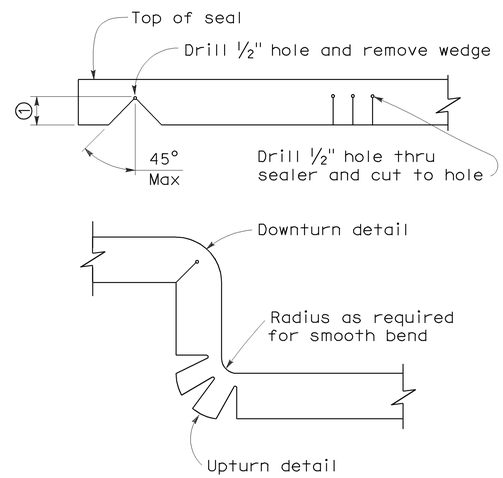

DETAIL A

NOTES:

1. Make smooth cuts from the bottom of seal to 1½" clear of top leaving at least one complete cell between the top of the cut and top of the seal. When necessary cut back of seal to clear conduit and round openings.
2. Opening in barrier to match width of sawn deck joint.
3. Sawcut groove widths shall be as ordered by the Engineer.
4. Depth of sawcut: Type A - Depth to be 2" minimum.
   Type B - Depth to be equal to or greater than the depth of seal measured along the contact surface, when compressed to minimum width position (W_2) plus dimensions shown.
5. MR (movement rating) as shown on other plan sheets.
6. Other depths must be approved by the Engineer.

DIMENSIONS "a" OF JOINT REQUIRED

Movement Rating (MR) 5	Bridge Type	"a" Dimension Deck Concrete Placed		
		Winter	Fall-Spring	Summer
2"	All except CIP/PS	1½"	1¼"	¾"
	CIP/PS	1¼"	1"	½"
1½"	All except CIP/PS	1¼"	1"	½"
	CIP/PS	1"	¾"	½"
1"	All except CIP/PS	1"	¾"	½"
	CIP/PS	¾"	½"	½"
½"	All except CIP/PS	¾"	¾"	½"
	CIP/PS	½"	½"	½"

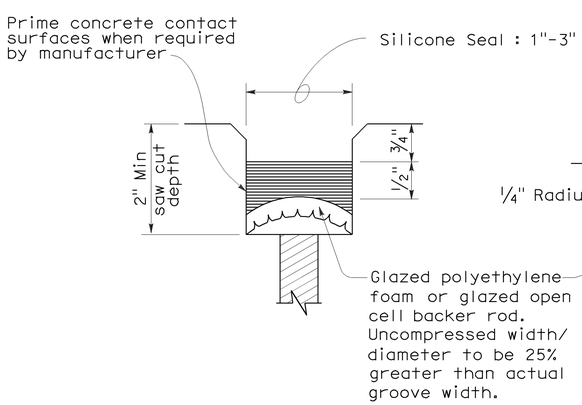

TYPE A SEAL

Movement rating : Silicone = 1" Max

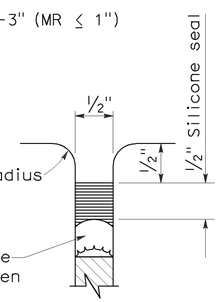

TYPE AL SEAL

Longitudinal joints only

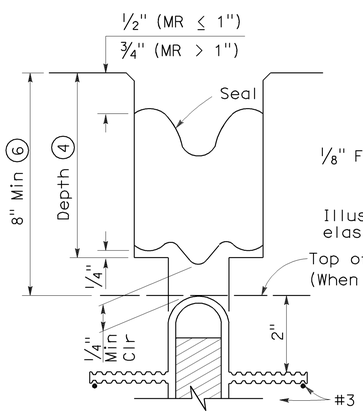

TYPE B JOINT SEAL
IN MINIMUM WIDTH POSITION (W_2)

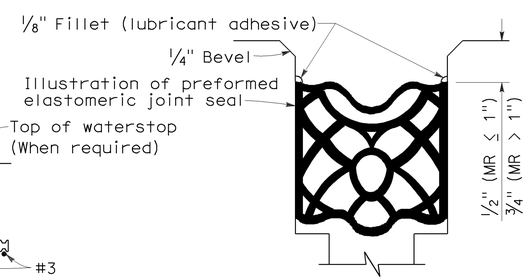

TYPE B SEAL

Movement Rating ≤ 2"

STATE OF CALIFORNIA
DEPARTMENT OF TRANSPORTATION

JOINT SEALS (MAXIMUM MOVEMENT RATING = 2")

NO SCALE

RSP B6-21 DATED OCTOBER 5, 2007 SUPERSEDES STANDARD PLAN B6-21 DATED MAY 1, 2006 - PAGE 258 OF THE STANDARD PLANS BOOK DATED MAY 2006.

REVISED STANDARD PLAN RSP B6-21

2006 REVISED STANDARD PLAN RSP B6-21

5-8-07

DIST	COUNTY	ROUTE	POST MILES TOTAL PROJECT	SHEET NO.	TOTAL SHEETS
07	LA	14	R32.1/R52.6	52	65

REGISTERED ELECTRICAL ENGINEER

October 5, 2007
PLANS APPROVAL DATE

REGISTERED PROFESSIONAL ENGINEER Jeffery G. McRae No. E14512 Exp. 6-30-08 ELECTRICAL STATE OF CALIFORNIA

The State of California or its officers or agents shall not be responsible for the accuracy or completeness of electronic copies of this plan sheet.

To accompany plans dated 6-27-11

ELECTROLIERS

STANDARD TYPES
15, 15D
15 STRUCTURE
21, 21D STRUCTURE
30
31
32
35
36-20A

High mast light pole

Double Arm lighting standard

Existing electrolier

Electrolier foundation (Future installation)

NOTES:

1. Luminaires shall be 310 W HPS when installed on Type 21, 21D, 30, 31, 32, 35 and 36-20A Standards, unless otherwise specified. Luminaires shall be 200 W HPS when installed on other type standards or poles, unless otherwise specified.
2. Luminaires shall be the cutoff type, ANSI Type Ⅲ medium cutoff lighting distribution, unless otherwise specified.
3. Variations noted adjacent to symbol on project plans.

Electrolier (see project notes or project plans)

Luminaire on wood pole

STANDARD NOTES:

- AB — Abandon. If applied to conduit, remove conductors.
- BC — Install pull box in existing conduit run.
- BP — Pedestrian barricade, type as indicated on plan.
- CB — Install conduit into existing pull box.
- CC — Connect new and existing conduit. Remove existing conductors and install conductors as indicated.
- CF — Conduit to remain for future use. Remove conductors. Install pull wire or rope.
- DH — Detector handhole.
- FA — Foundation to be abandoned.
- IS — Install sign on signal mast arm.
- NS — No slip base on standard.
- PEC — Photoelectric control.
- PEU — Photoelectric unit.
- RC — Equipment or material to be removed and become the property of the Contractor.
- RE — Remove electrolier, fuses and ballast. Tape ends of conductors.
- RL — Relocate equipment.
- RR — Remove and reuse equipment.
- RS — Remove and salvage equipment.
- SC — Splice new to existing conductors.
- SD — Service disconnect.
- SF — Standard to remain for future use. Remove luminaire, pole conductors, fuses and ballast.
- TSP — Telephone service point.

ABBREVIATIONS AND EQUIPMENT DESIGNATIONS

PROPOSED	EXISTING	
BBS	bbs	Battery backup system
BC	bc	Bolt circle
C	C	Conduit
CCTV	cctv	Closed circuit television
CKT	ckt	Circuit
CMS	cms	Changeable message sign
DLC	dlc	Loop detector lead-in cable
EMS	ems	Extinguishable message sign
EVC	evc	Emergency vehicle cable
EVD	evd	Emergency vehicle detector
FB	fb	Flashing beacon
FBCA	fbca	Flashing beacon control assembly
FBS	fbs	Flashing beacon with slip base
FO	fo	Fiber optic
G	G	Ground (Equipment Grounding Conductor)
GFCI	GFCI	Ground fault circuit interrupt
HAR	har	Highway advisory radio
HEX	hex	Hexagonal
HPS	hps	High pressure sodium
IISNS	iisns	Internally illuminated street name sign
ISL	isl	Induction sign lighting
LED	led	Light emitting diode
LMA	lma	Luminaire mast arm
LPS	lps	Low pressure sodium
LTG	ltg	Lighting
LUM	lum	Luminaire
MAT	mat	Mast arm mounting vehicle signal faces, top attachment
MAS	mas	Mast arm mounting vehicle signal faces, side attachment
MAS-4A	mas-4A	Mast arm mounting vehicle signal faces, side attachment - 4 signal section
MAS-4B	mas-4B	
MAS-4C	mas-4C	
MAS-5A	mas-5A	Mast arm mounting vehicle signal faces, side attachment - 5 signal section
MAS-5B	mas-5B	
MC	mc	Mercury contactor
M/M	m/m	Multiple to multiple transformer
MT	mt	Conduit with pull wire or rope only
MTG	mtg	Mounting
	mv	Mercury vapor lighting fixture
N	N	Neutral (Grounded Conductor)
NC	NC	Normally closed
NO	NO	Normally open
PB	pb	Pull box
PEC	pec	Photoelectric control (Type Ⅰ, Ⅱ, Ⅲ, Ⅳ or Ⅴ as shown)
PED	ped	Pedestrian
PEU	peu	Photoelectric unit
PPB	ppb	Pedestrian push button
RL		Relocated equipment
RM	rm	Ramp metering
SB	sb	Slip base
SIC	sic	Signal interconnect cable
SIG	sig	Signal
SMA	sma	Signal mast arm
SNS	sns	Street name sign
SP	sp	Service point
TDC	tdc	Telephone demarcation cabinet
TMS	tms	Traffic monitoring station
TOS	tos	Traffic Operations System
VEH	veh	Vehicle
XFMR	xfmr	Transformer
COMM	comm	Communication
RWIS	rwis	Roadway weather information system

SOFFIT AND WALL MOUNTED LUMINAIRES

Pendant, 70 W HPS unless otherwise specified.

Flush, 70 W HPS unless otherwise specified.

Wall surface, 70 W HPS unless otherwise specified.

Existing soffit or wall luminaire to remain unmodified.

Existing soffit or wall luminaire to be modified as specified.

NOTE:

Arrow indicates "street side" of luminaire.

STATE OF CALIFORNIA
DEPARTMENT OF TRANSPORTATION

ELECTRICAL SYSTEMS (SYMBOLS AND ABBREVIATIONS)

NO SCALE

RSP ES-1A DATED OCTOBER 5, 2007 SUPERSEDES STANDARD PLAN ES-1A DATED MAY 1, 2006 - PAGE 400 OF THE STANDARD PLANS BOOK DATED MAY 2006.

REVISED STANDARD PLAN RSP ES-1A

2006 REVISED STANDARD PLAN RSP ES-1A

DIST	COUNTY	ROUTE	POST MILES TOTAL PROJECT	SHEET NO.	TOTAL SHEETS
07	LA	14	R32.1/R52.6	53	65

REGISTERED ELECTRICAL ENGINEER

October 5, 2007
PLANS APPROVAL DATE

REGISTERED PROFESSIONAL ENGINEER Jeffery G. McRae No. E14512 Exp. 6-30-08 ELECTRICAL STATE OF CALIFORNIA

The State of California or its officers or agents shall not be responsible for the accuracy or completeness of electronic copies of this plan sheet.

To accompany plans dated 6-27-11

CONDUIT

PROPOSED	EXISTING	
		Lighting Conduit, unless otherwise indicated or noted
		Traffic signal conduit
C	c	Communication conduit
T	t	Telephone conduit
F	f	Fire alarm conduit
FO	fo	Fiber optic conduit
		Conduit termination (RSP ES-9A C)
R	r	Conduit riser in/on structure or service pole

SERVICE EQUIPMENT

PROPOSED	EXISTING	
OH	oh	Overhead lines
U	U	Wood pole "U" indicates utility owned
		Pole guy with anchor
		Utility transformer - ground mounted
III		Service equipment enclosure type
		Service equipment enclosure door indicates front of enclosure
T	t	Telephone demarcation cabinet

POLE-MOUNTED SERVICE DESIGNATION

Type of installation

TYPE H SERVICE - 28'-10" ← Pole height above grade

ILLUMINATED OVERHEAD SIGN

PROPOSED	EXISTING	
		Overhead sign - Single post
		Overhead sign - Two post
		Overhead sign - Mounted on structure
		Overhead sign with electrolier

SIGNAL EQUIPMENT

PROPOSED	EXISTING	
		Pedestrian signal face
		Pedestrian push button post
		Pedestrian barricade
		Vehicle signal face (with backplate, 3-Section: red, yellow and green)
		Vehicle signal face with angle visors
PV	PV	Modifications of basic symbols: "L" indicates all non-arrow sections louvered "LG" indicates louvered green section only "PV" indicates 12" programmed visibility sections "8" indicates all 8" sections (only when specified)
		Type 15TS and Vehicle signal face
		Vehicle signal face with red, yellow and green left arrow sections
		Vehicle signal face with red and yellow sections and up green arrow
		Vehicle signal face (5 Section) with red, yellow and green sections and yellow and green right arrows
		Type 1 Standard and attached vehicle signal faces
		Standard with signal mast arm only and attached vehicle signal faces and internally illuminated street name sign
		Type 33 Standard, Left-turn vehicle signal face and sign
		Standard with luminaire and signal mast arms and attached vehicle signal faces
		Cantilever flashing beacon Type 9 Frame, with a sign unless otherwise specified or indicated
		Type 15-FBS Standard with two vehicle signal face sections with lens, backplate and visor with a sign
R	Y	Flashing beacon. One vehicle signal face section with lens, backplate and visor. "R" indicates red indication, "Y" indicates yellow indication
		Controller assembly. Door indicates front of cabinet

SIGNAL EQUIPMENT Cont

PROPOSED	EXISTING	
		Guard post
		Type 1 Standard with "Meter On" sign
		Emergency Vehicle detector

NOTES:

1. All signal sections shall be 12" unless shown otherwise.
2. Signal heads shall be provided with backplates unless shown otherwise.
3. Signal indication shall be LED.

STATE OF CALIFORNIA
DEPARTMENT OF TRANSPORTATION

ELECTRICAL SYSTEMS (SYMBOLS AND ABBREVIATIONS)

NO SCALE

RSP ES-1B DATED OCTOBER 5, 2007 SUPERCEDES STANDARD PLAN ES-1B DATED MAY 1, 2006 - PAGE 401 OF THE STANDARD PLANS BOOK DATED MAY 2006.

REVISED STANDARD PLAN RSP ES-1B

2006 REVISED STANDARD PLAN RSP ES-1B

7-10-07

DIST	COUNTY	ROUTE	POST MILES TOTAL PROJECT	SHEET NO.	TOTAL SHEETS
07	LA	14	R32.1/R52.6	54	65

REGISTERED ELECTRICAL ENGINEER

October 5, 2007
PLANS APPROVAL DATE

REGISTERED PROFESSIONAL ENGINEER
Jeffery G. McRae
No. E14512
Exp. 6-30-08
ELECTRICAL
STATE OF CALIFORNIA

The State of California or its officers or agents shall not be responsible for the accuracy or completeness of electronic copies of this plan sheet.

To accompany plans dated 6-27-11

EQUIPMENT IDENTIFICATION

ILLUMINATED SIGN IDENTIFICATION NUMBER:

Sign No. 12345

10 ISL SCI 1.0

- Sign number - Place on post or structure
- Transformer rating (kVA)
- Lighting control type
- Number and type of fixtures

Do NOT place on standard or structure

ELECTROLIER OR EQUIPMENT IDENTIFICATION NUMBER:

12345 - 15'-0"

- Mast arm length, if shown. Do not place on standard or structure.
- Equipment number - Place on standard or structure. Existing equipment numbers are shown in parenthesis

CONDUIT AND CONDUCTOR IDENTIFICATION:

1½"C, 2#10, 15#14, 2 DLC

- Number and size of conductors and cables
- Size of conduit in inches

Ø1, Ø2, Ø2P, etc.	Traffic phase identification for signal faces, detectors and phase diagrams
1 2 3	Project note numbers
A B C	Equipment description, installation or item numbers
1 2 3	Conduit run numbers

SIGNAL AND LIGHTING STANDARD (TYPICAL DESIGNATION):

19A - 3 - 100

- Wind velocity = 100 mph
- Case 3 arm loading
- Standard type
- Standard Plan sheet number
- Detail number or letter

MISCELLANEOUS EQUIPMENT

PROPOSED	EXISTING	
CMS	cms	Changeable message sign
		Closed circuit television camera
		Highway advisory radio pole and antenna
EMS	ems	Extinguishable message sign
M V	m v	Detection device M = Microwave sensor V = Video image sensor

WIRING DIAGRAM LEGEND

P	Pole
CB	Circuit breaker
A	Ampere
V	Volt
M	Metered
UM	Unmetered
NB	Neutral bus
GB	Ground bus
G	Equipment grounding conductor
N	Grounded conductor (Neutral)

- External conductor
- Conductor or bus
- Tie point
- Contactor coil
- Contactor, Contact NO
- Terminal blocks
- Contactor, Contact NC
- Enclosure bond
- Grounding electrode
- Circuit breaker
- Receptacle

PULL BOXES

PROPOSED EXISTING

Pull box-No. 5 unless otherwise indicated or noted.

3 9A(21)

Pull box-Additional designations or descriptions

3	= No. 3½ pull box
5	= No. 5 pull box
6	= No. 6 pull box
7	= No. 7 (Ceiling pull box)
8	= No. 8 (Pendant soffit pull box)
9	= No. 9 pull box
9A	= No. 9A pull box

(C)	= Communications pull box
(E)	= Pull box with extension
(S)	= Sprinkler control pull box
(21)	= Anchor bolts and conduit for future installation of Type 21 Standard
(T)	= Traffic pull box

VEHICLE DETECTORS

5 J 9 U

- U = Upper
- L = Lower
- Slot number in input file
- Input file (I or J)
- Phase

PROPOSED EXISTING

	Type A detector loop. Outline of sawcut shown.
	Type B detector loop. Outline of sawcut shown.
	Type C detector loop. Outline of sawcut shown.
	Type D detector loop. Outline of sawcut shown.
	Type E detector loop. Outline of sawcut shown.
	Type Q detector loop. Outline of sawcut shown.
	Magnetic detector
DH dh	Detector handhole
	Microwave or video detection zone

STATE OF CALIFORNIA
DEPARTMENT OF TRANSPORTATION

ELECTRICAL SYSTEMS (SYMBOLS AND ABBREVIATIONS)

NO SCALE

RSP ES-1C DATED OCTOBER 5, 2007 SUPERCEDES STANDARD PLAN ES-1C DATED MAY 1, 2006 - PAGE 402 OF THE STANDARD PLANS BOOK DATED MAY 2006.

REVISED STANDARD PLAN RSP ES-1C

2006 REVISED STANDARD PLAN RSP ES-1C

DIST	COUNTY	ROUTE	POST MILES TOTAL PROJECT	SHEET NO.	TOTAL SHEETS
07	LA	14	R32.1/R52.6	55	65

REGISTERED ELECTRICAL ENGINEER

October 5, 2007
PLANS APPROVAL DATE

REGISTERED PROFESSIONAL ENGINEER Jeffery G. McRae No. E14512 Exp. 6-30-08 ELECTRICAL STATE OF CALIFORNIA

The State of California or its officers or agents shall not be responsible for the accuracy or completeness of electronic copies of this plan sheet.

To accompany plans dated 6-27-11

LOOP INSTALLATION PROCEDURE

1. Loops shall be centered in lanes.
2. Saw slots in pavement for loop conductors as shown in details.
3. Distance between side of loop and a lead-in saw cut from adjacent detectors shall be 2'-0" minimum. Distance between lead-in saw cuts shall be 6" minimum.
4. Bottom of saw slot shall be smooth with no sharp edges.
5. Slots shall be washed until clean, blown out and thoroughly dried before installing loop conductors.
6. Adjacent loops on the same sensor unit channel shall be wound in opposite directions.
7. Identify and tag loop circuit pairs in the pull box with loop number, start (S) and finish (F) of conductor. Identify and tag lead-in-cable with sensor number and phase.
8. Install loop conductor in slot using a 3/16" to 1/4" thick wood paddle. Hold loop conductors with wood paddles (at the bottom of the sawed slot) during sealant placement.
9. No more than 2 twisted pairs shall be installed in one sawed slot.
10. Allow additional 5'-0" of slack length of conductor for the lead-in run to pull box.
11. The additional length of each conductor for each loop shall be twisted together into a pair (6 turns per 3'-4" minimum) before being placed in the slot and conduit leading to pull box.
12. Test each loop circuit for continuity, circuit resistance and insulation resistance at the pull box before filling slots.
13. Fill slots as shown in details.
14. Splice loop conductors to lead-in-cable. Splices shall be soldered.
15. End of lead-in-cable and Type 2 loop conductor shall be waterproofed prior to installing in conduit to prevent moisture from entering the cable.
16. Lead-in-cable shall not be spliced between the pull box and the controller cabinet terminals.
17. Test each loop circuit for continuity, circuit resistance and insulation resistance at the controller cabinet location.
18. Where loop conductors are not to be spliced to a lead-in-cable, the ends of the conductors shall be taped and waterproofed with electrical insulating coating.

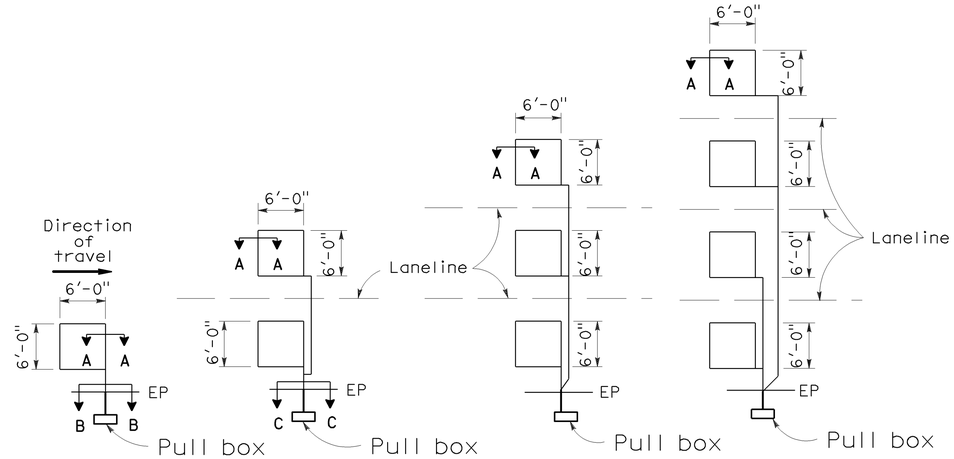

TYPE 1A INSTALLATION | TYPE 2A INSTALLATION | TYPE 3A INSTALLATION | TYPE 4A INSTALLATION

SAWCUT DETAILS

(Type A loop detector configurations illustrated)

1. 1A thru 4A = 1 Type A loop configuration in each lane.
2. 1B thru 4B = 1 Type B loop configuration in each lane.
3. 1C = 1 Type C loop configuration entering lanes as required.
4. 1D thru 4D = 1 Type D loop configuration in each lane.
5. 1E thru 4E = 1 Type E loop configuration in each lane.
6. 1Q thru 4Q = 1 Type Q loop configuration in each lane. (Use Type A, B, C, D, E or Q loop detector configurations only when specified or shown on plans)

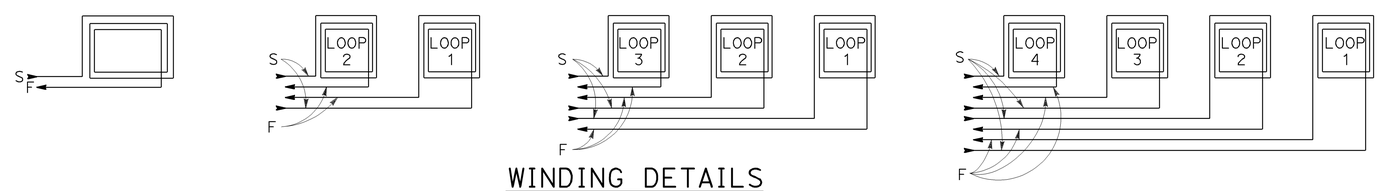

WINDING DETAILS

See Notes 6 and 7

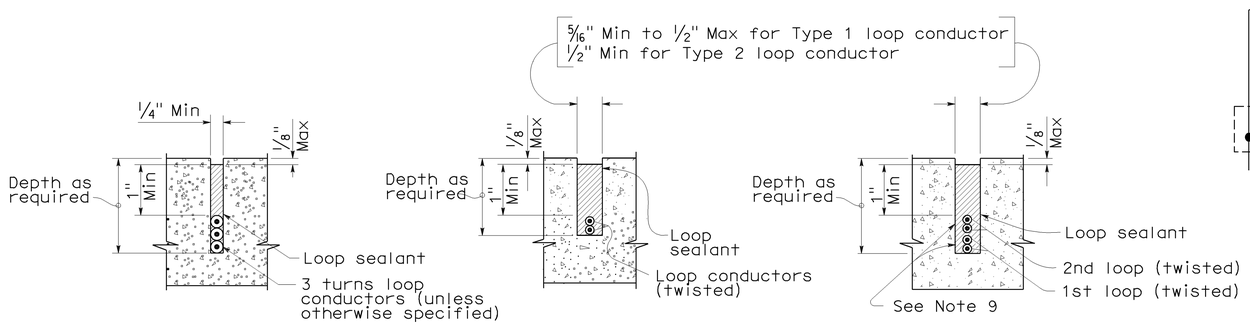

SECTION A-A | SECTION B-B | SECTION C-C

SLOT DETAILS - TYPE 1 AND TYPE 2 LOOP CONDUCTOR

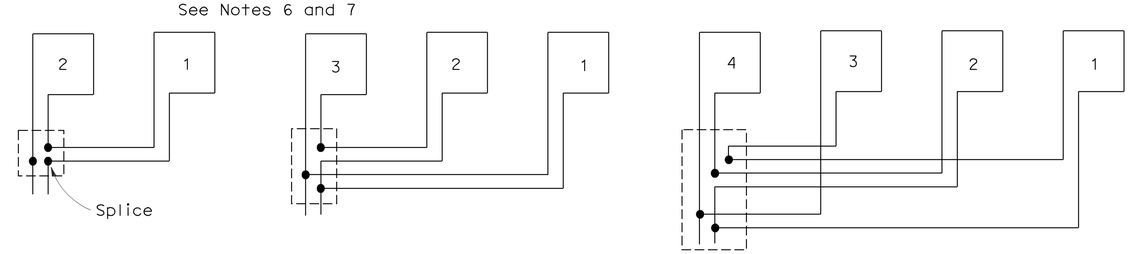

TYPICAL LOOP CONNECTIONS

(Dashed lines represent the pull box)

STATE OF CALIFORNIA
DEPARTMENT OF TRANSPORTATION

ELECTRICAL SYSTEMS (DETECTORS)

NO SCALE

RSP ES-5A DATED OCTOBER 5, 2007 SUPERCEDES STANDARD PLAN ES-5A DATED MAY 1, 2006 - PAGE 423 OF THE STANDARD PLANS BOOK DATED MAY 2006.

REVISED STANDARD PLAN RSP ES-5A

2006 REVISED STANDARD PLAN RSP ES-5A

8-17-07

DIST	COUNTY	ROUTE	POST MILES TOTAL PROJECT	SHEET No.	TOTAL SHEETS
07	LA	14	R32.1/R52.6	56	65

REGISTERED CIVIL ENGINEER 03-11-11 DATE

6-27-11
PLANS APPROVAL DATE

REGISTERED PROFESSIONAL ENGINEER MAMUNUR RAHMAN No. C48515 Exp. 06-30-12 CIVIL STATE OF CALIFORNIA

The State of California or its officers or agents shall not be responsible for the accuracy or completeness of electronic copies of this plan sheet.

INDEX TO PLANS

NO.	SHEET NAME
1.	GENERAL PLAN NO. 1
2.	GENERAL PLAN NO. 2
3.	GENERAL PLAN NO. 3
4.	GENERAL PLAN NO. 4
5.	GENERAL PLAN NO. 5
6.	GENERAL PLAN NO. 6
7.	GENERAL PLAN NO. 7
8.	GENERAL PLAN NO. 8
9.	JOINT SEAL DETAILS
10.	STRUCTURE APPROACH TYPE R(30D)

LEGEND

- Indicates Existing Structure
- Indicates limits of install new joint seal. Repair joint spalls prior to placement of new joint seal. For details see "JOINT SEAL DETAILS" sheet.
- Indicates limits of Structure Approach Slab Type R(30D). For details, see "STRUCTURE APPROACH TYPE R(30D)" sheet.
- Indicates Direction of Traffic
- * Approach Slab extends to toe of Median Barrier
- Indicates HOV Lane

NOTES:

1. For details not shown, see RSP B6-21
2. Paving notch extension.

STANDARD PLANS DATED MAY 2006

A10A	ACRONYMS AND ABBREVIATIONS (A-L)
A10B	ACRONYMS AND ABBREVIATIONS (M-Z)
RSP B6-21	JOINT SEALS (MAXIMUM MOVEMENT RATING = 2")
RSP P-10	CONCRETE PAVEMENT - BAR DETAILS

STANDARD PLAN SHEET NO.

DETAIL NO.

QUANTITIES

REMOVE UNSOUND CONCRETE	2	CF
AGGREGATE BASE (APPROACH SLAB)	46	CY
STRUCTURAL CONCRETE, APPROACH SLAB (TYPE R)	460	CY
PAVING NOTCH EXTENSION	365	CF
RAPID SETTING CONCRETE (PATCH)	2	CF
JOINT SEAL (MR 2")	490	LF

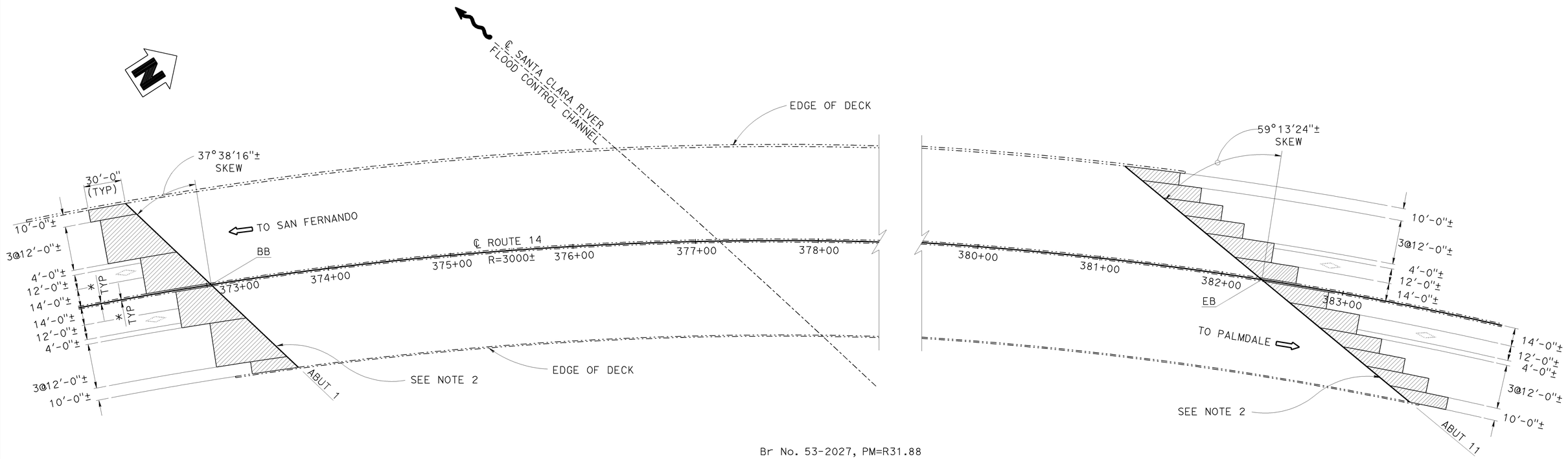

Br No. 53-2027, PM=R31.88

SANTA CLARA RIVER BRIDGE

1" = 40'

NOTE:

THE CONTRACTOR SHALL VERIFY ALL CONTROLLING FIELD DIMENSIONS BEFORE ORDERING OR FABRICATING ANY MATERIAL.

PAUL CHUNG
DESIGN ENGINEER

	BY	CHECKED
DESIGN	MAMUNUR RAHMAN	CESAR SANCHEZ
DETAILS	HECTOR INIGUEZ	MAMUNUR RAHMAN
QUANTITIES	CESAR SANCHEZ	MAMUNUR RAHMAN

LOAD & RESISTANCE FACTOR DESIGN — LIVE LOADING: HL93 W/"LOW-BOY": PERMIT DESIGN VEHICLE

	BY	CHECKED
LAYOUT	HECTOR INIGUEZ	MAMUNUR RAHMAN
SPECIFICATIONS	DAVE KLEIN	PLANS AND SPECS COMPARED DAVE KLEIN

ORIGINAL SCALE IN INCHES FOR REDUCED PLANS 0 1 2 3

STATE OF CALIFORNIA
DEPARTMENT OF TRANSPORTATION

DIVISION OF ENGINEERING SERVICES
STRUCTURE DESIGN
DESIGN BRANCH 19

BRIDGE NO. VARIOUS
POST MILE VARIOUS

ROUTE 14 BRIDGES
GENERAL PLAN NO. 1

UNIT: 3621
PROJECT NUMBER & PHASE: 0700020848 1 CONTRACT NO.: 07-251601

DISREGARD PRINTS BEARING EARLIER REVISION DATES

REVISION DATES: ~~11-04-10~~ ~~03-08-11~~ 03-11-11

SHEET 1 OF 10

USERNAME => s120514 DATE PLOTTED => 16-JUN-2011 TIME PLOTTED => 14:23

FILE => 01-01_EA07-251601-a-gp.dgn

DIST	COUNTY	ROUTE	POST MILES TOTAL PROJECT	SHEET No.	TOTAL SHEETS
07	LA	14	R32.1/R52.6	57	65

REGISTERED CIVIL ENGINEER 03-11-11 DATE

6-27-11
PLANS APPROVAL DATE

REGISTERED PROFESSIONAL ENGINEER MAMUNUR RAHMAN No. C48515 Exp. 06-30-12 CIVIL STATE OF CALIFORNIA

The State of California or its officers or agents shall not be responsible for the accuracy or completeness of electronic copies of this plan sheet.

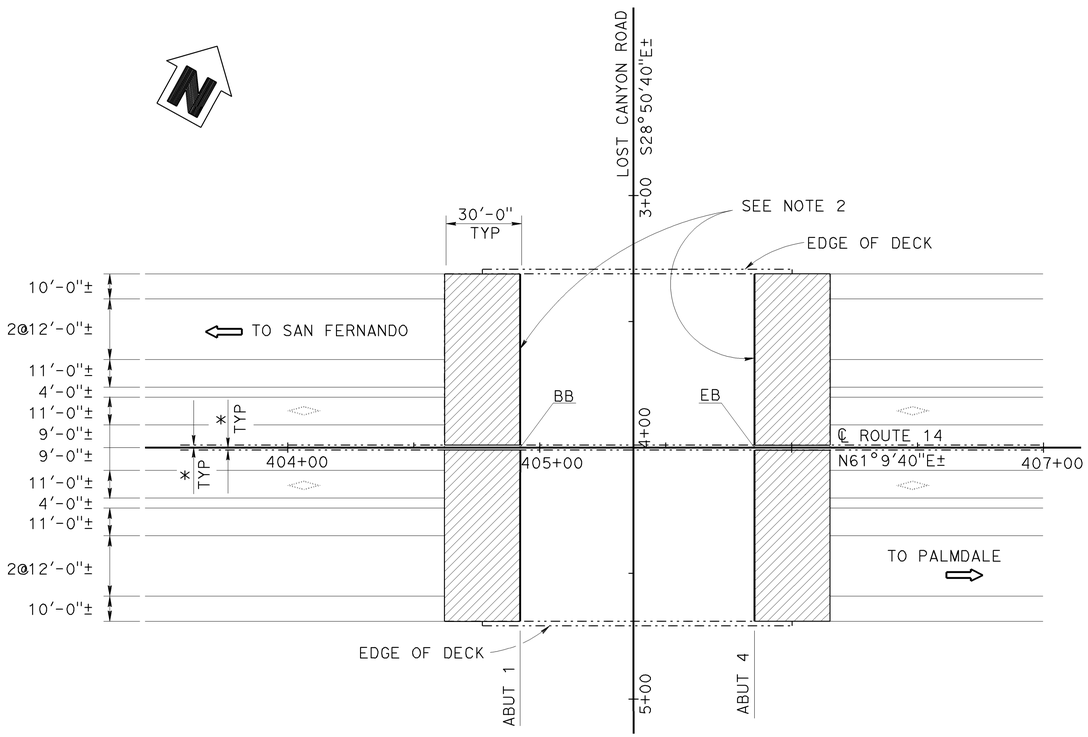

Br No. 53-1621, PM=32.53

LOST CANYON ROAD UC

1" = 30'

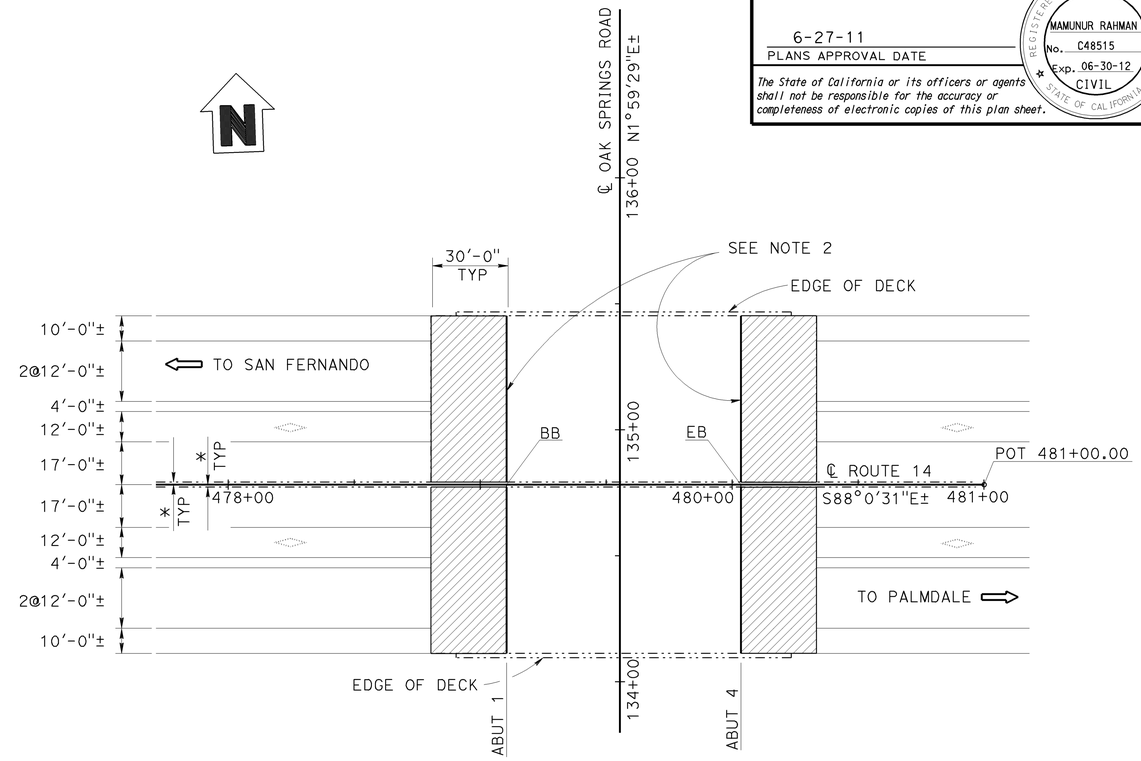

Br No. 53-1539, PM=33.94

OAK SPRINGS ROAD UC

1" = 30'

QUANTITIES

REMOVE UNSOUND CONCRETE	2	CF
AGGREGATE BASE (APPROACH SLAB)	31	CY
STRUCTURAL CONCRETE, APPROACH SLAB (TYPE R)	310	CY
PAVING NOTCH EXTENSION	205	CF
RAPID SETTING CONCRETE (PATCH)	2	CF
JOINT SEAL (MR 1")	278	LF

LEGEND

- Indicates Existing Structure
- Indicates limits of install new joint seal. Repair joint spalls prior to placement of new joint seal. For details see "JOINT SEAL DETAILS" sheet.
- Indicates limits of Structure Approach Slab Type R(30D). For details, see "STRUCTURE APPROACH TYPE R(30D)" sheet.
- Indicates Direction of Traffic
- * Approach Slab extends to toe of Median Barrier
- Indicates HOV Lane

QUANTITIES

REMOVE UNSOUND CONCRETE	2	CF
AGGREGATE BASE (APPROACH SLAB)	30	CY
STRUCTURAL CONCRETE, APPROACH SLAB (TYPE R)	300	CY
PAVING NOTCH EXTENSION	200	CF
RAPID SETTING CONCRETE (PATCH)	2	CF
JOINT SEAL (MR1/2")	270	LF

NOTE:

THE CONTRACTOR SHALL VERIFY ALL CONTROLLING FIELD DIMENSIONS BEFORE ORDERING OR FABRICATING ANY MATERIAL.

NOTE:

1. For details not shown, see RSP B6-21
2. Paving notch extension.

PAUL CHUNG
DESIGN ENGINEER

	BY	CHECKED			
DESIGN	MAMUNUR RAHMAN	CESAR SANCHEZ	LOAD & RESISTANCE FACTOR DESIGN	LIVE LOADING: HL93 W/"LOW-BOY"; PERMIT DESIGN VEHICLE	
DETAILS	HECTOR INIGUEZ	MAMUNUR RAHMAN	LAYOUT	HECTOR INIGUEZ	MAMUNUR RAHMAN
QUANTITIES	CESAR SANCHEZ	MAMUNUR RAHMAN	SPECIFICATIONS	DAVE KLEIN	PLANS AND SPECS COMPARED: DAVE KLEIN

ORIGINAL SCALE IN INCHES FOR REDUCED PLANS 0 1 2 3

STATE OF CALIFORNIA
DEPARTMENT OF TRANSPORTATION

DIVISION OF ENGINEERING SERVICES
STRUCTURE DESIGN
DESIGN BRANCH 19

BRIDGE NO. VARIOUS
POST MILE VARIOUS

ROUTE 14 BRIDGES
GENERAL PLAN NO. 2

UNIT: 3621
PROJECT NUMBER & PHASE: 0700020848 1 CONTRACT NO.: 07-251601

DISREGARD PRINTS BEARING EARLIER REVISION DATES

REVISION DATES: 11-04-10 03-08-11 03-11-11

SHEET 2 OF 10

STRUCTURES DESIGN GENERAL PLAN SHEET (ENGLISH) (REV.09-01-10)

FILE => 02-02-03_EA07-251601-a-gp.dgn

USERNAME => s120514 DATE PLOTTED => 16-JUN-2011 TIME PLOTTED => 14:23

DIST	COUNTY	ROUTE	POST MILES TOTAL PROJECT	SHEET No.	TOTAL SHEETS
07	LA	14	R32.1/R52.6	58	65

REGISTERED CIVIL ENGINEER 03-11-11 DATE

6-27-11
PLANS APPROVAL DATE

REGISTERED PROFESSIONAL ENGINEER
MAMUNUR RAHMAN
No. C48515
Exp. 06-30-12
CIVIL
STATE OF CALIFORNIA

The State of California or its officers or agents shall not be responsible for the accuracy or completeness of electronic copies of this plan sheet.

LEGEND

- Indicates Existing Structure
- Indicates limits of install new joint seal. Repair joint spalls prior to placement of new joint seal. For details see "JOINT SEAL DETAILS" sheet.
- Indicates limits of Structure Approach Slab Type R(30D). For details, see "STRUCTURE APPROACH TYPE R(30D)" sheet.
- Indicates Direction of Traffic
- * Approach Slab extends to toe of Median Barrier
- Indicates HOV Lane

NOTE:

1. For details not shown, see RSP B6-21
2. Paving notch extension.

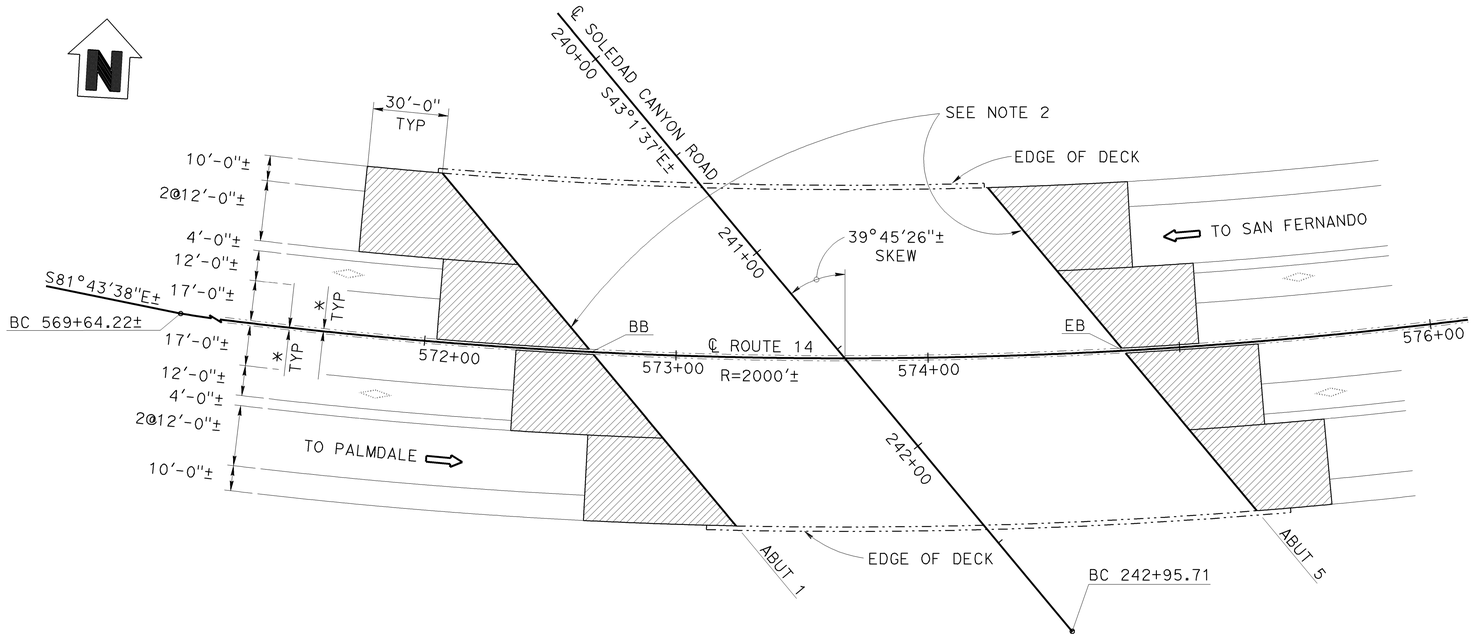

Br No. 53-1549, PM=35.71

SOLEDAD CANYON ROAD UC

1" = 30'

QUANTITIES

REMOVE UNSOUND CONCRETE	2	CF
AGGREGATE BASE (APPROACH SLAB)	45	CY
STRUCTURAL CONCRETE, APPROACH SLAB (TYPE R)	430	CY
PAVING NOTCH EXTENSION	260	CF
RAPID SETTING CONCRETE (PATCH)	2	CF
JOINT SEAL (MR 1")	350	LF

NOTE:

THE CONTRACTOR SHALL VERIFY ALL CONTROLLING FIELD DIMENSIONS BEFORE ORDERING OR FABRICATING ANY MATERIAL.

PAUL CHUNG
DESIGN ENGINEER

	BY	CHECKED
DESIGN	MAMUNUR RAHMAN	CESAR SANCHEZ
DETAILS	HECTOR INIGUEZ	MAMUNUR RAHMAN
QUANTITIES	CESAR SANCHEZ	MAMUNUR RAHMAN

LOAD & RESISTANCE FACTOR DESIGN — LIVE LOADING: HL93 W/"LOW-BOY"; PERMIT DESIGN VEHICLE

	BY	CHECKED
LAYOUT	HECTOR INIGUEZ	MAMUNUR RAHMAN
SPECIFICATIONS	DAVE KLEIN	PLANS AND SPECS COMPARED: DAVE KLEIN

ORIGINAL SCALE IN INCHES FOR REDUCED PLANS 0 1 2 3

STATE OF CALIFORNIA
DEPARTMENT OF TRANSPORTATION

DIVISION OF ENGINEERING SERVICES
STRUCTURE DESIGN
DESIGN BRANCH 19

BRIDGE NO. VARIOUS
POST MILE VARIOUS

ROUTE 14 BRIDGES
GENERAL PLAN NO. 3

UNIT: 3621
PROJECT NUMBER & PHASE: 0700020848 1 CONTRACT NO.: 07-251601

DISREGARD PRINTS BEARING EARLIER REVISION DATES

REVISION DATES: 11-04-10 03-08-11 03-11-11

SHEET 3 OF 10

USERNAME => s120514 DATE PLOTTED => 16-JUN-2011 TIME PLOTTED => 14:29

STRUCTURES DESIGN GENERAL PLAN SHEET (ENGLISH) (REV.09-01-10)

FILE => 03-04_EA07-251601-a-gp.dgn

DIST	COUNTY	ROUTE	POST MILES TOTAL PROJECT	SHEET No.	TOTAL SHEETS
07	LA	14	R32.1/R52.6	59	65

REGISTERED CIVIL ENGINEER 03-11-11 DATE

6-27-11
PLANS APPROVAL DATE

REGISTERED PROFESSIONAL ENGINEER MAMUNUR RAHMAN No. C48515 Exp. 06-30-12 CIVIL STATE OF CALIFORNIA

The State of California or its officers or agents shall not be responsible for the accuracy or completeness of electronic copies of this plan sheet.

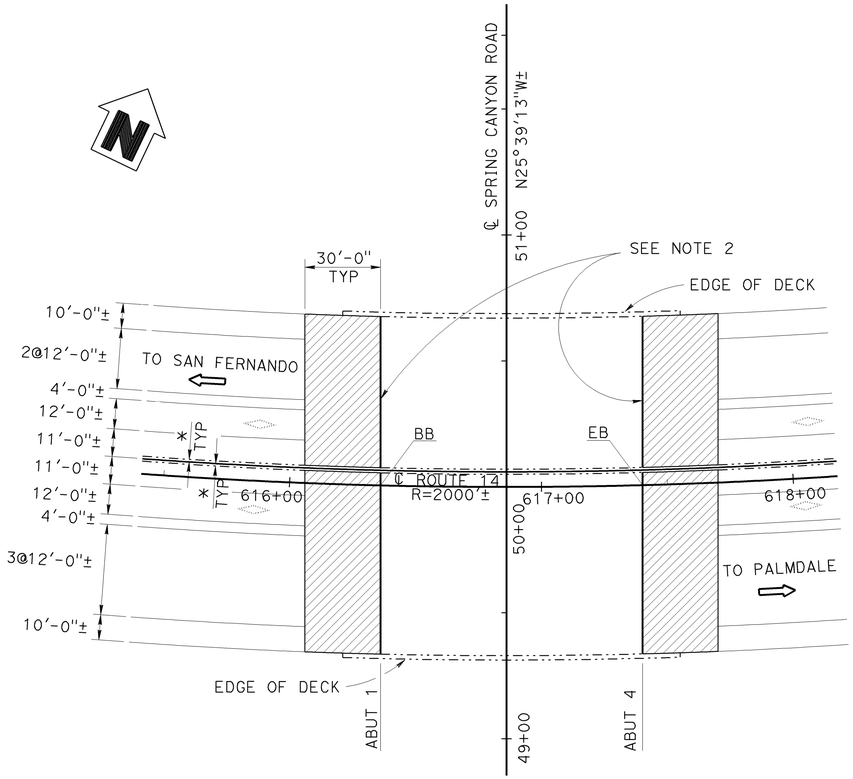

Br No. 53-1540, PM=36.54

SPRING CANYON ROAD UC

1" = 30'

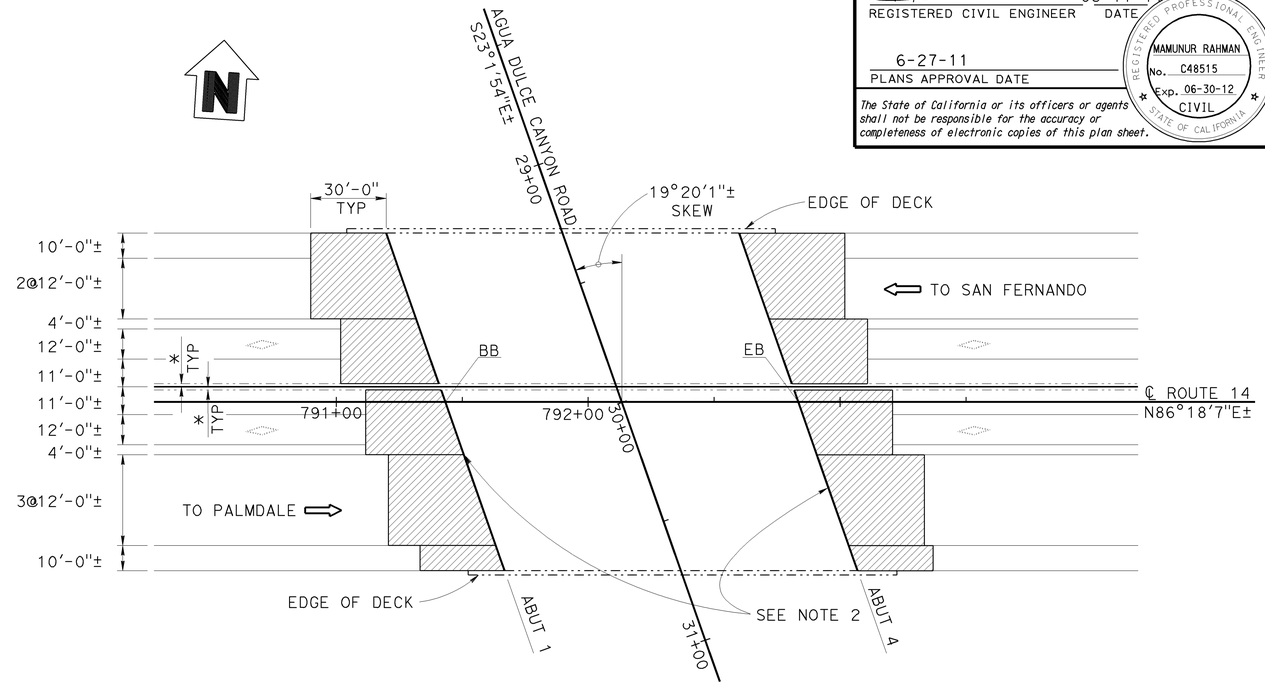

Br No. 53-1541, PM=39.85

AGUA DULCE ROAD UC

1" = 30'

QUANTITIES

REMOVE UNSOUND CONCRETE	2	CF
AGGREGATE BASE (APPROACH SLAB)	30	CY
STRUCTURAL CONCRETE, APPROACH SLAB (TYPE R)	300	CY
PAVING NOTCH EXTENSION	200	CF
RAPID SETTING CONCRETE (PATCH)	2	CF
JOINT SEAL (MR½")	270	LF

LEGEND

- Indicates Existing Structure
- Indicates limits of install new joint seal. Repair joint spalls prior to placement of new joint seal. For details see "JOINT SEAL DETAILS" sheet.
- Indicates limits of Structure Approach Slab Type R(30D). For details, see "STRUCTURE APPROACH TYPE R(30D)" sheet.
- Indicates Direction of Traffic
- * Approach Slab extends to toe of Median Barrier
- Indicates HOV Lane
- Indicates Median Barrier Rail

QUANTITIES

REMOVE UNSOUND CONCRETE	2	CF
AGGREGATE BASE (APPROACH SLAB)	35	CY
STRUCTURAL CONCRETE, APPROACH SLAB (TYPE R)	350	CY
PAVING NOTCH EXTENSION	210	CF
RAPID SETTING CONCRETE (PATCH)	2	CF
JOINT SEAL (MR 1")	286	LF

NOTE:

1. For details not shown, see RSP B6-21
2. Paving notch extension.

NOTE:

THE CONTRACTOR SHALL VERIFY ALL CONTROLLING FIELD DIMENSIONS BEFORE ORDERING OR FABRICATING ANY MATERIAL.

PAUL CHUNG
DESIGN ENGINEER

	BY	CHECKED
DESIGN	MAMUNUR RAHMAN	CESAR SANCHEZ
DETAILS	HECTOR INIGUEZ	MAMUNUR RAHMAN
QUANTITIES	CESAR SANCHEZ	MAMUNUR RAHMAN

LOAD & RESISTANCE FACTOR DESIGN — LIVE LOADING: HL93 W/"LOW-BOY"; PERMIT DESIGN VEHICLE

	BY	CHECKED
LAYOUT	HECTOR INIGUEZ	MAMUNUR RAHMAN
SPECIFICATIONS	DAVE KLEIN	PLANS AND SPECS COMPARED: DAVE KLEIN

ORIGINAL SCALE IN INCHES FOR REDUCED PLANS 0 1 2 3

STATE OF CALIFORNIA
DEPARTMENT OF TRANSPORTATION

DIVISION OF ENGINEERING SERVICES
STRUCTURE DESIGN
DESIGN BRANCH 19

BRIDGE NO. VARIOUS
POST MILE VARIOUS

ROUTE 14 BRIDGES
GENERAL PLAN NO. 4

UNIT: 3621
PROJECT NUMBER & PHASE: 0700020848 1 CONTRACT NO.: 07-251601

DISREGARD PRINTS BEARING EARLIER REVISION DATES

REVISION DATES: 11-04-10 03-08-11 03-11-11

SHEET 4 OF 10

STRUCTURES DESIGN GENERAL PLAN SHEET (ENGLISH) (REV.09-01-10)

FILE => 04-05-06_EA07-251601-a-gp.dgn

USERNAME => s120514 DATE PLOTTED => 16-JUN-2011 TIME PLOTTED => 14:29

DIST	COUNTY	ROUTE	POST MILES TOTAL PROJECT	SHEET No.	TOTAL SHEETS
07	LA	14	R32.1/R52.6	60	65

REGISTERED CIVIL ENGINEER 03-11-11 DATE

6-27-11
PLANS APPROVAL DATE

REGISTERED PROFESSIONAL ENGINEER MAMUNUR RAHMAN No. C48515 Exp. 06-30-12 CIVIL STATE OF CALIFORNIA

The State of California or its officers or agents shall not be responsible for the accuracy or completeness of electronic copies of this plan sheet.

LEGEND

- Indicates Existing Structure
- Indicates limits of install new joint seal. Repair joint spalls prior to placement of new joint seal. For details see "JOINT SEAL DETAILS" sheet.
- Indicates limits of Structure Approach Slab Type R(30D). For details, see "STRUCTURE APPROACH TYPE R(30D)" sheet.
- Indicates Direction of Traffic
- * Approach Slab extends to toe of Median Barrier
- Indicates HOV Lane

NOTE:

1. For details not shown, see RSP B6-21
2. Paving notch extension.

QUANTITIES

REMOVE UNSOUND CONCRETE	2	CF
AGGREGATE BASE (APPROACH SLAB)	26	CY
STRUCTURAL CONCRETE, APPROACH SLAB (TYPE R)	260	CY
PAVING NOTCH EXTENSION	175	CF
RAPID SETTING CONCRETE (PATCH)	2	CF
JOINT SEAL (MR1/2")	234	LF

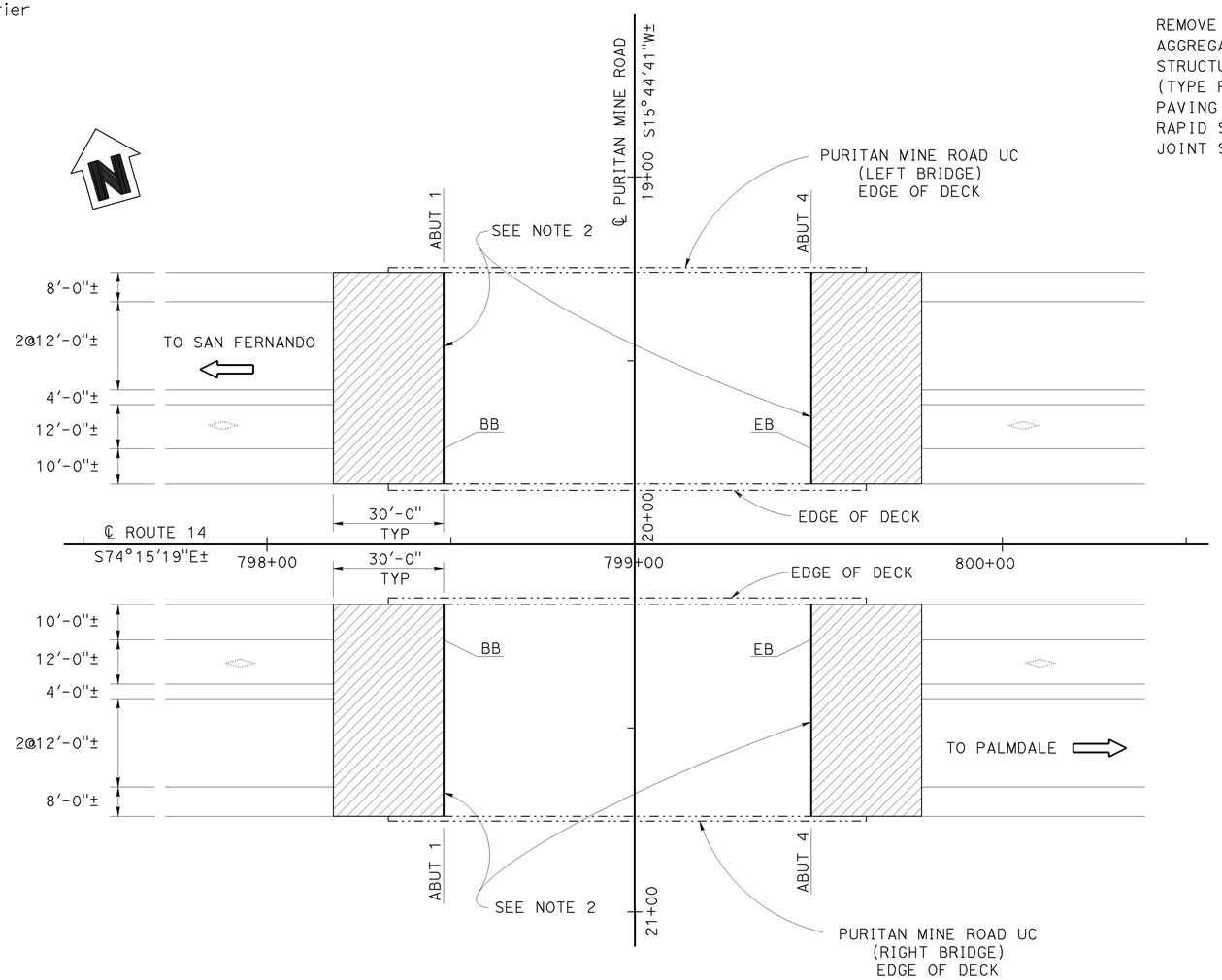

Br No. 53-1545L/R, PM=45.73

PURITAN MINE ROAD UC

1" = 20'

NOTE:

THE CONTRACTOR SHALL VERIFY ALL CONTROLLING FIELD DIMENSIONS BEFORE ORDERING OR FABRICATING ANY MATERIAL.

PAUL CHUNG
DESIGN ENGINEER

	BY	CHECKED
DESIGN	MAMUNUR RAHMAN	CESAR SANCHEZ
DETAILS	HECTOR INIGUEZ	MAMUNUR RAHMAN
QUANTITIES	CESAR SANCHEZ	MAMUNUR RAHMAN

LOAD & RESISTANCE FACTOR DESIGN — LIVE LOADING: HL93 W/"LOW-BOY"; PERMIT DESIGN VEHICLE

	BY	CHECKED
LAYOUT	HECTOR INIGUEZ	MAMUNUR RAHMAN
SPECIFICATIONS	DAVE KLEIN	PLANS AND SPECS COMPARED DAVE KLEIN

ORIGINAL SCALE IN INCHES FOR REDUCED PLANS 0 1 2 3

STATE OF CALIFORNIA
DEPARTMENT OF TRANSPORTATION

DIVISION OF ENGINEERING SERVICES
STRUCTURE DESIGN
DESIGN BRANCH 19

BRIDGE NO. VARIOUS
POST MILE VARIOUS

ROUTE 14 BRIDGES
GENERAL PLAN NO. 5

UNIT: 3621
PROJECT NUMBER & PHASE: 0700020848 1 CONTRACT NO.: 07-251601

DISREGARD PRINTS BEARING EARLIER REVISION DATES

REVISION DATES 11-04-10 03-08-11 03-11-11

SHEET 5 OF 10

STRUCTURES DESIGN GENERAL PLAN SHEET (ENGLISH) (REV.09-01-10)

FILE => 05-07-08_EA07-251601-a-gp.dgn

USERNAME => s120514 DATE PLOTTED => 16-JUN-2011 TIME PLOTTED => 14:29

DIST	COUNTY	ROUTE	POST MILES TOTAL PROJECT	SHEET No.	TOTAL SHEETS
07	LA	14	R32.1/R52.6	61	65

REGISTERED CIVIL ENGINEER 03-11-11 DATE

6-27-11
PLANS APPROVAL DATE

REGISTERED PROFESSIONAL ENGINEER MAMUNUR RAHMAN No. C48515 Exp. 06-30-12 CIVIL STATE OF CALIFORNIA

The State of California or its officers or agents shall not be responsible for the accuracy or completeness of electronic copies of this plan sheet.

LEGEND

- Indicates Existing Structure
- Indicates limits of install new joint seal. Repair joint spalls prior to placement of new joint seal. For details see "JOINT SEAL DETAILS" sheet.
- Indicates limits of Structure Approach Slab Type R(30D). For details, see "STRUCTURE APPROACH TYPE R(30D)" sheet.
- Indicates Direction of Traffic
- Indicates HOV Lane

NOTE:

1. For details not shown, see RSP B6-21
2. Paving notch extension.

QUANTITIES

REMOVE UNSOUND CONCRETE	2	CF
AGGREGATE BASE (APPROACH SLAB)	34	CY
STRUCTURAL CONCRETE, APPROACH SLAB (TYPE R)	335	CY
PAVING NOTCH EXTENSION	205	CF
RAPID SETTING CONCRETE (PATCH)	2	CF
JOINT SEAL (MR 1")	274	LF

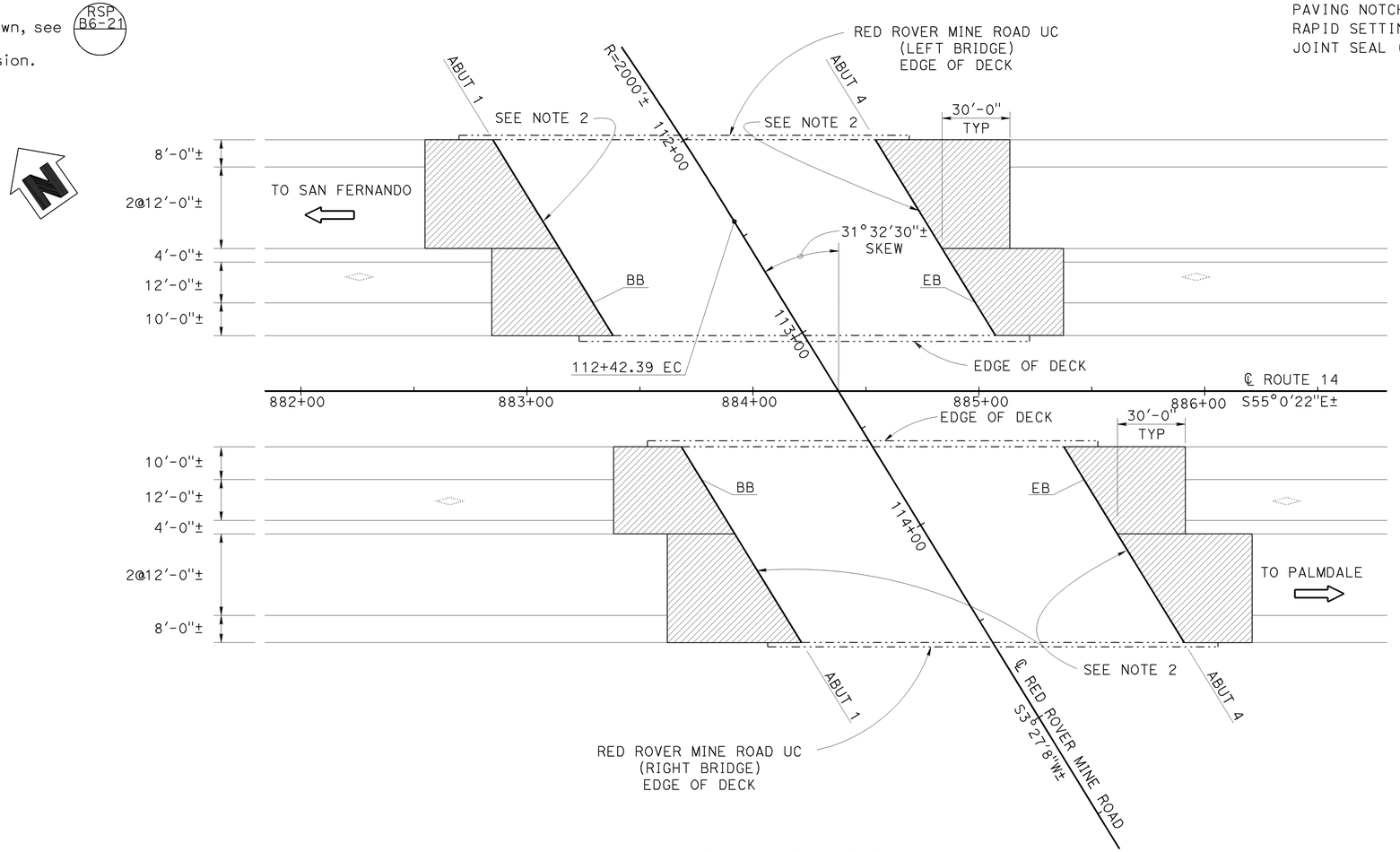

Br No. 53-0147L/R, PM=R47.34

RED ROVER MINE ROAD UC

1" = 30'

NOTE:

THE CONTRACTOR SHALL VERIFY ALL CONTROLLING FIELD DIMENSIONS BEFORE ORDERING OR FABRICATING ANY MATERIAL.

PAUL CHUNG
DESIGN ENGINEER

	BY	CHECKED
DESIGN	MAMUNUR RAHMAN	CESAR SANCHEZ
DETAILS	HECTOR INIGUEZ	MAMUNUR RAHMAN
QUANTITIES	CESAR SANCHEZ	MAMUNUR RAHMAN

LOAD & RESISTANCE FACTOR DESIGN — LIVE LOADING: HL93 W/"LOW-BOY"; PERMIT DESIGN VEHICLE

	BY	CHECKED
LAYOUT	HECTOR INIGUEZ	MAMUNUR RAHMAN
SPECIFICATIONS	DAVE KLEIN	PLANS AND SPECS COMPARED DAVE KLEIN

ORIGINAL SCALE IN INCHES FOR REDUCED PLANS 0 1 12-13-10 2 3

STATE OF CALIFORNIA
DEPARTMENT OF TRANSPORTATION

DIVISION OF ENGINEERING SERVICES
STRUCTURE DESIGN
DESIGN BRANCH 19

UNIT: 3621
PROJECT NUMBER & PHASE: 0700020848 1 CONTRACT NO.: 07-251601

BRIDGE NO. VARIOUS
POST MILE VARIOUS

ROUTE 14 BRIDGES
GENERAL PLAN NO. 6

DISREGARD PRINTS BEARING EARLIER REVISION DATES

REVISION DATES: 11-04-10 03-08-11 03-11-11

SHEET 6 OF 10

STRUCTURES DESIGN GENERAL PLAN SHEET (ENGLISH) (REV.09-01-10)

FILE => 06-09-10_EA07-251601-a-gp.dgn

USERNAME => s120514 DATE PLOTTED => 16-JUN-2011 TIME PLOTTED => 14:29

DIST	COUNTY	ROUTE	POST MILES TOTAL PROJECT	SHEET No.	TOTAL SHEETS
07	LA	14	R32.1/R52.6	62	65

REGISTERED CIVIL ENGINEER 03-11-11 DATE

6-27-11
PLANS APPROVAL DATE

REGISTERED PROFESSIONAL ENGINEER MAMUNUR RAHMAN No. C48515 Exp. 06-30-12 CIVIL STATE OF CALIFORNIA

The State of California or its officers or agents shall not be responsible for the accuracy or completeness of electronic copies of this plan sheet.

LEGEND

Indicates Existing Structure

Indicates limits of install new joint seal. Repair joint spalls prior to placement of new joint seal. For details see "JOINT SEAL DETAILS" sheet.

Indicates limits of Structure Approach Slab Type R(30D). For details, see "STRUCTURE APPROACH TYPE R(30D)" sheet.

Indicates Direction of Traffic

Indicates HOV Lane

NOTE:

1. For details not shown, see RSP B6-21
2. Paving notch extension.

QUANTITIES

REMOVE UNSOUND CONCRETE	2	CF
AGGREGATE BASE (APPROACH SLAB)	26	CY
STRUCTURAL CONCRETE, APPROACH SLAB (TYPE R)	260	CY
PAVING NOTCH EXTENSION	180	CF
RAPID SETTING CONCRETE (PATCH)	2	CF
JOINT SEAL (MR 1")	238	LF

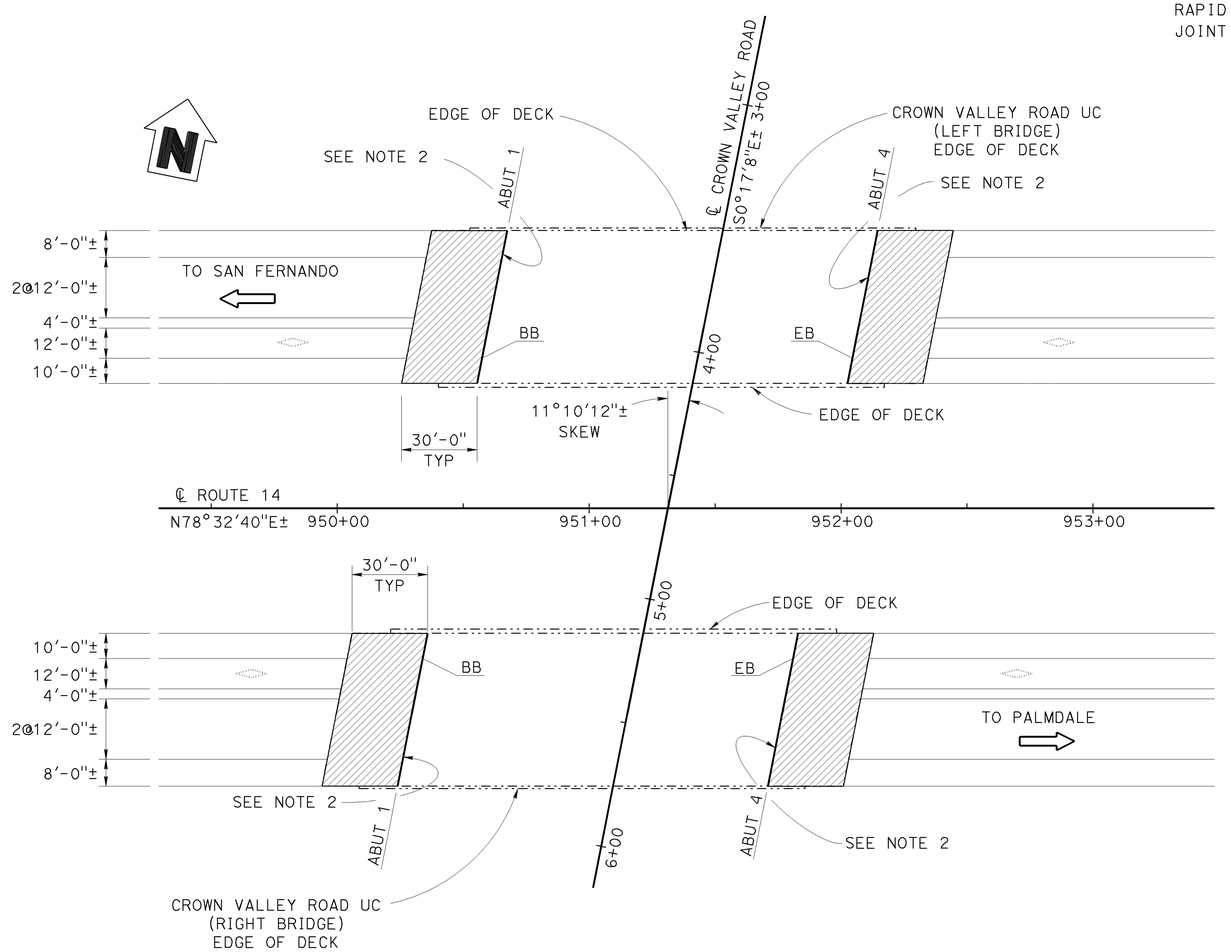

Br No. 53-0868L/R, PM=R48.61

CROWN VALLEY ROAD UC

1" = 30'

NOTE:

THE CONTRACTOR SHALL VERIFY ALL CONTROLLING FIELD DIMENSIONS BEFORE ORDERING OR FABRICATING ANY MATERIAL.

PAUL CHUNG
DESIGN ENGINEER

	BY	CHECKED
DESIGN	MAMUNUR RAHMAN	CESAR SANCHEZ
DETAILS	HECTOR INIGUEZ	MAMUNUR RAHMAN
QUANTITIES	CESAR SANCHEZ	MAMUNUR RAHMAN

LOAD & RESISTANCE FACTOR DESIGN — LIVE LOADING: HL93 W/"LOW-BOY"; PERMIT DESIGN VEHICLE

	BY	CHECKED
LAYOUT	HECTOR INIGUEZ	MAMUNUR RAHMAN
SPECIFICATIONS	DAVE KLEIN	PLANS AND SPECS COMPARED DAVE KLEIN

ORIGINAL SCALE IN INCHES FOR REDUCED PLANS 0 1 2 3

STATE OF CALIFORNIA
DEPARTMENT OF TRANSPORTATION

DIVISION OF ENGINEERING SERVICES
STRUCTURE DESIGN
DESIGN BRANCH 19

BRIDGE NO. VARIOUS
POST MILE VARIOUS

ROUTE 14 BRIDGES
GENERAL PLAN NO. 7

UNIT: 3621
PROJECT NUMBER & PHASE: 0700020848 1 CONTRACT NO.: 07-251601

DISREGARD PRINTS BEARING EARLIER REVISION DATES

REVISION DATES 11-04-10 03-08-11 03-11-11

SHEET 7 OF 10

STRUCTURES DESIGN GENERAL PLAN SHEET (ENGLISH) (REV.09-01-10)

FILE => 07-11-12_EA07-251601-a-gp.dgn

USERNAME => s120514 DATE PLOTTED => 16-JUN-2011 TIME PLOTTED => 14:29

DIST	COUNTY	ROUTE	POST MILES TOTAL PROJECT	SHEET No.	TOTAL SHEETS
07	LA	14	R32.1/R52.6	63	65

REGISTERED CIVIL ENGINEER 03-11-11 DATE

6-27-11
PLANS APPROVAL DATE

REGISTERED PROFESSIONAL ENGINEER MAMUNUR RAHMAN No. C48515 Exp. 06-30-12 CIVIL STATE OF CALIFORNIA

The State of California or its officers or agents shall not be responsible for the accuracy or completeness of electronic copies of this plan sheet.

LEGEND

Indicates Existing Structure

Indicates limits of install new joint seal. Repair joint spalls prior to placement of new joint seal. For details see "JOINT SEAL DETAILS" sheet.

Indicates limits of Structure Approach Slab Type R(30D). For details, see "STRUCTURE APPROACH TYPE R(30D)" sheet.

Indicates Direction of Traffic

Indicates HOV Lane

NOTE:

1. For details not shown, see RSP B6-21
2. Paving notch extension.

QUANTITIES

REMOVE UNSOUND CONCRETE	2	CF
AGGREGATE BASE (APPROACH SLAB)	26	CY
STRUCTURAL CONCRETE, APPROACH SLAB (TYPE R)	260	CY
PAVING NOTCH EXTENSION	175	CF
RAPID SETTING CONCRETE (PATCH)	2	CF
JOINT SEAL (MR 1")	236	LF

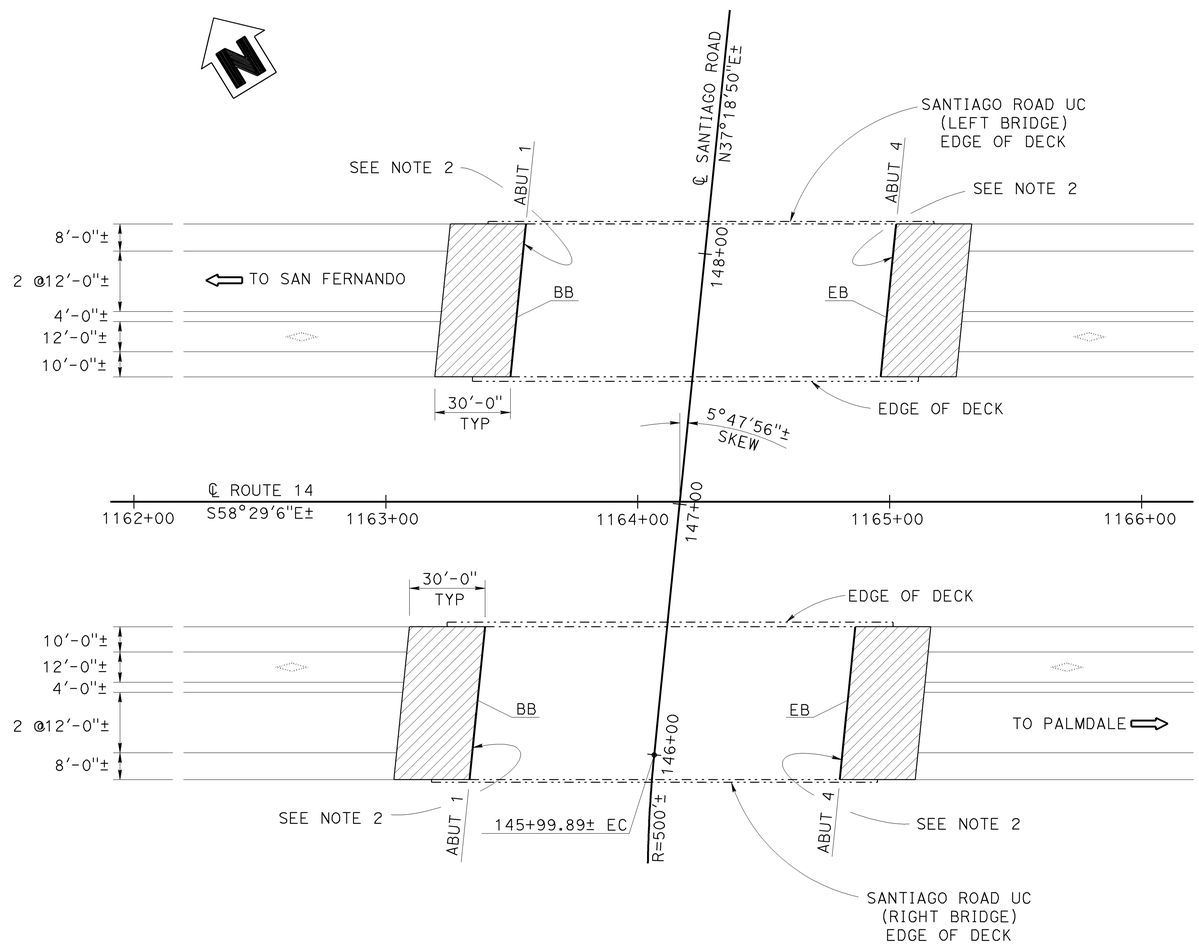

Br No. 53-0871L/R, PM=R50.75

SANTIAGO ROAD UC

1" = 30'

NOTE:

THE CONTRACTOR SHALL VERIFY ALL CONTROLLING FIELD DIMENSIONS BEFORE ORDERING OR FABRICATING ANY MATERIAL.

DESIGN	BY MAMUNUR RAHMAN	CHECKED CESAR SANCHEZ	LOAD & RESISTANCE FACTOR DESIGN	LIVE LOADING: HL93 W/"LOW-BOY"; PERMIT DESIGN VEHICLE
DETAILS	BY HECTOR INIGUEZ	CHECKED MAMUNUR RAHMAN	LAYOUT BY HECTOR INIGUEZ	CHECKED MAMUNUR RAHMAN
QUANTITIES	BY CESAR SANCHEZ	CHECKED MAMUNUR RAHMAN	SPECIFICATIONS BY DAVE KLEIN	PLANS AND SPECS COMPARED DAVE KLEIN

PAUL CHUNG
DESIGN ENGINEER

STATE OF CALIFORNIA
DEPARTMENT OF TRANSPORTATION

DIVISION OF ENGINEERING SERVICES
STRUCTURE DESIGN
DESIGN BRANCH 19

BRIDGE NO. VARIOUS
POST MILE VARIOUS

ROUTE 14 BRIDGES
GENERAL PLAN NO. 8

ORIGINAL SCALE IN INCHES FOR REDUCED PLANS 0 1 2 3 12-13-10

UNIT: 3621
PROJECT NUMBER & PHASE: 0700020848 1 CONTRACT NO.: 07-251601

DISREGARD PRINTS BEARING EARLIER REVISION DATES

REVISION DATES 11-04-10 03-08-11 03-11-11

SHEET 8 OF 10

STRUCTURES DESIGN GENERAL PLAN SHEET (ENGLISH) (REV.09-01-10)

FILE => 08-13-14_EA07-251601-a-gp.dgn

USERNAME => s120514 DATE PLOTTED => 16-JUN-2011 TIME PLOTTED => 14:29

DIST	COUNTY	ROUTE	POST MILES TOTAL PROJECT	SHEET No.	TOTAL SHEETS
07	LA	14	R32.1/R52.6	64	65

REGISTERED CIVIL ENGINEER 03-11-11 DATE

6-27-11
PLANS APPROVAL DATE

REGISTERED PROFESSIONAL ENGINEER MAMUNUR RAHMAN No. C 48515 Exp. 06-30-12 CIVIL STATE OF CALIFORNIA

The State of California or its officers or agents shall not be responsible for the accuracy or completeness of electronic copies of this plan sheet.

LEGEND

PN Indicates Paving Notch
BW Indicates Backwall

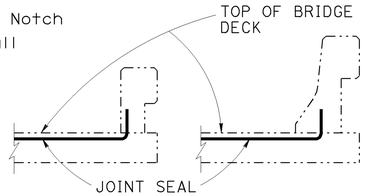

JOINT SEAL AT LOW SIDE OF DECK

DETAILS SHOWN FOR ILLUSTRATION PURPOSE ONLY. FOR USE ONLY WHERE DECK JOINT MATCHES THE SIDEWALK, CURB OR BARRIER RAIL JOINT.

NO SCALE

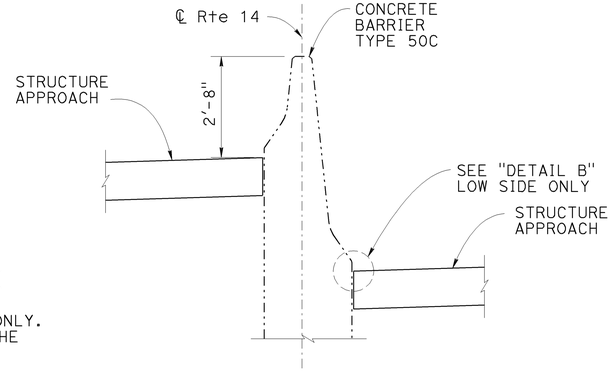

SECTION D-D

AT SANTA CLARA RIVER BRIDGE ONLY

NO SCALE

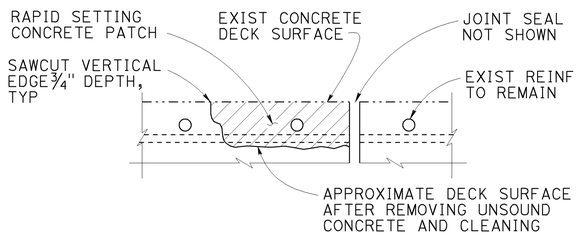

JOINT SPALL REPAIR DETAIL

REINFORCEMENT MAY BE ENCOUNTERED DURING DECK CONCRETE REMOVAL AND IS TO REMAIN UNDAMAGED. LOCATIONS TO BE DETERMINED BY THE ENGINEER.

NO SCALE

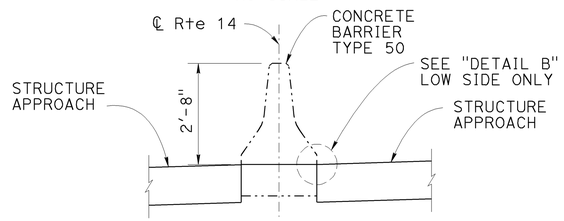

SECTION D-D

AT ALL OTHER LOCATIONS

NO SCALE

FOR LOCATION OF "SECTION D-D" SEE "STRUCTURE APPROACH SLAB R(30D)" SHEET "PLAN" VIEW

FOR "DETAIL B" SEE "STRUCTURE APPROACH SLAB R(30D)" SHEET

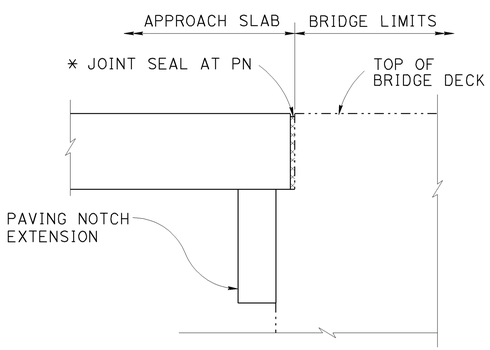

JOINT SEAL DETAIL

NO SCALE

* LOCATION OF JOINT SEAL CLEANING

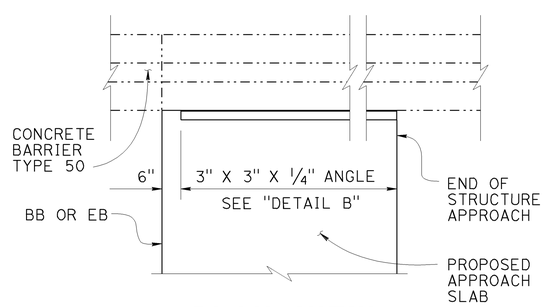

PLAN VIEW EDGE ANGLE DETAIL

NO SCALE

NOTES:

The following notes apply to JOINT SEAL TYPE B:

1. Seal must satisfy both minimum Movement Rating (MR) and minimum W1 requirements.
2. Minimum W1 is the calculated maximum width of the joint based on field measurements. After the joints have been cleaned, minimum W1 is to be recalculated by the Engineer.
3. W1 shall be the smaller of the values determined as follows:
   A) 0.85 times the manufacturer's designed minimum uncompressed width of the seal.
   B) The width of the seal on the third successive test cycle of the pressure deflection test when compressed to an average presure of 3.0 Psi.
4. Bend Type B joint seal 6 inches up into curb or rail on the low side of the deck where deck joint matches curb or rail joint.

The following note apply to JOINT SEAL TYPE A:

1. Install joint seal (MR = ½") or Silicone joint seal 3" up into curb or barrier rail on the low side of the deck where deck joint aligns with curb or barrier rail joint.

JOINT SEAL TABLE

BRIDGE NO. & NAME	LOCATION		MINIMUM "MR" (Inch)	JOINT SEAL LENGTH (Feet)	EXISTING WATERSTOP (Y/N)	APPROX DEPTH OF JOINT SPALLS (INCHES)	APPROX WIDTH OF JOINT SPALLS (INCHES)	APPROX LENGTH OF JOINT SPALLS (FEET)
BR NO. 53-2027 SANTA CLARA RIVER BRIDGE	ABUT 1	PN	2	192	N	3	6	5
	ABUT 11	PN	2	298	N	3	6	5
BR NO. 53-1621 LOST CANYON RD UC	ABUT 1	PN	1	139	N	3	6	5
	ABUT 4	PN	1	139	N	3	6	5
BR NO. 53-1539 OAK SPRINGS RD UC	ABUT 1	PN	½	135	N	3	6	5
	ABUT 4	PN	½	135	N	3	6	5
BR NO. 53-1549 SOLEDAD CANYON RD UC	ABUT 1	PN	1	175	N	3	6	5
	ABUT 5	PN	1	175	N	3	6	5
BR NO. 53-1540 SPRING CANYON RD UC	ABUT 1	PN	½	135	N	3	6	5
	ABUT 4	PN	½	135	N	3	6	5
BR NO. 53-1541 AGUA DULCE RD UC	ABUT 1	PN	1	143	N	3	6	5
	ABUT 4	PN	1	143	N	3	6	5
BR NO. 53-1545 L/R PURITAN MINE RD UC	ABUT 1	PN	½	117	N	3	6	5
	ABUT 4	PN	½	117	N	3	6	5
BR NO. 53-0147 L/R RED ROVER MINE RD UC	ABUT 1	PN	1	137	N	3	6	5
	ABUT 4	PN	1	137	N	3	6	5
BR NO. 53-0868 L/R CROWN VALLEY RD UC	ABUT 1	PN	1	119	N	3	6	5
	ABUT 4	PN	1	119	N	3	6	5
BR NO. 53-0871 L/R SANTIAGO RD UC	ABUT 1	PN	1	118	N	3	6	5
	ABUT 4	PN	1	118	N	3	6	5

NOTE:
THE CONTRACTOR SHALL VERIFY ALL CONTROLLING FIELD DIMENSIONS BEFORE ORDERING OR FABRICATING ANY MATERIAL.

	BY	CHECKED
DESIGN	MAMUNUR RAHMAN	CESAR SANCHEZ
DETAILS	HECTOR INIGUEZ	MAMUNUR RAHMAN
QUANTITIES	CESAR SANCHEZ	MAMUNUR RAHMAN

STATE OF CALIFORNIA
DEPARTMENT OF TRANSPORTATION

DIVISION OF ENGINEERING SERVICES
STRUCTURE DESIGN
DESIGN BRANCH 19

BRIDGE NO. VARIOUS
POST MILE VARIOUS

ROUTE 14 BRIDGES
JOINT SEAL DETAILS

STRUCTURES DESIGN DETAIL SHEET (ENGLISH) (REV. 09-01-10)

ORIGINAL SCALE IN INCHES FOR REDUCED PLANS 0 1 2 3

UNIT: 3621
PROJECT NUMBER & PHASE: 0700020848 1 CONTRACT NO.: 07-251601

DISREGARD PRINTS BEARING EARLIER REVISION DATES

REVISION DATES 12-02-10 03-10-11 03-11-11

SHEET 9 OF 10

FILE => 09-15_EA07-251601-m-det.dgn

USERNAME => s120514 DATE PLOTTED => 16-JUN-2011 TIME PLOTTED => 14:29

DIST	COUNTY	ROUTE	POST MILES TOTAL PROJECT	SHEET No.	TOTAL SHEETS
07	LA	14	R32.1/R52.6	65	65

REGISTERED CIVIL ENGINEER 03-11-11 DATE

6-27-11
PLANS APPROVAL DATE

REGISTERED PROFESSIONAL ENGINEER MAMUNUR RAHMAN No. C 48515 Exp. 06/30/12 CIVIL STATE OF CALIFORNIA

The State of California or its officers or agents shall not be responsible for the accuracy or completeness of electronic copies of this plan sheet.

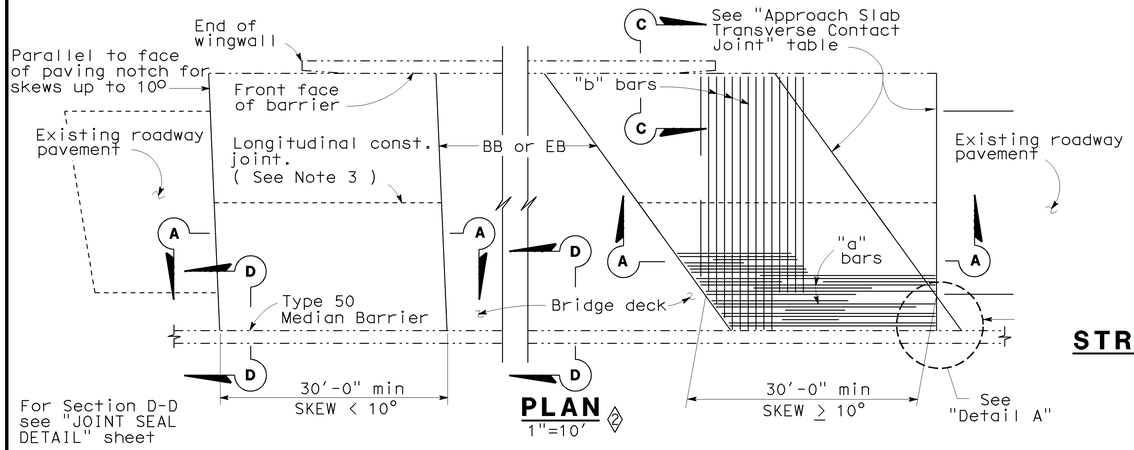

PLAN
1"=10' (2)

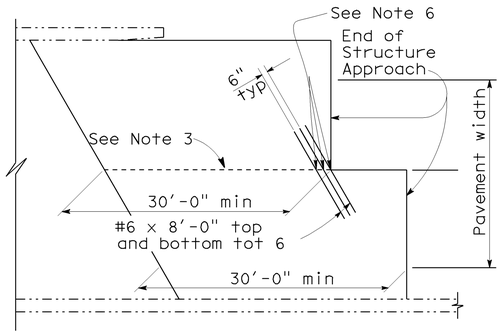

STRUCTURE APPROACH - END STAGGER DETAIL
No Scale

APPROACH SLAB TRANSVERSE CONTACT JOINT		
APPROACH SKEW	WITH AC ROADWAY PAVEMENT	WITH PCC ROADWAY PAVEMENT
< 10°	Parallel to face of paving notch	Parallel to face of paving notch
10° - 45°	Parallel to face of P N use (Detail A)	Stagger lines 24' to 36' apart
> 45°	Parallel to face of P N use (Detail A)	Stagger at each lane line

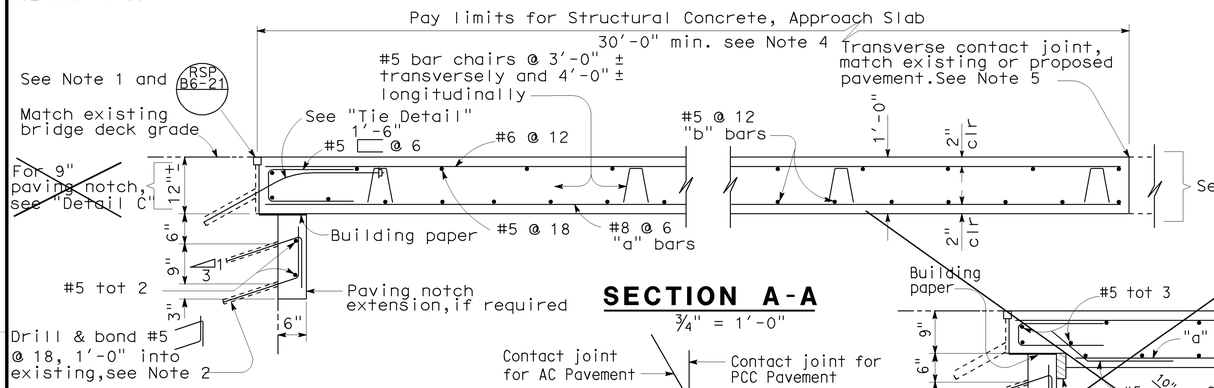

SECTION A-A
¾" = 1'-0"

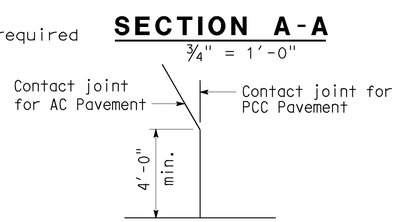

DETAIL A
No Scale

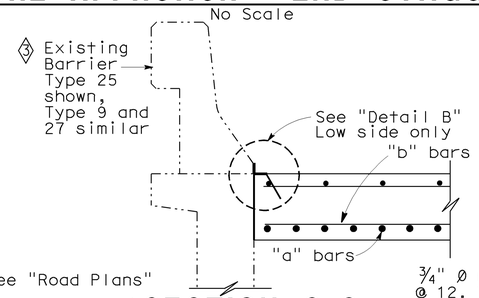

(1) SECTION C-C
¾" = 1'-0"

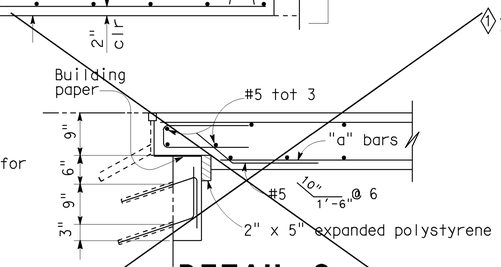

(1) DETAIL C
¾" = 1'-0"

NOTE: For details not shown, see "Section A-A".

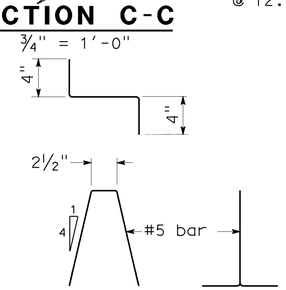

BAR CHAIR DETAIL
1½" = 1'-0"

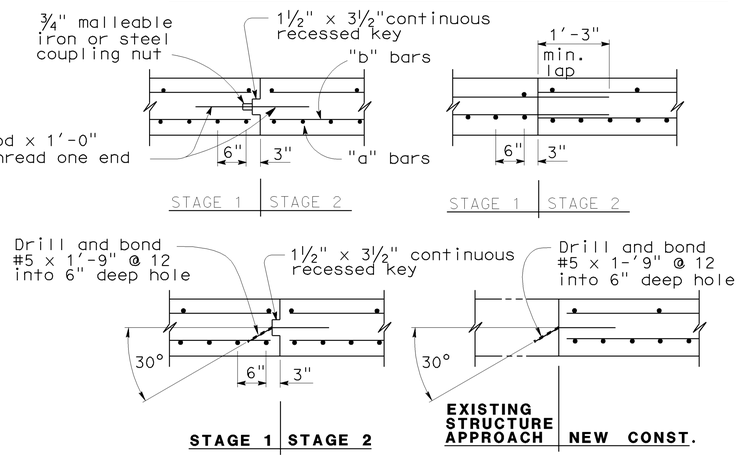

LONGITUDINAL CONSTRUCTION JOINT ALTERNATIVES
¾" = 1'-0"

NOTES:

1. For details not shown or noted, see Structure Plans. Adjust bar reinforcement to clear a sawcut for sealed joint, when required.
2. Space to avoid existing prestress anchorages and main reinforcement.
3. Longitudinal construction joints, when permitted by the Engineer, shall be located on lane lines.
4. Transverse contact joint shall be a minimum of 5'-0" from an existing or constructed weakened plane joint.
5. (3) For transverse contact joint with new PCC paving. refer to Revised Standard Plan P10.
6. Couplers are required for stage construction.
7. End angle or plate at beginning of barrier transition, end of wingwall or end of structure approach as applicable.

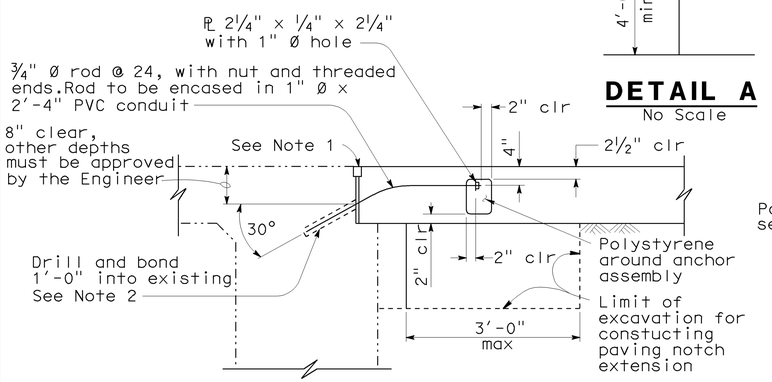

TIE DETAIL
¾" = 1'-0"

NOTE:
THE CONTRACTOR SHALL VERIFY ALL CONTROLLING FIELD DIMENSIONS BEFORE ORDERING OR FABRICATING ANY MATERIAL.

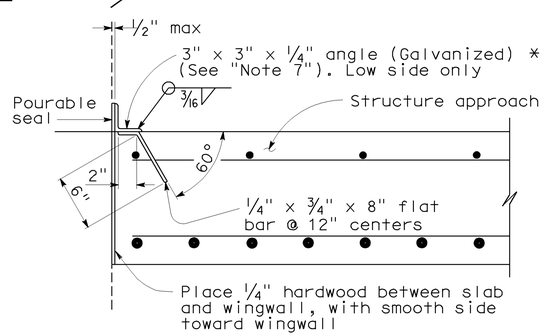

(2) * (TO BE USED WITH TYPE 9 OR 25 OR 27 OR 50 CONCRETE BARRIER)

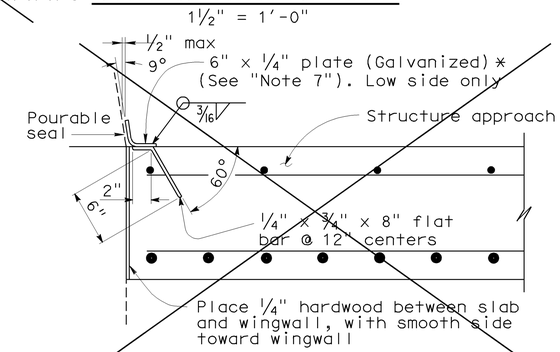

(1) *(TO BE USED WITH TYPE 732 OR TYPE 736 CONCRETE BARRIER)

DETAIL B
1½" = 1'-0"

STANDARD DRAWING

FILE NO. xs3-140e

APPROVED BY X (RESPONSIBLE TECHNICAL SPECIALIST)
APPROVAL DATE X-X-X

RELEASED BY (RESPONSIBLE OFFICE CHIEF)
RELEASE DATE 3/14/05

(1) Deleted Details
(2) Revised Detail
(3) Revised Notes

STATE OF CALIFORNIA
DEPARTMENT OF TRANSPORTATION

DIVISION OF ENGINEERING SERVICES

BRIDGE NO. VARIOUS
POST MILE VARIOUS

ROUTE 14 BRIDGES
STRUCTURE APPROACH TYPE R(30D)

DS OSD 2147A (ENGLISH STANDARD DRAWING "XS" BORDER REV. (08-10-10)

ORIGINAL SCALE IN INCHES FOR REDUCED PLANS 0 1 2 3

UNIT: 3621
PROJECT NUMBER & PHASE: 0700020848 1
CONTRACT NO.: 07-251601

DISREGARD PRINTS BEARING EARLIER REVISION DATES

REVISION DATES: 10-18-10 03-11-11 03-16-11

SHEET 10 OF 10

FILE => 10-16_EA07-251601-s-sa.dgn

USERNAME => s120514 DATE PLOTTED => 16-JUN-2011 TIME PLOTTED => 14:29