Dist	COUNTY	ROUTE	POST MILES TOTAL PROJECT	SHEET No.	TOTAL SHEETS
07	LA	5	R46.3/R50.0	1	456

ACIM-005-3(044)E

STATE OF CALIFORNIA
DEPARTMENT OF TRANSPORTATION

PROJECT PLANS FOR CONSTRUCTION ON
STATE HIGHWAY
IN LOS ANGELES COUNTY
IN AND NEAR SANTA CLARITA
FROM 0.3 MILE SOUTH OF WELDON CANYON OVERCROSSING TO 0.4 MILE SOUTH OF PICO CANYON ROAD/ LYONS AVENUE OVERCROSSING

TO BE SUPPLEMENTED BY STANDARD PLANS DATED MAY 2006

INDEX OF PLANS

SHEET No.	DESCRIPTION
1	TITLE AND LOCATION MAP
2-8	TYPICAL CROSS SECTIONS
9-24	LAYOUTS
25-40	PROFILES AND SUPERELEVATION DIAGRAMS
41-48	CONSTRUCTION DETAILS
49-58	EROSION CONTROL PLANS
59-74	CONTOUR GRADING
75-169	DRAINAGE PLANS, PROFILES, DETAILS AND QUANTITIES
170-186	UTILITY PLANS
187	CONSTRUCTION AREA SIGNS
188-227	STAGE CONSTRUCTION PLANS
228-232	TRAFFIC HANDLING DETAILS
233-249	PAVEMENT DELINEATION, SIGN PLANS AND QUANTITIES
250-252	SIGN DETAILS AND QUANTITIES
253-255	SUMMARY OF QUANTITIES
256-324	RETAINING WALL PLANS AND DETAILS
325-339	ELECTRICAL PLANS
340-379	REVISED AND NEW STANDARD PLANS

STRUCTURE PLANS

380-398	CALGROVE Blvd UC (WIDEN) Br No. 53-1792 R/L
399-436	GAVIN CANYON UC (WIDEN) Br No. 53-2790 R/L
437-456	RETAINING WALL No. 2433

THE STANDARD PLANS LIST APPLICABLE TO THIS CONTRACT IS INCLUDED IN THE NOTICE TO BIDDERS AND SPECIAL PROVISIONS BOOK.

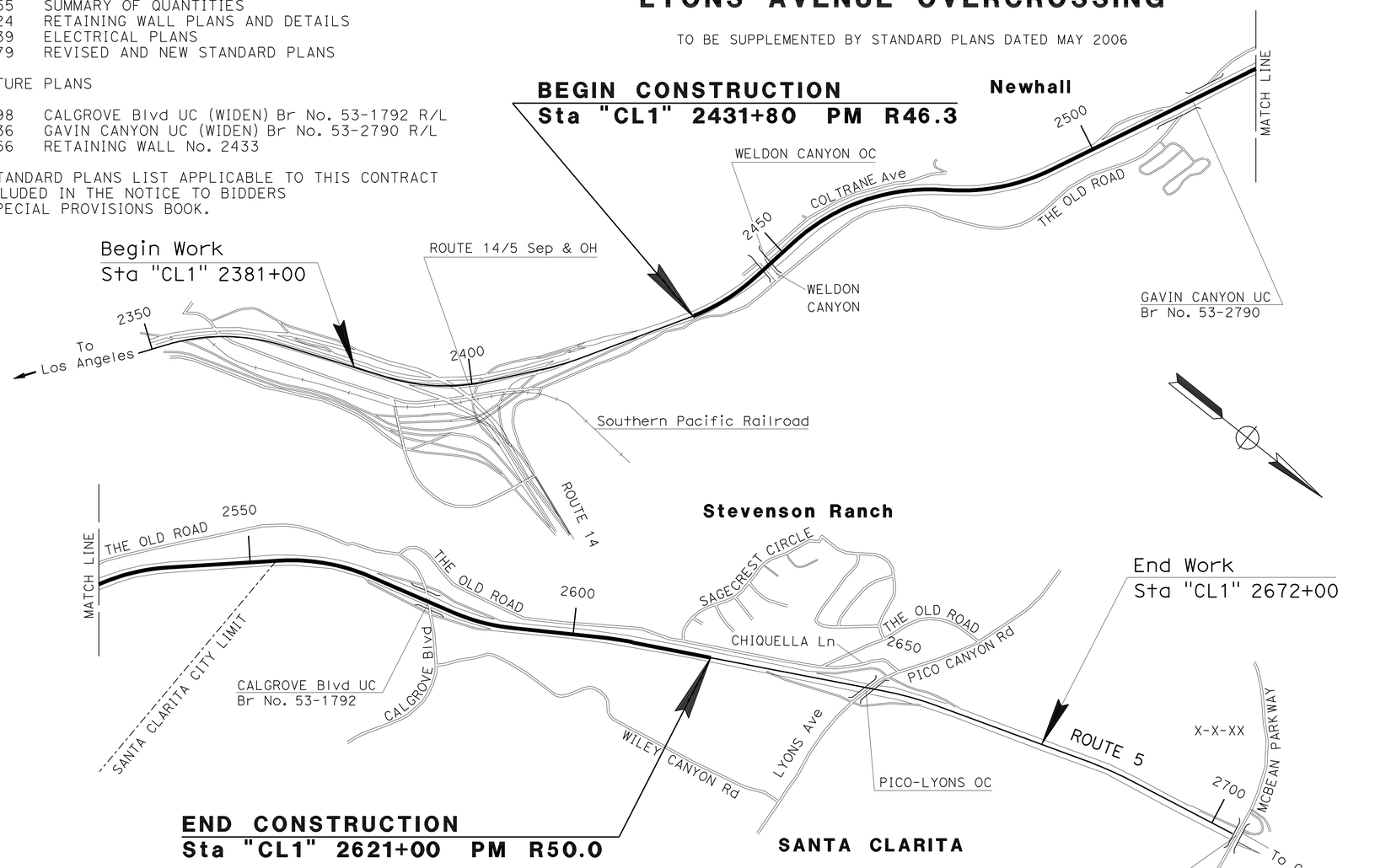

THE CONTRACTOR SHALL POSSESS THE CLASS (OR CLASSES) OF LICENSE AS SPECIFIED IN THE "NOTICE TO BIDDERS."

PROJECT MANAGER ASHRAF HABBAK

DESIGN ENGINEER CELINA AVILES

PROJECT ENGINEER REGISTERED CIVIL ENGINEER — DATE 01-11-11

April 25, 2011
PLANS APPROVAL DATE

REGISTERED PROFESSIONAL ENGINEER — AMIR AWN ELSHARIEF No. 72560 Exp. 6/30/12 CIVIL — STATE OF CALIFORNIA

THE STATE OF CALIFORNIA OR ITS OFFICERS OR AGENTS SHALL NOT BE RESPONSIBLE FOR THE ACCURACY OR COMPLETENESS OF SCANNED COPIES OF THIS PLAN SHEET.

CONTRACT No.	07-2332A4
PROJECT ID	0700000390

LAST REVISION 11-01-10 — DATE PLOTTED => 24-JUN-2011 TIME PLOTTED => 06:37

Dist	COUNTY	ROUTE	POST MILES TOTAL PROJECT	SHEET No.	TOTAL SHEETS
07	LA	5	R46.3/R50.0	2	456

REGISTERED CIVIL ENGINEER 01-11-11 DATE

4-25-11
PLANS APPROVAL DATE

REGISTERED PROFESSIONAL ENGINEER AMIR AWN ELSHARIEF No. 72560 Exp 6/30/12 CIVIL STATE OF CALIFORNIA

THE STATE OF CALIFORNIA OR ITS OFFICERS OR AGENTS SHALL NOT BE RESPONSIBLE FOR THE ACCURACY OR COMPLETENESS OF SCANNED COPIES OF THIS PLAN SHEET.

NOTES:

1. DIMENSIONS OF THE PAVEMENT STRUCTURES (STRUCTURAL SECTIONS) ARE SUBJECT TO TOLERANCES SPECIFIED IN THE STANDARD SPECIFICATIONS.
2. SUPERELEVATION AS SHOWN OR AS DIRECTED BY THE ENGINEER.
3. COLD PLANE AND HMA OVERLAY FOR Exist AC PAVEMENT, OR GRIND Exist PCC PAVEMENT (SEE LAYOUT AND CONSTRUCTION DETAILS SHEETS)

TABLE 1

SHEET No.	Exist STRUCTURAL SECTION	SOUTHBOUND STATION FROM	SOUTHBOUND STATION TO	NORTHBOUND STATION FROM	NORTHBOUND STATION TO
X-3	D	2432+89.49	2444+31.32	2432+89.49	2444+31.32
	E	2432+89.49	2444+31.32	2432+89.49	2444+31.32
	F	2432+89.49	2444+31.32	2432+89.49	2444+31.32
	G	2432+89.49	2444+31.32	-	-
	H	-	-	2432+89.49	2439+00.00
	I	-	-	2439+00.00	2444+31.32
	L	2448+25.00	2451+80.00	2448+25.00	2451+80.00
	M	2448+25.00	2451+80.00	2448+25.00	2451+80.00
X-4	N	2493+16.31	2494+50.00	-	-
	O	2493+16.31	2494+50.00	-	-
X-5	A	2519+48.19	2527+00.00	2519+48.19	2527+00.00
	N	2494+50.00	2498+00.00	-	-
	O	2494+50.00	2498+00.00	-	-
	P	2503+00.00	2513+30.32	2503+00.00	2513+30.32
		2519+48.19	2527+00.00	2519+48.19	2527+00.00
	Q	2503+00.00	2513+30.32	2503+00.00	2513+30.32
		2519+48.19	2527+00.00	2519+48.19	2527+00.00
	Z	-	-	2502+90.00	2505+70.00
	R	2527+00.00	2532+00.00	2527+00.00	2532+00.00
	S	2527+00.00	2532+00.00	2527+00.00	2532+00.00
	T	2532+00.00	2538+50.57	2532+00.00	2538+50.57
	U	2532+00.00	2538+50.57	2532+00.00	2538+50.57
	M	-	-	2552+41.97	2556+15.00
	L	-	-	2552+41.97	2556+15.00
	X	2559+38.41	2563+76.74	2564+03.59	2566+50.00
	Y	2559+38.41	2563+76.74	2564+03.59	2566+50.00
X-6	R	2542+90.00	2552+41.97	2538+50.57	2547+50.00
		2569+58.38	2576+33.30	2569+58.38	2576+33.30
	S	2542+90.00	2552+41.97	2538+50.57	2547+50.00
		2569+58.38	2576+33.30	2569+58.38	2576+33.30
	T	2538+50.57	2542+90.00	2547+50.00	2552+41.97
	N	2588+50.00	2590+96.27	2590+58.28	2592+00.00
	O	2588+50.00	2590+96.27	2590+58.28	2592+00.00
X-7	L	2604+00.00	2608+25.00	2604+00.00	2608+25.00
	M	2604+00.00	2608+25.00	2604+00.00	2608+25.00
	N	-	-	2592+00.00	2594+00.00
	O	-	-	2592+00.00	2594+00.00

EXISTING STRUCTURE SECTIONS

A
- 0.33' - 0.17' ASPHALT CONCRETE (TYPE B)
- 0.42' or 0.33' MINERAL AGGREGATE (RMCTB)-UNTREATED
- 1.33' CLASS 4 AGGREGATE SUBBASE

B
- 0.75' PORTLAND CEMENT CONCRETE
- 0.33' CLASS "A" CEMENT TREATED BASE
- 0.25' MINERAL AGGREGATE (RMCTB)-UNTREATED
- 0.67' CLASS 4 AGGREGATE SUBBASE

C
- 0.67' PORTLAND CEMENT CONCRETE
- 0.33' CLASS "A" CEMENT TREATED BASE
- 0.33' MINERAL AGGREGATE (RMCTB)-UNTREATED
- 0.67' CLASS 4 AGGREGATE SUBBASE

D
- 0.80' PORTLAND CEMENT CONCRETE
- 0.40' CEMENT TREATED BASE
- 0.50' AB (CLASS 3)

E
- 0.65' PORTLAND CEMENT CONCRETE
- 0.45' CEMENT TREATED BASE
- 0.60' AB (CLASS 3)

I F
- 0.40' ASPHALT CONCRETE
- 0.65' AB (CLASS 2)
- Var AGGREGATE SUBBASE

H G
- 0.25' ASPHALT CONCRETE
- 0.65' AB (CLASS 2)
- Var AGGREGATE SUBBASE

J
- 0.20' ASPHALT CONCRETE

K
- 0.20' ASPHALT CONCRETE
- 0.55' PORTLAND CEMENT CONCRETE
- 0.45' CEMENT TREATED BASE
- 0.50' AB (CLASS 3)

L
- 0.25' AC (TYPE B)
- PAVEMENT REINFORCING FABRIC
- 0.10' AC TYPE B (Min)
- 0.75' PORTLAND CEMENT CONCRETE
- 0.33' CLASS "A" CEMENT TREATED BASE
- 0.25' MINERAL AGGREGATE (RMCTB)-UNTREATED
- 0.67' CLASS 4 AGGREGATE SUBBASE

M
- 0.25' AC (TYPE B)
- PAVEMENT REINFORCING FABRIC
- 0.10' AC TYPE B (Min)
- 0.67' PORTLAND CEMENT CONCRETE
- 0.33' CLASS "A" CEMENT TREATED BASE
- 0.33' MINERAL AGGREGATE (RMCTB)-UNTREATED
- 0.67' CLASS 4 AGGREGATE SUBBASE

N
- 0.25' ASPHALT CONCRETE (TYPE B)
- 0.50' CLASS 2 AGGREGATE BASE
- 1.25' CLASS 4 AGGREGATE SUBBASE

O
- 0.25' - 0.17' ASPHALT CONCRETE (TYPE B)
- 0.33' CLASS 2 AGGREGATE BASE
- 1.25' CLASS 4 AGGREGATE SUBBASE

P
- 0.85' PORTLAND CEMENT CONCRETE
- 0.50' LEAN CONCRETE BASE
- 0.70' AGGREGATE BASE (CLASS 3)

Q
- 0.40' AC (TYPE B)
- 0.60' CLASS 2 AGGREGATE BASE

R
- 0.35' AC (TYPE B)
- 0.75' PORTLAND CEMENT CONCRETE
- 0.33' CLASS "A" CEMENT TREATED BASE
- 0.25' MINERAL AGGREGATE (RMCTB)-UNTREATED
- 0.67' CLASS 4 AGGREGATE SUBBASE

S
- 0.35' AC (TYPE B)
- 0.67' PORTLAND CEMENT CONCRETE
- 0.33' CLASS "A" CEMENT TREATED BASE
- 0.33' MINERAL AGGREGATE (RMCTB)-UNTREATED
- 0.67' CLASS 4 AGGREGATE SUBBASE

T
- 0.35' AC (TYPE B)
- 0.75' PORTLAND CEMENT CONCRETE
- 0.33' CLASS "A" CEMENT TREATED BASE
- 0.25' MINERAL AGGREGATE (RMCTB)-UNTREATED
- 0.67' CLASS 4 AGGREGATE SUBBASE

U
- 0.35' AC (TYPE B)
- 0.67' PORTLAND CEMENT CONCRETE
- 0.33' CLASS "A" CEMENT TREATED BASE
- 0.33' MINERAL AGGREGATE (RMCTB)-UNTREATED
- 0.67' CLASS 4 AGGREGATE SUBBASE

V
- 0.42' - 0.60' AND VARIES AC (TYPE B)

W
- 0.58' - 0.60' AND VARIES AC (TYPE B)
- 0.33' OR 0.42' MINERAL AGGREGATE (RMCTB) UNTREATED
- 1.33' CLASS 4 AGGREGATE SUBBASE

X
- 0.60' AC (TYPE B)
- 0.50' CLASS 2 AGGREGATE BASE
- 1.25' CLASS 4 AGGREGATE SUBBASE

Y
- 0.60' - 0.52' AC (TYPE B)
- 0.33' CLASS 2 AGGREGATE BASE
- 1.25' CLASS 4 AGGREGATE SUBBASE

Z
- 0.25' AND VARIES AC (TYPE B)
- 0.42' or 0.33' MINERAL AGGREGATE (RMCTB)-UNTREATED
- 1.33' CLASS 4 AGGREGATE SUBBASE

DESIGN DESIGNATION

ADT (2013)	195000	D	52%
ADT (2033)	290000	T	9.5%
DHV	8900	V	70mph
ESAL	262000	TI	17.0

TYPICAL PAVEMENT STRUCTURE SECTIONS

1
- 1.15' JPCP
- 0.50' LCB
- 0.70' CLASS 3 AB

2
- 1.25' JPCP
- 0.50' LCB
- 0.70' CLASS 3 AB

3
- 0.40' HMA (TYPE B)
- 0.40' LCB
- 0.65' CLASS 3 AB

4
- 1.25' HMA (TYPE B)
- 0.50' LCB
- 0.70' CLASS 3 AB

ABBREVIATIONS:

RMCTB ROAD MIX CEMENT TREATED BASE

TYPICAL CROSS SECTIONS

NO SCALE

X-1

STATE OF CALIFORNIA - DEPARTMENT OF TRANSPORTATION
Caltrans® DESIGN
FUNCTIONAL SUPERVISOR: CELINA AVILES
CALCULATED-DESIGNED BY: CUONG T. TRAN
CHECKED BY: AMIR ELSHARIEF
REVISED BY / DATE REVISED

LAST REVISION 11-02-10 | DATE PLOTTED => 26-APR-2011 | TIME PLOTTED => 09:43

Dist	COUNTY	ROUTE	POST MILES TOTAL PROJECT	SHEET No.	TOTAL SHEETS
07	LA	5	R46.3/R50.0	3	456

REGISTERED CIVIL ENGINEER 01-11-11 DATE

4-25-11
PLANS APPROVAL DATE

REGISTERED PROFESSIONAL ENGINEER
AMIR AWN ELSHARIEF
No. 72560
Exp. 6/30/12
CIVIL
STATE OF CALIFORNIA

THE STATE OF CALIFORNIA OR ITS OFFICERS OR AGENTS SHALL NOT BE RESPONSIBLE FOR THE ACCURACY OR COMPLETENESS OF SCANNED COPIES OF THIS PLAN SHEET.

NOTE: NOT ALL TIE BAR LOCATIONS SHOWN, REFER TO STANDARD PLANS.

* SEE TABLE 1 FOR BEGIN AND END STATIONS.

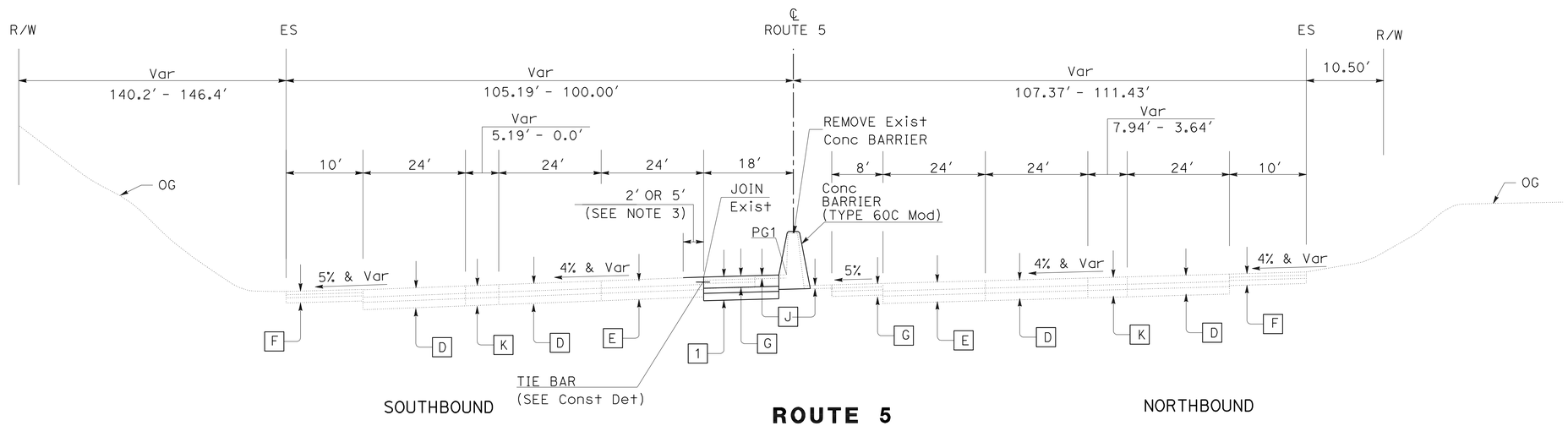

ROUTE 5

Sta 2431+80.00 TO Sta 2432+89.49

TYPICAL CROSS SECTIONS

NO SCALE

X-2

STATE OF CALIFORNIA - DEPARTMENT OF TRANSPORTATION
Caltrans®
DESIGN

FUNCTIONAL SUPERVISOR: CELINA AVILES
CALCULATED-DESIGNED BY: CUONG T. TRAN
CHECKED BY: AMIR ELSHARIEF
REVISED BY: A.E.
DATE REVISED: 09-8-10

LAST REVISION 02-18-10 | DATE PLOTTED => 25-APR-2011 | TIME PLOTTED => 16:01

Dist	COUNTY	ROUTE	POST MILES TOTAL PROJECT	SHEET No.	TOTAL SHEETS
07	LA	5	R46.3/R50.0	4	456

REGISTERED CIVIL ENGINEER 01-11-11 DATE

4-25-11
PLANS APPROVAL DATE

REGISTERED PROFESSIONAL ENGINEER AMIR AWN ELSHARIEF No. 72560 Exp 6/30/12 CIVIL STATE OF CALIFORNIA

THE STATE OF CALIFORNIA OR ITS OFFICERS OR AGENTS SHALL NOT BE RESPONSIBLE FOR THE ACCURACY OR COMPLETENESS OF SCANNED COPIES OF THIS PLAN SHEET.

NOTE: NOT ALL TIE BAR LOCATIONS SHOWN, REFER TO STANDARD PLANS.

* SEE TABLE 1 FOR BEGIN AND END STATIONS.

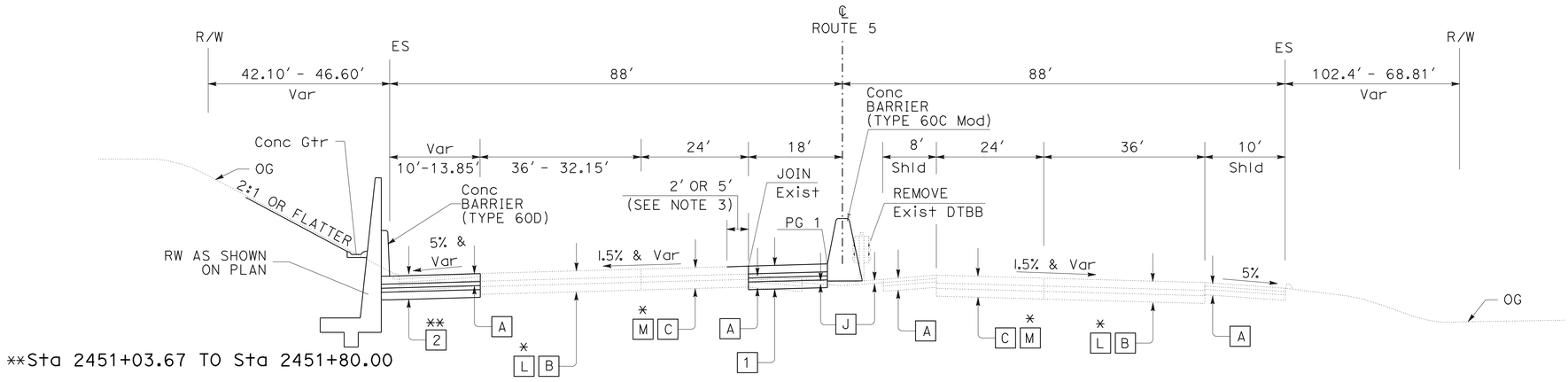

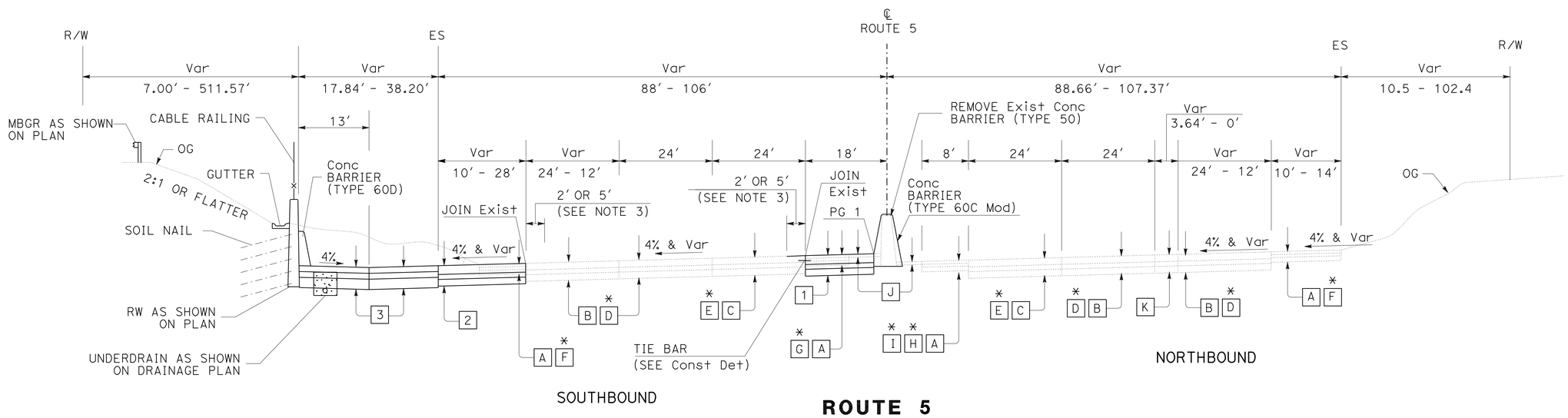

TYPICAL CROSS SECTIONS

NO SCALE

X-3

STATE OF CALIFORNIA - DEPARTMENT OF TRANSPORTATION
Caltrans®
DESIGN
FUNCTIONAL SUPERVISOR: CELINA AVILES
CALCULATED-DESIGNED BY: AMIR ELSHARIEF
CHECKED BY: CUONG T. TRAN
REVISED BY: A.E.
DATE REVISED: 09-8-10 11-02-10
CTT

LAST REVISION 11-02-10
DATE PLOTTED => 25-APR-2011
TIME PLOTTED => 16:01

Dist	COUNTY	ROUTE	POST MILES TOTAL PROJECT	SHEET No.	TOTAL SHEETS
07	LA	5	R46.3/R50.0	5	456

REGISTERED CIVIL ENGINEER 01-11-11 DATE

4-25-11
PLANS APPROVAL DATE

REGISTERED PROFESSIONAL ENGINEER AMIR AWN ELSHARIEF No. 72560 Exp 6/30/12 CIVIL STATE OF CALIFORNIA

THE STATE OF CALIFORNIA OR ITS OFFICERS OR AGENTS SHALL NOT BE RESPONSIBLE FOR THE ACCURACY OR COMPLETENESS OF SCANNED COPIES OF THIS PLAN SHEET.

NOTE: NOT ALL TIE BAR LOCATIONS SHOWN, REFER TO STANDARD PLANS.
* SEE TABLE 1 FOR BEGIN AND END STATIONS.

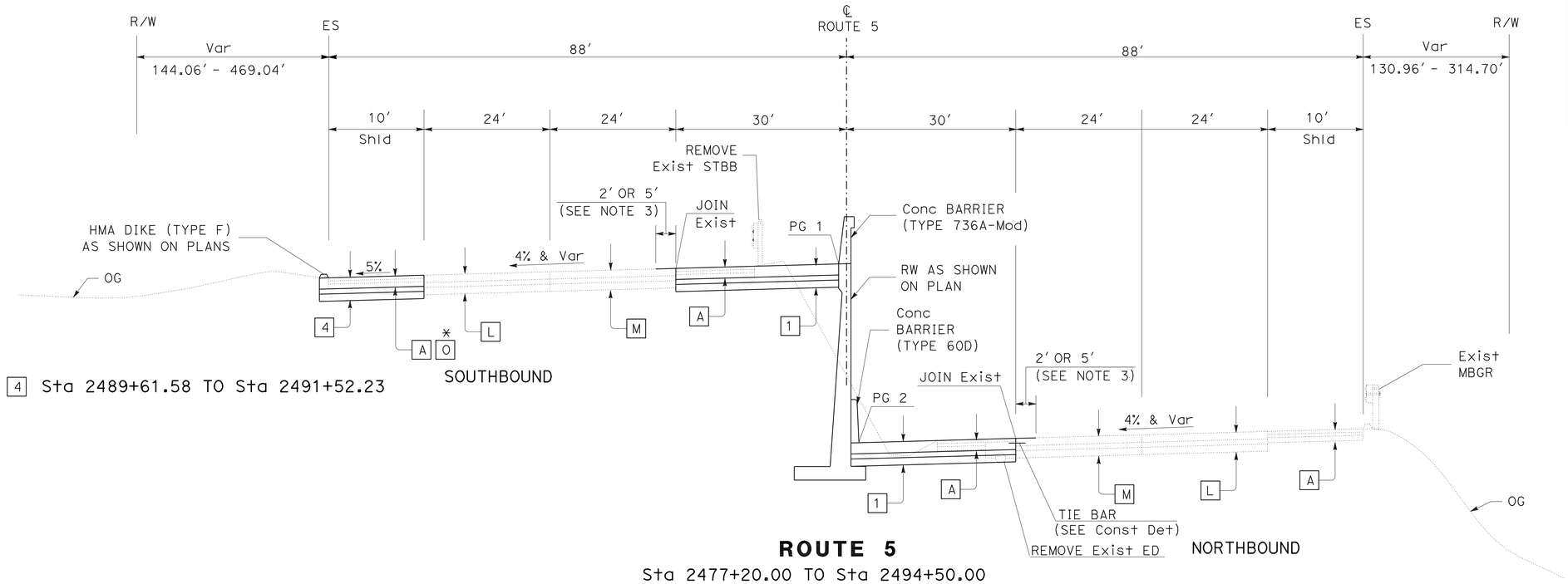

4 Sta 2489+61.58 TO Sta 2491+52.23

ROUTE 5

Sta 2477+20.00 TO Sta 2494+50.00

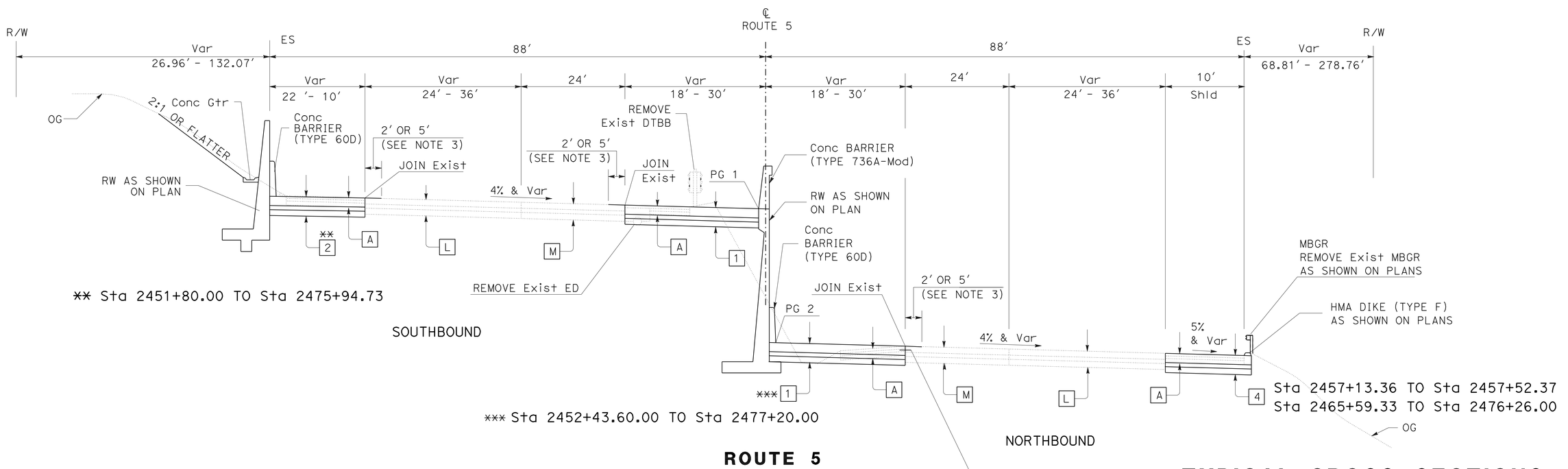

** Sta 2451+80.00 TO Sta 2475+94.73

*** Sta 2452+43.60.00 TO Sta 2477+20.00

Sta 2457+13.36 TO Sta 2457+52.37
Sta 2465+59.33 TO Sta 2476+26.00

ROUTE 5

Sta 2451+80.00 TO Sta 2477+20.00

TYPICAL CROSS SECTIONS

NO SCALE

X-4

A.E.	09-8-10
REVISED BY	DATE REVISED
CUONG T. TRAN	AMIR ELSHARIEF
CALCULATED-DESIGNED BY	CHECKED BY
FUNCTIONAL SUPERVISOR	CELINA AVILES

STATE OF CALIFORNIA - DEPARTMENT OF TRANSPORTATION
Caltrans
DESIGN

LAST REVISION 08-23-10
DATE PLOTTED => 25-APR-2011
TIME PLOTTED => 16:01

Dist	COUNTY	ROUTE	POST MILES TOTAL PROJECT	SHEET No.	TOTAL SHEETS
07	LA	5	R46.3/R50.0	6	456

REGISTERED CIVIL ENGINEER 01-11-11 DATE

4-25-11
PLANS APPROVAL DATE

REGISTERED PROFESSIONAL ENGINEER AMIR AWN ELSHARIEF No. 72560 Exp 6/30/12 CIVIL STATE OF CALIFORNIA

THE STATE OF CALIFORNIA OR ITS OFFICERS OR AGENTS SHALL NOT BE RESPONSIBLE FOR THE ACCURACY OR COMPLETENESS OF SCANNED COPIES OF THIS PLAN SHEET.

NOTE: NOT ALL TIE BAR LOCATIONS SHOWN, REFER TO STANDARD PLANS.

* SEE TABLE 1 FOR BEGIN AND END STATIONS.

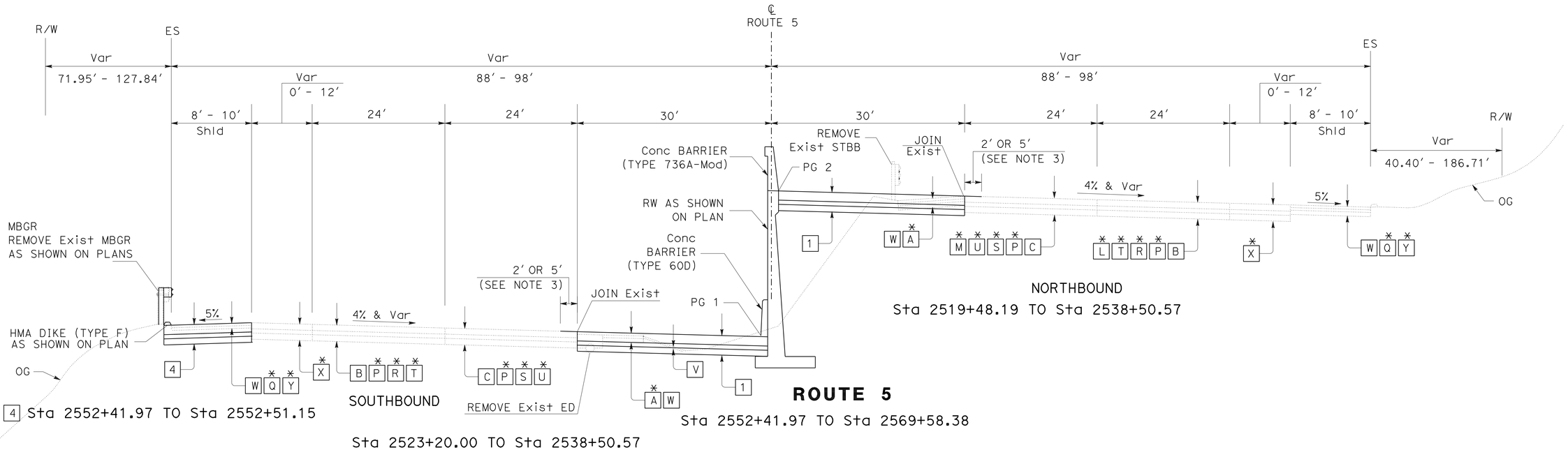

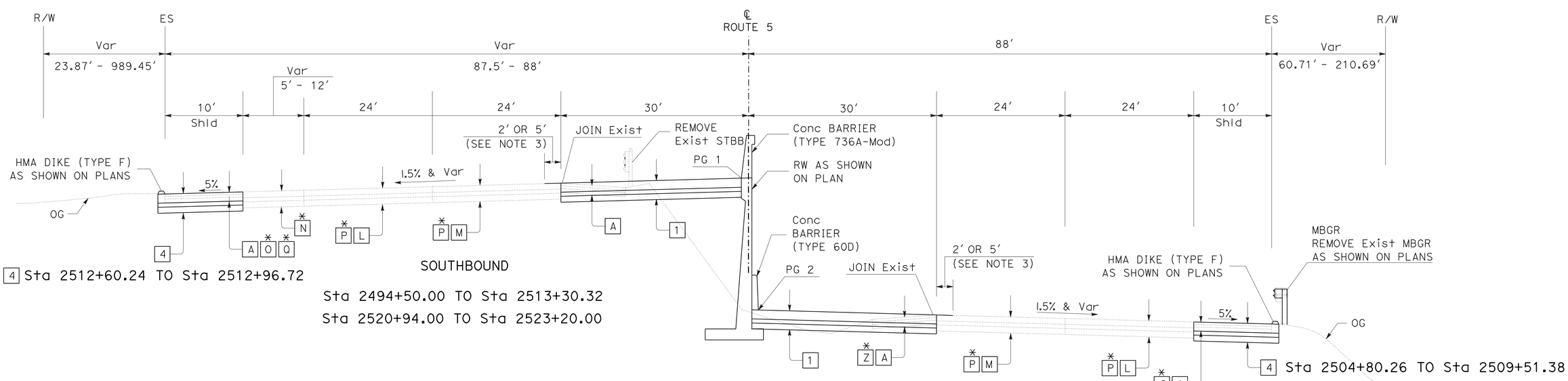

TYPICAL CROSS SECTIONS

NO SCALE

X-5

O'DONNA BLACKSTOCK	A.E. 09-8-10
CUONG T	06-8-10
REVISED BY	DATE REVISED
AMIR ELSHARIEF	
CALCULATED-DESIGNED BY	CHECKED BY
FUNCTIONAL SUPERVISOR	
CELINA AVILES	

STATE OF CALIFORNIA - DEPARTMENT OF TRANSPORTATION

DESIGN

LAST REVISION 08-25-10 | DATE PLOTTED => 25-APR-2011 | TIME PLOTTED => 16:01

Dist	COUNTY	ROUTE	POST MILES TOTAL PROJECT	SHEET No.	TOTAL SHEETS
07	LA	5	R46.3/R50.0	7	456

REGISTERED CIVIL ENGINEER 01-11-11 DATE

4-25-11
PLANS APPROVAL DATE

REGISTERED PROFESSIONAL ENGINEER AMIR AWN ELSHARIEF No. 72560 Exp 6/30/12 CIVIL STATE OF CALIFORNIA

THE STATE OF CALIFORNIA OR ITS OFFICERS OR AGENTS SHALL NOT BE RESPONSIBLE FOR THE ACCURACY OR COMPLETENESS OF SCANNED COPIES OF THIS PLAN SHEET.

NOTE: NOT ALL TIE BAR LOCATIONS SHOWN, REFER TO STANDARD PLANS.

* SEE TABLE 1 FOR BEGIN AND END STATIONS.

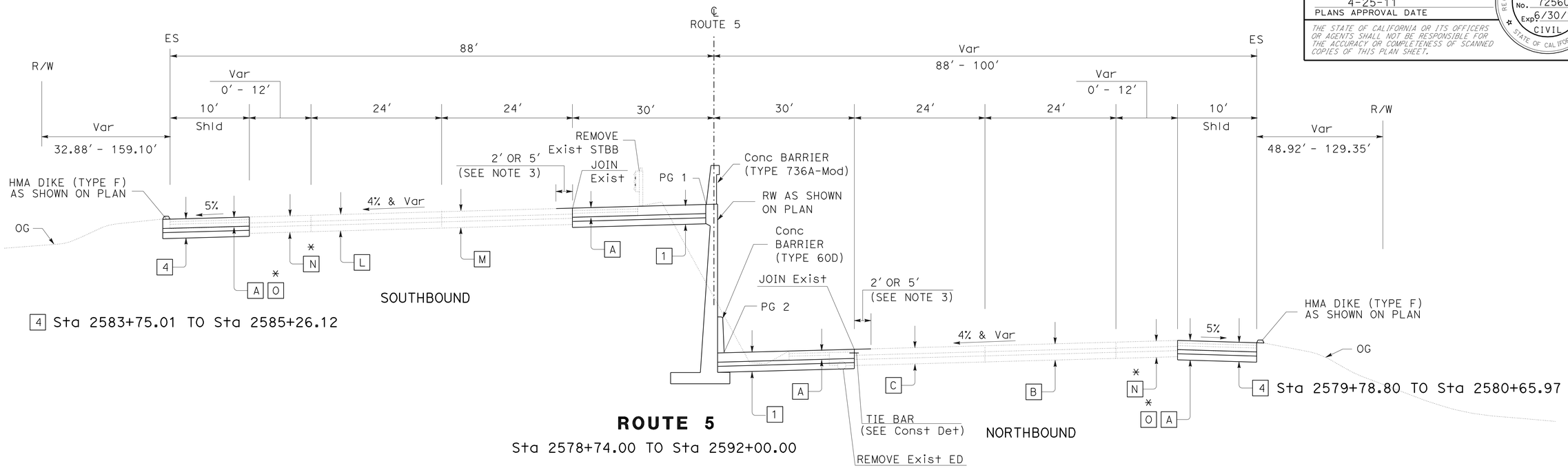

ROUTE 5

Sta 2578+74.00 TO Sta 2592+00.00

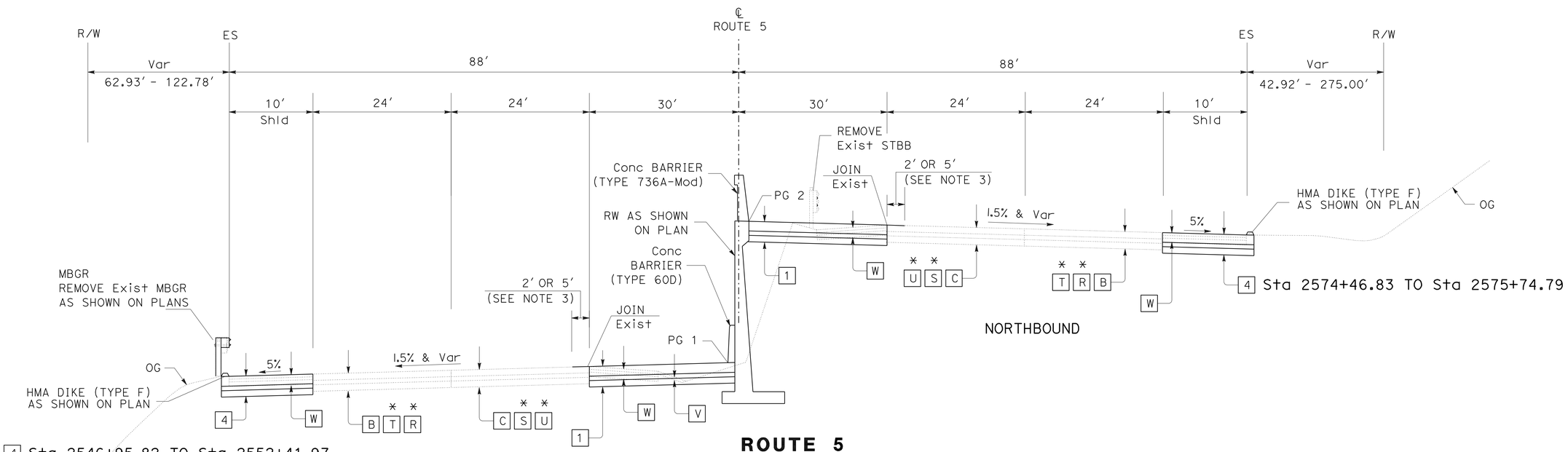

ROUTE 5

Sta 2569+58.38 TO Sta 2576+33.30
Sta 2538+50.57 TO Sta 2552+41.97

TYPICAL CROSS SECTIONS

NO SCALE

X-6

A.E.	09-8-10
REVISED BY	DATE REVISED
CUONG T. TRAN	AMIR ELSHARIEF
CALCULATED-DESIGNED BY	CHECKED BY
FUNCTIONAL SUPERVISOR	CELINA AVILES

STATE OF CALIFORNIA - DEPARTMENT OF TRANSPORTATION **DESIGN**

LAST REVISION 08-25-10 | DATE PLOTTED => 25-APR-2011 | TIME PLOTTED => 16:01

Dist	COUNTY	ROUTE	POST MILES TOTAL PROJECT	SHEET No.	TOTAL SHEETS
07	LA	5	R46.3/R50.0	8	456

REGISTERED CIVIL ENGINEER 01-11-11 DATE

4-25-11
PLANS APPROVAL DATE

REGISTERED PROFESSIONAL ENGINEER AMIR AWN ELSHARIEF No. 72560 Exp 6/30/12 CIVIL STATE OF CALIFORNIA

THE STATE OF CALIFORNIA OR ITS OFFICERS OR AGENTS SHALL NOT BE RESPONSIBLE FOR THE ACCURACY OR COMPLETENESS OF SCANNED COPIES OF THIS PLAN SHEET.

NOTE: NOT ALL TIE BAR LOCATIONS SHOWN, REFER TO STANDARD PLANS.

* SEE TABLE 1 FOR BEGIN AND END STATIONS.

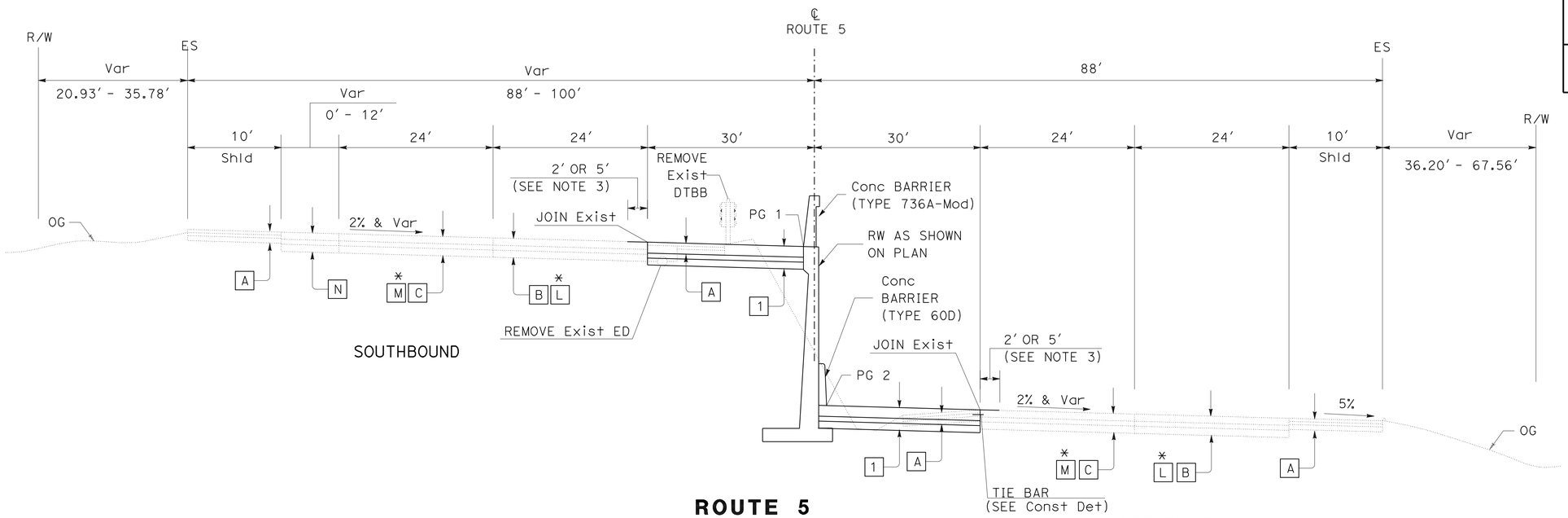

ROUTE 5

Sta 2602+60.00 TO Sta 2610+20.00

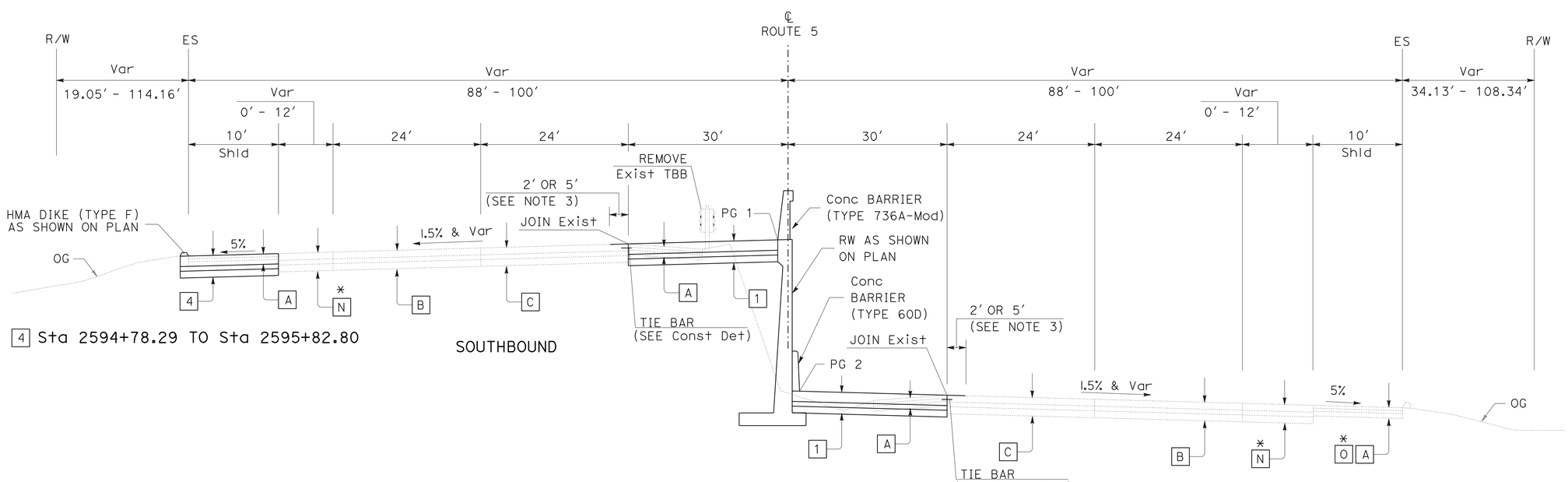

4 Sta 2594+78.29 TO Sta 2595+82.80

ROUTE 5

Sta 2610+20.00 TO Sta 2621+00.00
Sta 2592+00.00 TO Sta 2602+60.00

TYPICAL CROSS SECTIONS

NO SCALE

X-7

A.E.	09-8-10
REVISED BY	DATE REVISED
CUONG T. TRAN	AMIR ELSHARIEF
CALCULATED-DESIGNED BY	CHECKED BY
FUNCTIONAL SUPERVISOR	CELINA AVILES

STATE OF CALIFORNIA - DEPARTMENT OF TRANSPORTATION **DESIGN**

Caltrans®

LAST REVISION 08-24-10 | DATE PLOTTED => 25-APR-2011 | TIME PLOTTED => 16:02

Dist	COUNTY	ROUTE	POST MILES TOTAL PROJECT	SHEET No.	TOTAL SHEETS
07	LA	5	R46.3/R50.0	9	456

REGISTERED CIVIL ENGINEER 01-11-11 DATE

4-25-11
PLANS APPROVAL DATE

REGISTERED PROFESSIONAL ENGINEER
AMIR AWN ELSHARIEF
No. 72560
Exp. 6/30/12
CIVIL
STATE OF CALIFORNIA

THE STATE OF CALIFORNIA OR ITS OFFICERS OR AGENTS SHALL NOT BE RESPONSIBLE FOR THE ACCURACY OR COMPLETENESS OF SCANNED COPIES OF THIS PLAN SHEET.

NOTE:

1. FOR ACCURATE RIGHT OF WAY DATA, CONTACT RIGHT OF WAY ENGINEERING AT THE DISTRICT OFFICE.

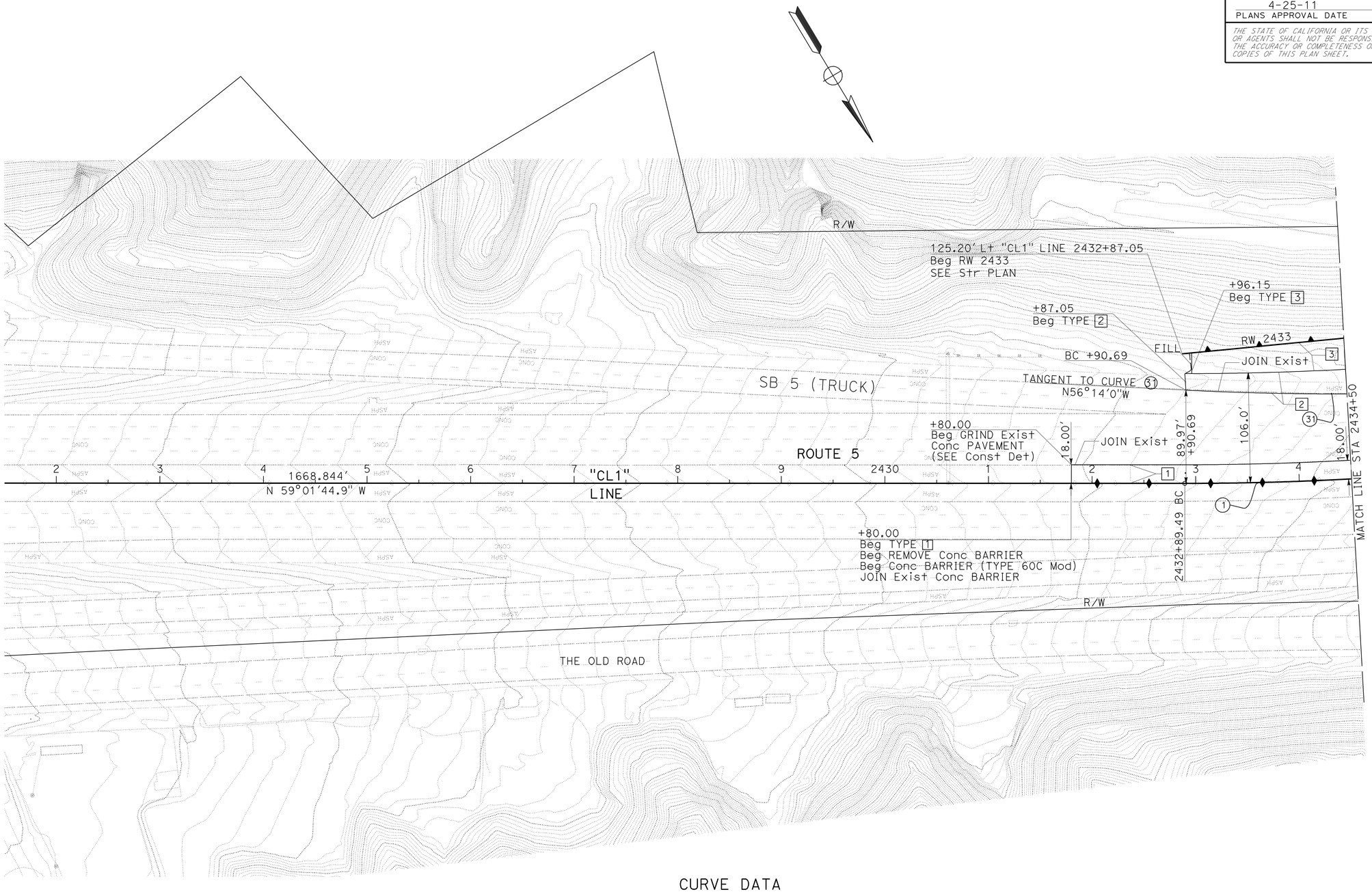

CURVE DATA

No.	R	Δ	T	L
1	3018'	21°41'21"	578.15'	1142.46'
31	3000'	4°34'05"	119.65'	239.18'

LAYOUT

SCALE: 1" = 50'

L-1

STATE OF CALIFORNIA - DEPARTMENT OF TRANSPORTATION	FUNCTIONAL SUPERVISOR	CALCULATED-DESIGNED BY	AMIR ELSHARIEF
Caltrans	CELINA AVILES	CHECKED BY	DAN PHAM
DESIGN		REVISED BY	DAN PHAM
		DATE REVISED	07-5-2010 08-10-10
			A.E.

LAST REVISION 07-29-10 | DATE PLOTTED => 25-APR-2011 | TIME PLOTTED => 16:02

Dist	COUNTY	ROUTE	POST MILES TOTAL PROJECT	SHEET No.	TOTAL SHEETS
07	LA	5	R46.3/R50.0	10	456

REGISTERED CIVIL ENGINEER 01-11-11 DATE

4-25-11
PLANS APPROVAL DATE

REGISTERED PROFESSIONAL ENGINEER AMIR AWN ELSHARIEF No. 72560 Exp 6/30/12 CIVIL STATE OF CALIFORNIA

THE STATE OF CALIFORNIA OR ITS OFFICERS OR AGENTS SHALL NOT BE RESPONSIBLE FOR THE ACCURACY OR COMPLETENESS OF SCANNED COPIES OF THIS PLAN SHEET.

NOTE:

1. FOR ACCURATE RIGHT OF WAY DATA, CONTACT RIGHT OF WAY ENGINEERING AT THE DISTRICT OFFICE.

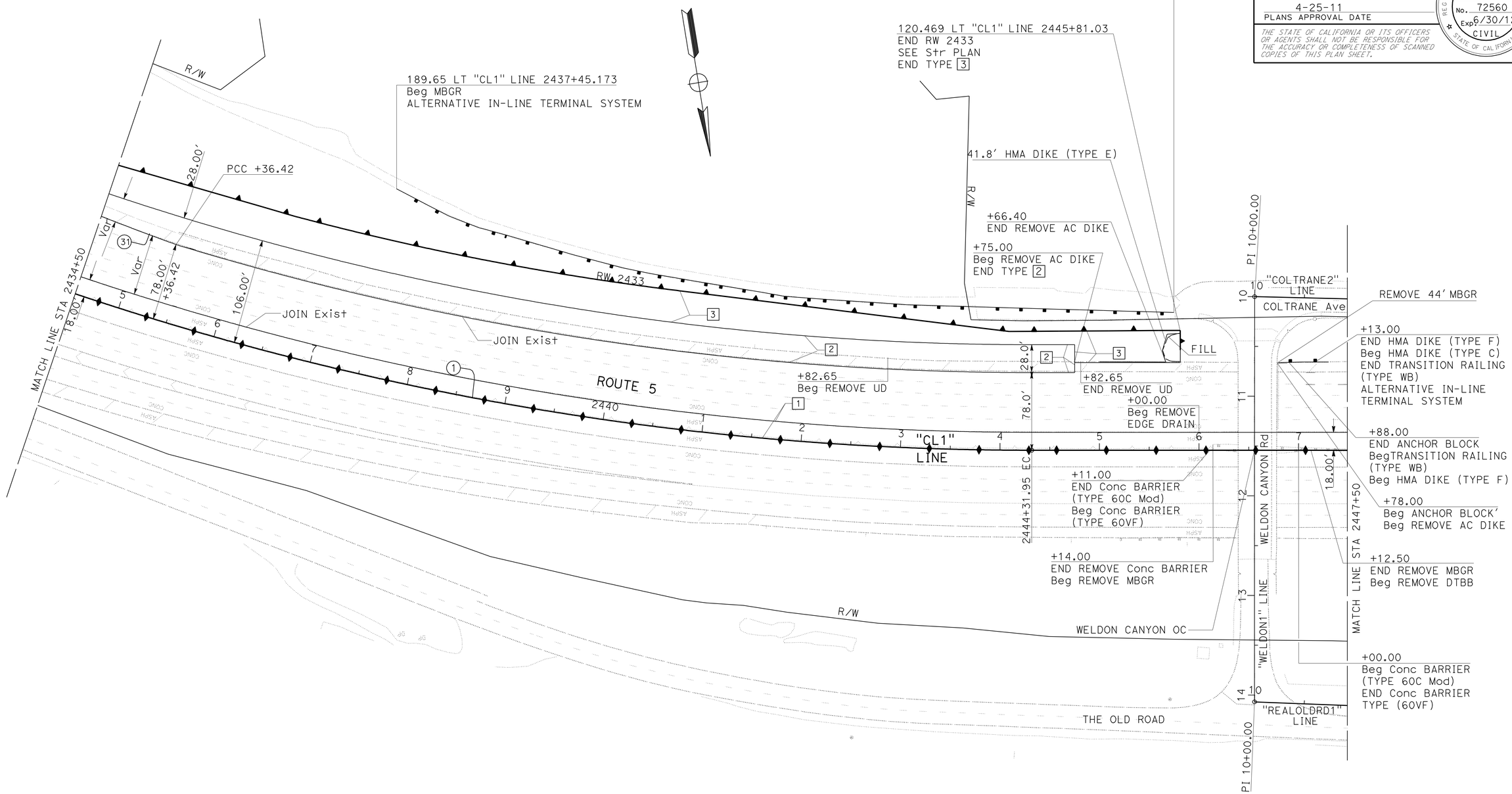

CURVE DATA

No.	R	Δ	T	L
1	3018'	21°41'21"	578.15'	1142.46'
31	3000'	4°34'05"	119.65'	239.18'

LAYOUT

SCALE: 1" = 50'

L-2

STATE OF CALIFORNIA - DEPARTMENT OF TRANSPORTATION
Caltrans
DESIGN

FUNCTIONAL SUPERVISOR: CELINA AVILES
CALCULATED-DESIGNED BY: AMIR ELSHARIEF
CHECKED BY: DAN PHAM
REVISED BY: DAN PHAM
DATE REVISED: 07-5-2010
A.E.: 08-10-10

LAST REVISION 07-29-10
DATE PLOTTED => 25-APR-2011
TIME PLOTTED => 16:02

Dist	COUNTY	ROUTE	POST MILES TOTAL PROJECT	SHEET No.	TOTAL SHEETS
07	LA	5	R46.3/R50.0	11	456

REGISTERED CIVIL ENGINEER 01-11-11 DATE

4-25-11
PLANS APPROVAL DATE

REGISTERED PROFESSIONAL ENGINEER AMIR AWN ELSHARIEF No. 72560 Exp 6/30/12 CIVIL STATE OF CALIFORNIA

THE STATE OF CALIFORNIA OR ITS OFFICERS OR AGENTS SHALL NOT BE RESPONSIBLE FOR THE ACCURACY OR COMPLETENESS OF SCANNED COPIES OF THIS PLAN SHEET.

NOTE:

1. FOR ACCURATE RIGHT OF WAY DATA, CONTACT RIGHT OF WAY ENGINEERING AT THE DISTRICT OFFICE.

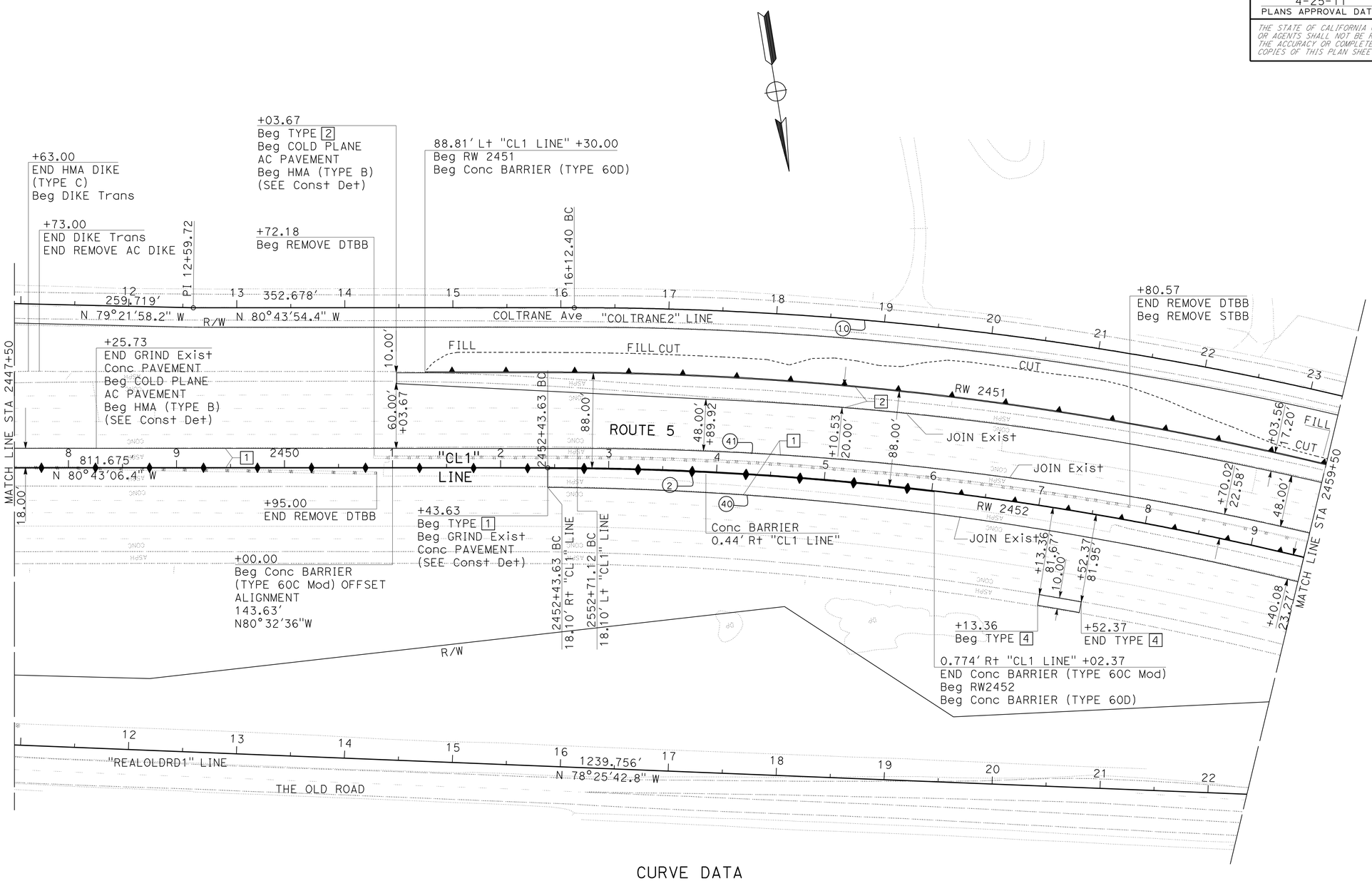

CURVE DATA

No.	R	Δ	T	L
2	3000'	44°48'57"	1236.99'	2346.54'
10	3126'	15°43'50"	431.83'	858.22'
40	3000'	44°20'56"	1222.71'	2322.09'
41	3000'	44°48'57"	1236.99'	2346.54'

LAYOUT

SCALE: 1" = 50'

L-3

STATE OF CALIFORNIA - DEPARTMENT OF TRANSPORTATION
Caltrans
DESIGN

FUNCTIONAL SUPERVISOR: CELINA AVILES
CALCULATED-DESIGNED BY: AMIR ELSHARIEF
CHECKED BY: DAN PHAM
REVISED BY: DAN PHAM
DATE REVISED: 07-5-2010
A.E.: 08-10-10

LAST REVISION 06-16-10
DATE PLOTTED => 25-APR-2011
TIME PLOTTED => 16:02

BORDER LAST REVISED 7/2/2010
USERNAME => trlim
DGN FILE => 72332Aea003.dgn
RELATIVE BORDER SCALE IS IN INCHES 0 1 2 3
UNIT 1823
PROJECT NUMBER & PHASE 07000003901

Dist	COUNTY	ROUTE	POST MILES TOTAL PROJECT	SHEET No.	TOTAL SHEETS
07	LA	5	R46.3/R50.0	12	456

REGISTERED CIVIL ENGINEER 01-11-11 DATE

4-25-11
PLANS APPROVAL DATE

REGISTERED PROFESSIONAL ENGINEER AMIR AWN ELSHARIEF No. 72560 Exp 6/30/12 CIVIL STATE OF CALIFORNIA

THE STATE OF CALIFORNIA OR ITS OFFICERS OR AGENTS SHALL NOT BE RESPONSIBLE FOR THE ACCURACY OR COMPLETENESS OF SCANNED COPIES OF THIS PLAN SHEET.

NOTE:

1. FOR ACCURATE RIGHT OF WAY DATA, CONTACT RIGHT OF WAY ENGINEERING AT THE DISTRICT OFFICE.

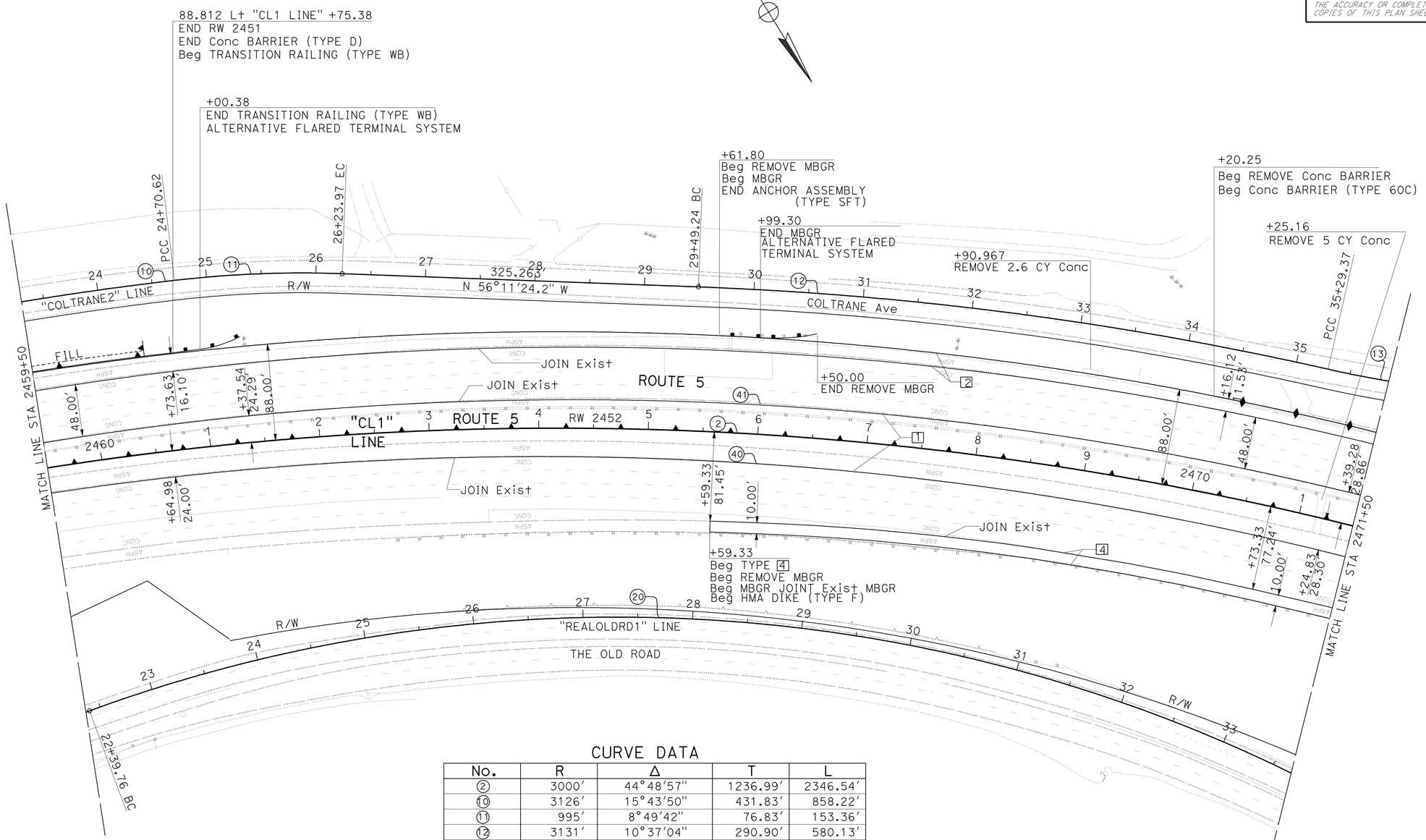

CURVE DATA

No.	R	Δ	T	L
2	3000′	44°48′57″	1236.99′	2346.54′
10	3126′	15°43′50″	431.83′	858.22′
11	995′	8°49′42″	76.83′	153.36′
12	3131′	10°37′04″	290.90′	580.13′
13	995′	12°13′07″	106.55′	212.29′
20	1400′	57°57′54″	775.46′	1416.32′
40	3000′	44°20′56″	1222.71′	2322.09′
41	3000′	44°48′57″	1236.99′	2346.54′

LAYOUT

SCALE: 1" = 50′

L-4

STATE OF CALIFORNIA - DEPARTMENT OF TRANSPORTATION
Caltrans
DESIGN

FUNCTIONAL SUPERVISOR: CELINA AVILES
CALCULATED-DESIGNED BY: AMIR ELSHARIEF
CHECKED BY: DAN PHAM
REVISED BY: DAN PHAM
DATE REVISED: 07-5-2010
A.E.: 08-10-10

LAST REVISION 06-16-10
DATE PLOTTED => 25-APR-2011
TIME PLOTTED => 16:02

Dist	COUNTY	ROUTE	POST MILES TOTAL PROJECT	SHEET No.	TOTAL SHEETS
07	LA	5	R46.3/R50.0	13	456

REGISTERED CIVIL ENGINEER 01-11-11 DATE

4-25-11
PLANS APPROVAL DATE

REGISTERED PROFESSIONAL ENGINEER AMIR AWN ELSHARIEF No. 72560 Exp 6/30/12 CIVIL STATE OF CALIFORNIA

THE STATE OF CALIFORNIA OR ITS OFFICERS OR AGENTS SHALL NOT BE RESPONSIBLE FOR THE ACCURACY OR COMPLETENESS OF SCANNED COPIES OF THIS PLAN SHEET.

NOTE:

1. FOR ACCURATE RIGHT OF WAY DATA, CONTACT RIGHT OF WAY ENGINEERING AT THE DISTRICT OFFICE.

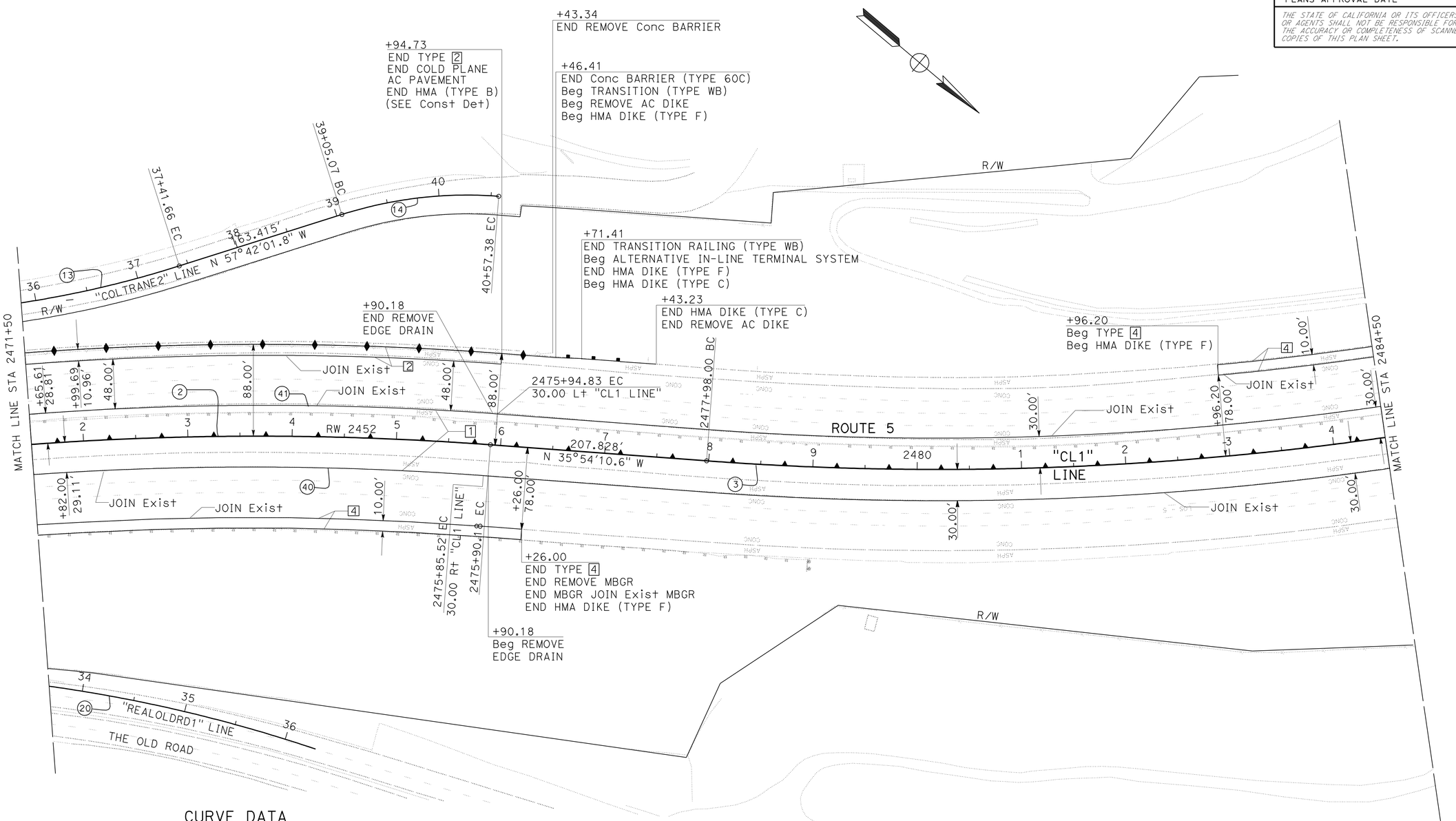

CURVE DATA

No.	R	Δ	T	L
2	3000′	44°48′57″	1236.99′	2346.54′
3	3000′	28°58′53″	775.33′	1517.47′
13	995′	12°13′07″	106.55′	212.29′
14	397′	22°0′04″	77.10′	152.31′
20	1400′	57°57′54″	775.46′	1416.32′
40	3000′	44°20′56″	1222.71′	2322.09′
41	3000′	44°48′57″	1236.99′	2346.54′

LAYOUT

SCALE: 1" = 50′

L-5

A.E.	DAN PHAM	AMIR ELSHARIEF	CALCULATED- DESIGNED BY	FUNCTIONAL SUPERVISOR	STATE OF CALIFORNIA - DEPARTMENT OF TRANSPORTATION
08-10-10	07-5-2010	DAN PHAM	CHECKED BY	CELINA AVILES	DESIGN
DATE REVISED		REVISED BY			

LAST REVISION 06-16-10 | DATE PLOTTED => 25-APR-2011 | TIME PLOTTED => 16:02

Dist	COUNTY	ROUTE	POST MILES TOTAL PROJECT	SHEET No.	TOTAL SHEETS
07	LA	5	R46.3/R50.0	14	456

REGISTERED CIVIL ENGINEER 01-11-11 DATE

4-25-11
PLANS APPROVAL DATE

REGISTERED PROFESSIONAL ENGINEER AMIR AWN ELSHARIEF No. 72560 Exp 6/30/12 CIVIL STATE OF CALIFORNIA

THE STATE OF CALIFORNIA OR ITS OFFICERS OR AGENTS SHALL NOT BE RESPONSIBLE FOR THE ACCURACY OR COMPLETENESS OF SCANNED COPIES OF THIS PLAN SHEET.

NOTE:

1. FOR ACCURATE RIGHT OF WAY DATA, CONTACT RIGHT OF WAY ENGINEERING AT THE DISTRICT OFFICE.

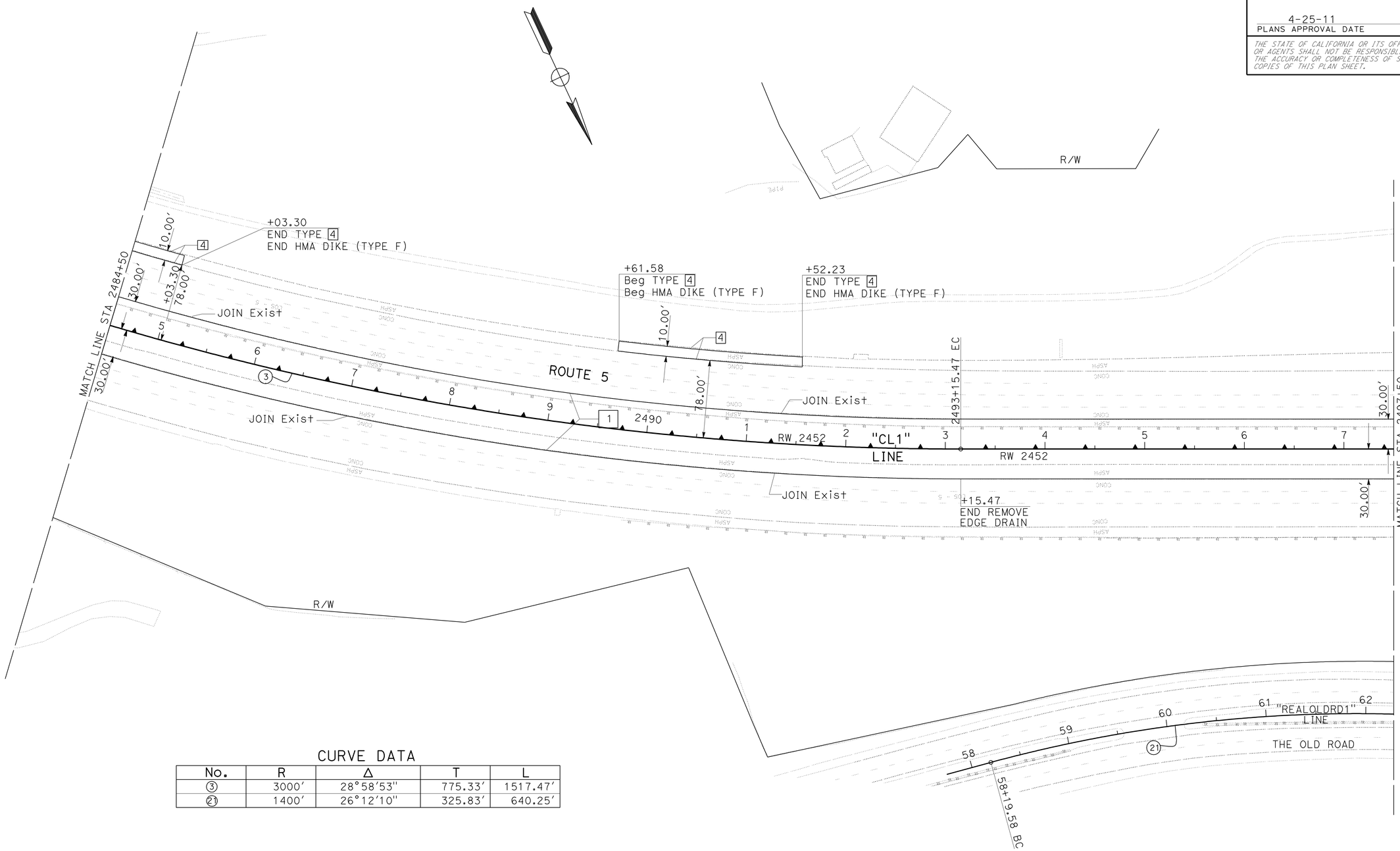

CURVE DATA

No.	R	Δ	T	L
3	3000′	28°58′53″	775.33′	1517.47′
21	1400′	26°12′10″	325.83′	640.25′

LAYOUT

SCALE: 1″ = 50′

L-6

REVISED BY	DATE REVISED
A.E.	08-10-10
DAN PHAM	07-5-2010

CALCULATED-DESIGNED BY: AMIR ELSHARIEF
CHECKED BY: DAN PHAM
FUNCTIONAL SUPERVISOR: CELINA AVILES

STATE OF CALIFORNIA - DEPARTMENT OF TRANSPORTATION
Caltrans
DESIGN

LAST REVISION 06-16-10 | DATE PLOTTED => 25-APR-2011 | TIME PLOTTED => 16:02

Dist	COUNTY	ROUTE	POST MILES TOTAL PROJECT	SHEET No.	TOTAL SHEETS
07	LA	5	R46.3/R50.0	15	456

REGISTERED CIVIL ENGINEER 01-11-11 DATE

4-25-11
PLANS APPROVAL DATE

REGISTERED PROFESSIONAL ENGINEER AMIR AWN ELSHARIEF No. 72560 Exp 6/30/12 CIVIL STATE OF CALIFORNIA

THE STATE OF CALIFORNIA OR ITS OFFICERS OR AGENTS SHALL NOT BE RESPONSIBLE FOR THE ACCURACY OR COMPLETENESS OF SCANNED COPIES OF THIS PLAN SHEET.

NOTE:

1. FOR ACCURATE RIGHT OF WAY DATA, CONTACT RIGHT OF WAY ENGINEERING AT THE DISTRICT OFFICE.

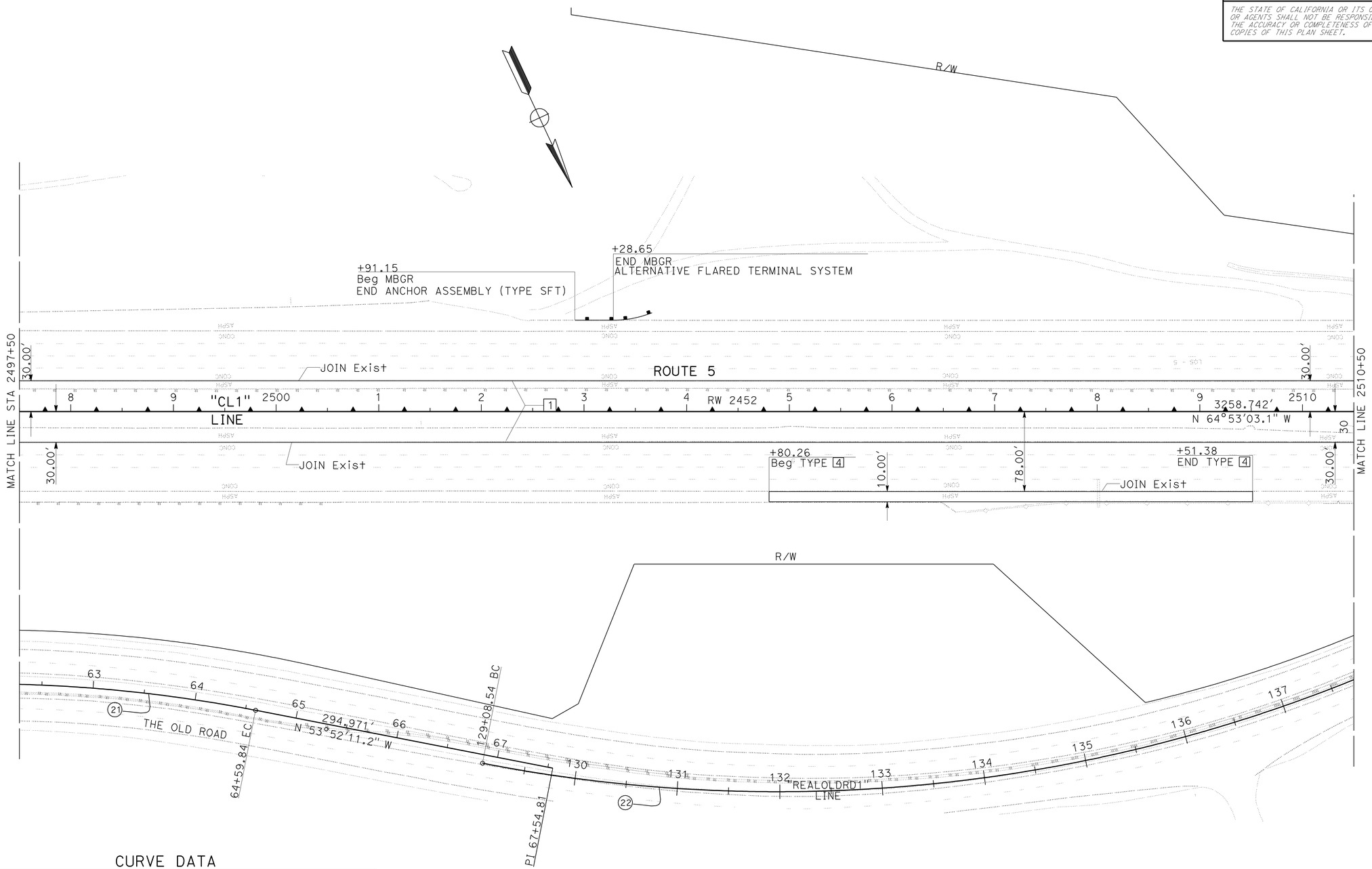

CURVE DATA

No.	R	Δ	T	L
21	1400'	26°12'10"	325.83'	640.25'
22	1500'	34°29'46"	465.71'	903.11'

LAYOUT

SCALE: 1" = 50'

L-7

A.E.	08-10-10	AMIR ELSHARIEF	CALCULATED-DESIGNED BY
DAN PHAM	07-5-2010	DAN PHAM	CHECKED BY
REVISED BY			
DATE REVISED			

FUNCTIONAL SUPERVISOR: CELINA AVILES

STATE OF CALIFORNIA - DEPARTMENT OF TRANSPORTATION

DESIGN

Caltrans

LAST REVISION 06-16-10 | DATE PLOTTED => 25-APR-2011 | TIME PLOTTED => 16:02

Dist	COUNTY	ROUTE	POST MILES TOTAL PROJECT	SHEET No.	TOTAL SHEETS
07	LA	5	R46.3/R50.0	16	456

REGISTERED CIVIL ENGINEER 01-11-11 DATE

4-25-11
PLANS APPROVAL DATE

REGISTERED PROFESSIONAL ENGINEER AMIR AWN ELSHARIEF No. 72560 Exp 6/30/12 CIVIL STATE OF CALIFORNIA

THE STATE OF CALIFORNIA OR ITS OFFICERS OR AGENTS SHALL NOT BE RESPONSIBLE FOR THE ACCURACY OR COMPLETENESS OF SCANNED COPIES OF THIS PLAN SHEET.

NOTE:

1. FOR ACCURATE RIGHT OF WAY DATA, CONTACT RIGHT OF WAY ENGINEERING AT THE DISTRICT OFFICE.

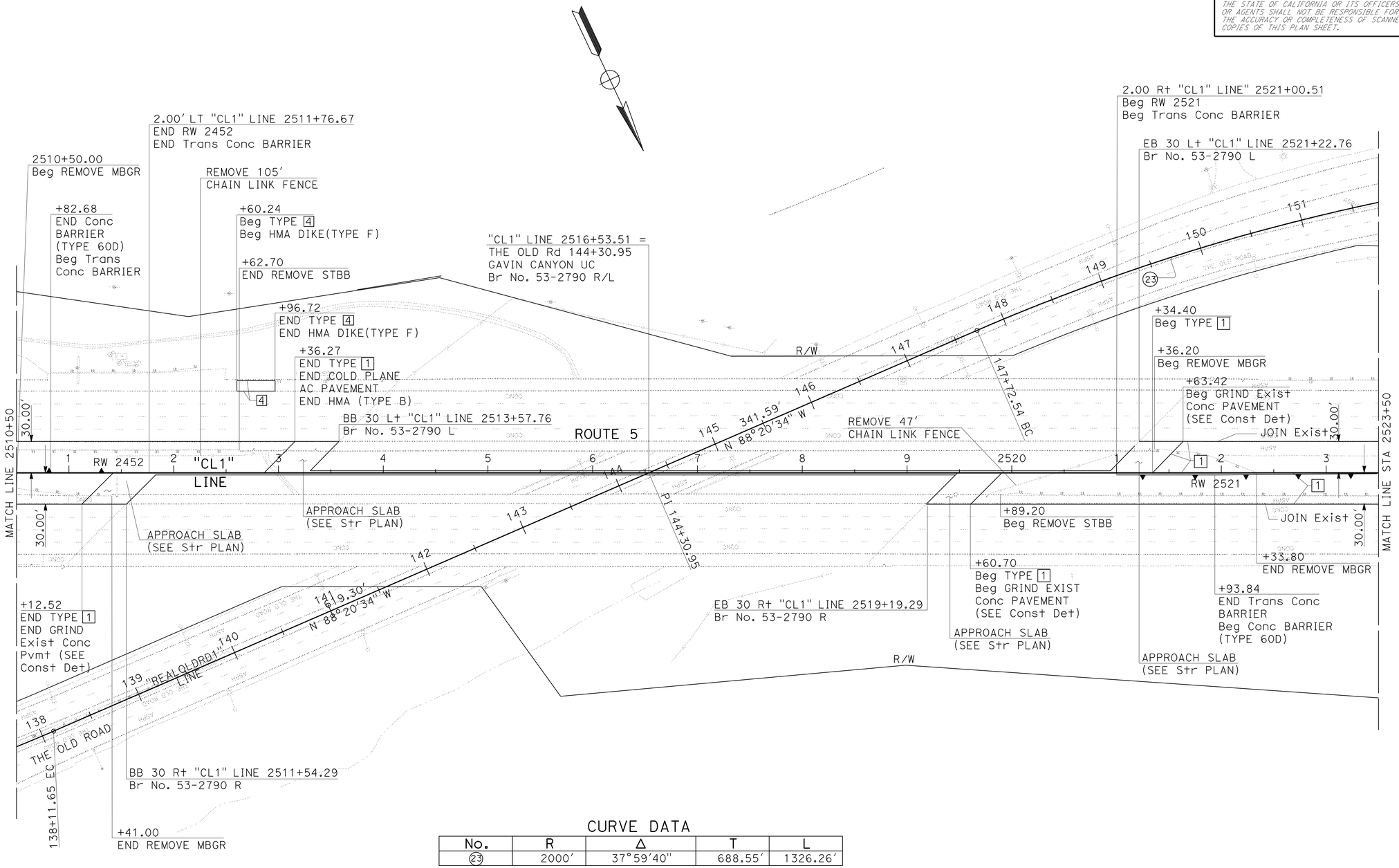

CURVE DATA

No.	R	Δ	T	L
23	2000'	37°59'40"	688.55'	1326.26'

LAYOUT

SCALE: 1" = 50'

L-8

STATE OF CALIFORNIA - DEPARTMENT OF TRANSPORTATION
Caltrans
DESIGN

FUNCTIONAL SUPERVISOR: CELINA AVILES
CALCULATED-DESIGNED BY: AMIR ELSHARIEF
CHECKED BY: DAN PHAM
REVISED BY: DAN PHAM
DATE REVISED: 07-5-2010
A.E. 08-10-10

LAST REVISION 07-29-10
DATE PLOTTED => 25-APR-2011
TIME PLOTTED => 16:03

Dist	COUNTY	ROUTE	POST MILES TOTAL PROJECT	SHEET No.	TOTAL SHEETS
07	LA	5	R46.3/R50.0	17	456

REGISTERED CIVIL ENGINEER 01-11-11 DATE

4-25-11
PLANS APPROVAL DATE

REGISTERED PROFESSIONAL ENGINEER
AMIR AWN ELSHARIEF
No. 72560
Exp 6/30/12
CIVIL
STATE OF CALIFORNIA

THE STATE OF CALIFORNIA OR ITS OFFICERS OR AGENTS SHALL NOT BE RESPONSIBLE FOR THE ACCURACY OR COMPLETENESS OF SCANNED COPIES OF THIS PLAN SHEET.

NOTE:

1. FOR ACCURATE RIGHT OF WAY DATA, CONTACT RIGHT OF WAY ENGINEERING AT THE DISTRICT OFFICE.

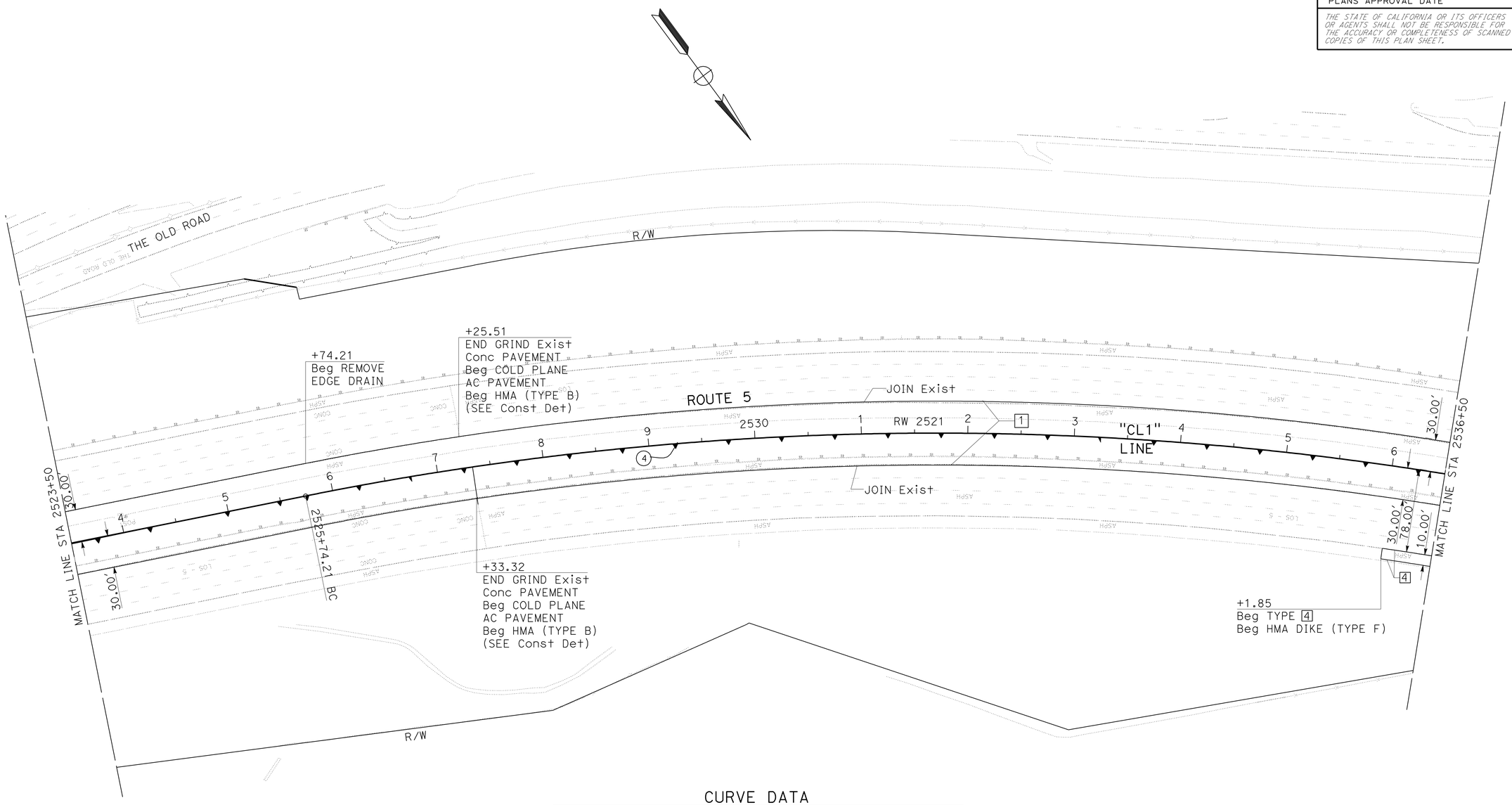

CURVE DATA

No.	R	Δ	T	L
4	3000'	22°46'01"	604.01'	1192.08'

LAYOUT

SCALE: 1" = 50'

L-9

STATE OF CALIFORNIA - DEPARTMENT OF TRANSPORTATION
Caltrans
DESIGN

FUNCTIONAL SUPERVISOR: CELINA AVILES

CALCULATED-DESIGNED BY: AMIR ELSHARIEF
CHECKED BY: DAN PHAM

REVISED BY: DAN PHAM
DATE REVISED: 07-5-2010 08-10-10

LAST REVISION 06-16-10
DATE PLOTTED => 25-APR-2011
TIME PLOTTED => 16:03

Dist	COUNTY	ROUTE	POST MILES TOTAL PROJECT	SHEET No.	TOTAL SHEETS
07	LA	5	R46.3/R50.0	18	456

REGISTERED CIVIL ENGINEER 01-11-11 DATE

4-25-11
PLANS APPROVAL DATE

REGISTERED PROFESSIONAL ENGINEER
AMIR AWN ELSHARIEF
No. 72560
Exp. 6/30/12
CIVIL
STATE OF CALIFORNIA

THE STATE OF CALIFORNIA OR ITS OFFICERS OR AGENTS SHALL NOT BE RESPONSIBLE FOR THE ACCURACY OR COMPLETENESS OF SCANNED COPIES OF THIS PLAN SHEET.

NOTE:

1. FOR ACCURATE RIGHT OF WAY DATA, CONTACT RIGHT OF WAY ENGINEERING AT THE DISTRICT OFFICE.

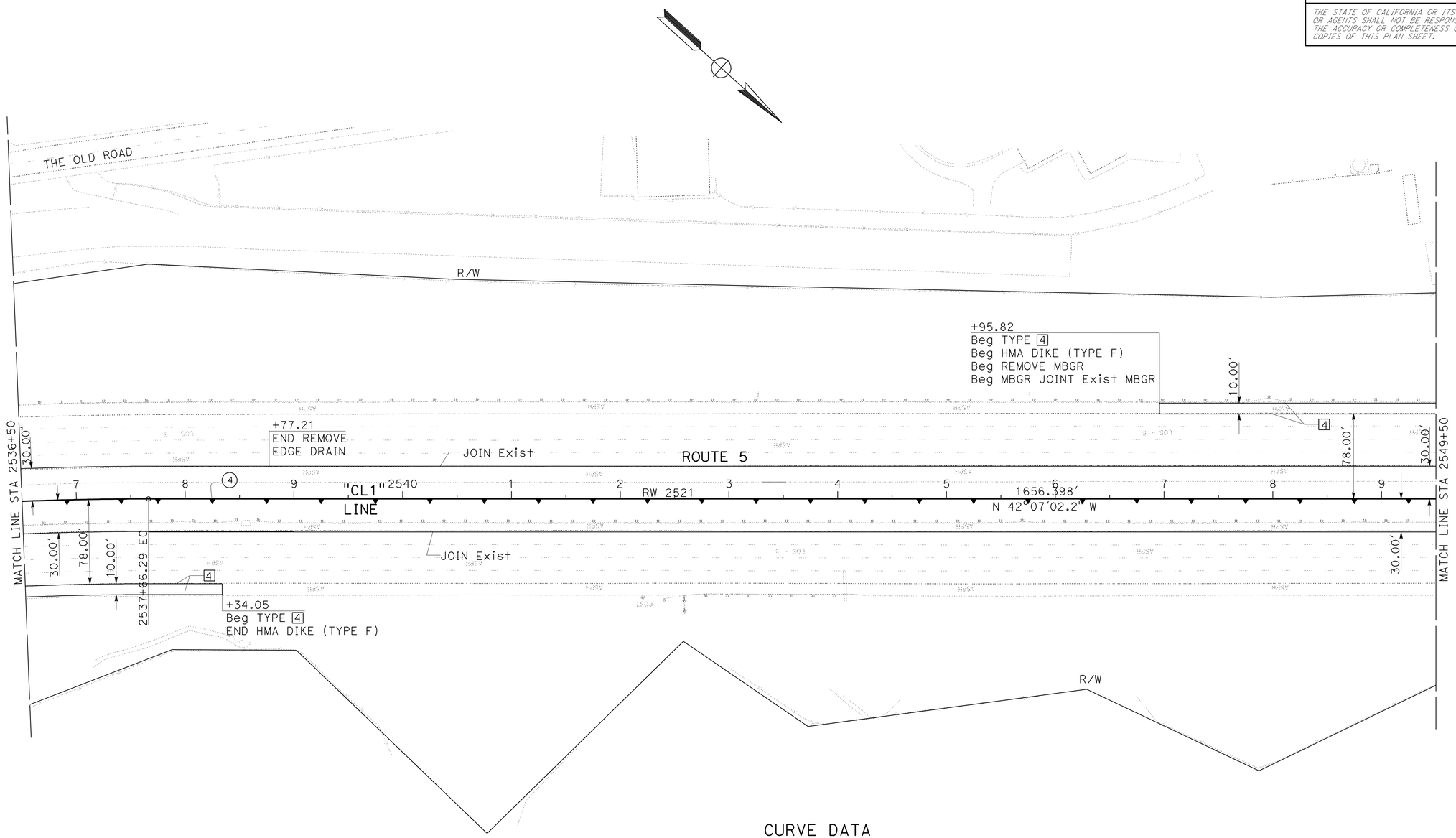

CURVE DATA

No.	R	Δ	T	L
4	3000'	22°46'01"	604.01'	1192.08'

LAYOUT

SCALE: 1" = 50'

L-10

STATE OF CALIFORNIA - DEPARTMENT OF TRANSPORTATION
Caltrans
DESIGN

FUNCTIONAL SUPERVISOR: CELINA AVILES

CALCULATED-DESIGNED BY: AMIR ELSHARIEF
CHECKED BY: DAN PHAM

REVISED BY: DAN PHAM
DATE REVISED: 07-5-2010

A.E.
08-10-10

LAST REVISION 06-16-10
DATE PLOTTED => 25-APR-2011
TIME PLOTTED => 16:03

Dist	COUNTY	ROUTE	POST MILES TOTAL PROJECT	SHEET No.	TOTAL SHEETS
07	LA	5	R46.3/R50.0	19	456

REGISTERED CIVIL ENGINEER 01-11-11 DATE

4-25-11
PLANS APPROVAL DATE

REGISTERED PROFESSIONAL ENGINEER AMIR AWN ELSHARIEF No. 72560 Exp 6/30/12 CIVIL STATE OF CALIFORNIA

THE STATE OF CALIFORNIA OR ITS OFFICERS OR AGENTS SHALL NOT BE RESPONSIBLE FOR THE ACCURACY OR COMPLETENESS OF SCANNED COPIES OF THIS PLAN SHEET.

NOTE:

1. FOR ACCURATE RIGHT OF WAY DATA, CONTACT RIGHT OF WAY ENGINEERING AT THE DISTRICT OFFICE.

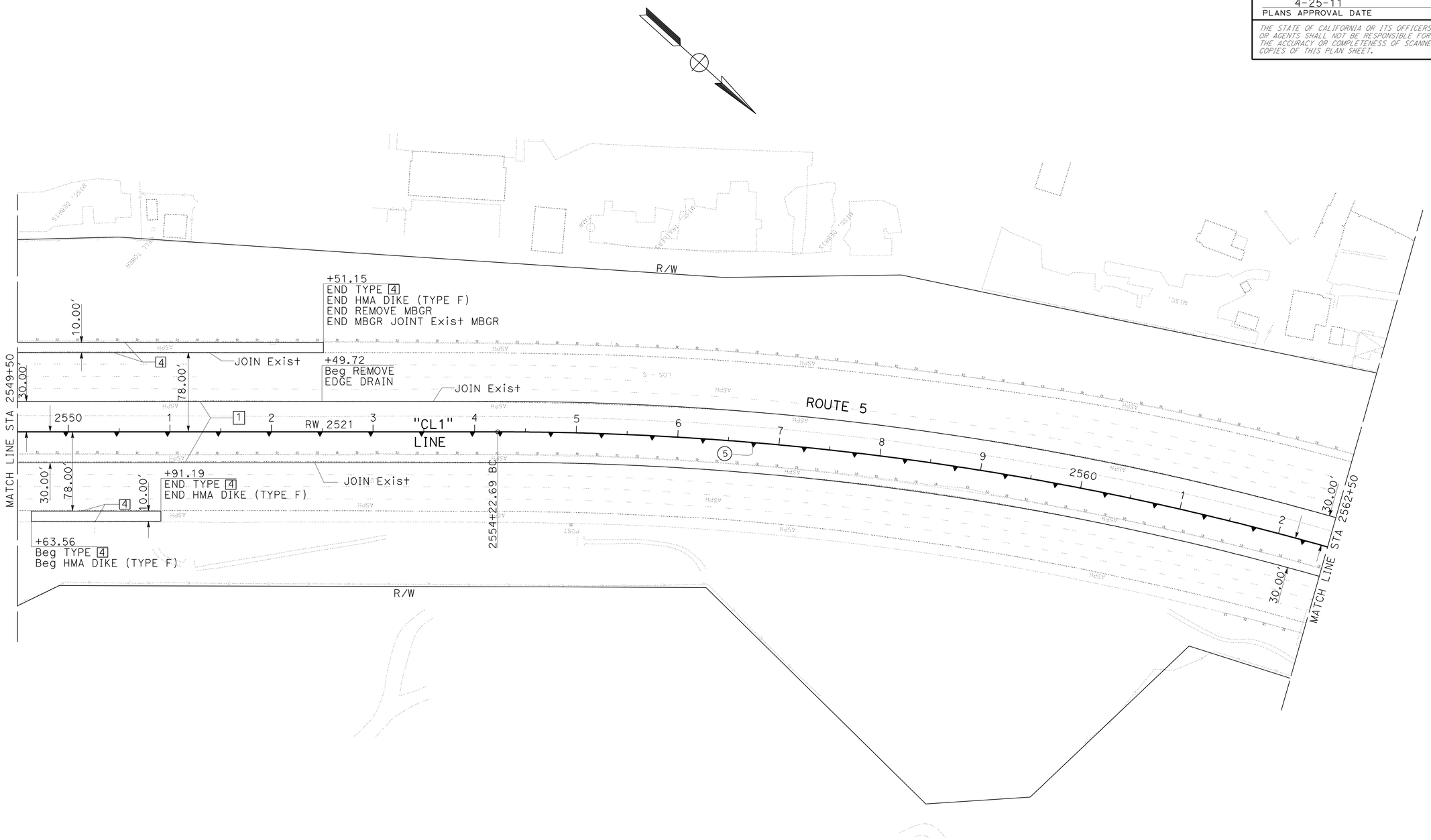

CURVE DATA

No.	R	Δ	T	L
5	3000'	26°55'48"	718.31'	1410.07'

LAYOUT

SCALE: 1" = 50'

L-11

REVISED BY	DATE REVISED
DAN PHAM	07-5-2010
A.E.	08-10-10

CALCULATED-DESIGNED BY: AMIR ELSHARIEF
CHECKED BY: DAN PHAM
FUNCTIONAL SUPERVISOR: CELINA AVILES

STATE OF CALIFORNIA - DEPARTMENT OF TRANSPORTATION
Caltrans
DESIGN

LAST REVISION 06-16-10 | DATE PLOTTED => 25-APR-2011 | TIME PLOTTED => 16:03

Dist	COUNTY	ROUTE	POST MILES TOTAL PROJECT	SHEET No.	TOTAL SHEETS
07	LA	5	R46.3/R50.0	20	456

REGISTERED CIVIL ENGINEER 01-11-11 DATE

4-25-11
PLANS APPROVAL DATE

REGISTERED PROFESSIONAL ENGINEER AMIR AWN ELSHARIEF No. 72560 Exp 6/30/12 CIVIL STATE OF CALIFORNIA

THE STATE OF CALIFORNIA OR ITS OFFICERS OR AGENTS SHALL NOT BE RESPONSIBLE FOR THE ACCURACY OR COMPLETENESS OF SCANNED COPIES OF THIS PLAN SHEET.

NOTE:

1. FOR ACCURATE RIGHT OF WAY DATA, CONTACT RIGHT OF WAY ENGINEERING AT THE DISTRICT OFFICE.

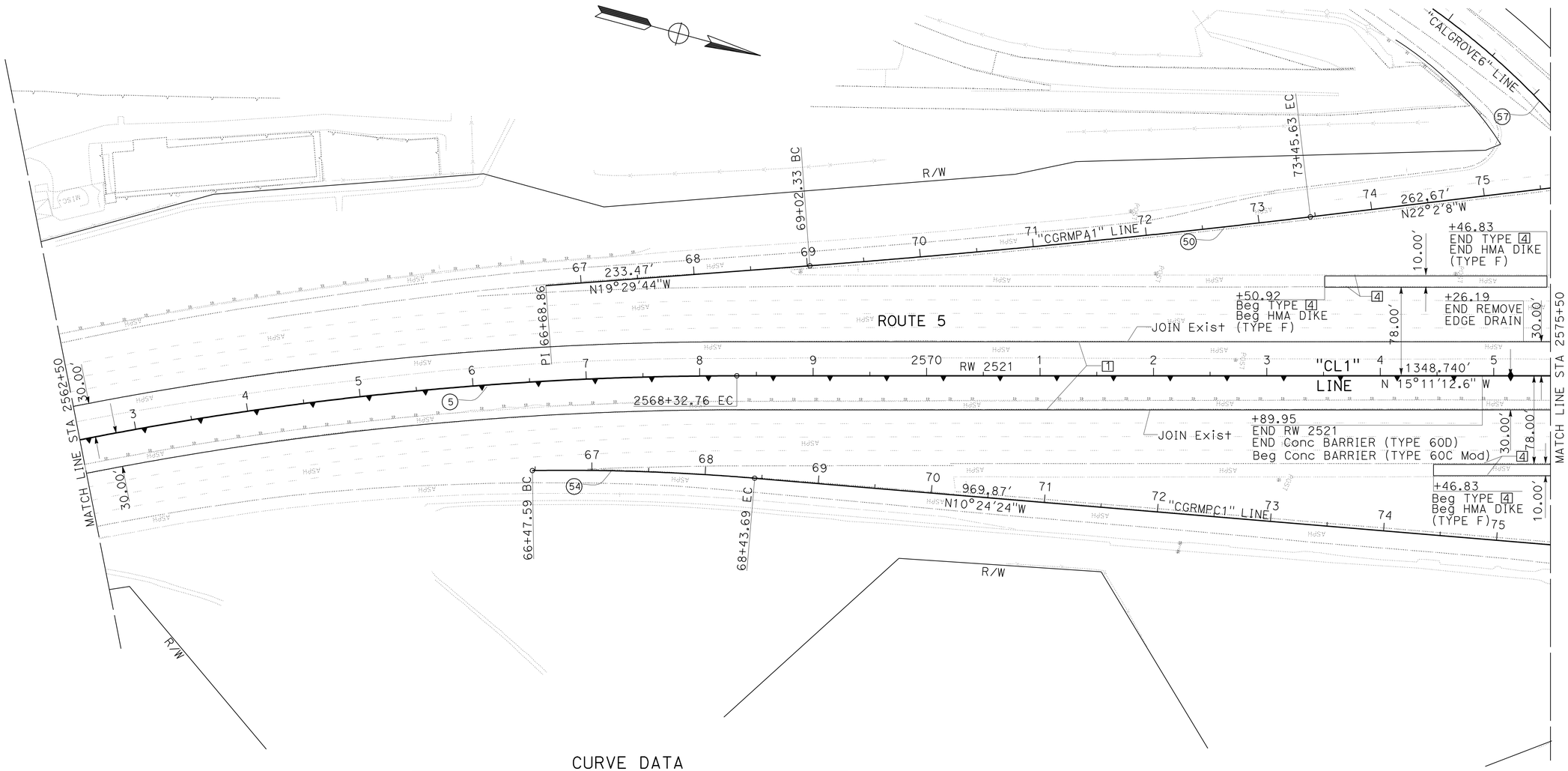

CURVE DATA

No.	R	Δ	T	L
5	3000′	26°55′48"	718.31′	1410.07′
50	10000′	2°32′24"	221.68′	443.30′
54	2000′	5°37′04"	98.13′	196.10′
57	650′	71°0′19"	463.69′	805.53′

LAYOUT

SCALE: 1" = 50′

L-12

STATE OF CALIFORNIA - DEPARTMENT OF TRANSPORTATION
Caltrans
DESIGN

FUNCTIONAL SUPERVISOR: CELINA AVILES

CALCULATED-DESIGNED BY: AMIR ELSHARIEF
CHECKED BY: DAN PHAM

REVISED BY: DAN PHAM
DATE REVISED: 07-5-2010 08-10-10 A.E.

LAST REVISION 06-16-10
DATE PLOTTED => 25-APR-2011
TIME PLOTTED => 16:03

BORDER LAST REVISED 7/2/2010
USERNAME => trlim
DGN FILE => 72332Aea012.dgn
RELATIVE BORDER SCALE IS IN INCHES 0 1 2 3
UNIT 1823
PROJECT NUMBER & PHASE 07000003901

Dist	COUNTY	ROUTE	POST MILES TOTAL PROJECT	SHEET No.	TOTAL SHEETS
07	LA	5	R46.3/R50.0	21	456

REGISTERED CIVIL ENGINEER 01-11-11 DATE

4-25-11
PLANS APPROVAL DATE

REGISTERED PROFESSIONAL ENGINEER AMIR AWN ELSHARIEF No. 72560 Exp 6/30/12 CIVIL STATE OF CALIFORNIA

THE STATE OF CALIFORNIA OR ITS OFFICERS OR AGENTS SHALL NOT BE RESPONSIBLE FOR THE ACCURACY OR COMPLETENESS OF SCANNED COPIES OF THIS PLAN SHEET.

NOTE:

1. FOR ACCURATE RIGHT OF WAY DATA, CONTACT RIGHT OF WAY ENGINEERING AT THE DISTRICT OFFICE.

ABBREVIATIONS:

MVP MAINTENANCE VEHICLE PULLOUT
GSRD GROSS SOLIDS REMOVAL DEVICE

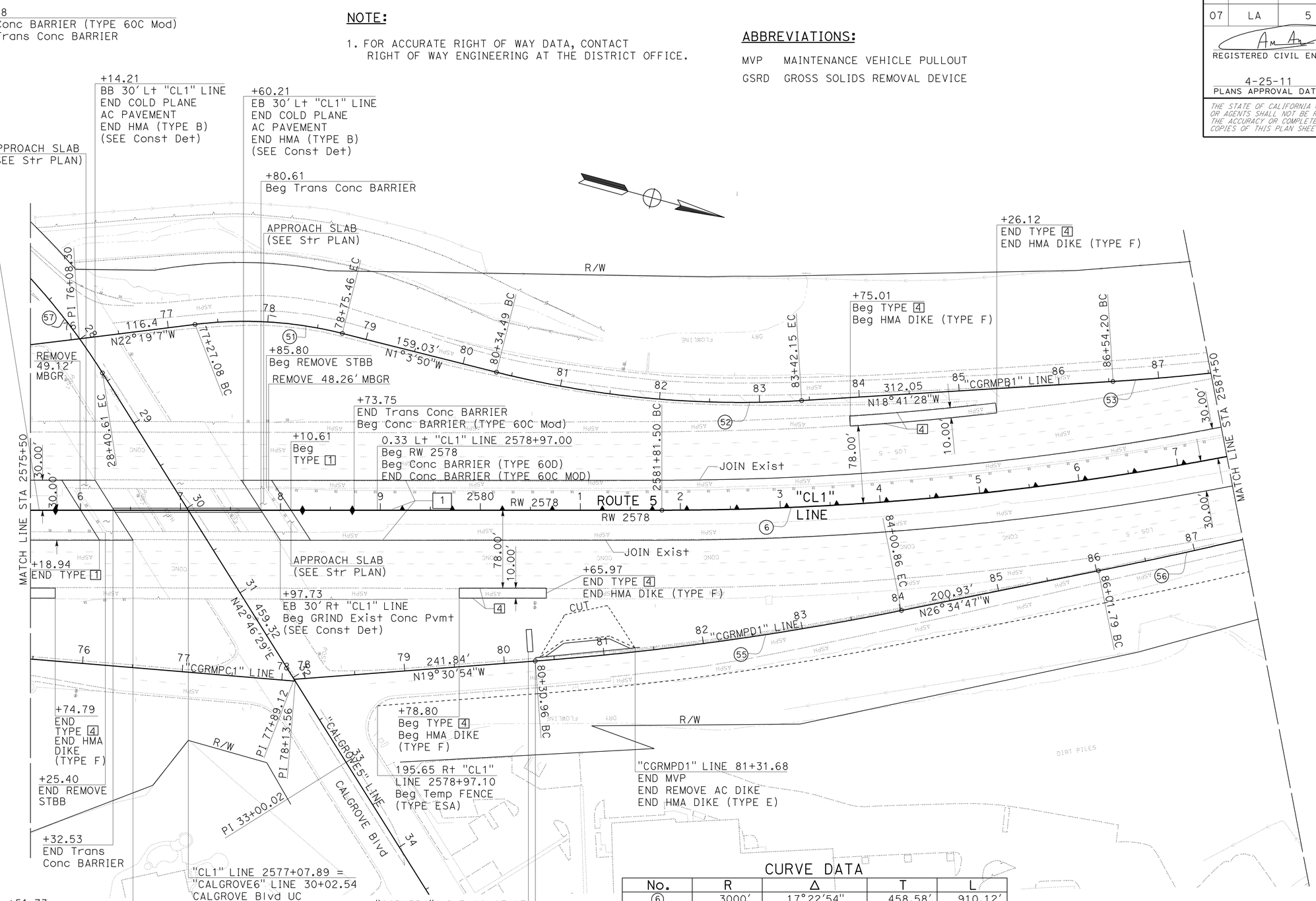

CURVE DATA

No.	R	Δ	T	L
6	3000'	17°22'54"	458.58'	910.12'
51	400'	21°15'17"	75.06'	148.39'
52	1000'	17°37'39"	155.05'	307.66'
53	2000'	5°36'07"	97.85'	195.54'
55	3000'	7°3'53"	185.19'	369.90'
56	5000'	1°50'35"	80.43'	160.84'
57	650'	71°0'19"	463.69'	805.53'

LAYOUT

SCALE: 1" = 50'

L-13

STATE OF CALIFORNIA - DEPARTMENT OF TRANSPORTATION
Caltrans®
DESIGN

FUNCTIONAL SUPERVISOR: CELINA AVILES
CALCULATED-DESIGNED BY: AMIR ELSHARIEF
CHECKED BY: DAN PHAM
REVISED BY: DAN PHAM
DATE REVISED: 07-5-2010 08-10-10
A.E.

LAST REVISION DATE PLOTTED => 25-APR-2011
06-28-10 TIME PLOTTED => 16:03

BORDER LAST REVISED 7/2/2010
USERNAME => trlim
DGN FILE => 72332Aea013.dgn
RELATIVE BORDER SCALE IS IN INCHES 0 1 2 3
UNIT 1823
PROJECT NUMBER & PHASE 07000003901

Dist	COUNTY	ROUTE	POST MILES TOTAL PROJECT	SHEET No.	TOTAL SHEETS
07	LA	5	R46.3/R50.0	22	456

REGISTERED CIVIL ENGINEER DATE 01-11-11

PLANS APPROVAL DATE 4-25-11

REGISTERED PROFESSIONAL ENGINEER AMIR AWN ELSHARIEF No. 72560 Exp. 6/30/12 CIVIL STATE OF CALIFORNIA

THE STATE OF CALIFORNIA OR ITS OFFICERS OR AGENTS SHALL NOT BE RESPONSIBLE FOR THE ACCURACY OR COMPLETENESS OF SCANNED COPIES OF THIS PLAN SHEET.

NOTE:

1. FOR ACCURATE RIGHT OF WAY DATA, CONTACT RIGHT OF WAY ENGINEERING AT THE DISTRICT OFFICE.

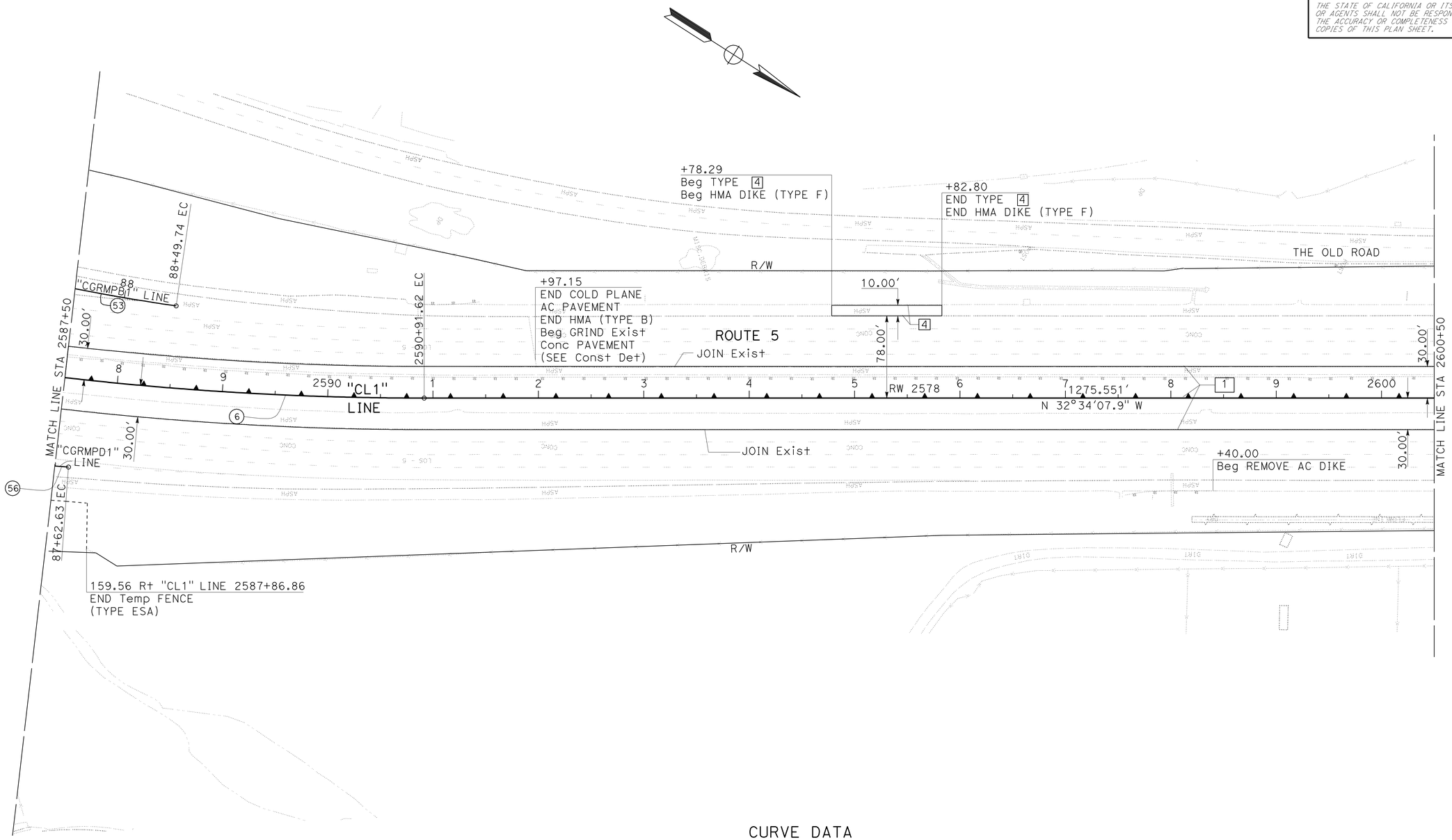

CURVE DATA

No. ⊕	R	Δ	T	L
6	3000'	17°22'54"	458.58'	910.12'
53	2000'	5°36'07"	97.85'	195.54'
56	5000'	1°50'35"	80.43'	160.84'

LAYOUT

SCALE: 1" = 50'

L-14

A.E.	DAN PHAM	REVISED BY	AMIR ELSHARIEF	CALCULATED-DESIGNED BY	FUNCTIONAL SUPERVISOR	STATE OF CALIFORNIA - DEPARTMENT OF TRANSPORTATION
08-10-10	07-5-2010	DATE REVISED	DAN PHAM	CHECKED BY	CELINA AVILES	DESIGN

LAST REVISION 06-16-10 | DATE PLOTTED => 25-APR-2011 | TIME PLOTTED => 13:15

Dist	COUNTY	ROUTE	POST MILES TOTAL PROJECT	SHEET No.	TOTAL SHEETS
07	LA	5	R46.3/R50.0	23	456

REGISTERED CIVIL ENGINEER 01-11-11 DATE

4-25-11
PLANS APPROVAL DATE

REGISTERED PROFESSIONAL ENGINEER
AMIR AWN ELSHARIEF
No. 72560
Exp 6/30/12
CIVIL
STATE OF CALIFORNIA

THE STATE OF CALIFORNIA OR ITS OFFICERS OR AGENTS SHALL NOT BE RESPONSIBLE FOR THE ACCURACY OR COMPLETENESS OF SCANNED COPIES OF THIS PLAN SHEET.

NOTE:

1. FOR ACCURATE RIGHT OF WAY DATA, CONTACT RIGHT OF WAY ENGINEERING AT THE DISTRICT OFFICE.

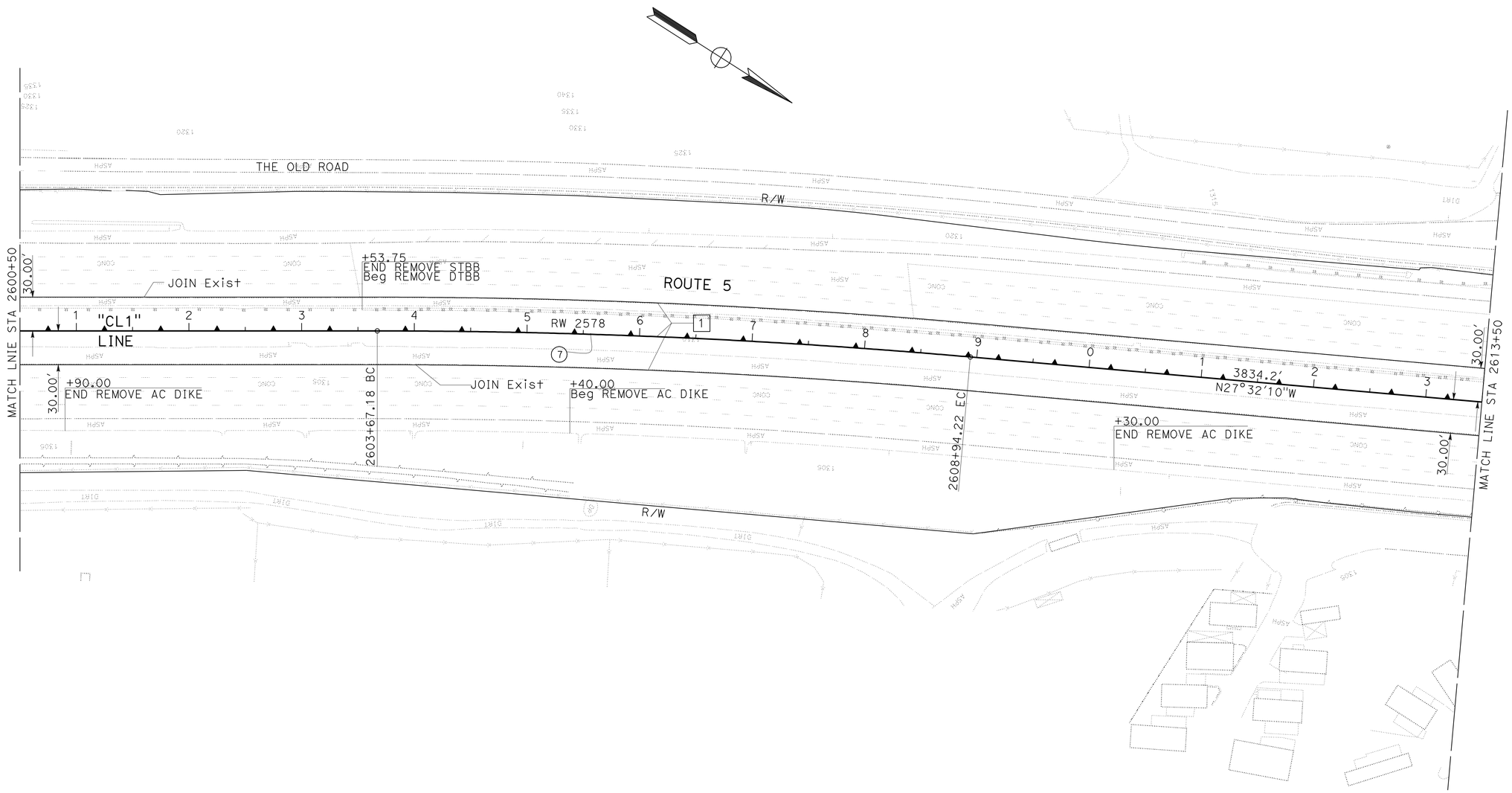

CURVE DATA

No.	R	Δ	T	L
7	5999'	5°2'01"	263.69'	527.04'

LAYOUT

SCALE: 1" = 50'

L-15

STATE OF CALIFORNIA - DEPARTMENT OF TRANSPORTATION
Caltrans DESIGN

FUNCTIONAL SUPERVISOR: CELINA AVILES

CALCULATED-DESIGNED BY: AMIR ELSHARIEF
CHECKED BY: DAN PHAM

REVISED BY: DAN PHAM
DATE REVISED: 07-5-2010

A.E. 08-10-10

LAST REVISION 06-16-10
DATE PLOTTED => 25-APR-2011
TIME PLOTTED => 13:16

Dist	COUNTY	ROUTE	POST MILES TOTAL PROJECT	SHEET No.	TOTAL SHEETS
07	LA	5	R46.3/R50.0	24	456

REGISTERED CIVIL ENGINEER 01-11-11 DATE

4-25-11
PLANS APPROVAL DATE

REGISTERED PROFESSIONAL ENGINEER AMIR AWN ELSHARIEF No. 72560 Exp 6/30/12 CIVIL STATE OF CALIFORNIA

THE STATE OF CALIFORNIA OR ITS OFFICERS OR AGENTS SHALL NOT BE RESPONSIBLE FOR THE ACCURACY OR COMPLETENESS OF SCANNED COPIES OF THIS PLAN SHEET.

NOTE:

1. FOR ACCURATE RIGHT OF WAY DATA, CONTACT RIGHT OF WAY ENGINEERING AT THE DISTRICT OFFICE.

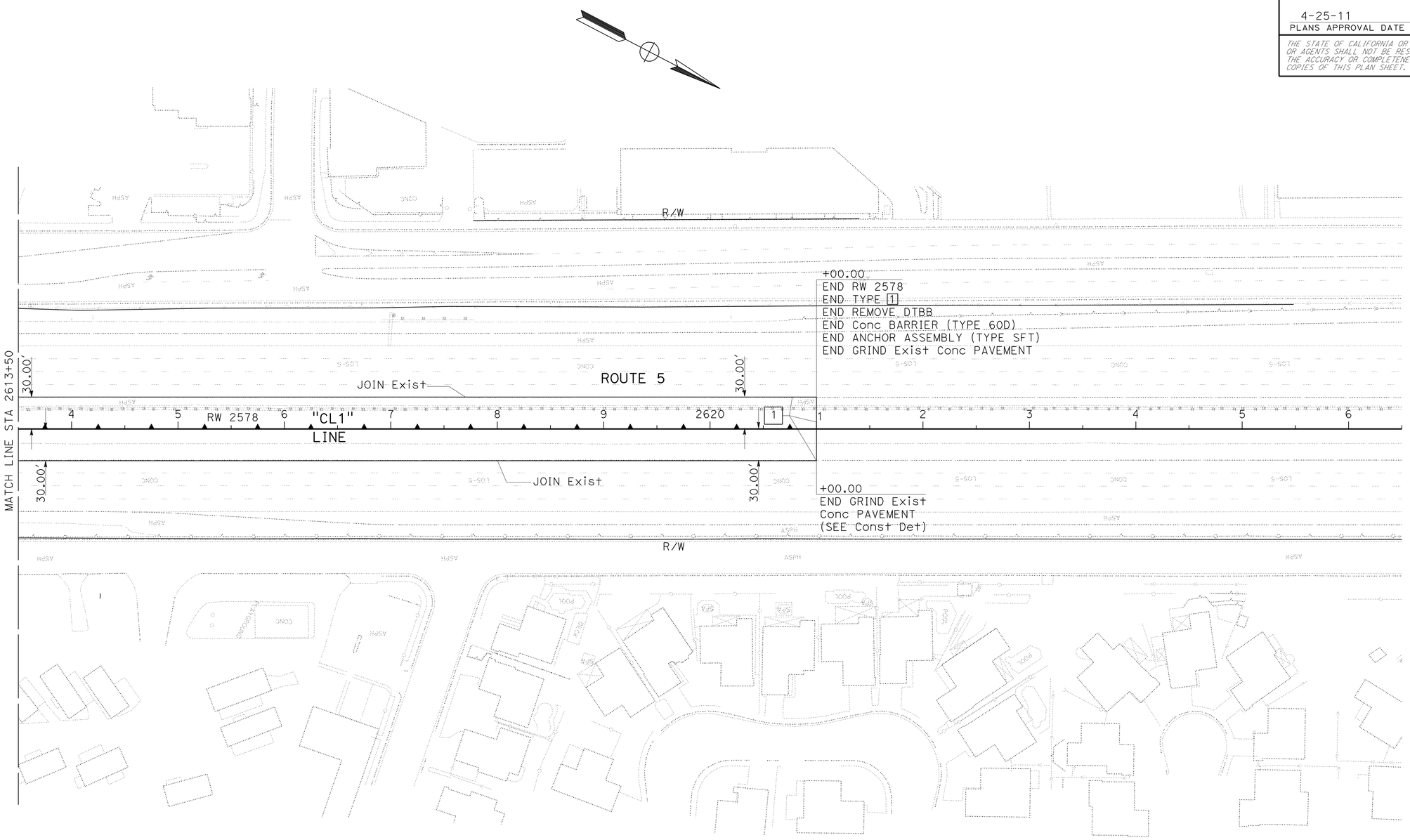

LAYOUT

SCALE: 1" = 50'

L-16

STATE OF CALIFORNIA - DEPARTMENT OF TRANSPORTATION
Caltrans
DESIGN

FUNCTIONAL SUPERVISOR: CELINA AVILES

CALCULATED-DESIGNED BY: AMIR ELSHARIEF
CHECKED BY: DAN PHAM

REVISED BY: DAN PHAM
DATE REVISED: 07-5-2010 08-10-10

A.E.

LAST REVISION 06-16-10
DATE PLOTTED => 25-APR-2011
TIME PLOTTED => 13:16

Dist	COUNTY	ROUTE	POST MILES TOTAL PROJECT	SHEET No.	TOTAL SHEETS
07	LA	5	R46.3/R50.0	25	456

REGISTERED CIVIL ENGINEER 01-11-11 DATE

4-25-11
PLANS APPROVAL DATE

REGISTERED PROFESSIONAL ENGINEER AMIR AWN ELSHARIEF No. 72560 Exp. 6/30/12 CIVIL STATE OF CALIFORNIA

THE STATE OF CALIFORNIA OR ITS OFFICERS OR AGENTS SHALL NOT BE RESPONSIBLE FOR THE ACCURACY OR COMPLETENESS OF SCANNED COPIES OF THIS PLAN SHEET.

NOTE:

ALL ELEVATIONS ARE BASED ON NAVD 1988

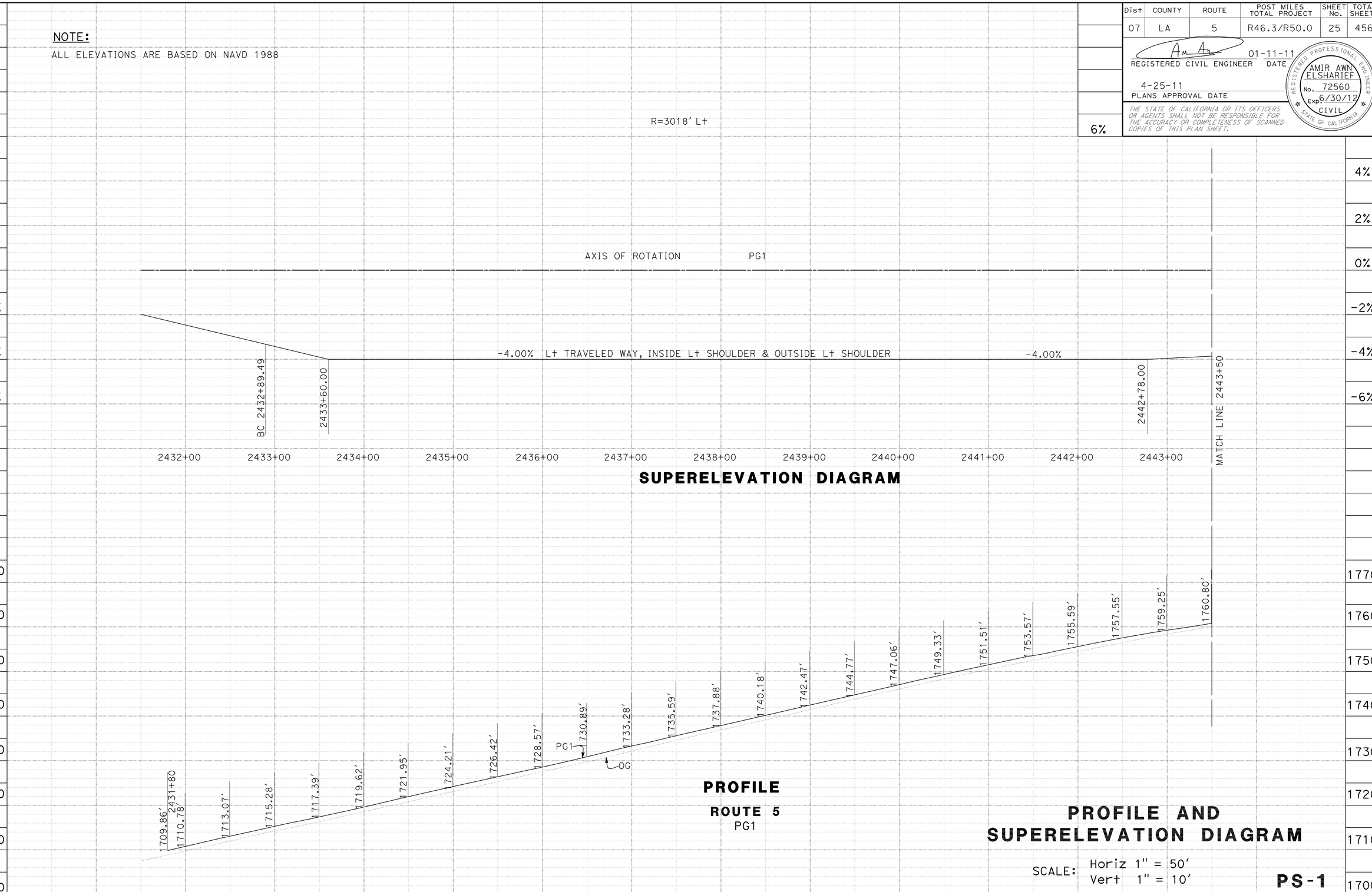

PROFILE AND SUPERELEVATION DIAGRAM

SCALE: Horiz 1" = 50'
Vert 1" = 10'

PS-1

REVISED BY | DATE REVISED

O. BLACKSTOCK

CALCULATED-DESIGNED BY | CHECKED BY

FUNCTIONAL SUPERVISOR

CELINA AVILES

STATE OF CALIFORNIA - DEPARTMENT OF TRANSPORTATION

Caltrans

DESIGN

LAST REVISION 03-24-10 | DATE PLOTTED => 25-APR-2011 | TIME PLOTTED => 13:16

Dist	COUNTY	ROUTE	POST MILES TOTAL PROJECT	SHEET No.	TOTAL SHEETS
07	LA	5	R46.3/R50.0	26	456

REGISTERED CIVIL ENGINEER 01-11-11 DATE

4-25-11
PLANS APPROVAL DATE

REGISTERED PROFESSIONAL ENGINEER AMIR AWN ELSHARIEF No. 72560 Exp. 6/30/12 CIVIL STATE OF CALIFORNIA

THE STATE OF CALIFORNIA OR ITS OFFICERS OR AGENTS SHALL NOT BE RESPONSIBLE FOR THE ACCURACY OR COMPLETENESS OF SCANNED COPIES OF THIS PLAN SHEET.

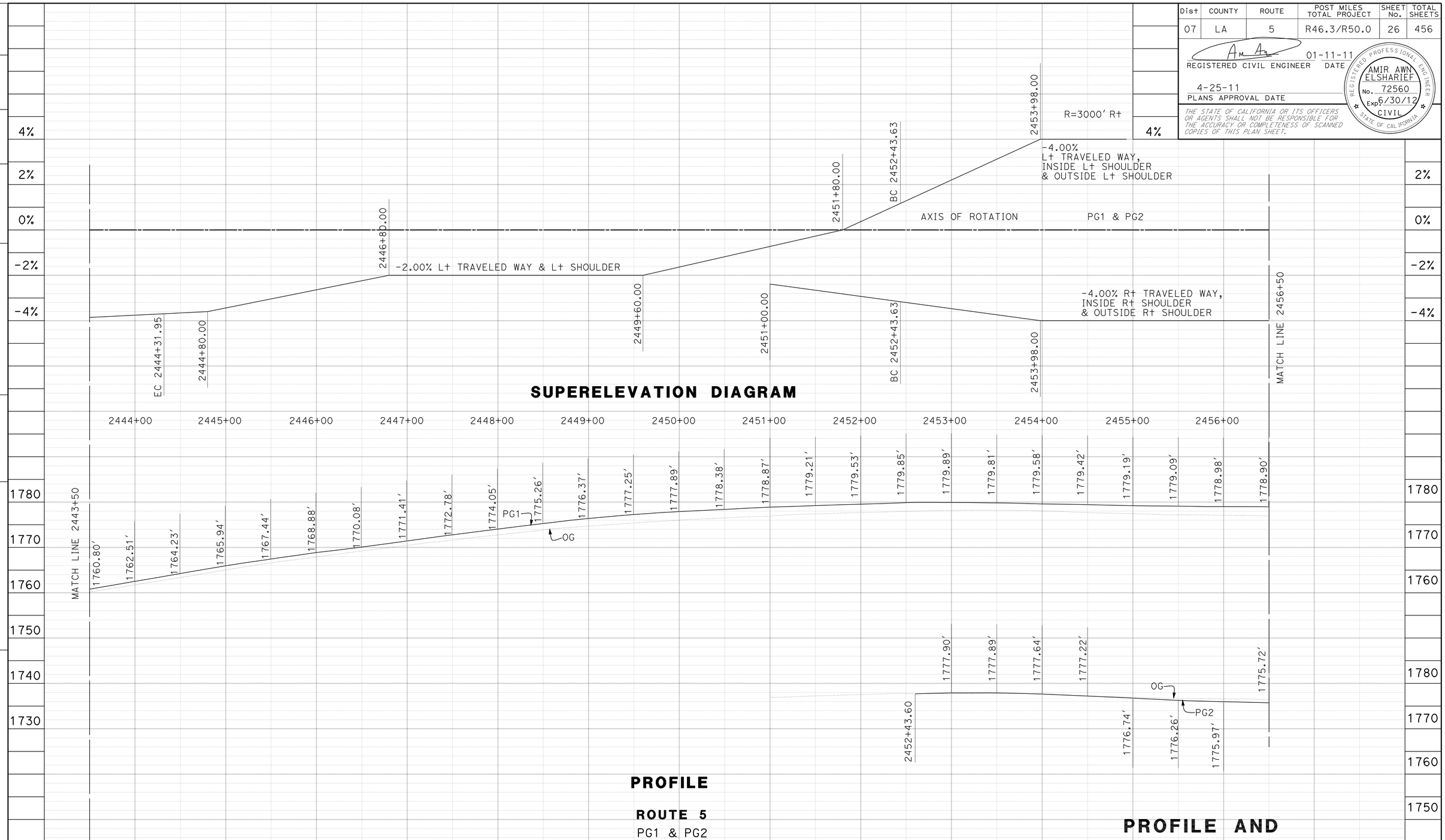

STATION	2444+00	2445+00	2446+00	2447+00	2448+00	2449+00	2450+00	2451+00	2452+00	2453+00	2454+00	2455+00	2456+00	TOTAL
CY Exc														
CY Emb														

7,334

REVISED BY
DATE REVISED
CALCULATED-DESIGNED BY O. BLACKSTOCK
CHECKED BY
FUNCTIONAL SUPERVISOR CELINA AVILES

STATE OF CALIFORNIA - DEPARTMENT OF TRANSPORTATION
Caltrans
DESIGN

LAST REVISION 04-05-10
DATE PLOTTED => 25-APR-2011
TIME PLOTTED => 13:16

Dist	COUNTY	ROUTE	POST MILES TOTAL PROJECT	SHEET No.	TOTAL SHEETS
07	LA	5	R46.3/R50.0	27	456

REGISTERED CIVIL ENGINEER 01-11-11 DATE

4-25-11
PLANS APPROVAL DATE

REGISTERED PROFESSIONAL ENGINEER AMIR AWN ELSHARIEF No. 72560 Exp 6/30/12 CIVIL STATE OF CALIFORNIA

THE STATE OF CALIFORNIA OR ITS OFFICERS OR AGENTS SHALL NOT BE RESPONSIBLE FOR THE ACCURACY OR COMPLETENESS OF SCANNED COPIES OF THIS PLAN SHEET.

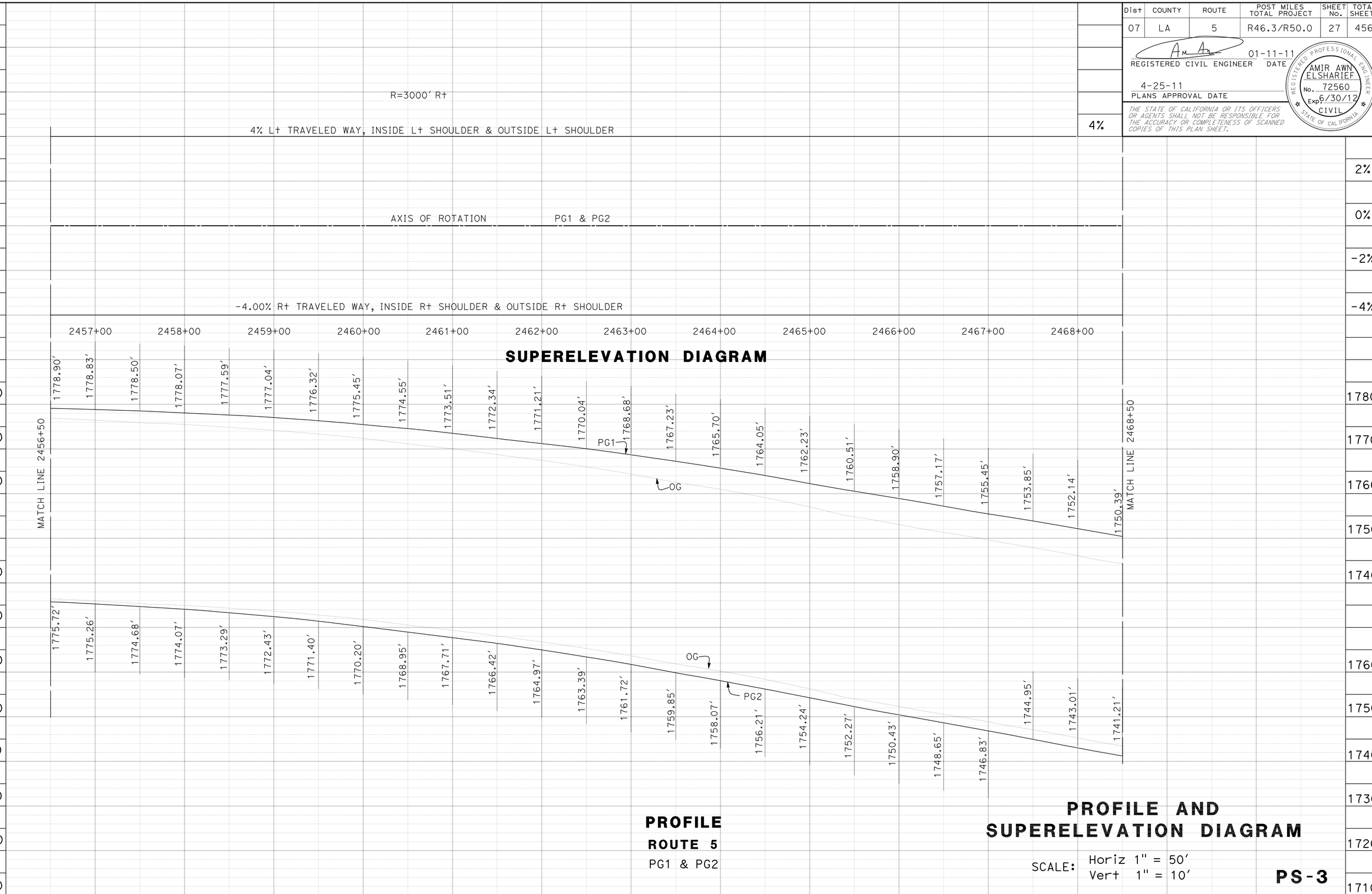

REVISED BY | DATE REVISED

CALCULATED-DESIGNED BY: O. BLACKSTOCK

CHECKED BY

FUNCTIONAL SUPERVISOR: CELINA AVILES

STATE OF CALIFORNIA - DEPARTMENT OF TRANSPORTATION

Caltrans®

DESIGN

LAST REVISION 03-17-10 | DATE PLOTTED => 25-APR-2011 | TIME PLOTTED => 13:16

Dist	COUNTY	ROUTE	POST MILES TOTAL PROJECT	SHEET No.	TOTAL SHEETS
07	LA	5	R46.3/R50.0	28	456

REGISTERED CIVIL ENGINEER 01-11-11 DATE

4-25-11
PLANS APPROVAL DATE

REGISTERED PROFESSIONAL ENGINEER AMIR AWN ELSHARIEF No. 72560 Exp 6/30/12 CIVIL STATE OF CALIFORNIA

THE STATE OF CALIFORNIA OR ITS OFFICERS OR AGENTS SHALL NOT BE RESPONSIBLE FOR THE ACCURACY OR COMPLETENESS OF SCANNED COPIES OF THIS PLAN SHEET.

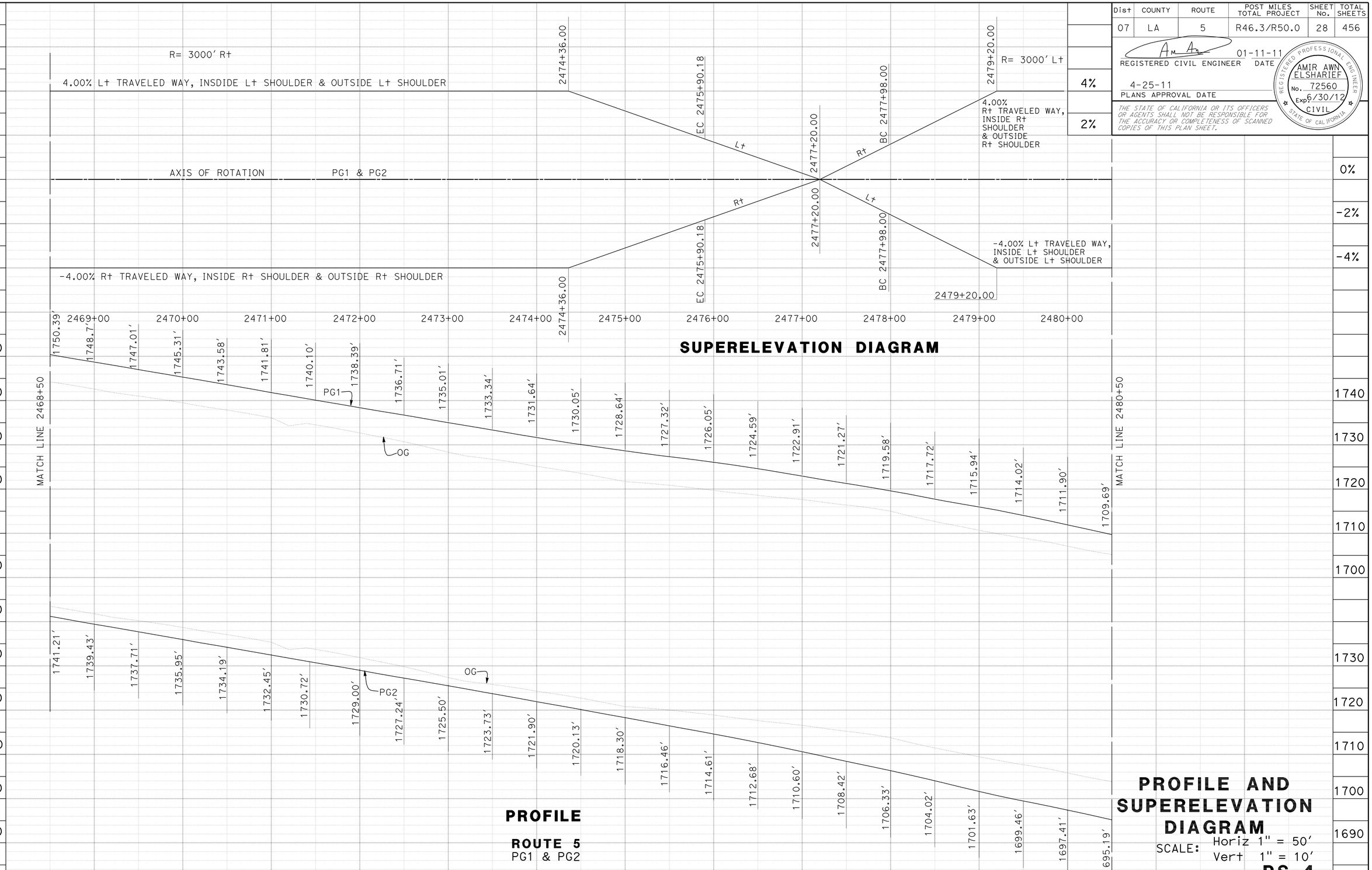

SUPERELEVATION DIAGRAM

PROFILE

ROUTE 5
PG1 & PG2

PROFILE AND SUPERELEVATION DIAGRAM

SCALE: Horiz 1" = 50'
Vert 1" = 10'

PS-4

STATE OF CALIFORNIA - DEPARTMENT OF TRANSPORTATION
Caltrans®
DESIGN

FUNCTIONAL SUPERVISOR: CELINA AVILES
CALCULATED-DESIGNED BY: O. BLACKSTOCK
CHECKED BY
REVISED BY
DATE REVISED

LAST REVISION 03-17-10
DATE PLOTTED => 25-APR-2011
TIME PLOTTED => 13:16

Dist	COUNTY	ROUTE	POST MILES TOTAL PROJECT	SHEET No.	TOTAL SHEETS
07	LA	5	R46.3/R50.0	29	456

REGISTERED CIVIL ENGINEER 01-11-11 DATE

4-25-11
PLANS APPROVAL DATE

REGISTERED PROFESSIONAL ENGINEER AMIR AWN ELSHARIEF No. 72560 Exp 6/30/12 CIVIL STATE OF CALIFORNIA

THE STATE OF CALIFORNIA OR ITS OFFICERS OR AGENTS SHALL NOT BE RESPONSIBLE FOR THE ACCURACY OR COMPLETENESS OF SCANNED COPIES OF THIS PLAN SHEET.

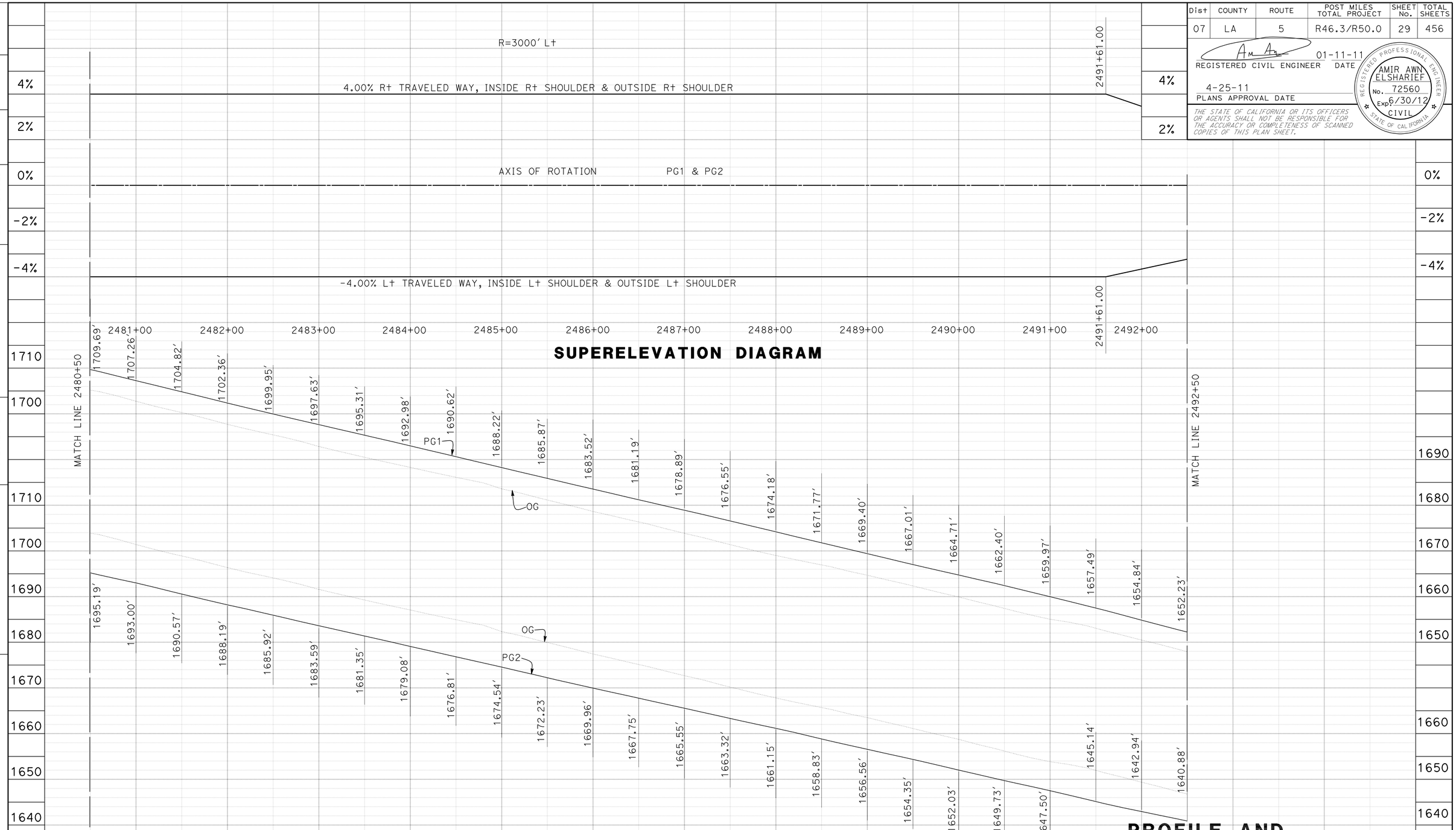

SUPERELEVATION DIAGRAM

PROFILE
ROUTE 5
PG1 & PG2

PROFILE AND SUPERELEVATION DIAGRAM

SCALE: Horiz 1" = 50'
Vert 1" = 10'

PS-5

STATION	2481+00	2482+00	2483+00	2484+00	2485+00	2486+00	2487+00	2488+00	2489+00	2490+00	2491+00	2492+00	TOTAL
CY Exc	18,849												
CY Emb													

STATE OF CALIFORNIA - DEPARTMENT OF TRANSPORTATION
Caltrans
DESIGN

FUNCTIONAL SUPERVISOR: CELINA AVILES
CALCULATED-DESIGNED BY: O. BLACKSTOCK
CHECKED BY
REVISED BY
DATE REVISED

LAST REVISION 03-17-10
DATE PLOTTED => 25-APR-2011
TIME PLOTTED => 13:16

Dist	COUNTY	ROUTE	POST MILES TOTAL PROJECT	SHEET No.	TOTAL SHEETS
07	LA	5	R46.3/R50.0	30	456

REGISTERED CIVIL ENGINEER 01-11-11 DATE

4-25-11
PLANS APPROVAL DATE

REGISTERED PROFESSIONAL ENGINEER
AMIR AWN ELSHARIEF
No. 72560
Exp. 6/30/12
CIVIL
STATE OF CALIFORNIA

THE STATE OF CALIFORNIA OR ITS OFFICERS OR AGENTS SHALL NOT BE RESPONSIBLE FOR THE ACCURACY OR COMPLETENESS OF SCANNED COPIES OF THIS PLAN SHEET.

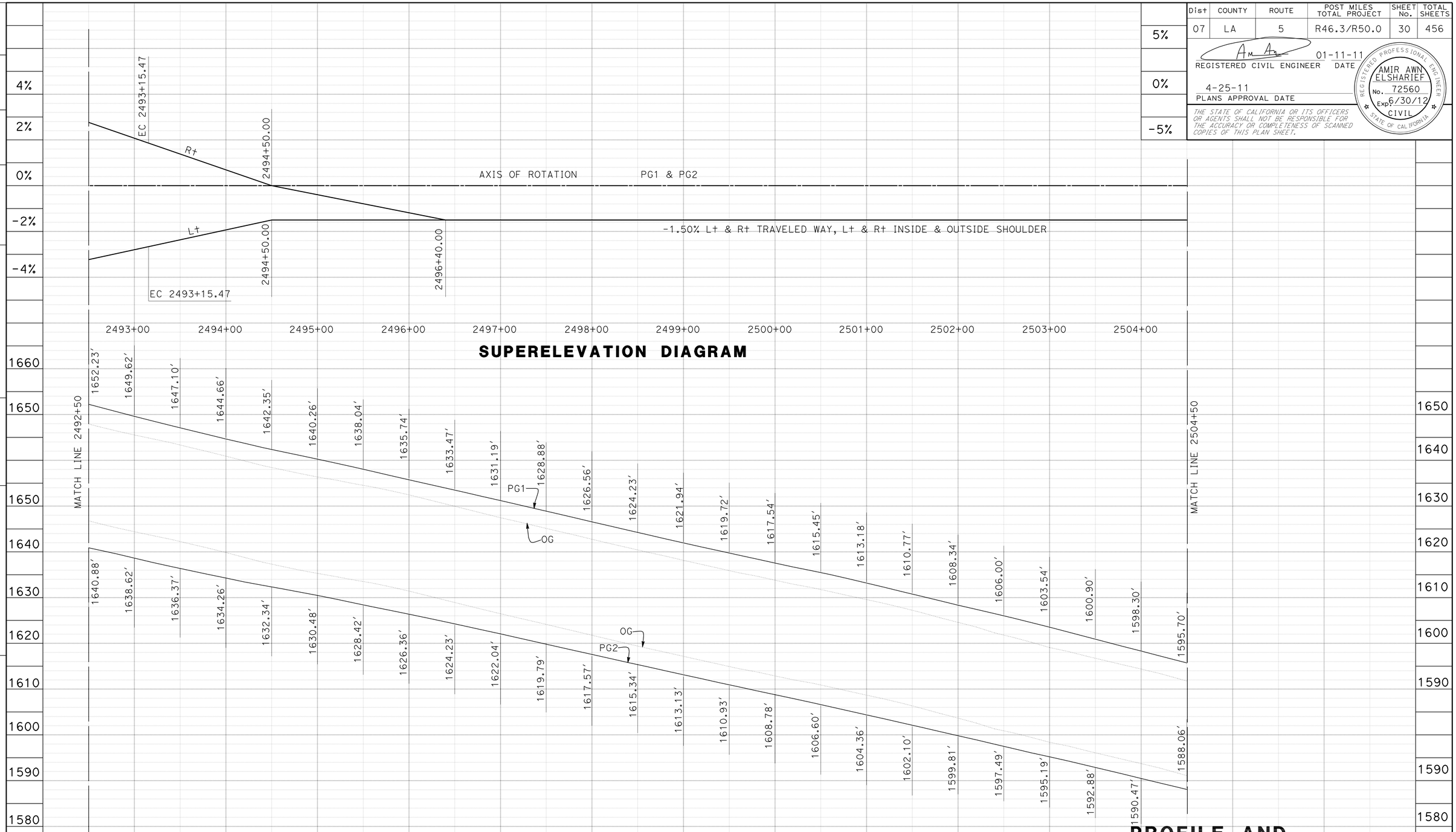

PROFILE
ROUTE 5
PG1 & PG2

PROFILE AND SUPERELEVATION DIAGRAM

SCALE: Horiz 1" = 50′
Vert 1" = 10′

PS-6

STATE OF CALIFORNIA - DEPARTMENT OF TRANSPORTATION
Caltrans®
DESIGN

FUNCTIONAL SUPERVISOR: CELINA AVILES
CALCULATED-DESIGNED BY: O. BLACKSTOCK
CHECKED BY
REVISED BY
DATE REVISED

LAST REVISION 03-29-10
DATE PLOTTED => 25-APR-2011
TIME PLOTTED => 13:16

Dist	COUNTY	ROUTE	POST MILES TOTAL PROJECT	SHEET No.	TOTAL SHEETS
07	LA	5	R46.3/R50.0	31	456

REGISTERED CIVIL ENGINEER 01-11-11 DATE

4-25-11
PLANS APPROVAL DATE

REGISTERED PROFESSIONAL ENGINEER AMIR AWN ELSHARIEF No. 72560 Exp 6/30/12 CIVIL STATE OF CALIFORNIA

THE STATE OF CALIFORNIA OR ITS OFFICERS OR AGENTS SHALL NOT BE RESPONSIBLE FOR THE ACCURACY OR COMPLETENESS OF SCANNED COPIES OF THIS PLAN SHEET.

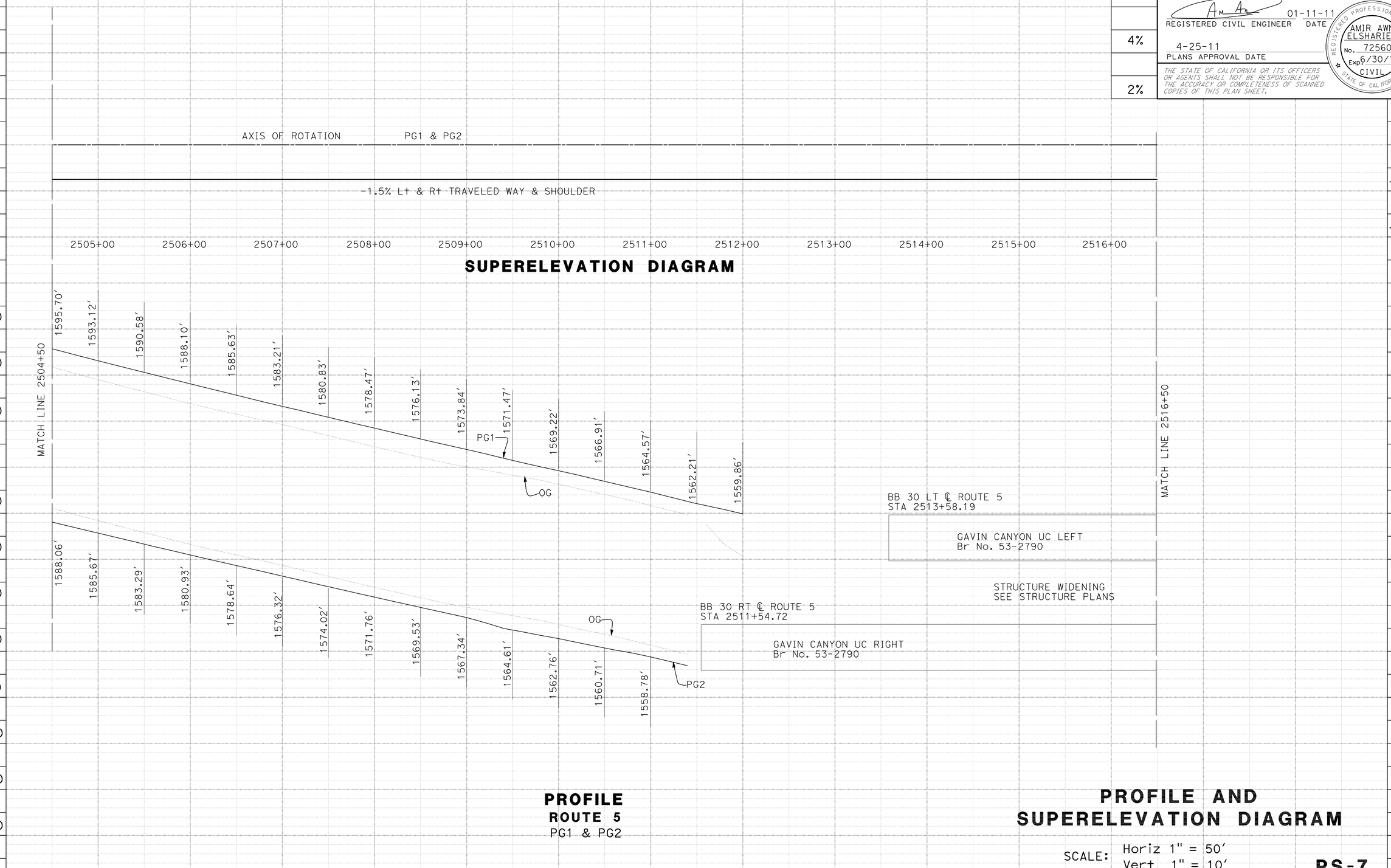

PROFILE
ROUTE 5
PG1 & PG2

PROFILE AND SUPERELEVATION DIAGRAM

SCALE: Horiz 1" = 50'
Vert 1" = 10'

PS-7

STATION		2505+00	2506+00	2507+00	2508+00	2509+00	2510+00	2511+00	2512+00	2513+00	2514+00	2515+00	2516+00	TOTAL
CY	Exc	6,923												
	Emb													

REVISED BY | DATE REVISED
O. BLACKSTOCK
CALCULATED-DESIGNED BY | CHECKED BY
FUNCTIONAL SUPERVISOR
CELINA AVILES

STATE OF CALIFORNIA - DEPARTMENT OF TRANSPORTATION
Caltrans
DESIGN

LAST REVISION | DATE PLOTTED => 25-APR-2011 | TIME PLOTTED => 13:16
04-05-10

Dist	COUNTY	ROUTE	POST MILES TOTAL PROJECT	SHEET No.	TOTAL SHEETS
07	LA	5	R46.3/R50.0	32	456

REGISTERED CIVIL ENGINEER 01-11-11 DATE

4-25-11
PLANS APPROVAL DATE

REGISTERED PROFESSIONAL ENGINEER AMIR AWN ELSHARIEF No. 72560 Exp. 6/30/12 CIVIL STATE OF CALIFORNIA

THE STATE OF CALIFORNIA OR ITS OFFICERS OR AGENTS SHALL NOT BE RESPONSIBLE FOR THE ACCURACY OR COMPLETENESS OF SCANNED COPIES OF THIS PLAN SHEET.

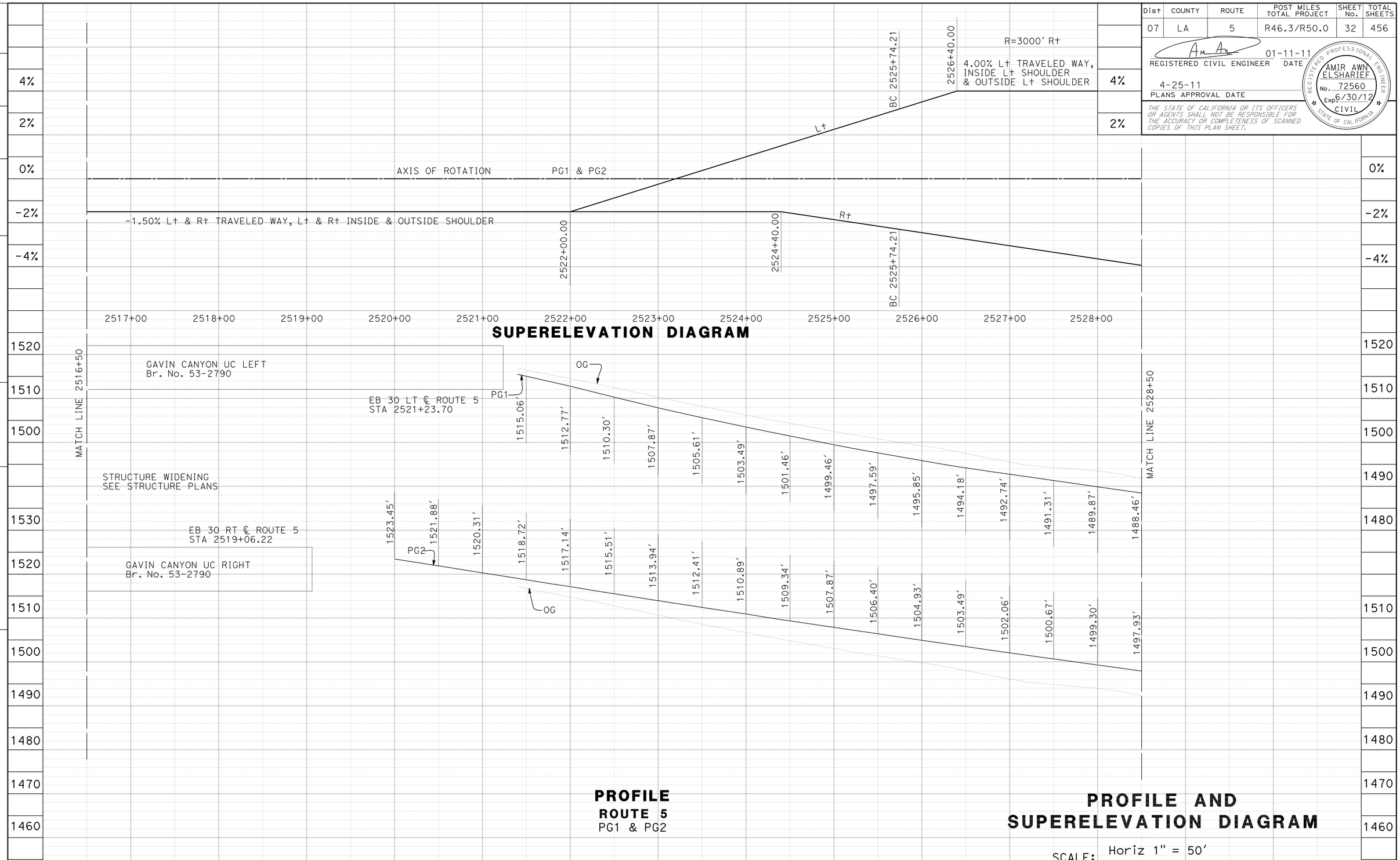

STATE OF CALIFORNIA - DEPARTMENT OF TRANSPORTATION
DESIGN
Caltrans

FUNCTIONAL SUPERVISOR: CELINA AVILES
CALCULATED-DESIGNED BY: O. BLACKSTOCK
CHECKED BY
REVISED BY
DATE REVISED

LAST REVISION 04-05-10
DATE PLOTTED => 25-APR-2011
TIME PLOTTED => 13:16

Dist	COUNTY	ROUTE	POST MILES TOTAL PROJECT	SHEET No.	TOTAL SHEETS
07	LA	5	R46.3/R50.0	33	456

REGISTERED CIVIL ENGINEER 01-11-11 DATE

4-25-11
PLANS APPROVAL DATE

REGISTERED PROFESSIONAL ENGINEER
AMIR AWN ELSHARIEF
No. 72560
Exp. 6/30/12
CIVIL
STATE OF CALIFORNIA

THE STATE OF CALIFORNIA OR ITS OFFICERS OR AGENTS SHALL NOT BE RESPONSIBLE FOR THE ACCURACY OR COMPLETENESS OF SCANNED COPIES OF THIS PLAN SHEET.

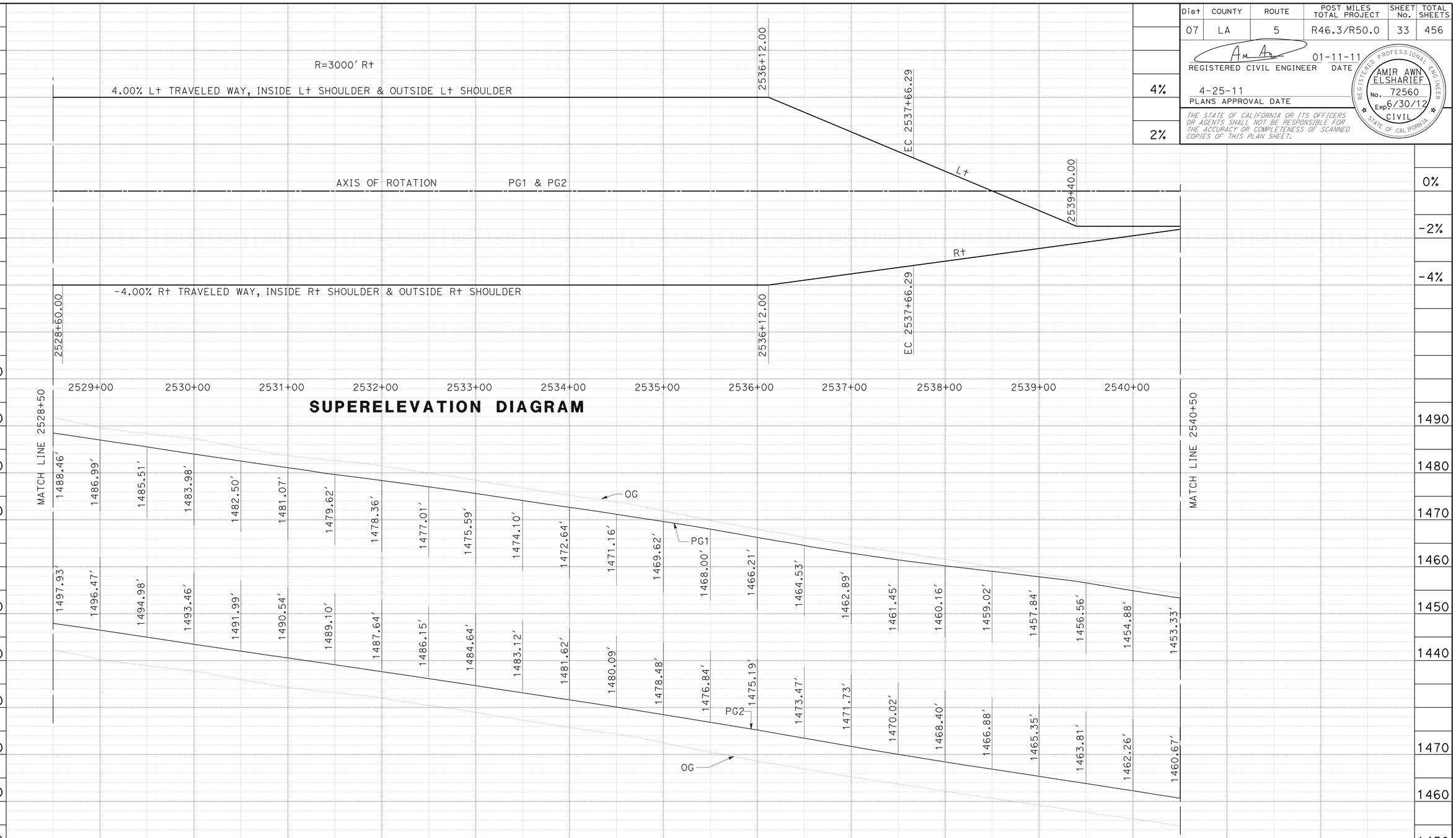

PROFILE

ROUTE 5
PG1 & PG2

PROFILE AND SUPERELEVATION DIAGRAM

SCALE: Horiz 1" = 50'
Vert 1" = 10'

PS-9

REVISED BY
DATE REVISED
O. BLACKSTOCK
CALCULATED-DESIGNED BY
CHECKED BY
FUNCTIONAL SUPERVISOR
CELINA AVILES

STATE OF CALIFORNIA - DEPARTMENT OF TRANSPORTATION
Caltrans
DESIGN

LAST REVISION 01-07-10
DATE PLOTTED => 25-APR-2011
TIME PLOTTED => 13:16

Dist	COUNTY	ROUTE	POST MILES TOTAL PROJECT	SHEET No.	TOTAL SHEETS
07	LA	5	R46.3/R50.0	34	456

REGISTERED CIVIL ENGINEER 01-11-11 DATE

4-25-11
PLANS APPROVAL DATE

REGISTERED PROFESSIONAL ENGINEER AMIR AWN ELSHARIEF No. 72560 Exp. 6/30/12 CIVIL STATE OF CALIFORNIA

THE STATE OF CALIFORNIA OR ITS OFFICERS OR AGENTS SHALL NOT BE RESPONSIBLE FOR THE ACCURACY OR COMPLETENESS OF SCANNED COPIES OF THIS PLAN SHEET.

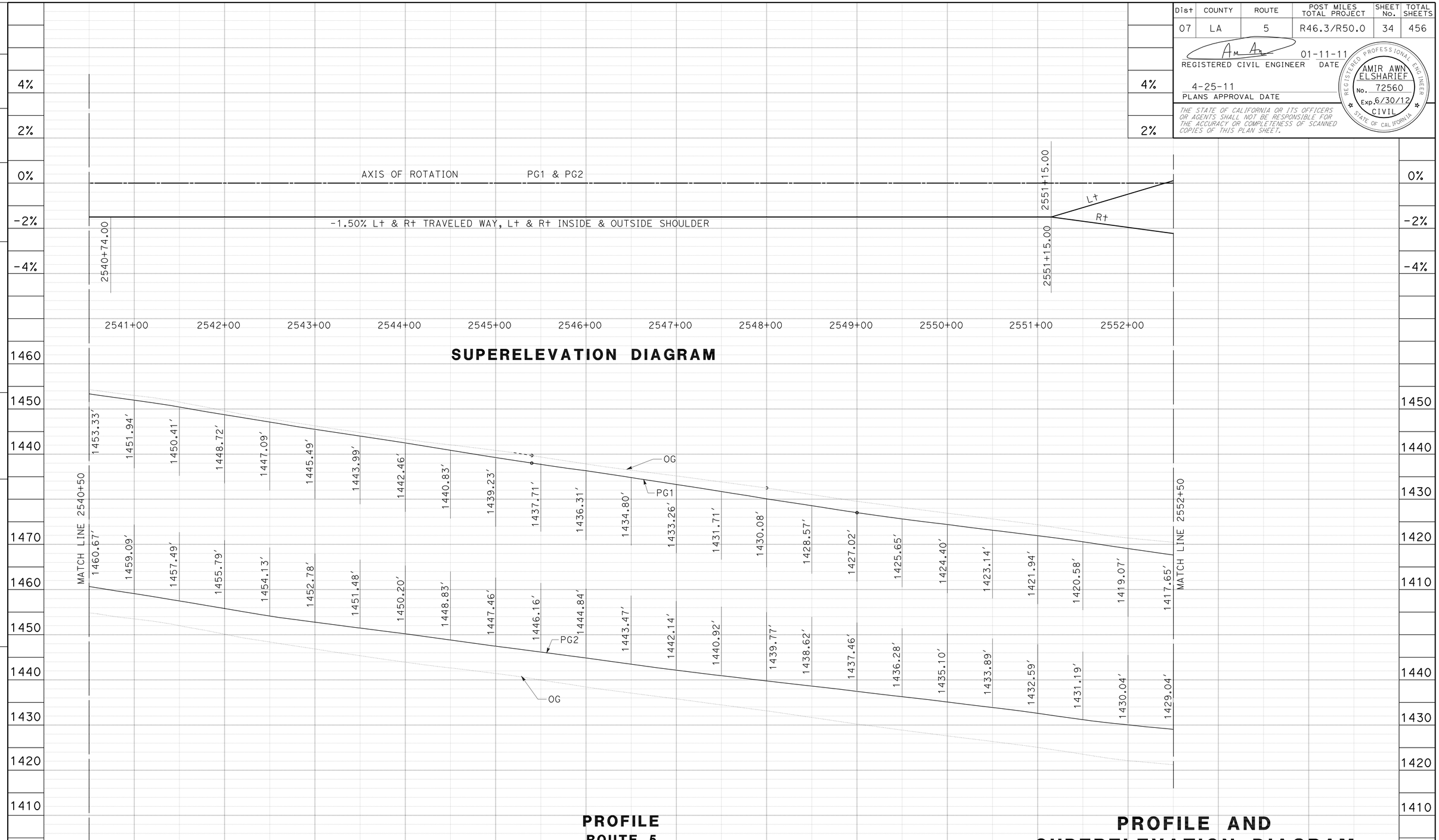

REVISED BY | DATE REVISED

CALCULATED-DESIGNED BY: O. BLACKSTOCK
CHECKED BY

FUNCTIONAL SUPERVISOR: CELINA AVILES

STATE OF CALIFORNIA - DEPARTMENT OF TRANSPORTATION
Caltrans®
DESIGN

LAST REVISION 01-11-10 | DATE PLOTTED => 24-JUN-2011 | TIME PLOTTED => 06:52

Dist	COUNTY	ROUTE	POST MILES TOTAL PROJECT	SHEET No.	TOTAL SHEETS
07	LA	5	R46.3/R50.0	35	456

REGISTERED CIVIL ENGINEER 01-11-11 DATE

4-25-11
PLANS APPROVAL DATE

REGISTERED PROFESSIONAL ENGINEER AMIR AWN ELSHARIEF No. 72560 Exp 6/30/12 CIVIL STATE OF CALIFORNIA

THE STATE OF CALIFORNIA OR ITS OFFICERS OR AGENTS SHALL NOT BE RESPONSIBLE FOR THE ACCURACY OR COMPLETENESS OF SCANNED COPIES OF THIS PLAN SHEET.

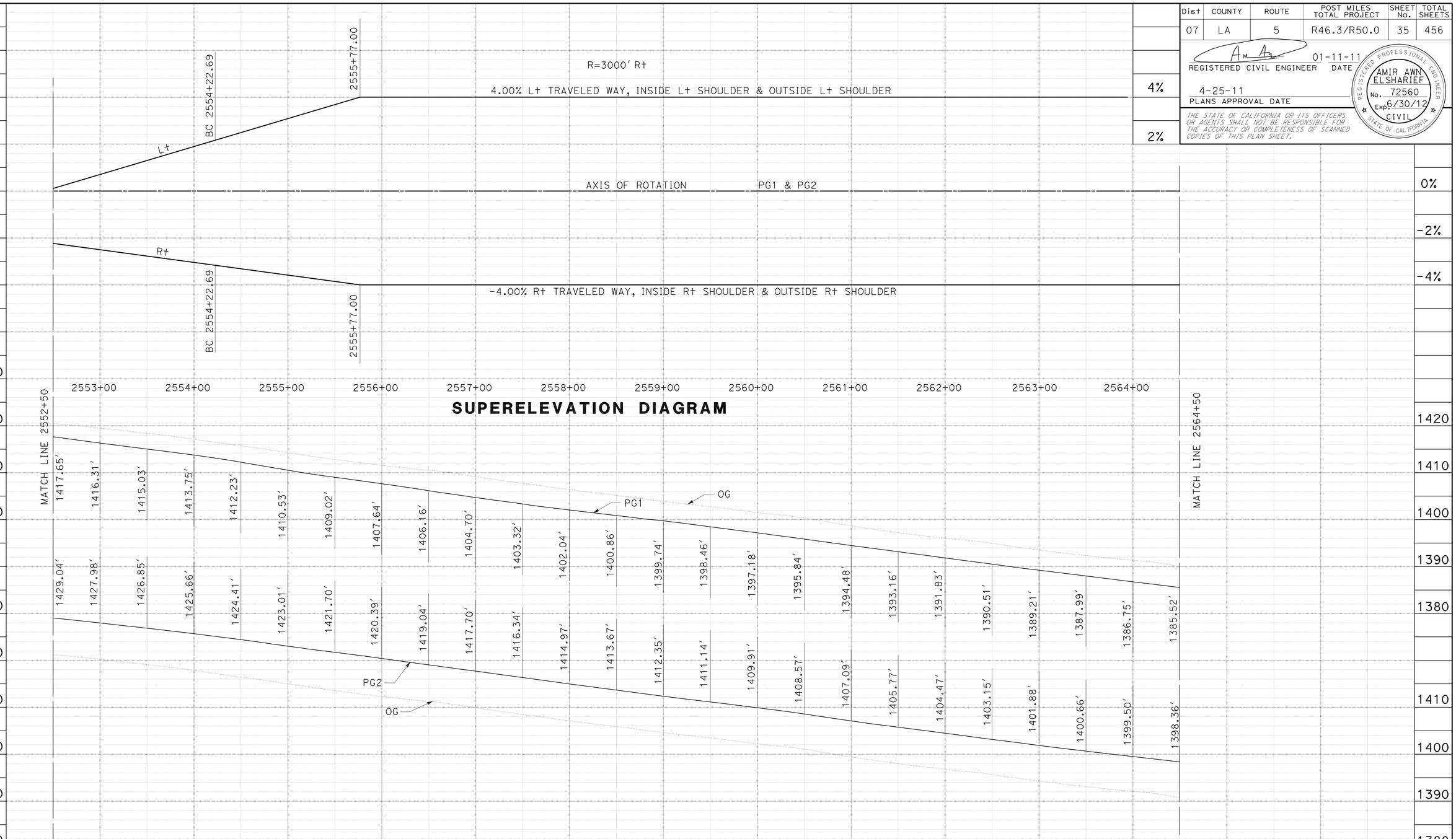

PROFILE
ROUTE 5
PG1 & PG2

PROFILE AND SUPERELEVATION DIAGRAM

SCALE: Horiz 1" = 50'
Vert 1" = 10'

PS-11

REVISED BY | DATE REVISED
O. BLACKSTOCK
CALCULATED-DESIGNED BY
CHECKED BY
FUNCTIONAL SUPERVISOR
CELINA AVILES

STATE OF CALIFORNIA - DEPARTMENT OF TRANSPORTATION
Caltrans
DESIGN

LAST REVISION 01-11-10 | DATE PLOTTED => 25-APR-2011 | TIME PLOTTED => 13:17

Dist	COUNTY	ROUTE	POST MILES TOTAL PROJECT	SHEET No.	TOTAL SHEETS
07	LA	5	R46.3/R50.0	36	456

REGISTERED CIVIL ENGINEER 01-11-11 DATE

4-25-11
PLANS APPROVAL DATE

REGISTERED PROFESSIONAL ENGINEER AMIR AWN ELSHARIEF No. 72560 Exp. 6/30/12 CIVIL STATE OF CALIFORNIA

THE STATE OF CALIFORNIA OR ITS OFFICERS OR AGENTS SHALL NOT BE RESPONSIBLE FOR THE ACCURACY OR COMPLETENESS OF SCANNED COPIES OF THIS PLAN SHEET.

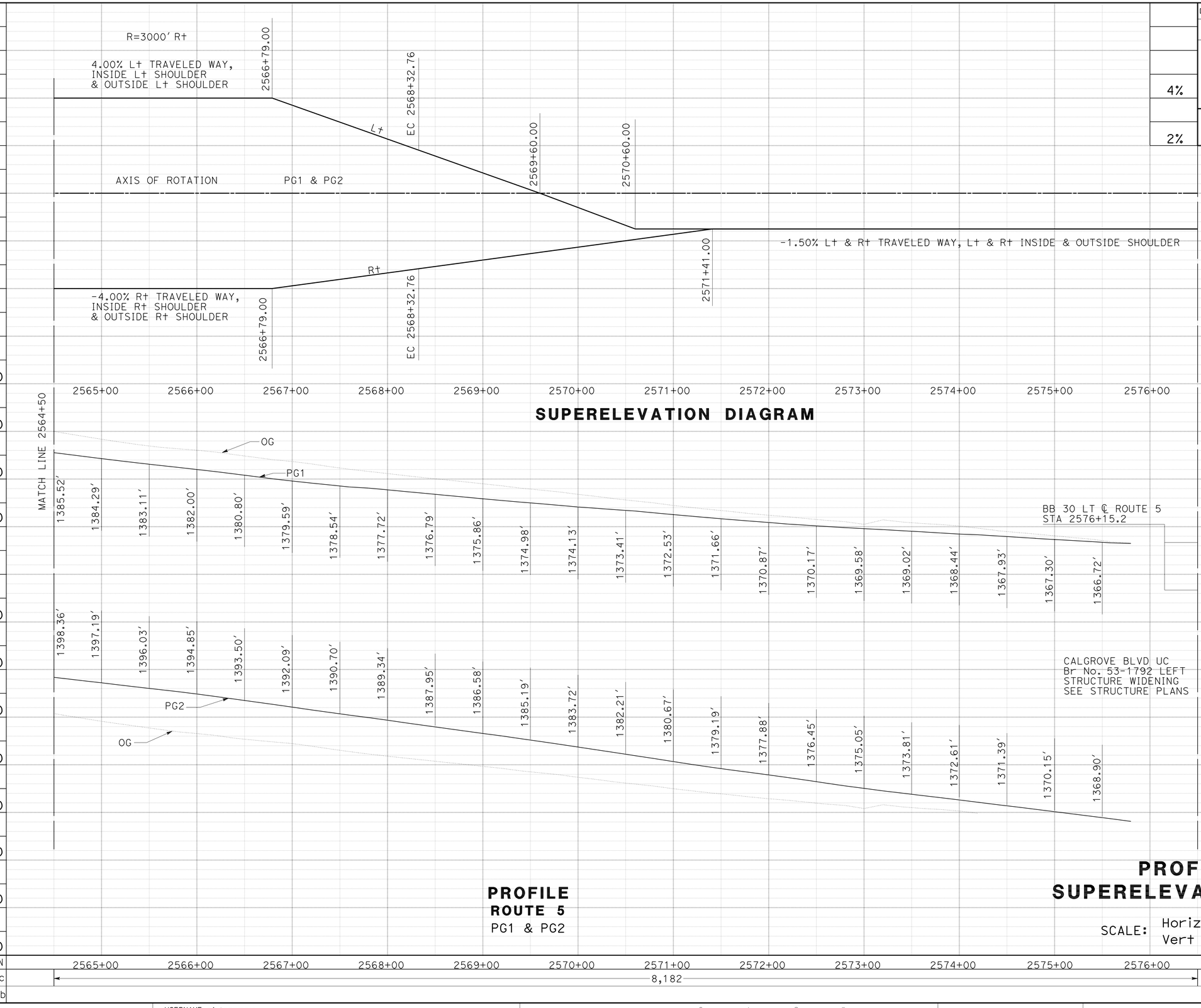

SUPERELEVATION DIAGRAM

PROFILE
ROUTE 5
PG1 & PG2

PROFILE AND SUPERELEVATION DIAGRAM

SCALE: Horiz 1" = 50'
Vert 1" = 10'

PS-12

STATION	2565+00	2566+00	2567+00	2568+00	2569+00	2570+00	2571+00	2572+00	2573+00	2574+00	2575+00	2576+00	TOTAL
CY Exc	8,182												
CY Emb													

REVISED BY | DATE REVISED
O. BLACKSTOCK
CALCULATED-DESIGNED BY
CHECKED BY
FUNCTIONAL SUPERVISOR
CELINA AVILES
STATE OF CALIFORNIA - DEPARTMENT OF TRANSPORTATION
Caltrans
DESIGN

LAST REVISION 04-05-10 | DATE PLOTTED => 25-APR-2011 | TIME PLOTTED => 13:17

Dist	COUNTY	ROUTE	POST MILES TOTAL PROJECT	SHEET No.	TOTAL SHEETS
07	LA	5	R46.3/R50.0	37	456

REGISTERED CIVIL ENGINEER 01-11-11 DATE

4-25-11
PLANS APPROVAL DATE

REGISTERED PROFESSIONAL ENGINEER
AMIR AWN ELSHARIEF
No. 72560
Exp. 6/30/12
CIVIL
STATE OF CALIFORNIA

THE STATE OF CALIFORNIA OR ITS OFFICERS OR AGENTS SHALL NOT BE RESPONSIBLE FOR THE ACCURACY OR COMPLETENESS OF SCANNED COPIES OF THIS PLAN SHEET.

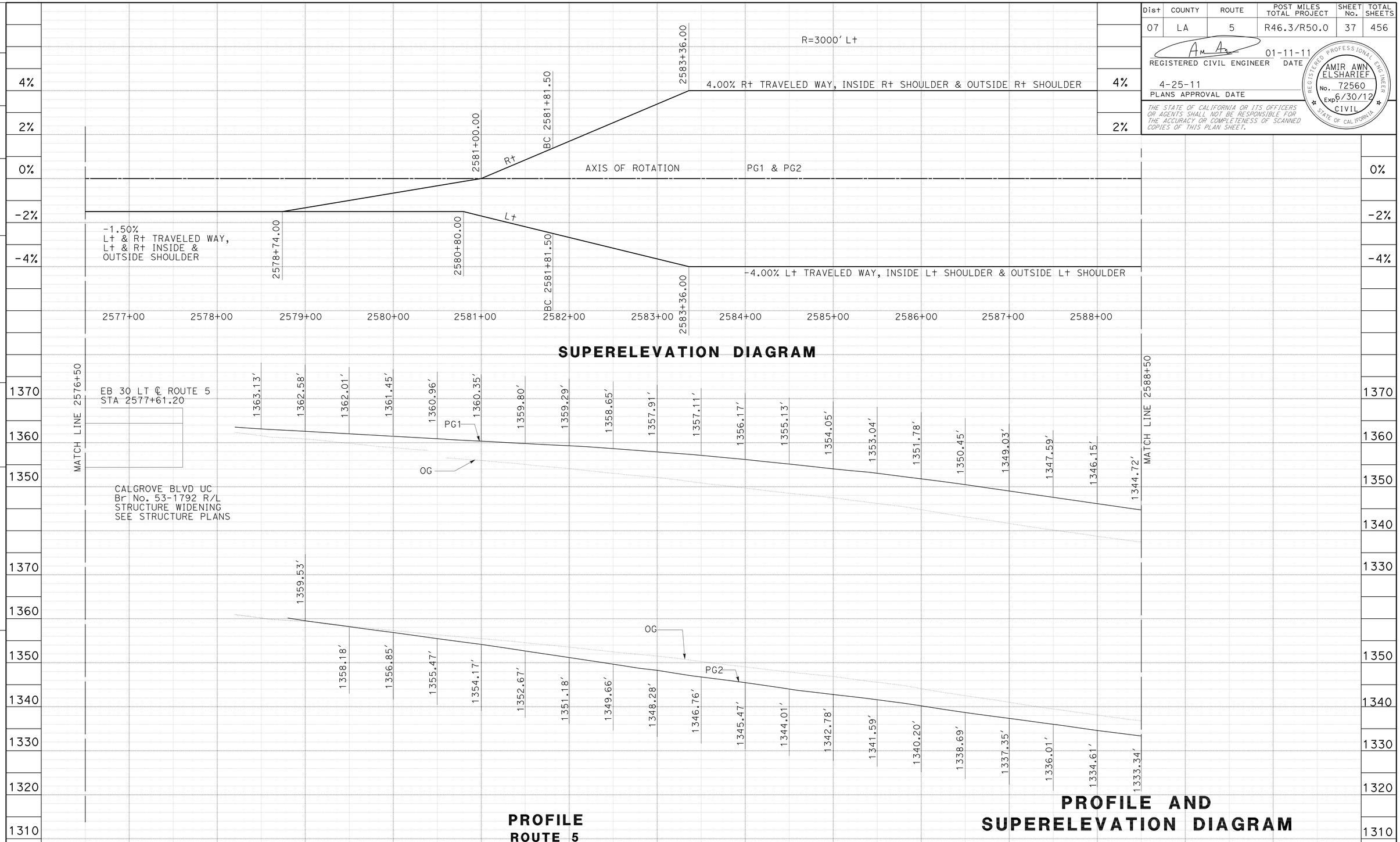

STATE OF CALIFORNIA - DEPARTMENT OF TRANSPORTATION
Caltrans
DESIGN

FUNCTIONAL SUPERVISOR: CELINA AVILES
CALCULATED-DESIGNED BY: O. BLACKSTOCK
CHECKED BY
REVISED BY
DATE REVISED

LAST REVISION DATE PLOTTED => 25-APR-2011
04-05-10 TIME PLOTTED => 13:17

Dist	COUNTY	ROUTE	POST MILES TOTAL PROJECT	SHEET No.	TOTAL SHEETS
07	LA	5	R46.3/R50.0	38	456

REGISTERED CIVIL ENGINEER 01-11-11 DATE

4-25-11
PLANS APPROVAL DATE

REGISTERED PROFESSIONAL ENGINEER AMIR AWN ELSHARIEF No. 72560 Exp. 6/30/12 CIVIL STATE OF CALIFORNIA

THE STATE OF CALIFORNIA OR ITS OFFICERS OR AGENTS SHALL NOT BE RESPONSIBLE FOR THE ACCURACY OR COMPLETENESS OF SCANNED COPIES OF THIS PLAN SHEET.

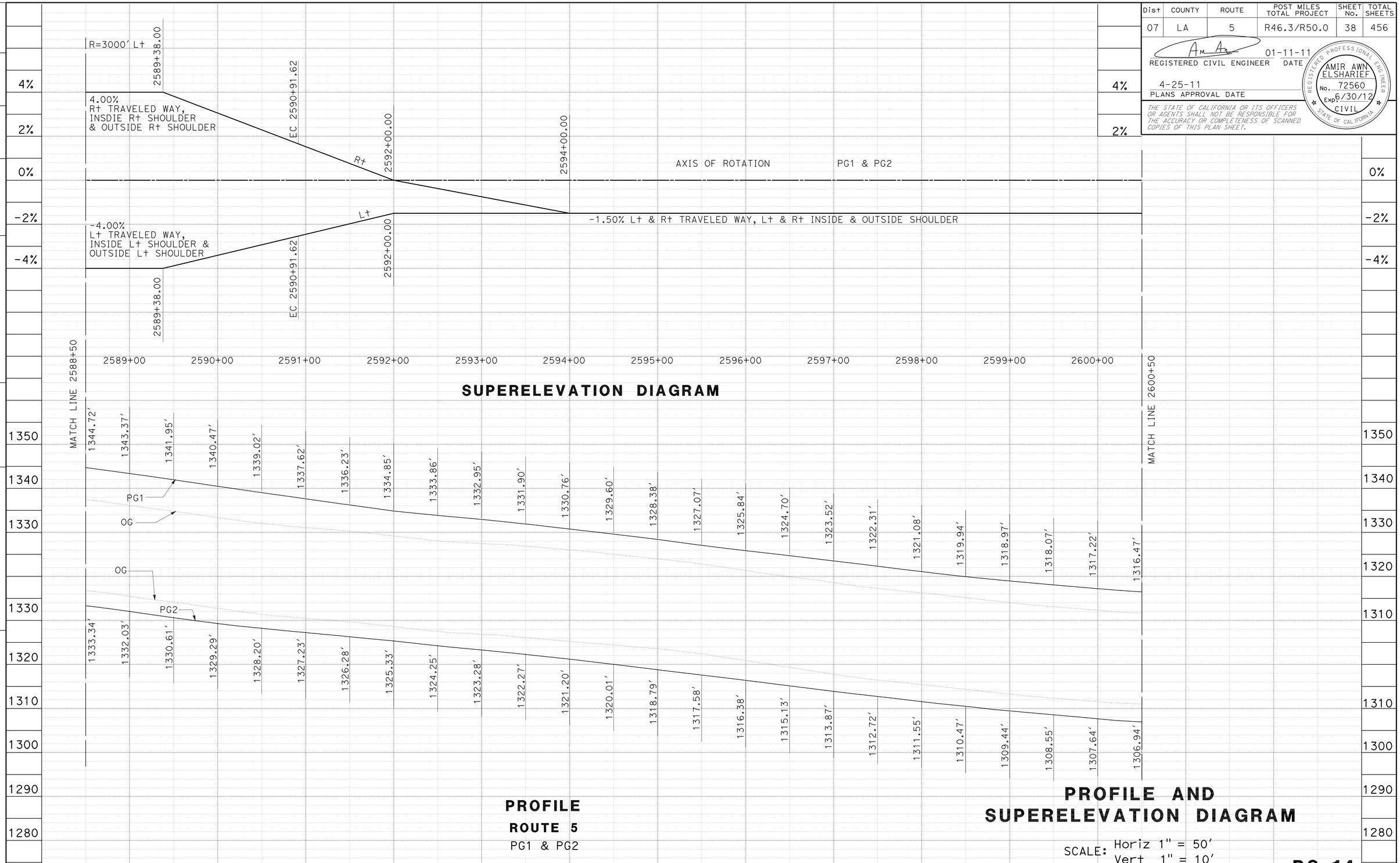

SUPERELEVATION DIAGRAM

PROFILE
ROUTE 5
PG1 & PG2

PROFILE AND SUPERELEVATION DIAGRAM

SCALE: Horiz 1" = 50'
Vert 1" = 10'

PS-14

STATE OF CALIFORNIA - DEPARTMENT OF TRANSPORTATION
Caltrans® **DESIGN**

FUNCTIONAL SUPERVISOR: CELINA AVILES
CALCULATED-DESIGNED BY: O. BLACKSTOCK
CHECKED BY
REVISED BY
DATE REVISED

LAST REVISION 03-29-10
DATE PLOTTED => 25-APR-2011
TIME PLOTTED => 13:17

Dist	COUNTY	ROUTE	POST MILES TOTAL PROJECT	SHEET No.	TOTAL SHEETS
07	LA	5	R46.3/R50.0	39	456

REGISTERED CIVIL ENGINEER 01-11-11 DATE

4-25-11
PLANS APPROVAL DATE

REGISTERED PROFESSIONAL ENGINEER
AMIR AWN ELSHARIEF
No. 72560
Exp. 6/30/12
CIVIL
STATE OF CALIFORNIA

THE STATE OF CALIFORNIA OR ITS OFFICERS OR AGENTS SHALL NOT BE RESPONSIBLE FOR THE ACCURACY OR COMPLETENESS OF SCANNED COPIES OF THIS PLAN SHEET.

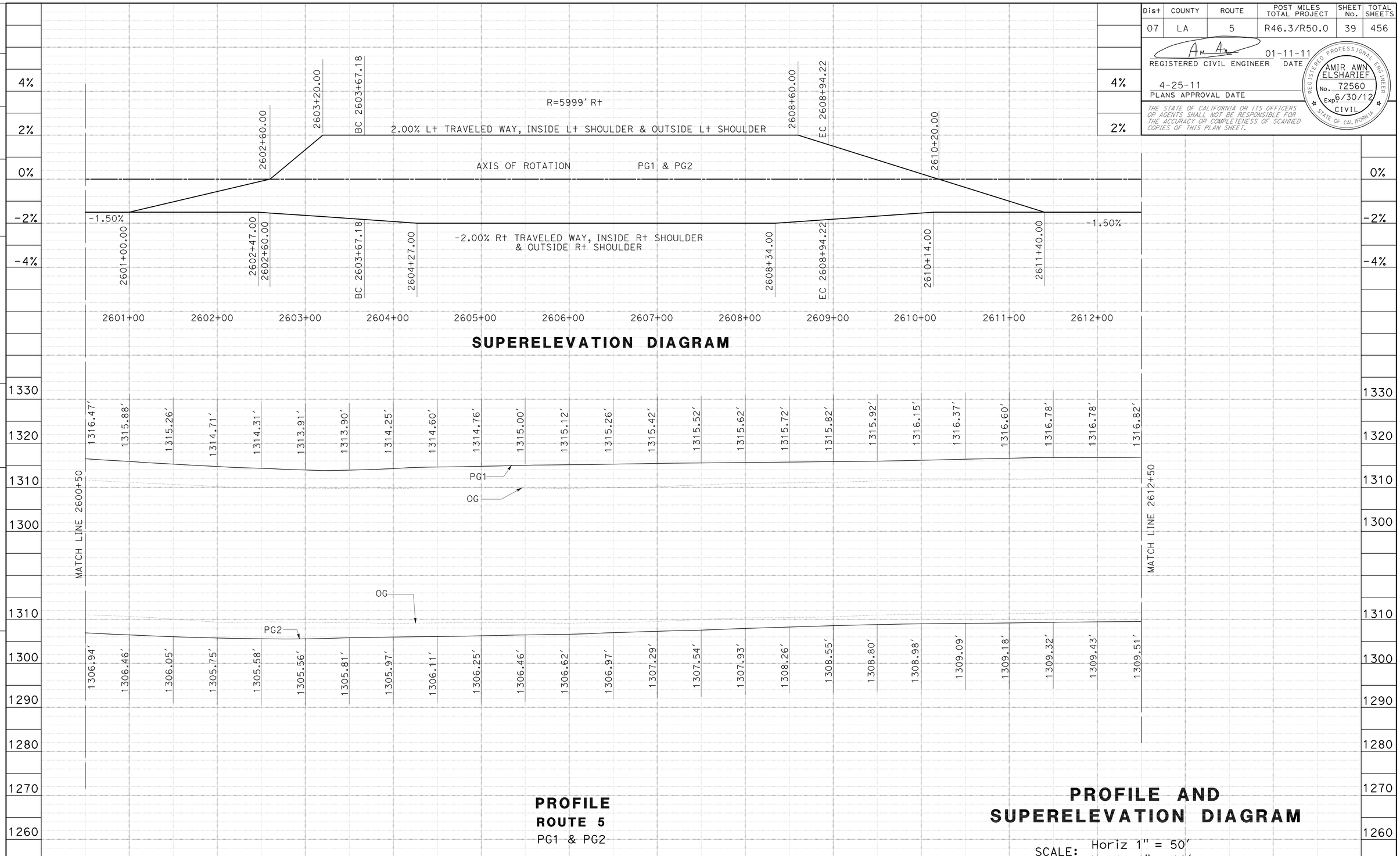

STATE OF CALIFORNIA - DEPARTMENT OF TRANSPORTATION
Caltrans
DESIGN

FUNCTIONAL SUPERVISOR: CELINA AVILES
CALCULATED-DESIGNED BY: O. BLACKSTOCK
CHECKED BY
REVISED BY
DATE REVISED

LAST REVISION 04-05-10
DATE PLOTTED => 25-APR-2011
TIME PLOTTED => 13:17

Dist	COUNTY	ROUTE	POST MILES TOTAL PROJECT	SHEET No.	TOTAL SHEETS
07	LA	5	R46.3/R50.0	40	456

REGISTERED CIVIL ENGINEER 01-11-11 DATE

4-25-11
PLANS APPROVAL DATE

REGISTERED PROFESSIONAL ENGINEER AMIR AWN ELSHARIEF No. 72560 Exp. 6/30/12 CIVIL STATE OF CALIFORNIA

THE STATE OF CALIFORNIA OR ITS OFFICERS OR AGENTS SHALL NOT BE RESPONSIBLE FOR THE ACCURACY OR COMPLETENESS OF SCANNED COPIES OF THIS PLAN SHEET.

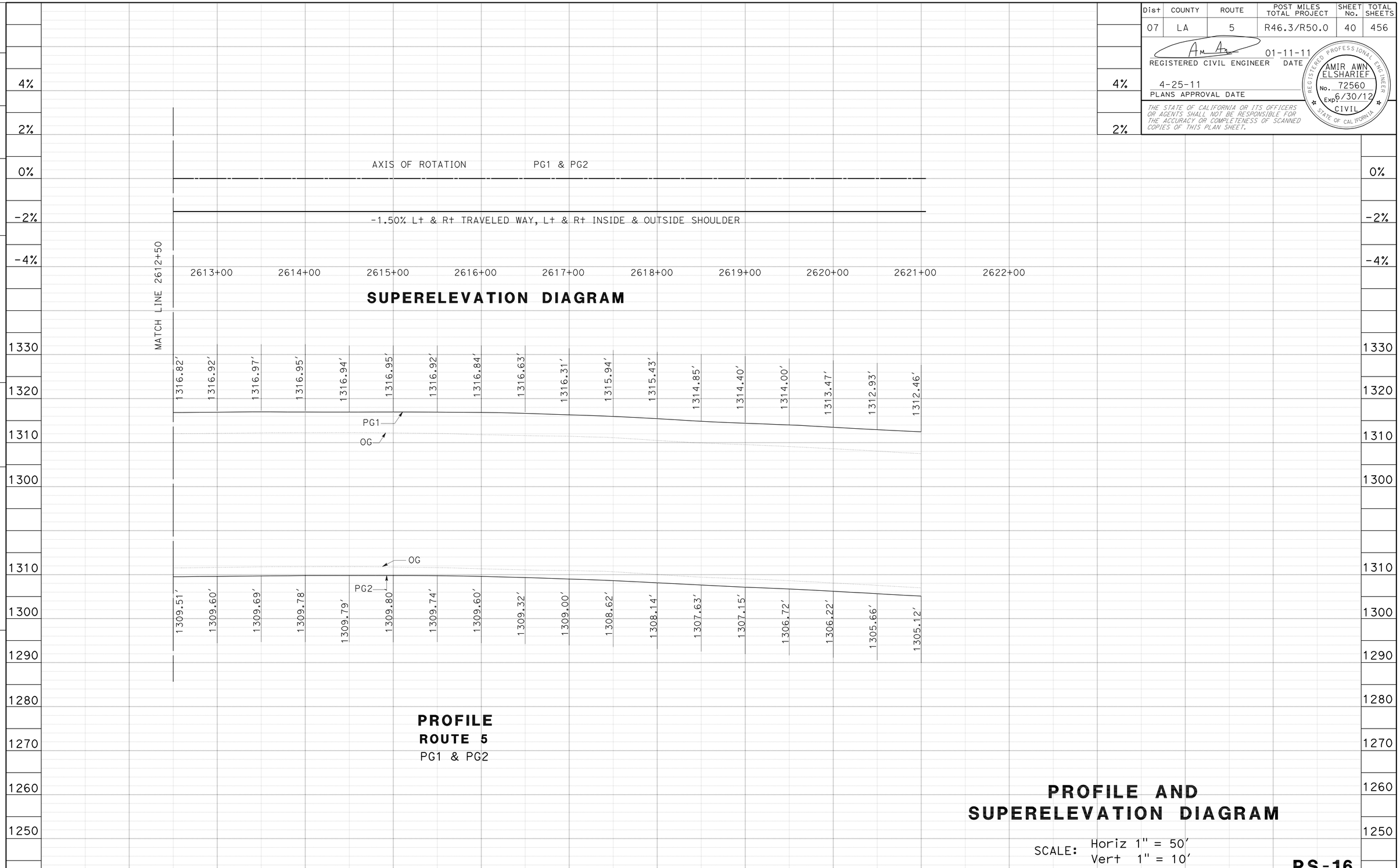

PROFILE AND SUPERELEVATION DIAGRAM

SCALE: Horiz 1" = 50'
Vert 1" = 10'

PS-16

REVISED BY | DATE REVISED

CALCULATED-DESIGNED BY: O. BLACKSTOCK
CHECKED BY

FUNCTIONAL SUPERVISOR: CELINA AVILES

STATE OF CALIFORNIA - DEPARTMENT OF TRANSPORTATION
Caltrans®
DESIGN

LAST REVISION 03-29-10
DATE PLOTTED => 25-APR-2011
TIME PLOTTED => 13:17

Dist	COUNTY	ROUTE	POST MILES TOTAL PROJECT	SHEET No.	TOTAL SHEETS
07	LA	5	R46.3/R50.0	41	456

REGISTERED CIVIL ENGINEER 01-11-11 DATE

4-25-11
PLANS APPROVAL DATE

REGISTERED PROFESSIONAL ENGINEER AMIR AWN ELSHARIEF No. 72560 Exp 6/30/12 CIVIL STATE OF CALIFORNIA

THE STATE OF CALIFORNIA OR ITS OFFICERS OR AGENTS SHALL NOT BE RESPONSIBLE FOR THE ACCURACY OR COMPLETENESS OF SCANNED COPIES OF THIS PLAN SHEET.

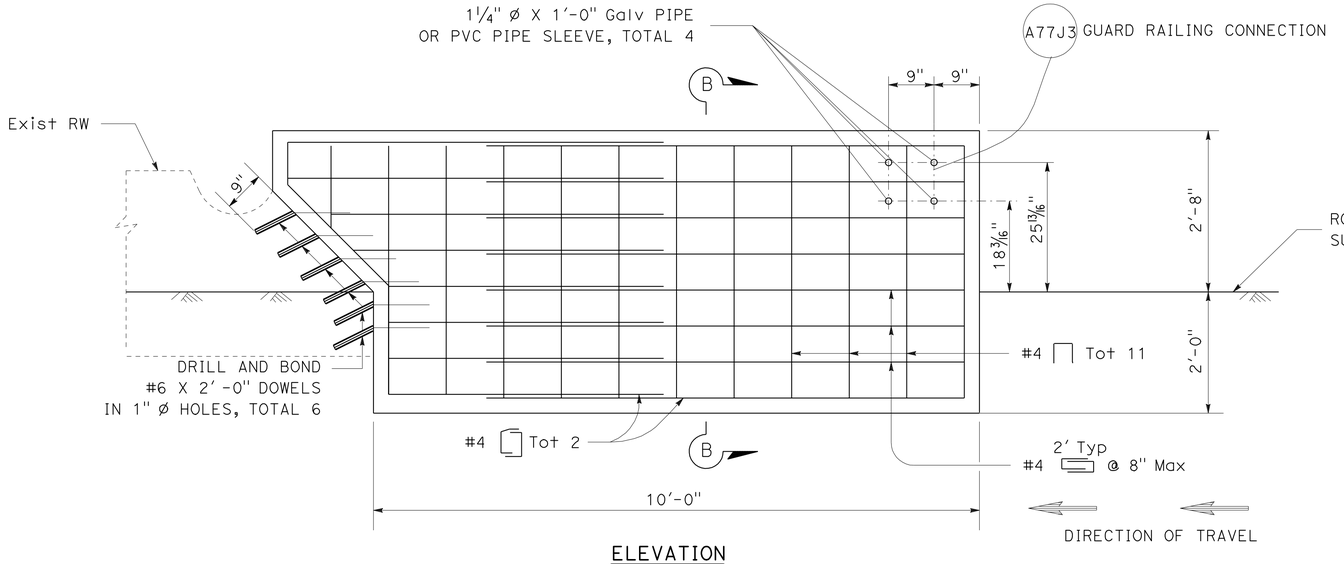

ELEVATION

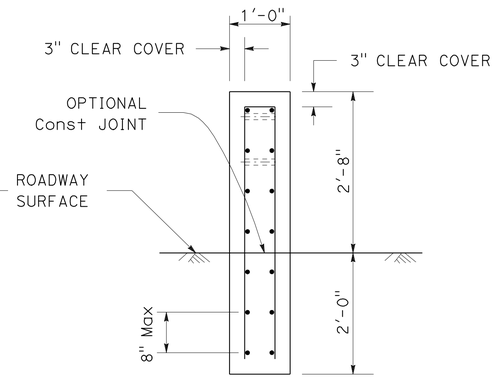

SECTION B-B

ANCHOR BLOCK AT WELDON CYN OC

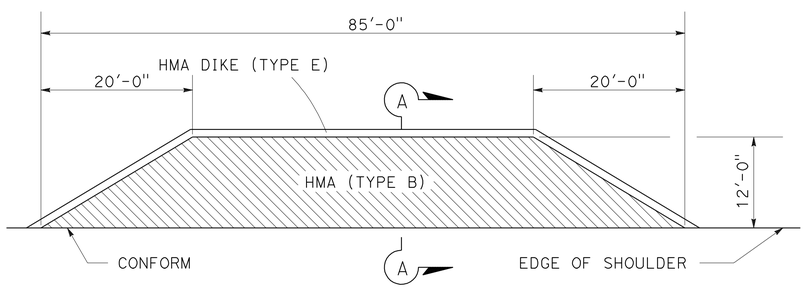

PLAN

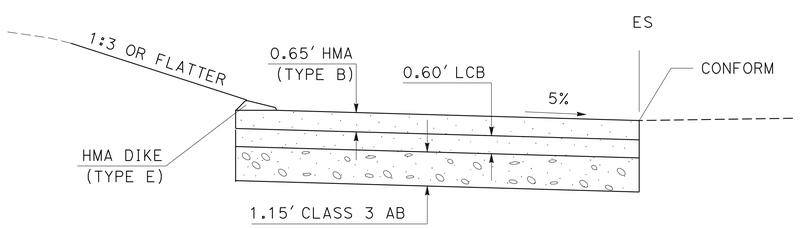

SECTION A-A

MAINTENANCE VEHICLE PULLOUT

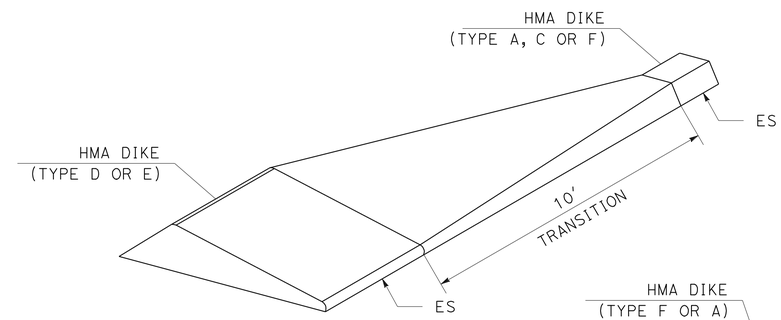

(TYPE D OR E) TO (TYPE A, C OR F)

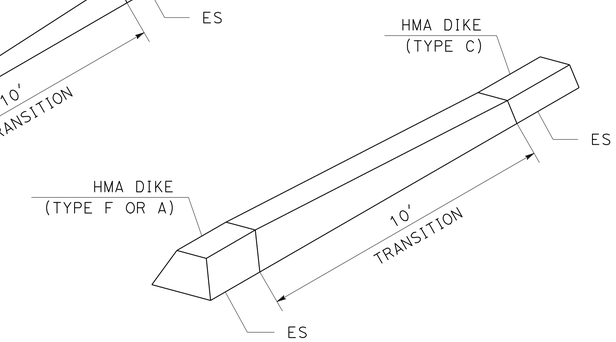

(TYPE F OR A) TO (TYPE C)

HMA DIKE TRANSITION

CONSTRUCTION DETAILS

NO SCALE

C-1

STATE OF CALIFORNIA - DEPARTMENT OF TRANSPORTATION
Caltrans® DESIGN

FUNCTIONAL SUPERVISOR: CELINA AVILES
CALCULATED-DESIGNED BY: AMIR ELSHARIEF
CHECKED BY: CUONG T. TRAN
REVISED BY: C. TRAN
DATE REVISED: 07/01/10

LAST REVISION 07-01-10 | DATE PLOTTED => 25-APR-2011 | TIME PLOTTED => 13:17

Dist	COUNTY	ROUTE	POST MILES TOTAL PROJECT	SHEET No.	TOTAL SHEETS
07	LA	5	R46.3/R50.0	42	456

REGISTERED CIVIL ENGINEER 01-11-11 DATE

4-25-11
PLANS APPROVAL DATE

REGISTERED PROFESSIONAL ENGINEER AMIR AWN ELSHARIEF No. 72560 Exp. 6/30/12 CIVIL STATE OF CALIFORNIA

THE STATE OF CALIFORNIA OR ITS OFFICERS OR AGENTS SHALL NOT BE RESPONSIBLE FOR THE ACCURACY OR COMPLETENESS OF SCANNED COPIES OF THIS PLAN SHEET.

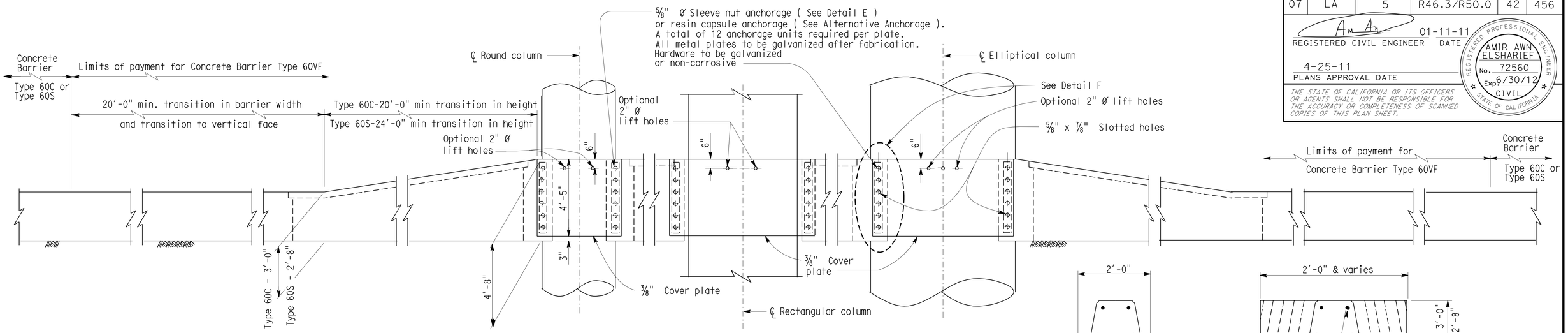

ELEVATION

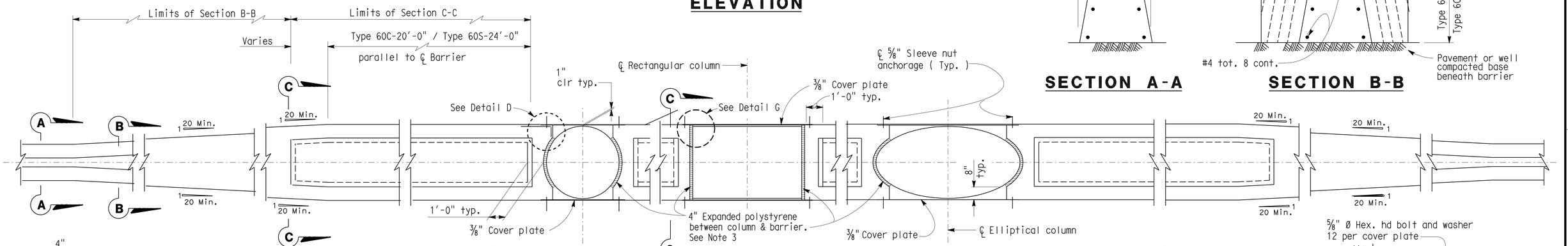

PLAN

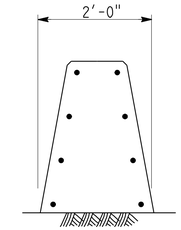

SECTION A-A

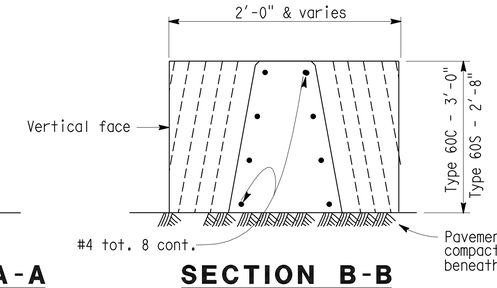

SECTION B-B

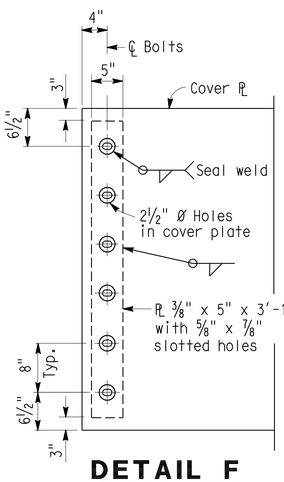

DETAIL F

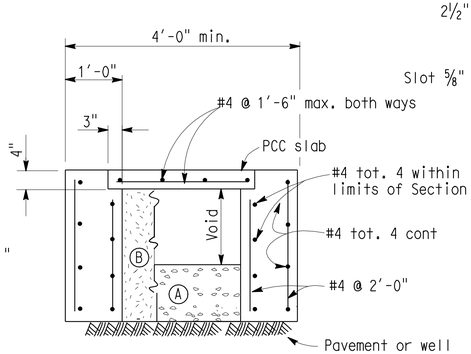

SECTION C-C

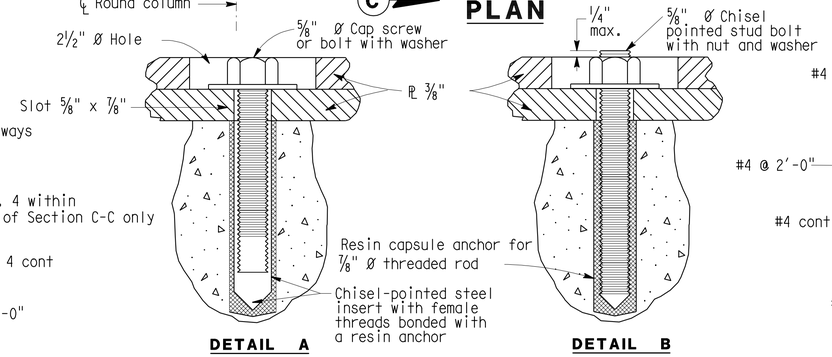

DETAIL A DETAIL B

ALTERNATIVE ANCHORAGE

NOTES: 1) Resin capsule anchorage is subject to approval of the Engineer. Installation procedures shall comply with manufacturer's instructions.

2) Detail B similar to Detail A except for anchorage devices.

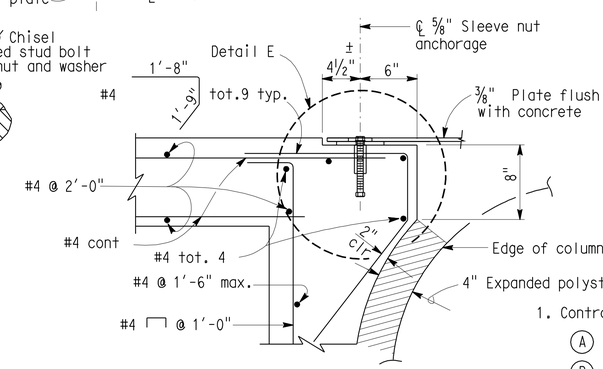

DETAIL D

NO SCALE

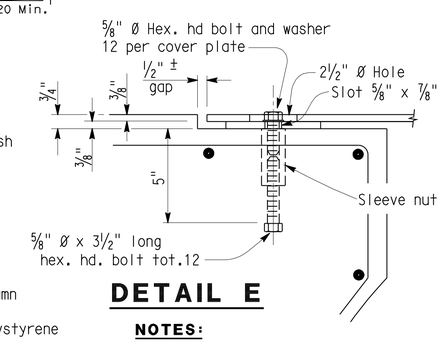

DETAIL E

NOTES:

1. Contractor options for fill between barrier walls.
   - (A) Place 2'-0" PCC at base between barrier walls.
   - (B) Place granular material from base to bottom of 4" cap.
2. Forming material for 4" cap may remain in place.
3. Enclose column with 4" expanded polystyrene at locations where concrete or cement treated base encases the column.
4. For Detail G, see Transition at Bridge Column sheet 2 of 2.

C-2

STANDARD DRAWING

FILE NO. xs16-090-1e

APPROVED BY T SATTER — RESPONSIBLE TECHNICAL SPECIALIST
APPROVAL DATE 4-15-08

RELEASED BY ROBERTO LACALLE — RESPONSIBLE OFFICE CHIEF
RELEASE DATE 4-15-08

STATE OF CALIFORNIA DEPARTMENT OF TRANSPORTATION

DIVISION OF ENGINEERING SERVICES

CU 07276
EA 2332A1

BRIDGE NO. 53-1796
POST MILE R46.58

BARRIER-CONCRETE TYPE 60VF
TRANSITION AT BRIDGE COLUMN

DISREGARD PRINTS BEARING EARLIER REVISION DATES

REVISION DATES (PRELIMINARY STAGE ONLY)

SHEET 1 OF 2

DS OSD 2147A (ENGLISH STANDARD DRAWING "XS" BORDER REV. 01/11/08)

ORIGINAL SCALE IN INCHES FOR REDUCED PLANS 0 1 2 3

USERNAME => trmnguye

72332Aga002.dgn

DATE PLOTTED => 25-APR-2011 TIME PLOTTED => 13:17

Dist	COUNTY	ROUTE	POST MILES TOTAL PROJECT	SHEET No.	TOTAL SHEETS
07	LA	5	R46.3/R50.0	43	456

REGISTERED CIVIL ENGINEER 01-11-11 DATE

4-25-11
PLANS APPROVAL DATE

REGISTERED PROFESSIONAL ENGINEER AMIR AWN ELSHARIEF No. 72560 Exp. 6/30/12 CIVIL STATE OF CALIFORNIA

THE STATE OF CALIFORNIA OR ITS OFFICERS OR AGENTS SHALL NOT BE RESPONSIBLE FOR THE ACCURACY OR COMPLETENESS OF SCANNED COPIES OF THIS PLAN SHEET.

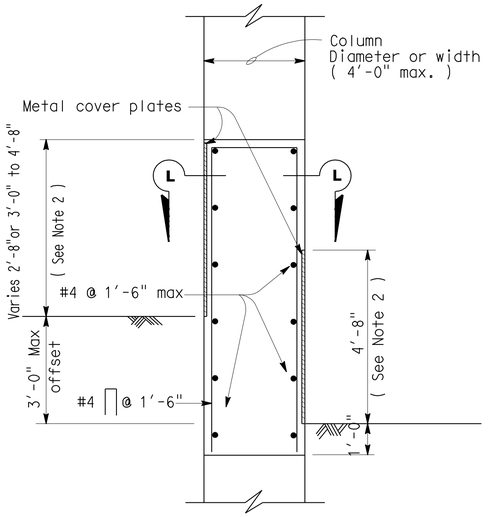

TYPICAL SECTION

Roadway offset 3'-0" or less
Column width less than 4'-0"

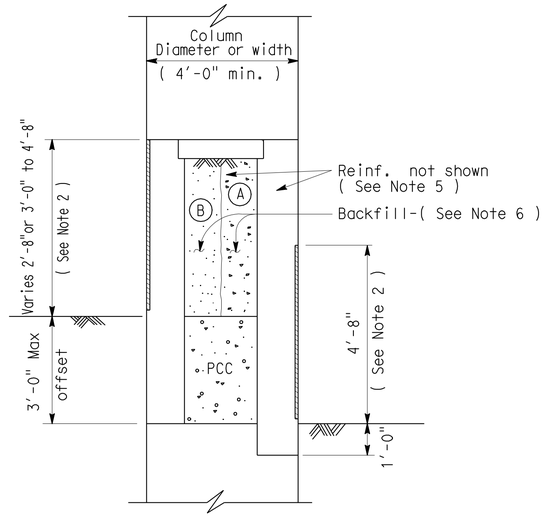

TYPICAL SECTION

Roadway offset 3'-0" or less
Column width less than 4'-0"

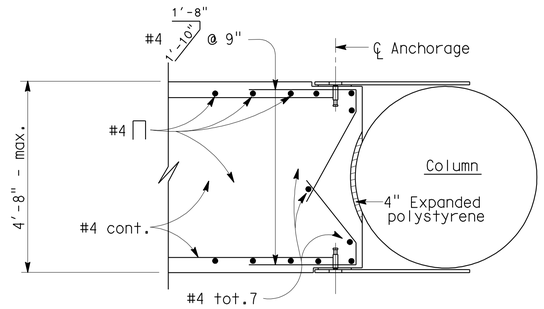

SECTION L-L

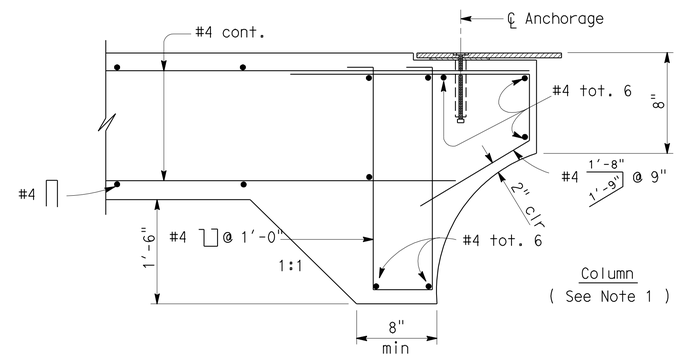

SECTION M-M

NOTES:

1. These details are to be combined with "Concrete Barrier Type 60VF" Sheet No.1. Details not indicated are similar to the details shown elsewhere on said sheet.
2. Metal plate details at columns shown on Concrete Barrier Type 60VF Sheet No.1.
3. For Retaining Wall Type 1A details, see Standard Plans.
4. Extend retaining wall footing dimension "B" to satisfy column width as indicated.
5. Extend reinforcement as shown in Section C-C on Concrete Barrier Type 60VF Sheet No.1.
6. Contractor options for fill between barrier walls:
   - (A) Place PCC between barrier walls, may be placed monolithic.
   - (B) Place granular material from base to bottom of concrete cap.

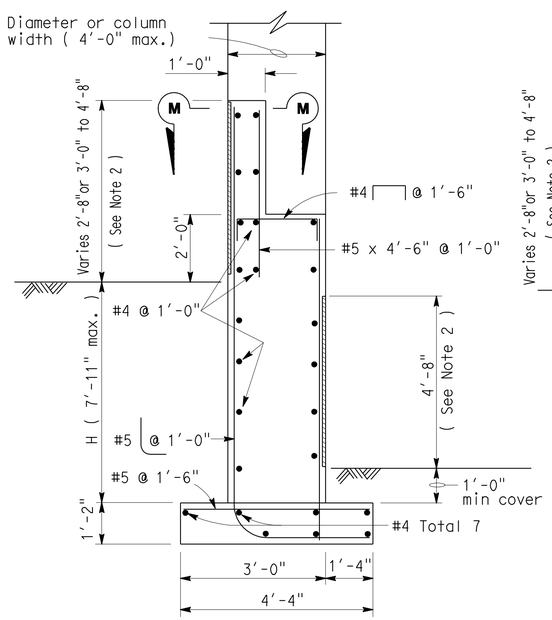

TYPICAL SECTION

Roadway offsets greater than 3'-0"
Column widths 4'-4" or less

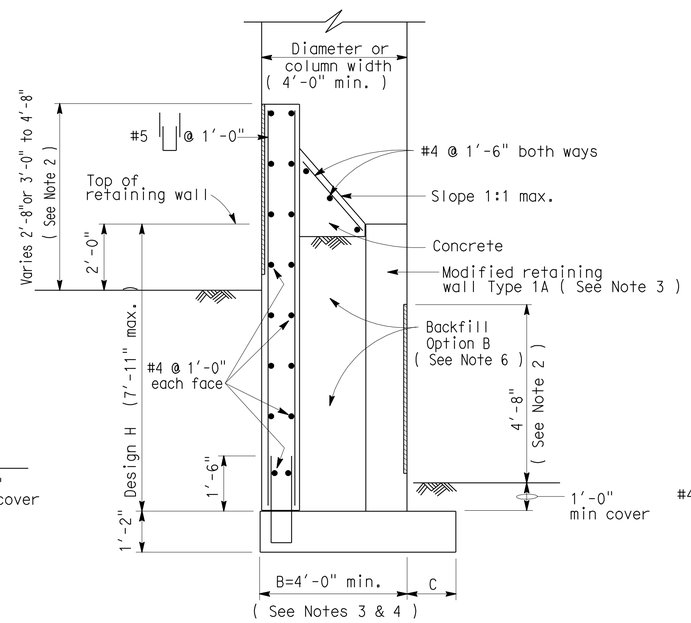

TYPICAL SECTION

Roadway offsets greater than 3'-0"
Column widths greater than 4'-0"

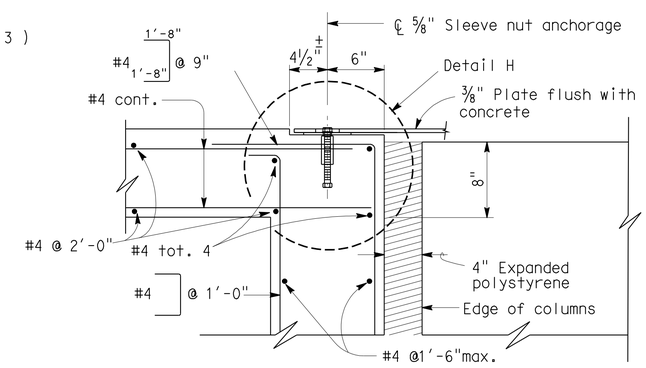

DETAIL G

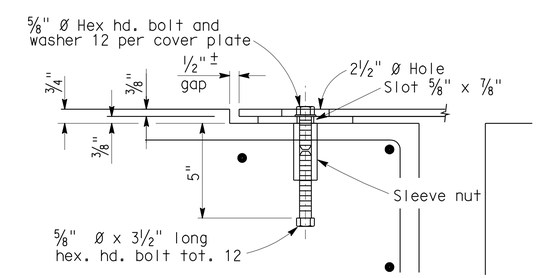

DETAIL H

C-3

NO SCALE

STANDARD DRAWING			
FILE NO. xs16-090-2e	APPROVED BY T SATTER, RESPONSIBLE TECHNICAL SPECIALIST	RELEASED BY ROBERTO LACALLE, RESPONSIBLE OFFICE CHIEF	
	APPROVAL DATE 4-15-08	RELEASE DATE 4-15-08	

STATE OF CALIFORNIA
DEPARTMENT OF TRANSPORTATION

DIVISION OF ENGINEERING SERVICES

BRIDGE NO.	BARRIER-CONCRETE TYPE 60VF
53-1796	
POST MILE	TRANSITION AT BRIDGE COLUMN
R46.58	

DS OSD 2147A (ENGLISH STANDARD DRAWING "XS" BORDER REV. 01/11/08)

ORIGINAL SCALE IN INCHES FOR REDUCED PLANS 0 1 2 3

CU 07276
EA 2332A1

DISREGARD PRINTS BEARING EARLIER REVISION DATES

REVISION DATES (PRELIMINARY STAGE ONLY)

SHEET 2 OF 2

USERNAME => trmnguye

72332Aga003.dgn

DATE PLOTTED => 25-APR-2011 TIME PLOTTED => 13:18

Dist	COUNTY	ROUTE	POST MILES TOTAL PROJECT	SHEET No.	TOTAL SHEETS
07	LA	5	R46.3/R50.0	44	456

LICENSED LANDSCAPE ARCHITECT

4-25-11
PLANS APPROVAL DATE

LICENSED LANDSCAPE ARCHITECT DUC T. TRINH No. 5457 Signature 11-30-11 Renewal Date 01-19-11 Date STATE OF CALIFORNIA

THE STATE OF CALIFORNIA OR ITS OFFICERS OR AGENTS SHALL NOT BE RESPONSIBLE FOR THE ACCURACY OR COMPLETENESS OF SCANNED COPIES OF THIS PLAN SHEET.

NOTES:

1. THE CONTRACTOR SHALL VERIFY ALL CONTROLLING FIELD DIMENSIONS BEFORE ORDERING OR FABRICATING ANY MATERIAL.
2. DETAIL SHOWN ALONG SLOPING SURFACE OF CONCRETE BARRIER.
3. ALL CONCRETE SURFACES ARE SMOOTH CONCRETE TEXTURE UNLESS OTHERWISE NOTED.
4. PATTERN ON BARRIER SHOULD BE FROM LEFT TO RIGHT.
5. ARCHITECTURAL TREATMENT SHALL BE STAIN COLOR CONCRETE, REFER TO SPECIAL PROVISIONS FOR COLOR.

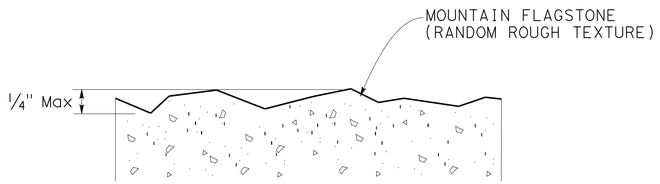

DETAIL 1
MOUNTAIN FLAGSTONE DETAIL

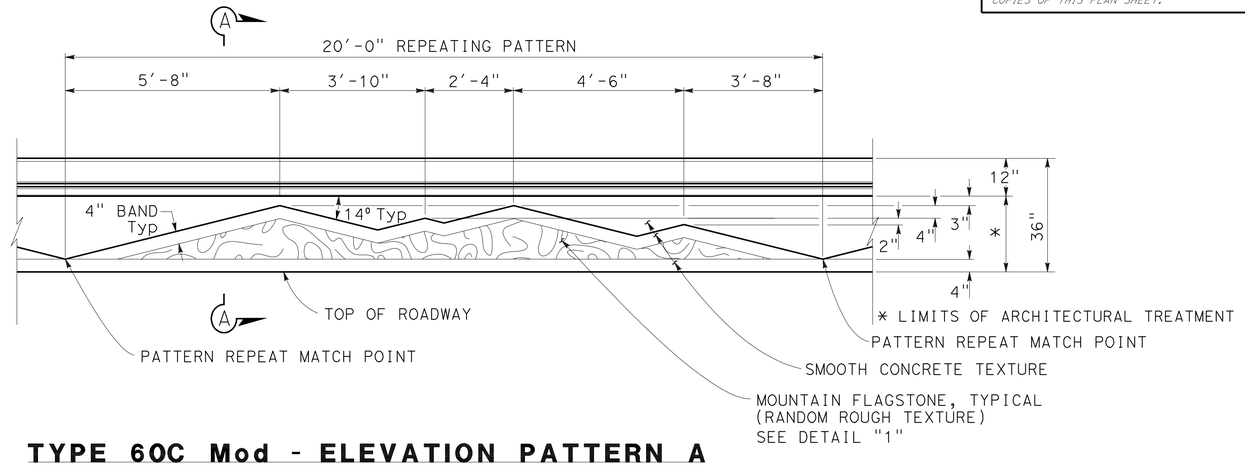

TYPE 60C Mod - ELEVATION PATTERN A

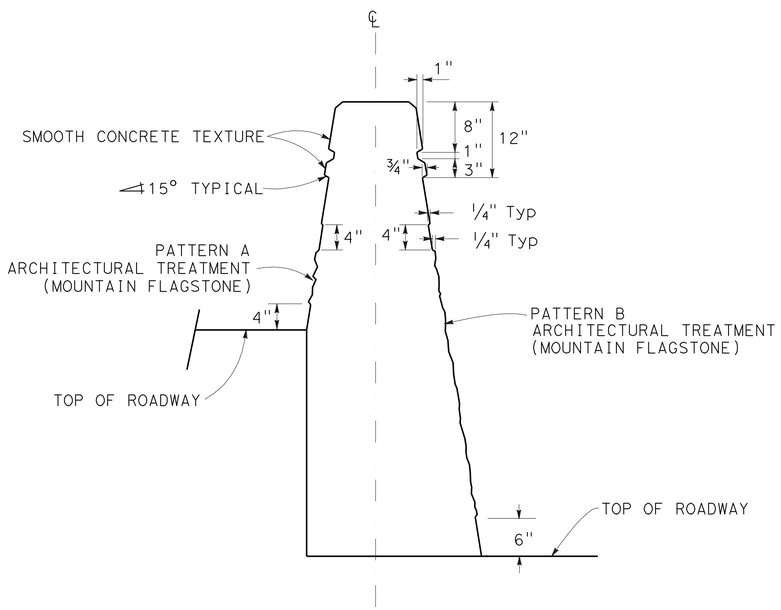

SECTION A-A

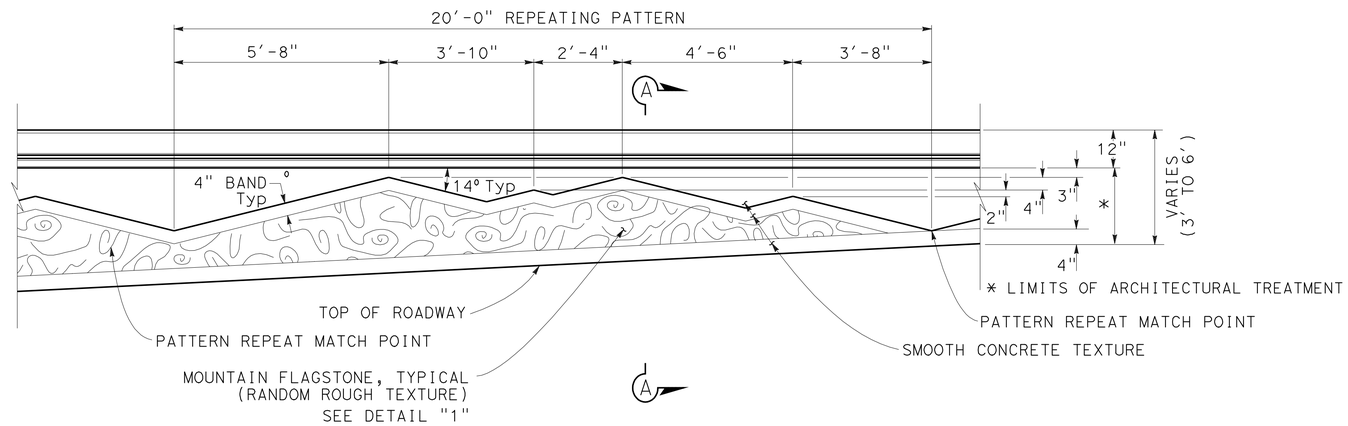

TYPE 60C Mod - ELEVATION PATTERN B

CONSTRUCTION DETAILS
ARCHITECTURAL TREATMENT
(CONCRETE BARRIER TYPE 60C Mod)

NO SCALE

C-4

STATE OF CALIFORNIA - DEPARTMENT OF TRANSPORTATION
Caltrans® LANDSCAPE ARCHITECTURE

SENIOR LANDSCAPE ARCHITECT: PATTY WATANABE
CALCULATED-DESIGNED BY: DONNY THAI
CHECKED BY: DUC T TRINH
REVISED BY
DATE REVISED

LAST REVISION 00-00-00
DATE PLOTTED => 25-APR-2011
TIME PLOTTED => 13:18

Dist	COUNTY	ROUTE	POST MILES TOTAL PROJECT	SHEET No.	TOTAL SHEETS
07	LA	5	R46.3/R50.0	45	456

REGISTERED CIVIL ENGINEER 01-11-11 DATE

4-25-11
PLANS APPROVAL DATE

REGISTERED PROFESSIONAL ENGINEER AMIR AWN ELSHARIEF No. 72560 Exp. 6/30/12 CIVIL STATE OF CALIFORNIA

THE STATE OF CALIFORNIA OR ITS OFFICERS OR AGENTS SHALL NOT BE RESPONSIBLE FOR THE ACCURACY OR COMPLETENESS OF SCANNED COPIES OF THIS PLAN SHEET.

1. Footing monolithic or doweled with 2-#8 x 8" @ 2'-0". The footing is required at concrete barrier ends and at interruptions in concrete barrier.
2. 10" Concrete barrier footing extends 10' back from structure.

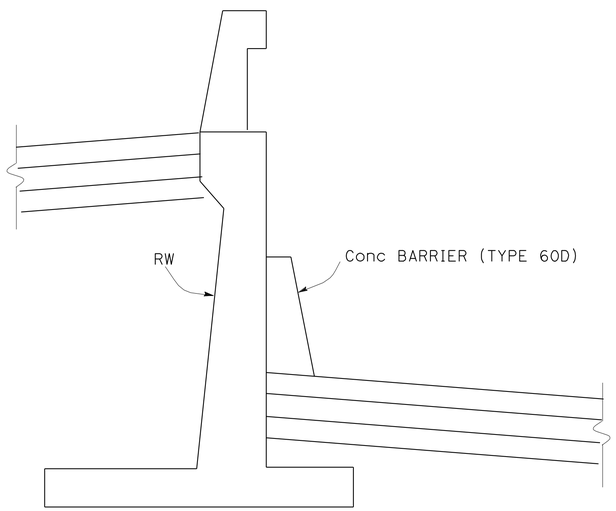

SECTION A-A

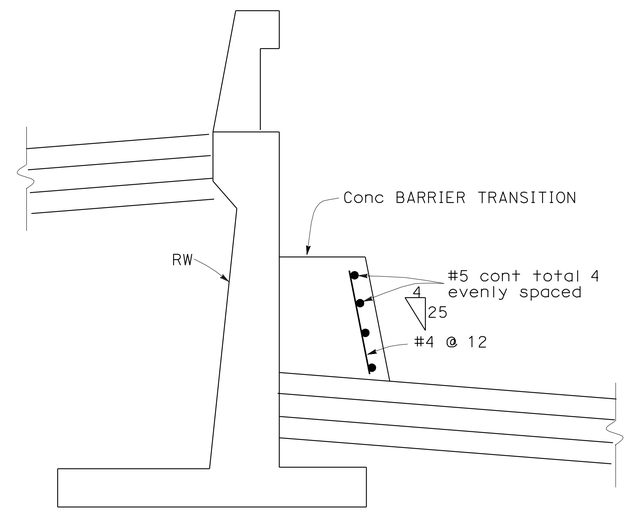

SECTION B-B

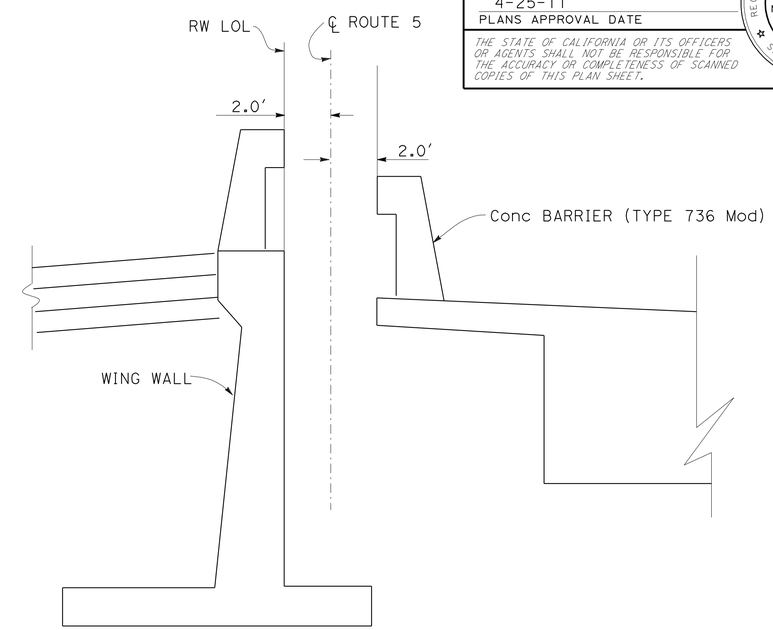

SECTION C-C

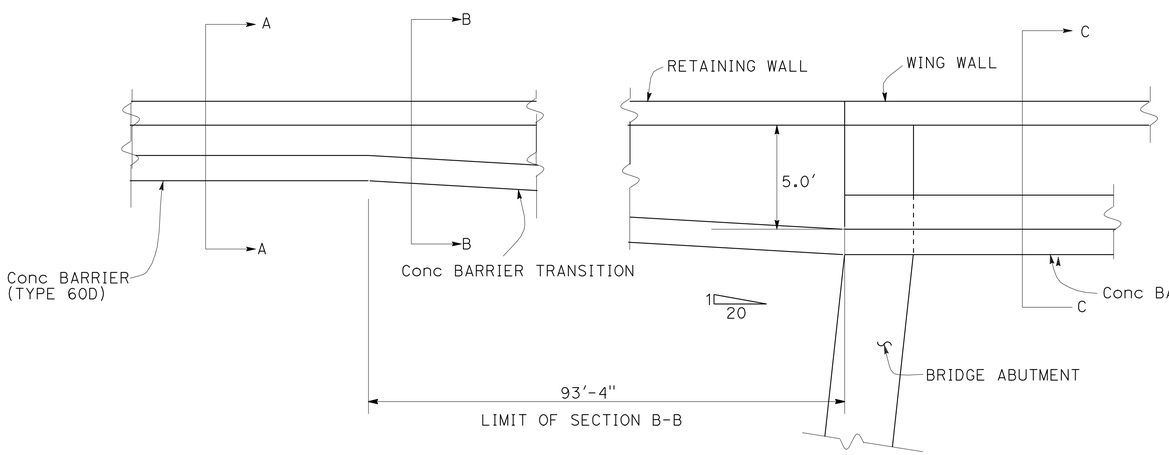

CONCRETE BARRIER TRANSITION AT GAVIN CANYON UC BRIDGE

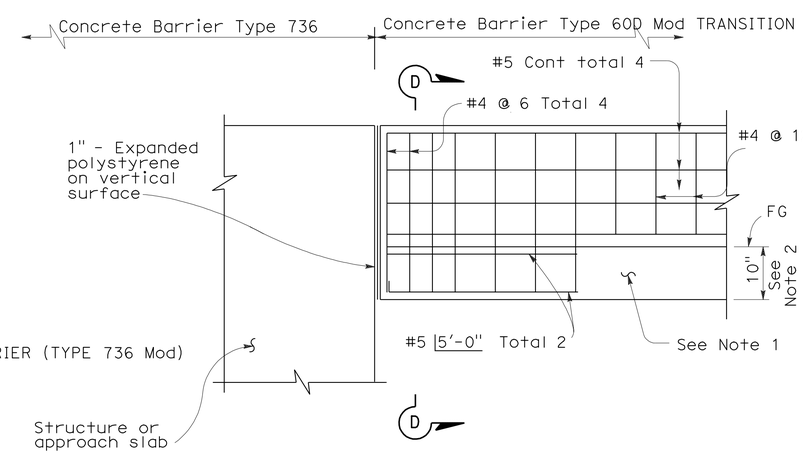

CONCRETE BARRIER TYPE 60D MODIFIED TRANSITION CONNECTION TO STRUCTURE

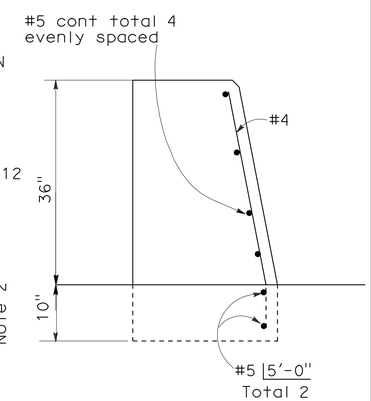

SECTION D-D

CONSTRUCTION DETAILS

NO SCALE

C-5

STATE OF CALIFORNIA - DEPARTMENT OF TRANSPORTATION
Caltrans
DESIGN

FUNCTIONAL SUPERVISOR: CELINA AVILES
CALCULATED-DESIGNED BY: AMIR ELSHARIEF
CHECKED BY
REVISED BY
DATE REVISED

LAST REVISION
DATE PLOTTED => 25-APR-2011
TIME PLOTTED => 13:18

Dist	COUNTY	ROUTE	POST MILES TOTAL PROJECT	SHEET No.	TOTAL SHEETS
07	LA	5	R46.3/R50.0	46	456

REGISTERED CIVIL ENGINEER 01-11-11 DATE

4-25-11
PLANS APPROVAL DATE

REGISTERED PROFESSIONAL ENGINEER AMIR AWN ELSHARIEF No. 72560 Exp 6/30/12 CIVIL STATE OF CALIFORNIA

THE STATE OF CALIFORNIA OR ITS OFFICERS OR AGENTS SHALL NOT BE RESPONSIBLE FOR THE ACCURACY OR COMPLETENESS OF SCANNED COPIES OF THIS PLAN SHEET.

NOTES:

1. Reinforcing stirrup not required for roadway offsets less than 1′-0″.
2. For roadway surfaces offset greater than 1½″ to 3″, no rebars required. For roadway surfaces offset greater than 3″ to 8″ use two #4 rebars at 3″ above the lower roadway surface. For roadway surfaces offset greater than 8″ to 12″, use two #4 rebars at 3″ above the lower roadway surface and two #4 rebars at 8″ above the lower roadway surface. For roadway surfaces offset greater than 12″ to 36″, use two #4 rebars at 3″ above the lower roadway surface and two #4 rebars at every 8″ increment vertical spacing above the first two #4 rebars.
3. Footing monolithic or doweled with 2-#8 x 8″ @ 2′-0″. The footing is required at concrete barrier ends and at interruptions in concrete barrier.
4. 10″ Concrete barrier footing extends 10′ back from structure.

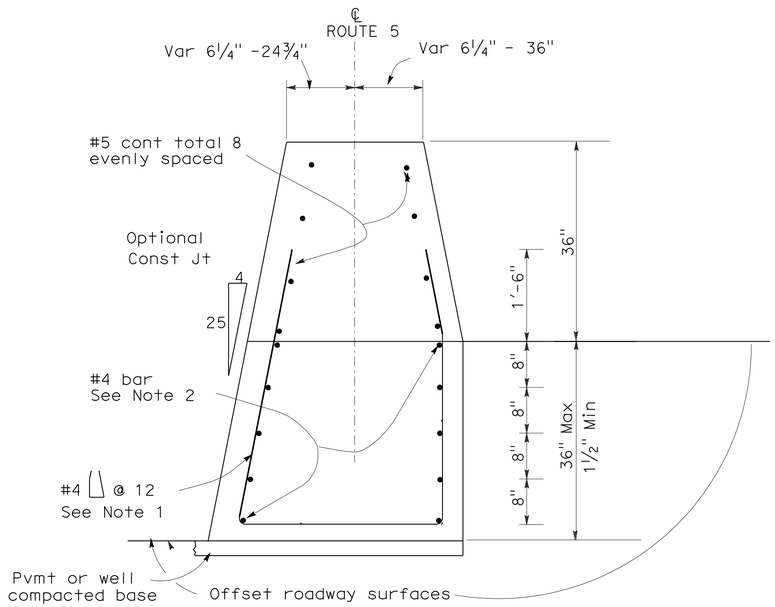

SECTION A-A

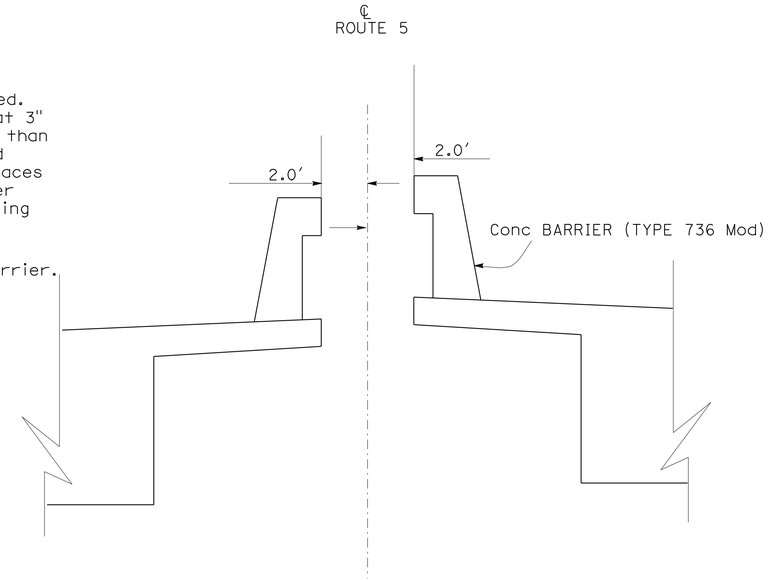

SECTION B-B

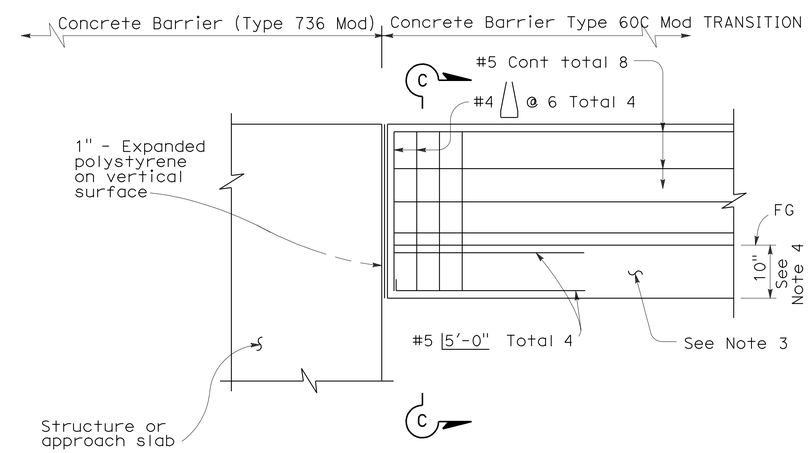

CONCRETE BARRIER TYPE 60C MODIFIED TRANSITION CONNECTION TO STRUCTURE

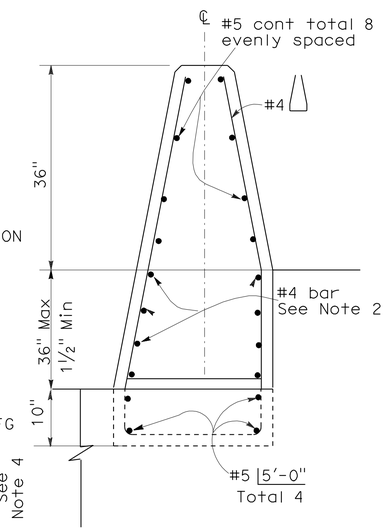

SECTION C-C

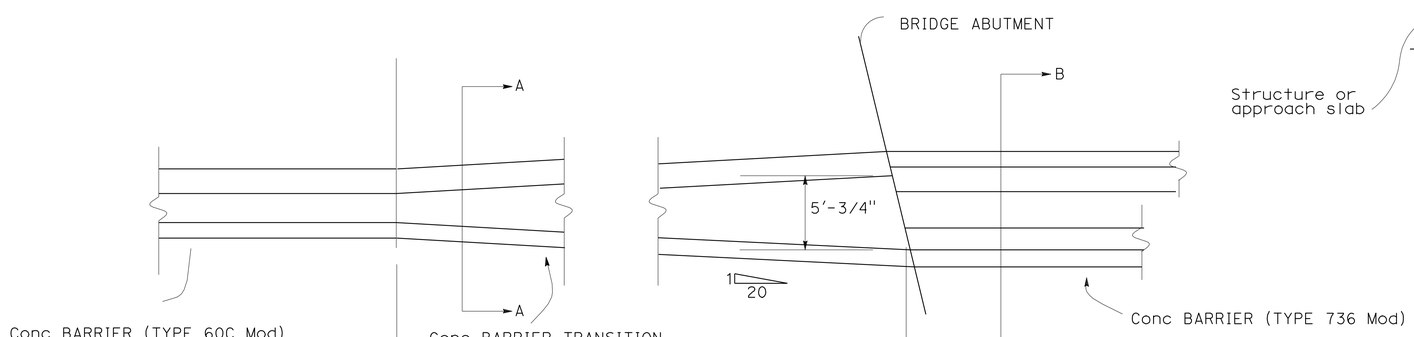

CONCRETE BARRIER TRANSITION FROM TYPE 60 C Mod TO TYPE 736 BARRIERS AT CALGROVE BLVD UC BRIDGE

CONSTRUCTION DETAILS

NO SCALE

C-6

STATE OF CALIFORNIA - DEPARTMENT OF TRANSPORTATION
Caltrans
DESIGN
FUNCTIONAL SUPERVISOR: CELINA AVILES
CALCULATED-DESIGNED BY: AMIR ELSHARIEF
CHECKED BY
REVISED BY
DATE REVISED

LAST REVISION
DATE PLOTTED => 26-APR-2011
TIME PLOTTED => 09:43

Dist	COUNTY	ROUTE	POST MILES TOTAL PROJECT	SHEET No.	TOTAL SHEETS
07	LA	5	R46.3/R50.0	47	456

REGISTERED CIVIL ENGINEER 01-11-11 DATE

4-25-11
PLANS APPROVAL DATE

REGISTERED PROFESSIONAL ENGINEER AMIR AWN ELSHARIEF No. 72560 Exp 6/30/12 CIVIL STATE OF CALIFORNIA

THE STATE OF CALIFORNIA OR ITS OFFICERS OR AGENTS SHALL NOT BE RESPONSIBLE FOR THE ACCURACY OR COMPLETENESS OF SCANNED COPIES OF THIS PLAN SHEET.

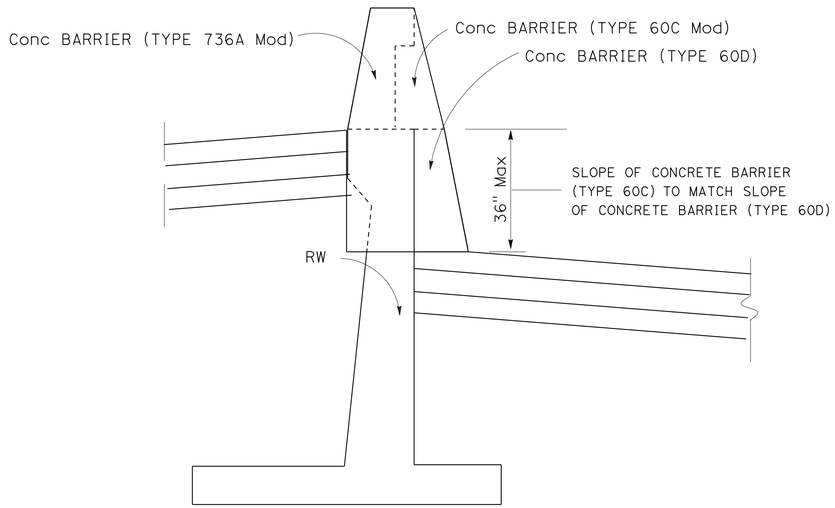

CONNECTION OF CONCRETE BARRIER (TYPE 60C Mod) AND TYPE 1 RETAINING WALL

STA 2456+02.75
STA 2578+97.00

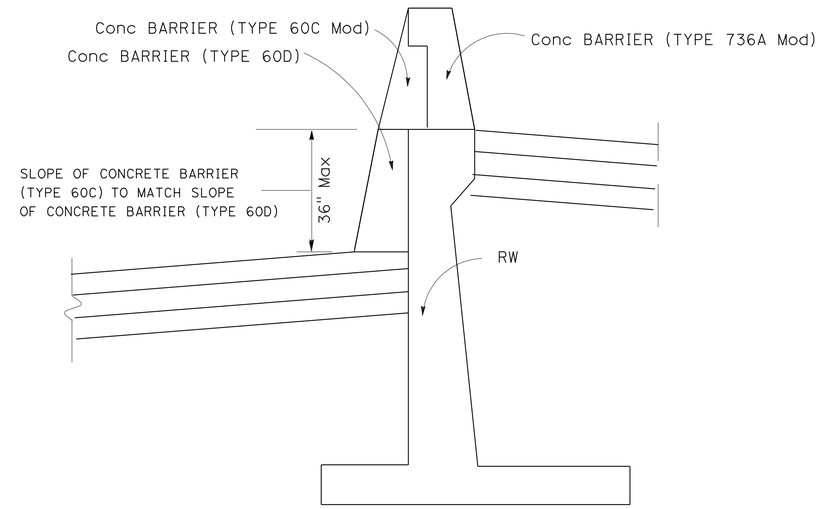

CONNECTION OF CONCRETE BARRIER (TYPE 60C Mod) AND TYPE 1 RETAINING WALL

STA 2574+89.95

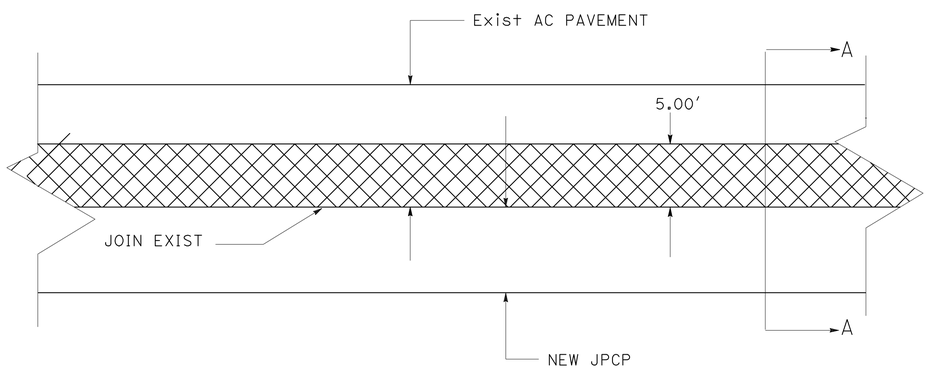

COLD PLANE AND HMA OVERLAY OF EXISTING AC PAVEMENT

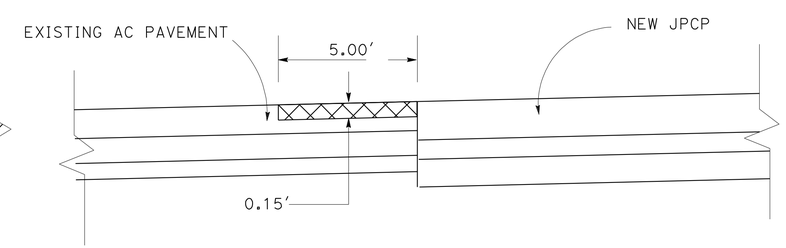

SECTION A-A

LEGEND

COLD PLANE AC PAVEMENT HMA (TYPE B)

GRIND EXISTING Conc PAVEMENT

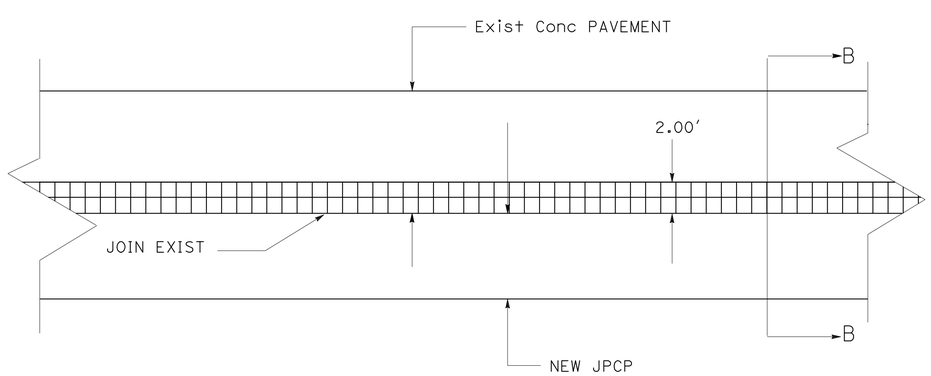

GRIND EXISTING CONCRETE PAVEMENT

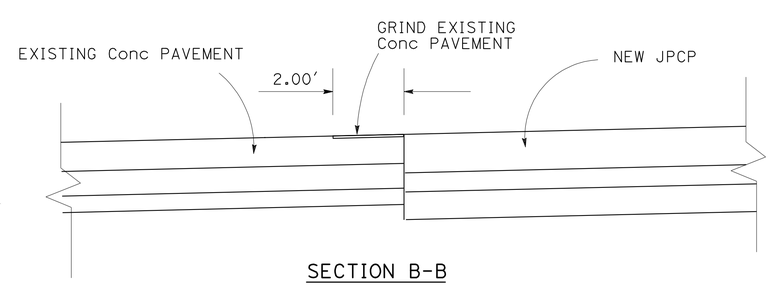

SECTION B-B

CONSTRUCTION DETAILS

NO SCALE

C-7

STATE OF CALIFORNIA - DEPARTMENT OF TRANSPORTATION
Caltrans
DESIGN

FUNCTIONAL SUPERVISOR: CELINA AVILES
CALCULATED-DESIGNED BY: AMIR ELSHARIEF
CHECKED BY
REVISED BY
DATE REVISED

LAST REVISION
DATE PLOTTED => 26-APR-2011
TIME PLOTTED => 09:43

Dist	COUNTY	ROUTE	POST MILES TOTAL PROJECT	SHEET No.	TOTAL SHEETS
07	LA	5	R46.3/R50.0	48	456

REGISTERED CIVIL ENGINEER 01-11-11 DATE

4-25-11
PLANS APPROVAL DATE

REGISTERED PROFESSIONAL ENGINEER
AMIR AWN ELSHARIEF
No. 72560
Exp 6/30/12
CIVIL
STATE OF CALIFORNIA

THE STATE OF CALIFORNIA OR ITS OFFICERS OR AGENTS SHALL NOT BE RESPONSIBLE FOR THE ACCURACY OR COMPLETENESS OF SCANNED COPIES OF THIS PLAN SHEET.

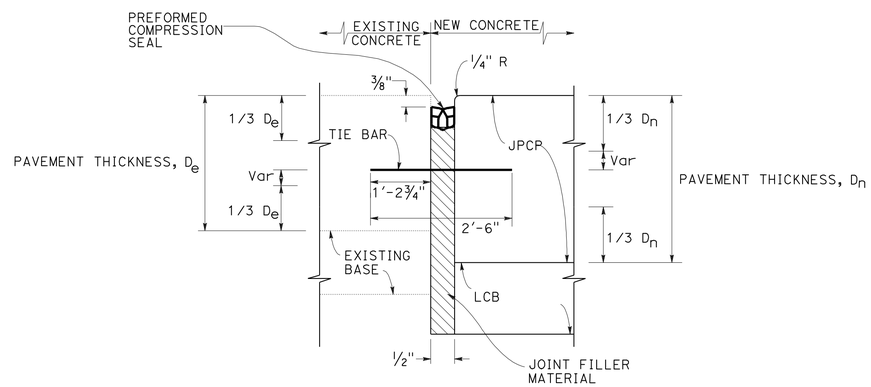

SEAL LONGITUDINAL ISOLATION WITH LOAD TRANSFER TIE BAR DETAIL

CONSTRUCTION DETAILS

NO SCALE

C-8

STATE OF CALIFORNIA - DEPARTMENT OF TRANSPORTATION
Caltrans
DESIGN

FUNCTIONAL SUPERVISOR: CELINA AVILES
CALCULATED-DESIGNED BY: AMIR ELSHARIEF
CHECKED BY
REVISED BY
DATE REVISED

LAST REVISION
DATE PLOTTED => 26-APR-2011
TIME PLOTTED => 09:43

Dist	COUNTY	ROUTE	POST MILES TOTAL PROJECT	SHEET No.	TOTAL SHEETS
07	LA	5	R46.3/R50.0	49	456

LICENSED LANDSCAPE ARCHITECT

4-25-11
PLANS APPROVAL DATE

LICENSED LANDSCAPE ARCHITECT
DUC T. TRINH
No. 5457
Signature
11-30-11
Renewal Date
01-19-11
Date
STATE OF CALIFORNIA

THE STATE OF CALIFORNIA OR ITS OFFICERS OR AGENTS SHALL NOT BE RESPONSIBLE FOR THE ACCURACY OR COMPLETENESS OF SCANNED COPIES OF THIS PLAN SHEET.

NOTES:

1. FOR ACCURATE RIGHT OF WAY AND ACCESS DATA, CONTACT RIGHT OF WAY ENGINEERING AT THE DISTRICT OFFICE.
2. EXISTING UTILITY FACILITY ARE NOT SHOWN ON THIS PLAN.

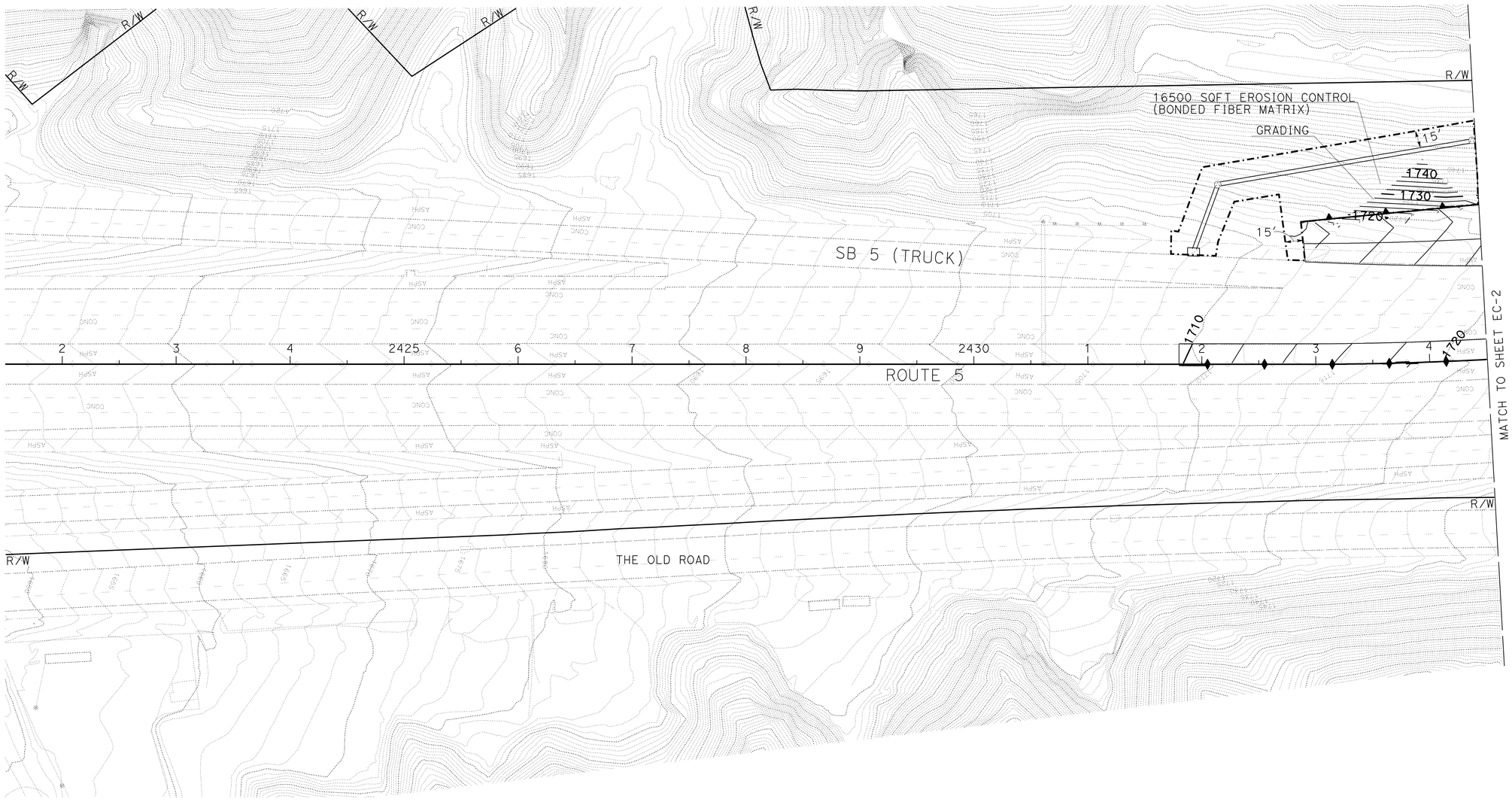

THIS PLAN ACCURATE FOR EROSION CONTROL WORK ONLY

EROSION CONTROL PLAN

SCALE: 1" = 50'

EC-1

STATE OF CALIFORNIA - DEPARTMENT OF TRANSPORTATION
Caltrans® LANDSCAPE ARCHITECTURE

SENIOR LANDSCAPE ARCHITECT: PATTY WATANABE

CALCULATED-DESIGNED BY: DONNY THAI
CHECKED BY: DUC T TRINH

REVISED BY
DATE REVISED

LAST REVISION 00-00-00
DATE PLOTTED => 26-APR-2011
TIME PLOTTED => 13:21

Dist	COUNTY	ROUTE	POST MILES TOTAL PROJECT	SHEET No.	TOTAL SHEETS
07	LA	5	R46.3/R50.0	50	456

LICENSED LANDSCAPE ARCHITECT

4-25-11
PLANS APPROVAL DATE

LICENSED LANDSCAPE ARCHITECT
DUC T. TRINH
No. 5457
Signature
11-30-11
Renewal Date
01-19-11
Date
STATE OF CALIFORNIA

THE STATE OF CALIFORNIA OR ITS OFFICERS OR AGENTS SHALL NOT BE RESPONSIBLE FOR THE ACCURACY OR COMPLETENESS OF SCANNED COPIES OF THIS PLAN SHEET.

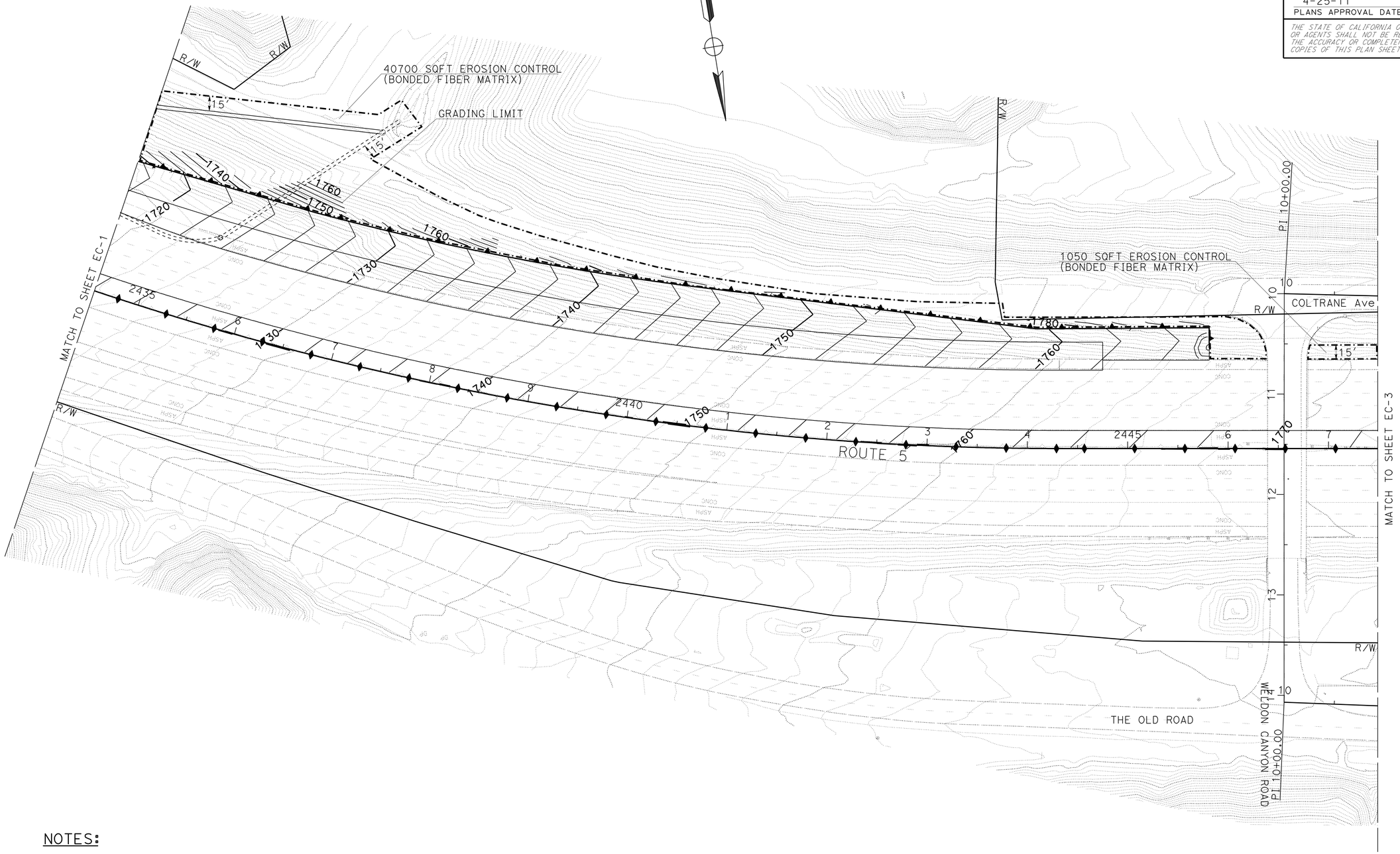

NOTES:

1. FOR ACCURATE RIGHT OF WAY AND ACCESS DATA, CONTACT RIGHT OF WAY ENGINEERING AT THE DISTRICT OFFICE.
2. EXISTING UTILITY FACILITY ARE NOT SHOWN ON THIS PLAN.

THIS PLAN ACCURATE FOR EROSION CONTROL WORK ONLY

EROSION CONTROL PLAN

SCALE: 1" = 50'

EC-2

STATE OF CALIFORNIA - DEPARTMENT OF TRANSPORTATION
Caltrans® LANDSCAPE ARCHITECTURE

SENIOR LANDSCAPE ARCHITECT: PATTY WATANABE
CALCULATED-DESIGNED BY: DONNY THAI
CHECKED BY: DUC T TRINH
REVISED BY
DATE REVISED

LAST REVISION 00-00-00
DATE PLOTTED => 26-APR-2011
TIME PLOTTED => 13:22

BORDER LAST REVISED 7/2/2010
USERNAME => trpierce
DGN FILE => 72332Age002.dgn
RELATIVE BORDER SCALE IS IN INCHES 0 1 2 3
UNIT 1851
PROJECT NUMBER & PHASE 07000003901

Dist	COUNTY	ROUTE	POST MILES TOTAL PROJECT	SHEET No.	TOTAL SHEETS
07	LA	5	R46.3/R50.0	51	456

LICENSED LANDSCAPE ARCHITECT

4-25-11
PLANS APPROVAL DATE

LICENSED LANDSCAPE ARCHITECT DUC T. TRINH No. 5457 Signature 11-30-11 Renewal Date 01-19-11 Date STATE OF CALIFORNIA

THE STATE OF CALIFORNIA OR ITS OFFICERS OR AGENTS SHALL NOT BE RESPONSIBLE FOR THE ACCURACY OR COMPLETENESS OF SCANNED COPIES OF THIS PLAN SHEET.

NOTES:

1. FOR ACCURATE RIGHT OF WAY AND ACCESS DATA, CONTACT RIGHT OF WAY ENGINEERING AT THE DISTRICT OFFICE.
2. EXISTING UTILITY FACILITY ARE NOT SHOWN ON THIS PLAN.

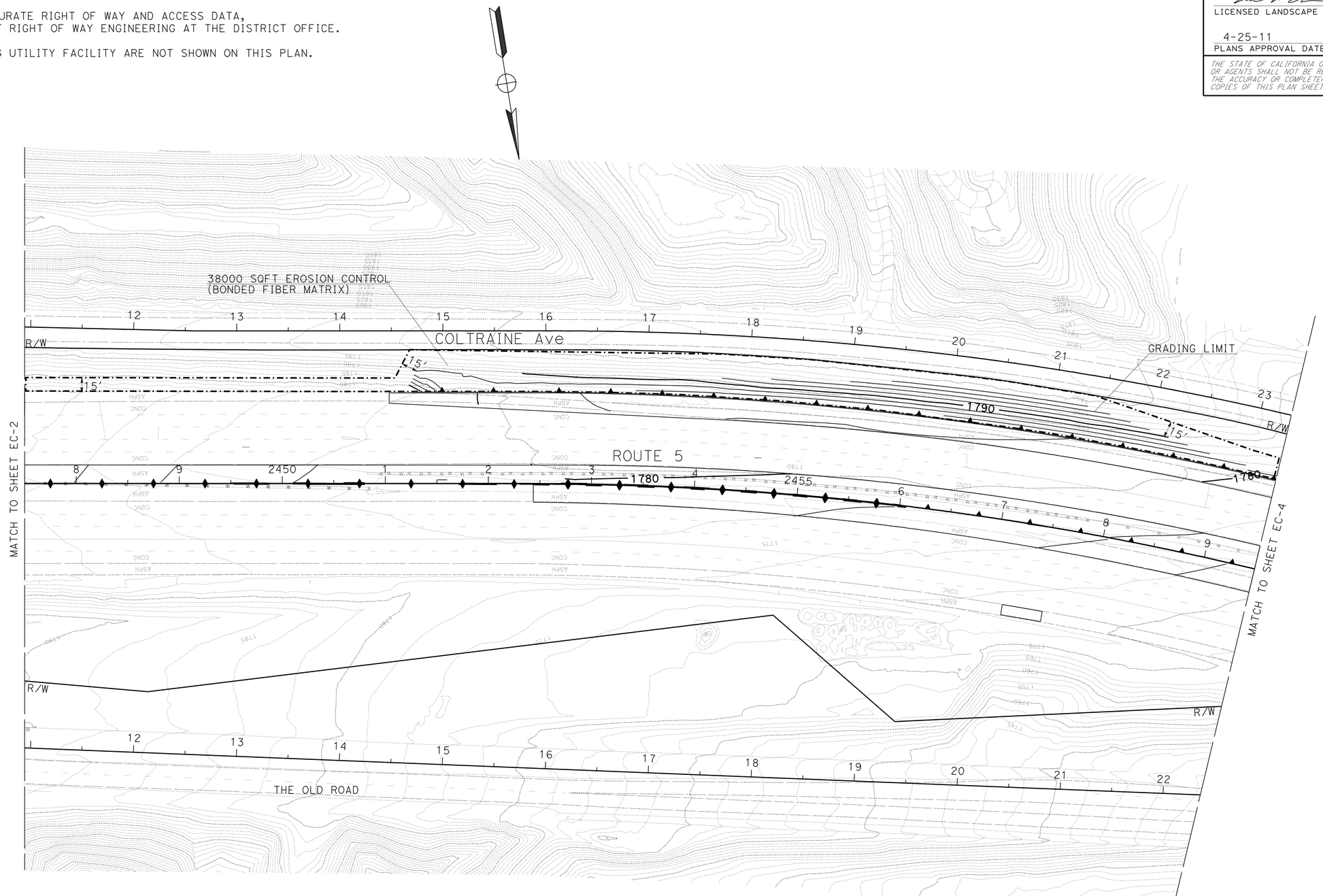

THIS PLAN ACCURATE FOR EROSION CONTROL WORK ONLY

EROSION CONTROL PLAN

SCALE: 1" = 50'

EC-3

REVISED BY	DATE REVISED

CALCULATED-DESIGNED BY	CHECKED BY
DONNY THAI	DUC T TRINH

SENIOR LANDSCAPE ARCHITECT: PATTY WATANABE

STATE OF CALIFORNIA - DEPARTMENT OF TRANSPORTATION
Caltrans® LANDSCAPE ARCHITECTURE

LAST REVISION 00-00-00 | DATE PLOTTED => 26-APR-2011 | TIME PLOTTED => 13:22

Dist	COUNTY	ROUTE	POST MILES TOTAL PROJECT	SHEET No.	TOTAL SHEETS
07	LA	5	R46.3/R50.0	52	456

LICENSED LANDSCAPE ARCHITECT

4-25-11
PLANS APPROVAL DATE

LICENSED LANDSCAPE ARCHITECT
DUC T. TRINH
No. 5457
Signature
11-30-11
Renewal Date
01-19-11
Date
STATE OF CALIFORNIA

THE STATE OF CALIFORNIA OR ITS OFFICERS OR AGENTS SHALL NOT BE RESPONSIBLE FOR THE ACCURACY OR COMPLETENESS OF SCANNED COPIES OF THIS PLAN SHEET.

NOTES:

1. FOR ACCURATE RIGHT OF WAY AND ACCESS DATA, CONTACT RIGHT OF WAY ENGINEERING AT THE DISTRICT OFFICE.
2. EXISTING UTILITY FACILITY ARE NOT SHOWN ON THIS PLAN.

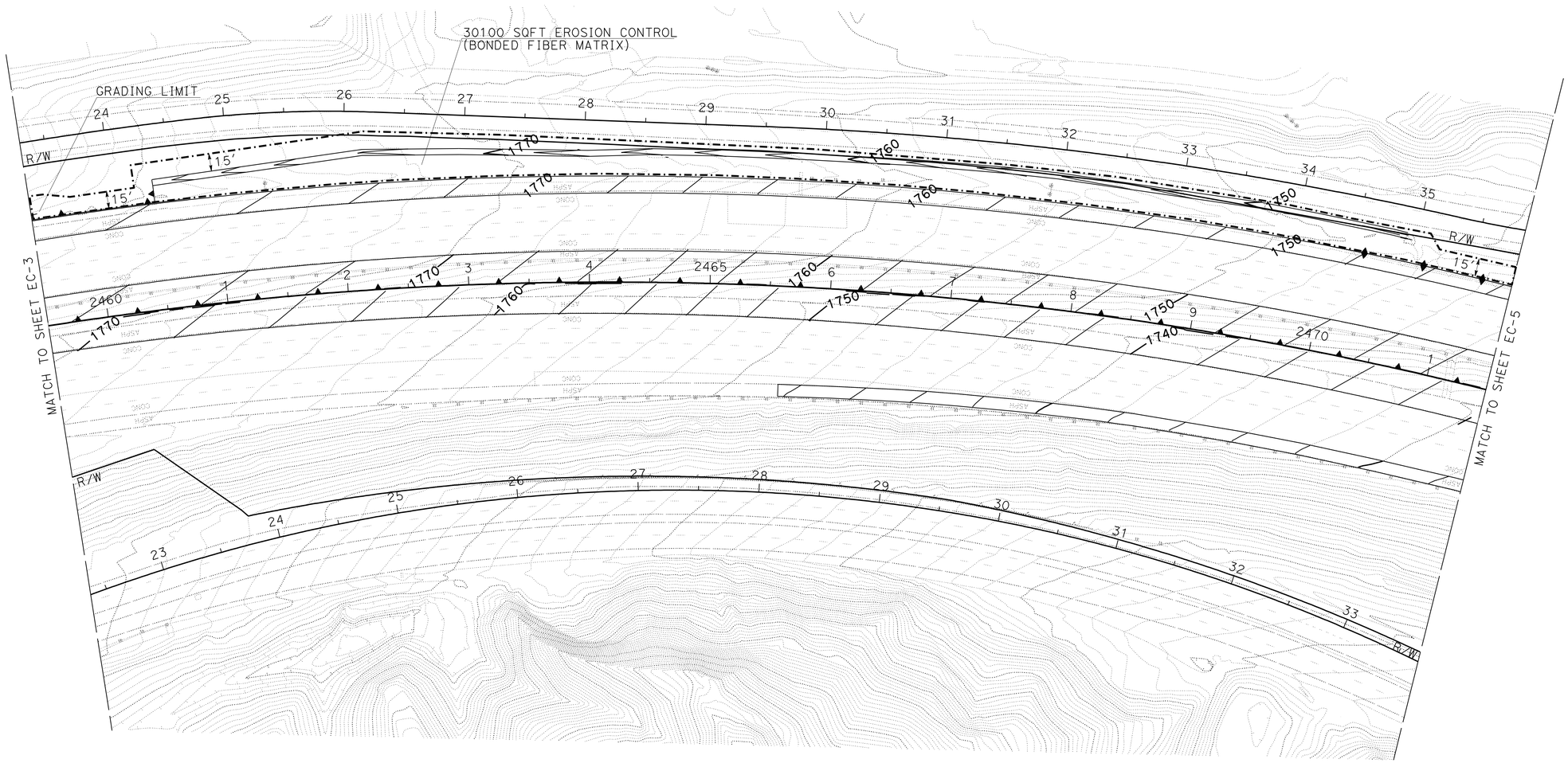

THIS PLAN ACCURATE FOR EROSION CONTROL WORK ONLY

EROSION CONTROL PLAN

SCALE: 1" = 50'

EC-4

STATE OF CALIFORNIA - DEPARTMENT OF TRANSPORTATION
Caltrans® LANDSCAPE ARCHITECTURE

SENIOR LANDSCAPE ARCHITECT: PATTY WATANABE

CALCULATED-DESIGNED BY: DONNY THAI
CHECKED BY: DUC T TRINH

REVISED BY
DATE REVISED

LAST REVISION 00-00-00
DATE PLOTTED => 26-APR-2011
TIME PLOTTED => 13:22

Dist	COUNTY	ROUTE	POST MILES TOTAL PROJECT	SHEET No.	TOTAL SHEETS
07	LA	5	R46.3/R50.0	53	456

LICENSED LANDSCAPE ARCHITECT

4-25-11
PLANS APPROVAL DATE

LICENSED LANDSCAPE ARCHITECT
DUC T. TRINH
No. 5457
Signature
11-30-11
Renewal Date
01-19-11
Date
STATE OF CALIFORNIA

THE STATE OF CALIFORNIA OR ITS OFFICERS OR AGENTS SHALL NOT BE RESPONSIBLE FOR THE ACCURACY OR COMPLETENESS OF SCANNED COPIES OF THIS PLAN SHEET.

NOTES:

1. FOR ACCURATE RIGHT OF WAY AND ACCESS DATA, CONTACT RIGHT OF WAY ENGINEERING AT THE DISTRICT OFFICE.
2. EXISTING UTILITY FACILITY ARE NOT SHOWN ON THIS PLAN.

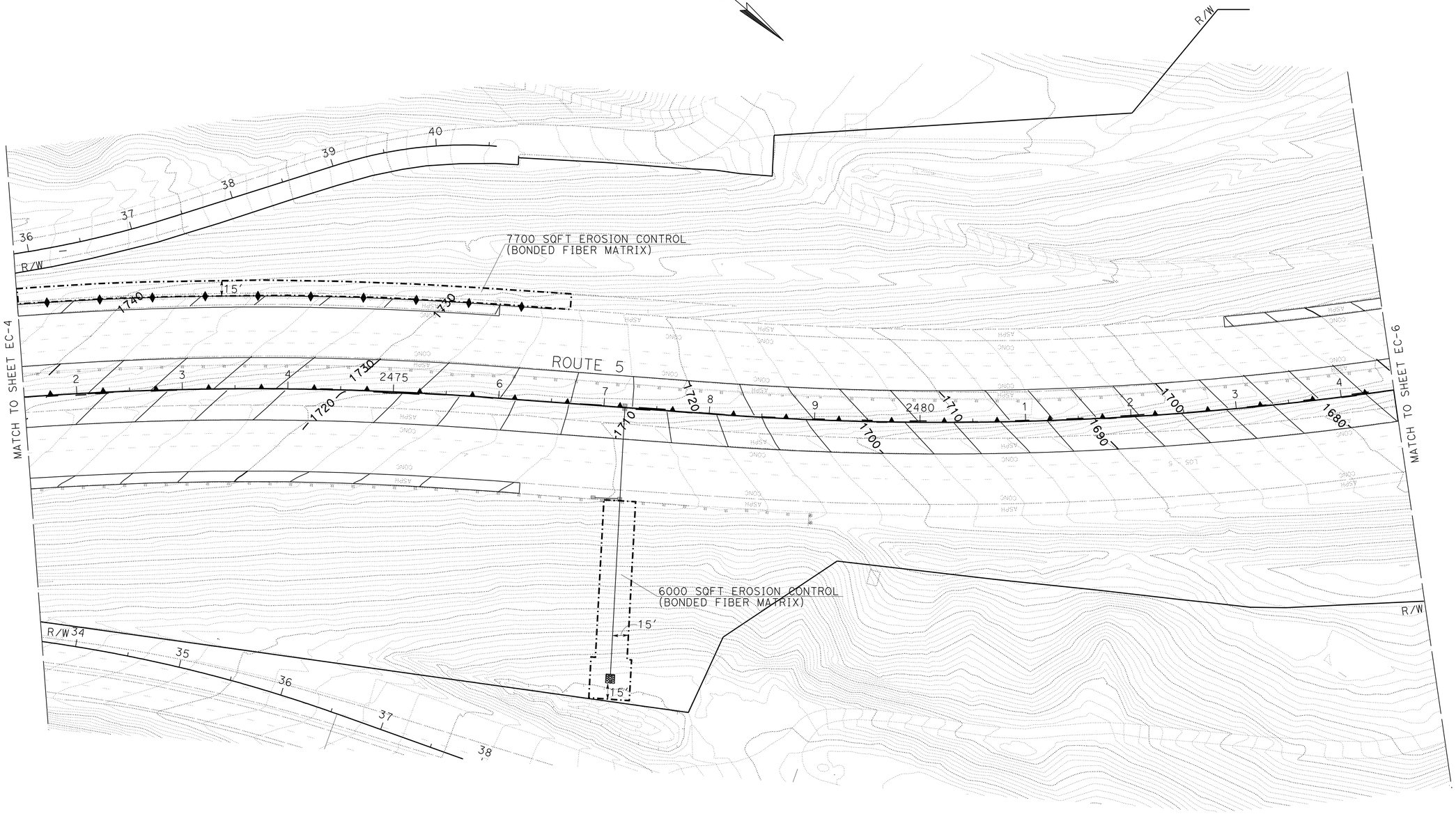

THIS PLAN ACCURATE FOR EROSION CONTROL WORK ONLY

EROSION CONTROL PLAN

SCALE: 1" = 50'

EC-5

REVISED BY	DATE REVISED

DONNY THAI — DUC T TRINH — CALCULATED-DESIGNED BY — CHECKED BY

SENIOR LANDSCAPE ARCHITECT — PATTY WATANABE

STATE OF CALIFORNIA - DEPARTMENT OF TRANSPORTATION
Caltrans® LANDSCAPE ARCHITECTURE

LAST REVISION 00-00-00 — DATE PLOTTED => 26-APR-2011 — TIME PLOTTED => 13:22

Dist	COUNTY	ROUTE	POST MILES TOTAL PROJECT	SHEET No.	TOTAL SHEETS
07	LA	5	R46.3/R50.0	54	456

LICENSED LANDSCAPE ARCHITECT

4-25-11
PLANS APPROVAL DATE

LICENSED LANDSCAPE ARCHITECT
DUC T. TRINH
No. 5457
Signature
11-30-11
Renewal Date
01-19-11
Date
STATE OF CALIFORNIA

THE STATE OF CALIFORNIA OR ITS OFFICERS OR AGENTS SHALL NOT BE RESPONSIBLE FOR THE ACCURACY OR COMPLETENESS OF SCANNED COPIES OF THIS PLAN SHEET.

NOTES:

1. FOR ACCURATE RIGHT OF WAY AND ACCESS DATA, CONTACT RIGHT OF WAY ENGINEERING AT THE DISTRICT OFFICE.
2. EXISTING UTILITY FACILITY ARE NOT SHOWN ON THIS PLAN.

THIS PLAN ACCURATE FOR EROSION CONTROL WORK ONLY

EROSION CONTROL PLAN

SCALE: 1" = 50'

EC-6

STATE OF CALIFORNIA - DEPARTMENT OF TRANSPORTATION
Caltrans® LANDSCAPE ARCHITECTURE

SENIOR LANDSCAPE ARCHITECT: PATTY WATANABE

CALCULATED-DESIGNED BY: DONNY THAI
CHECKED BY: DUC T TRINH

REVISED BY
DATE REVISED

LAST REVISION 00-00-00
DATE PLOTTED => 26-APR-2011
TIME PLOTTED => 13:22

Dist	COUNTY	ROUTE	POST MILES TOTAL PROJECT	SHEET No.	TOTAL SHEETS
07	LA	5	R46.3/R50.0	55	456

LICENSED LANDSCAPE ARCHITECT

4-25-11
PLANS APPROVAL DATE

LICENSED LANDSCAPE ARCHITECT
DUC T. TRINH
No. 5457
Signature
11-30-11
Renewal Date
01-19-11
Date
STATE OF CALIFORNIA

THE STATE OF CALIFORNIA OR ITS OFFICERS OR AGENTS SHALL NOT BE RESPONSIBLE FOR THE ACCURACY OR COMPLETENESS OF SCANNED COPIES OF THIS PLAN SHEET.

NOTES:

1. FOR ACCURATE RIGHT OF WAY AND ACCESS DATA, CONTACT RIGHT OF WAY ENGINEERING AT THE DISTRICT OFFICE.
2. EXISTING UTILITY FACILITY ARE NOT SHOWN ON THIS PLAN.

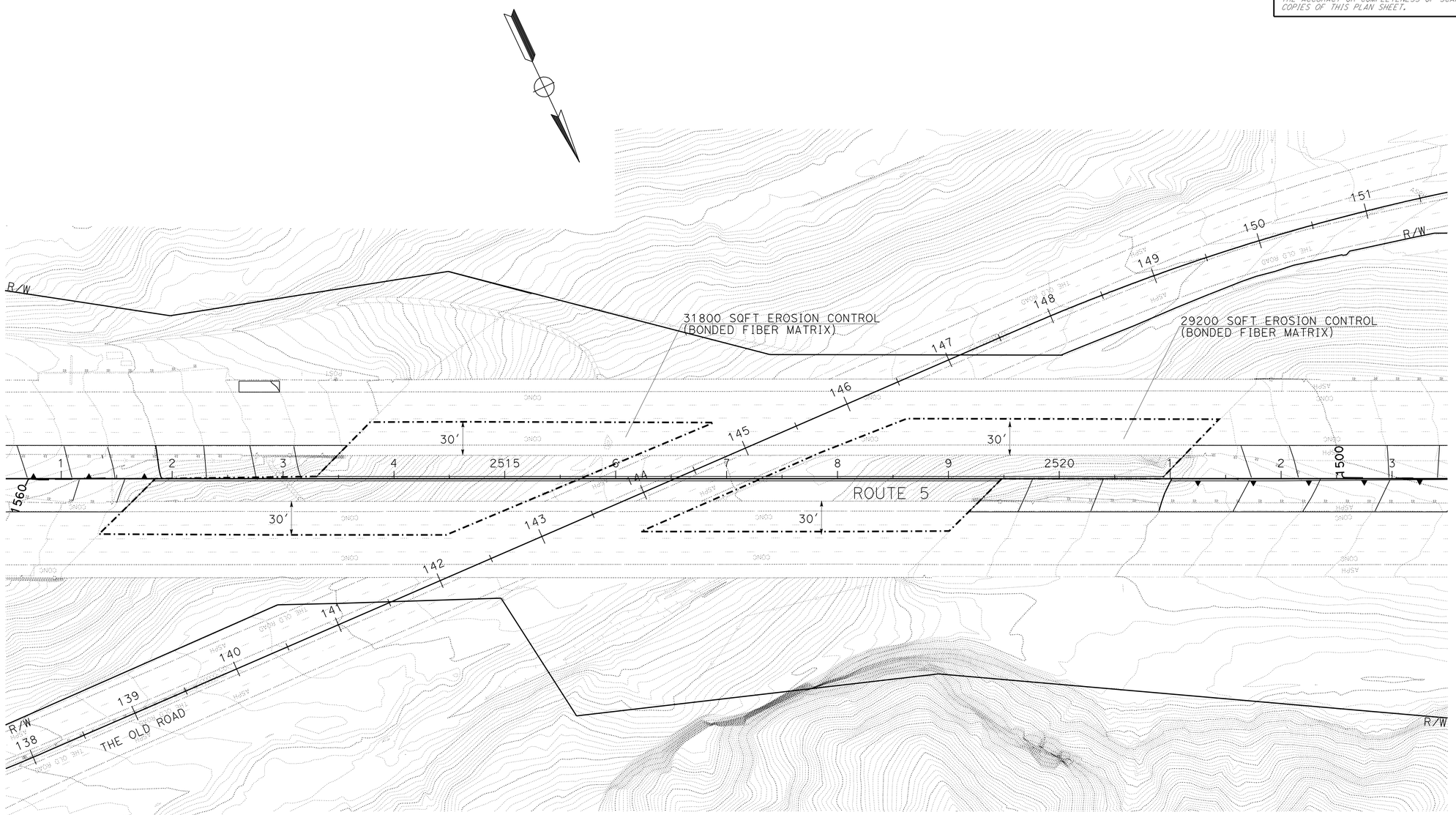

THIS PLAN ACCURATE FOR EROSION CONTROL WORK ONLY

EROSION CONTROL PLAN

SCALE: 1" = 50'

EC-7

STATE OF CALIFORNIA - DEPARTMENT OF TRANSPORTATION
Caltrans® LANDSCAPE ARCHITECTURE

SENIOR LANDSCAPE ARCHITECT: PATTY WATANABE

CALCULATED-DESIGNED BY: DONNY THAI
CHECKED BY: DUC T TRINH

REVISED BY
DATE REVISED

LAST REVISION 00-00-00
DATE PLOTTED => 26-APR-2011
TIME PLOTTED => 13:23

Dist	COUNTY	ROUTE	POST MILES TOTAL PROJECT	SHEET No.	TOTAL SHEETS
07	LA	5	R46.3/R50.0	56	456

LICENSED LANDSCAPE ARCHITECT

4-25-11
PLANS APPROVAL DATE

LICENSED LANDSCAPE ARCHITECT
DUC T. TRINH
No. 5457
Signature
11-30-11
Renewal Date
01-19-11
Date
STATE OF CALIFORNIA

THE STATE OF CALIFORNIA OR ITS OFFICERS OR AGENTS SHALL NOT BE RESPONSIBLE FOR THE ACCURACY OR COMPLETENESS OF SCANNED COPIES OF THIS PLAN SHEET.

NOTES:

1. FOR ACCURATE RIGHT OF WAY AND ACCESS DATA, CONTACT RIGHT OF WAY ENGINEERING AT THE DISTRICT OFFICE.
2. EXISTING UTILITY FACILITY ARE NOT SHOWN ON THIS PLAN.

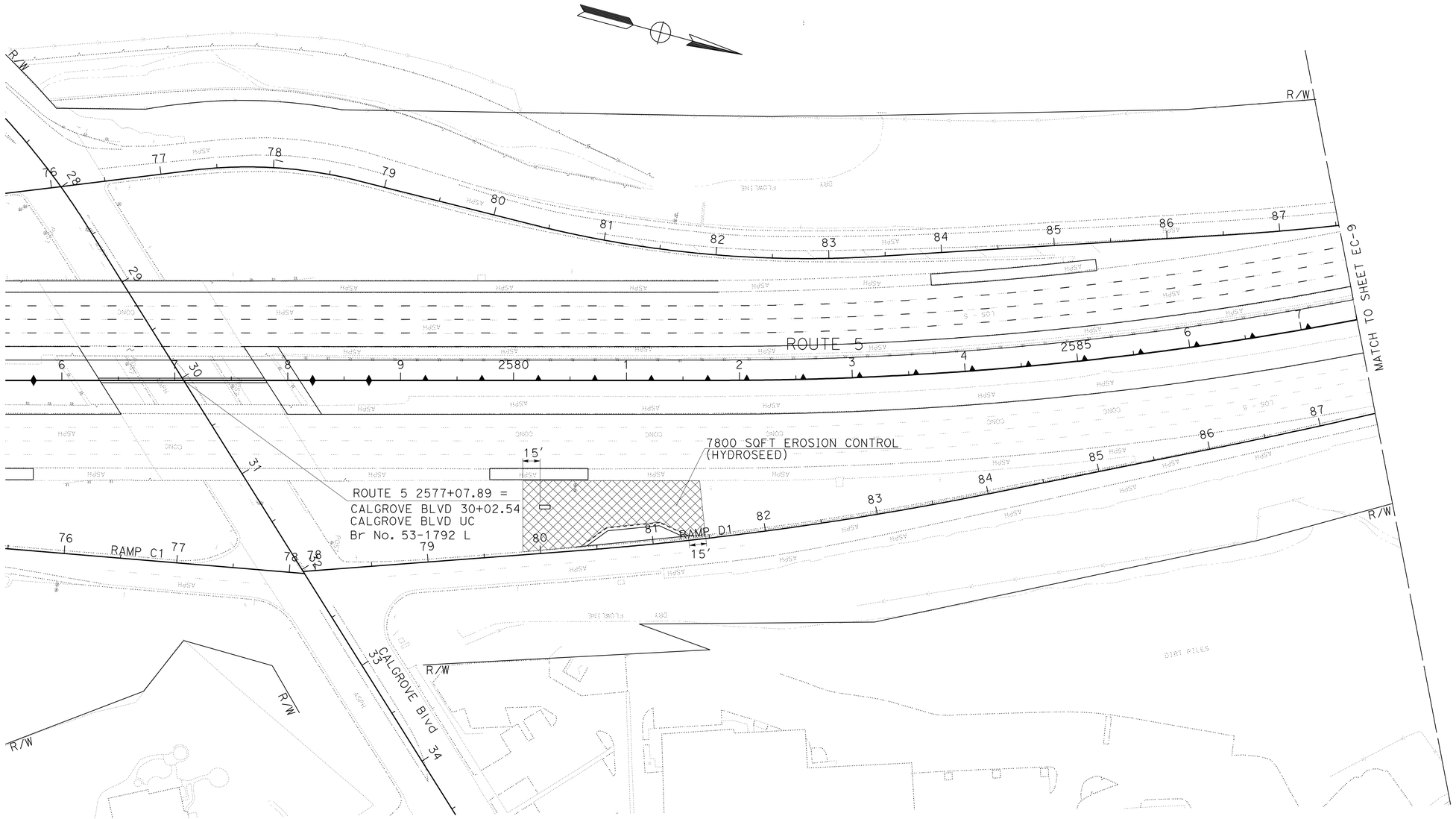

THIS PLAN ACCURATE FOR EROSION CONTROL WORK ONLY

EROSION CONTROL PLAN

SCALE: 1" = 50'

EC-8

STATE OF CALIFORNIA - DEPARTMENT OF TRANSPORTATION
Caltrans® LANDSCAPE ARCHITECTURE

SENIOR LANDSCAPE ARCHITECT: PATTY WATANABE
CALCULATED-DESIGNED BY: DONNY THAI
CHECKED BY: DUC T TRINH
REVISED BY
DATE REVISED

LAST REVISION 00-00-00
DATE PLOTTED => 26-APR-2011
TIME PLOTTED => 13:23

Dist	COUNTY	ROUTE	POST MILES TOTAL PROJECT	SHEET No.	TOTAL SHEETS
07	LA	5	R46.3/R50.0	57	456

LICENSED LANDSCAPE ARCHITECT

4-25-11
PLANS APPROVAL DATE

LICENSED LANDSCAPE ARCHITECT
DUC T. TRINH
No. 5457
Signature
11-30-11
Renewal Date
01-19-11
Date
STATE OF CALIFORNIA

THE STATE OF CALIFORNIA OR ITS OFFICERS OR AGENTS SHALL NOT BE RESPONSIBLE FOR THE ACCURACY OR COMPLETENESS OF SCANNED COPIES OF THIS PLAN SHEET.

NOTES:

1. FOR ACCURATE RIGHT OF WAY AND ACCESS DATA, CONTACT RIGHT OF WAY ENGINEERING AT THE DISTRICT OFFICE.
2. EXISTING UTILITY FACILITY ARE NOT SHOWN ON THIS PLAN.

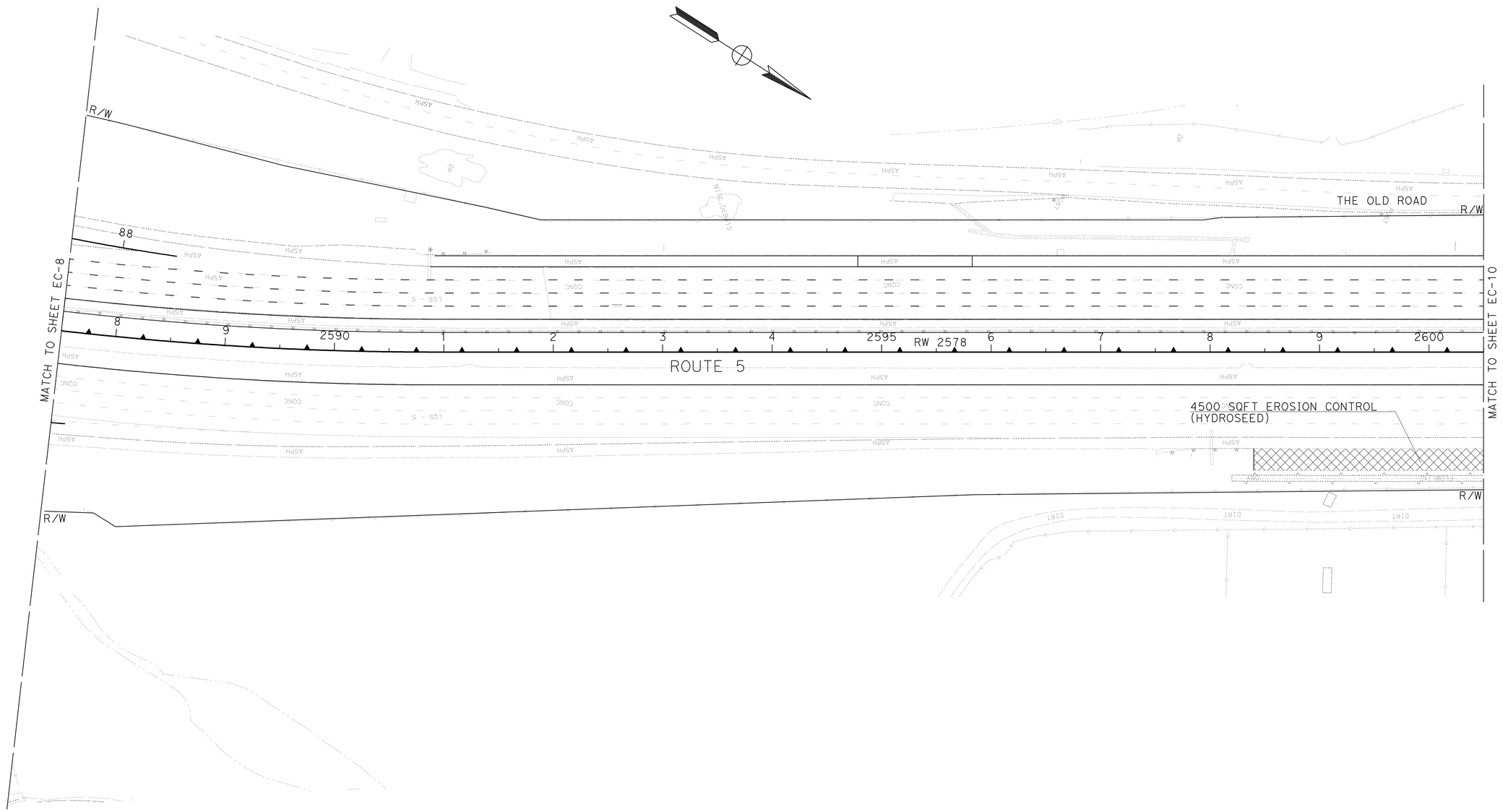

THIS PLAN ACCURATE FOR EROSION CONTROL WORK ONLY

EROSION CONTROL PLAN

SCALE: 1" = 50'

EC-9

STATE OF CALIFORNIA - DEPARTMENT OF TRANSPORTATION
Caltrans® LANDSCAPE ARCHITECTURE

SENIOR LANDSCAPE ARCHITECT: PATTY WATANABE

CALCULATED-DESIGNED BY: DONNY THAI
CHECKED BY: DUC T TRINH

REVISED BY
DATE REVISED

LAST REVISION 00-00-00
DATE PLOTTED => 26-APR-2011
TIME PLOTTED => 13:23

Dist	COUNTY	ROUTE	POST MILES TOTAL PROJECT	SHEET No.	TOTAL SHEETS
07	LA	5	R46.3/R50.0	58	456

LICENSED LANDSCAPE ARCHITECT

4-25-11
PLANS APPROVAL DATE

LICENSED LANDSCAPE ARCHITECT
DUC T. TRINH
No. 5457
Signature
11-30-11
Renewal Date
01-19-11
Date
STATE OF CALIFORNIA

THE STATE OF CALIFORNIA OR ITS OFFICERS OR AGENTS SHALL NOT BE RESPONSIBLE FOR THE ACCURACY OR COMPLETENESS OF SCANNED COPIES OF THIS PLAN SHEET.

NOTES:

1. FOR ACCURATE RIGHT OF WAY AND ACCESS DATA, CONTACT RIGHT OF WAY ENGINEERING AT THE DISTRICT OFFICE.
2. EXISTING UTILITY FACILITY ARE NOT SHOWN ON THIS PLAN.

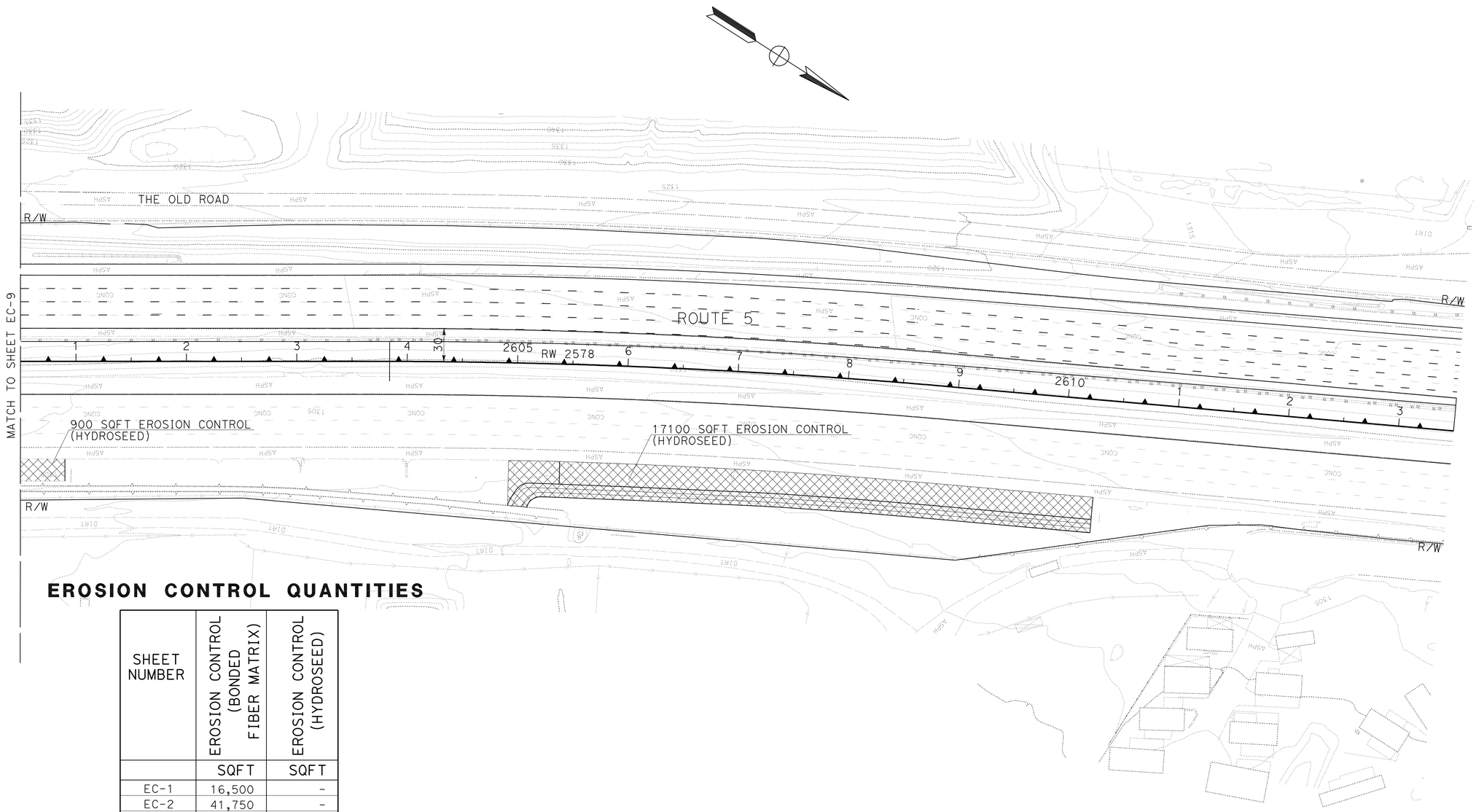

EROSION CONTROL QUANTITIES

SHEET NUMBER	EROSION CONTROL (BONDED FIBER MATRIX)	EROSION CONTROL (HYDROSEED)
	SQFT	SQFT
EC-1	16,500	-
EC-2	41,750	-
EC-3	38,000	-
EC-4	30,100	-
EC-5	13,700	-
EC-6	7,400	-
EC-7	61,000	-
EC-8	-	7,800
EC-9	-	4,500
EC-10	-	18,000
TOTAL	208,450	30,300

THIS PLAN ACCURATE FOR EROSION CONTROL WORK ONLY

EROSION CONTROL PLAN

SCALE: 1" = 50'

EC-10

REVISED BY | DATE REVISED

DONNY THAI | DUC T TRINH

CALCULATED-DESIGNED BY | CHECKED BY

SENIOR LANDSCAPE ARCHITECT | PATTY WATANABE

STATE OF CALIFORNIA - DEPARTMENT OF TRANSPORTATION
Caltrans® LANDSCAPE ARCHITECTURE

LAST REVISION 00-00-00 | DATE PLOTTED => 26-APR-2011 | TIME PLOTTED => 13:23

Dist	COUNTY	ROUTE	POST MILES TOTAL PROJECT	SHEET No.	TOTAL SHEETS
07	LA	5	R46.3/R50.0	59	456

REGISTERED CIVIL ENGINEER 01-11-11 DATE

4-25-11
PLANS APPROVAL DATE

REGISTERED PROFESSIONAL ENGINEER
AMIR AWN ELSHARIEF
No. 72560
Exp 6/30/12
CIVIL
STATE OF CALIFORNIA

THE STATE OF CALIFORNIA OR ITS OFFICERS OR AGENTS SHALL NOT BE RESPONSIBLE FOR THE ACCURACY OR COMPLETENESS OF SCANNED COPIES OF THIS PLAN SHEET.

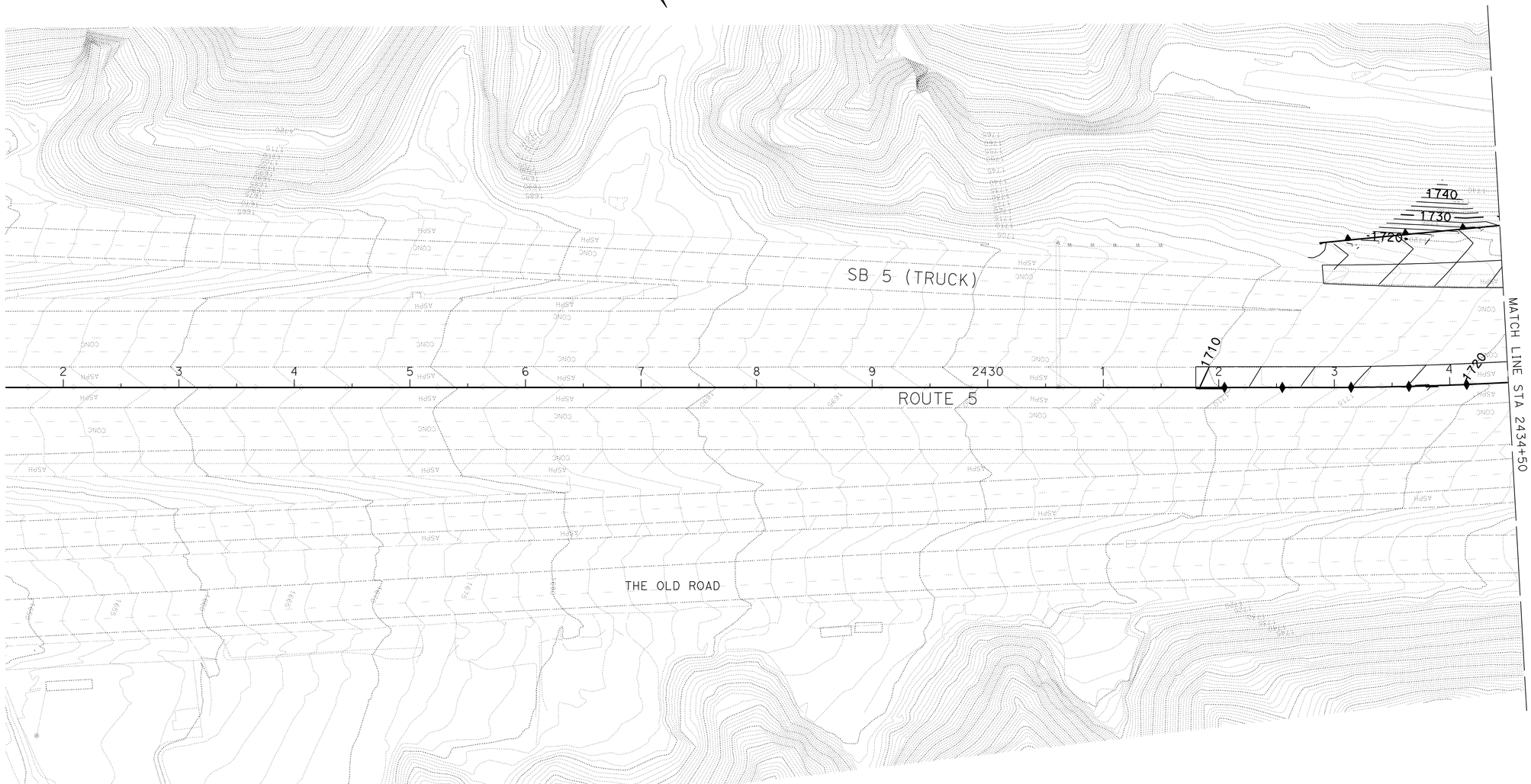

THIS PLAN ACCURATE FOR CONTOUR GRADING WORK ONLY

CONTOUR GRADING

SCALE: 1" = 50'

G-1

REVISED BY | DATE REVISED

AMIR ELSHARIEF

CALCULATED-DESIGNED BY | CHECKED BY

FUNCTIONAL SUPERVISOR: CELINA AVILES

STATE OF CALIFORNIA - DEPARTMENT OF TRANSPORTATION

Caltrans

DESIGN

LAST REVISION 10-11-10 | DATE PLOTTED => 26-APR-2011 | TIME PLOTTED => 06:45

Dist	COUNTY	ROUTE	POST MILES TOTAL PROJECT	SHEET No.	TOTAL SHEETS
07	LA	5	R46.3/R50.0	60	456

REGISTERED CIVIL ENGINEER DATE 01-11-11

4-25-11
PLANS APPROVAL DATE

REGISTERED PROFESSIONAL ENGINEER
AMIR AWN ELSHARIEF
No. 72560
Exp. 6/30/12
CIVIL
STATE OF CALIFORNIA

THE STATE OF CALIFORNIA OR ITS OFFICERS OR AGENTS SHALL NOT BE RESPONSIBLE FOR THE ACCURACY OR COMPLETENESS OF SCANNED COPIES OF THIS PLAN SHEET.

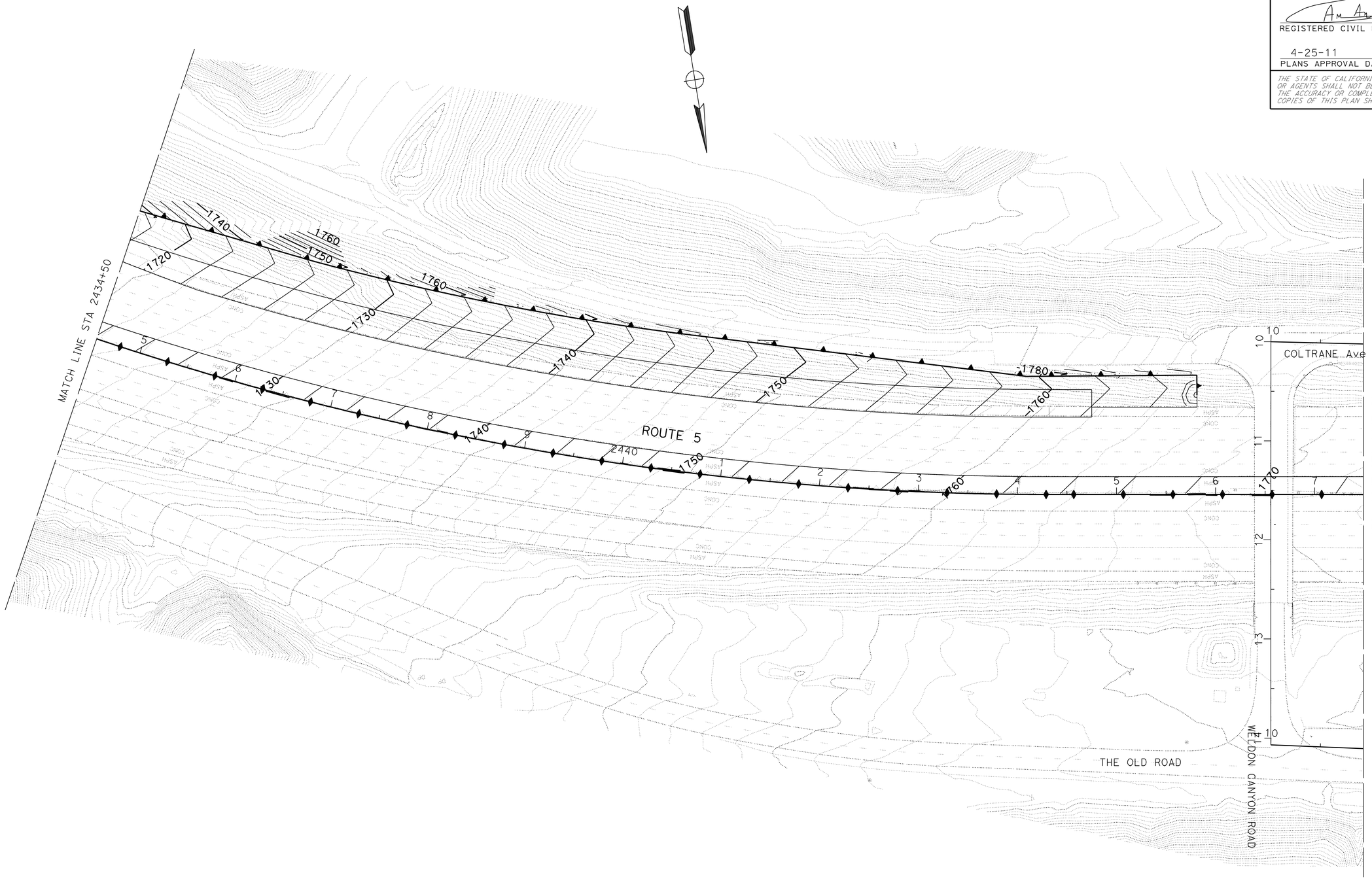

CONTOUR GRADING

SCALE: 1" = 50'

G-2

THIS PLAN ACCURATE FOR CONTOUR GRADING WORK ONLY

STATE OF CALIFORNIA - DEPARTMENT OF TRANSPORTATION
Caltrans®
DESIGN

FUNCTIONAL SUPERVISOR: CELINA AVILES
CALCULATED-DESIGNED BY: AMIR ELSHARIEF
CHECKED BY
REVISED BY
DATE REVISED

LAST REVISION 10-11-10
DATE PLOTTED => 26-APR-2011
TIME PLOTTED => 06:45

Dist	COUNTY	ROUTE	POST MILES TOTAL PROJECT	SHEET No.	TOTAL SHEETS
07	LA	5	R46.3/R50.0	61	456

REGISTERED CIVIL ENGINEER DATE 01-11-11

4-25-11
PLANS APPROVAL DATE

REGISTERED PROFESSIONAL ENGINEER
AMIR AWN ELSHARIEF
No. 72560
Exp. 6/30/12
CIVIL
STATE OF CALIFORNIA

THE STATE OF CALIFORNIA OR ITS OFFICERS OR AGENTS SHALL NOT BE RESPONSIBLE FOR THE ACCURACY OR COMPLETENESS OF SCANNED COPIES OF THIS PLAN SHEET.

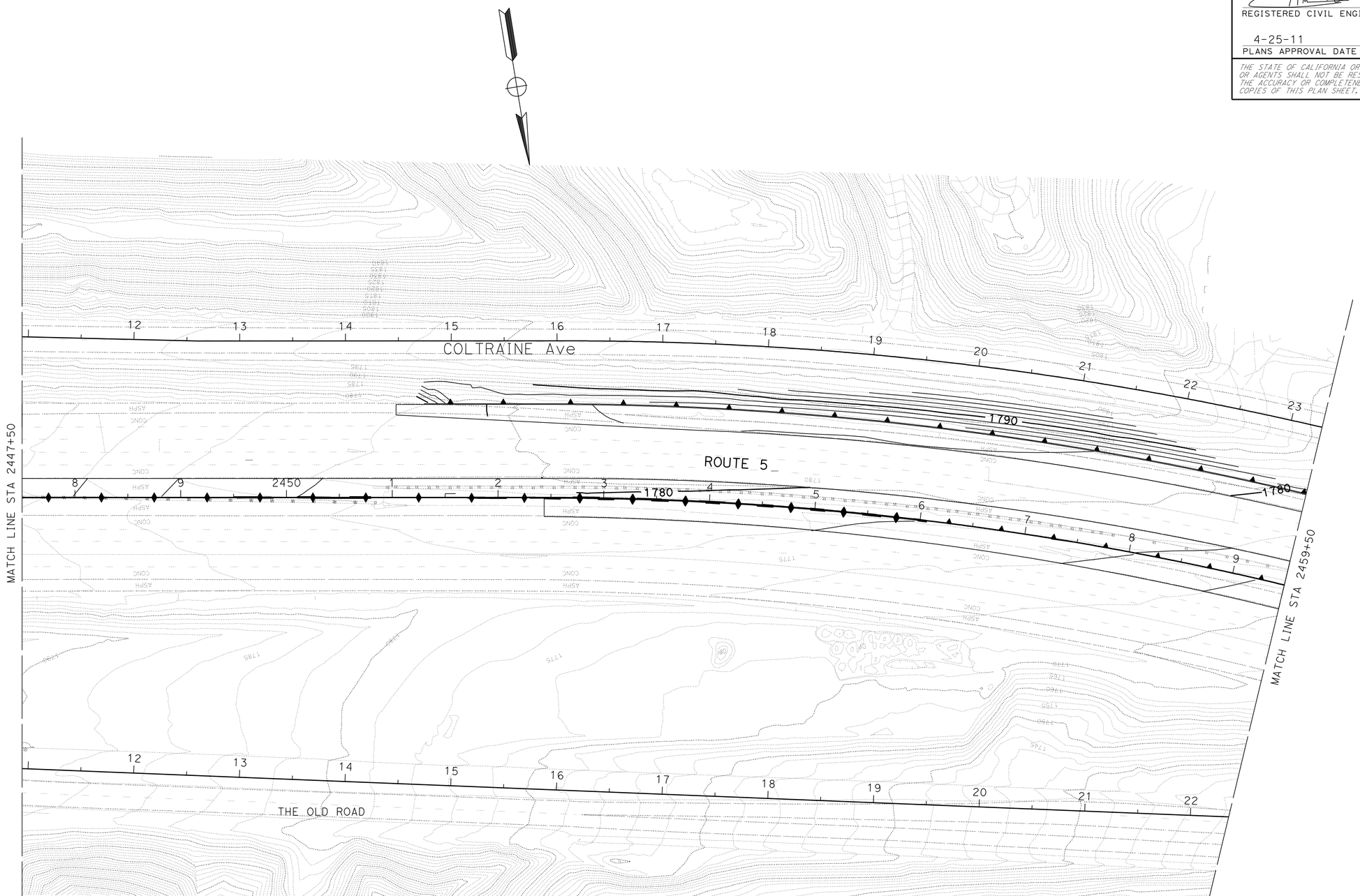

CONTOUR GRADING

SCALE: 1" = 50'

THIS PLAN ACCURATE FOR CONTOUR GRADING WORK ONLY

G-3

REVISED BY | DATE REVISED

AMIR ELSHARIEF

CALCULATED-DESIGNED BY | CHECKED BY

FUNCTIONAL SUPERVISOR: CELINA AVILES

STATE OF CALIFORNIA - DEPARTMENT OF TRANSPORTATION

Caltrans

DESIGN

LAST REVISION 10-11-10 | DATE PLOTTED => 26-APR-2011 | TIME PLOTTED => 06:52

Dist	COUNTY	ROUTE	POST MILES TOTAL PROJECT	SHEET No.	TOTAL SHEETS
07	LA	5	R46.3/R50.0	62	456

REGISTERED CIVIL ENGINEER 01-11-11 DATE

4-25-11
PLANS APPROVAL DATE

REGISTERED PROFESSIONAL ENGINEER
AMIR AWN ELSHARIEF
No. 72560
Exp. 6/30/12
CIVIL
STATE OF CALIFORNIA

THE STATE OF CALIFORNIA OR ITS OFFICERS OR AGENTS SHALL NOT BE RESPONSIBLE FOR THE ACCURACY OR COMPLETENESS OF SCANNED COPIES OF THIS PLAN SHEET.

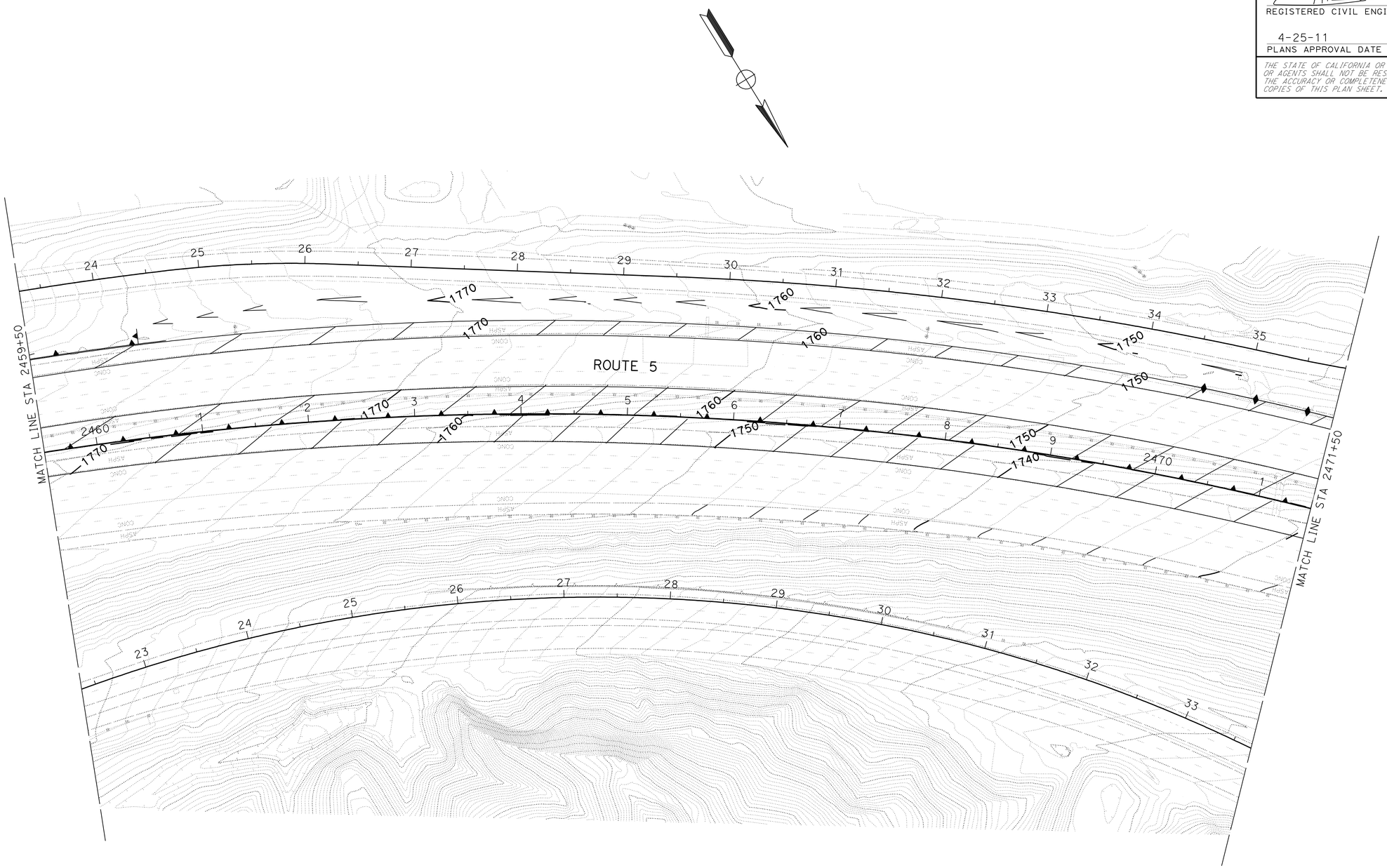

THIS PLAN ACCURATE FOR CONTOUR GRADING WORK ONLY

CONTOUR GRADING

SCALE: 1" = 50'

G-4

STATE OF CALIFORNIA - DEPARTMENT OF TRANSPORTATION
Caltrans
DESIGN

FUNCTIONAL SUPERVISOR: CELINA AVILES
CALCULATED-DESIGNED BY: AMIR ELSHARIEF
CHECKED BY
REVISED BY
DATE REVISED

LAST REVISION 10-11-10
DATE PLOTTED => 26-APR-2011
TIME PLOTTED => 06:45

Dist	COUNTY	ROUTE	POST MILES TOTAL PROJECT	SHEET No.	TOTAL SHEETS
07	LA	5	R46.3/R50.0	63	456

REGISTERED CIVIL ENGINEER 01-11-11 DATE

4-25-11
PLANS APPROVAL DATE

REGISTERED PROFESSIONAL ENGINEER
AMIR AWN ELSHARIEF
No. 72560
Exp. 6/30/12
CIVIL
STATE OF CALIFORNIA

THE STATE OF CALIFORNIA OR ITS OFFICERS OR AGENTS SHALL NOT BE RESPONSIBLE FOR THE ACCURACY OR COMPLETENESS OF SCANNED COPIES OF THIS PLAN SHEET.

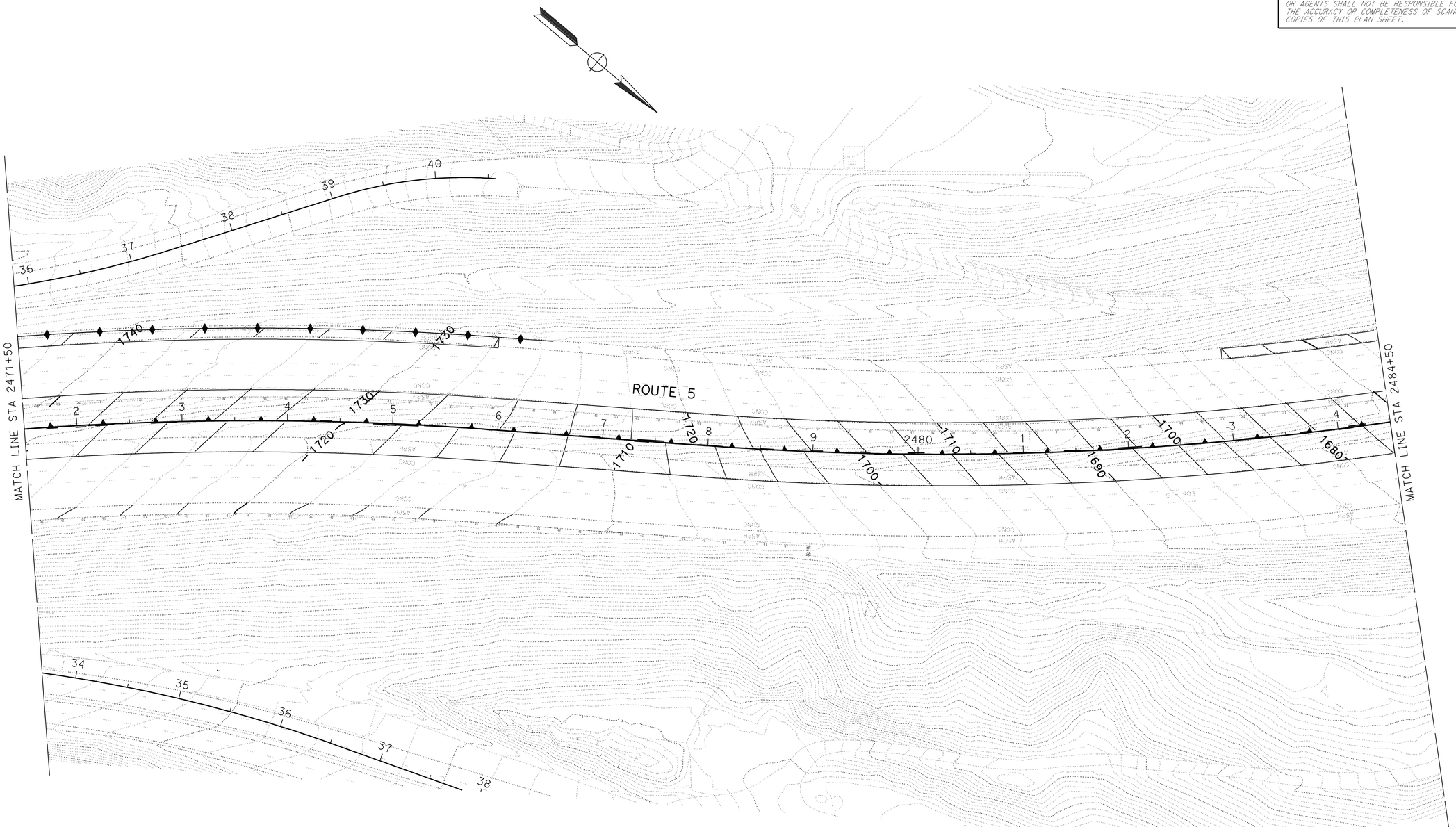

CONTOUR GRADING

SCALE: 1" = 50'

THIS PLAN ACCURATE FOR CONTOUR GRADING WORK ONLY

G-5

STATE OF CALIFORNIA - DEPARTMENT OF TRANSPORTATION
Caltrans
DESIGN

FUNCTIONAL SUPERVISOR: CELINA AVILES
CALCULATED-DESIGNED BY: AMIR ELSHARIEF
CHECKED BY
REVISED BY
DATE REVISED

LAST REVISION 10-11-10
DATE PLOTTED => 26-APR-2011
TIME PLOTTED => 06:46

Dist	COUNTY	ROUTE	POST MILES TOTAL PROJECT	SHEET No.	TOTAL SHEETS
07	LA	5	R46.3/R50.0	64	456

REGISTERED CIVIL ENGINEER 01-11-11 DATE

4-25-11
PLANS APPROVAL DATE

REGISTERED PROFESSIONAL ENGINEER
AMIR AWN ELSHARIEF
No. 72560
Exp. 6/30/12
CIVIL
STATE OF CALIFORNIA

THE STATE OF CALIFORNIA OR ITS OFFICERS OR AGENTS SHALL NOT BE RESPONSIBLE FOR THE ACCURACY OR COMPLETENESS OF SCANNED COPIES OF THIS PLAN SHEET.

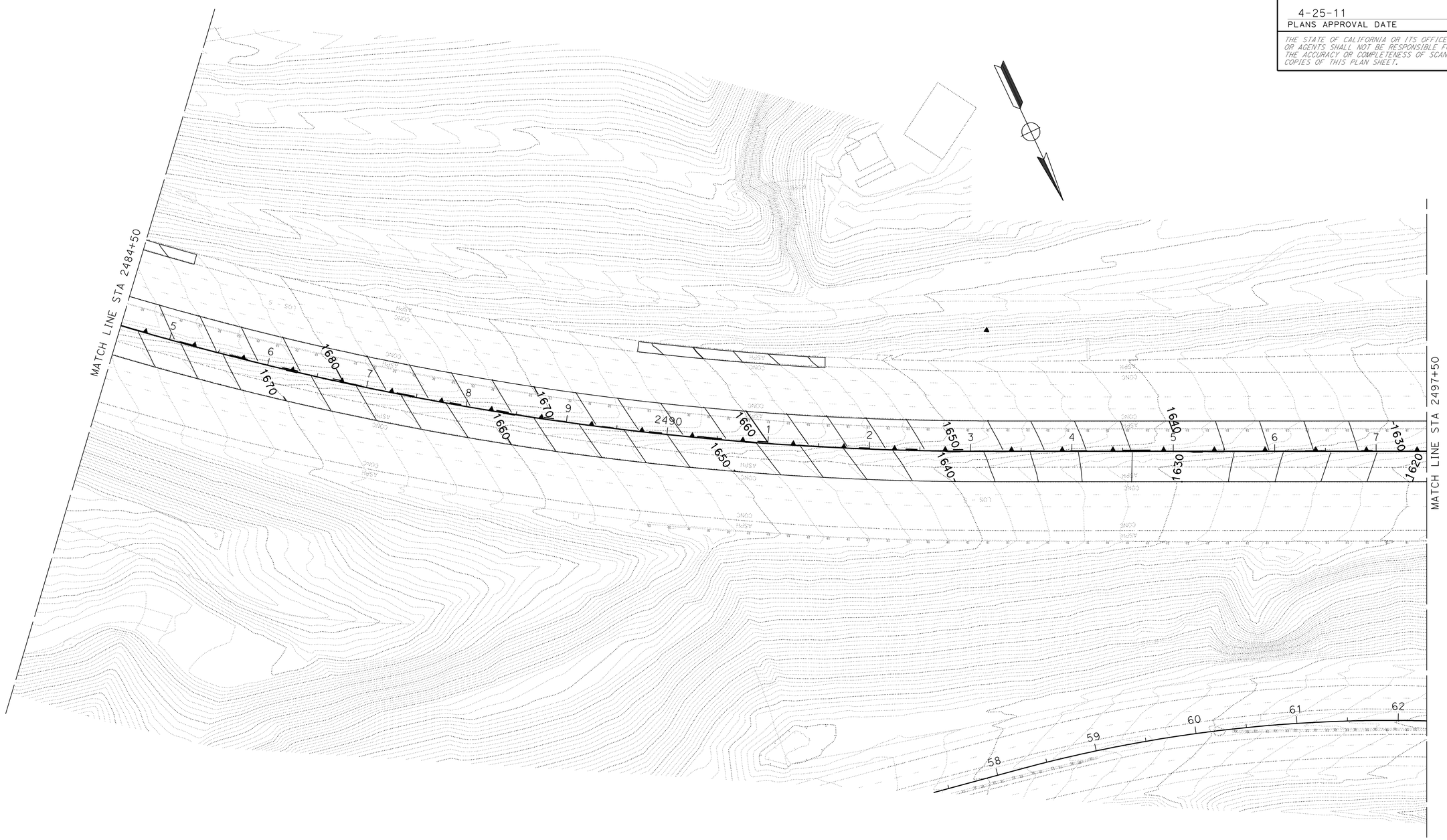

CONTOUR GRADING

SCALE: 1" = 50'

G-6

THIS PLAN ACCURATE FOR CONTOUR GRADING WORK ONLY

STATE OF CALIFORNIA - DEPARTMENT OF TRANSPORTATION
Caltrans
DESIGN

FUNCTIONAL SUPERVISOR: CELINA AVILES
CALCULATED-DESIGNED BY: AMIR ELSHARIEF
CHECKED BY
REVISED BY
DATE REVISED

LAST REVISION 10-11-10
DATE PLOTTED => 26-APR-2011
TIME PLOTTED => 06:46

Dist	COUNTY	ROUTE	POST MILES TOTAL PROJECT	SHEET No.	TOTAL SHEETS
07	LA	5	R46.3/R50.0	65	456

REGISTERED CIVIL ENGINEER 01-11-11 DATE

4-25-11
PLANS APPROVAL DATE

REGISTERED PROFESSIONAL ENGINEER
AMIR AWN ELSHARIEF
No. 72560
Exp. 6/30/12
CIVIL
STATE OF CALIFORNIA

THE STATE OF CALIFORNIA OR ITS OFFICERS OR AGENTS SHALL NOT BE RESPONSIBLE FOR THE ACCURACY OR COMPLETENESS OF SCANNED COPIES OF THIS PLAN SHEET.

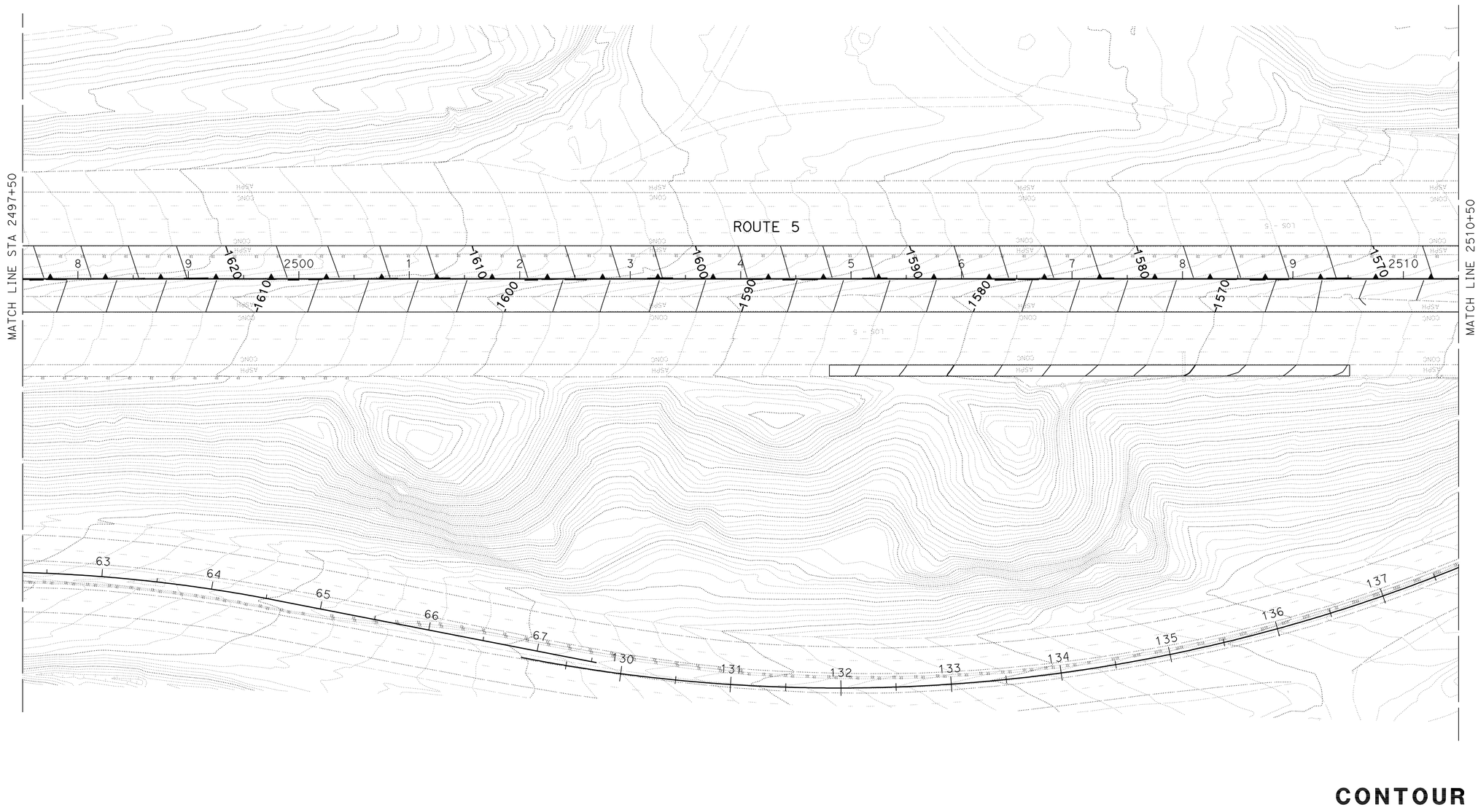

CONTOUR GRADING

SCALE: 1" = 50'

G-7

THIS PLAN ACCURATE FOR CONTOUR GRADING WORK ONLY

STATE OF CALIFORNIA - DEPARTMENT OF TRANSPORTATION
Caltrans
DESIGN

FUNCTIONAL SUPERVISOR: CELINA AVILES

CALCULATED-DESIGNED BY: AMIR ELSHARIEF
CHECKED BY

REVISED BY
DATE REVISED

LAST REVISION 10-11-10
DATE PLOTTED => 26-APR-2011
TIME PLOTTED => 06:46

Dist	COUNTY	ROUTE	POST MILES TOTAL PROJECT	SHEET No.	TOTAL SHEETS
07	LA	5	R46.3/R50.0	66	456

REGISTERED CIVIL ENGINEER 01-11-11 DATE

4-25-11
PLANS APPROVAL DATE

REGISTERED PROFESSIONAL ENGINEER
AMIR AWN ELSHARIEF
No. 72560
Exp. 6/30/12
CIVIL
STATE OF CALIFORNIA

THE STATE OF CALIFORNIA OR ITS OFFICERS OR AGENTS SHALL NOT BE RESPONSIBLE FOR THE ACCURACY OR COMPLETENESS OF SCANNED COPIES OF THIS PLAN SHEET.

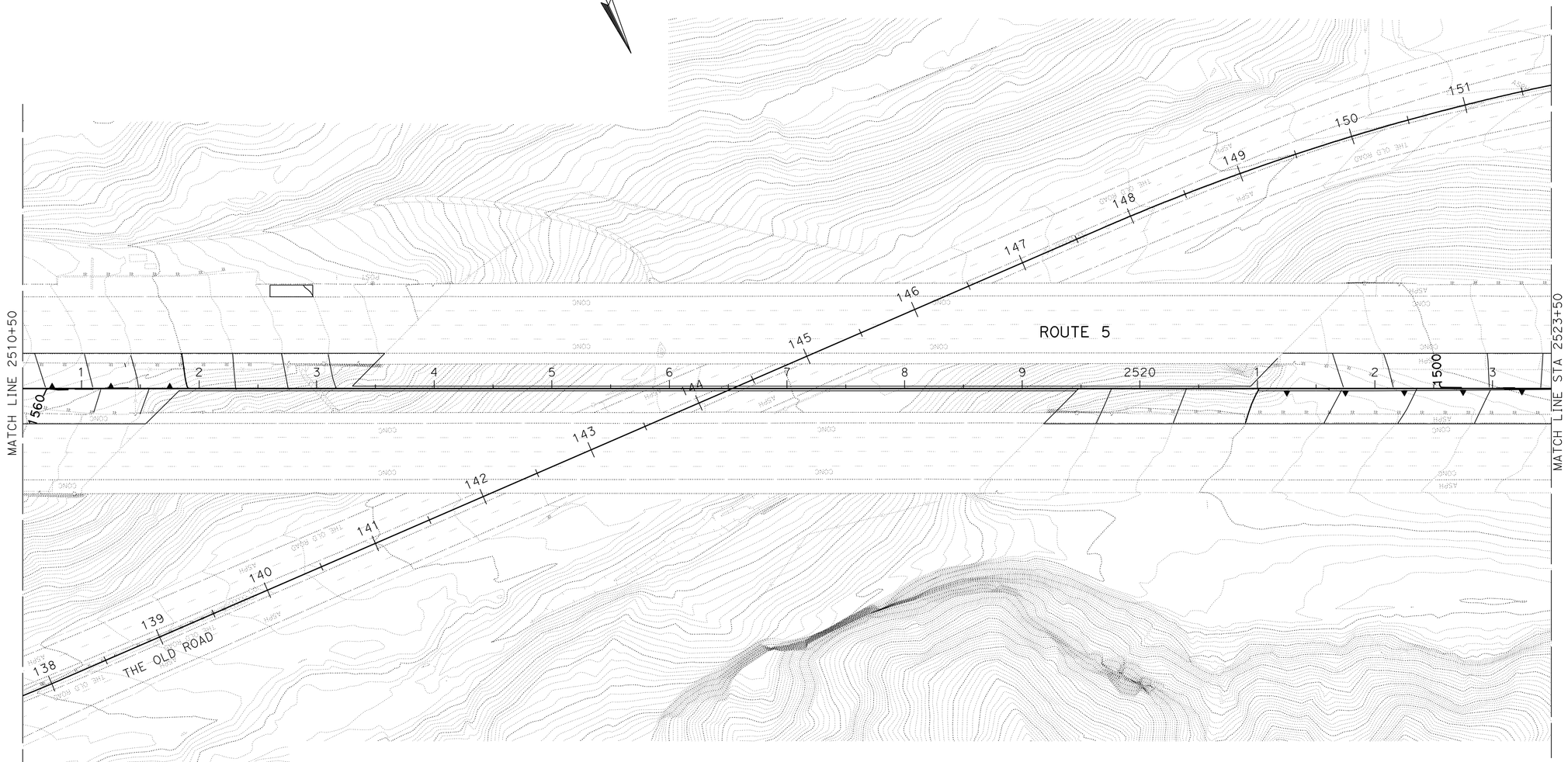

CONTOUR GRADING

SCALE: 1" = 50'

G-8

THIS PLAN ACCURATE FOR CONTOUR GRADING WORK ONLY

STATE OF CALIFORNIA - DEPARTMENT OF TRANSPORTATION
Caltrans
DESIGN

FUNCTIONAL SUPERVISOR: CELINA AVILES
CALCULATED-DESIGNED BY: AMIR ELSHARIEF
CHECKED BY
REVISED BY
DATE REVISED

LAST REVISION 10-11-10
DATE PLOTTED => 26-APR-2011
TIME PLOTTED => 06:46

Dist	COUNTY	ROUTE	POST MILES TOTAL PROJECT	SHEET No.	TOTAL SHEETS
07	LA	5	R46.3/R50.0	67	456

REGISTERED CIVIL ENGINEER 01-11-11 DATE

4-25-11
PLANS APPROVAL DATE

REGISTERED PROFESSIONAL ENGINEER
AMIR AWN ELSHARIEF
No. 72560
Exp. 6/30/12
CIVIL
STATE OF CALIFORNIA

THE STATE OF CALIFORNIA OR ITS OFFICERS OR AGENTS SHALL NOT BE RESPONSIBLE FOR THE ACCURACY OR COMPLETENESS OF SCANNED COPIES OF THIS PLAN SHEET.

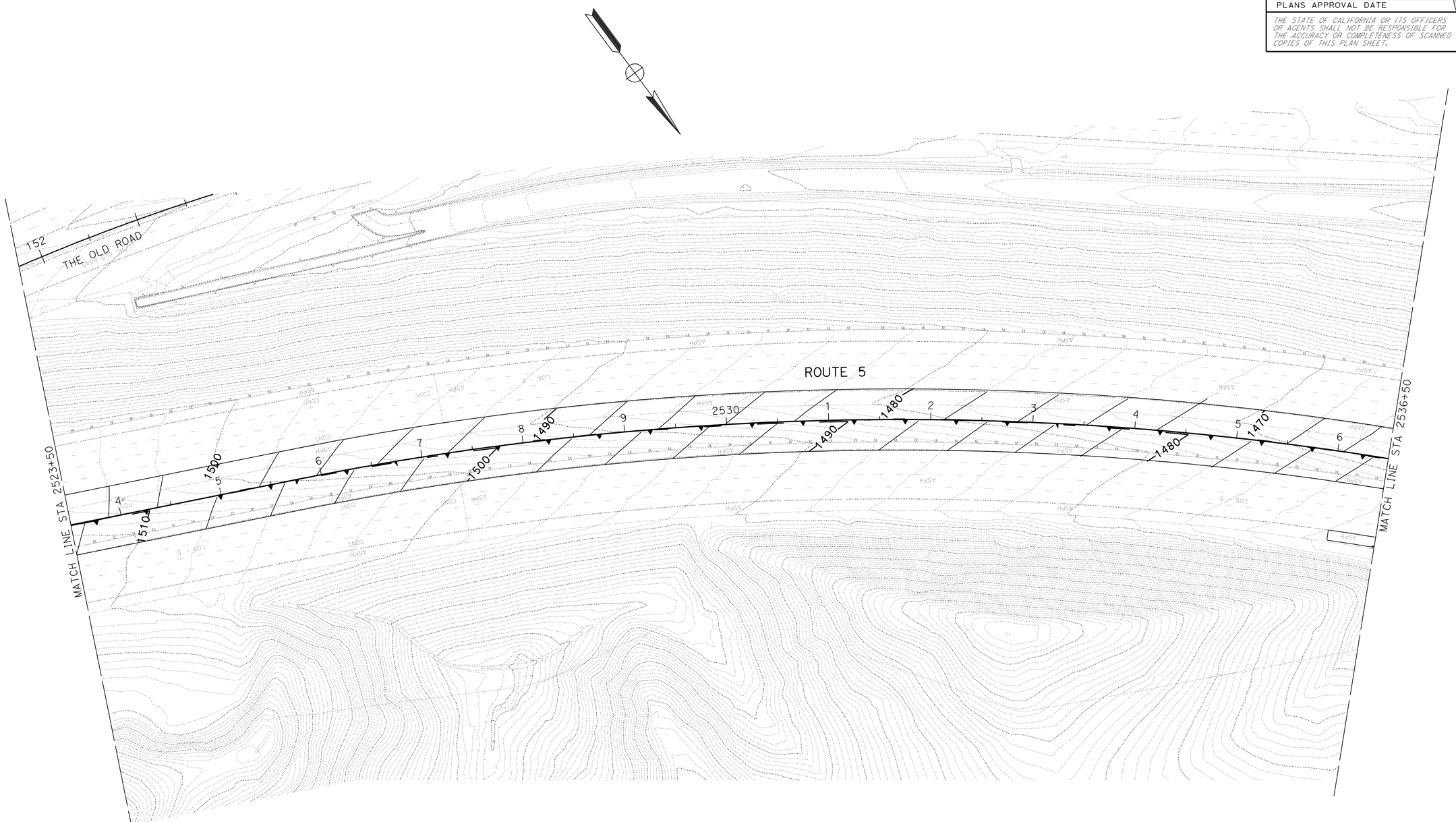

CONTOUR GRADING

SCALE: 1" = 50'

G-9

THIS PLAN ACCURATE FOR CONTOUR GRADING WORK ONLY

STATE OF CALIFORNIA - DEPARTMENT OF TRANSPORTATION
Caltrans®
DESIGN

FUNCTIONAL SUPERVISOR: CELINA AVILES

CALCULATED-DESIGNED BY: AMIR ELSHARIEF
CHECKED BY

REVISED BY
DATE REVISED

LAST REVISION 10-11-10
DATE PLOTTED => 26-APR-2011
TIME PLOTTED => 06:46

Dist	COUNTY	ROUTE	POST MILES TOTAL PROJECT	SHEET No.	TOTAL SHEETS
07	LA	5	R46.3/R50.0	68	456

REGISTERED CIVIL ENGINEER 01-11-11 DATE

4-25-11
PLANS APPROVAL DATE

REGISTERED PROFESSIONAL ENGINEER
AMIR AWN ELSHARIEF
No. 72560
Exp. 6/30/12
CIVIL
STATE OF CALIFORNIA

THE STATE OF CALIFORNIA OR ITS OFFICERS OR AGENTS SHALL NOT BE RESPONSIBLE FOR THE ACCURACY OR COMPLETENESS OF SCANNED COPIES OF THIS PLAN SHEET.

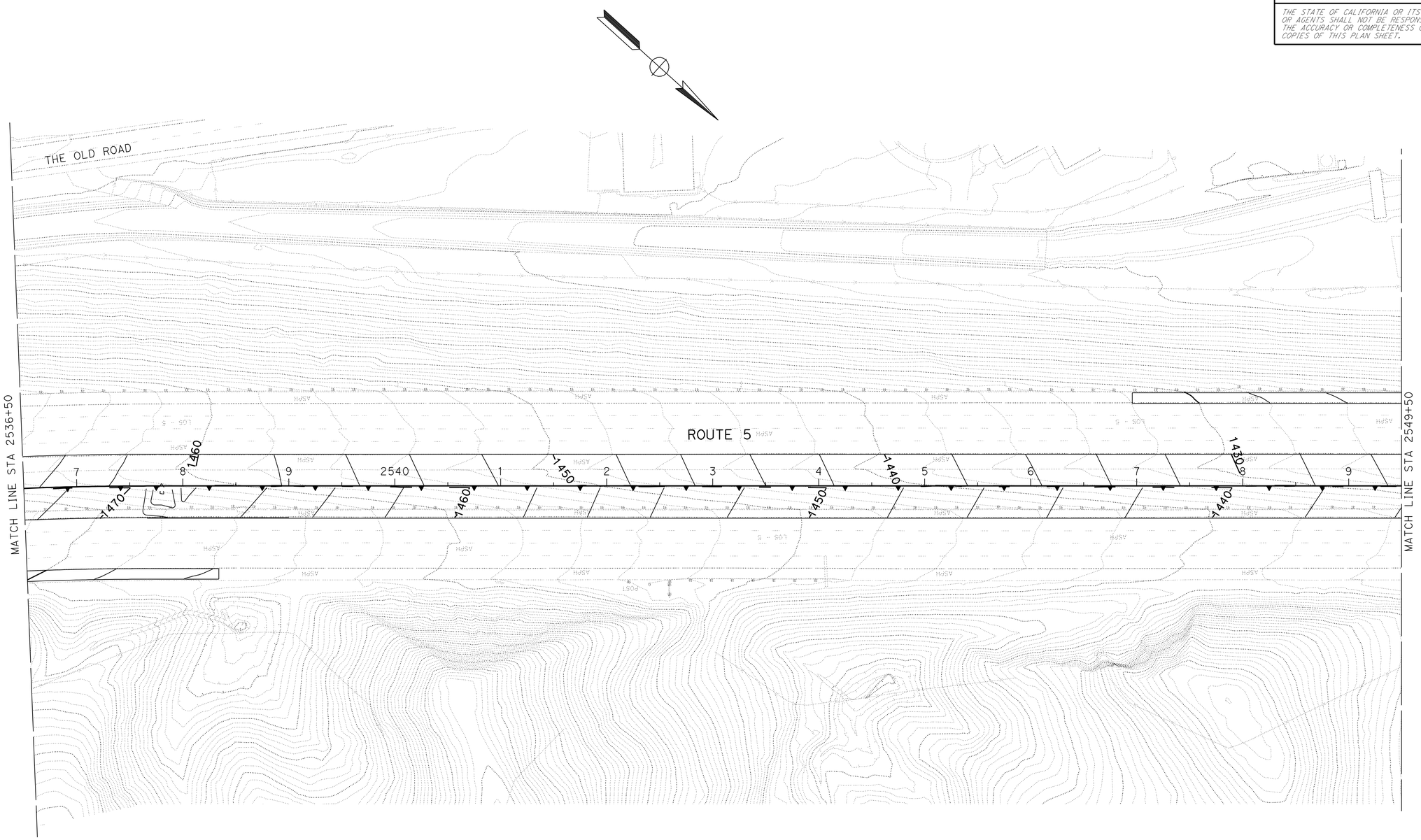

CONTOUR GRADING

SCALE: 1" = 50'

G-10

THIS PLAN ACCURATE FOR CONTOUR GRADING WORK ONLY

STATE OF CALIFORNIA - DEPARTMENT OF TRANSPORTATION
Caltrans
DESIGN

FUNCTIONAL SUPERVISOR: CELINA AVILES
CALCULATED-DESIGNED BY: AMIR ELSHARIEF
CHECKED BY
REVISED BY
DATE REVISED

LAST REVISION 10-11-10
DATE PLOTTED => 26-APR-2011
TIME PLOTTED => 06:46

Dist	COUNTY	ROUTE	POST MILES TOTAL PROJECT	SHEET No.	TOTAL SHEETS
07	LA	5	R46.3/R50.0	69	456

REGISTERED CIVIL ENGINEER 01-11-11 DATE

4-25-11
PLANS APPROVAL DATE

REGISTERED PROFESSIONAL ENGINEER
AMIR AWN ELSHARIEF
No. 72560
Exp. 6/30/12
CIVIL
STATE OF CALIFORNIA

THE STATE OF CALIFORNIA OR ITS OFFICERS OR AGENTS SHALL NOT BE RESPONSIBLE FOR THE ACCURACY OR COMPLETENESS OF SCANNED COPIES OF THIS PLAN SHEET.

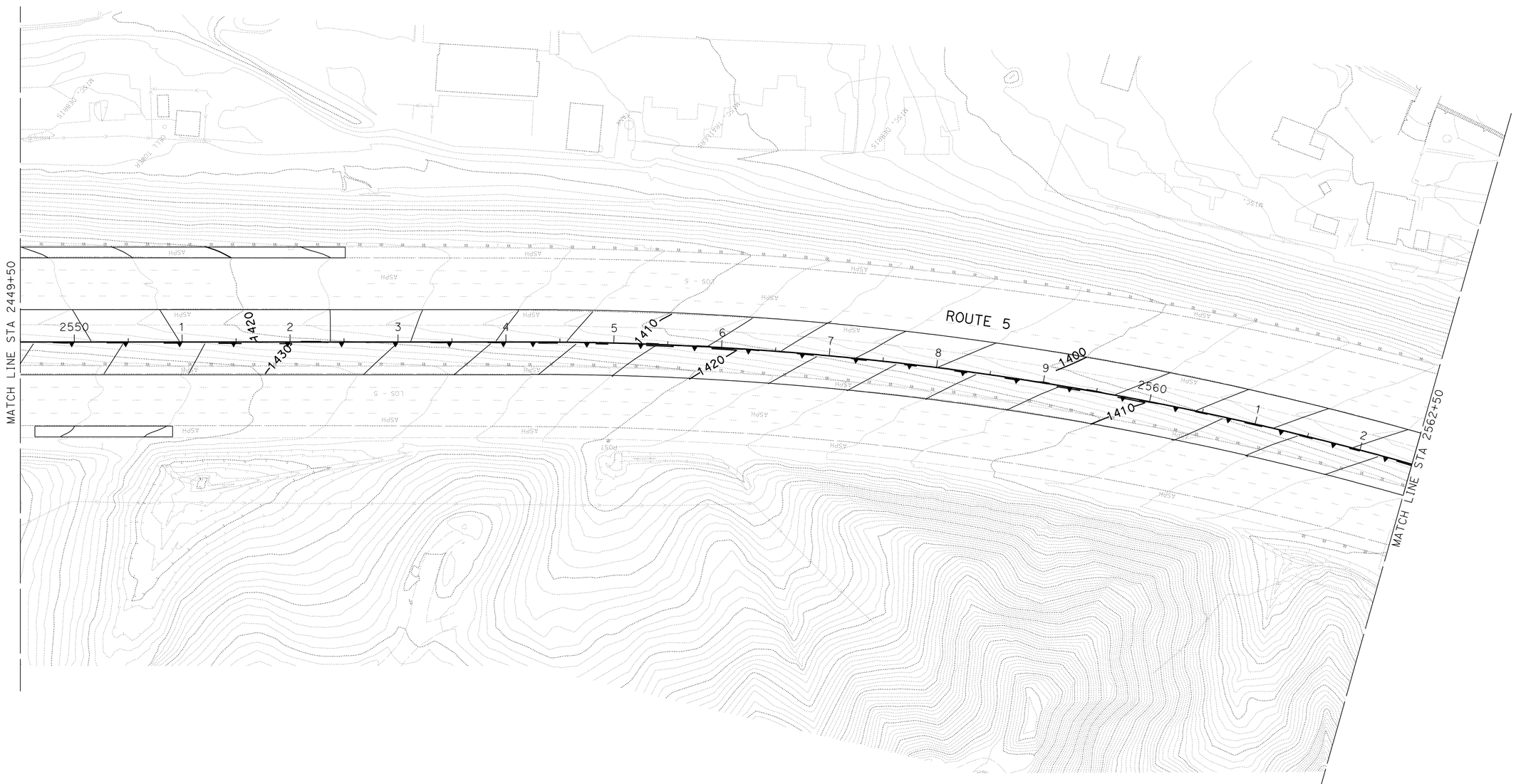

CONTOUR GRADING

SCALE: 1" = 50'

THIS PLAN ACCURATE FOR CONTOUR GRADING WORK ONLY

G-11

REVISED BY
DATE REVISED
AMIR ELSHARIEF
CALCULATED-
DESIGNED BY
CHECKED BY
FUNCTIONAL SUPERVISOR
CELINA AVILES
STATE OF CALIFORNIA - DEPARTMENT OF TRANSPORTATION
Caltrans
DESIGN

LAST REVISION 10-11-10
DATE PLOTTED => 26-APR-2011
TIME PLOTTED => 06:46

Dist	COUNTY	ROUTE	POST MILES TOTAL PROJECT	SHEET No.	TOTAL SHEETS
07	LA	5	R46.3/R50.0	70	456

REGISTERED CIVIL ENGINEER 01-11-11 DATE

4-25-11
PLANS APPROVAL DATE

REGISTERED PROFESSIONAL ENGINEER
AMIR AWN ELSHARIEF
No. 72560
Exp. 6/30/12
CIVIL
STATE OF CALIFORNIA

THE STATE OF CALIFORNIA OR ITS OFFICERS OR AGENTS SHALL NOT BE RESPONSIBLE FOR THE ACCURACY OR COMPLETENESS OF SCANNED COPIES OF THIS PLAN SHEET.

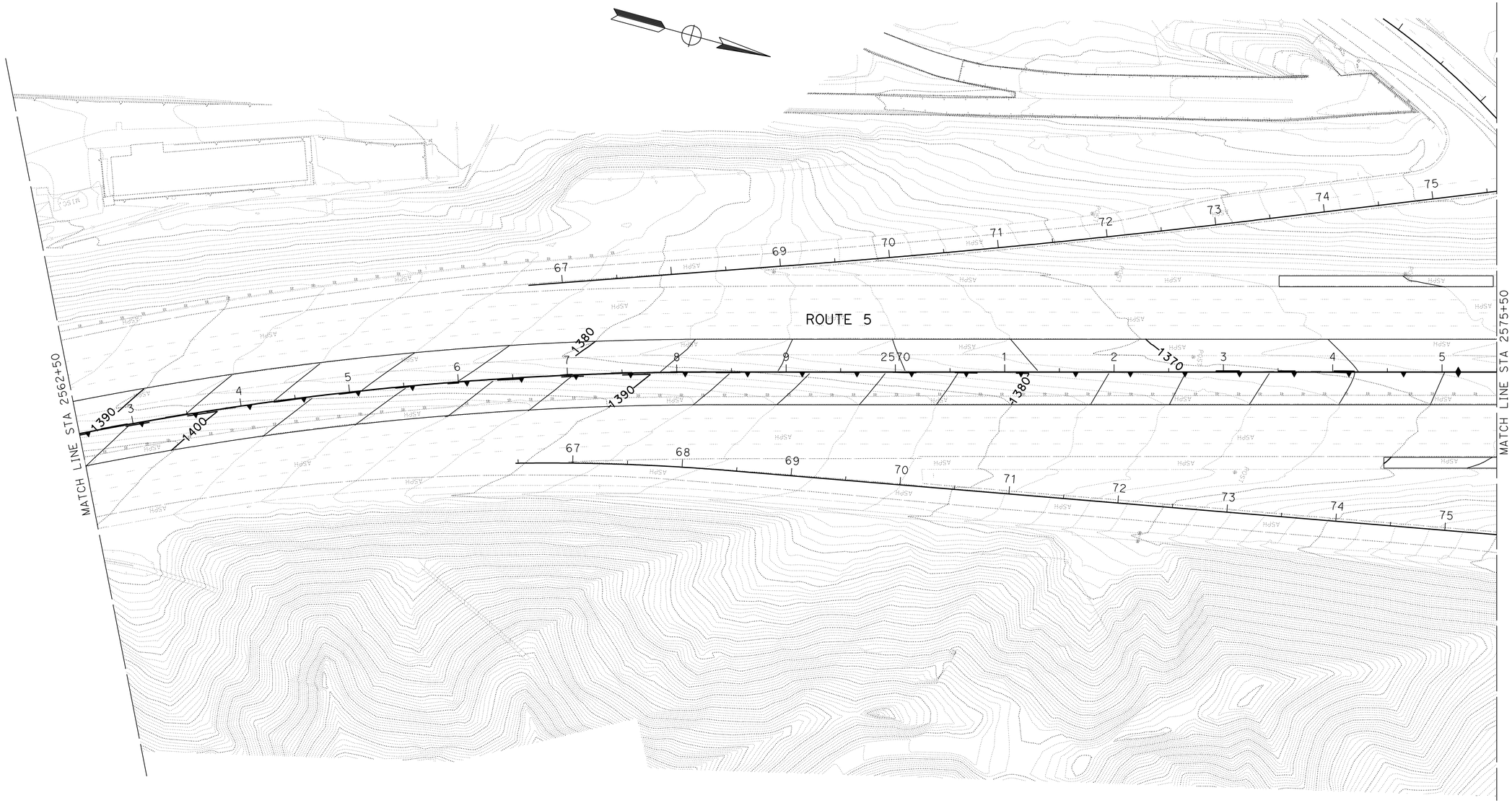

CONTOUR GRADING

SCALE: 1" = 50'

G-12

THIS PLAN ACCURATE FOR CONTOUR GRADING WORK ONLY

STATE OF CALIFORNIA - DEPARTMENT OF TRANSPORTATION
Caltrans
DESIGN

FUNCTIONAL SUPERVISOR: CELINA AVILES
CALCULATED-DESIGNED BY: AMIR ELSHARIEF
CHECKED BY
REVISED BY
DATE REVISED

LAST REVISION 10-11-10
DATE PLOTTED => 26-APR-2011
TIME PLOTTED => 06:47

Dist	COUNTY	ROUTE	POST MILES TOTAL PROJECT	SHEET No.	TOTAL SHEETS
07	LA	5	R46.3/R50.0	71	456

REGISTERED CIVIL ENGINEER DATE 01-11-11

4-25-11
PLANS APPROVAL DATE

REGISTERED PROFESSIONAL ENGINEER
AMIR AWN ELSHARIEF
No. 72560
Exp. 6/30/12
CIVIL
STATE OF CALIFORNIA

THE STATE OF CALIFORNIA OR ITS OFFICERS OR AGENTS SHALL NOT BE RESPONSIBLE FOR THE ACCURACY OR COMPLETENESS OF SCANNED COPIES OF THIS PLAN SHEET.

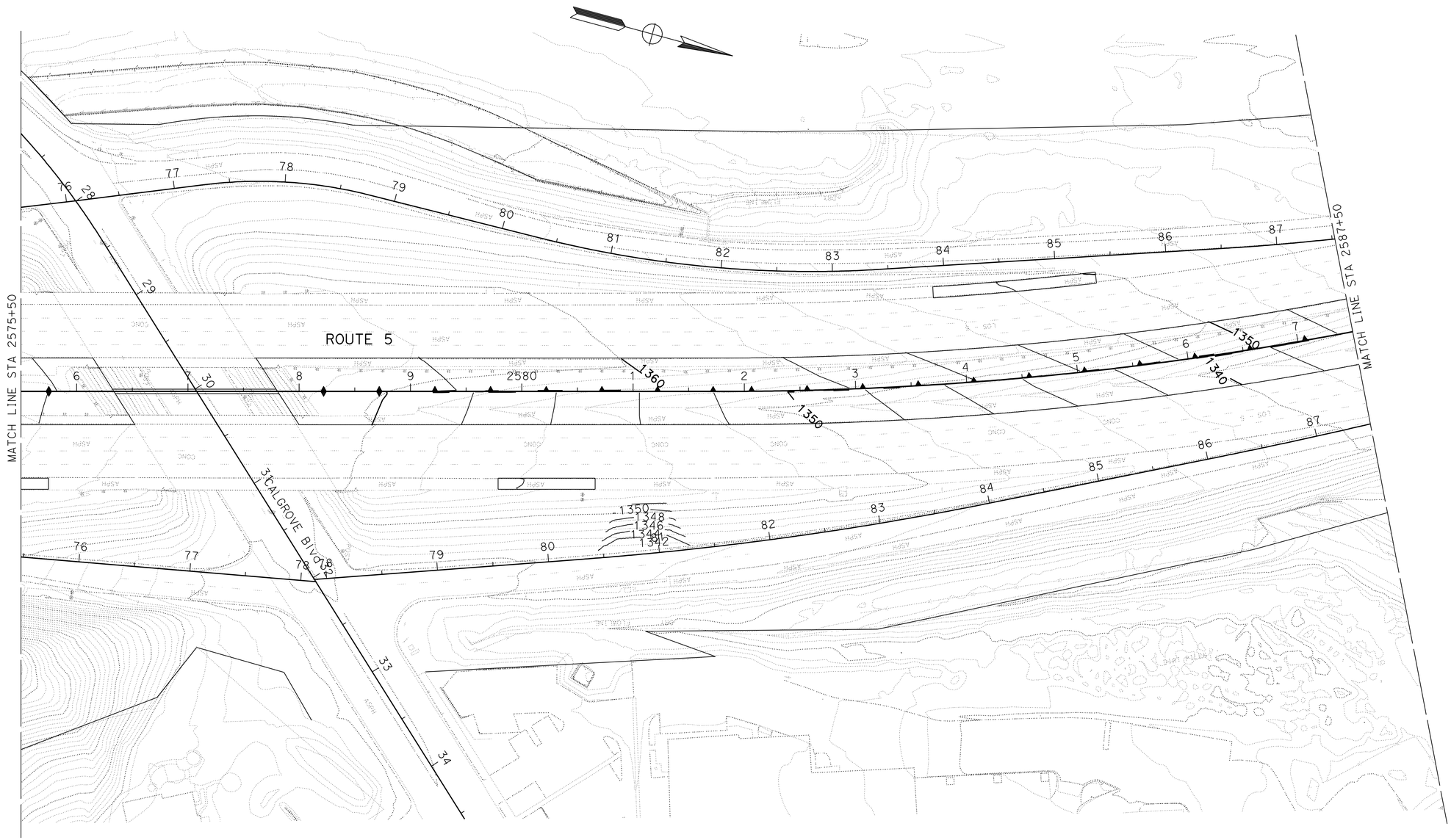

CONTOUR GRADING

SCALE: 1" = 50'

THIS PLAN ACCURATE FOR CONTOUR GRADING WORK ONLY

G-13

STATE OF CALIFORNIA - DEPARTMENT OF TRANSPORTATION
Caltrans
DESIGN

FUNCTIONAL SUPERVISOR: CELINA AVILES

CALCULATED-DESIGNED BY: AMIR ELSHARIEF
CHECKED BY

REVISED BY
DATE REVISED

LAST REVISION 10-11-10
DATE PLOTTED => 26-APR-2011
TIME PLOTTED => 06:47

Dist	COUNTY	ROUTE	POST MILES TOTAL PROJECT	SHEET No.	TOTAL SHEETS
07	LA	5	R46.3/R50.0	72	456

REGISTERED CIVIL ENGINEER 01-11-11 DATE

4-25-11
PLANS APPROVAL DATE

REGISTERED PROFESSIONAL ENGINEER
AMIR AWN ELSHARIEF
No. 72560
Exp. 6/30/12
CIVIL
STATE OF CALIFORNIA

THE STATE OF CALIFORNIA OR ITS OFFICERS OR AGENTS SHALL NOT BE RESPONSIBLE FOR THE ACCURACY OR COMPLETENESS OF SCANNED COPIES OF THIS PLAN SHEET.

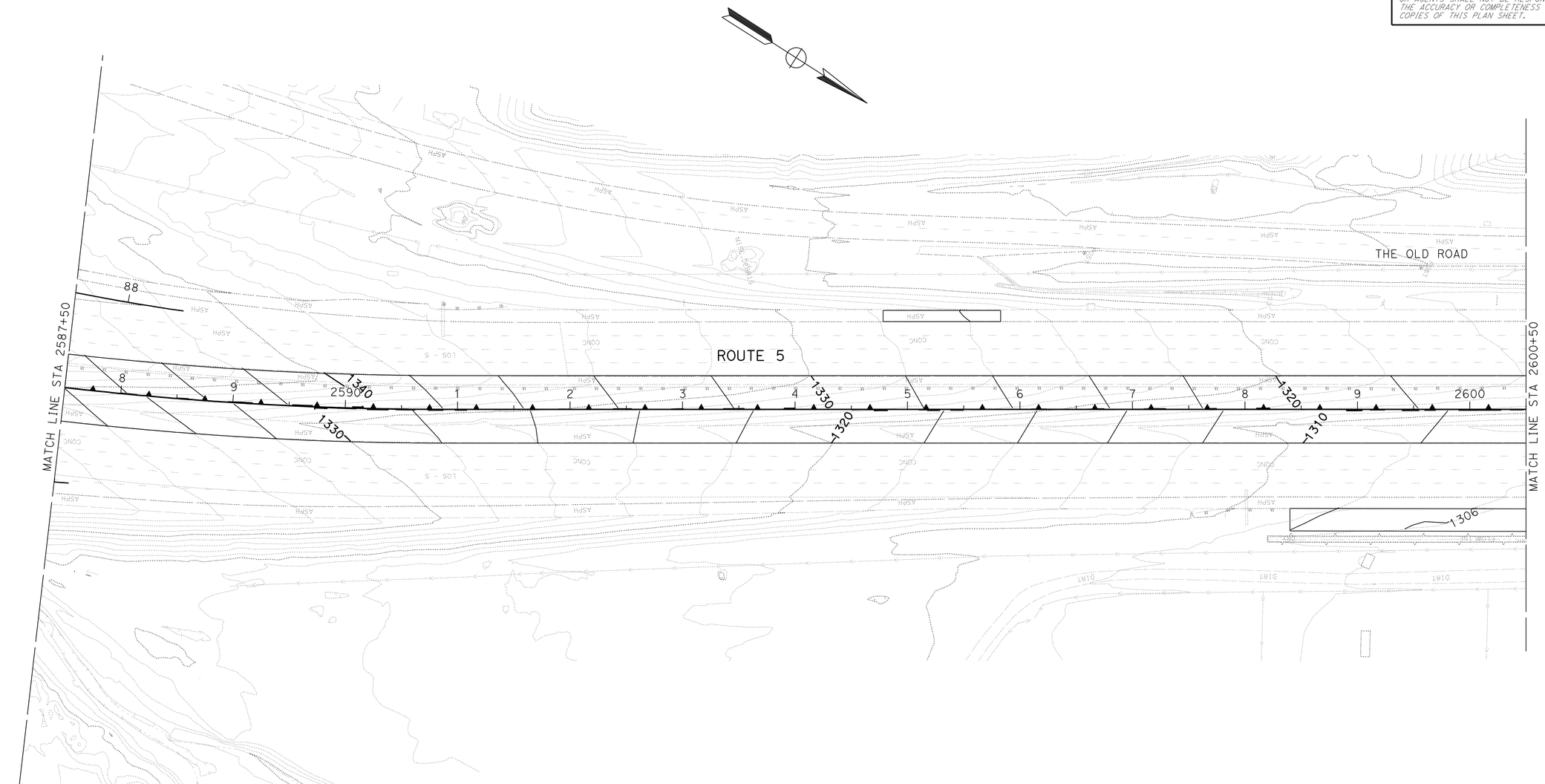

CONTOUR GRADING

SCALE: 1" = 50'

THIS PLAN ACCURATE FOR CONTOUR GRADING WORK ONLY

G-14

STATE OF CALIFORNIA - DEPARTMENT OF TRANSPORTATION
Caltrans
DESIGN

FUNCTIONAL SUPERVISOR: CELINA AVILES
CALCULATED-DESIGNED BY: AMIR ELSHARIEF
CHECKED BY
REVISED BY
DATE REVISED

LAST REVISION 10-11-10
DATE PLOTTED => 26-APR-2011
TIME PLOTTED => 06:47

Dist	COUNTY	ROUTE	POST MILES TOTAL PROJECT	SHEET No.	TOTAL SHEETS
07	LA	5	R46.3/R50.0	73	456

REGISTERED CIVIL ENGINEER 01-11-11 DATE

4-25-11
PLANS APPROVAL DATE

REGISTERED PROFESSIONAL ENGINEER
AMIR AWN ELSHARIEF
No. 72560
Exp. 6/30/12
CIVIL
STATE OF CALIFORNIA

THE STATE OF CALIFORNIA OR ITS OFFICERS OR AGENTS SHALL NOT BE RESPONSIBLE FOR THE ACCURACY OR COMPLETENESS OF SCANNED COPIES OF THIS PLAN SHEET.

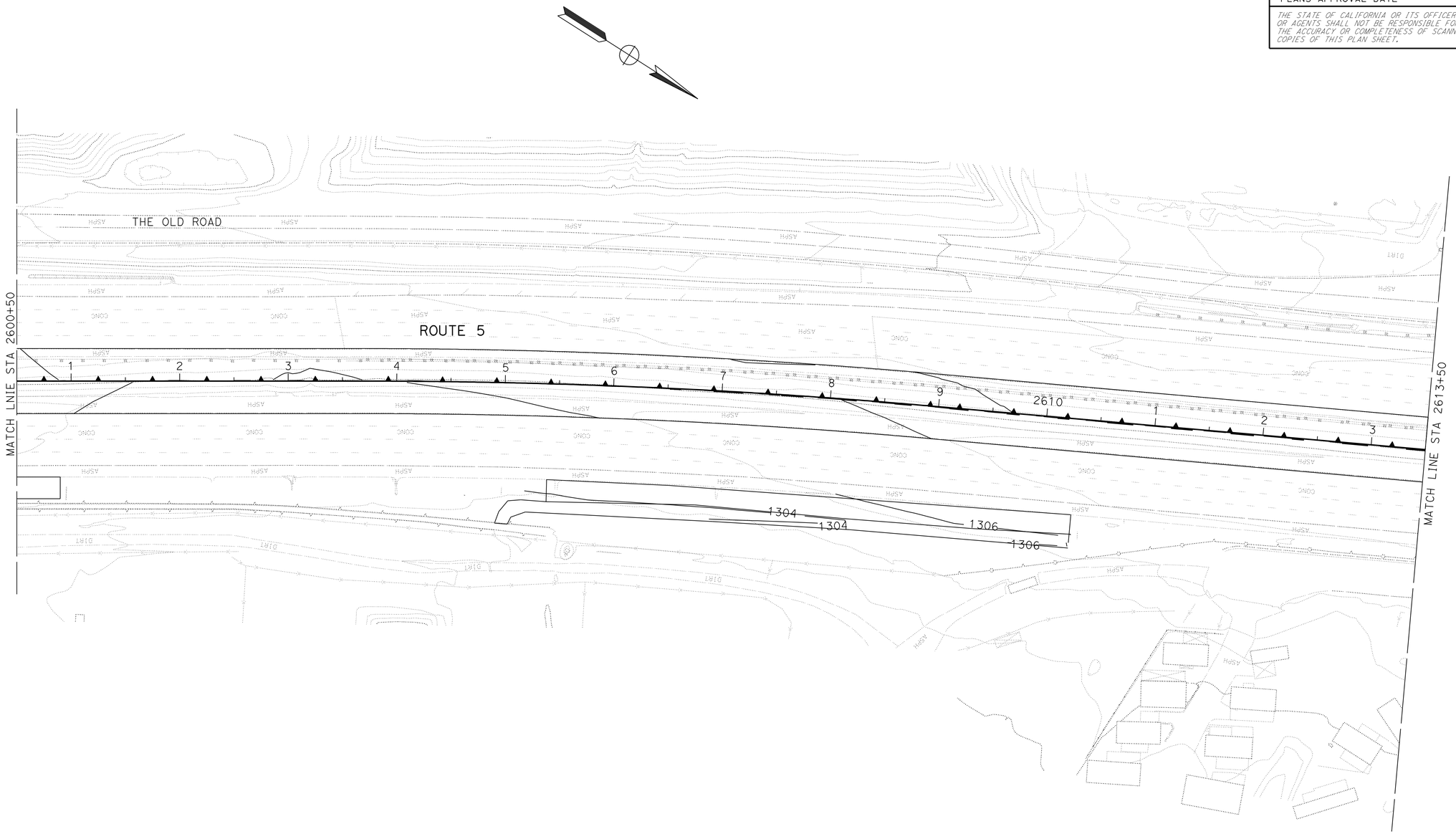

CONTOUR GRADING

SCALE: 1" = 50'

THIS PLAN ACCURATE FOR CONTOUR GRADING WORK ONLY

G-15

STATE OF CALIFORNIA - DEPARTMENT OF TRANSPORTATION
Caltrans
DESIGN

FUNCTIONAL SUPERVISOR: CELINA AVILES

CALCULATED-DESIGNED BY: AMIR ELSHARIEF
CHECKED BY
REVISED BY
DATE REVISED

LAST REVISION 10-11-10
DATE PLOTTED => 26-APR-2011
TIME PLOTTED => 06:47

Dist	COUNTY	ROUTE	POST MILES TOTAL PROJECT	SHEET No.	TOTAL SHEETS
07	LA	5	R46.3/R50.0	74	456

REGISTERED CIVIL ENGINEER DATE 01-11-11

4-25-11
PLANS APPROVAL DATE

REGISTERED PROFESSIONAL ENGINEER
AMIR AWN ELSHARIEF
No. 72560
Exp 6/30/12
CIVIL
STATE OF CALIFORNIA

THE STATE OF CALIFORNIA OR ITS OFFICERS OR AGENTS SHALL NOT BE RESPONSIBLE FOR THE ACCURACY OR COMPLETENESS OF SCANNED COPIES OF THIS PLAN SHEET.

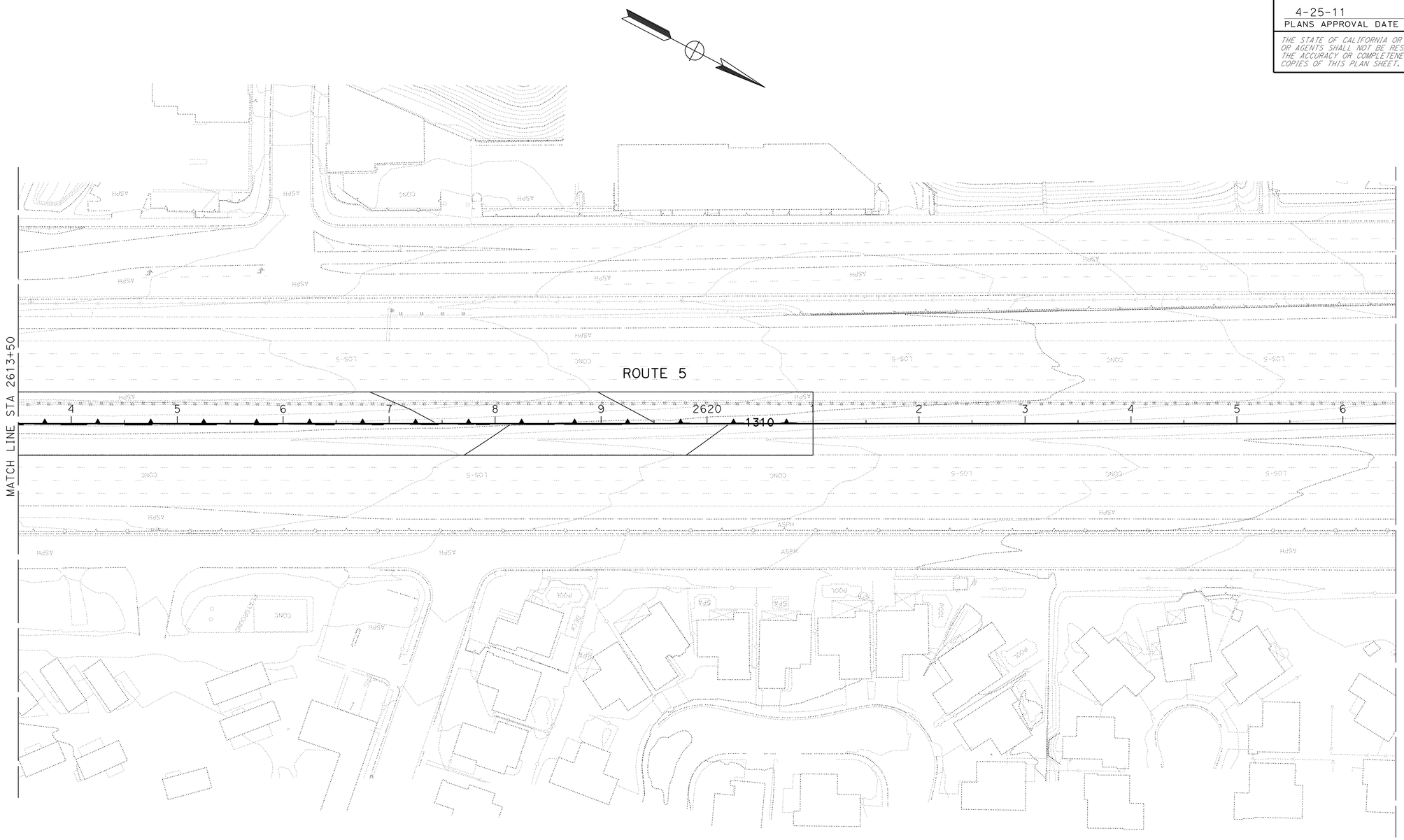

CONTOUR GRADING

SCALE: 1" = 50'

THIS PLAN ACCURATE FOR CONTOUR GRADING WORK ONLY

G-16

STATE OF CALIFORNIA - DEPARTMENT OF TRANSPORTATION
Caltrans
DESIGN

FUNCTIONAL SUPERVISOR: CELINA AVILES

CALCULATED-DESIGNED BY: AMIR ELSHARIEF
CHECKED BY

REVISED BY
DATE REVISED

LAST REVISION 10-11-10
DATE PLOTTED => 26-APR-2011
TIME PLOTTED => 06:47

Dist	COUNTY	ROUTE	POST MILES TOTAL PROJECT	SHEET No.	TOTAL SHEETS
07	LA	5	R46.3/R50.0	75	456

Paul Fong 01-18-11
REGISTERED CIVIL ENGINEER DATE

4-25-11
PLANS APPROVAL DATE

REGISTERED PROFESSIONAL ENGINEER
PAUL FONG
No. C67053
Exp. 9/30/12
CIVIL
STATE OF CALIFORNIA

THE STATE OF CALIFORNIA OR ITS OFFICERS OR AGENTS SHALL NOT BE RESPONSIBLE FOR THE ACCURACY OR COMPLETENESS OF SCANNED COPIES OF THIS PLAN SHEET.

NOTES:

1. FOR ACCURATE RIGHT OF WAY DATA, CONTACT RIGHT OF WAY ENGINEERING AT THE DISTRICT OFFICE.
2. CONTRACTOR SHALL VERIFY ELEVATIONS OF PROPSOED DRAINAGE WORK AND EXISTING DRAINAGE CONDITIONS BEFORE COMMENCEMENT OF WORK.

LEGEND:

- (X) DRAINAGE SYSTEM No.
- (X) DRAINAGE UNIT

1

- (a) REMOVE 48" x 9.0' RCP
- (b) JUNCTION STRUCTURE No. 2
- (c) 42" x 58.0' RCP
- (d) MH No. 2, H=17.5'
- (e) 42" x 228.0' RCP
- (f) MH No. 2, H=16.4'

2

- (a) 18" x 32.5' RCP W/22.0' MINOR Conc Bkf
- (b) GD-3 INLET, H=3.8'
- (c) 18" x 20.0' RCP
- (d) GD-3 INLET, H=3.7'
- (e) 18" x 40.0' RCP
- (f) GD-3 INLET, H=3.9'

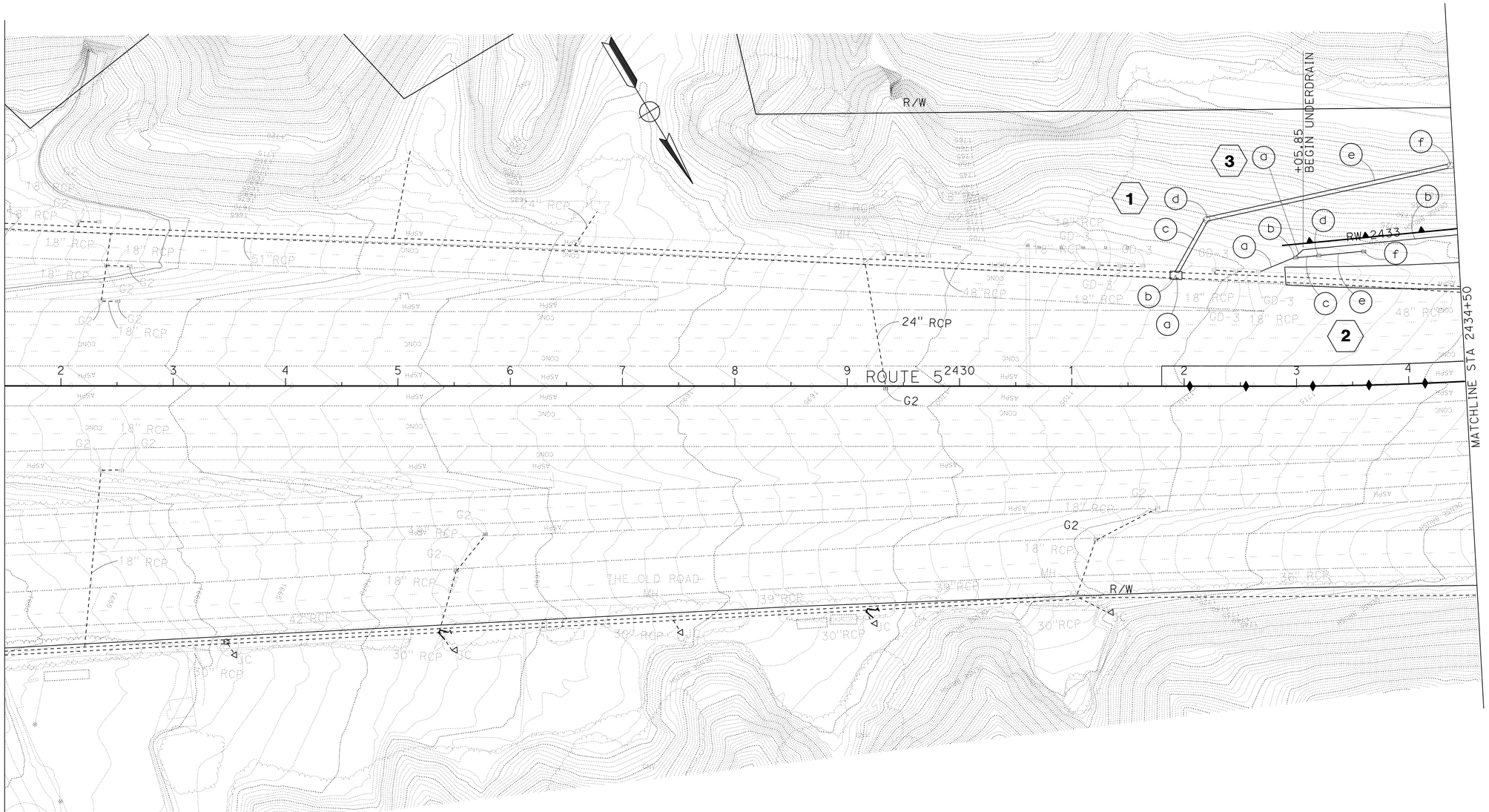

3

- (a) 8" x 9.0' NON-PERFORATED PLASTIC PIPE UNDERDRAIN
- (b) 8" x 1265.0' PERFORATED PLASTIC PIPE UNDERDRAIN

THIS PLAN ACCURATE FOR DRAINAGE WORK ONLY.

DRAINAGE PLAN

SCALE: 1" = 50'

D-1

STATE OF CALIFORNIA - DEPARTMENT OF TRANSPORTATION
Caltrans
HYDRAULICS

FUNCTIONAL SUPERVISOR: DAVE BHALLA
CALCULATED-DESIGNED BY: PAUL FONG
CHECKED BY: PRAKASH YADAV
REVISED BY
DATE REVISED

LAST REVISION
DATE PLOTTED => 26-APR-2011
TIME PLOTTED => 06:47

Dist	COUNTY	ROUTE	POST MILES TOTAL PROJECT	SHEET No.	TOTAL SHEETS
07	LA	5	R46.3/R50.0	76	456

REGISTERED CIVIL ENGINEER Paul Fong 01-18-11 DATE

4-25-11
PLANS APPROVAL DATE

REGISTERED PROFESSIONAL ENGINEER PAUL FONG No. C67053 Exp. 9/30/12 CIVIL STATE OF CALIFORNIA

THE STATE OF CALIFORNIA OR ITS OFFICERS OR AGENTS SHALL NOT BE RESPONSIBLE FOR THE ACCURACY OR COMPLETENESS OF SCANNED COPIES OF THIS PLAN SHEET.

NOTES:

1. FOR ACCURATE RIGHT OF WAY DATA, CONTACT RIGHT OF WAY ENGINEERING AT THE DISTRICT OFFICE.
2. TOP COVER OF RISER SHALL BE FLUSH WITH THE AC SURFACE.

1
- (g) 45" x 222.5' RCP
- (h) MH No.2, H=16.6'

3
- (c) 8" x 3.2' CSP RISER (VERTICAL)
- (d) 8" x 13.5' NON-PERFORATED PLASTIC PIPE UNDERDRAIN
- (e) 8" x 3.2' CSP RISER (VERTICAL)
- (f) 8" x 3.2' CSP RISER (VERTICAL)
- (g) 8" x 3.2' CSP RISER (VERTICAL)
- (h) 8" x 4.6' CSP RISER (TERMINAL)
- (i) 8" x 52.0' NON-PERFORATED PLASTIC PIPE UNDERDRAIN
- (j) 8" x 34.0' NON-PERFORATED PLASTIC PIPE UNDERDRAIN

4
- (a) CAP MANHOLE
- (b) REMOVE 42" x 5.5' RCP
- (c) REMOVE 42" x 156.0' RCP
- (d) MANHOLE No. 2, H=8.0'
- (e) 24" x 12.5' RCP
- (f) GD-3 INLET, H=5.8'

4
- (g) 24" x 58.0' RCP
- (h) GD-3 INLET, H=5.5'
- (i) 24" x 78.0' RCP
- (j) GD-3 INLET, H=5.6'
- (k) 24" x 98.0' RCP
- (l) GD-3 INLET, H=5.8'

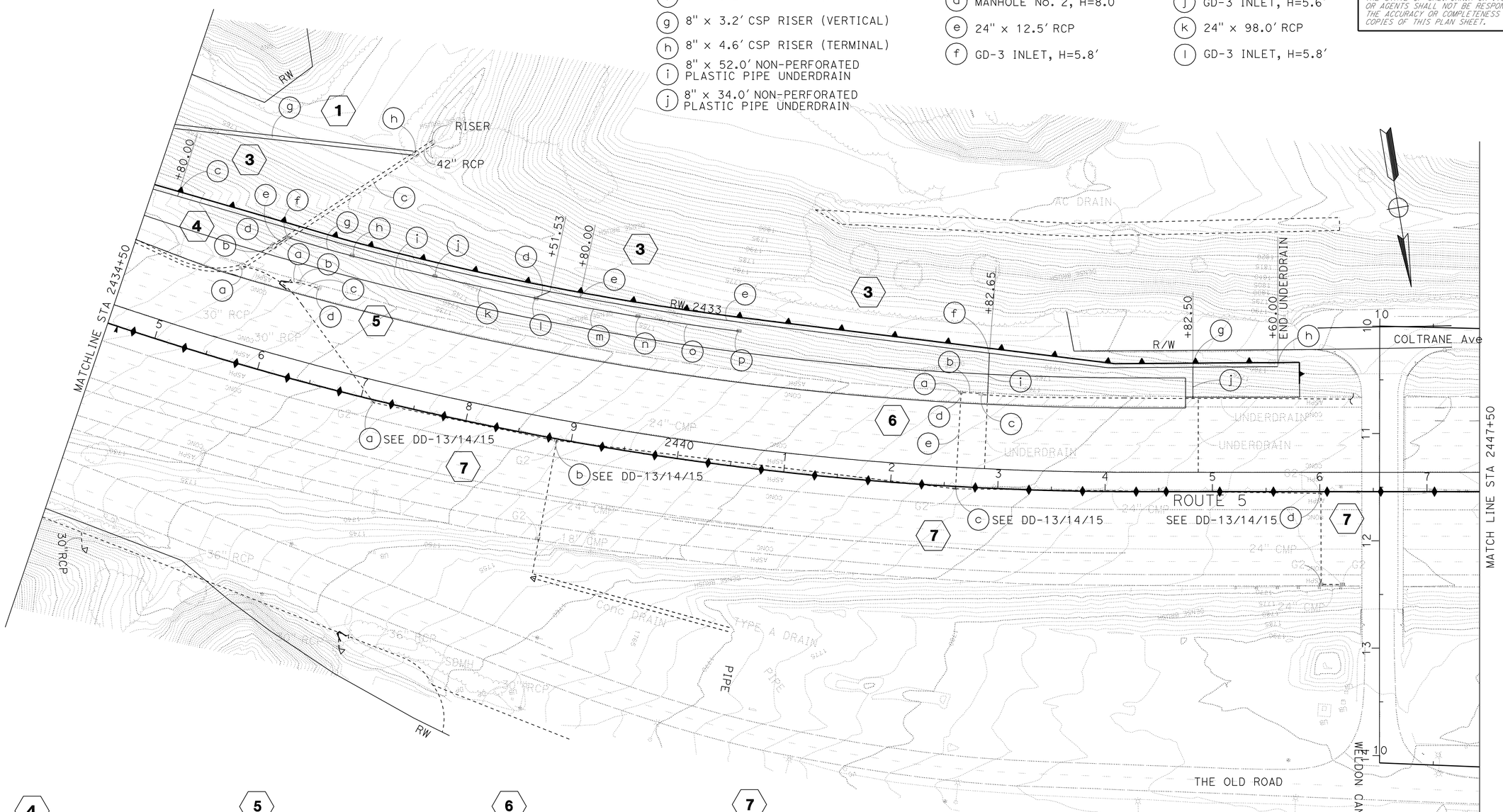

4
- (m) 24" x 98.0' RCP
- (n) GD-3 INLET, H=5.9'
- (o) 24" x 98.0' RCP
- (p) GD-3 INLET, H=5.9'

5
- (a) ABANDON 18" x 8.0' RCP
- (b) REMOVE INLET
- (c) REMOVE 18" x 16.0' RCP
- (d) REMOVE INLET

6
- (a) REMOVE INLET
- (b) REMOVE 18" x 16.0' CMP
- (c) REMOVE INLET
- (d) REMOVE 18" x 6.0' CMP
- (e) ABANDON 24" x 78.0' CMP

7
- (a) STEEL CHANNEL CLOSURE
- (b) STEEL CHANNEL CLOSURE
- (c) STEEL CHANNEL CLOSURE
- (d) STEEL CHANNEL CLOSURE

THIS PLAN ACCURATE FOR DRAINAGE WORK ONLY.

DRAINAGE PLAN

SCALE: 1" = 50'

D-2

REVISED BY | DATE REVISED

CALCULATED-DESIGNED BY: PAUL FONG
CHECKED BY: PRAKASH YADAV

FUNCTIONAL SUPERVISOR: DAVE BHALLA

STATE OF CALIFORNIA - DEPARTMENT OF TRANSPORTATION
Caltrans
HYDRAULICS

LAST REVISION | DATE PLOTTED => 26-APR-2011 | TIME PLOTTED => 06:48

Dist	COUNTY	ROUTE	POST MILES TOTAL PROJECT	SHEET No.	TOTAL SHEETS
07	LA	5	R46.3/R50.0	77	456

REGISTERED CIVIL ENGINEER *Paul Fong* 01-18-11 DATE

4-25-11
PLANS APPROVAL DATE

REGISTERED PROFESSIONAL ENGINEER PAUL FONG No. C67053 Exp. 9/30/12 CIVIL STATE OF CALIFORNIA

THE STATE OF CALIFORNIA OR ITS OFFICERS OR AGENTS SHALL NOT BE RESPONSIBLE FOR THE ACCURACY OR COMPLETENESS OF SCANNED COPIES OF THIS PLAN SHEET.

NOTE:

1. FOR ACCURATE RIGHT OF WAY DATA, CONTACT RIGHT OF WAY ENGINEERING AT THE DISTRICT OFFICE.

8
- (a) TYPE G2 INLET, H=5.0′
- (b) 24" x 98.0′ RCP
- (c) 18" x 98.0′ SCSP
- (d) TYPE G2 INLET, H=6.3′
- (e) 24" x 98.0′ RCP
- (f) TYPE G2 INLET, H=6.5′

8
- (g) 24" x 98.0′ RCP
- (h) TYPE G2 INLET, H=6.5′
- (i) 24" x 98.0′ RCP
- (j) TYPE G2 INLET, H=6.6′
- (k) 24" x 98.0′ RCP
- (l) TYPE G2 INLET, H=7.0′

8
- (m) 24" x 98.0′ RCP
- (n) TYPE G2 INLET, H=8.0′
- (o) 24" x 3.5′ RCP
- (p) TYPE G2 INLET, H=5.2′
- (q) REMOVE INLET
- (r) 24" x 6.0′ RCP

9
- (a) GD-1 INLET, H=3.8′
- (b) 18" x 32.5′ RCP

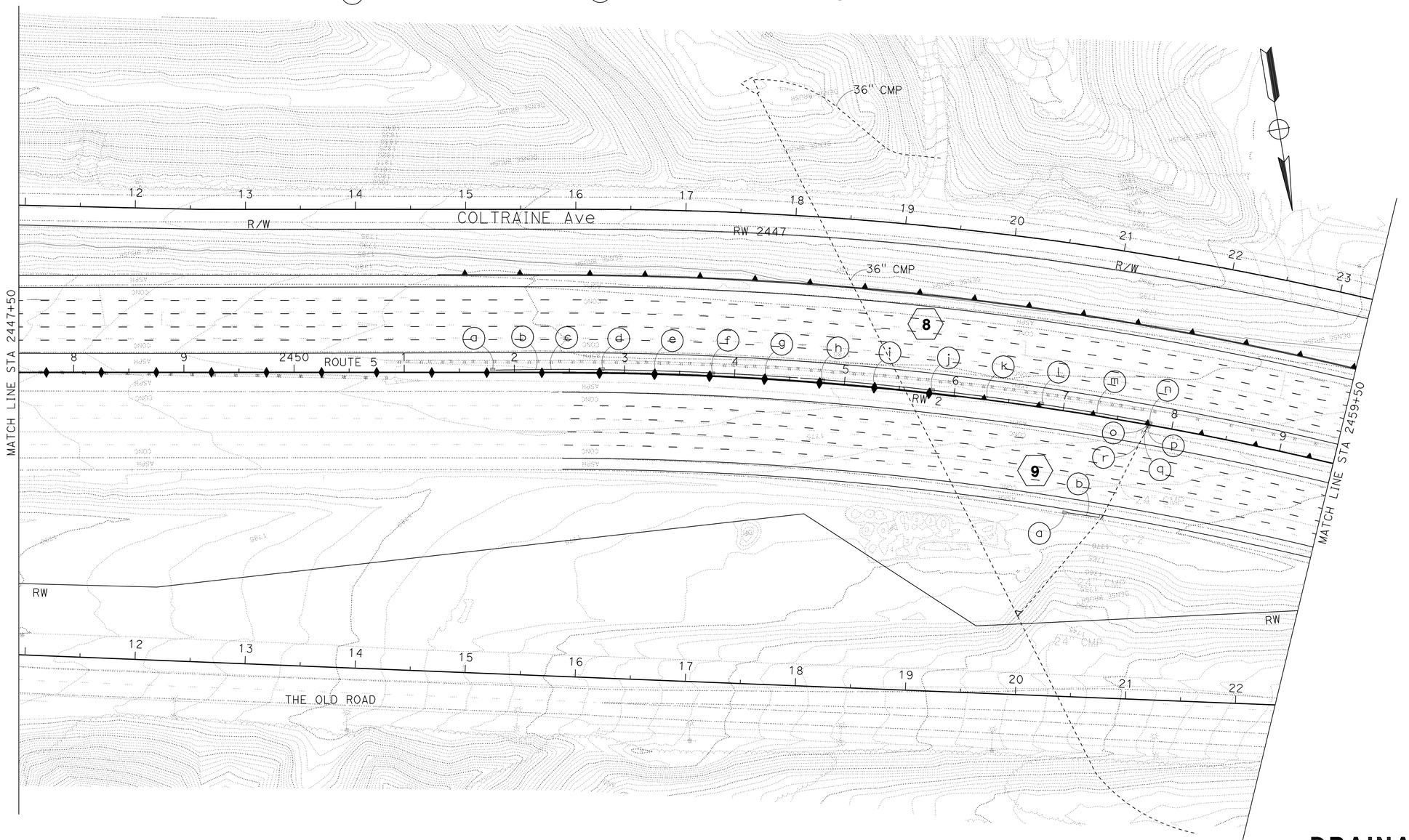

DRAINAGE PLAN

SCALE 1" = 50′

D-3

THIS PLAN ACCURATE FOR DRAINAGE WORK ONLY.

STATE OF CALIFORNIA - DEPARTMENT OF TRANSPORTATION
Caltrans
HYDRAULICS

FUNCTIONAL SUPERVISOR: DAVE BHALLA
CALCULATED-DESIGNED BY: PAUL FONG
CHECKED BY: PRAKASH YADAV
REVISED BY
DATE REVISED

LAST REVISION 12-16-09
DATE PLOTTED => 26-APR-2011
TIME PLOTTED => 06:48

Dist	COUNTY	ROUTE	POST MILES TOTAL PROJECT	SHEET No.	TOTAL SHEETS
07	LA	5	R46.3/R50.0	78	456

Paul Fong 01-18-11
REGISTERED CIVIL ENGINEER DATE

4-25-11
PLANS APPROVAL DATE

REGISTERED PROFESSIONAL ENGINEER PAUL FONG No. C67053 Exp. 9/30/12 CIVIL STATE OF CALIFORNIA

THE STATE OF CALIFORNIA OR ITS OFFICERS OR AGENTS SHALL NOT BE RESPONSIBLE FOR THE ACCURACY OR COMPLETENESS OF SCANNED COPIES OF THIS PLAN SHEET.

NOTE:

1. FOR ACCURATE RIGHT OF WAY DATA, CONTACT RIGHT OF WAY ENGINEERING AT THE DISTRICT OFFICE.

10
- (a) DITCH EXCAVATION
- (b) 12" x 2.5' RCP
- (c) L HW, H=2'-8"
- (d) REMOVE 12" x 50.0' CORRUGATED PLASTIC PIPE

11
- (a) REMOVE Conc OVERSIDE DRAIN

12
- (a) GD-1 INLET, H=6.1'
- (b) 24" x 139.0' CSP
- (c) GD-1 INLET, H=6.1'
- (d) 24" x 139.0' CSP
- (e) GD-1 INLET, H=6.3'
- (f) 24" x 139.0' CSP
- (g) GD-1 INLET, H=6.3'
- (h) 24" x 139.0' CSP
- (i) GD-1 INLET, H=6.5'
- (j) 24" x 119.0' RCP

13
- (a) TYPE G2 INLET, H=5.5'
- (b) 24" x 98.0' RCP
- (c) TYPE G2 INLET, H=5.7'
- (d) 24" x 98.0' RCP
- (e) TYPE G2 INLET, H=5.8'
- (f) 24" x 98.0' RCP
- (g) TYPE G2 INLET, H=5.7'
- (h) 24" x 98.0' RCP
- (i) TYPE G2 INLET, H=5.8'

13
- (j) 24" x 98.0' RCP
- (k) TYPE G2 INLET, H=5.8'
- (l) 24" x 98.0' RCP
- (m) TYPE G2 INLET, H=5.8'
- (n) 24" x 98.0' RCP
- (o) TYPE G2 INLET, H=5.7'
- (p) 24" x 98.0' RCP
- (q) TYPE G2 INLET, H=5.8'
- (r) 24" x 98.0' RCP

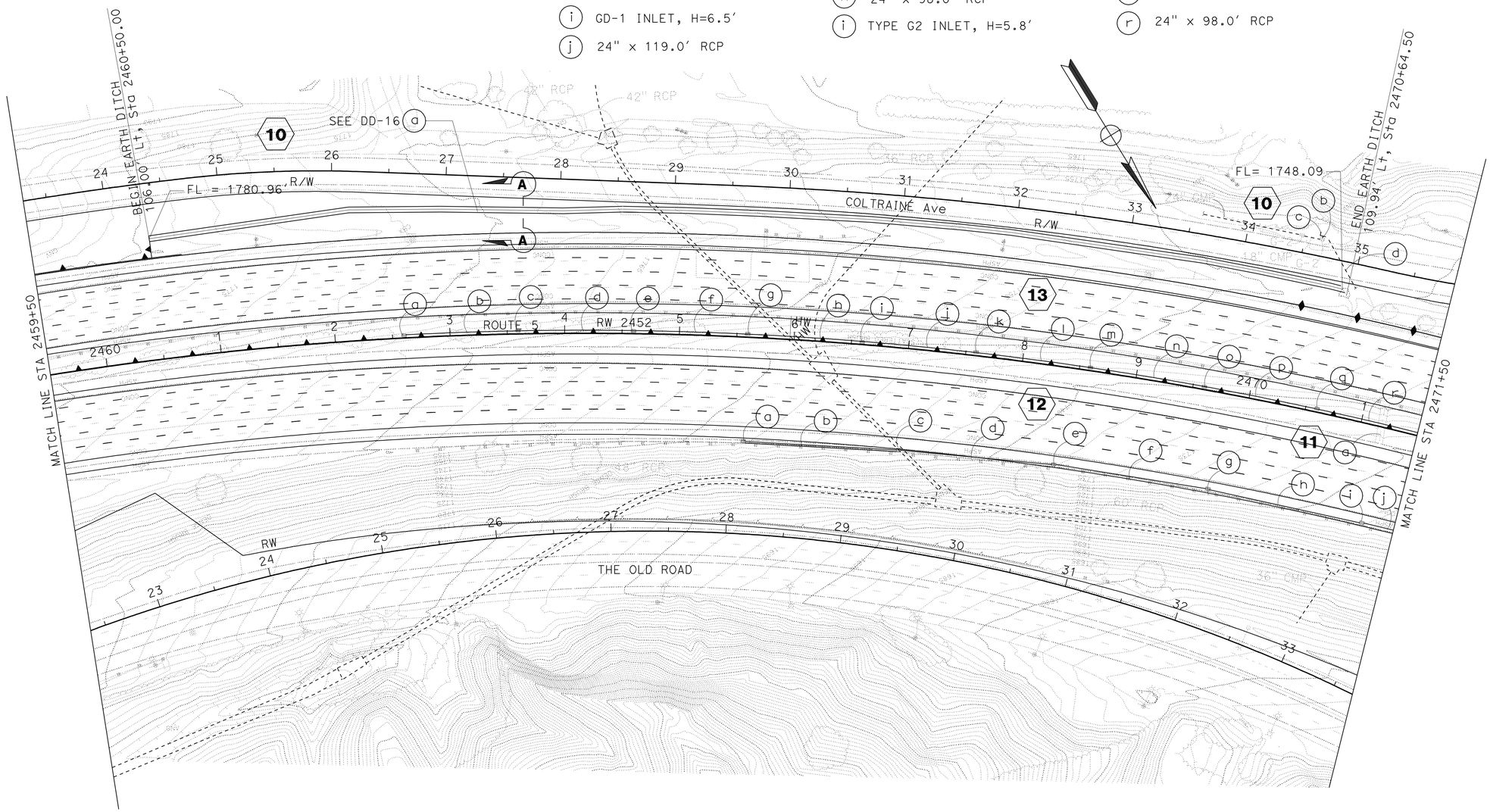

DRAINAGE PLAN

SCALE: 1" = 50'

D-4

THIS PLAN ACCURATE FOR DRAINAGE WORK ONLY.

STATE OF CALIFORNIA - DEPARTMENT OF TRANSPORTATION
Caltrans
HYDRAULICS

FUNCTIONAL SUPERVISOR: DAVE BHALLA
CALCULATED-DESIGNED BY: PAUL FONG
CHECKED BY: PRAKASH YADAV
REVISED BY
DATE REVISED

LAST REVISION
DATE PLOTTED => 26-APR-2011
TIME PLOTTED => 06:48

Dist	COUNTY	ROUTE	POST MILES TOTAL PROJECT	SHEET No.	TOTAL SHEETS
07	LA	5	R46.3/R50.0	79	456

Paul Fong 01-18-11
REGISTERED CIVIL ENGINEER DATE

4-25-11
PLANS APPROVAL DATE

REGISTERED PROFESSIONAL ENGINEER PAUL FONG No. C67053 Exp. 9/30/12 CIVIL STATE OF CALIFORNIA

THE STATE OF CALIFORNIA OR ITS OFFICERS OR AGENTS SHALL NOT BE RESPONSIBLE FOR THE ACCURACY OR COMPLETENESS OF SCANNED COPIES OF THIS PLAN SHEET.

NOTE:

1. FOR ACCURATE RIGHT OF WAY DATA, CONTACT RIGHT OF WAY ENGINEERING AT THE DISTRICT OFFICE.

12

- (k) GD-1 INLET, H=6.7′
- (l) 24" x 78.0′ RCP
- (m) TYPE G2 INLET, H=6.1′
- (n) 24" x 78.0′ RCP
- (o) TYPE G2 INLET, H=5.5′
- (p) 24" x 78.0′ RCP
- (q) REMOVE INLET
- (r) TYPE G2 INLET, H=5.2′

12

- (s) 24" x 58.0′ RCP
- (t) TYPE G2 INLET, H=5.0′
- (u) 24" x 44.0′ RCP
- (v) REMOVE 18" x 122.0′ CMP
- (w) TYPE G2 INLET, H=5.2′
- (x) REMOVE INLET
- (y) 24" x 36.0′ RCP
- (z) REMOVE 18" x 22.0′ CMP

13

- (s) TYPE G2 INLET, H=5.7′
- (t) 24" x 98.0′ RCP
- (u) TYPE G2 INLET, H=5.8′
- (v) 24" x 98.0′ RCP
- (w) TYPE G2 INLET, H=5.7′
- (x) 24" x 98′ RCP
- (y) TYPE G2 INLET, H=5.8′
- (z) 24" x 98′ RCP

13

- (aa) TYPE G2 INLET, H=6.7′
- (bb) 24" x 63.0′ RCP
- (cc) REMOVE INLET
- (dd) ABANDON 24" x 68.0′ CMP
- (ee) REMOVE 24" x 37.0′ CMP
- (ff) REMOVE 24" x 4.0′ CMP
- (gg) 24" x 16.0′ CSP
- (hh) TYPE G2 INLET, H=8.9′

13

- (ii) 24" x 52.5′ RCP
- (jj) 18" x 52.5′ SCSP
- (kk) TYPE G2 INLET, H=10.0′
- (ll) 24" x 37.5′ RCP
- (mm) 18" x 37.5′ SCSP
- (nn) TYPE G2 INLET, H=17.0′
- (oo) 24" x 4.5′ RCP

13

- (pp) TYPE G2 INLET, H=7.0′
- (qq) JACKED 24" x 79.0′ RCP (CLASS V)
- (rr) TYPE G2 INLET, H=10.1′
- (ss) 18" x 25.5 RCP
- (tt) TYPE G2 INLET, H=5.0′

13

- (UU) CONCRETE PIPE ANCHORS AT EVERY 16 FEET (TOTAL 10)
- (vv) 24" x 172.0′ CSP DOWNDRAIN
- (ww) 24" x 10.0′ CSP DOWNDRAIN
- (xx) STRAIGHT HW, H=3′-8"
- (yy) RSP (FACING, METHOD B)

14

- (a) REMOVE INLET
- (b) 2.5′ x 24" RCP
- (c) J.C. 3-C, H=3.9′
- (d) Conc V-DITCH (TYPE B DRAIN), L=12.0′

15

- (a) TYPE G2 INLET, H=5.5′
- (b) 18" x 98.0′ RCP
- (c) TYPE G2 INLET, H=5.0′

16

- (a) TYPE G2 INLET, H=5.8′
- (b) 24" x 98.0′ RCP
- (c) TYPE G2 INLET, H=6.0′
- (d) 24" x 98.0′ RCP

THIS PLAN ACCURATE FOR DRAINAGE WORK ONLY.

DRAINAGE PLAN

SCALE: 1" = 50′

D-5

STATE OF CALIFORNIA - DEPARTMENT OF TRANSPORTATION
Caltrans
HYDRAULICS
FUNCTIONAL SUPERVISOR: DAVE BHALLA
CALCULATED-DESIGNED BY: PAUL FONG
CHECKED BY: PRAKASH YADAV
REVISED BY
DATE REVISED

LAST REVISION DATE PLOTTED => 26-APR-2011
TIME PLOTTED => 06:48

Dist	COUNTY	ROUTE	POST MILES TOTAL PROJECT	SHEET No.	TOTAL SHEETS
07	LA	5	R46.3/R50.0	80	456

Paul Fong 01-18-11
REGISTERED CIVIL ENGINEER DATE

4-25-11
PLANS APPROVAL DATE

REGISTERED PROFESSIONAL ENGINEER PAUL FONG No. C67053 Exp. 9/30/12 CIVIL STATE OF CALIFORNIA

THE STATE OF CALIFORNIA OR ITS OFFICERS OR AGENTS SHALL NOT BE RESPONSIBLE FOR THE ACCURACY OR COMPLETENESS OF SCANNED COPIES OF THIS PLAN SHEET.

NOTE:

1. FOR ACCURATE RIGHT OF WAY DATA, CONTACT RIGHT OF WAY ENGINEERING AT THE DISTRICT OFFICE.

15

- (d) 18" x 98.0' RCP W/68.0' MINOR Conc Bkf

16

- (e) TYPE G2 INLET, H=7.0'
- (f) REMOVE 24" x 20.0' CMP
- (g) REMOVE 24" x 4.0' CMP
- (h) REMOVE 24" x 8.0' CMP
- (i) CONCRETE PIPE ANCHOR

16

- (j) 24" x 23.0' CSP
- (k) 24" x 98.0' RCP
- (l) TYPE G2 INLET, H=6.0'
- (m) 24" x 98.0' RCP
- (n) TYPE G2 INLET, H=6.2'

16

- (o) 24" x 98.0' RCP
- (p) TYPE G2 INLET, H=6.1'
- (q) 24" x 98.0' RCP
- (r) TYPE G2 INLET, H=5.7'
- (s) 24" x 98.0' RCP
- (t) TYPE G2 INLET, H=5.7'
- (u) 24" x 98.0' RCP

16

- (v) TYPE G2 INLET, H=5.6'
- (w) 24" x 98.0' RCP
- (x) TYPE G2 INLET, H=5.6'
- (y) 24" x 98.0' RCP
- (z) TYPE G2 INLET, H=5.8'
- (aa) 24" x 98.0' RCP
- (bb) TYPE G2 INLET, H=6.3'

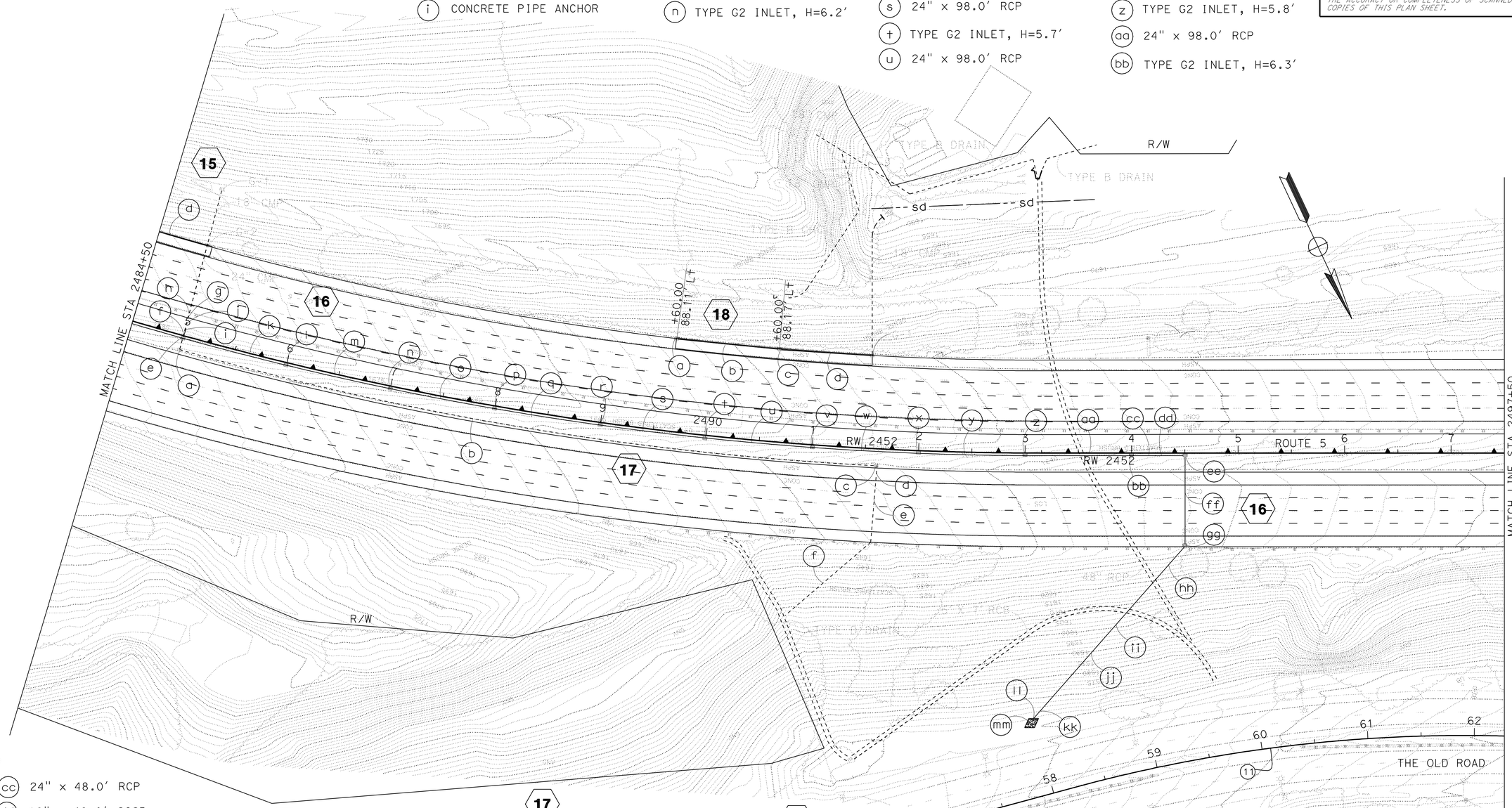

16

- (cc) 24" x 48.0' RCP
- (dd) 18" x 48.0' SCSP
- (ee) TYPE G2 INLET, H=7.0'
- (ff) JACKED 24" x 81.0' RCP (CLASS V)
- (gg) TYPE G2 INLET, H=9.4'
- (hh) 24" x 44.0' CSP DOWNDRAIN
- (ii) CONCRETE PIPE ANCHORS AT EVERY 16 FEET (TOTAL 10)

16

- (jj) 24" x 172.0' CSP DOWNDRAIN
- (kk) 24" x 10.0' CSP DOWNDRAIN
- (ll) STRAIGHT HW, H=3'-8"
- (mm) RSP (FACING, METHOD B)

17

- (a) REMOVE INLET
- (b) REMOVE 24" x 656.0' CMP
- (c) REMOVE INLET
- (d) REMOVE 24" x 14.0' CMP
- (e) ABANDON 24" x 58.0' CMP
- (f) ABANDON 24" x 115.0' CMP

18

- (a) CL1 INLET(CASE 1)
- (b) 18" x 98.0' SCSP
- (c) CL1 INLET(CASE 2)
- (d) 18" x 90.0' SCSP

THIS PLAN ACCURATE FOR DRAINAGE WORK ONLY.

DRAINAGE PLAN

SCALE: 1" = 50'

D-6

STATE OF CALIFORNIA - DEPARTMENT OF TRANSPORTATION
Caltrans
HYDRAULICS

FUNCTIONAL SUPERVISOR: DAVE BHALLA
CALCULATED-DESIGNED BY: PAUL FONG
CHECKED BY: PRAKASH YADAV
REVISED BY
DATE REVISED

LAST REVISION
DATE PLOTTED => 26-APR-2011
TIME PLOTTED => 06:49

Dist	COUNTY	ROUTE	POST MILES TOTAL PROJECT	SHEET No.	TOTAL SHEETS
07	LA	5	R46.3/R50.0	81	456

Paul Fong 01-18-11
REGISTERED CIVIL ENGINEER DATE

4-25-11
PLANS APPROVAL DATE

REGISTERED PROFESSIONAL ENGINEER
PAUL FONG
No. C67053
Exp. 9/30/12
CIVIL
STATE OF CALIFORNIA

THE STATE OF CALIFORNIA OR ITS OFFICERS OR AGENTS SHALL NOT BE RESPONSIBLE FOR THE ACCURACY OR COMPLETENESS OF SCANNED COPIES OF THIS PLAN SHEET.

NOTE:

1. FOR ACCURATE RIGHT OF WAY DATA, CONTACT RIGHT OF WAY ENGINEERING AT THE DISTRICT OFFICE.

19

- (a) REMOVE INLET
- (b) REMOVE 36" x 15.0' CMP
- (c) TYPE G2 INLET, H=8.5'
- (d) REMOVE 36" x 448.0' CMP
- (e) 36" x 458.0' CSP
- (f) REMOVE 36" x 12.5' CMP
- (g) REMVOVE INLET
- (h) 36" x 12.5' CSP
- (i) TYPE G2 INLET, H=6.9'

20

- (a) GD-1 INLET, H=6.2'
- (b) 24" x 148.0' CSP
- (c) GD-1 INLET, H=6.0'
- (d) 24" x 142.0' CSP
- (e) TYPE G2 INLET, H=5.9'
- (f) 24" x 58.0' CSP
- (g) TYPE G2 INLET, H=6.1'
- (h) 24" x 58.0' CSP

20

- (i) TYPE G2 INLET, H=6.3'
- (j) 24" x 58.0' CSP

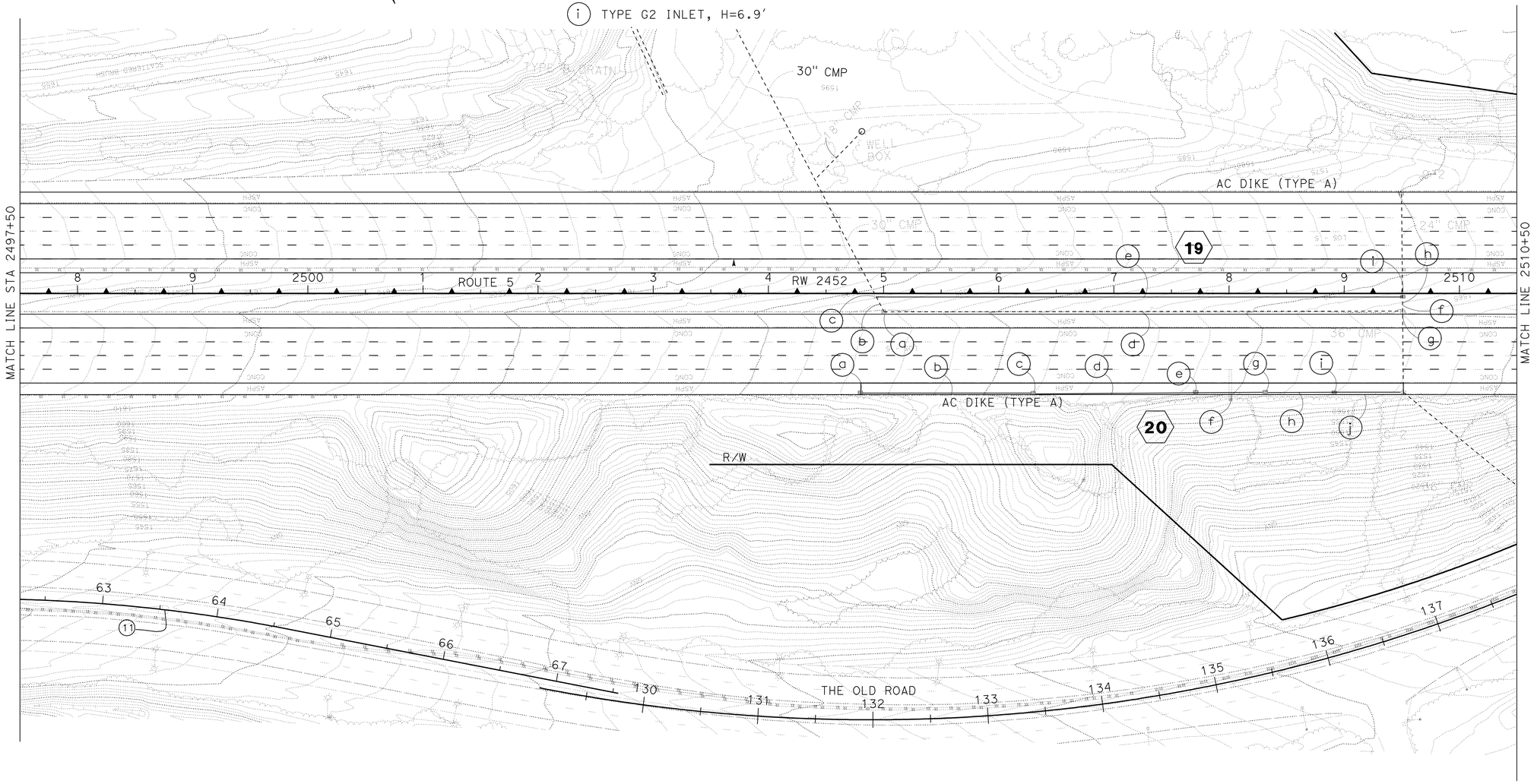

DRAIANAGE PLAN

SCALE: 1" = 50'

D-7

THIS PLAN ACCURATE FOR DRAINAGE WORK ONLY.

REVISED BY	DATE REVISED

CALCULATED-DESIGNED BY	PAUL FONG
CHECKED BY	PRAKASH YADAV
FUNCTIONAL SUPERVISOR	DAVE BHALLA

STATE OF CALIFORNIA - DEPARTMENT OF TRANSPORTATION
Caltrans
HYDRAULICS

LAST REVISION | DATE PLOTTED => 26-APR-2011 | TIME PLOTTED => 06:49

Dist	COUNTY	ROUTE	POST MILES TOTAL PROJECT	SHEET No.	TOTAL SHEETS
07	LA	5	R46.3/R50.0	82	456

Paul Fong 01-18-11
REGISTERED CIVIL ENGINEER DATE

4-25-11
PLANS APPROVAL DATE

REGISTERED PROFESSIONAL ENGINEER
PAUL FONG
No. C67053
Exp. 9/30/12
CIVIL
STATE OF CALIFORNIA

THE STATE OF CALIFORNIA OR ITS OFFICERS OR AGENTS SHALL NOT BE RESPONSIBLE FOR THE ACCURACY OR COMPLETENESS OF SCANNED COPIES OF THIS PLAN SHEET.

NOTE:

1. FOR ACCURATE RIGHT OF WAY DATA, CONTACT RIGHT OF WAY ENGINEERING AT THE DISTRICT OFFICE.

21
- (a) TYPE G1 INLET, H=3.7'
- (b) 18" x 37.0' CSP W/22.0' MINOR Conc Bkf

22
- (a) REMOVE 86.0' TRAPEZOIDAL Conc CHANNEL
- (b) 82.5' TRAPEZOIDAL Conc CHANNEL

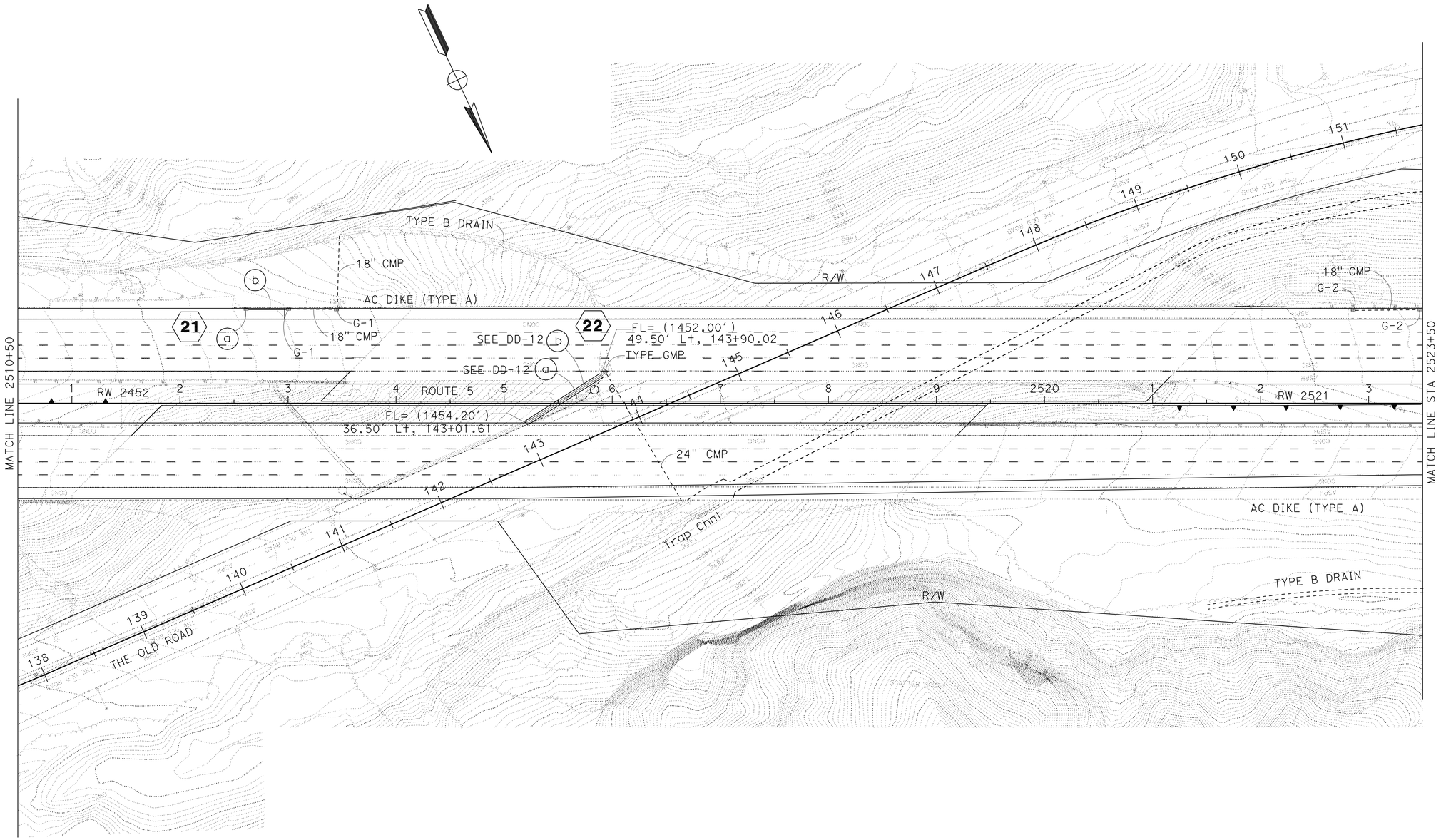

DRAINAGE PLAN

SCALE: 1" = 50'

D-8

THIS PLAN ACCURATE FOR DRAINAGE WORK ONLY.

STATE OF CALIFORNIA - DEPARTMENT OF TRANSPORTATION
Caltrans
HYDRAULICS

FUNCTIONAL SUPERVISOR: DAVE BHALLA
CALCULATED-DESIGNED BY: PAUL FONG
CHECKED BY: PRAKASH YADAV
REVISED BY
DATE REVISED

LAST REVISION
DATE PLOTTED => 26-APR-2011
TIME PLOTTED => 06:49

Dist	COUNTY	ROUTE	POST MILES TOTAL PROJECT	SHEET No.	TOTAL SHEETS
07	LA	5	R46.3/R50.0	83	456

REGISTERED CIVIL ENGINEER 01-20-11 DATE

4-25-11
PLANS APPROVAL DATE

REGISTERED PROFESSIONAL ENGINEER PRAKASH YADAV No. C68479 Exp. 9/30/11 CIVIL STATE OF CALIFORNIA

THE STATE OF CALIFORNIA OR ITS OFFICERS OR AGENTS SHALL NOT BE RESPONSIBLE FOR THE ACCURACY OR COMPLETENESS OF SCANNED COPIES OF THIS PLAN SHEET.

NOTE:

1. FOR ACCURATE RIGHT OF WAY DATA, CONTACT RIGHT OF WAY ENGINEERING AT THE DISTRICT OFFICE.

23

- (a) CAP INLET
- (b) 24"x12' CSP
- (c) TYPE G2 INLET,H=5.0'

24

- (a) TYPE G2 INLET,H=5.1'
- (b) 24"x98' RCP
- (c) TYPE G2 INLET,H=5.3'
- (d) 24"x98' RCP
- (e) TYPE G2 INLET,H=5.1'
- (f) 24"x98' RCP
- (g) TYPE G2 INLET,H=5.0'

24

- (h) 24" x98' RCP
- (i) TYPE G2 INLET,H=5.2'
- (j) 24" x98' RCP
- (k) TYPE G2 INLET,H=5.4'
- (l) 24" x98' RCP
- (m) TYPE G2 INLET,H=5.5'

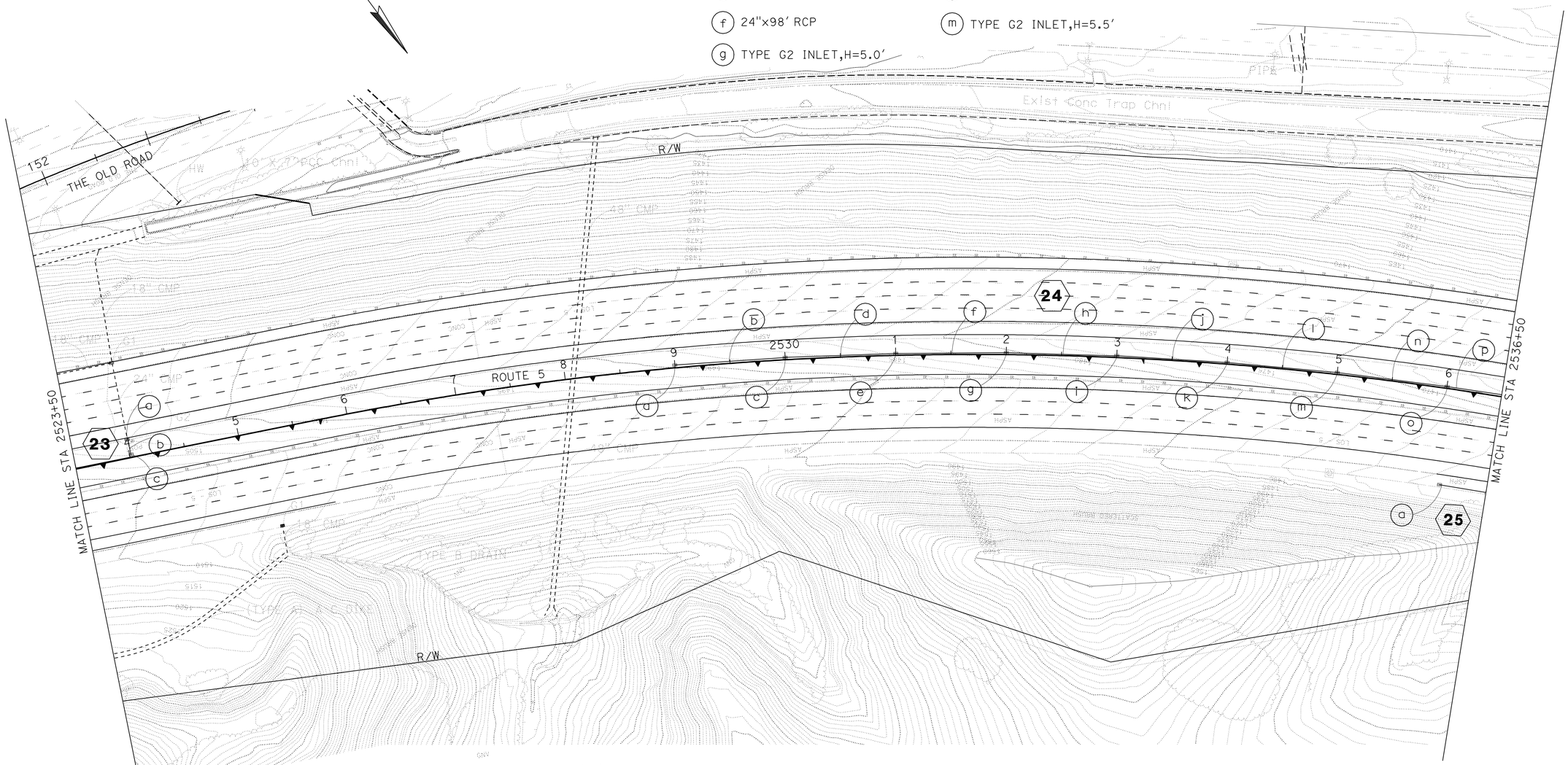

24

- (n) 24" x98' RCP
- (o) TYPE G2 INLET,H=5.8'
- (p) 24" x95' RCP

25

- (a) GD1 INLET,H=5.3'

DRAINAGE PLAN

SCALE: 1" = 50'

THIS PLAN ACCURATE FOR DRAINAGE WORK ONLY.

D-9

STATE OF CALIFORNIA - DEPARTMENT OF TRANSPORTATION
Caltrans
HYDRAULICS

FUNCTIONAL SUPERVISOR: DAVE BHALLA
CALCULATED-DESIGNED BY: PRAKASH YADAV
CHECKED BY: PAUL FONG
REVISED BY
DATE REVISED

LAST REVISION
DATE PLOTTED => 26-APR-2011
TIME PLOTTED => 06:49

Dist	COUNTY	ROUTE	POST MILES TOTAL PROJECT	SHEET No.	TOTAL SHEETS
07	LA	5	R46.3/R50.0	84	456

REGISTERED CIVIL ENGINEER 01-20-11 DATE

4-25-11
PLANS APPROVAL DATE

REGISTERED PROFESSIONAL ENGINEER PRAKASH YADAV No. C68479 Exp. 9/30/11 CIVIL STATE OF CALIFORNIA

THE STATE OF CALIFORNIA OR ITS OFFICERS OR AGENTS SHALL NOT BE RESPONSIBLE FOR THE ACCURACY OR COMPLETENESS OF SCANNED COPIES OF THIS PLAN SHEET.

NOTE:

1. FOR ACCURATE RIGHT OF WAY DATA, CONTACT RIGHT OF WAY ENGINEERING AT THE DISTRICT OFFICE.

24
- (q) TYPE G2 INLET,H=5.9′
- (r) 24"x98′ RCP
- (s) TYPE G2 INLET,H=5.7′
- (t) 18"x78′ SCSP

24
- (u) 24"x78′ RCP
- (v) TYPE G2 INLET,H=6.0′
- (w) 24"x12.5′ RCP
- (x) CAP INLET

25
- (b) 18"x98′ RCP
- (c) TYPE G1 INLET,H=5.1′
- (d) 18"x58′RCP
- (e) TYPE G1 INLET,H=5.3′
- (f) 18"x58′RCP

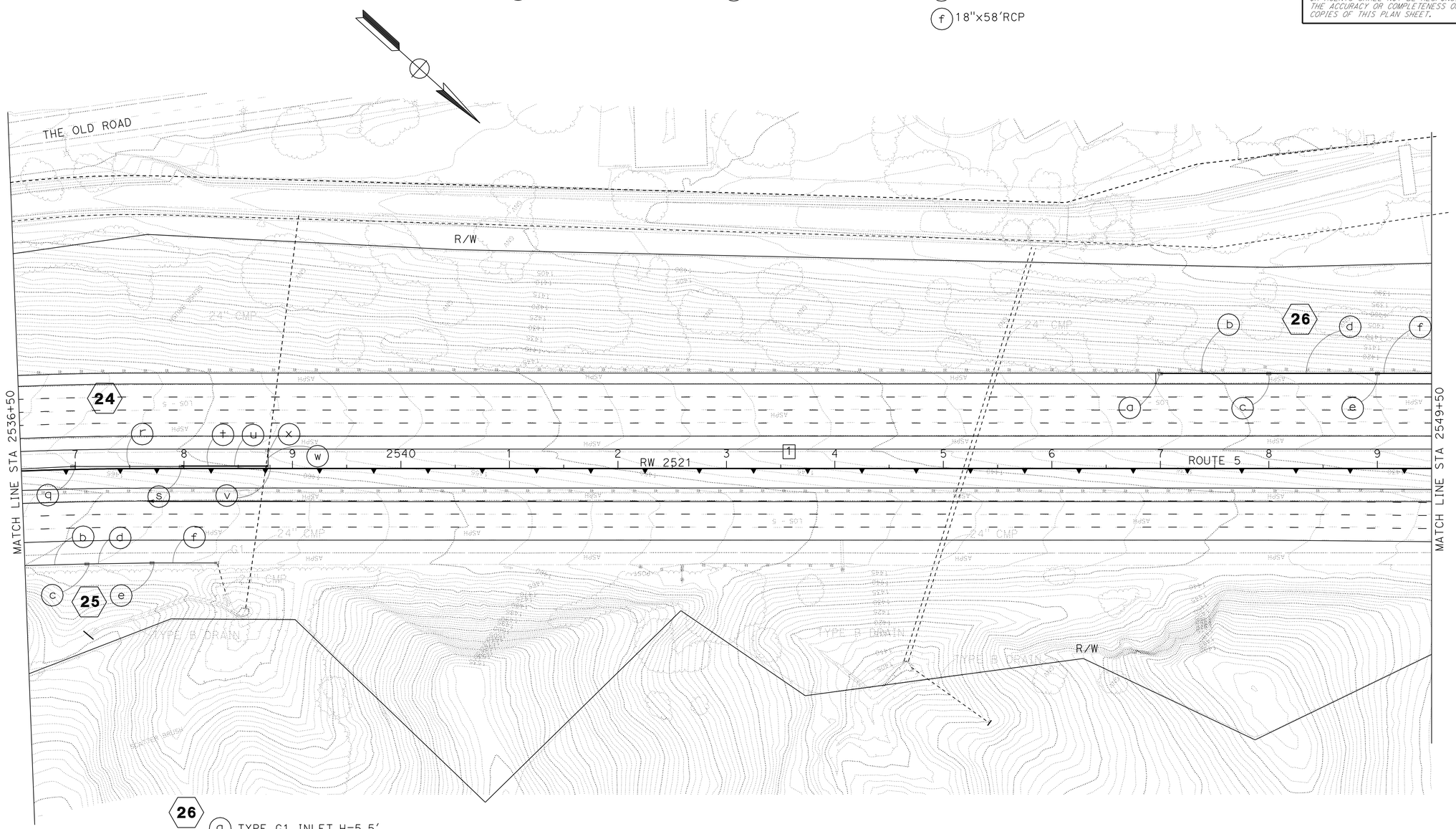

26
- (a) TYPE G1 INLET,H=5.5′
- (b) 18"x98′ RCP
- (c) TYPE G1 INLET,H=5.3′
- (d) 18"x98′ RCP
- (e) TYPE G1 INLET,H=5.2′
- (f) 18"x98′ RCP

THIS PLAN ACCURATE FOR DRAINAGE WORK ONLY.

DRAINAGE PLAN

SCALE: 1" = 50′

D-10

STATE OF CALIFORNIA - DEPARTMENT OF TRANSPORTATION
Caltrans
HYDRAULICS

FUNCTIONAL SUPERVISOR: DAVE BHALLA
CALCULATED-DESIGNED BY: PRAKASH YADAV
CHECKED BY: PAUL FONG
REVISED BY
DATE REVISED

LAST REVISION
DATE PLOTTED => 26-APR-2011
TIME PLOTTED => 06:50

Dist	COUNTY	ROUTE	POST MILES TOTAL PROJECT	SHEET No.	TOTAL SHEETS
07	LA	5	R46.3/R50.0	85	456

REGISTERED CIVIL ENGINEER 01-20-11 DATE

4-25-11
PLANS APPROVAL DATE

REGISTERED PROFESSIONAL ENGINEER PRAKASH YADAV No. C68479 Exp. 9/30/11 CIVIL STATE OF CALIFORNIA

THE STATE OF CALIFORNIA OR ITS OFFICERS OR AGENTS SHALL NOT BE RESPONSIBLE FOR THE ACCURACY OR COMPLETENESS OF SCANNED COPIES OF THIS PLAN SHEET.

NOTE:

1. FOR ACCURATE RIGHT OF WAY DATA, CONTACT RIGHT OF WAY ENGINEERING AT THE DISTRICT OFFICE.

26
- (g) TYPE G1 INLET,H=5.4′
- (h) 18"x98′ RCP
- (i) TYPE G1 INLET,H=5.3′
- (j) 18"x98′ RCP

26
- (k) REMOVE INLET
- (l) TYPE G2 INLET,H=5.4′
- (m) REMOVE18"X48′CMP
- (n) 18"x48′ RCP

27
- (a) TYPE GD1 INLET,H=5.0′
- (b) 18"x58′ RCP
- (c) TYPE GD1 INLET,H=5.1′
- (d) 18"x58′ RCP
- (e) TYPE G1 INLET,H=5.0′

27
- (f) REMOVE INLET
- (g) REMOVE 18" x 20′ CMP
- (h) 18"x25′ CSP
- (i) REMOVE HEAD WALL
- (j) STRAIGHT HW, H=3′-2"

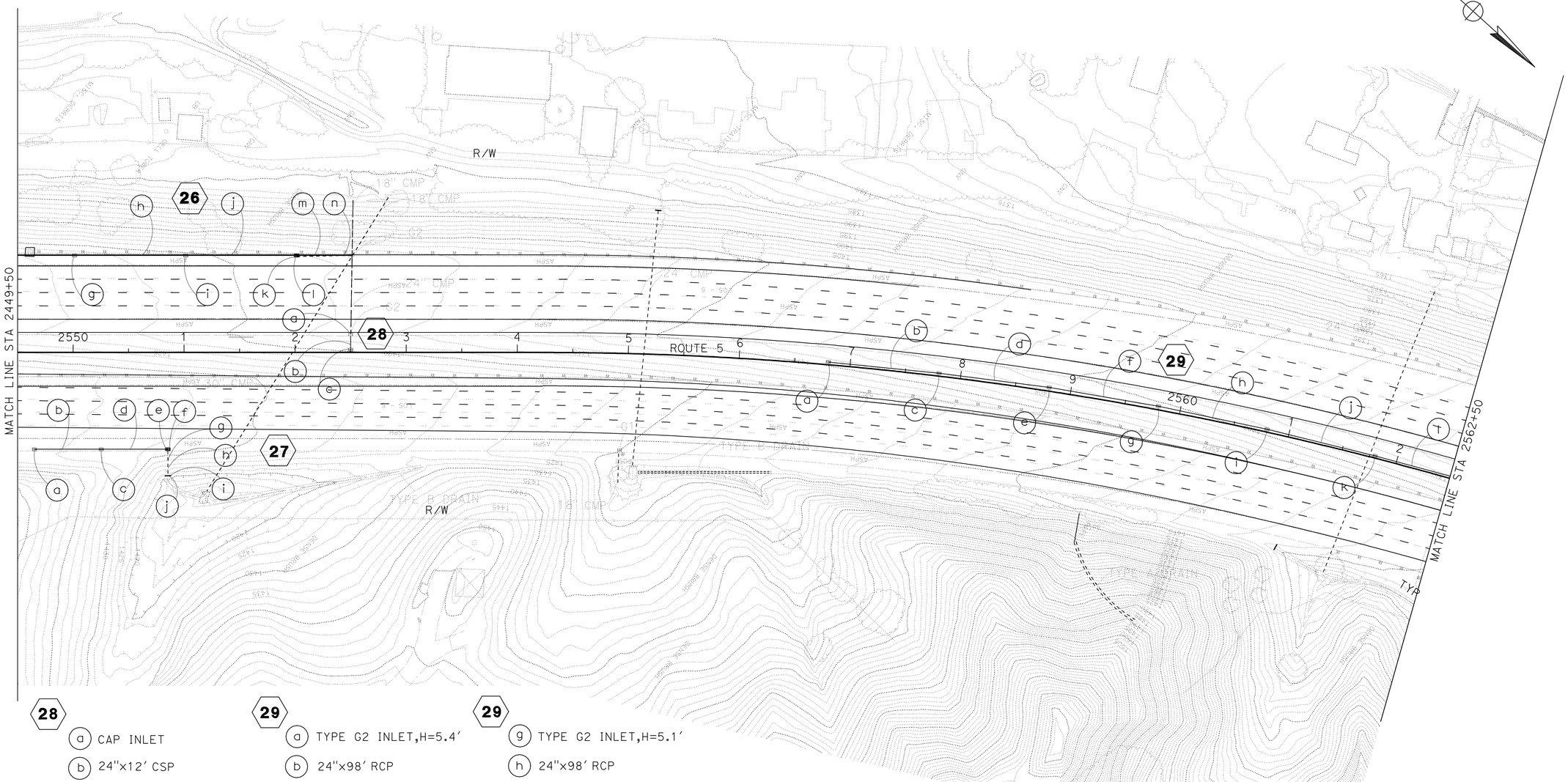

28
- (a) CAP INLET
- (b) 24"x12′ CSP
- (c) TYPE G2 INLET,H=5.0′

29
- (a) TYPE G2 INLET,H=5.4′
- (b) 24"x98′ RCP
- (c) TYPE G2 INLET,H=5.0′
- (d) 24"x98′ RCP
- (e) TYPE G2 INLET,H=5.0′
- (f) 24"x98′ RCP

29
- (g) TYPE G2 INLET,H=5.1′
- (h) 24"x98′ RCP
- (i) TYPE G2 INLET,H=5.1′
- (j) 24"x98′ RCP
- (k) TYPE G2 INLET,H=5.4′
- (l) 24"x98′ RCP

THIS PLAN ACCURATE FOR DRAINAGE WORK ONLY.

DRAINAGE PLAN

SCALE: 1" = 50′

D-11

STATE OF CALIFORNIA - DEPARTMENT OF TRANSPORTATION
Caltrans
HYDRAULICS

FUNCTIONAL SUPERVISOR: DAVE BHALLA
CALCULATED-DESIGNED BY: PRAKASH YADAV
CHECKED BY: PAUL FONG
REVISED BY
DATE REVISED

LAST REVISION
DATE PLOTTED => 26-APR-2011
TIME PLOTTED => 06:50

Dist	COUNTY	ROUTE	POST MILES TOTAL PROJECT	SHEET No.	TOTAL SHEETS
07	LA	5	R46.3/R50.0	86	456

REGISTERED CIVIL ENGINEER 01-20-11 DATE

4-25-11
PLANS APPROVAL DATE

REGISTERED PROFESSIONAL ENGINEER PRAKASH YADAV No. C68479 Exp. 9/30/11 CIVIL STATE OF CALIFORNIA

THE STATE OF CALIFORNIA OR ITS OFFICERS OR AGENTS SHALL NOT BE RESPONSIBLE FOR THE ACCURACY OR COMPLETENESS OF SCANNED COPIES OF THIS PLAN SHEET.

NOTE:

1. FOR ACCURATE RIGHT OF WAY DATA, CONTACT RIGHT OF WAY ENGINEERING AT THE DISTRICT OFFICE.

29
- (m) TYPE G2 INLET,H=5.7′
- (n) 24"x98′ RCP
- (o) TYPE G2 INLET,H=5.4′
- (p) 24"x58′ RCP
- (q) TYPE G2 INLET,H=4.9′
- (r) 24"x58′ RCP
- (s) TYPE G2 INLET,H=4.4′
- (t) 24"x12.5′ RCP
- (u) CAP INLET

30
- (a) TYPE G2 INLET,H=5.2′
- (b) 24"x58′ RCP
- (c) TYPE G2 INLET,H=5.2′
- (d) 18"x58′ SCSP
- (e) 24"x58′ RCP
- (f) TYPE G2 INLET,H=5.1′
- (g) 18"x58′ SCSP
- (h) 24"x58′ RCP
- (i) TYPE G2 INLET,H=5.0′

30
- (j) 24"x198′ RCP
- (k) TYPE G1 INLET,H=5.0′
- (l) 24"x198′ RCP
- (m) TYPE G1 INLET,H=5.0′
- (n) 24"x234′ RCP
- (o) TYPE G2 INLET,H=5.8′

30
- (p) REMOVE 24"x 14′ CMP
- (q) 24"x 12′ RCP
- (r) CAP INLET
- (s) REMOVE 18"x48′CMP
- (t) REMOVE INLET
- (u) REMOVE 18"x48′CMP

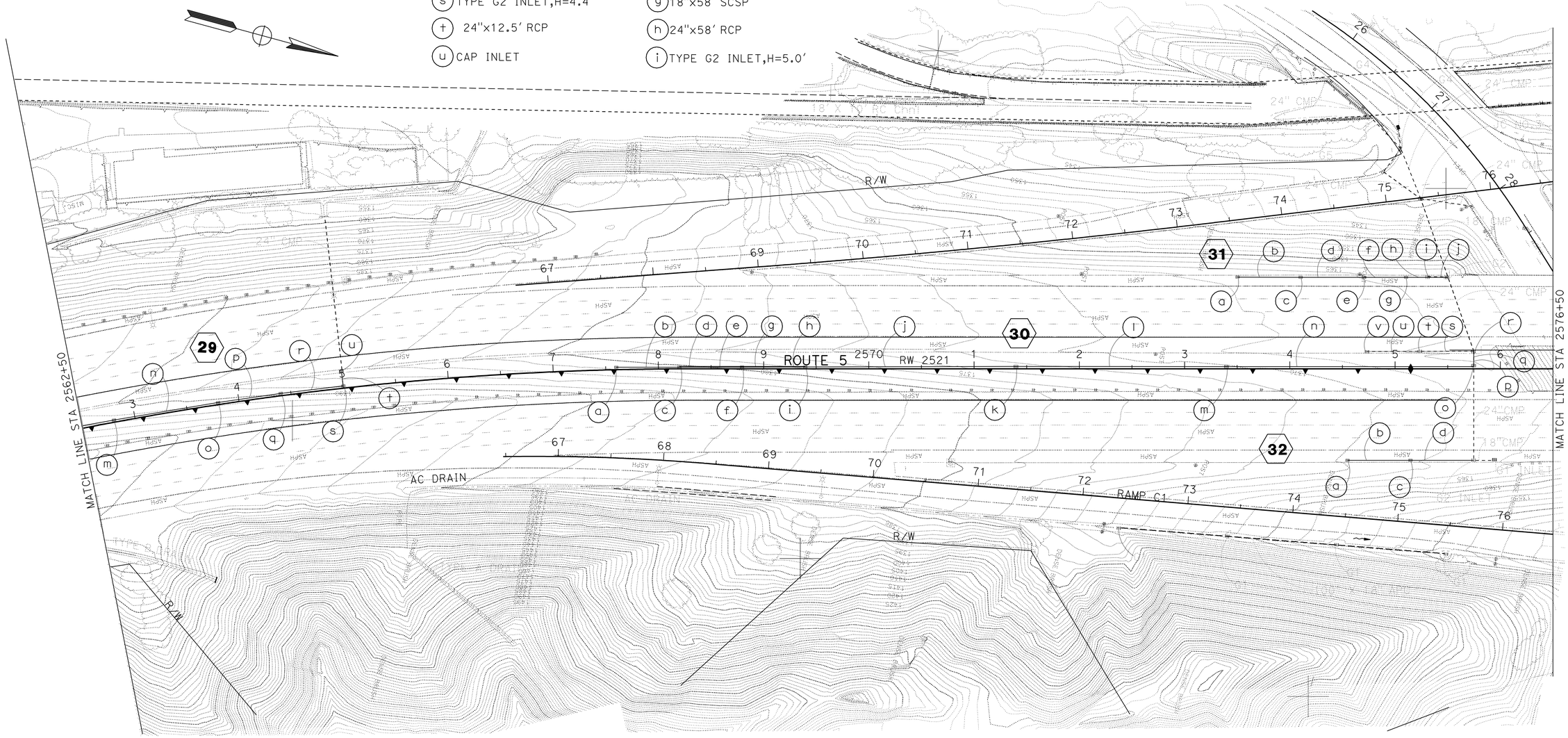

30
- (v) REMOVE INLET

31
- (a) TYPE G1 INLET,H=4.0′
- (b) 18"x58′ RCP
- (c) TYPE G1 INLET,H=4.1′

31
- (d) 18"x58′ RCP
- (e) TYPE G1 INLET,H=4.1′
- (f) 18"x38′ RCP

31
- (g) TYPE G1 INLET,H=4.4′
- (h) 18"x38′ RCP

31
- (i) REMOVE INLET
- (j) REMOVE 18"x18′CMP

32
- (a) TYPE G1 INLET,H=5.0′
- (b) 18"x58′ RCP

32
- (c) TYPE G1 INLET,H=5.1′
- (d) 18"x58′ RCP

THIS PLAN ACCURATE FOR DRAINAGE WORK ONLY.

DRAINAGE PLAN

SCALE: 1" = 50′

D-12

STATE OF CALIFORNIA - DEPARTMENT OF TRANSPORTATION
Caltrans
HYDRAULICS
FUNCTIONAL SUPERVISOR: DAVE BAHALLA
CALCULATED-DESIGNED BY: PRAKASH YADAV
CHECKED BY: PAUL FONG
REVISED BY
DATE REVISED

LAST REVISION 03-04-10
DATE PLOTTED => 26-APR-2011
TIME PLOTTED => 06:50

Dist	COUNTY	ROUTE	POST MILES TOTAL PROJECT	SHEET No.	TOTAL SHEETS
07	LA	5	R46.3/R50.0	87	456

Paul Fong 01-18-11
REGISTERED CIVIL ENGINEER DATE

4-25-11
PLANS APPROVAL DATE

REGISTERED PROFESSIONAL ENGINEER PAUL FONG No. C67053 Exp. 9/30/12 CIVIL STATE OF CALIFORNIA

THE STATE OF CALIFORNIA OR ITS OFFICERS OR AGENTS SHALL NOT BE RESPONSIBLE FOR THE ACCURACY OR COMPLETENESS OF SCANNED COPIES OF THIS PLAN SHEET.

33
- (a) TYPE G1 INLET, H=3.5′
- (b) 18" x 22.5 RCP W/22.5′ MINOR Conc Bkf
- (c) 18" x 23.0′ RCP W/10.0′ MINOR Conc Bkf
- (d) TYPE G1 INLET, H=3.4′

33
- (e) REMOVE 24" x 27.5′ CMP
- (f) 18" x 25.5′ RCP
- (g) INCLINED SCREEN TYPE A GSRD

34
- (a) TYPE G1 INLET, H=3.5′
- (b) 18" x 57.5′ RCP W/57.5′ MINOR Conc Bkf
- (c) TYPE G1 INLET, H=3.3′
- (d) 18" x 43.5′ RCP W/43.5′ MINOR Conc Bkf

35
- (a) REMOVE INLET
- (b) REMOVE 24" x 5.0′ CMP
- (c) REMOVE 24" x 27.0′ CMP
- (d) 24" x 15.5′ CSP
- (e) 24" x 18.5′ RCP W/18.5′ MINOR Conc Bkf
- (f) TYPE G2 INLET, H=4.5′

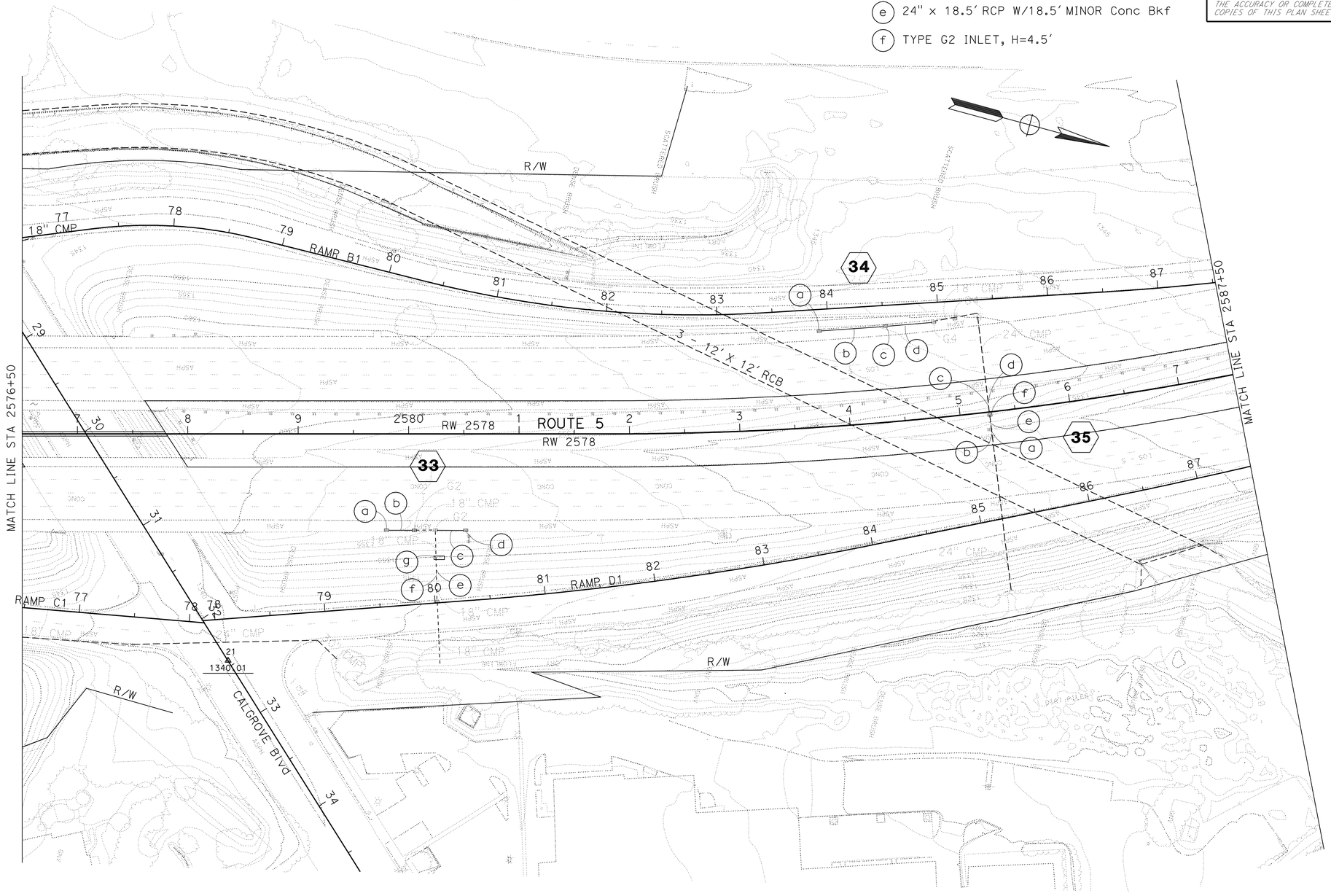

NOTE:

1. FOR ACCURATE RIGHT OF WAY DATA, CONTACT RIGHT OF WAY ENGINEERING AT THE DISTRICT OFFICE.

THIS PLAN ACCURATE FOR DRAINAGE WORK ONLY.

DRAINAGE PLAN

SCALE: 1" = 50′

D-13

STATE OF CALIFORNIA - DEPARTMENT OF TRANSPORTATION
Caltrans
HYDRAULICS

FUNCTIONAL SUPERVISOR: DAVE BHALLA
CALCULATED-DESIGNED BY: PAUL FONG
CHECKED BY: PRAKSH YADAV
REVISED BY
DATE REVISED

LAST REVISION 03-04-10 | DATE PLOTTED => 26-APR-2011 | TIME PLOTTED => 06:50

Dist	COUNTY	ROUTE	POST MILES TOTAL PROJECT	SHEET No.	TOTAL SHEETS
07	LA	5	R46.3/R50.0	88	456

Paul Fong 01-18-11
REGISTERED CIVIL ENGINEER DATE

4-25-11
PLANS APPROVAL DATE

REGISTERED PROFESSIONAL ENGINEER PAUL FONG No. C67053 Exp. 9/30/12 CIVIL STATE OF CALIFORNIA

THE STATE OF CALIFORNIA OR ITS OFFICERS OR AGENTS SHALL NOT BE RESPONSIBLE FOR THE ACCURACY OR COMPLETENESS OF SCANNED COPIES OF THIS PLAN SHEET.

NOTE:

1. FOR ACCURATE RIGHT OF WAY DATA, CONTACT RIGHT OF WAY ENGINEERING AT THE DISTRICT OFFICE.

36

- (a) TYPE G2 INLET, H=5.5′
- (b) 24" x 58.5′ RCP
- (c) TYPE G2 INLET, H=5.5′
- (d) 24" x 58.5′ RCP
- (e) TYPE G2 INLET, H=5.7′

36

- (f) 24" x 58.5′ RCP
- (g) TYPE G2 INLET, H=6.0′
- (h) 24" x 38.5′ RCP
- (i) 24" x 38.5′ SCSP
- (j) TYPE G2 INLET, H=6.7′

36

- (k) JACKED 24" x 119.0′ RCP (CLASS V)
- (l) STRAIGHT HW, H=3′-8"
- (m) ROCK SLOPE PROTECTION (FACING, METHOD B)
- (n) REMOVE INLET
- (o) ABANDON 24" x 116.0′ CMP

37

- (a) TYPE G1 INLET, H=4.3′
- (b) 18" x 58.5′ RCP
- (c) TYPE G1 INLET, H=4.4′
- (d) 18" x 38.5′ RCP
- (e) TYPE G1 INLET, H=4.5′
- (f) 18" x 16.0′ CSP
- (g) 18" x 2.4′ CSP
- (h) 18" STEEL FES

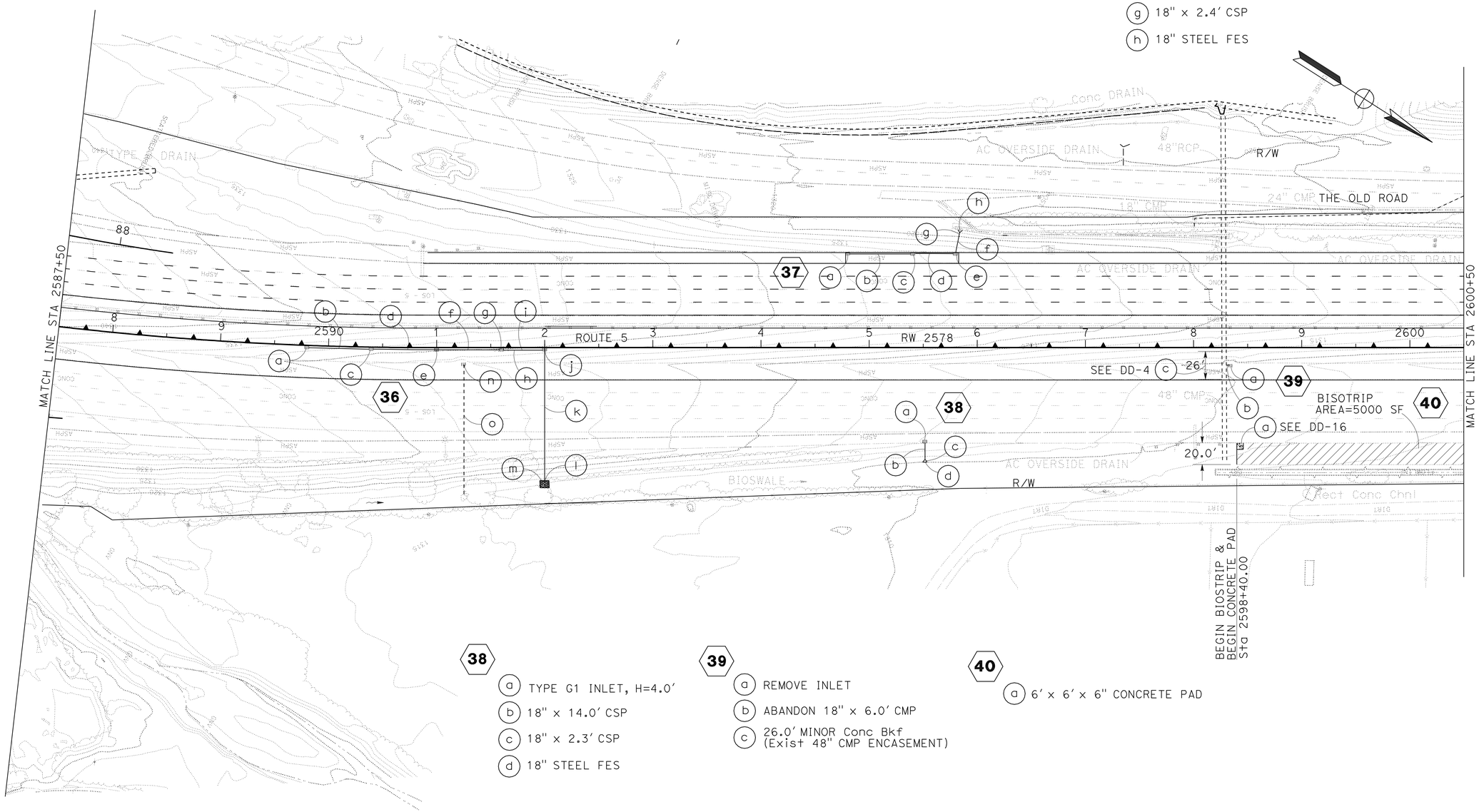

38

- (a) TYPE G1 INLET, H=4.0′
- (b) 18" x 14.0′ CSP
- (c) 18" x 2.3′ CSP
- (d) 18" STEEL FES

39

- (a) REMOVE INLET
- (b) ABANDON 18" x 6.0′ CMP
- (c) 26.0′ MINOR Conc Bkf (Exist 48" CMP ENCASEMENT)

40

- (a) 6′ x 6′ x 6" CONCRETE PAD

DRAINAGE PLAN

SCALE: 1" = 50′

D-14

THIS PLAN ACCURATE FOR DRAINAGE WORK ONLY.

STATE OF CALIFORNIA - DEPARTMENT OF TRANSPORTATION
Caltrans
HYDRAULICS

FUNCTIONAL SUPERVISOR: DAVE BHALLA
CALCULATED-DESIGNED BY: PAUL FONG
CHECKED BY: PRAKSH YADAV
REVISED BY
DATE REVISED

LAST REVISION
DATE PLOTTED => 26-APR-2011
TIME PLOTTED => 06:50

Dist	COUNTY	ROUTE	POST MILES TOTAL PROJECT	SHEET No.	TOTAL SHEETS
07	LA	5	R46.3/R50.0	89	456

Paul Fong 01-18-11
REGISTERED CIVIL ENGINEER DATE

4-25-11
PLANS APPROVAL DATE

REGISTERED PROFESSIONAL ENGINEER
PAUL FONG
No. C67053
Exp. 9/30/12
CIVIL
STATE OF CALIFORNIA

THE STATE OF CALIFORNIA OR ITS OFFICERS OR AGENTS SHALL NOT BE RESPONSIBLE FOR THE ACCURACY OR COMPLETENESS OF SCANNED COPIES OF THIS PLAN SHEET.

NOTE:

1. FOR ACCURATE RIGHT OF WAY DATA, CONTACT RIGHT OF WAY ENGINEERING AT THE DISTRICT OFFICE.
2. FLOW LINE ELEVATION SHALL MATCH THE TOP OF THE EXISTING RECTANGULAR CONCRETE CHANNEL.

41

- (a) TYPE G2 INLET, H=5.0′
- (b) 24" x 17.5′ RCP
- (c) TYPE G2 INLET, H=5.2′
- (d) 24" x 27.5′ RCP
- (e) TYPE G2 INLET, H=12.0′
- (f) 24" x 47.5′ RCP
- (g) TYPE G2 INLET, H=5.8′
- (h) 24" x 97.5′ RCP
- (i) TYPE G2 INLET, H=5.8′
- (j) 24" x 97.5′ RCP

41

- (k) TYPE G2 INLET, H=5.5′
- (l) 24" x 97.5′ RCP
- (m) TYPE G2 INLET, H=5.0′
- (n) REMOVE INLET
- (o) REMOVE 24" x 48.0′ CMP
- (p) REMOVE INLET
- (q) 24" x 13.5′ RCP
- (r) 24" x 5.0′ CSP
- (s) TYPE G2 INLET, H=5.3′

42

- (a) 4′ x 5′ x 6" CONCRETE PAD

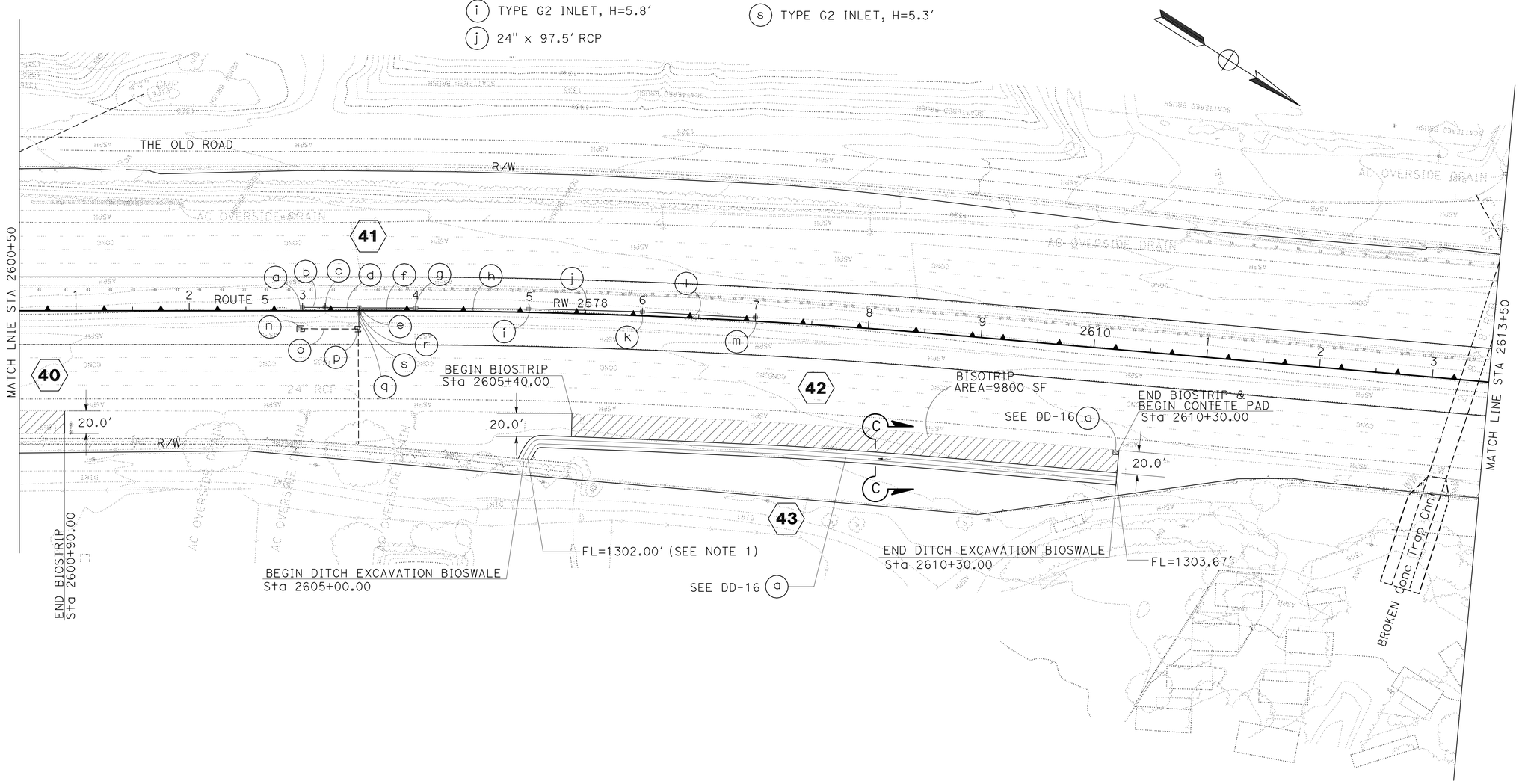

43

- (a) EARTH DITCH BIOSWALE

DRAINAGE PLAN

SCALE: 1" = 50′

THIS PLAN ACCURATE FOR DRAINAGE WORK ONLY.

D-15

STATE OF CALIFORNIA - DEPARTMENT OF TRANSPORTATION
Caltrans
HYDRAULICS

FUNCTIONAL SUPERVISOR: DAVE BHALLA
CALCULATED-DESIGNED BY: PAUL FONG
CHECKED BY: PRAKASH YADAV
REVISED BY
DATE REVISED

LAST REVISION
DATE PLOTTED => 26-APR-2011
TIME PLOTTED => 06:51

Dist	COUNTY	ROUTE	POST MILES TOTAL PROJECT	SHEET No.	TOTAL SHEETS
07	LA	5	R46.3/R50.0	90	456

Paul Fong 01-18-11
REGISTERED CIVIL ENGINEER DATE

4-25-11
PLANS APPROVAL DATE

REGISTERED PROFESSIONAL ENGINEER
PAUL FONG
No. C67053
Exp. 9/30/12
CIVIL
STATE OF CALIFORNIA

THE STATE OF CALIFORNIA OR ITS OFFICERS OR AGENTS SHALL NOT BE RESPONSIBLE FOR THE ACCURACY OR COMPLETENESS OF SCANNED COPIES OF THIS PLAN SHEET.

NOTE:

1. FOR ACCURATE RIGHT OF WAY DATA, CONTACT RIGHT OF WAY ENGINEERING AT THE DISTRICT OFFICE.

44
- (a) CL1 INLET (CASE No. 1)
- (b) 24" x 117.5' SCSP
- (c) CL1 INLET (CASE No. 2)
- (d) 24" x 117.5' SCSP
- (e) CL1 INLET (CASE No. 2)

44
- (f) 24" x 117.5' SCSP
- (g) CL1 INLET (CASE No. 2)
- (h) 24" x 117.5' SCSP
- (i) CL1 INLET (CASE No. 2)
- (j) 24" x 117.5' SCSP

44
- (k) CL1 INLET (CASE No. 2)
- (l) 24" x 117.5' SCSP
- (m) CL1 INLET (CASE No. 2)

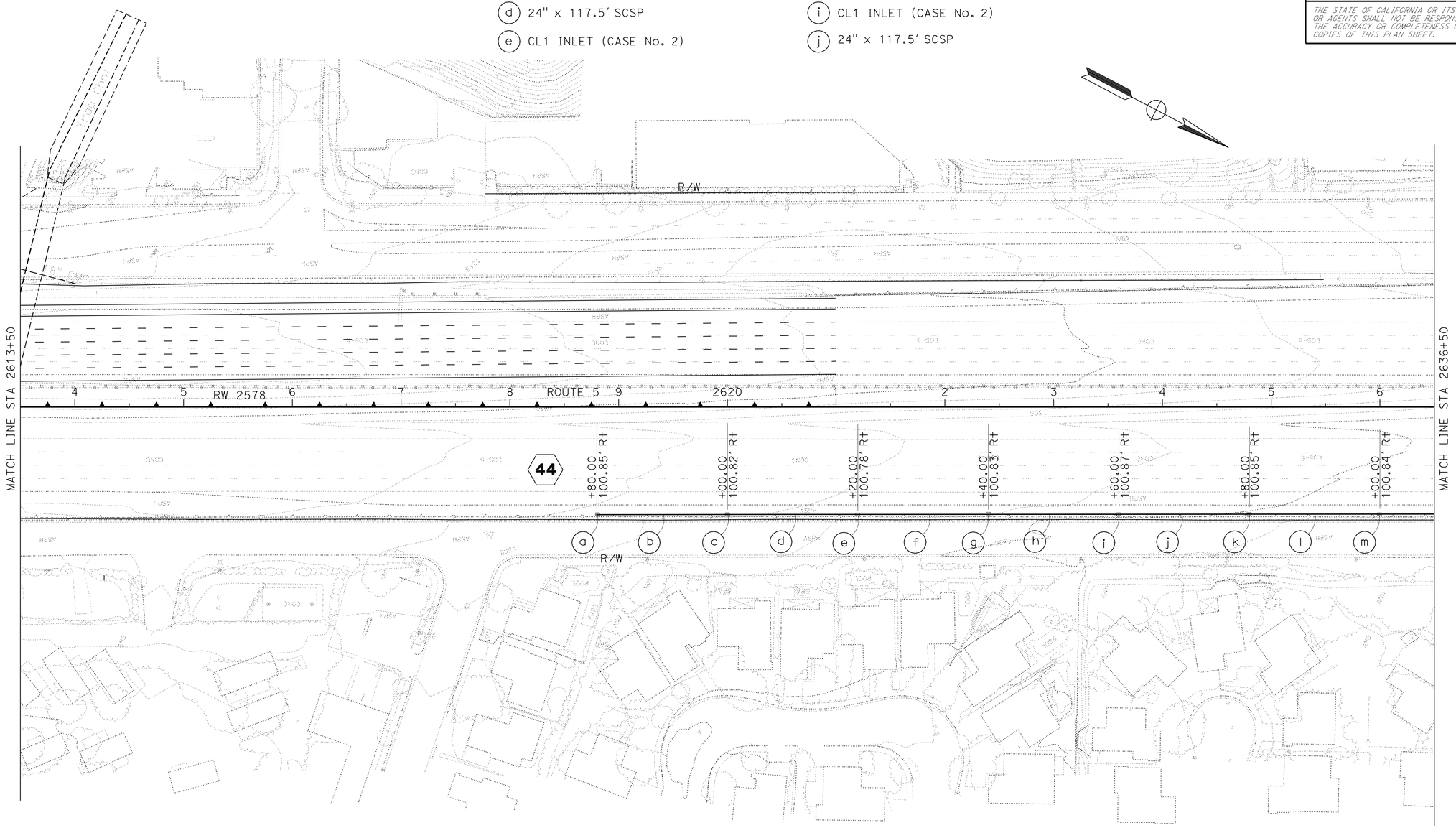

DRAINAGE PLAN

SCALE: 1" = 50'

D-16

THIS PLAN ACCURATE FOR DRAINAGE WORK ONLY.

STATE OF CALIFORNIA - DEPARTMENT OF TRANSPORTATION
Caltrans
HYDRAULICS

FUNCTIONAL SUPERVISOR: DAVE BHALLA
CALCULATED-DESIGNED BY: PAUL FONG
CHECKED BY: PRAKASH YADAV
REVISED BY
DATE REVISED

LAST REVISION 12-17-09
DATE PLOTTED => 26-APR-2011
TIME PLOTTED => 06:51

Dist	COUNTY	ROUTE	POST MILES TOTAL PROJECT	SHEET No.	TOTAL SHEETS
07	LA	5	R46.3/R50.0	91	456

Paul Fong 01-18-11
REGISTERED CIVIL ENGINEER DATE

4-25-11
PLANS APPROVAL DATE

REGISTERED PROFESSIONAL ENGINEER
PAUL FONG
No. C67053
Exp. 9/30/12
CIVIL
STATE OF CALIFORNIA

THE STATE OF CALIFORNIA OR ITS OFFICERS OR AGENTS SHALL NOT BE RESPONSIBLE FOR THE ACCURACY OR COMPLETENESS OF SCANNED COPIES OF THIS PLAN SHEET.

NOTE:

1. FOR ACCURATE RIGHT OF WAY DATA, CONTACT RIGHT OF WAY ENGINEERING AT THE DISTRICT OFFICE.

44

(n) 24" x 80.0' SCSP

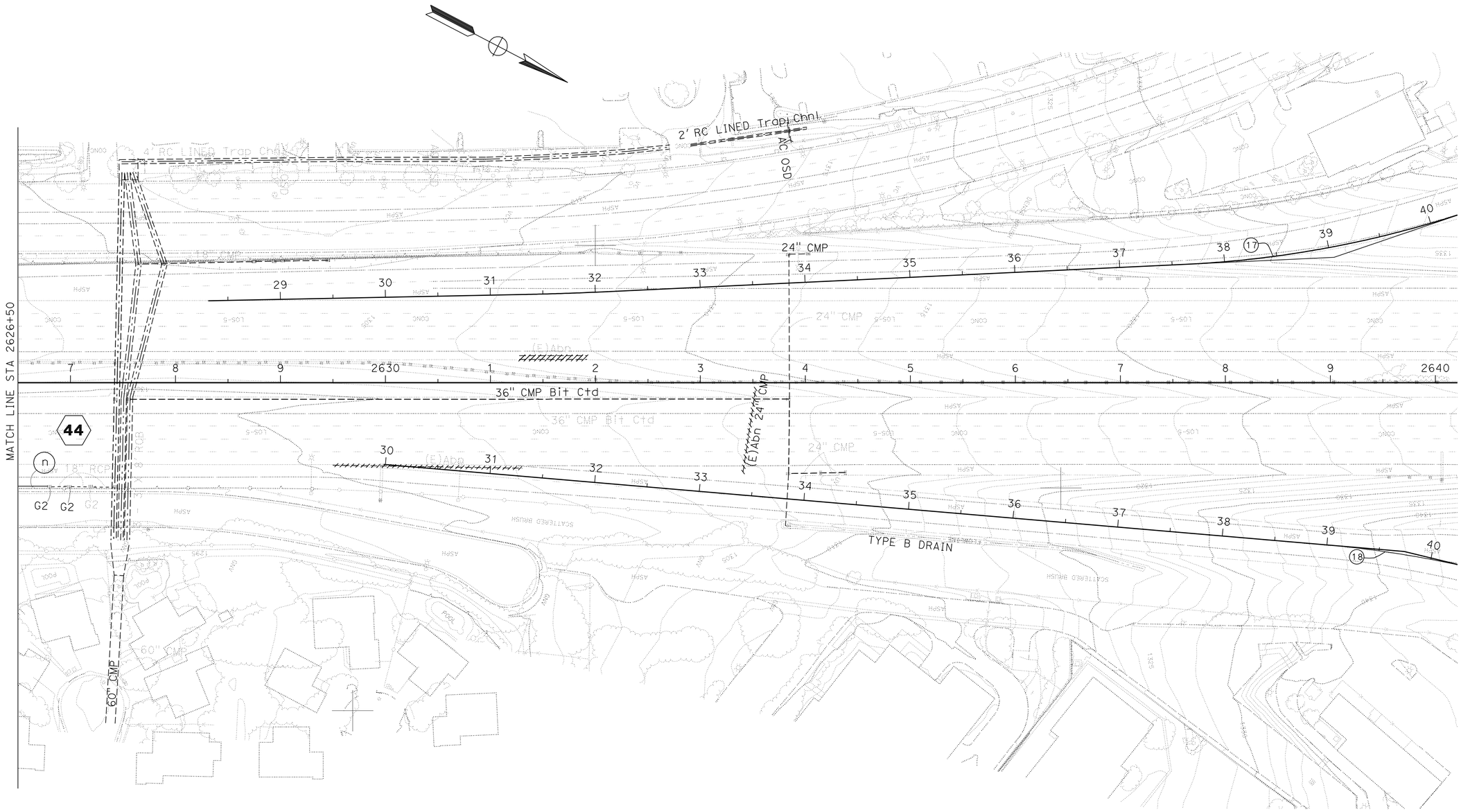

DRAINAGE PLAN

SCALE: 1" = 50'

D-17

THIS PLAN ACCURATE FOR DRAINAGE WORK ONLY.

STATE OF CALIFORNIA - DEPARTMENT OF TRANSPORTATION
Caltrans
HYDRAULICS

FUNCTIONAL SUPERVISOR: DAVE BHALLA

CALCULATED-DESIGNED BY: PAUL FONG
CHECKED BY: PRAKASH YADAV

REVISED BY
DATE REVISED

LAST REVISION
DATE PLOTTED => 26-APR-2011
TIME PLOTTED => 06:51

Dist	COUNTY	ROUTE	POST MILES TOTAL PROJECT	SHEET No.	TOTAL SHEETS
07	LA	5	R46.3/R50.0	92	456

Paul Fong 01-18-11
REGISTERED CIVIL ENGINEER DATE

4-25-11
PLANS APPROVAL DATE

REGISTERED PROFESSIONAL ENGINEER
PAUL FONG
No. C67053
Exp. 9/30/12
CIVIL
STATE OF CALIFORNIA

THE STATE OF CALIFORNIA OR ITS OFFICERS OR AGENTS SHALL NOT BE RESPONSIBLE FOR THE ACCURACY OR COMPLETENESS OF SCANNED COPIES OF THIS PLAN SHEET.

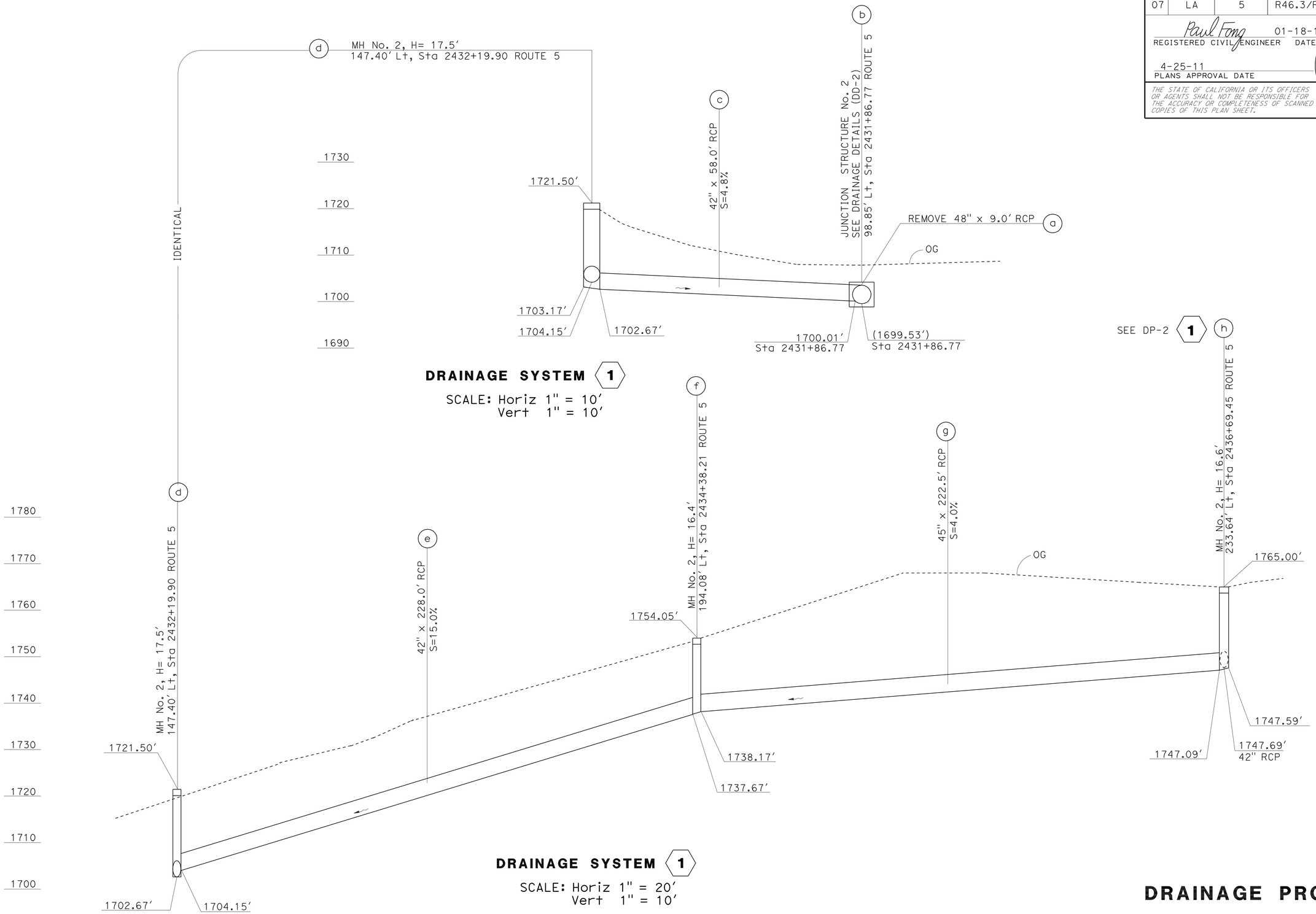

DRAINAGE PROFILE
DP-1

STATE OF CALIFORNIA - DEPARTMENT OF TRANSPORTATION
Caltrans
HDRAULICS

FUNCTIONAL SUPERVISOR: DAVE BHALLA
CALCULATED-DESIGNED BY: PAUL FONG
CHECKED BY: PRAKASH YADAV
REVISED BY
DATE REVISED

LAST REVISION
DATE PLOTTED => 26-APR-2011
TIME PLOTTED => 08:01

Dist	COUNTY	ROUTE	POST MILES TOTAL PROJECT	SHEET No.	TOTAL SHEETS
07	LA	5	R46.3/R50.0	93	456

Paul Fong 01-18-11
REGISTERED CIVIL ENGINEER DATE

4-25-11
PLANS APPROVAL DATE

REGISTERED PROFESSIONAL ENGINEER
PAUL FONG
No. C67053
Exp. 9/30/12
CIVIL
STATE OF CALIFORNIA

THE STATE OF CALIFORNIA OR ITS OFFICERS OR AGENTS SHALL NOT BE RESPONSIBLE FOR THE ACCURACY OR COMPLETENESS OF SCANNED COPIES OF THIS PLAN SHEET.

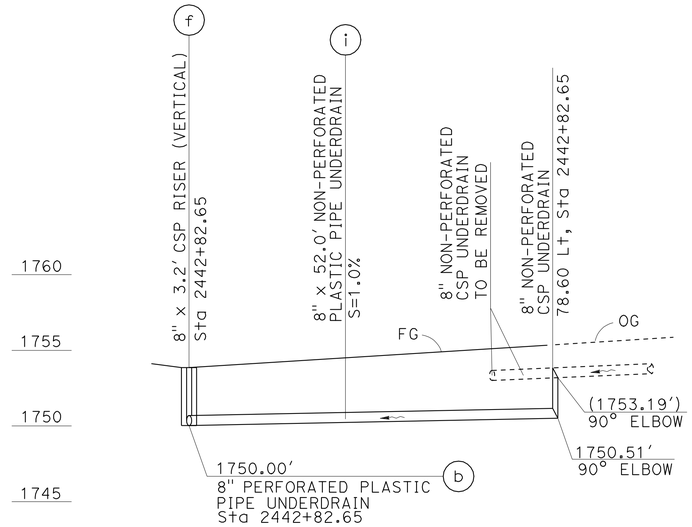

DRAINAGE SYSTEM 3

SCALE: Horiz 1" = 10'
Vert 1" = 5'

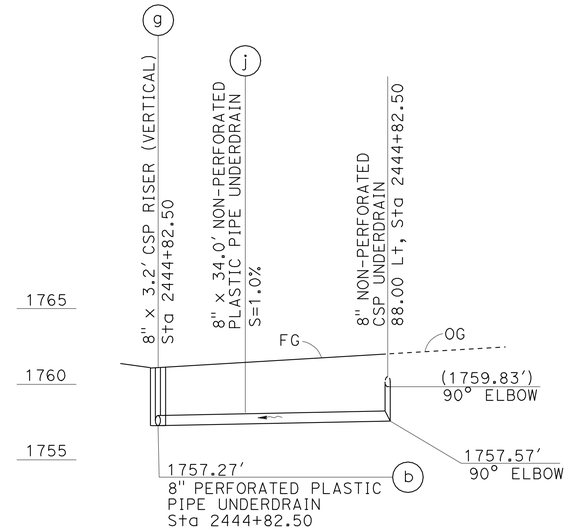

DRAINAGE SYSTEM 3

SCALE: Horiz 1" = 10'
Vert 1" = 5'

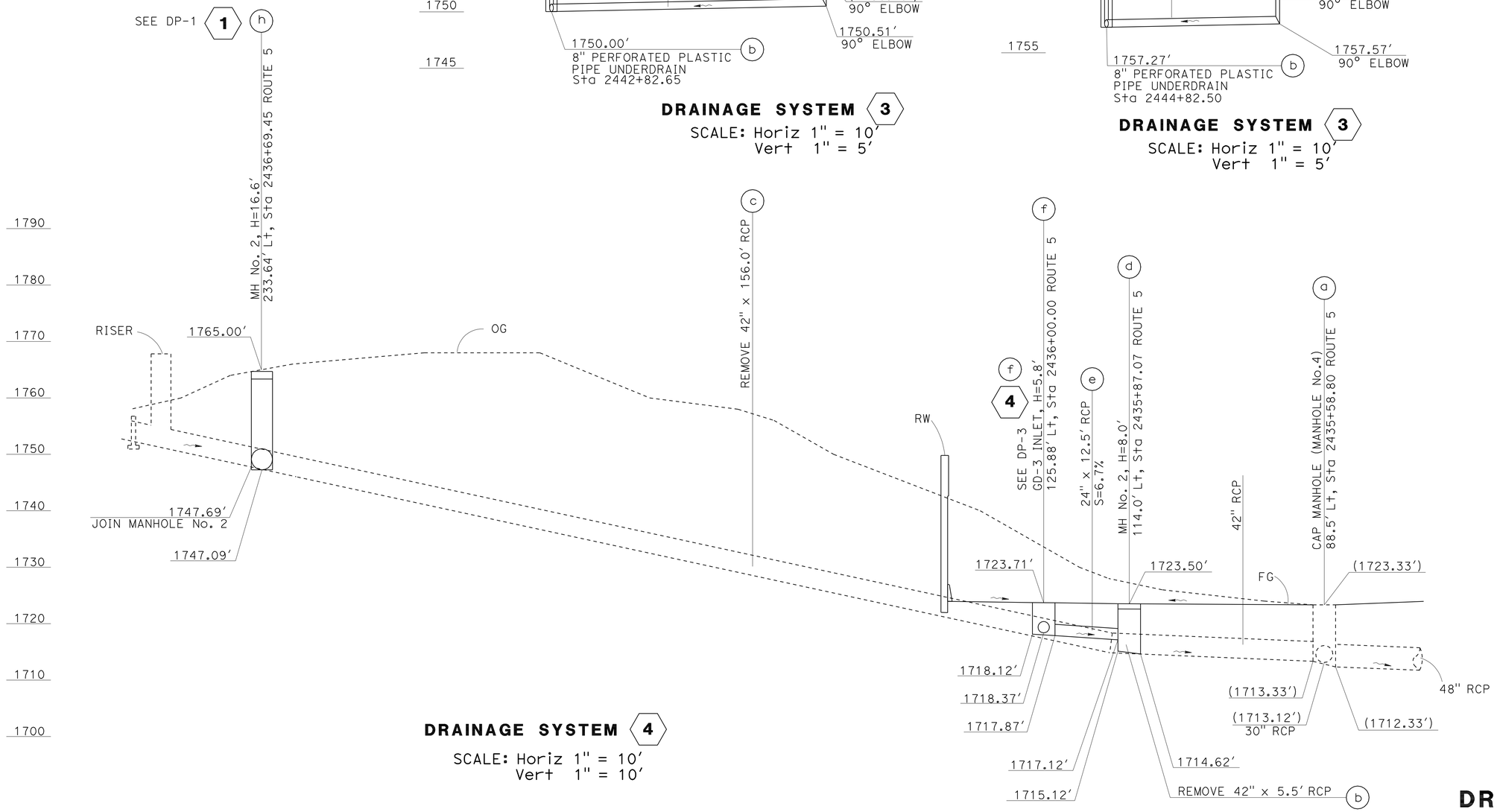

DRAINAGE SYSTEM 4

SCALE: Horiz 1" = 10'
Vert 1" = 10'

DRAINAGE PROFILE
DP-2

STATE OF CALIFORNIA - DEPARTMENT OF TRANSPORTATION
Caltrans
HYDRAULICS

FUNCTIONAL SUPERVISOR: DAVE BHALLA
CALCULATED-DESIGNED BY: PAUL FONG
CHECKED BY: PRAKASH YADAV
REVISED BY
DATE REVISED

LAST REVISION
DATE PLOTTED => 26-APR-2011
TIME PLOTTED => 08:01

Dist	COUNTY	ROUTE	POST MILES TOTAL PROJECT	SHEET No.	TOTAL SHEETS
07	LA	5	R46.3/R50.0	94	456

Paul Fong 01-18-11
REGISTERED CIVIL ENGINEER DATE

4-25-11
PLANS APPROVAL DATE

REGISTERED PROFESSIONAL ENGINEER
PAUL FONG
No. C67053
Exp. 9/30/12
CIVIL
STATE OF CALIFORNIA

THE STATE OF CALIFORNIA OR ITS OFFICERS OR AGENTS SHALL NOT BE RESPONSIBLE FOR THE ACCURACY OR COMPLETENESS OF SCANNED COPIES OF THIS PLAN SHEET.

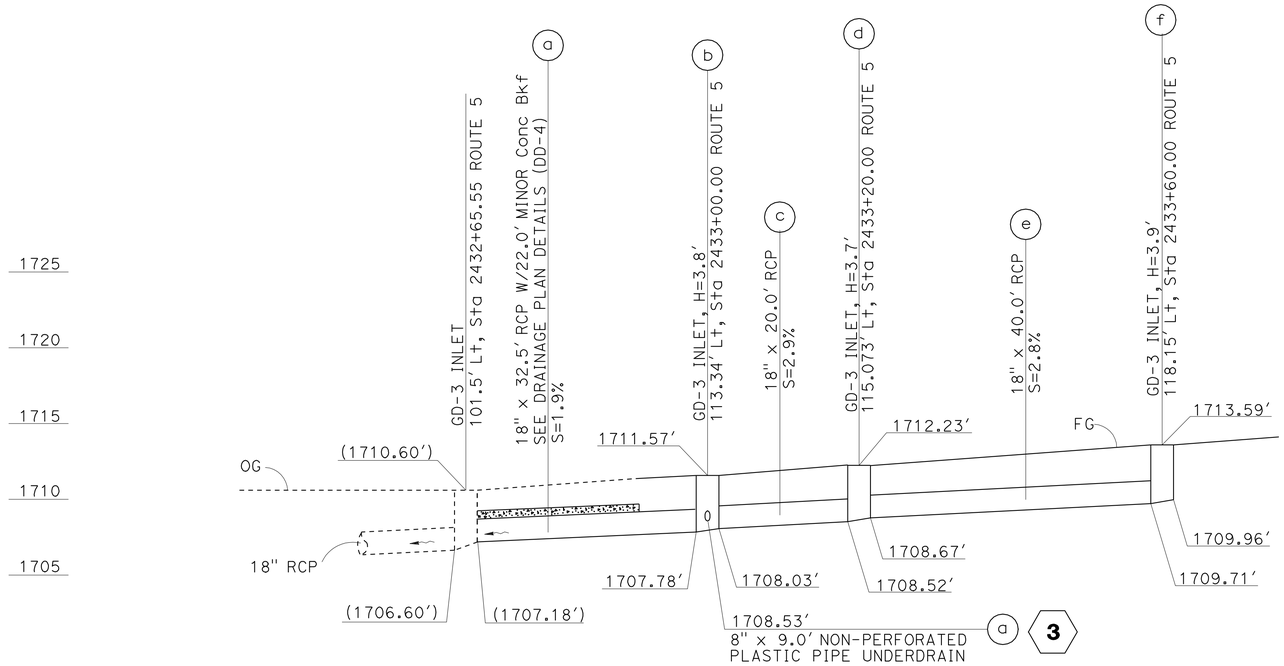

DRAINAGE SYSTEM 2

SCALE: Horiz 1" = 10'
Vert 1" = 5'

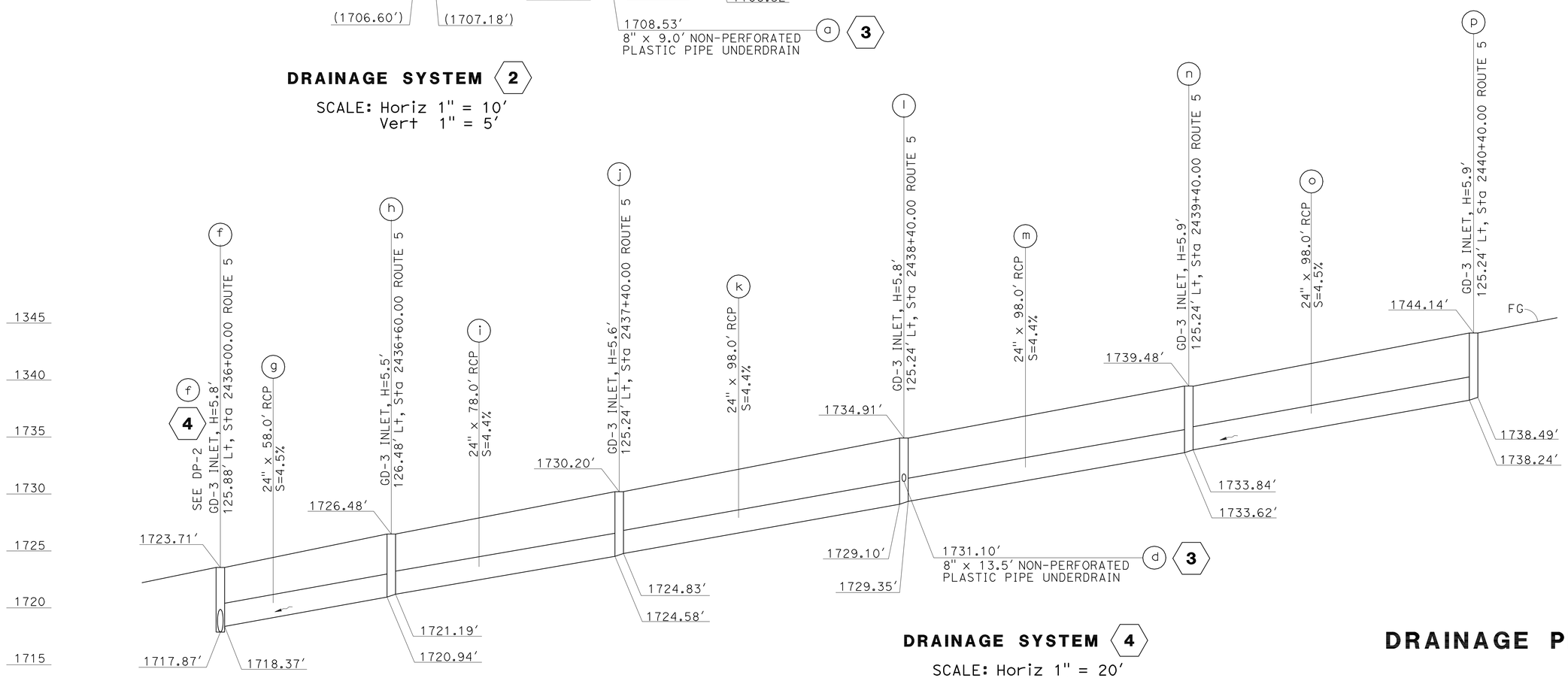

DRAINAGE SYSTEM 4

SCALE: Horiz 1" = 20'
Vert 1" = 5'

DRAINAGE PROFILE
DP-3

STATE OF CALIFORNIA - DEPARTMENT OF TRANSPORTATION
Caltrans
HYDRAULICS

FUNCTIONAL SUPERVISOR: DAVE BHALLA
CALCULATED-DESIGNED BY: PAUL FONG
CHECKED BY: PRAKASH YADAV
REVISED BY
DATE REVISED

LAST REVISION
DATE PLOTTED => 26-APR-2011
TIME PLOTTED => 08:01

Dist	COUNTY	ROUTE	POST MILES TOTAL PROJECT	SHEET No.	TOTAL SHEETS
07	LA	5	R46.3/R50.0	95	456

Paul Fong 01-18-11
REGISTERED CIVIL ENGINEER DATE

4-25-11
PLANS APPROVAL DATE

REGISTERED PROFESSIONAL ENGINEER
PAUL FONG
No. C67053
Exp. 9/30/12
CIVIL
STATE OF CALIFORNIA

THE STATE OF CALIFORNIA OR ITS OFFICERS OR AGENTS SHALL NOT BE RESPONSIBLE FOR THE ACCURACY OR COMPLETENESS OF SCANNED COPIES OF THIS PLAN SHEET.

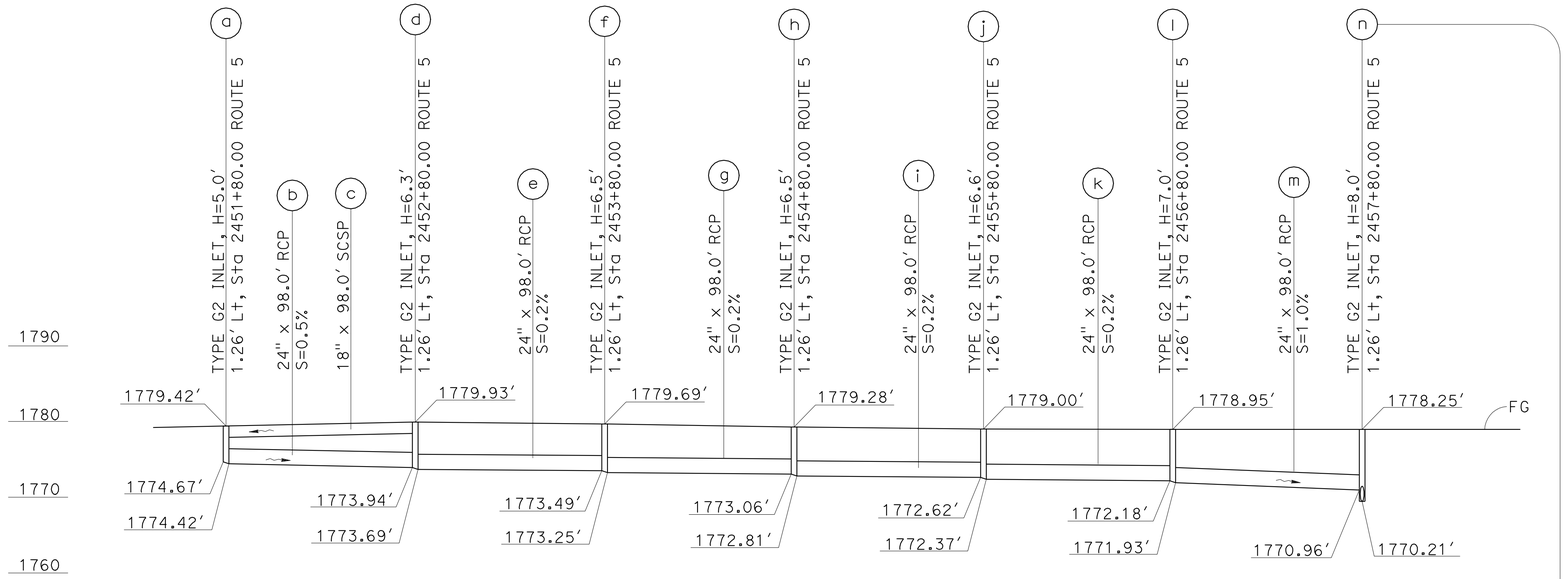

DRAINAGE SYSTEM 8

SCALE: Horiz 1" = 40′
Vert 1" = 10′

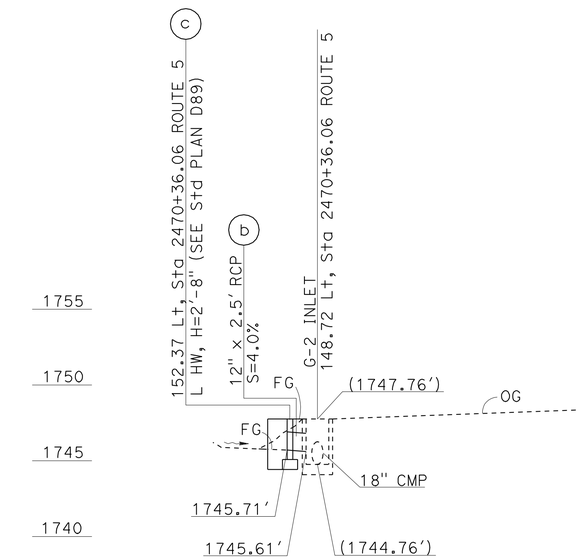

DRAINAGE SYSTEM 10

SCALE: Horiz 1" = 10′
Vert 1" = 5′

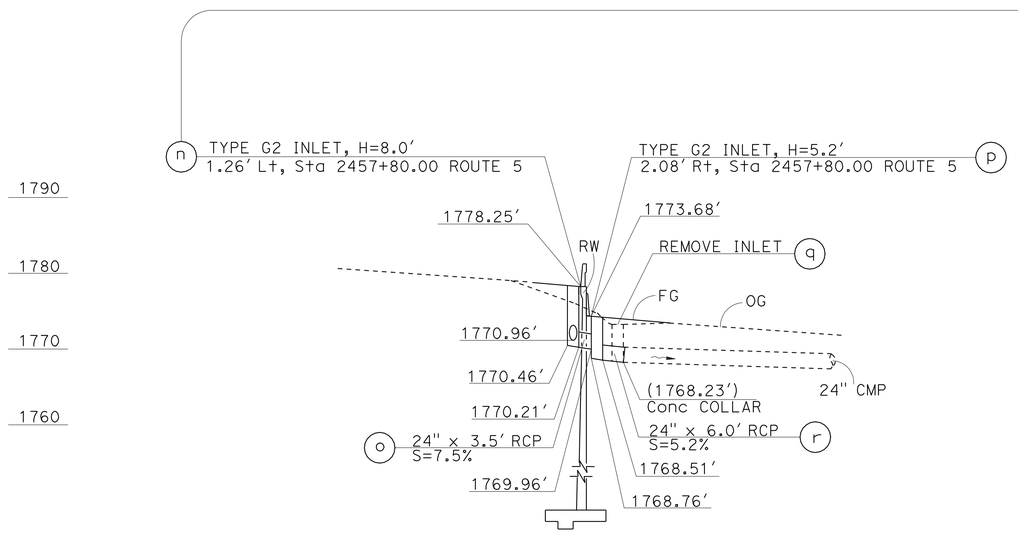

DRAINAGE SYSTEM 8

SCALE: Horiz 1" = 20′
Vert 1" = 10′

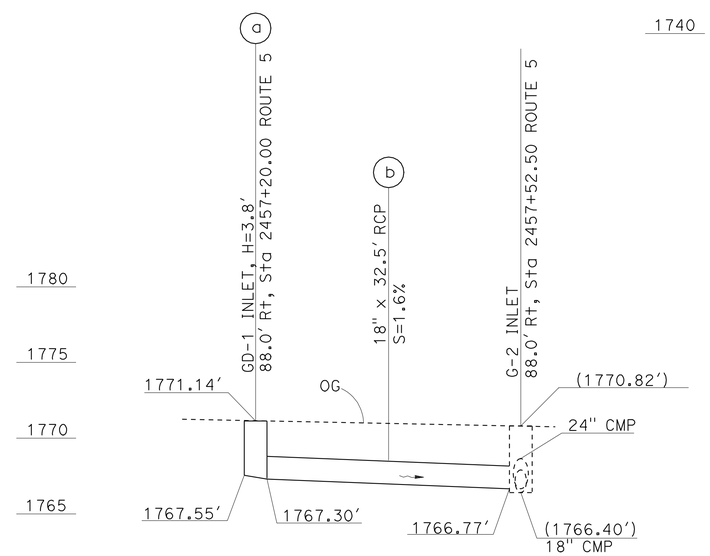

DRAINAGE SYSTEM 9

SCALE: Horiz 1" = 10′
Vert 1" = 5′

DRAINAGE PROFILE
DP-4

STATE OF CALIFORNIA - DEPARTMENT OF TRANSPORTATION
Caltrans
HYDRAULICS

FUNCTIONAL SUPERVISOR: DAVE BHALLA
CALCULATED-DESIGNED BY: PAUL FONG
CHECKED BY: PRAKASH YADAV
REVISED BY
DATE REVISED

LAST REVISION
DATE PLOTTED => 26-APR-2011
TIME PLOTTED => 08:01

Dist	COUNTY	ROUTE	POST MILES TOTAL PROJECT	SHEET No.	TOTAL SHEETS
07	LA	5	R46.3/R50.0	96	456

Paul Fong 01-18-11
REGISTERED CIVIL ENGINEER DATE

4-25-11
PLANS APPROVAL DATE

REGISTERED PROFESSIONAL ENGINEER
PAUL FONG
No. C67053
Exp. 9/30/12
CIVIL
STATE OF CALIFORNIA

THE STATE OF CALIFORNIA OR ITS OFFICERS OR AGENTS SHALL NOT BE RESPONSIBLE FOR THE ACCURACY OR COMPLETENESS OF SCANNED COPIES OF THIS PLAN SHEET.

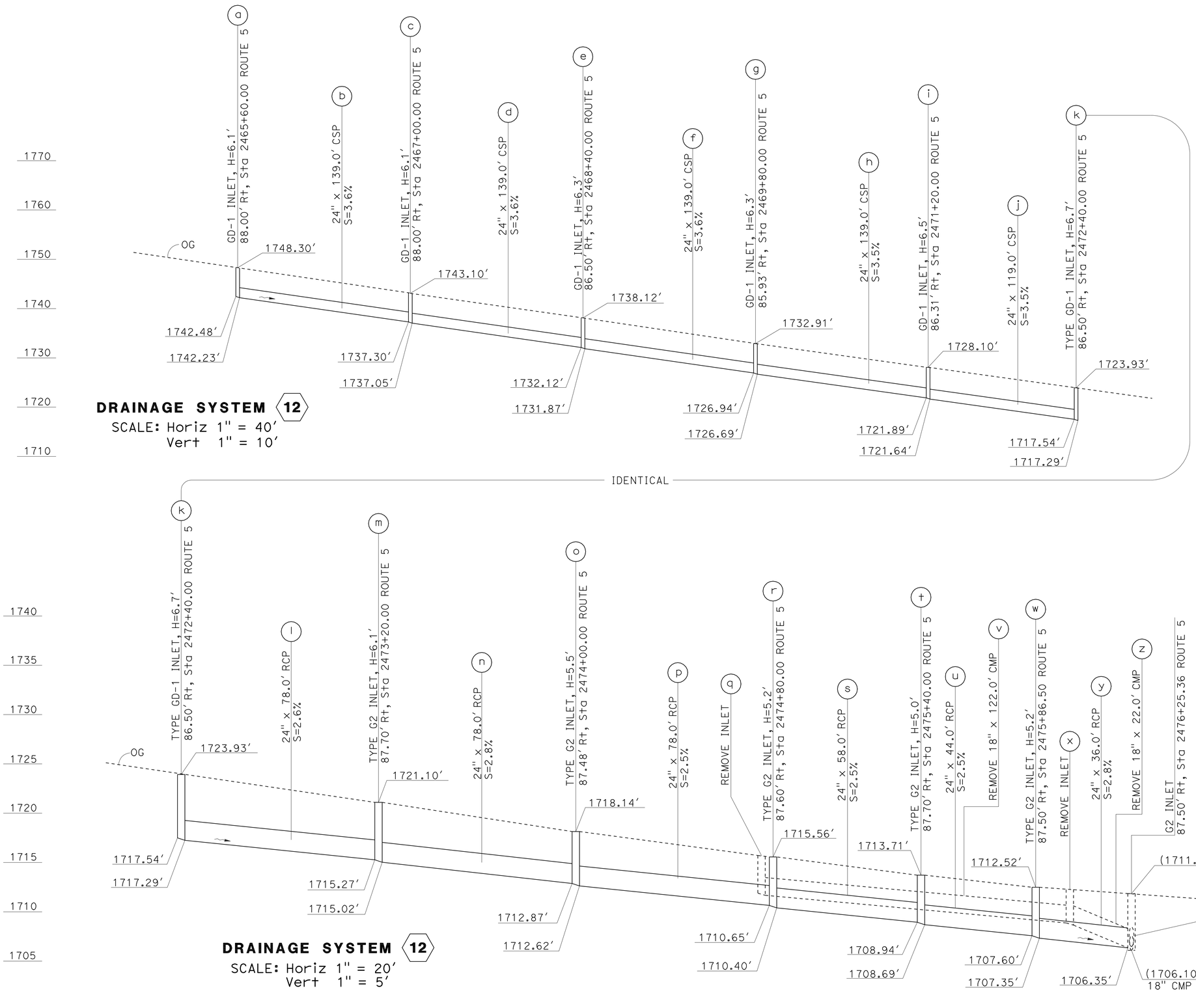

DRAINAGE SYSTEM 12
SCALE: Horiz 1" = 40′
Vert 1" = 10′

DRAINAGE SYSTEM 12
SCALE: Horiz 1" = 20′
Vert 1" = 5′

DRAINAGE PROFILE
DP-5

STATE OF CALIFORNIA - DEPARTMENT OF TRANSPORTATION
Caltrans® HYDRAULICS

FUNCTIONAL SUPERVISOR: DAVE BHALLA
CALCULATED-DESIGNED BY: PAUL FONG
CHECKED BY: PRAKASH YADAV
REVISED BY
DATE REVISED

LAST REVISION
DATE PLOTTED => 26-APR-2011
TIME PLOTTED => 08:02

Dist	COUNTY	ROUTE	POST MILES TOTAL PROJECT	SHEET No.	TOTAL SHEETS
07	LA	5	R46.3/R50.0	97	456

Paul Fong 01-18-11
REGISTERED CIVIL ENGINEER DATE

4-25-11
PLANS APPROVAL DATE

REGISTERED PROFESSIONAL ENGINEER
PAUL FONG
No. C67053
Exp. 9/30/12
CIVIL
STATE OF CALIFORNIA

THE STATE OF CALIFORNIA OR ITS OFFICERS OR AGENTS SHALL NOT BE RESPONSIBLE FOR THE ACCURACY OR COMPLETENESS OF SCANNED COPIES OF THIS PLAN SHEET.

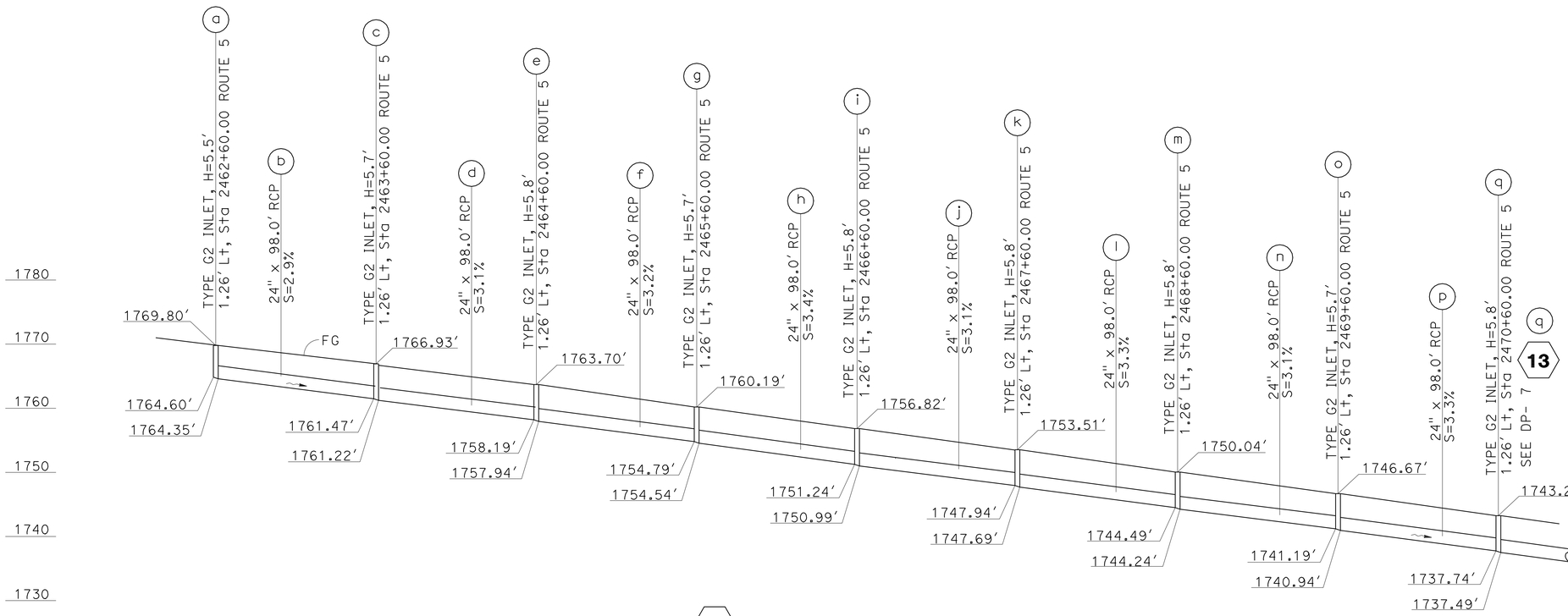

DRAINAGE SYSTEM 13

SCALE: Horiz 1" = 40′
Vert 1" = 10′

DRAINAGE PROFILE
DP-6

STATE OF CALIFORNIA - DEPARTMENT OF TRANSPORTATION	Caltrans
HYDRAULICS	
FUNCTIONAL SUPERVISOR	DAVE BHALLA
CALCULATED-DESIGNED BY	PAUL FONG
CHECKED BY	PRAKASH YADAV
REVISED BY	
DATE REVISED	

LAST REVISION
DATE PLOTTED => 26-APR-2011
TIME PLOTTED => 08:02

Dist	COUNTY	ROUTE	POST MILES TOTAL PROJECT	SHEET No.	TOTAL SHEETS
07	LA	5	R46.3/R50.0	98	456

Paul Fong 01-18-11
REGISTERED CIVIL ENGINEER DATE

4-25-11
PLANS APPROVAL DATE

REGISTERED PROFESSIONAL ENGINEER PAUL FONG No. C67053 Exp. 9/30/12 CIVIL STATE OF CALIFORNIA

THE STATE OF CALIFORNIA OR ITS OFFICERS OR AGENTS SHALL NOT BE RESPONSIBLE FOR THE ACCURACY OR COMPLETENESS OF SCANNED COPIES OF THIS PLAN SHEET.

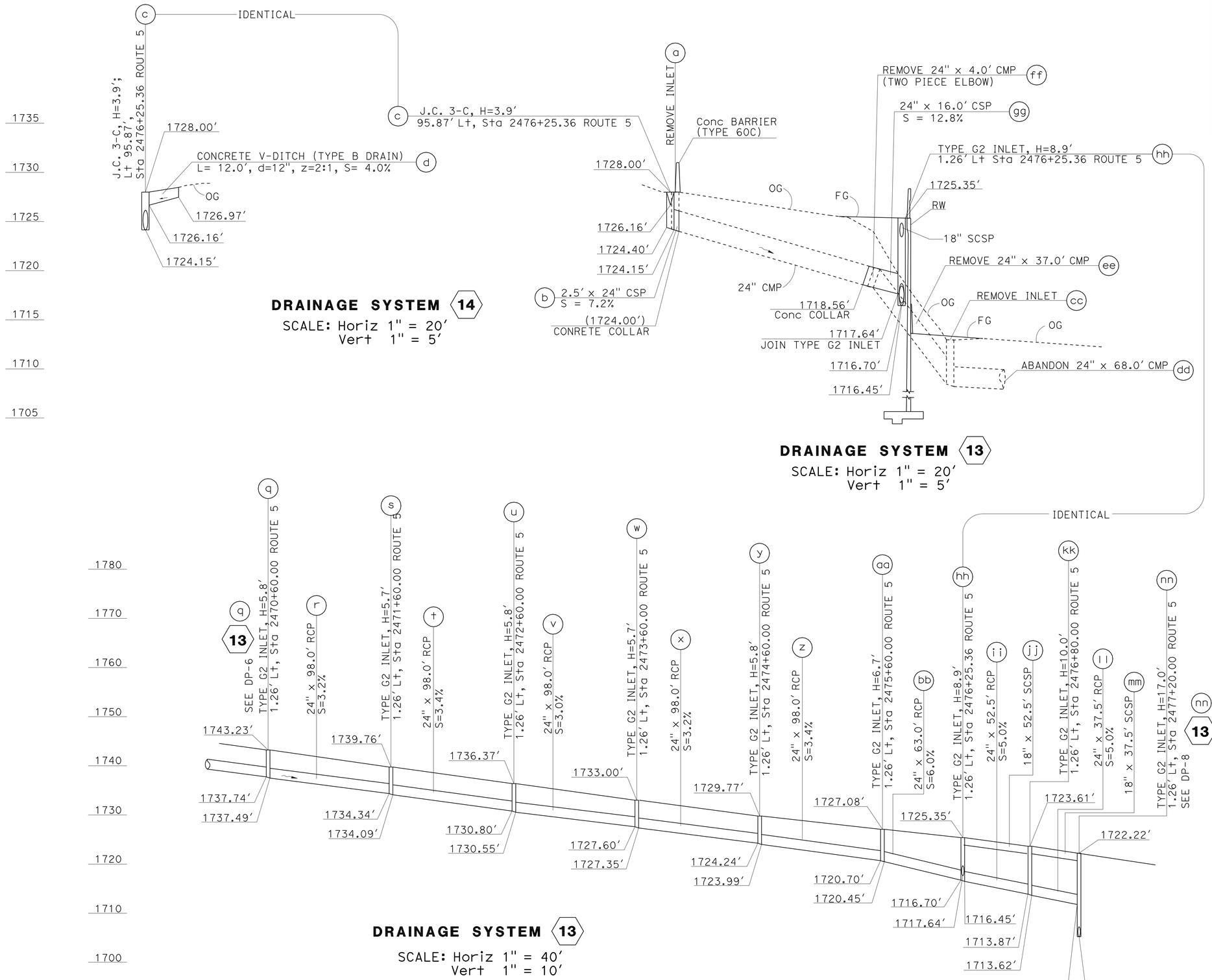

DRAINAGE PROFILE
DP-7

STATE OF CALIFORNIA - DEPARTMENT OF TRANSPORTATION
Caltrans®
HYDRAULICS

FUNCTIONAL SUPERVISOR: DAVE BHALLA
CALCULATED-DESIGNED BY: PAUL FONG
CHECKED BY: PRAKASH YADAV
REVISED BY
DATE REVISED

LAST REVISION
DATE PLOTTED => 26-APR-2011
TIME PLOTTED => 08:02

Dist	COUNTY	ROUTE	POST MILES TOTAL PROJECT	SHEET No.	TOTAL SHEETS
07	LA	5	R46.3/R50.0	99	456

Paul Fong 01-18-11
REGISTERED CIVIL ENGINEER DATE

4-25-11
PLANS APPROVAL DATE

REGISTERED PROFESSIONAL ENGINEER PAUL FONG No. C67053 Exp. 9/30/12 CIVIL STATE OF CALIFORNIA

THE STATE OF CALIFORNIA OR ITS OFFICERS OR AGENTS SHALL NOT BE RESPONSIBLE FOR THE ACCURACY OR COMPLETENESS OF SCANNED COPIES OF THIS PLAN SHEET.

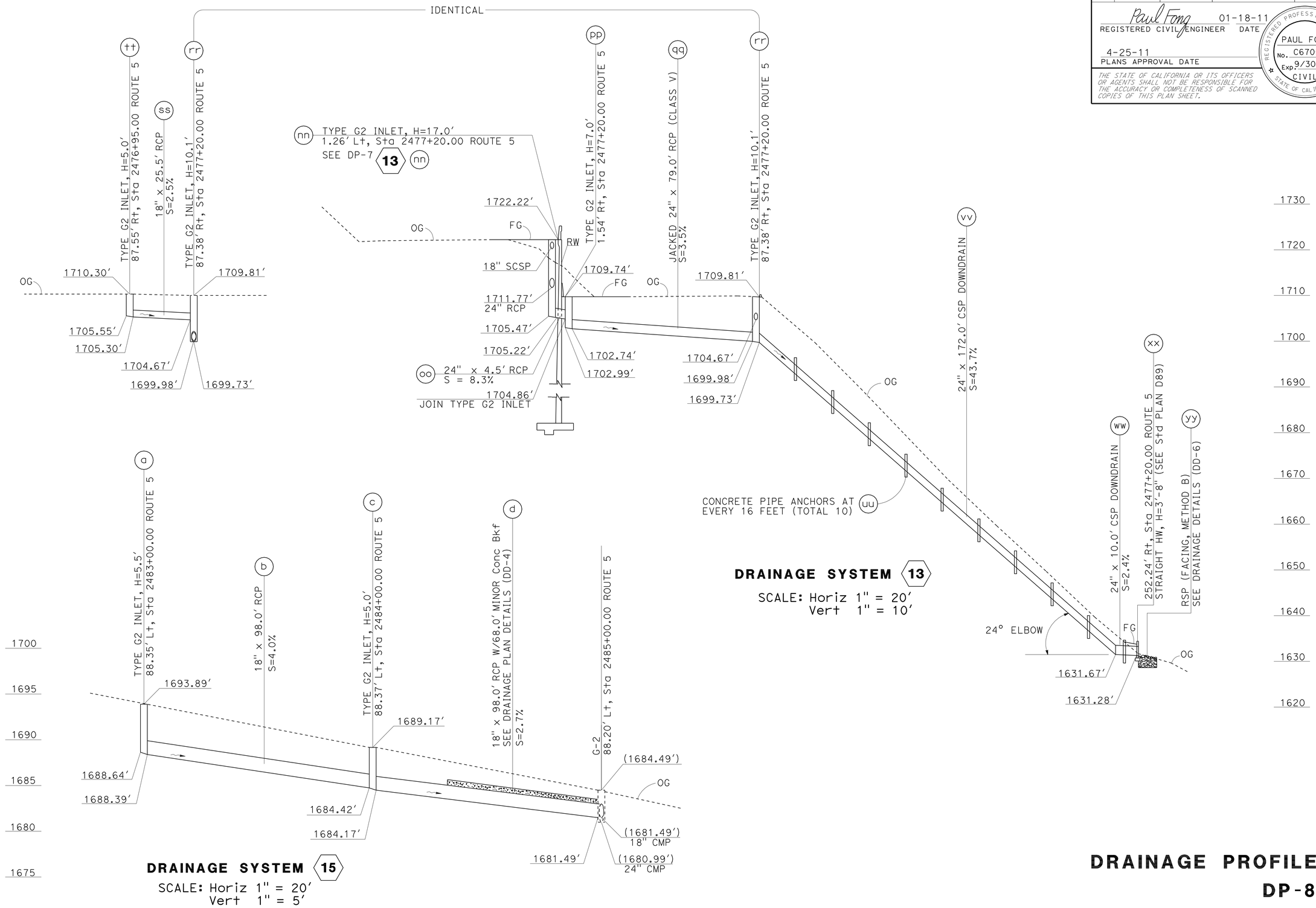

DRAINAGE PROFILE

DP-8

REVISED BY	
DATE REVISED	
CALCULATED-DESIGNED BY	PAUL FONG
CHECKED BY	PRAKASH YADAV
FUNCTIONAL SUPERVISOR	DAVE BHALLA

STATE OF CALIFORNIA - DEPARTMENT OF TRANSPORTATION
Caltrans® HYDRAULICS

LAST REVISION DATE PLOTTED => 26-APR-2011 TIME PLOTTED => 08:02

Dist	COUNTY	ROUTE	POST MILES TOTAL PROJECT	SHEET No.	TOTAL SHEETS
07	LA	5	R46.3/R50.0	100	456

Paul Fong 01-18-11
REGISTERED CIVIL ENGINEER DATE

4-25-11
PLANS APPROVAL DATE

REGISTERED PROFESSIONAL ENGINEER PAUL FONG No. C67053 Exp. 9/30/12 CIVIL STATE OF CALIFORNIA

THE STATE OF CALIFORNIA OR ITS OFFICERS OR AGENTS SHALL NOT BE RESPONSIBLE FOR THE ACCURACY OR COMPLETENESS OF SCANNED COPIES OF THIS PLAN SHEET.

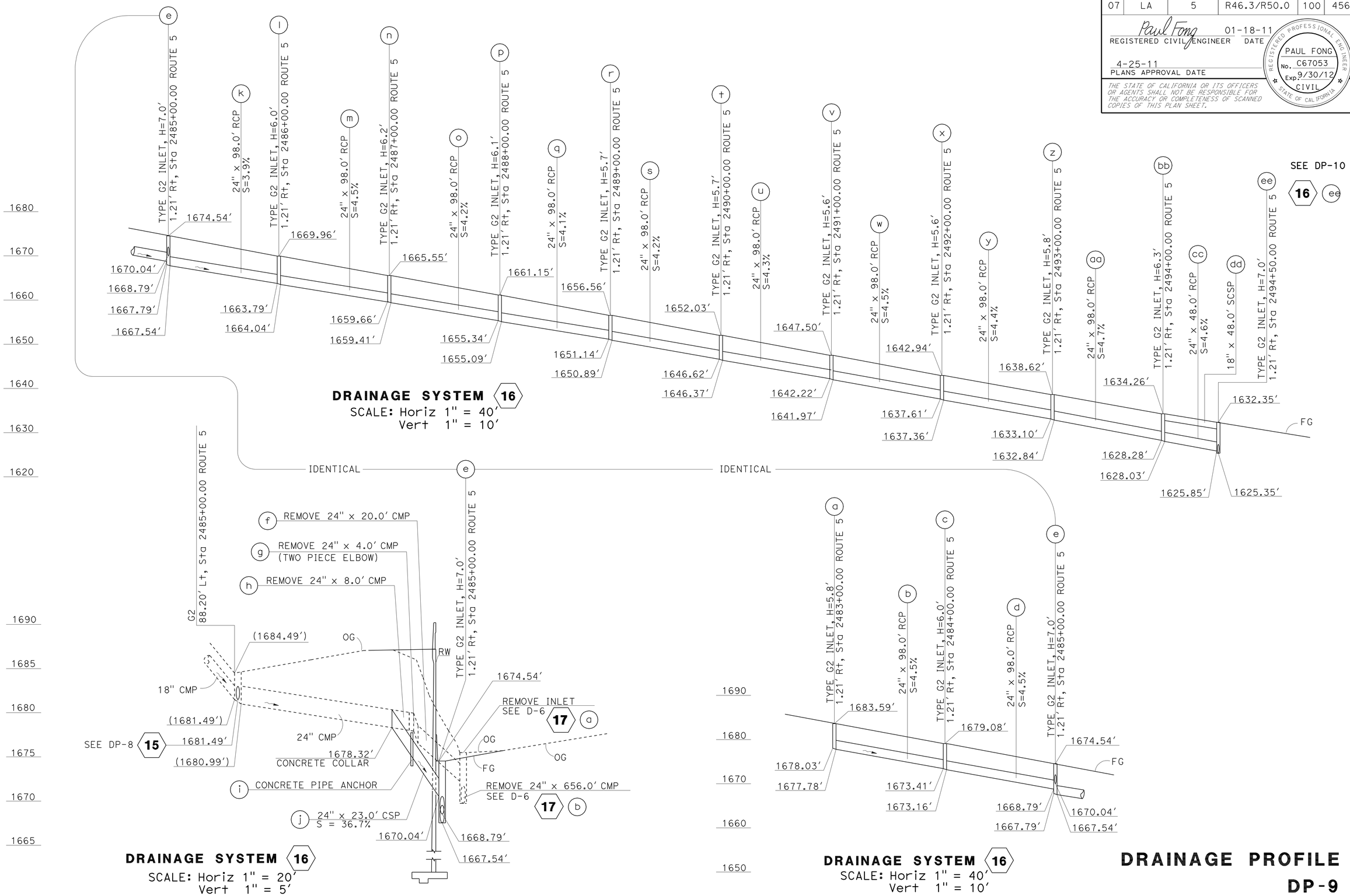

DRAINAGE PROFILE
DP-9

REVISED BY	DATE REVISED

CALCULATED-DESIGNED BY	CHECKED BY
PAUL FONG	PRAKASH YADAV

FUNCTIONAL SUPERVISOR: DAVE BHALLA

STATE OF CALIFORNIA - DEPARTMENT OF TRANSPORTATION
Caltrans® HYDRAULICS

LAST REVISION DATE PLOTTED => 26-APR-2011 TIME PLOTTED => 08:02