DIST	COUNTY	ROUTE	KILOMETER POST TOTAL PROJECT	SHEET No	TOTAL SHEETS
07	LA	5	2.9/4.9	901	1082

Daniel L. Texler 5/24/10
REGISTERED CIVIL ENGINEER

6-21-10
PLANS APPROVAL DATE

REGISTERED PROFESSIONAL ENGINEER
Daniel L Texler
No. 49792
Exp. 9/30/10
CIVIL
STATE OF CALIFORNIA

The State of California or its officers or agents shall not be responsible for the accuracy or completeness of electronic copies of this plan sheet.

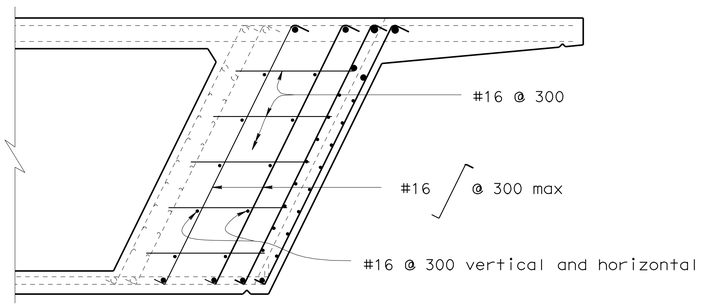

SECTION A-A

1:20

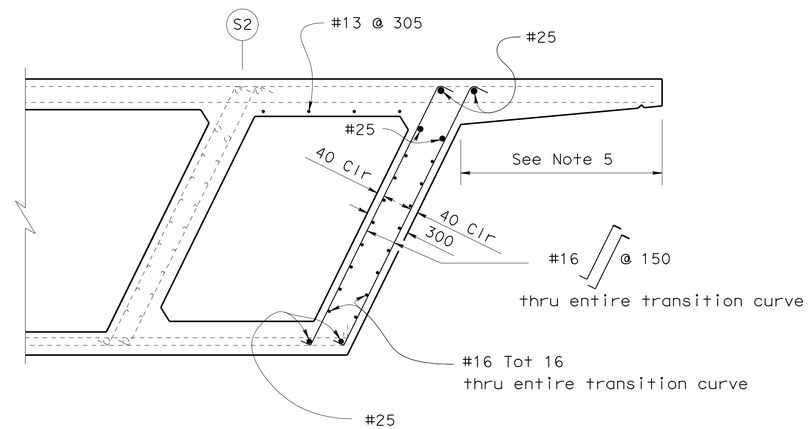

SECTION B-B

1:20

Notes:

1) Detail sections shown are for the transition between the B1 right edge of deck and the C2 left edge of deck. All other transition regions are similar
2) For details & reinforcement not shown, see other sheets
3) A construction joint is required at the C1 & C2 transitions only. Exact location of the constuction joint may be adjusted with Engineer's approval.
4) See "ROAD PLANS" for construction staging
5) Overhang length varies linearly from 1350 mm to 1220 mm

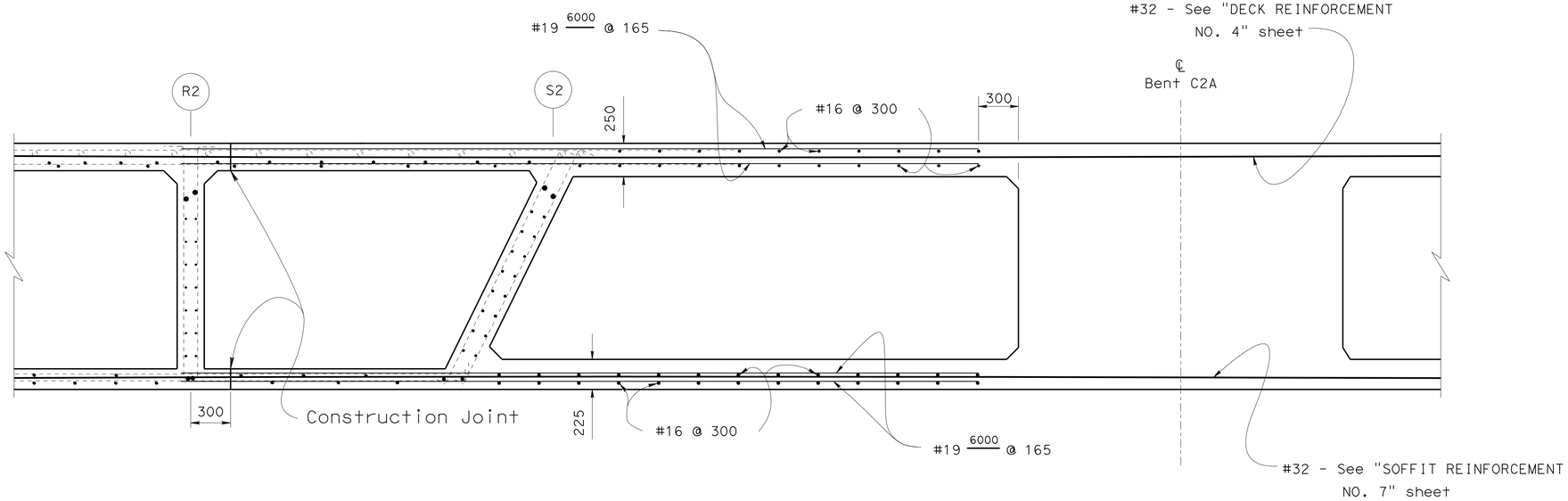

SECTION C-C

1:20

DESIGN	BY D. Texler	CHECKED D. Menzmer	
DETAILS	BY T. Bittermann	CHECKED D. Menzmer	
QUANTITIES	BY M. Okimura	CHECKED D. Menzmer	

STATE OF CALIFORNIA
DEPARTMENT OF TRANSPORTATION

DIVISION OF ENGINEERING SERVICES
STRUCTURE DESIGN
DESIGN BRANCH 11

BRIDGE NO. 53-3018
KILOMETER POST 3.88 (2.42)

CARMENITA ROAD OVERCROSSING/OVERHEAD
B1 TYPICAL SECTION DETAILS NO. 2

Caltrans Metric

ALL DIMENSIONS ARE IN MILLIMETERS UNLESS OTHERWISE SHOWN

ORIGINAL SCALE IN MILLIMETERS FOR REDUCED PLANS 0 10 20 30 40 50 60 70 80 90 100

CU 07225
EA 2159C1

DISREGARD PRINTS BEARING EARLIER REVISION DATES

REVISION DATES (PRELIMINARY STAGE ONLY) 12-20-09 12-24-09 12-28-09 01-04-10 5/18/10

SHEET 74 OF 110

FILE => 53-3018__kk-ts04.dgn

USERNAME => trlenard DATE PLOTTED => 22-JUN-2010 TIME PLOTTED => 09:53

DIST	COUNTY	ROUTE	KILOMETER POST TOTAL PROJECT	SHEET No	TOTAL SHEETS
07	LA	5	2.9/4.9	902	1082

Daniel L. Texler 5/24/10
REGISTERED CIVIL ENGINEER DATE

6-21-10
PLANS APPROVAL DATE

REGISTERED PROFESSIONAL ENGINEER Daniel L Texler No. 49792 Exp. 9-30-10 CIVIL STATE OF CALIFORNIA

The State of California or its officers or agents shall not be responsible for the accuracy or completeness of electronic copies of this plan sheet.

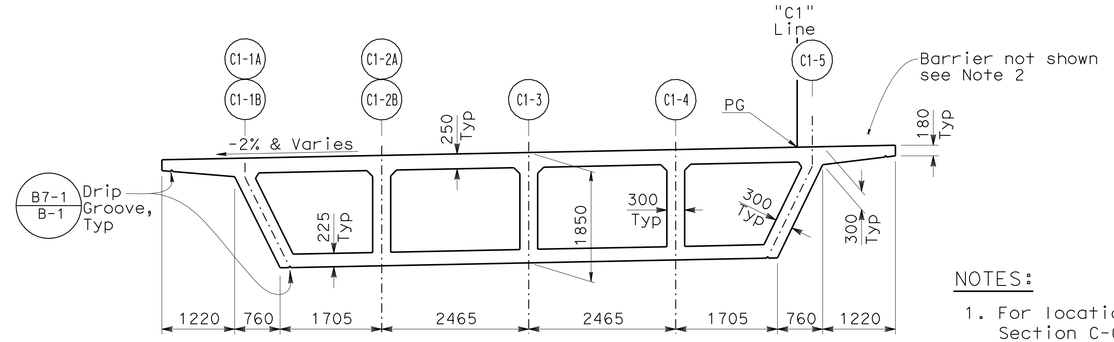

SECTION C-C
1:50

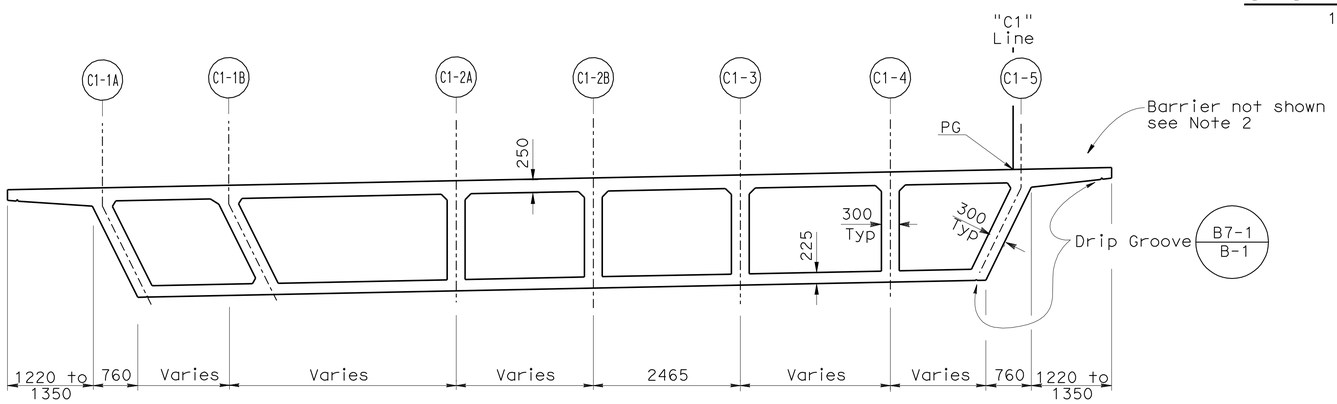

SECTION D-D
1:50

NOTES:

1. For location of Section C-C and Section D-D, see "GIRDER LAYOUT NO.5" sheet
2. For "Concrete Barrier Type 26 Mod" and "Concrete Barrier Type 736 Mod", see "STRUCTURE PLAN NO. 4" and "B1 TYPICAL SECTION NO. 2" sheets Install utility conduits as req'd (not shown) For size and other data, see "ROAD PLANS"
3. For Detail "J" see "C3 TYPICAL SECTION" sheet

∘ Indicates additional Reinf, see soffit & deck Reinf sheets

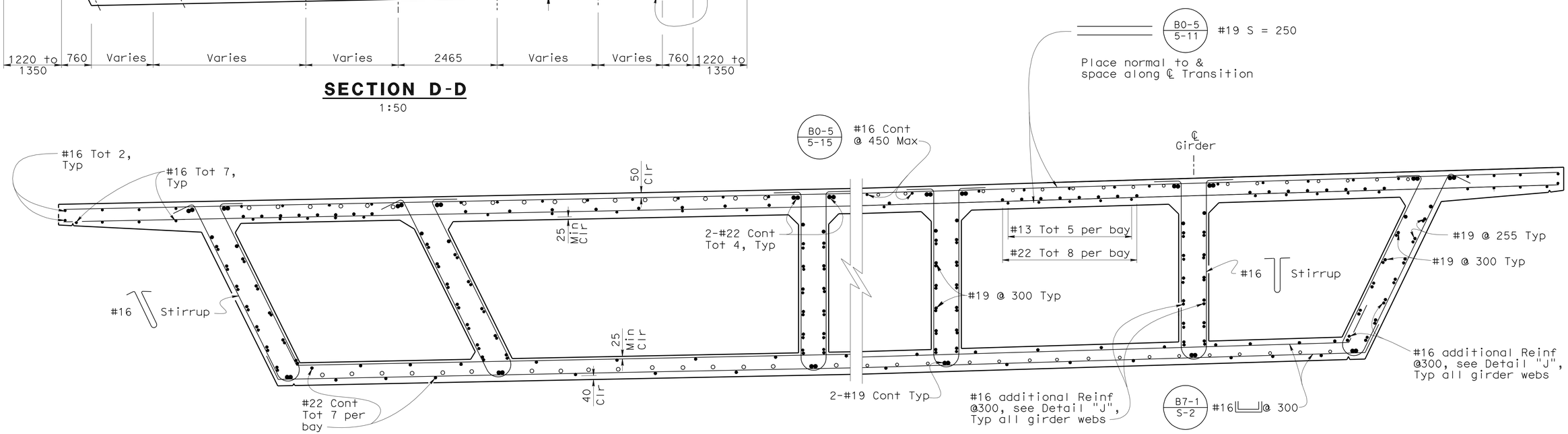

PART SECTION C-C, D-D
1:20

B0-5 B7-1

DESIGN	BY Dary Tavatli	CHECKED D. Menzmer	
DETAILS	BY Pauline Tong	CHECKED D. Menzmer	
QUANTITIES	BY M. Okimura	CHECKED D. Menzmer	

STATE OF CALIFORNIA DEPARTMENT OF TRANSPORTATION

DIVISION OF ENGINEERING SERVICES STRUCTURE DESIGN
DESIGN BRANCH 11

BRIDGE NO. 53-3018
KILOMETER POST 3.88 (2.42)

CARMENITA ROAD OVERCROSSING/OVERHEAD
C1 TYPICAL SECTION

Caltrans Metric

ALL DIMENSIONS ARE IN MILLIMETERS UNLESS OTHERWISE SHOWN

ORIGINAL SCALE IN MILLIMETERS FOR REDUCED PLANS 0 10 20 30 40 50 60 70 80 90 100

CU 07225
EA 2159C1

DISREGARD PRINTS BEARING EARLIER REVISION DATES

REVISION DATES: 12-03-07 4/28/08 1/14/09 5/08/09 7/1/09 7/8/09 5/18/10

SHEET 75 OF 110

FILE => 53-3018__kk-ts05.dgn

STRUCTURES DESIGN DETAIL SHEET (METRIC) (REV.03-17-04)

USERNAME => trlehard DATE PLOTTED => 22-JUN-2010 TIME PLOTTED => 09:53

DIST	COUNTY	ROUTE	KILOMETER POST TOTAL PROJECT	SHEET No	TOTAL SHEETS
07	LA	5	2.9/4.9	903	1082

Daniel L. Texler 5/24/10
REGISTERED CIVIL ENGINEER DATE

6-21-10
PLANS APPROVAL DATE

REGISTERED PROFESSIONAL ENGINEER Daniel L Texler No. 49792 Exp. 9-30-10 CIVIL STATE OF CALIFORNIA

The State of California or its officers or agents shall not be responsible for the accuracy or completeness of electronic copies of this plan sheet.

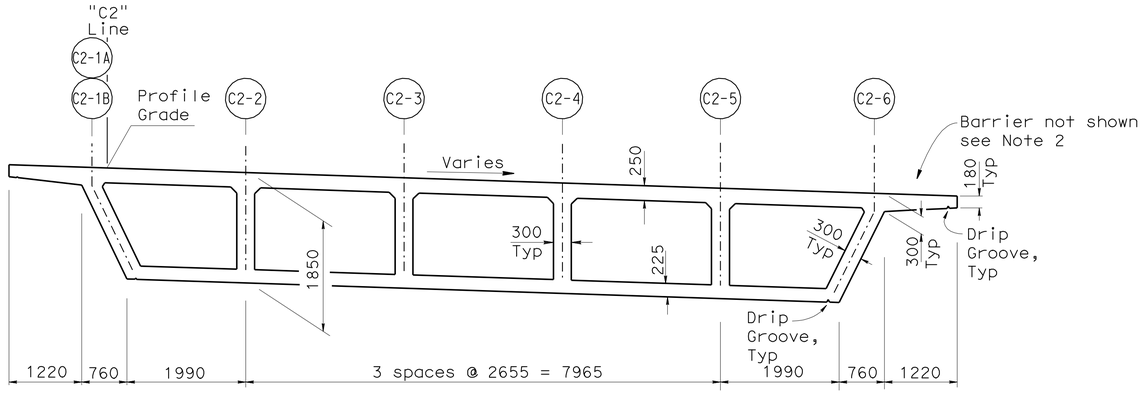

SECTION K-K
1:50

NOTES:

1. For location of Section K-K and Section L-L, see "GIRDER LAYOUT NO. 6" sheet
2. For "Concrete Barrier Type 26 Mod" and "Concrete Barrier Type 736 Mod", see "STRUCTURE PLAN NO. 4" and "B1 TYPICAL SECTION NO. 2" sheets Install utility conduits as req'd (not shown) For size and other data, see "ROAD PLANS"
3. For Detail "J" see "C3 TYPICAL SECTION" sheet

∘ Indicates additional Reinf, see soffit & deck Reinf sheets

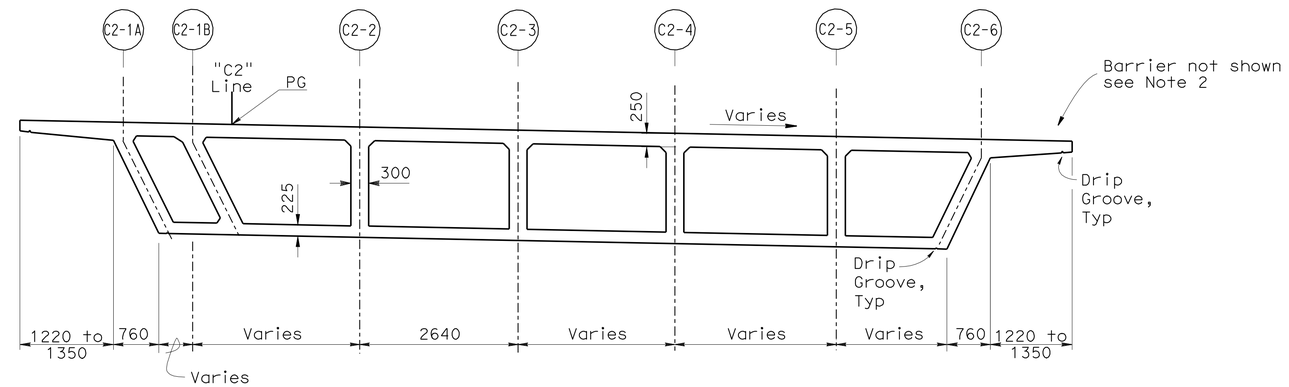

SECTION L-L
1:50

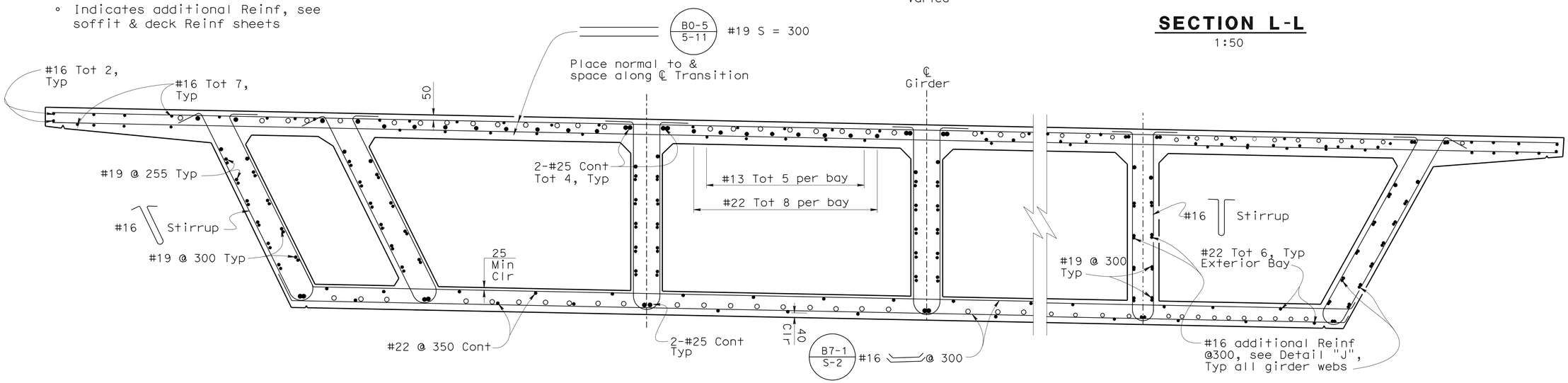

PART SECTION K-K, L-L
1:20

B0-5 B7-1

DESIGN	BY Dary Tavatli	CHECKED D. Menzmer	
DETAILS	BY Pauline Tong	CHECKED D. Menzmer	
QUANTITIES	BY M. Okimura	CHECKED D. Menzmer	

STATE OF CALIFORNIA
DEPARTMENT OF TRANSPORTATION

DIVISION OF ENGINEERING SERVICES
STRUCTURE DESIGN
DESIGN BRANCH 11

BRIDGE NO. 53-3018
KILOMETER POST 3.88 (2.42)

CARMENITA ROAD OVERCROSSING/OVERHEAD
C2 TYPICAL SECTION

ALL DIMENSIONS ARE IN MILLIMETERS UNLESS OTHERWISE SHOWN

ORIGINAL SCALE IN MILLIMETERS FOR REDUCED PLANS 0 10 20 30 40 50 60 70 80 90 100

CU 07225
EA 2159C1

DISREGARD PRINTS BEARING EARLIER REVISION DATES

REVISION DATES: 12-07-07 4/25/08 7/1/09 7/8/09 5/18/10

SHEET 76 OF 110

FILE => 53-3018__kk-ts06.dgn

STRUCTURES DESIGN DETAIL SHEET (METRIC) (REV.03-17-04)

USERNAME => trlenard DATE PLOTTED => 22-JUN-2010 TIME PLOTTED => 09:53

DIST	COUNTY	ROUTE	KILOMETER POST TOTAL PROJECT	SHEET No	TOTAL SHEETS
07	LA	5	2.9/4.9	904	1082

Daniel L. Texler 5/24/10
REGISTERED CIVIL ENGINEER DATE

6-21-10
PLANS APPROVAL DATE

REGISTERED PROFESSIONAL ENGINEER Daniel L Texler No. 49792 Exp. 9-30-10 CIVIL STATE OF CALIFORNIA

The State of California or its officers or agents shall not be responsible for the accuracy or completeness of electronic copies of this plan sheet.

NOTES:

1. For location of Section N-N and Section M-M, see "GIRDER LAYOUT NO. 7" sheet
2. For "Concrete Barrier Type 26 Mod" and "Concrete Barrier Type 736 Mod", see "STRUCTURE PLAN NO. 4" and "B1 TYPICAL SECTION NO. 2" sheets Install utility conduits as req'd (not shown) For size and other data, see "ROAD PLANS"

∘ Indicates additional Reinf, see soffit & deck Reinf sheets

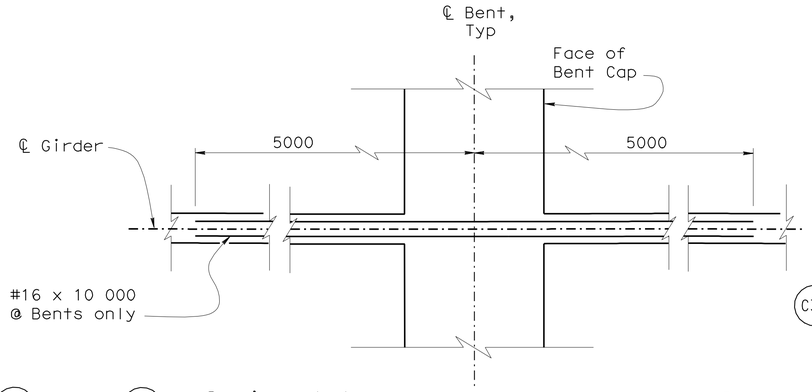

PART PLAN DETAIL "J"
1:20

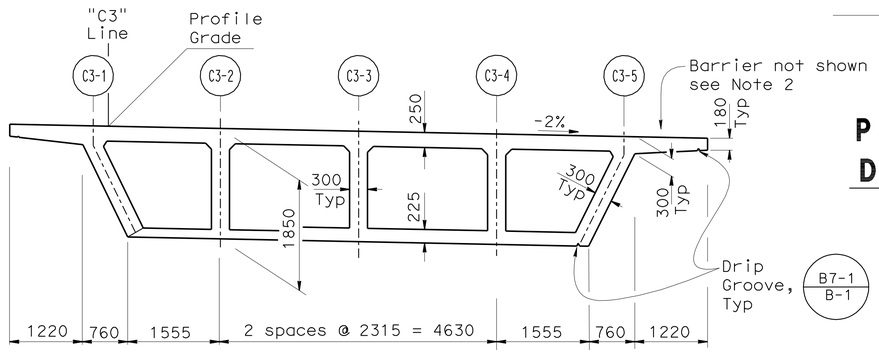

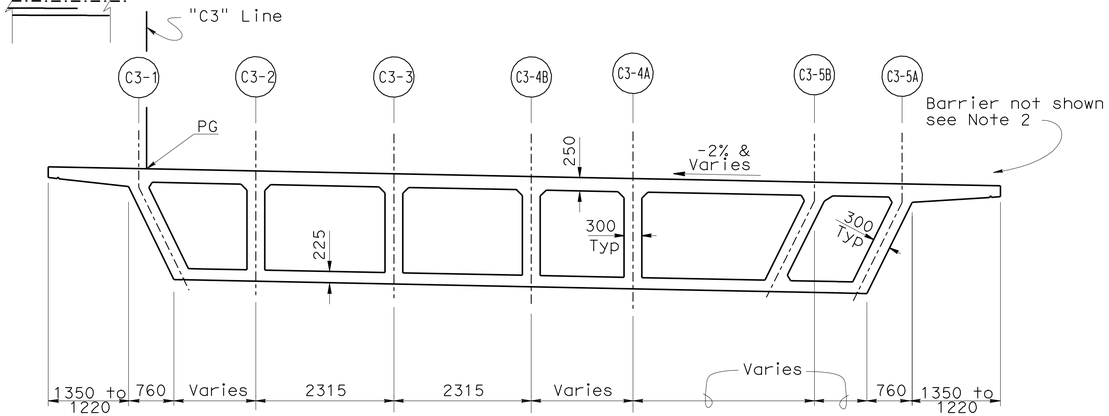

SECTION N-N
1:50

SECTION M-M
1:50

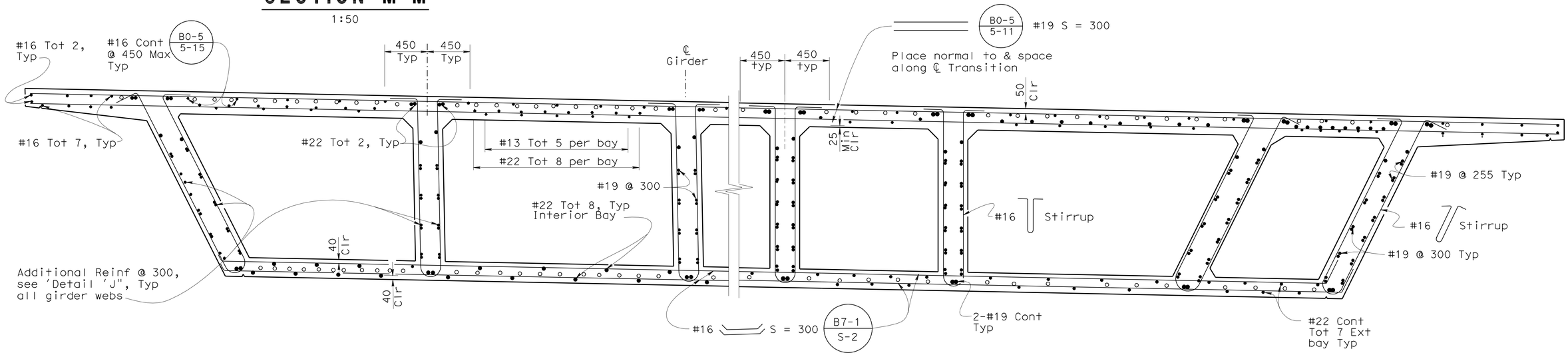

PART SECTIONS M-M, N-N
B0-5 B7-1
1:20

Caltrans Metric

ALL DIMENSIONS ARE IN MILLIMETERS UNLESS OTHERWISE SHOWN

ORIGINAL SCALE IN MILLIMETERS FOR REDUCED PLANS 0 10 20 30 40 50 60 70 80 90 100

	BY	CHECKED
DESIGN	Dary Tavatli	D. Menzmer
DETAILS	Pauline Tong	D. Menzmer
QUANTITIES	M. Okimura	D. Menzmer

STATE OF CALIFORNIA
DEPARTMENT OF TRANSPORTATION

DIVISION OF ENGINEERING SERVICES
STRUCTURE DESIGN
DESIGN BRANCH 11

CU 07225
EA 2159C1

BRIDGE NO. 53-3018
KILOMETER POST 3.88 (2.42)

CARMENITA ROAD OVERCROSSING/OVERHEAD
C3 TYPICAL SECTION

DISREGARD PRINTS BEARING EARLIER REVISION DATES

REVISION DATES: 12-03-07 4/25/08 5/26/09 6/8/09 7/1/09 7/24/09 12/31/09 5/18/10

SHEET 77 OF 110

FILE => 53-3018__kk-ts07.dgn

STRUCTURES DESIGN DETAIL SHEET (METRIC) (REV.03-17-04)

USERNAME => trienard DATE PLOTTED => 22-JUN-2010 TIME PLOTTED => 09:53

DIST	COUNTY	ROUTE	KILOMETER POST TOTAL PROJECT	SHEET No	TOTAL SHEETS
07	LA	5	2.9/4.9	905	1082

Daniel L. Texler 5/24/10
REGISTERED CIVIL ENGINEER DATE

6-21-10
PLANS APPROVAL DATE

REGISTERED PROFESSIONAL ENGINEER Daniel L Texler No. 49792 Exp. 9-30-10 CIVIL STATE OF CALIFORNIA

The State of California or its officers or agents shall not be responsible for the accuracy or completeness of electronic copies of this plan sheet.

NOTES:

1. For location of Section A-A and Section B-B, see "GIRDER LAYOUT NO. 8" sheet
2. For "Concrete Barrier Type 26 Mod" and "Concrete Barrier Type 736 Mod", see "STRUCTURE PLAN NO. 4" and "B1 TYPICAL SECTION NO. 2" sheets Install utility conduits as req'd (not shown) For size and other data, see "ROAD PLANS"
3. For Detail "J" see "C3 TYPICAL SECTION" sheet

∘ Indicates additional Reinf, see soffit & deck Reinf sheets

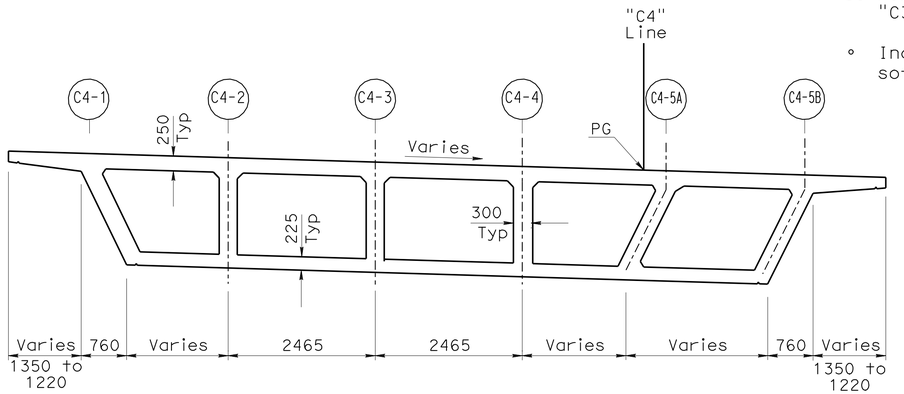

SECTION A-A
1:50

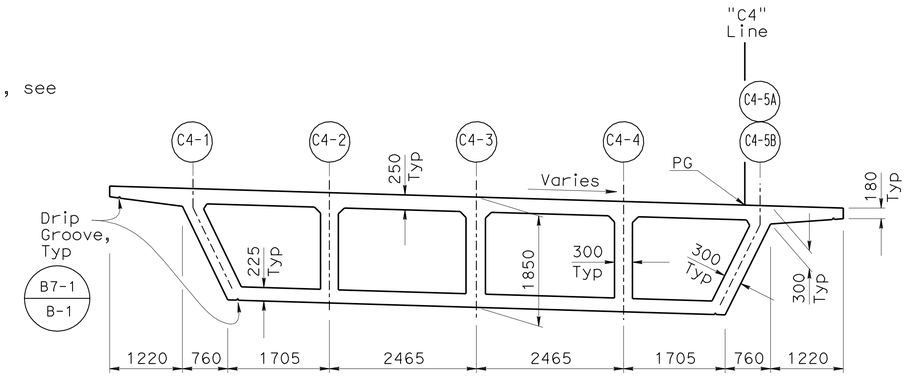

SECTION B-B
1:50

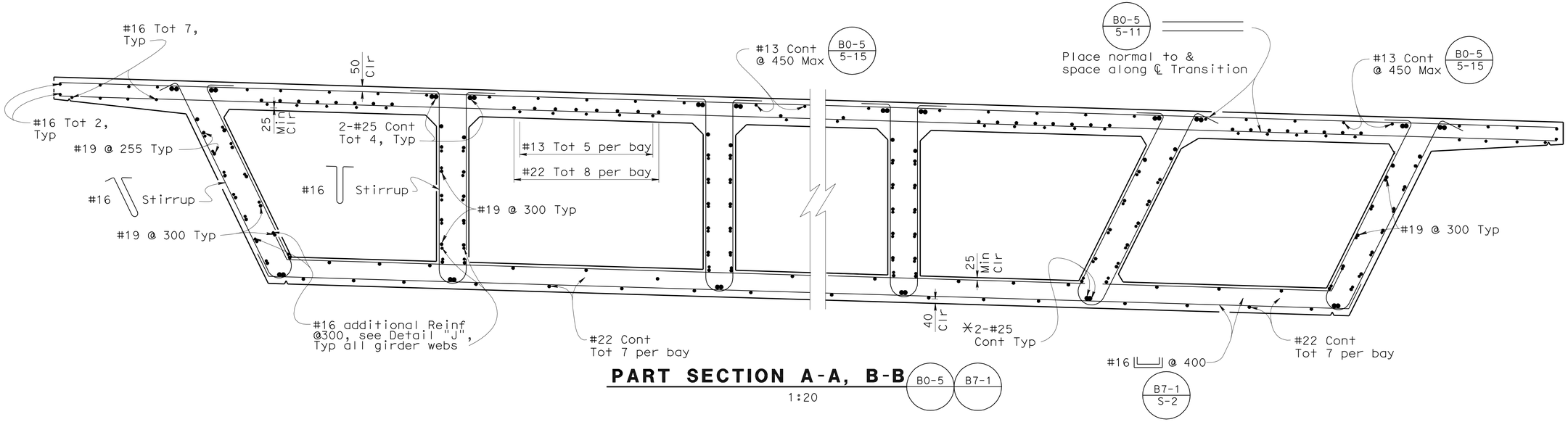

PART SECTION A-A, B-B B0-5 B7-1
1:20

DESIGN	BY Dary Tavatli	CHECKED D. Menzmer	
DETAILS	BY Pauline Tong	CHECKED D. Menzmer	
QUANTITIES	BY M. Okimura	CHECKED D. Menzmer	

STATE OF CALIFORNIA
DEPARTMENT OF TRANSPORTATION

DIVISION OF ENGINEERING SERVICES
STRUCTURE DESIGN
DESIGN BRANCH 11

BRIDGE NO. 53-3018
KILOMETER POST 3.88 (2.42)

CARMENITA ROAD OVERCROSSING/OVERHEAD
C4 TYPICAL SECTION

ALL DIMENSIONS ARE IN MILLIMETERS UNLESS OTHERWISE SHOWN

ORIGINAL SCALE IN MILLIMETERS FOR REDUCED PLANS 0 10 20 30 40 50 60 70 80 90 100

CU 07225
EA 2159C1

DISREGARD PRINTS BEARING EARLIER REVISION DATES

REVISION DATES: 12-06-07 2-25-08 4-23-08 5-22-09 7-1-09 7-16-09 5/18/10

SHEET 78 OF 110

FILE => 53-3018__kk-ts08.dgn

STRUCTURES DESIGN DETAIL SHEET (METRIC) (REV.03-17-04)

USERNAME => trienard DATE PLOTTED => 22-JUN-2010 TIME PLOTTED => 09:53

DIST	COUNTY	ROUTE	KILOMETER POST TOTAL PROJECT	SHEET No	TOTAL SHEETS
07	LA	5	2.9/4.9	906	1082

Daniel L. Texler 5/24/10
REGISTERED CIVIL ENGINEER

6-21-10
PLANS APPROVAL DATE

REGISTERED PROFESSIONAL ENGINEER
Daniel L Texler
No. 49792
Exp. 9-30-10
CIVIL
STATE OF CALIFORNIA

The State of California or its officers or agents shall not be responsible for the accuracy or completeness of electronic copies of this plan sheet.

TIME DEPENDENT CAMBER VALUES

Days ✡	Hinge				
	Camber "A"	Camber "B"	Long Cantilever Adjusted Camber		
			@1/4L	@1/2L	@3/4L
30	-3	0	4	8	2
60	-3	-3	4	8	2
90	0	-3	6	9	3
120	0	-3	6	9	3
180	0	-3	6	9	3
240	0	-3	6	9	3
360	0	-3	6	9	3
720	0	-3	6	9	3

✡ Elapsed time in days measured from prestressing short hinge side till closure and load transfer.

Notes:

Camber values shown do not include allowances for falsework settlement.
Camber values are shown in millimeters.

HINGE REACTION DUE TO DEAD LOAD AND PRESTRESS ✳

Hinge Location	Dead Load Reaction (kN)	PS Reaction (kN)
Span 4	4900	50

✳ Unfactored loads, includes closure pour

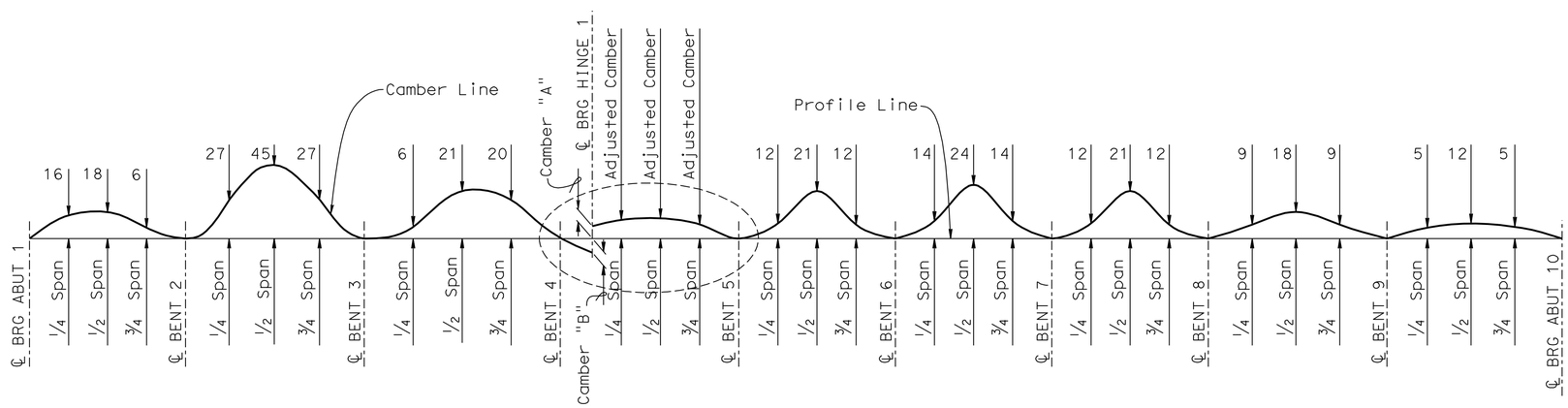

CAMBER DIAGRAM

No Scale

DESIGN	BY Ling Wang	CHECKED D. Menzmer	
DETAILS	BY D. Elliott	CHECKED D. Menzmer	
QUANTITIES	BY M. Okimura	CHECKED D. Menzmer	

STATE OF CALIFORNIA
DEPARTMENT OF TRANSPORTATION

DIVISION OF STRUCTURES
STRUCTURE DESIGN 11

BRIDGE NO. 53-3018
KILOMETER POST 3.88 (2.42)

CARMENITA ROAD OVERCROSSING/OVERHEAD
CAMBER DIAGRAM

ALL DIMENSIONS ARE IN METERS UNLESS OTHERWISE SHOWN

ORIGINAL SCALE IN MILLIMETERS FOR REDUCED PLANS 0 10 20 30 40 50 60 70 80 90 100

CU 07225
EA 2159C1

DISREGARD PRINTS BEARING EARLIER REVISION DATES

REVISION DATES (PRELIMINARY STAGE ONLY) 3-28-07 4-5-07 5/18/10

SHEET 79 OF 110

FILE => 53-3018__mm-cmbr.dgn

USERNAME => trlenard DATE PLOTTED => 22-JUN-2010 TIME PLOTTED => 09:53

DIST	COUNTY	ROUTE	KILOMETER POST TOTAL PROJECT	SHEET No	TOTAL SHEETS
07	LA	5	2.9/4.9	907	1082

Daniel L. Texler 5/24/10
REGISTERED CIVIL ENGINEER DATE

6-21-10
PLANS APPROVAL DATE

REGISTERED PROFESSIONAL ENGINEER Daniel L. Texler No. 49792 Exp. 9-30-10 CIVIL STATE OF CALIFORNIA

The State of California or its officers or agents shall not be responsible for the accuracy or completeness of electronic copies of this plan sheet.

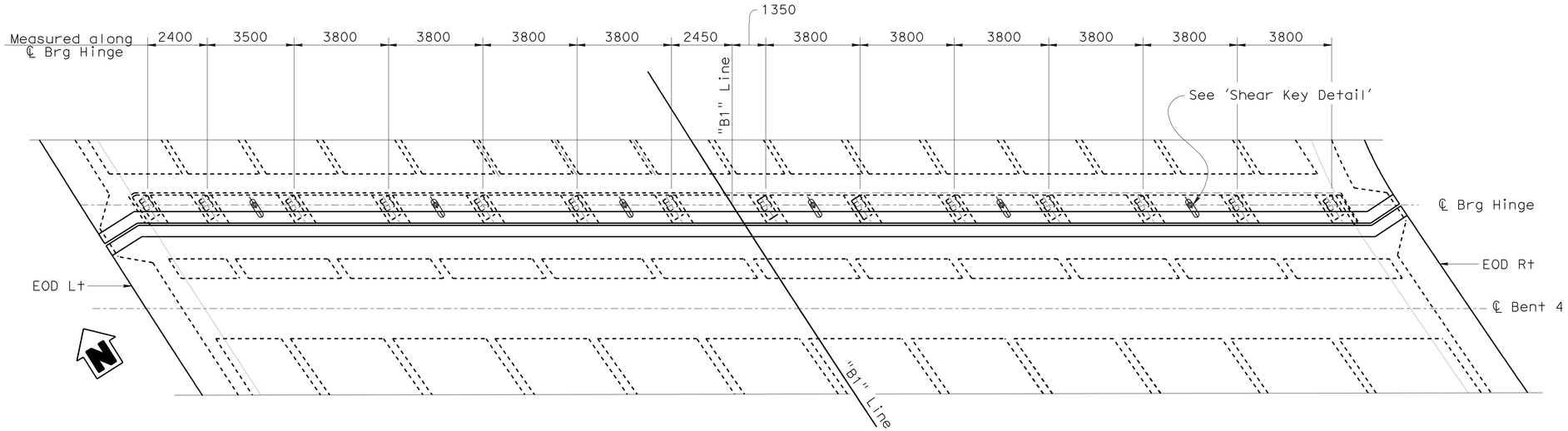

PLAN
1:100

NOTES:

Shear Key total 6 placed between bearings as shown.

Place grout between pipes.

Void between NPS 6 and NPS 8 Pipes.

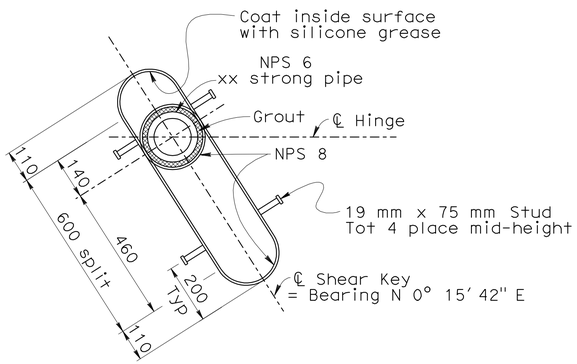

SHEAR KEY DETAIL
1:10

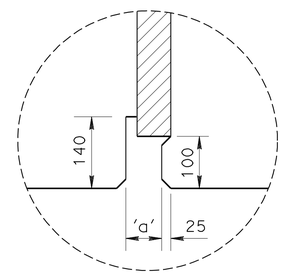

DETAIL A
No Scale

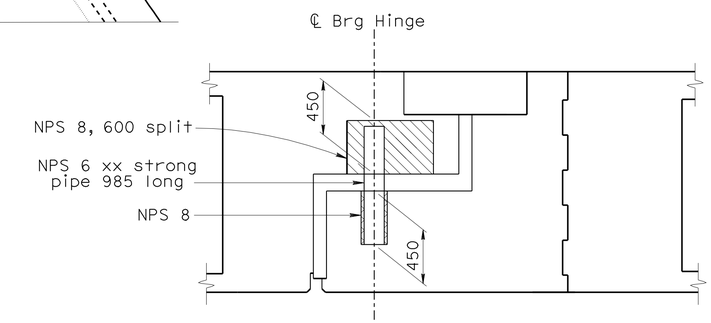

HINGE SECTION AT SHEAR KEY
1:25

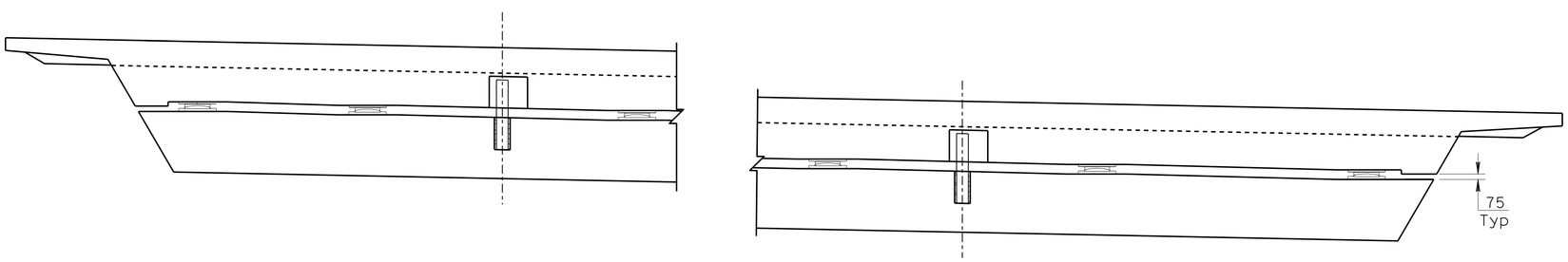

PARTIAL SECTION ALONG ℄ BEARING HINGE
1:40

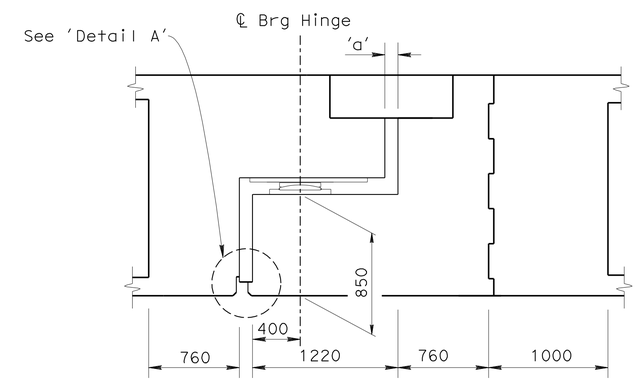

HINGE SECTION AT BEARING
1:25

DESIGN	BY Ling Wang	CHECKED D. Menzmer	
DETAILS	BY D. Elliott	CHECKED D. Menzmer	
QUANTITIES	BY M. Okimura	CHECKED D. Menzmer	

STATE OF CALIFORNIA
DEPARTMENT OF TRANSPORTATION

DIVISION OF ENGINEERING SERVICES
STRUCTURE DESIGN
DESIGN BRANCH 11

BRIDGE NO. 53-3018
KILOMETER POST 3.88(2.42)

CARMENITA ROAD OVERCROSSING/OVERHEAD
B1 HINGE LAYOUT

Caltrans Metric

ALL DIMENSIONS ARE IN MILLIMETERS UNLESS OTHERWISE SHOWN

ORIGINAL SCALE IN MILLIMETERS FOR REDUCED PLANS 0 10 20 30 40 50 60 70 80 90 100

CU 07225
EA 2159C1

DISREGARD PRINTS BEARING EARLIER REVISION DATES

REVISION DATES: 4-23-01 6-26-01 7-10-01 8-3-01 8-20-01 1-23-09 12/18/09 5/18/10

SHEET 80 OF 110

FILE => 53-3018__na-hnglyt.dgn

STRUCTURES DESIGN DETAIL SHEET (METRIC) (REV.03-17-04)

USERNAME => trleonard DATE PLOTTED => 22-JUN-2010 TIME PLOTTED => 09:53

DIST	COUNTY	ROUTE	KILOMETER POST TOTAL PROJECT	SHEET No	TOTAL SHEETS
07	LA	5	2.9/4.9	908	1082

Daniel L. Texler 5/24/10
REGISTERED CIVIL ENGINEER DATE

6-21-10
PLANS APPROVAL DATE

REGISTERED PROFESSIONAL ENGINEER Daniel L. Texler No. 49792 Exp. 9-30-10 CIVIL STATE OF CALIFORNIA

The State of California or its officers or agents shall not be responsible for the accuracy or completeness of electronic copies of this plan sheet.

LEGEND:

Ⓐ #29 ⌐ @ 300, except @ 200 - 6 spaces from ends

Ⓑ #29 ⌐ @ 300, except @ 200 - 6 spaces from ends

Ⓒ #19 ▭ @ 400, placed along and above Ⓐ bars

Ⓓ #19 ▭ @ 400, placed along and below Ⓑ bars

Ⓔ #32 Tot 4, see Note 5

Ⓕ #32 Tot 4, see Note 6

Ⓖ #25 ⌋ @ 200 (2000)

Ⓗ #25 ⌈ @ 200, see Note 2

Ⓙ #25 ⌈ (1500, 1500) @ 200, see Note 2

Ⓚ #29 ⌊ @ 200 Tot 5, see Note 4

Ⓛ #29 ⌐ @ 200 Tot 5, see Note 4

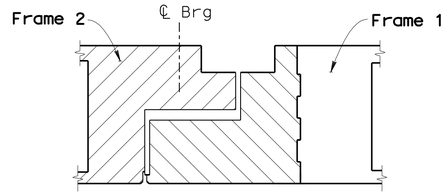

POURING SEQUENCE

No Scale

NOTES:

Indicates reinforced cast-in-place concrete Stage 1 with f'_c = 28 MPa

Indicates reinforced cast-in-place concrete Stage 2 with f'_c = 28 MPa. Stage 2 to be placed no sooner than 30 days after prestressing frame 1 is completed.

Falsework shall remain in place a minimum of 10 days after Stage 2 has been placed and until the cast-in-place concrete has attained a compressive strength of 23 MPa.

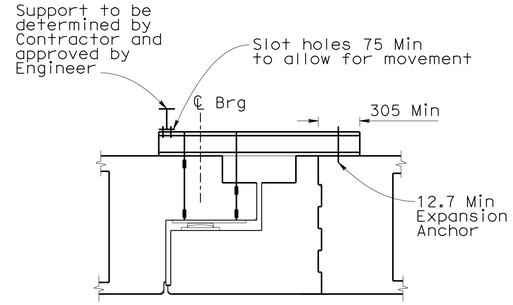

TEMPORARY BEARING SUPPORT

SECTION THRU HINGE

No Scale

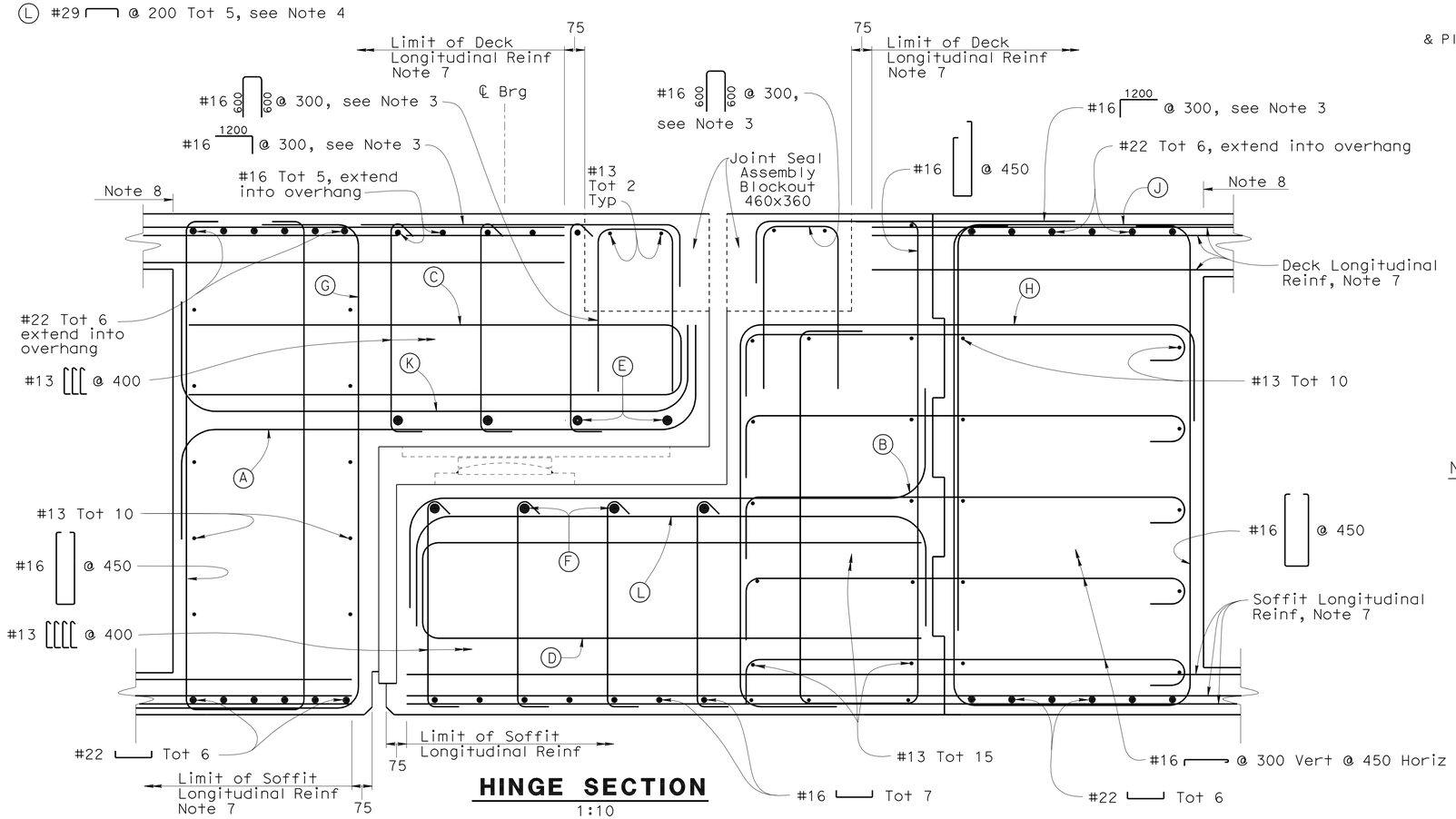

HINGE SECTION

1:10

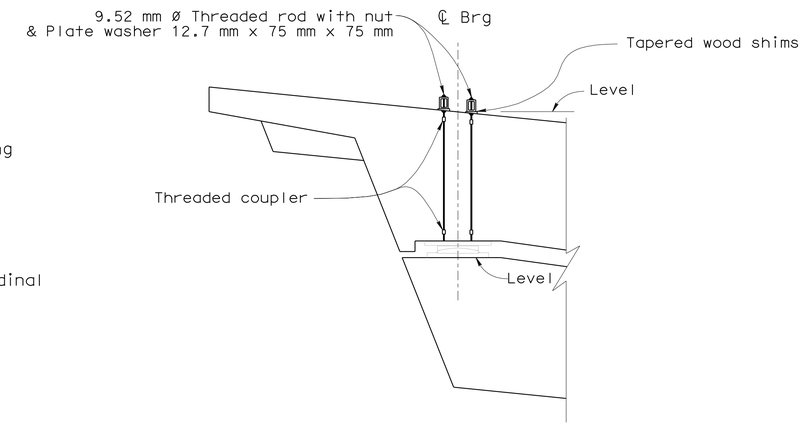

TEMPORARY BEARING SUPPORT

PART SECTION THRU HINGE

No Scale

NOTES:

1. Reinforcement horizontal spacing shall be measured along ℄ Brg Hinge
2. Reinforcement may be moved to clear the prestress jack as directed by the Engineer.
3. Reinforcement may be moved to accommodate installation of the joint seal assembly as directed by the Engineer.
4. For Reinforcement location See "B1 HINGE DETAILS NO. 2" sheet
5. Reinforcement shall be modified at Shear Key.
6. Reinforcement may be moved to accommodate the installation of Shear Key.
7. Longitudinal Reinforcement in deck and soffit slab See "TYPICAL SECTION" sheets.
8. Limit of transverse Deck and soffit Reinforcement

B0-5 5-10 | B0-5 5-11 | B7-1 S-2

Caltrans Metric

ALL DIMENSIONS ARE IN MILLIMETERS UNLESS OTHERWISE SHOWN

ORIGINAL SCALE IN MILLIMETERS FOR REDUCED PLANS 0 10 20 30 40 50 60 70 80 90 100

	BY	CHECKED
DESIGN	P. Nguyen	D. Menzmer
DETAILS	T. Bittermann	D. Menzmer
QUANTITIES	M. Okimura	D. Menzmer

STATE OF CALIFORNIA
DEPARTMENT OF TRANSPORTATION

DIVISION OF ENGINEERING SERVICES
STRUCTURE DESIGN
DESIGN BRANCH 11

CU 07225
EA 2159C1

BRIDGE NO. 53-3018
KILOMETER POST 3.88(2.42)

CARMENITA ROAD OVERCROSSING/OVERHEAD
B1 HINGE DETAILS NO. 1

DISREGARD PRINTS BEARING EARLIER REVISION DATES

REVISION DATES: 6-29-01 7-2-01 7-9-01 8-10-01 1-22-09 12/14/09 5/18/10

SHEET 81 OF 110

FILE => 53-3018__nb-hngdt01.dgn

STRUCTURES DESIGN DETAIL SHEET (METRIC) (REV.03-17-04)

USERNAME => trenard DATE PLOTTED => 22-JUN-2010 TIME PLOTTED => 09:53

DIST	COUNTY	ROUTE	KILOMETER POST TOTAL PROJECT	SHEET No	TOTAL SHEETS
07	LA	5	2.9/4.9	909	1082

Daniel L. Texler 5/24/10
REGISTERED CIVIL ENGINEER DATE

6-21-10
PLANS APPROVAL DATE

REGISTERED PROFESSIONAL ENGINEER Daniel L. Texler No. 49792 Exp. 9-30-10 CIVIL STATE OF CALIFORNIA

The State of California or its officers or agents shall not be responsible for the accuracy or completeness of electronic copies of this plan sheet.

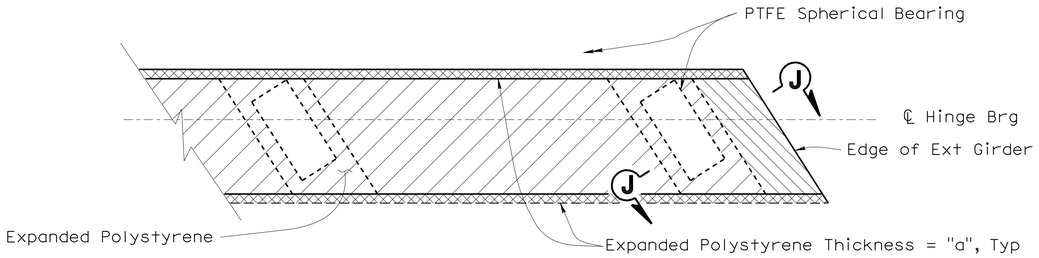

PART PLAN AT BEARING SEAT

No Scale

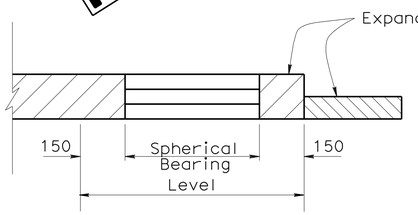

SECTION J-J

No Scale

LEGEND:

Expanded Polystyrene same thickness as bearing

Expanded Polystyrene 75 mm thick at each end

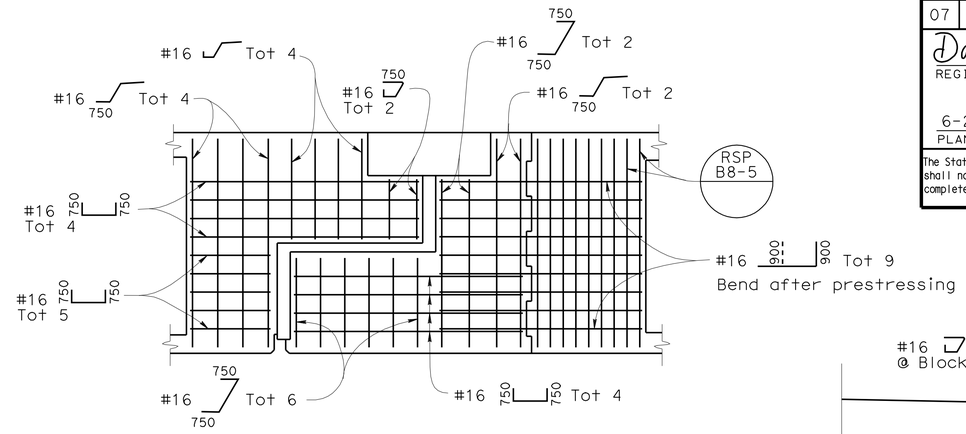

HINGE SIDE REINFORCEMENT

1:25

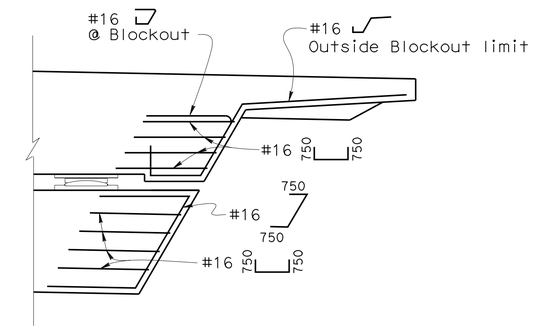

SIDE REINFORCEMENT PARTIAL VIEW AT SEAT

1:25

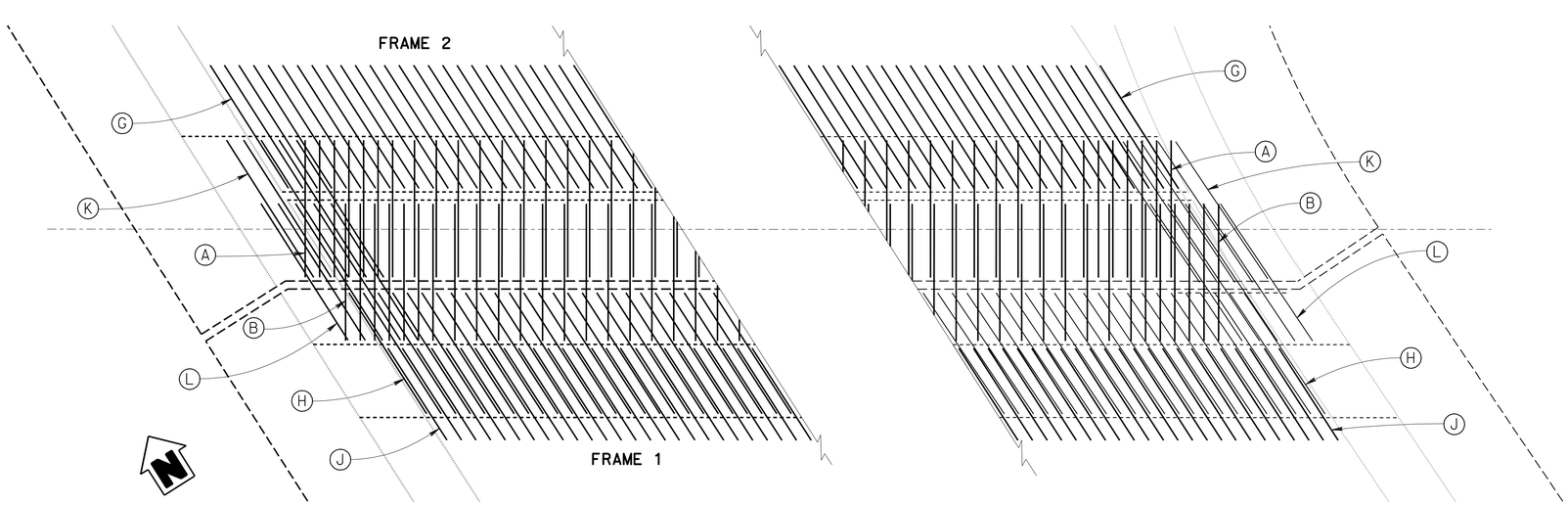

PARTIAL HINGE REINFORCEMENT LAYOUT

No Scale

See Reinforcement "LEGEND" on "B1 HINGE DETAILS NO. 1" SHEET

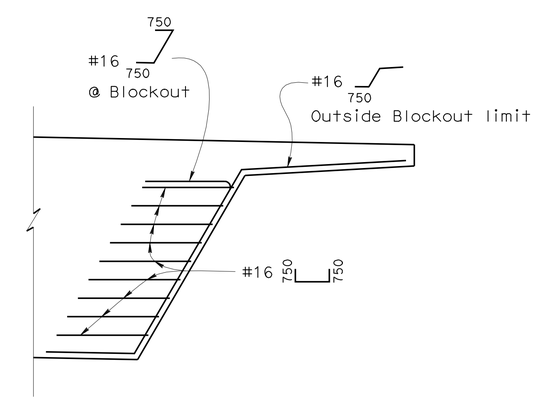

SIDE REINFORCEMENT PARTIAL VIEW AWAY FROM SEAT

1:25

Caltrans Metric

	BY	CHECKED
DESIGN	P. Nguyen	D. Menzmer
DETAILS	T. Bittermann	D. Menzmer
QUANTITIES	M. Okimura	D. Menzmer

STATE OF CALIFORNIA DEPARTMENT OF TRANSPORTATION

DIVISION OF ENGINEERING SERVICES STRUCTURE DESIGN

DESIGN BRANCH 11

BRIDGE NO. 53-3018

KILOMETER POST 3.88(2.42)

CARMENITA ROAD OVERCROSSING/OVERHEAD

B1 HINGE DETAILS NO. 2

ALL DIMENSIONS ARE IN MILLIMETERS UNLESS OTHERWISE SHOWN

ORIGINAL SCALE IN MILLIMETERS FOR REDUCED PLANS 0 10 20 30 40 50 60 70 80 90 100

CU 07225
EA 2159C1

DISREGARD PRINTS BEARING EARLIER REVISION DATES

REVISION DATES: 6-29-07 1-28-08 1-23-09 12/11/2009 12/18/2009 5/18/10

SHEET 82 OF 110

FILE => 53-3018__nb-hngdt02.dgn

STRUCTURES DESIGN DETAIL SHEET (METRIC) (REV.03-17-04)

USERNAME => trtenard DATE PLOTTED => 22-JUN-2010 TIME PLOTTED => 09:54

DIST	COUNTY	ROUTE	KILOMETER POST TOTAL PROJECT	SHEET No	TOTAL SHEETS
07	LA	5	2.9/4.9	910	1082

Daniel L. Texler 5/24/10
REGISTERED CIVIL ENGINEER DATE

6-21-10
PLANS APPROVAL DATE

REGISTERED PROFESSIONAL ENGINEER Daniel L Texler No. 49792 Exp. 9-30-10 CIVIL STATE OF CALIFORNIA

The State of California or its officers or agents shall not be responsible for the accuracy or completeness of electronic copies of this plan sheet.

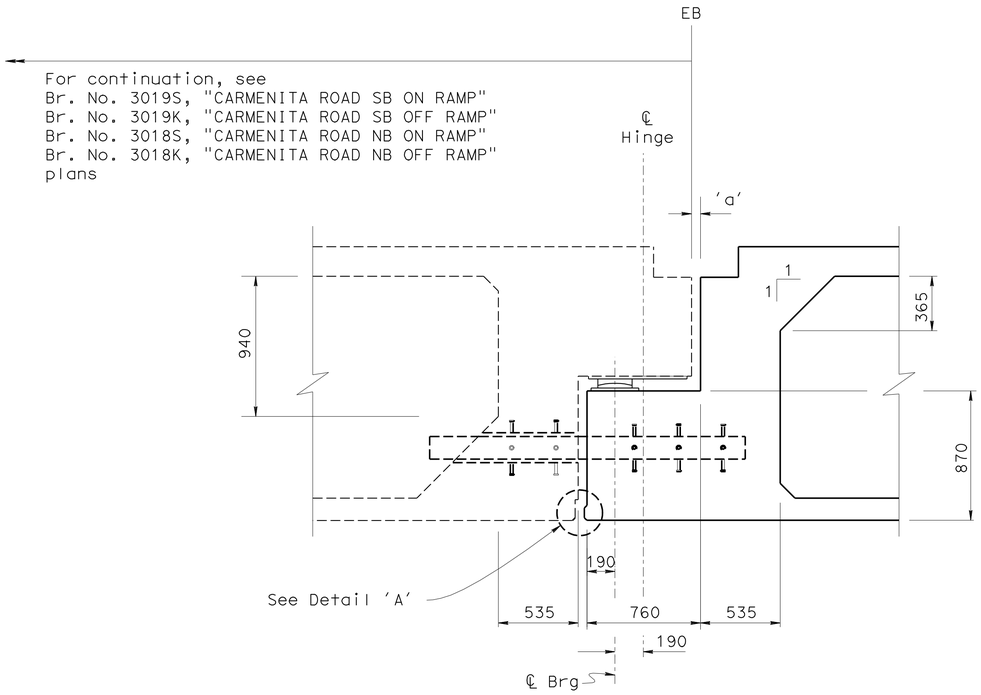

TYPICAL SECTION AT TRANSITION RAMP HINGE

1:20

NOTES:

For details and spacing of NPS6 xx strong pipe, Transition Ramp Hinge Bearing Pads and other details, see
Br. No. 3019S, "CARMENITA ROAD SB ON RAMP"
Br. No. 3019K, "CARMENITA ROAD SB OFF RAMP"
Br. No. 3018S, "CARMENITA ROAD NB ON RAMP"
Br. No. 3018K, "CARMENITA ROAD NB OFF RAMP"
plans

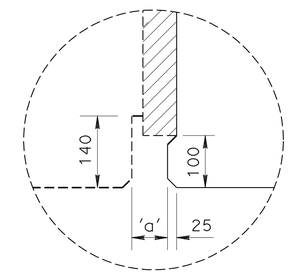

DETAIL A

No Scale

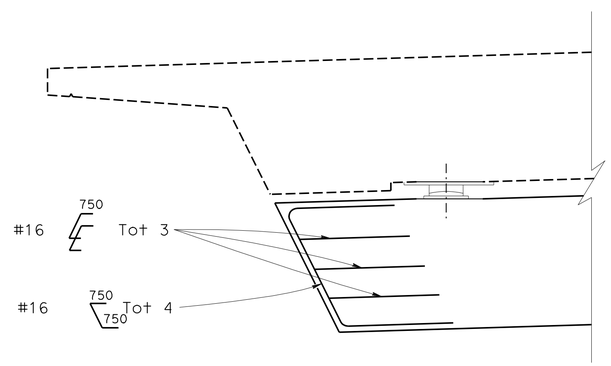

SIDE REINFORCEMENT

1:20

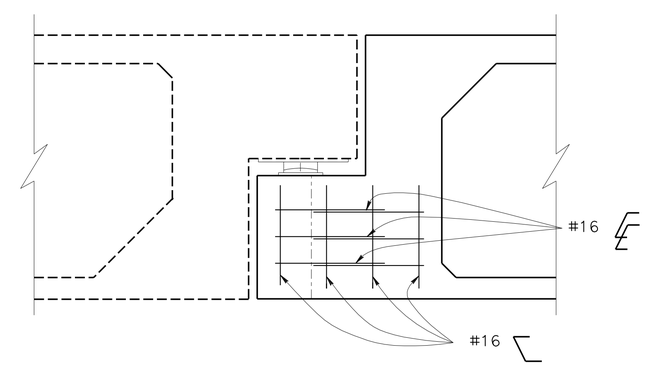

HINGE SIDE REINFORCEMENT

1:20

DESIGN	BY Eric Burgeson	CHECKED D. Menzmer
DETAILS	BY Pauline Tong	CHECKED D. Menzmer
QUANTITIES	BY M. Okimura	CHECKED D. Menzmer

STATE OF CALIFORNIA
DEPARTMENT OF TRANSPORTATION

DIVISION OF ENGINEERING SERVICES
STRUCTURE DESIGN
DESIGN BRANCH 11

BRIDGE NO. 53-3018
KILOMETER POST 3.88 (2.42)

CARMENITA ROAD OVERCROSSING/OVERHEAD
RAMP HINGE DETAILS NO. 1

ALL DIMENSIONS ARE IN MILLIMETERS UNLESS OTHERWISE SHOWN

ORIGINAL SCALE IN MILLIMETERS FOR REDUCED PLANS 0 10 20 30 40 50 60 70 80 90 100

CU 07225
EA 2159C1

DISREGARD PRINTS BEARING EARLIER REVISION DATES

REVISION DATES: 3-24-07 3-26-07 2-04-09 6-18-09 5/18/10

SHEET 83 OF 110

FILE => 53-3018__nd-hngdt03.dgn

STRUCTURES DESIGN DETAIL SHEET (METRIC) (REV.03-17-04)

USERNAME => trlenard DATE PLOTTED => 22-JUN-2010 TIME PLOTTED => 09:54

DIST	COUNTY	ROUTE	KILOMETER POST TOTAL PROJECT	SHEET No	TOTAL SHEETS
07	LA	5	2.9/4.9	911	1082

Daniel L. Texler 5/24/10
REGISTERED CIVIL ENGINEER DATE

6-21-10
PLANS APPROVAL DATE

REGISTERED PROFESSIONAL ENGINEER
Daniel L Texler
No. 49792
Exp. 9-30-10
CIVIL
STATE OF CALIFORNIA

The State of California or its officers or agents shall not be responsible for the accuracy or completeness of electronic copies of this plan sheet.

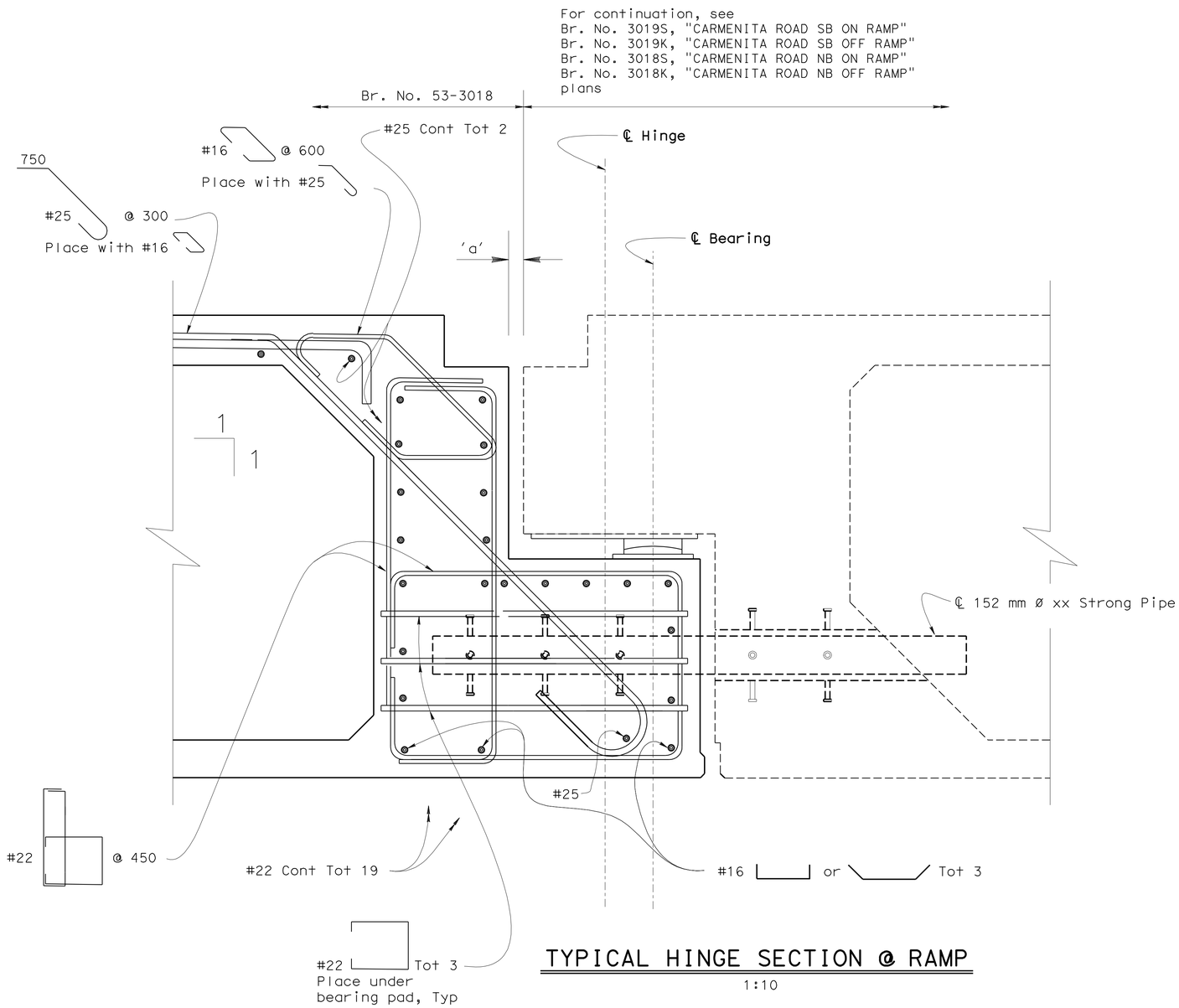

TYPICAL HINGE SECTION @ RAMP

1:10

NOTES:

For details and spacing of NPS6 xx strong pipe, Transition Ramp Hinge Bearing Pads and other details, see
Br. No. 3019S, "CARMENITA ROAD SB ON RAMP"
Br. No. 3019K, "CARMENITA ROAD SB OFF RAMP"
Br. No. 3018S, "CARMENITA ROAD NB ON RAMP"
Br. No. 3018K, "CARMENITA ROAD NB OFF RAMP"
plans

Caltrans Metric

	BY	CHECKED
DESIGN	Eric Burgeson	D. Menzmer
DETAILS	Pauline Tong	D. Menzmer
QUANTITIES	M. Okimura	D. Menzmer

STATE OF CALIFORNIA
DEPARTMENT OF TRANSPORTATION

DIVISION OF ENGINEERING SERVICES
STRUCTURE DESIGN
DESIGN BRANCH 11

BRIDGE NO. 53-3018
KILOMETER POST 3.88 (2.42)

CARMENITA ROAD OVERCROSSING/OVERHEAD
RAMP HINGE DETAILS NO. 2

ALL DIMENSIONS ARE IN MILLIMETERS UNLESS OTHERWISE SHOWN

ORIGINAL SCALE IN MILLIMETERS FOR REDUCED PLANS 0 10 20 30 40 50 60 70 80 90 100

CU 07225
EA 2159C1

DISREGARD PRINTS BEARING EARLIER REVISION DATES → 3-24-07 3-26-07 3-22-07 2-05-09 6-18-09 5/18/10

REVISION DATES

SHEET 84 OF 110

FILE => 53-3018__nd-hngdt04.dgn

STRUCTURES DESIGN DETAIL SHEET (METRIC) (REV.03-17-04)

USERNAME => trlehard DATE PLOTTED => 22-JUN-2010 TIME PLOTTED => 09:54

DIST.	COUNTY	ROUTE	KILOMETER POST TOTAL PROJECT	SHEET NO.	TOTAL SHEETS
07	LA	5	2.9/4.9	912	1082

Caltrans Metric

Daniel L. Texler 5/24/10
REGISTERED ENGINEER - CIVIL

6-21-10
PLANS APPROVAL DATE

REGISTERED PROFESSIONAL ENGINEER Daniel L Texler No. 49792 Exp. 9-30-10 CIVIL STATE OF CALIFORNIA

The State of California or its officers or agents shall not be responsible for the accuracy or completeness of electronic copies of this plan sheet.

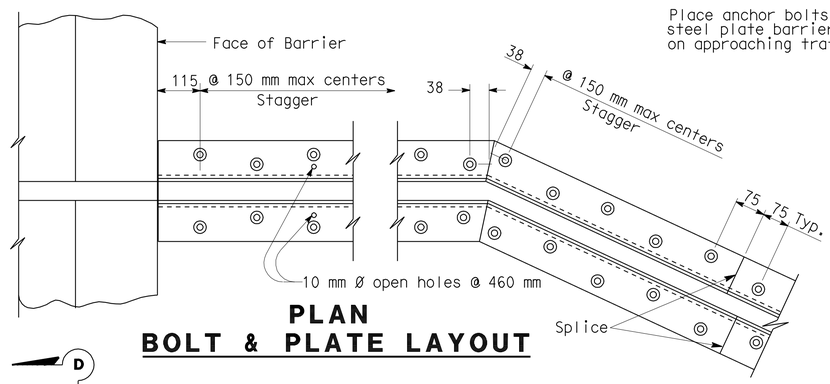

PLAN
BOLT & PLATE LAYOUT

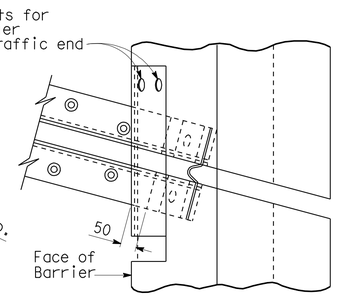

SKEW ≤ 20°

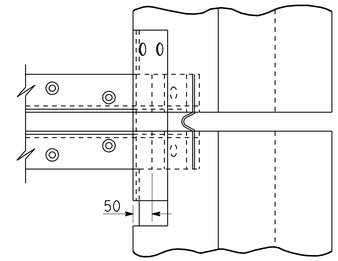

SKEW > 20°

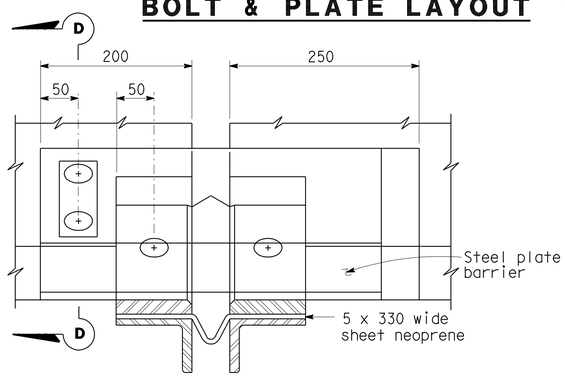

VIEW B-B

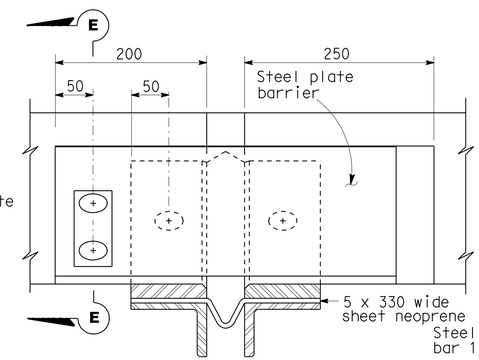

VIEW C-C

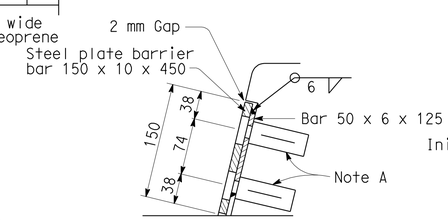

SECTION E-E

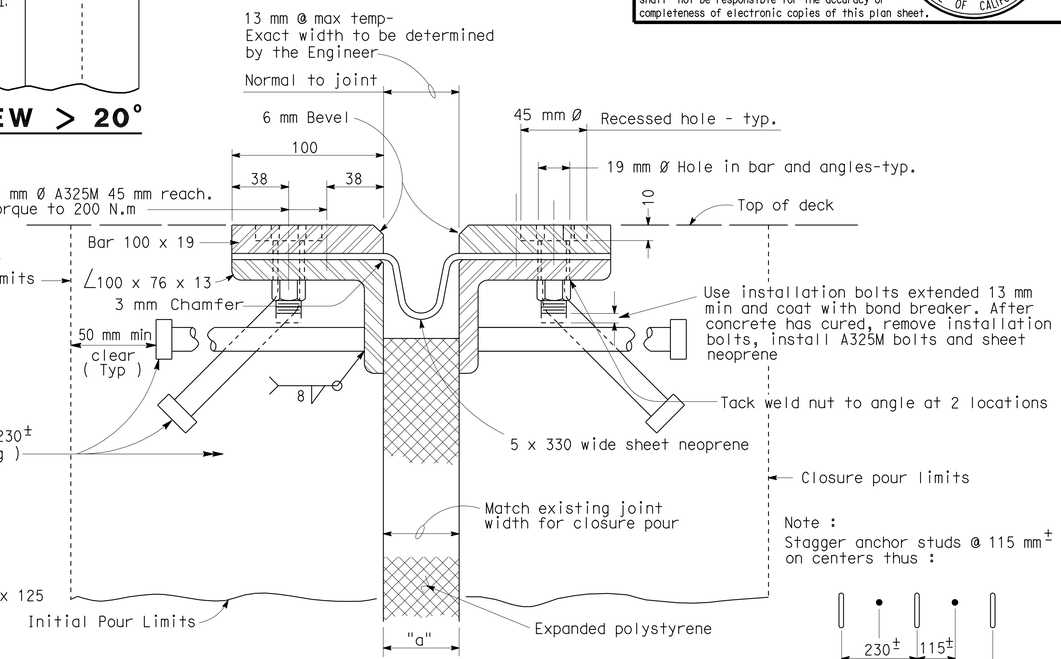

SECTION A-A

Note :
Stagger anchor studs @ 115 mm± on centers thus :

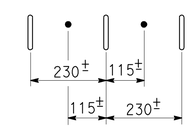

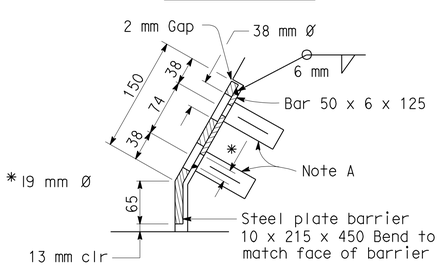

SECTION D-D

Joint Information			"a" Dimensions		
Location	Movement Rating (MR)	Skew	Winter	Spring & Fall	Summer
Abut 1	80	38.7°	40	30	20
Abut 10	80	24.5°	15	15	15

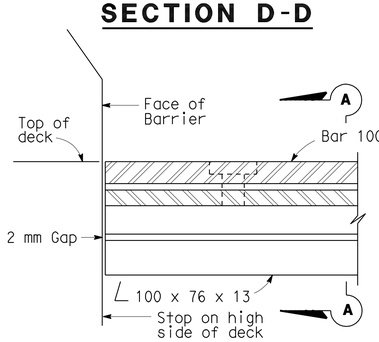

HIGH SIDE BARRIER DETAIL

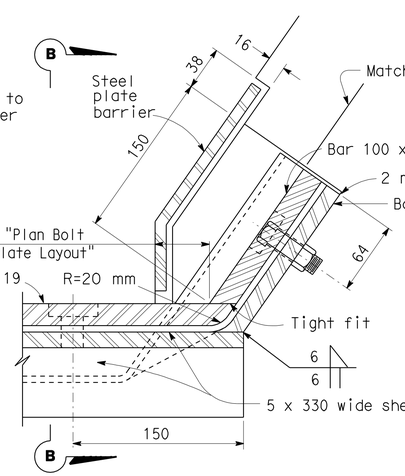

LOW SIDE BARRIER DETAIL
(See Note B)

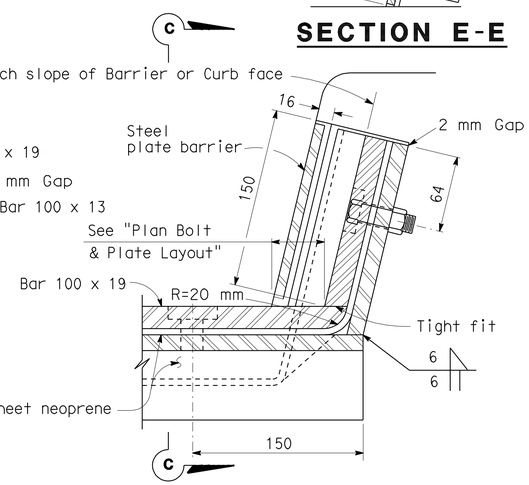

SIDEWALK DETAIL
(See Note B)

NOTES:

Full penetration butt welds may be substituted for fillet welds on all anchor studs.

Alternate types of anchor studs may be permitted subject to the approval by the Engineer.

Joint seal assembly to be used in conjunction with closure pour. (See other sheets for limits). Closure pour shall not be placed until final deck surface is within the tolerance specified.

Use joint at crown of roadway, at any change in transverse slope in deck and at changes in horizontal direction. Place other joints at or near lanes. All metal parts to be painted or galvanized after fabrication.

Sheet neoprene shall be fabricated in one continuous piece or joints shall be vulcanized. Neoprene shall be fabricated to bend around corners. 25 mm holes in neoprene sheets shall be drilled or punched so that the neoprene is not distorted at the time of installation.

NOTE A

Insert assembly or expansion anchorage for 16 x 45 A325M bolt.

NOTE B

Use the Sidewalk Detail at all sidewalk joints. Use the Barrier Detail at both sides if the roadway is crowned or if the difference in elevation between the ends of the seal is 150 mm or less.

NO SCALE

ALL DIMENSIONS ARE IN MILLIMETERS UNLESS OTHERWISE SHOWN

STANDARD DRAWING					
RELEASE DATE 4/1/97	DESIGN	BY H. HERR	CHECKED R. LACALLE	RELEASED BY	
FILE NO. xs8-010	DETAILS	BY R. YEE	CHECKED R. LACALLE		
	SUBMITTED	BY C.W. PURKISS	DRAWING DATE 9/93	OFFICE CHIEF	

STATE OF CALIFORNIA
DEPARTMENT OF TRANSPORTATION

DIVISION OF ENGINEERING SERVICES

BRIDGE NO. 53-3018
KILOMETER POST 3.88 (2.42)

CARMENITA RD OVERCROSSING/OVERHEAD
JOINT SEAL ASSEMBLY (MAXIMUM MOVEMENT RATING = 100 mm)

DS OSD 2147A (METRIC) (REV. 2/25/97)

ORIGINAL SCALE IN MILLIMETERS FOR REDUCED PLANS 0 10 20 30 40 50 60 70 80 90 100

CU 07225
EA 2159C

DISREGARD PRINTS BEARING EARLIER REVISION DATES 3/5/09 5/18/10

REVISION DATES (PRELIMINARY STAGE ONLY)

SHEET 85 OF 110

53-3018__qq-jsa.dgn USERNAME => trlenard

DATE PLOTTED => 22-JUN-2010 TIME PLOTTED => 09:54

DIST.	COUNTY	ROUTE	KILOMETER POST TOTAL PROJECT	SHEET NO.	TOTAL SHEETS
07	LA	5	2.9/4.9	913	1082

Caltrans Metric

Daniel L. Texler 5/24/10
REGISTERED ENGINEER - CIVIL

6-21-10
PLANS APPROVAL DATE

REGISTERED PROFESSIONAL ENGINEER Daniel L Texler No. 49792 Exp. 9-30-10 CIVIL STATE OF CALIFORNIA

The State of California or its officers or agents shall not be responsible for the accuracy or completeness of electronic copies of this plan sheet.

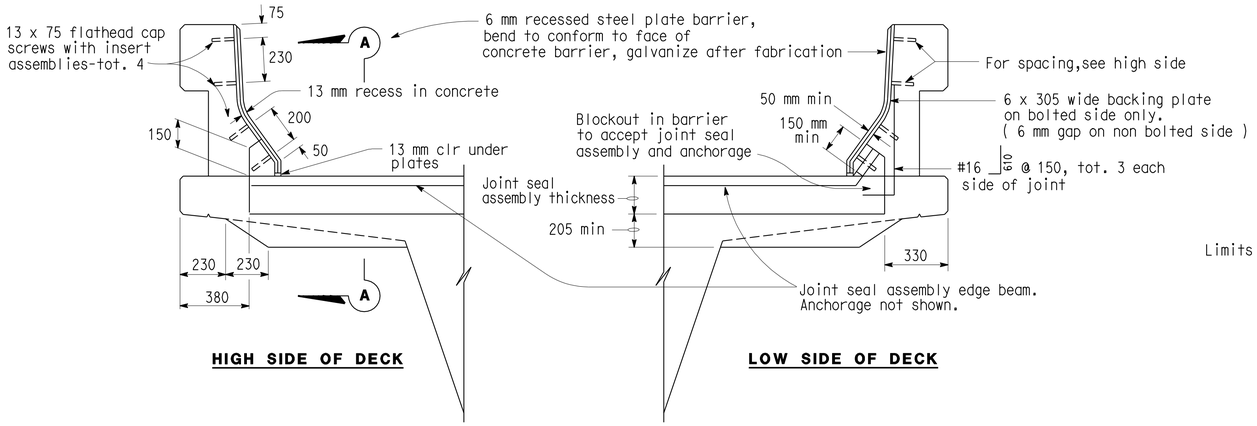

SEAL INSTALLATION

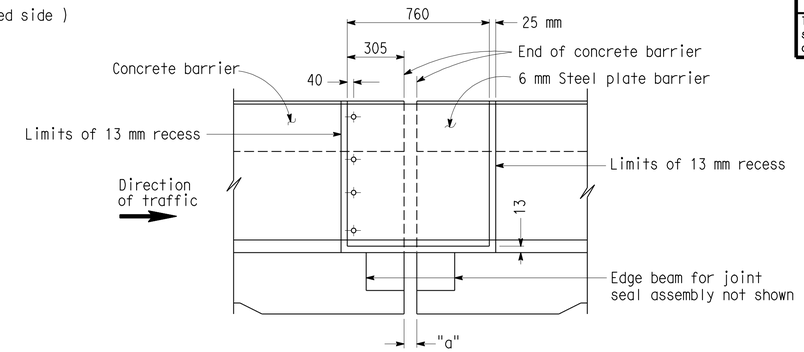

ELEVATION A-A

JOINT INFORMATION		"a" DIMENSIONS			
LOCATION	MOVEMENT RATING (M.R.)	SKEW	WINTER	SPRING & FALL	SUMMER
Hinge, Span 4	160	32.6°	50	40	25

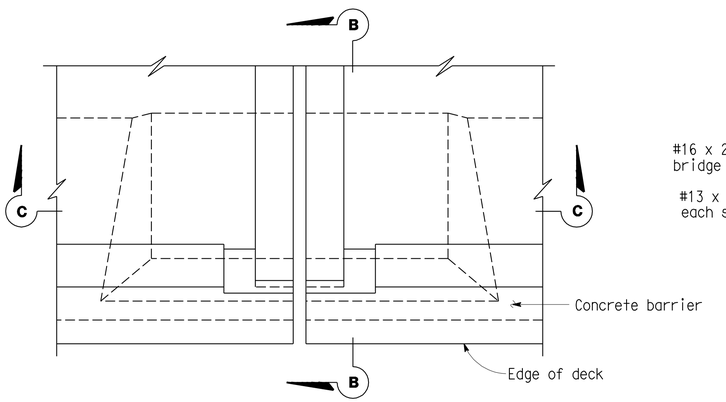

PLAN - DECK JOINT

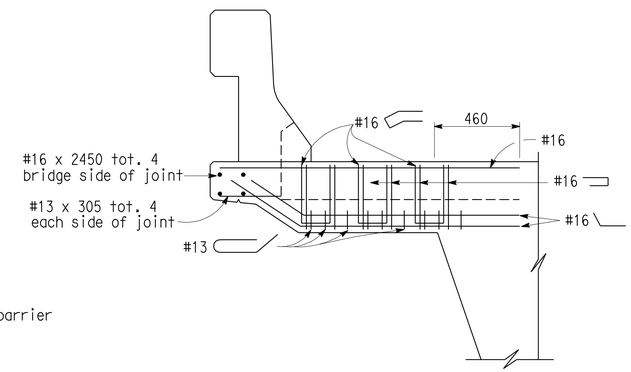

SECTION B-B

Reinf. shown is in addition to slab reinf.

Note: For details not shown, see Bridge Plans

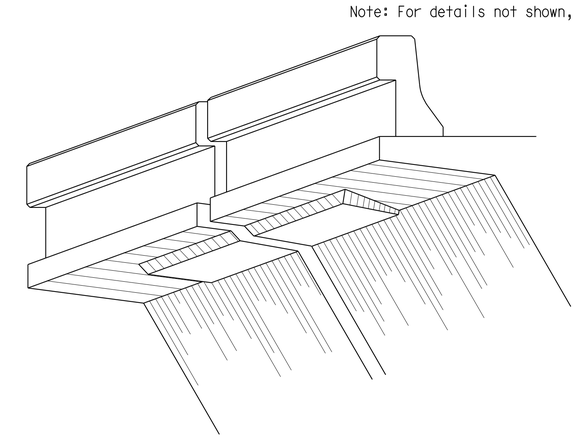

DECK OVERHANG AT HINGE

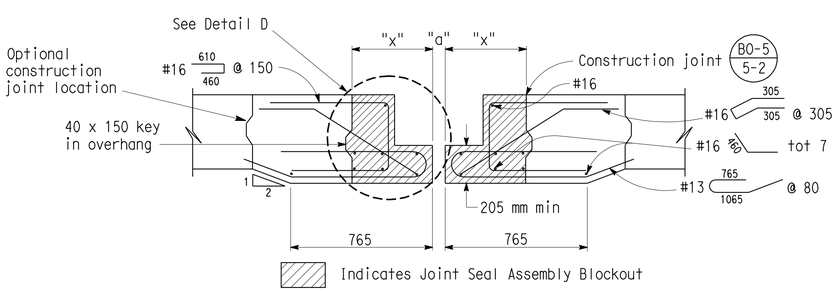

SECTION C-C

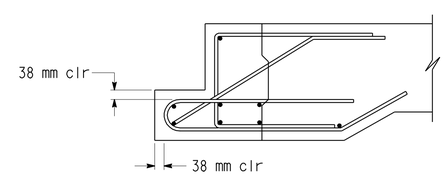

DETAIL D

NO SCALE

ALL DIMENSIONS ARE IN MILLIMETERS UNLESS OTHERWISE SHOWN

CARMENITA ROAD OVERCROSSING/OVERHEAD

JOINT SEAL - HINGE DETAILS

MOVEMENT RATING GREATER THAN 100 mm

STANDARD DRAWING					
RELEASE DATE 5/26/93	DESIGN	BY DICK BARLOW	CHECKED R. LACALLE	RELEASED BY	
FILE NO. xs8-020	DETAILS	BY R. YEE	CHECKED R. LACALLE		
	SUBMITTED	BY	DRAWING DATE 4/93	OFFICE CHIEF	

STATE OF CALIFORNIA
DEPARTMENT OF TRANSPORTATION

DIVISION OF ENGINEERING SERVICES
STRUCTURE DESIGN
DESIGN BRANCH 11

BRIDGE NO. 53-3018
KILOMETER POST 3.88 (2.42)

DS OSD 2147A (METRIC) (REV. 2/25/97)

ORIGINAL SCALE IN MILLIMETERS FOR REDUCED PLANS 0 10 20 30 40 50 60 70 80 90 100

CU 07225
EA 2159C1

DISREGARD PRINTS BEARING EARLIER REVISION DATES 10-14-09 5/18/10

REVISION DATES (PRELIMINARY STAGE ONLY)

SHEET 86 OF 110

53-3018__qr-jsd.dgn USERNAME => trlenard

USERNAME => trlenard

DATE PLOTTED => 22-JUN-2010 TIME PLOTTED => 09:54

DIST	COUNTY	ROUTE	KILOMETER POST TOTAL PROJECT	SHEET No	TOTAL SHEETS
07	LA	5	2.9/4.9	914	1082

Daniel L. Texler 5/24/10
REGISTERED CIVIL ENGINEER

6-21-10
PLANS APPROVAL DATE

REGISTERED PROFESSIONAL ENGINEER Daniel L Texler No. 49792 Exp. 9-30-10 CIVIL STATE OF CALIFORNIA

The State of California or its officers or agents shall not be responsible for the accuracy or completeness of electronic copies of this plan sheet.

DRAINAGE SYSTEM NO. 1	
DI LOCATION	
Sta "B1" Line	
13+20.375	Lt
13+25.351	Lt
13+30.325	Lt
13+35.301	Lt
13+40.329	Lt
Pipe size	
NPS8	

DRAINAGE SYSTEM NO. 2	
DI LOCATION	
Sta "B1" Line	
13+50.212	Lt
13+55.183	Lt
13+60.149	Lt
13+65.117	Lt
13+70.081	Lt
13+75.046	Lt
13+80.007	Lt
13+84.969	Lt
13+89.928	Lt
Pipe size	
NPS8	

DRAINAGE SYSTEM NO. 3	
DI LOCATION	
Sta "B1" Line	
13+94.888	Lt
13+99.846	Lt
14+04.797	Lt
14+09.752	Lt
14+14.703	Lt
Pipe size	
NPS8	

DRAINAGE SYSTEM NO. 4	
DI LOCATION	
Sta "B1" Line	
12+95.066	Rt
13+00.213	Rt
13+05.322	Rt
13+10.474	Rt
13+15.603	Rt
13+20.476	Rt
Pipe size	
NPS8	

DRAINAGE SYSTEM NO. 5	
DI LOCATION	
Sta "B1" Line	
13+30.449	Rt
13+35.590	Rt
13+40.427	Rt
13+45.578	Rt
13+50.402	Rt
13+55.555	Rt
13+60.377	Rt
13+65.532	Rt
13+70.302	Rt
Pipe size	
NPS8	

DRAINAGE SYSTEM NO. 6	
DI LOCATION	
Sta "B1" Line	
13+80.305	Rt
13+85.455	Rt
13+90.256	Rt
13+95.402	Rt
14+00.203	Rt
14+05.346	Rt
14+10.144	Rt
Pipe size	
NPS8	

LEGEND:

□ Deck Drain Inlet, Type D1, Typ

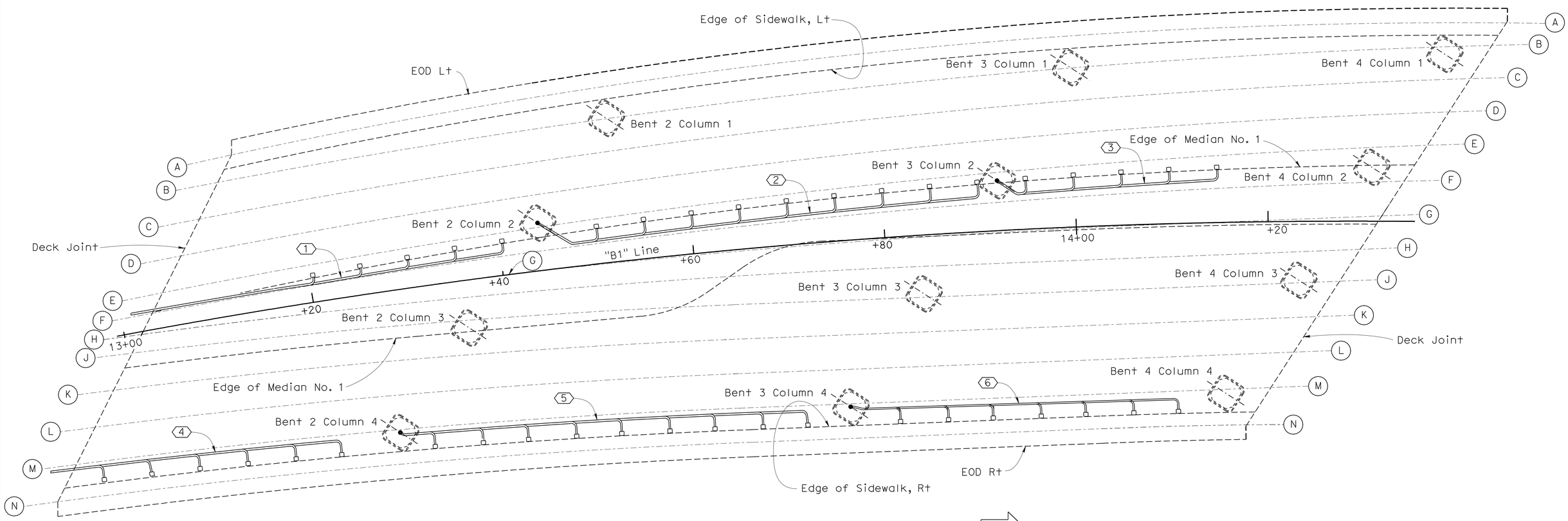

B1 LINE FRAME 1 DRAINAGE LAYOUT

1:200

B7-6 B7-8

DESIGN	BY B. KEMP	CHECKED D. Menzmer	
DETAILS	BY T. BITTERMANN	CHECKED D. Menzmer	
QUANTITIES	BY D. Tavati	CHECKED K. Doll	

STATE OF CALIFORNIA
DEPARTMENT OF TRANSPORTATION

DIVISION OF ENGINEERING SERVICES
STRUCTURE DESIGN
DESIGN BRANCH 11

BRIDGE NO. 53-3018
KILOMETER POST 3.88 (2.42)

CARMENITA ROAD OVERCROSSING/OVERHEAD
DRAINAGE LAYOUT NO. 1

Caltrans Metric

ALL DIMENSIONS ARE IN MILLIMETERS UNLESS OTHERWISE SHOWN

ORIGINAL SCALE IN MILLIMETERS FOR REDUCED PLANS 0 10 20 30 40 50 60 70 80 90 100

CU 07225
EA 2159C1

DISREGARD PRINTS BEARING EARLIER REVISION DATES

REVISION DATES: 3-9-07 10-12-09 4-20-10 5/18/10 6-29-07 3-17-08 4-16-08 5-28-08 1-28-09

SHEET 87 OF 110

FILE => 53-3018__rr-drnlyt01.dgn

STRUCTURES DESIGN DETAIL SHEET (METRIC) (REV.03-17-04)

USERNAME => trrlenard DATE PLOTTED => 22-JUN-2010 TIME PLOTTED => 09:54

DIST	COUNTY	ROUTE	KILOMETER POST TOTAL PROJECT	SHEET No	TOTAL SHEETS
07	LA	5	2.9/4.9	915	1082

Daniel L. Texler 5/24/10
REGISTERED CIVIL ENGINEER

6-21-10
PLANS APPROVAL DATE

REGISTERED PROFESSIONAL ENGINEER Daniel L Texler No. 49792 Exp. 9-30-10 CIVIL STATE OF CALIFORNIA

The State of California or its officers or agents shall not be responsible for the accuracy or completeness of electronic copies of this plan sheet.

DRAINAGE SYSTEM NO. 7	
DI LOCATION	
Sta "B1" Line	
14+39.009	Lt
14+43.959	Lt
Pipe size	
NPS8	

DRAINAGE SYSTEM NO. 8	
DI LOCATION	
Sta "B1" Line	
14+94.391	Lt
14+97.391	Lt
15+00.391	Lt
15+03.391	Lt
15+06.391	Lt
Pipe size	
NPS8	

DRAINAGE SYSTEM NO. 9	
DI LOCATION	
Sta "B1" Line	
14+82.543	Rt
14+87.688	Rt
14+92.834	Rt
14+97.981	Rt
15+03.126	Rt
15+08.273	Rt
15+13.422	Rt
15+20.092	Rt
15+25.238	Rt
15+30.285	Rt
15+35.285	Rt
15+40.285	Rt
15+45.284	Rt
15+50.284	Rt
Pipe size	
NPS10	

LEGEND:

▫ Deck Drain Inlet, Type D1, Typ

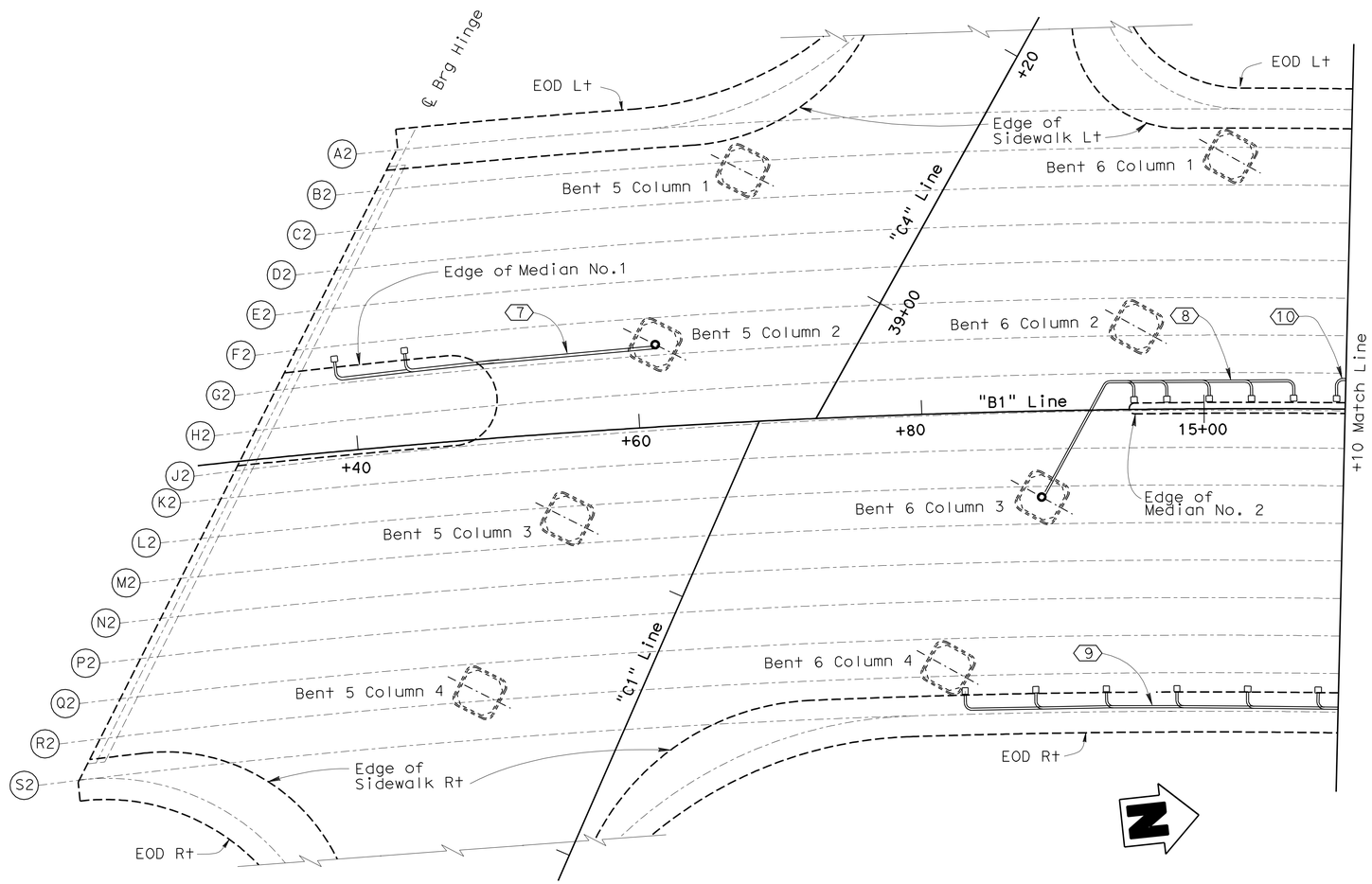

B1 LINE FRAME 2 DRAINAGE LAYOUT

B7-6 B7-8

1:200

DESIGN	BY D. Texler	CHECKED D. Menzmer	
DETAILS	BY T. Bittermann	CHECKED D. Menzmer	
QUANTITIES	BY M. Okimura	CHECKED D. Menzmer	

STATE OF CALIFORNIA
DEPARTMENT OF TRANSPORTATION

DIVISION OF ENGINEERING SERVICES
STRUCTURE DESIGN
DESIGN BRANCH 11

BRIDGE NO. 53-3018
KILOMETER POST 3.88 (2.42)

CARMENITA ROAD OVERCROSSING/OVERHEAD
DRAINAGE LAYOUT NO. 2

Caltrans Metric

ALL DIMENSIONS ARE IN METERS UNLESS OTHERWISE SHOWN

ORIGINAL SCALE IN MILLIMETERS FOR REDUCED PLANS 0 10 20 30 40 50 60 70 80 90 100

CU 07225
EA 2159C1

DISREGARD PRINTS BEARING EARLIER REVISION DATES

REVISION DATES (PRELIMINARY STAGE ONLY): 5-31-07 4-15-08 5-28-08 1-27-09 10-12-09 4-28-10 5-18-10

SHEET 88 OF 110

FILE => 53-3018__rr-drnlyt02.dgn

USERNAME => trlenard DATE PLOTTED =>

DIST	COUNTY	ROUTE	KILOMETER POST TOTAL PROJECT	SHEET No	TOTAL SHEETS
07	LA	5	2.9/4.9	916	1082

Daniel L. Texler 5/24/10
REGISTERED CIVIL ENGINEER

6-21-10
PLANS APPROVAL DATE

REGISTERED PROFESSIONAL ENGINEER Daniel L Texler No. 49792 Exp. 9-30-10 CIVIL STATE OF CALIFORNIA

The State of California or its officers or agents shall not be responsible for the accuracy or completeness of electronic copies of this plan sheet.

DRAINAGE SYSTEM NO. 10	
DI LOCATION	
Sta "B1" Line	
15+09.391	Lt
15+12.391	Lt
15+15.391	Lt
15+18.391	Lt
15+21.391	Lt
15+24.391	Lt
15+31.891	Lt
15+34.891	Lt
15+37.891	Lt
15+40.891	Lt
15+43.891	Lt
15+46.891	Lt
15+49.891	Lt
15+52.891	Lt
15+55.891	Lt
15+58.891	Lt
15+61.891	Lt
Pipe size	
NPS10	

DRAINAGE SYSTEM NO. 11	
DI LOCATION	
Sta "B1" Line	
16+09.000	Lt
16+14.000	Lt
16+19.000	Lt
Pipe size	
NPS8	

DRAINAGE SYSTEM NO. 12	
DI LOCATION	
Sta "B1" Line	
16+05.000	Rt
16+10.000	Rt
Pipe size	
NPS8	

LEGEND:

▫ Deck Drain Inlet, Type D1, Typ

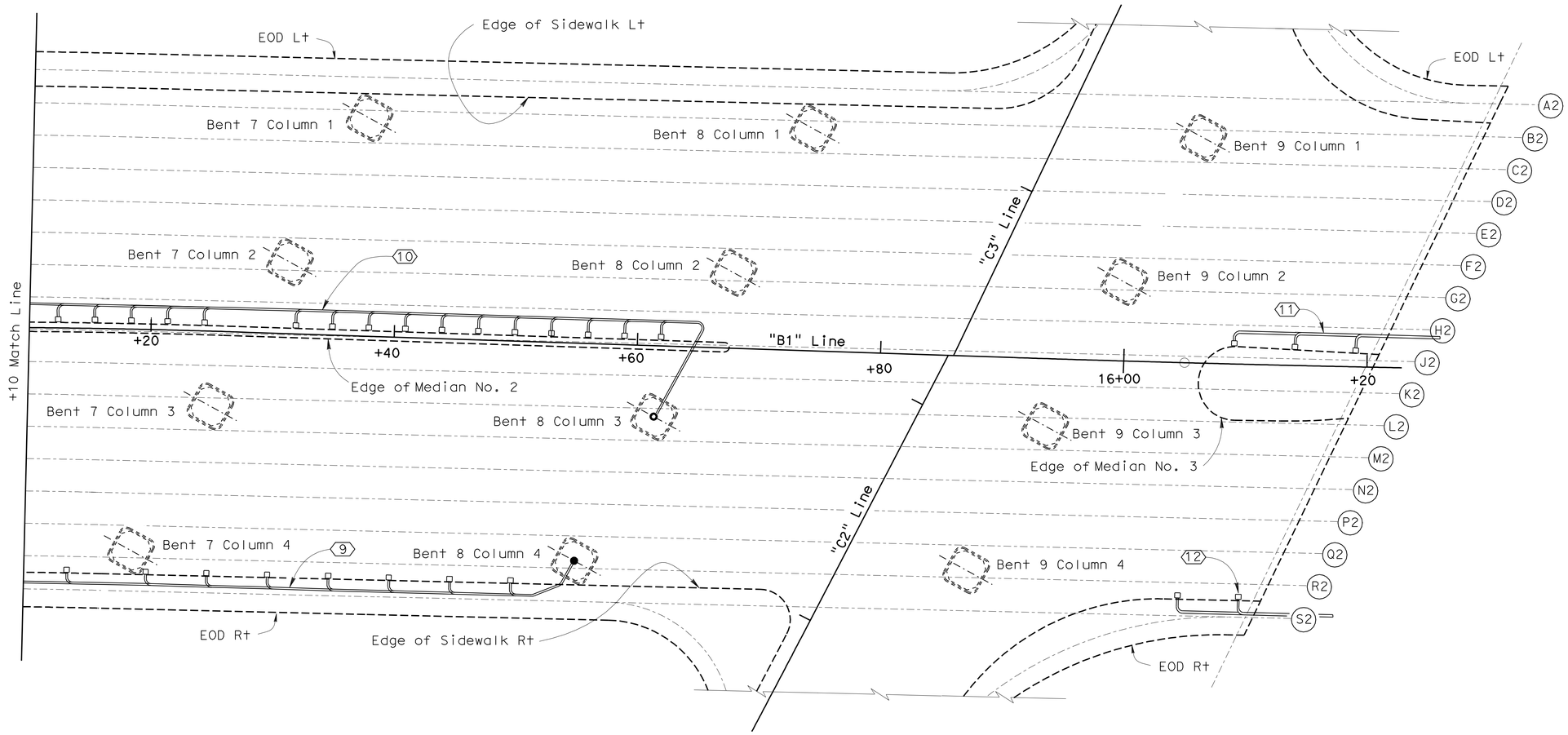

B1 LINE FRAME 2 DRAINAGE LAYOUT

B7-6 B7-8

1:200

DESIGN	BY B. Kemp	CHECKED D. Menzmer	
DETAILS	BY T. Bittermann	CHECKED D. Menzmer	
QUANTITIES	BY M. Okimura	CHECKED D. Menzmer	

STATE OF CALIFORNIA
DEPARTMENT OF TRANSPORTATION

DIVISION OF ENGINEERING SERVICES
STRUCTURE DESIGN
DESIGN BRANCH 11

BRIDGE NO. 53-3018
KILOMETER POST 3.88 (2.42)

CARMENITA ROAD OVERCROSSING/OVERHEAD
DRAINAGE LAYOUT NO. 3

ALL DIMENSIONS ARE IN METERS UNLESS OTHERWISE SHOWN

ORIGINAL SCALE IN MILLIMETERS FOR REDUCED PLANS 0 10 20 30 40 50 60 70 80 90 100

CU 07225
EA 2159C1

DISREGARD PRINTS BEARING EARLIER REVISION DATES

REVISION DATES (PRELIMINARY STAGE ONLY): 5-31-07 3-17-08 5-23-08 1-30-09 10-12-09 4-28-10 5/18/10

SHEET 89 OF 110

FILE => 53-3018__rr-drnlyt03.dgn

USERNAME => rfrenord DATE PLOTTED =>

DIST.	COUNTY	ROUTE	KILOMETER POST TOTAL PROJECT	SHEET NO.	TOTAL SHEETS
07	LA	5	2.9/4.9	917	1082

Caltrans Metric

Daniel L. Texler 1-26-10
REGISTERED ENGINEER - CIVIL

6-21-10
PLANS APPROVAL DATE

REGISTERED PROFESSIONAL ENGINEER Daniel L Texler No. 49792 Exp. 9-30-10 CIVIL STATE OF CALIFORNIA

The State of California or its officers or agents shall not be responsible for the accuracy or completeness of electronic copies of this plan sheet.

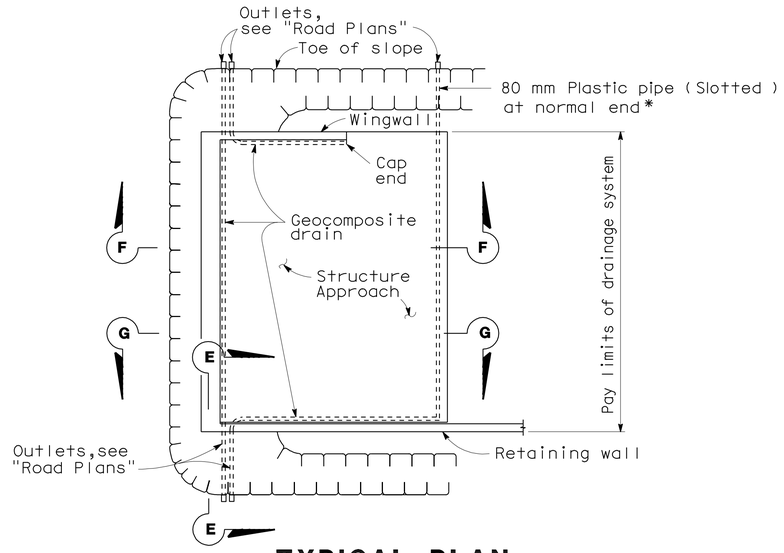

TYPICAL PLAN

*For pipe layout at staggered end, see "Detail B".

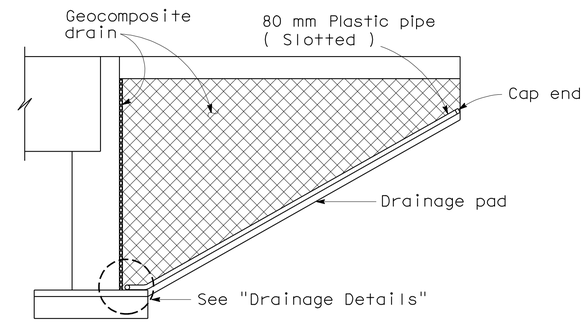

CANTILEVER WINGWALL
SECTION F-F

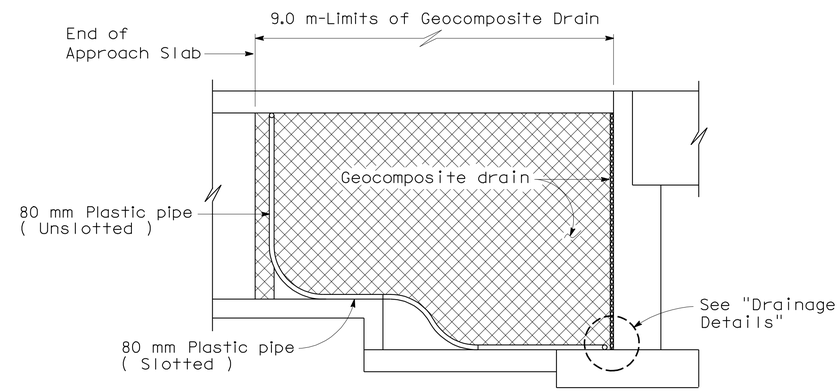

RETAINING WALL WINGWALL
SECTION G-G

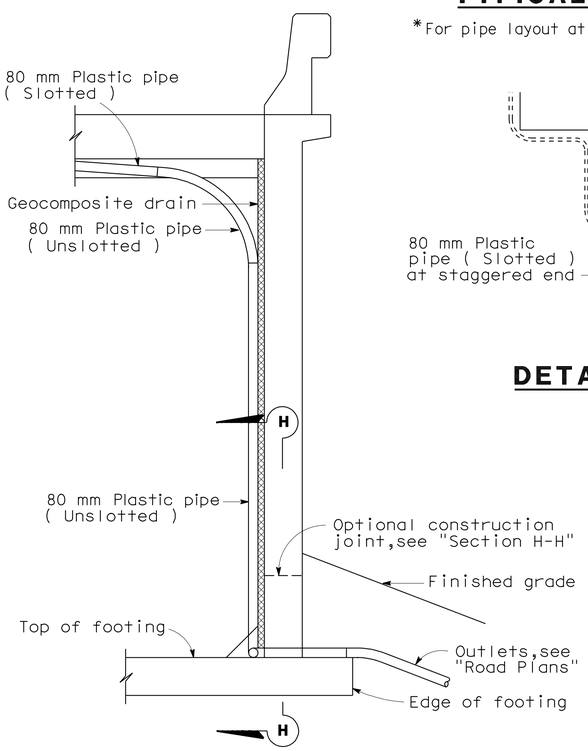

SECTION E-E

NOTE: Bends and junctions in 80 mm plastic pipe are 750 mm radius min.

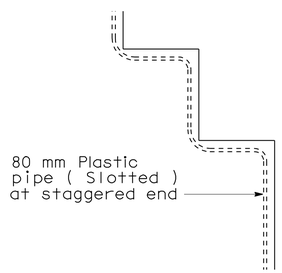

DETAIL B

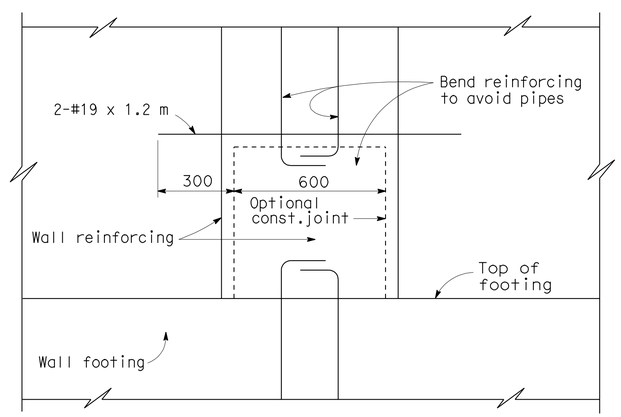

SECTION H-H

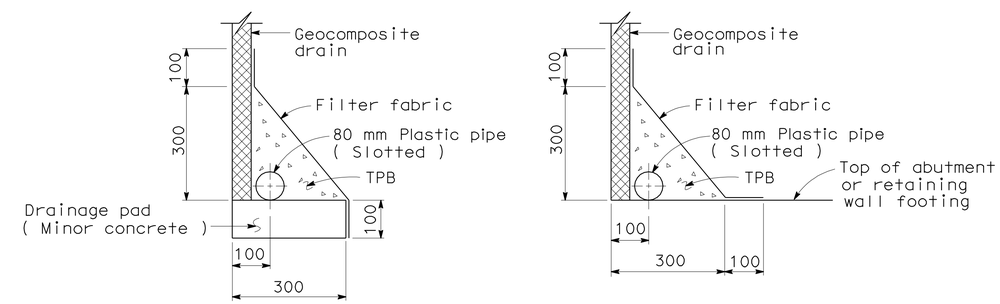

WITHOUT FOOTING **WITH FOOTING**

DRAINAGE DETAILS

NO SCALE

ALL DIMENSIONS ARE IN MILLIMETERS UNLESS OTHERWISE SHOWN

STANDARD DRAWING					
RELEASE DATE 4/23/98	DESIGN	BY M. TRAFFALIS	CHECKED E. THORKILDSEN	RELEASED BY	
FILE NO. xs3-110	DETAILS	BY R. YEE	CHECKED E. THORKILDSEN	OFFICE CHIEF	
	SUBMITTED	BY M. HA	DRAWING DATE 4/98		

DS OSD 2147A (METRIC) (REV. 2/25/97)

STATE OF CALIFORNIA DEPARTMENT OF TRANSPORTATION

DIVISION OF ENGINEERING SERVICES

CU 07226
EA 2159C1

BRIDGE NO. 53-3018
KILOMETER POST 3.88 (2.42)

CARMENITA ROAD OVERCROSSING/OVERHEAD
STRUCTURE APPROACH DRAINAGE DETAILS

ORIGINAL SCALE IN MILLIMETERS FOR REDUCED PLANS 0 10 20 30 40 50 60 70 80 90 100

DISREGARD PRINTS BEARING EARLIER REVISION DATES 2-16-07

REVISION DATES (PRELIMINARY STAGE ONLY)

SHEET 90 OF 110

USERNAME => trlenard

53-3018__sa-sadd.d

DATE PLOTTED => 22-JUN-2010 TIME PLOTTED => 09:55

DIST	COUNTY	ROUTE	KILOMETER POST TOTAL PROJECT	SHEET No	TOTAL SHEETS
07	LA	5	2.9/4.9	918	1082

Daniel L. Texler 1-26-10
REGISTERED CIVIL ENGINEER DATE

6-21-10
PLANS APPROVAL DATE

REGISTERED PROFESSIONAL ENGINEER Daniel L Texler No. 49792 Exp. 9-30-10 CIVIL STATE OF CALIFORNIA

The State of California or its officers or agents shall not be responsible for the accuracy or completeness of electronic copies of this plan sheet.

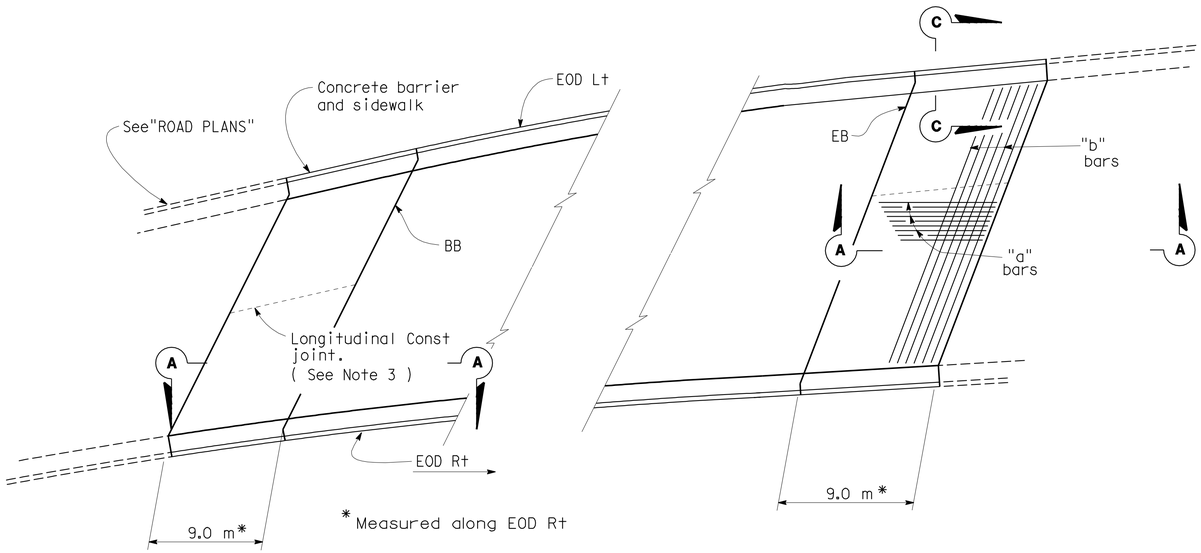

APPROACH SLABS

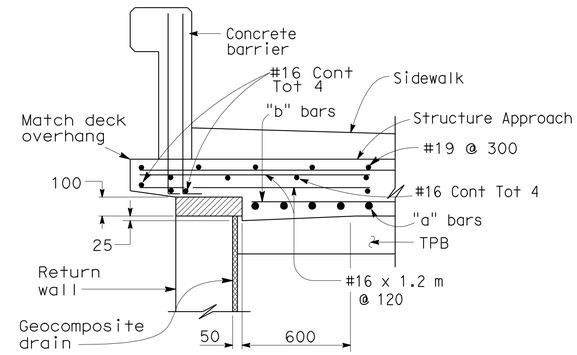

SECTION C-C

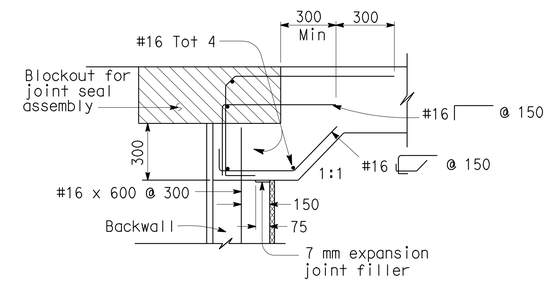

MR > 50 mm

SEAT TYPE ABUTMENT TIE DETAILS

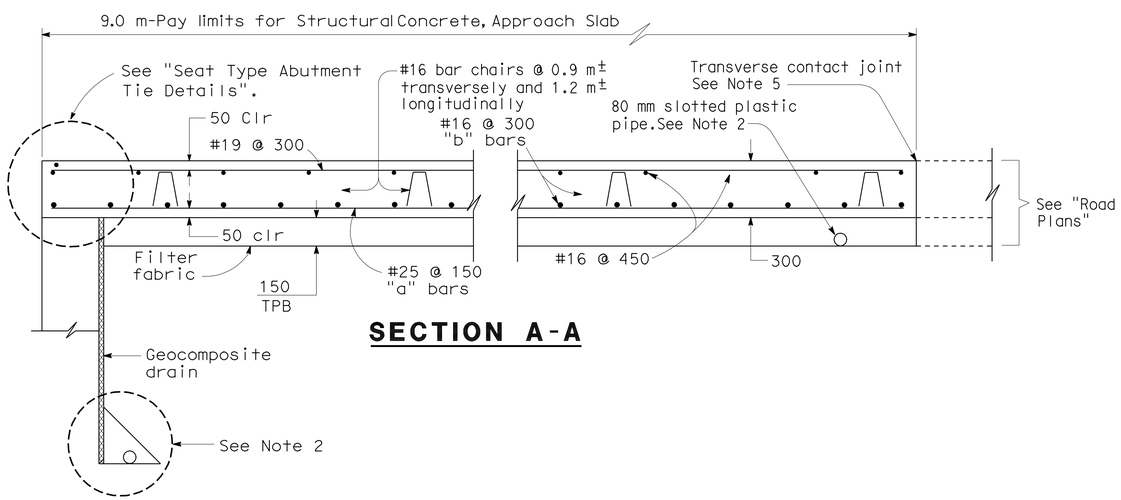

SECTION A-A

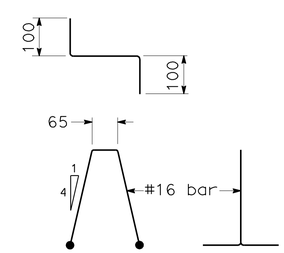

BAR CHAIR DETAIL

NOTES:

1. For details not shown, see Structure Plans. For MR ≤ 50 mm, adjust bar reinforcement to clear a sawcut for sealed joint, when required.
2. For drainage details, see "Structure Approach Drainage Details" sheet.
3. Longitudinal construction joints, when permitted by the Engineer, shall be located on lane lines.
4. For transverse contact joint with new PCC paving, refer to Standard Plan P10.
5. At the contractor's option, approach slab transverse reinforcement may be placed parallel to paving notch. Spacing of transverse reinforcement is measured along ℄ roadway.

Remove all polystyrene.

NO SCALE
ALL DIMENSIONS ARE IN MILLIMETERS UNLESS OTHERWISE SHOWN

Caltrans Metric

	BY	CHECKED
DESIGN	Daniel L. Texler	D. Menzmer
DETAILS	T. Bittermann	D. Menzmer
QUANTITIES	M. Okimura	D. Menzmer

STATE OF CALIFORNIA
DEPARTMENT OF TRANSPORTATION

DIVISION OF ENGINEERING SERVICES
STRUCTURE DESIGN
DESIGN BRANCH 11

BRIDGE NO. 53-3018
KILOMETER POST 3.88 (2.42)

CARMENITA RD OVERCROSSING/OVERHEAD
STRUCTURE APPROACH TYPE N(9S)

ALL DIMENSIONS ARE IN MILLIMETERS UNLESS OTHERWISE SHOWN

ORIGINAL SCALE IN MILLIMETERS FOR REDUCED PLANS 0 10 20 30 40 50 60 70 80 90 100

CU 07225
EA 2159C1

DISREGARD PRINTS BEARING EARLIER REVISION DATES 3/9/09

REVISION DATES

SHEET 91 OF 110

STRUCTURES DESIGN DETAIL SHEET (METRIC) (REV.03-17-04)

FILE => 53-3018__ss-san9s.dgn USERNAME => trlenard

USERNAME => trlenard DATE PLOTTED=>20-JUN-2012 TIME PLOTTED=>08:55

DIST	COUNTY	ROUTE	KILOMETER POST TOTAL PROJECT	SHEET No	TOTAL SHEETS
07	LA	5	2.9/4.9	919	1082

Daniel L. Texler 1-26-10
REGISTERED CIVIL ENGINEER DATE

6-21-10
PLANS APPROVAL DATE

REGISTERED PROFESSIONAL ENGINEER Daniel L. Texler No. 49792 Exp. 9-30-10 CIVIL STATE OF CALIFORNIA

The State of California or its officers or agents shall not be responsible for the accuracy or completeness of electronic copies of this plan sheet.

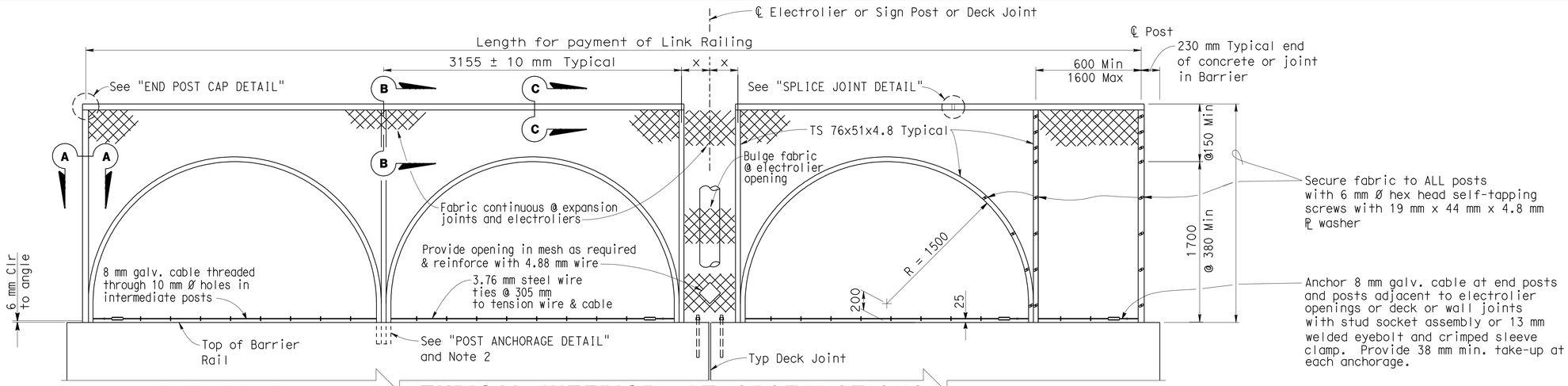

ELEVATION
1:25

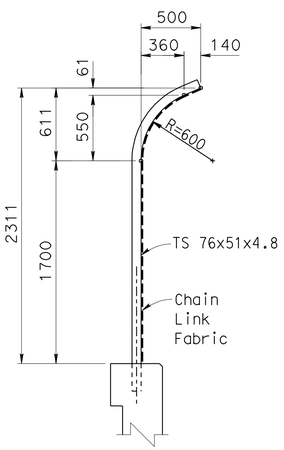

TYPICAL SECTION
1:25

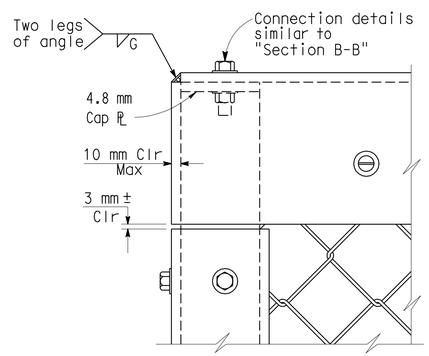

END POST CAP ELEVATION

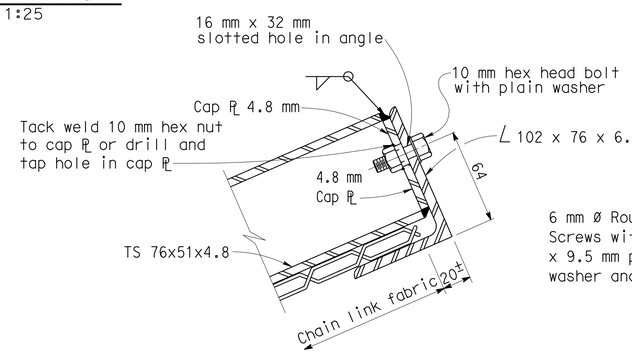

SECTION B-B

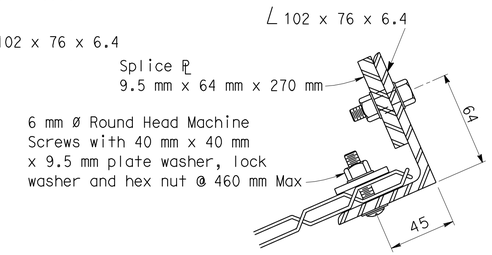

SECTION C-C

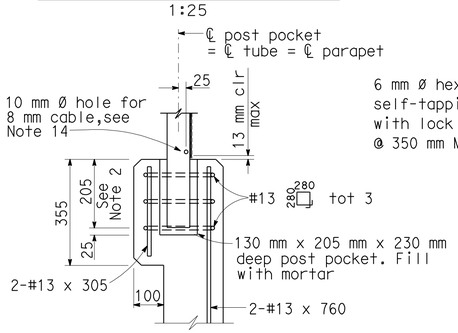

POST ANCHORAGE DETAIL
Scale 1:10

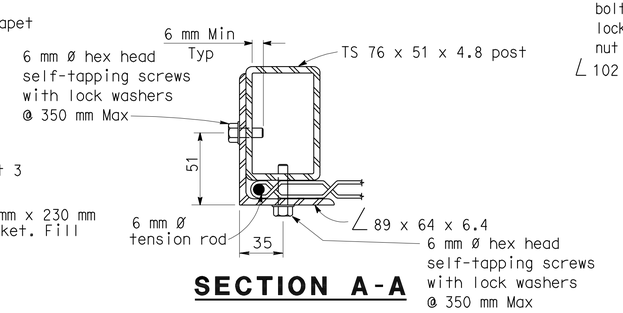

SECTION A-A

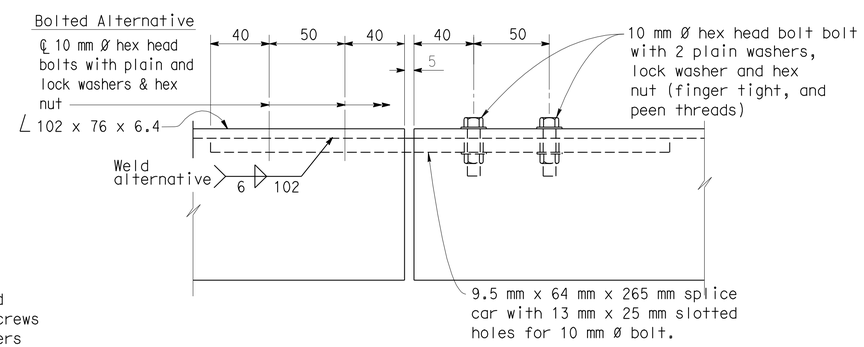

SPLICE JOINT DETAIL

NOTES:

X = 300 Min @ Electroliers & Sign Post
600 Max

X = 300 Min @ Deck Joints
400 Max

1. Horizontal angle shall be continuous over not less than two intermediate posts except that a shorter length is permitted at expansion joints, electroliers and other rail discontinuities.
2. One post may be embedded 152 mm minimum to accommodate grade changes, otherwise fabricate post lengths as required.
3. Curved posts may be rotated in plan within its post pocket to accomodate curved horizontal alignment.
4. Straight posts and straight portions of curved posts shall be installed normal to bridge profile grade.
5. Top horizontal angle shall be parallel to bridge profile grade and shall be shop bent to fit horizontal curves.
6. When railing is on slope, fabric shall be placed parallel to slope.
7. Alternative details may be submitted by Contractor for Engineer's approval.
8. Railing assembly except chain link fabric shall be galvanized after fabrication.
9. For details and reinforcement not shown, see "Concrete Barrier Type 26" sheet.
10. See Bridge Plans for limits of Chain Link Railing.
11. Provide thimbles at all cable loops.
12. Chain link fabric to be 2549 mm wide with 25 mm mesh and with knuckled selvage top and bottom.
13. When railing is placed on a horizontal alignment with a radius of 45.72 m or less, thread 8 mm cable through 10 mm Ø welded eye rods embedded 102 mm into the top of the concrete parapet and equally spaced to limit the middle ordinate distance between the 8 mm cable and the curve to 25 mm max.
14. Holes in posts for 8 mm cable and its anchorage may be field drilled and painted with zinc rich paint.

USERNAME => trienard DATE PLOTTED => 22-JUN-2010 TIME PLOTTED => 08:55

Caltrans Metric

	BY	CHECKED
DESIGN	Dan Texler	Doug Menzmer
DETAILS	Jaime Ramirez	Doug Menzmer
QUANTITIES	M. Okimura	D. Menzmer

STATE OF CALIFORNIA
DEPARTMENT OF TRANSPORTATION

DIVISION OF ENGINEERING SERVICES
STRUCTURE DESIGN
DESIGN BRANCH 11

BRIDGE NO. 53-3018
KILOMETER POST 3.88 (2.42)

CARMENITA ROAD OVERCROSSING/OVERHEAD
CHAIN LINK RAILING

ALL DIMENSIONS ARE IN MILLIMETERS UNLESS OTHERWISE SHOWN

ORIGINAL SCALE IN MILLIMETERS FOR REDUCED PLANS 0 10 20 30 40 50 60 70 80 90 100

CU 07225
EA 2159C1

DISREGARD PRINTS BEARING EARLIER REVISION DATES 2-16-09 2-23-09 3-2-09

REVISION DATES

SHEET 92 OF 110

FILE => 53-3018__tt-clbrdt.dgn

STRUCTURES DESIGN DETAIL SHEET (METRIC) (REV.03-17-04)

DIST.	COUNTY	ROUTE	KILOMETER POST TOTAL PROJECT	SHEET NO.	TOTAL SHEETS
07	LA	5	2.9/4.9	920	1082

Caltrans Metric

Daniel L. Texler 1-26-10
REGISTERED ENGINEER - CIVIL

6-21-10
PLANS APPROVAL DATE

REGISTERED PROFESSIONAL ENGINEER Daniel L Texler No. 49792 Exp. 9-30-10 CIVIL STATE OF CALIFORNIA

The State of California or its officers or agents shall not be responsible for the accuracy or completeness of electronic copies of this plan sheet.

EXPANSION BEARING TABLE

LOCATION	MAXIMUM VERTICAL LOAD (kN)	MINIMUM DEAD LOAD (kN)	DESIGN ROTATION (Radians)	CONCAVE PLATE						CONVEX PLATE		MASONRY PLATE			SOLE PLATE			ASSEMBLY HEIGHT	BEARING OFFSET
				WIDTH / LENGTH	FLAT PTFE AREA (m^2)	DIAMETER	SPHERICAL RADIUS	MINIMUM THICKNESS	MAXIMUM THICKNESS	DIAMETER	MAXIMUM THICKNESS	WIDTH	LENGTH	THICKNESS	WIDTH	LENGTH	THICKNESS		
				L_{cp}	A_{PTFE}	D_m	R_{act}	T_{min}	T_{max}	C_m	H_{act}	W_{mp}	L_{mp}	T_{mp}	W_{sp}	L_{sp}	T_{sp}	A_h	
SPAN 4 HINGE	1150	575	2.0	280	0.0523	254	553	19	40	290	39	360	360	26	385	915	45	128	100

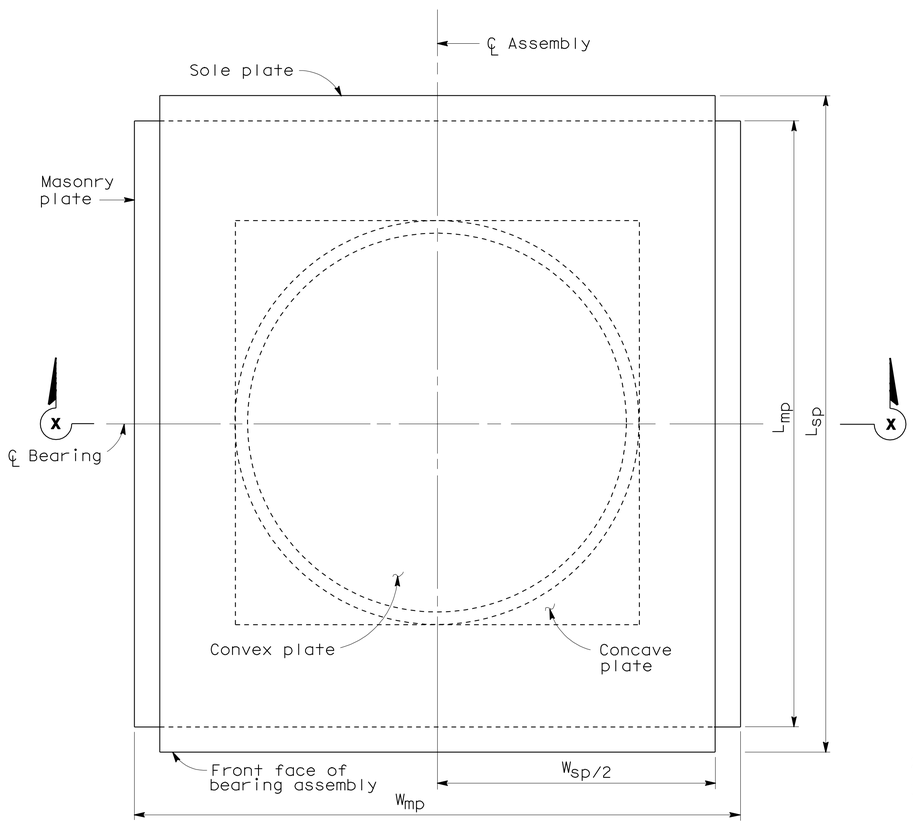

PLAN

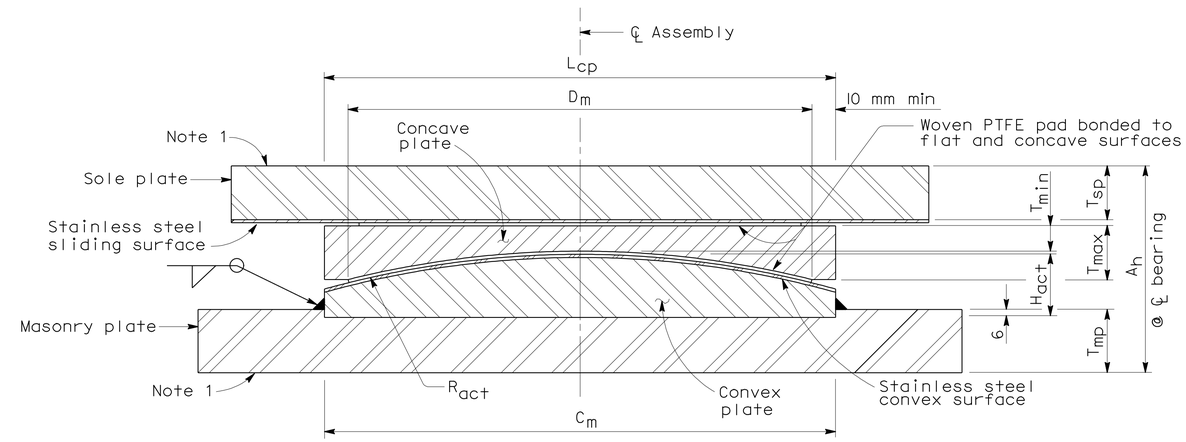

SECTION X-X

NOTES:

1. Anchorage method not shown.
2. All units in millimeters unless otherwise noted.
3. All dimensions shown are steel only unless otherwise noted.
4. H_{act} includes stainless steel.
5. A_h includes PTFE, substratum and stainless steel, (Varies).
6. R_{act} is to sliding surface.

NO SCALE

ALL DIMENSIONS ARE IN MILLIMETERS UNLESS OTHERWISE SHOWN

STANDARD DRAWING				
RELEASE DATE 4/9/97	DESIGN	BY ROBERTO LACALLE	CHECKED ROD SIMMONS	RELEASED BY
FILE NO. xs9-010	DETAILS	BY R. YEE	CHECKED ROD SIMMONS	OFFICE CHIEF
	SUBMITTED	BY ROBERTO LACALLE	DRAWING DATE 11/93	

DS OSD 2147A (METRIC) (REV. 2/25/97)

ORIGINAL SCALE IN MILLIMETERS FOR REDUCED PLANS 0 10 20 30 40 50 60 70 80 90 100

STATE OF CALIFORNIA DEPARTMENT OF TRANSPORTATION

DIVISION OF ENGINEERING SERVICES

CU 07255
EA 2159C1

BRIDGE NO. 53-3018
KILOMETER POST 3.88(2.42)

CARMENITA ROAD OVERCROSSING/OVERHEAD

PTFE/SPHERICAL EXPANSION BEARING DETAILS

DISREGARD PRINTS BEARING EARLIER REVISION DATES 4-23-07

REVISION DATES (PRELIMINARY STAGE ONLY)

SHEET 93 OF 110

USERNAME => trlenard

53-3018__xx-ptfe.d

DATE PLOTTED => 22-JUN-2010 TIME PLOTTED => 10:33

DIST	COUNTY	ROUTE	KILOMETER POST TOTAL PROJECT	SHEET No	TOTAL SHEETS
07	LA	5	2.9/4.9	921	1082

REGISTERED CIVIL ENGINEER 10-26-06

6-21-10
PLANS APPROVAL DATE

REGISTERED PROFESSIONAL ENGINEER
Cuong Nguyen
No. C32414
Exp. 12-30-06
CIVIL
STATE OF CALIFORNIA

The State of California or its officers or agents shall not be responsible for the accuracy or completeness of electronic copies of this plan sheet.

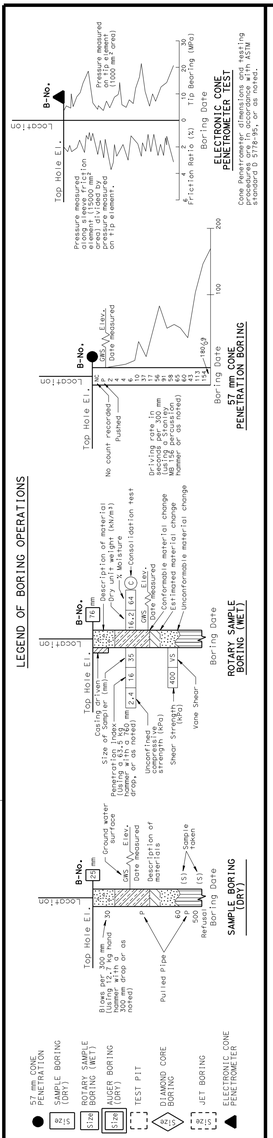

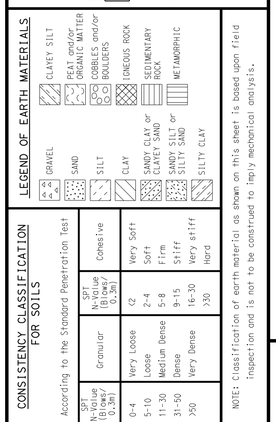

OGS CIVIL LOG OF TEST BORINGS SHEET (METRIC) (REV. 4/04)

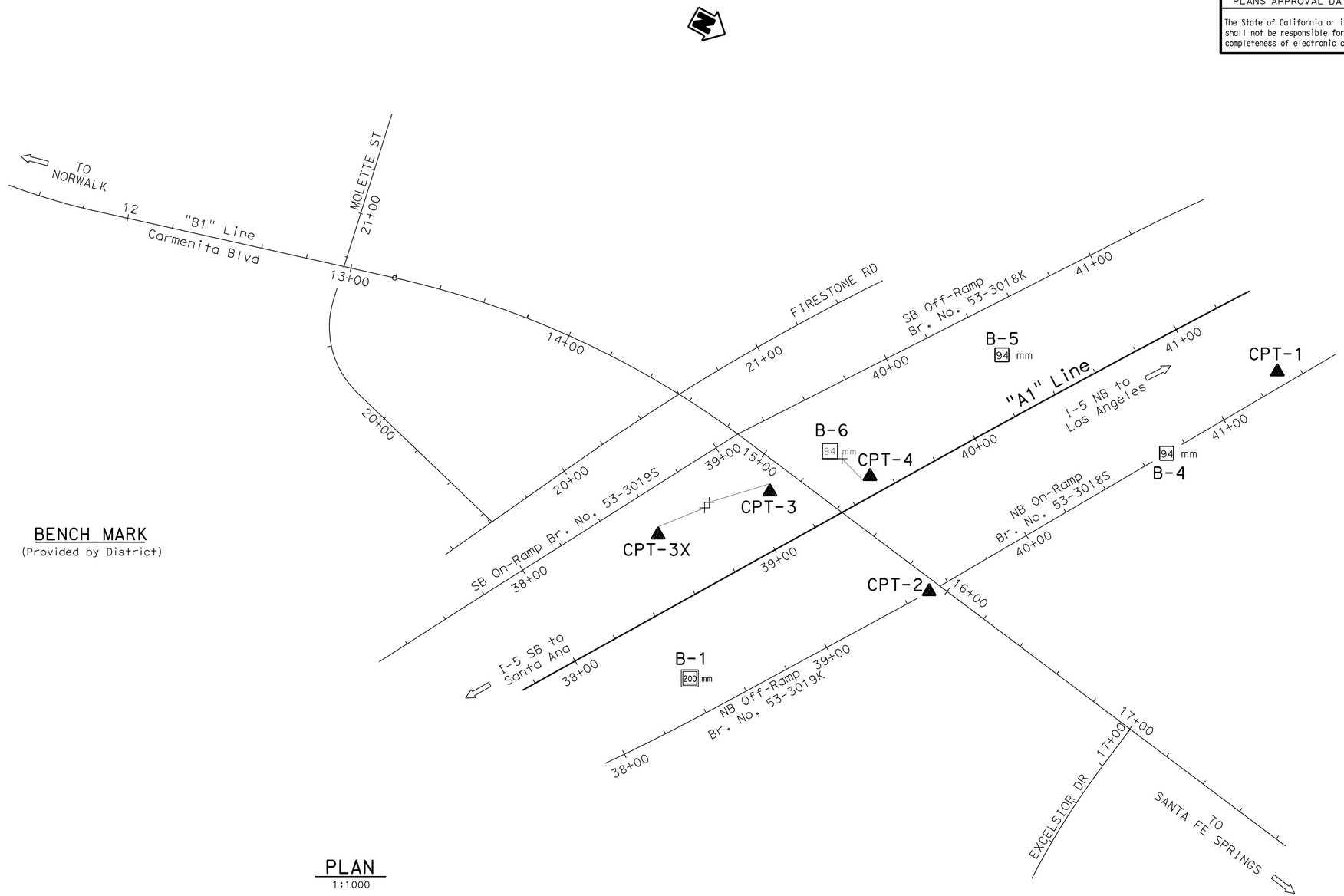

BENCH MARK
(Provided by District)

PLAN
1:1000

Caltrans Metric

GEOTECHNICAL SERVICES	
DRAWN BY	W. Tang 5/05
CHECKED BY	C. Nguyen

FIELD INVESTIGATION BY: C. Nguyen

STATE OF CALIFORNIA
DEPARTMENT OF TRANSPORTATION

DIVISION OF ENGINEERING SERVICES
STRUCTURE DESIGN
DESIGN BRANCH 11

BRIDGE NO. 53-3018
KILOMETER POST 1.2/3.6

CARMENITA AVENUE OC, PHASE 1
LOG OF TEST BORINGS 1 OF 4

ALL DIMENSIONS ARE IN METERS UNLESS OTHERWISE SHOWN

ORIGINAL SCALE IN MILLIMETERS FOR REDUCED PLANS 0 10 20 30 40 50 60 70 80 90 100

CU 07225
EA 2159C1

DISREGARD PRINTS BEARING EARLIER REVISION DATES

REVISION DATES (PRELIMINARY STAGE ONLY): 6-16-05 8-22-05 9-1-05 09-19-06 10-25-06

SHEET 94 OF 110

FILE => 53-3018__zz-ltb01.dgn

USERNAME => ttrehard DATE PLOTTED => 22-JUN-2010 TIME PLOTTED => 10:33

DIST	COUNTY	ROUTE	KILOMETER POST TOTAL PROJECT	SHEET No	TOTAL SHEETS
07	LA	5	2.9/4.9	922	1082

REGISTERED CIVIL ENGINEER 10-26-06

6-21-10
PLANS APPROVAL DATE

REGISTERED PROFESSIONAL ENGINEER Cuong Nguyen No. C32414 Exp. 12-30-06 CIVIL STATE OF CALIFORNIA

The State of California or its officers or agents shall not be responsible for the accuracy or completeness of electronic copies of this plan sheet.

FOR PLAN VIEW, SEE
"LOG OF TEST BORINGS" 1 OF 4

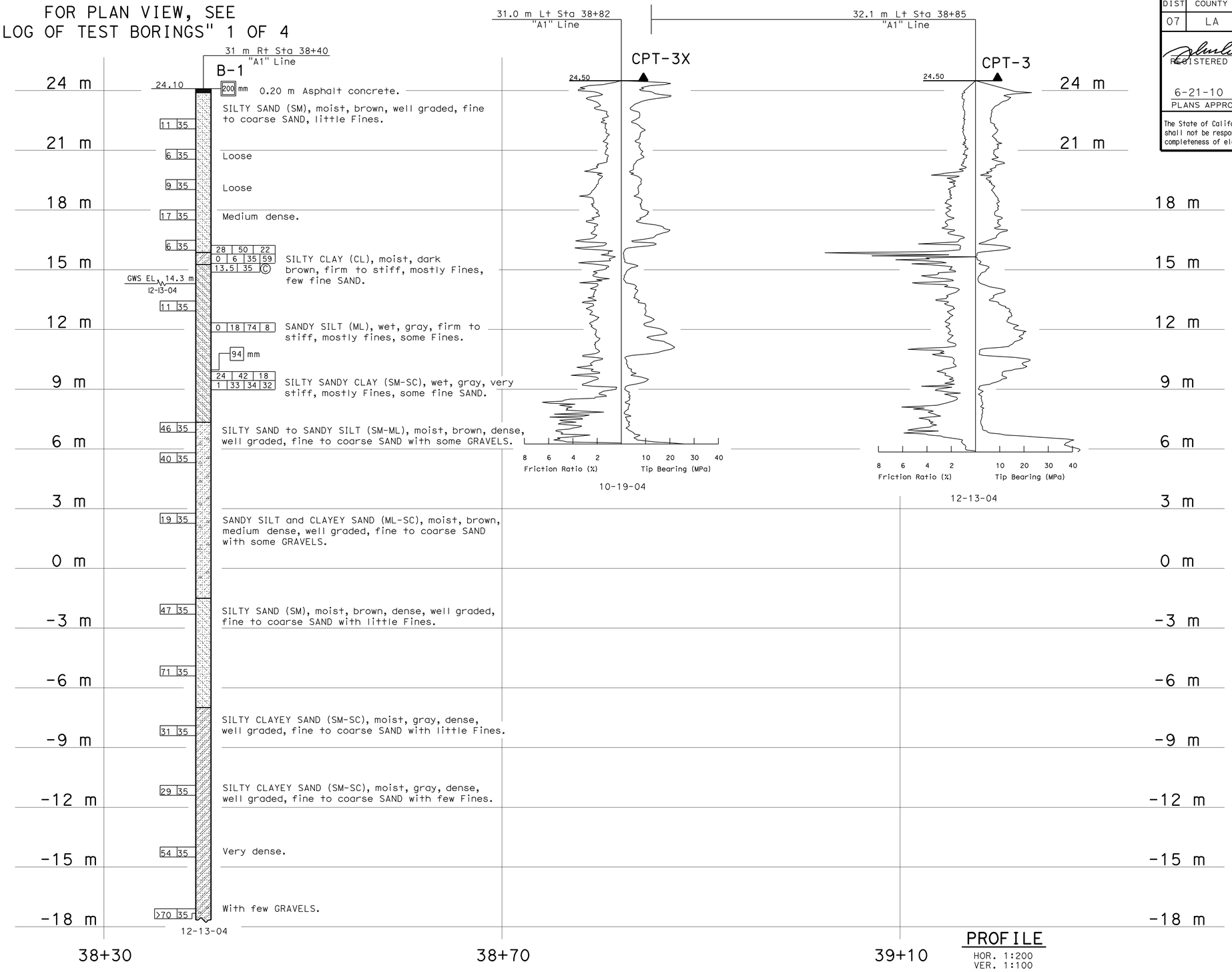

PROFILE
HOR. 1:200
VER. 1:100

LEGEND (SOIL)

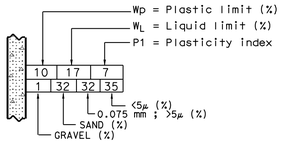

LEGEND OF BORING OPERATIONS

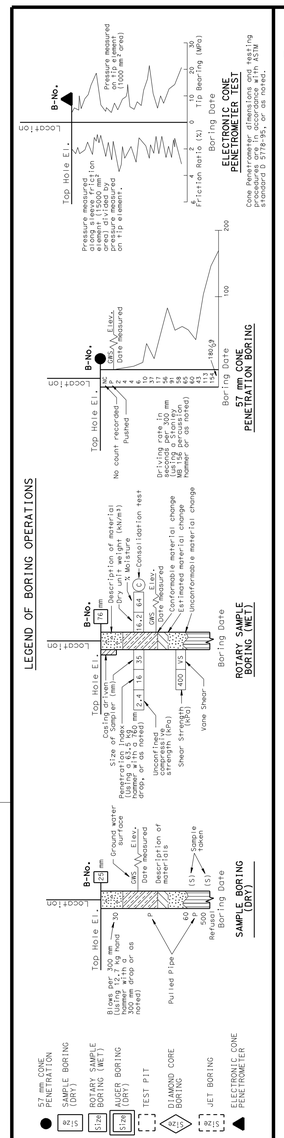

LEGEND OF EARTH MATERIALS

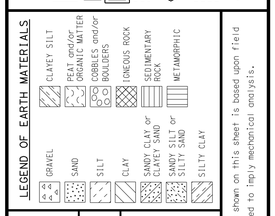

CONSISTENCY CLASSIFICATION FOR SOILS

According to the Standard Penetration Test

SPT N-Value (Blows/0.3m)	Granular	SPT N-Value (Blows/0.3m)	Cohesive
0-4	Very Loose	<2	Very Soft
5-10	Loose	2-4	Soft
11-30	Medium Dense	5-8	Firm
31-50	Dense	9-15	Stiff
>50	Very Dense	16-30	Very stiff
		>30	Hard

NOTE: Classification of earth material as shown on this sheet is based upon field inspection and is not to be construed to imply mechanical analysis.

OGS CIVIL LOG OF TEST BORINGS SHEET (METRIC) (REV. 4/04)

Caltrans Metric

GEOTECHNICAL SERVICES

DRAWN BY W. Tang 5/05
CHECKED BY C. Nguyen

FIELD INVESTIGATION BY: C. Nguyen

STATE OF CALIFORNIA DEPARTMENT OF TRANSPORTATION

DIVISION OF ENGINEERING SERVICES STRUCTURE DESIGN
DESIGN BRANCH 11

BRIDGE NO. 53-3018
KILOMETER POST 1.2/3.6

CARMENITA AVENUE OC, PHASE 1
LOG OF TEST BORINGS 2 OF 4

ALL DIMENSIONS ARE IN METERS UNLESS OTHERWISE SHOWN

ORIGINAL SCALE IN MILLIMETERS FOR REDUCED PLANS 0 10 20 30 40 50 60 70 80 90 100

CU 07225
EA 2159C1

DISREGARD PRINTS BEARING EARLIER REVISION DATES

REVISION DATES (PRELIMINARY STAGE ONLY) 06-15-05 08-22-05 09-01-06 09-26-05 10-19-06 10-16-06 10-25-06

SHEET 95 OF 110

FILE => 53-3018__zz-ltb02.dgn

USERNAME => trlenard DATE PLOTTED => 22-JUN-2010 TIME PLOTTED => 10:33

DIST	COUNTY	ROUTE	KILOMETER POST TOTAL PROJECT	SHEET No	TOTAL SHEETS
07	LA	5	2.9/4.9	923	1082

REGISTERED CIVIL ENGINEER 10-26-06

6-21-10
PLANS APPROVAL DATE

REGISTERED PROFESSIONAL ENGINEER Cuong Nguyen No. C32414 Exp. 12-30-06 CIVIL STATE OF CALIFORNIA

The State of California or its officers or agents shall not be responsible for the accuracy or completeness of electronic copies of this plan sheet.

FOR PLAN VIEW, SEE
"LOG OF TEST BORINGS" 1 OF 4

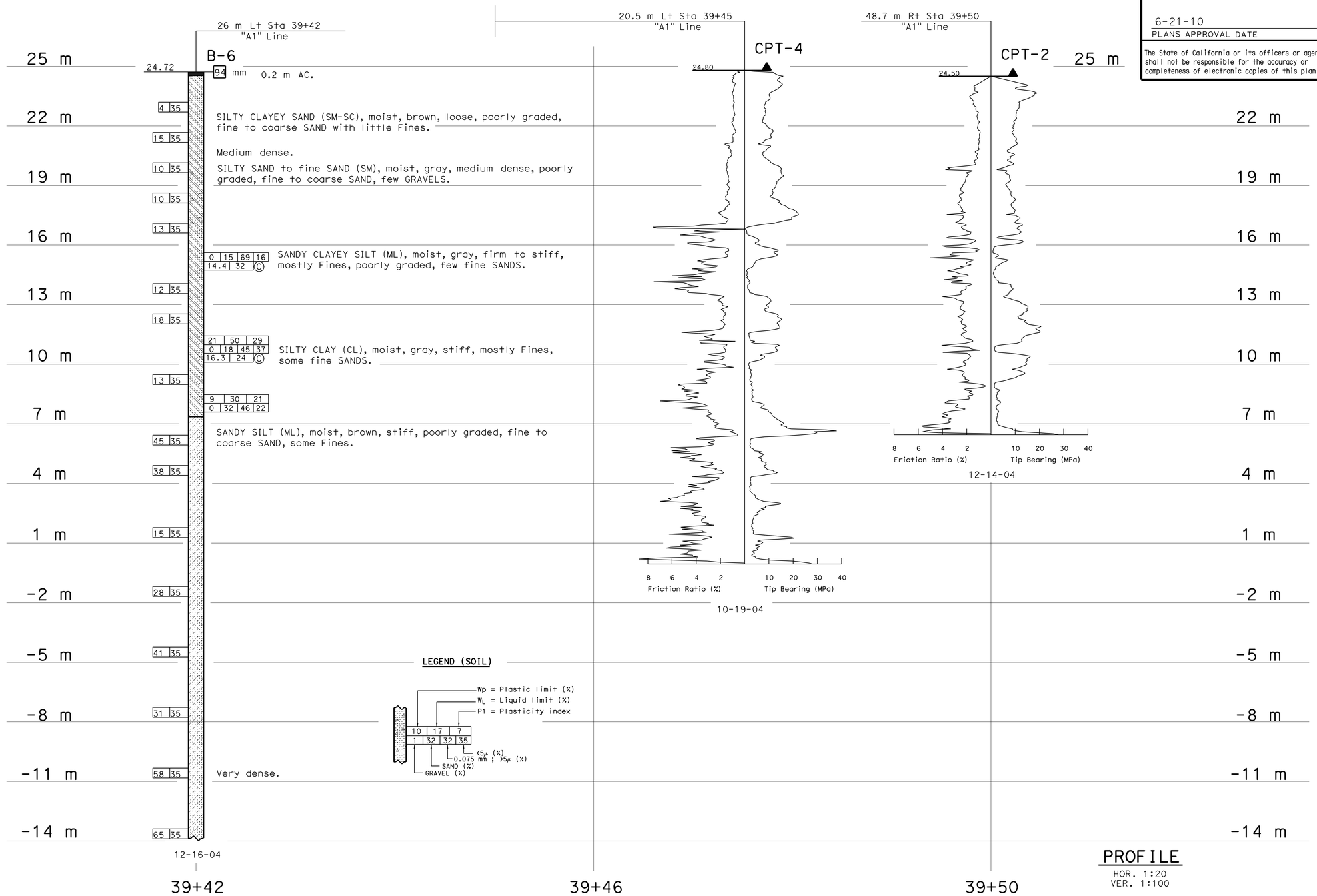

PROFILE
HOR. 1:20
VER. 1:100

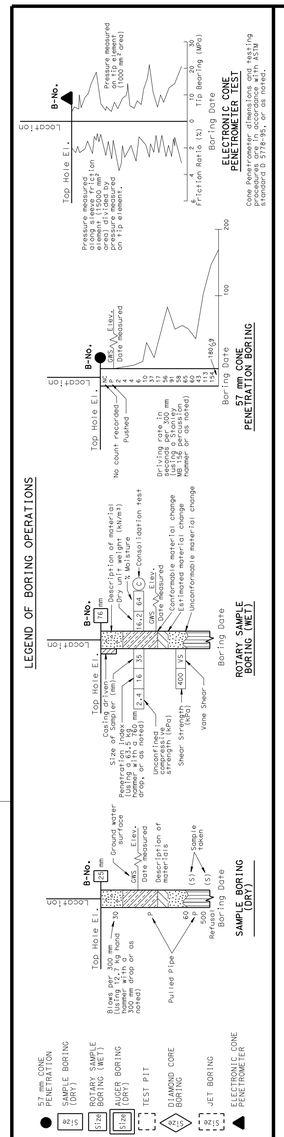

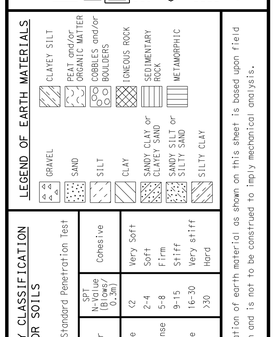

CONSISTENCY CLASSIFICATION FOR SOILS

According to the Standard Penetration Test

SPT N-Value (Blows/ 0.3m)	Granular	SPT N-Value (Blows/ 0.3m)	Cohesive
0-4	Very Loose	<2	Very Soft
5-10	Loose	2-4	Soft
11-30	Medium Dense	5-8	Firm
31-50	Dense	9-15	Stiff
>50	Very Dense	16-30	Very stiff
		>30	Hard

NOTE: Classification of earth material as shown on this sheet is based upon field inspection and is not to be construed to imply mechanical analysis.

OGS CIVIL LOG OF TEST BORINGS SHEET (METRIC) (REV. 4/04)

Caltrans Metric

GEOTECHNICAL SERVICES

DRAWN BY W. Tang 5/05
CHECKED BY C. Nguyen

FIELD INVESTIGATION BY: C. Nguyen

STATE OF CALIFORNIA DEPARTMENT OF TRANSPORTATION

DIVISION OF ENGINEERING SERVICES STRUCTURE DESIGN
DESIGN BRANCH 11

BRIDGE NO. 53-3018
KILOMETER POST 1.2/3.6

CARMENITA AVENUE OC, PHASE 1
LOG OF TEST BORINGS 3 OF 4

ALL DIMENSIONS ARE IN METERS UNLESS OTHERWISE SHOWN

ORIGINAL SCALE IN MILLIMETERS FOR REDUCED PLANS 0 10 20 30 40 50 60 70 80 90 100

CU 07225
EA 2159C1

DISREGARD PRINTS BEARING EARLIER REVISION DATES

REVISION DATES (PRELIMINARY STAGE ONLY) 06-15-05 08-22-05 09-01-05 09-26-05 09-19-06 10-16-06 10-25-06

SHEET 96 OF 110

FILE => 53-3018__zz-ltb03.dgn

USERNAME => trlenard DATE PLOTTED => 22-JUN-2010 TIME PLOTTED => 10:34

DIST	COUNTY	ROUTE	KILOMETER POST TOTAL PROJECT	SHEET No	TOTAL SHEETS
07	LA	5	2.9/4.9	924	1082

REGISTERED CIVIL ENGINEER 10-26-06

6-21-10
PLANS APPROVAL DATE

REGISTERED PROFESSIONAL ENGINEER Cuong Nguyen No. C32414 Exp. 12-30-06 CIVIL STATE OF CALIFORNIA

The State of California or its officers or agents shall not be responsible for the accuracy or completeness of electronic copies of this plan sheet.

FOR PLAN VIEW, SEE
"LOG OF TEST BORINGS" 1 OF 4

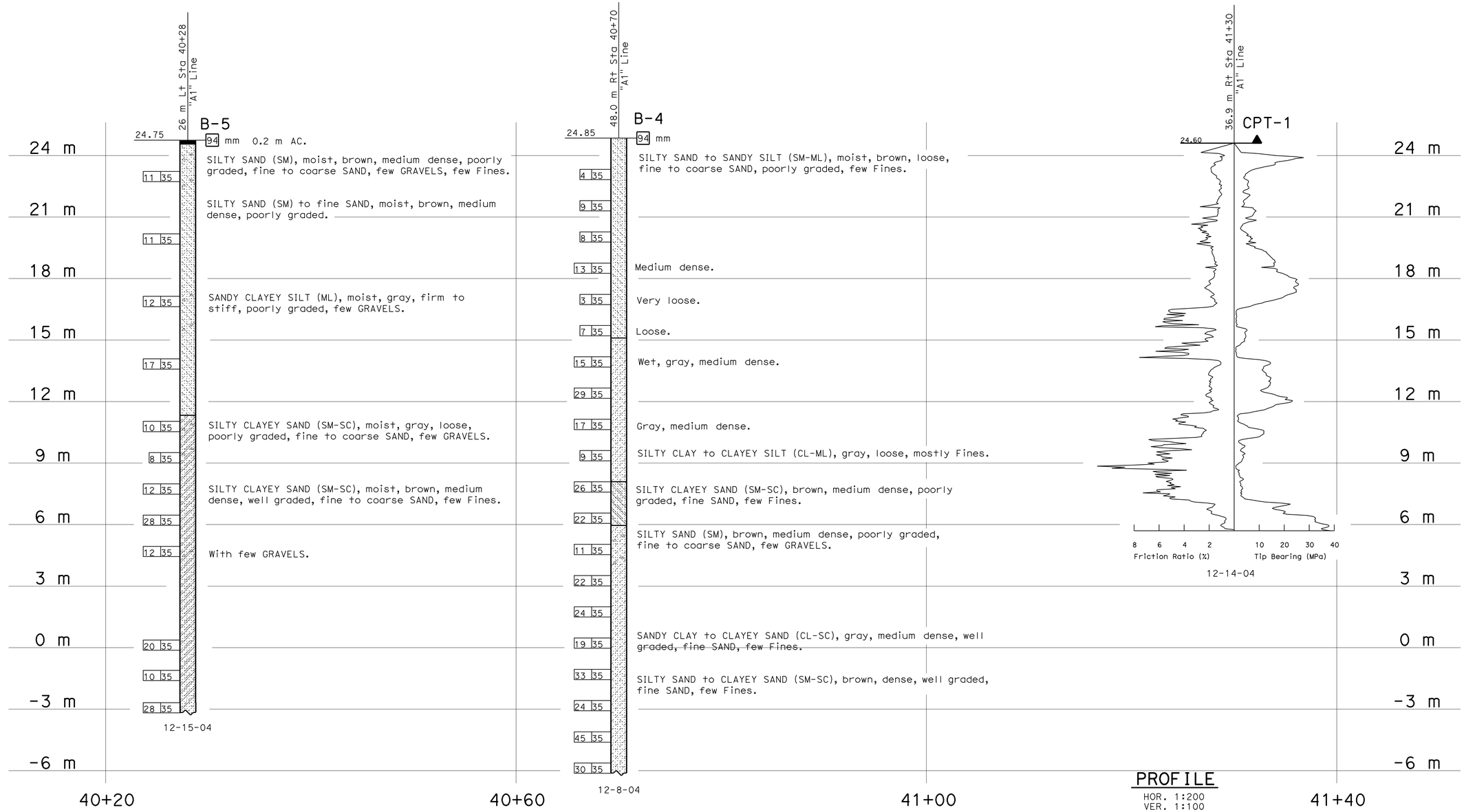

PROFILE
HOR. 1:200
VER. 1:100

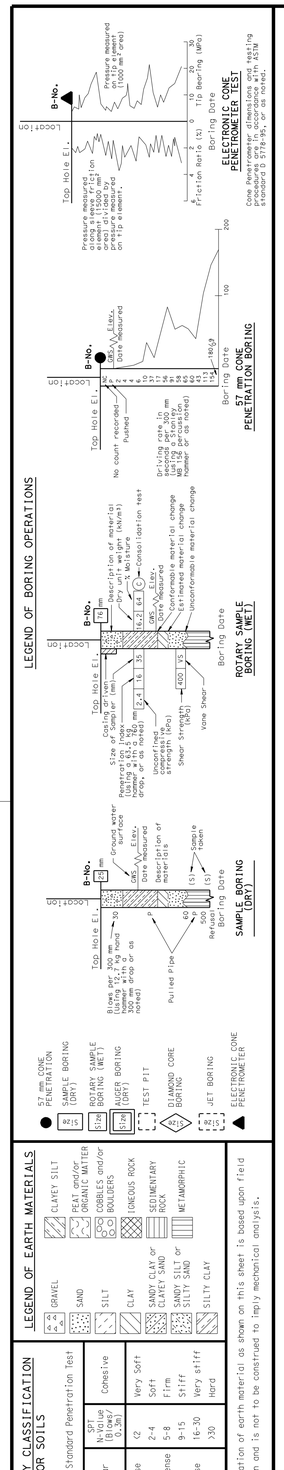

OGS CIVIL LOG OF TEST BORINGS SHEET (METRIC) (REV. 4/04)

Caltrans Metric

GEOTECHNICAL SERVICES	
DRAWN BY	W. Tang 5/05
CHECKED BY	C. Nguyen

FIELD INVESTIGATION BY: C. Nguyen

STATE OF CALIFORNIA DEPARTMENT OF TRANSPORTATION

DIVISION OF ENGINEERING SERVICES STRUCTURE DESIGN DESIGN BRANCH 11

BRIDGE NO. 53-3018
KILOMETER POST 1.2/3.6

CARMENITA AVENUE OC, PHASE 1
LOG OF TEST BORINGS 4 OF 4

ALL DIMENSIONS ARE IN METERS UNLESS OTHERWISE SHOWN

ORIGINAL SCALE IN MILLIMETERS FOR REDUCED PLANS 0 10 20 30 40 50 60 70 80 90 100

CU 07225
EA 2159C1

DISREGARD PRINTS BEARING EARLIER REVISION DATES

REVISION DATES (PRELIMINARY STAGE ONLY) 06-15-05 08-22-05 09-26-05 09-14-06 10-16-06

SHEET 97 OF 110

FILE => 53-3018__zz-ltb04.dgn

USERNAME => trlenard DATE PLOTTED => 22-JUN-2010 TIME PLOTTED => 10:34

DIST	COUNTY	ROUTE	KILOMETERS POST TOTAL PROJECT	SHEET No	TOTAL SHEETS
07	LA	5	2.9/4.9	925	1082

REGISTERED CIVIL ENGINEER 2-02-10

6-21-10
PLANS APPROVAL DATE

REGISTERED PROFESSIONAL ENGINEER Haitao Liu No. C66398 Exp. 6/30/2010 CIVIL STATE OF CALIFORNIA

The State of California or its officers or agents shall not be responsible for the accuracy or completeness of electronic copies of this plan sheet.

This LOTB sheet was prepared in accordance with the Caltrans Soil & Rock Logging, Classification, & Presentation Manual (June 2007).

GROUP SYMBOLS AND NAMES

Graphic / Symbol	Group Names	Graphic / Symbol	Group Names
GW	Well-graded GRAVEL Well-graded GRAVEL with SAND	CL	Lean CLAY Lean CLAY with SAND Lean CLAY with GRAVEL SANDY lean CLAY SANDY lean CLAY with GRAVEL GRAVELLY lean CLAY GRAVELLY lean CLAY with SAND
GP	Poorly graded GRAVEL Poorly graded GRAVEL with SAND		
GW-GM	Well-graded GRAVEL with SILT Well-graded GRAVEL with SILT and SAND	CL-ML	SILTY CLAY SILTY CLAY with SAND SILTY CLAY with GRAVEL SANDY SILTY CLAY SANDY SILTY CLAY with GRAVEL GRAVELLY SILTY CLAY GRAVELLY SILTY CLAY with SAND
GW-GC	Well-graded GRAVEL with CLAY (or SILTY CLAY) Well-graded GRAVEL with CLAY and SAND (or SILTY CLAY and SAND)		
GP-GM	Poorly graded GRAVEL with SILT Poorly graded GRAVEL with SILT and SAND	ML	SILT SILT with SAND SILT with GRAVEL SANDY SILT SANDY SILT with GRAVEL GRAVELLY SILT GRAVELLY SILT with SAND
GP-GC	Poorly graded GRAVEL with CLAY (or SILTY CLAY) Poorly graded GRAVEL with CLAY and SAND (or SILTY CLAY and SAND)		
GM	SILTY GRAVEL SILTY GRAVEL with SAND	OL	ORGANIC lean CLAY ORGANIC lean CLAY with SAND ORGANIC lean CLAY with GRAVEL SANDY ORGANIC lean CLAY SANDY ORGANIC lean CLAY with GRAVEL GRAVELLY ORGANIC lean CLAY GRAVELLY ORGANIC lean CLAY with SAND
GC	CLAYEY GRAVEL CLAYEY GRAVEL with SAND		
GC-GM	SILTY, CLAYEY GRAVEL SILTY, CLAYEY GRAVEL with SAND	OL	ORGANIC SILT ORGANIC SILT with SAND ORGANIC SILT with GRAVEL SANDY ORGANIC SILT SANDY ORGANIC SILT with GRAVEL GRAVELLY ORGANIC SILT GRAVELLY ORGANIC SILT with SAND
SW	Well-graded SAND Well-graded SAND with GRAVEL		
SP	Poorly graded SAND Poorly graded SAND with GRAVEL	CH	Fat CLAY Fat CLAY with SAND Fat CLAY with GRAVEL SANDY fat CLAY SANDY fat CLAY with GRAVEL GRAVELLY fat CLAY GRAVELLY fat CLAY with SAND
SW-SM	Well-graded SAND with SILT Well-graded SAND with SILT and GRAVEL		
SW-SC	Well-graded SAND with CLAY (or SILTY CLAY) Well-graded SAND with CLAY and GRAVEL (or SILTY CLAY and GRAVEL)	MH	Elastic SILT Elastic SILT with SAND Elastic SILT with GRAVEL SANDY elastic SILT SANDY elastic SILT with GRAVEL GRAVELLY elastic SILT GRAVELLY elastic SILT with SAND
SP-SM	Poorly graded SAND with SILT Poorly graded SAND with SILT and GRAVEL		
SP-SC	Poorly graded SAND with CLAY (or SILTY CLAY) Poorly graded SAND with CLAY and GRAVEL (or SILTY CLAY and GRAVEL)	OH	ORGANIC fat CLAY ORGANIC fat CLAY with SAND ORGANIC fat CLAY with GRAVEL SANDY ORGANIC fat CLAY SANDY ORGANIC fat CLAY with GRAVEL GRAVELLY ORGANIC fat CLAY GRAVELLY ORGANIC fat CLAY with SAND
SM	SILTY SAND SILTY SAND with GRAVEL		
SC	CLAYEY SAND CLAYEY SAND with GRAVEL	OH	ORGANIC elastic SILT ORGANIC elastic SILT with SAND ORGANIC elastic SILT with GRAVEL SANDY elastic ELASTIC SILT SANDY ORGANIC elastic SILT with GRAVEL GRAVELLY ORGANIC elastic SILT GRAVELLY ORGANIC elastic SILT with SAND
SC-SM	SILTY, CLAYEY SAND SILTY, CLAYEY SAND with GRAVEL		
PT	PEAT	OL/OH	ORGANIC SOIL ORGANIC SOIL with SAND ORGANIC SOIL with GRAVEL SANDY ORGANIC SOIL SANDY ORGANIC SOIL with GRAVEL GRAVELLY ORGANIC SOIL GRAVELLY ORGANIC SOIL with SAND
	COBBLES COBBLES and BOULDERS BOULDERS		

FIELD AND LABORATORY TESTS

C	Consolidation (ASTM D 2435-04)
CL	Collapse Potential (ASTM D 5333-03)
CP	Compaction Curve (CTM 216 - 06)
CR	Corrosion, Sulfates, Chlorides (CTM 643 - 99; CTM 417 - 06; CTM 422 - 06)
CU	Consolidated Undrained Triaxial (ASTM D 4767-02)
DS	Direct Shear (ASTM D 3080-04)
EI	Expansion Index (ASTM D 4829-03)
M	Moisture Content (ASTM D 2216-05)
OC	Organic Content (ASTM D 2974-07)
P	Permeability (CTM 220 - 05)
PA	Particle Size Analysis (ASTM D 422-63 [2002])
PI	Liquid Limit, Plastic Limit, Plasticity Index (AASHTO T 89-02, AASHTO T 90-00)
PL	Point Load Index (ASTM D 5731-05)
PM	Pressure Meter
PP	Pocket Penetrometer
R	R-Value (CTM 301 - 00)
SE	Sand Equivalent (CTM 217 - 99)
SG	Specific Gravity (AASHTO T 100-06)
SL	Shrinkage Limit (ASTM D 427-04)
SW	Swell Potential (ASTM D 4546-03)
TV	Pocket Torvane
UC	Unconfined Compression - Soil (ASTM D 2166-06) Unconfined Compression - Rock (ASTM D 2938-95)
UU	Unconsolidated Undrained Triaxial (ASTM D 2850-03)
UW	Unit Weight (ASTM D 4767-04)
VS	Vane Shear (AASHTO T 223-96 [2004])
WA	Minus #200 (ASTM D 1140)

CONSISTENCY OF COHESIVE SOILS

Descriptor	Unconfined Compressive Strength (tsf)	Pocket Penetrometer (tsf)	Torvane (tsf)	Field Approximation
Very Soft	< 0.25	< 0.25	< 0.12	Easily penetrated several inches by fist
Soft	0.25 - 0.50	0.25 - 0.50	0.12 - 0.25	Easily penetrated several inches by thumb
Medium Stiff	0.50 - 1.0	0.50 - 1.0	0.25 - 0.50	Can be penetrated several inches by thumb with moderate effort
Stiff	1.0 - 2.0	1.0 - 2.0	0.50 - 1.0	Readily indented by thumb but penetrated only with great effort
Very Stiff	2.0 - 4.0	2.0 - 4.0	1.0 - 2.0	Readily indented by thumbnail
Hard	> 4.0	> 4.0	> 2.0	Indented by thumbnail with difficulty

APPARENT DENSITY OF COHESIONLESS SOILS

Descriptor	SPT N60 - Value (blows / foot)
Very Loose	0 - 4
Loose	5 - 10
Medium Dense	11 - 30
Dense	31 - 50
Very Dense	> 50

MOISTURE

Descriptor	Criteria
Dry	Absence of moisture, dusty, dry to the touch
Moist	Damp but no visible water
Wet	Visible free water, usually soil is below water table

PERCENT OR PROPORTION OF SOILS

Descriptor	Criteria
Trace	Particles are present but estimated to be less than 5%
Few	5 to 10%
Little	15 to 25%
Some	30 to 45%
Mostly	50 to 100%

SOIL PARTICLE SIZE

Descriptor		Size
Boulder		> 12 inches
Cobble		3 to 12 inches
Gravel	Coarse	3/4 inch to 3 inches
	Fine	No. 4 Sieve to 3/4 inch
Sand	Coarse	No. 10 Sieve to No. 4 Sieve
	Medium	No. 40 Sieve to No. 10 Sieve
	Fine	No. 200 Sieve to No. 40 Sieve
Silt and Clay		Passing No. 200 Sieve

PLASTICITY OF FINE-GRAINED SOILS

Descriptor	Criteria
Nonplastic	A 1/8-inch thread cannot be rolled at any water content.
Low	The thread can barely be rolled, and the lump cannot be formed when drier than the plastic limit.
Medium	The thread is easy to roll, and not much time is required to reach the plastic limit; it cannot be rerolled after reaching the plastic limit. The lump crumbles when drier than the plastic limit.
High	It takes considerable time rolling and kneading to reach the plastic limit. The thread can be rerolled several times after reaching the plastic limit. The lump can be formed without crumbling when drier than the plastic limit.

CEMENTATION

Descriptor	Criteria
Weak	Crumbles or breaks with handling or little finger pressure.
Moderate	Crumbles or breaks with considerable finger pressure.
Strong	Will not crumble or break with finger pressure.

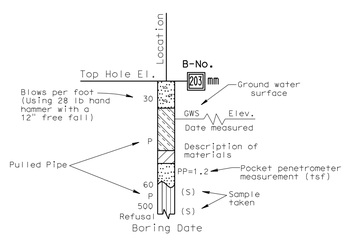

SAMPLE BORING (DRY)

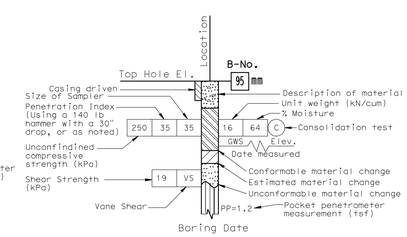

ROTARY SAMPLE BORING (WET)

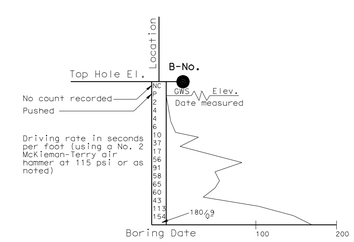

2 1/4" CONE PENETRATION BORING

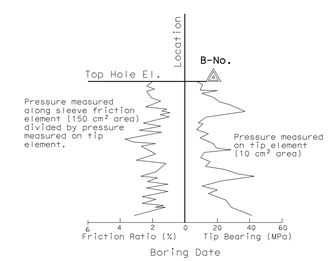

ELECTRONIC CONE PENETROMETER TEST

Cone Penetrometer dimensions and testing procedures are in accordance with ASTM standard D 3441-79, or as noted.

ENGINEERING SERVICES	GEOTECHNICAL SERVICES	STATE OF CALIFORNIA DEPARTMENT OF TRANSPORTATION	DIVISION OF ENGINEERING SERVICES STRUCTURE DESIGN DESIGN BRANCH	BRIDGE NO. 53-3018	CARMENITA RD OC/OH, PHASE 2
FUNCTIONAL SUPERVISOR NAME: Deh-Jeng Jang	DRAWN BY: Phuong Quach-URS CHECKED BY: Sivasubramaniam Pirathiviraj-URS	FIELD INVESTIGATION BY: Sungro Cho		KILOMETER POST 2.9/3.9	LOG OF TEST BORINGS SHEET 1 OF 13
OGS CIVIL LOG OF TEST BORINGS SHEET	ORIGINAL SCALE IN MILLIMETERS FOR REDUCED PLANS 0 10 20 30 40 50 60 70 80 90 100		CU 59A0590 EA 07-2159C1	DISREGARD PRINTS BEARING EARLIER REVISION DATES	REVISION DATES SHEET 98 OF 110

FILE => 53-3018__zz-ltb05.dgn

USERNAME => trlehard DATE PLOTTED => 22-JUN-2010 TIME PLOTTED => 10:34

Borehole Number	Drill Method	Drilling Equipment	Hammer Type	Avg. Hammer Efficiency, ETR (%)
A-08-001	Hollow Stem Auger	CME85	Automatic	87
A-08-002	Hollow Stem Auger	CME85	Automatic	87
R-08-003	Rotary Wash	CME85	Automatic	87
R-08-004	Rotary Wash	CME85	Automatic	87
R-08-005	Rotary Wash	CME85	Automatic	87
R-08-006	Rotary Wash	CME85	Automatic	87
R-08-007	Rotary Wash	CME85	Automatic	87
R-08-008	Rotary Wash	CME85	Automatic	87
R-08-009	Rotary Wash	CME85	Automatic	87
R-08-010	Rotary Wash	CME85	Automatic	87
R-08-011	Hollow Stem Auger	CME85	Automatic	87
CPT-08-001 to CPT-08-011	Cone Penetration	Hogentogler CPT Rig	N/A	N/A

Caltrans Metric

DIST	COUNTY	ROUTE	KILOMETERS POST TOTAL PROJECT	SHEET No	TOTAL SHEETS
07	LA	5	2.9/4.9	926	1082

REGISTERED CIVIL ENGINEER 2-02-10

6-21-10
PLANS APPROVAL DATE

REGISTERED PROFESSIONAL ENGINEER Haitao Liu No. C66398 Exp. 6/30/2010 CIVIL STATE OF CALIFORNIA

The State of California or its officers or agents shall not be responsible for the accuracy or completeness of electronic copies of this plan sheet.

This LOTB sheet was prepared in accordance with the Caltrans Soil & Rock Logging, Classification, & Presentation Manual (June 2007).

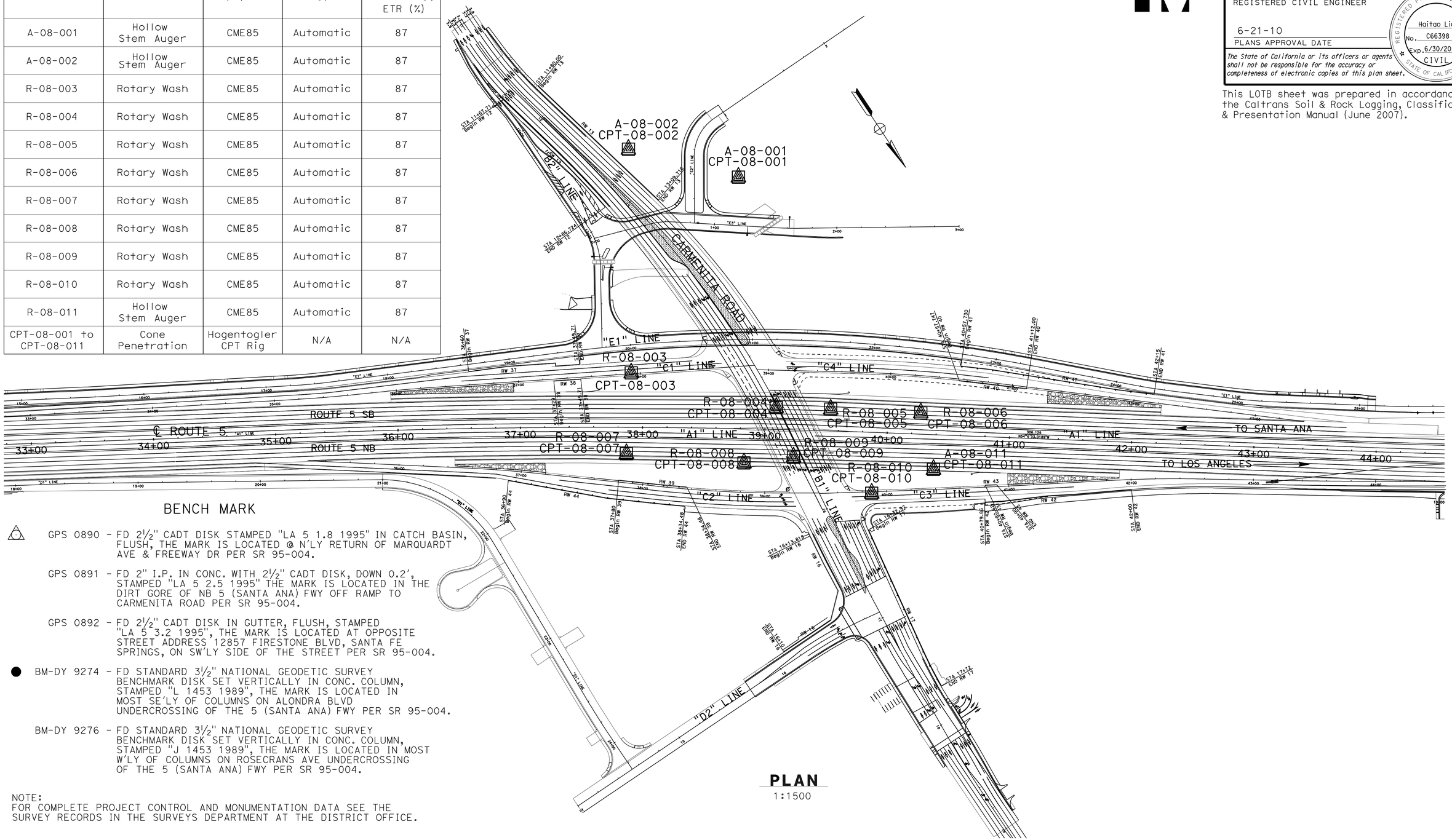

BENCH MARK

GPS 0890 - FD 2½" CADT DISK STAMPED "LA 5 1.8 1995" IN CATCH BASIN, FLUSH, THE MARK IS LOCATED @ N'LY RETURN OF MARQUARDT AVE & FREEWAY DR PER SR 95-004.

GPS 0891 - FD 2" I.P. IN CONC. WITH 2½" CADT DISK, DOWN 0.2', STAMPED "LA 5 2.5 1995" THE MARK IS LOCATED IN THE DIRT GORE OF NB 5 (SANTA ANA) FWY OFF RAMP TO CARMENITA ROAD PER SR 95-004.

GPS 0892 - FD 2½" CADT DISK IN GUTTER, FLUSH, STAMPED "LA 5 3.2 1995", THE MARK IS LOCATED AT OPPOSITE STREET ADDRESS 12857 FIRESTONE BLVD, SANTA FE SPRINGS, ON SW'LY SIDE OF THE STREET PER SR 95-004.

BM-DY 9274 - FD STANDARD 3½" NATIONAL GEODETIC SURVEY BENCHMARK DISK SET VERTICALLY IN CONC. COLUMN, STAMPED "L 1453 1989", THE MARK IS LOCATED IN MOST SE'LY OF COLUMNS ON ALONDRA BLVD UNDERCROSSING OF THE 5 (SANTA ANA) FWY PER SR 95-004.

BM-DY 9276 - FD STANDARD 3½" NATIONAL GEODETIC SURVEY BENCHMARK DISK SET VERTICALLY IN CONC. COLUMN, STAMPED "J 1453 1989", THE MARK IS LOCATED IN MOST W'LY OF COLUMNS ON ROSECRANS AVE UNDERCROSSING OF THE 5 (SANTA ANA) FWY PER SR 95-004.

NOTE:
FOR COMPLETE PROJECT CONTROL AND MONUMENTATION DATA SEE THE SURVEY RECORDS IN THE SURVEYS DEPARTMENT AT THE DISTRICT OFFICE.

PLAN
1:1500

ENGINEERING SERVICES	GEOTECHNICAL SERVICES	STATE OF CALIFORNIA DEPARTMENT OF TRANSPORTATION	DIVISION OF ENGINEERING SERVICES STRUCTURE DESIGN DESIGN BRANCH	BRIDGE NO. 53-3018 / KILOMETER POST 2.9/3.9	CARMENITA RD OC/OH, PHASE 2 LOG OF TEST BORINGS SHEET 2 OF 13
FUNCTIONAL SUPERVISOR NAME: Deh-Jeng Jang	DRAWN BY: Phuong Quach-URS; CHECKED BY: Sivasubramaniam Pirathiviraj-URS	FIELD INVESTIGATION BY: Sungro Cho			

OGS CIVIL LOG OF TEST BORINGS SHEET

ORIGINAL SCALE IN MILLIMETERS FOR REDUCED PLANS 0 10 20 30 40 50 60 70 80 90 100

CU 59A0590
EA 07-2159C1

DISREGARD PRINTS BEARING EARLIER REVISION DATES

REVISION DATES

SHEET 99 OF 110

FILE => 53-3018__zz-ltb06.dgn

USERNAME => tfriehord DATE PLOTTED => 22-JUN-2010 TIME PLOTTED => 10:34

NOTES: 1/ Backfill has been completed
2/ Groundwater is not measured

FOR PLAN VIEW, SEE
"LOG OF TEST BORINGS" 2 OF 13

Caltrans Metric

DIST	COUNTY	ROUTE	KILOMETERS POST TOTAL PROJECT	SHEET No	TOTAL SHEETS
07	LA	5	2.9/4.9	927	1082

REGISTERED CIVIL ENGINEER 2-02-10

6-21-10
PLANS APPROVAL DATE

REGISTERED PROFESSIONAL ENGINEER Haitao Liu No. C66398 Exp. 6/30/2010 CIVIL STATE OF CALIFORNIA

The State of California or its officers or agents shall not be responsible for the accuracy or completeness of electronic copies of this plan sheet.

This LOTB sheet was prepared in accordance with the Caltrans Soil & Rock Logging, Classification, & Presentation Manual (June 2007).

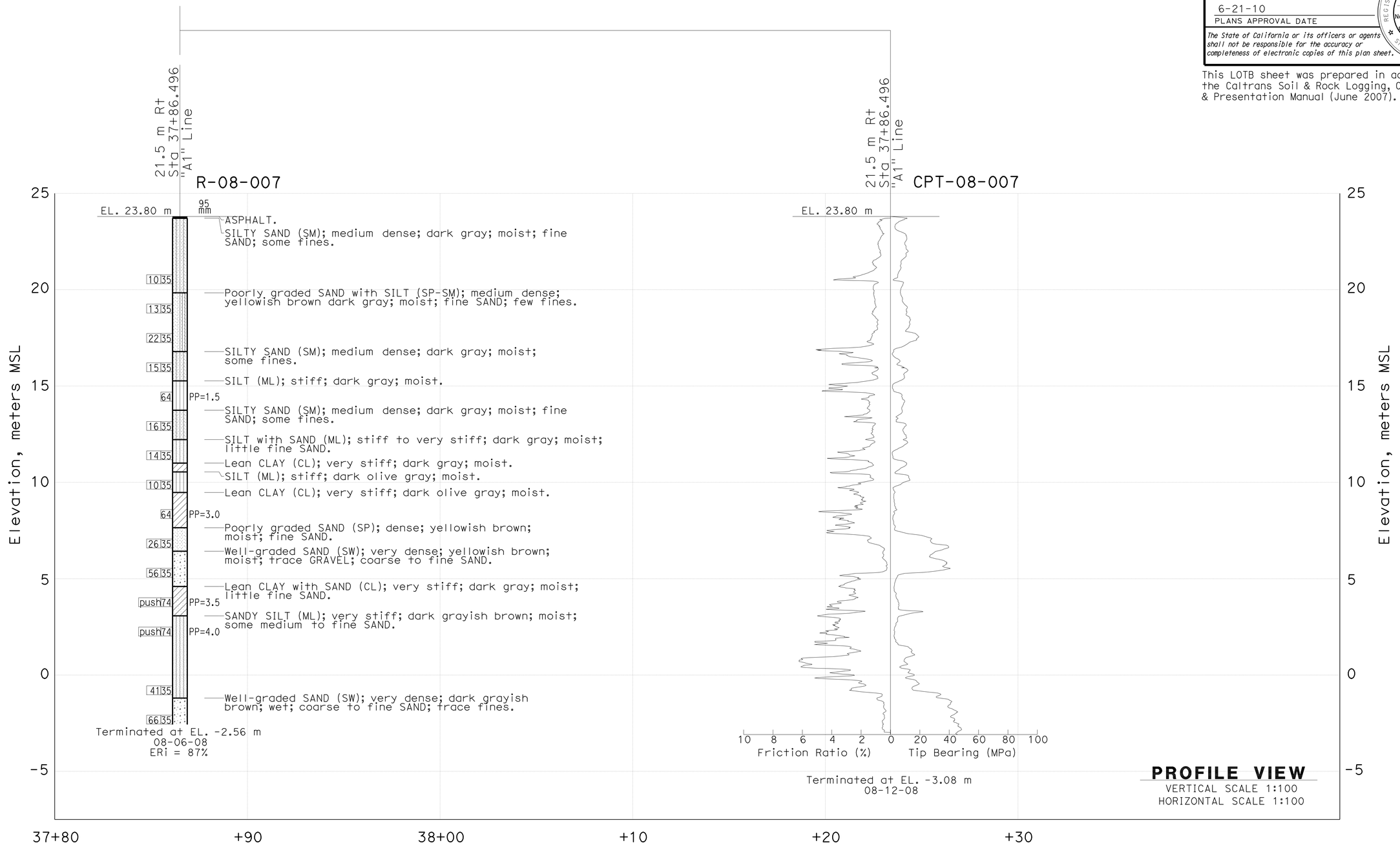

PROFILE VIEW
VERTICAL SCALE 1:100
HORIZONTAL SCALE 1:100

ENGINEERING SERVICES		GEOTECHNICAL SERVICES	STATE OF CALIFORNIA DEPARTMENT OF TRANSPORTATION	DIVISION OF ENGINEERING SERVICES STRUCTURE DESIGN DESIGN BRANCH	BRIDGE NO. 53-3018	CARMENITA RD OC/OH, PHASE 2
FUNCTIONAL SUPERVISOR	DRAWN BY: Phuong Quach-URS	FIELD INVESTIGATION BY:			KILOMETER POST 2.9/3.9	LOG OF TEST BORINGS SHEET 3 OF 13
NAME: Deh-Jeng Jang	CHECKED BY: Sivasubramaniam Pirathiviraj-URS	Sungro Cho		CU 59A0590 EA 07-2159C1		

OGS CIVIL LOG OF TEST BORINGS SHEET

ORIGINAL SCALE IN MILLIMETERS FOR REDUCED PLANS 0 10 20 30 40 50 60 70 80 90 100

DISREGARD PRINTS BEARING EARLIER REVISION DATES

REVISION DATES

SHEET 100 OF 110

FILE => 53-3018__zz-ltb07.dgn

USERNAME => trlenard DATE PLOTTED => 22-JUN-2010 TIME PLOTTED => 10:34

NOTES: 1/ Backfill has been completed
2/ Groundwater is encountered at elevation 14.4 m

FOR PLAN VIEW, SEE
"LOG OF TEST BORINGS" 2 OF 13

Caltrans Metric

DIST	COUNTY	ROUTE	KILOMETERS POST TOTAL PROJECT	SHEET No	TOTAL SHEETS
07	LA	5	2.9/4.9	928	1082

REGISTERED CIVIL ENGINEER 2-02-10

6-21-10
PLANS APPROVAL DATE

REGISTERED PROFESSIONAL ENGINEER Haitao Liu No. C66398 Exp. 6/30/2010 CIVIL STATE OF CALIFORNIA

The State of California or its officers or agents shall not be responsible for the accuracy or completeness of electronic copies of this plan sheet.

This LOTB sheet was prepared in accordance with the Caltrans Soil & Rock Logging, Classification, & Presentation Manual (June 2007).

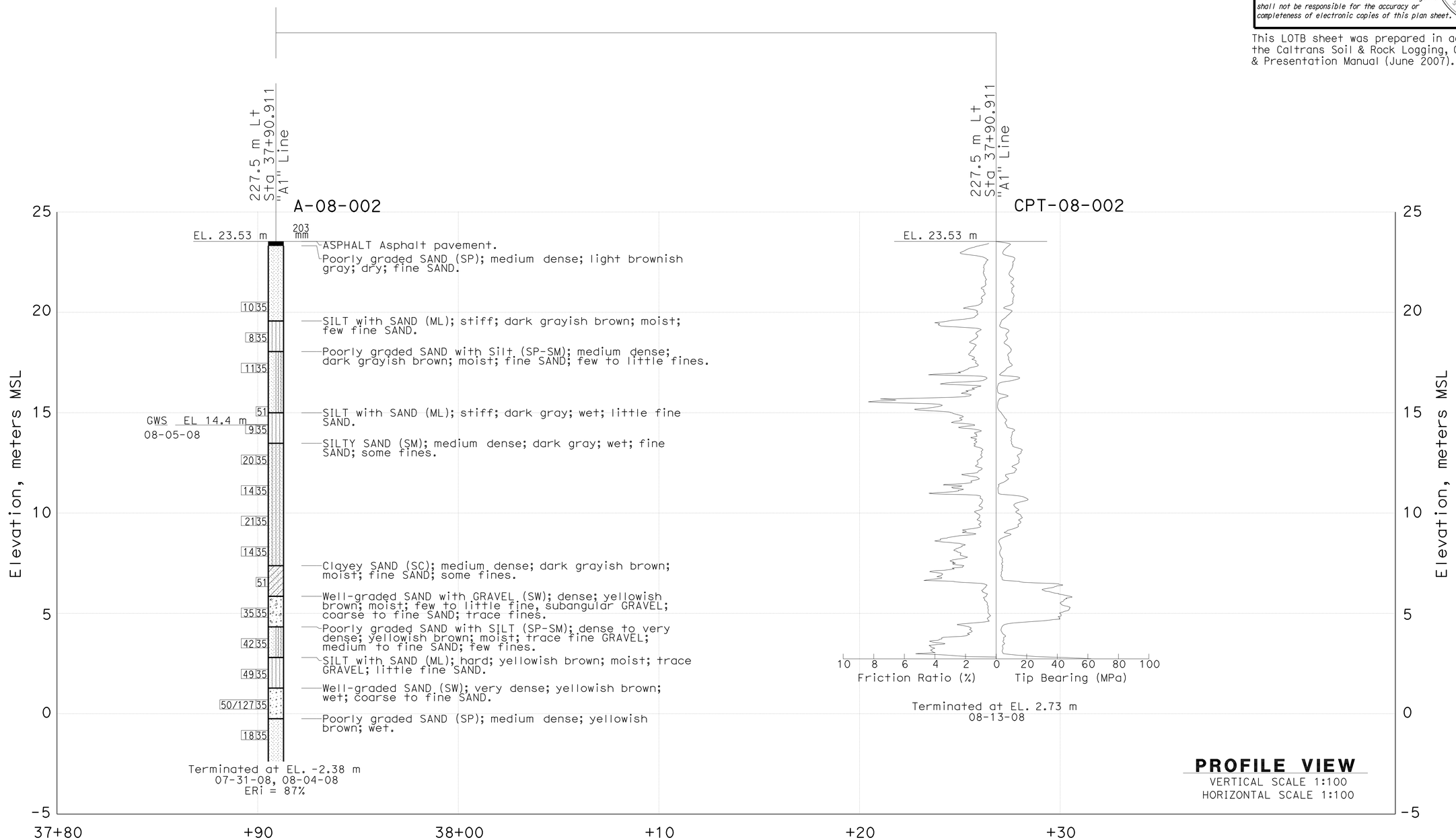

ENGINEERING SERVICES	GEOTECHNICAL SERVICES	STATE OF CALIFORNIA DEPARTMENT OF TRANSPORTATION	DIVISION OF ENGINEERING SERVICES STRUCTURE DESIGN DESIGN BRANCH	BRIDGE NO. 53-3018 / KILOMETER POST 2.9/3.9	CARMENITA RD OC/OH, PHASE 2 LOG OF TEST BORINGS SHEET 4 OF 13
FUNCTIONAL SUPERVISOR NAME: Deh-Jeng Jang	DRAWN BY: Phuong Quach-URS; CHECKED BY: Sivasubramaniam Pirathiviraj-URS	FIELD INVESTIGATION BY: Sungro Cho			

OGS CIVIL LOG OF TEST BORINGS SHEET

ORIGINAL SCALE IN MILLIMETERS FOR REDUCED PLANS 0 10 20 30 40 50 60 70 80 90 100

CU 59A0590
EA 07-2159C1

DISREGARD PRINTS BEARING EARLIER REVISION DATES

REVISION DATES

SHEET 101 OF 110

FILE => 53-3018__zz-ltb08.dgn

USERNAME => tfriehard DATE PLOTTED => 22-JUN-2010 TIME PLOTTED => 10:34

NOTES: 1/ Backfill has been completed
2/ Groundwater is not measured

FOR PLAN VIEW, SEE
"LOG OF TEST BORINGS" 2 OF 13

Caltrans Metric

DIST	COUNTY	ROUTE	KILOMETERS POST TOTAL PROJECT	SHEET No	TOTAL SHEETS
07	LA	5	2.9/4.9	929	1082

REGISTERED CIVIL ENGINEER 2-02-10

6-21-10
PLANS APPROVAL DATE

REGISTERED PROFESSIONAL ENGINEER Haitao Liu No. C66398 Exp. 6/30/2010 CIVIL STATE OF CALIFORNIA

The State of California or its officers or agents shall not be responsible for the accuracy or completeness of electronic copies of this plan sheet.

This LOTB sheet was prepared in accordance with the Caltrans Soil & Rock Logging, Classification, & Presentation Manual (June 2007).

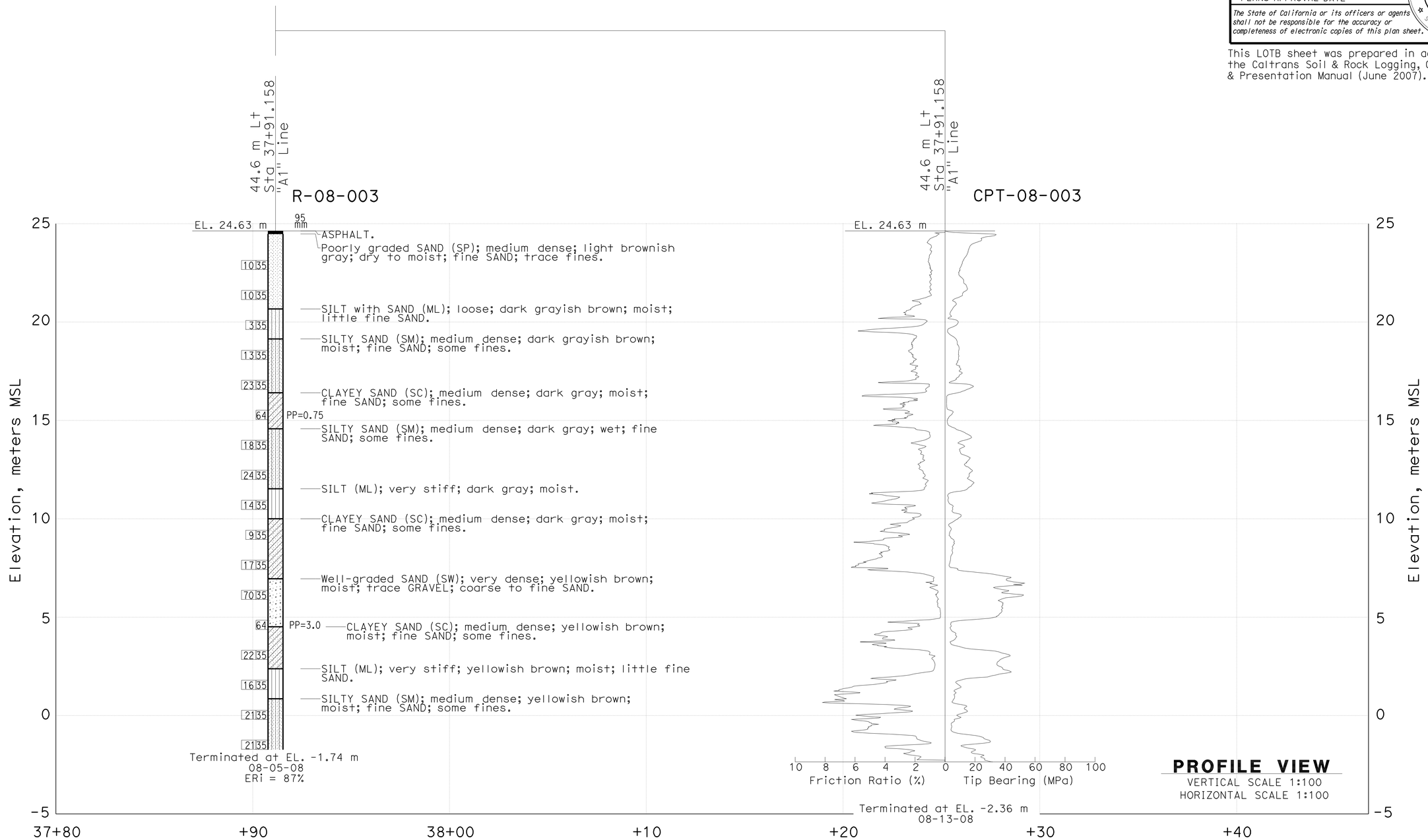

ENGINEERING SERVICES	GEOTECHNICAL SERVICES	STATE OF CALIFORNIA DEPARTMENT OF TRANSPORTATION	DIVISION OF ENGINEERING SERVICES STRUCTURE DESIGN DESIGN BRANCH	BRIDGE NO. 53-3018	CARMENITA RD OC/OH, PHASE 2
FUNCTIONAL SUPERVISOR	DRAWN BY: Phuong Quach-URS	FIELD INVESTIGATION BY:		KILOMETER POST 2.9/3.9	LOG OF TEST BORINGS SHEET 5 OF 13
NAME: Deh-Jeng Jang	CHECKED BY: Sivasubramaniam Pirathiviraj-URS	Sungro Cho			

OGS CIVIL LOG OF TEST BORINGS SHEET

ORIGINAL SCALE IN MILLIMETERS FOR REDUCED PLANS 0 10 20 30 40 50 60 70 80 90 100

CU 59A0590
EA 07-2159C1

DISREGARD PRINTS BEARING EARLIER REVISION DATES

REVISION DATES

SHEET 102 OF 110

FILE => 53-3018__zz-ltb09.dgn

USERNAME => frlenard DATE PLOTTED => 22-JUN-2010 TIME PLOTTED => 10:34

NOTES: 1/ Backfill has been completed
2/ Groundwater is encountered at elevation 14.4 m

FOR PLAN VIEW, SEE
"LOG OF TEST BORINGS" 2 OF 13

Caltrans Metric

DIST	COUNTY	ROUTE	KILOMETERS POST TOTAL PROJECT	SHEET No	TOTAL SHEETS
07	LA	5	2.9/4.9	930	1082

REGISTERED CIVIL ENGINEER 2-02-10

6-21-10
PLANS APPROVAL DATE

REGISTERED PROFESSIONAL ENGINEER Haitao Liu No. C66398 Exp. 6/30/2010 CIVIL STATE OF CALIFORNIA

The State of California or its officers or agents shall not be responsible for the accuracy or completeness of electronic copies of this plan sheet.

This LOTB sheet was prepared in accordance with the Caltrans Soil & Rock Logging, Classification, & Presentation Manual (June 2007).

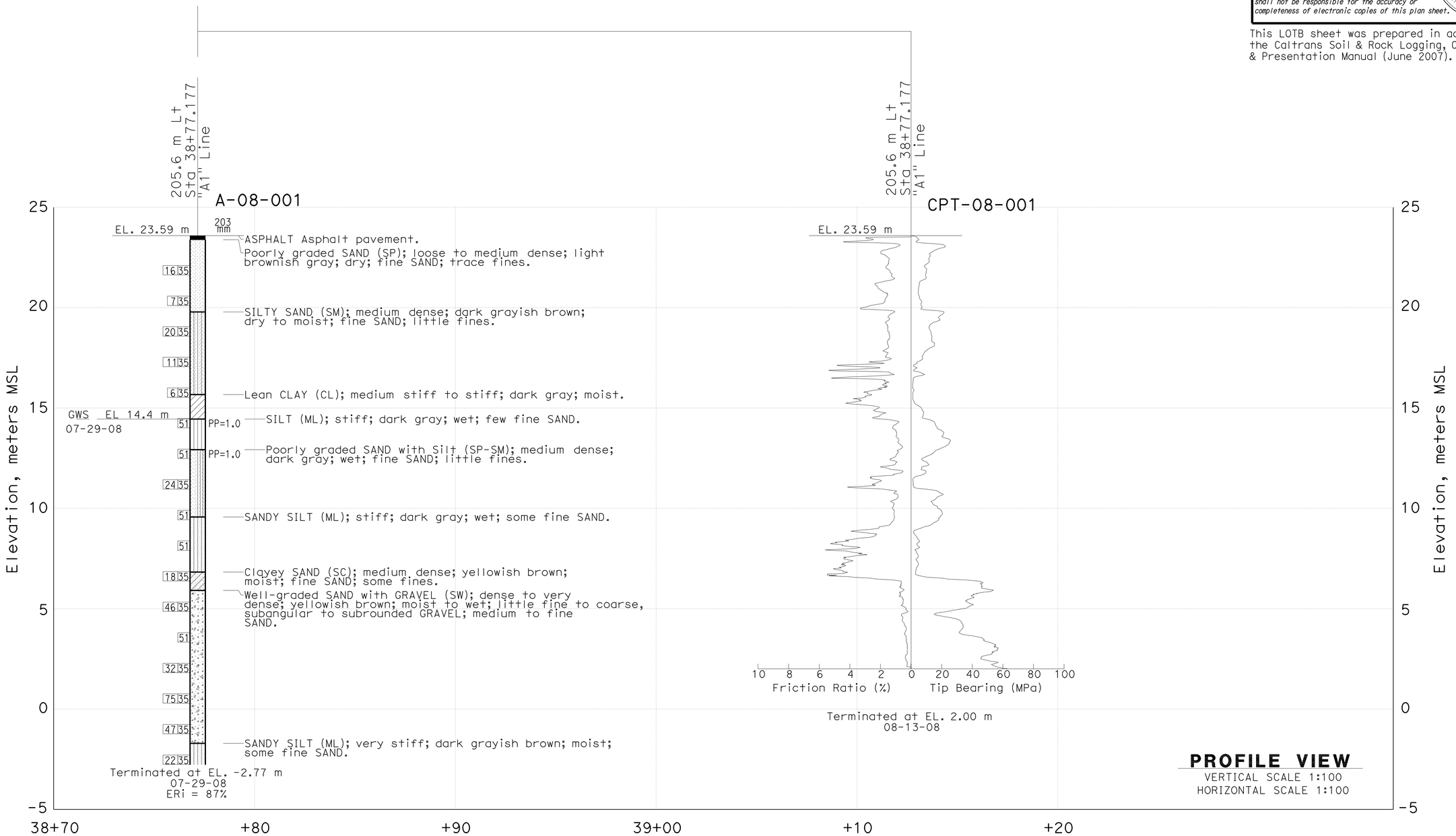

ENGINEERING SERVICES	GEOTECHNICAL SERVICES	STATE OF CALIFORNIA DEPARTMENT OF TRANSPORTATION	DIVISION OF ENGINEERING SERVICES STRUCTURE DESIGN DESIGN BRANCH	BRIDGE NO. 53-3018	CARMENITA RD OC/OH, PHASE 2
FUNCTIONAL SUPERVISOR	DRAWN BY: Phuong Quach-URS	FIELD INVESTIGATION BY:		KILOMETER POST 2.9/3.9	LOG OF TEST BORINGS SHEET 6 OF 13
NAME: Deh-Jeng Jang	CHECKED BY: Sivasubramaniam Pirathiviraj-URS	Sungro Cho			

OGS CIVIL LOG OF TEST BORINGS SHEET

ORIGINAL SCALE IN MILLIMETERS FOR REDUCED PLANS 0 10 20 30 40 50 60 70 80 90 100

CU 59A0590
EA 07-2159C1

DISREGARD PRINTS BEARING EARLIER REVISION DATES

REVISION DATES

SHEET 103 OF 110

FILE => 53-3018__zz-ltb10.dgn

USERNAME => trlenard DATE PLOTTED => 22-JUN-2010 TIME PLOTTED => 10:35

NOTES: 1/ Backfill has been completed
2/ Groundwater is not measured

FOR PLAN VIEW, SEE
"LOG OF TEST BORINGS" 2 OF 13

DIST	COUNTY	ROUTE	KILOMETERS POST TOTAL PROJECT	SHEET No	TOTAL SHEETS
07	LA	5	2.9/4.9	931	1082

Caltrans Metric

REGISTERED CIVIL ENGINEER 2-02-10

6-21-10
PLANS APPROVAL DATE

REGISTERED PROFESSIONAL ENGINEER Haitao Liu No. C66398 Exp. 6/30/2010 CIVIL STATE OF CALIFORNIA

The State of California or its officers or agents shall not be responsible for the accuracy or completeness of electronic copies of this plan sheet.

This LOTB sheet was prepared in accordance with the Caltrans Soil & Rock Logging, Classification, & Presentation Manual (June 2007).

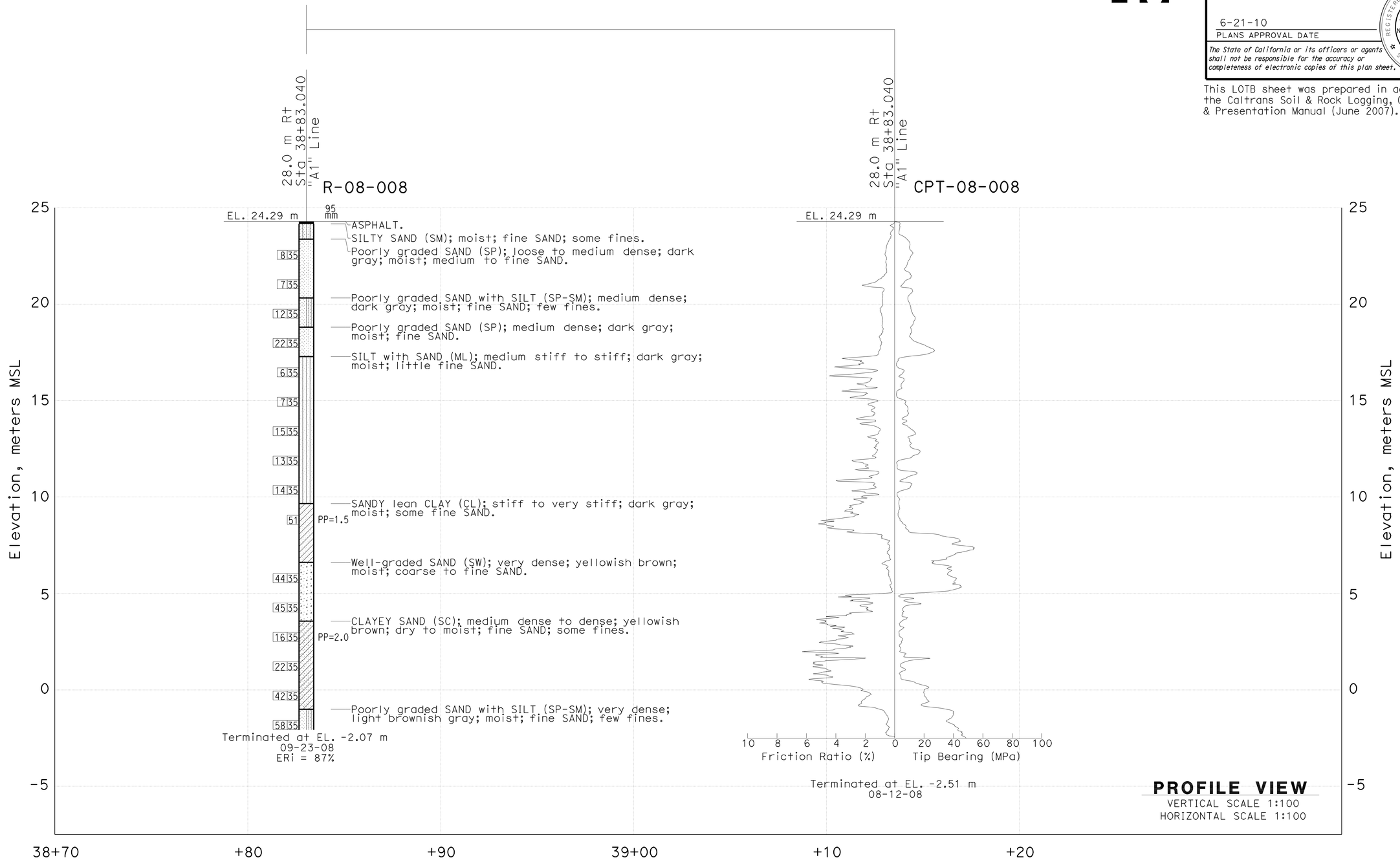

PROFILE VIEW
VERTICAL SCALE 1:100
HORIZONTAL SCALE 1:100

ENGINEERING SERVICES	GEOTECHNICAL SERVICES	STATE OF CALIFORNIA DEPARTMENT OF TRANSPORTATION	DIVISION OF ENGINEERING SERVICES STRUCTURE DESIGN DESIGN BRANCH	BRIDGE NO. 53-3018	CARMENITA RD OC/OH, PHASE 2
FUNCTIONAL SUPERVISOR	DRAWN BY: Phuong Quach-URS	FIELD INVESTIGATION BY:		KILOMETER POST 2.9/3.9	LOG OF TEST BORINGS SHEET 7 OF 13
NAME: Deh-Jeng Jang	CHECKED BY: Sivasubramaniam Pirathiviraj-URS	Sungro Cho			

OGS CIVIL LOG OF TEST BORINGS SHEET

ORIGINAL SCALE IN MILLIMETERS FOR REDUCED PLANS 0 10 20 30 40 50 60 70 80 90 100

CU 59A0590
EA 07-2159C1

DISREGARD PRINTS BEARING EARLIER REVISION DATES

REVISION DATES

SHEET 104 OF 110

FILE => 53-3018__zz-ltb11.dgn

USERNAME => trlenard DATE PLOTTED => 22-JUN-2010 TIME PLOTTED => 10:35

NOTES: 1/ Backfill has been completed
2/ Groundwater is not measured

FOR PLAN VIEW, SEE
"LOG OF TEST BORINGS" 2 OF 13

DIST	COUNTY	ROUTE	KILOMETERS POST TOTAL PROJECT	SHEET No	TOTAL SHEETS
07	LA	5	2.9/4.9	932	1082

REGISTERED CIVIL ENGINEER 2-02-10

6-21-10
PLANS APPROVAL DATE

REGISTERED PROFESSIONAL ENGINEER Haitao Liu No. C66398 Exp. 6/30/2010 CIVIL STATE OF CALIFORNIA

The State of California or its officers or agents shall not be responsible for the accuracy or completeness of electronic copies of this plan sheet.

This LOTB sheet was prepared in accordance with the Caltrans Soil & Rock Logging, Classification, & Presentation Manual (June 2007).

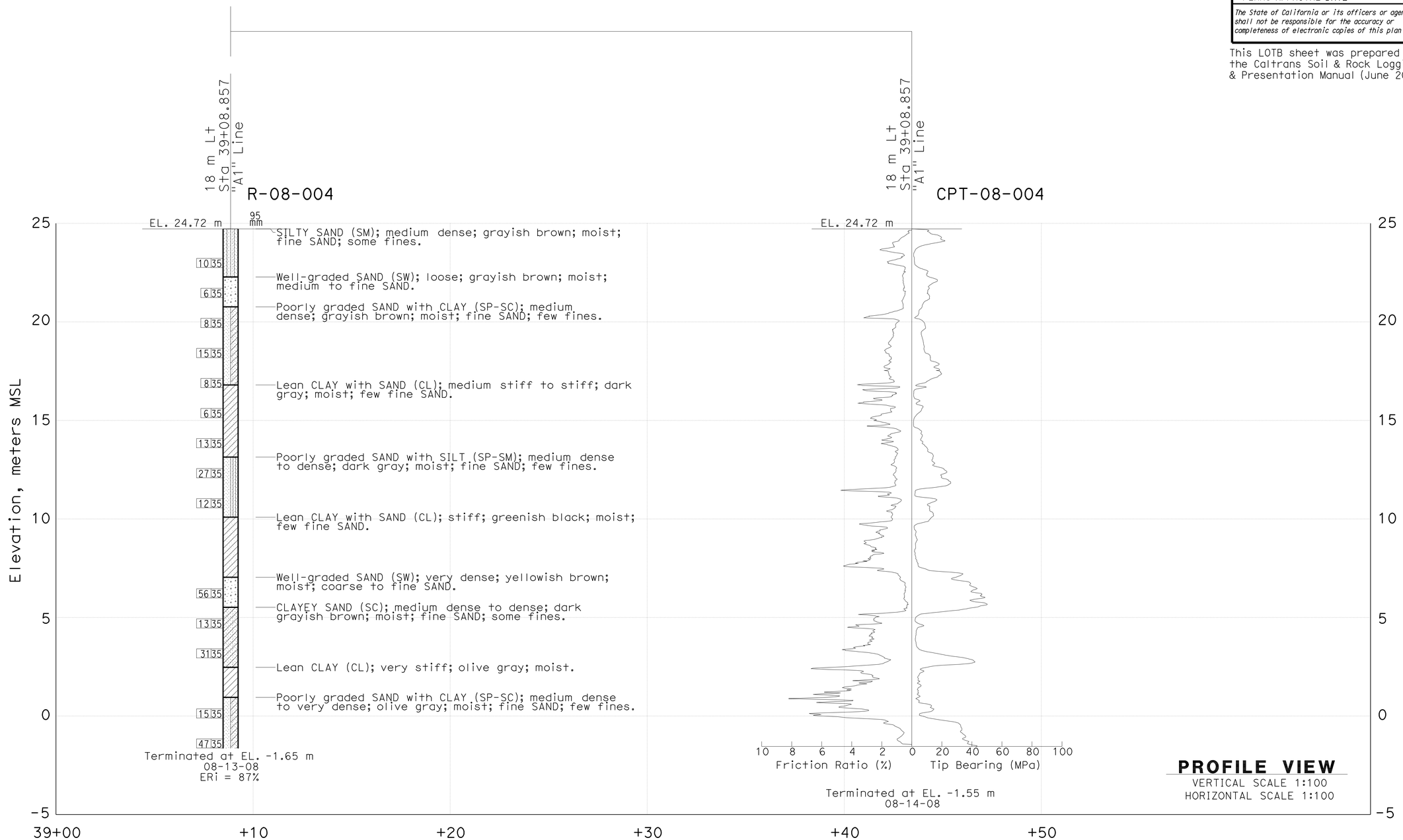

ENGINEERING SERVICES	GEOTECHNICAL SERVICES	STATE OF CALIFORNIA DEPARTMENT OF TRANSPORTATION	DIVISION OF ENGINEERING SERVICES STRUCTURE DESIGN	BRIDGE NO. 53-3018	CARMENITA RD OC/OH, PHASE 2
FUNCTIONAL SUPERVISOR	DRAWN BY: Phuong Quach-URS	FIELD INVESTIGATION BY:	DESIGN BRANCH	KILOMETER POST 2.9/3.9	LOG OF TEST BORINGS SHEET 8 OF 13
NAME: Deh-Jeng Jang	CHECKED BY: Sivasubramaniam Pirathiviraj-URS	Sungro Cho			

OGS CIVIL LOG OF TEST BORINGS SHEET

ORIGINAL SCALE IN MILLIMETERS FOR REDUCED PLANS 0 10 20 30 40 50 60 70 80 90 100

CU 59A0590
EA 07-2159C1

DISREGARD PRINTS BEARING EARLIER REVISION DATES

REVISION DATES

SHEET 105 OF 110

FILE => 53-3018__zz-ltb12.dgn

USERNAME => trlenard DATE PLOTTED => 22-JUN-2010 TIME PLOTTED => 10:35

NOTES: 1/ Backfill has been completed
2/ Groundwater is not measured

DIST	COUNTY	ROUTE	KILOMETERS POST TOTAL PROJECT	SHEET No	TOTAL SHEETS
07	LA	5	2.9/4.9	933	1082

REGISTERED CIVIL ENGINEER 2-02-10

6-21-10
PLANS APPROVAL DATE

REGISTERED PROFESSIONAL ENGINEER Haitao Liu No. C66398 Exp. 6/30/2010 CIVIL STATE OF CALIFORNIA

The State of California or its officers or agents shall not be responsible for the accuracy or completeness of electronic copies of this plan sheet.

This LOTB sheet was prepared in accordance with the Caltrans Soil & Rock Logging, Classification, & Presentation Manual (June 2007).

FOR PLAN VIEW, SEE
"LOG OF TEST BORINGS" 2 OF 13

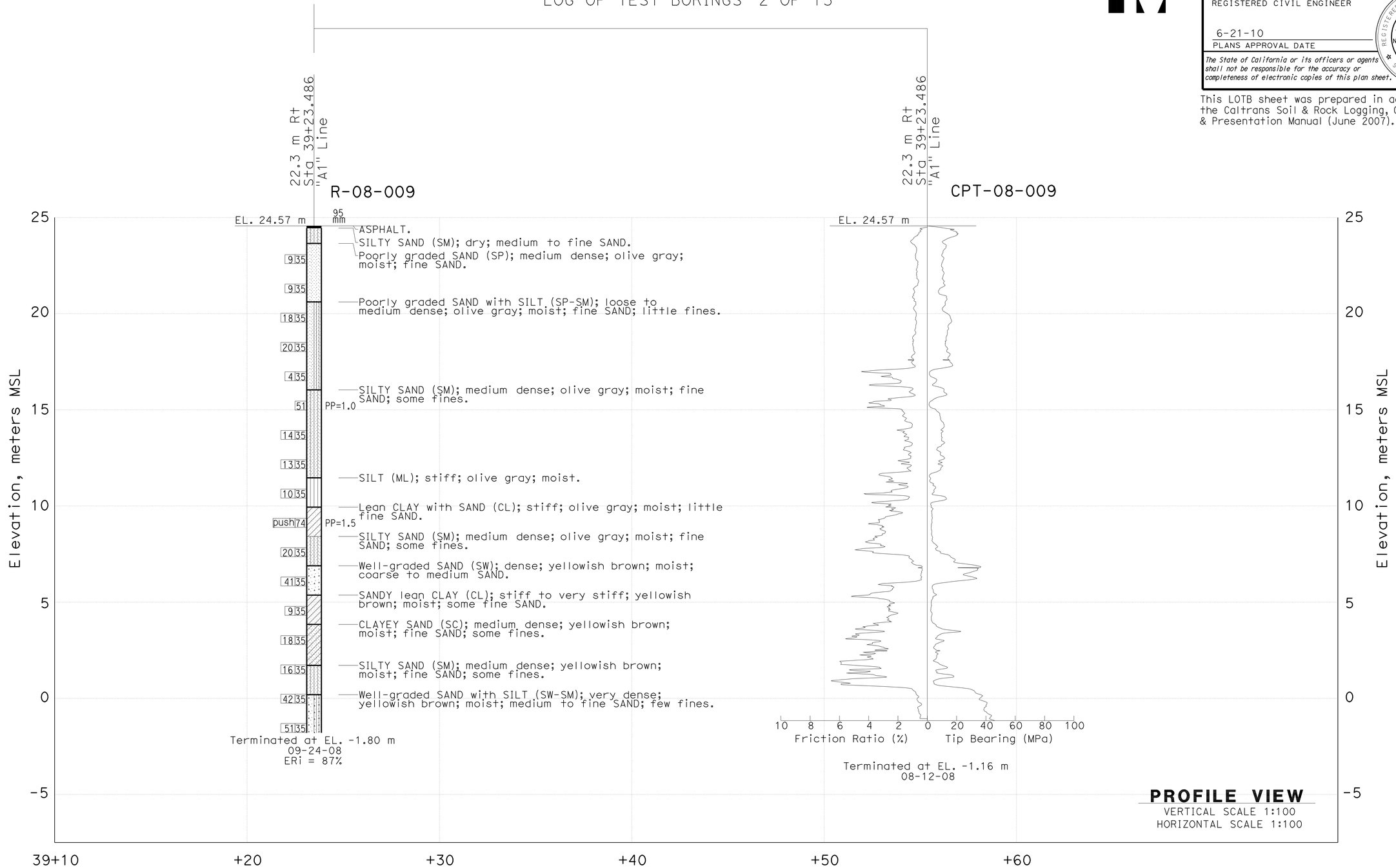

PROFILE VIEW
VERTICAL SCALE 1:100
HORIZONTAL SCALE 1:100

ENGINEERING SERVICES	GEOTECHNICAL SERVICES	STATE OF CALIFORNIA DEPARTMENT OF TRANSPORTATION	DIVISION OF ENGINEERING SERVICES STRUCTURE DESIGN DESIGN BRANCH	BRIDGE NO. 53-3018 / KILOMETER POST 2.9/3.9	CARMENITA RD OC/OH, PHASE 2
FUNCTIONAL SUPERVISOR NAME: Deh-Jeng Jang	DRAWN BY: Phuong Quach-URS / CHECKED BY: Sivasubramaniam Pirathiviraj-URS	FIELD INVESTIGATION BY: Sungro Cho	CU 59A0590 EA 07-2159C1		LOG OF TEST BORINGS SHEET 9 OF 13

OGS CIVIL LOG OF TEST BORINGS SHEET

ORIGINAL SCALE IN MILLIMETERS FOR REDUCED PLANS 0 10 20 30 40 50 60 70 80 90 100

DISREGARD PRINTS BEARING EARLIER REVISION DATES

REVISION DATES

SHEET 106 OF 110

FILE => 53-3018__zz-ltb13.dgn

USERNAME => trlehard DATE PLOTTED => 22-JUN-2010 TIME PLOTTED => 10:35

NOTES: 1/ Backfill has been completed
2/ Groundwater is not measured

DIST	COUNTY	ROUTE	KILOMETERS POST TOTAL PROJECT	SHEET No	TOTAL SHEETS
07	LA	5	2.9/4.9	934	1082

REGISTERED CIVIL ENGINEER 2-02-10

6-21-10
PLANS APPROVAL DATE

REGISTERED PROFESSIONAL ENGINEER Haitao Liu No. C66398 Exp. 6/30/2010 CIVIL STATE OF CALIFORNIA

The State of California or its officers or agents shall not be responsible for the accuracy or completeness of electronic copies of this plan sheet.

This LOTB sheet was prepared in accordance with the Caltrans Soil & Rock Logging, Classification, & Presentation Manual (June 2007).

FOR PLAN VIEW, SEE
"LOG OF TEST BORINGS" 2 OF 13

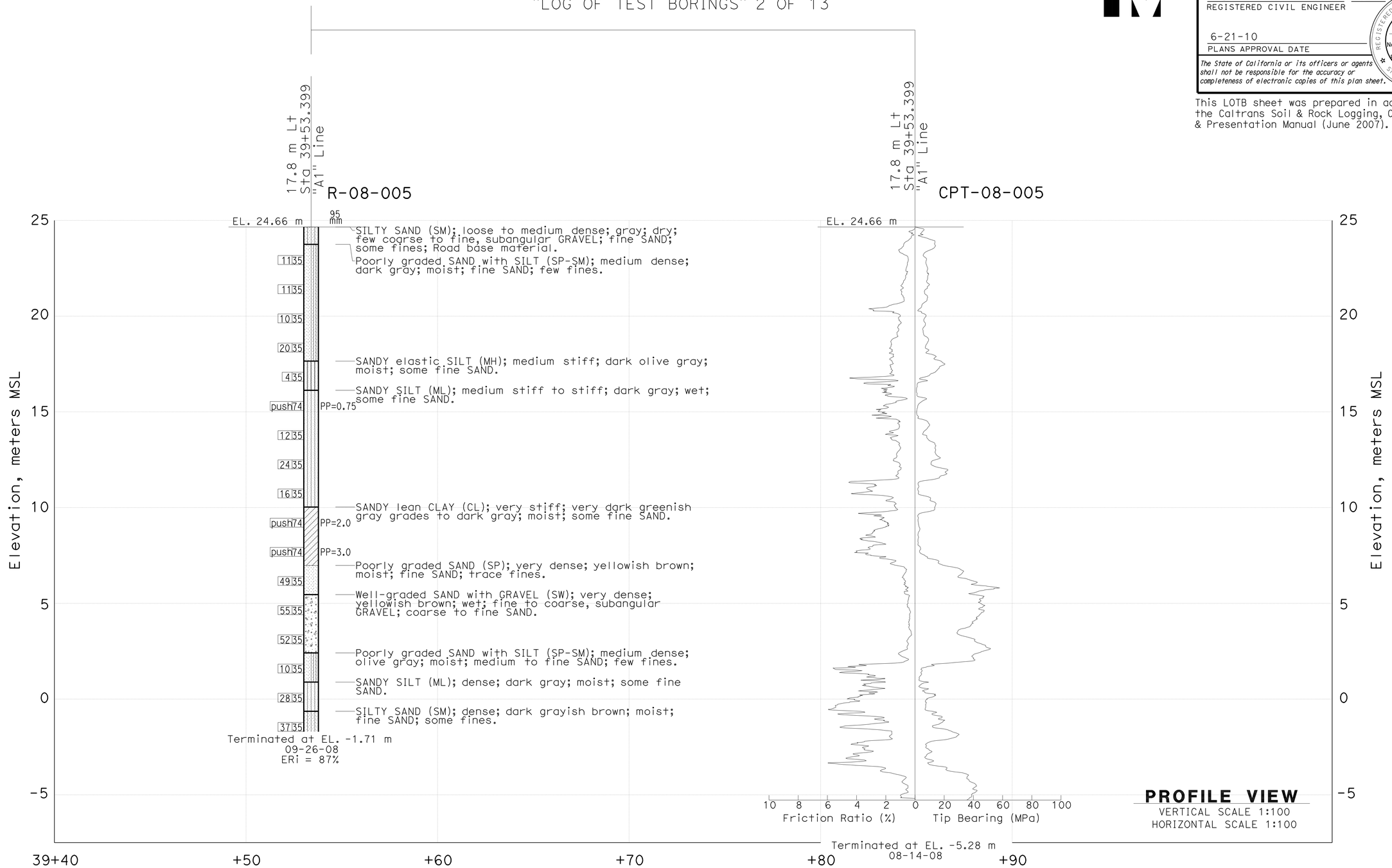

ENGINEERING SERVICES	GEOTECHNICAL SERVICES	STATE OF CALIFORNIA DEPARTMENT OF TRANSPORTATION	DIVISION OF ENGINEERING SERVICES STRUCTURE DESIGN	BRIDGE NO. 53-3018	CARMENITA RD OC/OH, PHASE 2
FUNCTIONAL SUPERVISOR NAME: Deh-Jeng Jang	DRAWN BY: Phuong Quach-URS CHECKED BY: Sivasubramaniam Pirathiviraj-URS	FIELD INVESTIGATION BY: Sungro Cho	DESIGN BRANCH	KILOMETER POST 2.9/3.9	LOG OF TEST BORINGS SHEET 10 OF 13

OGS CIVIL LOG OF TEST BORINGS SHEET

ORIGINAL SCALE IN MILLIMETERS FOR REDUCED PLANS 0 10 20 30 40 50 60 70 80 90 100

CU 59A0590
EA 07-2159C1

DISREGARD PRINTS BEARING EARLIER REVISION DATES

REVISION DATES

SHEET 107 OF 110

FILE => 53-3018__zz-ltb14.dgn

USERNAME => jtrenard DATE PLOTTED => 22-JUN-2010 TIME PLOTTED => 10:35

NOTES: 1/ Backfill has been completed
2/ Groundwater is not measured

DIST	COUNTY	ROUTE	KILOMETERS POST TOTAL PROJECT	SHEET No	TOTAL SHEETS
07	LA	5	2.9/4.9	935	1082

REGISTERED CIVIL ENGINEER 2-02-10

6-21-10
PLANS APPROVAL DATE

REGISTERED PROFESSIONAL ENGINEER Haitao Liu No. C66398 Exp. 6/30/2010 CIVIL STATE OF CALIFORNIA

The State of California or its officers or agents shall not be responsible for the accuracy or completeness of electronic copies of this plan sheet.

This LOTB sheet was prepared in accordance with the Caltrans Soil & Rock Logging, Classification, & Presentation Manual (June 2007).

FOR PLAN VIEW, SEE
"LOG OF TEST BORINGS" 2 OF 13

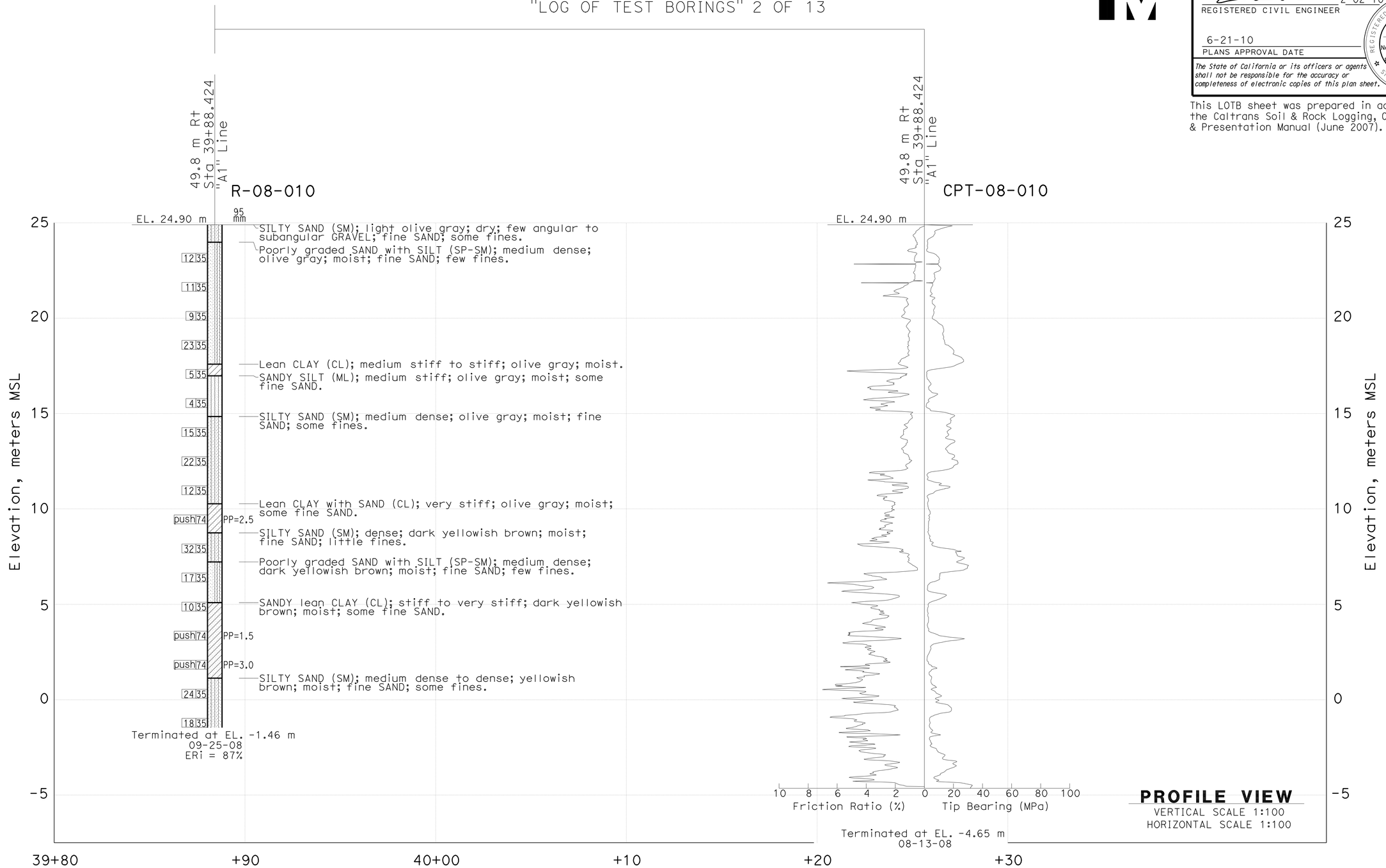

PROFILE VIEW
VERTICAL SCALE 1:100
HORIZONTAL SCALE 1:100

ENGINEERING SERVICES	GEOTECHNICAL SERVICES	STATE OF CALIFORNIA DEPARTMENT OF TRANSPORTATION	DIVISION OF ENGINEERING SERVICES STRUCTURE DESIGN	BRIDGE NO. 53-3018	CARMENITA RD OC/OH, PHASE 2
FUNCTIONAL SUPERVISOR	DRAWN BY: Phuong Quach-URS	FIELD INVESTIGATION BY:	DESIGN BRANCH	KILOMETER POST 2.9/3.9	LOG OF TEST BORINGS SHEET 11 OF 13
NAME: Deh-Jeng Jang	CHECKED BY: Sivasubramaniam Pirathiviraj-URS	Sungro Cho			

OGS CIVIL LOG OF TEST BORINGS SHEET

ORIGINAL SCALE IN MILLIMETERS FOR REDUCED PLANS 0 10 20 30 40 50 60 70 80 90 100

CU 59A0590
EA 07-2159C1

DISREGARD PRINTS BEARING EARLIER REVISION DATES

REVISION DATES

SHEET 108 OF 110

FILE => 53-3018__zz-ltb15.dgn

USERNAME => friehard DATE PLOTTED => 22-JUN-2010 TIME PLOTTED => 10:35

NOTES: 1/ Backfill has been completed
2/ Groundwater is not measured

FOR PLAN VIEW, SEE
"LOG OF TEST BORINGS" 2 OF 13

DIST	COUNTY	ROUTE	KILOMETERS POST TOTAL PROJECT	SHEET No	TOTAL SHEETS
07	LA	5	2.9/4.9	936	1082

REGISTERED CIVIL ENGINEER 2-02-10

6-21-10
PLANS APPROVAL DATE

REGISTERED PROFESSIONAL ENGINEER
Haitao Liu
No. C66398
Exp. 6/30/2010
CIVIL
STATE OF CALIFORNIA

The State of California or its officers or agents shall not be responsible for the accuracy or completeness of electronic copies of this plan sheet.

This LOTB sheet was prepared in accordance with the Caltrans Soil & Rock Logging, Classification, & Presentation Manual (June 2007).

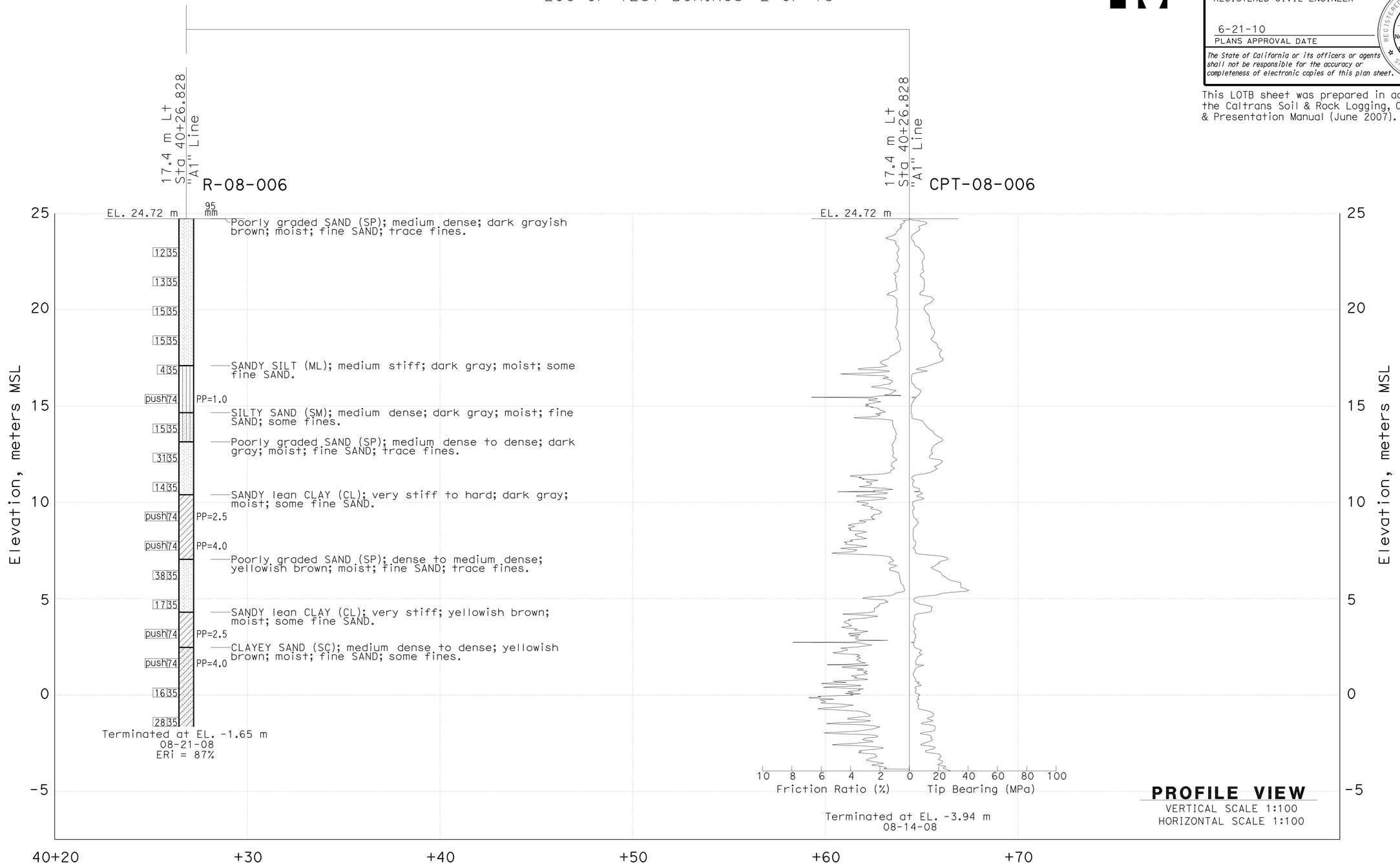

PROFILE VIEW
VERTICAL SCALE 1:100
HORIZONTAL SCALE 1:100

ENGINEERING SERVICES	GEOTECHNICAL SERVICES	STATE OF CALIFORNIA DEPARTMENT OF TRANSPORTATION	DIVISION OF ENGINEERING SERVICES STRUCTURE DESIGN DESIGN BRANCH	BRIDGE NO. 53-3018 / KILOMETER POST 2.9/3.9	CARMENITA RD OC/OH, PHASE 2
FUNCTIONAL SUPERVISOR NAME: Deh-Jeng Jang	DRAWN BY: Phuong Quach-URS / CHECKED BY: Sivasubramaniam Pirathiviraj-URS	FIELD INVESTIGATION BY: Sungro Cho			LOG OF TEST BORINGS SHEET 12 OF 13

OGS CIVIL LOG OF TEST BORINGS SHEET

ORIGINAL SCALE IN MILLIMETERS FOR REDUCED PLANS 0 10 20 30 40 50 60 70 80 90 100

CU 59A0590
EA 07-2159C1

DISREGARD PRINTS BEARING EARLIER REVISION DATES

REVISION DATES

SHEET 109 OF 110

FILE => 53-3018__zz-ltb16.dgn

USERNAME => trienard DATE PLOTTED => 22-JUN-2010 TIME PLOTTED => 10:35

NOTES: 1/ Backfill has been completed
2/ Groundwater is encountered at elevation 13.7 m

DIST	COUNTY	ROUTE	KILOMETERS POST TOTAL PROJECT	SHEET No	TOTAL SHEETS
07	LA	5	2.9/4.9	937	1082

REGISTERED CIVIL ENGINEER 2-02-10

6-21-10
PLANS APPROVAL DATE

REGISTERED PROFESSIONAL ENGINEER Haitao Liu No. C66398 Exp. 6/30/2010 CIVIL STATE OF CALIFORNIA

The State of California or its officers or agents shall not be responsible for the accuracy or completeness of electronic copies of this plan sheet.

This LOTB sheet was prepared in accordance with the Caltrans Soil & Rock Logging, Classification, & Presentation Manual (June 2007).

FOR PLAN VIEW, SEE
"LOG OF TEST BORINGS" 2 OF 13

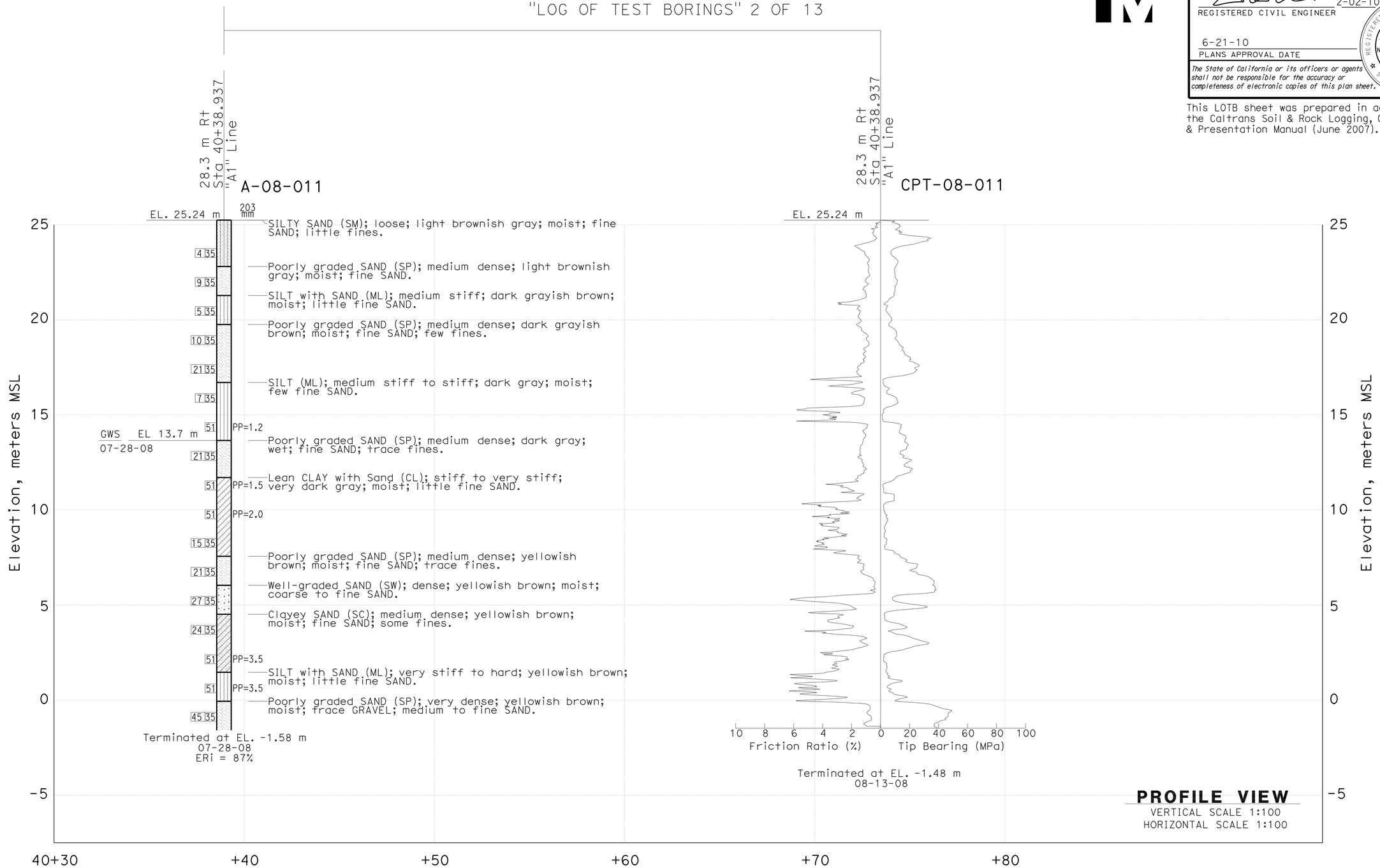

PROFILE VIEW
VERTICAL SCALE 1:100
HORIZONTAL SCALE 1:100

ENGINEERING SERVICES	GEOTECHNICAL SERVICES	STATE OF CALIFORNIA DEPARTMENT OF TRANSPORTATION	DIVISION OF ENGINEERING SERVICES STRUCTURE DESIGN DESIGN BRANCH	BRIDGE NO. 53-3018	CARMENITA RD OC/OH, PHASE 2
FUNCTIONAL SUPERVISOR	DRAWN BY: Phuong Quach-URS	FIELD INVESTIGATION BY:		KILOMETER POST 2.9/3.9	LOG OF TEST BORINGS SHEET 13 OF 13
NAME: Deh-Jeng Jang	CHECKED BY: Sivasubramaniam Pirathiviraj-URS	Sungro Cho			

OGS CIVIL LOG OF TEST BORINGS SHEET

ORIGINAL SCALE IN MILLIMETERS FOR REDUCED PLANS 0 10 20 30 40 50 60 70 80 90 100

CU 59A0590
EA 07-2159C1

DISREGARD PRINTS BEARING EARLIER REVISION DATES

REVISION DATES

SHEET 110 OF 110

FILE => 53-3018__zz-ltb17.dgn

USERNAME => trlenard DATE PLOTTED => 22-JUN-2010 TIME PLOTTED => 10:35

ARCHITECTURAL ABBREVIATIONS

&	AND
∟	ANGLE
℄	CENTER LINE
Ø	DIAMETER OR ROUND
□	SQUARE
d	PENNY
°	DEGREE
AB	ANCHOR BOLT
ABUT	ABUTMENT
ABV	ABOVE
AC	ASPHALT CONCRETE
ACOUS	ACOUSTICAL
ADJ	ADJUSTABLE
ALT	ALTERNATE
ALUM	ALUMINUM
APA	AMERICAN PLYWOOD ASSOCIATION
ARCH	ARCHITECTURAL, ARCHITECT
ASPH	ASPHALT
BD	BOARD
BIT	BITUMINOUS
BLDG	BUILDING
BLK	BLOCK
BLKG	BLOCKING
BM	BEAM
BN	BOUNDARY NAILING
BOT	BOTTOM
BR	BRIDGE
BTM	BOTTOM
BTWN	BETWEEN
BUR	BUILT-UP-ROOFING
CJ	CONTROL JOINT
CL	CHAIN LINK
CAB	CABINET
CB	CATCH BASIN
CEM	CEMENT
CER	CERAMIC
CH	CLOTHES HOOK
CIDH	CAST IN DRILLED HOLE
CIP	CAST IN PLACE
CKBD	CHALKBOARD
CLG	CEILING
CMU	CONCRETE MASONRY UNIT
CLO	CLOSET
CLR	CLEAR
COL	COLUMN
CONC	CONCRETE
CONN	CONNECTION
CONST	CONSTRUCTION
CONT	CONTINUOUS
CORR	CORRIDOR
CPT	CARPET
CT	CERAMIC TILE
CTR	CENTER
CTSK	COUNTERSUNK
CY	CUBIC YARD
DBL	DOUBLE
DEPT	DEPARTMENT
DET	DETAIL
DF	DOUGLAS FIR
DIA	DIAMETER
DIM	DIMENSION
DN	DOWN
DP	DEEP
DR	DOOR
DS	DOWNSPOUT
DWG	DRAWING
DWR	DRAWER
(E)	EXISTING
E	EAST
EA	EACH
EF	EXHAUST FAN
EHD	ELECTRIC HAND DRYER
EJ	EXPANSION JOINT
EL	ELEVATION (HEIGHT)
ELEC	ELECTRICAL
ELEV	ELEVATION (VIEW)
ELVR	ELEVATOR
EMER	EMERGENCY
ENCL	ENCLOSURE
EP	EDGE OF PAVEMENT
EQ	EQUAL
EPB	ELECTRICAL PANELBOARD
EQUIP	EQUIPMENT
ESCL	ESCALATOR
ETW	EDGE OF TRAVEL WAY
EWC	ELECTRIC WATER COOLER
EXP	EXPANSION
EXPO	EXPOSED, EXPOSURE
EXT	EXTERIOR
FD	FLOOR DRAIN
FDN	FOUNDATION
FE	FIRE EXTINGUISHER
FEC	FIRE EXTINGUISHER CABINET
FF	FINISH FLOOR
FG	FINISH GRADE
FH	FIRE HYDRANT
FHC	FIRE HOSE CABINET
FHMS	FLATHEAD METAL SCREW
FHWS	FLATHEAD WOOD SCREW
FIN	FINISH
FJ	FLOOR JOIST
FLASH	FLASHING
FLR	FLOOR
FLUOR	FLUORESCENT
FOC	FACE OF CONCRETE
FOF	FACE OF FINISH
FOM	FACE OF MASONRY
FOS	FACE OF STUD
FRMG	FRAMING
FRPP	FIBERGLASS REINFORCED PLASTIC PANEL
FT	FEET, FOOT
FTG	FOOTING
FURR	FURRING
FWY	FREEWAY
GA	GAUGE
GAL	GALLON
GALV	GALVANIZED
GB	GRAB BAR
GI	GALVANIZED IRON
GL	GLASS
GLM	GLUE LAMINATED MEMBER
GLZ	GLAZING
GR	GRADE
GSM	GALVANIZED SHEET METAL
GYP	GYPSUM
GYP SHTG	GYPSUM SHEATHING
HB	HOSE BIB
HC	HOLLOW CORE
HD	HEAD, HOLD DOWN
HDR	HEADER
HDWD	HARDWOOD
HDWR	HARDWARE
HEX	HEXAGONAL
HF	HEMLOCK-FIR
HGR	HANGER
HM	HOLLOW METAL
HORIZ	HORIZONTAL
HP	HIGH POINT
HR	HOUR
HSB	HIGH STRENGTH BOLT
HT	HEIGHT
HVAC	HEATING, VENTILATING, AIR CONDITIONING
HWY	HIGHWAY
ID	INSIDE DIAMETER
IN	INCH
INFO	INFORMATION
INSUL	INSULATION
INT	INTERIOR
JAN	JANITOR
JB	JUNCTION BOX
JH	JOIST HANGER
JST	JOIST
JT	JOINT
KIT	KITCHEN
LAB	LABORATORY
LAV	LAVATORY
LBS	POUNDS
LF	LINEAR FEET
LKR	LOCKER
LLV	LONG LEG VERTICAL
LOL	LAYOUT LINE
LPG	LIQUIFIED PETROLEUM GAS
LS	LAG SCREW
M	METER
MAT	MATERIAL
MAX	MAXIMUM
MB	MACHINE BOLT
MBR	MEMBER
MECH	MECHANICAL
MEMB	MEMBRANE
MET	METAL
MFR	MANUFACTURER
MH	MAN HOLE
MIN	MINIMUM
MIR	MIRROR
MISC	MISCELLANEOUS
mm	MILLIMETER
MO	MASONRY OPENING
MOD	MODIFIED
MTD	MOUNTED
MUL	MULLION
N	NORTH
NB	NORTH BOUND
NIC	NOT IN CONTRACT
NO	NUMBER
NOM	NOMINAL
NTS	NOT TO SCALE
OBSC	OBSCURE
OC	OVERCROSSING
OD	OUTSIDE DIAMETER
OFF	OFFICE
OFD	OVERFLOW DRAIN
OG	ORIGINAL GROUND
OH	OVERHEAD
OHWS	OVALHEAD WOOD SCREW
OP	OPERATIONS
OPNG	OPENING
OPP	OPPOSITE
OPT	OPTION, OPTIONAL
P	PITCH
PB	POST BASE
PC	POST CAP
PCC	PORTLAND CEMENT CONCRETE
PDF	POWDER DRIVEN FASTENERS
PH	PHILLIPS HEAD
PL	PLATE
PLAM	PLASTIC LAMINATE
PLAS	PLASTER
PLYWD	PLYWOOD
PMF	PRESSED METAL FRAME
PR	PAIR
PRTN	PARTITION
PT	POINT
PTD	PAPER TOWEL DISPENSER
PTD/R	PAPER TOWEL DISPENSER /RECEPTACLE
PVC	POLYVINYL CHLORIDE
PWB	PREFABRICATED WOOD I BEAM
QT	QUARRY TILE
(R)	RELOCATED
R	RADIUS, RISER
R/W	RIGHT OF WAY
RD	ROAD
RDWD	REDWOOD
REF	REFERENCE
REFG	REFRIGERATOR
REINF	REINFORCED(ING)
REQ	REQUIRED
RFG	ROOFING
RFSWN	ROUGHSAWN
RH	ROUND HEAD
RHWS	ROUND HEAD WOOD SCREWS
RJ	ROOF JOIST
RM	ROOM
RO	ROUGH OPENING
RSWN	RESAWN
RTE	ROUTE
RW	RETAINING WALL
S	SOUTH
SB	SOUTH BOUND
SCHED	SCHEDULE
SD	SOAP DISPENSER
SDST	SELF DRILLING SELF TAPPING
SF	SQUARE FEET
SH	SHELF
SHWR	SHOWER
SHT	SHEET
SHTG	SHEATHING
SIM	SIMILAR
SL	SCORE LINE
SMS	SHEET METAL SCREW
SOHD	SECTIONAL OVERHEAD DOOR
SPEC	SPECIFICATION
SPS	STRUCTURAL PLYWOOD SHEATHING
SQ	SQUARE
SRRA	SAFETY ROADSIDE REST AREA
SS	SERVICE SINK
SST	STAINLESS STEEL
STA	STATION
STAG	STAGGER
STD	STANDARD
STL	STEEL
STOR	STORAGE
STRUC	STRUCTURAL
SUSP	SUSPENDED
T	TREAD
T&G	TONGUE & GROOVE
TB	TOLL BOOTH
TEL	TELEPHONE
TEMP	TEMPERED
TER	TERRAZZO
THK	THICK
THLD	THRESHOLD
TJ	TOOLED JOINT
TKBD	TACKBOARD
TN	TOE NAIL
TNVM	TAMPON/NAPKIN VENDING MACHINE
TOC	TOP OF CURB OR CONCRETE
TOP	TOP OF PAVEMENT
TOS	TOE OF SLOPE
TOT	TOTAL
TOW	TOP OF WALL
TS	TUBE STEEL
TSCD	TOILET SEAT COVER DISPENSER
TTD	TOILET TISSUE DISPENSER
TTY	TELETYPEWRITER
TYP	TYPICAL
UNF	UNFINISHED
UON	UNLESS OTHERWISE NOTED
UR	URINAL
VAR	VARIES
VCT	VINYL COMPOSITION TILE
VERT	VERTICAL
VEST	VESTIBULE
VR	VENT RISER
VTR	VENT THRU ROOF
W	WEST
W/	WITH
W/O	WITHOUT
WC	WATER CLOSET
WD	WOOD
WDW	WINDOW
WH	WATER HEATER
WP	WORKING POINT
WR	WATER RESISTANT
WSCT	WAINSCOT
WT	WEIGHT
WTPR	WATERPROOFING
WWF	WELDED WIRE FABRIC
YD	YARD

DIST	COUNTY	ROUTE	KILOMETER POST TOTAL PROJECT	SHEET No	TOTAL SHEETS
07	LA	5	2.9/4.9	938	1082

LICENSED ARCHITECT — DATE 2/02/10

6-21-10
PLANS APPROVAL DATE

LICENSED ARCHITECT H. Javier Chavez 14073 03-31-11 Renewal Date STATE OF CALIFORNIA

The State of California or its officers or agents shall not be responsible for the accuracy or completeness of electronic copies of this plan sheet.

ARCHITECTURAL GENERAL NOTES

1. THE CONTRACTOR SHALL VERIFY ALL CONTROLLING DIMENSIONS AND FIELD CONDITIONS PRIOR TO ORDERING OR FABRICATING ANY MATERIALS OR ASSEMBLIES FOR CONSTRUCTION
2. THE CONTRACTOR SHALL NOTIFY THE ENGINEER IN WRITING OF ANY DISCREPANCIES BETWEEN THESE PLANS AND ACTUAL MEASUREMENTS OR FIELD CONDITIONS PRIOR TO ORDERING OR FABRICATING ANY MATERIALS OR ASSEMBLIES FOR CONSTRUCTION.

SYMBOLS FOR ARCHITECTURAL SHEETS

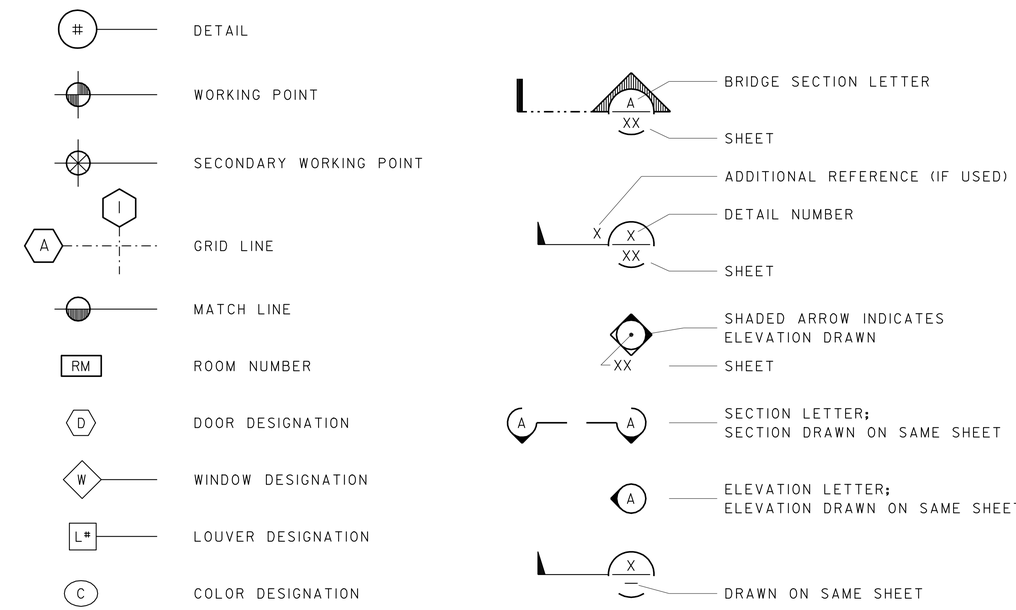

INDEX FOR ARCHITECTURAL SHEETS

A0 ARCHITECTURAL ABBREVIATIONS, SYMBOLS & INDEX
A1 SITE PLAN
A2 ELEVATION AND ARCHITECTURAL MOTIF AT ABUTMENT 1
A3 ELEVATION AND ARCHITECTURAL MOTIF AT ABUTMENT 10
A4 SECTIONS AT ABUTMENTS 1 AND 10
A5 ARCHITECTURAL MOTIF DETAILS AT ABUTMENT 1
A6 ARCHITECTURAL MOTIF DETAILS AT ABUTMENT 10
A7 ELEVATIONS AT RETAINING WALLS 12,13,16,17
A8 PARTIAL ELEVATIONS AT RETAINING WALLS 12,13,16,17
A9 SECTIONS AT RETAINING WALLS 12,13,16,17
A10 ARCHITECTURAL MOTIF AT RETAINING WALLS 12,13,16,17
A11 ARCHITECTURAL MOTIF DETAILS AT RETAINING WALLS 12,13,16,17
A12 ELEVATIONS AT RAMP ABUTMENTS
A13 ELEVATIONS AT RETAINING WALLS 37,38,39,44
A14 ELEVATIONS AT RETAINING WALLS 40,41,42,43
A15 SECTIONS AT RETAINING WALLS 37,38,39,40,41,42,43,44
A16 BARRIER MOTIF DETAILS

DIST	COUNTY	ROUTE	KILOMETER POST TOTAL PROJECT	SHEET No	TOTAL SHEETS
07	LA	5	2.9/4.9	939	1082

LICENSED ARCHITECT — DATE 2/02/10

6-21-10
PLANS APPROVAL DATE

LICENSED ARCHITECT H. Javier Chavez 14073 03-31-11 Renewal Date STATE OF CALIFORNIA

The State of California or its officers or agents shall not be responsible for the accuracy or completeness of electronic copies of this plan sheet.

LEGEND

1. Br. No. 53-3018, "CARMENITA RD OVERCROSSING/OVERHEAD RETAINING WALLS No. 12, No 13, No 16, & No 17
2. Br. No. 53-3019S, RETAINING WALLS No. 37 & 38
3. Br. No. 53-3019K, RETAINING WALLS No. 39 & 44
4. Br. No. 53-3018S, RETAINING WALLS No. 43 & 42
5. Br. No. 53-3018K, RETAINING WALLS No. 40 & 41

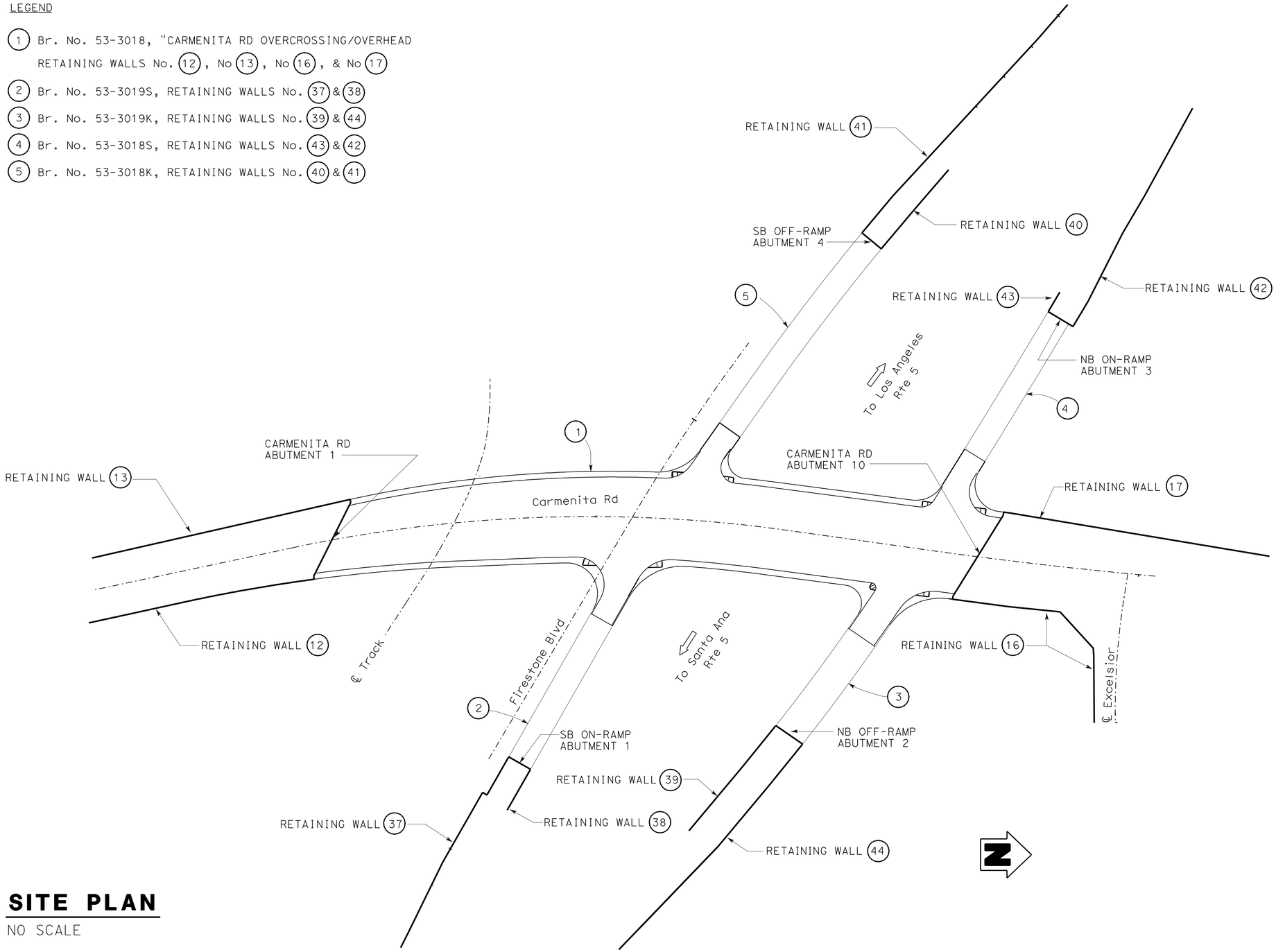

SITE PLAN

NO SCALE

DESIGN	BY H. Chavez	CHECKED I. Tasabia	
DETAILS	BY K. Li	CHECKED H. Chavez	
QUANTITIES	BY	CHECKED	

STATE OF CALIFORNIA DEPARTMENT OF TRANSPORTATION

DIVISION OF ENGINEERING SERVICES BRIDGE ARCHITECTURE AND AESTHETICS

BRIDGE NO. 53-3018
KILOMETER POST 3.88(2.42)

CARMENITA ROAD OVERCROSSING/OVERHEAD
SITE PLAN

SHEET A1

ALL DIMENSIONS ARE IN MILLIMETERS UNLESS OTHERWISE SHOWN

ORIGINAL SCALE IN MILLIMETERS FOR REDUCED PLANS 0 10 20 30 40 50 60 70 80 90 100

CU 07225
EA 2159C1

DISREGARD PRINTS BEARING EARLIER REVISION DATES 9/6/09

REVISION DATES

SHEET 2 OF 17

FILE => 53-3018_-arch02.dgn

USERNAME => trienard DATE PLOTTED => 22-JUN-2010 TIME PLOTTED => 10:36

DIST	COUNTY	ROUTE	KILOMETER POST TOTAL PROJECT	SHEET No	TOTAL SHEETS
07	LA	5	2.9/4.9	940	1082

LICENSED ARCHITECT — DATE 5/24/10

6-21-10
PLANS APPROVAL DATE

LICENSED ARCHITECT H. Javier Chavez 14073 03-31-11 Renewal Date STATE OF CALIFORNIA

The State of California or its officers or agents shall not be responsible for the accuracy or completeness of electronic copies of this plan sheet.

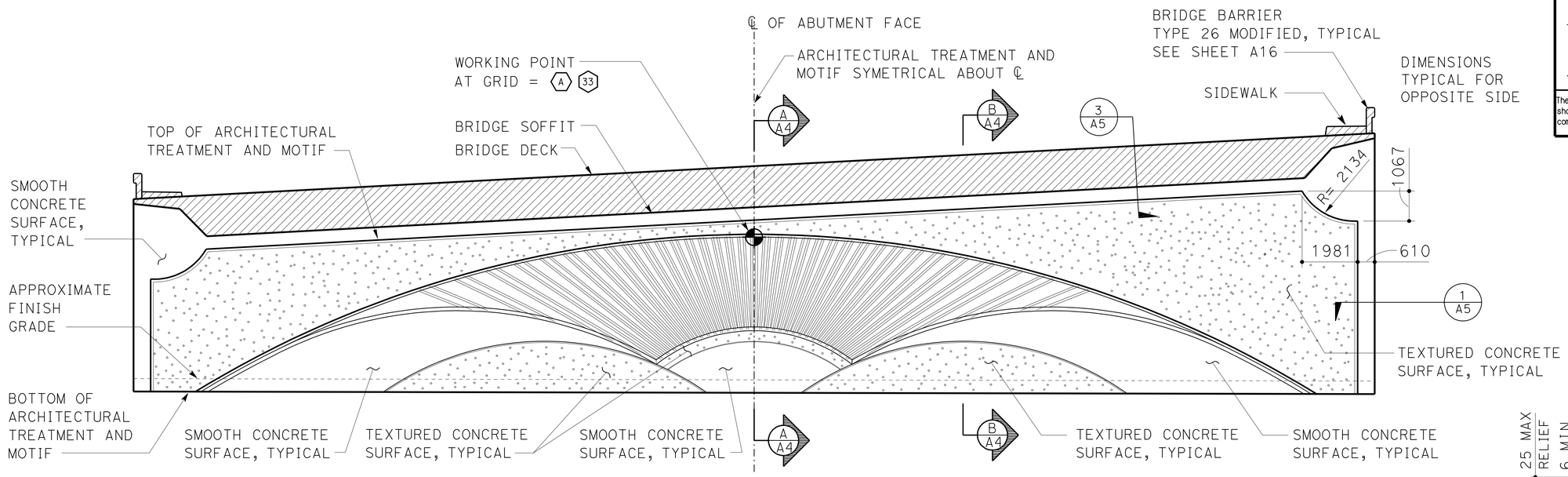

ELEVATION AT ABUTMENT 1

NO SCALE

LEGEND:

- TEXTURED CONCRETE SURFACE = SPLIT SLATE TEXTURE
- SMOOTH CONCRETE SURFACE

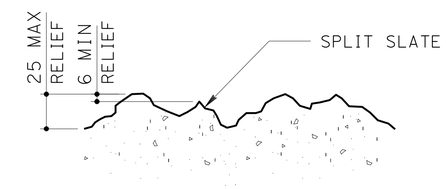

SPLIT SLATE TEXTURE

NO SCALE

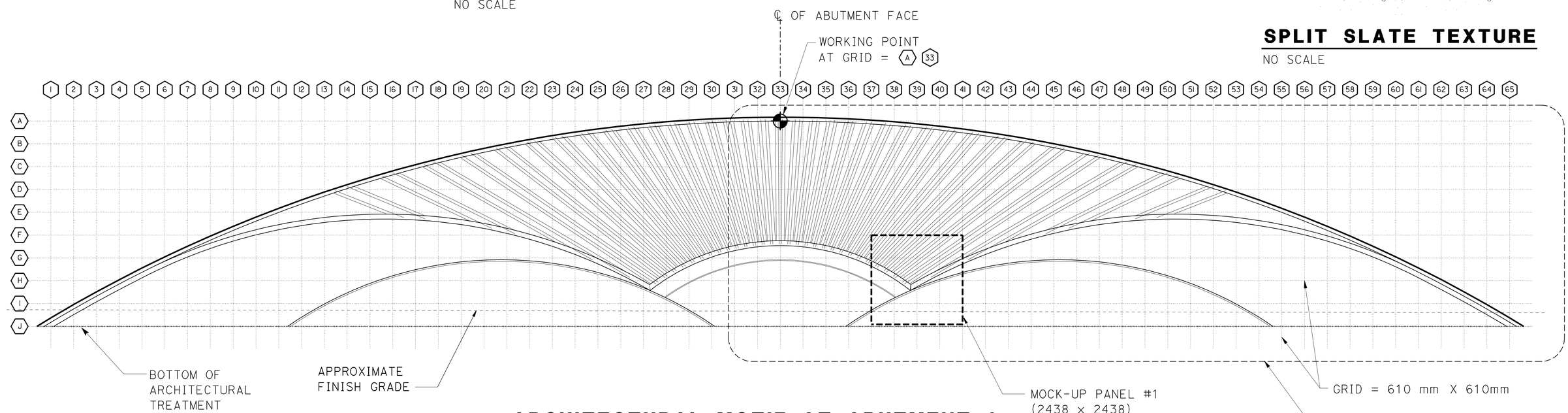

ARCHITECTURAL MOTIF AT ABUTMENT 1

NO SCALE

Caltrans Metric

	BY	CHECKED
DESIGN	H. Chavez	I. Tasabia
DETAILS	K. Li	H. Chavez
QUANTITIES		

STATE OF CALIFORNIA
DEPARTMENT OF TRANSPORTATION

DIVISION OF ENGINEERING SERVICES
BRIDGE ARCHITECTURE AND AESTHETICS

BRIDGE NO. 53-3018
KILOMETER POST 3.88(2.42)

CARMENITA ROAD OVERCROSSING/OVERHEAD
ELEVATION AND ARCHITECTURAL MOTIF AT ABUTMENT 1

SHEET A2

ALL DIMENSIONS ARE IN MILLIMETERS UNLESS OTHERWISE SHOWN

ORIGINAL SCALE IN MILLIMETERS FOR REDUCED PLANS 0 10 20 30 40 50 60 70 80 90 100

CU 07225
EA 2159C1

DISREGARD PRINTS BEARING EARLIER REVISION DATES → 9/15/09 1/6/10 2/3/10

REVISION DATES

SHEET 3 OF 17

FILE => 53-3018_-arch03.dgn

USERNAME => trmikest DATE PLOTTED => 22-JUN-2010 TIME PLOTTED => 13:31

DIST	COUNTY	ROUTE	KILOMETER POST TOTAL PROJECT	SHEET No	TOTAL SHEETS
07	LA	5	2.9/4.9	941	1082

LICENSED ARCHITECT — DATE 2/02/10

6-21-10
PLANS APPROVAL DATE

LICENSED ARCHITECT H. Javier Chavez 14073 03-31-11 Renewal Date STATE OF CALIFORNIA

The State of California or its officers or agents shall not be responsible for the accuracy or completeness of electronic copies of this plan sheet.

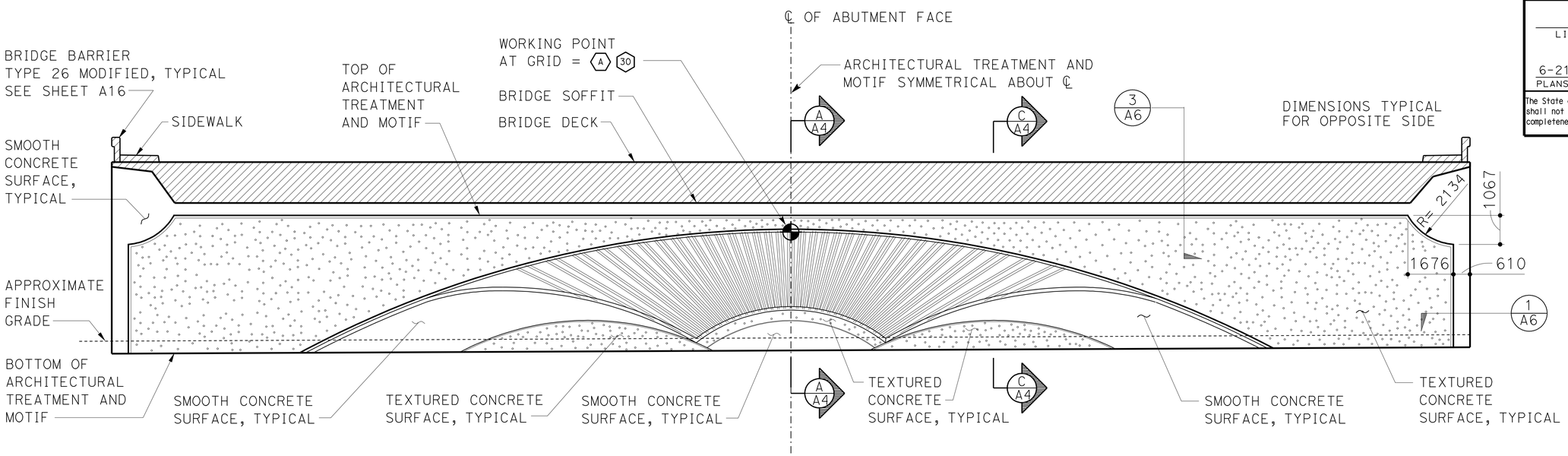

LEGEND:

- TEXTURED CONCRETE SURFACE = SPLIT SLATE TEXTURE, SEE SHEET A2
- SMOOTH CONCRETE SURFACE

ELEVATION AT ABUTMENT 10

NO SCALE

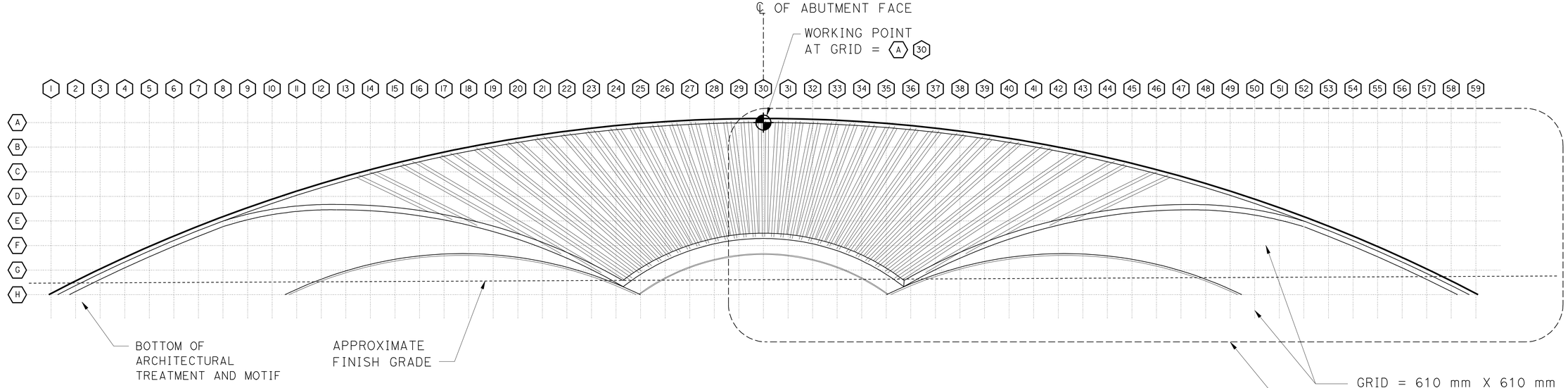

ARCHITECTURAL MOTIF AT ABUTMENT 10

NO SCALE

DESIGN	BY H. Chavez	CHECKED I. Tasabia	
DETAILS	BY K. Li	CHECKED H. Chavez	
QUANTITIES	BY	CHECKED	

STATE OF CALIFORNIA DEPARTMENT OF TRANSPORTATION

DIVISION OF ENGINEERING SERVICES BRIDGE ARCHITECTURE AND AESTHETICS

BRIDGE NO. 53-3018
KILOMETER POST 3.88(2.42)

CARMENITA ROAD OVERCROSSING/OVERHEAD

ELEVATION AND ARCHITECTURAL MOTIF AT ABUTMENT 10

SHEET A3

ALL DIMENSIONS ARE IN MILLIMETERS UNLESS OTHERWISE SHOWN

ORIGINAL SCALE IN MILLIMETERS FOR REDUCED PLANS 0 10 20 30 40 50 60 70 80 90 100

CU 07225
EA 2159C1

DISREGARD PRINTS BEARING EARLIER REVISION DATES → 9/15/09 1/6/10

REVISION DATES

SHEET 4 OF 17

FILE => 53-3018_-arch04.dgn

USERNAME => trmikesl DATE PLOTTED => 22-JUN-2010 TIME PLOTTED => 13:31

DIST	COUNTY	ROUTE	KILOMETER POST TOTAL PROJECT	SHEET No	TOTAL SHEETS
07	LA	5	2.9/4.9	942	1082

NOTE: ALL REFERENCE TO SURFACE DIMENSIONS OF WALL DETAILS ARE FROM DATUM 0 = FACE OF ABUTMENT, TYPICAL

LICENSED ARCHITECT — DATE 2/02/10

6-21-10
PLANS APPROVAL DATE

LICENSED ARCHITECT H. Javier Chavez 14073 03-31-11 Renewal Date STATE OF CALIFORNIA

The State of California or its officers or agents shall not be responsible for the accuracy or completeness of electronic copies of this plan sheet.

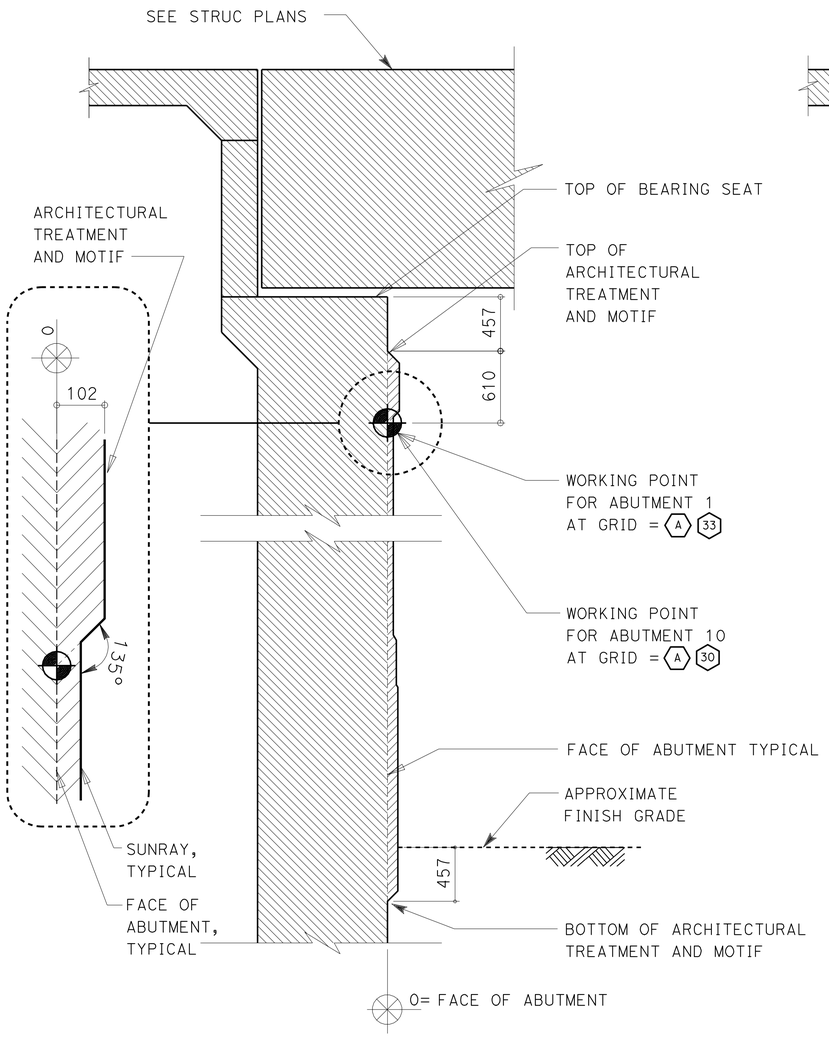

A-A SECTION

NO SCALE

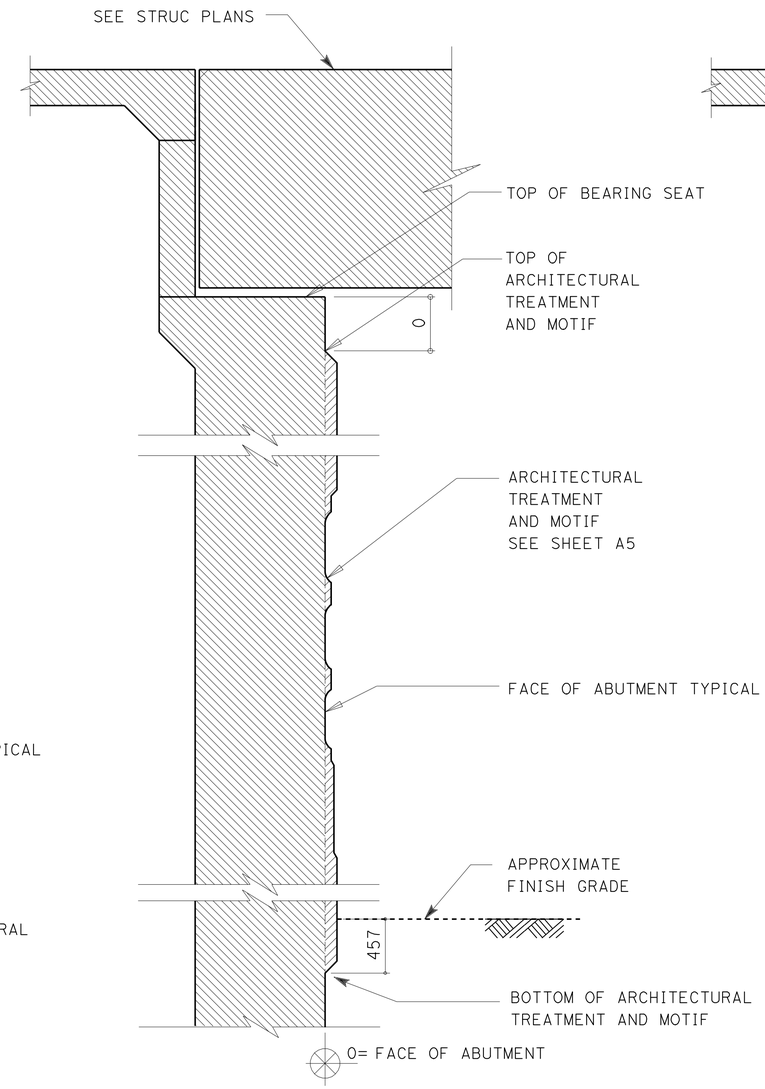

B-B SECTION

NO SCALE

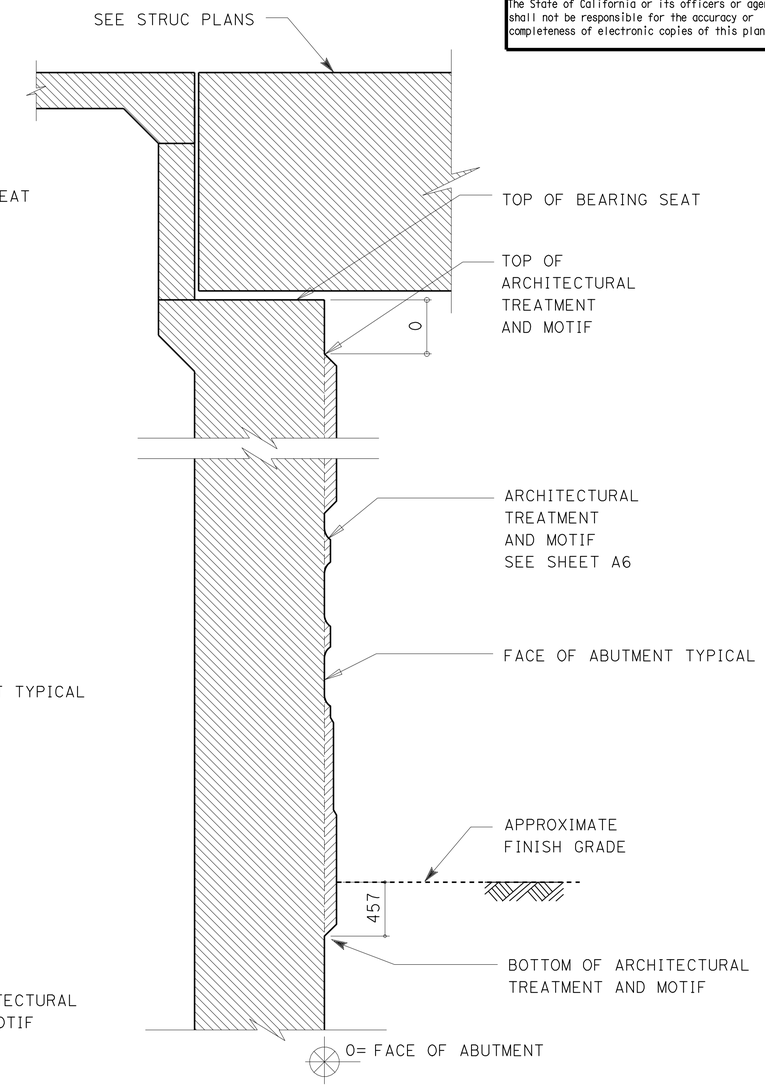

C-C SECTION

NO SCALE

Caltrans Metric

DESIGN	BY H. Chavez	CHECKED I. Tasabia	
DETAILS	BY K. Li	CHECKED H. Chavez	
QUANTITIES	BY	CHECKED	

STATE OF CALIFORNIA
DEPARTMENT OF TRANSPORTATION

DIVISION OF ENGINEERING SERVICES
BRIDGE ARCHITECTURE AND AESTHETICS

BRIDGE NO. 53-3018
KILOMETER POST 3.88(2.42)

CARMENITA ROAD OVERCROSSING/OVERHEAD
SECTIONS AT ABUTMENTS 1 AND 10

SHEET A4

ALL DIMENSIONS ARE IN MILLIMETERS UNLESS OTHERWISE SHOWN

ORIGINAL SCALE IN MILLIMETERS FOR REDUCED PLANS 0 10 20 30 40 50 60 70 80 90 100

CU 07225
EA 2159C1

DISREGARD PRINTS BEARING EARLIER REVISION DATES 9/5/09

REVISION DATES

SHEET 5 OF 17

FILE => 53-3018_-arch05.dgn

USERNAME => trmikesl DATE PLOTTED => 22-JUN-2010 TIME PLOTTED => 13:31

DIST	COUNTY	ROUTE	KILOMETER POST TOTAL PROJECT	SHEET No	TOTAL SHEETS
07	LA	5	2.9/4.9	943	1082

LICENSED ARCHITECT — DATE 2/02/10

6-21-10
PLANS APPROVAL DATE

The State of California or its officers or agents shall not be responsible for the accuracy or completeness of electronic copies of this plan sheet.

LICENSED ARCHITECT H. Javier Chavez 14073 03-31-11 Renewal Date STATE OF CALIFORNIA

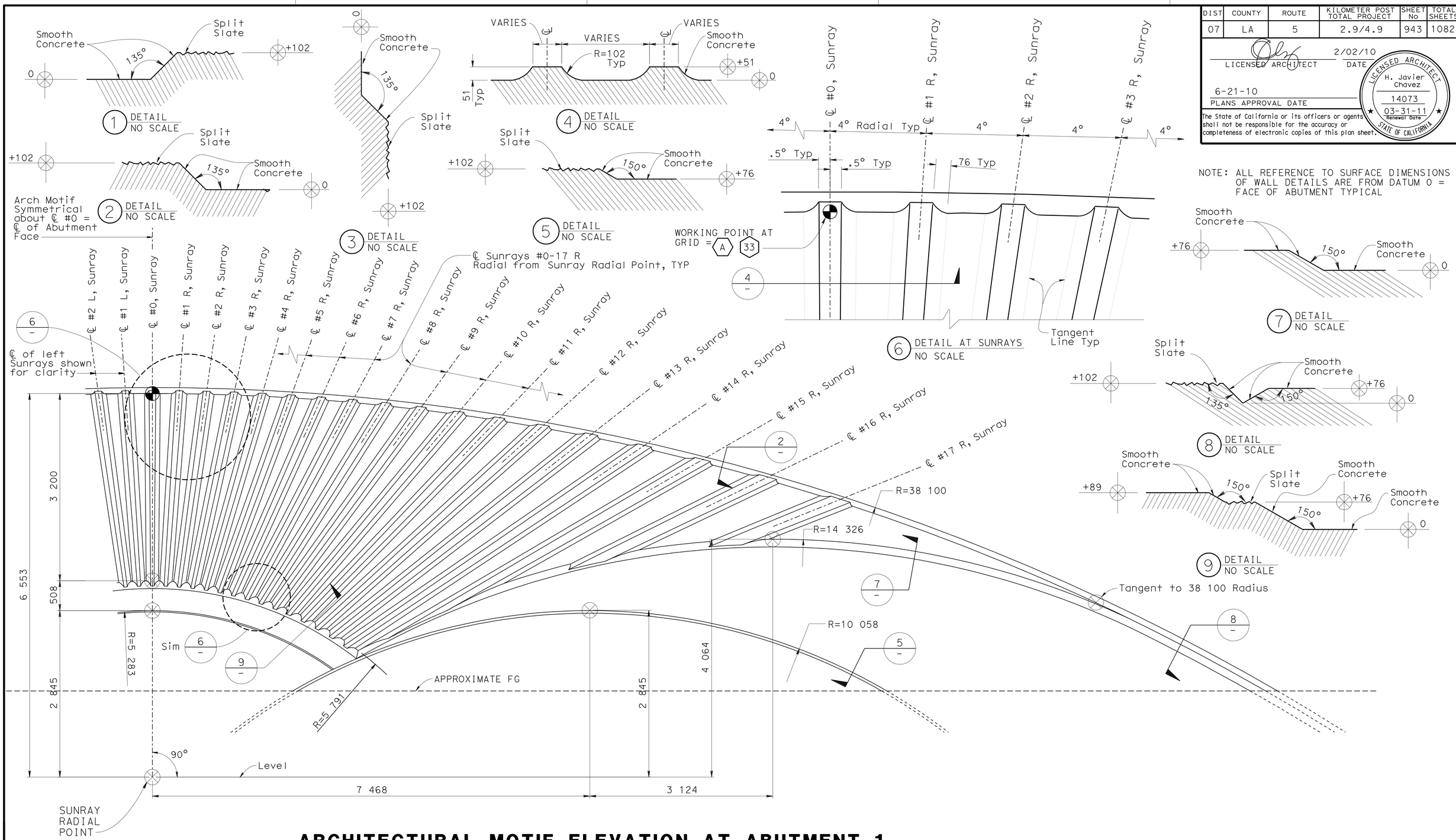

ARCHITECTURAL MOTIF ELEVATION AT ABUTMENT 1

NO SCALE

DESIGN	BY H. Chavez	CHECKED I. Tasabia	
DETAILS	BY K. Li	CHECKED H. Chavez	
QUANTITIES	BY	CHECKED	

STATE OF CALIFORNIA DEPARTMENT OF TRANSPORTATION

DIVISION OF ENGINEERING SERVICES BRIDGE ARCHITECTURE AND AESTHETICS

BRIDGE NO. 53-3018
KILOMETER POST 3.88(2.42)

CARMENITA ROAD OVERCROSSING/OVERHEAD

ARCHITECTURAL MOTIF DETAILS AT ABUTMENT 1

SHEET A5

Caltrans Metric

ALL DIMENSIONS ARE IN MILLIMETERS UNLESS OTHERWISE SHOWN

ORIGINAL SCALE IN MILLIMETERS FOR REDUCED PLANS 0 10 20 30 40 50 60 70 80 90 100

CU 07225
EA 2159C1

DISREGARD PRINTS BEARING EARLIER REVISION DATES 9/8/09 2/00/10

REVISION DATES

SHEET 6 OF 17

FILE => 53-3018_-arch06.dgn

USERNAME => trmikesl DATE PLOTTED => 22-JUN-2010 TIME PLOTTED => 13:31

DIST	COUNTY	ROUTE	KILOMETER POST TOTAL PROJECT	SHEET No	TOTAL SHEETS
07	LA	5	2.9/4.9	944	1082

LICENSED ARCHITECT — DATE 2/02/10

6-21-10
PLANS APPROVAL DATE

LICENSED ARCHITECT H. Javier Chavez 14073 03-31-11 Renewal Date STATE OF CALIFORNIA

The State of California or its officers or agents shall not be responsible for the accuracy or completeness of electronic copies of this plan sheet.

NOTE: ALL REFERENCE TO SURFACE DIMENSIONS OF WALL DETAILS ARE FROM DATUM 0 = FACE OF ABUTMENT TYPICAL

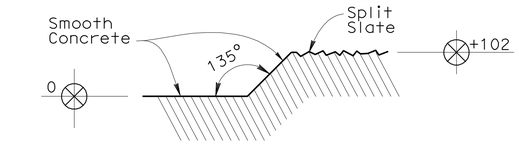

1 DETAIL NO SCALE

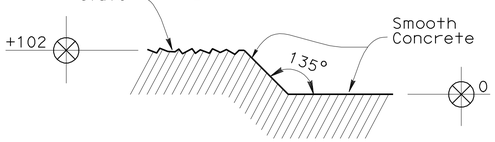

2 DETAIL NO SCALE

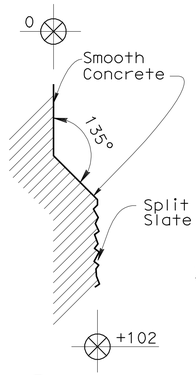

3 DETAIL NO SCALE

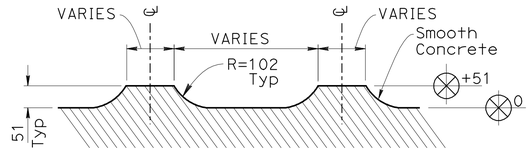

4 DETAIL NO SCALE

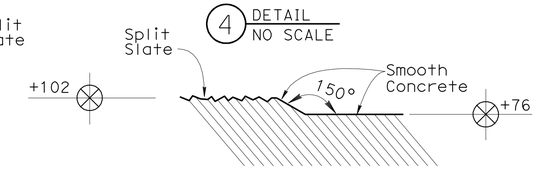

5 DETAIL NO SCALE

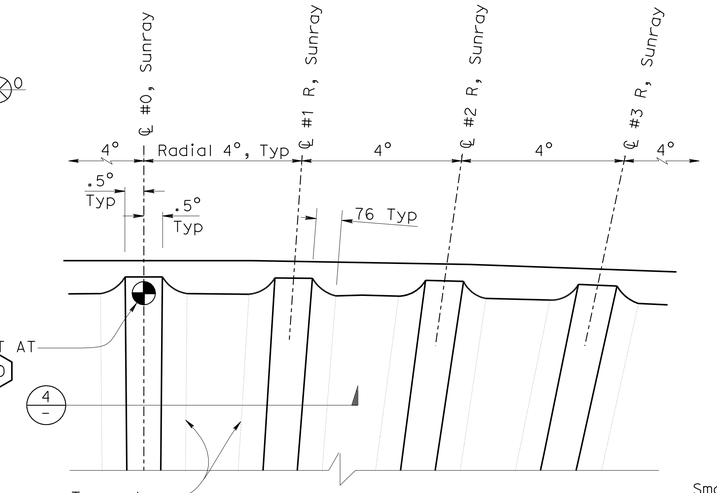

6 DETAIL AT SUNRAYS NO SCALE

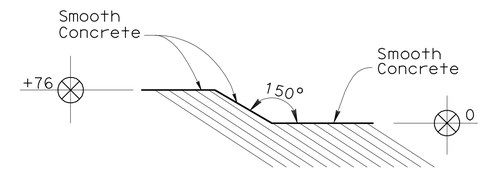

7 DETAIL NO SCALE

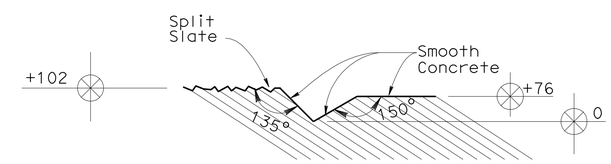

8 DETAIL NO SCALE

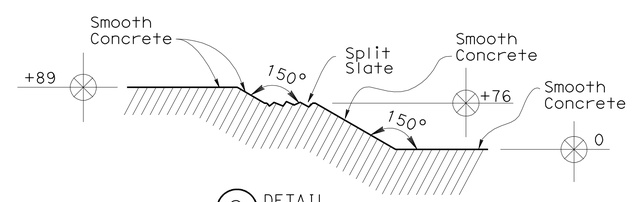

9 DETAIL NO SCALE

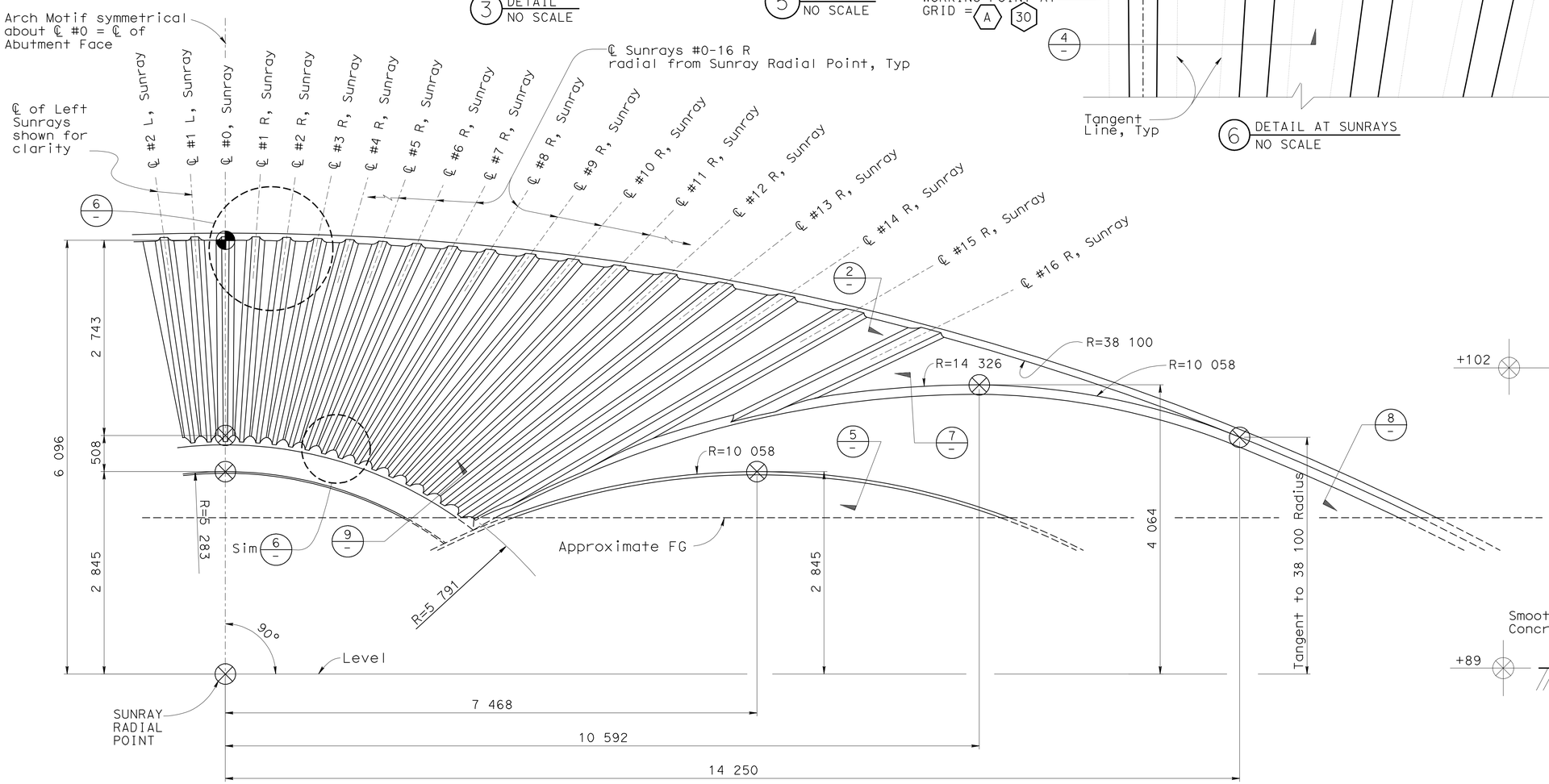

ARCHITECTURAL MOTIF ELEVATION AT ABUTMENT 10

NO SCALE

DESIGN	BY H. Chavez	CHECKED I. Tasabia	STATE OF CALIFORNIA DEPARTMENT OF TRANSPORTATION	DIVISION OF ENGINEERING SERVICES BRIDGE ARCHITECTURE AND AESTHETICS	BRIDGE NO. 53-3018
DETAILS	BY K. Li	CHECKED H. Chavez			KILOMETER POST 3.88(2.42)
QUANTITIES	BY	CHECKED			

CARMENITA ROAD OVERCROSSING/OVERHEAD

ARCHITECTURAL MOTIF DETAILS AT ABUTMENT 10

SHEET A6

Caltrans Metric

ALL DIMENSIONS ARE IN MILLIMETERS UNLESS OTHERWISE SHOWN

ORIGINAL SCALE IN MILLIMETERS FOR REDUCED PLANS 0 10 20 30 40 50 60 70 80 90 100

CU 07225
EA 2159C1

DISREGARD PRINTS BEARING EARLIER REVISION DATES → 3/6/09 2/02/10

REVISION DATES

SHEET 7 OF 17

FILE => 53-3018_-arch07.dgn

USERNAME => trmikes1 DATE PLOTTED => 22-JUN-2010 TIME PLOTTED => 13:31

DIST	COUNTY	ROUTE	KILOMETER POST TOTAL PROJECT	SHEET No	TOTAL SHEETS
07	LA	5	2.9/4.9	945	1082

LICENSED ARCHITECT — DATE 2/02/10

6-21-10
PLANS APPROVAL DATE

LICENSED ARCHITECT H. Javier Chavez 14073 03-31-11 Renewal Date STATE OF CALIFORNIA

The State of California or its officers or agents shall not be responsible for the accuracy or completeness of electronic copies of this plan sheet.

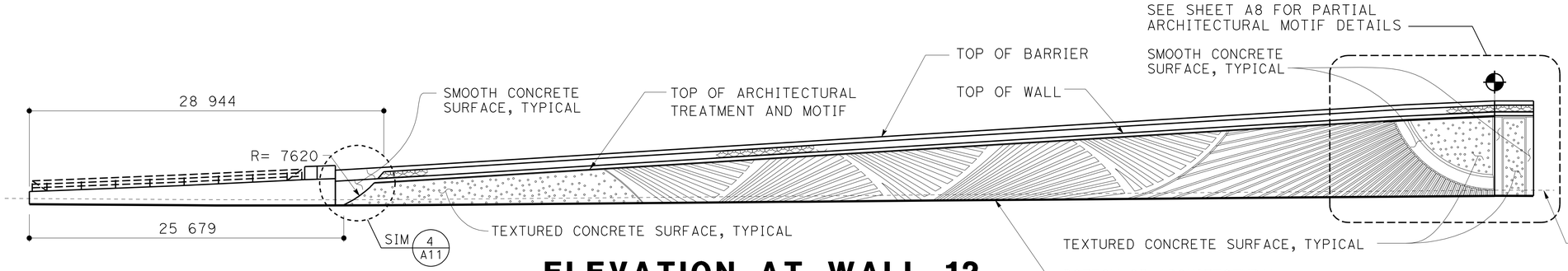

ELEVATION AT WALL 12

NO SCALE

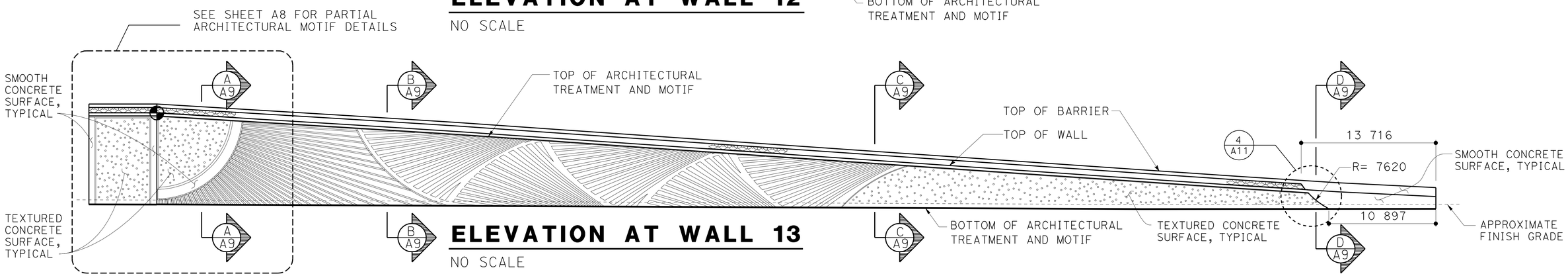

ELEVATION AT WALL 13

NO SCALE

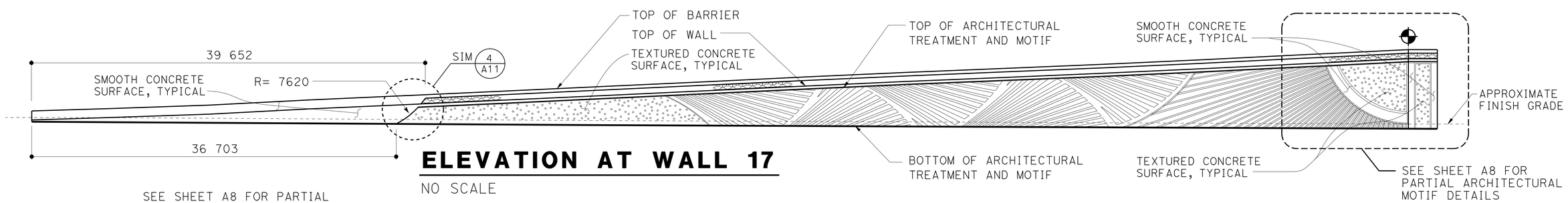

ELEVATION AT WALL 17

NO SCALE

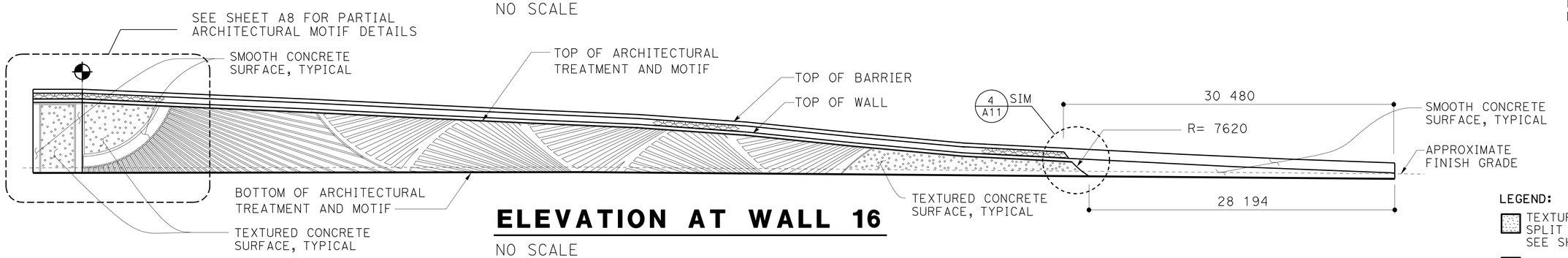

ELEVATION AT WALL 16

NO SCALE

LEGEND:

- TEXTURED CONCRETE SURFACE = SPLIT SLATE TEXTURE, SEE SHEET A2
- SMOOTH CONCRETE SURFACE

DESIGN	BY H. Chavez	CHECKED I. Tasabia	
DETAILS	BY K. Li	CHECKED H. Chavez	
QUANTITIES	BY	CHECKED	

STATE OF CALIFORNIA
DEPARTMENT OF TRANSPORTATION

DIVISION OF ENGINEERING SERVICES
BRIDGE ARCHITECTURE AND AESTHETICS

BRIDGE NO. 53-3018
KILOMETER POST 3.88(2.42)

CARMENITA ROAD OVERCROSSING/OVERHEAD
ELEVATIONS AT RETAINING WALLS 12,13,16,17

SHEET A7

Caltrans Metric

ALL DIMENSIONS ARE IN MILLIMETERS UNLESS OTHERWISE SHOWN

ORIGINAL SCALE IN MILLIMETERS FOR REDUCED PLANS 0 10 20 30 40 50 60 70 80 90 100

CU 07225
EA 2159C1

DISREGARD PRINTS BEARING EARLIER REVISION DATES 9/5/09

REVISION DATES

SHEET 8 OF 17

FILE => 53-3018_-arch08.dgn

USERNAME => trmikesl DATE PLOTTED => 22-JUN-2010 TIME PLOTTED => 13:31

DIST	COUNTY	ROUTE	KILOMETER POST TOTAL PROJECT	SHEET No	TOTAL SHEETS
07	LA	5	2.9/4.9	946	1082

LICENSED ARCHITECT — DATE 5/24/10

6-21-10
PLANS APPROVAL DATE

LICENSED ARCHITECT H. Javier Chavez 14073 03-31-11 Renewal Date STATE OF CALIFORNIA

The State of California or its officers or agents shall not be responsible for the accuracy or completeness of electronic copies of this plan sheet.

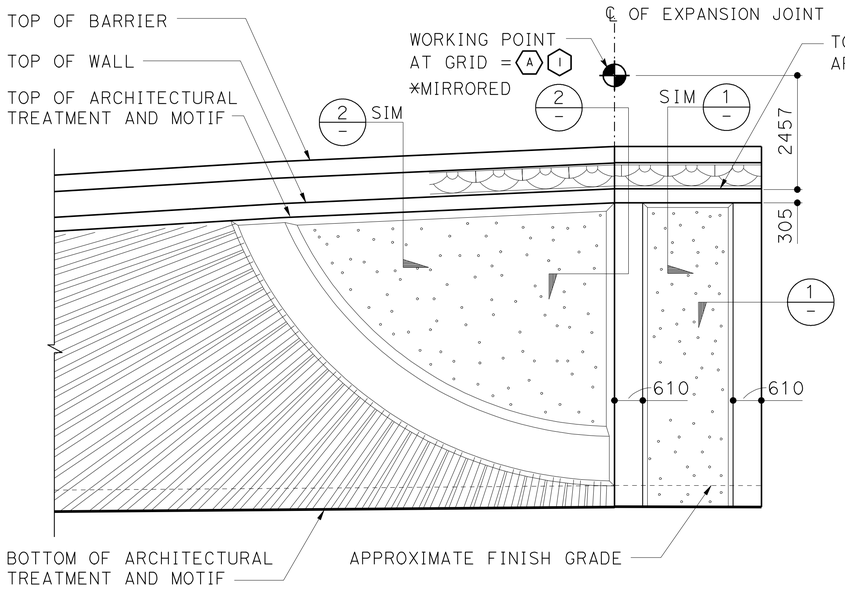

PARTIAL ELEVATION AT WALL 12

NO SCALE

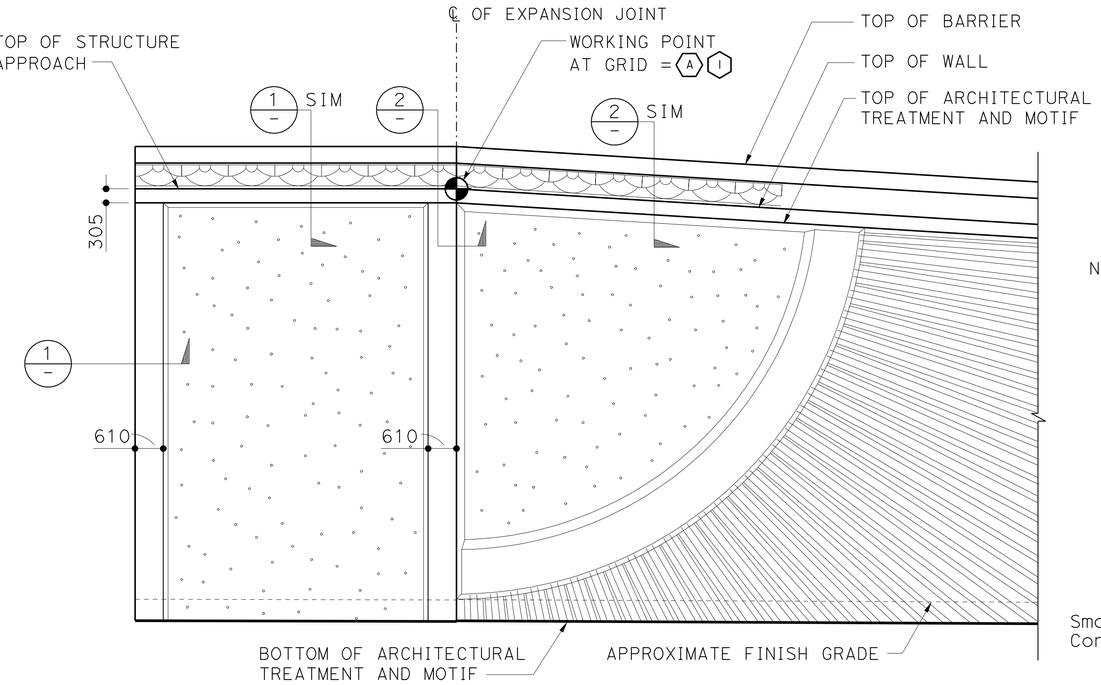

PARTIAL ELEVATION AT WALL 13

NO SCALE

NOTE: ALL REFERENCE TO SURFACE DIMENSIONS OF WALL DETAILS ARE FROM DATUM 0 = RETAINING WALL LOL, TYPICAL

LEGEND:

- TEXTURED CONCRETE SURFACE = SPLIT SLATE TEXTURE, SEE SHEET A2
- SMOOTH CONCRETE SURFACE

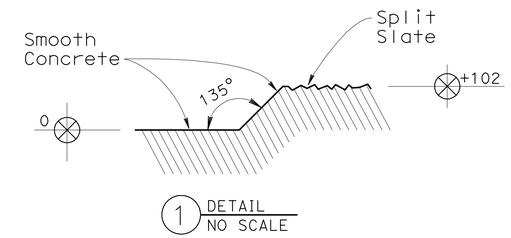

1 DETAIL NO SCALE

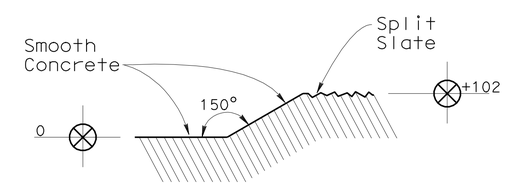

2 DETAIL NO SCALE

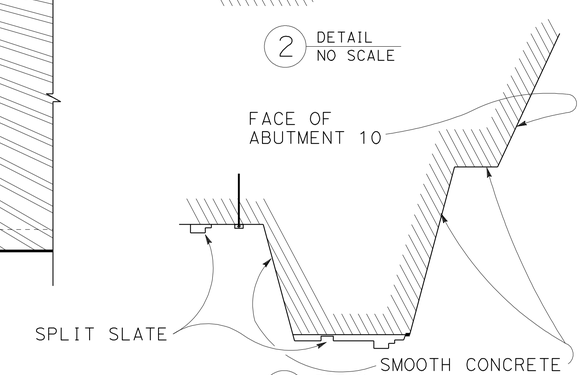

3 DETAIL NO SCALE

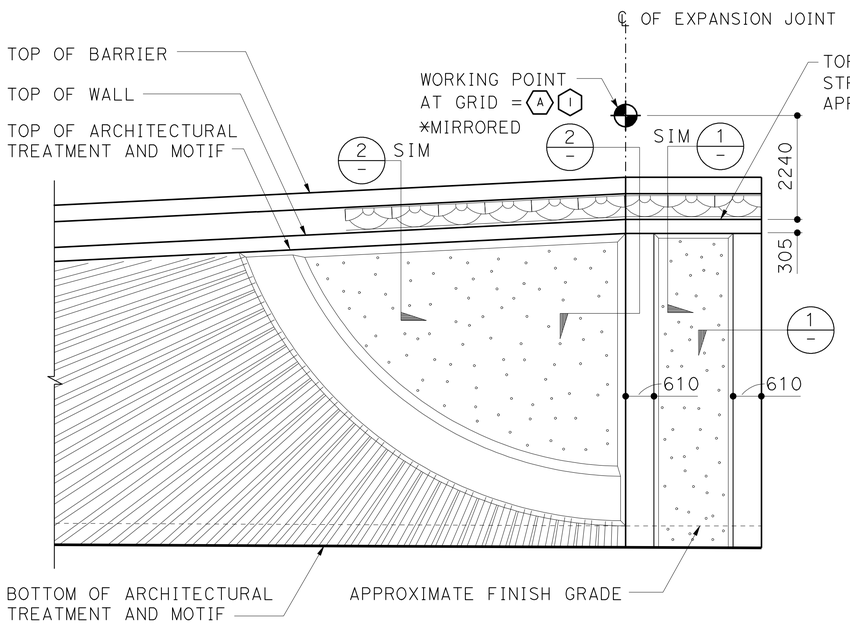

PARTIAL ELEVATION AT WALL 17

NO SCALE

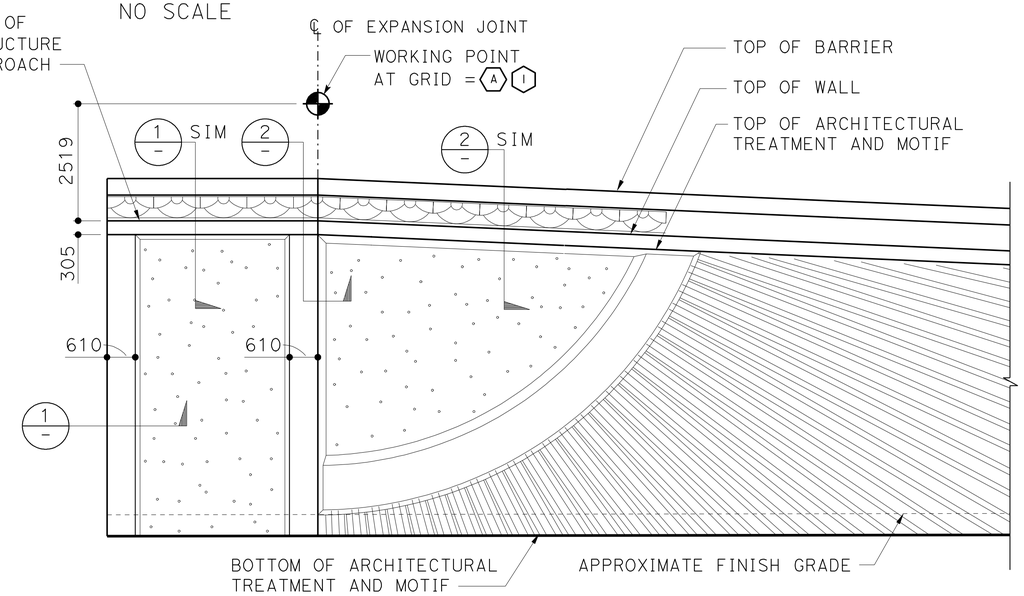

PARTIAL ELEVATION AT WALL 16

NO SCALE

Caltrans Metric

	BY	CHECKED
DESIGN	H. Chavez	I. Tasabia
DETAILS	K. Li	H. Chavez
QUANTITIES		

STATE OF CALIFORNIA DEPARTMENT OF TRANSPORTATION

DIVISION OF ENGINEERING SERVICES BRIDGE ARCHITECTURE AND AESTHETICS

BRIDGE NO. 53-3018
KILOMETER POST 3.88(2.42)

CARMENITA ROAD OVERCROSSING/OVERHEAD

PARTIAL ELEVATIONS AT RETAINING WALLS 12,13,16,17

SHEET A8

ALL DIMENSIONS ARE IN MILLIMETERS UNLESS OTHERWISE SHOWN

ORIGINAL SCALE IN MILLIMETERS FOR REDUCED PLANS 0 10 20 30 40 50 60 70 80 90 100

CU 07225
EA 2159C1

DISREGARD PRINTS BEARING EARLIER REVISION DATES 9/15/09 2/20/10

REVISION DATES

SHEET 9 OF 17

FILE => 53-3018_-arch09.dgn

USERNAME => trmikes1 DATE PLOTTED => 22-JUN-2010 TIME PLOTTED => 13:32

DIST	COUNTY	ROUTE	KILOMETER POST TOTAL PROJECT	SHEET No	TOTAL SHEETS
07	LA	5	2.9/4.9	947	1082

LICENSED ARCHITECT — DATE 2/02/10

6-21-10
PLANS APPROVAL DATE

LICENSED ARCHITECT H. Javier Chavez 14073 03-31-11 Renewal Date STATE OF CALIFORNIA

The State of California or its officers or agents shall not be responsible for the accuracy or completeness of electronic copies of this plan sheet.

NOTE: ALL REFERENCE TO SURFACE DIMENSIONS OF WALL DETAILS ARE FROM DATUM 0 = RETAINING WALL LOL, TYPICAL

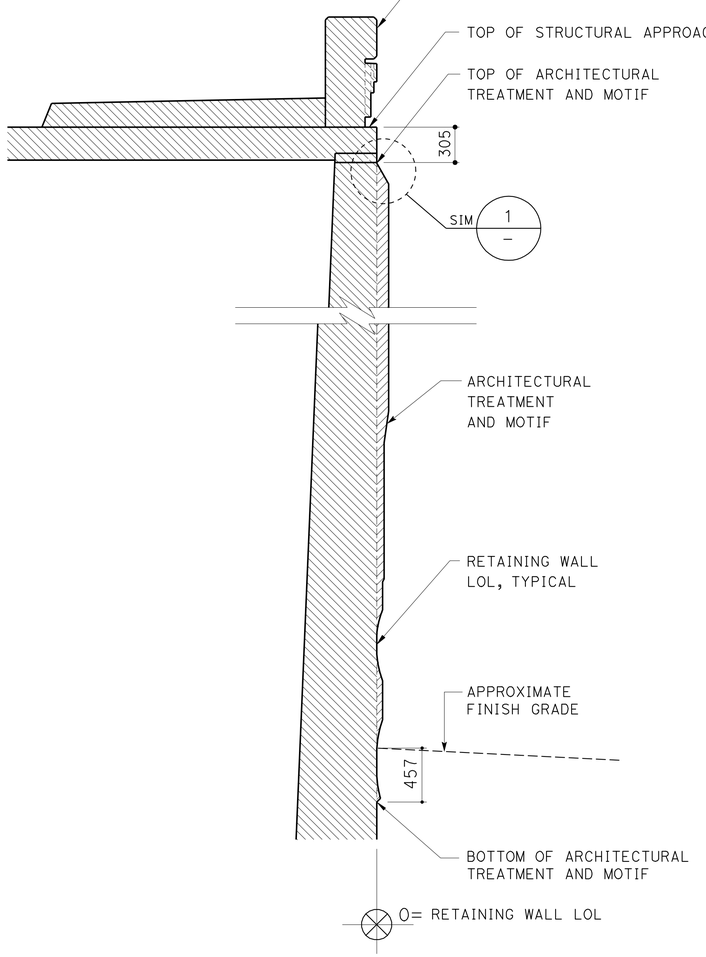

A-A SECTION

NO SCALE

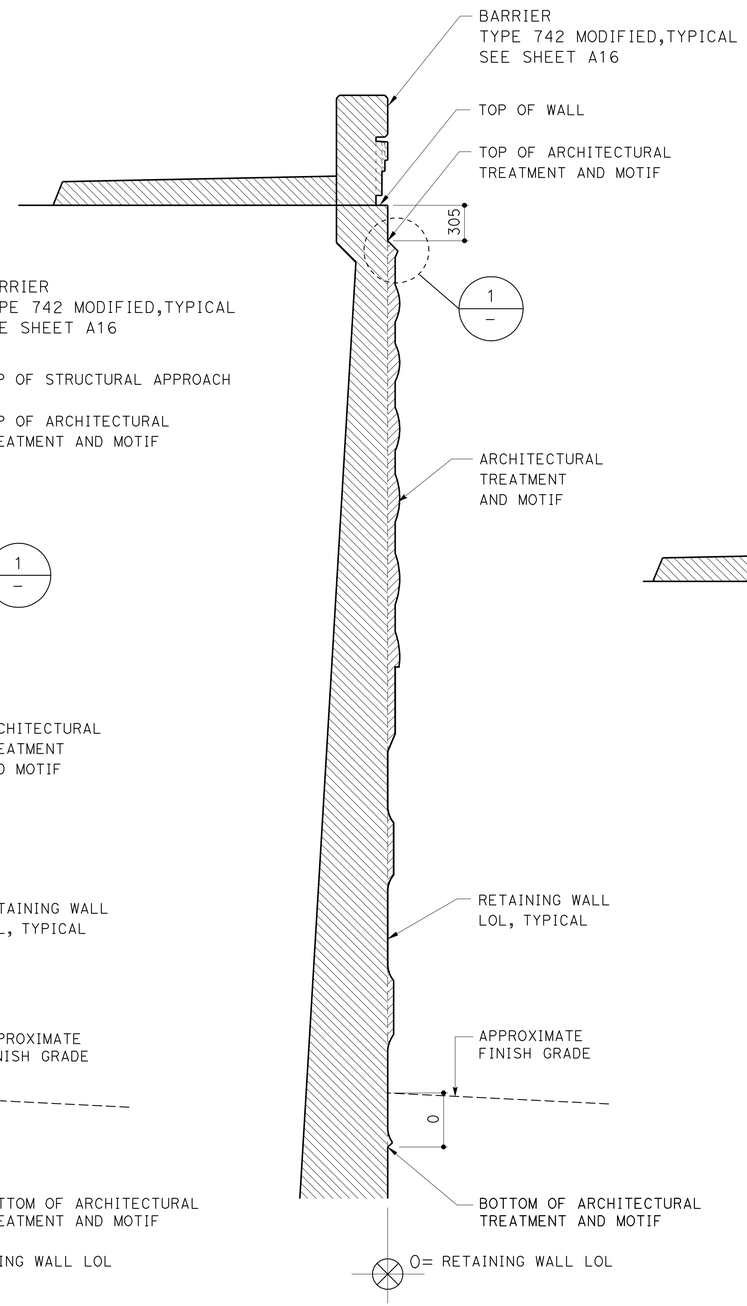

B-B SECTION

NO SCALE

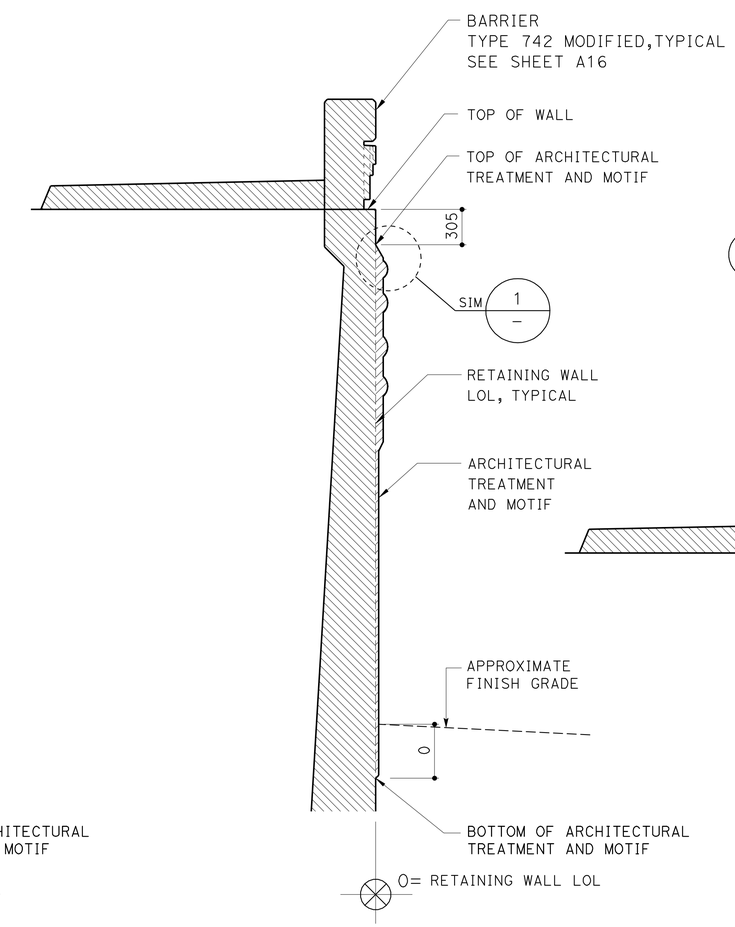

C-C SECTION

NO SCALE

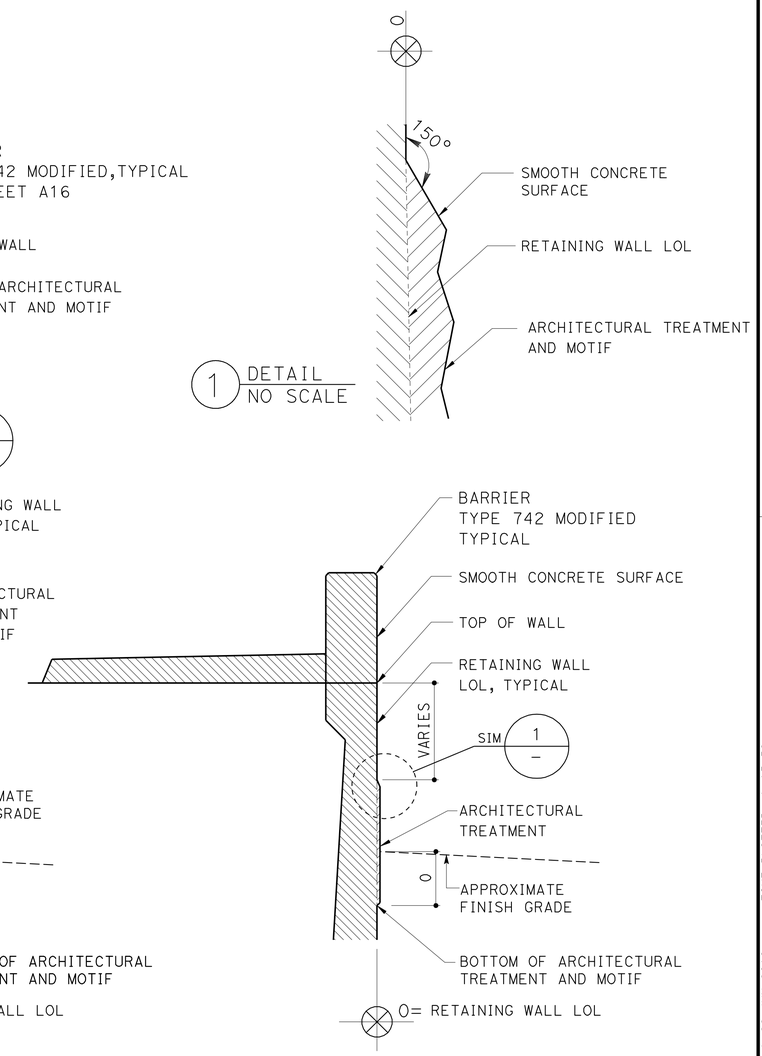

D-D SECTION

NO SCALE

DESIGN	BY H. Chavez	CHECKED I. Tasabia	
DETAILS	BY K. Li	CHECKED H. Chavez	
QUANTITIES	BY	CHECKED	

STATE OF CALIFORNIA
DEPARTMENT OF TRANSPORTATION

DIVISION OF ENGINEERING SERVICES
BRIDGE ARCHITECTURE AND AESTHETICS

BRIDGE NO. 53-3018
KILOMETER POST 3.88(2.42)

CARMENITA ROAD OVERCROSSING/OVERHEAD
SECTIONS AT RETAINING WALLS 12,13,16,17

SHEET A9

Caltrans Metric

ALL DIMENSIONS ARE IN MILLIMETERS UNLESS OTHERWISE SHOWN

ORIGINAL SCALE IN MILLIMETERS FOR REDUCED PLANS 0 10 20 30 40 50 60 70 80 90 100

CU 07225
EA 2159C1

DISREGARD PRINTS BEARING EARLIER REVISION DATES 9/16/09

REVISION DATES

SHEET 10 OF 17

FILE => 53-3018_-arch10.dgn

USERNAME => trcarol DATE PLOTTED => 22-JUN-2010 TIME PLOTTED => 15:59

DIST	COUNTY	ROUTE	KILOMETER POST TOTAL PROJECT	SHEET No	TOTAL SHEETS
07	LA	5	2.9/4.9	948	1082

LICENSED ARCHITECT — 5/24/10 DATE

6-21-10
PLANS APPROVAL DATE

LICENSED ARCHITECT H. Javier Chavez 14073 03-31-11 Renewal Date STATE OF CALIFORNIA

The State of California or its officers or agents shall not be responsible for the accuracy or completeness of electronic copies of this plan sheet.

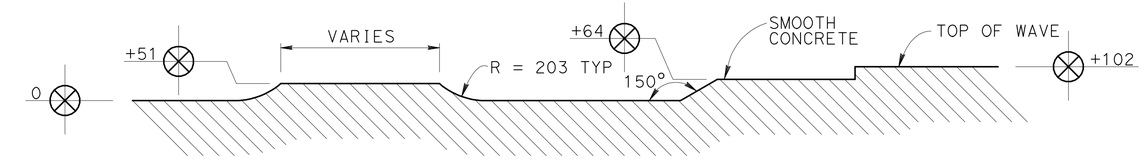

1 DETAIL NO SCALE

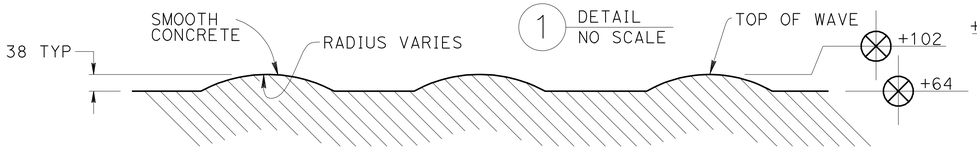

2 DETAIL NO SCALE

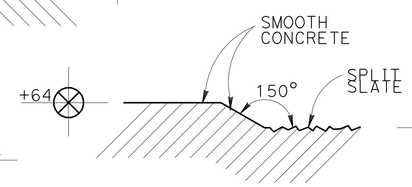

3 DETAIL NO SCALE

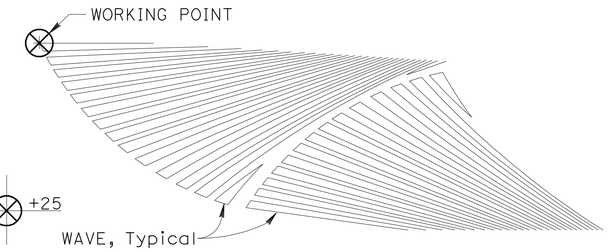

WAVE PATTERN

NO SCALE

NOTE: ALL REFERENCE TO SURFACE DIMENSIONS OF WALL DETAILS ARE FROM DATUM 0 = RETAINING WALL LOL, TYPICAL

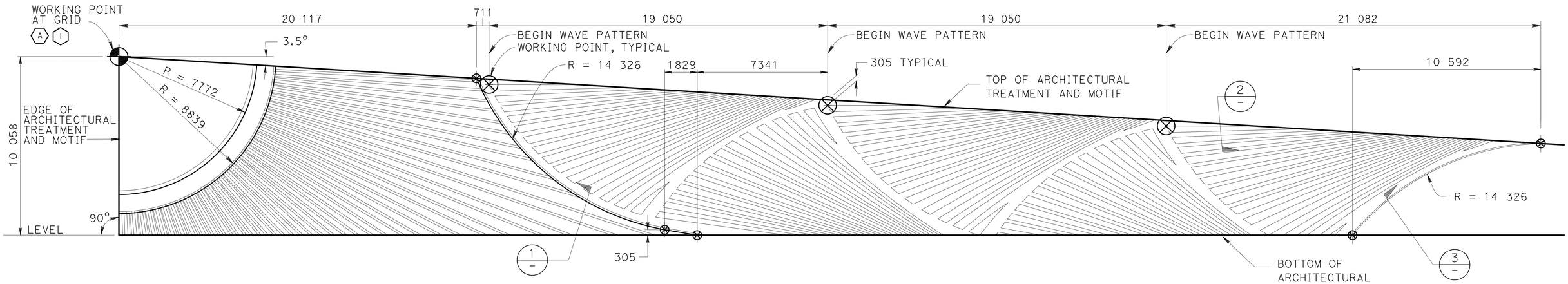

ARCHITECTURAL MOTIF ELEVATION AT RETAINING WALLS 13 & 16

NO SCALE

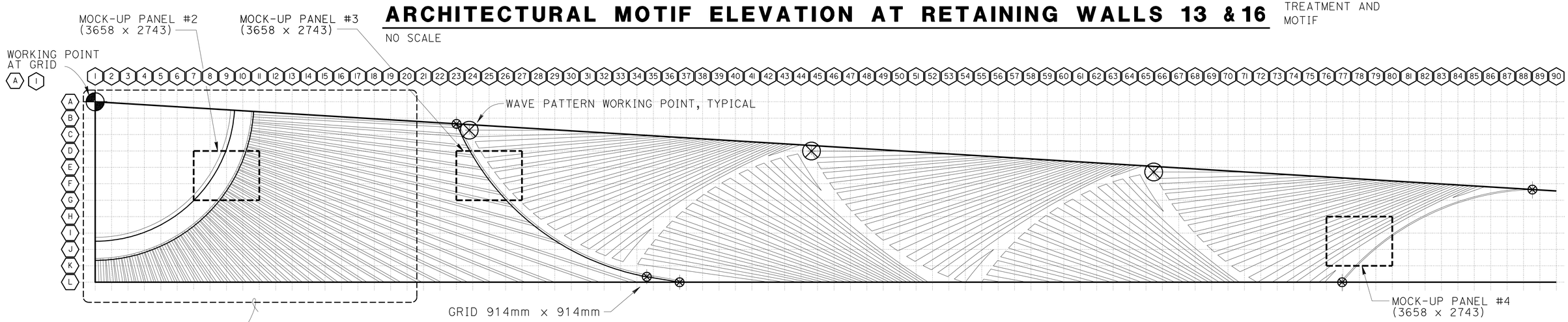

ARCHITECTURAL MOTIF ELEVATION AT RETAINING WALLS 13 & 16

NO SCALE

*MIRROR ARCHITECTURAL MOTIF ABOUT WORKING POINT GRID=(A)(I) FOR RETAINING WALLS 12 & 17

Caltrans Metric

ALL DIMENSIONS ARE IN MILLIMETERS UNLESS OTHERWISE SHOWN

ORIGINAL SCALE IN MILLIMETERS FOR REDUCED PLANS 0 10 20 30 40 50 60 70 80 90 100

	BY	CHECKED
DESIGN	H. Chavez	I. Tasabia
DETAILS	K. Li	H. Chavez
QUANTITIES		

STATE OF CALIFORNIA DEPARTMENT OF TRANSPORTATION

DIVISION OF ENGINEERING SERVICES BRIDGE ARCHITECTURE AND AESTHETICS

CU 07225
EA 2159C1

BRIDGE NO. 53-3018
KILOMETER POST 3.88(2.42)

CARMENITA ROAD OVERCROSSING/OVERHEAD

ARCHITECTURAL MOTIF AT RETAINING WALLS 12,13,16,17

DISREGARD PRINTS BEARING EARLIER REVISION DATES → 9/15/09 2/3/10

REVISION DATES

SHEET 11 OF 17

SHEET A10

FILE => 53-3018_-arch11.dgn

USERNAME => trcarol DATE PLOTTED=>JUN-2010 TIME PLOTTED => 15:59

DIST	COUNTY	ROUTE	KILOMETER POST TOTAL PROJECT	SHEET No	TOTAL SHEETS
07	LA	5	2.9/4.9	949	1082

LICENSED ARCHITECT — DATE 5/24/10

6-21-10
PLANS APPROVAL DATE

LICENSED ARCHITECT H. Javier Chavez 14073 03-31-11 Renewal Date STATE OF CALIFORNIA

The State of California or its officers or agents shall not be responsible for the accuracy or completeness of electronic copies of this plan sheet.

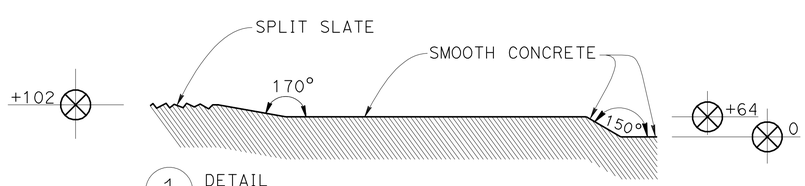

1 DETAIL NO SCALE

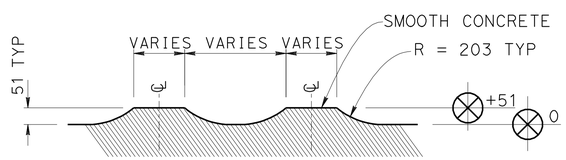

2 DETAIL NO SCALE

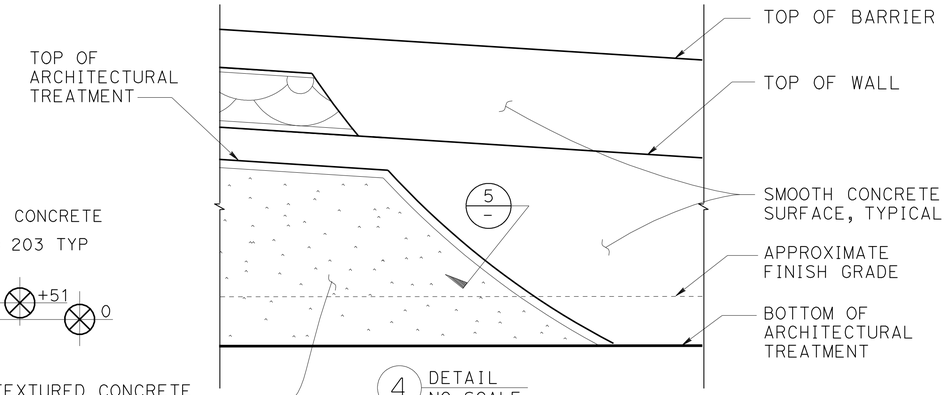

4 DETAIL NO SCALE

NOTE: ALL REFERENCE TO SURFACE DIMENSIONS OF WALL DETAILS ARE FROM DATUM 0 = RETAINING WALL LOL, TYPICAL

LEGEND:

- TEXTURED CONCRETE SURFACE = SPLIT SLATE TEXTURE, SEE SHEET A2
- SMOOTH CONCRETE SURFACE

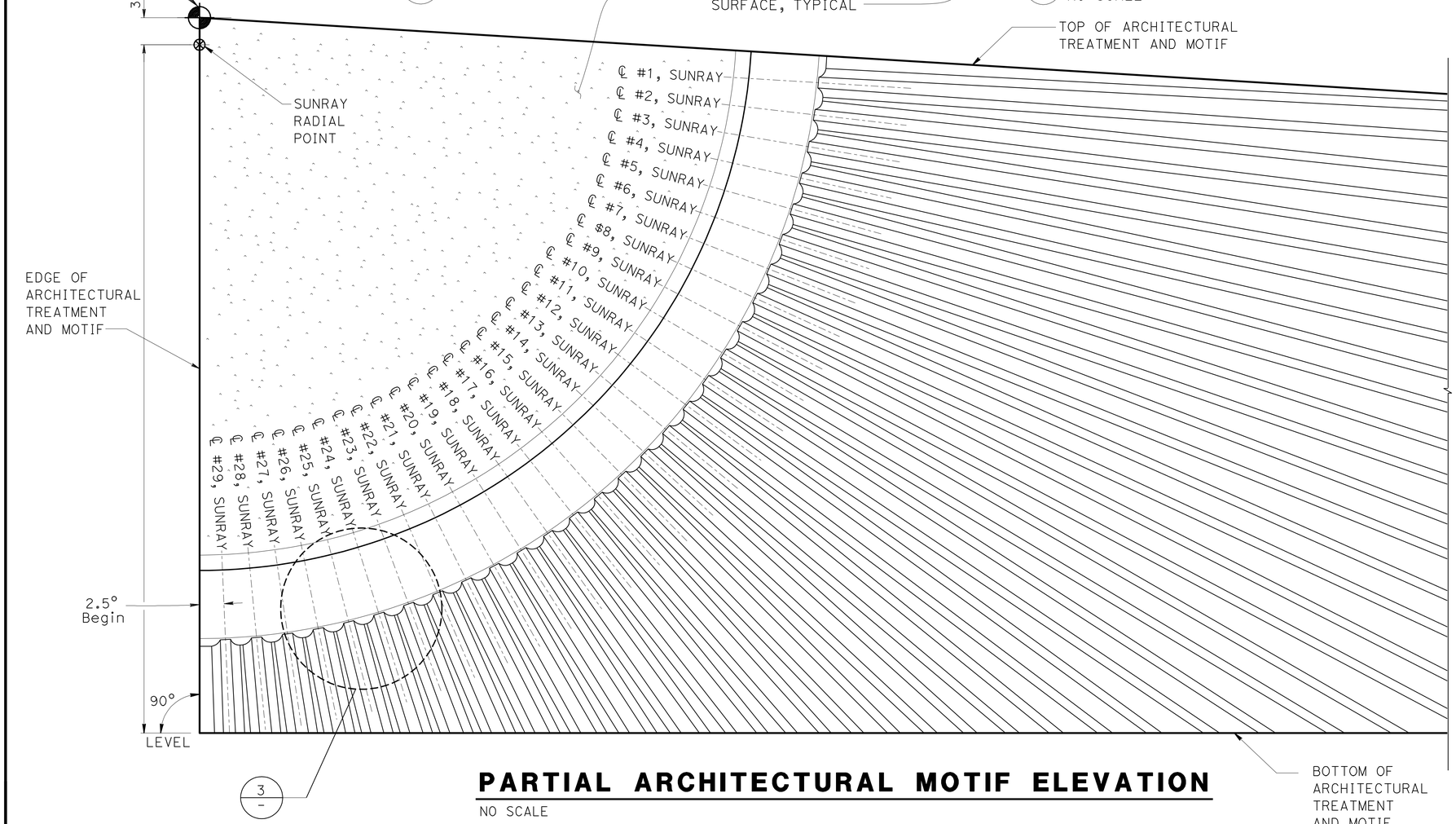

PARTIAL ARCHITECTURAL MOTIF ELEVATION

NO SCALE

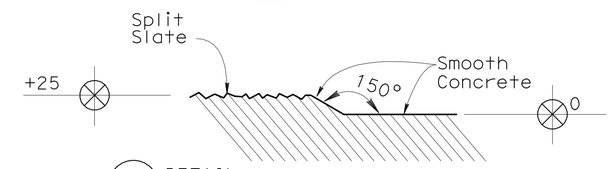

5 DETAIL NO SCALE

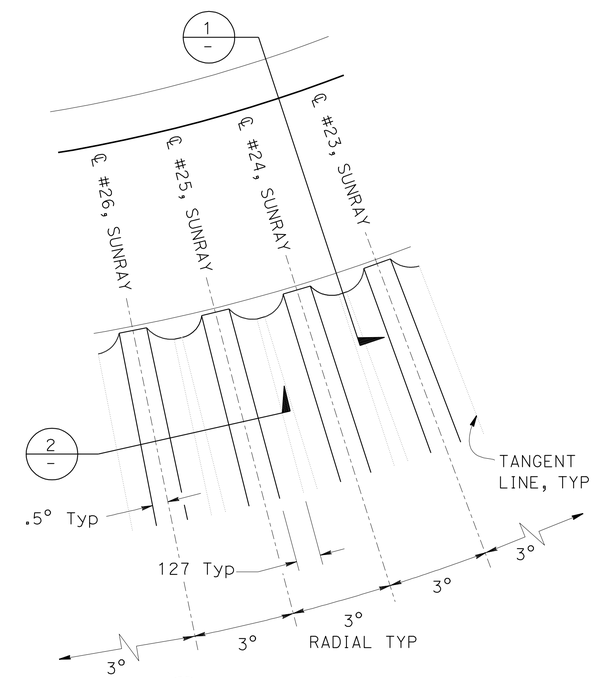

3 DETAIL AT SUNRAYS, TYPICAL NO SCALE

DESIGN	BY H. Chavez	CHECKED I. Tasabia	
DETAILS	BY K. Li	CHECKED H. Chavez	
QUANTITIES	BY	CHECKED	

STATE OF CALIFORNIA DEPARTMENT OF TRANSPORTATION

DIVISION OF ENGINEERING SERVICES BRIDGE ARCHITECTURE AND AESTHETICS

BRIDGE NO. 53-3018
KILOMETER POST 3.88(2.42)

CARMENITA ROAD OVERCROSSING/OVERHEAD

ARCHITECTURAL MOTIF DETAILS AT RETAINING WALLS 12,13,16,17

SHEET A11

Caltrans Metric

ALL DIMENSIONS ARE IN MILLIMETERS UNLESS OTHERWISE SHOWN

ORIGINAL SCALE IN MILLIMETERS FOR REDUCED PLANS 0 10 20 30 40 50 60 70 80 90 100

CU 07225
EA 2159C1

DISREGARD PRINTS BEARING EARLIER REVISION DATES

REVISION DATES: 5-28-09 9/15/09 2/01/10

SHEET 12 OF 17

FILE => 53-3018_-arch12.dgn

USERNAME => trcarol DATE PLOTTED => 22-JUN-2010 TIME PLOTTED => 15:59

DIST	COUNTY	ROUTE	KILOMETER POST TOTAL PROJECT	SHEET No	TOTAL SHEETS
07	LA	5	2.9/4.9	950	1082

LICENSED ARCHITECT 2/02/10 DATE

6-21-10
PLANS APPROVAL DATE

LICENSED ARCHITECT H. Javier Chavez 14073 03-31-11 Renewal Date STATE OF CALIFORNIA

The State of California or its officers or agents shall not be responsible for the accuracy or completeness of electronic copies of this plan sheet.

NOTE: ALL REFERENCE TO SURFACE DIMENSIONS OF WALL DETAILS ARE FROM DATUM 0 = FACE OF ABUTMENT TYPICAL

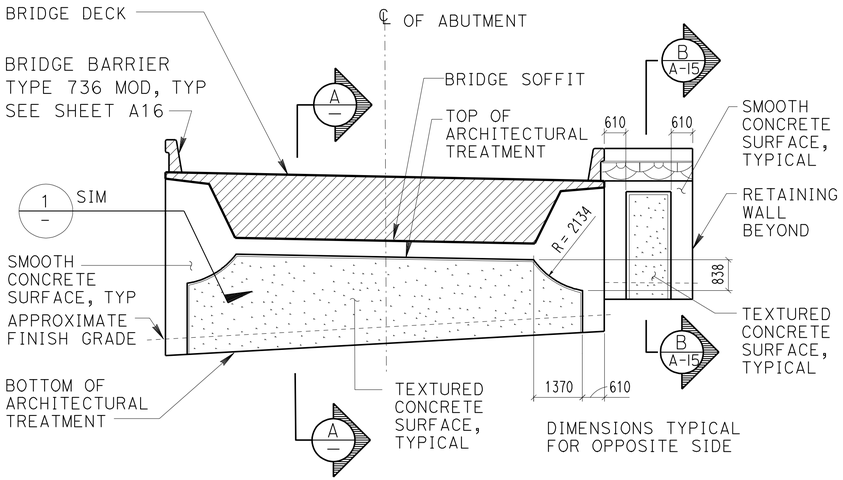

SB ON-RAMP ABUTMENT 1

NO SCALE

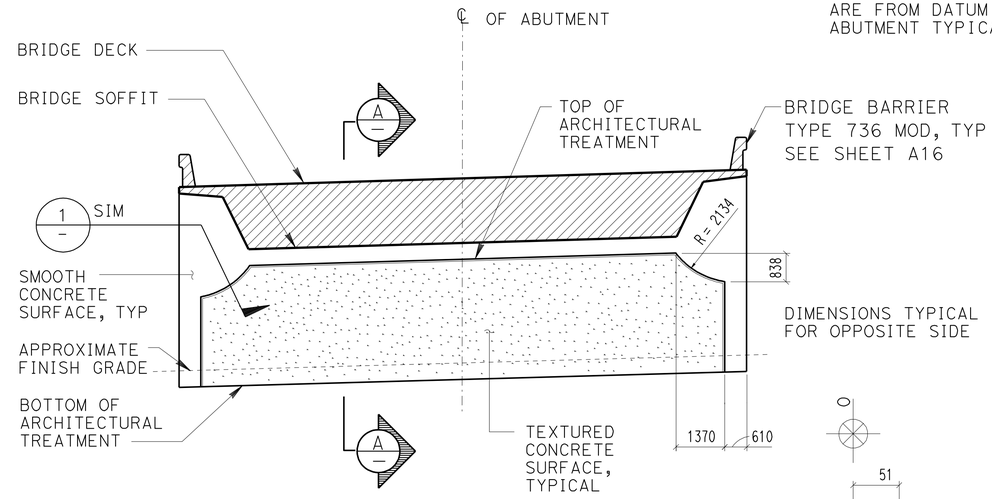

NB OFF-RAMP ABUTMENT 2

NO SCALE

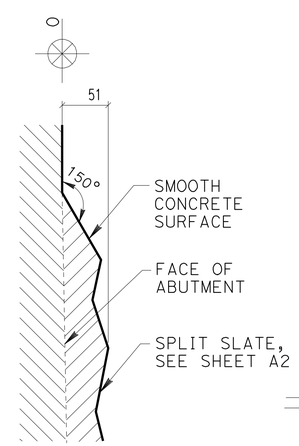

1 DETAIL
NO SCALE

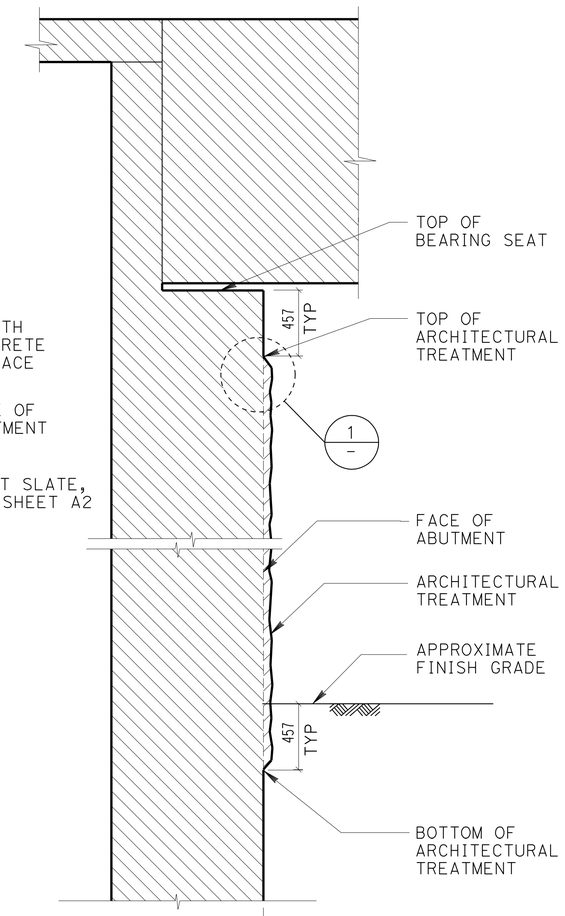

SECTION A-A

NO SCALE

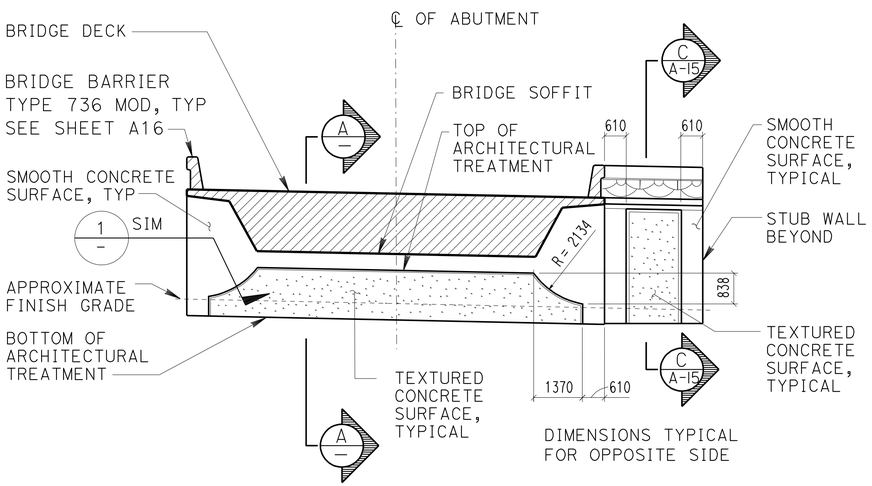

NB ON-RAMP ABUTMENT 3

NO SCALE

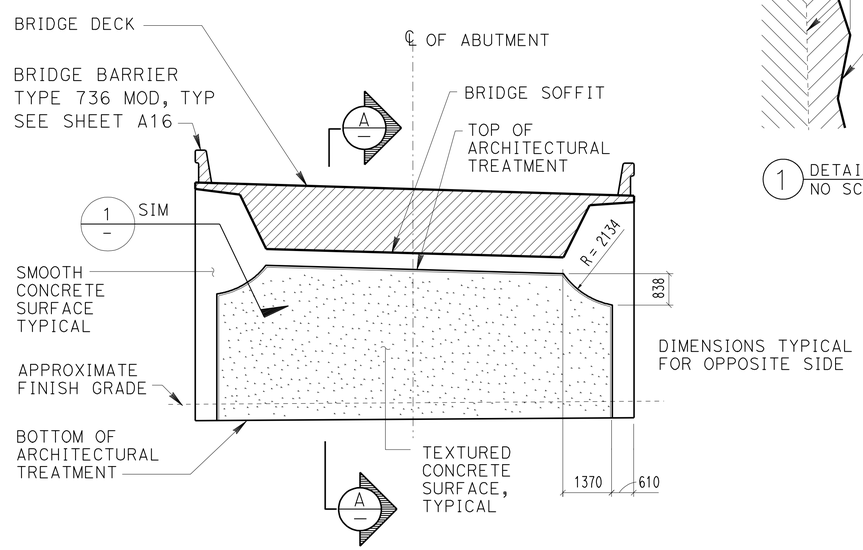

SB OFF-RAMP ABUTMENT 4

NO SCALE

LEGEND:

- TEXTURED CONCRETE SURFACE = SPLIT SLATE TEXTURE, SEE SHEET A2
- SMOOTH CONCRETE SURFACE

DESIGN	BY H. Chavez	CHECKED I. Tasabia	
DETAILS	BY K. Li	CHECKED H. Chavez	
QUANTITIES	BY	CHECKED	

STATE OF CALIFORNIA
DEPARTMENT OF TRANSPORTATION

DIVISION OF ENGINEERING SERVICES
BRIDGE ARCHITECTURE AND AESTHETICS

BRIDGE NO. 53-3018
KILOMETER POST 3.88(2.42)

CARMENITA ROAD OVERCROSSING/OVERHEAD
ELEVATIONS AT RAMP ABUTMENTS

SHEET A12

ALL DIMENSIONS ARE IN MILLIMETERS UNLESS OTHERWISE SHOWN

ORIGINAL SCALE IN MILLIMETERS FOR REDUCED PLANS 0 10 20 30 40 50 60 70 80 90 100

CU 07225
EA 2159C1

DISREGARD PRINTS BEARING EARLIER REVISION DATES 9/15/09

REVISION DATES

SHEET 13 OF 17

FILE => 53-3018_-arch13.dgn

USERNAME => trcarol DATE PLOTTED => 22-JUN-2010 TIME PLOTTED => 15:59

DIST	COUNTY	ROUTE	KILOMETER POST TOTAL PROJECT	SHEET No	TOTAL SHEETS
07	LA	5	2.9/4.9	951	1082

LICENSED ARCHITECT — DATE 2/02/10

6-21-10
PLANS APPROVAL DATE

LICENSED ARCHITECT H. Javier Chavez 14073 03-31-11 Renewal Date STATE OF CALIFORNIA

The State of California or its officers or agents shall not be responsible for the accuracy or completeness of electronic copies of this plan sheet.

LEGEND:

- TEXTURED CONCRETE SURFACE = SPLIT SLATE TEXTURE, SEE SHEET A2
- SMOOTH CONCRETE SURFACE

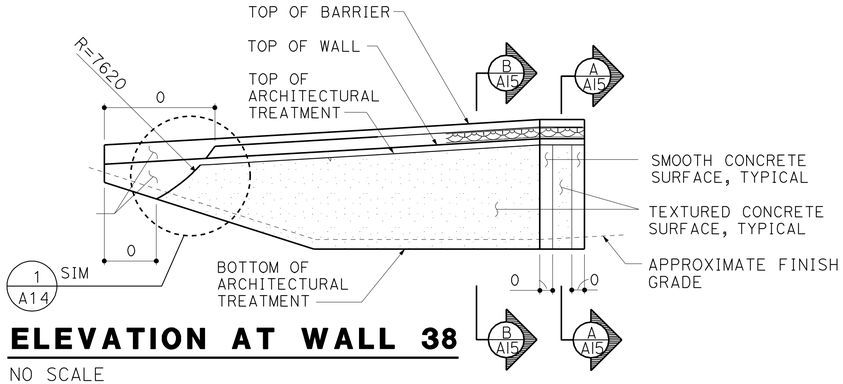

ELEVATION AT WALL 38

NO SCALE

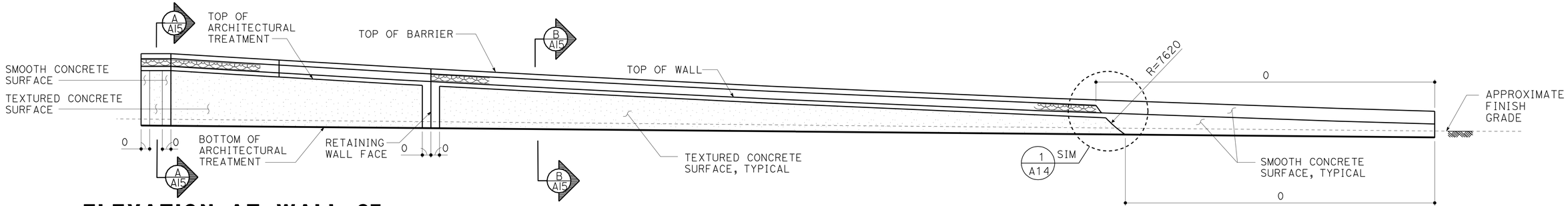

ELEVATION AT WALL 37

NO SCALE

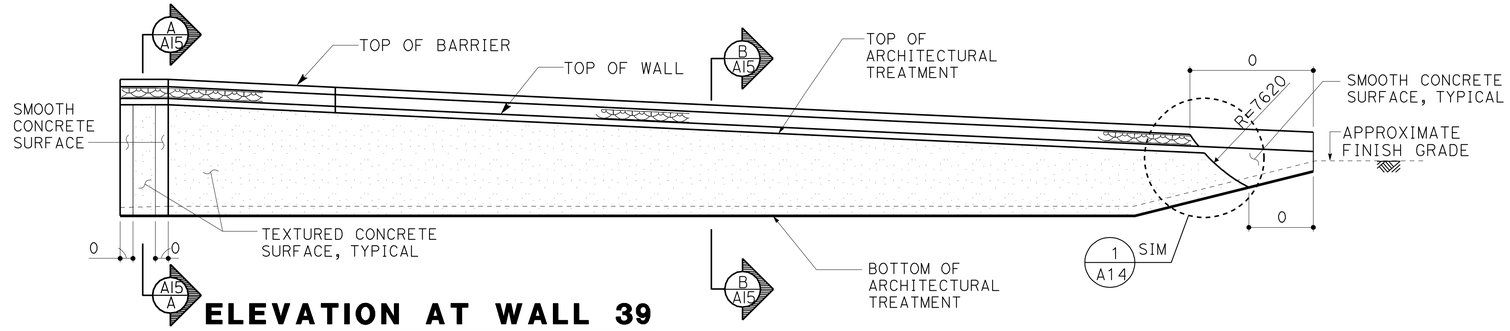

ELEVATION AT WALL 39

NO SCALE

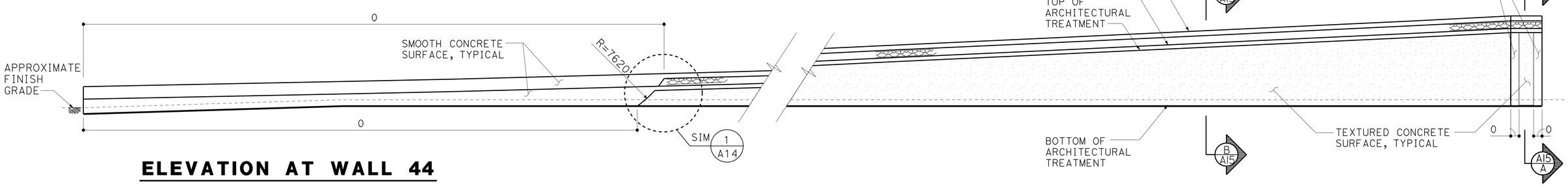

ELEVATION AT WALL 44

NO SCALE

Caltrans Metric

	BY	CHECKED
DESIGN	H. Chavez	I. Tasabia
DETAILS	K. Li	H. Chavez
QUANTITIES		

STATE OF CALIFORNIA
DEPARTMENT OF TRANSPORTATION

DIVISION OF ENGINEERING SERVICES
BRIDGE ARCHITECTURE AND AESTHETICS

BRIDGE NO. 53-3018
KILOMETER POST 3.88(2.42)

CARMENITA ROAD OVERCROSSING/OVERHEAD
ELEVATIONS AT RETAINING WALLS 37,38,39,44

SHEET A13

ALL DIMENSIONS ARE IN MILLIMETERS UNLESS OTHERWISE SHOWN

ORIGINAL SCALE IN MILLIMETERS FOR REDUCED PLANS 0 10 20 30 40 50 60 70 80 90 100

CU 07225
EA 2159C1

DISREGARD PRINTS BEARING EARLIER REVISION DATES → 9/15/09

REVISION DATES

SHEET 14 OF 17

FILE => 53-3018_-arch14.dgn

USERNAME => trcarol DATE PLOTTED => 22-JUN-2010 TIME PLOTTED => 15:59

DIST	COUNTY	ROUTE	KILOMETER POST TOTAL PROJECT	SHEET No	TOTAL SHEETS
07	LA	5	2.9/4.9	952	1082

LICENSED ARCHITECT — DATE 2/02/10

6-21-10
PLANS APPROVAL DATE

LICENSED ARCHITECT H. Javier Chavez 14073 03-31-11 Renewal Date STATE OF CALIFORNIA

The State of California or its officers or agents shall not be responsible for the accuracy or completeness of electronic copies of this plan sheet.

NOTE: ALL REFERENCE TO SURFACE DIMENSIONS OF WALL DETAILS ARE FROM DATUM 0 = RETAINING WALL LOL, TYPICAL

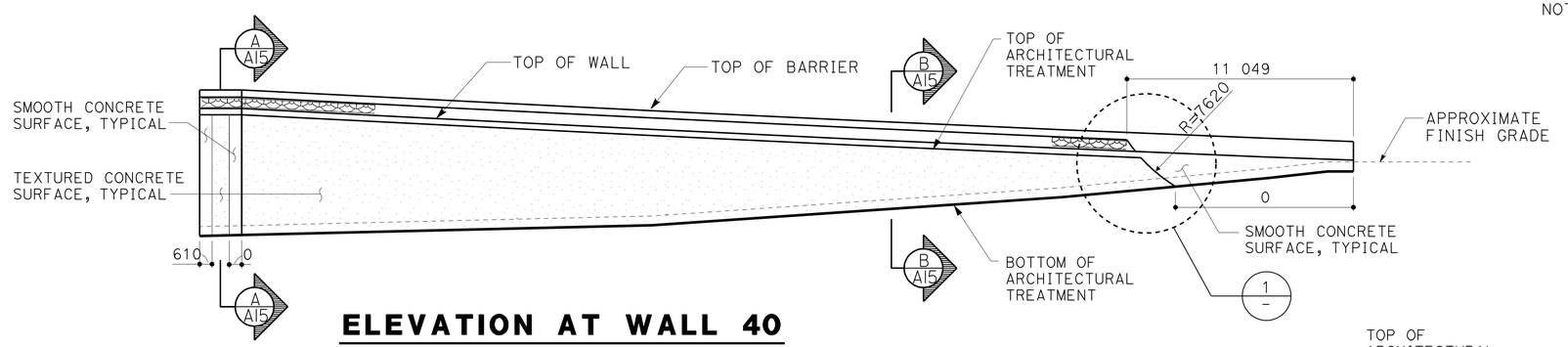

ELEVATION AT WALL 40

NO SCALE

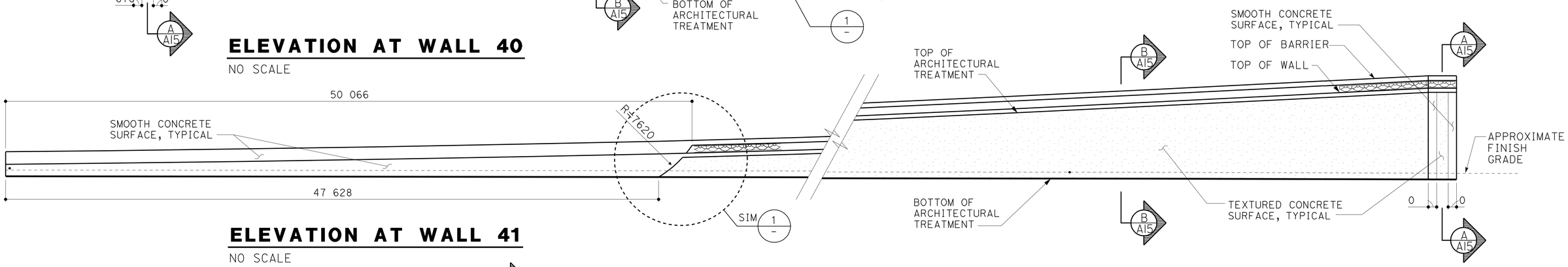

ELEVATION AT WALL 41

NO SCALE

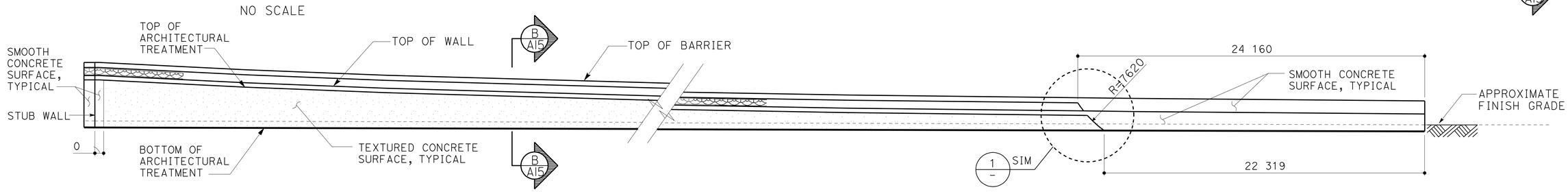

ELEVATION AT WALL 42

NO SCALE

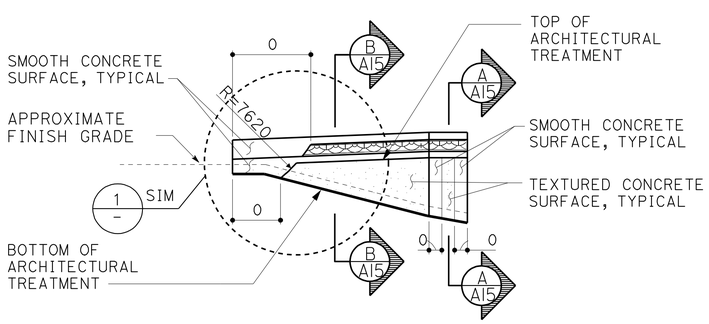

ELEVATION AT WALL 43

NO SCALE

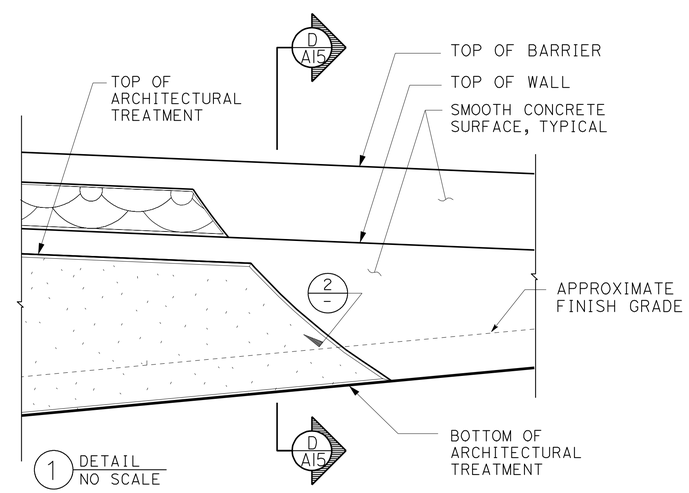

1 DETAIL
NO SCALE

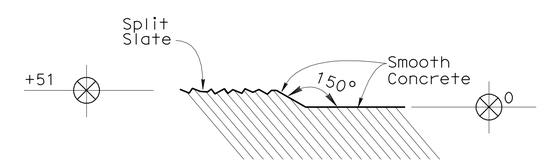

2 DETAIL
NO SCALE

LEGEND:

- TEXTURED CONCRETE SURFACE = SPLIT SLATE TEXTURE, SEE SHEET A2
- SMOOTH CONCRETE SURFACE

DESIGN	BY H. Chavez	CHECKED I. Tasabia	
DETAILS	BY K. Li	CHECKED H. Chavez	
QUANTITIES	BY	CHECKED	

STATE OF CALIFORNIA
DEPARTMENT OF TRANSPORTATION

DIVISION OF ENGINEERING SERVICES
BRIDGE ARCHITECTURE AND AESTHETICS

BRIDGE NO. 53-3018
KILOMETER POST 3.88(2.42)

CARMENITA ROAD OVERCROSSING/OVERHEAD
ELEVATIONS AT RETAINING WALLS 40,41,42,43

SHEET A14

ALL DIMENSIONS ARE IN MILLIMETERS UNLESS OTHERWISE SHOWN

ORIGINAL SCALE IN MILLIMETERS FOR REDUCED PLANS 0 10 20 30 40 50 60 70 80 90 100

CU 07225
EA 2159C1

DISREGARD PRINTS BEARING EARLIER REVISION DATES

REVISION DATES

SHEET 15 OF 17

FILE => 53-3018_-arch15.dgn

USERNAME => trcarro1 DATE PLOTTED => 22-JUN-2010 TIME PLOTTED => 16:00

DIST	COUNTY	ROUTE	KILOMETER POST TOTAL PROJECT	SHEET No	TOTAL SHEETS
07	LA	5	2.9/4.9	953	1082

LICENSED ARCHITECT 5/24/10 DATE

6-21-10
PLANS APPROVAL DATE

LICENSED ARCHITECT H. Javier Chavez 14073 03-31-11 Renewal Date STATE OF CALIFORNIA

The State of California or its officers or agents shall not be responsible for the accuracy or completeness of electronic copies of this plan sheet.

NOTE: ALL REFERENCE TO SURFACE DIMENSIONS OF WALL DETAILS ARE FROM DATUM 0 = RETAINING WALL LOL, TYPICAL

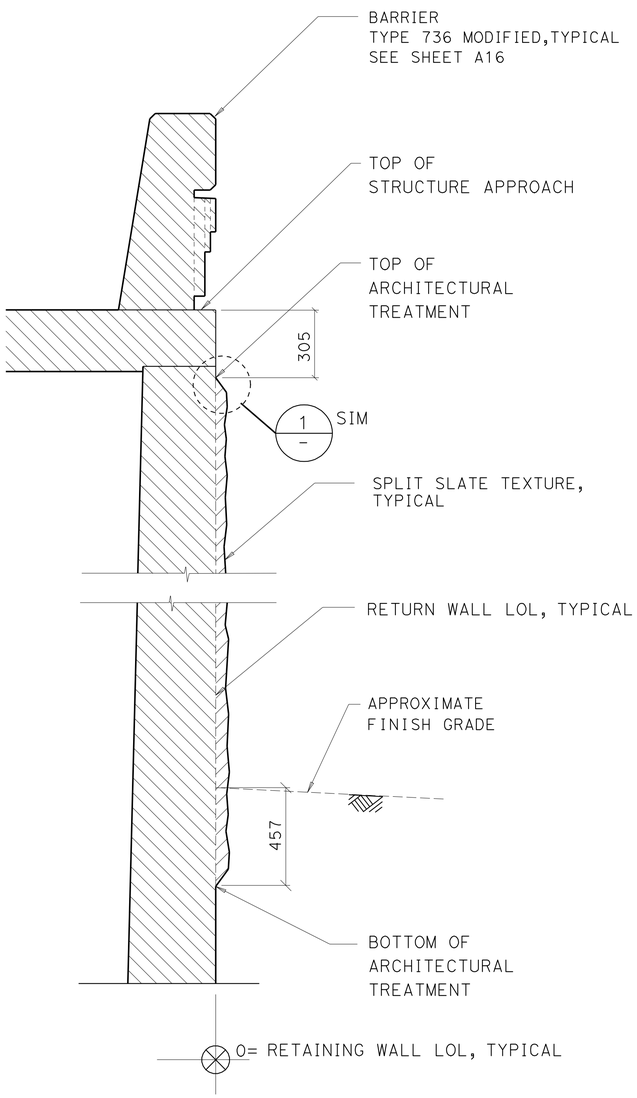

RETURN WALL SECTION A-A

NO SCALE

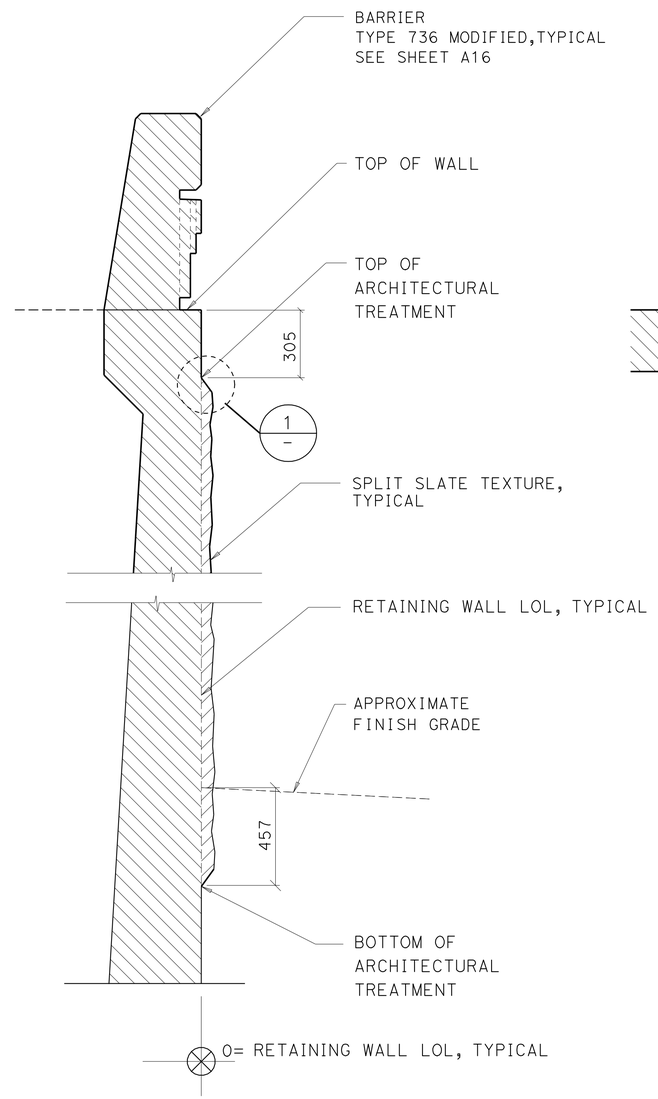

RETAINING WALL SECTION B-B

NO SCALE

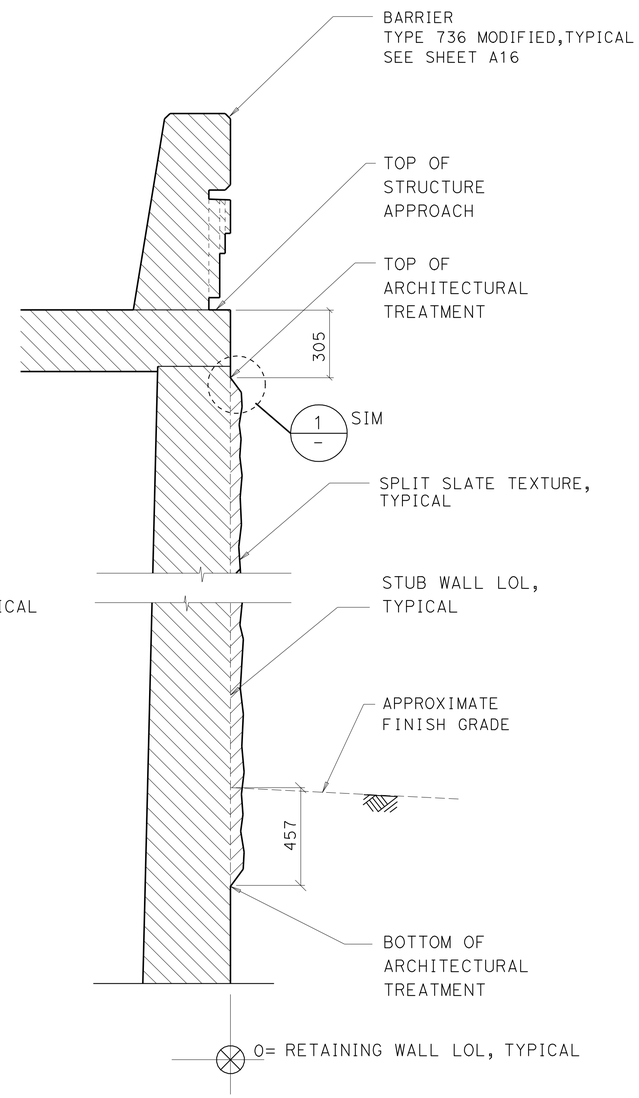

STUB WALL SECTION C-C

NO SCALE

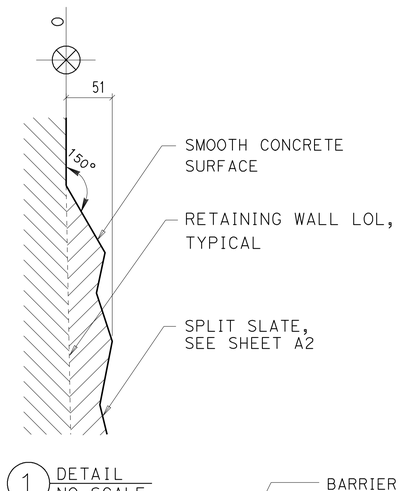

1 DETAIL
NO SCALE

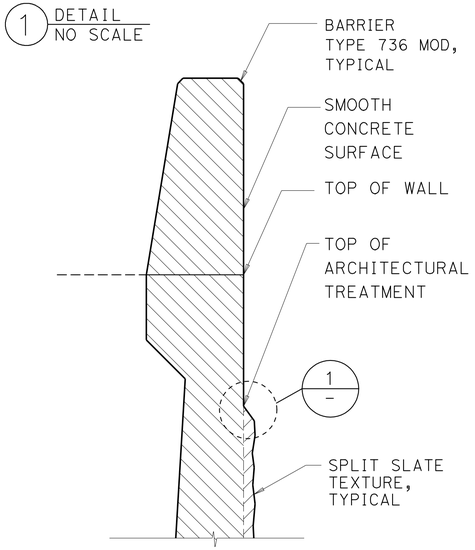

RETAINING WALL SECTION D-D

NO SCALE

DESIGN	BY H. Chavez	CHECKED I. Tasabia	
DETAILS	BY K. Li	CHECKED H. Chavez	
QUANTITIES	BY	CHECKED	

STATE OF CALIFORNIA
DEPARTMENT OF TRANSPORTATION

DIVISION OF ENGINEERING SERVICES
BRIDGE ARCHITECTURE AND AESTHETICS

BRIDGE NO. 53-3018
KILOMETER POST 3.88(2.42)

CARMENITA ROAD OVERCROSSING/OVERHEAD
SECTIONS AT RETAINING WALLS 37,38,39,40,41,42,43,44

SHEET A15

Caltrans Metric

ALL DIMENSIONS ARE IN MILLIMETERS UNLESS OTHERWISE SHOWN

ORIGINAL SCALE IN MILLIMETERS FOR REDUCED PLANS 0 10 20 30 40 50 60 70 80 90 100

CU 07225
EA 2159C1

DISREGARD PRINTS BEARING EARLIER REVISION DATES

REVISION DATES 9/16/09 5/05/10

SHEET 16 OF 17

FILE => 53-3018_-arch16.dgn

USERNAME => tfcdrol DATE PLOTTED => 22-JUN-2010 TIME PLOTTED => 16:00

DIST	COUNTY	ROUTE	KILOMETER POST TOTAL PROJECT	SHEET No	TOTAL SHEETS
07	LA	5	2.9/4.9	954	1082

LICENSED ARCHITECT — DATE 5/24/10

6-21-10
PLANS APPROVAL DATE

LICENSED ARCHITECT H. Javier Chavez 14073 03-31-11 Renewal Date STATE OF CALIFORNIA

The State of California or its officers or agents shall not be responsible for the accuracy or completeness of electronic copies of this plan sheet.

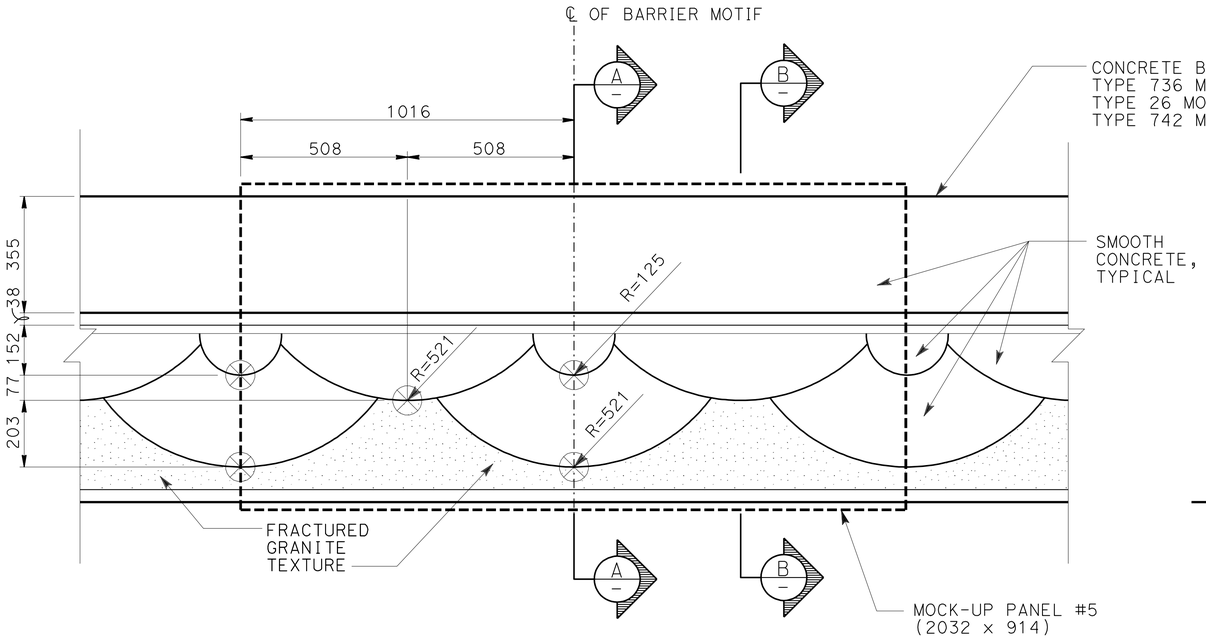

ELEVATION - BARRIER MOTIF

NO SCALE

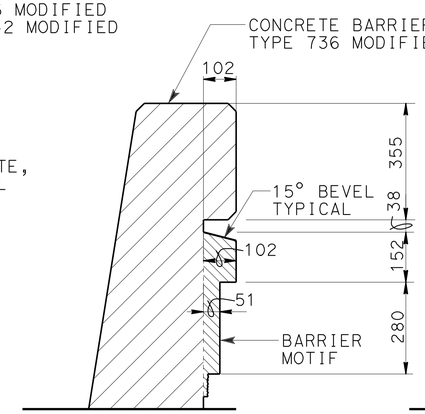

A-A SECTION

NO SCALE

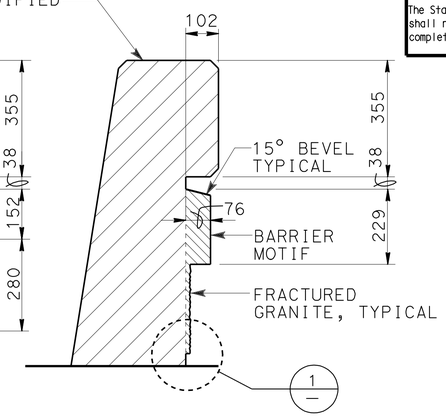

B-B SECTION

NO SCALE

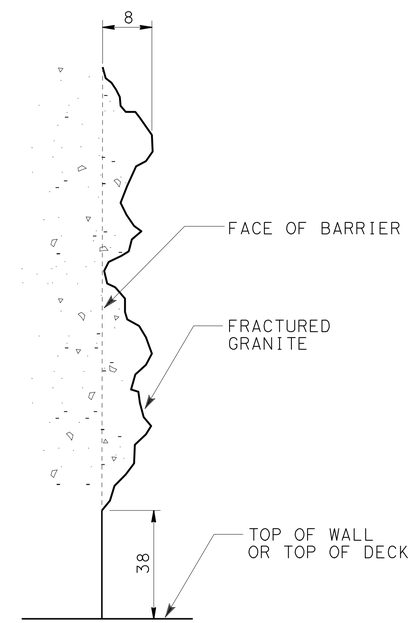

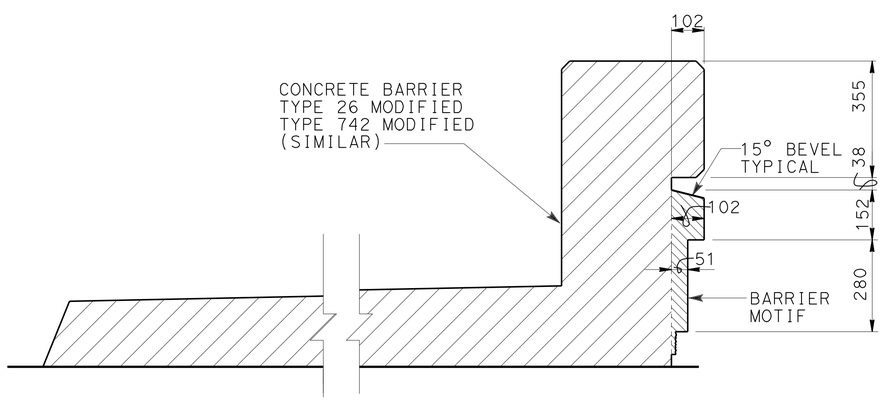

A-A SECTION

NO SCALE

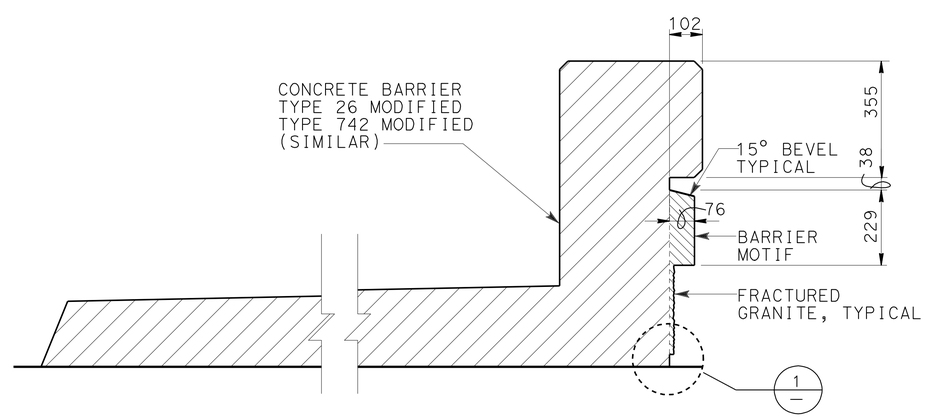

B-B SECTION

NO SCALE

1 DETAIL

NO SCALE

Caltrans Metric

DESIGN	BY H. Chavez	CHECKED I. Tasabia	
DETAILS	BY K. Li	CHECKED H. Chavez	
QUANTITIES	BY	CHECKED	

STATE OF CALIFORNIA
DEPARTMENT OF TRANSPORTATION

DIVISION OF ENGINEERING SERVICES
BRIDGE ARCHITECTURE AND AESTHETICS

BRIDGE NO. 53-3018
KILOMETER POST 3.88(2.42)

CARMENITA ROAD OVERCROSSING/OVERHEAD
BARRIER MOTIF DETAILS

SHEET A16

ALL DIMENSIONS ARE IN MILLIMETERS UNLESS OTHERWISE SHOWN

ORIGINAL SCALE IN MILLIMETERS FOR REDUCED PLANS 0 10 20 30 40 50 60 70 80 90 100

CU 07225
EA 2159C1

DISREGARD PRINTS BEARING EARLIER REVISION DATES

REVISION DATES: 9/15/09 2/3/10

SHEET 17 OF 17

FILE => 53-3018_-arch17.dgn

USERNAME => trcarol DATE PLOTTED => 22-JUN-2010 TIME PLOTTED => 16:00

DIST	COUNTY	ROUTE	KILOMETER POST TOTAL PROJECT	SHEET No	TOTAL SHEETS
07	LA	5	2.9/4.9	955	1082

Daniel L Texler 01-26-10
REGISTERED CIVIL ENGINEER DATE

6-21-10
PLANS APPROVAL DATE

REGISTERED PROFESSIONAL ENGINEER Daniel L. Texler No. 49792 Exp. 9-30-10 CIVIL STATE OF CALIFORNIA

The State of California or its officers or agents shall not be responsible for the accuracy or completeness of electronic copies of this plan sheet.

PROFILE GRADE
No Scale

NOTES:

1. Paint "Br. No. 53-3018K"
2. Paint "CARMENITA RD SB OFF-RANP"
3. Paint Bent number
4. Structure Approach Type N(9S)
5. Concrete Barrier Type 736 Mod, install utility conduits as req'd (not shown) for size and other data, see "ROAD PLANS"

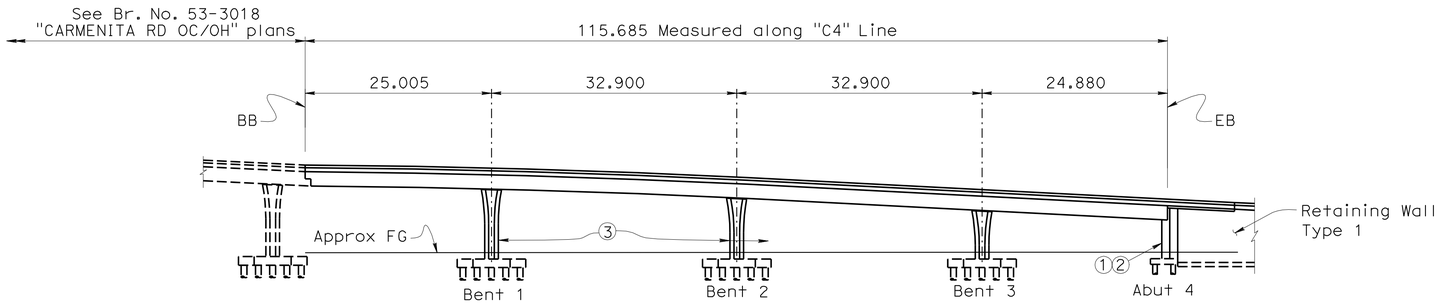

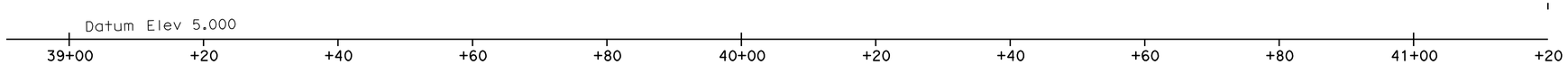

ELEVATION
1:400

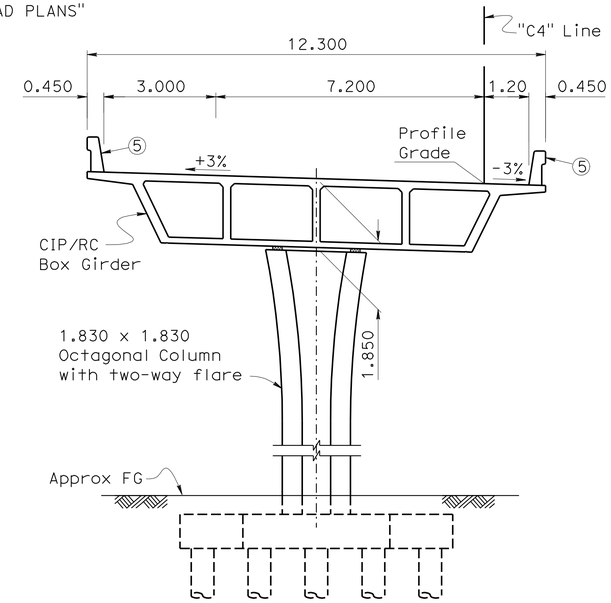

TYPICAL SECTION
1:80

QUANTITIES

STRUCTURE EXCAVATION (BRIDGE)	297	m3
STRUCTURE EXCAVATION (CONTAMINATED)	104	m3
STRUCTURE EXCAVATION (RETAINING WALL)	2286	m3
STRUCTURE BACKFILL (BRIDGE)	229	m3
STRUCTURE BACKFILL (RETAINING WALL)	1888	m3
FURNISH STEEL PIPE PILING (610 MM)	1458	m
DRIVE STEEL PIPE PILE (610 MM)	74	EA
FURNISH PILING (CLASS 400) (ALTERNATIVE V)	2645	m
DRIVE PILE (CLASS 400) (ALTERNATIVE V)	181	EA
760 mm PILE CASING	1055	m
STRUCTURAL CONCRETE, BRIDGE FOOTING	204	m3
STRUCTURAL CONCRETE, BRIDGE	767	m3
STRUCTURAL CONCRETE, RETAINING WALL	658	m3
STRUCTURAL CONCRETE, APPROACH SLAB (TYPE N)	34	m3
ARCHITECTURAL TREATMENT	720	m2
PTFE SPHERICAL BEARING	4	EA
JOINT SEAL ASSEMBLY (MR 75 MM)	12	m
JOINT SEAL (MR 40 MM)	13	m
BAR REINFORCING STEEL (BRIDGE)	175 170	kg
BAR REINFORCING STEEL (RETAINING WALL)	59 346	kg
HEADED BAR REINFORCEMENT	264	EA
MISCELLANEOUS METAL (BRIDGE)	783	kg
CONCRETE BARRIER (TYPE 736 MODIFIED)	234	m
CONCRETE BARRIER (TYPE 736A MODIFIED)	213	m

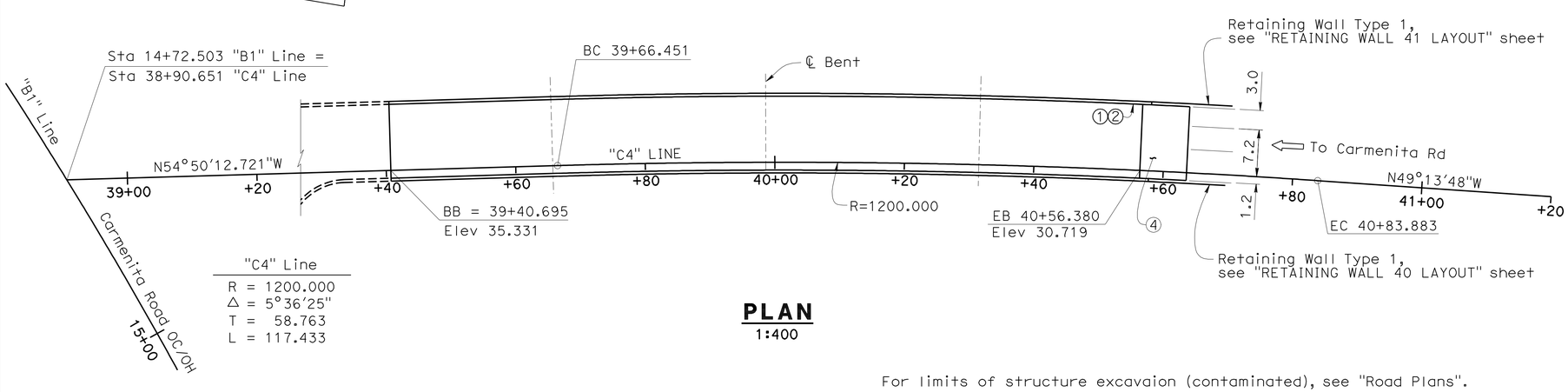

"C4" Line
R = 1200.000
Δ = 5°36'25"
T = 58.763
L = 117.433

PLAN
1:400

For limits of structure excavaion (contaminated), see "Road Plans".

Caltrans Metric

DESIGN	BY Phu Nguyen	CHECKED D. Menzmer	LOAD FACTOR DESIGN	LIVE LOADING: HS20-44 AND ALTERNATIVE AND PERMIT DESIGN LOAD	
DETAILS	BY Pauline Tong	CHECKED D. Menzmer	LAYOUT	BY	CHECKED
QUANTITIES	BY M. Okimura	CHECKED D. Menzmer	SPECIFICATIONS	BY M. Pan	PLANS AND SPECS COMPARED

DESIGN ENGINEER

ALL DIMENSIONS ARE IN METERS UNLESS OTHERWISE SHOWN

ORIGINAL SCALE IN MILLIMETERS FOR REDUCED PLANS 0 10 20 30 40 50 60 70 80 90 100

STATE OF CALIFORNIA
DEPARTMENT OF TRANSPORTATION

DIVISION OF ENGINEERING SERVICES
STRUCTURE DESIGN
DESIGN BRANCH 11

CU 07225
EA 2159C1

BRIDGE NO. 53-3018K
KILOMETER POST 3.875

CARMENITA ROAD SB OFF-RAMP
GENERAL PLAN

DISREGARD PRINTS BEARING EARLIER REVISION DATES

REVISION DATES: 10-24-07, 1-2-10, 1-11-10, 3-18-08, 7-1-08, 5-28-08, 6-17-09, 1-13-09, 12-28-09

SHEET 1 OF 29

STRUCTURES DESIGN GENERAL PLAN SHEET (METRIC) (REV.03-17-04)

FILE => 53-3018k-a-gp.dgn

USERNAME => ttpierce DATE PLOTTED => 15-FEB-2011 TIME PLOTTED => 11:30

DIST	COUNTY	ROUTE	KILOMETER POST TOTAL PROJECT	SHEET No	TOTAL SHEETS
07	LA	5	2.9/4.9	956	1082

Daniel L. Texler 01-26-10
REGISTERED CIVIL ENGINEER DATE

6-21-10
PLANS APPROVAL DATE

REGISTERED PROFESSIONAL ENGINEER Daniel L. Texler No. 49792 Exp. 9-30-10 CIVIL STATE OF CALIFORNIA

The State of California or its officers or agents shall not be responsible for the accuracy or completeness of electronic copies of this plan sheet.

GENERAL NOTES
LOAD FACTOR DESIGN

DESIGN: CALTRANS BRIDGE DESIGN SPECIFICATIONS LFD Version April 2000 (1996 AASHTO with Interims and Revisions by Caltrans)

SEISMIC DESIGN: CALTRANS SEISMIC DESIGN CRITERIA (SDC), Version 1.4, June 2006

DEAD LOAD: Includes 1675 Pa for Future Wearing Surface

LIVE LOADING: HS20-44 and Alternative and Permit Design Load.

SEISMIC LOADING: See Site Specific, ARS Curve

REINFORCED CONCRETE:

f_y = 414 MPa

f'_c = 25 MPa (except as shown on Concrete Strength & Type Limits Diagram)

n = 8

Transverse Deck Slabs (Working Stress):

f_s = 138 MPa

f_c = 8.3 MPa

n = 10

STRUCTURAL STEEL: Steel Pipe: Shear Key ASTM-A53/A53M, Grade B

f_y = 240 MPa

f_u = 415 MPa

RAILING LOAD: 240 kN traffic collision load (LFD) applied laterally at top of barrier and distributed over a longitudinal distance of 3.008 m

STANDARD PLANS DATED JULY 2004

A10A	ACRONYMS AND ABBREVIATIONS (A-L)
A10B	ACRONYMS AND ABBREVIATIONS (M-Z)
A10C	SYMBOLS (SHEET 1 OF 2)
A10D	SYMBOLS (SHEET 2 OF 2)
A62B	LIMITS OF PAYMENT FOR EXCAVATION AND BACKFILL - BRIDGE SURCHARGE AND WALL
A62C	LIMITS OF PAYMENT FOR EXCAVATION AND BACKFILL - BRIDGE
B0-1	BRIDGE DETAILS
B0-3	BRIDGE DETAILS
B0-5	BRIDGE DETAILS
B0-13	BRIDGE DETAILS
B2-5	PILE DETAILS CLASS 400 AND CLASS 625 ALTERNATIVE "V"
B3-1	RETAINING WALL TYPE 1
B3-8	RETAINING WALL DETAILS NO. 1
RSP B6-21	JOINT SEALS (MAXIMUM MOVEMENT RATING = 50 MM)
B7-1	BOX GIRDER DETAILS
B11-56	CONCRETE BARRIER TYPE 736
RSP P1	JOINTED PLAIN CONCRETE PAVEMENT

STANDARD PLAN SHEET NO.

DETAIL NO.

INDEX TO PLANS

SHEET NO.	TITLE
1	GENERAL PLAN
2	INDEX TO PLANS
3	DECK CONTOURS
4	FOUNDATION PLAN NO. 1
5	FOUNDATION PLAN NO. 2
6	PILE DATA
7	PILE DETAILS
8	ABUTMENT LAYOUT
9	ABUTMENT DETAILS
10	RETAINING WALL 40 LAYOUT
11	RETAINING WALL 41 LAYOUT
12	RETAINING WALL 41 PILE LAYOUT
13	RETAINING WALL DETAILS
14	BENT LAYOUT
15	BENT DETAILS
16	BENT FOOTING DETAILS
17	TYPICAL SECTION
18	GIRDER LAYOUT
19	ADDITIONAL GIRDER REINFORCEMENT NO. 1
20	ADDITIONAL GIRDER REINFORCEMENT NO. 2
21	HINGE LAYOUT
22	HINGE DETAILS NO. 1
23	HINGE DETAILS NO. 2
24	PTFE/SPHERICAL EXPANSION BEARING DETAILS NO. 1
25	PTFE/SPHERICAL EXPANSION BEARING DETAILS NO. 2
26	JOINT SEAL ASSEMBLY (MAXIMUM MOVEMENT RATING = 100 mm)
27	DRAINAGE LAYOUT
28	STRUCTURE APPROACH TYPE N(9S)
29	STRUCTURE APPROACH DRAINAGE DETAILS

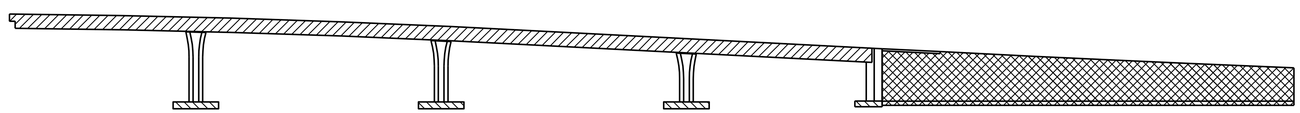

Structural Concrete, Bridge

Structural Concrete, Bridge Footing

Structural Concrete, Bridge (25 MPa at 28 days)

Structural Concrete, Retaining Wall

CONCRETE STRENGTH AND TYPE LIMITS

No Scale

Caltrans Metric

	BY	CHECKED
DESIGN	Phu Nguyen	Ubong Inyang
DETAILS	Pauline Tong	D. Menzmer
QUANTITIES	M. Okimura	D. Menzmer

STATE OF CALIFORNIA DEPARTMENT OF TRANSPORTATION

DIVISION OF ENGINEERING SERVICES STRUCTURE DESIGN DESIGN BRANCH 11

BRIDGE NO. 53-3018K

KILOMETER POST 3.875

CARMENITA ROAD SB OFF-RAMP

INDEX TO PLANS

ALL DIMENSIONS ARE IN MILLIMETERS UNLESS OTHERWISE SHOWN

ORIGINAL SCALE IN MILLIMETERS FOR REDUCED PLANS 0 10 20 30 40 50 60 70 80 90 100

CU 07225
EA 2159C1

DISREGARD PRINTS BEARING EARLIER REVISION DATES

REVISION DATES: 10-28-01 12-18-09 12-28-09 1-06-10 1-7-10 1-13-09 5-18-09 6-18-09 6-30-09

SHEET 2 OF 29

FILE => 53-3018k-bb-itp.dgn

STRUCTURES DESIGN DETAIL SHEET (METRIC) (REV.03-17-04)

USERNAME => trcarol DATE PLOTTED => 22-JUN-2010 TIME PLOTTED => 16:00

DIST	COUNTY	ROUTE	KILOMETER POST TOTAL PROJECT	SHEET No	TOTAL SHEETS
07	LA	5	2.9/4.9	957	1082

Daniel L. Texler 01-26-10
REGISTERED CIVIL ENGINEER DATE

6-21-10
PLANS APPROVAL DATE

REGISTERED PROFESSIONAL ENGINEER
Daniel L. Texler
No. 49792
Exp. 9-30-10
CIVIL
STATE OF CALIFORNIA

The State of California or its officers or agents shall not be responsible for the accuracy or completeness of electronic copies of this plan sheet.

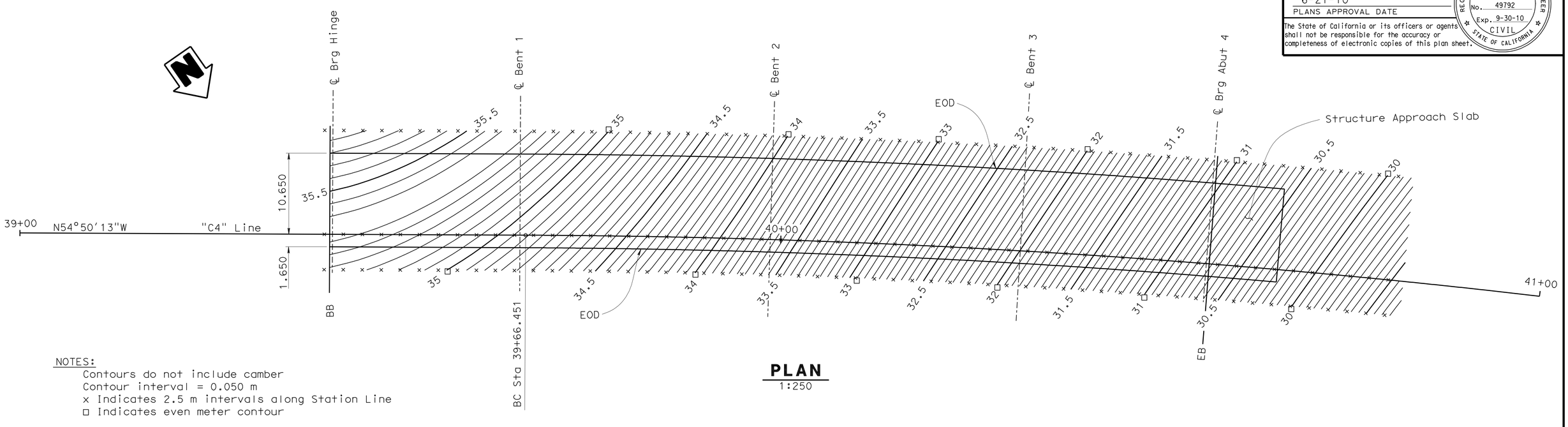

PLAN
1:250

NOTES:
- Contours do not include camber
- Contour interval = 0.050 m
- x Indicates 2.5 m intervals along Station Line
- □ Indicates even meter contour

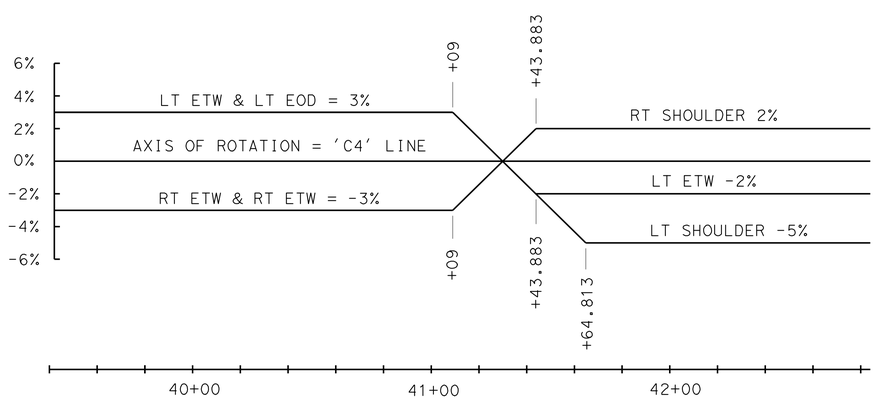

SUPERELEVATION DIAGRAM - "C4" LINE
NO SCALE

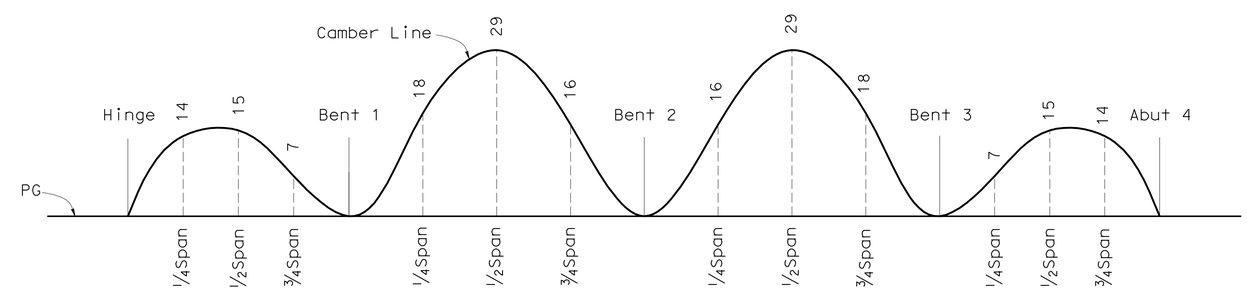

CAMBER DIAGRAM
No Scale

Note: Camber values shown do not include allowances for falsework settlement

HINGE REACTION

HINGE LOCATION	DEAD LOAD (Unfactored)
Span 1	1435 kN

Caltrans Metric

	BY	CHECKED
DESIGN	Phu Nguyen	U. Inyang
DETAILS	L. Goldthwait	U. Inyang
QUANTITIES	M. Okimura	D. Menzmer

STATE OF CALIFORNIA
DEPARTMENT OF TRANSPORTATION

DIVISION OF ENGINEERING SERVICES
STRUCTURE DESIGN
DESIGN BRANCH 11

BRIDGE NO. 53-3018K
KILOMETER POST 3.875

CARMENITA ROAD SB OFF-RAMP
DECK CONTOURS

ALL DIMENSIONS ARE IN METERS UNLESS OTHERWISE SHOWN

ORIGINAL SCALE IN MILLIMETERS FOR REDUCED PLANS 0 10 20 30 40 50 60 70 80 90 100

CU 07225
EA 2159C1

DISREGARD PRINTS BEARING EARLIER REVISION DATES

REVISION DATES: 11-01-07 07-03-08 05-12-08 08-05-09

SHEET 3 OF 29

FILE => 53-3018k-c-dekcon.dgn

STRUCTURES DESIGN DETAIL SHEET (METRIC) (REV.03-17-04)

USERNAME => trcarrol

DIST	COUNTY	ROUTE	KILOMETER POST TOTAL PROJECT	SHEET No	TOTAL SHEETS
07	LA	5	2.9/4.9	958	1082

Caltrans Metric

Daniel L. Texler 01-26-10
REGISTERED CIVIL ENGINEER DATE

6-21-10
PLANS APPROVAL DATE

REGISTERED PROFESSIONAL ENGINEER Daniel L. Texler No. 49792 Exp. 9-30-10 CIVIL STATE OF CALIFORNIA

The State of California or its officers or agents shall not be responsible for the accuracy or completeness of electronic copies of this plan sheet.

Curve Data				
No.	R	Δ	T	L
1	1200.000	18°03'52"	190.754	378.342
2	1200.000	05°36'25"	58.763	117.432

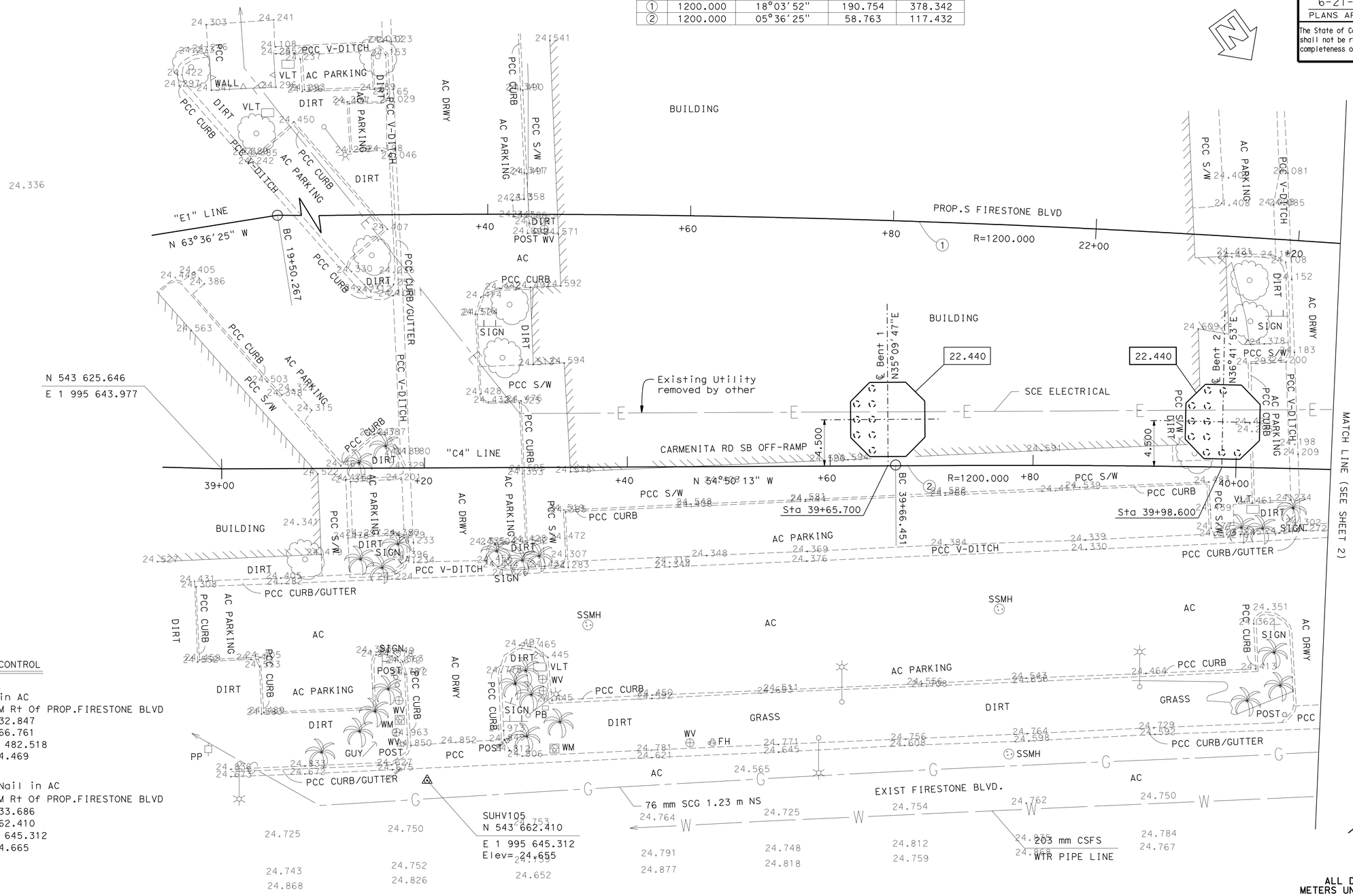

SURVEY CONTROL

SUHV110
FD P/K in AC
31.315 M Rt Of PROP.FIRESTONE BLVD
Sta 23+32.847
N 543 766.761
E 1 995 482.518
Elev= 24.469

SUHV105
FD P/K Nail in AC
55.788 M Rt Of PROP.FIRESTONE BLVD
Sta 21+33.686
N 543 662.410
E 1 995 645.312
Elev= 24.665

NOTES:

UNDERGROUND UTILITIES AS SHOWN ARE APPROXIMATE

- Indicates Bottom of Footing Elevation

- Denotes piles, not all piles shown

ALL DIMENSIONS ARE IN METERS UNLESS OTHERWISE SHOWN

PRELIMINARY INVESTIGATION SECTION

SCALE	VERT. DATUM NAVD88	PHOTOGRAMMETRY AS OF:			
1:200	HORZ. DATUM NAD83 (1986)	SURVEYED	BY T.PHUNG	DRAFTED BY V.PHAM	12/2006
ALIGNMENT TIES Dist.Trav. Sheets		FIELD CHECKED BY		CHECKED BY S.ALIVIO	12/2006

	BY	CHECKED
DESIGN	Phu Nguyen	Ubong Inyang
DETAILS	Pauline Tong	Ubong Inyang
QUANTITIES	W. Okimura	D. Menzmer

STATE OF CALIFORNIA
DEPARTMENT OF TRANSPORTATION

DIVISION OF STRUCTURES
STRUCTURE DESIGN

CU 07225
EA 2159C1

BRIDGE NO. 53-3018K
KILOMETER POST 3.875

CARMENITA ROAD SB OFF-RAMP
FOUNDATION PLAN NO. 1

STRUCTURES FOUNDATION PLAN SHEET (METRIC) (REV.12-1-01)

ORIGINAL SCALE IN MILLIMETERS FOR REDUCED PLANS 0 10 20 30 40 50 60 70 80 90 100

DISREGARD PRINTS BEARING EARLIER REVISION DATES

REVISION DATES (PRELIMINARY STAGE ONLY): 12-04-06 10-26-07 10-31-07 11-18-07 3-18-08 1-13-09 5-28-09 6-17-09

SHEET 4 OF 29

FILE => 53-3018k-e-fp01.dgn

USERNAME => rtrcar01 DATE PLOTTED => 22-JUN-2010 TIME PLOTTED => 16:01

DIST	COUNTY	ROUTE	KILOMETER POST TOTAL PROJECT	SHEET No	TOTAL SHEETS
07	LA	5	2.9/4.9	959	1082

Caltrans Metric

Daniel L. Texler 01-26-10
REGISTERED CIVIL ENGINEER DATE

6-21-10
PLANS APPROVAL DATE

REGISTERED PROFESSIONAL ENGINEER Daniel L. Texler No. 49792 Exp. 9-30-10 CIVIL STATE OF CALIFORNIA

The State of California or its officers or agents shall not be responsible for the accuracy or completeness of electronic copies of this plan sheet.

Curve Data				
No.	R	Δ	T	L
1	1200.000	18°03′52"	190.754	378.342
2	1200.000	05°36′25"	58.763	117.432

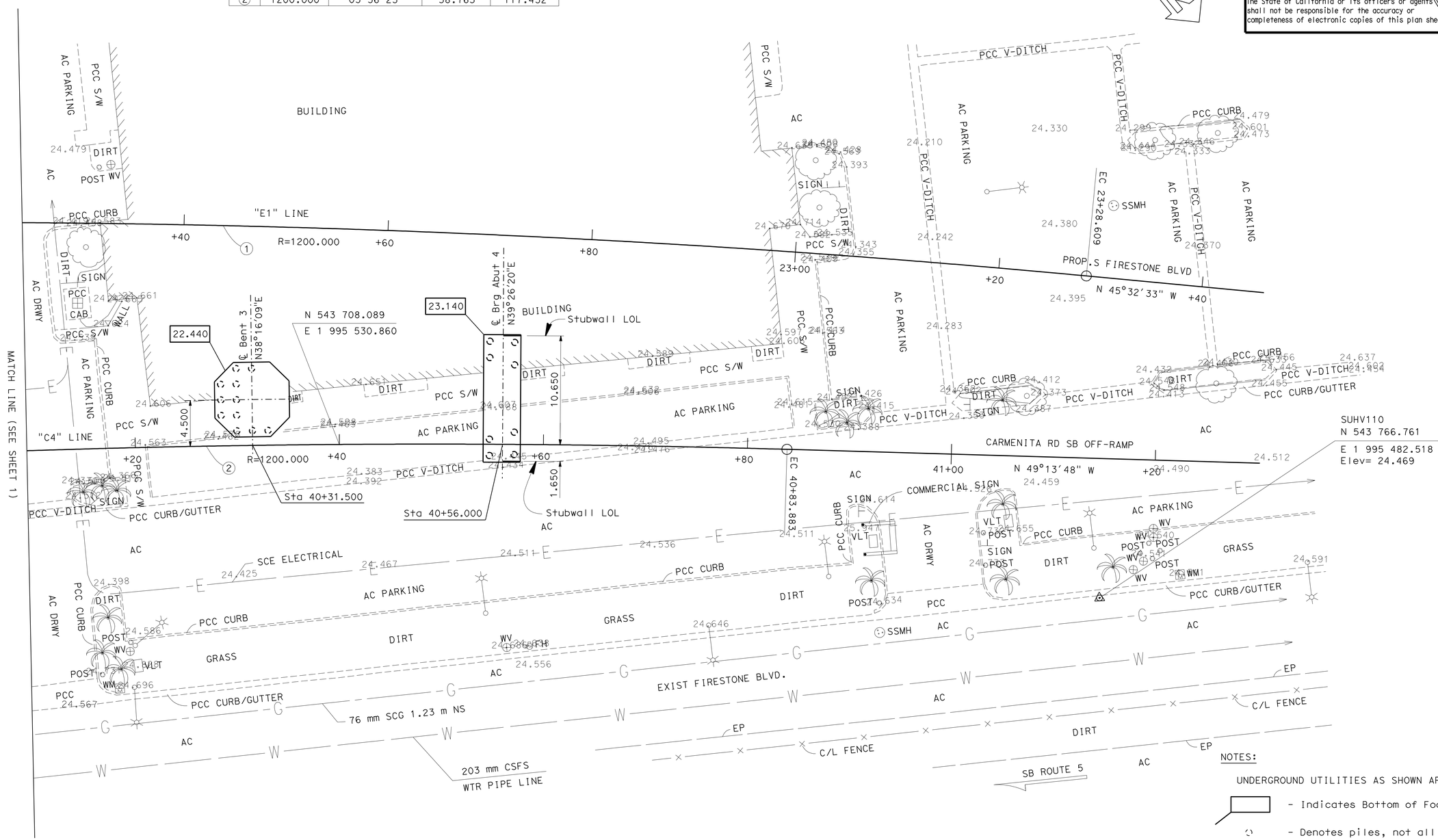

SURVEY CONTROL

(SEE SHEET 1)

NOTES:

UNDERGROUND UTILITIES AS SHOWN ARE APPROXIMATE

- Indicates Bottom of Footing Elevation

- Denotes piles, not all piles shown

ALL DIMENSIONS ARE IN METERS UNLESS OTHERWISE SHOWN

PRELIMINARY INVESTIGATION SECTION							
SCALE 1:200	VERT. DATUM NAVD88	PHOTOGRAMMETRY AS OF:					
	HORZ. DATUM NAD83 (1986)	SURVEYED	BY T.PHUNG	DRAFTED	BY V.PHAM 12/2006		
ALIGNMENT TIES Dist.Trav. Sheets		FIELD CHECKED	BY	CHECKED	BY S.ALIVIO 12/2006		

	BY	CHECKED
DESIGN	Phu Nguyen	Ubong Inyang
DETAILS	Pauline Tong	Ubong Inyang
QUANTITIES	M. Okimura	D. Menzmer

STATE OF CALIFORNIA DEPARTMENT OF TRANSPORTATION

DIVISION OF STRUCTURES
STRUCTURE DESIGN

BRIDGE NO. 53-3018K
KILOMETER POST 3.875

CARMENITA ROAD SB OFF-RAMP
FOUNDATION PLAN NO. 2

STRUCTURES FOUNDATION PLAN SHEET (METRIC) (REV.12-1-01)

ORIGINAL SCALE IN MILLIMETERS FOR REDUCED PLANS 0 10 20 30 40 50 60 70 80 90 100

CU 07225
EA 215C1

DISREGARD PRINTS BEARING EARLIER REVISION DATES

REVISION DATES (PRELIMINARY STAGE ONLY): 12-04-06 10-26-07 10-31-07 11-14-07 3-18-08 1-13-09 5-26-09 6-17-09

SHEET 5 OF 29

FILE => 53-3018k-e-fp02.dgn

USERNAME => trcarol DATE PLOTTED => 22-JUN-2010 TIME PLOTTED => 16:01

DIST	COUNTY	ROUTE	KILOMETER POST TOTAL PROJECT	SHEET No	TOTAL SHEETS
07	LA	5	2.9/4.9	960	1082

Daniel L. Texler 01-26-10
REGISTERED CIVIL ENGINEER DATE

6-21-10
PLANS APPROVAL DATE

REGISTERED PROFESSIONAL ENGINEER Daniel L. Texler No. 49792 Exp. 9-30-10 CIVIL STATE OF CALIFORNIA

The State of California or its officers or agents shall not be responsible for the accuracy or completeness of electronic copies of this plan sheet.

PILE DATA TABLE

Location	Pile Type	Design Loading	Nominal Resistance		Cut-off Elevation (m)	Design Tip Elevation (m) see Note 3			Specified Tip Elev (m)	Nominal Driving Resistance (kH) see Note 2
			Compression	Tension		Compression	Tension	Lateral		
Bent 1	610 x 12.7 Pipe Pile	N/A	1400 kN	700 kN	22.565	3.0	6.0	7.0	3.0	3350
Bent 2	610 x 12.7 Pipe Pile	N/A	1400 kN	600 kN	22.565	3.0	6.5	7.0	3.0	3350
Bent 3	610 x 12.7 Pipe Pile	N/A	1400 kN	600 kN	22.565	3.0	6.5	7.0	3.0	3350
Abut 4	610 x 12.7 Pipe Pile	700 kN	N/A	N/A	23.265	3.0	N/A	7.0	3.0	3350

DESIGN TIP ELEVATION ADJUSTMENT TABLE

Pile casing Tip Elevation (Expressed as a depth below existing ground in meters)	14.6	16.0	17.5	19.0	20.5	22.0	23.5	25.0	26.5
DTE Adjustment (m)									
Nominal Resistance less than 1450 kN or Design Loading less than 725 kN	0.0	-1.0	-2.3	-3.7	-5.0	-6.1	-6.9	-7.6	-8.4
Nominal Resistance greater than 1450 kN or Design Loading greater than 725 kN	0.0	-1.5	-3.0	-4.6	-6.1	-6.9	-7.6	-8.4	-9.1

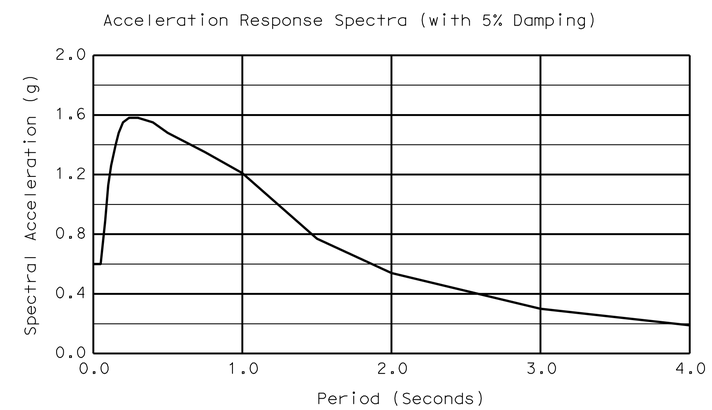

SITE SPECIFIC ARS CURVE

NOTES:

1. For Typical Pipe Pile Installation Procedure, see "PILE DETAILS" sheet
2. "Nominal Driving Resistance" shall only be applicable to piles installed without a Temp Steel Casing
3. Where pile installations require a pile casing and the Tip Elevation of the steel casing will be more than 14.6 meters below the exist ground surface, the "Specified Tip Elevation" value shown in the Pile Data Table shall be modified by adding to it the appropriate "DTE Adjustment" value from the Design Tip Elevation Adjustment Table

Caltrans Metric

ALL DIMENSIONS ARE IN MILLIMETERS UNLESS OTHERWISE SHOWN

ORIGINAL SCALE IN MILLIMETERS FOR REDUCED PLANS 0 10 20 30 40 50 60 70 80 90 100

	BY	CHECKED
DESIGN	Phu Nguyen	Ubong Inyang
DETAILS	Pauline Tong	D. Menzmer
QUANTITIES	M. Okimura	D. Menzmer

STATE OF CALIFORNIA DEPARTMENT OF TRANSPORTATION

DIVISION OF ENGINEERING SERVICES STRUCTURE DESIGN
DESIGN BRANCH 11

CU 07225
EA 2159C1

BRIDGE NO. 53-3018K
KILOMETER POST 3.875

CARMENITA ROAD SB OFF-RAMP
PILE DATA

DISREGARD PRINTS BEARING EARLIER REVISION DATES 1-5-10

REVISION DATES

SHEET 6 OF 29

FILE => 53-3018k-fa-piledata.dgn

STRUCTURES DESIGN DETAIL SHEET (METRIC) (REV.03-17-04)

USERNAME => ttmikes1 DATE PLOTTED => 23-JUN-2010 TIME PLOTTED => 05:40

DIST	COUNTY	ROUTE	KILOMETER POST TOTAL PROJECT	SHEET No	TOTAL SHEETS
07	LA	5	2.9/4.9	961	1082

Daniel L. Texler 5/24/10
REGISTERED CIVIL ENGINEER DATE

6-21-10
PLANS APPROVAL DATE

REGISTERED PROFESSIONAL ENGINEER
Daniel L. Texler
No. 49792
Exp. 9-30-10
CIVIL
STATE OF CALIFORNIA

The State of California or its officers or agents shall not be responsible for the accuracy or completeness of electronic copies of this plan sheet.

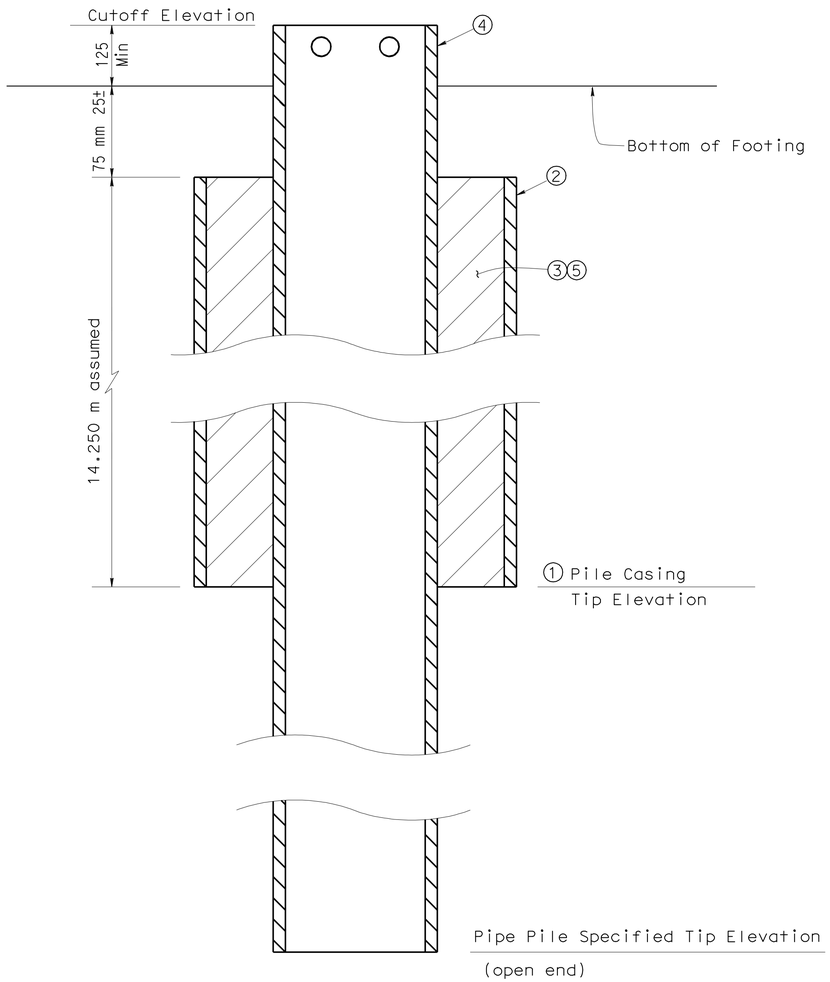

TYPICAL PIPE PILE INSTALLATION

INSTALLATION NOTES:

① Determine required Pile Casing Tip Elevation

② Install Pile Casing, 760 mm ø

③ Remove soil and debris from interior space of Pile Casing

④ Drive 610 mm ø Pipe Pile

⑤ Fill space between Pipe Pile & Pile Casing with grout

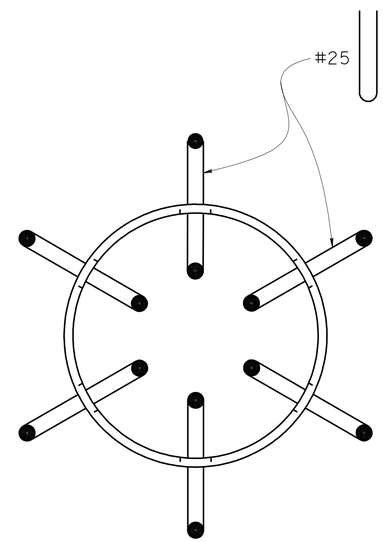

PLAN

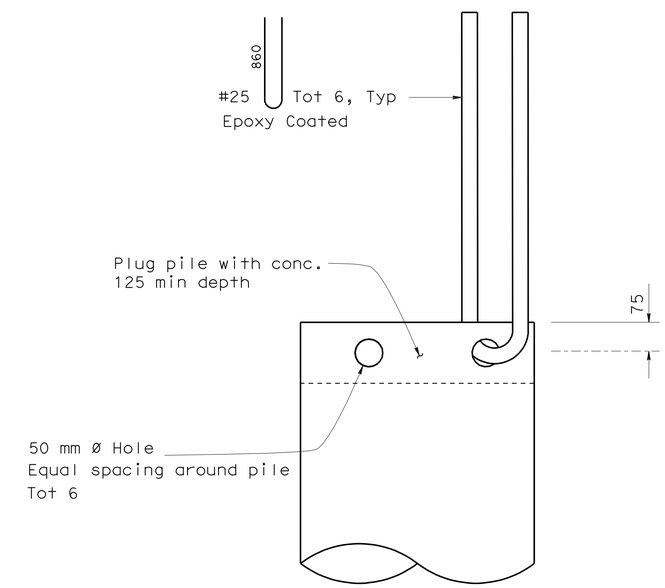

ELEVATION

TYPICAL PIPE PILE ANCHOR

NO SCALE

Caltrans Metric

	BY	CHECKED
DESIGN	D. Texler	U. Inyang
DETAILS	T. Bittermann	U. Inyang
QUANTITIES	M. Okimura	D. Menzmer

STATE OF CALIFORNIA
DEPARTMENT OF TRANSPORTATION

DIVISION OF ENGINEERING SERVICES
STRUCTURE DESIGN
DESIGN BRANCH 11

BRIDGE NO. 53-3018K
KILOMETER POST 3.875

CARMENITA ROAD SB OFF-RAMP
PILE DETAILS

ALL DIMENSIONS ARE IN MILLIMETERS UNLESS OTHERWISE SHOWN

ORIGINAL SCALE IN MILLIMETERS FOR REDUCED PLANS 0 10 20 30 40 50 60 70 80 90 100

CU 07225
EA 2159C1

DISREGARD PRINTS BEARING EARLIER REVISION DATES

REVISION DATES: 12-30-09 5-06-10 5/18/10

SHEET 7 OF 29

FILE => 53-3018k-fb-piledet.dgn

STRUCTURES DESIGN DETAIL SHEET (METRIC) (REV.03-17-04)

USERNAME => ttmirkes1 DATE PLOTTED => 23-JUN-2010 TIME PLOTTED => 05:40

DIST	COUNTY	ROUTE	KILOMETER POST TOTAL PROJECT	SHEET No	TOTAL SHEETS
07	LA	5	2.9/4.9	962	1082

Daniel L. Texler 5/24/10
REGISTERED CIVIL ENGINEER DATE

6-21-10
PLANS APPROVAL DATE

REGISTERED PROFESSIONAL ENGINEER Daniel L. Texler No. 49792 Exp. 9-30-10 CIVIL STATE OF CALIFORNIA

The State of California or its officers or agents shall not be responsible for the accuracy or completeness of electronic copies of this plan sheet.

Notes:

1. Joint Seal MR = 40 — RSP B6-21
2. Expanded Polystyrene — B0-13

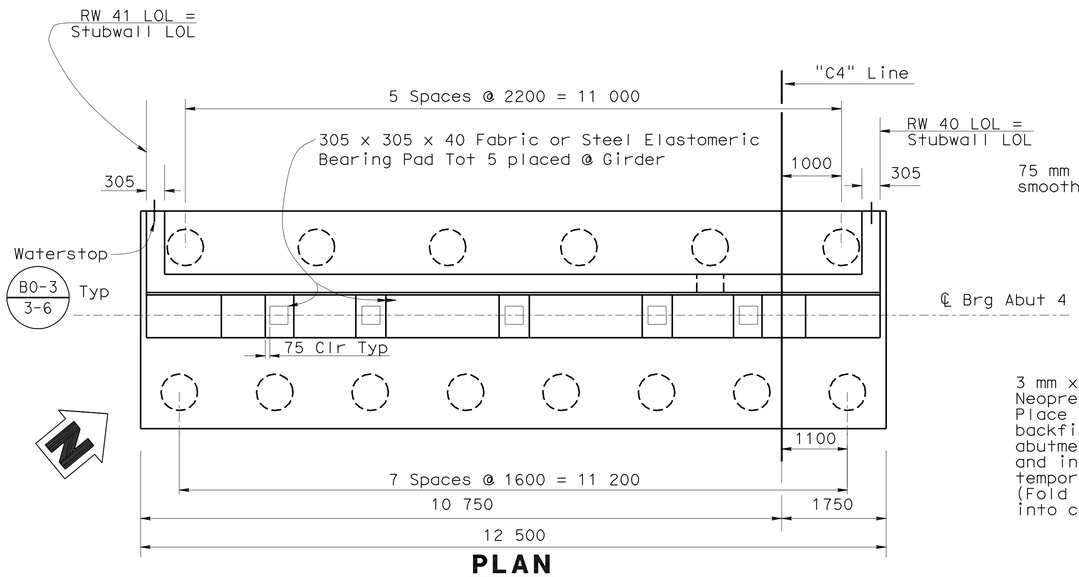

PLAN
1:50

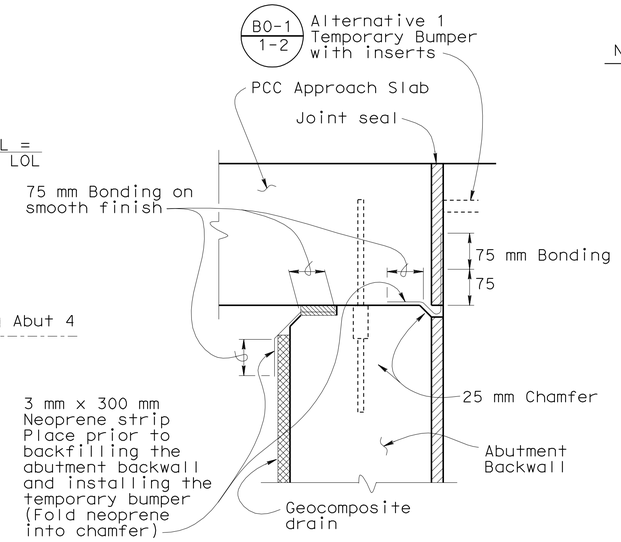

JOINT PROTECTION DETAIL
1:20

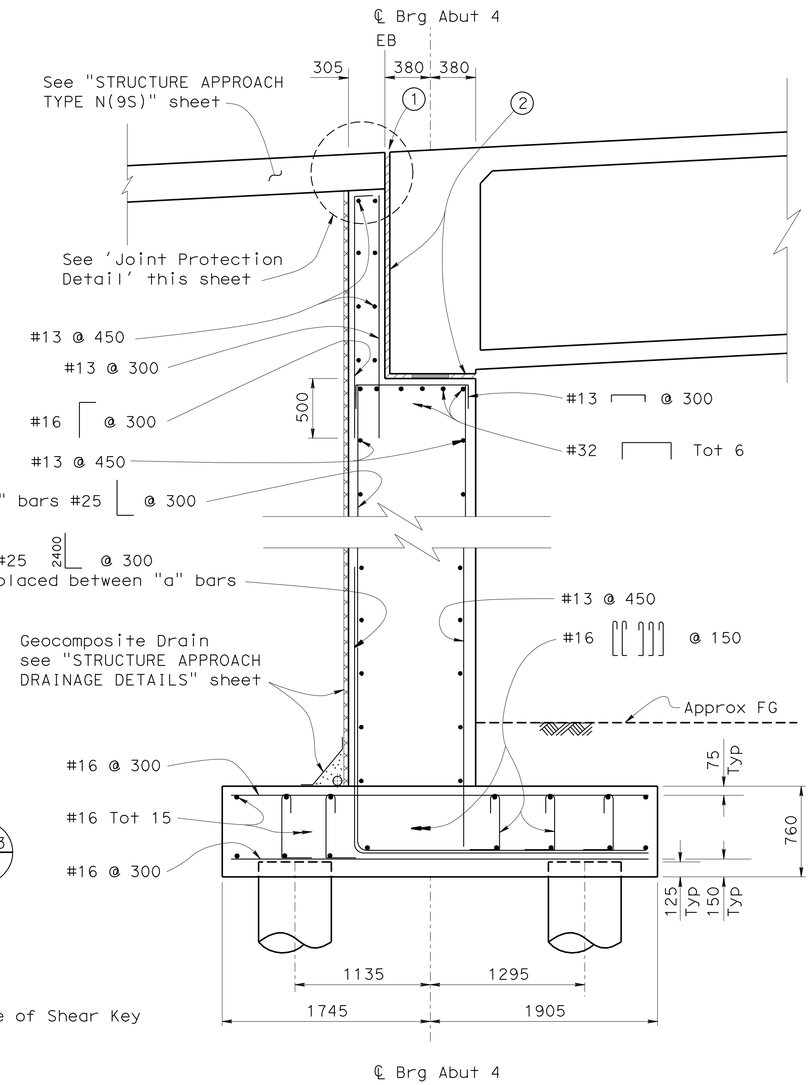

ABUTMENT SECTION
1:25

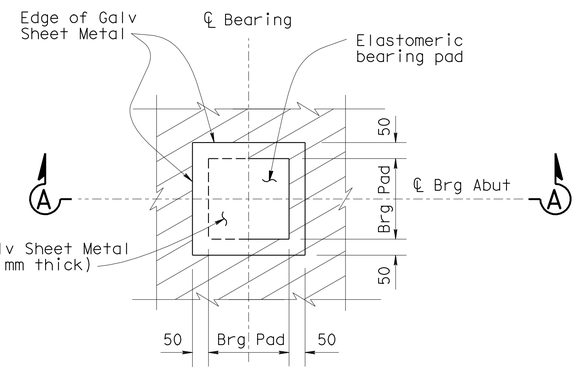

BEARING PAD DETAIL
No Scale

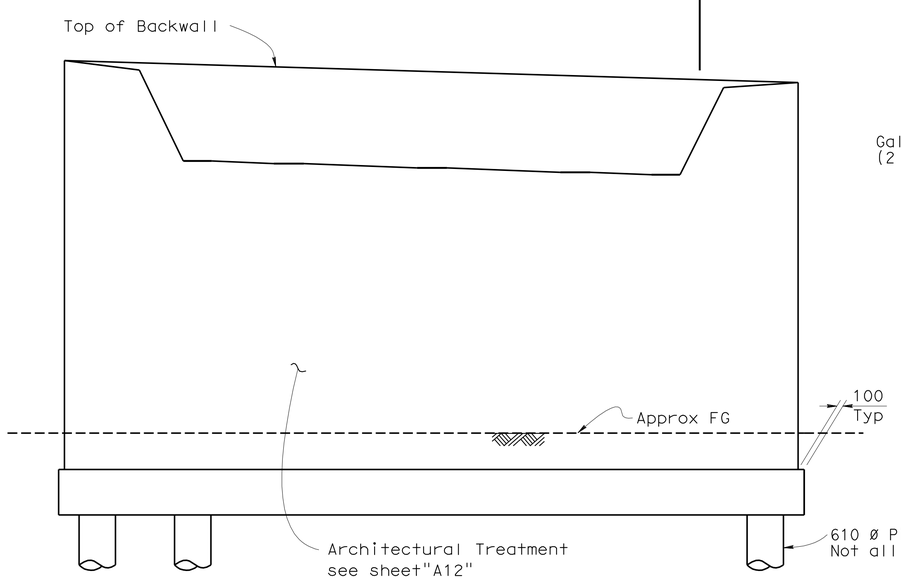

ELEVATION
1:50

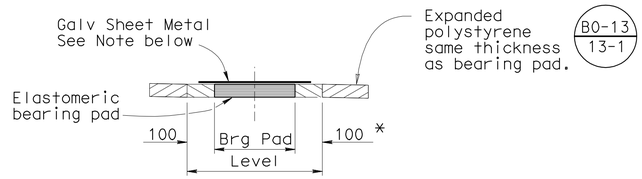

Note: Coat top of Bearing Pad with silicone grease prior to placing sheet metal

* 75 mm at side of Shear Key

SECTION A-A
No Scale

Caltrans Metric						
	DESIGN	BY Phu Nguyen	CHECKED U. Inyang	STATE OF CALIFORNIA DEPARTMENT OF TRANSPORTATION	DIVISION OF ENGINEERING SERVICES STRUCTURE DESIGN DESIGN BRANCH 11	BRIDGE NO. 53-3018K
	DETAILS	BY L. Goldthwait	CHECKED U. Inyang			KILOMETER POST 3.875
	QUANTITIES	BY M. Okimura	CHECKED D. Menzmer			

CARMENITA ROAD SB OFF-RAMP
ABUTMENT LAYOUT

ALL DIMENSIONS ARE IN MILLIMETERS UNLESS OTHERWISE SHOWN

ORIGINAL SCALE IN MILLIMETERS FOR REDUCED PLANS 0 10 20 30 40 50 60 70 80 90 100

CU 07225
EA 2159C1

DISREGARD PRINTS BEARING EARLIER REVISION DATES

REVISION DATES: 10-24-07 12-24-07 9-18-08 1-13-09 6-17-09 7-02-09 01-06-10 5-20-10

SHEET 8 OF 29

FILE => 53-3018k-fc-abtlyt.dgn

STRUCTURES DESIGN DETAIL SHEET (METRIC) (REV.03-17-04)

USERNAME => trmikest DATE PLOTTED => 23-JUN-2010 TIME PLOTTED => 06:40

DIST	COUNTY	ROUTE	KILOMETER POST TOTAL PROJECT	SHEET No	TOTAL SHEETS
07	LA	5	2.9/4.9	963	1082

Daniel L. Texler 01-26-10
REGISTERED CIVIL ENGINEER DATE

6-21-10
PLANS APPROVAL DATE

REGISTERED PROFESSIONAL ENGINEER
Daniel L. Texler
No. 49792
Exp. 9-30-10
CIVIL
STATE OF CALIFORNIA

The State of California or its officers or agents shall not be responsible for the accuracy or completeness of electronic copies of this plan sheet.

Note: Left side of Abutment shown.
Right side of Abutment similiar

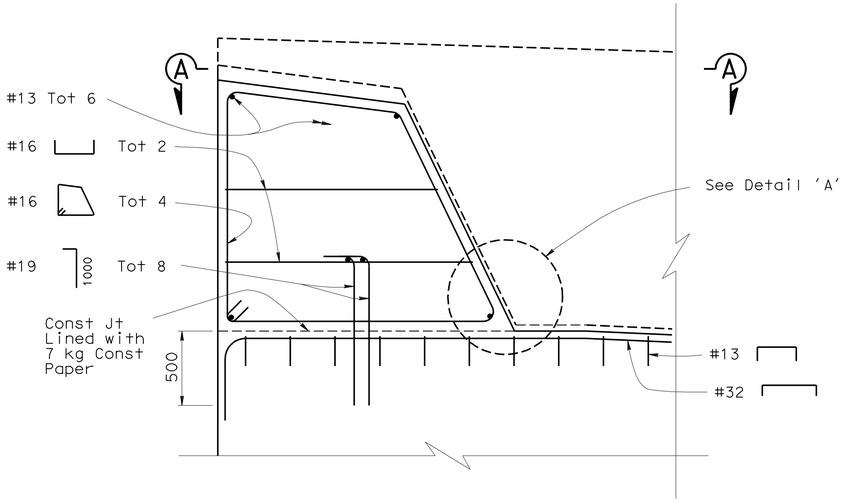

ABUTMENT SHEAR KEY DETAIL

1:20

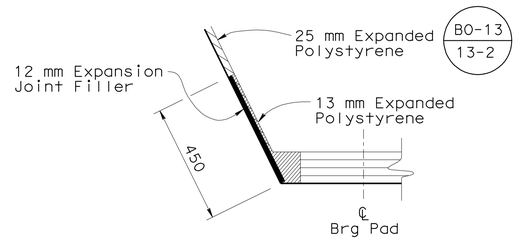

DETAIL A

NO SCALE

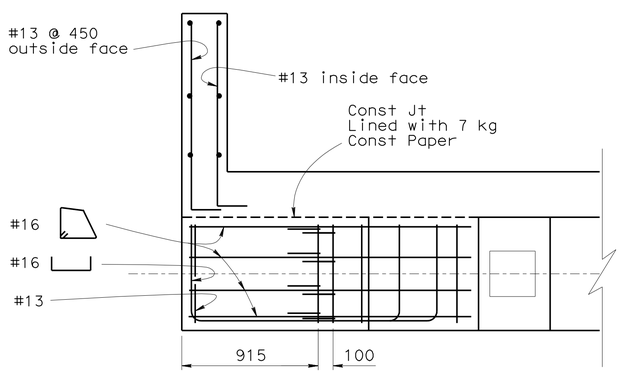

SECTION A-A

1:20

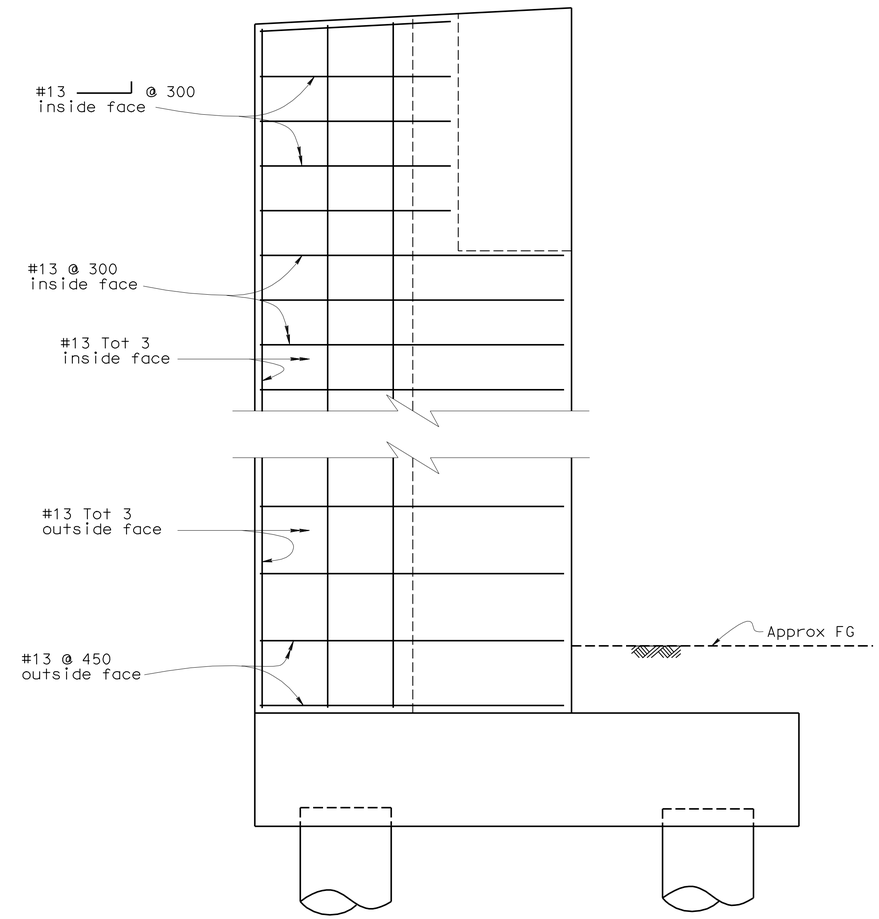

STUBWALL ELEVATION

1:20

DESIGN	BY Phu Nguyen	CHECKED U. Inyang	
DETAILS	BY L. Goldthwait	CHECKED U. Inyang	
QUANTITIES	BY M. Okimura	CHECKED D. Menzmer	

STATE OF CALIFORNIA
DEPARTMENT OF TRANSPORTATION

DIVISION OF ENGINEERING SERVICES
STRUCTURE DESIGN
DESIGN BRANCH 11

BRIDGE NO. 53-3018K
KILOMETER POST 3.875

CARMENITA ROAD SB OFF-RAMP
ABUTMENT DETAILS

ALL DIMENSIONS ARE IN MILLIMETERS UNLESS OTHERWISE SHOWN

ORIGINAL SCALE IN MILLIMETERS FOR REDUCED PLANS 0 10 20 30 40 50 60 70 80 90 100

CU 07225
EA 2159C1

DISREGARD PRINTS BEARING EARLIER REVISION DATES

REVISION DATES: 11-02-07 1-02-08 1-13-09 12-28-09

SHEET 9 OF 29

FILE => 53-3018k-ff-abtdet.dgn

STRUCTURES DESIGN DETAIL SHEET (METRIC) (REV.03-17-04)

USERNAME => trmikes1 DATE PLOTTED => 23-JUN-2010 TIME PLOTTED => 05:40

DIST	COUNTY	ROUTE	KILOMETER POST TOTAL PROJECT	SHEET No	TOTAL SHEETS
07	LA	5	2.9/4.9	964	1082

Daniel L. Texler 01-26-10
REGISTERED CIVIL ENGINEER DATE

6-21-10
PLANS APPROVAL DATE

REGISTERED PROFESSIONAL ENGINEER Daniel L.Texler No. 49792 Exp. 9-30-08 CIVIL STATE OF CALIFORNIA

The State of California or its officers or agents shall not be responsible for the accuracy or completeness of electronic copies of this plan sheet.

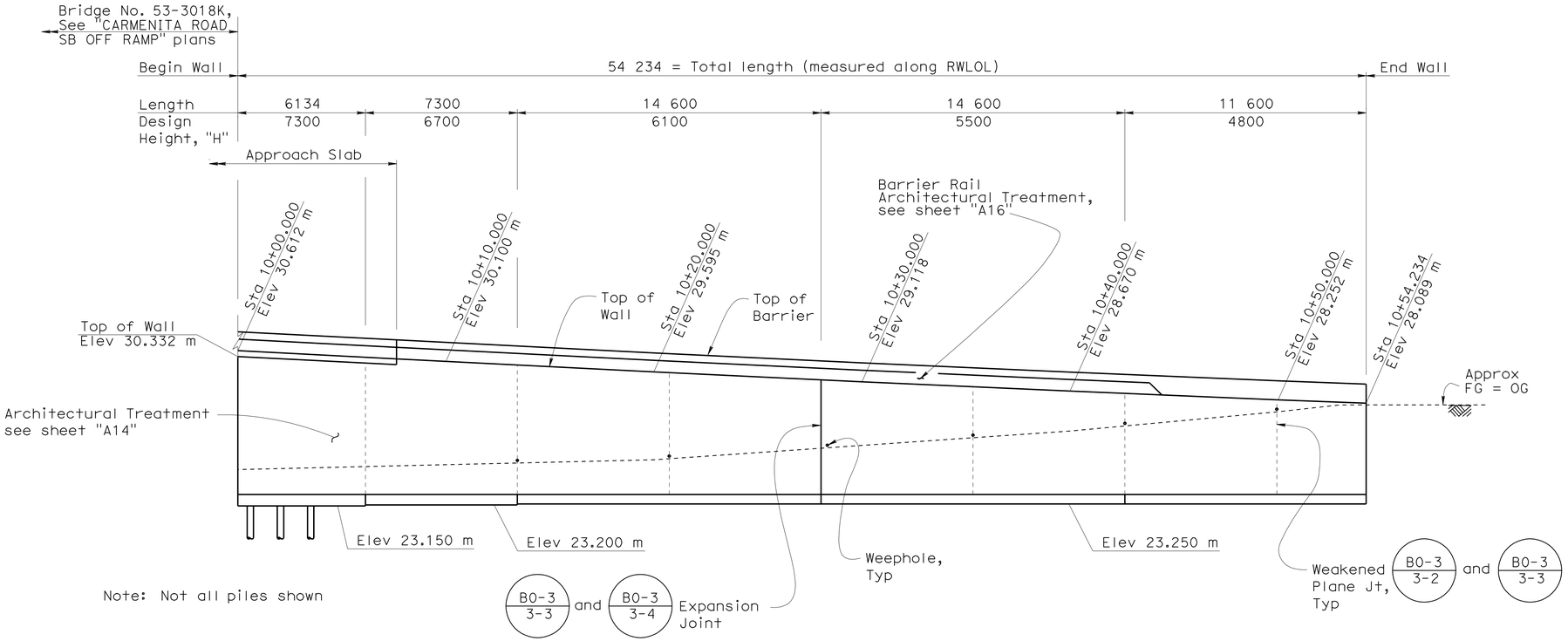

ELEVATION
1:125

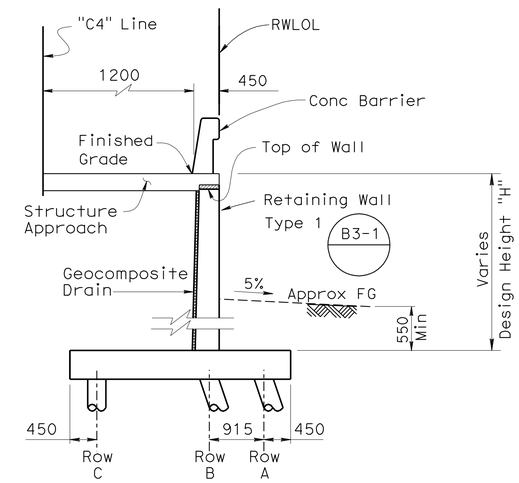

SECTION AT APPROACH SLAB
1:50

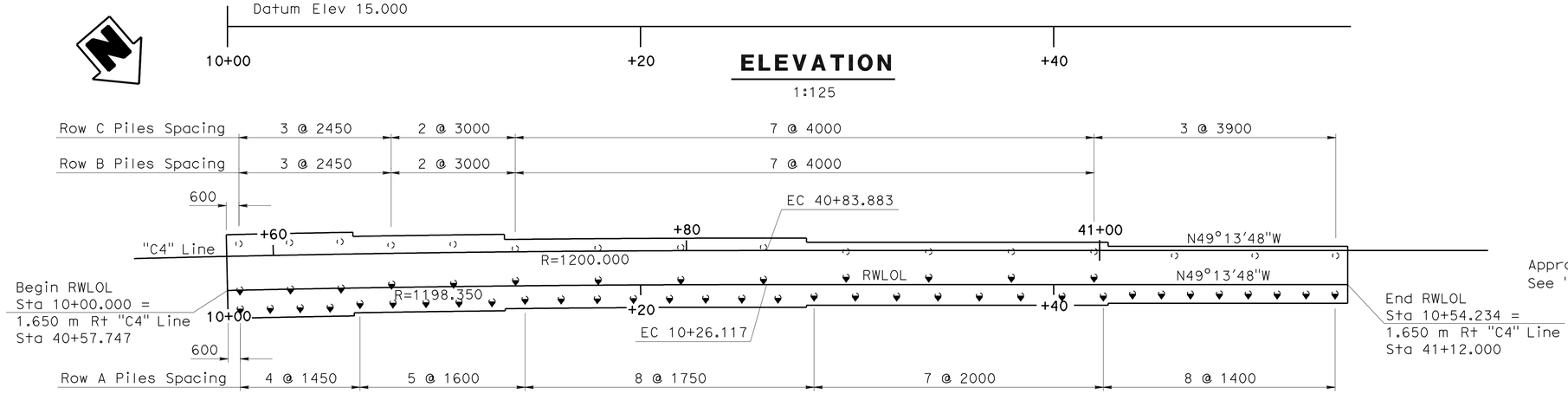

PLAN
1:125

LEGEND:

- Indicates Vertical Piles
- Indicates Battered 1:3 Piles

NOTES:

Piles are Class 400, Alternative "V" closed-end with 60° conical tip (B2-5)

Pile Tip shall be 14.0 m below bottom of wall footings

Pile spacing measured along RWLOL

Install utility conduits as req'd, (not shown) for size and other data, see "ROAD PLANS"

* See Retaining Wall Type 1 (B3-1) for wall stem design; see '400 kN Pile Footing Section' on "TYPICAL SECTION" sheet for footing Reinf details

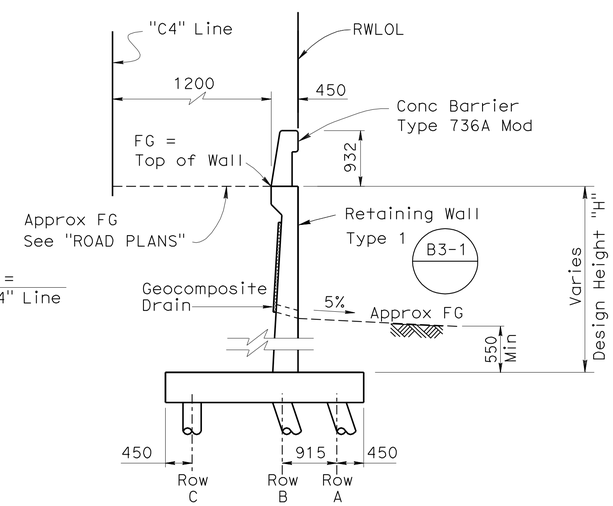

TYPICAL SECTION
1:50

Caltrans Metric

	BY	CHECKED
DESIGN	Brian Alconcel	U. Inyang
DETAILS	Pauline Tong	U. Inyang
QUANTITIES	M. Okimura	D. Menzmer

STATE OF CALIFORNIA
DEPARTMENT OF TRANSPORTATION

DIVISION OF ENGINEERING SERVICES
STRUCTURE DESIGN
DESIGN BRANCH 11

BRIDGE NO. 53-3018K
KILOMETER POST 3.875

CARMENITA ROAD SB OFF-RAMP
RETAINING WALL 40 LAYOUT

ALL DIMENSIONS ARE IN MILLIMETERS UNLESS OTHERWISE SHOWN

ORIGINAL SCALE IN MILLIMETERS FOR REDUCED PLANS 0 10 20 30 40 50 60 70 80 90 100

CU 07225
EA 2159C1

DISREGARD PRINTS BEARING EARLIER REVISION DATES

REVISION DATES: 1-1-08 9-15-08 9-15-08 5/13/09 6/15/09 7/1/09 7/13/09 8/14/09 12/28/09 1/1/10

SHEET 10 OF 29

FILE => 53-3018k-ff-rw40tlyt.dgn

STRUCTURES DESIGN DETAIL SHEET (METRIC) (REV.03-17-04)

USERNAME => ttmirkes1 DATE PLOTTED => 23-JUN-2010 TIME PLOTTED => 05:40

DIST	COUNTY	ROUTE	KILOMETER POST TOTAL PROJECT	SHEET No	TOTAL SHEETS
07	LA	5	2.9/4.9	965	1082

Daniel L. Texler 01-26-10
REGISTERED CIVIL ENGINEER DATE

6-21-10
PLANS APPROVAL DATE

REGISTERED PROFESSIONAL ENGINEER Daniel L. Texler No. 49792 Exp. 9-30-10 CIVIL STATE OF CALIFORNIA

The State of California or its officers or agents shall not be responsible for the accuracy or completeness of electronic copies of this plan sheet.

△ Indicates location where Bottom of Footing elevation changes

Install utility conduits as req'd, (not shown) for size and other data, see "ROAD PLANS"

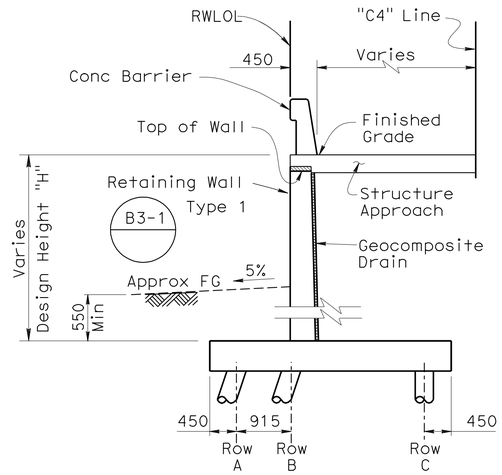

SECTION AT APPROACH SLAB

1:50

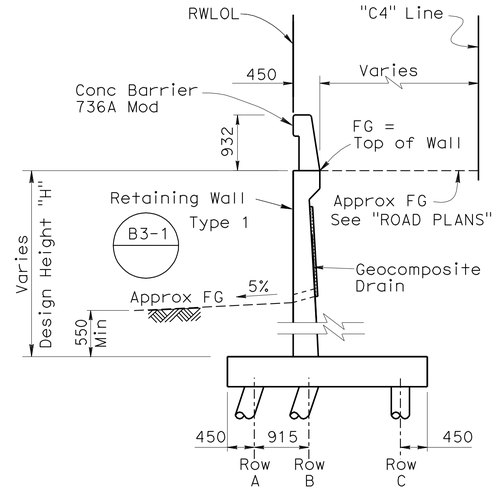

TYPICAL SECTION

1:50

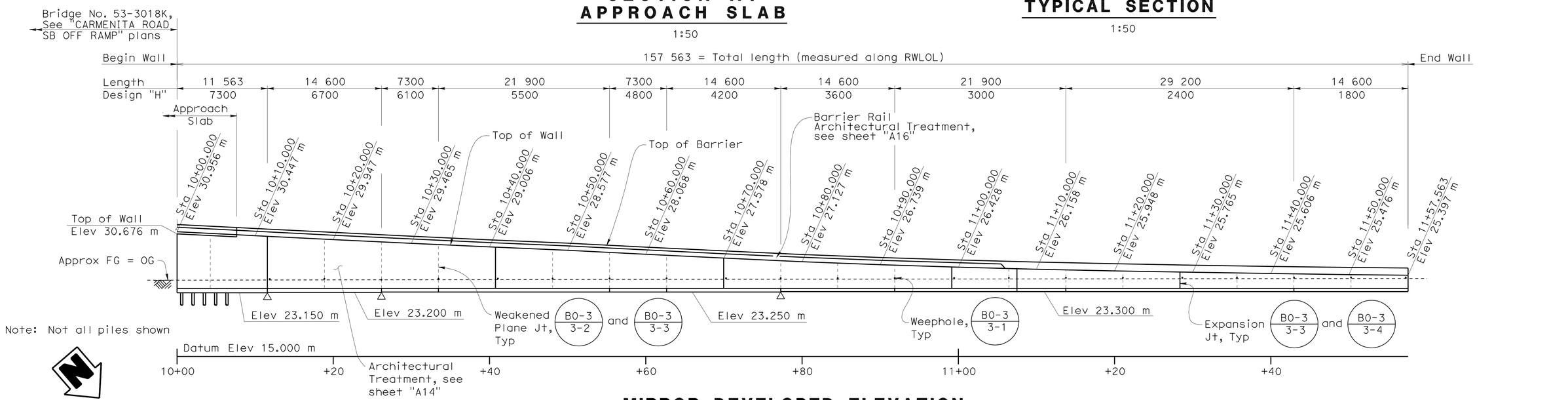

MIRROR DEVELOPED ELEVATION

1:250

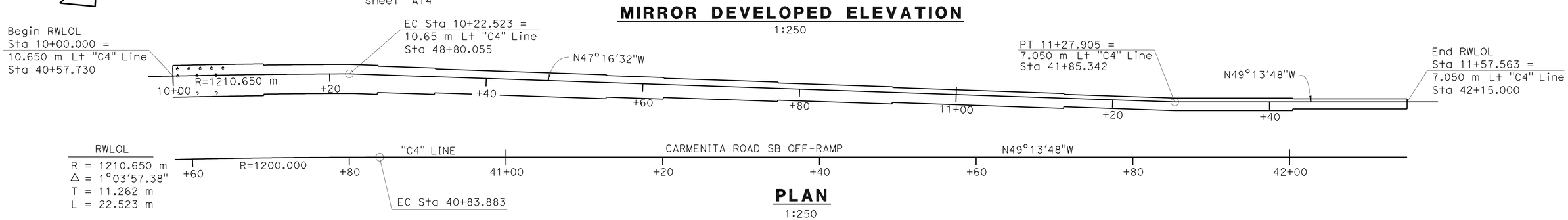

PLAN

1:250

DESIGN	BY Brian Alconcel	CHECKED U. Inyang	
DETAILS	BY Pauline Tong	CHECKED U. Inyang	
QUANTITIES	BY M. Okimura	CHECKED D. Menzmer	

STATE OF CALIFORNIA DEPARTMENT OF TRANSPORTATION

DIVISION OF ENGINEERING SERVICES STRUCTURE DESIGN
DESIGN BRANCH 11

BRIDGE NO. 53-3018K
KILOMETER POST 3.875

CARMENITA ROAD SB OFF-RAMP
RETAINING WALL 41 LAYOUT

ALL DIMENSIONS ARE IN MILLIMETERS UNLESS OTHERWISE SHOWN

ORIGINAL SCALE IN MILLIMETERS FOR REDUCED PLANS 0 10 20 30 40 50 60 70 80 90 100

CU 07225
EA 2159C1

DISREGARD PRINTS BEARING EARLIER REVISION DATES

REVISION DATES: 7-1-08 9-3-08 5/13/09 5/20/09 6/5/09 7/1/09 7/13/09 8/4/09 12/28/09 1/7/10

SHEET 11 OF 29

FILE => 53-3018K-ff-rw41lyt.dgn

STRUCTURES DESIGN DETAIL SHEET (METRIC) (REV.03-17-04)

USERNAME => trmikest DATE PLOTTED => 23-JUN-2010 TIME PLOTTED => 05:40

DIST	COUNTY	ROUTE	KILOMETER POST TOTAL PROJECT	SHEET No	TOTAL SHEETS
07	LA	5	2.9/4.9	966	1082

Daniel L. Texler 01-26-10
REGISTERED CIVIL ENGINEER DATE

6-21-10
PLANS APPROVAL DATE

REGISTERED PROFESSIONAL ENGINEER Daniel L. Texler No. 49792 Exp. 9-30-10 CIVIL STATE OF CALIFORNIA

The State of California or its officers or agents shall not be responsible for the accuracy or completeness of electronic copies of this plan sheet.

LEGEND:

Indicates Vertical Piles

Indicates Battered 1:3 Piles

NOTES:

Piles are Class 400, Alternative "V" closed-end with 60° conical tip (B2-5)

Pile Tip shall be 14.0 m below bottom of wall footings

Pile spacing measured along RWLOL

✳ See Retaining Wall Type 1 (B3-1) for wall stem design; see '400 kN Pile Footing Section' on "TYPICAL SECTION" sheet for footing Reinf details

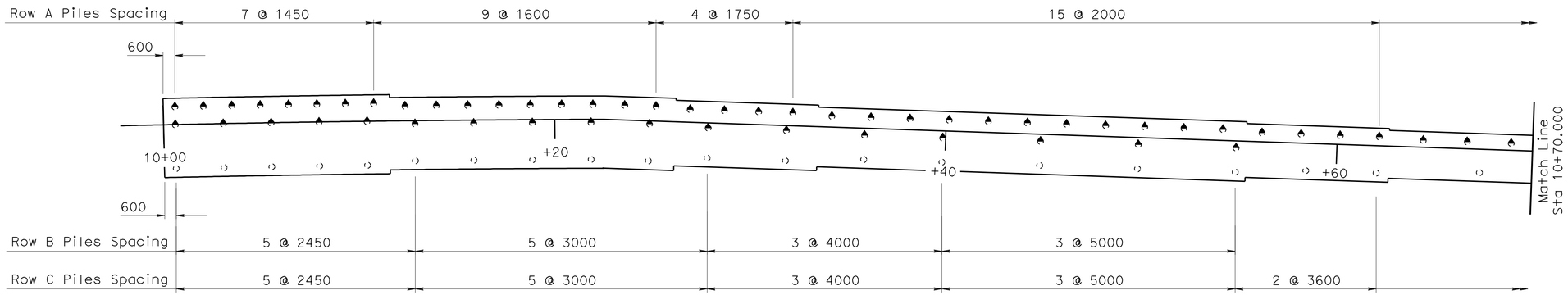

PLAN
1:125

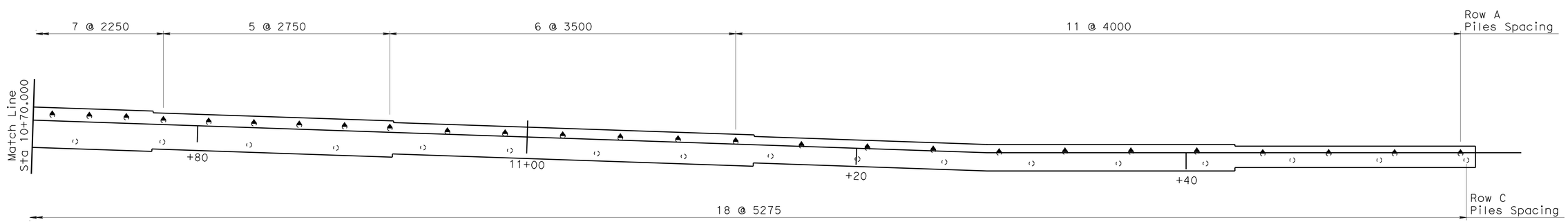

PLAN
1:125

DESIGN	BY Brian Alconcel	CHECKED U. Inyang	
DETAILS	BY Pauline Tong	CHECKED U. Inyang	
QUANTITIES	BY M. Okimura	CHECKED D. Menzmer	

STATE OF CALIFORNIA
DEPARTMENT OF TRANSPORTATION

DIVISION OF ENGINEERING SERVICES
STRUCTURE DESIGN
DESIGN BRANCH 11

BRIDGE NO. 53-3018K
KILOMETER POST 3.875

CARMENITA ROAD SB OFF-RAMP
RETAINING WALL 41 PILE LAYOUT

ALL DIMENSIONS ARE IN MILLIMETERS UNLESS OTHERWISE SHOWN

ORIGINAL SCALE IN MILLIMETERS FOR REDUCED PLANS 0 10 20 30 40 50 60 70 80 90 100

CU 07225
EA 2159C1

DISREGARD PRINTS BEARING EARLIER REVISION DATES

REVISION DATES: 9-15-08 | 5-13-09 | 6-17-09 | 1-7-10

SHEET 12 OF 29

FILE => 53-3018k-ff-rw41pilelyt.dgn

STRUCTURES DESIGN DETAIL SHEET (METRIC) (REV.03-17-04)

USERNAME => trmikes! DATE PLOTTED => 23-JUN-2010 TIME PLOTTED => 05:41

DIST	COUNTY	ROUTE	KILOMETER POST TOTAL PROJECT	SHEET No	TOTAL SHEETS
07	LA	5	2.9/4.9	967	1082

Daniel L. Texler 01-26-10
REGISTERED CIVIL ENGINEER DATE

6-21-10
PLANS APPROVAL DATE

REGISTERED PROFESSIONAL ENGINEER
Daniel L. Texler
No. 49792
Exp. 9-30-10
CIVIL
STATE OF CALIFORNIA

The State of California or its officers or agents shall not be responsible for the accuracy or completeness of electronic copies of this plan sheet.

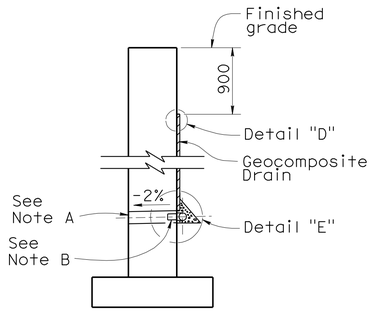

WALL SECTION

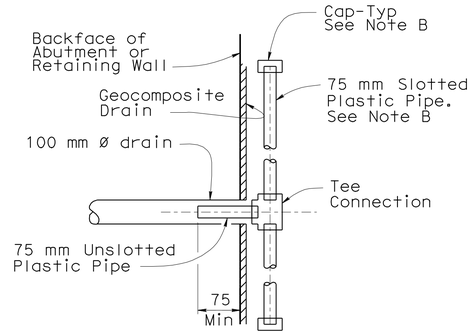

SECTION K-K

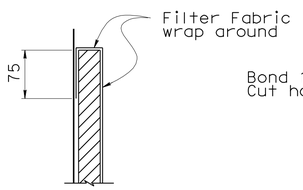

DETAIL "D"

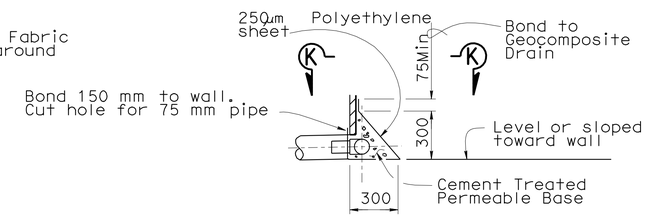

DETAIL "E"

WEEP HOLE AND GEOCOMPOSITE DRAIN

NO SCALE

Notes:

A. 100 mm ø drains at intermediate sag points and at 7.600 m center to center (2.750 m c-c for Type 3 and 2.800 m c-c for Type 4 retaining walls). For walls adjacent to sidewalks or curbs, provide 100 mm ø cast iron or asbestos cement pipe under the sidewalk to discharge through curb face. Exposed wall drains shall be located 75 mm ± above finished grade.

B. Geocomposite drain, cement treated permeable base, and 75 mm ø slotted plastic pipe continuous behind retaining wall or abutment. Cap ends of pipe. Provide "Tee" connection at each 100 mm ø drain.

C. Connect the low end of plastic pipe to the main outlet pipe as applicable.

Caltrans Metric

	BY	CHECKED
DESIGN	Phu Nguyen	U. Inyang
DETAILS	Pauline Tong	U. Inyang
QUANTITIES	M. Okimura	D. Menzmer

STATE OF CALIFORNIA
DEPARTMENT OF TRANSPORTATION

DIVISION OF ENGINEERING SERVICES
STRUCTURE DESIGN
DESIGN BRANCH 11

BRIDGE NO. 53-3018K
KILOMETER POST 3.875

CARMENITA ROAD SB OFF-RAMP
RETAINING WALL DETAILS

ALL DIMENSIONS ARE IN MILLIMETERS UNLESS OTHERWISE SHOWN

ORIGINAL SCALE IN MILLIMETERS FOR REDUCED PLANS 0 10 20 30 40 50 60 70 80 90 100

CU 07225
EA 2159C1

DISREGARD PRINTS BEARING EARLIER REVISION DATES 7-1-08 01-05-10

REVISION DATES

SHEET 13 OF 29

FILE => 53-3018k-ff-rwdet.dgn

STRUCTURES DESIGN DETAIL SHEET (METRIC) (REV.03-17-04)

USERNAME => trmhkes1 DATE PLOTTED => 23-JUN-2010 TIME PLOTTED => 06:41

DIST	COUNTY	ROUTE	KILOMETER POST TOTAL PROJECT	SHEET No	TOTAL SHEETS
07	LA	5	2.9/4.9	968	1082

Daniel L. Texler 01-26-10
REGISTERED CIVIL ENGINEER DATE

6-21-10
PLANS APPROVAL DATE

REGISTERED PROFESSIONAL ENGINEER Daniel L. Texler No. 49792 Exp. 9-30-10 CIVIL STATE OF CALIFORNIA

The State of California or its officers or agents shall not be responsible for the accuracy or completeness of electronic copies of this plan sheet.

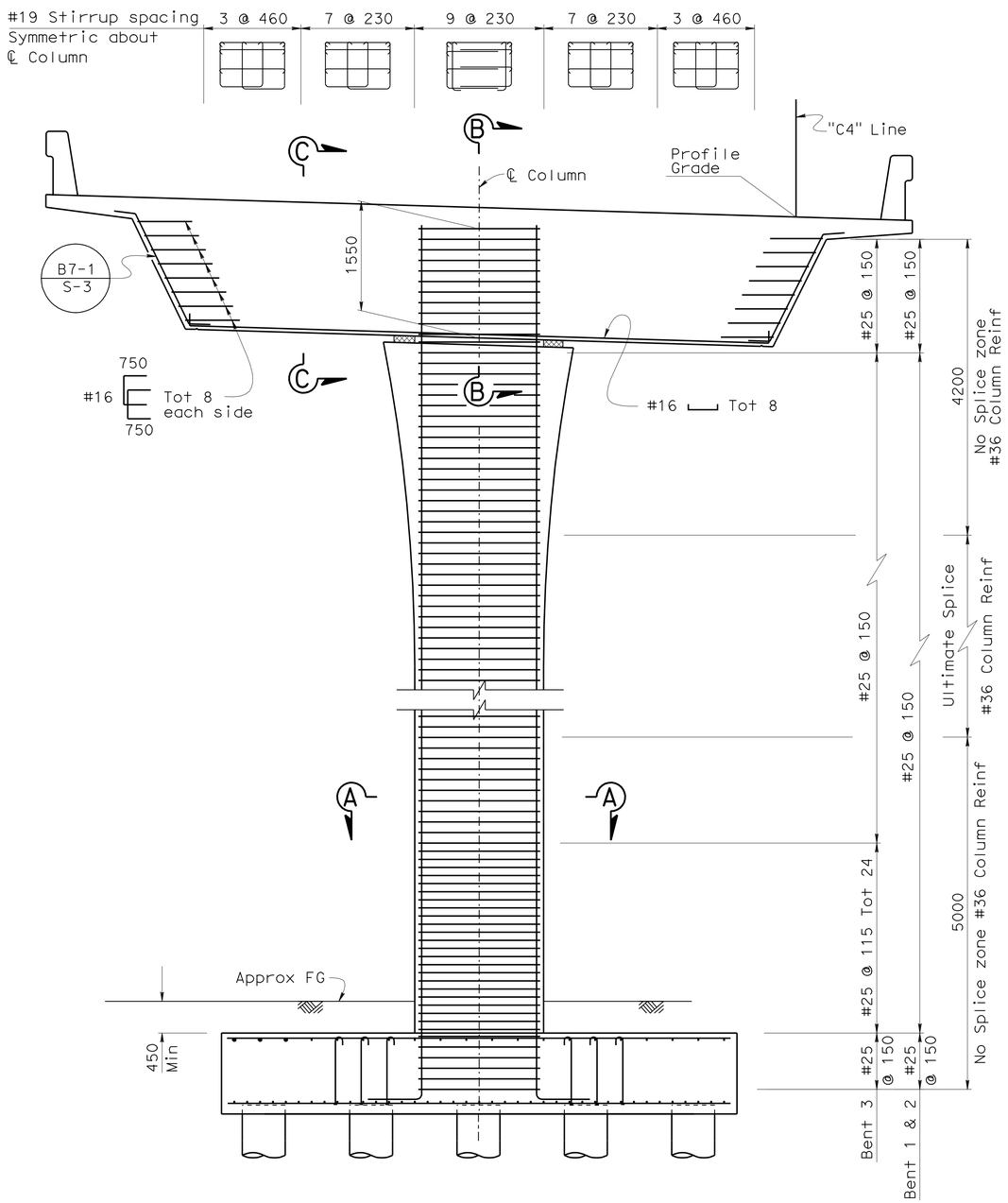

ELEVATION
1:40

Note: Bent 1 shown, Bent 2 and 3 similar

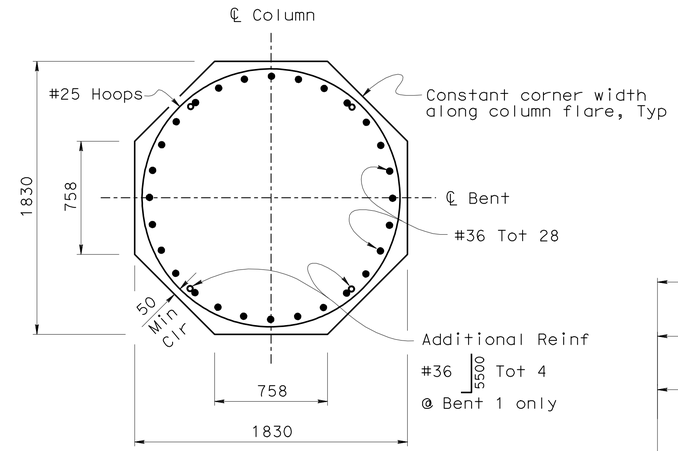

SECTION A-A
1:20

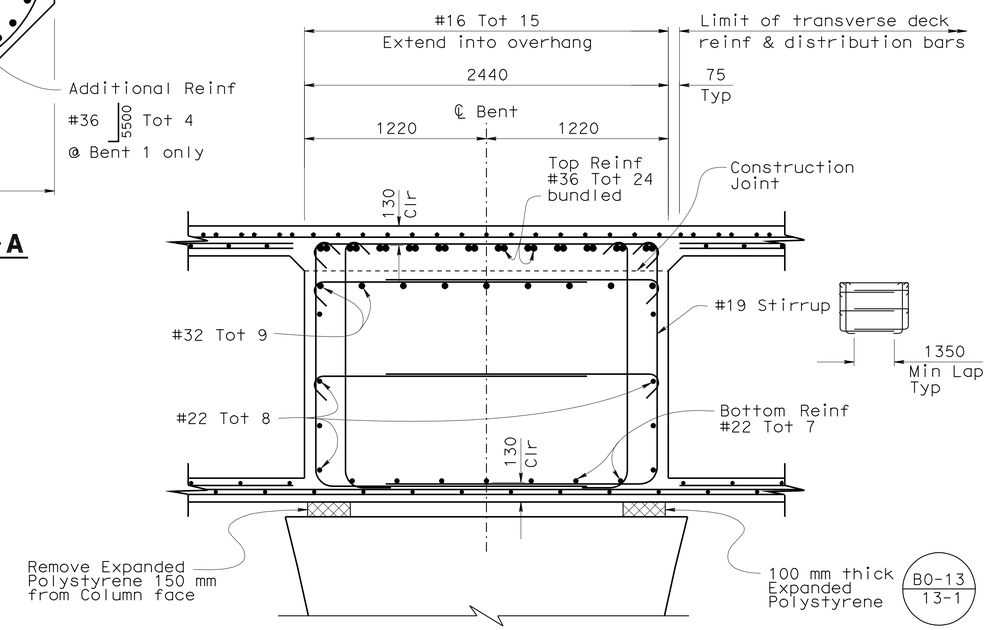

SECTION B-B
1:20

Notes:

1. For 'Pile Data Table', see "PILE DATA" sheet
2. Hoops in columns must conform to ultimate splice specifications
3. Main column reinforcement and column hoops may be manipulated to accommodate drain pipe as directed by Engineer.
4. For NPS6 outlet location and direction, see "DRAINAGE LAYOUT" sheet.

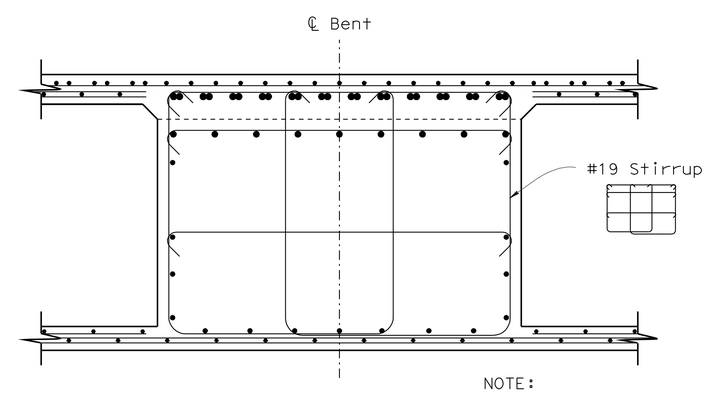

SECTION C-C
1:20

NOTE:
Reinforcement similar to 'Section B-B' except as shown

DESIGN	BY Phu Nguyen	CHECKED D. Menzmer	
DETAILS	BY Pauline Tong	CHECKED D. Menzmer	
QUANTITIES	BY M. Okimura	CHECKED D. Menzmer	

STATE OF CALIFORNIA
DEPARTMENT OF TRANSPORTATION

DIVISION OF ENGINEERING SERVICES
STRUCTURE DESIGN
DESIGN BRANCH 11

BRIDGE NO. 53-3018K
KILOMETER POST 3.875

CARMENITA ROAD SB OFF-RAMP
BENT LAYOUT

ALL DIMENSIONS ARE IN MILLIMETERS UNLESS OTHERWISE SHOWN

ORIGINAL SCALE IN MILLIMETERS FOR REDUCED PLANS 0 10 20 30 40 50 60 70 80 90 100

CU 07225
EA 2159C1

DISREGARD PRINTS BEARING EARLIER REVISION DATES

REVISION DATES: 11-14-07 1-7-10 1-7-08 3-13-08 7-1-08 9-16-08 1-14-09 5-28-09 6-17-09

SHEET 14 OF 29

FILE => 53-3018k-h-bntlyt.dgn

STRUCTURES DESIGN DETAIL SHEET (METRIC) (REV.03-17-04)

USERNAME => trmikesl DATE PLOTTED => 23-JUN-2010 TIME PLOTTED => 05:41

DIST	COUNTY	ROUTE	KILOMETER POST TOTAL PROJECT	SHEET No	TOTAL SHEETS
07	LA	5	2.9/4.9	969	1082

Daniel L. Texler 01-26-10
REGISTERED CIVIL ENGINEER DATE

6-21-10
PLANS APPROVAL DATE

REGISTERED PROFESSIONAL ENGINEER Daniel L. Texler No. 49792 Exp. 9-30-10 CIVIL STATE OF CALIFORNIA

The State of California or its officers or agents shall not be responsible for the accuracy or completeness of electronic copies of this plan sheet.

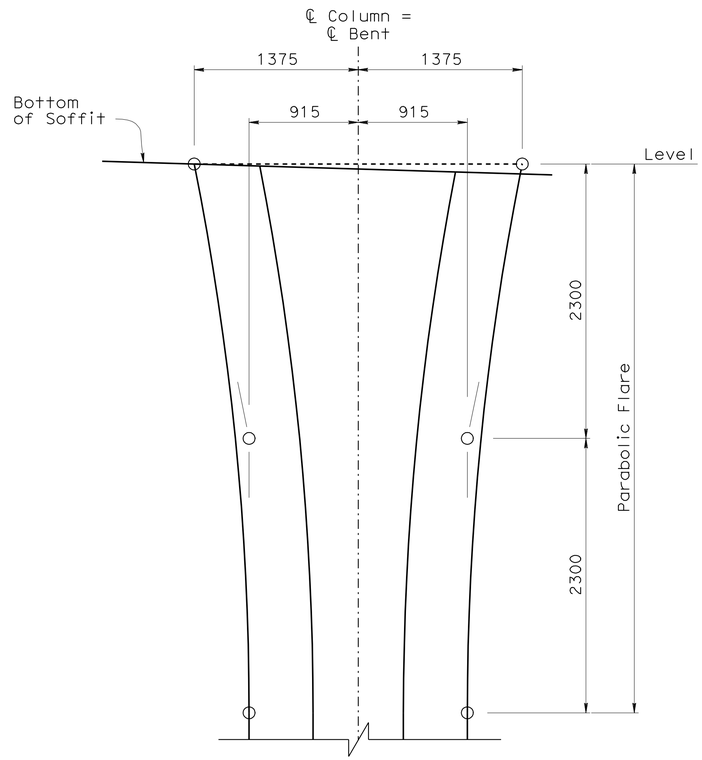

COLUMN GEOMETRY
1:25

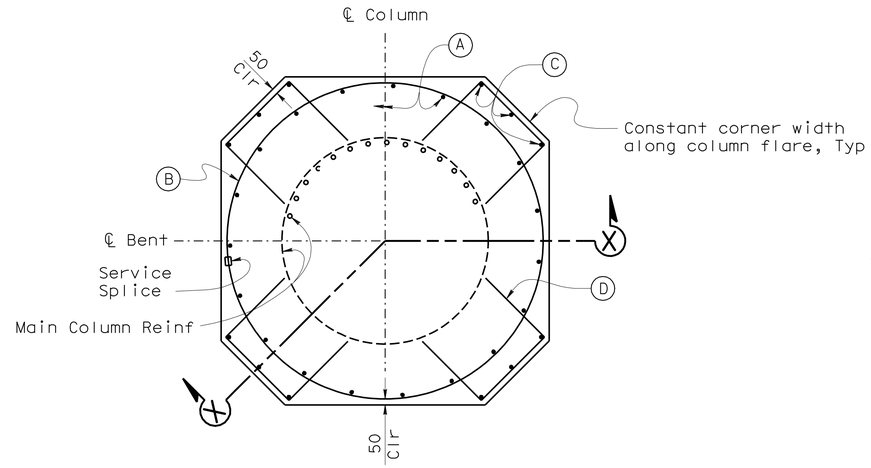

COLUMN FLARE REINF
1:25

LEGEND:

(A) = #19 / Tot 19

(B) = #25 Hoops @ 175, stagger splices

(C) = #19 / Tot 12

(D) = #19 700 700 @ 175

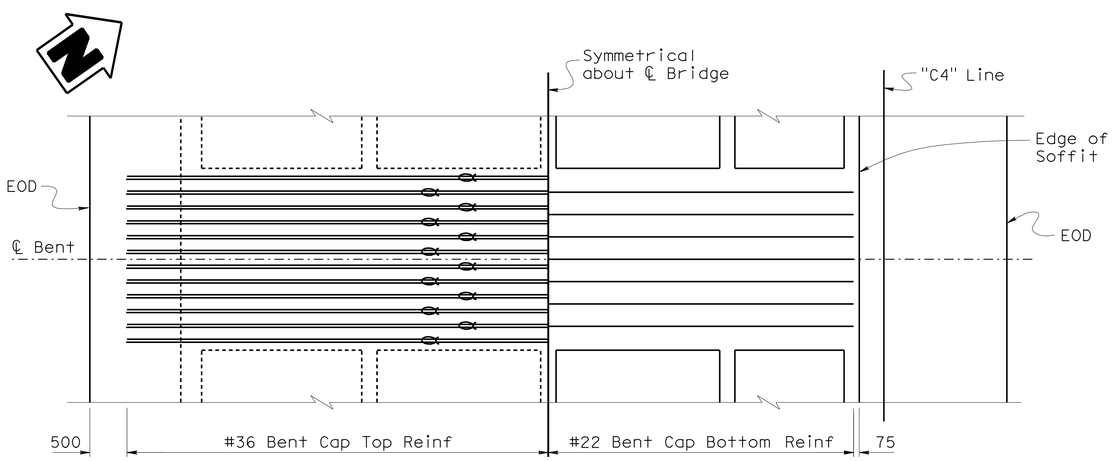

PLAN
1:40

NOTE:
Indicates Bundled Bars

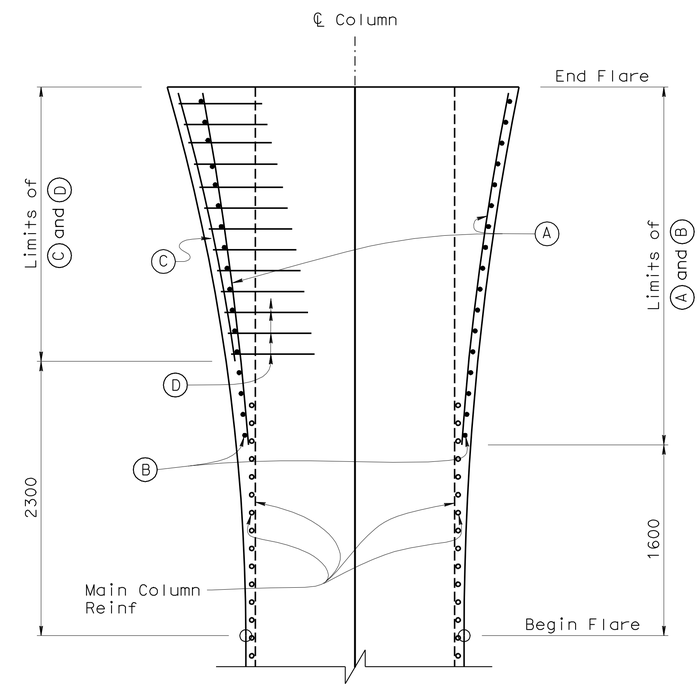

SECTION X-X
1:25

DESIGN	BY Phu Nguyen	CHECKED D. Menzmer	
DETAILS	BY Pauline Tong	CHECKED D. Menzmer	
QUANTITIES	BY M. Okimura	CHECKED D. Menzmer	

STATE OF CALIFORNIA
DEPARTMENT OF TRANSPORTATION

DIVISION OF ENGINEERING SERVICES
STRUCTURE DESIGN
DESIGN BRANCH 11

BRIDGE NO. 53-3018K
KILOMETER POST 3.875

CARMENITA ROAD SB OFF-RAMP
BENT DETAILS

Caltrans Metric

ALL DIMENSIONS ARE IN MILLIMETERS UNLESS OTHERWISE SHOWN

ORIGINAL SCALE IN MILLIMETERS FOR REDUCED PLANS 0 10 20 30 40 50 60 70 80 90 100

CU 07225
EA 2159C1

DISREGARD PRINTS BEARING EARLIER REVISION DATES 11-28-07 9-16-08 12-28-09

REVISION DATES

SHEET 15 OF 29

FILE => 53-3018k-hh-bntdet.dgn

STRUCTURES DESIGN DETAIL SHEET (METRIC) (REV.03-17-04)

USERNAME => ttmikes1 DATE PLOTTED => 23-JUN-2010 TIME PLOTTED => 05:41

DIST	COUNTY	ROUTE	KILOMETER POST TOTAL PROJECT	SHEET No	TOTAL SHEETS
07	LA	5	2.9/4.9	970	1082

Daniel L. Texler 01-26-10
REGISTERED CIVIL ENGINEER DATE

6-21-10
PLANS APPROVAL DATE

REGISTERED PROFESSIONAL ENGINEER
Daniel L. Texler
No. 49792
Exp. 9-30-10
CIVIL
STATE OF CALIFORNIA

The State of California or its officers or agents shall not be responsible for the accuracy or completeness of electronic copies of this plan sheet.

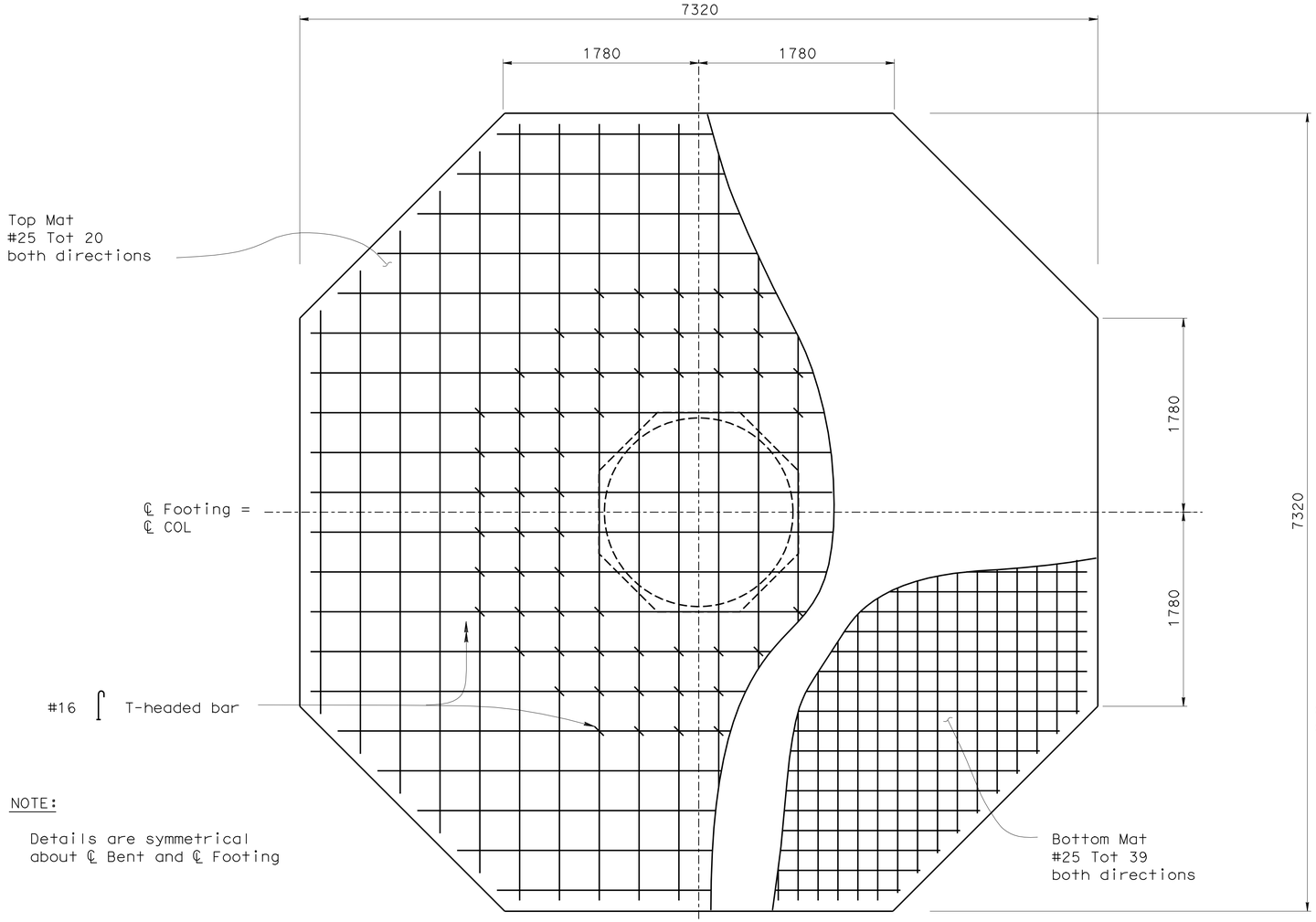

NOTE:

Details are symmetrical about ℄ Bent and ℄ Footing

TYPICAL FOOTING PLAN

1:25

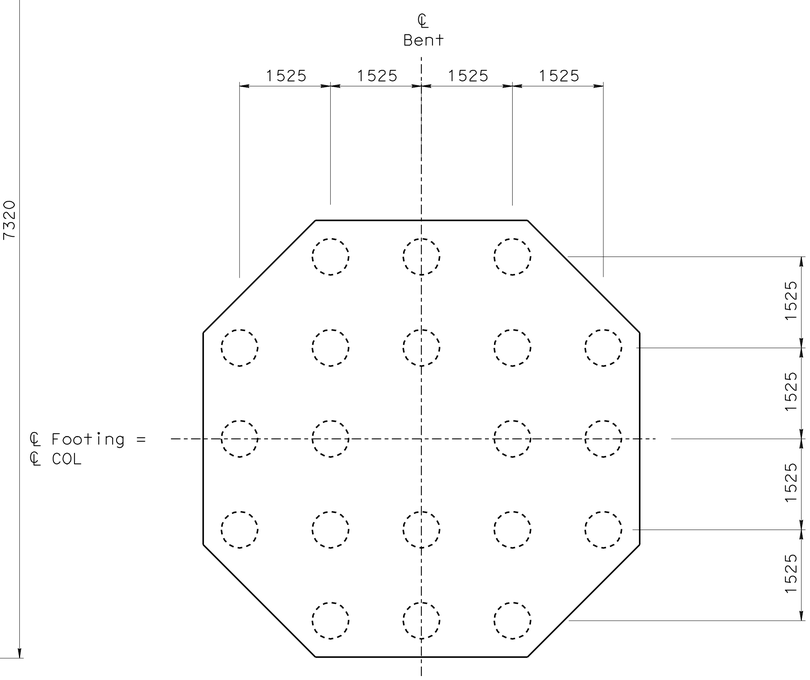

PILE LAYOUT

1:50

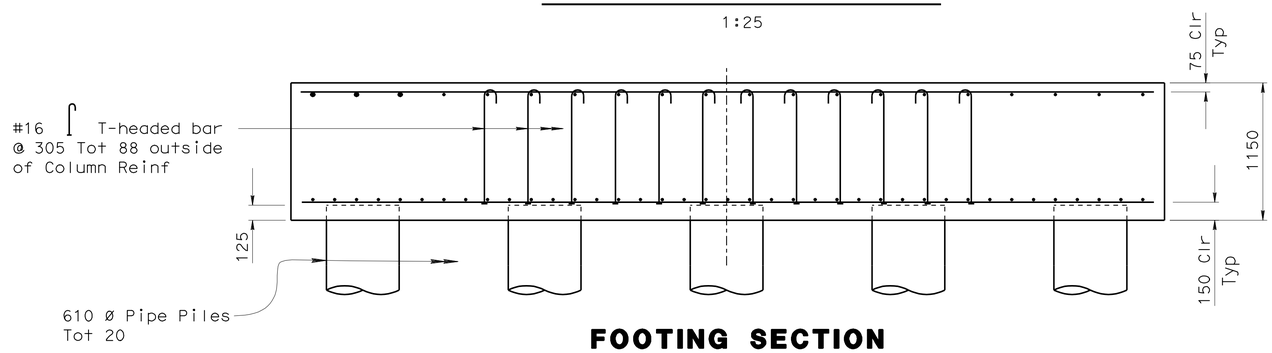

FOOTING SECTION

1:25

DESIGN	BY Phu Nguyen	CHECKED D. Menzmer	
DETAILS	BY Pauline Tong	CHECKED D. Menzmer	
QUANTITIES	BY M. Okimura	CHECKED D. Menzmer	

STATE OF CALIFORNIA
DEPARTMENT OF TRANSPORTATION

DIVISION OF ENGINEERING SERVICES
STRUCTURE DESIGN
DESIGN BRANCH 11

BRIDGE NO. 53-3018K
KILOMETER POST 3.875

CARMENITA ROAD SB OFF-RAMP
BENT FOOTING DETAILS

ALL DIMENSIONS ARE IN MILLIMETERS UNLESS OTHERWISE SHOWN

ORIGINAL SCALE IN MILLIMETERS FOR REDUCED PLANS 0 10 20 30 40 50 60 70 80 90 100

CU 07225
EA 2159C1

DISREGARD PRINTS BEARING EARLIER REVISION DATES

REVISION DATES: 11-29-07 12-04-07 12-20-07 1-7-08 12-18-08 1-16-09 5-28-09 6-17-09

SHEET 16 OF 29

FILE => 53-3018k-hh-bntftgdet.dgn

STRUCTURES DESIGN DETAIL SHEET (METRIC) (REV.03-17-04)

USERNAME => trmikes1 DATE PLOTTED => 23-JUN-2010 TIME PLOTTED => 05:41

DIST	COUNTY	ROUTE	KILOMETER POST TOTAL PROJECT	SHEET No	TOTAL SHEETS
07	LA	5	2.9/4.9	971	1082

Daniel L. Texler 01-26-10
REGISTERED CIVIL ENGINEER DATE

6-21-10
PLANS APPROVAL DATE

REGISTERED PROFESSIONAL ENGINEER Daniel L Texler No. 49792 Exp. 9-30-08 CIVIL STATE OF CALIFORNIA

The State of California or its officers or agents shall not be responsible for the accuracy or completeness of electronic copies of this plan sheet.

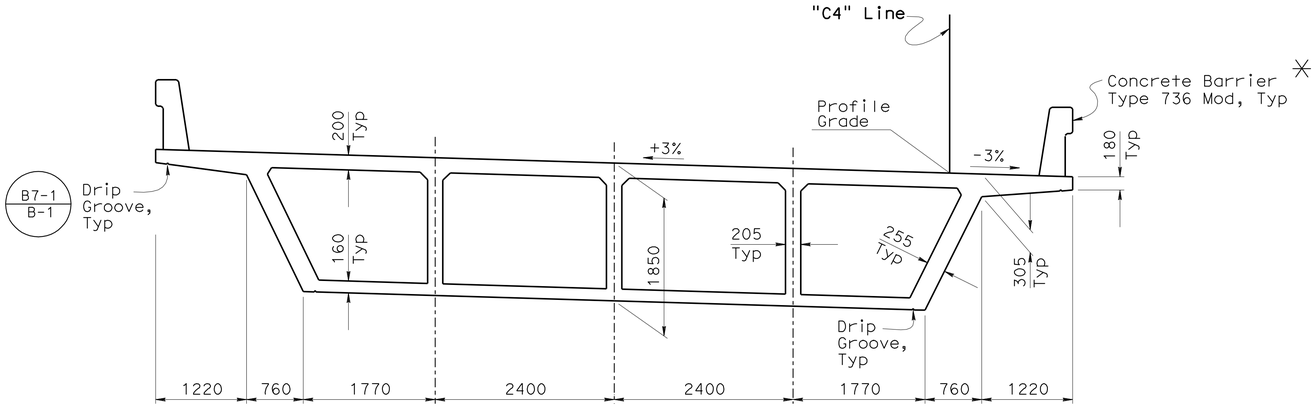

TYPICAL SECTION

1:40

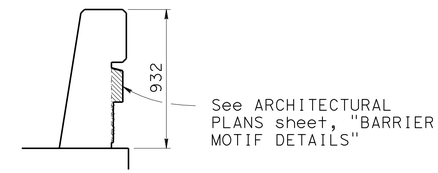

CONCRETE BARRIER ✳ TYPE 736 MOD & TYPE 736A MOD

1:20

For Reinforcement & other details not shown, see B11-56

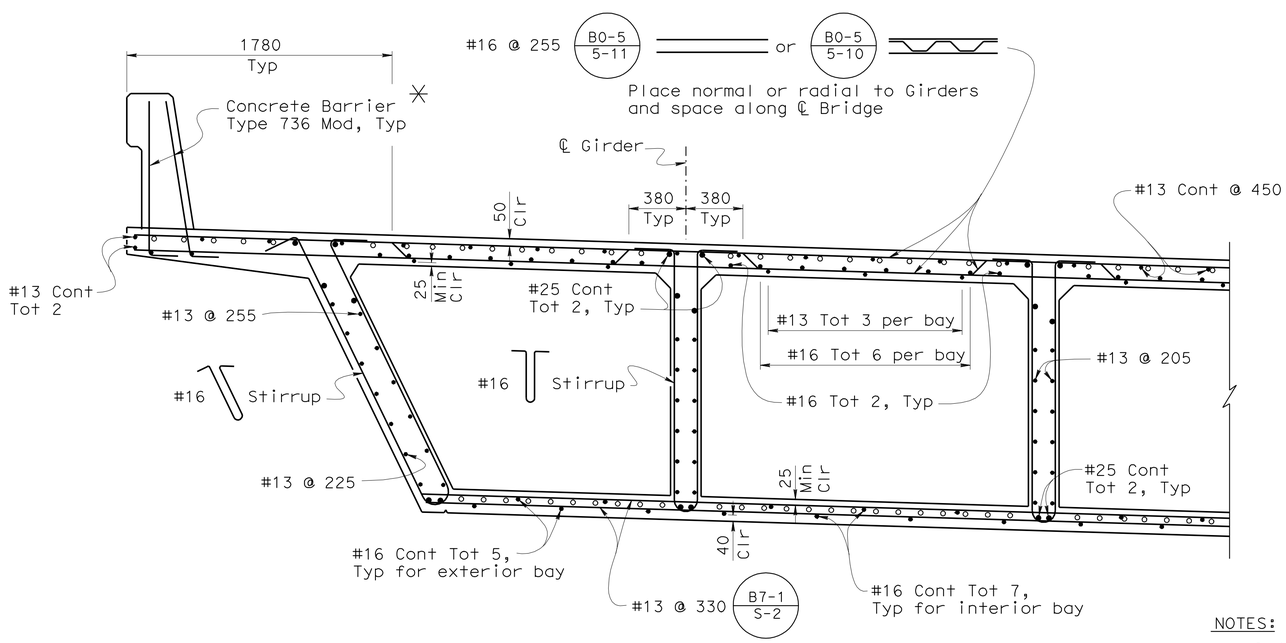

PART TYPICAL SECTION

B0-5 B7-1 B11-56

1:20

NOTES:

- o Indicates additional girder reinforcement. See "ADDITIONAL GIRDER REINFORCEMENT" sheets

  For stirrup spacing, see "GIRDER LAYOUT" sheet

- ✳ Install utility conduits as req'd, (not shown) for size and other data, see "ROAD PLANS"

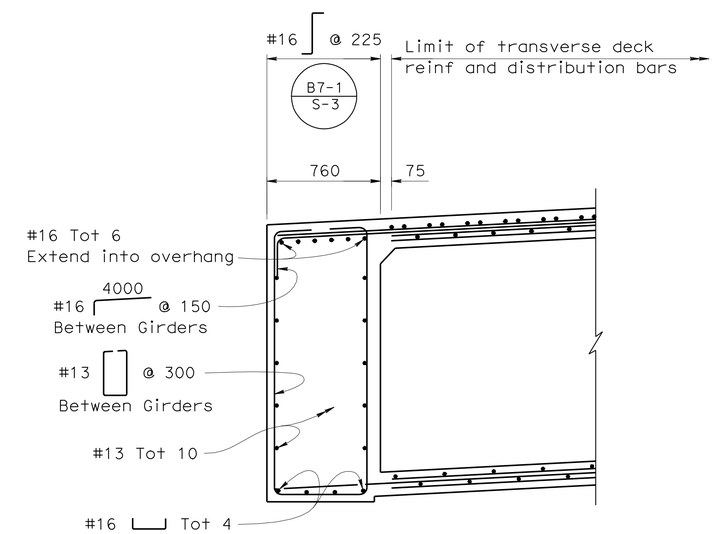

END DIAPHRAGM (AT ABUT)

1:20

Caltrans Metric

ALL DIMENSIONS ARE IN MILLIMETERS UNLESS OTHERWISE SHOWN

ORIGINAL SCALE IN MILLIMETERS FOR REDUCED PLANS 0 10 20 30 40 50 60 70 80 90 100

	BY	CHECKED
DESIGN	Phu Nguyen	D. Menzmer
DETAILS	Pauline Tong	D. Menzmer
QUANTITIES	M. Okimura	D. Menzmer

STATE OF CALIFORNIA DEPARTMENT OF TRANSPORTATION

DIVISION OF ENGINEERING SERVICES STRUCTURE DESIGN

DESIGN BRANCH 11

CU 07225
EA 2159C1

BRIDGE NO. 53-3018K
KILOMETER POST 3.875

CARMENITA ROAD SB OFF-RAMP

TYPICAL SECTION

DISREGARD PRINTS BEARING EARLIER REVISION DATES

REVISION DATES: 11-02-07 01-05-10 1-7-08 3-14-08 3-18-08 9-16-08 5-12-09 7-13-09 12-28-09

SHEET 17 OF 29

FILE => 53-3018k-j-typ.dgn

STRUCTURES DESIGN DETAIL SHEET (METRIC) (REV.03-17-04)

USERNAME => trmikest DATE PLOTTED => 23-JUN-2010 TIME PLOTTED => 06:41

DIST	COUNTY	ROUTE	KILOMETER POST TOTAL PROJECT	SHEET No	TOTAL SHEETS
07	LA	5	2.9/4.9	972	1082

Daniel L. Texler 01-26-10
REGISTERED CIVIL ENGINEER DATE

6-21-10
PLANS APPROVAL DATE

REGISTERED PROFESSIONAL ENGINEER
Daniel L. Texler
No. 49792
Exp. 9-30-10
CIVIL
STATE OF CALIFORNIA

The State of California or its officers or agents shall not be responsible for the accuracy or completeness of electronic copies of this plan sheet.

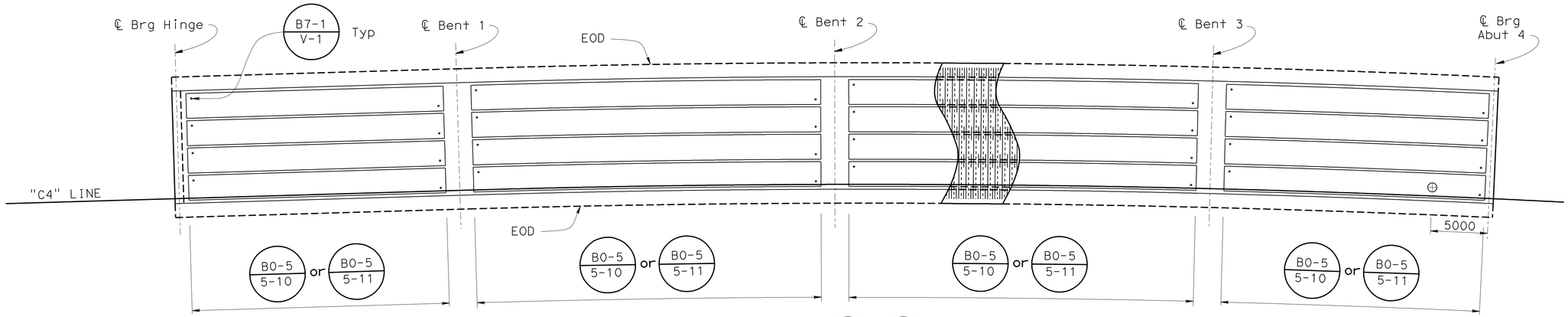

PLAN (B7-1 / V-1) (B7-1 / S-3)
1:200

Note: ⊕ Indicates Access Opening (B14-5)

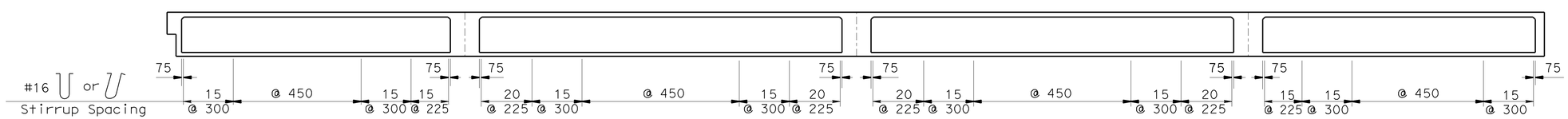

LONGITUDINAL SECTION

Horiz. 1:200
Vert. 1:100

Caltrans Metric	DESIGN	BY Phu Nguyen	CHECKED Ubong Inyang	STATE OF CALIFORNIA DEPARTMENT OF TRANSPORTATION	DIVISION OF ENGINEERING SERVICES STRUCTURE DESIGN DESIGN BRANCH 11
	DETAILS	BY L. Goldthwait	CHECKED Ubong Inyang		
	QUANTITIES	BY M. Okimura	CHECKED D. Menzmer		

BRIDGE NO. 53-3018K
KILOMETER POST 3.875

CARMENITA ROAD SB OFF-RAMP
GIRDER LAYOUT

ALL DIMENSIONS ARE IN MILLIMETERS UNLESS OTHERWISE SHOWN

ORIGINAL SCALE IN MILLIMETERS FOR REDUCED PLANS 0 10 20 30 40 50 60 70 80 90 100

CU 07225
EA 2159C1

DISREGARD PRINTS BEARING EARLIER REVISION DATES

REVISION DATES: ~~11-14-07~~ ~~3-01-08~~ ~~9-18-08~~ 12-24-08

SHEET 18 OF 29

FILE => 53-3018k-k-girlyt.dgn

STRUCTURES DESIGN DETAIL SHEET (METRIC) (REV.03-17-04)

USERNAME => trmikesl DATE PLOTTED => 23-JUN-2010 TIME PLOTTED => 06:41

DIST	COUNTY	ROUTE	KILOMETER POST TOTAL PROJECT	SHEET No	TOTAL SHEETS
07	LA	5	2.9/4.9	973	1082

Daniel L. Texler 01-26-10
REGISTERED CIVIL ENGINEER DATE

6-21-10
PLANS APPROVAL DATE

REGISTERED PROFESSIONAL ENGINEER
Daniel L. Texler
No. 49792
Exp. 9-30-10
CIVIL
STATE OF CALIFORNIA

The State of California or its officers or agents shall not be responsible for the accuracy or completeness of electronic copies of this plan sheet.

NOTES:

1. All reinforcement are #32 unless noted
2. (2) 12.2 m, total 3 in overhang
3. (3) 12.2 m, total 6 in exterior bay
4. (4) 12.2 m, total 6 in interior bay
5. (5) 18.3 m, total 6 in exterior bay
6. (6) 18.3 m, total 10 in interior bay
7. All #32 Cont bars shall be lap spliced with two times the standard lap length

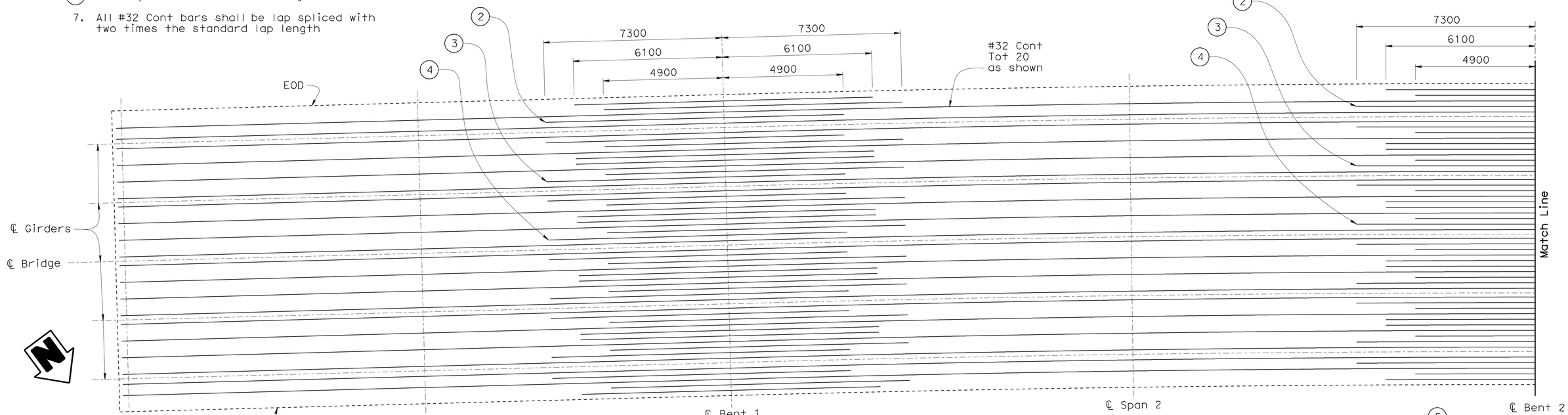

DECK REINFORCEMENT

1:80

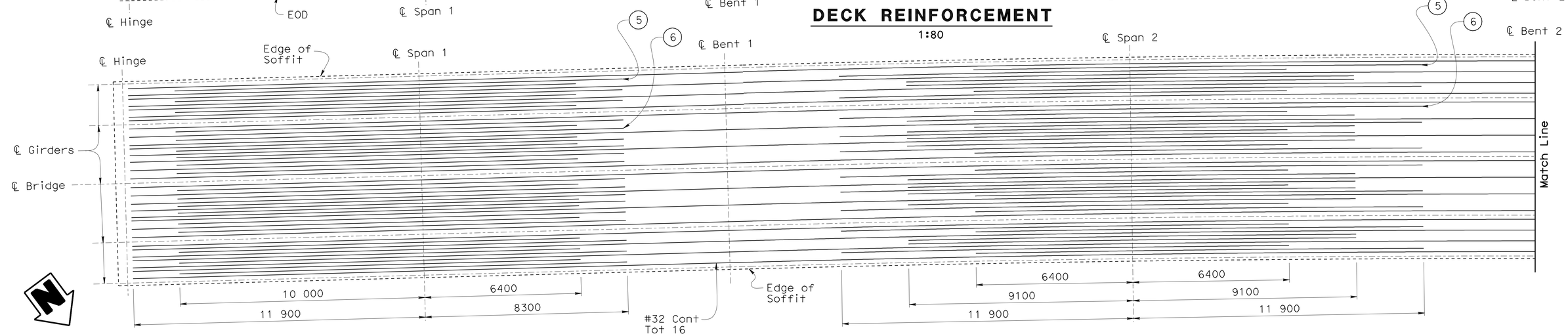

SOFFIT REINFORCEMENT

1:80

Caltrans Metric	DESIGN	BY Phu Nguyen	CHECKED D. Menzmer	STATE OF CALIFORNIA DEPARTMENT OF TRANSPORTATION	DIVISION OF ENGINEERING SERVICES STRUCTURE DESIGN DESIGN BRANCH 11	BRIDGE NO. 53-3018K	CARMENITA ROAD SB OFF-RAMP
	DETAILS	BY Pauline Tong	CHECKED D. Menzmer			KILOMETER POST 3.875	ADDITIONAL GIRDER REINFORCEMENT NO. 1
ALL DIMENSIONS ARE IN MILLIMETERS UNLESS OTHERWISE SHOWN	QUANTITIES	BY M. Okimura	CHECKED D. Menzmer	ORIGINAL SCALE IN MILLIMETERS FOR REDUCED PLANS 0 10 20 30 40 50 60 70 80 90 100	CU 07225 EA 2159C1	DISREGARD PRINTS BEARING EARLIER REVISION DATES	REVISION DATES 11-26-07 1-2-08 9-12-08 1-14-09 6-17-09 — SHEET 19 OF 29

FILE => 53-3018k-k-girrf01.dgn

STRUCTURES DESIGN DETAIL SHEET (METRIC) (REV.03-17-04)

USERNAME => ttmikest DATE PLOTTED => 23-JUN-2010 TIME PLOTTED => 05:42

DIST	COUNTY	ROUTE	KILOMETER POST TOTAL PROJECT	SHEET No	TOTAL SHEETS
07	LA	5	2.9/4.9	974	1082

Daniel L. Texler 01-26-10
REGISTERED CIVIL ENGINEER DATE

6-21-10
PLANS APPROVAL DATE

REGISTERED PROFESSIONAL ENGINEER Daniel L. Texler No. 49792 Exp. 9-30-10 CIVIL STATE OF CALIFORNIA

The State of California or its officers or agents shall not be responsible for the accuracy or completeness of electronic copies of this plan sheet.

NOTES:

1. All reinforcement are #32 unless noted
2. (2) 12.2 m, total 3 in overhang
3. (3) 12.2 m, total 6 in exterior bay
4. (4) 12.2 m, total 6 in interior bay
5. (5) 18.3 m, total 6 in exterior bay
6. (6) 18.3 m, total 10 in interior bay
7. All #32 Cont bars shall be lap spliced with two times the standard lap length

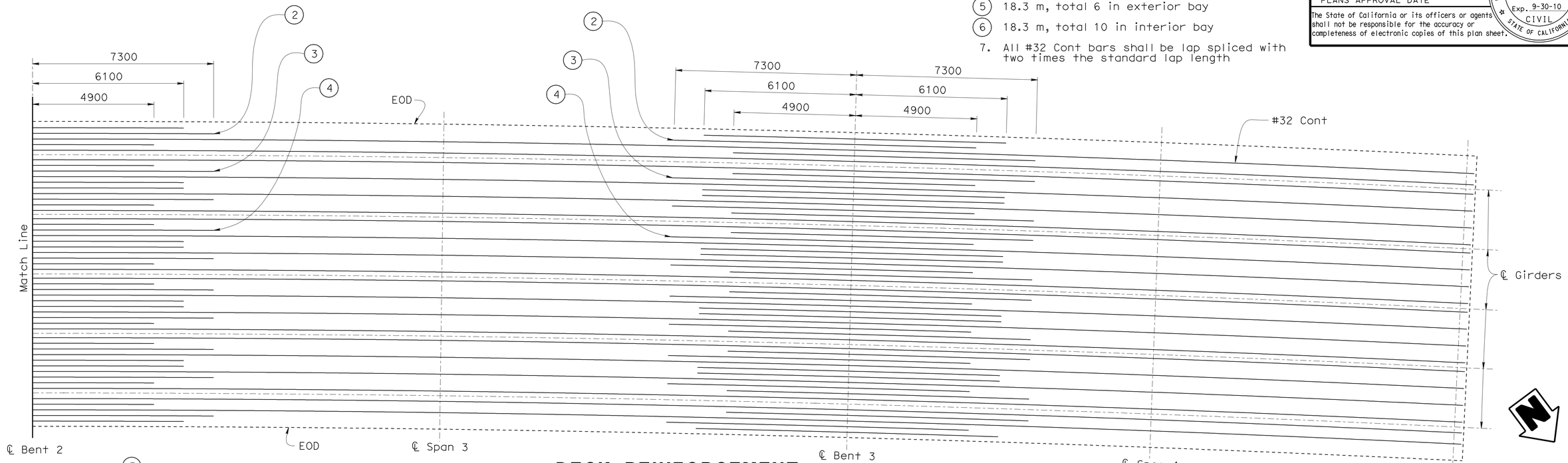

DECK REINFORCEMENT

1:80

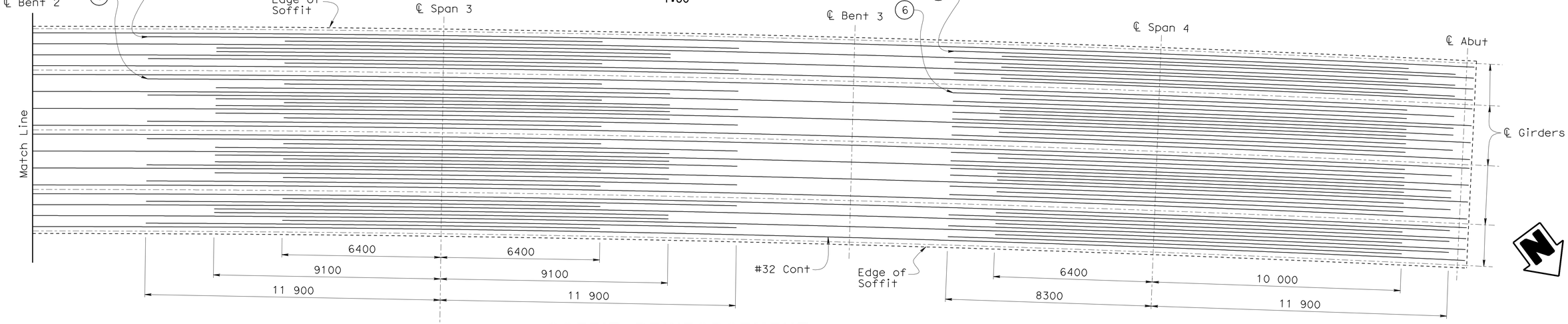

SOFFIT REINFORCEMENT

1:80

Caltrans Metric	DESIGN	BY Phu Nguyen	CHECKED D. Menzmer	STATE OF CALIFORNIA DEPARTMENT OF TRANSPORTATION	DIVISION OF ENGINEERING SERVICES STRUCTURE DESIGN DESIGN BRANCH 11
	DETAILS	BY Pauline Tong	CHECKED D. Menzmer		
	QUANTITIES	BY M. Okimura	CHECKED D. Menzmer		

ALL DIMENSIONS ARE IN MILLIMETERS UNLESS OTHERWISE SHOWN

ORIGINAL SCALE IN MILLIMETERS FOR REDUCED PLANS 0 10 20 30 40 50 60 70 80 90 100

CU 07225
EA 2159C1

BRIDGE NO. 53-3018K
KILOMETER POST 3.875

CARMENITA ROAD SB OFF-RAMP
ADDITIONAL GIRDER REINFORCEMENT NO. 2

DISREGARD PRINTS BEARING EARLIER REVISION DATES → 9-12-08 1-14-09 6-17-09

REVISION DATES

SHEET 20 OF 29

FILE => 53-3018k-k-girrf02.dgn

STRUCTURES DESIGN DETAIL SHEET (METRIC) (REV.03-17-04)

USERNAME => trmikest DATE PLOTTED => 23-JUN-2010 TIME PLOTTED => 06:42

DIST	COUNTY	ROUTE	KILOMETER POST TOTAL PROJECT	SHEET No	TOTAL SHEETS
07	LA	5	2.9/4.9	975	1082

Daniel L. Texler 01-26-10
REGISTERED CIVIL ENGINEER DATE

6-21-10
PLANS APPROVAL DATE

REGISTERED PROFESSIONAL ENGINEER Daniel L. Texler No. 49792 Exp. 9-30-10 CIVIL STATE OF CALIFORNIA

The State of California or its officers or agents shall not be responsible for the accuracy or completeness of electronic copies of this plan sheet.

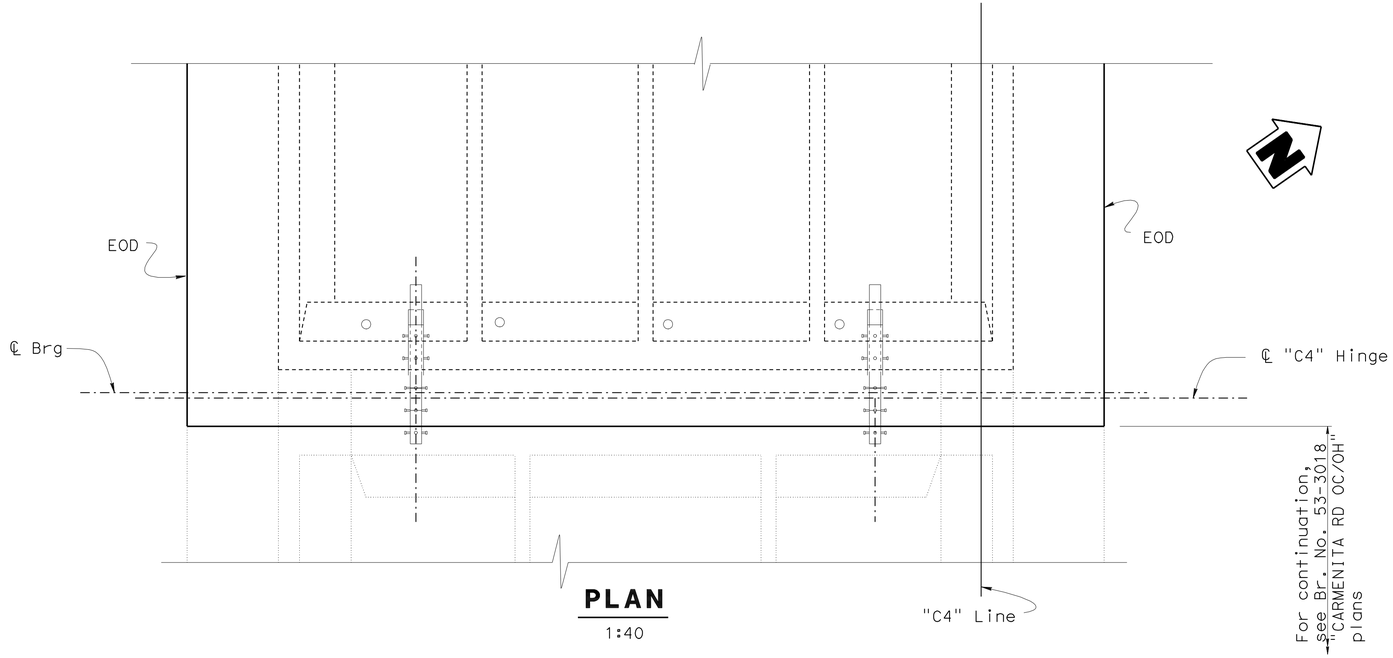

PLAN
1:40

NOTES:

1. See Bridge Details B0-13 / 13-1 & B0-13 / 13-2
2. For 'Section V-V', see "HINGE DETAILS NO. 1" sheet.
3. For 'Section W-W', see "HINGE DETAILS NO. 2" sheet.
4. Expanded polystyrene to be removed 150 from visible surface.
5. For bearing pad details, see "PTFE/SPHERICAL EXPANSION BEARING DETAILS NO. 1" sheets

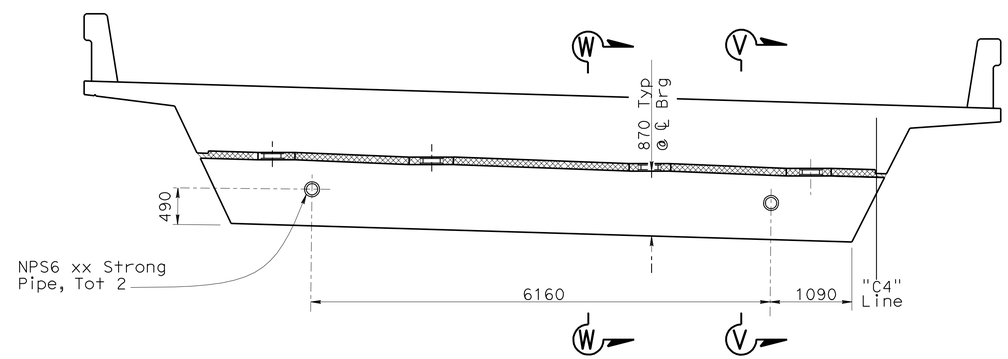

ELEVATION
1:40

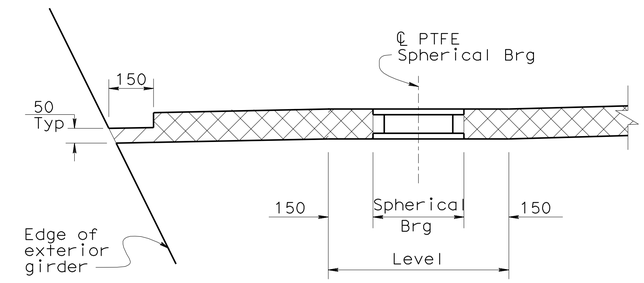

SECTION A-A
1:10

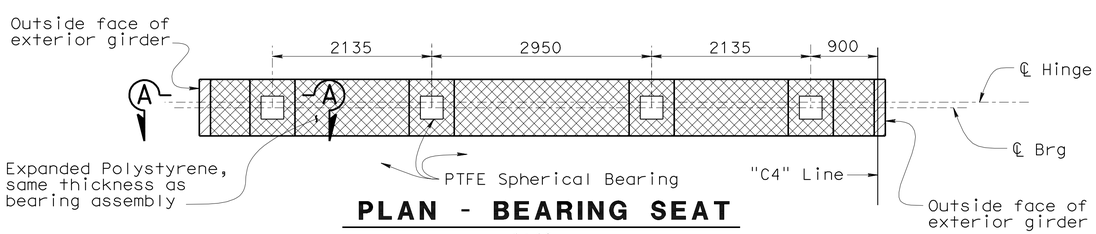

PLAN - BEARING SEAT
1:40

LEGEND:

Indicates expanded polystyrene, 50 mm thickness.

Indicates expanded polystyrene, same thickness as bearing

DESIGN	BY B. Kemp	CHECKED U. Inyang	
DETAILS	BY J. Chlubna/D. Elliott	CHECKED U. Inyang	
QUANTITIES	BY M. Okimura	CHECKED D. Menzmer	

STATE OF CALIFORNIA
DEPARTMENT OF TRANSPORTATION

DIVISION OF ENGINEERING SERVICES
STRUCTURE DESIGN
DESIGN BRANCH 11

BRIDGE NO. 53-3018K
KILOMETER POST 3.875

CARMENITA ROAD SB OFF-RAMP
HINGE LAYOUT

ALL DIMENSIONS ARE IN MILLIMETERS UNLESS OTHERWISE SHOWN

ORIGINAL SCALE IN MILLIMETERS FOR REDUCED PLANS 0 10 20 30 40 50 60 70 80 90 100

CU 07225
EA 2159C1

DISREGARD PRINTS BEARING EARLIER REVISION DATES 3-04-08 3-14-08 11-25-08 1-21-09

REVISION DATES

SHEET 21 OF 29

FILE => 53-3018k-m-hnglyt.dgn

STRUCTURES DESIGN DETAIL SHEET (METRIC) (REV.03-17-04)

USERNAME => trmikest DATE PLOTTED => 23-JUN-2010 TIME PLOTTED => 05:42

DIST	COUNTY	ROUTE	KILOMETER POST TOTAL PROJECT	SHEET No	TOTAL SHEETS
07	LA	5	2.9/4.9	976	1082

Daniel L. Texler 01-26-10
REGISTERED CIVIL ENGINEER DATE

6-21-10
PLANS APPROVAL DATE

REGISTERED PROFESSIONAL ENGINEER Daniel L. Texler No. 49792 Exp. 9-30-10 CIVIL STATE OF CALIFORNIA

The State of California or its officers or agents shall not be responsible for the accuracy or completeness of electronic copies of this plan sheet.

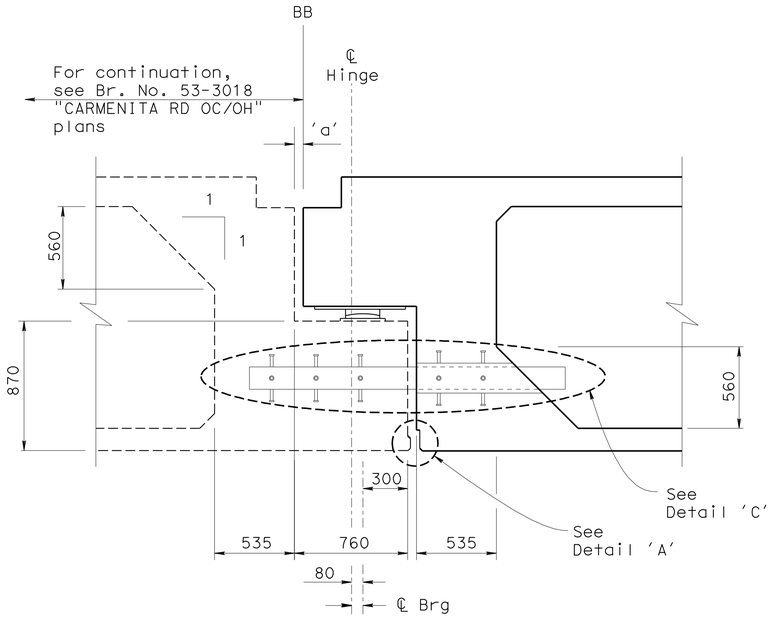

SECTION V-V
1:20

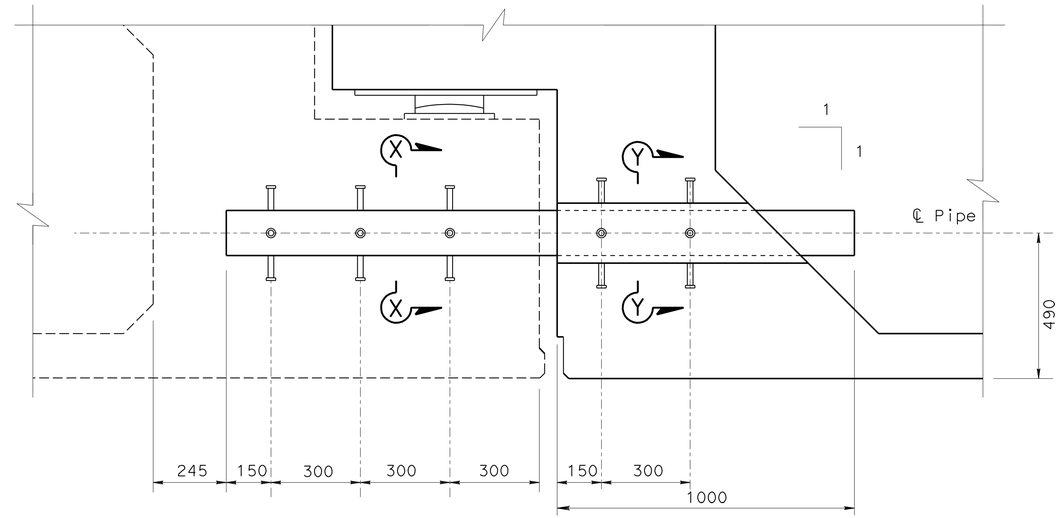

DETAIL 'C'
1:10

NOTES:

1. For location of 'Section V-V' and NPS6 xx strong pipe layout, see "HINGE LAYOUT" sheet
2. Details for Br. No. 53-3018 shown for information only.

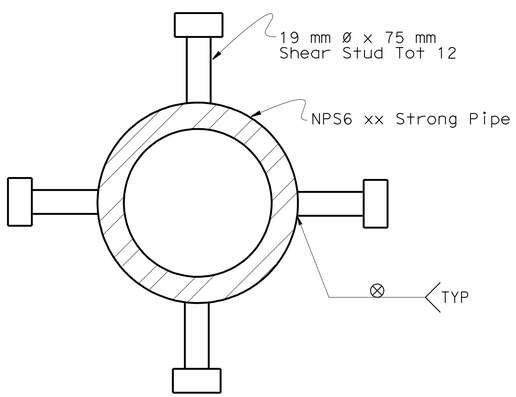

SECTION X-X
1:2.5

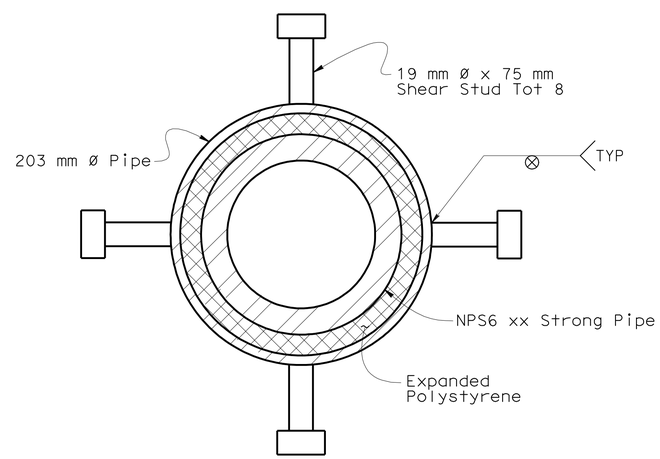

SECTION Y-Y
1:2.5

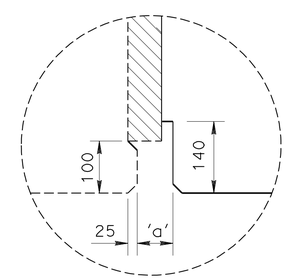

DETAIL A
No Scale

Caltrans Metric

DESIGN	BY B. Kemp	CHECKED U. Inyang	
DETAILS	BY D. Elliott	CHECKED U. Inyang	
QUANTITIES	BY M. Okimura	CHECKED D. Menzmer	

STATE OF CALIFORNIA
DEPARTMENT OF TRANSPORTATION

DIVISION OF ENGINEERING SERVICES
STRUCTURE DESIGN
DESIGN BRANCH 11

BRIDGE NO. 53-3018K
KILOMETER POST 3.875

CARMENITA ROAD SB OFF-RAMP
HINGE DETAILS NO.1

ALL DIMENSIONS ARE IN MILLIMETERS UNLESS OTHERWISE SHOWN

ORIGINAL SCALE IN MILLIMETERS FOR REDUCED PLANS 0 10 20 30 40 50 60 70 80 90 100

CU 07225
EA 2159C1

DISREGARD PRINTS BEARING EARLIER REVISION DATES

REVISION DATES: 3-03-08 3-14-08 11-25-08 12-12-08 6-11-09 6-17-09

SHEET 22 OF 29

FILE => 53-3018k-mm-hngdet01.dgn

STRUCTURES DESIGN DETAIL SHEET (METRIC) (REV.03-17-04)

USERNAME => trmikesl DATE PLOTTED => 23-JUN-2010 TIME PLOTTED => 05:42

DIST	COUNTY	ROUTE	KILOMETER POST TOTAL PROJECT	SHEET No	TOTAL SHEETS
07	LA	5	2.9/4.9	977	1082

Daniel L. Texler 01-26-10
REGISTERED CIVIL ENGINEER DATE

6-21-10
PLANS APPROVAL DATE

REGISTERED PROFESSIONAL ENGINEER Daniel L. Texler No. 49792 Exp. 9-30-10 CIVIL STATE OF CALIFORNIA

The State of California or its officers or agents shall not be responsible for the accuracy or completeness of electronic copies of this plan sheet.

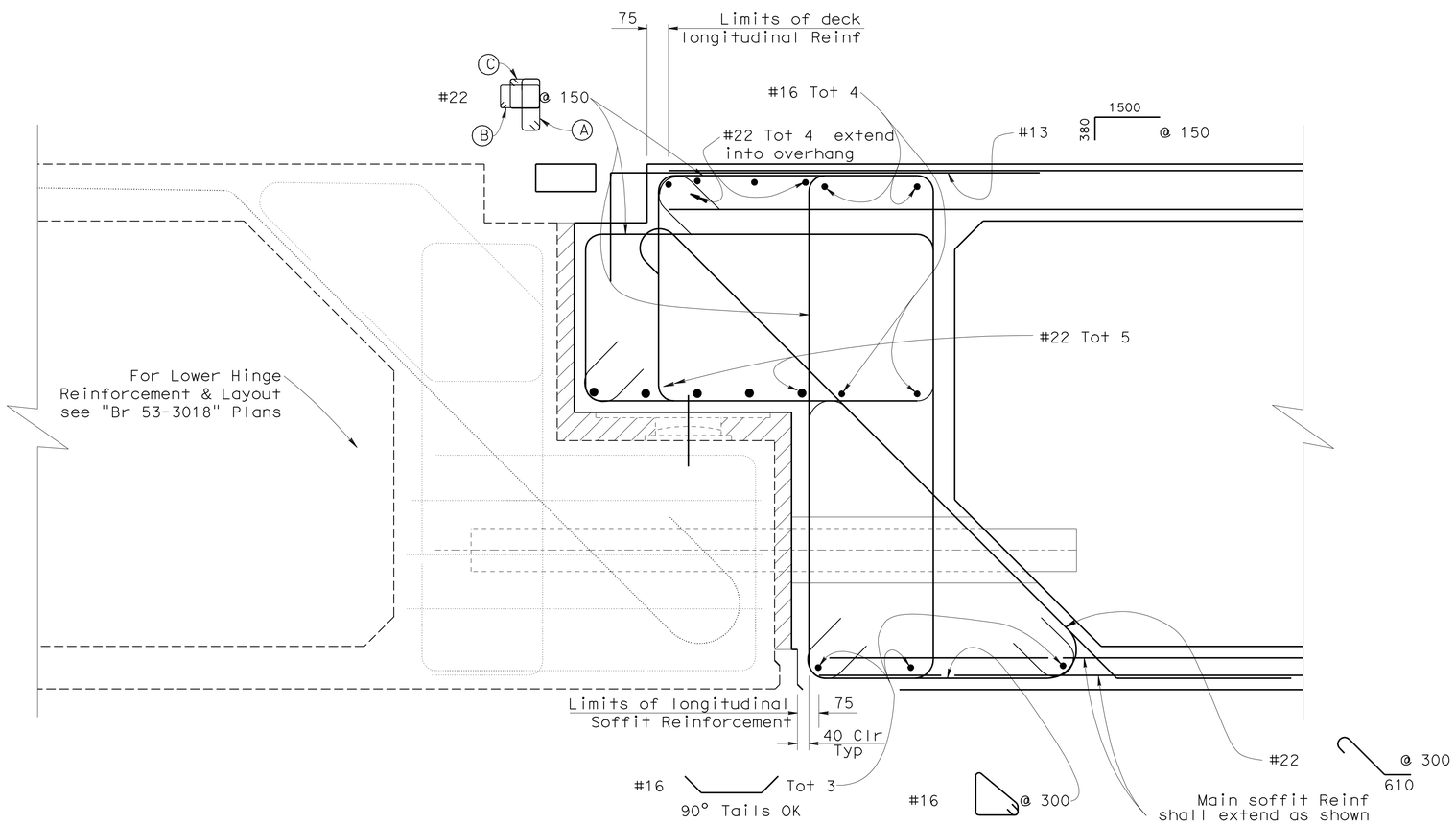

SECTION W-W

1:10

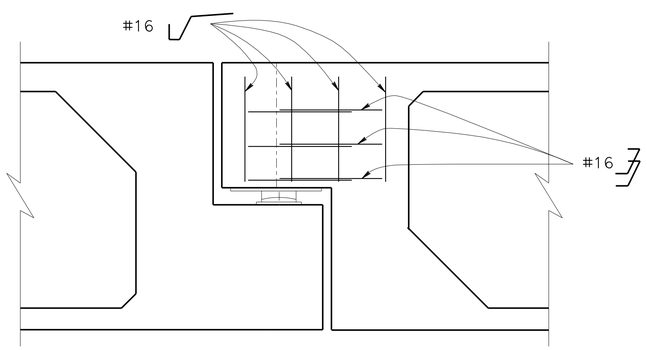

HINGE SIDE REINFORCEMENT

1:20

NOTES:

1. For location of 'Section W-W' and NPS6 double extra strong pipe layout see "HINGE LAYOUT" sheet.
2. Hinge Seat shown for information only. For details, see Bridge No. 53-3018 "CARMENITA ROAD OC/OH" plans.

Denotes Expanded Polystyrene

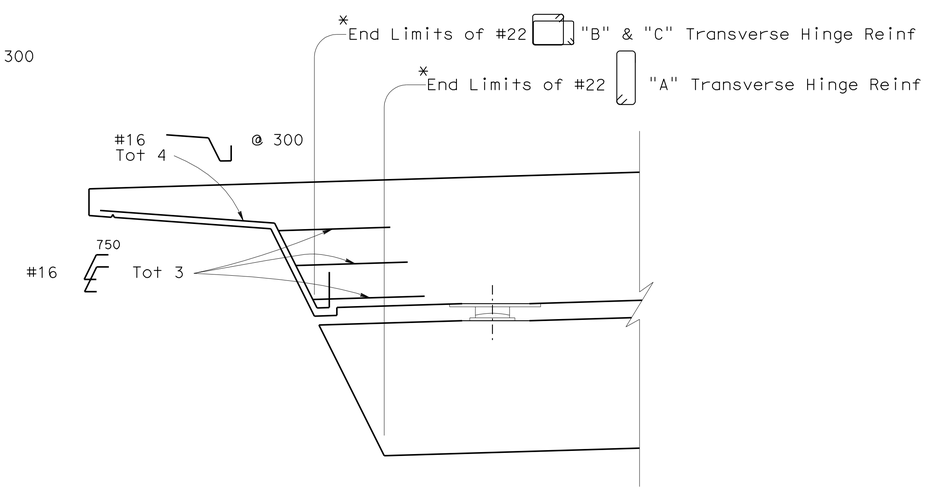

SIDE REINFORCEMENT

1:20

* See Section W-W for location of #22 Transverse Hinge Reinf

Caltrans Metric

	BY	CHECKED
DESIGN	Bill Kemp	U. Inyang
DETAILS	Jaime Ramirez	U. Inyang
QUANTITIES	M. Okimura	D. Menzmer

STATE OF CALIFORNIA DEPARTMENT OF TRANSPORTATION

DIVISION OF ENGINEERING SERVICES STRUCTURE DESIGN
DESIGN BRANCH 11

BRIDGE NO. 53-3018K
KILOMETER POST 3.875

CARMENITA ROAD SB OFF-RAMP
HINGE DETAILS NO. 2

ALL DIMENSIONS ARE IN MILLIMETERS UNLESS OTHERWISE SHOWN

ORIGINAL SCALE IN MILLIMETERS FOR REDUCED PLANS 0 10 20 30 40 50 60 70 80 90 100

CU 07225
EA 2159C1

DISREGARD PRINTS BEARING EARLIER REVISION DATES

REVISION DATES: 04-29-08 5-1-08 11-25-08 1-21-09 2-06-09 5/12/09

SHEET 23 OF 29

FILE => 53-3018k-mm-hngdet02.dgn

STRUCTURES DESIGN DETAIL SHEET (METRIC) (REV.03-17-04)

USERNAME => trmikest DATE PLOTTED => 23-JUN-2010 TIME PLOTTED => 06:42

DIST	COUNTY	ROUTE	KILOMETER POST TOTAL PROJECT	SHEET No	TOTAL SHEETS
07	LA	5	2.9/4.9	978	1082

Caltrans Metric

Daniel L. Texler 01-26-10
REGISTERED CIVIL ENGINEER

6-21-10
PLANS APPROVAL DATE

REGISTERED PROFESSIONAL ENGINEER Daniel L. Texler No. 49792 Exp. 9-30-10 CIVIL STATE OF CALIFORNIA

The State of California or its officers or agents shall not be responsible for the accuracy or completeness of electronic copies of this plan sheet.

EXPANSION BEARING TABLE

LOCATION	MAXIMUM VERTICAL LOAD (kN)	MINIMUM DEAD LOAD (kN)	DESIGN ROTATION (Radians)	CONCAVE PLATE						CONVEX PLATE		MASONRY PLATE			SOLE PLATE			ASSEMBLY HEIGHT
				WIDTH / LENGTH	FLAT PTFE AREA (m^2)	DIAMETER	SPHERICAL RADIUS	MINIMUM THICKNESS	MAXIMUM THICKNESS	DIAMETER	MAXIMUM THICKNESS	WIDTH	LENGTH	THICKNESS	WIDTH	LENGTH	THICKNESS	
				L_{cp}	A_{PTFE}	D_m	R_{act}	T_{min}	T_{max}	C_m	H_{act}	W_{mp}	L_{mp}	T_{mp}	W_{sp}	L_{sp}	T_{sp}	A_h
Hinge	700	460	0.035	222	0.029	192	405	19.0	36	222	35	280	280	22	324	660	39	115

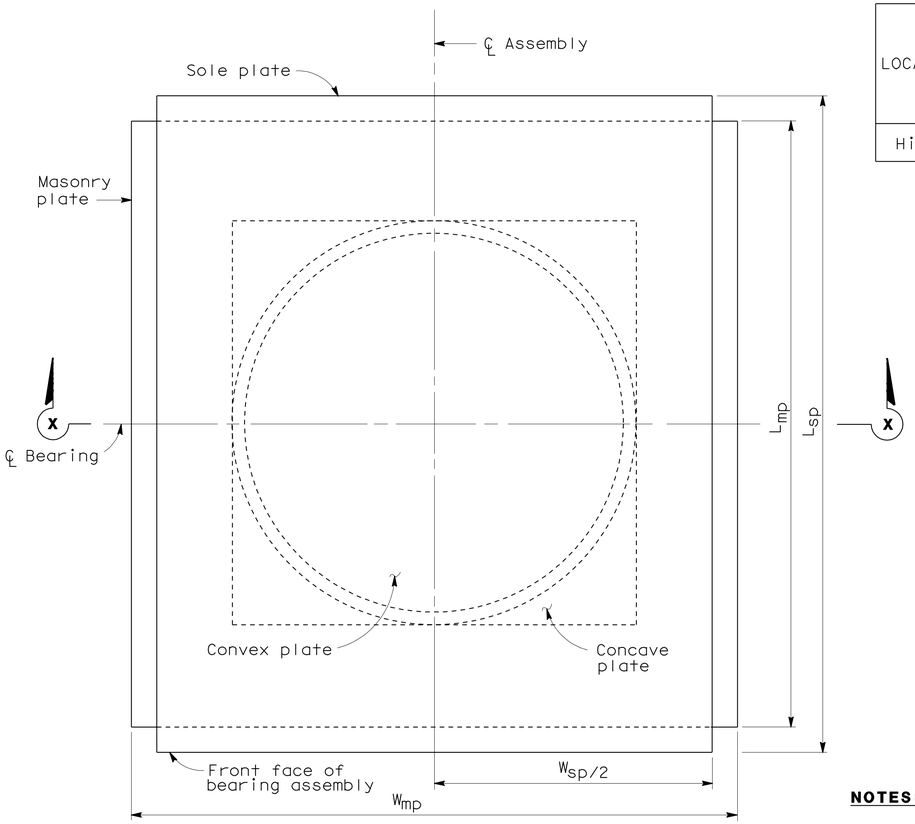

PLAN

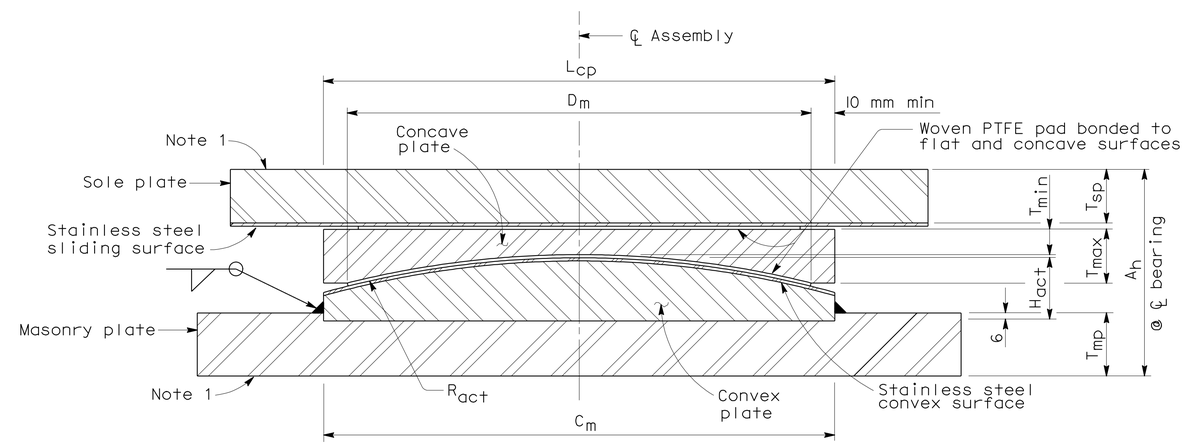

SECTION X-X

NOTES:

1. Anchorage method not shown.
2. All units in millimeters unless otherwise noted.
3. All dimensions shown are steel only unless otherwise noted.
4. H_{act} includes stainless steel.
5. A_h includes PTFE, substratum and stainless steel, (Varies).
6. R_{act} is to sliding surface.

NO SCALE

ALL DIMENSIONS ARE IN MILLIMETERS UNLESS OTHERWISE SHOWN

DATE PLOTTED => 23-JUN-2010 TIME PLOTTED => 05:42

STANDARD DRAWING

RELEASE DATE	4/9/97	DESIGN	BY ROBERTO LACALLE	CHECKED ROD SIMMONS	RELEASED BY
		DETAILS	BY R. YEE	CHECKED ROD SIMMONS	
FILE NO.	xs9-010	SUBMITTED	BY ROBERTO LACALLE	DRAWING DATE 11/93	OFFICE CHIEF

STATE OF CALIFORNIA
DEPARTMENT OF TRANSPORTATION

DIVISION OF ENGINEERING SERVICES

BRIDGE NO. 53-3018K
KILOMETER POST 3.875

CARMENITA ROAD SB OFF-RAMP

PTFE/SPHERICAL EXPANSION BEARING DETAILS NO. 1

DS OSD 2147A (METRIC) (REV. 2/25/97)

ORIGINAL SCALE IN MILLIMETERS FOR REDUCED PLANS 0 10 20 30 40 50 60 70 80 90 100

CU 07225
EA 2159C1

DISREGARD PRINTS BEARING EARLIER REVISION DATES

REVISION DATES (PRELIMINARY STAGE ONLY) 3-4-08 7-7-08 12/5/08

SHEET 24 OF 29

USERNAME => trmikesl

53-3018k-n-ptfe01.dgn

DIST	COUNTY	ROUTE	KILOMETER POST TOTAL PROJECT	SHEET No	TOTAL SHEETS
07	LA	5	2.9/4.9	979	1082

Daniel L. Texler 01-26-10
REGISTERED CIVIL ENGINEER

6-21-10
PLANS APPROVAL DATE

REGISTERED PROFESSIONAL ENGINEER
Daniel L. Texler
No. 49792
Exp. 9-30-10
CIVIL
STATE OF CALIFORNIA

The State of California or its officers or agents shall not be responsible for the accuracy or completeness of electronic copies of this plan sheet.

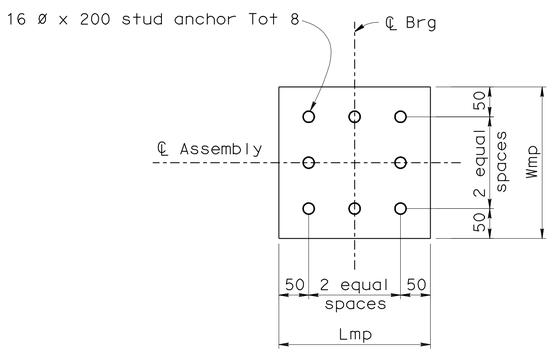

PLAN-MASONRY PLATE AT HINGE

1:5

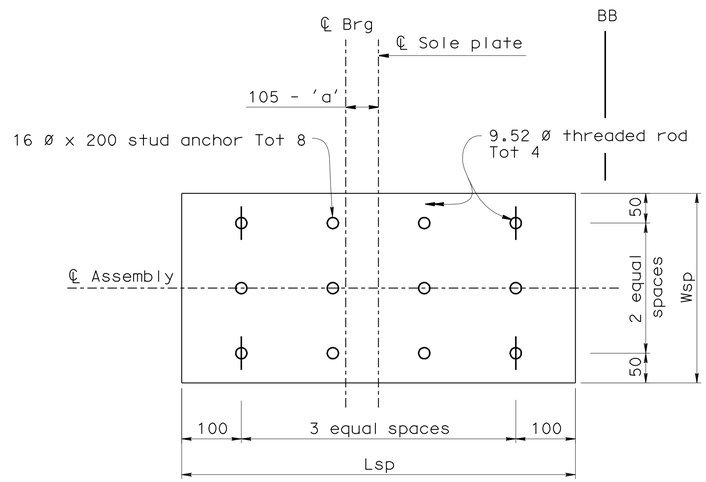

NOTE:

For dimension 'a', see "JOINT SEAL ASSEMBLY (MAXIMUM MOVEMENT RATING = 100 mm)" sheet

PLAN-SOLE PLATE AT HINGE

1:5

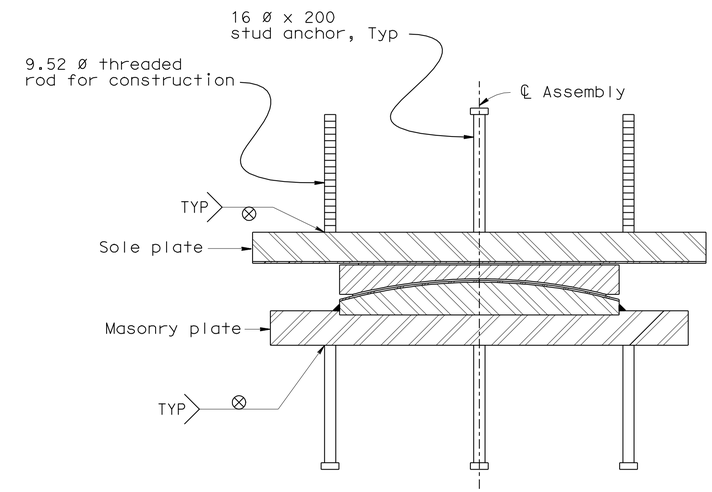

ANCHORAGE DETAIL

NO SCALE

Caltrans Metric

DESIGN	BY Phu Nguyen	CHECKED D. Menzmer
DETAILS	BY Pauline Tong	CHECKED D. Menzmer
QUANTITIES	BY M. Okimura	CHECKED D. Menzmer

STATE OF CALIFORNIA
DEPARTMENT OF TRANSPORTATION

DIVISION OF ENGINEERING SERVICES
STRUCTURE DESIGN
DESIGN BRANCH 11

BRIDGE NO. 53-3018K
KILOMETER POST 3.875

CARMENITA ROAD SB OFF-RAMP
PTFE/SPHERICAL EXPANSION BEARING DETAILS NO. 2

ALL DIMENSIONS ARE IN MILLIMETERS UNLESS OTHERWISE SHOWN

ORIGINAL SCALE IN MILLIMETERS FOR REDUCED PLANS 0 10 20 30 40 50 60 70 80 90 100

CU 07225
EA 2159C1

DISREGARD PRINTS BEARING EARLIER REVISION DATES

REVISION DATES (PRELIMINARY STAGE ONLY) ~~3-4-08~~ ~~1-12-09~~ ~~6-11-09~~ 6-17-09

SHEET 25 OF 29

FILE => 53-3018k-n-ptfe02.dgn

USERNAME => ttmikes1 DATE PLOTTED => 23-JUN-2010 TIME PLOTTED => 05:42

DIST.	COUNTY	ROUTE	KILOMETER POST TOTAL PROJECT	SHEET NO.	TOTAL SHEETS
07	LA	5	2.9/4.9	980	1082

Caltrans Metric

Daniel L. Texler 01-26-10
REGISTERED ENGINEER - CIVIL

6-21-10
PLANS APPROVAL DATE

REGISTERED PROFESSIONAL ENGINEER Daniel L. Texler No. 49792 Exp. 9-30-10 CIVIL STATE OF CALIFORNIA

The State of California or its officers or agents shall not be responsible for the accuracy or completeness of electronic copies of this plan sheet.

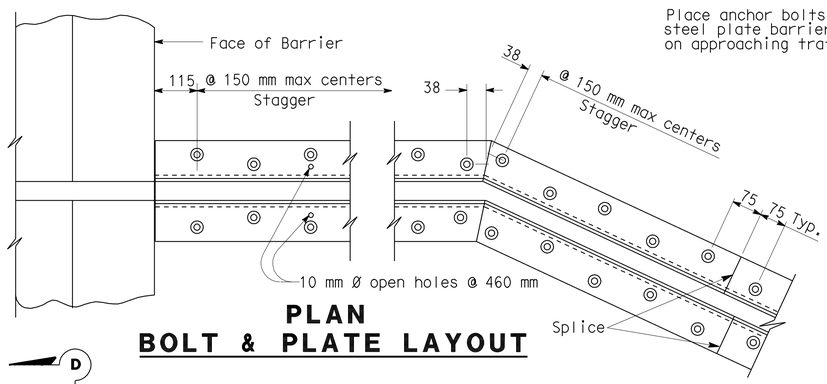

PLAN
BOLT & PLATE LAYOUT

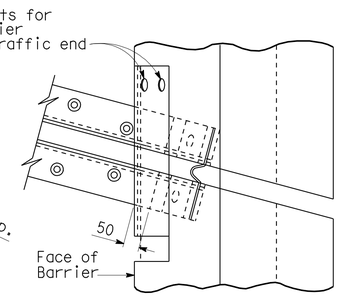

SKEW ≤ 20°

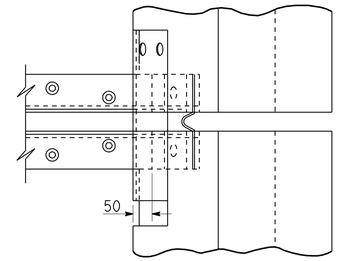

SKEW > 20°

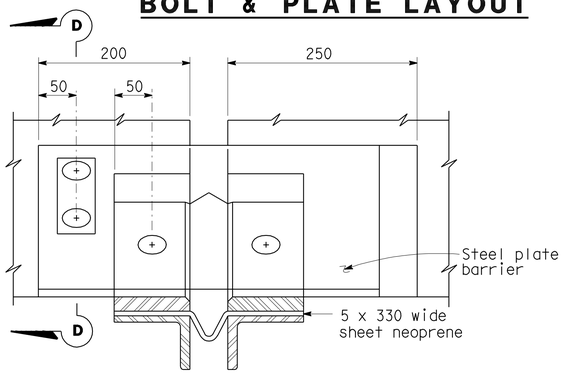

VIEW B-B

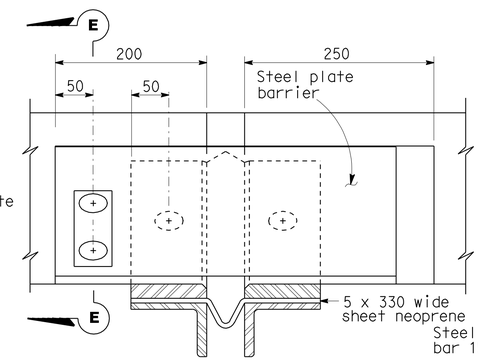

VIEW C-C

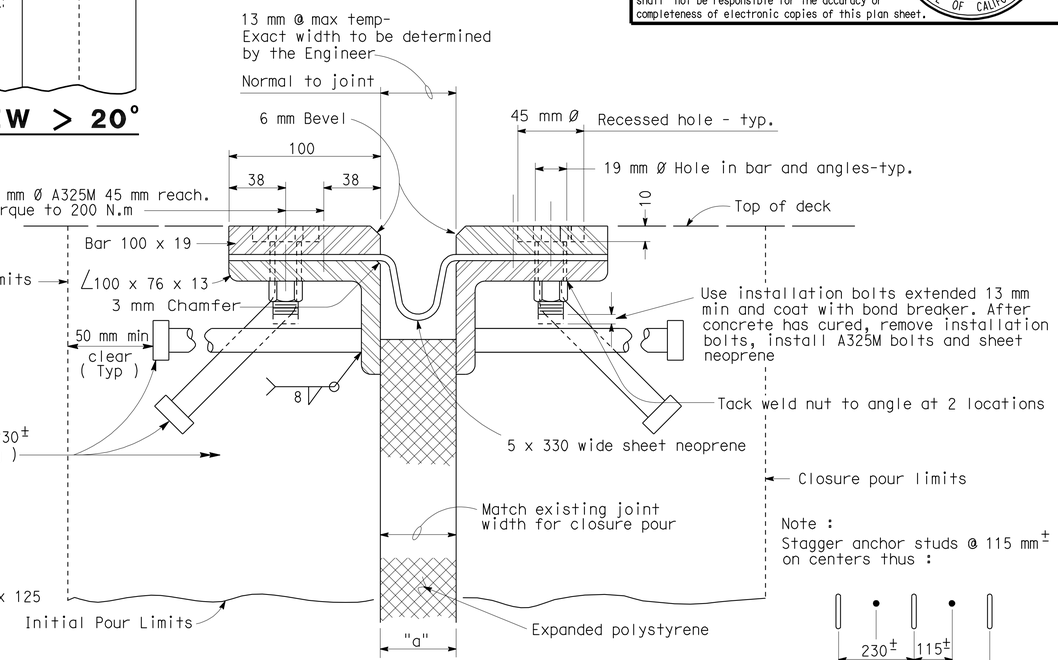

SECTION A-A

Note :
Stagger anchor studs @ 115 mm± on centers thus :

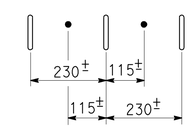

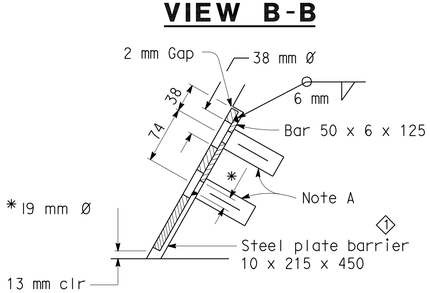

SECTION D-D

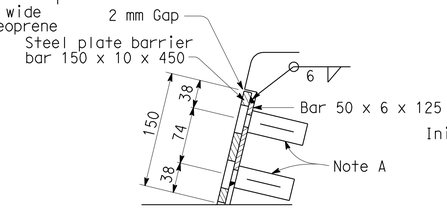

SECTION E-E

Joint Information			"a" Dimensions		
Location	Movement Rating (MR)	Skew	Winter	Spring & Fall	Summer
Hinge	75	0	65	50	35

NOTES:

Full penetration butt welds may be substituted for fillet welds on all anchor studs.

Alternate types of anchor studs may be permitted subject to the approval by the Engineer.

Joint seal assembly to be used in conjunction with closure pour. (See other sheets for limits). Closure pour shall not be placed until final deck surface is within the tolerance specified.

Use joint at crown of roadway, at any change in transverse slope in deck and at changes in horizontal direction. Place other joints at or near lanes. All metal parts to be painted or galvanized after fabrication.

Sheet neoprene shall be fabricated in one continuous piece or joints shall be vulcanized. Neoprene shall be fabricated to bend around corners. 25 mm holes in neoprene sheets shall be drilled or punched so that the neoprene is not distorted at the time of installation.

NOTE A

Insert assembly or expansion anchorage for 16 x 45 A325M bolt.

NOTE B

Use the Sidewalk Detail at all sidewalk joints. Use the Barrier Detail at both sides if the roadway is crowned or if the difference in elevation between the ends of the seal is 150 mm or less.

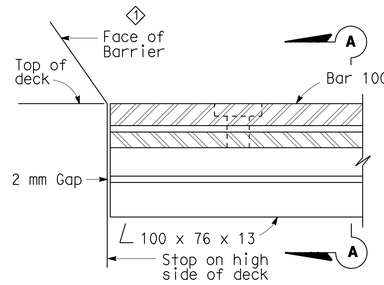

HIGH SIDE BARRIER DETAIL

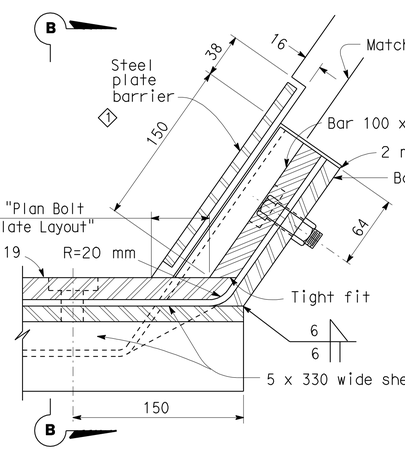

LOW SIDE BARRIER DETAIL
(See Note B)

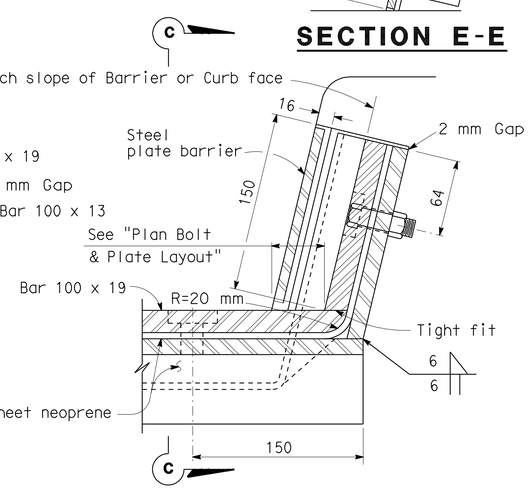

SIDEWALK DETAIL
(See Note B)

NO SCALE

ALL DIMENSIONS ARE IN MILLIMETERS UNLESS OTHERWISE SHOWN

STANDARD DRAWING				
RELEASE DATE 4/1/97	DESIGN BY H. HERR	CHECKED R. LACALLE	RELEASED BY	
FILE NO. xs8-010	DETAILS BY R. YEE	CHECKED R. LACALLE		
	SUBMITTED BY C.W. PURKISS	DRAWING DATE 9/93	OFFICE CHIEF	

1 Modify Face of Barrier

STATE OF CALIFORNIA
DEPARTMENT OF TRANSPORTATION

DIVISION OF ENGINEERING SERVICES

BRIDGE NO. 53-3018K
KILOMETER POST 3.875

CARMENITA ROAD SB OFF-RAMP
JOINT SEAL ASSEMBLY (MAXIMUM MOVEMENT RATING = 100 mm)

DS OSD 2147A (METRIC) (REV. 2/25/97)

ORIGINAL SCALE IN MILLIMETERS FOR REDUCED PLANS 0 10 20 30 40 50 60 70 80 90 100

CU 07225
EA 2159C1

DISREGARD PRINTS BEARING EARLIER REVISION DATES 3-4-08

REVISION DATES (PRELIMINARY STAGE ONLY)

SHEET 26 OF 29

USERNAME => trmikesl

53-3018k-p-jtseal.dgn

DATE PLOTTED => 23-JUN-2010 TIME PLOTTED => 05:43

DIST	COUNTY	ROUTE	KILOMETER POST TOTAL PROJECT	SHEET No	TOTAL SHEETS
07	LA	5	2.9/4.9	981	1082

Daniel L. Texler 01-26-10
REGISTERED CIVIL ENGINEER DATE

6-21-10
PLANS APPROVAL DATE

REGISTERED PROFESSIONAL ENGINEER
Daniel L Texler
No. 49792
Exp. 9-30-08
CIVIL
STATE OF CALIFORNIA

The State of California or its officers or agents shall not be responsible for the accuracy or completeness of electronic copies of this plan sheet.

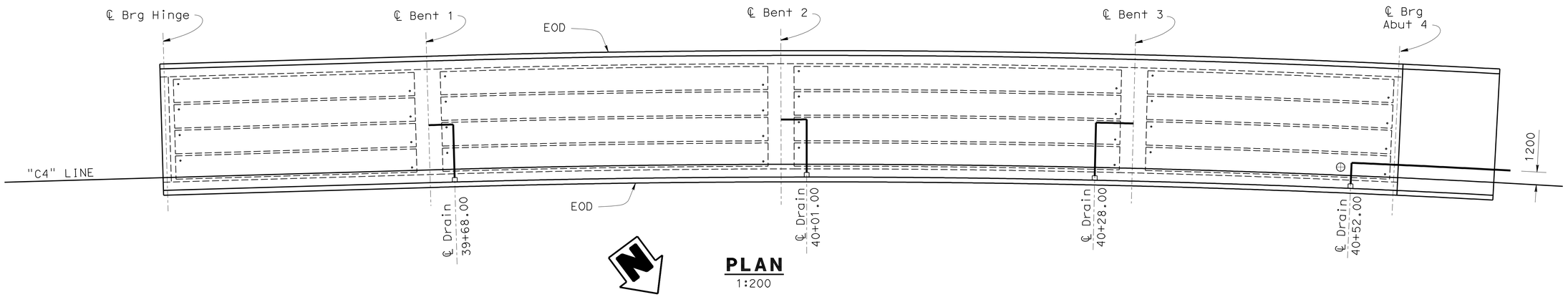

PLAN
1:200

Bent	Outlet Direction
1	2
2	2
3	2

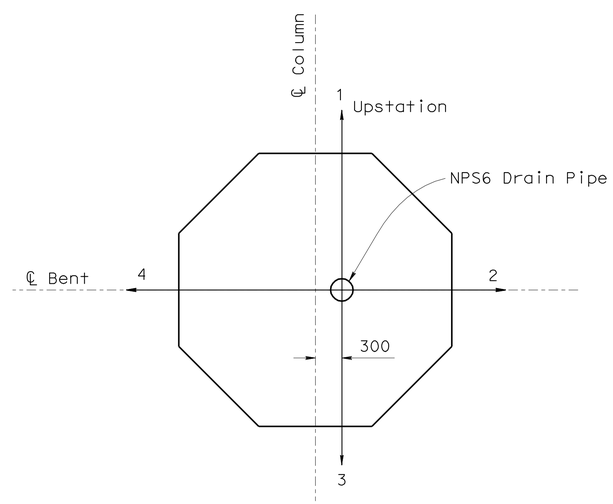

OUTLET DIRECTION
No Scale

NOTES:

- ▫ Indicates deck drain Type D-3 (B7-7 / 7-9)

1. End drain pipe 1.5 m beyond approach slab
2. For drain outlet detail at column, see (B7-6) and (B7-8)
3. For pipe detail at Abutment, see (B7-8)

Caltrans Metric

ALL DIMENSIONS ARE IN MILLIMETERS UNLESS OTHERWISE SHOWN

ORIGINAL SCALE IN MILLIMETERS FOR REDUCED PLANS 0 10 20 30 40 50 60 70 80 90 100

	BY	CHECKED
DESIGN	Phu Nguyen	D. Menzmer
DETAILS	L. Goldthwait	D. Menzmer
QUANTITIES	M. Okimura	D. Menzmer

STATE OF CALIFORNIA
DEPARTMENT OF TRANSPORTATION

DIVISION OF ENGINEERING SERVICES
STRUCTURE DESIGN
DESIGN BRANCH 11

CU 07225
EA 2159C1

BRIDGE NO. 53-3018K
KILOMETER POST 3.875

CARMENITA ROAD SB OFF-RAMP
DRAINAGE LAYOUT

DISREGARD PRINTS BEARING EARLIER REVISION DATES

REVISION DATES: 12-15-07 3-18-08

SHEET 27 OF 29

FILE => 53-3018k-s-drnlyt.dgn

STRUCTURES DESIGN DETAIL SHEET (METRIC) (REV.03-17-04)

USERNAME => trmikesl DATE PLOTTED => 23-JUN-2010 TIME PLOTTED => 05:43

DIST.	COUNTY	ROUTE	KILOMETER POST TOTAL PROJECT	SHEET NO.	TOTAL SHEETS
07	LA	5	2.9/4.9	982	1082

Caltrans Metric

Daniel L. Texler 01-26-10
REGISTERED ENGINEER - CIVIL
6-21-10
PLANS APPROVAL DATE
The State of California or its officers or agents shall not be responsible for the accuracy or completeness of electronic copies of this plan sheet.

REGISTERED PROFESSIONAL ENGINEER Daniel L. Texler No. 49792 Exp. 9-30-10 CIVIL STATE OF CALIFORNIA

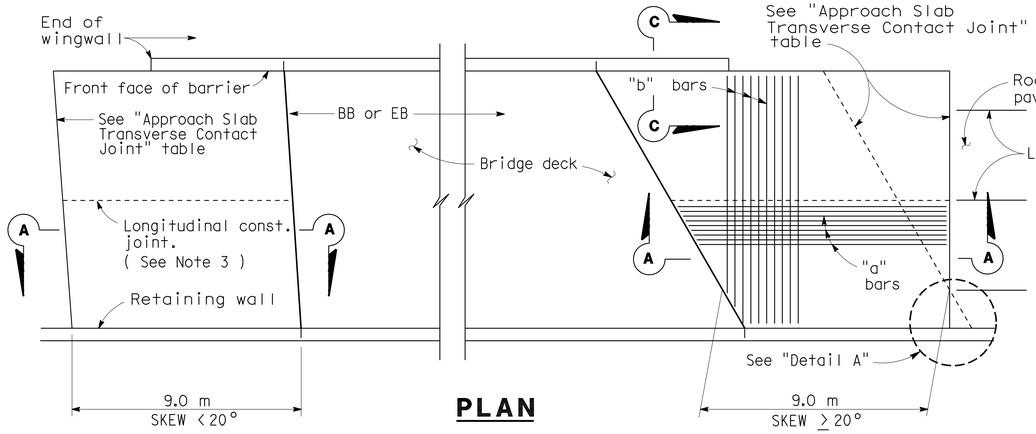

PLAN

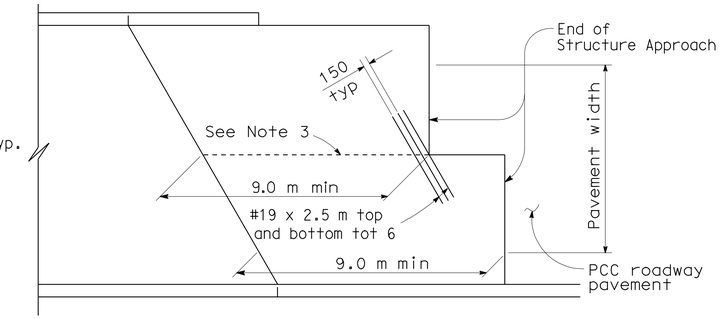

STRUCTURE APPROACH - END STAGGER DETAIL

APPROACH SLAB TRANSVERSE CONTACT JOINT		
APPROACH SKEW	WITH AC ROADWAY PAVEMENT	WITH PCC ROADWAY PAVEMENT
< 20°	Parallel to face of paving notch	Parallel to face of paving notch
20°- 45°	Parallel to face of P N use (Detail A)	Stagger lines 7.2 m to 10.8 m apart.
> 45°	Parallel to face of P N use (Detail A)	Stagger at each lane line.

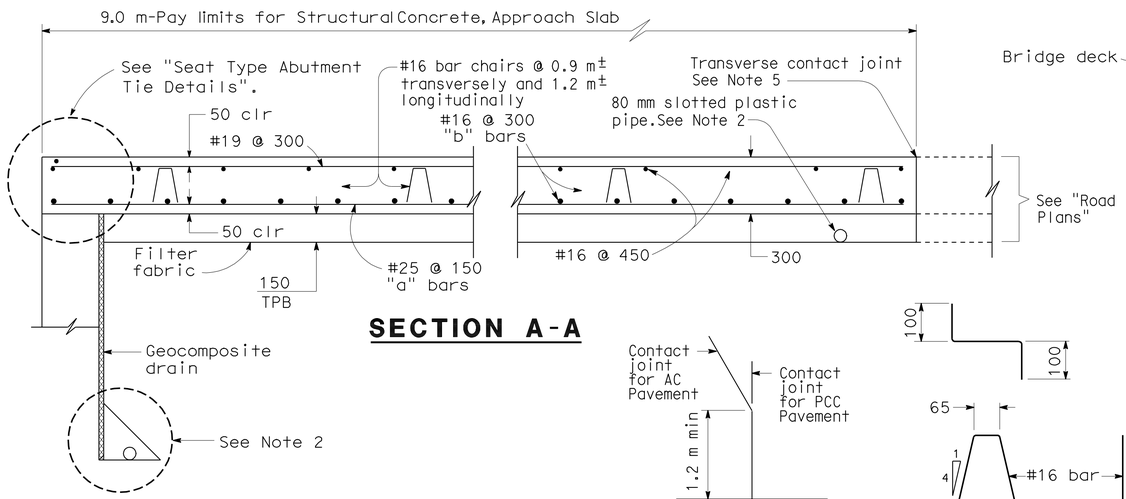

SECTION A-A

DETAIL A

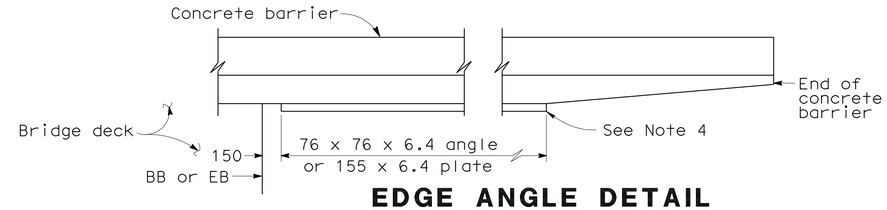

EDGE ANGLE DETAIL

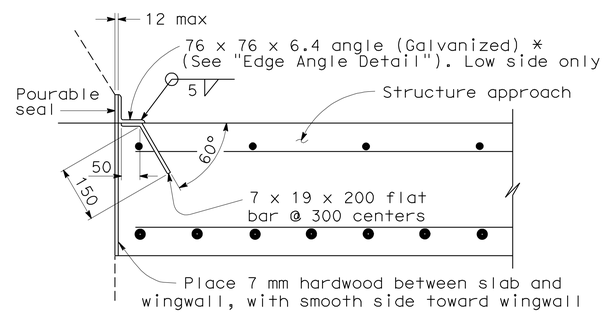

*(TO BE USED WITH TYPE 25 OR TYPE 27 CONCRETE BARRIER)

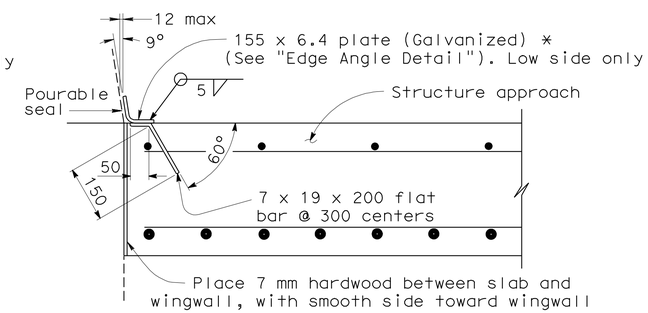

*(TO BE USED WITH TYPE 732 OR TYPE 736 CONCRETE BARRIER)

DETAIL B

BAR CHAIR DETAIL

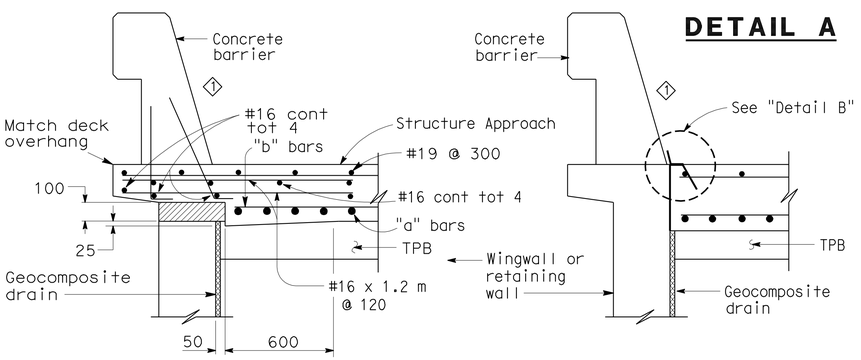

TYPE E-1

TYPE E-2

SECTION C-C

(Type E-1 to be used,unless otherwise shown on plans)

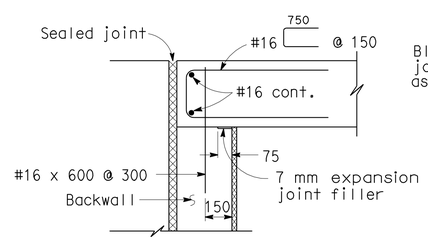

MR ≤ 50 mm

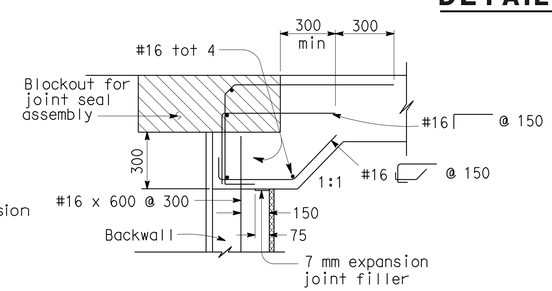

MR > 50 mm

SEAT TYPE ABUTMENT TIE DETAILS (SEE NOTE 1)

NOTES:

1. For details not shown,see Structure Plans. For MR ≤ 50 mm,adjust bar reinforcement to clear a sawcut for sealed joint,when required.
2. For drainage details,see "Structure Approach Drainage Details" sheet.
3. Longitudinal construction joints,when permitted by the Engineer, shall be located on lane lines.
4. End angle or plate at beginning of barrier transition, end of wingwall or end of structure approach as applicable.
5. For transverse contact joint with new PCC paving, refer to Standard Plan P10.
6. At the contractor's option, approach slab transverse reinforcement may be placed parallel to paving notch. Spacing of transverse reinforcement is measured along ℄ roadway.

Remove all polystyrene.

NO SCALE

ALL DIMENSIONS ARE IN MILLIMETERS UNLESS OTHERWISE SHOWN

STANDARD DRAWING				
RELEASE DATE 3/14/05	DESIGN	BY M. TRAFFALIS	CHECKED E. THORKILDSEN	RELEASED BY
FILE NO. xs3-120	DETAILS	BY R. YEE	CHECKED E. THORKILDSEN	OFFICE CHIEF
	SUBMITTED	BY M. HA	DRAWING DATE 4/98	

1 Modify Barrier Face

STATE OF CALIFORNIA DEPARTMENT OF TRANSPORTATION

DIVISION OF ENGINEERING SERVICES

BRIDGE NO. 53-3018K

KILOMETER POST 3.875

CARMENITA ROAD SB OFF-RAMP

STRUCTURE APPROACH TYPE N(9S)

DS OSD 2147A (METRIC) (REV. 2/25/97)

ORIGINAL SCALE IN MILLIMETERS FOR REDUCED PLANS 0 10 20 30 40 50 60 70 80 90 100

CU 07225
EA 2159C1

DISREGARD PRINTS BEARING EARLIER REVISION DATES 12-24-07

REVISION DATES (PRELIMINARY STAGE ONLY)

SHEET 28 OF 29

USERNAME => trmikesl

53-3018K-u-sacn9s.dgn

DATE PLOTTED => 23-JUN-2010 TIME PLOTTED => 05:43

DIST.	COUNTY	ROUTE	KILOMETER POST TOTAL PROJECT	SHEET NO.	TOTAL SHEETS
07	LA	5	2.9/4.9	983	1082

Caltrans Metric

Daniel L. Texler 01-26-10
REGISTERED ENGINEER - CIVIL

6-21-10
PLANS APPROVAL DATE

REGISTERED PROFESSIONAL ENGINEER Daniel L. Texler No. 49792 Exp. 9-30-10 CIVIL STATE OF CALIFORNIA

The State of California or its officers or agents shall not be responsible for the accuracy or completeness of electronic copies of this plan sheet.

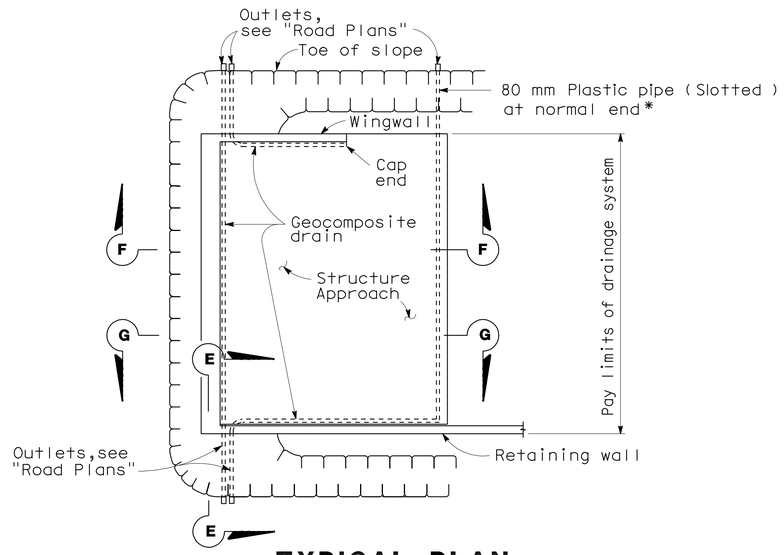

TYPICAL PLAN

*For pipe layout at staggered end, see "Detail B".

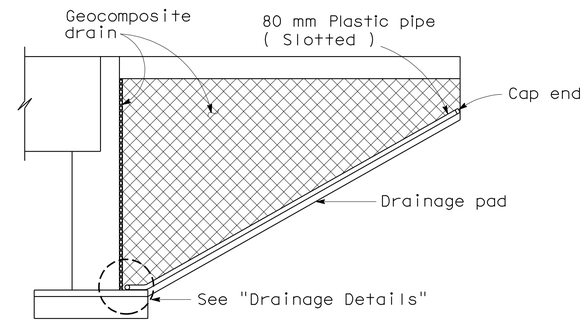

CANTILEVER WINGWALL SECTION F-F

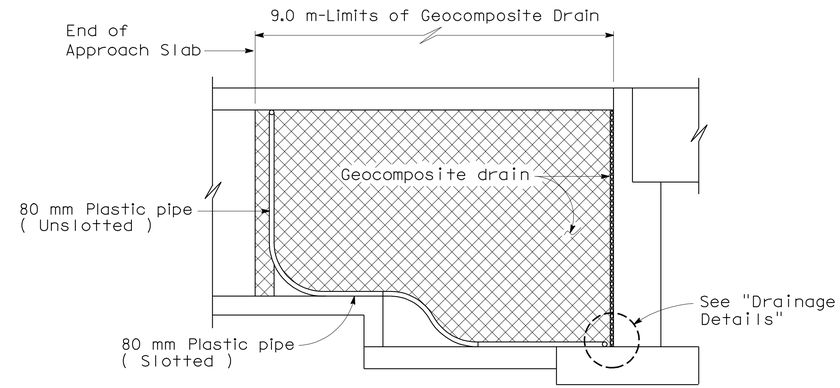

RETAINING WALL WINGWALL SECTION G-G

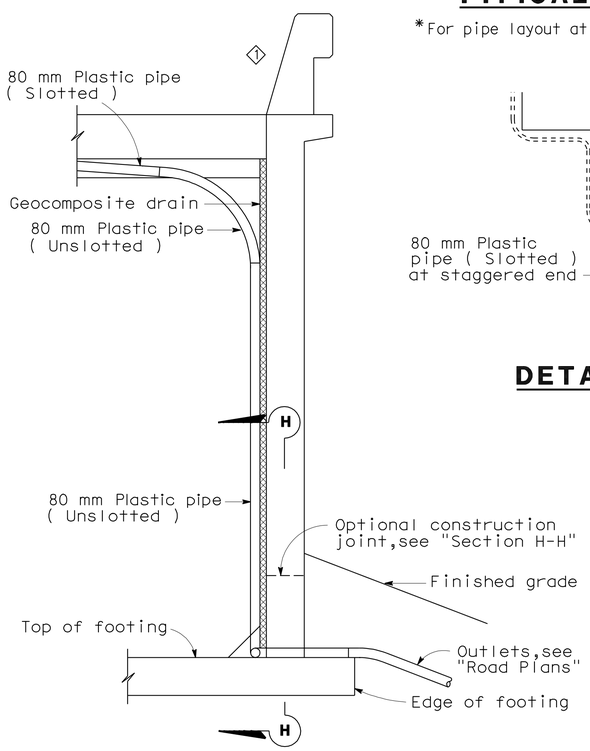

SECTION E-E

NOTE: Bends and junctions in 80 mm plastic pipe are 750 mm radius min.

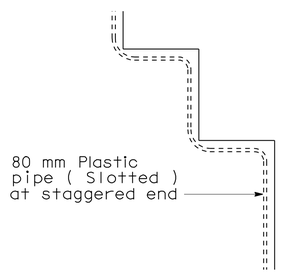

DETAIL B

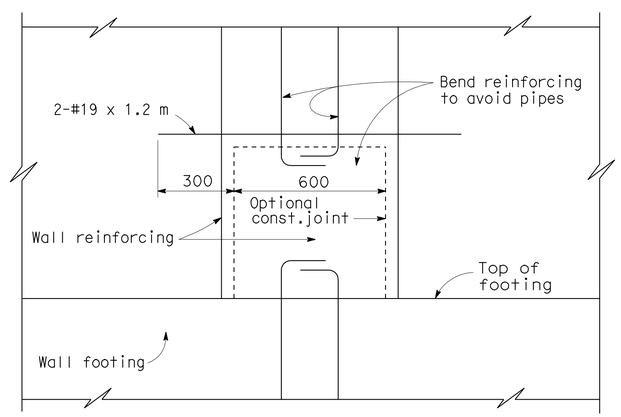

SECTION H-H

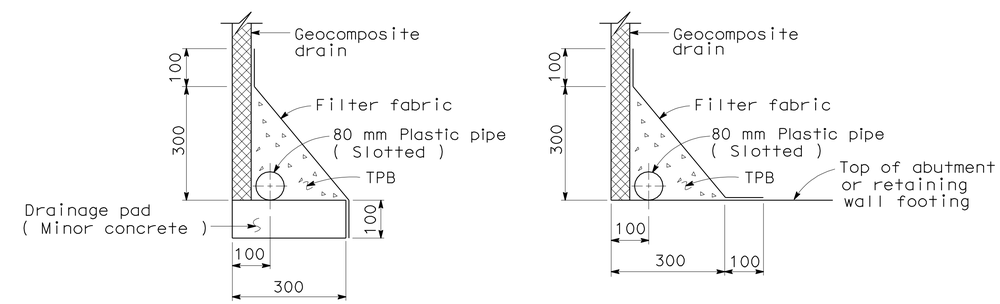

WITHOUT FOOTING

WITH FOOTING

DRAINAGE DETAILS

NO SCALE

ALL DIMENSIONS ARE IN MILLIMETERS UNLESS OTHERWISE SHOWN

STANDARD DRAWING					
RELEASE DATE 4/23/98	DESIGN	BY M. TRAFFALIS	CHECKED E. THORKILDSEN	RELEASED BY	
FILE NO. xs3-110	DETAILS	BY R. YEE	CHECKED E. THORKILDSEN	OFFICE CHIEF	
	SUBMITTED	BY M. HA	DRAWING DATE 4/98		

DS OSD 2147A (METRIC) (REV. 2/25/97)

1 Modify Barrier Face

STATE OF CALIFORNIA DEPARTMENT OF TRANSPORTATION

DIVISION OF ENGINEERING SERVICES

CU 07225
EA 2159C1

BRIDGE NO. 53-3018K
KILOMETER POST 3.875

CARMENITA ROAD SB OFF-RAMP

STRUCTURE APPROACH DRAINAGE DETAILS

ORIGINAL SCALE IN MILLIMETERS FOR REDUCED PLANS 0 10 20 30 40 50 60 70 80 90 100

DISREGARD PRINTS BEARING EARLIER REVISION DATES 12-24-07 3-18-08

REVISION DATES (PRELIMINARY STAGE ONLY)

SHEET 29 OF 29

USERNAME => trmikesl

53-3018k-u-sadd.dgn

DATE PLOTTED => 23-JUN-2010 TIME PLOTTED => 08:43

DIST	COUNTY	ROUTE	KILOMETER POST TOTAL PROJECT	SHEET No	TOTAL SHEETS
07	LA	5	2.9/4.9	984	1082

Daniel L. Texler 01-26-10
REGISTERED CIVIL ENGINEER DATE

6-21-10
PLANS APPROVAL DATE

REGISTERED PROFESSIONAL ENGINEER Daniel L. Texler No. 49792 Exp. 9-30-10 CIVIL STATE OF CALIFORNIA

The State of California or its officers or agents shall not be responsible for the accuracy or completeness of electronic copies of this plan sheet.

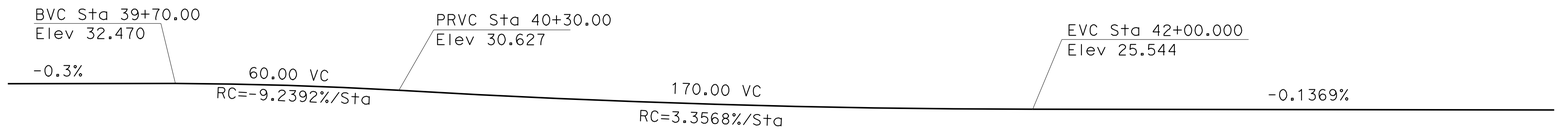

PROFILE GRADE

No Scale

NOTES:

1. Paint "Br. No. 53-3018S"
2. Paint "CARMENITA RD NB ON-RAMP"
3. Paint Bent number
4. Structure Approach Type N(9S) Mod
5. Concrete Barrier Type 736 Mod, Install utility conduits as req'd, (not shown) for size and other data, see "ROAD PLANS"

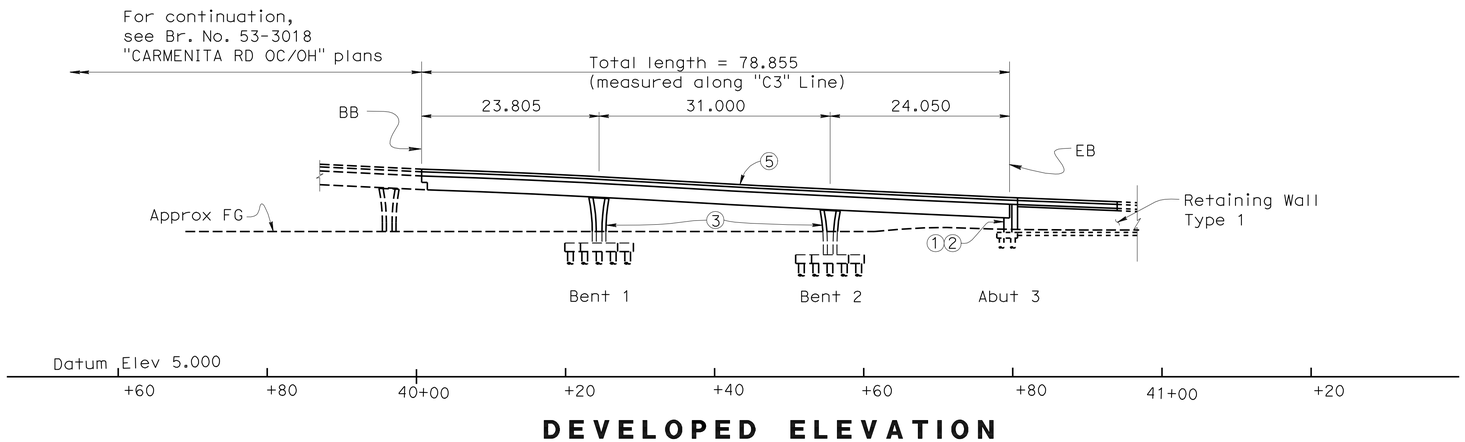

DEVELOPED ELEVATION

1:400

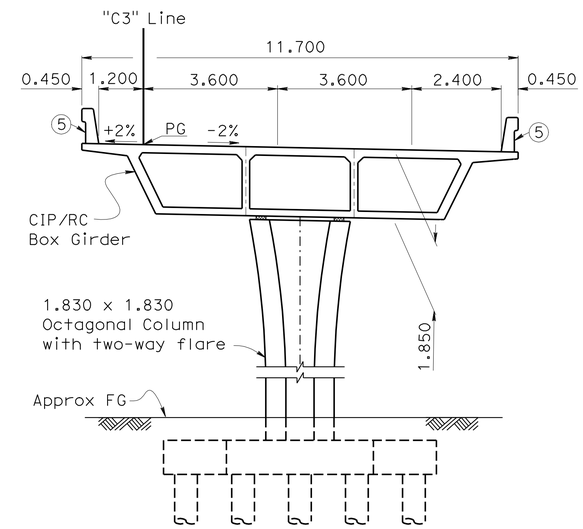

TYPICAL SECTION

1:80

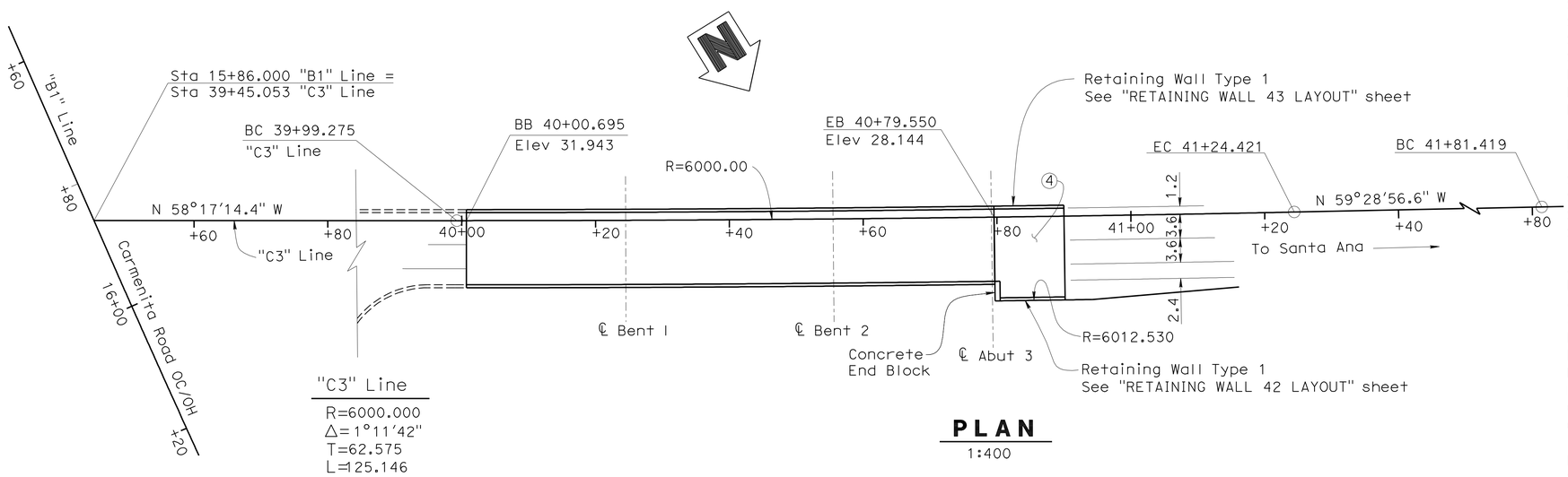

PLAN

1:400

QUANTITIES

STRUCTURE EXCAVATION (BRIDGE)	290	m3
STRUCTURE EXCAVATION (RETAINING WALL)	409	m3
STRUCTURE BACKFILL (BRIDGE)	325	m3
STRUCTURE BACKFILL (RETAINING WALL)	394	m3
FURNISH STEEL PIPE PILING (610 MM)	882	m
DRIVE STEEL PIPE PILE (610 MM)	49	EA
FURNISH PILING (CLASS 400) (ALTERNATIVE V)	930	m
DRIVE PILE (CLASS 400) (ALTERNATIVE V)	64	EA
760 Min PILE CASING	699	m
STRUCTURAL CONCRETE, BRIDGE FOOTING	137	m3
STRUCTURAL CONCRETE, BRIDGE	692	m3
STRUCTURAL CONCRETE, RETAINING WALL	220	m3
STRUCTURAL CONCRETE, APPROACH SLAB (TYPE N)	44	m3
ARCHITECTURAL TREATMENT	242	m2
PTFE SPHERICAL BEARING	4	EA
JOINT SEAL ASSEMBLY (MR 75 MM)	11	m
JOINT SEAL (MR 25 MM)	11	m
BAR REINFORCING STEEL (BRIDGE)	103 802	kg
BAR REINFORCING STEEL (RETAINING WALL)	14 640	kg
HEADED BAR REINFORCEMENT	176	EA
MISCELLANEOUS METAL (BRIDGE)	411	kg
CONCRETE BARRIER (TYPE 736 MODIFIED)	178	m
CONCRETE BARRIER (TYPE 736A MODIFIED)	130	m

FOR LIMITS OF STRUCTURE EXCAVATION (CONTAMINATED), SEE ROAD PLANS

Caltrans Metric

DESIGN ENGINEER

	BY	CHECKED
DESIGN	P. Nguyen	D. Menzmer
DETAILS	L. Goldthwait	D. Menzmer
QUANTITIES	M. Okimura	D. Menzmer

LOAD FACTOR DESIGN — LIVE LOADING: HS20-44 AND ALTERNATIVE AND PERMIT DESIGN LOAD
LAYOUT — BY — CHECKED
SPECIFICATIONS — BY M. Pan — PLANS AND SPECS COMPARED

STATE OF CALIFORNIA
DEPARTMENT OF TRANSPORTATION

DIVISION OF ENGINEERING SERVICES
STRUCTURE DESIGN
DESIGN BRANCH 11

BRIDGE NO. 53-3018S
KILOMETER POST 3.875

CARMENITA ROAD NB ON-RAMP
GENERAL PLAN

ALL DIMENSIONS ARE IN METERS UNLESS OTHERWISE SHOWN

ORIGINAL SCALE IN MILLIMETERS FOR REDUCED PLANS 0 10 20 30 40 50 60 70 80 90 100

CU 07225
EA 2159C1

DISREGARD PRINTS BEARING EARLIER REVISION DATES

REVISION DATES: 6-20-08 | 1-1-10 | 1-11-10 | 2-24-09 | 5/12/09 | 5-29-09 | 6-12-09 | 7-13-09 | 12-28-09

SHEET 1 OF 26

FILE => 53-3018s-a-gp.dgn

STRUCTURES DESIGN GENERAL PLAN SHEET (METRIC) (REV.03-17-04)

USERNAME => ttpierce DATE PLOTTED => 15-FEB-2011 TIME PLOTTED => 11:31

DIST	COUNTY	ROUTE	KILOMETER POST TOTAL PROJECT	SHEET No	TOTAL SHEETS
07	LA	5	2.9/4.9	985	1082

Daniel L. Texler 01-26-10
REGISTERED CIVIL ENGINEER DATE

6-21-10
PLANS APPROVAL DATE

REGISTERED PROFESSIONAL ENGINEER Daniel L. Texler No. 49792 Exp. 9-30-10 CIVIL STATE OF CALIFORNIA

The State of California or its officers or agents shall not be responsible for the accuracy or completeness of electronic copies of this plan sheet.

INDEX TO PLANS

SHEET NO.	TITLE
1	GENERAL PLAN
2	INDEX TO PLANS
3	DECK CONTOURS
4	FOUNDATION PLAN
5	PILE DATA
6	PILE DETAILS
7	ABUTMENT LAYOUT
8	ABUTMENT DETAILS NO. 1
9	ABUTMENT DETAILS NO. 2
10	RETAINING WALL 42 LAYOUT
11	RETAINING WALL 43 LAYOUT
12	BENT LAYOUT
13	BENT DETAILS
14	FOOTING DETAILS
15	TYPICAL SECTION
16	GIRDER LAYOUT
17	ADDITIONAL GIRDER REINFORCEMENT NO. 1
18	ADDITIONAL GIRDER REINFORCEMENT NO. 2
19	HINGE LAYOUT
20	HINGE DETAILS NO. 1
21	HINGE DETAILS NO. 2
22	PTFE/SPHERICAL EXPANSION BEARING DETAILS NO. 1
23	PTFE/SPHERICAL EXPANSION BEARING DETAILS NO. 2
24	JOINT SEAL ASSEMBLY (MAXIMUM MOVEMENT RATING = 100 mm)
25	STRUCTURE APPROACH TYPE N(9S) MOD
26	STRUCTURE APPROACH DRAINAGE DETAILS

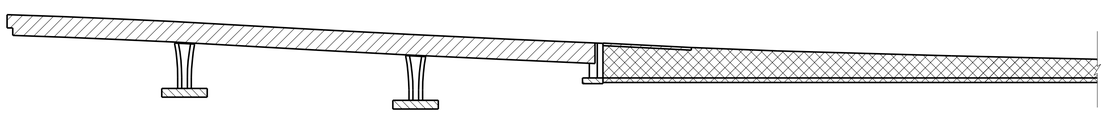

Structural Concrete, Bridge (25 MPa at 28 days)

Structural Concrete, Bridge

Structural Concrete, Bridge Footing

Structural Concrete, Retaining Wall

CONCRETE STRENGTH AND TYPE LIMITS

No Scale

GENERAL NOTES
LOAD FACTOR DESIGN

DESIGN: CALTRANS BRIDGE DESIGN SPECIFICATIONS LFD Version April 2000 (1996 AASHTO with Interims and Revision by Caltrans)

SEISMIC DESIGN: CALTRANS SEISMIC DESIGN CRITERIA (SDC) Version 1.4, June 2006

DEAD LOAD: Includes 1675 Pa for Future Wearing Surface

LIVE LOADING: HS20-44 and Alternative and Permit Design Load

SEISMIC LOADING: See Site Specific, ARS Curve

REINFORCED CONCRETE:

f_y = 414 MPa

f'_c = 25 MPa (except as shown on Concrete Strength & Type Limits Diagram)

n = 8

Transverse Deck Slabs (Working Stress):

f_s = 138 MPa

f_c = 8.3 MPa

n = 10

STRUCTURAL STEEL: Steel Pipe: Shear Key

ASTM-A53/A53M, Grade B

f_y = 240 MPa

f_u = 415 MPa

RAILING LOAD: 240 kN traffic collision (LFD) applied laterally at top of barrier and distributed over a longitudinal distance of 3.008 m

STANDARD PLANS DATED JULY 2004

A10A	ACRONYMS AND ABBREVIATIONS (A-L)
A10B	ACRONYMS AND ABBREVIATIONS (M-Z)
A10C	SYMBOLS (SHEET 1 OF 2)
A10D	SYMBOLS (SHEET 2 OF 2)
A62B	LIMITS OF PAYMENT FOR EXCAVATION AND BACKFILL - BRIDGE SURCHARGE AND WALL
A62C	LIMITS OF PAYMENT FOR EXCAVATION AND BACKFILL - BRIDGE
BO-1	BRIDGE DETAILS
BO-3	BRIDGE DETAILS
BO-5	BRIDGE DETAILS
BO-13	BRIDGE DETAILS
B2-5	PILE DETAILS CLASS 400 AND CLASS 625 ALTERNATIVE "V"
B3-1	RETAINING WALL TYPE 1
B3-8	RETAINING WALL DETAILS NO. 1
RSP B6-21	JOINT SEALS (MAXIMUM MOVEMENT RATING = 50 MM)
B7-1	BOX GIRDER DETAILS
B11-56	CONCRETE BARRIER TYPE 736
RSP P1	JOINTED PLAIN CONCRETE PAVEMENT

STANDARD PLAN SHEET NO.

DETAIL NO.

Caltrans Metric

ALL DIMENSIONS ARE IN MILLIMETERS UNLESS OTHERWISE SHOWN

ORIGINAL SCALE IN MILLIMETERS FOR REDUCED PLANS 0 10 20 30 40 50 60 70 80 90 100

	BY	CHECKED
DESIGN	P. Nguyen	D. Menzmer
DETAILS	L. Goldthwait	D. Menzmer
QUANTITIES	M. Okimura	D. Menzmer

STATE OF CALIFORNIA
DEPARTMENT OF TRANSPORTATION

DIVISION OF ENGINEERING SERVICES
STRUCTURE DESIGN
DESIGN BRANCH 11

CU 07225
EA 2159C1

BRIDGE NO. 53-3018S
KILOMETER POST 3.875

CARMENITA ROAD NB ON-RAMP
INDEX TO PLANS

DISREGARD PRINTS BEARING EARLIER REVISION DATES

REVISION DATES: 06-23-08 08-18-08 5-18-09 6/18/09 6-30-09 12/18/09 12/28/09 12/30/09

SHEET 2 OF 26

STRUCTURES DESIGN DETAIL SHEET (METRIC) (REV.03-17-04)

FILE => 53-3018s-b-itp.dgn

USERNAME => rtmikes1 DATE PLOTTED => 23-JUN-2010 TIME PLOTTED => 06:07

DIST	COUNTY	ROUTE	KILOMETER POST TOTAL PROJECT	SHEET No	TOTAL SHEETS
07	LA	5	2.9/4.9	986	1082

Daniel L. Texler 01-26-10
REGISTERED CIVIL ENGINEER DATE

6-21-10
PLANS APPROVAL DATE

REGISTERED PROFESSIONAL ENGINEER
Daniel L. Texler
No. 49792
Exp. 9-30-10
CIVIL
STATE OF CALIFORNIA

The State of California or its officers or agents shall not be responsible for the accuracy or completeness of electronic copies of this plan sheet.

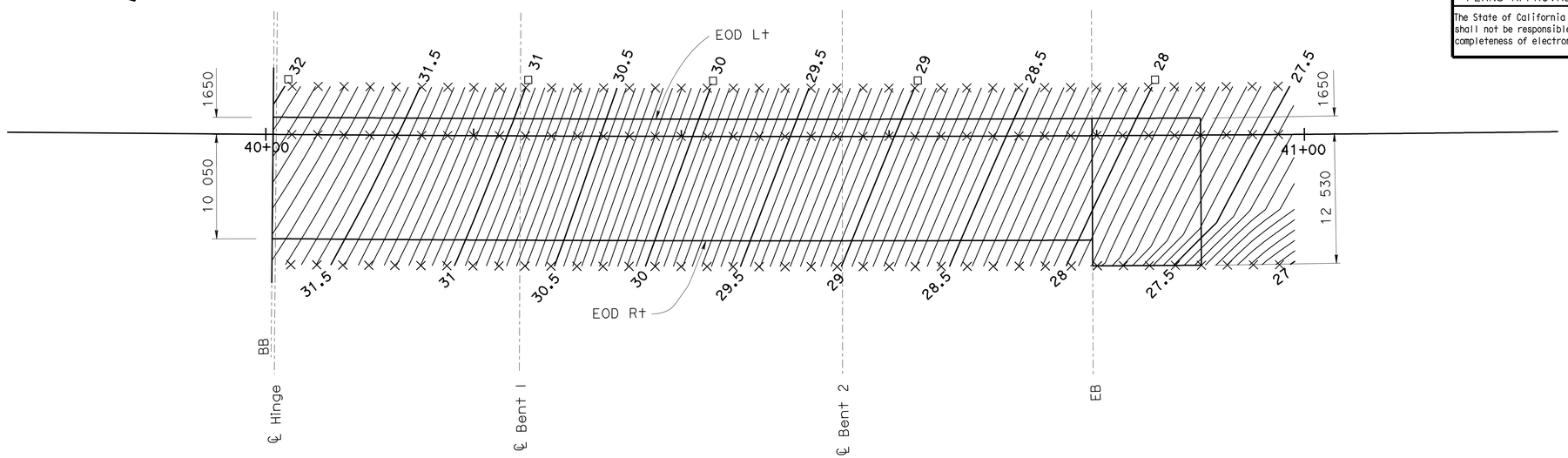

PLAN
1:250

NOTES:
Contours do not include camber
Contour interval = 0.050 m
x Indicates 2.5 m intervals along Station Line
□ Indicates even meter contour

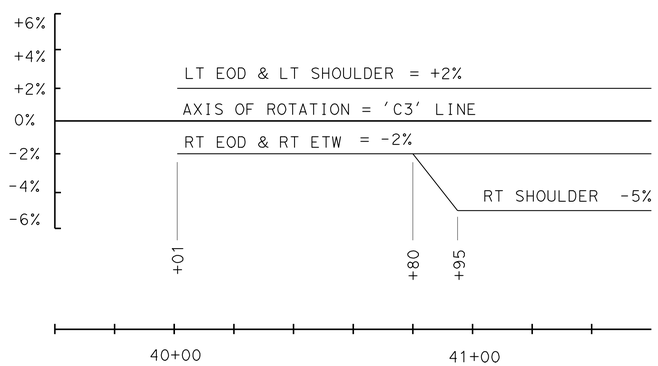

SUPERELEVATION DIAGRAM - "C3" LINE
NO SCALE

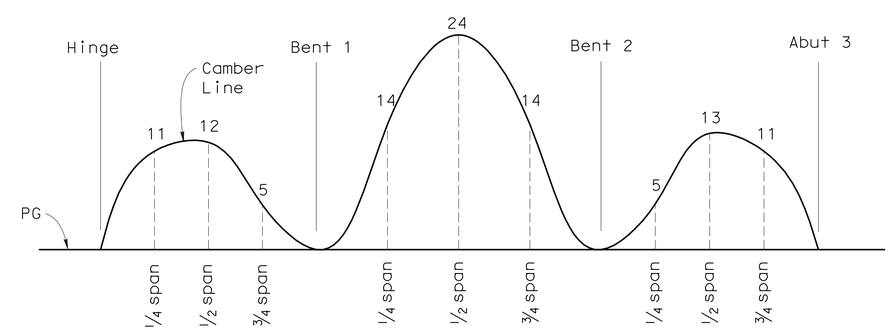

HINGE REACTION

Hinge Location	Dead Load (Unfactored)
Span 1	1340 kN

CAMBER DIAGRAM
NO SCALE

NOTE: Camber values shown do not include allowances for falsework settlement

Caltrans Metric

	BY	CHECKED
DESIGN	P. Nguyen	D. Menzmer
DETAILS	L. Goldthwait	D. Menzmer
QUANTITIES	M. Okimura	D. Menzmer

STATE OF CALIFORNIA
DEPARTMENT OF TRANSPORTATION

DIVISION OF ENGINEERING SERVICES
STRUCTURE DESIGN
DESIGN BRANCH 11

BRIDGE NO. 53-3018S
KILOMETER POST 3.875

CARMENITA ROAD NB ON-RAMP
DECK CONTOURS

ALL DIMENSIONS ARE IN MILLIMETERS UNLESS OTHERWISE SHOWN

ORIGINAL SCALE IN MILLIMETERS FOR REDUCED PLANS 0 10 20 30 40 50 60 70 80 90 100

CU 07225
EA 2159C1

DISREGARD PRINTS BEARING EARLIER REVISION DATES

REVISION DATES: 07-01-08 08-19-08 01-21-09 05-13-09

SHEET 3 OF 26

FILE => 53-3018s-c-dekcon.dgn

STRUCTURES DESIGN DETAIL SHEET (METRIC) (REV.03-17-04)

USERNAME => trmikesl DATE PLOTTED => 23-JUN-2010 TIME PLOTTED => 06:07

DIST	COUNTY	ROUTE	KILOMETER POST TOTAL PROJECT	SHEET No	TOTAL SHEETS
07	LA	5	2.9/4.9	987	1082

Caltrans Metric

Daniel L. Texler 01-26-10
REGISTERED CIVIL ENGINEER DATE

6-21-10
PLANS APPROVAL DATE

REGISTERED PROFESSIONAL ENGINEER Daniel L. Texler No. 49792 Exp. 9-30-10 CIVIL STATE OF CALIFORNIA

The State of California or its officers or agents shall not be responsible for the accuracy or completeness of electronic copies of this plan sheet.

No.	R	Δ	T	L
1	6000.000	01°11′42"	62.575	125.146
2	6006.892	00°30′53"	26.984	53.968

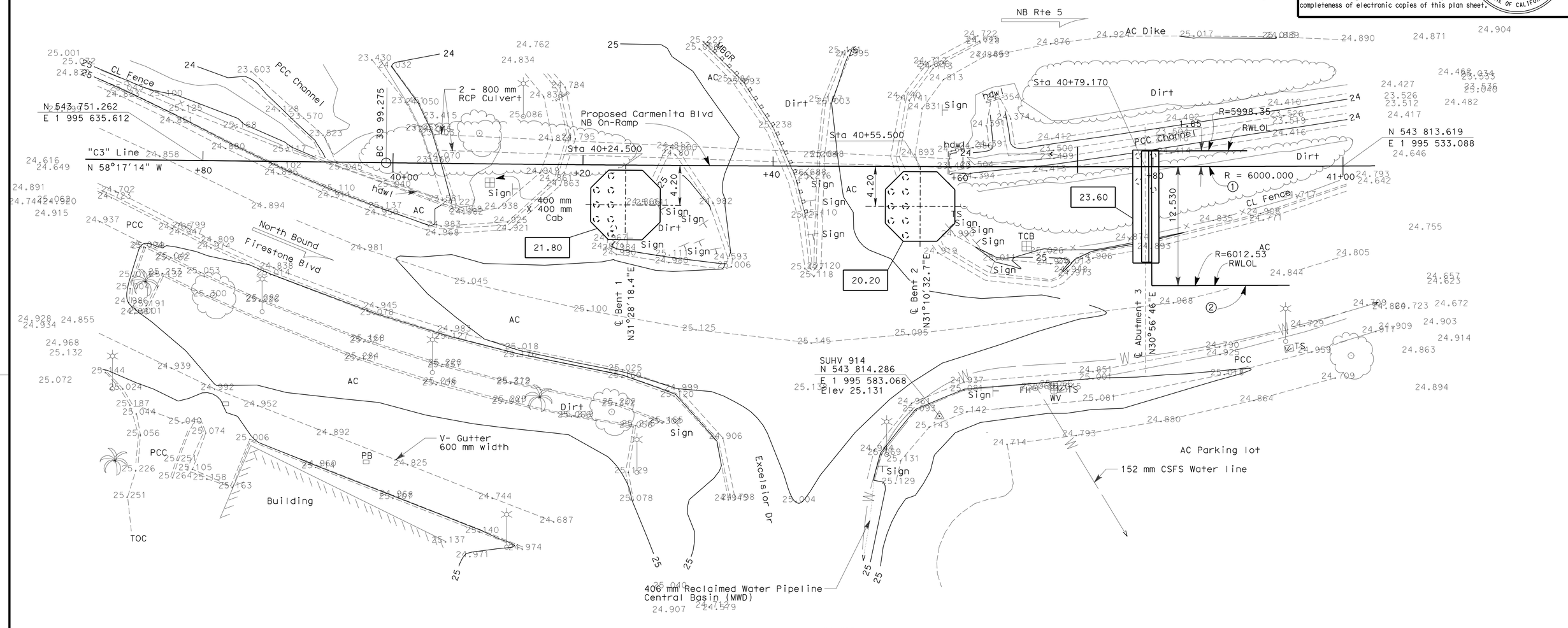

SURVEY CONTROL

SUHV 913 (Not Shown)
Fnd L&T in Gutter Freeway Dr
15.723 Lt. "C3" Line
Sta. 39+46.296
N 543 720.169
E 1 995 656.018
Elev 24.754

SUHV 914
Fnd 6ch X in Sidewalk
26.279 Rt. "C3" Line
Sta. 40+57.574
N 543 814.286
E 1 995 583.068
Elev 25.131

NOTES:

Underground utilities as shown are approximate

- Indicates Bottom of Footing Elevation

- Denotes piles, not all piles shown

ALL DIMENSIONS ARE IN METERS UNLESS OTHERWISE SHOWN

PRELIMINARY INVESTIGATION SECTION

SCALE	VERT. DATUM NAVD88	PHOTOGRAMMETRY AS OF:		
1:200	HORZ. DATUM NAD83	SURVEYED	BY T. Phung	DRAFTED BY C. Pham
ALIGNMENT TIES Dist Traverse sheet		FIELD CHECKED	BY S. Alivio	CHECKED BY S. Alivio

	BY	CHECKED
DESIGN	P. Nguyen	D. Menzmer
DETAILS	L. Goldthwait	D. Menzmer
QUANTITIES	M. Okimura	D. Menzmer

STATE OF CALIFORNIA
DEPARTMENT OF TRANSPORTATION

DIVISION OF STRUCTURES
STRUCTURE DESIGN

BRIDGE NO. 53-3018S
KILOMETER POST 3.875

CARMENITA ROAD NB ON-RAMP
FOUNDATION PLAN

CU 07225
EA 2159C1

STRUCTURES FOUNDATION PLAN SHEET (METRIC) (REV.12-1-01)

ORIGINAL SCALE IN MILLIMETERS FOR REDUCED PLANS 0 10 20 30 40 50 60 70 80 90 100

DISREGARD PRINTS BEARING EARLIER REVISION DATES

REVISION DATES (PRELIMINARY STAGE ONLY): 10/18/06 10/31/06 5/30/08 5-29-09 6-17-09

SHEET 4 OF 26

FILE => 53-3018s-e-fp.dgn

USERNAME => trmikest DATE PLOTTED => 23-JUN-2010 TIME PLOTTED => 06:07

DIST	COUNTY	ROUTE	KILOMETER POST TOTAL PROJECT	SHEET No	TOTAL SHEETS
07	LA	5	2.9/4.9	988	1082

Daniel L. Texler 01-26-10
REGISTERED CIVIL ENGINEER DATE

6-21-10
PLANS APPROVAL DATE

REGISTERED PROFESSIONAL ENGINEER
Daniel L. Texler
No. 49792
Exp. 9-30-10
CIVIL
STATE OF CALIFORNIA

The State of California or its officers or agents shall not be responsible for the accuracy or completeness of electronic copies of this plan sheet.

PILE DATA TABLE

Location	Pile Type	Design Loading	Nominal Resistance		Cut-off Elevation (m)	Design Tip Elevation (m) see Note 3			Specified Tip Elev (m)	Nominal Driving Resistance (kH) see Note 2
			Compression	Tension		Compression	Tension	Lateral		
Bent 1	610 x 12.7 Pipe Pile	N/A	1350 kN	550 kN	21.925	3.5	7.0	5.0	3.5	3300
Bent 2	610 x 12.7 Pipe Pile	N/A	1400 kN	500 kN	20.325	3.3	7.0	5.0	3.3	3250
Abut 3	610 x 12.7 Pipe Pile	600 kN	N/A	N/A	23.725	4.5	N/A	5.0	4.5	3100

DESIGN TIP ELEVATION ADJUSTMENT TABLE

Pile Casing Tip Elevation (expressed as a depth below existing ground in meters)	14.6	16.0	17.5	19.0	20.5	22.0	23.5	25.0	26.5
DTE Adjustment (m)									
Nominal Resistance less than 1450 kN or Design Loading less than 725 kN	0.0	-1.0	-2.3	-3.7	-5.0	-6.1	-6.9	-7.6	-8.4
Nominal Resistance greater than 1450 kN or Design Loading greater than 725 kN	0.0	-1.5	-3.0	-4.6	-6.1	-6.9	-7.6	-8.4	-9.1

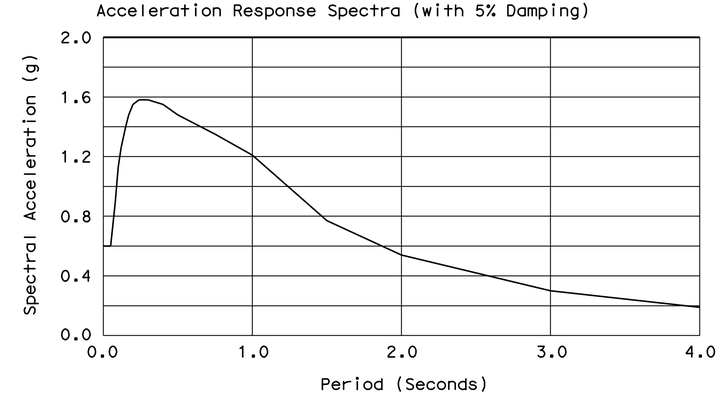

SITE SPECIFIC ARS CURVE

NOTES:

1. For Typical Pipe Pile Installation Procedure, see "PILE DETAILS" sheet
2. "Nominal Driving Resistance" shall only be applicable to piles installed without a Temp Steel Casing
3. Where pile installations require a pile casing and the Tip Elevation of the steel casing will be more than 14.6 meters below the exist ground surface, the "Specified Tip Elevation" value shown in the Pile Data Table shall be modified by adding to it the appropriate "DTE Adjustment" value from the Design Tip Elevation Adjustment Table

Caltrans Metric

	BY	CHECKED
DESIGN	D. Texler	D. Menzmer
DETAILS	T. Bittermann	D. Menzmer
QUANTITIES	M. Okimura	D. Menzmer

STATE OF CALIFORNIA
DEPARTMENT OF TRANSPORTATION

DIVISION OF ENGINEERING SERVICES
STRUCTURE DESIGN
DESIGN BRANCH 11

BRIDGE NO. 53-3018S
KILOMETER POST 3.875

CARMENITA ROAD NB ON-RAMP
PILE DATA

ALL DIMENSIONS ARE IN MILLIMETERS UNLESS OTHERWISE SHOWN

ORIGINAL SCALE IN MILLIMETERS FOR REDUCED PLANS 0 10 20 30 40 50 60 70 80 90 100

CU 07225
EA 2159C1

DISREGARD PRINTS BEARING EARLIER REVISION DATES 1-06-10

REVISION DATES

SHEET 5 OF 26

FILE => 53-3018s-fa-piledata.dgn

STRUCTURES DESIGN DETAIL SHEET (METRIC) (REV.03-17-04)

USERNAME => trmikesl DATE PLOTTED => 23-JUN-2010 TIME PLOTTED => 06:07

DIST	COUNTY	ROUTE	KILOMETER POST TOTAL PROJECT	SHEET No	TOTAL SHEETS
07	LA	5	2.9/4.9	989	1082

Daniel L. Texler 5/24/10
REGISTERED CIVIL ENGINEER DATE

6-21-10
PLANS APPROVAL DATE

REGISTERED PROFESSIONAL ENGINEER
Daniel L. Texler
No. 49792
Exp. 9-30-10
CIVIL
STATE OF CALIFORNIA

The State of California or its officers or agents shall not be responsible for the accuracy or completeness of electronic copies of this plan sheet.

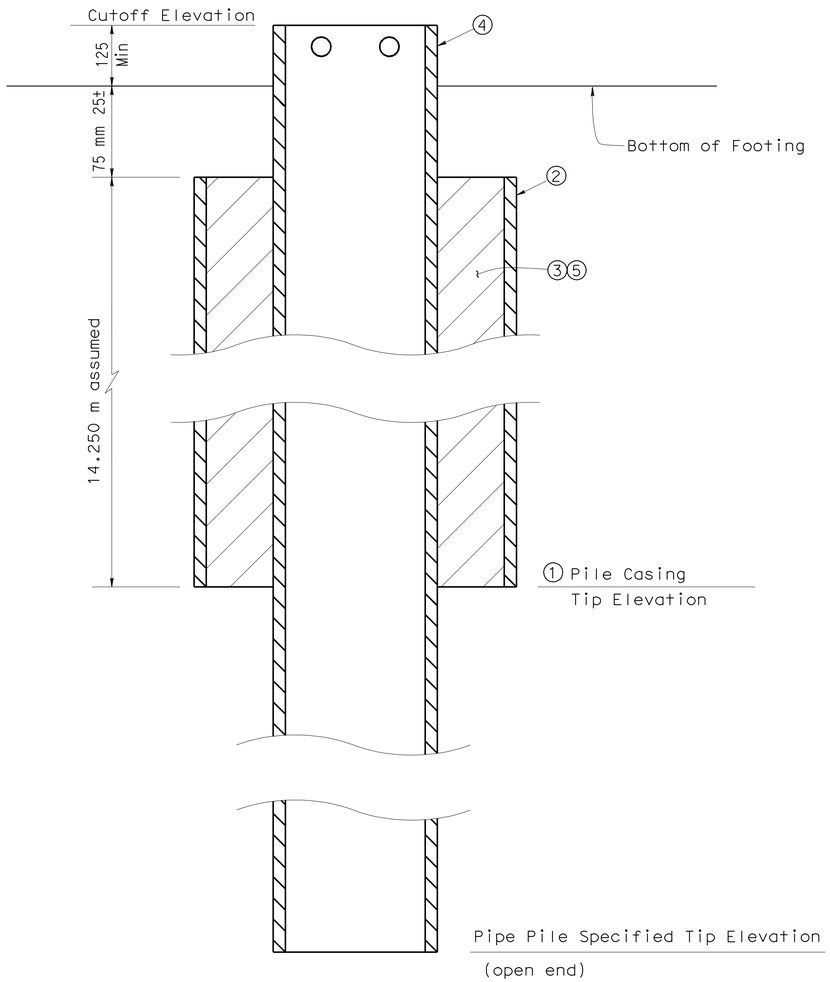

TYPICAL PIPE PILE INSTALLATION

INSTALLATION NOTES:

① Determine required Pile Casing Tip Elevation

② Install Pile Casing, 760 mm ø

③ Remove soil and debris from interior space of Pile Casing

④ Drive 610 mm ø Pipe Pile

⑤ Fill space between Pipe Pile & Pile Casing with grout

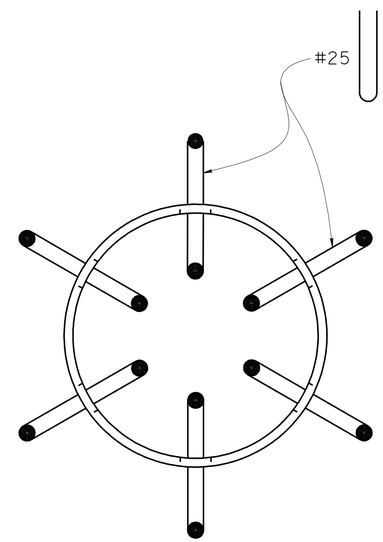

PLAN

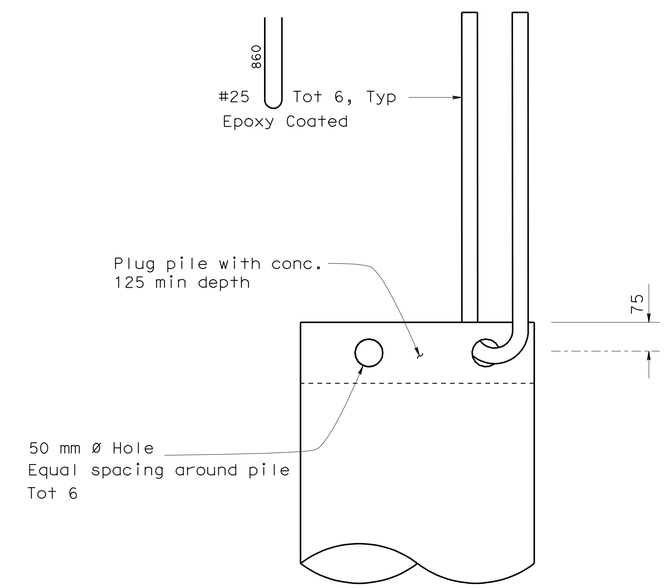

ELEVATION

TYPICAL PIPE PILE ANCHOR

NO SCALE

Caltrans Metric

	BY	CHECKED
DESIGN	D. Texler	D. Menzmer
DETAILS	T. Bittermann	D. Menzmer
QUANTITIES	M. Okimura	D. Menzmer

STATE OF CALIFORNIA
DEPARTMENT OF TRANSPORTATION

DIVISION OF ENGINEERING SERVICES
STRUCTURE DESIGN
DESIGN BRANCH 11

BRIDGE NO. 53-3018S
KILOMETER POST 3.875

CARMENITA ROAD NB ON-RAMP
PILE DETAILS

ALL DIMENSIONS ARE IN MILLIMETERS UNLESS OTHERWISE SHOWN

ORIGINAL SCALE IN MILLIMETERS FOR REDUCED PLANS 0 10 20 30 40 50 60 70 80 90 100

CU 07225
EA 2159C1

DISREGARD PRINTS BEARING EARLIER REVISION DATES

REVISION DATES: 5-21-08 8-14-08 8-22-08 10-31-08 6-17-09 7-02-09 5-06-10 5/18/10

SHEET 6 OF 26

FILE => 53-3018s-fb-piledet.dgn

STRUCTURES DESIGN DETAIL SHEET (METRIC) (REV.03-17-04)

USERNAME => ttmirkes1 DATE PLOTTED => 23-JUN-2010 TIME PLOTTED => 06:07

DIST	COUNTY	ROUTE	KILOMETER POST TOTAL PROJECT	SHEET No	TOTAL SHEETS
07	LA	5	2.9/4.9	990	1082

Daniel L. Texler 5/24/10
REGISTERED CIVIL ENGINEER DATE

6-21-10
PLANS APPROVAL DATE

REGISTERED PROFESSIONAL ENGINEER Daniel L. Texler No. 49792 Exp. 9-30-10 CIVIL STATE OF CALIFORNIA

The State of California or its officers or agents shall not be responsible for the accuracy or completeness of electronic copies of this plan sheet.

LEGEND:

Indicates Vertical Pile

Notes:

1. Joint Seal MR = 25 (RSP B6-21)
2. Expanded Polystyrene (B0-13)

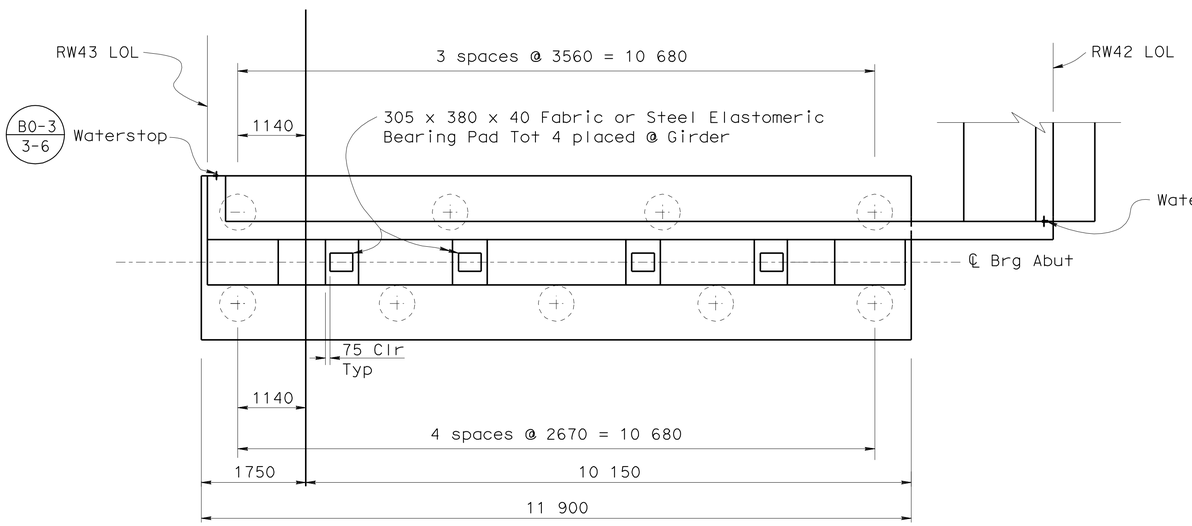

PLAN
1:50

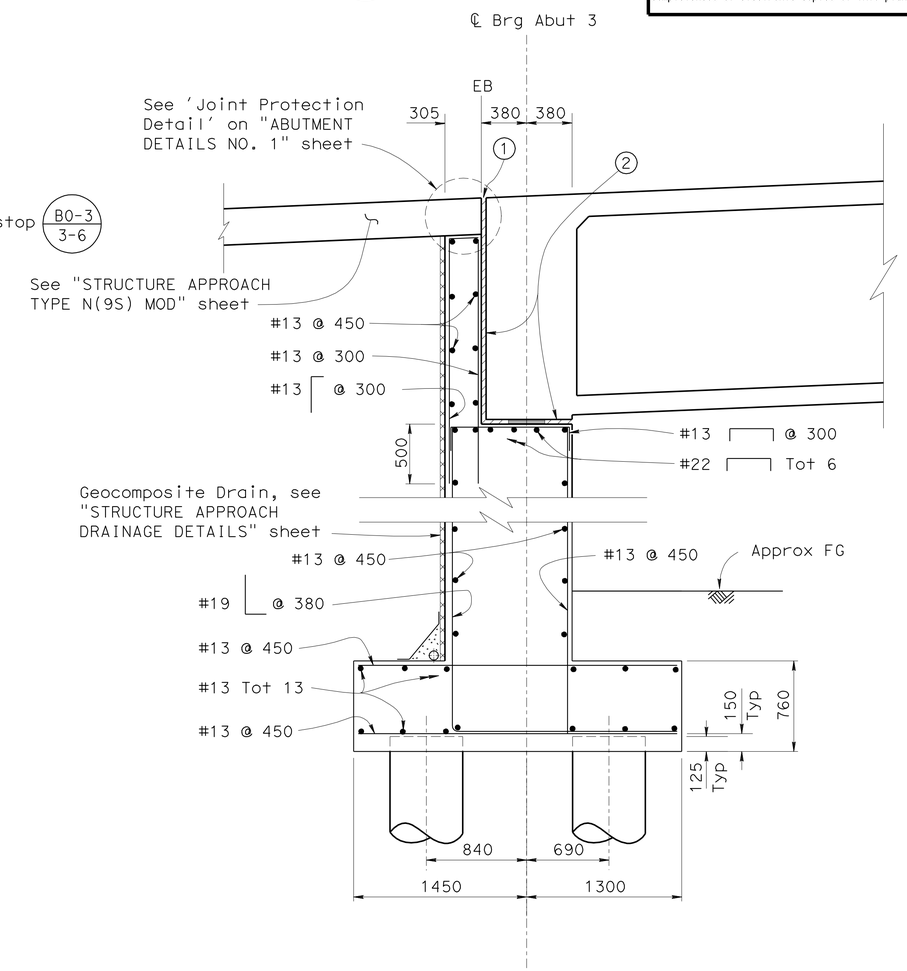

ABUTMENT SECTION
1:25

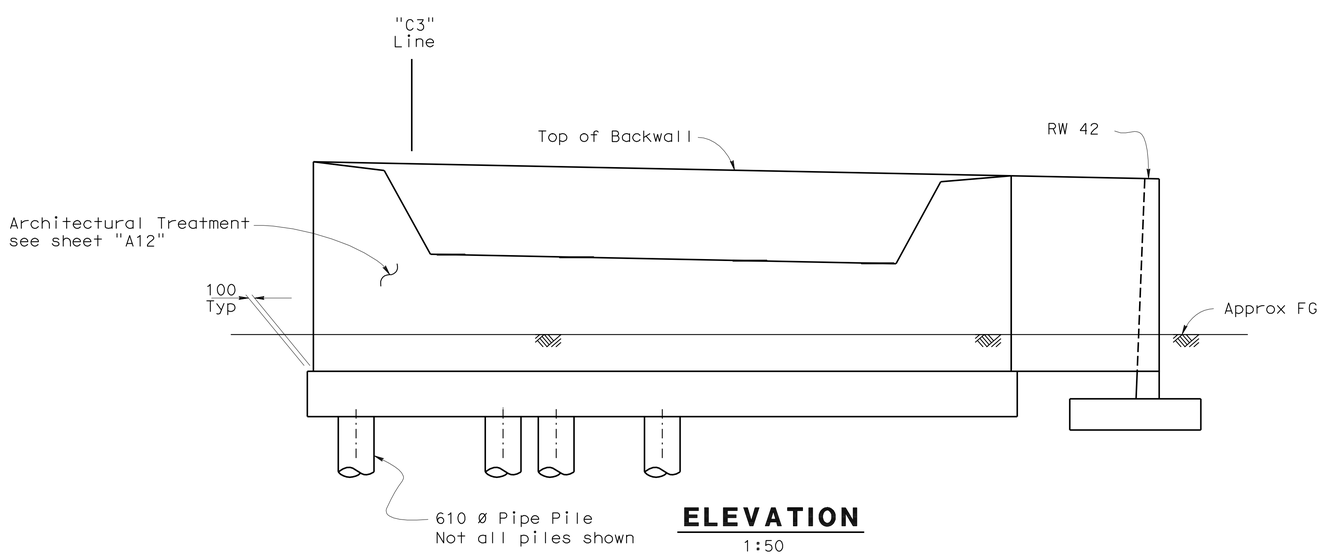

ELEVATION
1:50

DESIGN	BY P. Nguyen	CHECKED D. Menzmer
DETAILS	BY L. Goldthwait	CHECKED D. Menzmer
QUANTITIES	BY M. Okimura	CHECKED D. Menzmer

STATE OF CALIFORNIA
DEPARTMENT OF TRANSPORTATION

DIVISION OF ENGINEERING SERVICES
STRUCTURE DESIGN
DESIGN BRANCH 11

BRIDGE NO. 53-3018S
KILOMETER POST 3.875

CARMENITA ROAD NB ON-RAMP
ABUTMENT LAYOUT

ALL DIMENSIONS ARE IN MILLIMETERS UNLESS OTHERWISE SHOWN

ORIGINAL SCALE IN MILLIMETERS FOR REDUCED PLANS 0 10 20 30 40 50 60 70 80 90 100

CU 07225
EA 2159C1

DISREGARD PRINTS BEARING EARLIER REVISION DATES

REVISION DATES: 5-21-08 8-04-08 8-22-08 10-01-08 6-17-09 7-02-09

SHEET 7 OF 26

FILE => 53-3018s-fd-abtlyt.dgn

STRUCTURES DESIGN DETAIL SHEET (METRIC) (REV.03-17-04)

USERNAME => trmikes1 DATE PLOTTED => 23-JUN-2010 TIME PLOTTED => 06:23

DIST	COUNTY	ROUTE	KILOMETER POST TOTAL PROJECT	SHEET No	TOTAL SHEETS
07	LA	5	2.9/4.9	991	1082

Daniel L. Texler 01-26-10
REGISTERED CIVIL ENGINEER DATE

6-21-10
PLANS APPROVAL DATE

REGISTERED PROFESSIONAL ENGINEER Daniel L. Texler No. 49792 Exp. 9-30-10 CIVIL STATE OF CALIFORNIA

The State of California or its officers or agents shall not be responsible for the accuracy or completeness of electronic copies of this plan sheet.

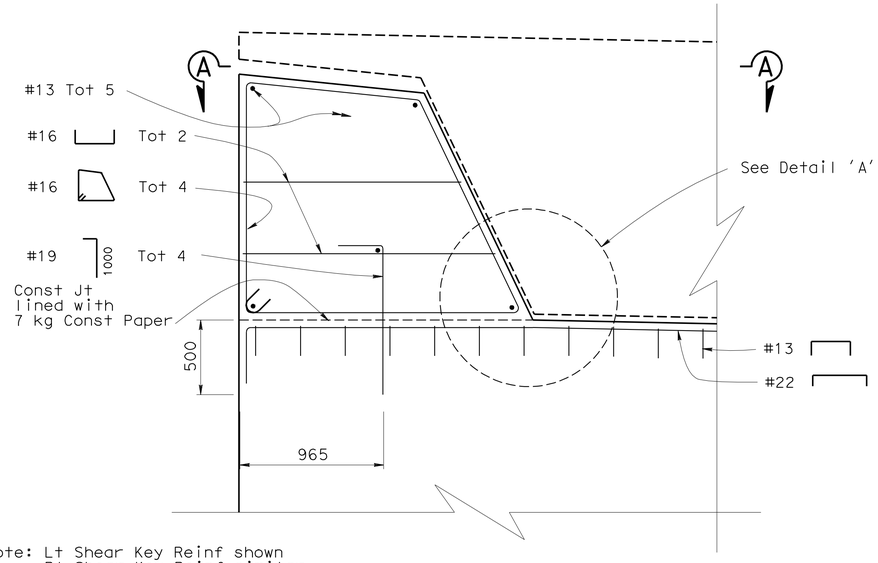

Note: Lt Shear Key Reinf shown
Rt Shear Key Reinf similar

ABUTMENT SHEAR KEY DETAIL

1:20

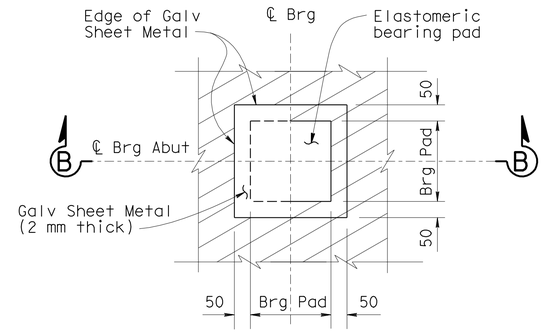

BEARING PAD DETAIL

No Scale

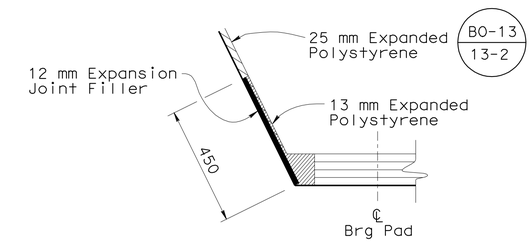

DETAIL A

NO SCALE

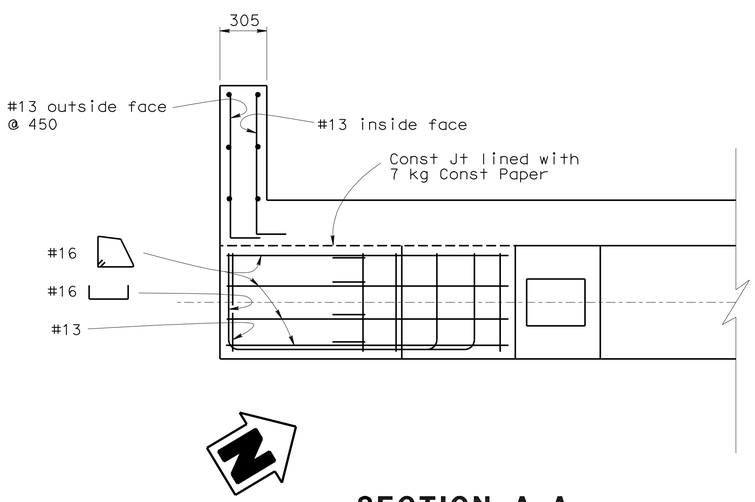

SECTION A-A

1:20

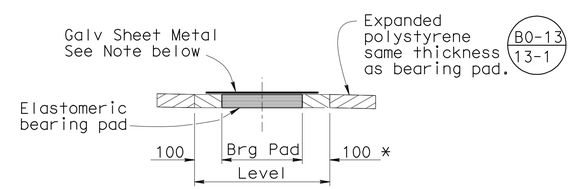

Note: Coat top of Bearing Pad with silicone grease prior to placing sheet metal

SECTION B-B

No Scale

* 75 mm at side of Shear Key

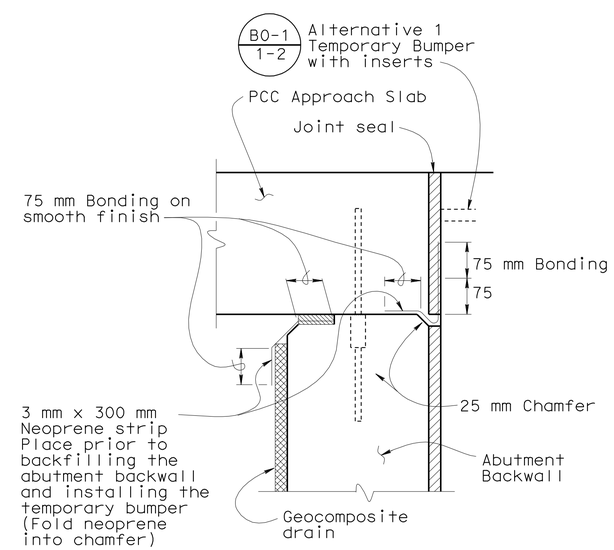

JOINT PROTECTION DETAIL

1:20

Caltrans Metric

ALL DIMENSIONS ARE IN MILLIMETERS UNLESS OTHERWISE SHOWN

ORIGINAL SCALE IN MILLIMETERS FOR REDUCED PLANS 0 10 20 30 40 50 60 70 80 90 100

	BY	CHECKED
DESIGN	P. Nguyen	D. Menzmer
DETAILS	L. Goldthwait	D. Menzmer
QUANTITIES	M. Okimura	D. Menzmer

STATE OF CALIFORNIA
DEPARTMENT OF TRANSPORTATION

DIVISION OF ENGINEERING SERVICES
STRUCTURE DESIGN
DESIGN BRANCH 11

CU 07225
EA 2159C1

BRIDGE NO. 53-3018S
KILOMETER POST 3.875

CARMENITA ROAD NB ON-RAMP
ABUTMENT DETAILS NO. 1

DISREGARD PRINTS BEARING EARLIER REVISION DATES

REVISION DATES: 5-21-08 8-22-08 9-16-08 10-01-08 10-09-08 2-24-09 6-12-09 12-28-09

SHEET 8 OF 26

FILE => 53-3018s-ff-abtdet01.dgn

STRUCTURES DESIGN DETAIL SHEET (METRIC) (REV.03-17-04)

USERNAME => trmikesl DATE PLOTTED => 23-JUN-2010 TIME PLOTTED => 06:07

DIST	COUNTY	ROUTE	KILOMETER POST TOTAL PROJECT	SHEET No	TOTAL SHEETS
07	LA	5	2.9/4.9	992	1082

Daniel L. Texler 01-26-10
REGISTERED CIVIL ENGINEER DATE

6-21-10
PLANS APPROVAL DATE

REGISTERED PROFESSIONAL ENGINEER
Daniel L. Texler
No. 49792
Exp. 9-30-10
CIVIL
STATE OF CALIFORNIA

The State of California or its officers or agents shall not be responsible for the accuracy or completeness of electronic copies of this plan sheet.

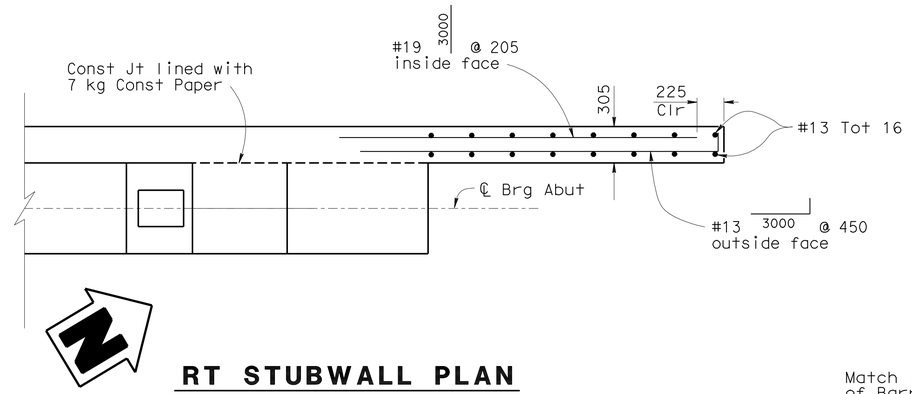

RT STUBWALL PLAN
1:25

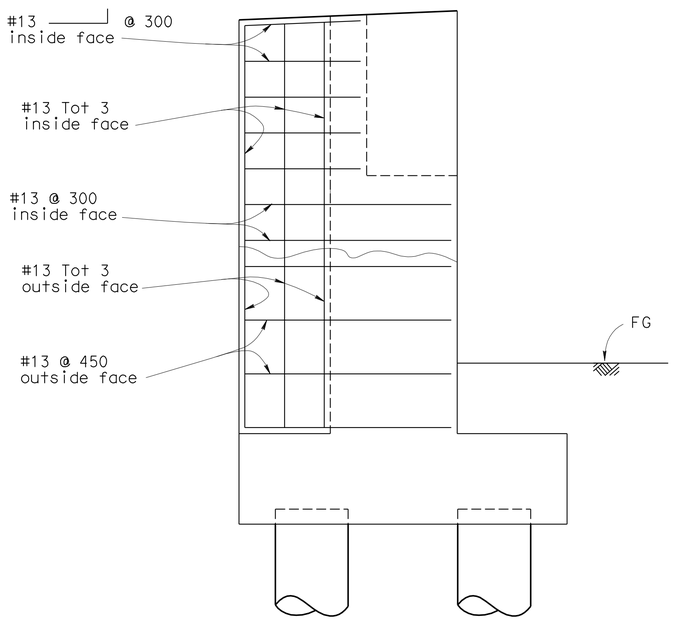

LT STUBWALL ELEVATION
1:25

Note: See 'Section A-A' on "ABUTMENT DETAILS NO. 1" sheet for Lt Stubwall plan view

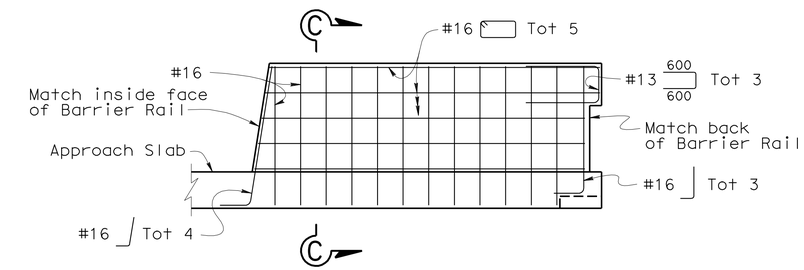

CONCRETE END BLOCK
1:25

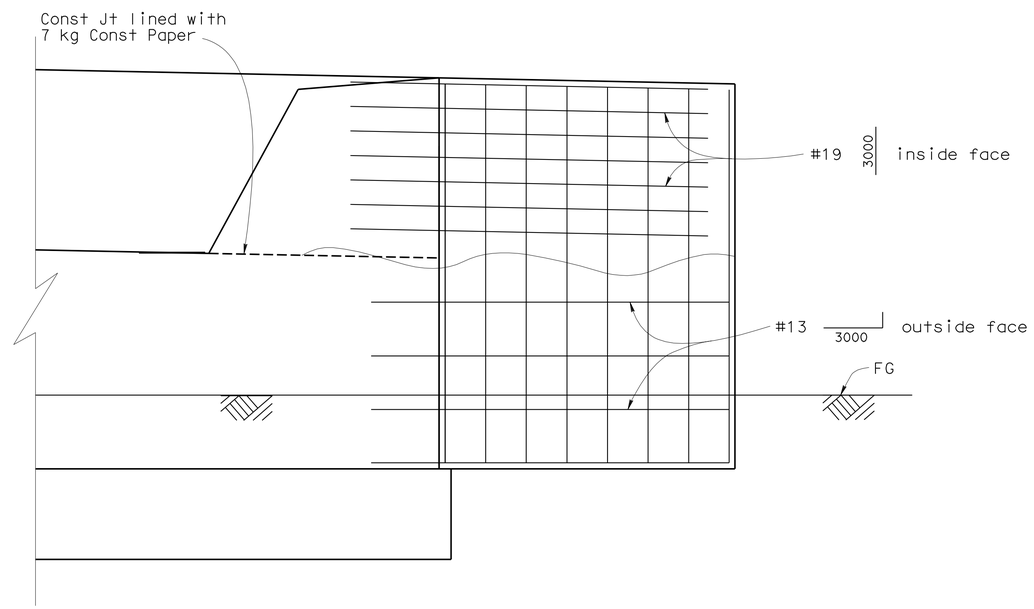

RT STUBWALL ELEVATION
1:25

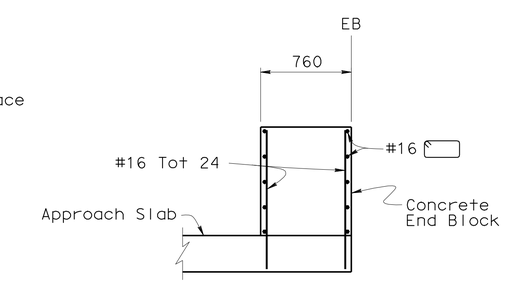

SECTION C-C
1:25

DESIGN	BY P. Nguyen	CHECKED D. Menzmer	
DETAILS	BY L. Goldthwait	CHECKED D. Menzmer	
QUANTITIES	BY M. Okimura	CHECKED D. Menzmer	

STATE OF CALIFORNIA
DEPARTMENT OF TRANSPORTATION

DIVISION OF ENGINEERING SERVICES
STRUCTURE DESIGN
DESIGN BRANCH 11

BRIDGE NO. 53-3018S
KILOMETER POST 3.875

CARMENITA ROAD NB ON-RAMP
ABUTMENT DETAILS NO. 2

ALL DIMENSIONS ARE IN MILLIMETERS UNLESS OTHERWISE SHOWN

ORIGINAL SCALE IN MILLIMETERS FOR REDUCED PLANS 0 10 20 30 40 50 60 70 80 90 100

CU 07225
EA 2159C1

DISREGARD PRINTS BEARING EARLIER REVISION DATES

REVISION DATES: 5-21-08, 8-22-08, 9-18-08, 10-01-08, 10-08-08, 2-26-09, 6-17-09

SHEET 9 OF 26

FILE => 53-3018s-ff-abtdet02.dgn

STRUCTURES DESIGN DETAIL SHEET (METRIC) (REV.03-17-04)

USERNAME => trmikest DATE PLOTTED => 23-JUN-2010 TIME PLOTTED => 06:08

DIST	COUNTY	ROUTE	KILOMETER POST TOTAL PROJECT	SHEET No	TOTAL SHEETS
07	LA	5	2.9/4.9	993	1082

Daniel L. Texler 01-26-10
REGISTERED CIVIL ENGINEER DATE

6-21-10
PLANS APPROVAL DATE

REGISTERED PROFESSIONAL ENGINEER
Daniel L. Texler
No. 49792
Exp. 9-30-10
CIVIL
STATE OF CALIFORNIA

The State of California or its officers or agents shall not be responsible for the accuracy or completeness of electronic copies of this plan sheet.

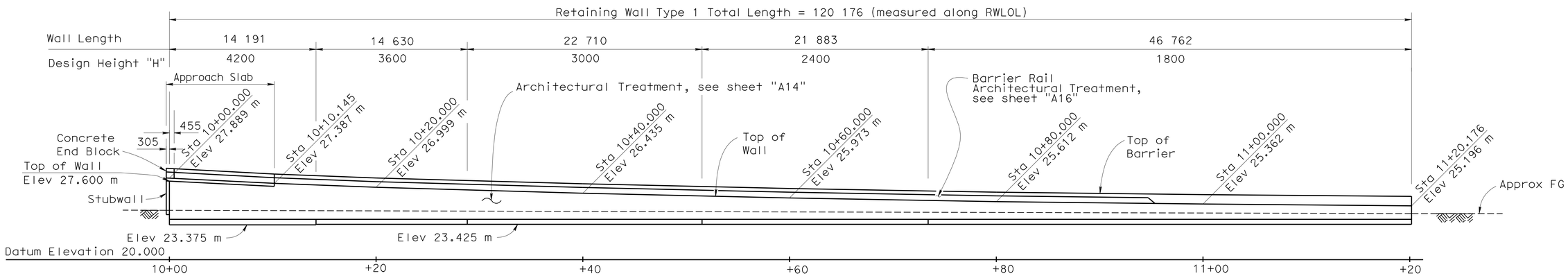

Note: All piles not shown

DEVELOPED ELEVATION

1:200

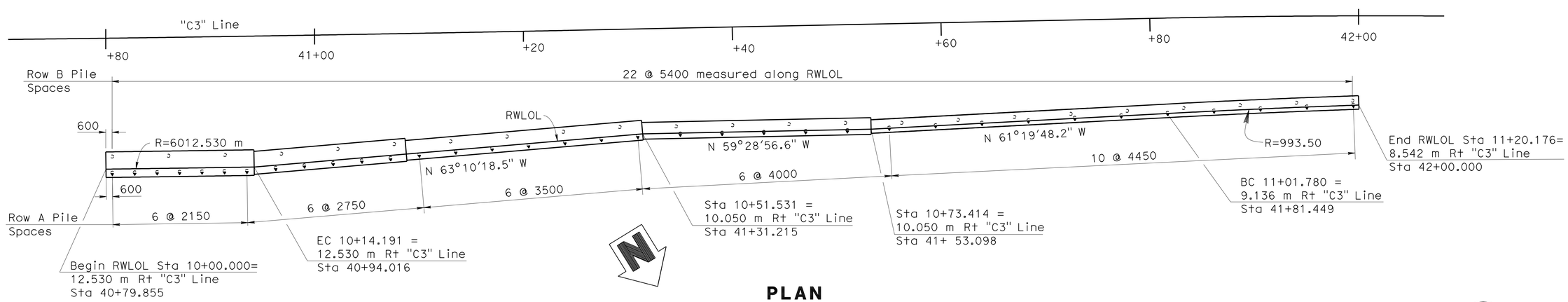

PLAN

1:200

LEGEND:

Indicates Vertical Piles

Indicates Battered 1:3 Piles

NOTES:

Piles are Class 400, Alternative "V" closed-end with 60° conical tip (B2-5)

Pile Tip shall be 14.0 m below bottom of wall footings

Pile spacing measured along RWLOL

✳ See Retaining Wall Type 1 (B3-1) for wall stem design; see '400 kN Pile Footing Section' on "TYPICAL SECTION" sheet for footing Reinf details

For section cuts and drain details, see "RETAINING WALL 43 LAYOUT" sheet

Caltrans Metric

ALL DIMENSIONS ARE IN MILLIMETERS UNLESS OTHERWISE SHOWN

ORIGINAL SCALE IN MILLIMETERS FOR REDUCED PLANS 0 10 20 30 40 50 60 70 80 90 100

	BY	CHECKED
DESIGN	P. Nguyen	D. Menzmer
DETAILS	L. Goldthwait	D. Menzmer
QUANTITIES	M. Okimura	D. Menzmer

STATE OF CALIFORNIA
DEPARTMENT OF TRANSPORTATION

DIVISION OF ENGINEERING SERVICES
STRUCTURE DESIGN
DESIGN BRANCH 11

CU 07225
EA 2159C1

BRIDGE NO. 53-3018S
KILOMETER POST 3.875

CARMENITA ROAD NB ON-RAMP
RETAINING WALL 42 LAYOUT

DISREGARD PRINTS BEARING EARLIER REVISION DATES

REVISION DATES: 7-15-08 7-15-08 9-24-08 9-26-08 5-13-09 6-17-09 07-01-09 8/4/09 1/7/10

SHEET 10 OF 26

FILE => 53-3018s-ff-rw42lyt.dgn

STRUCTURES DESIGN DETAIL SHEET (METRIC) (REV.03-17-04)

USERNAME => trmikesl DATE PLOTTED => 23-JUN-2010 TIME PLOTTED => 06:08

DIST	COUNTY	ROUTE	KILOMETER POST TOTAL PROJECT	SHEET No	TOTAL SHEETS
07	LA	5	2.9/4.9	994	1082

Daniel L. Texler 01-26-10
REGISTERED CIVIL ENGINEER DATE

6-21-10
PLANS APPROVAL DATE

REGISTERED PROFESSIONAL ENGINEER Daniel L. Texler No. 49792 Exp. 9-30-10 CIVIL STATE OF CALIFORNIA

The State of California or its officers or agents shall not be responsible for the accuracy or completeness of electronic copies of this plan sheet.

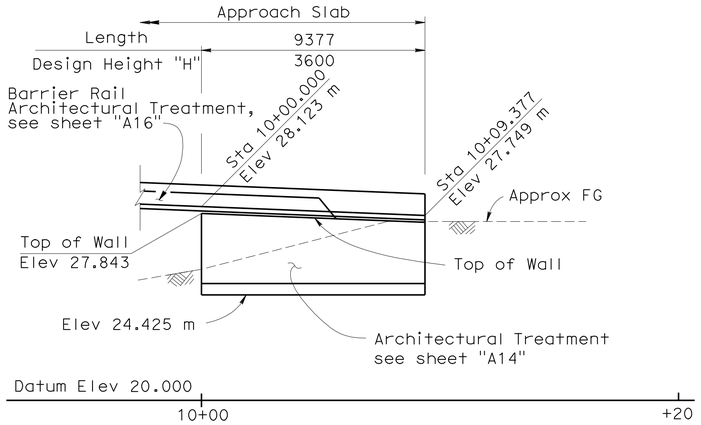

Note: All piles not shown

MIRRORED DEVELOPED ELEVATION

1:125

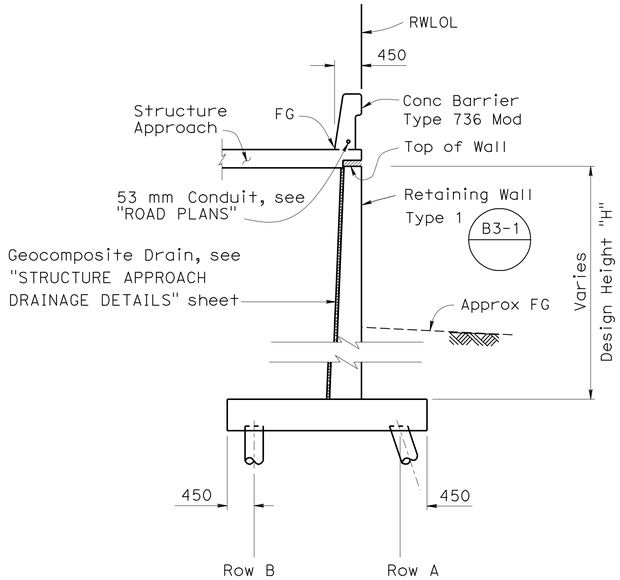

Note: At RW 42 and RW 43

SECTION AT APPROACH SLAB

1:50

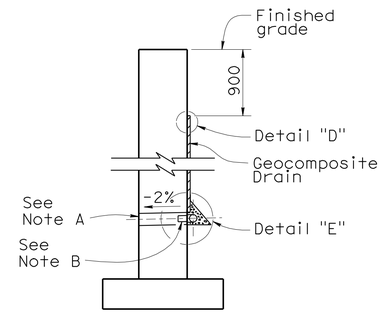

WALL SECTION

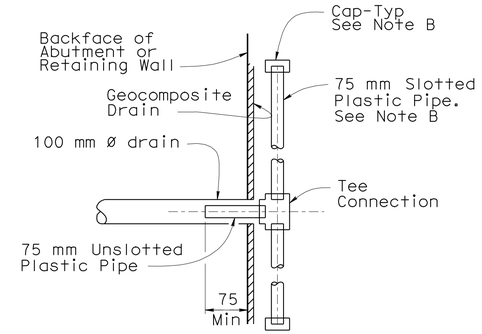

SECTION K-K

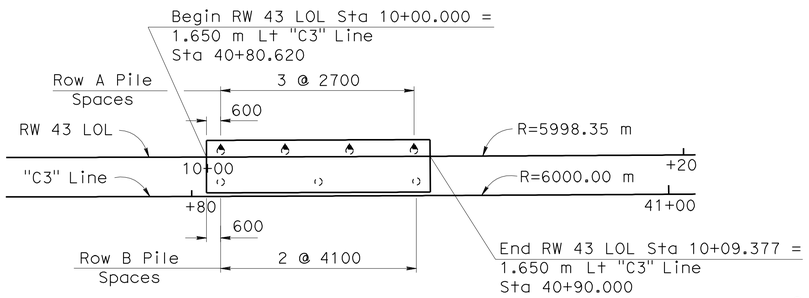

PLAN

1:125

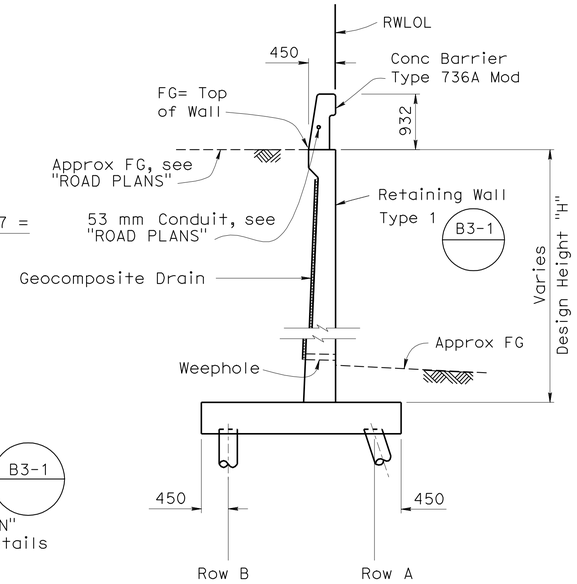

Note: At RW 42

TYPICAL SECTION

1:50

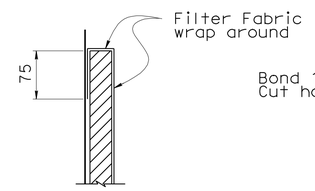

DETAIL "D"

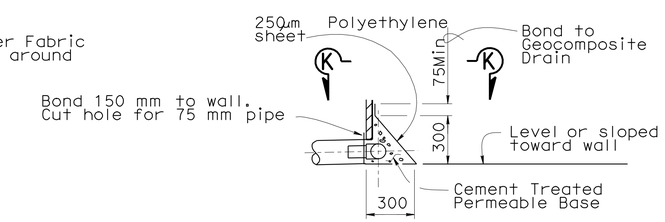

DETAIL "E"

WEEP HOLE AND GEOCOMPOSITE DRAIN

NO SCALE

Notes:

A. 100 mm ø drains at intermediate sag points and at 7.600 m center to center (2.750 m c-c for Type 3 and 2.800 m c-c for Type 4 retaining walls). For walls adjacent to sidewalks or curbs, provide 100 mm ø cast iron or asbestos cement pipe under the sidewalk to discharge through curb face. Exposed wall drains shall be located 75 mm ± above finished grade.

B. Geocomposite drain, cement treated permeable base, and 75 mm ø slotted plastic pipe continuous behind retaining wall or abutment. Cap ends of pipe. Provide "Tee" connection at each 100 mm ø drain.

C. Connect the low end of plastic pipe to the main outlet pipe as applicable.

LEGEND:

Indicates Vertical Piles

Indicates Battered 1:3 Piles

NOTES:

Piles are Class 400, Alternative "V" closed-end with 60° conical tip (B2-5)

Pile Tip shall be 14.0 m below bottom of wall footings

Pile spacing measured along RWLOL

Install utility conduits as req'd, (not shown) for size and other data, see "ROAD PLANS"

✳ See Retaining Wall Type 1 (B3-1) for wall stem design; see '400 kN Pile Footing Section' on "TYPICAL SECTION" sheet for footing Reinf details

	BY	CHECKED
DESIGN	P. Nguyen	D. Menzmer
DETAILS	L. Goldthwait	D. Menzmer
QUANTITIES	M. Okimura	D. Menzmer

STATE OF CALIFORNIA DEPARTMENT OF TRANSPORTATION

DIVISION OF ENGINEERING SERVICES STRUCTURE DESIGN DESIGN BRANCH 11

BRIDGE NO. 53-3018S
KILOMETER POST 3.875

CARMENITA ROAD NB ON-RAMP
RETAINING WALL 43 LAYOUT

Caltrans Metric

ALL DIMENSIONS ARE IN MILLIMETERS UNLESS OTHERWISE SHOWN

ORIGINAL SCALE IN MILLIMETERS FOR REDUCED PLANS 0 10 20 30 40 50 60 70 80 90 100

CU 07225
EA 2159C1

DISREGARD PRINTS BEARING EARLIER REVISION DATES

REVISION DATES: 9-12-08 1-12-10 1/11/10 6-17-09 6-30-09 07-01-09 7-13-09 8-14-09 12-28-09

SHEET 11 OF 26

FILE => 53-3018s-ff-rw43lyt.dgn

STRUCTURES DESIGN DETAIL SHEET (METRIC) (REV.03-17-04)

USERNAME => ttmrikes1 DATE PLOTTED => 23-JUN-2010 TIME PLOTTED => 06:08

DIST	COUNTY	ROUTE	KILOMETER POST TOTAL PROJECT	SHEET No	TOTAL SHEETS
07	LA	5	2.9/4.9	995	1082

Daniel L. Texler 01-26-10
REGISTERED CIVIL ENGINEER DATE

6-21-10
PLANS APPROVAL DATE

REGISTERED PROFESSIONAL ENGINEER Daniel L. Texler No. 49792 Exp. 9-30-10 CIVIL STATE OF CALIFORNIA

The State of California or its officers or agents shall not be responsible for the accuracy or completeness of electronic copies of this plan sheet.

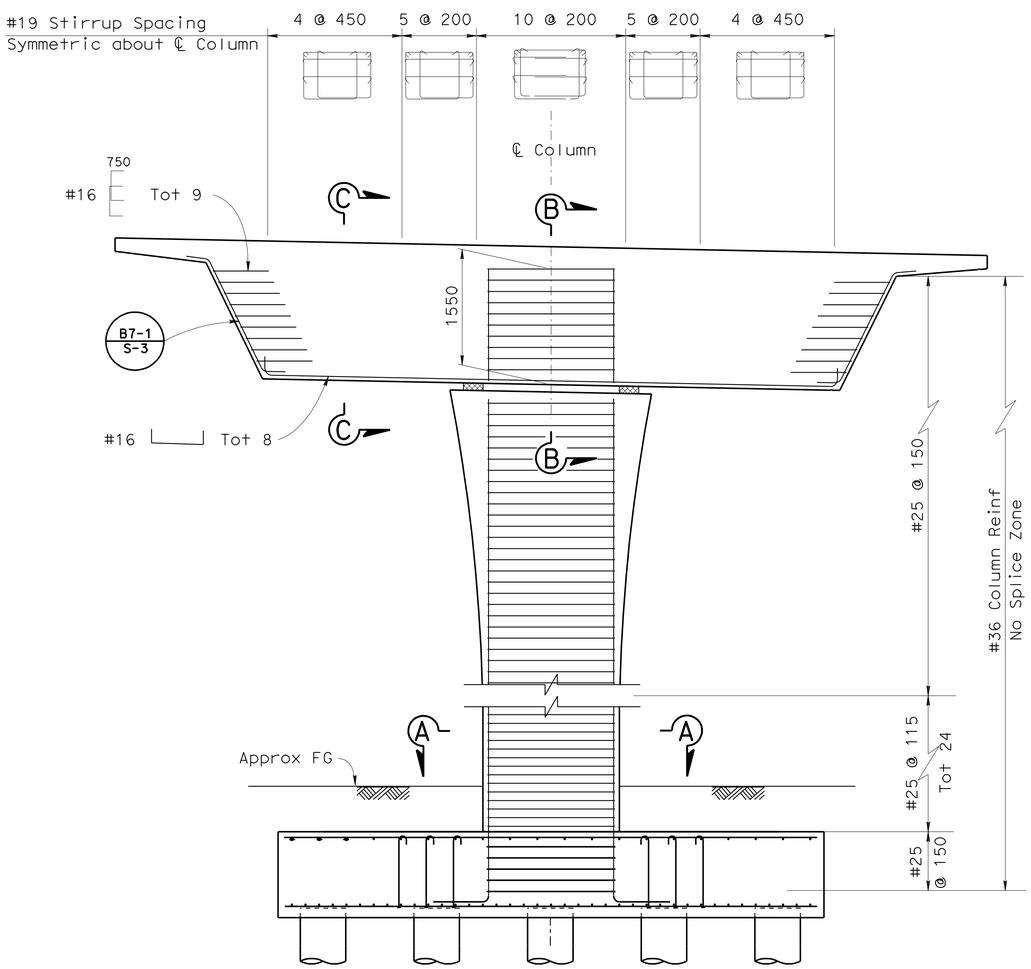

ELEVATION
1:40

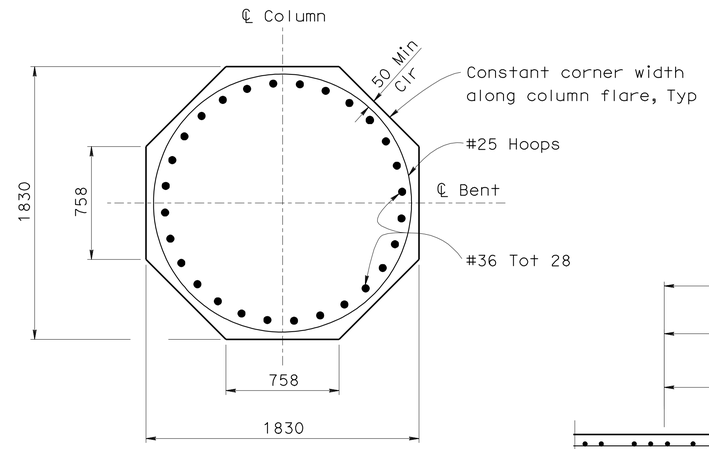

SECTION A-A
1:20

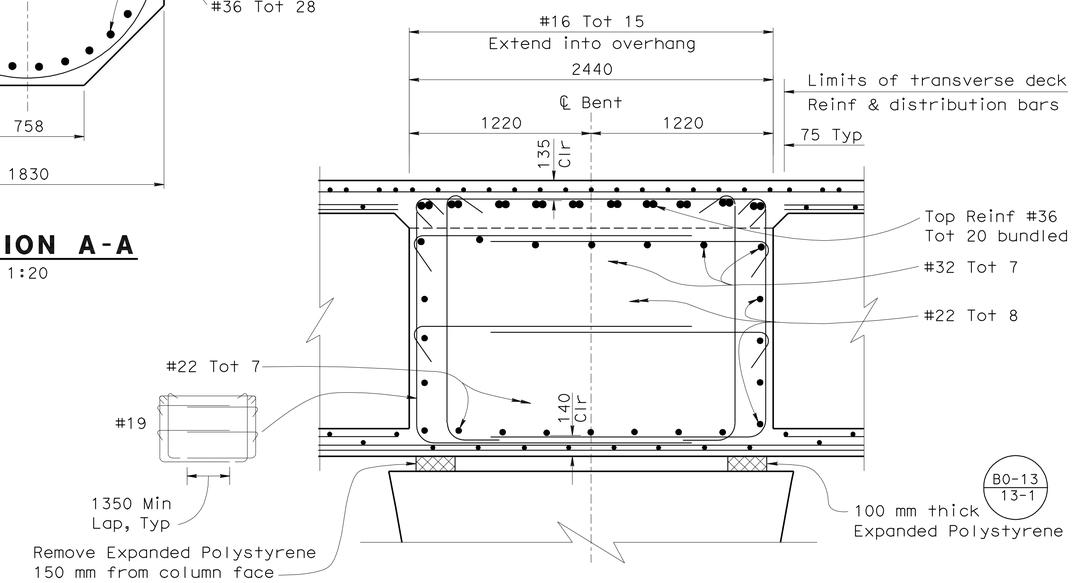

SECTION B-B
1:20

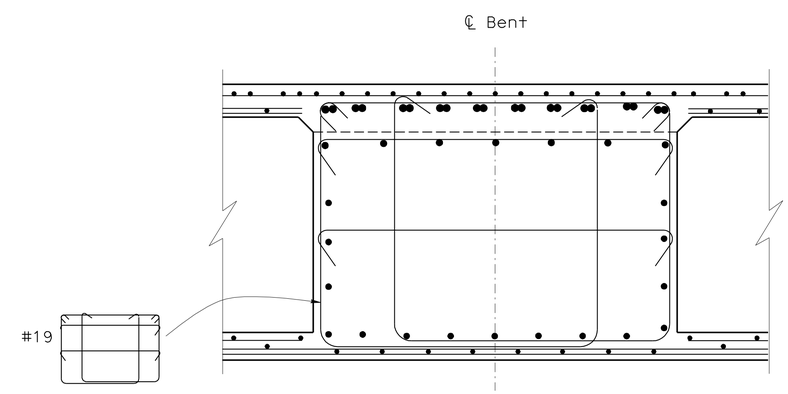

SECTION C-C
1:20

Note: Reinforcement similar to 'Section B-B' except as shown

NOTES:

1. For 'Pile Data Table", see "PILE DATA" sheet
2. Hoops in column must conform to Ultimate Splice specifications

DESIGN	BY Phu Nguyen	CHECKED D. Menzmer
DETAILS	BY L. Goldthwait	CHECKED D. Menzmer
QUANTITIES	BY M. Okimura	CHECKED D. Menzmer

STATE OF CALIFORNIA
DEPARTMENT OF TRANSPORTATION

DIVISION OF ENGINEERING SERVICES
STRUCTURE DESIGN
DESIGN BRANCH 11

BRIDGE NO. 53-3018S
KILOMETER POST 3.875

CARMENITA ROAD NB ON-RAMP
BENT LAYOUT

ALL DIMENSIONS ARE IN MILLIMETERS UNLESS OTHERWISE SHOWN

ORIGINAL SCALE IN MILLIMETERS FOR REDUCED PLANS 0 10 20 30 40 50 60 70 80 90 100

CU 07225
EA 2159C1

DISREGARD PRINTS BEARING EARLIER REVISION DATES

REVISION DATES: 11-01-08, 11-04-08, 12-04-08, 5-28-09, 6-12-09, 1-7-10

SHEET 12 OF 26

FILE => 53-3018s-h-bntlyt.dgn

STRUCTURES DESIGN DETAIL SHEET (METRIC) (REV.03-17-04)

USERNAME => trmikesl DATE PLOTTED => 23-JUN-2010 TIME PLOTTED => 06:08

DIST	COUNTY	ROUTE	KILOMETER POST TOTAL PROJECT	SHEET No	TOTAL SHEETS
07	LA	5	2.9/4.9	996	1082

Daniel L. Texler 01-26-10
REGISTERED CIVIL ENGINEER DATE

6-21-10
PLANS APPROVAL DATE

REGISTERED PROFESSIONAL ENGINEER Daniel L. Texler No. 49792 Exp. 9-30-10 CIVIL STATE OF CALIFORNIA

The State of California or its officers or agents shall not be responsible for the accuracy or completeness of electronic copies of this plan sheet.

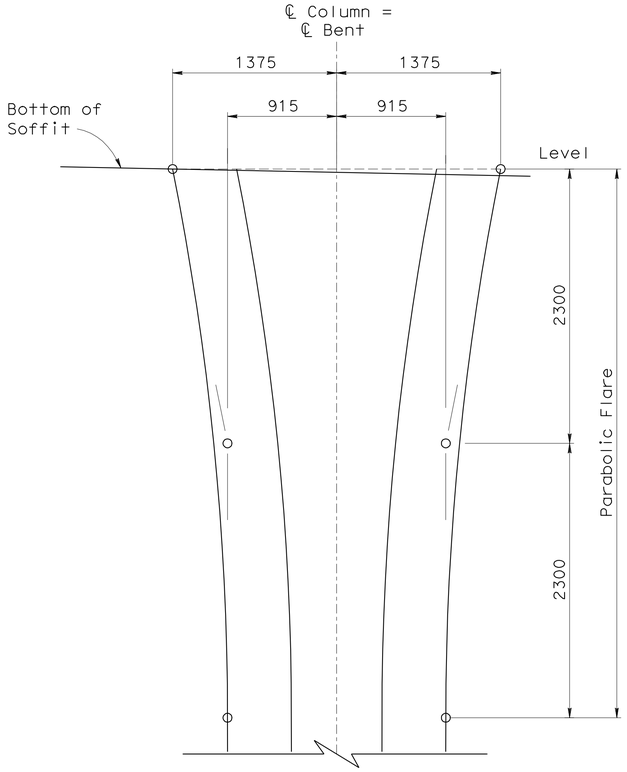

COLUMN GEOMETRY
1:25

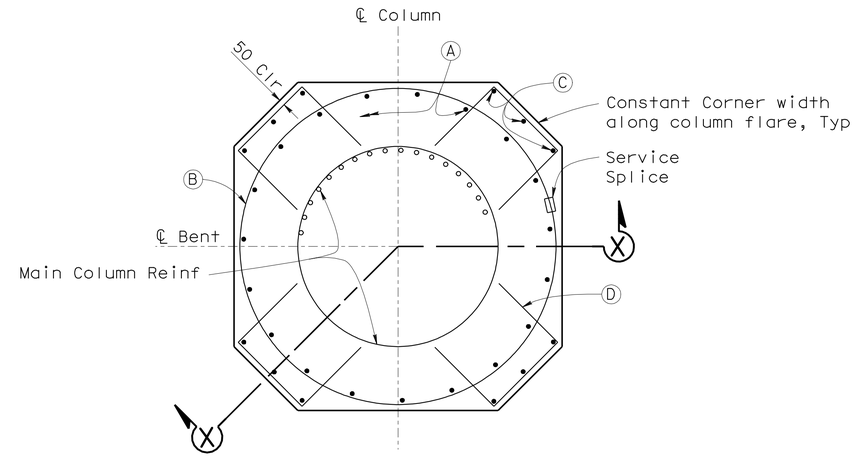

COLUMN FLARE REINF
1:25

LEGEND:

Ⓐ = #19 / Tot 19

Ⓑ = #25 Hoops @ 175, stagger splices

Ⓒ = #19 / Tot 12

Ⓓ = #19 700 700 @175

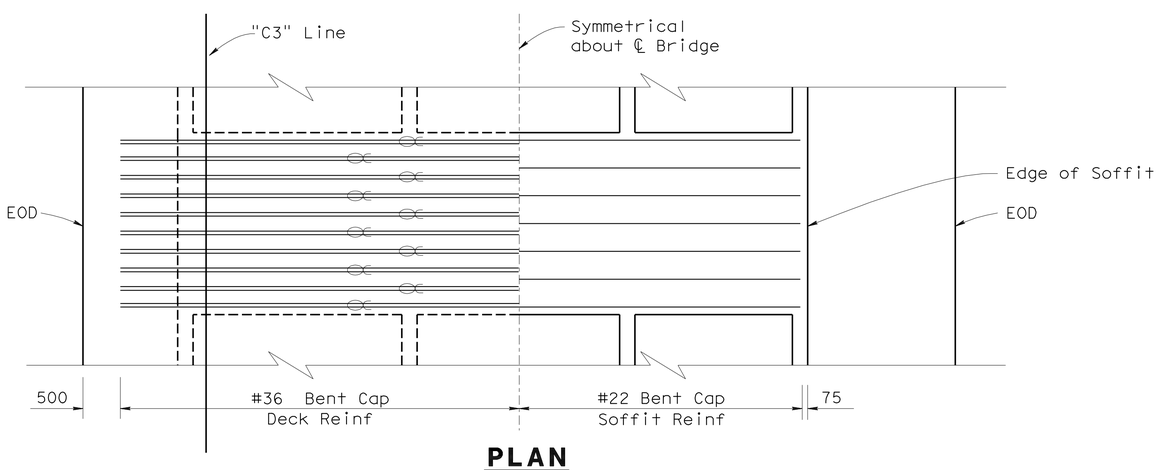

PLAN
1:40

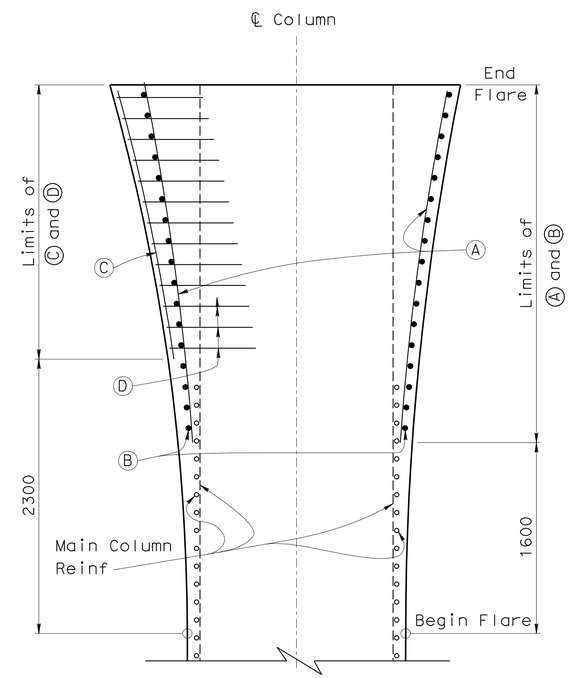

SECTION X-X
1:25

DESIGN	BY Phu Nguyen	CHECKED D. Menzmer	
DETAILS	BY L. Goldthwait	CHECKED D. Menzmer	
QUANTITIES	BY M. Okimura	CHECKED D. Menzmer	

STATE OF CALIFORNIA
DEPARTMENT OF TRANSPORTATION

DIVISION OF ENGINEERING SERVICES
STRUCTURE DESIGN
DESIGN BRANCH 11

BRIDGE NO. 53-3018S
KILOMETER POST 3.875

CARMENITA ROAD NB ON-RAMP
BENT DETAILS

Caltrans Metric

ALL DIMENSIONS ARE IN MILLIMETERS UNLESS OTHERWISE SHOWN

ORIGINAL SCALE IN MILLIMETERS FOR REDUCED PLANS 0 10 20 30 40 50 60 70 80 90 100

CU 07225
EA 2159C1

DISREGARD PRINTS BEARING EARLIER REVISION DATES

REVISION DATES: 11-28-07 12-12-08 12-28-08

SHEET 13 OF 26

FILE => 53-3018s-hh-bntdet.dgn

STRUCTURES DESIGN DETAIL SHEET (METRIC) (REV.03-17-04)

USERNAME => trmikesl DATE PLOTTED => 23-JUN-2010 TIME PLOTTED => 06:08

DIST	COUNTY	ROUTE	KILOMETER POST TOTAL PROJECT	SHEET No	TOTAL SHEETS
07	LA	5	2.9/4.9	997	1082

Daniel L. Texler 01-26-10
REGISTERED CIVIL ENGINEER DATE

6-21-10
PLANS APPROVAL DATE

REGISTERED PROFESSIONAL ENGINEER Daniel L. Texler No. 49792 Exp. 9-30-10 CIVIL STATE OF CALIFORNIA

The State of California or its officers or agents shall not be responsible for the accuracy or completeness of electronic copies of this plan sheet.

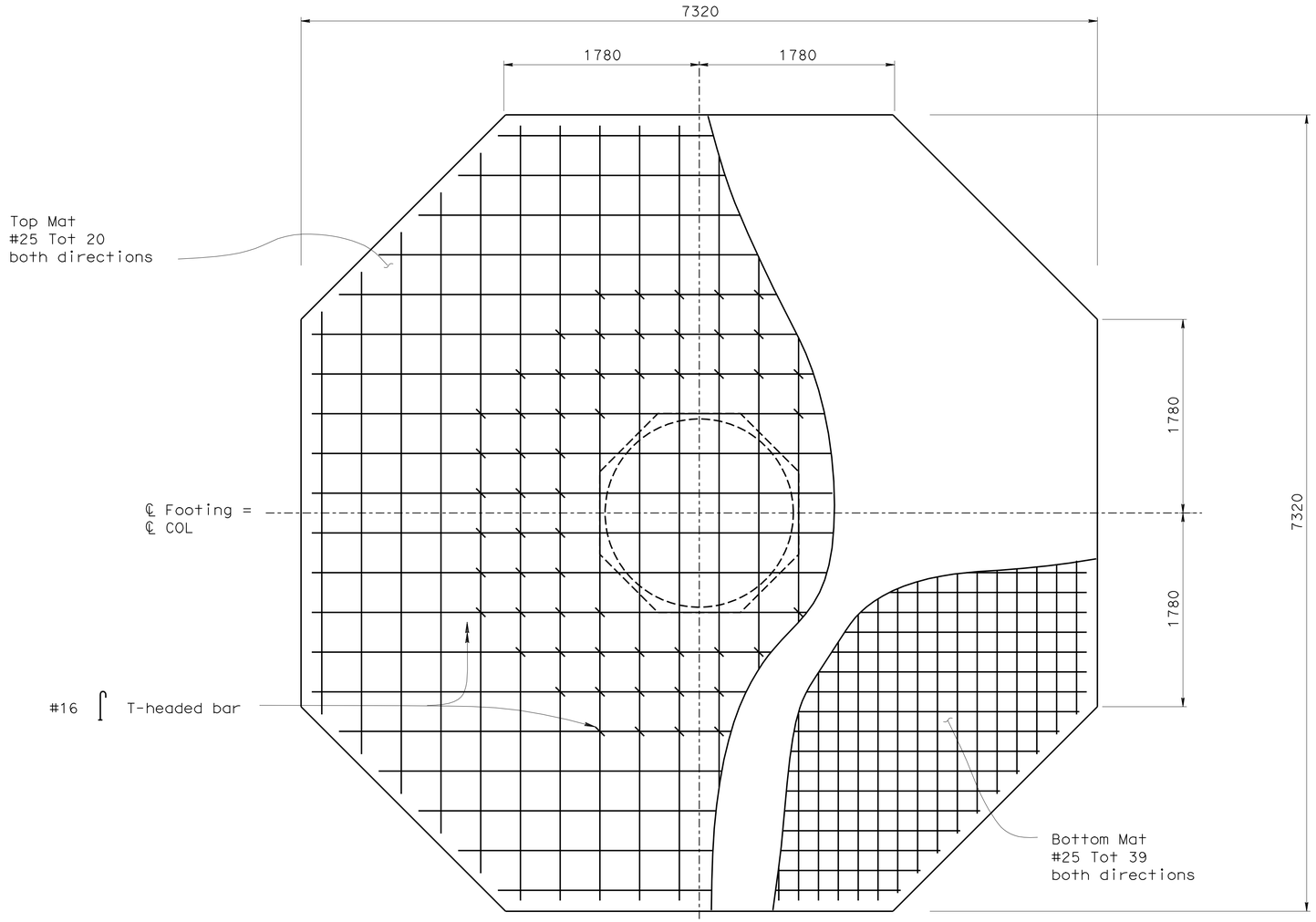

TYPICAL FOOTING PLAN

1:25

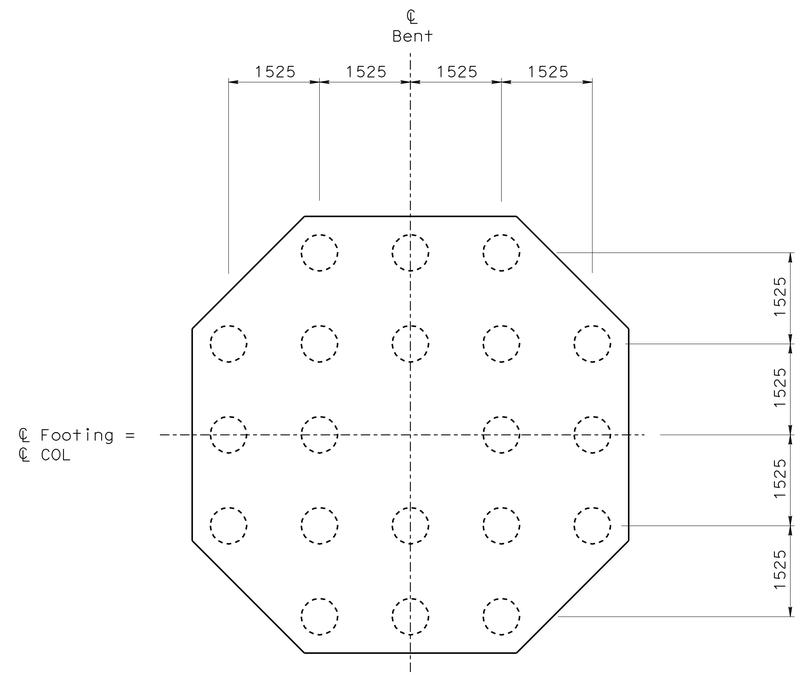

PILE LAYOUT

1:50

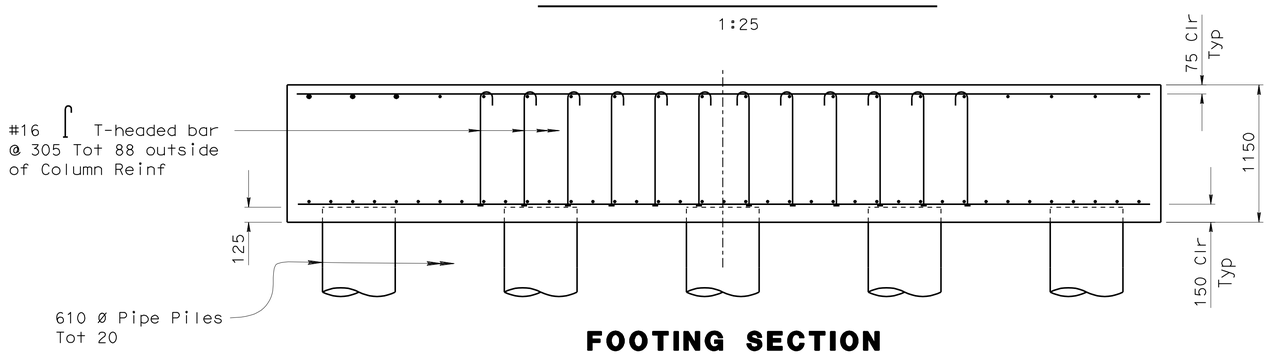

FOOTING SECTION

1:25

Notes:

1. Details are symmetrical about ℄ Bent & ℄ Footing

DESIGN	BY P. Nguyen	CHECKED D. Menzmer	
DETAILS	BY L. Goldthwait	CHECKED D. Menzmer	
QUANTITIES	BY M. Okimura	CHECKED D. Menzmer	

STATE OF CALIFORNIA
DEPARTMENT OF TRANSPORTATION

DIVISION OF ENGINEERING SERVICES
STRUCTURE DESIGN
DESIGN BRANCH 11

BRIDGE NO. 53-3018S
KILOMETER POST 3.875

CARMENITA ROAD NB ON-RAMP
FOOTING DETAILS

ALL DIMENSIONS ARE IN MILLIMETERS UNLESS OTHERWISE SHOWN

ORIGINAL SCALE IN MILLIMETERS FOR REDUCED PLANS 0 10 20 30 40 50 60 70 80 90 100

CU 07225
EA 2159C1

DISREGARD PRINTS BEARING EARLIER REVISION DATES 12-18-08 12-28-08

REVISION DATES

SHEET 14 OF 26

FILE => 53-3018s-hh-bntftg.dgn

STRUCTURES DESIGN DETAIL SHEET (METRIC) (REV.03-17-04)

USERNAME => ttmikes1 DATE PLOTTED => 23-JUN-2010 TIME PLOTTED => 06:08

DIST	COUNTY	ROUTE	KILOMETER POST TOTAL PROJECT	SHEET No	TOTAL SHEETS
07	LA	5	2.9/4.9	998	1082

Daniel L. Texler 01-26-10
REGISTERED CIVIL ENGINEER DATE

6-21-10
PLANS APPROVAL DATE

REGISTERED PROFESSIONAL ENGINEER Daniel L. Texler No. 49792 Exp. 9-30-10 CIVIL STATE OF CALIFORNIA

The State of California or its officers or agents shall not be responsible for the accuracy or completeness of electronic copies of this plan sheet.

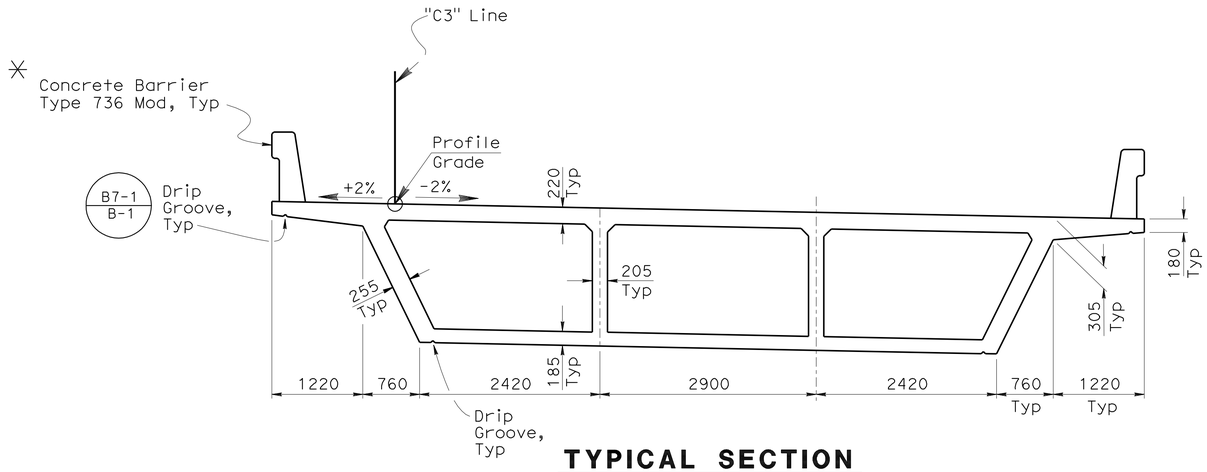

TYPICAL SECTION

1:40

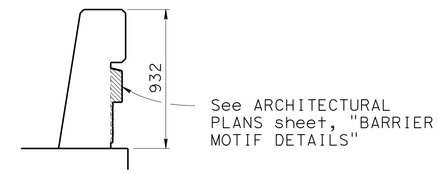

CONCRETE BARRIER ✳ TYPE 736 MOD & TYPE 736A MOD

1:20

For Reinforcement & other details not shown, see B11-56

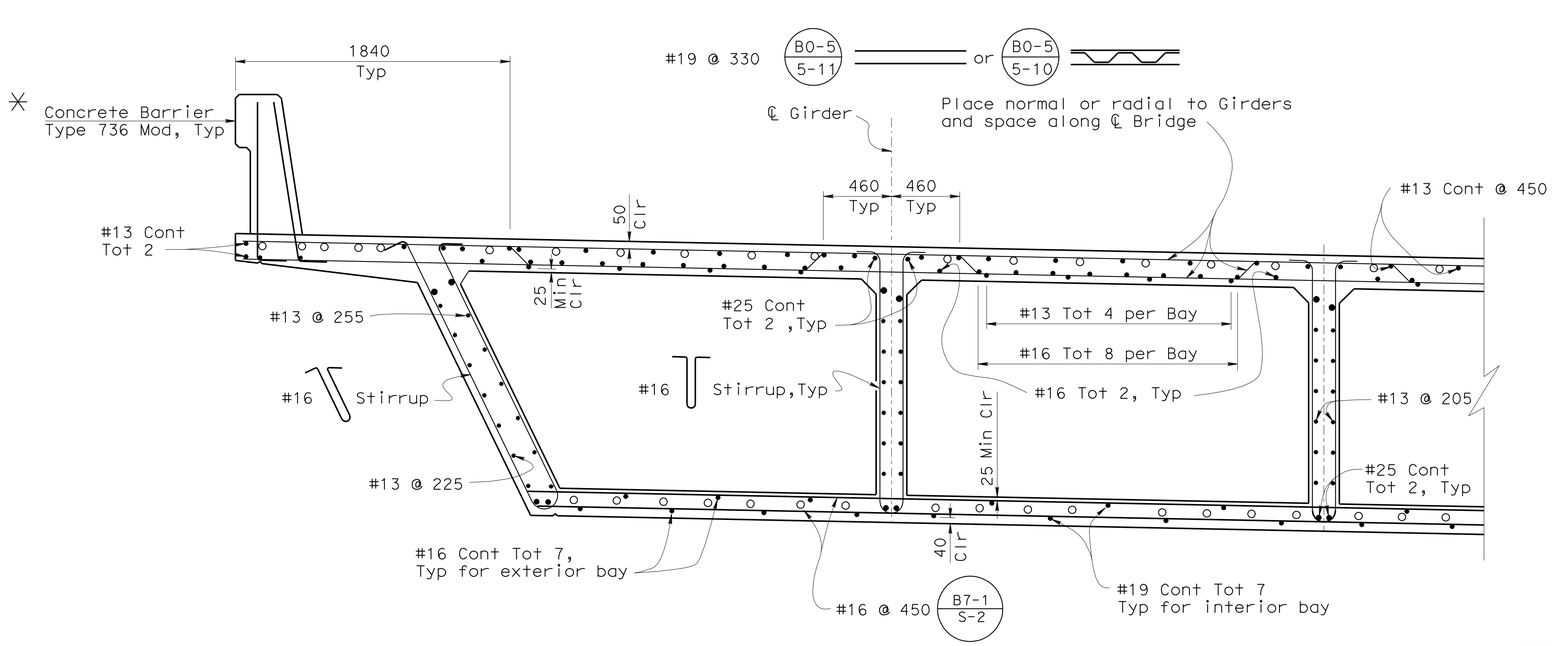

PART TYPICAL SECTION

1:20

B0-5 B7-1 B11-56

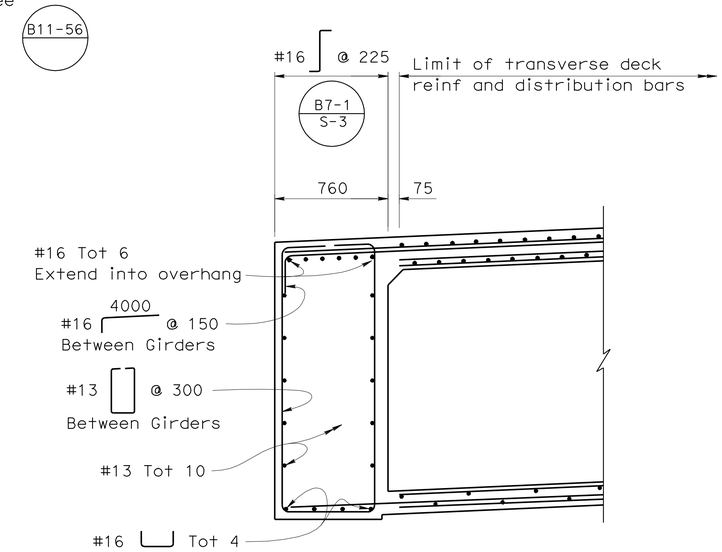

END DIAPHRAGM (AT ABUT)

1:20

NOTES:

- o Indicates additional girder reinforcement. See "ADDITIONAL GIRDER REINFORCEMENT" sheets

  For stirrup spacing, see "GIRDER LAYOUT" sheet

- ✳ Install utility conduits as req'd, (not shown) for size and other data, see "ROAD PLANS"

Caltrans Metric

	BY	CHECKED
DESIGN	P. Nguyen	D. Menzmer
DETAILS	L. Goldthwait	D. Menzmer
QUANTITIES	M. Okimura	D. Menzmer

STATE OF CALIFORNIA DEPARTMENT OF TRANSPORTATION

DIVISION OF ENGINEERING SERVICES STRUCTURE DESIGN
DESIGN BRANCH 11

BRIDGE NO. 53-3018S
KILOMETER POST 3.875

CARMENITA ROAD NB ON-RAMP
TYPICAL SECTION

ALL DIMENSIONS ARE IN MILLIMETERS UNLESS OTHERWISE SHOWN

ORIGINAL SCALE IN MILLIMETERS FOR REDUCED PLANS 0 10 20 30 40 50 60 70 80 90 100

CU 07225
EA 2159C1

DISREGARD PRINTS BEARING EARLIER REVISION DATES

REVISION DATES: 06-09-08 09-16-08 2-26-09 6-17-09 7-13-09 12-28-09 01-04-10

SHEET 15 OF 26

FILE => 53-3018s-j-typ.dgn

STRUCTURES DESIGN DETAIL SHEET (METRIC) (REV.03-17-04)

USERNAME => trmikesl DATE PLOTTED => 23-JUN-2010 TIME PLOTTED => 06:03

DIST	COUNTY	ROUTE	KILOMETER POST TOTAL PROJECT	SHEET No	TOTAL SHEETS
07	LA	5	2.9/4.9	999	1082

Daniel L. Texler 01-26-10
REGISTERED CIVIL ENGINEER DATE

6-21-10
PLANS APPROVAL DATE

REGISTERED PROFESSIONAL ENGINEER
Daniel L. Texler
No. 49792
Exp. 9-30-10
CIVIL
STATE OF CALIFORNIA

The State of California or its officers or agents shall not be responsible for the accuracy or completeness of electronic copies of this plan sheet.

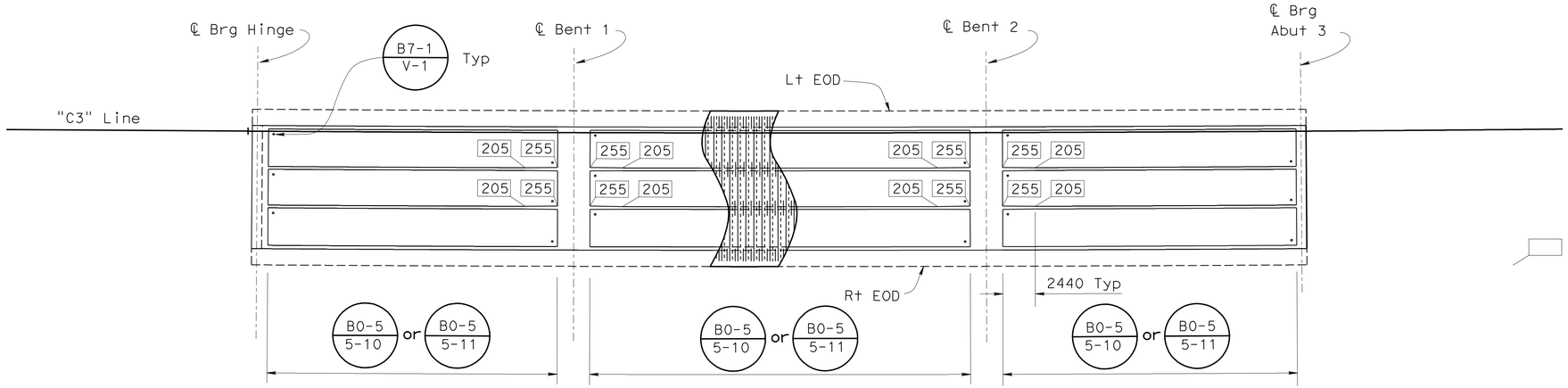

Indicates Girder Stem width

PLAN
1:200
B7-1 V-1
B7-1 S-3

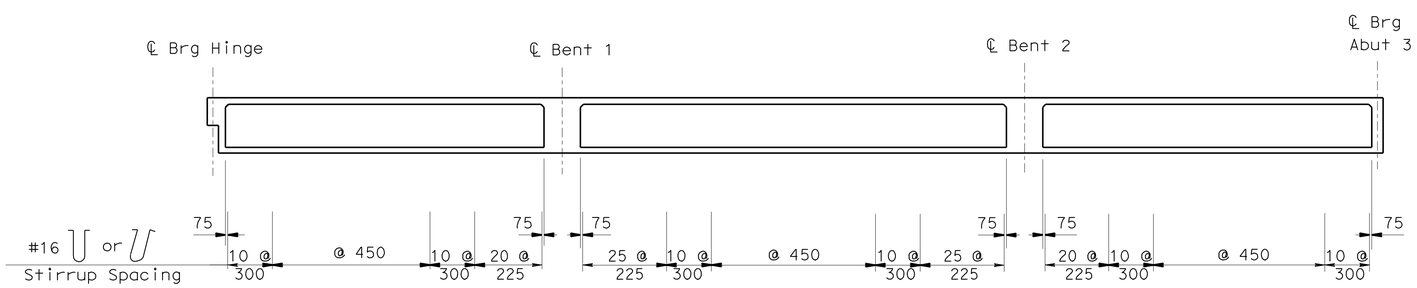

LONGITUDINAL SECTION

Horiz. 1:200
Vert. 1:100

DESIGN	BY P. Nguyen	CHECKED D. Menzmer	
DETAILS	BY L. Goldthwait	CHECKED D. Menzmer	
QUANTITIES	BY M. Okimura	CHECKED D. Menzmer	

STATE OF CALIFORNIA
DEPARTMENT OF TRANSPORTATION

DIVISION OF ENGINEERING SERVICES
STRUCTURE DESIGN
DESIGN BRANCH 11

BRIDGE NO. 53-3018S
KILOMETER POST 3.875

CARMENITA ROAD NB ON-RAMP
GIRDER LAYOUT

ALL DIMENSIONS ARE IN MILLIMETERS UNLESS OTHERWISE SHOWN

ORIGINAL SCALE IN MILLIMETERS FOR REDUCED PLANS 0 10 20 30 40 50 60 70 80 90 100

CU 07225
EA 2159C1

DISREGARD PRINTS BEARING EARLIER REVISION DATES

REVISION DATES: 11-14-07, 3-01-08, 10-22-08, 1-16-09

SHEET 16 OF 26

FILE => 53-3018s-k-girlyt.dgn

STRUCTURES DESIGN DETAIL SHEET (METRIC) (REV.03-17-04)

USERNAME => trmikesl DATE PLOTTED => 23-JUN-2010 TIME PLOTTED => 06:09

DIST	COUNTY	ROUTE	KILOMETER POST TOTAL PROJECT	SHEET No	TOTAL SHEETS
07	LA	5	2.9/4.9	1000	1082

Daniel L. Texler 01-26-10
REGISTERED CIVIL ENGINEER DATE

6-21-10
PLANS APPROVAL DATE

REGISTERED PROFESSIONAL ENGINEER
Daniel L. Texler
No. 49792
Exp. 9-30-10
CIVIL
STATE OF CALIFORNIA

The State of California or its officers or agents shall not be responsible for the accuracy or completeness of electronic copies of this plan sheet.

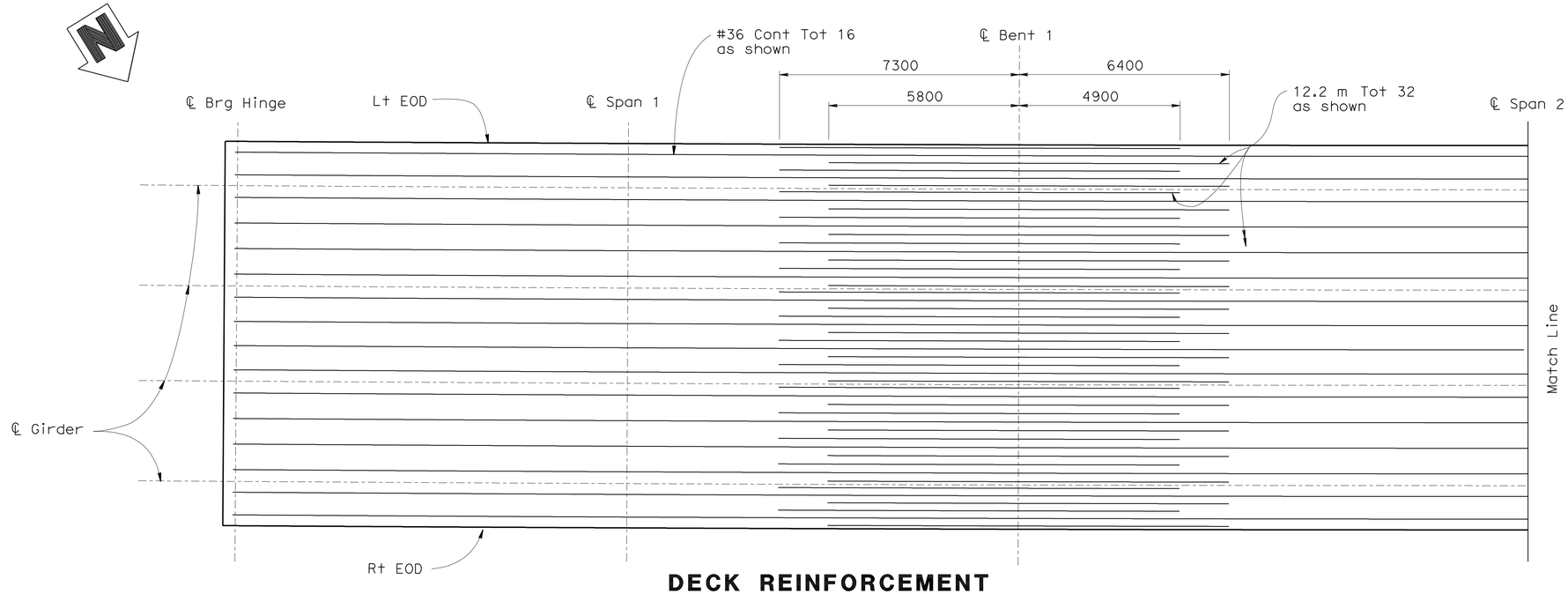

DECK REINFORCEMENT

1:80

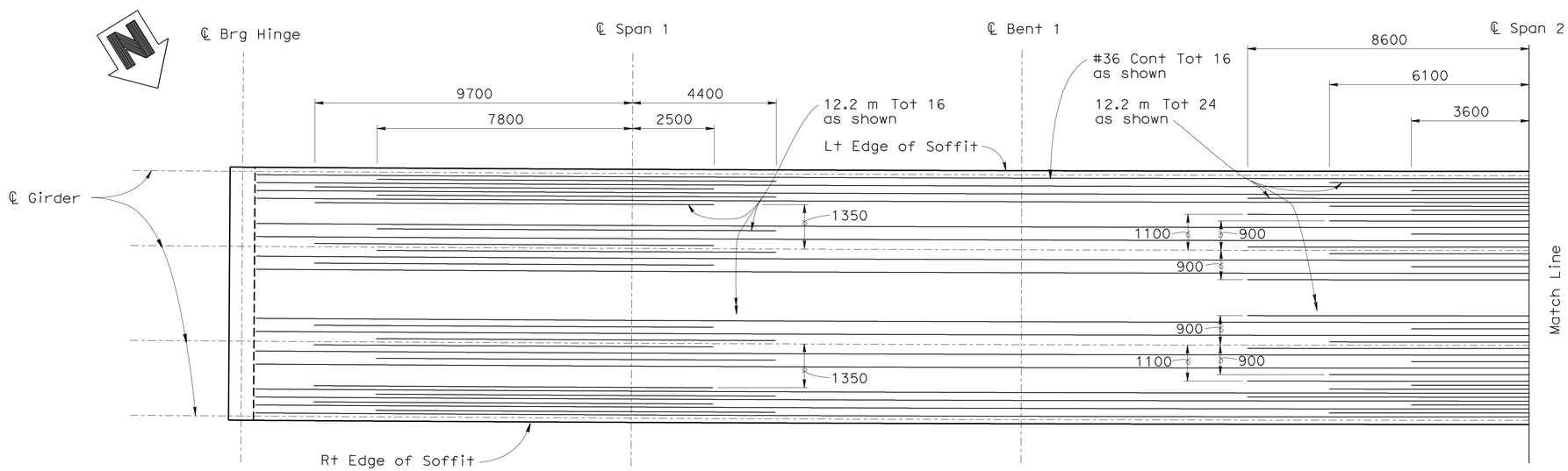

SOFFIT REINFORCEMENT

1:80

NOTES:

1. All reinforcement are #36 unless noted
2. Reinforcement are evenly spaced in limits shown
3. All #36 Cont bars shall be lap spliced with two times the standard lap length

Caltrans Metric

	BY	CHECKED
DESIGN	Phu Nguyen	D. Menzmer
DETAILS	L. Goldthwait	D. Menzmer
QUANTITIES	M. Okimura	D. Menzmer

STATE OF CALIFORNIA
DEPARTMENT OF TRANSPORTATION

DIVISION OF ENGINEERING SERVICES
STRUCTURE DESIGN
DESIGN BRANCH 11

BRIDGE NO. 53-3018S
KILOMETER POST 3.875

CARMENITA ROAD NB ON-RAMP
ADDITIONAL GIRDER REINFORCEMENT NO. 1

ALL DIMENSIONS ARE IN MILLIMETERS UNLESS OTHERWISE SHOWN

ORIGINAL SCALE IN MILLIMETERS FOR REDUCED PLANS 0 10 20 30 40 50 60 70 80 90 100

CU 07225
EA 2159C1

DISREGARD PRINTS BEARING EARLIER REVISION DATES 10-29-08 6-16-09

REVISION DATES

SHEET 17 OF 26

FILE => 53-3018s-k-girrf01.dgn

STRUCTURES DESIGN DETAIL SHEET (METRIC) (REV.03-17-04)

USERNAME => trmikesl DATE PLOTTED => 23-JUN-2010 TIME PLOTTED => 06:09