Dist	COUNTY	ROUTE	POST MILES TOTAL PROJECT	SHEET No.	TOTAL SHEETS
07	LA	5	0.0/7.6	101	985

REGISTERED CIVIL ENGINEER 10-11-12 DATE

6-24-13
PLANS APPROVAL DATE

REGISTERED PROFESSIONAL ENGINEER
NGIM NANCY PE
No. 58161
Exp 6-30-14
CIVIL
STATE OF CALIFORNIA

THE STATE OF CALIFORNIA OR ITS OFFICERS OR AGENTS SHALL NOT BE RESPONSIBLE FOR THE ACCURACY OR COMPLETENESS OF SCANNED COPIES OF THIS PLAN SHEET.

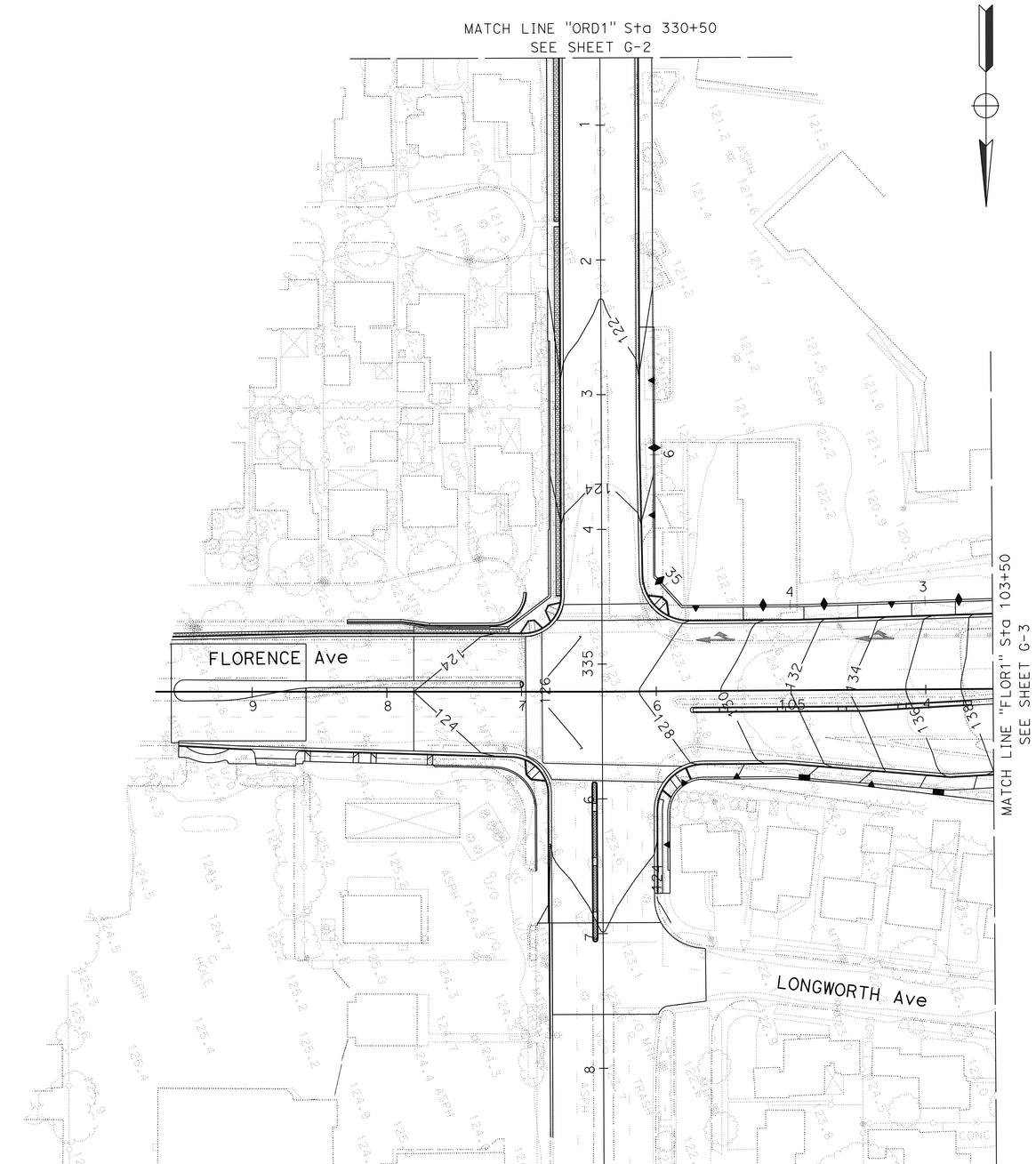

GRADING PLAN

SCALE: 1" = 50'

G-7

APPROVED FOR CONTOUR GRADING WORK ONLY

REVISED BY	MARK MAI
DATE REVISED	10-15-12
CALCULATED-DESIGNED BY	KEVIN Q NGUYEN
CHECKED BY	NGIM NANCY PE
FUNCTIONAL SUPERVISOR	NGIM NANCY PE

Caltrans® OFFICE OF DESIGN A
STATE OF CALIFORNIA - DEPARTMENT OF TRANSPORTATION

S:\projects\215951\721595ha007.dgn

LAST REVISION 10-19-12 | DATE PLOTTED => 26-JUN-2013 | TIME PLOTTED => 15:27

BORDER LAST REVISED 7/2/2010 | USERNAME => s117606 | DGN FILE => 721595ha007.dgn | RELATIVE BORDER SCALE IS IN INCHES 0 1 2 3 | UNIT 1797 | PROJECT NUMBER & PHASE 07000018351

Dist	COUNTY	ROUTE	POST MILES TOTAL PROJECT	SHEET No.	TOTAL SHEETS
07	LA	5	0.0/7.6	102	985

REGISTERED CIVIL ENGINEER 10-11-12 DATE

6-24-13
PLANS APPROVAL DATE

REGISTERED PROFESSIONAL ENGINEER
NGIM NANCY PE
No. 58161
Exp 6-30-14
CIVIL
STATE OF CALIFORNIA

THE STATE OF CALIFORNIA OR ITS OFFICERS OR AGENTS SHALL NOT BE RESPONSIBLE FOR THE ACCURACY OR COMPLETENESS OF SCANNED COPIES OF THIS PLAN SHEET.

NOTE:
FOR DETENTION BASIN GRADING, SEE DRAINAGE PLAN FOR BASIN CONSTRUCTION DETAIL.

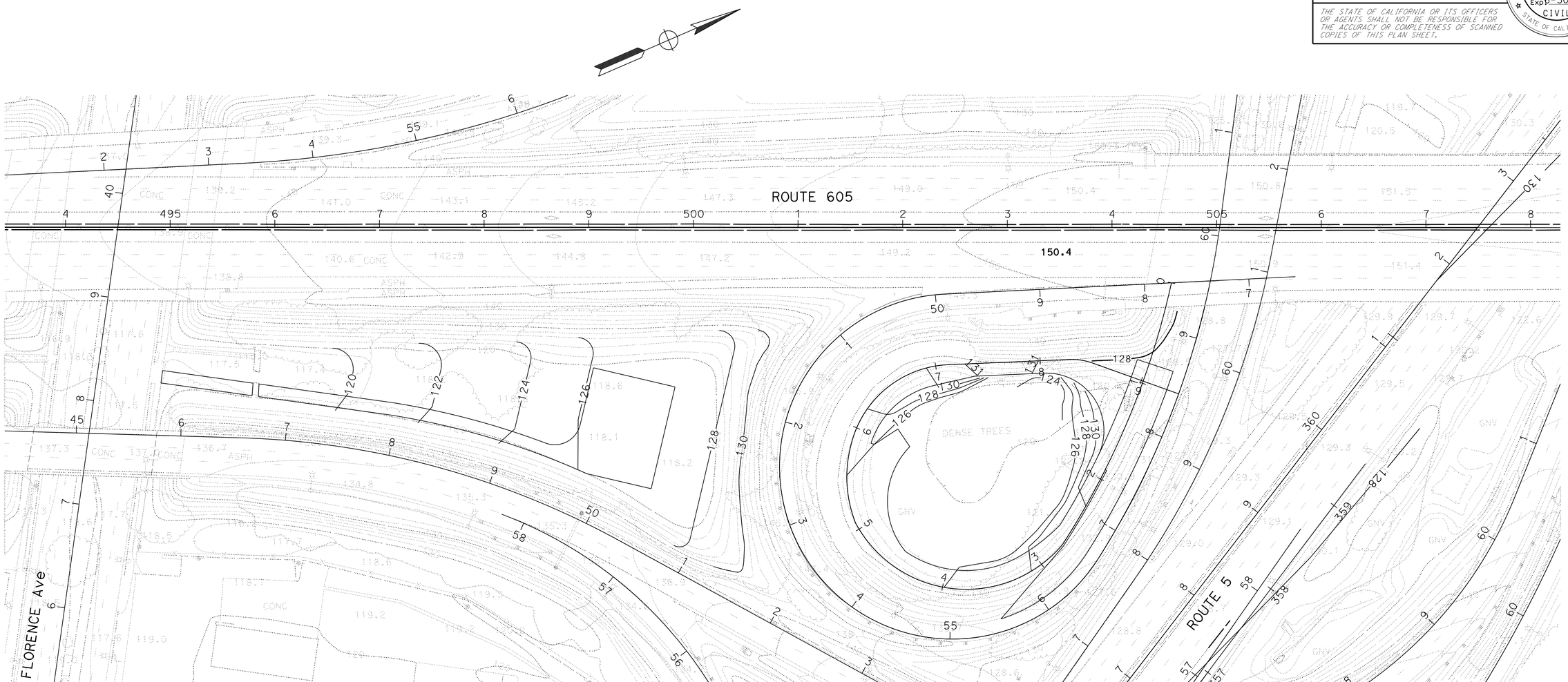

GRADING PLAN

SCALE: 1" = 50'

G-8

APPROVED FOR CONTOUR GRADING WORK ONLY

MARK MAI	10-15-12
REVISED BY	DATE REVISED
MARK MAI	NGIM NANCY PE
CALCULATED-DESIGNED BY	
CHECKED BY	
FUNCTIONAL SUPERVISOR	NGIM NANCY PE

STATE OF CALIFORNIA - DEPARTMENT OF TRANSPORTATION
Caltrans® OFFICE OF DESIGN A

S:\projects\215951\721595ha008.dgn

LAST REVISION 10-19-12 | DATE PLOTTED => 26-JUN-2013 | TIME PLOTTED => 15:27

Dist	COUNTY	ROUTE	POST MILES TOTAL PROJECT	SHEET No.	TOTAL SHEETS
07	LA	5	0.0/7.6	103	985

REGISTERED CIVIL ENGINEER 10-11-12 DATE

6-24-13
PLANS APPROVAL DATE

REGISTERED PROFESSIONAL ENGINEER DAVE BHALLA No. 34350 Exp. 9-30-13 CIVIL STATE OF CALIFORNIA

THE STATE OF CALIFORNIA OR ITS OFFICERS OR AGENTS SHALL NOT BE RESPONSIBLE FOR THE ACCURACY OR COMPLETENESS OF SCANNED COPIES OF THIS PLAN SHEET.

NOTE:

FOR ACCURATE RIGHT OF WAY DATA, CONTACT RIGHT OF WAY ENGINEERING AT THE DISTRICT OFFICE

1
- a GD-1 INLET
- b 24" RCP
- c GD-1 INLET
- d 24" RCP

2
- a REMOVE CONCRETE CHANNEL
- b REMOVE HEADWALL
- c ABANDON 4.0′ x 2.0′ RCB

3
- a REMOVE HEADWALL
- b ABANDON INLET
- c ABANDON 4′ x 2′ RCB
- d REMOVE HEADWALL

4
- a REMOVE INLET
- b REMOVE 18" CSP DOWNDRAIN

5
- a GD-1 INLET
- b 24" RCP
- c GD-1 INLET
- d 24" RCP

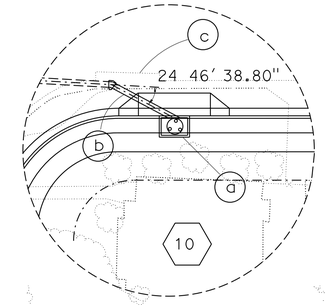

DETAIL "A"

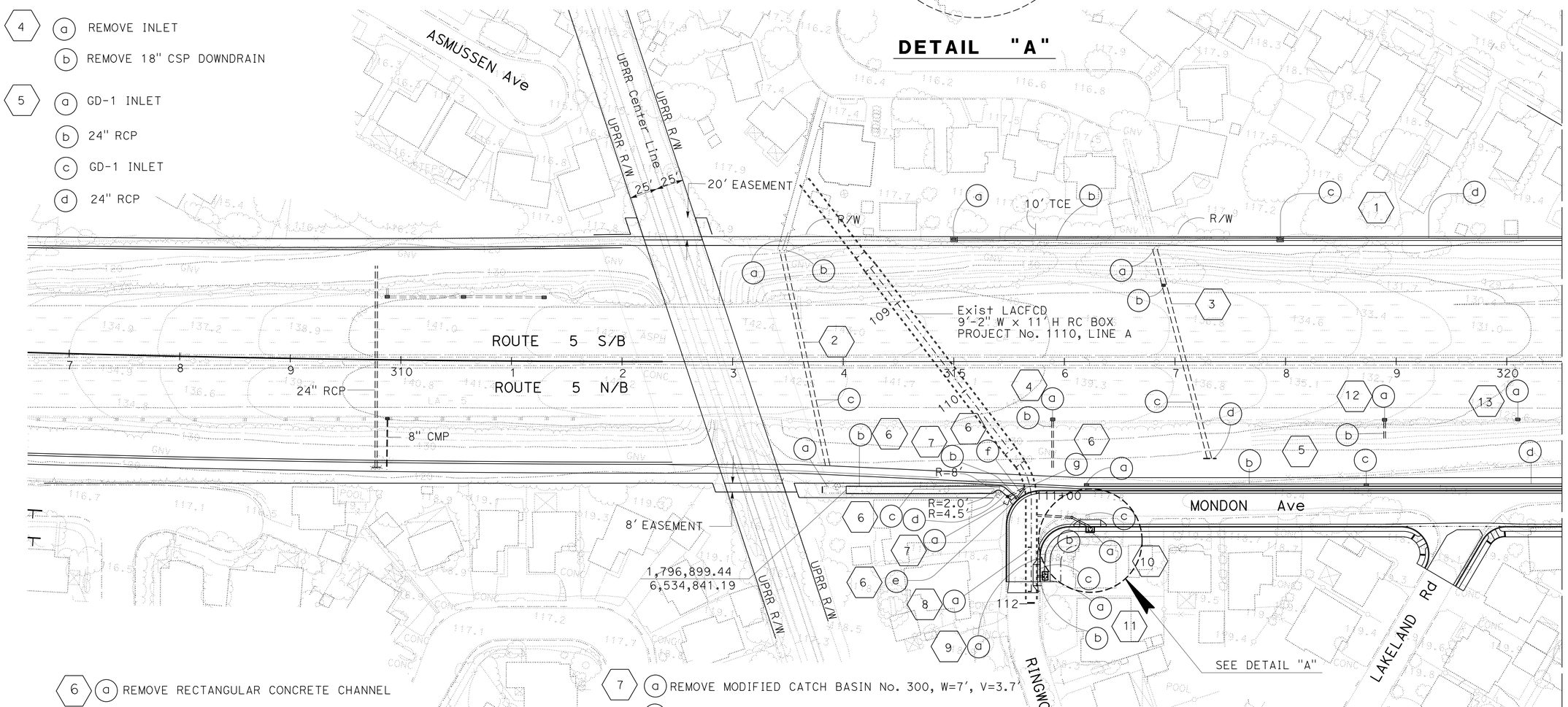

6
- a REMOVE RECTANGULAR CONCRETE CHANNEL
- b RECTANGULAR CONCRETE CHANNEL 6.0′ W x 0.87′ & Var 0.50′ H x 132.3′
- c RECTANGULAR CONCRETE CHANNEL 6.0′ & Var 3.0′ W x 0.87′ & Var 0.50′ H x 11.4′
- d RECTANGULAR CONCRETE CHANNEL 4.0′ W x 0.87′ & Var 0.50′ H x 11.3′
- e MODIFIED CURB OPENING CATCH BASIN (300-3), W=7′, V=5.0′ TO FIT CURVE LOCAL DEPRESSION 313-3, CASE E, H=2"
- f 18" x 8.8′ RCP, 2000D
- g JOIN Exist LACFCD RCB (SEE PIPE CONNECTIONS TO EXISTING STORM DRAIN 335-2)

7
- a REMOVE MODIFIED CATCH BASIN No. 300, W=7′, V=3.7′
- b REMOVE 18" x 16′ RCP AND JUNCTION STRUCTURE

8
- a ADJUST MANHOLE TO GRADE

9
- a REMOVE Mod CATCH BASIN No. 300, W=3′-6" AND SEAL RCB WALL OPENING PER 381-2

10
- a CURB OPENING CATCH BASIN (300-3),W=3′-6",V=4.7′ 10′-8" OFFSET FROM BCR TO Beg CURB OPENING CATCH BASIN LOCAL DEPRESSION 313-3, CASE E, H=2"
- b 18" x 18.6′ RCP, 2000D
- c REMOVE CATCH BASIN No. 300, W=3′-6", V=4.7′

11
- a CURB OPENING CATCH BASIN (300-3), W=3′-6", V=5.0′ LOCAL DEPRESSION 313-3, CASE E, H=2"
- b 18" x 5.2′ RCP,1400D
- c JOIN Exist LACFCD RCB (SEE PIPE CONNECTIONS TO EXISTING STORM DRAIN 335-2)

12
- a REMOVE INLET
- b REMOVE 18" RCP

13
- a REMOVE INLET

APPROVED FOR DRAINAGE WORK ONLY

DRAINAGE PLAN

SCALE: 1" = 50′

D-1

STATE OF CALIFORNIA - DEPARTMENT OF TRANSPORTATION
Caltrans® HYDRAULICS

FUNCTIONAL SUPERVISOR: DAVE BHALLA
CALCULATED-DESIGNED BY: VIC T. VALIDO
CHECKED BY: D. BHALLA
REVISED BY / DATE REVISED

LAST REVISION 08-31-10 | DATE PLOTTED => 26-JUN-2013 | TIME PLOTTED => 15:27

Dist	COUNTY	ROUTE	POST MILES TOTAL PROJECT	SHEET No.	TOTAL SHEETS
07	LA	5	0.0/7.6	104	985

REGISTERED CIVIL ENGINEER 10-11-12 DATE

6-24-13
PLANS APPROVAL DATE

REGISTERED PROFESSIONAL ENGINEER DAVE BHALLA No. 34350 Exp. 9-30-13 CIVIL STATE OF CALIFORNIA

THE STATE OF CALIFORNIA OR ITS OFFICERS OR AGENTS SHALL NOT BE RESPONSIBLE FOR THE ACCURACY OR COMPLETENESS OF SCANNED COPIES OF THIS PLAN SHEET.

1 (d) 24"RCP

14 (a) GD-1 INLET (b) 24"RCP (c) GD-1 INLET (d) 24"RCP (e) GD-1 INLET (f) 24"RCP (g) MODIFIED GD-2 INLET (h) 48"RCP (i) MODIFIED GD-2 INLET (j) 48"RCP (k) MODIFIED GD-2 INLET

15 (a) TYPE "D" STRAIGHT HEADWALL (b) REMOVE CONCRETE CHANNEL (c) GD-1 INLET (d) 4'x 2' RCB (e) REMOVE RCB (f) REMOVE HEADWALL (g) REMOVE INLET (h) REMOVE HEADWALL (i) REMOVE CONCRETE CHANNEL (j) 4'x 2' RCB (k) GD-1 INLET

17 (a) REMOVE INLET
18 (a) REMOVE INLET
19 (a) REMOVE INLET
21 (a) REMOVE INLET
22 (a) REMOVE INLET
23 (a) REMOVE INLET
24 (a) REMOVE INLET
25 (a) REMOVE INLET
26 (a) REMOVE INLET
27 (a) REMOVE INLET
28 (a) REMOVE INLET
29 (a) REMOVE INLET
30 (a) REMOVE INLET

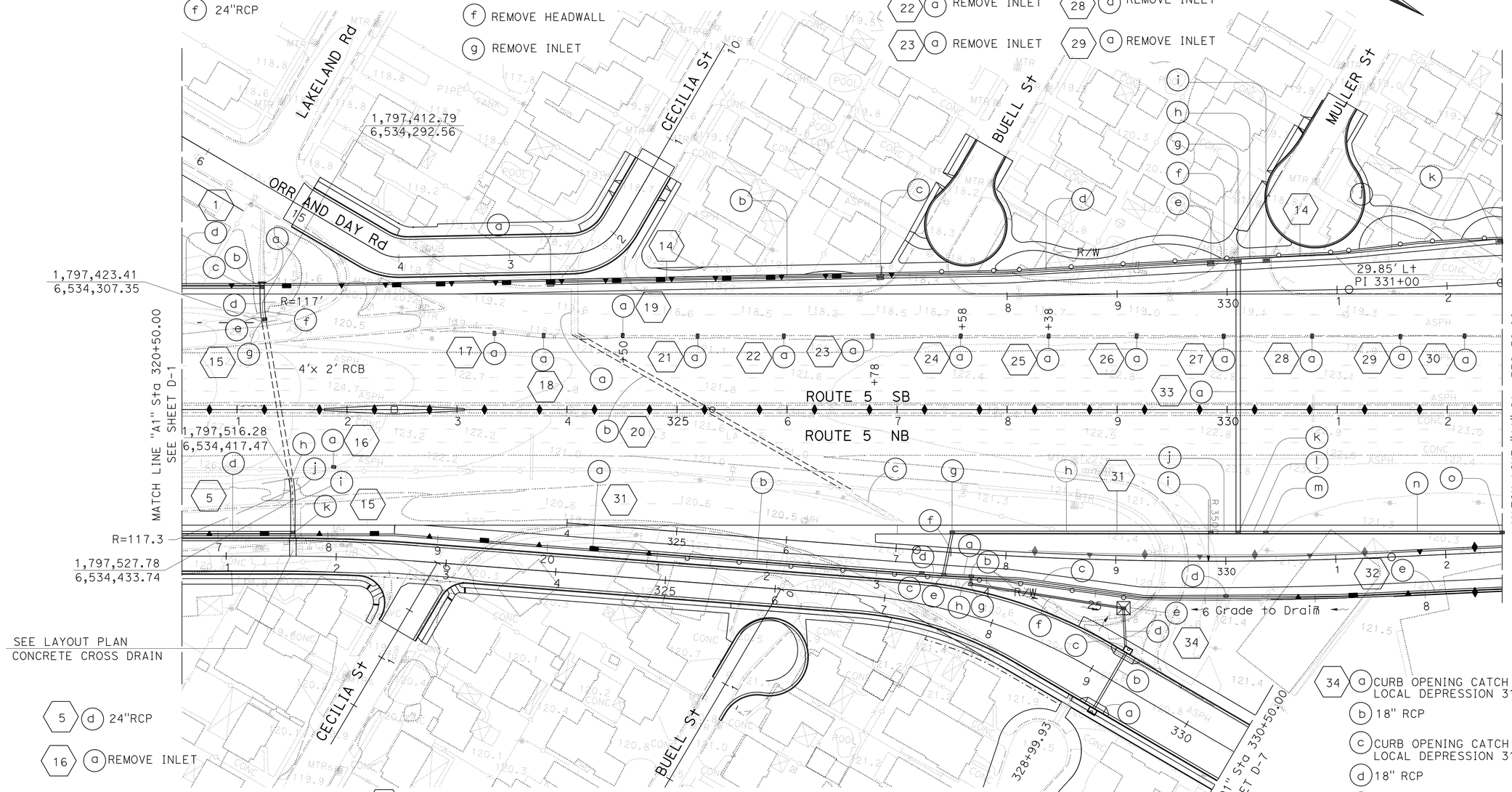

5 (d) 24"RCP

16 (a) REMOVE INLET

20 (a) REMOVE CONCRETE DRAIN (b) ABANDON 4'x 2' RCB (c) REMOVE CONCRETE DRAIN

31 (a) GD-1 INLET (b) 24"RCP (c) GD-1 INLET (d) 24"RCP (e) GD-1 INLET (f) 24"RCP (g) GD-1 INLET (h) 24"RCP (i) GD-1 INLET (j) 27" RCP (k) MODIFIED GD-2 INLET (CASE 1) (l) 27" RCP (m) GD-1 INLET (n) 27" RCP (o) GD-1 INLET

32 (a) 18" RCP (b) GD-1 INLET (c) 18" RCP (d) GD-1 INLET (e) 18" RCP

33 (a) 48" RCP

34 (a) CURB OPENING CATCH BASIN (300-3) LOCAL DEPRESSION 313-3 CASE A (b) 18" RCP (c) CURB OPENING CATCH BASIN (300-3) LOCAL DEPRESSION 313-3 CASE A (d) 18" RCP (e) GD-3 INLET W/DEPRESSED APRON (f) 18" RCP (g) MANHOLE No.1 (MH No.1) (h) 18" RCP

DRAINAGE PLAN

SCALE: 1" = 50'

D-2

APPROVED FOR DRAINAGE WORK ONLY

STATE OF CALIFORNIA - DEPARTMENT OF TRANSPORTATION
Caltrans
HYDRAULICS

FUNCTIONAL SUPERVISOR: DAVE BHALLA
CALCULATED-DESIGNED BY: VIC T. VALIDO
CHECKED BY: D. BHALLA
REVISED BY
DATE REVISED

LAST REVISION 08-31-10
DATE PLOTTED => 26-JUN-2013
TIME PLOTTED => 15:28

Dist	COUNTY	ROUTE	POST MILES TOTAL PROJECT	SHEET No.	TOTAL SHEETS
07	LA	5	0.0/7.6	105	985

REGISTERED CIVIL ENGINEER 10-11-12 DATE

6-24-13
PLANS APPROVAL DATE

REGISTERED PROFESSIONAL ENGINEER DAVE BHALLA No. 34350 Exp. 9-30-13 CIVIL STATE OF CALIFORNIA

THE STATE OF CALIFORNIA OR ITS OFFICERS OR AGENTS SHALL NOT BE RESPONSIBLE FOR THE ACCURACY OR COMPLETENESS OF SCANNED COPIES OF THIS PLAN SHEET.

(14) (l) 48" RCP
(m) MODIFIED GD-2 INLET
(n) 48" RCP
(o) MODIFIED GD-2 INLET
(p) 48" RCP
(q) MODIFIED MANHOLE No.2
(r) 48" RCP
(s) MODIFIED MANHOLE No.2
(t) 48" RCP

(35) (a) REMOVE INLET
(b) REMOVE 2'x 2' RCB
(c) REMOVE HEADWALL
(36) (a) REMOVE INLET
(37) (a) REMOVE INLET
(38) (a) REMOVE INLET
(39) (a) REMOVE INLET

(40) (a) REMOVE 54" x34.9' RCP
(b) REMOVE 7.7'x7.7'x10.5' CONCRETE BOX
(c) ABANDON RCB
(d) REMOVE HEADWALL
(e) REMOVE CONCRETE FLUME

(40) (f) REMOVE HEADWALL
(g) REMOVE RCB
(h) REMOVE HEADWALL
(i) REMOVE CONCRETE CHANNEL

(50) (a) REMOVE CATCH BASIN No. 300, W=3'-6",V=3'-6"
(b) REMOVE 18" x18' RCP
(53) (a) REMOVE 18" RCP
(b) REMOVE HEADWALL

(54) (a) REMOVE HEADWALL
(b) REMOVE 18" RCP
(c) REMOVE HEADWALL

(52) (a) JUNCTION STRUCTURE No.3
(b) 18" RCP
(c) GD-1 INLET
(d) 18" RCP
(e) GD-1 INLET
(f) 18" RCP
(g) GD-1 INLET
(h) 18" RCP
(i) GD-1 INLET

(55) (a) 18" RCP
(b) TYPE G4 INLET
(c) 18" RCP

(56) (a) TYPE G4 INLET
(b) 18" RCP

(51) (a) GRATING CATCH BASIN-ALLEY (305-3),V=6.28' (TRANSVERSE)
(b) 18"x 33.3' RCP, 1800D
(c) 18"x 136.7' RCP, 1800D
(d) MODIFIED CURB CATCH BASIN (300-3), W=7', V=5.20' LOCAL DEPRESSION 313-3, CASE E, H=2"

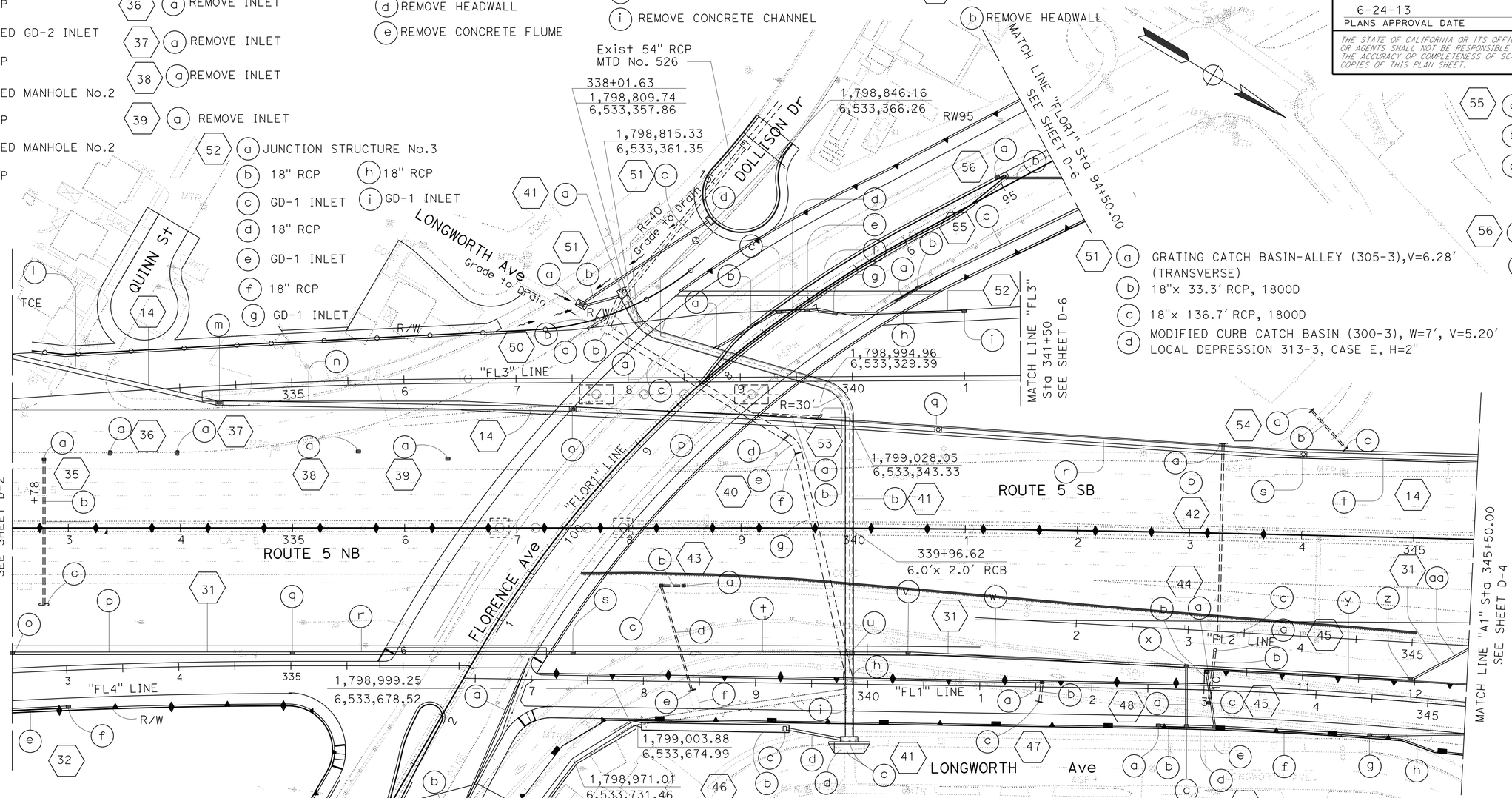

(31) (p) 27" RCP
(q) GD-1 INLET
(r) 27" RCP
(s) GD-1 INLET
(t) 27" RCP
(u) CONCRETE BACKFILL
(v) GD-1 INLET
(w) 24" RCP
(x) GD-1 INLET

(y) 24" RCP
(z) GD-1 INLET
(aa) 24" RCP
(32) (e) 18" RCP
(f) GD-1 INLET

(57) (a) 18" RCP
(b) TYPE G4-INLET
(c) 18" RCP

(41) (a) MANHOLE(RC BOX)
(b) 6'W x 2 H' RC BOX
(c) REMOVE SIDEWALK CULVERT AND CONCRETE DRAIN
(d) CURB OPENING CATCH BASIN (300-3) LOCAL DEPRESSION CASE A, PER 313-3

(43) (a) REMOVE INLET
(b) REMOVE 18" RCP
(c) REMOVE INLET
(d) REMOVE 18" RCP
(e) REMOVE HEADWALL
(f) REMOVE CONCRETE CHANNEL
(48) (a) 24" RCP

(42) (a) REMOVE HEADWALL
(b) REMOVE 24" RCP
(c) REMOVE 24" FES
(44) (a) 18" PLASTIC PIPE
(b) TYPE G4 INLET
(45) (a) REMOVE 24" FES
(b) REMOVE 24" RCP
(c) REMOVE INLET

(49) (a) GD-1 INLET
(b) 24" RCP
(c) GD-1 INLET
(d) 24" RCP
(e) GD-1 INLET
(f) 18" RCP
(g) GD-1 INLET
(h) 18" RCP

(46) (a) TYPE B DRAIN
(b) 6'x 2' CONCRETE CHANNEL
(c) TYPE G1 INLET
(d) 24" RCP

(47) (a) REMOVE INLET
(b) REMOVE 18" RCP
(c) REMOVE HEADWALL

APPROVED FOR DRAINAGE WORK ONLY

DRAINAGE PLAN

SCALE: 1" = 50'

D-3

STATE OF CALIFORNIA - DEPARTMENT OF TRANSPORTATION
Caltrans HYDRAULICS

FUNCTIONAL SUPERVISOR: DAVE BHALLA
CALCULATED-DESIGNED BY: VIC T. VALIDO
CHECKED BY: D. BHALLA
REVISED BY / DATE REVISED

LAST REVISION 08-31-10
DATE PLOTTED => 26-JUN-2013
TIME PLOTTED => 15:28

Dist	COUNTY	ROUTE	POST MILES TOTAL PROJECT	SHEET No.	TOTAL SHEETS
07	LA	5	0.0/7.6	106	985

REGISTERED CIVIL ENGINEER 10-11-12 DATE

6-24-13
PLANS APPROVAL DATE

REGISTERED PROFESSIONAL ENGINEER DAVE BHALLA No. 34350 Exp. 9-30-13 CIVIL STATE OF CALIFORNIA

THE STATE OF CALIFORNIA OR ITS OFFICERS OR AGENTS SHALL NOT BE RESPONSIBLE FOR THE ACCURACY OR COMPLETENESS OF SCANNED COPIES OF THIS PLAN SHEET.

(14) (t) 48" RCP
(u) MODIFIED MANHOLE No. 2
(v) 48" RCP
(w) MODIFIED MANHOLE No. 2
(x) 48" RCP
(y) MODIFIED MANHOLE No. 2
(z) 48" RCP
(aa) MODIFIED MANHOLE No. 2
(bb) JACKED 48" RCP (CLASS V)

(58) (a) REMOVE HEADWALL
(b) REMOVE 24" RCP
(c) REMOVE HEADWALL

(59) (a) REMOVE 24" RCP
(b) REMOVE HEADWALL

(64) (a) REMOVE CONCRETE RIPRAP
(b) REMOVE HEADWALL
(c) REMOVE 24" RCP
(d) CAP INLET
(e) 24" RCP
(f) TYPE G2 INLET
(g) 24" RCP

(65) (a) REMOVE RIPRAP
(b) REMOVE HEADWALL
(c) REMOVE 24" RCP
(d) MANHOLE No. 1 (MH No. 1)

(66) (a) 24" RCP
(b) MANHOLE No. 1
(c) 24" RCP
(d) JUNCTION STRUCTURE No. 3

(67) (a) REMOVE RCB
(b) RCB TRANSITION
(c) REMOVE HEADWALL
(d) REMOVE CONCRETE CHANNEL
(e) 5'x 5' RCB
(f) MANHOLE ON TOP OF RCB
(g) RCB TRANSITION
(h) REMOVE HEADWALL

(68) (a) REMOVE HEADWALL
(b) MANHOLE No. 1 (MH No. 1)
(c) 24" RCP
(d) GD-3 INLET/DEPRESSED APRON
(e) 24" RCP
(f) JUNCTION STRUCTURE No. 3

Exist INLETS & PIPES TO BE PROTECTED WHILE CONSTRUCTING SYSTEM (14)(x) OR IF DAMAGE REPLACE IN KIND

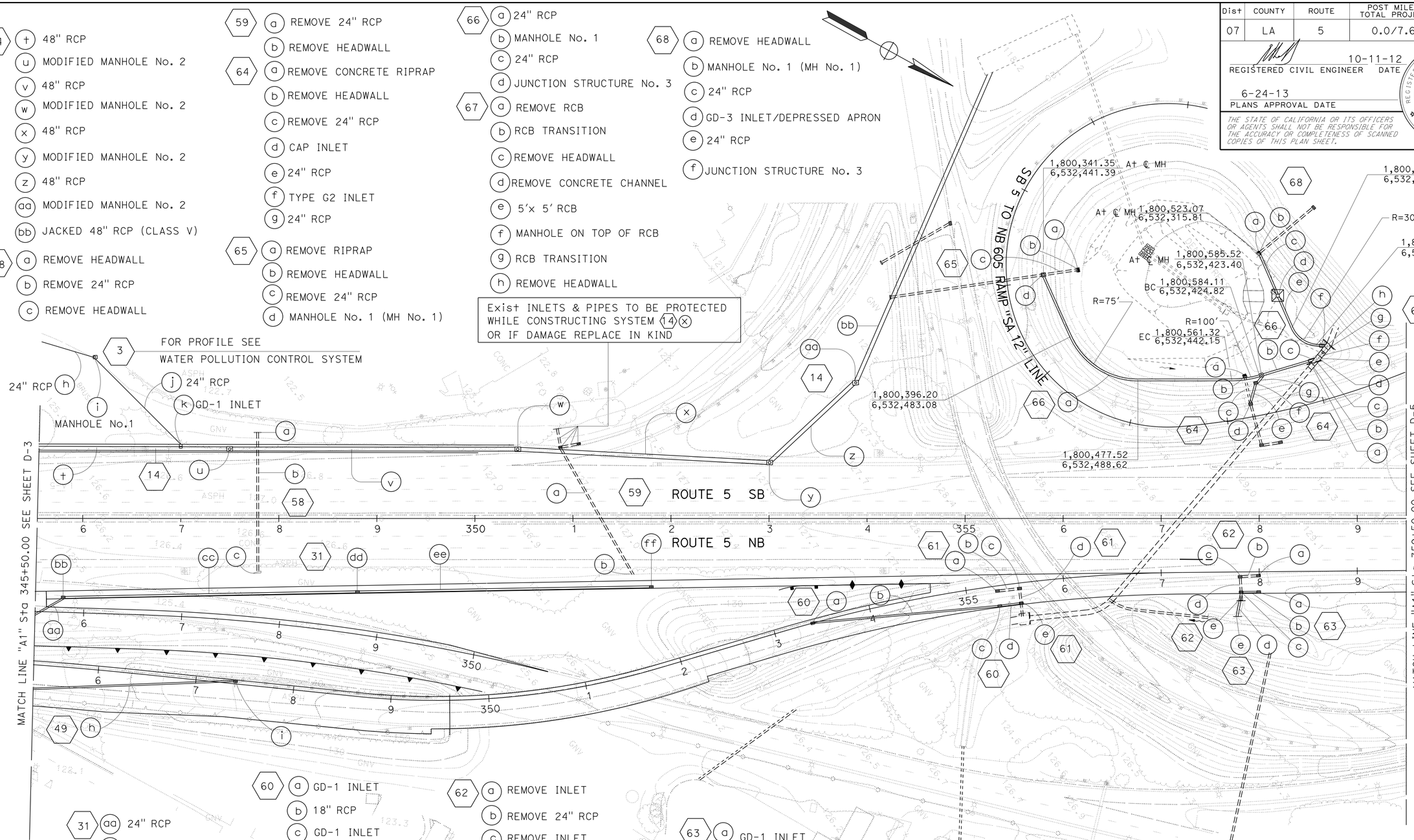

(31) (aa) 24" RCP
(bb) GD-1 INLET
(cc) 24" RCP
(dd) GD-1 INLET
(ee) 24" RCP
(ff) GD-1 INLET

(49) (h) 18" RCP
(i) GD-1 INLET

(60) (a) GD-1 INLET
(b) 18" RCP
(c) GD-1 INLET
(d) 24" RCP

(61) (a) REMOVE INLET
(b) REMOVE 24" RCP
(c) REMOVE INLET
(d) REMOVE 24" RCP
(e) GD-1 INLET

(62) (a) REMOVE INLET
(b) REMOVE 24" RCP
(c) REMOVE INLET
(d) REMOVE 24" RCP
(e) REMOVE HEADWALL

(63) (a) GD-1 INLET
(b) 24" RCP
(c) GD-1 INLET
(d) 24" RCP
(e) STRAIGHT HEADWALL

DRAINAGE PLAN

SCALE: 1" = 50'

D-4

APPROVED FOR DRAINAGE WORK ONLY

STATE OF CALIFORNIA - DEPARTMENT OF TRANSPORTATION
Caltrans
HYDRAULICS

FUNCTIONAL SUPERVISOR: DAVE BHALLA
CALCULATED-DESIGNED BY: VIC T. VALIDO
CHECKED BY: D. BHALLA
REVISED BY
DATE REVISED

LAST REVISION 08-31-10
DATE PLOTTED => 26-JUN-2013
TIME PLOTTED => 15:28

Dist	COUNTY	ROUTE	POST MILES TOTAL PROJECT	SHEET No.	TOTAL SHEETS
07	LA	5	0.0/7.6	107	985

REGISTERED CIVIL ENGINEER DATE 10-11-12

PLANS APPROVAL DATE 6-24-13

REGISTERED PROFESSIONAL ENGINEER DAVE BHALLA No. 34350 Exp. 9-30-13 CIVIL STATE OF CALIFORNIA

THE STATE OF CALIFORNIA OR ITS OFFICERS OR AGENTS SHALL NOT BE RESPONSIBLE FOR THE ACCURACY OR COMPLETENESS OF SCANNED COPIES OF THIS PLAN SHEET.

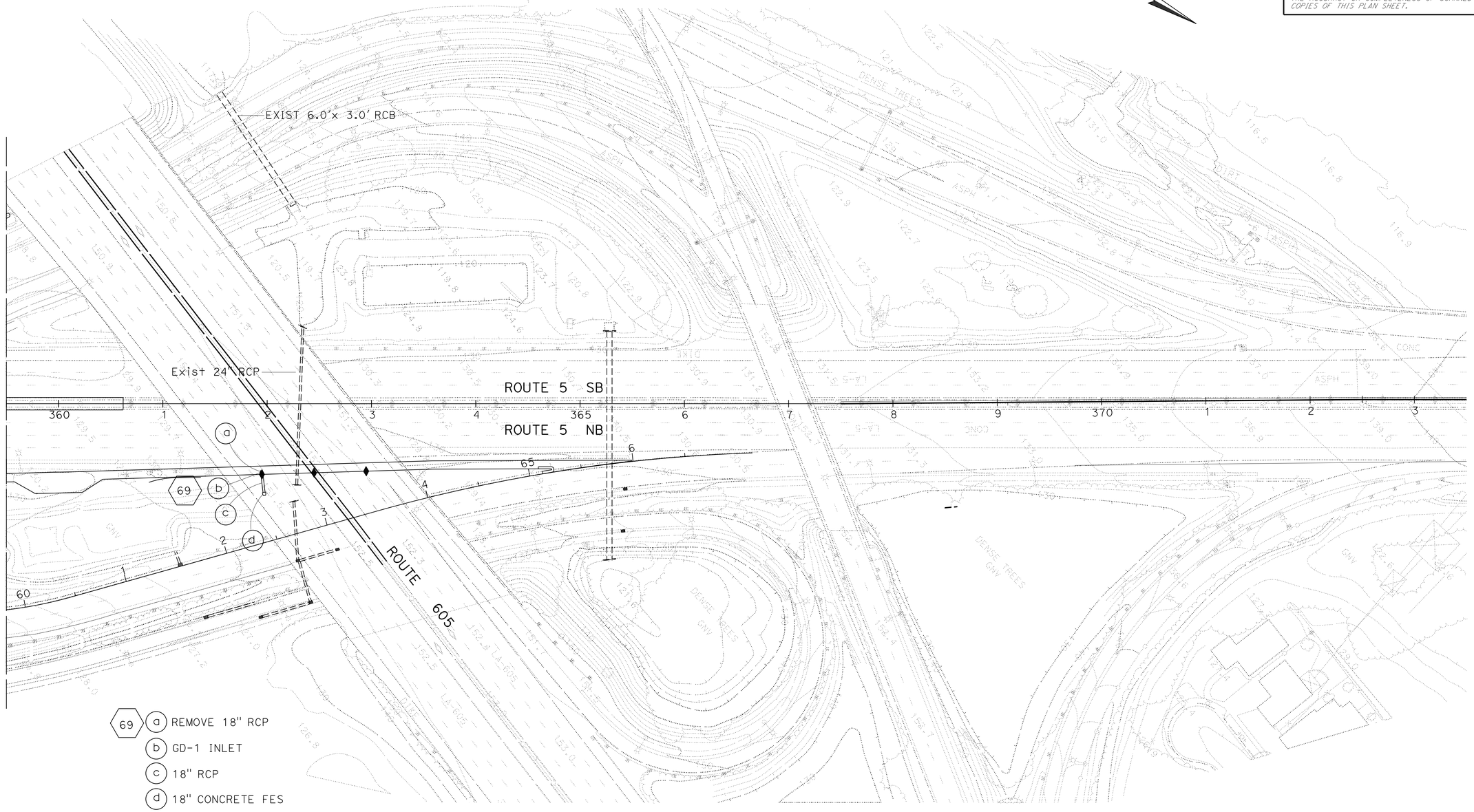

69 (a) REMOVE 18" RCP

(b) GD-1 INLET

(c) 18" RCP

(d) 18" CONCRETE FES

DRAINAGE PLAN

SCALE: 1" = 50'

D-5

APPROVED FOR DRAINAGE WORK ONLY

STATE OF CALIFORNIA - DEPARTMENT OF TRANSPORTATION

Caltrans

HYDRAULICS

FUNCTIONAL SUPERVISOR: DAVE BHALLA

CALCULATED-DESIGNED BY: VIC T. VALIDO

CHECKED BY: D. BHALLA

REVISED BY

DATE REVISED

LAST REVISION 08-31-10

DATE PLOTTED => 26-JUN-2013

TIME PLOTTED => 15:28

Dist	COUNTY	ROUTE	POST MILES TOTAL PROJECT	SHEET No.	TOTAL SHEETS
07	LA	5	0.0/7.6	108	985

REGISTERED CIVIL ENGINEER 10-11-12 DATE

6-24-13
PLANS APPROVAL DATE

REGISTERED PROFESSIONAL ENGINEER DAVE BHALLA No. 34350 Exp. 9-30-13 CIVIL STATE OF CALIFORNIA

THE STATE OF CALIFORNIA OR ITS OFFICERS OR AGENTS SHALL NOT BE RESPONSIBLE FOR THE ACCURACY OR COMPLETENESS OF SCANNED COPIES OF THIS PLAN SHEET.

(70) (a) REMOVE 27" x 192.0' RCP
(b) 27" x 192.0' RCP
(c) ADJUST MANHOLE TO GRADE
(d) REMOVE 27" x 324.0' RCP
(e) 27" x 324.0' RCP
(f) 18" x 80.3' RCP
(g) G4 INLET

(71) (a) ADJUST MANHOLE TO GRADE

(72) (a) ADJUST MANHOLE TO GRADE

(73) (a) Mod CURB OPENING CATCH BASIN PER (300-3) W=7', SEE SECTION A-A THIS SHEET
(b) REMOVE CATCH BASIN

(74) (a) CURB OPENING CATCH BASIN PER (300-3) W=14', LOCAL DEPRESSION CASE A
(b) 18" x 3.4' RCP, 1400D
(c) REMOVE CATCH BASIN

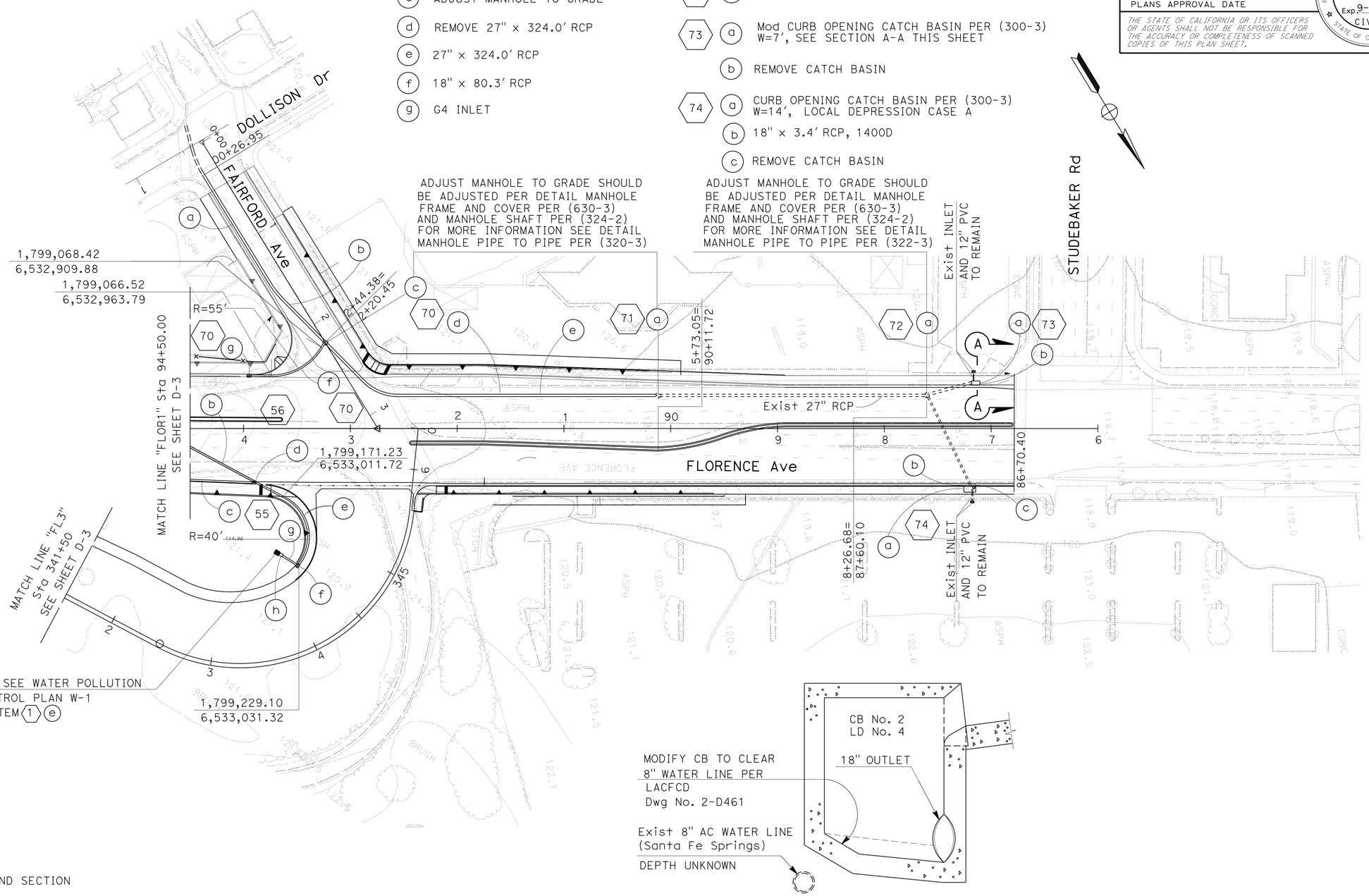

(55) (c) 18" RCP
(d) G4 INLET
(e) 18" RCP
(f) GD-1 INLET
(g) 18" RCP
(h) CONCRETE FLARED END SECTION

SECTION A-A
NO SCALE

DRAINAGE SYSTEM (73) (a)

DRAINAGE PLAN

SCALE: 1" = 50'

D-6

APPROVED FOR DRAINAGE WORK ONLY

STATE OF CALIFORNIA - DEPARTMENT OF TRANSPORTATION
Caltrans
HYDRAULICS

FUNCTIONAL SUPERVISOR: DAVE BHALLA
CALCULATED-DESIGNED BY: VIC T. VALIDO
CHECKED BY: D. BHALLA
REVISED BY
DATE REVISED

LAST REVISION 08-31-10
DATE PLOTTED => 26-JUN-2013
TIME PLOTTED => 15:28

Dist	COUNTY	ROUTE	POST MILES TOTAL PROJECT	SHEET No.	TOTAL SHEETS
07	LA	5	0.0/7.6	109	985

REGISTERED CIVIL ENGINEER DATE 10-11-12

6-24-13
PLANS APPROVAL DATE

REGISTERED PROFESSIONAL ENGINEER DAVE BHALLA No. 34350 Exp. 9-30-13 CIVIL STATE OF CALIFORNIA

THE STATE OF CALIFORNIA OR ITS OFFICERS OR AGENTS SHALL NOT BE RESPONSIBLE FOR THE ACCURACY OR COMPLETENESS OF SCANNED COPIES OF THIS PLAN SHEET.

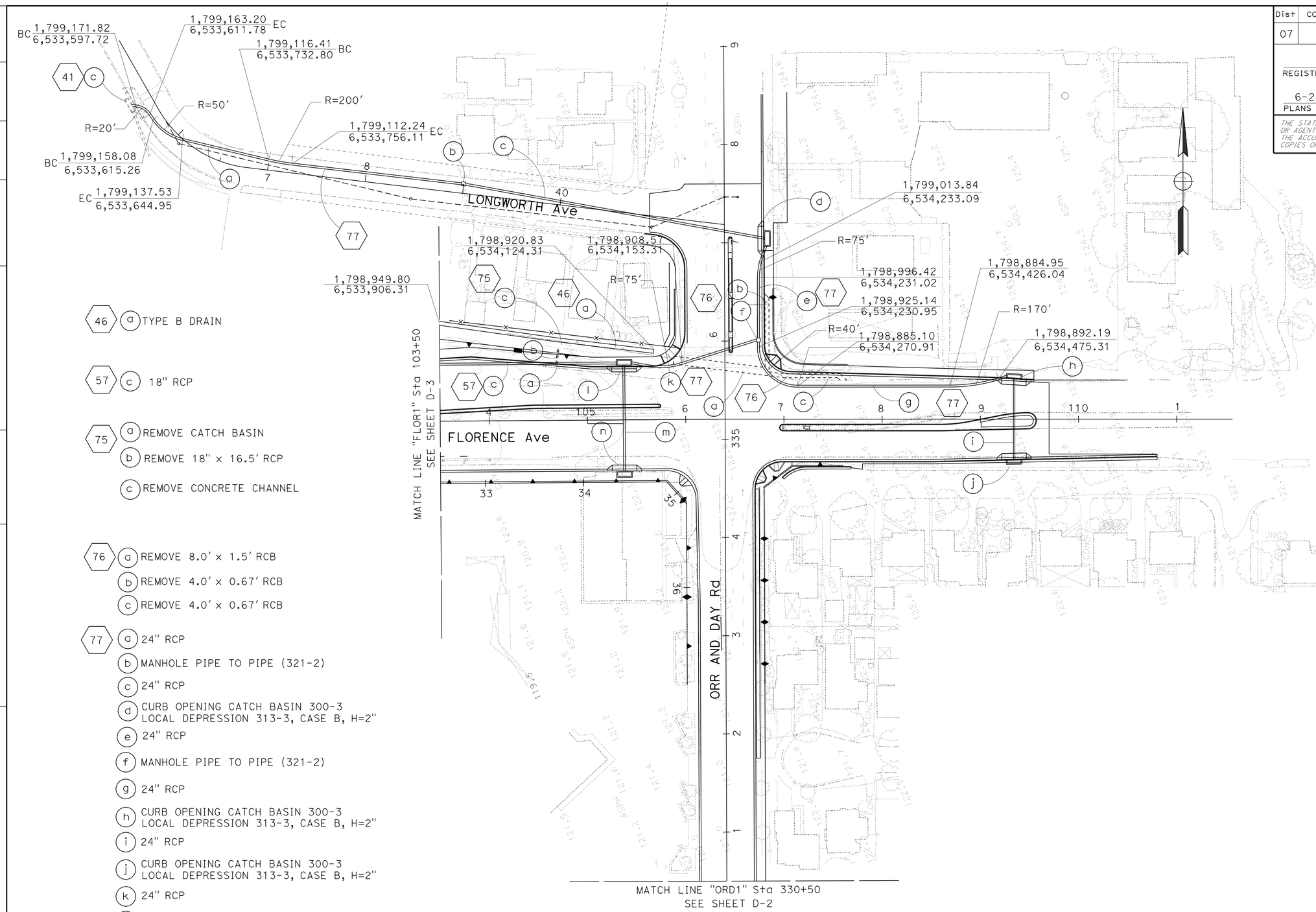

46 (a) TYPE B DRAIN

57 (c) 18" RCP

75
- (a) REMOVE CATCH BASIN
- (b) REMOVE 18" x 16.5′ RCP
- (c) REMOVE CONCRETE CHANNEL

76
- (a) REMOVE 8.0′ x 1.5′ RCB
- (b) REMOVE 4.0′ x 0.67′ RCB
- (c) REMOVE 4.0′ x 0.67′ RCB

77
- (a) 24" RCP
- (b) MANHOLE PIPE TO PIPE (321-2)
- (c) 24" RCP
- (d) CURB OPENING CATCH BASIN 300-3 LOCAL DEPRESSION 313-3, CASE B, H=2"
- (e) 24" RCP
- (f) MANHOLE PIPE TO PIPE (321-2)
- (g) 24" RCP
- (h) CURB OPENING CATCH BASIN 300-3 LOCAL DEPRESSION 313-3, CASE B, H=2"
- (i) 24" RCP
- (j) CURB OPENING CATCH BASIN 300-3 LOCAL DEPRESSION 313-3, CASE B, H=2"
- (k) 24" RCP
- (l) CURB OPENING CATCH BASIN 300-3 LOCAL DEPRESSION 313-3, CASE B, H=2"
- (m) 24" RCP
- (n) CURB OPENING CATCH BASIN 300-3 LOCAL DEPRESSION 313-3, CASE B, H=2"

DRAINAGE PLAN

SCALE: 1" = 50′

D-7

APPROVED FOR DRAINAGE WORK ONLY

STATE OF CALIFORNIA - DEPARTMENT OF TRANSPORTATION
Caltrans
HYDRAULICS

FUNCTIONAL SUPERVISOR: DAVE BHALLA
CALCULATED-DESIGNED BY: D. BHALLA
CHECKED BY: VIC T. VALIDO
REVISED BY / DATE REVISED

LAST REVISION 08-31-10
DATE PLOTTED => 26-JUN-2013
TIME PLOTTED => 15:28

Dist	COUNTY	ROUTE	POST MILES TOTAL PROJECT	SHEET No.	TOTAL SHEETS
07	LA	5	0.0/7.6	110	985

REGISTERED CIVIL ENGINEER DATE 10-11-12

6-24-13
PLANS APPROVAL DATE

REGISTERED PROFESSIONAL ENGINEER
DAVE BHALLA
No. 34350
Exp. 9/30/13
CIVIL
STATE OF CALIFORNIA

THE STATE OF CALIFORNIA OR ITS OFFICERS OR AGENTS SHALL NOT BE RESPONSIBLE FOR THE ACCURACY OR COMPLETENESS OF SCANNED COPIES OF THIS PLAN SHEET.

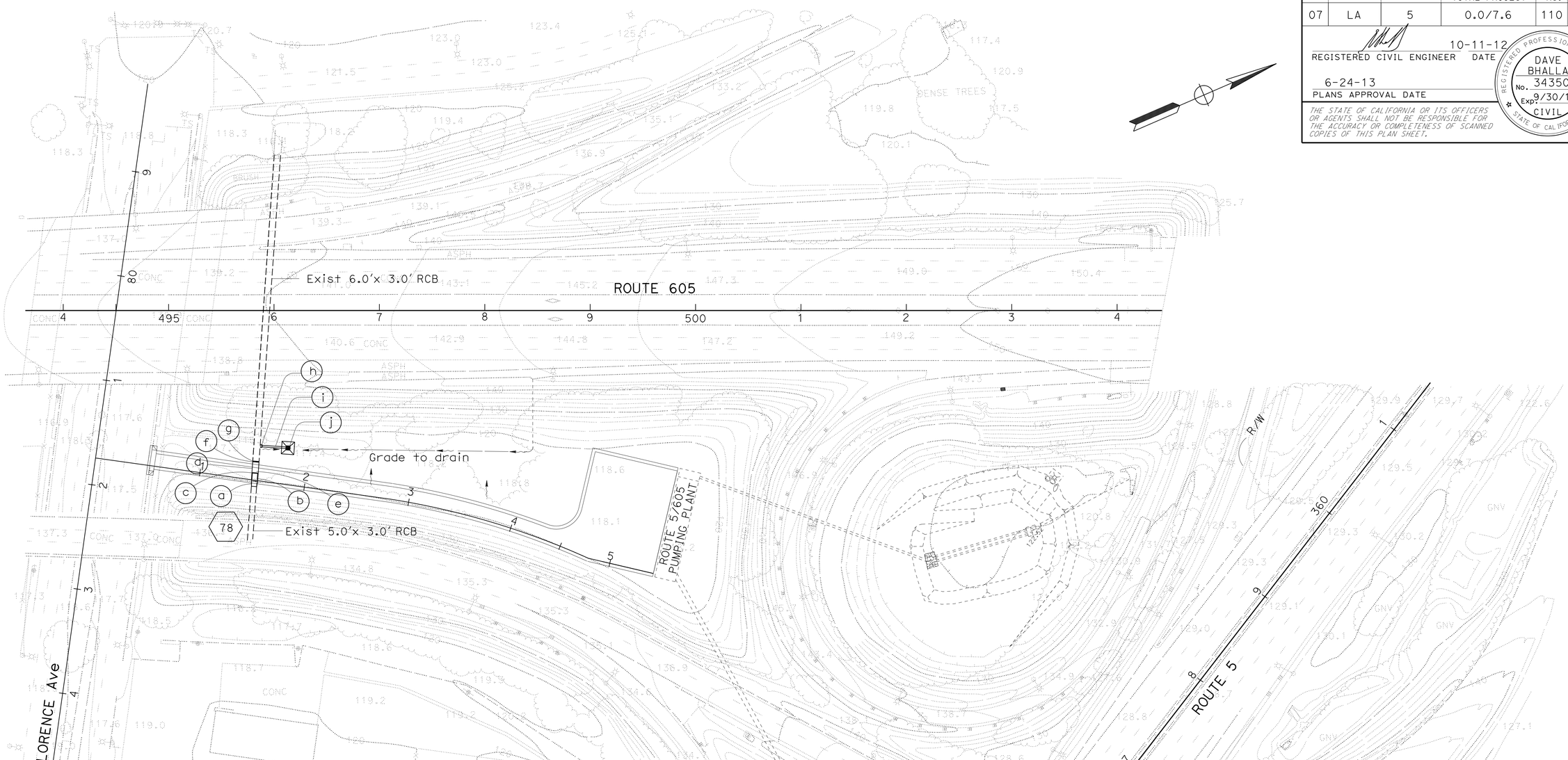

78 (a) TRANSITION 5.0' x 3.0' RCB TO 6.0'x 3.0' RCB

(b) REMOVE 5.0'x 3.0'x 12.5' RCB

(c) REMOVE HEADWALL

(d) 6.0'x 3.0'x 19.0' RCB

(e) REMOVE RECTANGULAR CONCRETE CHANNEL

(f) REMOVE HEADWALL

(g) REMOVE 6.0'x 3.0'x 1.0' RCB

(h) JUNCTION STRUCTURE No. 3 (J.S.3)

(i) 18" RCP

(j) GD-3 INLET/ W DEPRESSED APRON

DRAINAGE PLAN

SCALE: 1" = 50'

D-8

APPROVED FOR DRAINAGE WORK ONLY

STATE OF CALIFORNIA - DEPARTMENT OF TRANSPORTATION
Caltrans
HYDRAULICS

FUNCTIONAL SUPERVISOR: DAVE BHALLA
CALCULATED-DESIGNED BY: VIC T. VALIDO
CHECKED BY: D. BHALLA
REVISED BY
DATE REVISED

LAST REVISION 08-31-10
DATE PLOTTED => 26-JUN-2013
TIME PLOTTED => 15:28

Dist	COUNTY	ROUTE	POST MILES TOTAL PROJECT	SHEET No.	TOTAL SHEETS
07	LA	5	0.0/7.6	111	985

REGISTERED CIVIL ENGINEER 10-11-12 DATE

6-24-13
PLANS APPROVAL DATE

REGISTERED PROFESSIONAL ENGINEER DAVE BHALLA No. 34350 Exp. 9-30-13 CIVIL STATE OF CALIFORNIA

THE STATE OF CALIFORNIA OR ITS OFFICERS OR AGENTS SHALL NOT BE RESPONSIBLE FOR THE ACCURACY OR COMPLETENESS OF SCANNED COPIES OF THIS PLAN SHEET.

NOTE:

THE CONTRACTOR SHALL VERIFY ELEVATIONS OF EXISTING DRAINAGE SYSTEMS PRIOR TO COMMENCEMENT OF WORK.

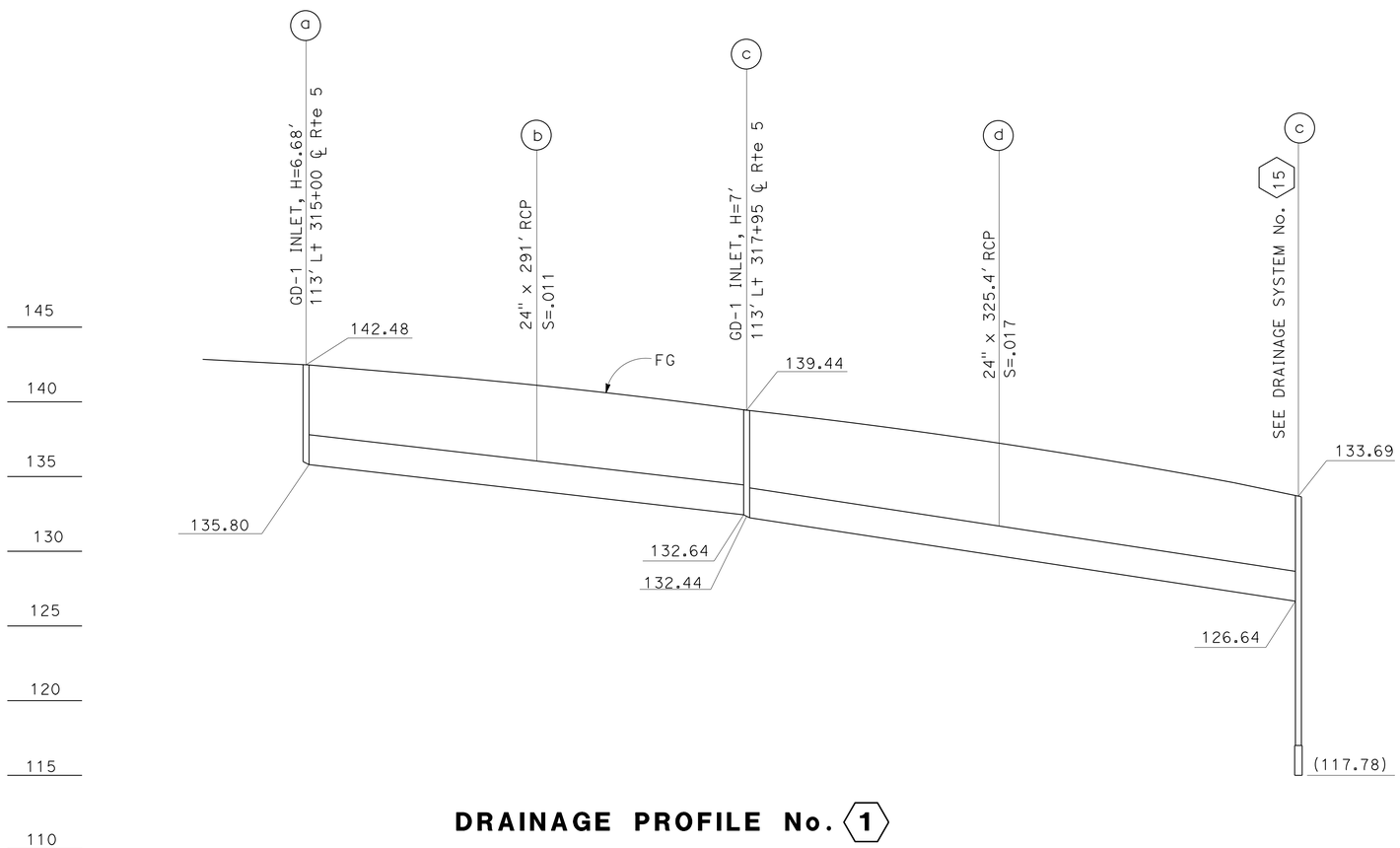

DRAINAGE PROFILE No. 1

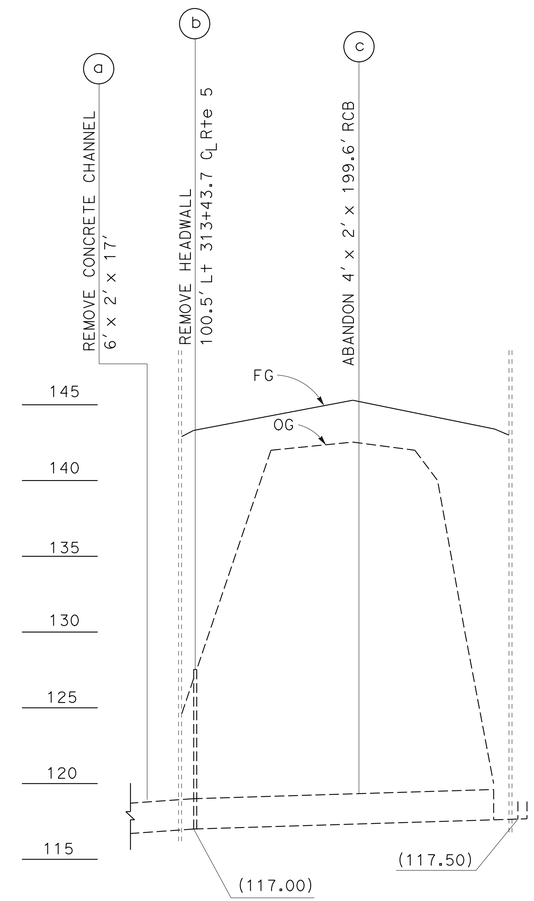

DRAINAGE PROFILE No. 2

DRAINAGE PROFILES

SCALE: Horiz 1" = 50'
Vert 1" = 5'

DP-1

STATE OF CALIFORNIA - DEPARTMENT OF TRANSPORTATION
Caltrans
HYDRAULICS

FUNCTIONAL SUPERVISOR: DAVE BHALLA
CALCULATED-DESIGNED BY: VIC T. VALIDO
CHECKED BY: D. BHALLA
REVISED BY
DATE REVISED

LAST REVISION 10-20-12
DATE PLOTTED => 26-JUN-2013
TIME PLOTTED => 15:28

Dist	COUNTY	ROUTE	POST MILES TOTAL PROJECT	SHEET No.	TOTAL SHEETS
07	LA	5	0.0/7.6	112	985

REGISTERED CIVIL ENGINEER 10-11-12 DATE

6-24-13
PLANS APPROVAL DATE

REGISTERED PROFESSIONAL ENGINEER DAVE BHALLA No. 34350 Exp. 9-30-13 CIVIL STATE OF CALIFORNIA

THE STATE OF CALIFORNIA OR ITS OFFICERS OR AGENTS SHALL NOT BE RESPONSIBLE FOR THE ACCURACY OR COMPLETENESS OF SCANNED COPIES OF THIS PLAN SHEET.

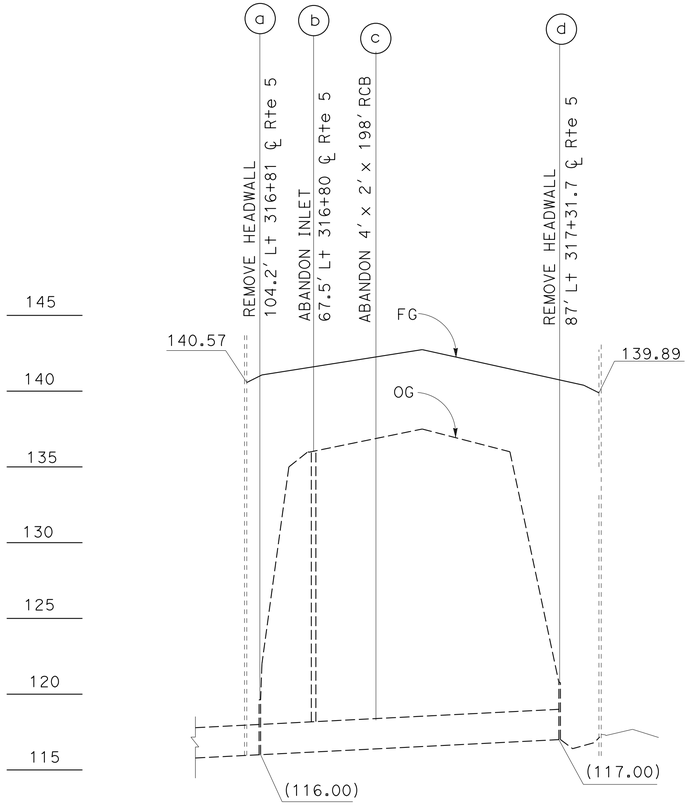

DRAINAGE PROFILE No. 3

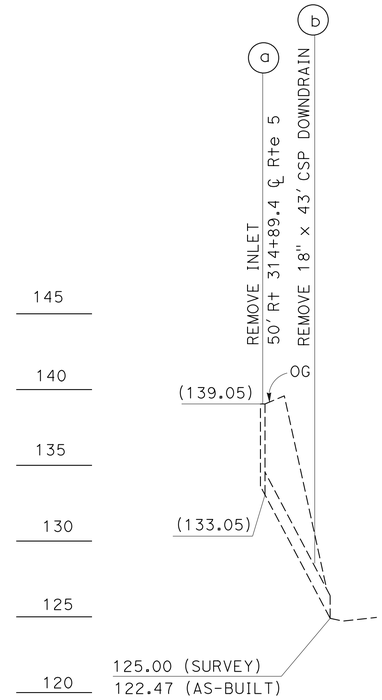

DRAINAGE PROFILE No. 4

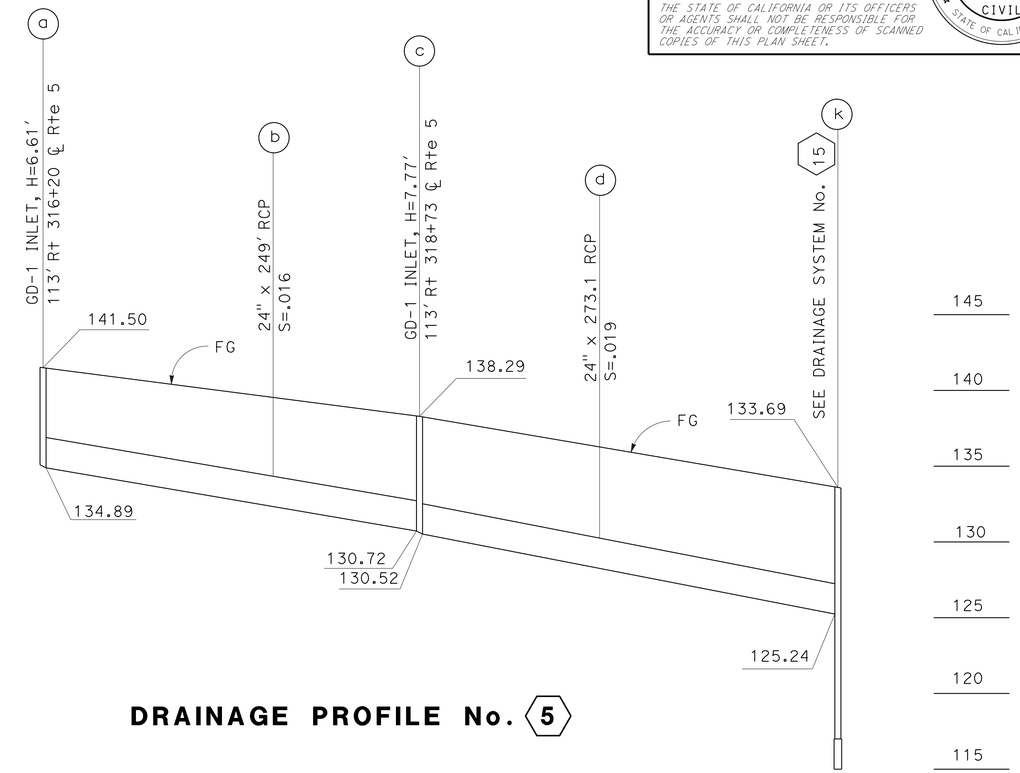

DRAINAGE PROFILE No. 5

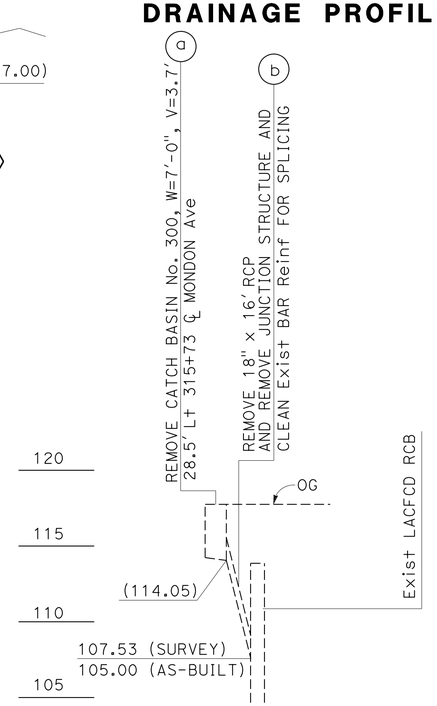

DRAINAGE PROFILE No. 7

DRAINAGE PROFILES

SCALE: Horiz 1" = 50'
Vert 1" = 5'

DP-2

STATE OF CALIFORNIA - DEPARTMENT OF TRANSPORTATION
Caltrans® HYDRAULICS

FUNCTIONAL SUPERVISOR: DAVE BHALLA
CALCULATED-DESIGNED BY: VIC T. VALIDO
CHECKED BY: D. BHALLA
REVISED BY
DATE REVISED

LAST REVISION 10-20-12
DATE PLOTTED => 26-JUN-2013
TIME PLOTTED => 15:29

Dist	COUNTY	ROUTE	POST MILES TOTAL PROJECT	SHEET No.	TOTAL SHEETS
07	LA	5	0.0/7.6	113	985

REGISTERED CIVIL ENGINEER 10-11-12 DATE

6-24-13
PLANS APPROVAL DATE

REGISTERED PROFESSIONAL ENGINEER DAVE BHALLA No. 34350 Exp. 9-30-13 CIVIL STATE OF CALIFORNIA

THE STATE OF CALIFORNIA OR ITS OFFICERS OR AGENTS SHALL NOT BE RESPONSIBLE FOR THE ACCURACY OR COMPLETENESS OF SCANNED COPIES OF THIS PLAN SHEET.

DRAINAGE SYSTEM	DRAINAGE UNIT	STATION	DESCRIPTION
13	a	320+10.05	REMOVE INLET

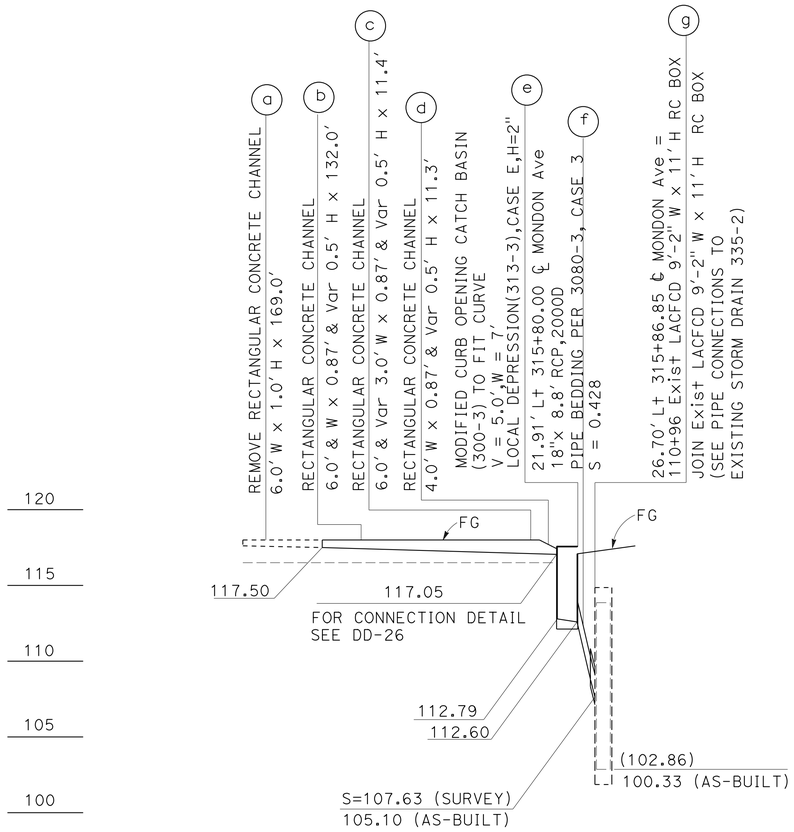

DRAINAGE SYSTEM No. 6

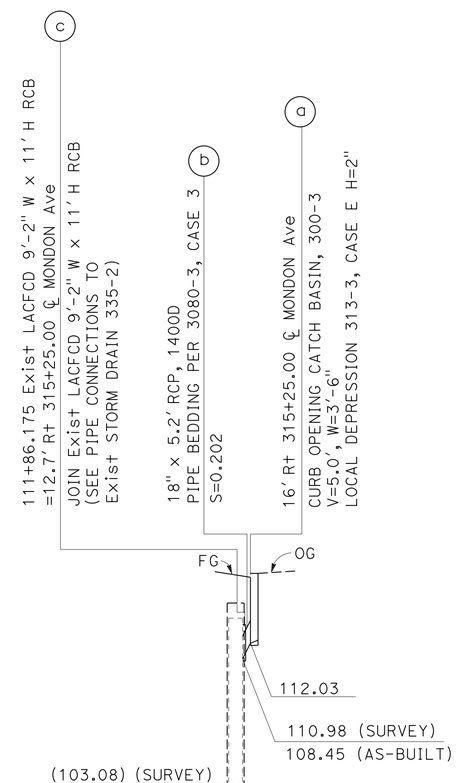

DRAINAGE PROFILE No. 11

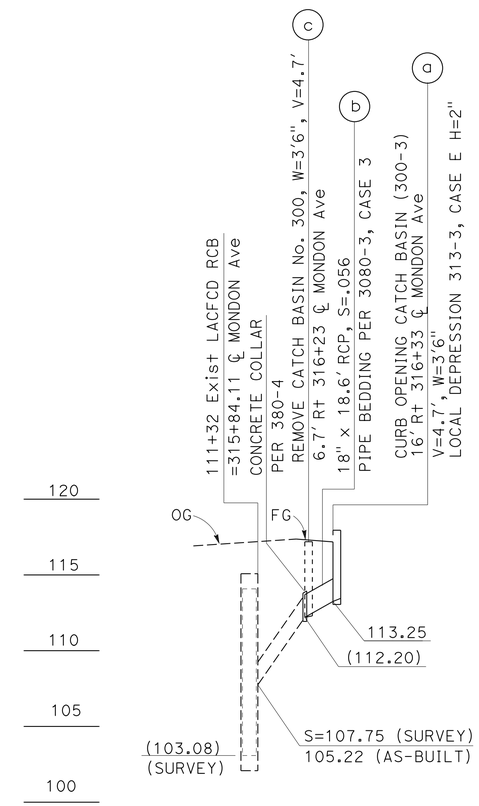

DRAINAGE PROFILE No. 10

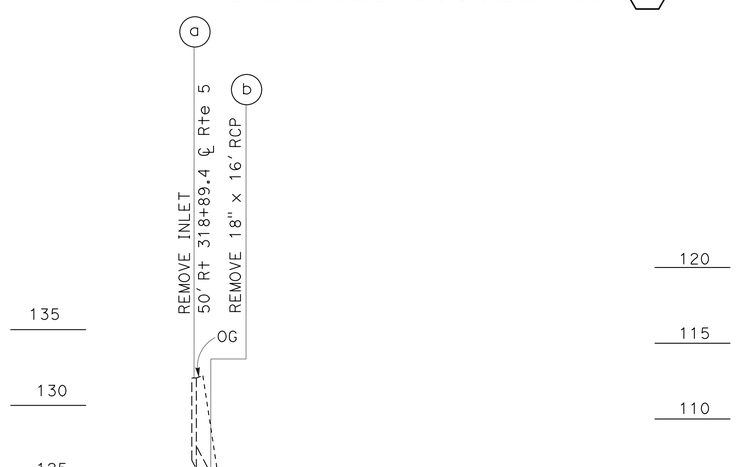

DRAINAGE SYSTEM No. 12

DRAINAGE PROFILES

SCALE: Horiz 1" = 50'
Vert 1" = 5'

DP-3

STATE OF CALIFORNIA - DEPARTMENT OF TRANSPORTATION
Caltrans® HYDRAULICS

FUNCTIONAL SUPERVISOR: DAVE BHALLA
CALCULATED-DESIGNED BY: VIC T. VALIDO
CHECKED BY: D. BHALLA
REVISED BY
DATE REVISED

LAST REVISION 10-20-12
DATE PLOTTED => 26-JUN-2013
TIME PLOTTED => 15:29

Dist	COUNTY	ROUTE	POST MILES TOTAL PROJECT	SHEET No.	TOTAL SHEETS
07	LA	5	0.0/7.6	114	985

REGISTERED CIVIL ENGINEER 10-11-12 DATE

6-24-13
PLANS APPROVAL DATE

REGISTERED PROFESSIONAL ENGINEER
DAVE BHALLA
No. 34350
Exp. 9-30-13
CIVIL
STATE OF CALIFORNIA

THE STATE OF CALIFORNIA OR ITS OFFICERS OR AGENTS SHALL NOT BE RESPONSIBLE FOR THE ACCURACY OR COMPLETENESS OF SCANNED COPIES OF THIS PLAN SHEET.

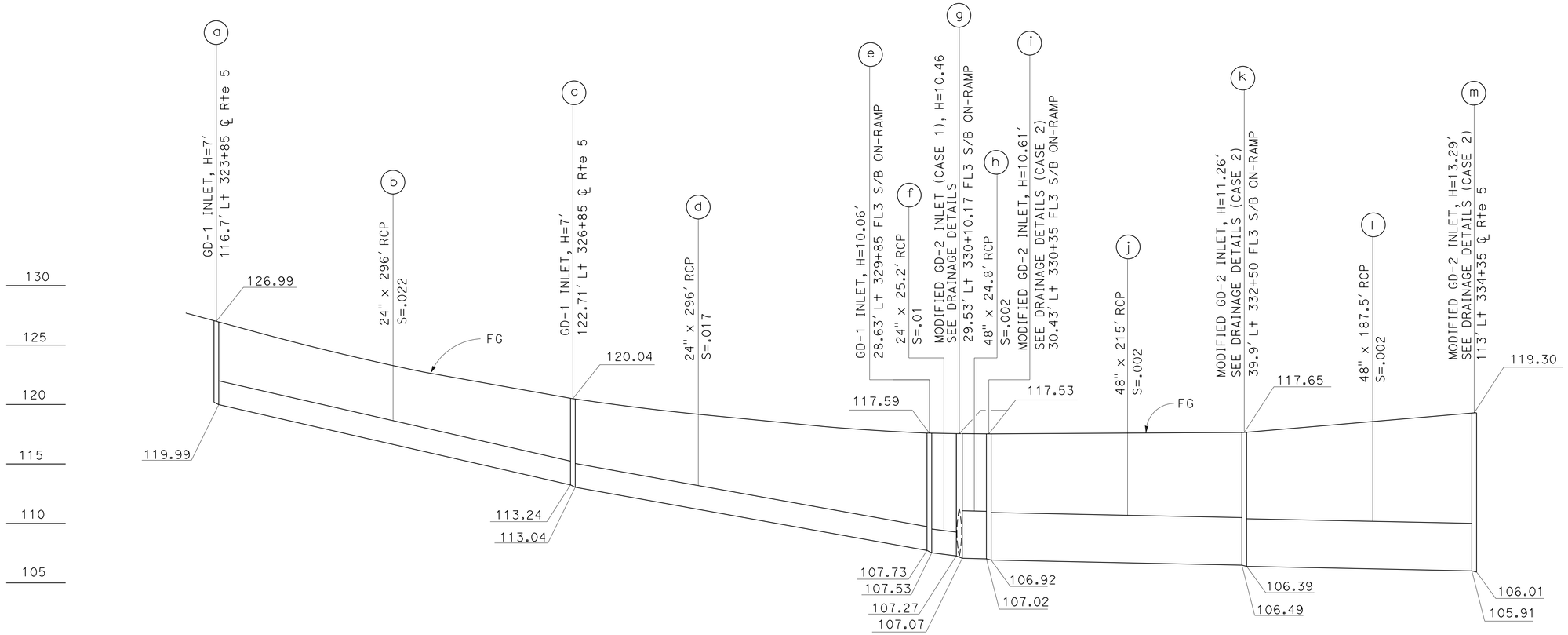

DRAINAGE PROFILE No. 14

DRAINAGE PROFILES

SCALE: Horiz 1" = 50′
Vert 1" = 5′

DP-4

STATE OF CALIFORNIA - DEPARTMENT OF TRANSPORTATION
Caltrans
HYDRAULICS

FUNCTIONAL SUPERVISOR: DAVE BHALLA
CALCULATED-DESIGNED BY: VIC T. VALIDO
CHECKED BY: D. BHALLA
REVISED BY
DATE REVISED

LAST REVISION 10-20-12
DATE PLOTTED => 26-JUN-2013
TIME PLOTTED => 15:29

Dist	COUNTY	ROUTE	POST MILES TOTAL PROJECT	SHEET No.	TOTAL SHEETS
07	LA	5	0.0/7.6	115	985

REGISTERED CIVIL ENGINEER 10-11-12 DATE

6-24-13
PLANS APPROVAL DATE

REGISTERED PROFESSIONAL ENGINEER
DAVE BHALLA
No. 34350
Exp. 9-30-13
CIVIL
STATE OF CALIFORNIA

THE STATE OF CALIFORNIA OR ITS OFFICERS OR AGENTS SHALL NOT BE RESPONSIBLE FOR THE ACCURACY OR COMPLETENESS OF SCANNED COPIES OF THIS PLAN SHEET.

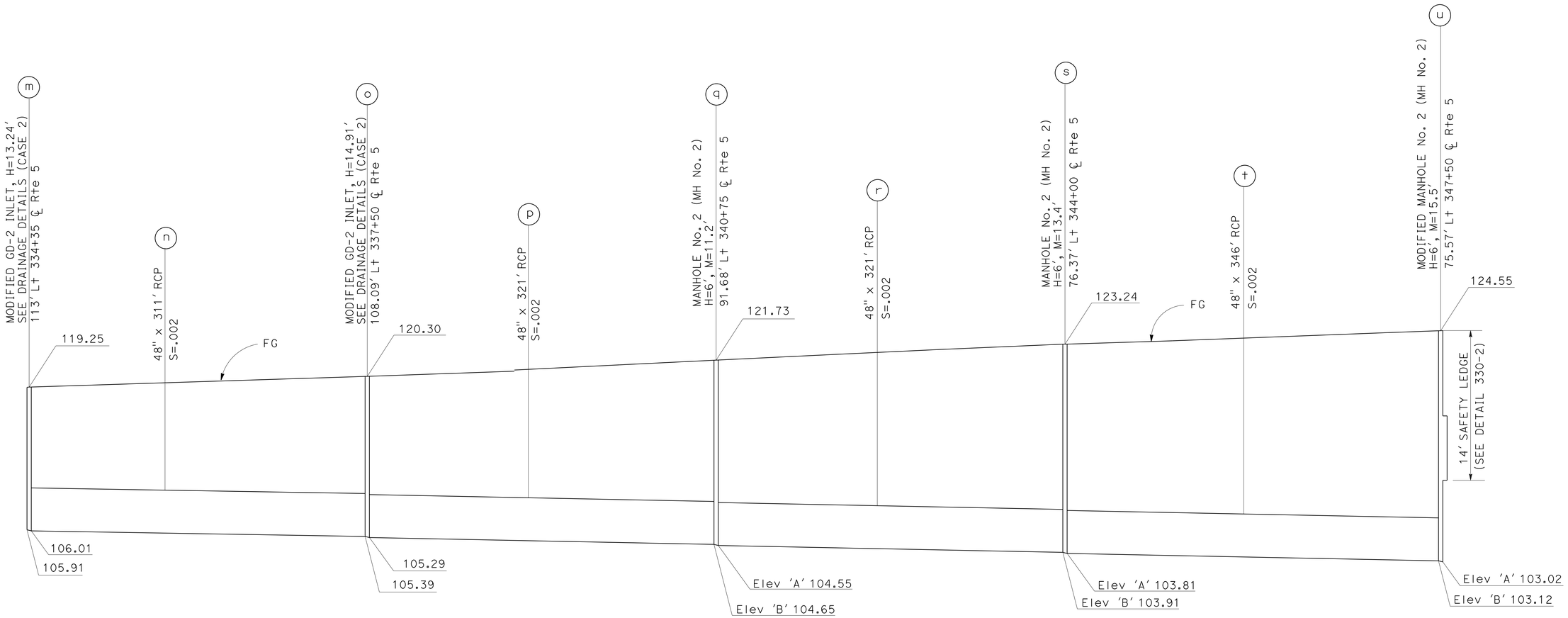

DRAINAGE SYSTEM No. 14

DRAINAGE PROFILES

SCALE: Horiz 1" = 50'
Vert 1" = 5'

DP-5

CALCULATED-DESIGNED BY	VIC T. VALIDO	REVISED BY
CHECKED BY	D. BHALLA	DATE REVISED

FUNCTIONAL SUPERVISOR: DAVE BHALLA

STATE OF CALIFORNIA - DEPARTMENT OF TRANSPORTATION
Caltrans
HYDRAULICS

LAST REVISION 10-20-12 | DATE PLOTTED => 26-JUN-2013 | TIME PLOTTED => 15:37

Dist	COUNTY	ROUTE	POST MILES TOTAL PROJECT	SHEET No.	TOTAL SHEETS
07	LA	5	0.0/7.6	116	985

REGISTERED CIVIL ENGINEER 10-11-12 DATE

6-24-13
PLANS APPROVAL DATE

REGISTERED PROFESSIONAL ENGINEER DAVE BHALLA No. 34350 Exp. 9-30-13 CIVIL STATE OF CALIFORNIA

THE STATE OF CALIFORNIA OR ITS OFFICERS OR AGENTS SHALL NOT BE RESPONSIBLE FOR THE ACCURACY OR COMPLETENESS OF SCANNED COPIES OF THIS PLAN SHEET.

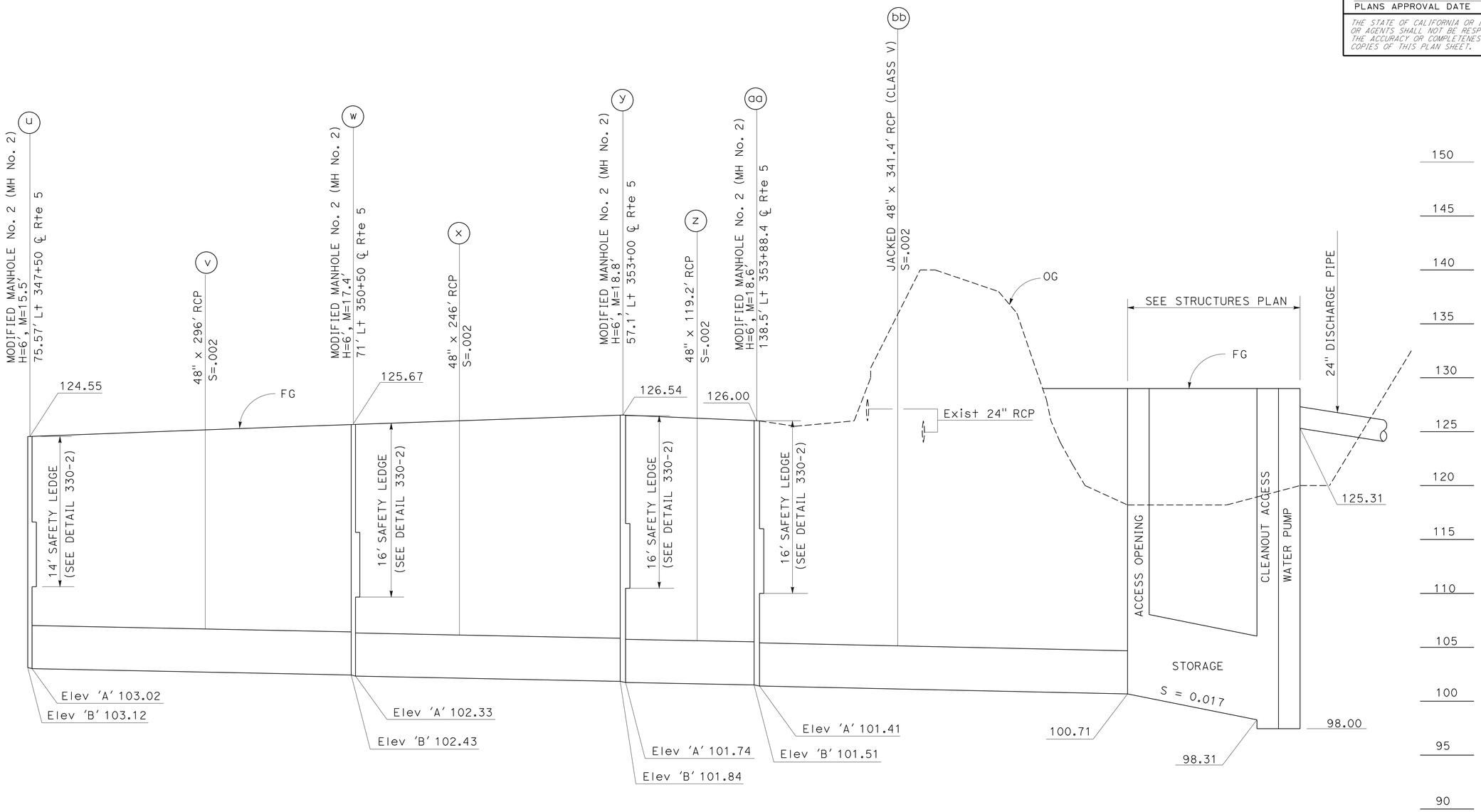

DRAINAGE SYSTEM No. 14

DRAINAGE PROFILES

SCALE: Horiz 1" = 50'
Vert 1" = 5'

DP-6

STATE OF CALIFORNIA - DEPARTMENT OF TRANSPORTATION
Caltrans
HYDRAULICS

FUNCTIONAL SUPERVISOR: DAVE BHALLA
CALCULATED-DESIGNED BY: VIC T. VALIDO
CHECKED BY: D. BHALLA
REVISED BY
DATE REVISED

LAST REVISION 10-20-12
DATE PLOTTED => 26-JUN-2013
TIME PLOTTED => 15:37

Dist	COUNTY	ROUTE	POST MILES TOTAL PROJECT	SHEET No.	TOTAL SHEETS
07	LA	5	0.0/7.6	117	985

REGISTERED CIVIL ENGINEER 10-11-12 DATE

6-24-13
PLANS APPROVAL DATE

REGISTERED PROFESSIONAL ENGINEER DAVE BHALLA No. 34350 Exp. 9-30-13 CIVIL STATE OF CALIFORNIA

THE STATE OF CALIFORNIA OR ITS OFFICERS OR AGENTS SHALL NOT BE RESPONSIBLE FOR THE ACCURACY OR COMPLETENESS OF SCANNED COPIES OF THIS PLAN SHEET.

DRAINAGE SYSTEM	DRAINAGE UNIT	STATION	DESCRIPTION
16	a	52.5' Rt 321+87 ℄ Rte 5	REMOVE INLET
17	a	67.25' Lt 323+34 ℄ Rte 5	REMOVE INLET
18	a	67.25' Lt 323+79 ℄ Rte 5	REMOVE INLET
19	a	67.25' Lt 324+50 ℄ Rte 5	REMOVE INLET
21	a	67.25' Lt 325+18 ℄ Rte 5	REMOVE INLET
22	a	67.25' Lt 325+98 ℄ Rte 5	REMOVE INLET
23	a	67.25' Lt 326+78 ℄ Rte 5	REMOVE INLET
24	a	67.25' Lt 327+58 ℄ Rte 5	REMOVE INLET
25	a	67.25' Lt 328+38 ℄ Rte 5	REMOVE INLET
26	a	67.25' Lt 329+18 ℄ Rte 5	REMOVE INLET
27	a	67.25' Lt 329+97 ℄ Rte 5	REMOVE INLET
28	a	67.25' Lt 330+17 ℄ Rte 5	REMOVE INLET
29	a	67.25' Lt 331+58 ℄ Rte 5	REMOVE INLET
30	a	67.25' Lt 332+16 ℄ Rte 5	REMOVE INLET

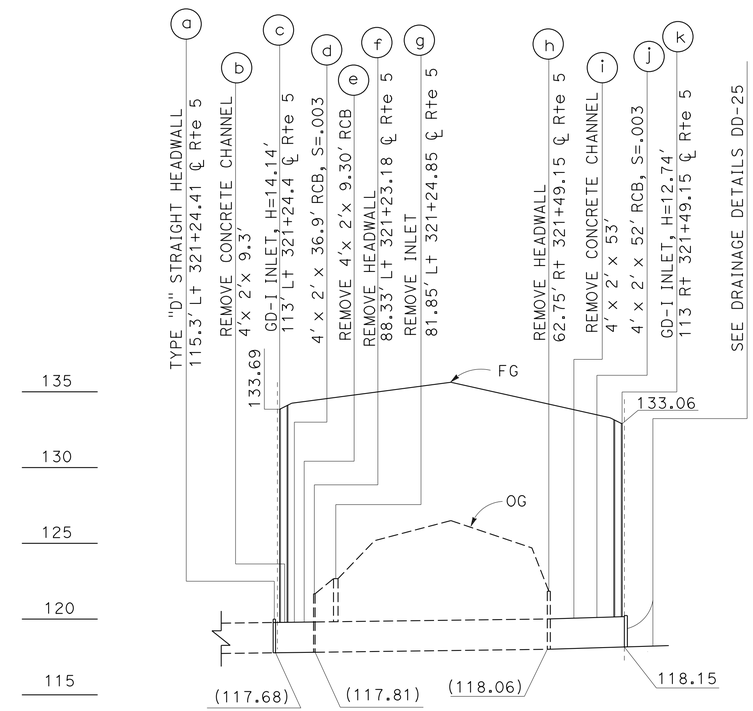

DRAINAGE PROFILE No. 15

DRAINAGE PROFILES

SCALE: Horiz 1" = 50'
Vert 1" = 5'

DP-7

STATE OF CALIFORNIA - DEPARTMENT OF TRANSPORTATION
Caltrans
HYDRAULICS

FUNCTIONAL SUPERVISOR: DAVE BHALLA
CALCULATED-DESIGNED BY: VIC T. VALIDO
CHECKED BY: D. BHALLA
REVISED BY
DATE REVISED

LAST REVISION 10-20-12
DATE PLOTTED => 26-JUN-2013
TIME PLOTTED => 15:37

Dist	COUNTY	ROUTE	POST MILES TOTAL PROJECT	SHEET No.	TOTAL SHEETS
07	LA	5	0.0/7.6	118	985

REGISTERED CIVIL ENGINEER 10-11-12 DATE

6-24-13
PLANS APPROVAL DATE

REGISTERED PROFESSIONAL ENGINEER DAVE BHALLA No. 34350 Exp. 9-30-13 CIVIL STATE OF CALIFORNIA

THE STATE OF CALIFORNIA OR ITS OFFICERS OR AGENTS SHALL NOT BE RESPONSIBLE FOR THE ACCURACY OR COMPLETENESS OF SCANNED COPIES OF THIS PLAN SHEET.

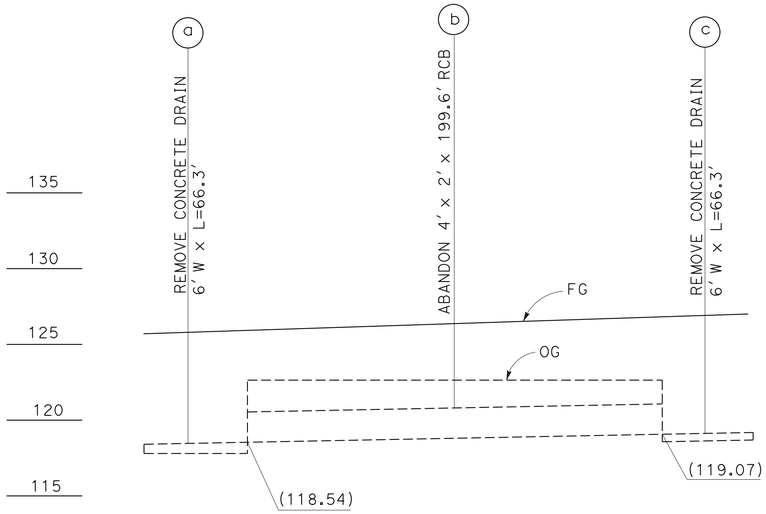

DRAINAGE SYSTEM No. 20

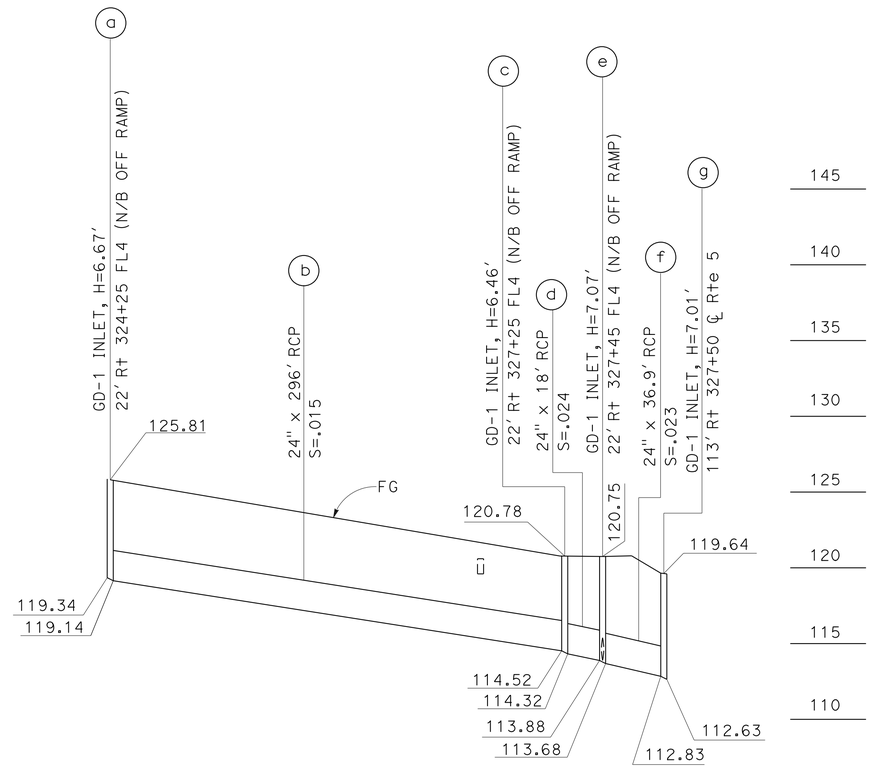

DRAINAGE PROFILE No. 31

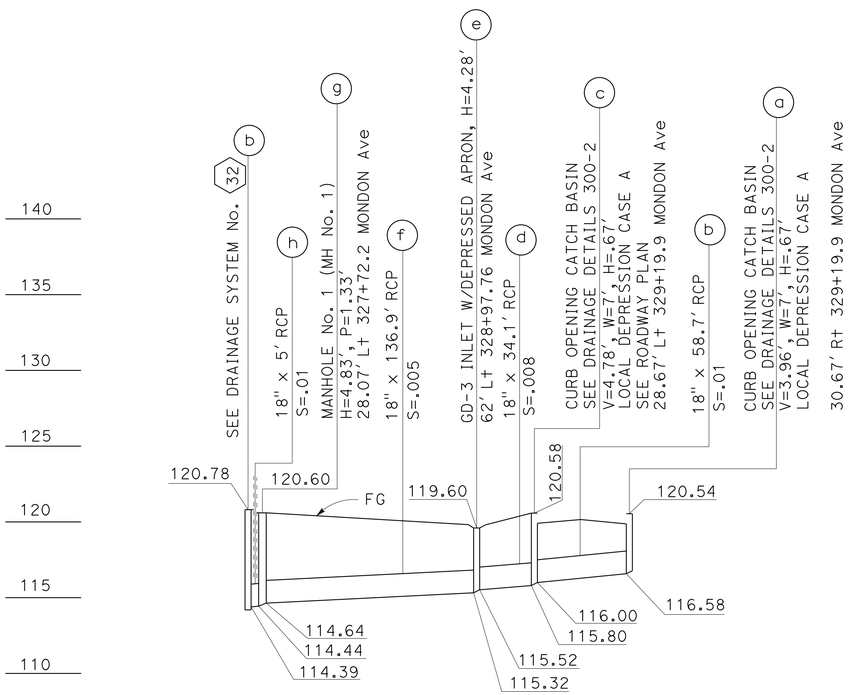

DRAINAGE PROFILE No. 34

DRAINAGE PROFILES

SCALE: Horiz 1" = 50'
Vert 1" = 5'

DP-8

STATE OF CALIFORNIA - DEPARTMENT OF TRANSPORTATION
Caltrans® HYDRAULICS

FUNCTIONAL SUPERVISOR: DAVE BHALLA
CALCULATED-DESIGNED BY: VIC T. VALIDO
CHECKED BY: D. BHALLA
REVISED BY
DATE REVISED

LAST REVISION 10-19-12
DATE PLOTTED => 26-JUN-2013
TIME PLOTTED => 15:37

Dist	COUNTY	ROUTE	POST MILES TOTAL PROJECT	SHEET No.	TOTAL SHEETS
07	LA	5	0.0/7.6	119	985

REGISTERED CIVIL ENGINEER 10-11-12 DATE

6-24-13
PLANS APPROVAL DATE

REGISTERED PROFESSIONAL ENGINEER
DAVE BHALLA
No. 34350
Exp. 9-30-13
CIVIL
STATE OF CALIFORNIA

THE STATE OF CALIFORNIA OR ITS OFFICERS OR AGENTS SHALL NOT BE RESPONSIBLE FOR THE ACCURACY OR COMPLETENESS OF SCANNED COPIES OF THIS PLAN SHEET.

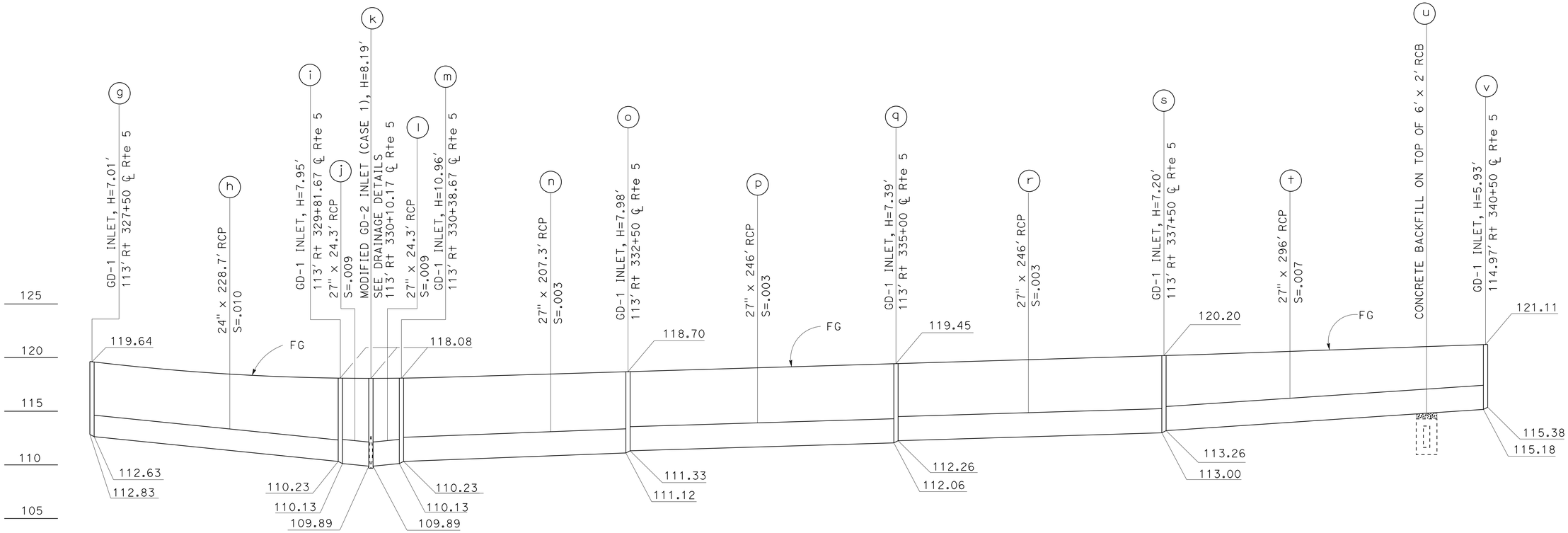

DRAINAGE PROFILE No. 31

DRAINAGE PROFILES

SCALE: Horiz 1" = 50′
Vert 1" = 5′

DP-9

STATE OF CALIFORNIA - DEPARTMENT OF TRANSPORTATION
Caltrans
HYDRAULICS

FUNCTIONAL SUPERVISOR: DAVE BHALLA

CALCULATED-DESIGNED BY: VIC T. VALIDO
CHECKED BY: D. BHALLA
REVISED BY
DATE REVISED

LAST REVISION 10-20-12
DATE PLOTTED => 26-JUN-2013
TIME PLOTTED => 15:37

Dist	COUNTY	ROUTE	POST MILES TOTAL PROJECT	SHEET No.	TOTAL SHEETS
07	LA	5	0.0/7.6	120	985

REGISTERED CIVIL ENGINEER DATE 10-11-12

6-24-13
PLANS APPROVAL DATE

REGISTERED PROFESSIONAL ENGINEER
DAVE BHALLA
No. 34350
Exp. 9-30-13
CIVIL
STATE OF CALIFORNIA

THE STATE OF CALIFORNIA OR ITS OFFICERS OR AGENTS SHALL NOT BE RESPONSIBLE FOR THE ACCURACY OR COMPLETENESS OF SCANNED COPIES OF THIS PLAN SHEET.

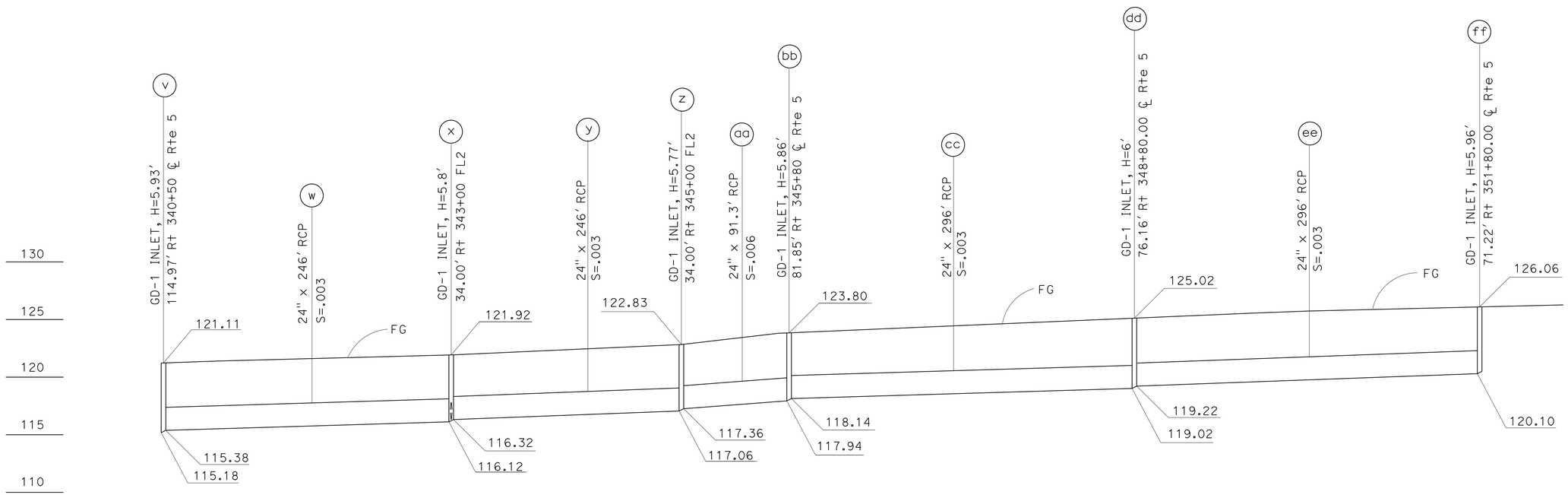

DRAINAGE PROFILE No. 31

DRAINAGE PROFILES

SCALE: Horiz 1" = 50′
Vert 1" = 5′

DP-10

STATE OF CALIFORNIA - DEPARTMENT OF TRANSPORTATION
Caltrans
HYDRAULICS

FUNCTIONAL SUPERVISOR: DAVE BHALLA
CALCULATED-DESIGNED BY: VIC T. VALIDO
CHECKED BY: D. BHALLA
REVISED BY
DATE REVISED

LAST REVISION 10-20-12
DATE PLOTTED => 26-JUN-2013
TIME PLOTTED => 15:37

Dist	COUNTY	ROUTE	POST MILES TOTAL PROJECT	SHEET No.	TOTAL SHEETS
07	LA	5	0.0/7.6	121	985

REGISTERED CIVIL ENGINEER 10-11-12 DATE

6-24-13
PLANS APPROVAL DATE

REGISTERED PROFESSIONAL ENGINEER DAVE BHALLA No. 34350 Exp. 9-30-13 CIVIL STATE OF CALIFORNIA

THE STATE OF CALIFORNIA OR ITS OFFICERS OR AGENTS SHALL NOT BE RESPONSIBLE FOR THE ACCURACY OR COMPLETENESS OF SCANNED COPIES OF THIS PLAN SHEET.

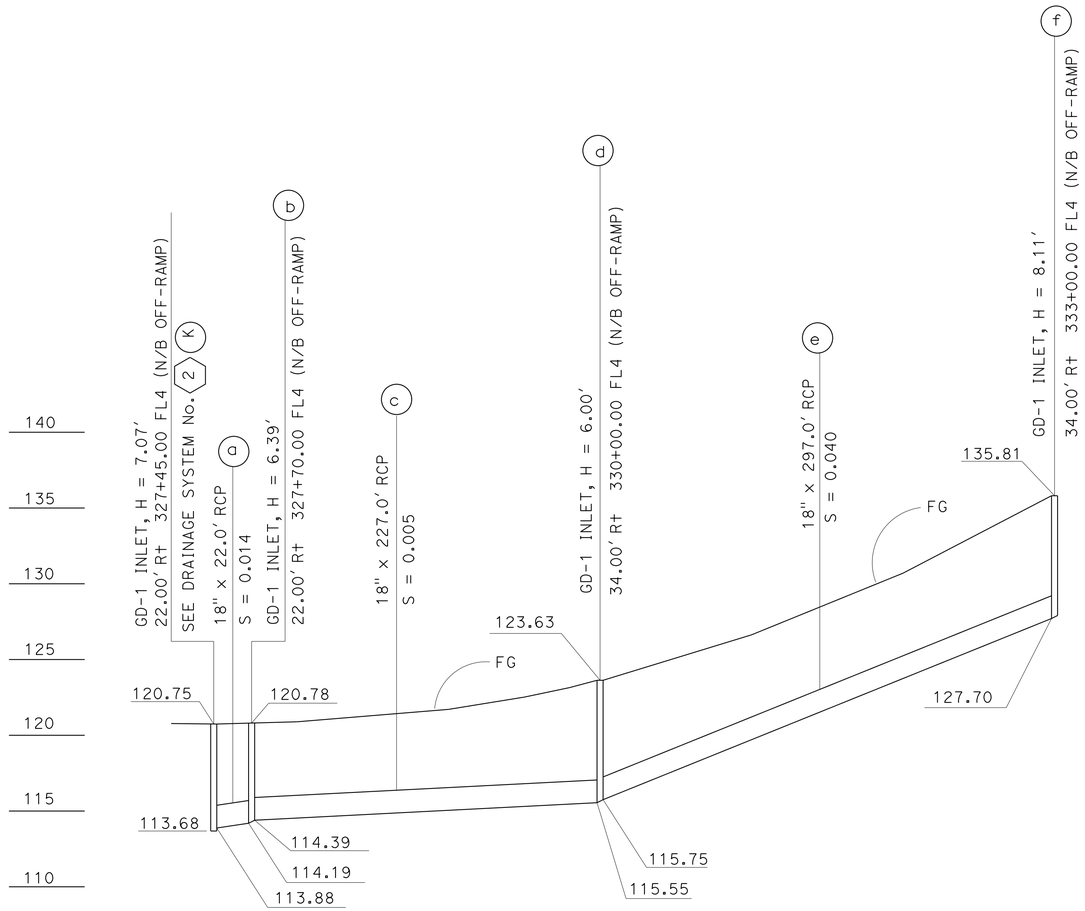

DRAINAGE PROFILE No. 32

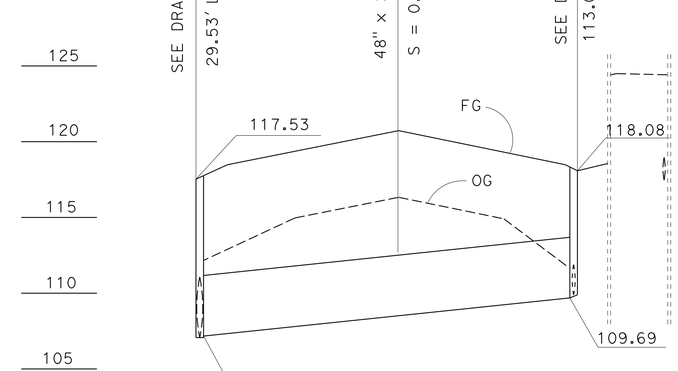

DRAINAGE PROFILE No. 33

DRAINAGE PROFILES

SCALE: Horiz 1" = 50′
Vert 1" = 5′

DP-11

STATE OF CALIFORNIA - DEPARTMENT OF TRANSPORTATION
Caltrans
HYDRAULICS

FUNCTIONAL SUPERVISOR: DAVE BHALLA
CALCULATED-DESIGNED BY: VIC T. VALIDO
CHECKED BY: D. BHALLA
REVISED BY
DATE REVISED

LAST REVISION 08-31-10
DATE PLOTTED => 26-JUN-2013
TIME PLOTTED => 15:38

Dist	COUNTY	ROUTE	POST MILES TOTAL PROJECT	SHEET No.	TOTAL SHEETS
07	LA	5	0.0/7.6	122	985

REGISTERED CIVIL ENGINEER 10-11-12 DATE

6-24-13
PLANS APPROVAL DATE

REGISTERED PROFESSIONAL ENGINEER DAVE BHALLA No.34350 Exp.9/30/13 CIVIL STATE OF CALIFORNIA

THE STATE OF CALIFORNIA OR ITS OFFICERS OR AGENTS SHALL NOT BE RESPONSIBLE FOR THE ACCURACY OR COMPLETENESS OF SCANNED COPIES OF THIS PLAN SHEET.

DRAINAGE SYSTEM	DRAINAGE UNIT	STATION	DESCRIPTION
36	a	64.90' Lt 333+37.00 ℄ Rte 5	REMOVE INLET
37	a	64.90' Lt 333+98.00 ℄ Rte 5	REMOVE INLET
38	a	64.90' Lt 335+58.00 ℄ Rte 5	REMOVE INLET
39	a	64.90' Lt 336+38.00 ℄ Rte 5	REMOVE INLET

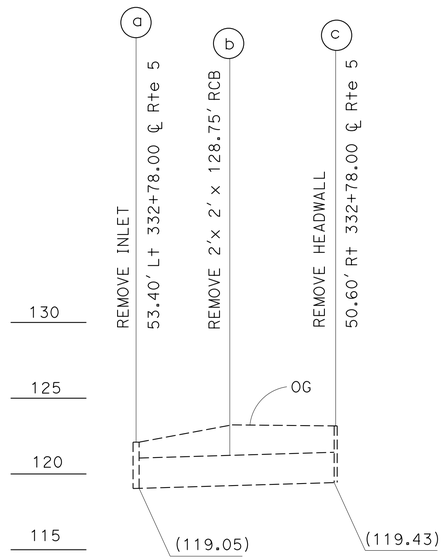

DRAINAGE PROFILE No. 35

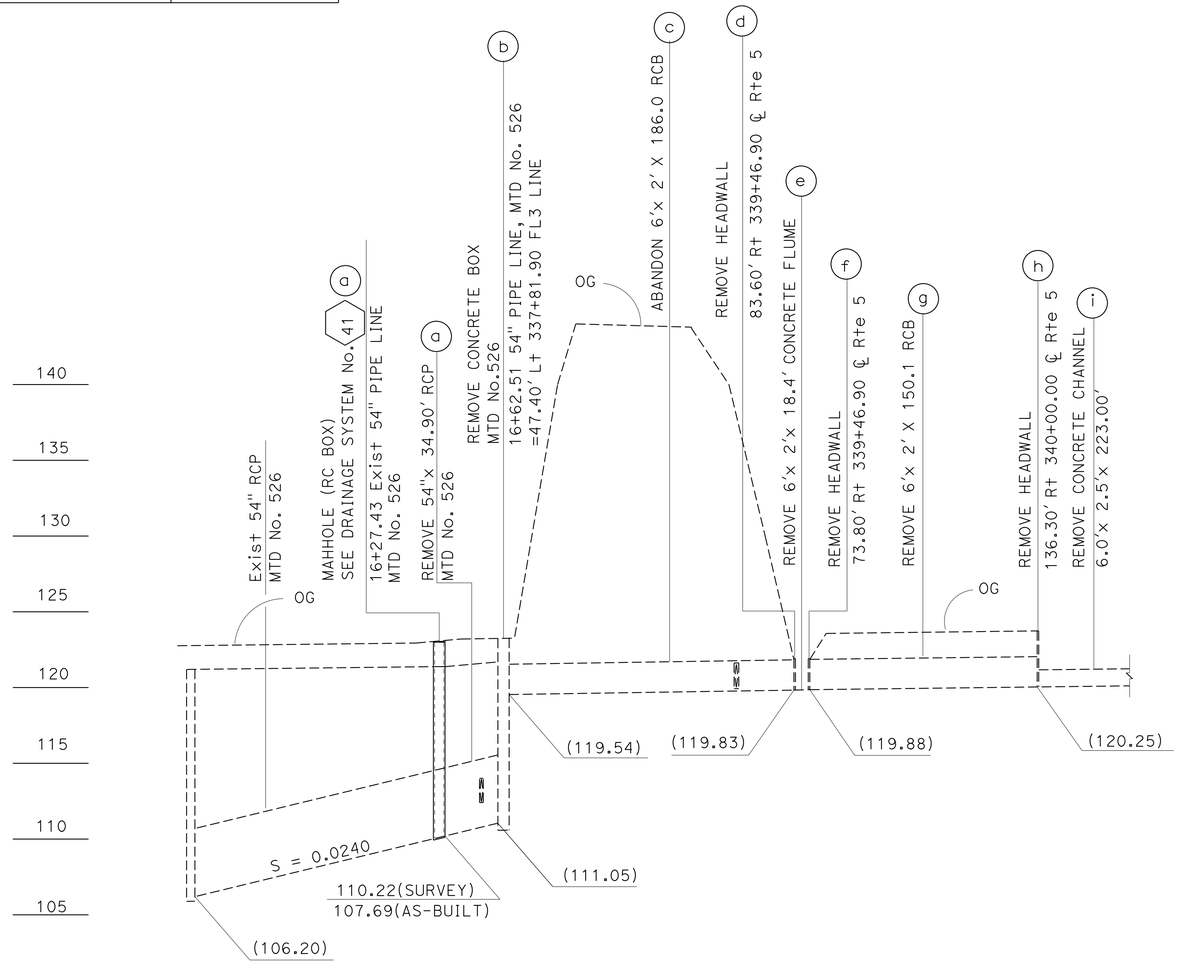

DRAINAGE PROFILE No. 40

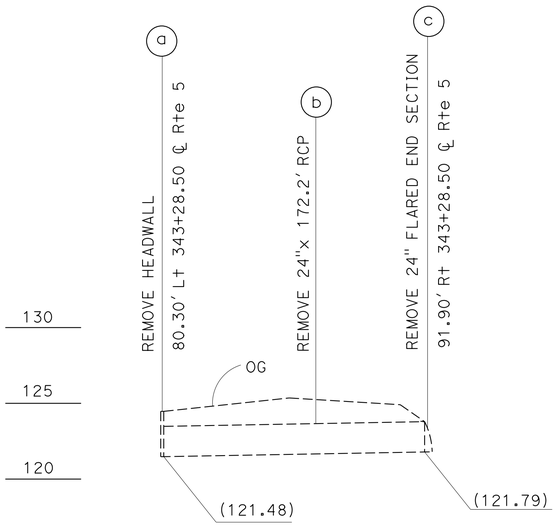

DRAINAGE PROFILE No. 42

DRAINAGE PROFILES

SCALE: Horiz 1" = 50'
Vert 1" = 5'

DP-12

STATE OF CALIFORNIA - DEPARTMENT OF TRANSPORTATION
Caltrans
HYDRAULICS

FUNCTIONAL SUPERVISOR: DAVE BHALLA
CALCULATED-DESIGNED BY: VIC T. VALIDO
CHECKED BY: D. BHALLA
REVISED BY
DATE REVISED

LAST REVISION 08-31-10
DATE PLOTTED => 26-JUN-2013
TIME PLOTTED => 15:38

Dist	COUNTY	ROUTE	POST MILES TOTAL PROJECT	SHEET No.	TOTAL SHEETS
07	LA	5	0.0/7.6	123	985

REGISTERED CIVIL ENGINEER 10/11/12 DATE

6-24-13
PLANS APPROVAL DATE

REGISTERED PROFESSIONAL ENGINEER DAVE BHALLA No. 34350 Exp. 9/30/13 CIVIL STATE OF CALIFORNIA

THE STATE OF CALIFORNIA OR ITS OFFICERS OR AGENTS SHALL NOT BE RESPONSIBLE FOR THE ACCURACY OR COMPLETENESS OF SCANNED COPIES OF THIS PLAN SHEET.

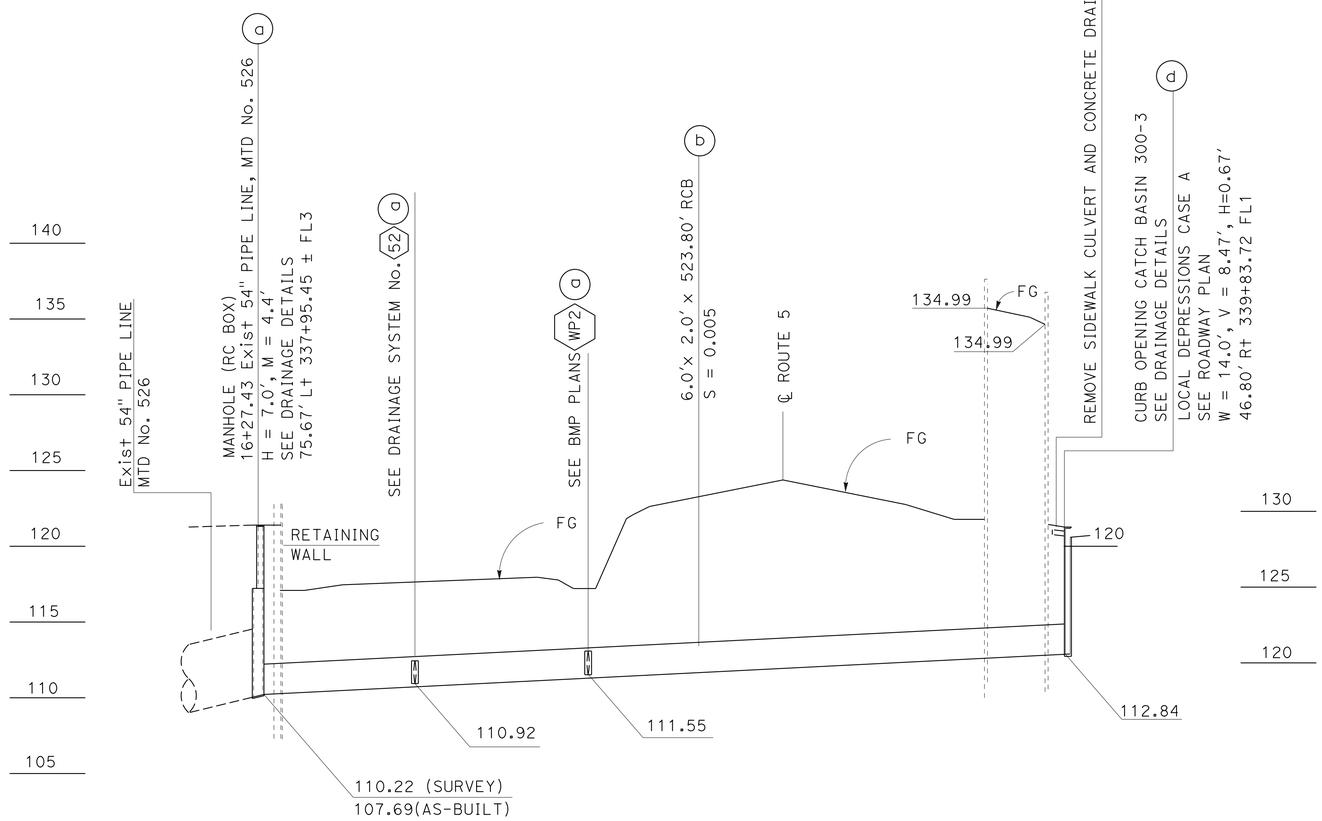

DRAINAGE PROFILE No. 41

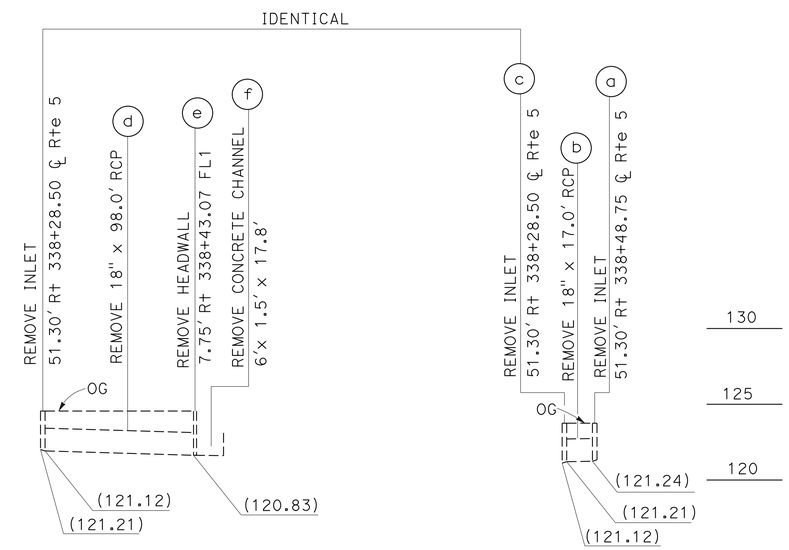

DRAINAGE PROFILE No. 43

DRAINAGE PROFILES

SCALE: Horiz 1" = 50'
Vert 1" = 5'

DP-13

STATE OF CALIFORNIA - DEPARTMENT OF TRANSPORTATION
Caltrans
HYDRAULICS

FUNCTIONAL SUPERVISOR: DAVE BHALLA
CALCULATED-DESIGNED BY: VIC T. VALIDO
CHECKED BY: D. BHALLA
REVISED BY
DATE REVISED

LAST REVISION 08-31-10
DATE PLOTTED => 26-JUN-2013
TIME PLOTTED => 15:38

Dist	COUNTY	ROUTE	POST MILES TOTAL PROJECT	SHEET No.	TOTAL SHEETS
07	LA	5	0.0/7.6	124	985

REGISTERED CIVIL ENGINEER 10/11/12 DATE

6-24-13
PLANS APPROVAL DATE

REGISTERED PROFESSIONAL ENGINEER DAVE BHALLA No. 34350 Exp. 9/30/13 CIVIL STATE OF CALIFORNIA

THE STATE OF CALIFORNIA OR ITS OFFICERS OR AGENTS SHALL NOT BE RESPONSIBLE FOR THE ACCURACY OR COMPLETENESS OF SCANNED COPIES OF THIS PLAN SHEET.

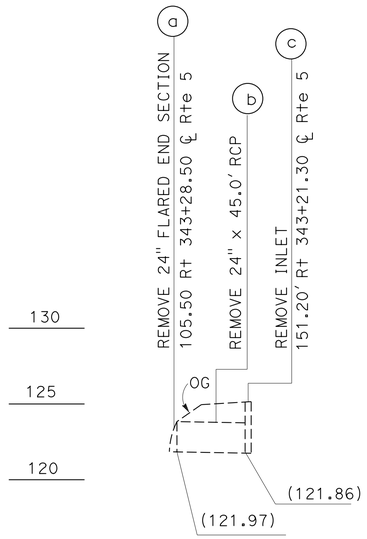

DRAINAGE PROFILE No. 45

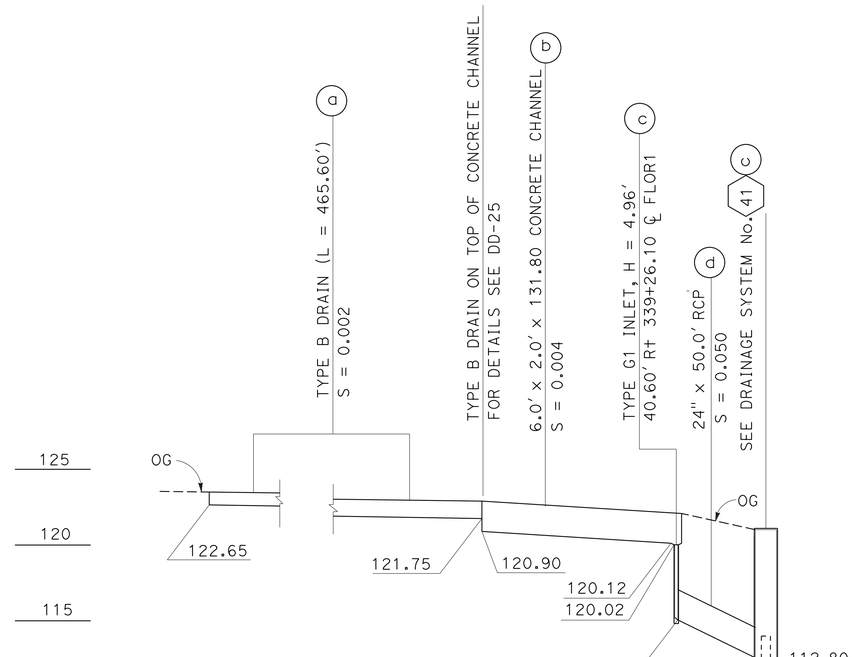

DRAINAGE PROFILE No. 46

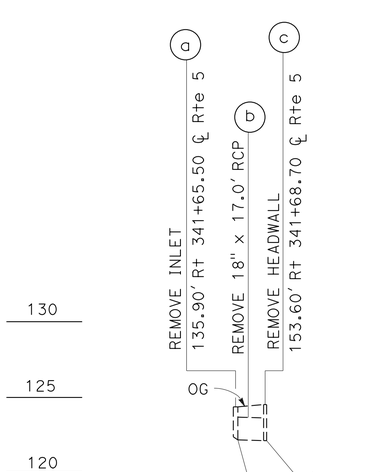

DRAINAGE SYSTEM No. 47

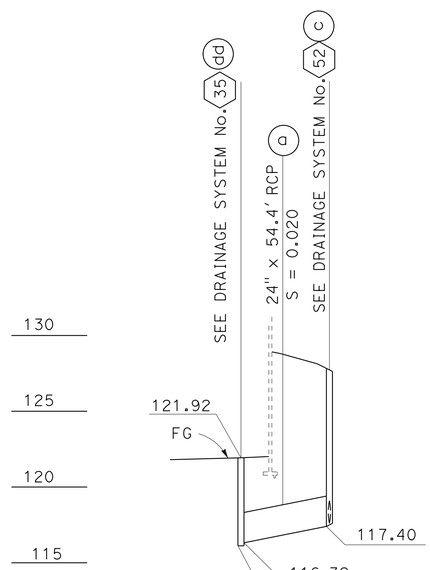

DRAINAGE PROFILE No. 48

DRAINAGE PROFILES

SCALE: Horiz 1" = 50'
Vert 1" = 5'

DP-14

STATE OF CALIFORNIA - DEPARTMENT OF TRANSPORTATION
Caltrans® HYDRAULICS

FUNCTIONAL SUPERVISOR: DAVE BHALLA
CALCULATED-DESIGNED BY: VIC T. VALIDO
CHECKED BY: D. BHALLA
REVISED BY
DATE REVISED

LAST REVISION 08-31-10
DATE PLOTTED => 26-JUN-2013
TIME PLOTTED => 15:38

Dist	COUNTY	ROUTE	POST MILES TOTAL PROJECT	SHEET No.	TOTAL SHEETS
07	LA	5	0.0/7.6	125	985

REGISTERED CIVIL ENGINEER 10/11/12 DATE

6-24-13
PLANS APPROVAL DATE

REGISTERED PROFESSIONAL ENGINEER DAVE BHALLA No. 34350 Exp. 9/30/13 CIVIL STATE OF CALIFORNIA

THE STATE OF CALIFORNIA OR ITS OFFICERS OR AGENTS SHALL NOT BE RESPONSIBLE FOR THE ACCURACY OR COMPLETENESS OF SCANNED COPIES OF THIS PLAN SHEET.

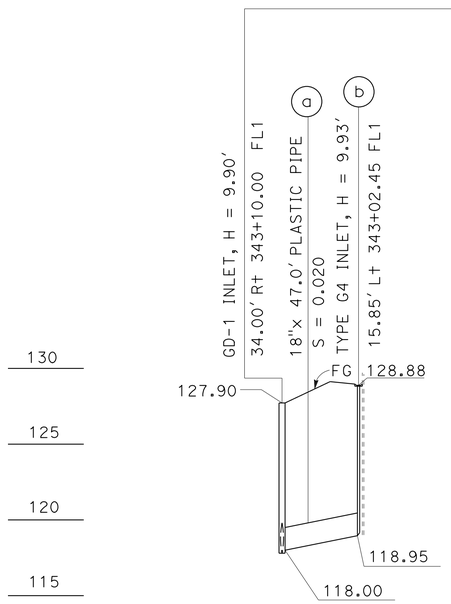

DRAINAGE PROFILE No. 44

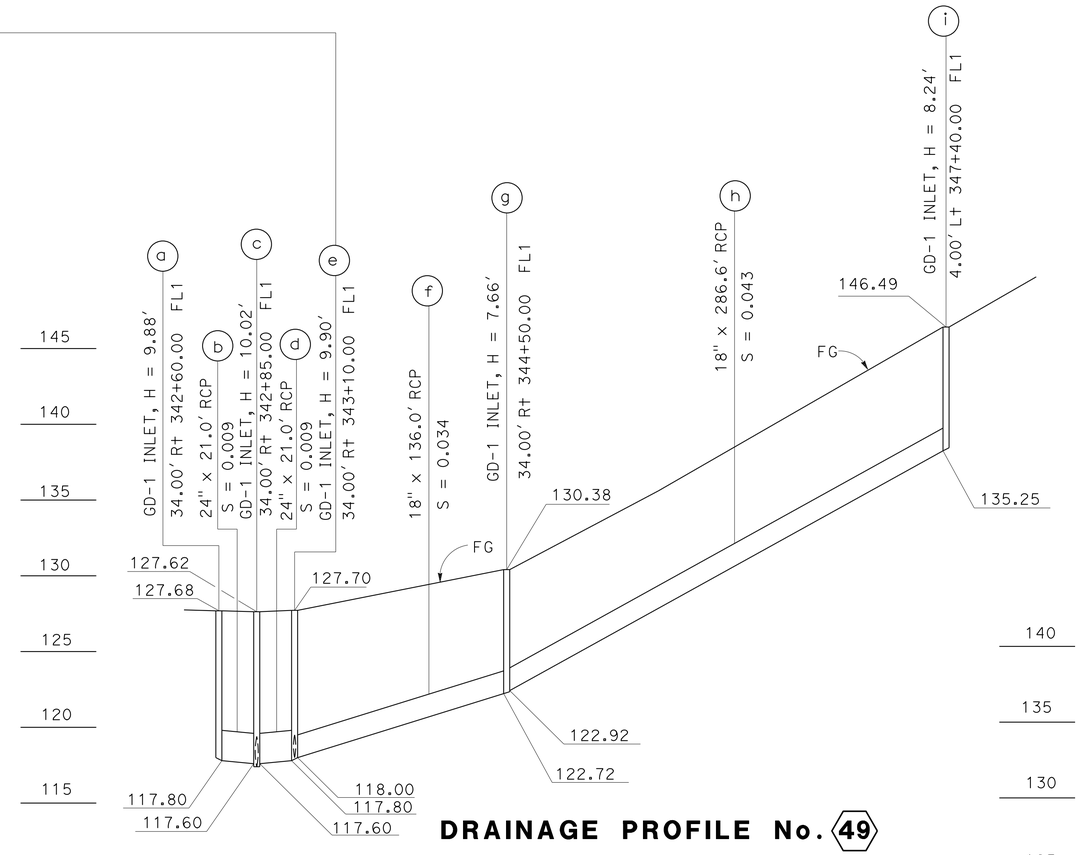

DRAINAGE PROFILE No. 49

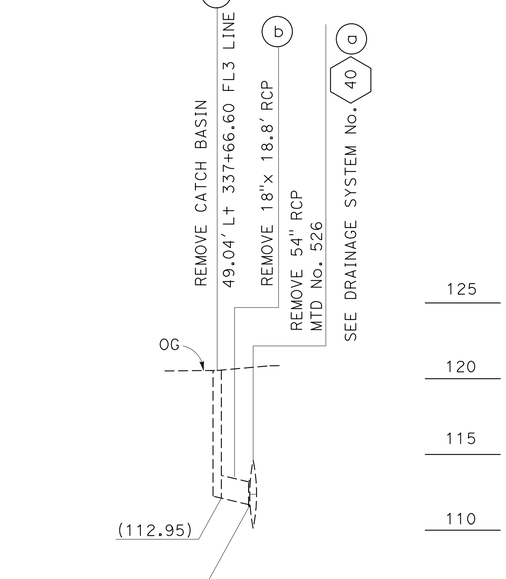

DRAINAGE PROFILE No. 50

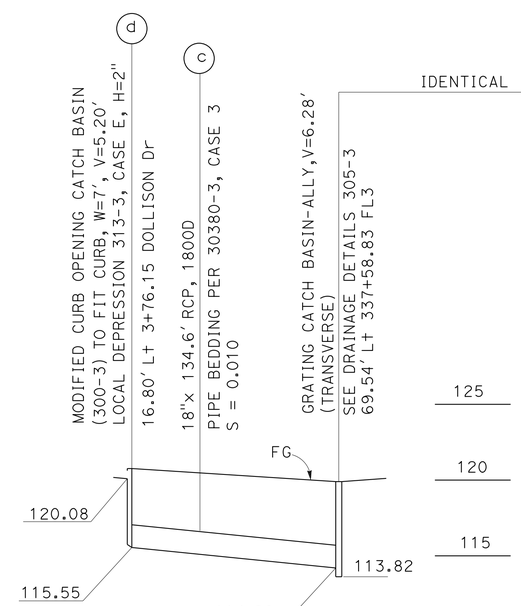

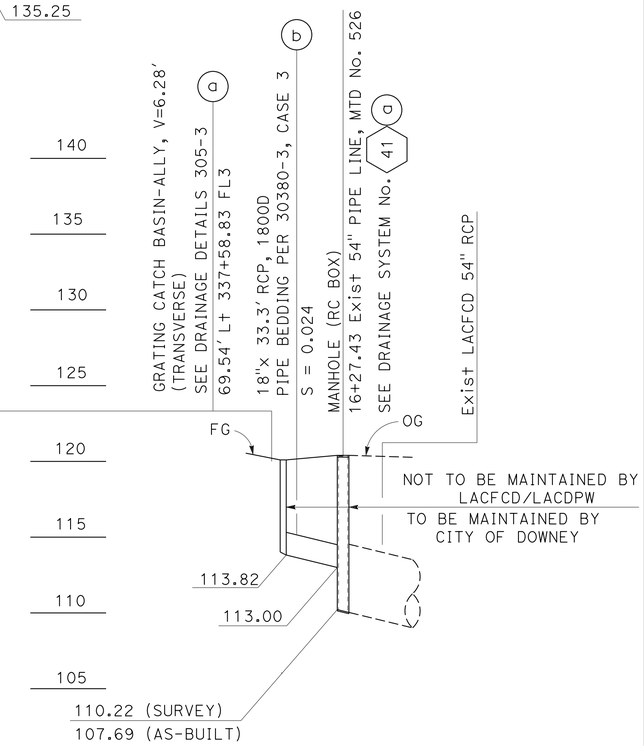

DRAINAGE PROFILE No. 51

DRAINAGE PROFILES

SCALE: Horiz 1" = 50'
Vert 1" = 5'

DP-15

STATE OF CALIFORNIA - DEPARTMENT OF TRANSPORTATION
Caltrans® HYDRAULICS

FUNCTIONAL SUPERVISOR: DAVE BHALLA
CALCULATED-DESIGNED BY: VIC T. VALIDO
CHECKED BY: D. BHALLA
REVISED BY
DATE REVISED

LAST REVISION 08-31-10 | DATE PLOTTED => 26-JUN-2013 | TIME PLOTTED => 15:38

Dist	COUNTY	ROUTE	POST MILES TOTAL PROJECT	SHEET No.	TOTAL SHEETS
07	LA	5	0.0/7.6	126	985

REGISTERED CIVIL ENGINEER 10/11/12 DATE

6-24-13
PLANS APPROVAL DATE

REGISTERED PROFESSIONAL ENGINEER DAVE BHALLA No.34350 Exp.9/30/13 CIVIL STATE OF CALIFORNIA

THE STATE OF CALIFORNIA OR ITS OFFICERS OR AGENTS SHALL NOT BE RESPONSIBLE FOR THE ACCURACY OR COMPLETENESS OF SCANNED COPIES OF THIS PLAN SHEET.

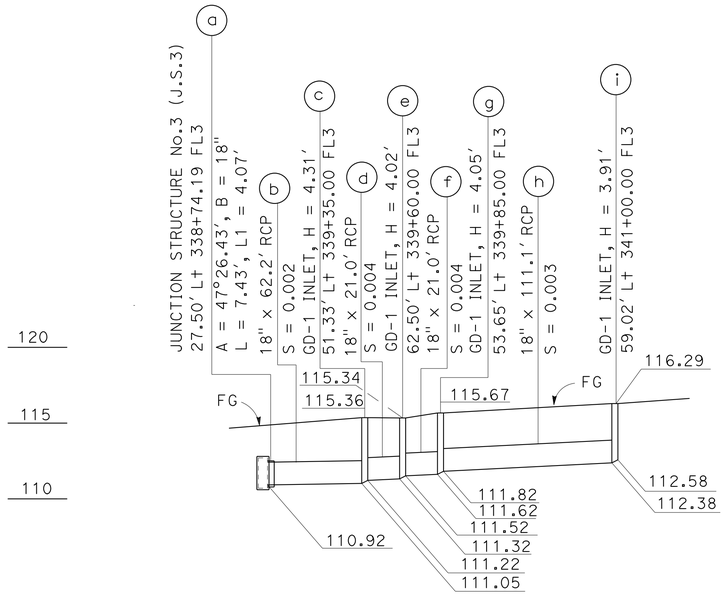

DRAINAGE PROFILE No. 52

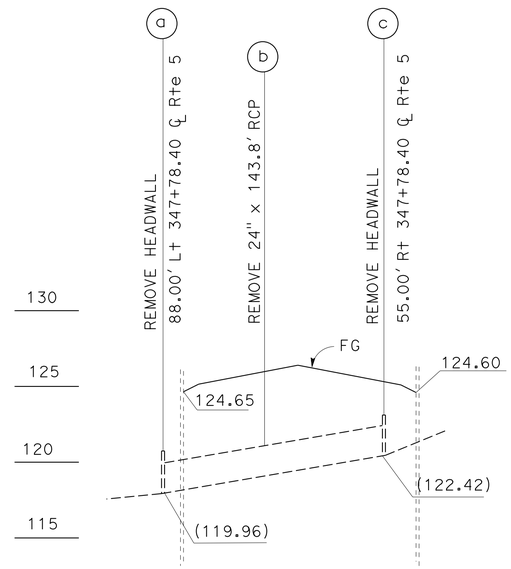

DRAINAGE PROFILE No. 58

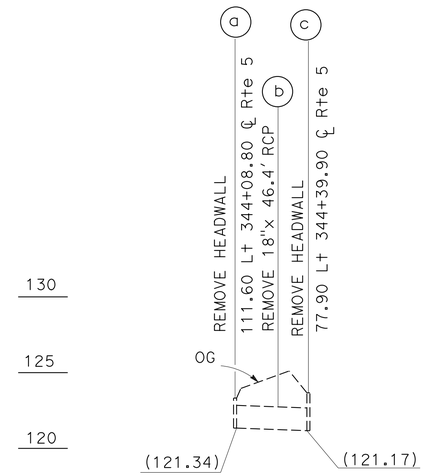

DRAINAGE PROFILE No. 54

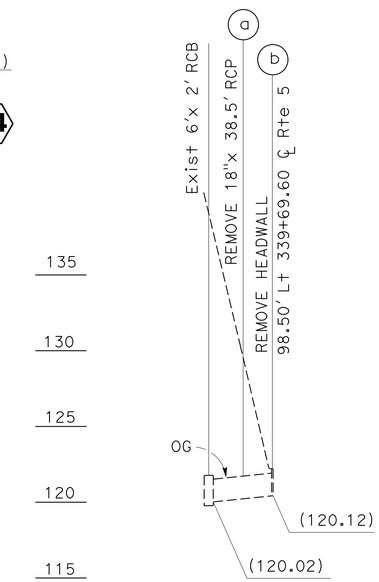

DRAINAGE PROFILE No. 53

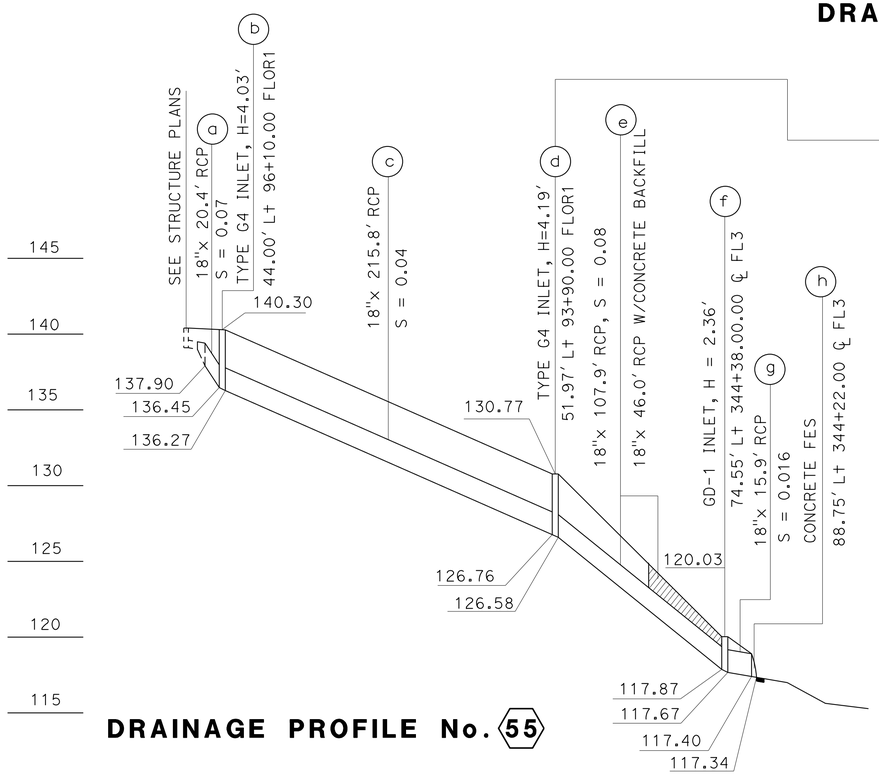

DRAINAGE PROFILE No. 55

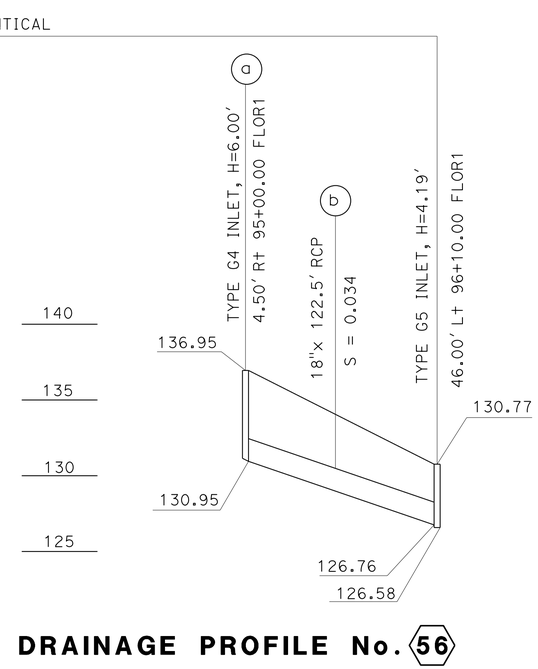

DRAINAGE PROFILE No. 56

DRAINAGE PROFILES

SCALE: Horiz 1" = 50'
Vert 1" = 5'

DP-16

STATE OF CALIFORNIA - DEPARTMENT OF TRANSPORTATION
Caltrans
HYDRAULICS

FUNCTIONAL SUPERVISOR: DAVE BHALLA
CALCULATED-DESIGNED BY: VIC T. VALIDO
CHECKED BY: D. BHALLA
REVISED BY
DATE REVISED

LAST REVISION 08-31-10
DATE PLOTTED => 26-JUN-2013
TIME PLOTTED => 15:38

Dist	COUNTY	ROUTE	POST MILES TOTAL PROJECT	SHEET No.	TOTAL SHEETS
07	LA	5	0.0/7.6	127	985

REGISTERED CIVIL ENGINEER 10/11/12 DATE

6-24-13
PLANS APPROVAL DATE

REGISTERED PROFESSIONAL ENGINEER DAVE BHALLA No.34350 Exp.9/30/13 CIVIL STATE OF CALIFORNIA

THE STATE OF CALIFORNIA OR ITS OFFICERS OR AGENTS SHALL NOT BE RESPONSIBLE FOR THE ACCURACY OR COMPLETENESS OF SCANNED COPIES OF THIS PLAN SHEET.

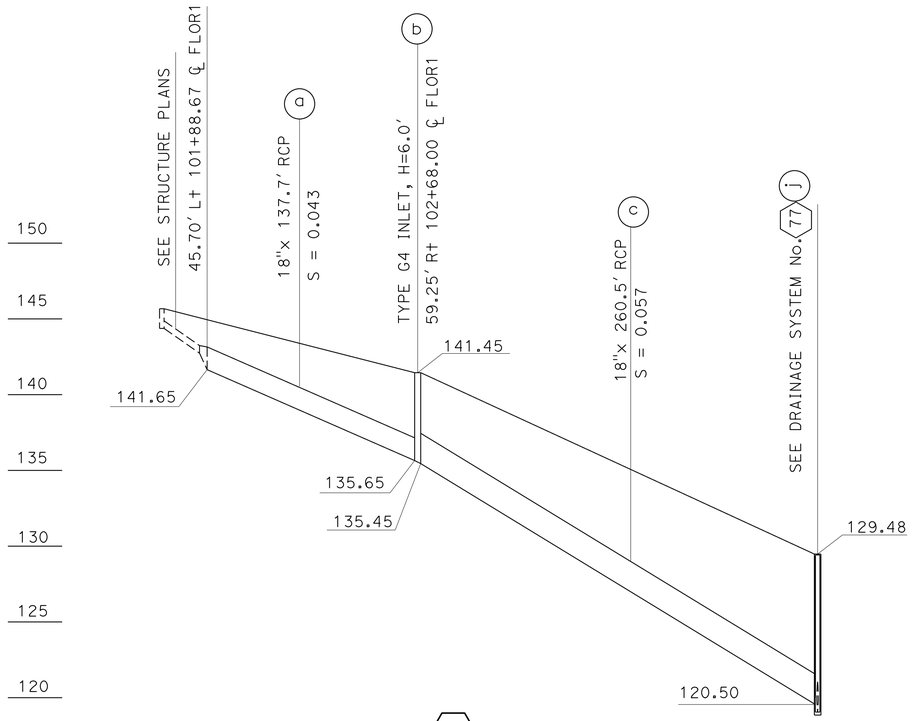

DRAINAGE SYSTEM No. 57

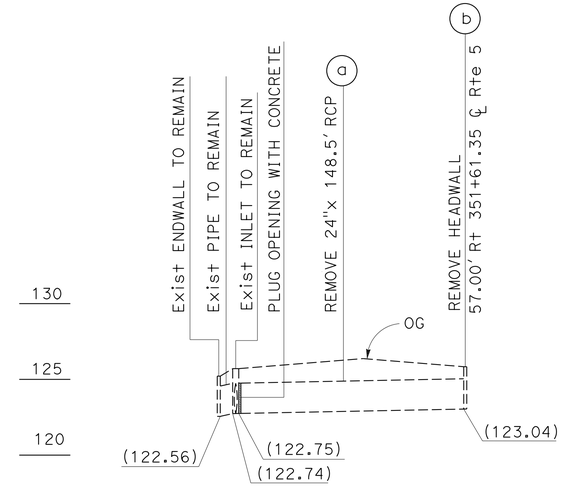

DRAINAGE PROFILE No. 59

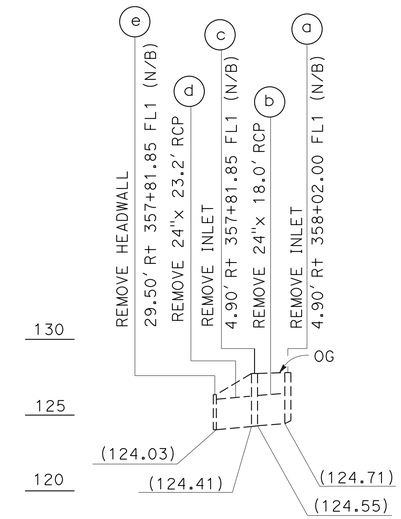

DRAINAGE PROFILE No. 62

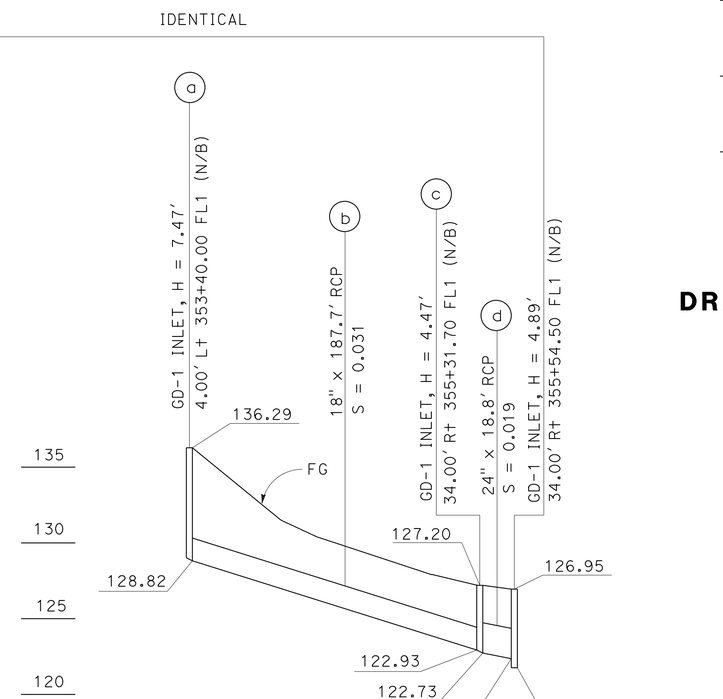

DRAINAGE PROFILE No. 60

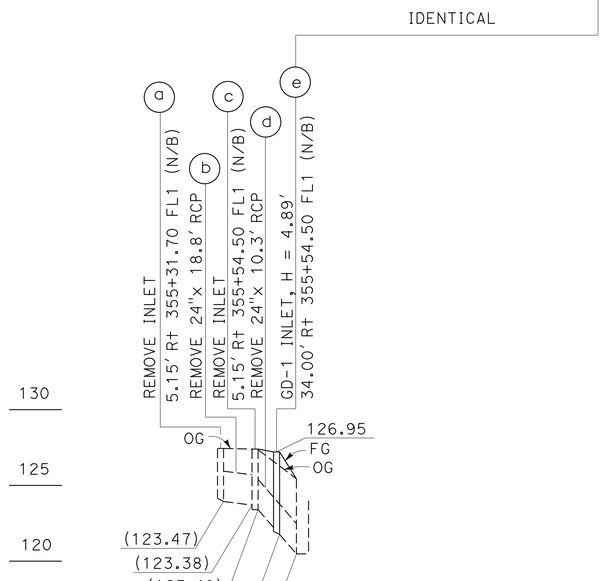

DRAINAGE PROFILE No. 61

DRAINAGE PROFILES

SCALE: Horiz 1" = 50'
Vert 1" = 5'

DP-17

STATE OF CALIFORNIA - DEPARTMENT OF TRANSPORTATION
Caltrans
HYDRAULICS

FUNCTIONAL SUPERVISOR: DAVE BHALLA
CALCULATED-DESIGNED BY: VIC T. VALIDO
CHECKED BY: D. BHALLA
REVISED BY
DATE REVISED

LAST REVISION 08-31-10
DATE PLOTTED => 26-JUN-2013
TIME PLOTTED => 15:38

Dist	COUNTY	ROUTE	POST MILES TOTAL PROJECT	SHEET No.	TOTAL SHEETS
07	LA	5	0.0/7.6	128	985

REGISTERED CIVIL ENGINEER 10/11/12 DATE

6-24-13
PLANS APPROVAL DATE

REGISTERED PROFESSIONAL ENGINEER DAVE BHALLA No. 34350 Exp. 9/30/13 CIVIL STATE OF CALIFORNIA

THE STATE OF CALIFORNIA OR ITS OFFICERS OR AGENTS SHALL NOT BE RESPONSIBLE FOR THE ACCURACY OR COMPLETENESS OF SCANNED COPIES OF THIS PLAN SHEET.

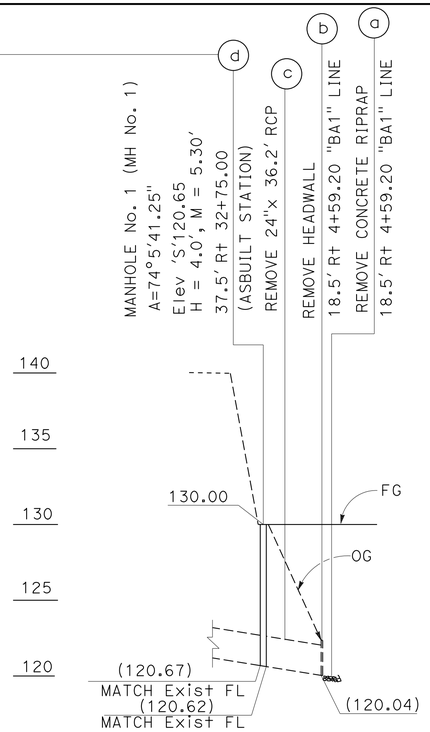

DRAINAGE PROFILE No. 65

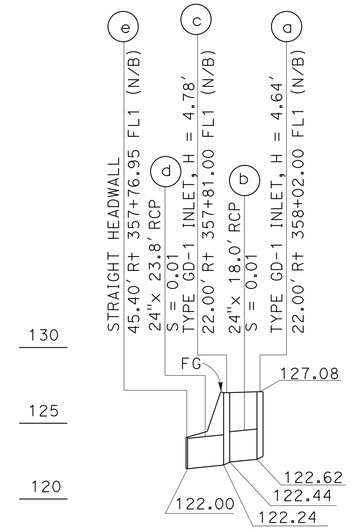

DRAINAGE PROFILE No. 63

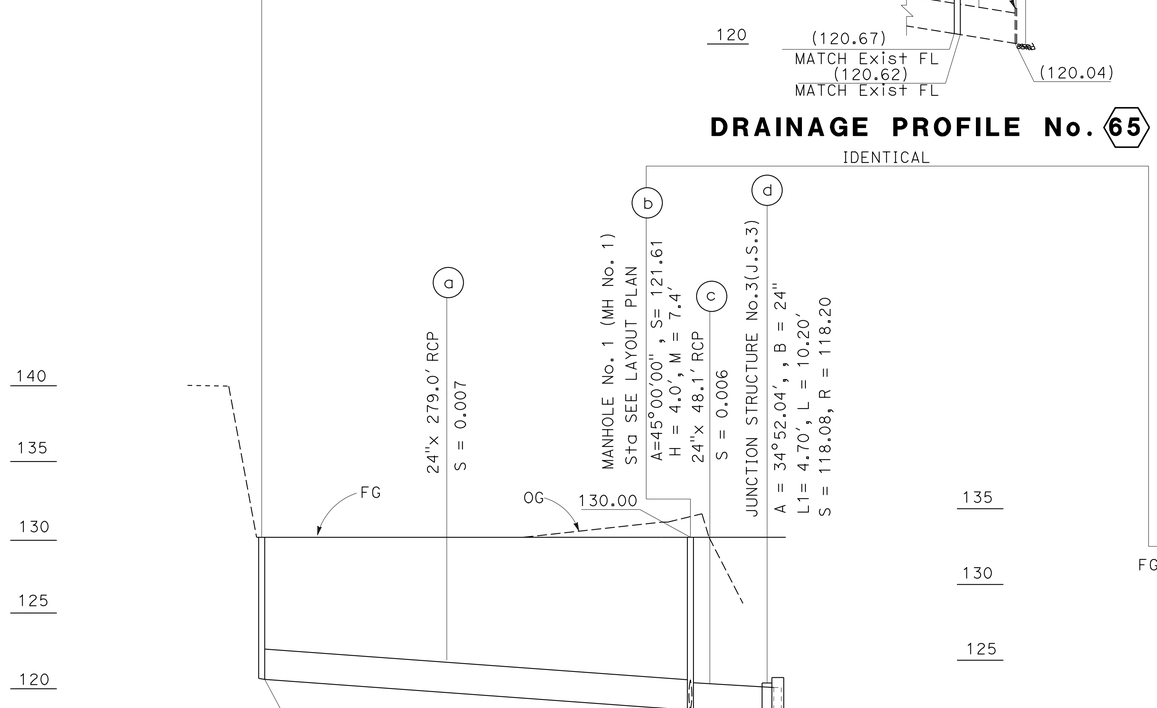

DRAINAGE PROFILE No. 66

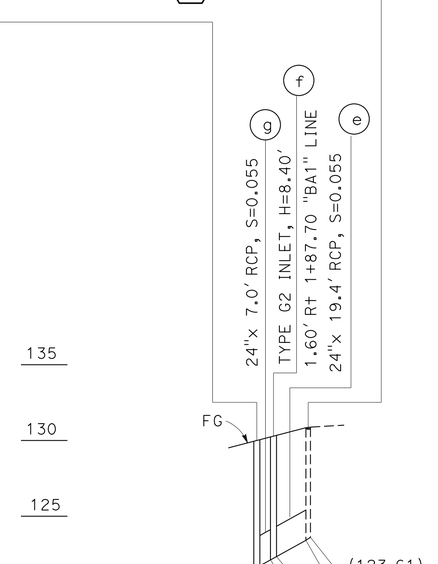

DRAINAGE PROFILE No. 64

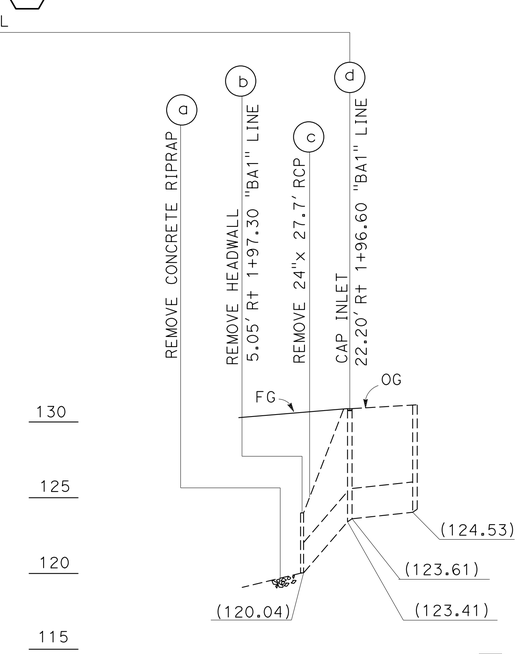

DRAINAGE PROFILE No. 64

DRAINAGE PROFILES

SCALE: Horiz 1" = 50'
Vert 1" = 5'

DP-18

STATE OF CALIFORNIA - DEPARTMENT OF TRANSPORTATION
Caltrans
HYDRAULICS

FUNCTIONAL SUPERVISOR: DAVE BHALLA
CALCULATED-DESIGNED BY: VIC T. VALIDO
CHECKED BY: D. BHALLA
REVISED BY
DATE REVISED

LAST REVISION 08-31-10 | DATE PLOTTED => 26-JUN-2013 | TIME PLOTTED => 15:38

Dist	COUNTY	ROUTE	POST MILES TOTAL PROJECT	SHEET No.	TOTAL SHEETS
07	LA	5	0.0/7.6	129	985

REGISTERED CIVIL ENGINEER 10-11-12 DATE

6-24-13
PLANS APPROVAL DATE

REGISTERED PROFESSIONAL ENGINEER DAVE BHALLA No. 34350 Exp. 9/30/13 CIVIL STATE OF CALIFORNIA

THE STATE OF CALIFORNIA OR ITS OFFICERS OR AGENTS SHALL NOT BE RESPONSIBLE FOR THE ACCURACY OR COMPLETENESS OF SCANNED COPIES OF THIS PLAN SHEET.

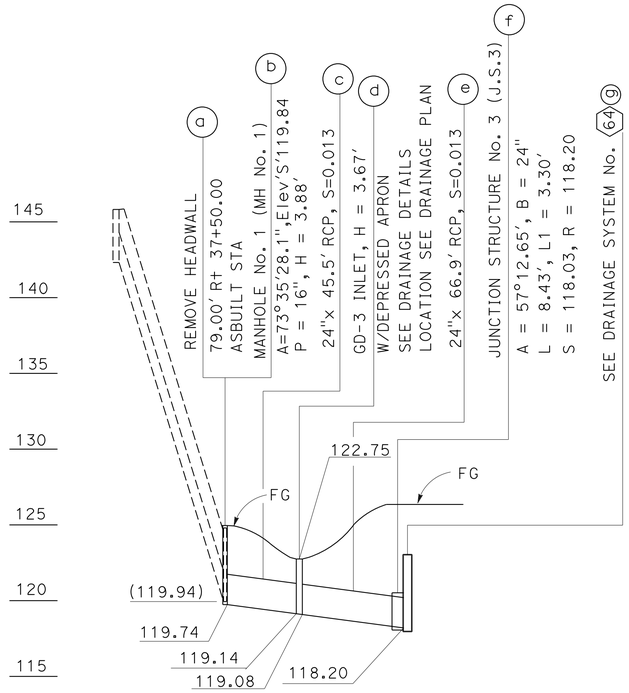

DRAINAGE PROFILE No. 68

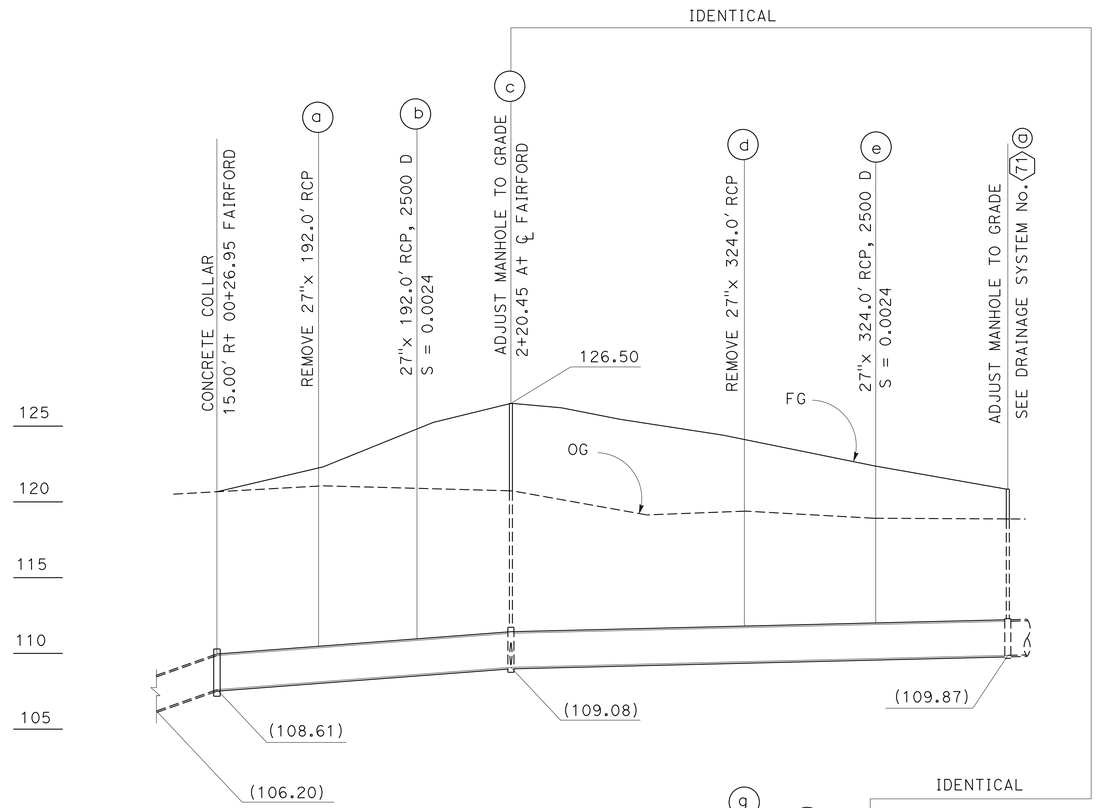

DRAINAGE PROFILE No. 70

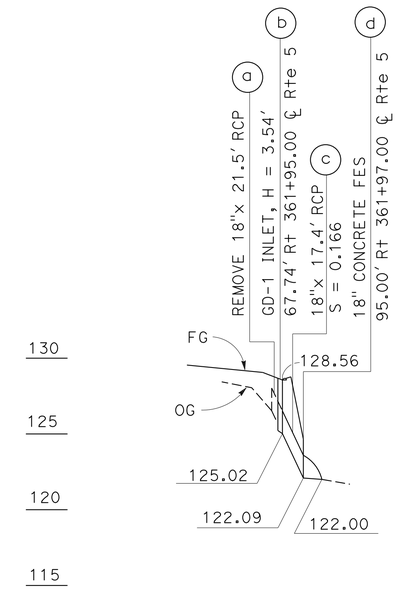

DRAINAGE PROFILE No. 69

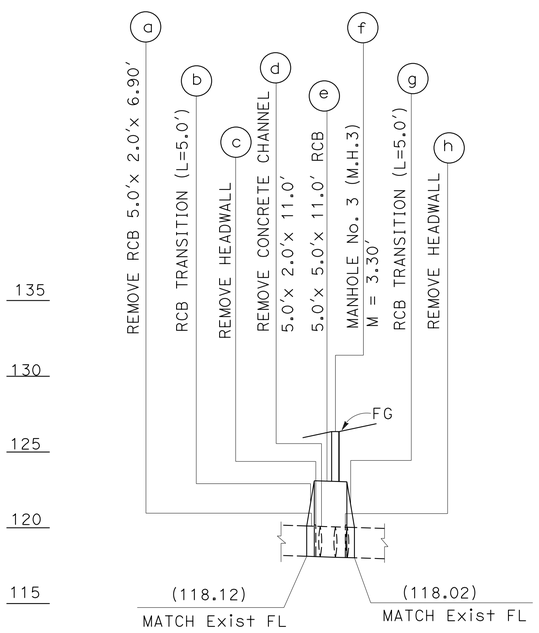

DRAINAGE PROFILE No. 67

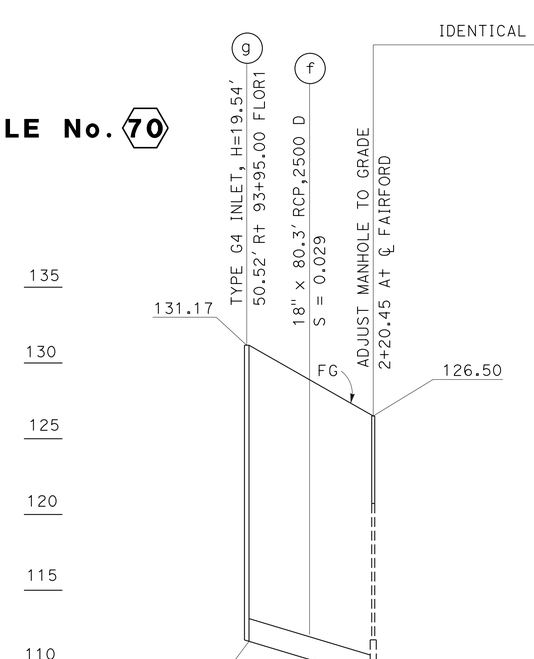

DRAINAGE PROFILE No. 70

DRAINAGE PROFILES

SCALE: Horiz 1" = 50'
Vert 1" = 5'

DP-19

REVISED BY	DATE REVISED

CALCULATED-DESIGNED BY: VIC T. VALIDO
CHECKED BY: D. BHALLA
FUNCTIONAL SUPERVISOR: DAVE BHALLA

STATE OF CALIFORNIA - DEPARTMENT OF TRANSPORTATION
Caltrans
HYDRAULICS

LAST REVISION 08-31-10 | DATE PLOTTED => 26-JUN-2013 | TIME PLOTTED => 15:38

Dist	COUNTY	ROUTE	POST MILES TOTAL PROJECT	SHEET No.	TOTAL SHEETS
07	LA	5	0.0/7.6	130	985

REGISTERED CIVIL ENGINEER 10/11/12 DATE

6-24-13
PLANS APPROVAL DATE

REGISTERED PROFESSIONAL ENGINEER DAVE BHALLA No. 34350 Exp. 9/30/13 CIVIL STATE OF CALIFORNIA

THE STATE OF CALIFORNIA OR ITS OFFICERS OR AGENTS SHALL NOT BE RESPONSIBLE FOR THE ACCURACY OR COMPLETENESS OF SCANNED COPIES OF THIS PLAN SHEET.

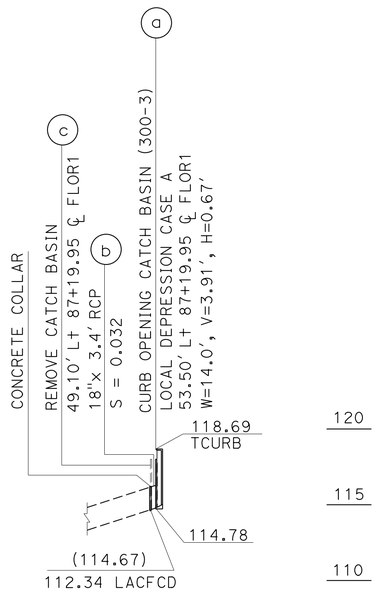

DRAINAGE SYSTEM No. 74

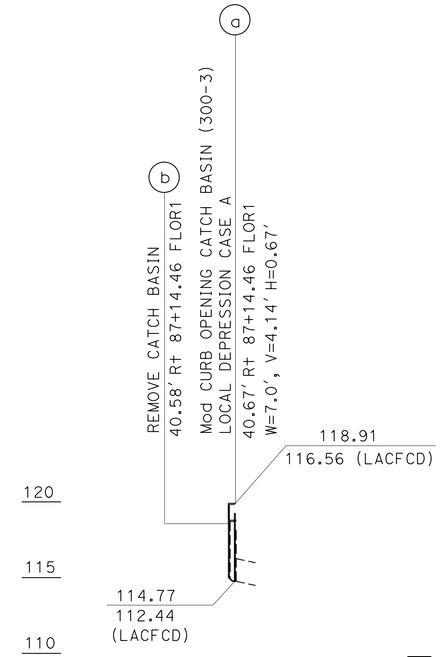

DRAINAGE SYSTEM No. 73

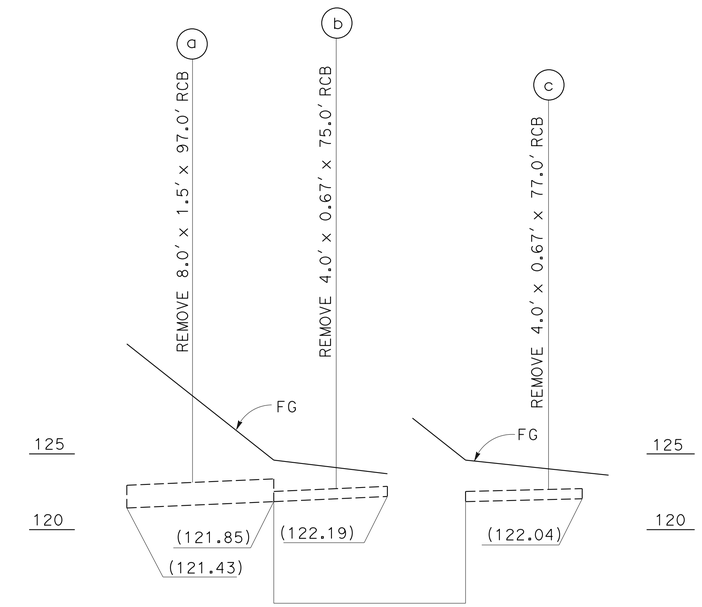

DRAINAGE SYSTEM No. 76

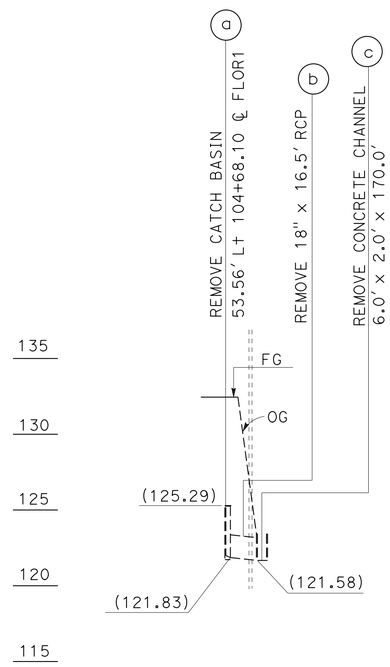

DRAINAGE SYSTEM No. 75

DRAINAGE PROFILES

SCALE: Horiz 1" = 50'
Vert 1" = 5'

DP-20

STATE OF CALIFORNIA - DEPARTMENT OF TRANSPORTATION
Caltrans
HYDRAULICS

FUNCTIONAL SUPERVISOR: DAVE BHALLA
CALCULATED-DESIGNED BY: VIC T. VALIDO
CHECKED BY: D. BHALLA
REVISED BY
DATE REVISED

LAST REVISION 08-31-10
DATE PLOTTED => 26-JUN-2013
TIME PLOTTED => 15:38

Dist	COUNTY	ROUTE	POST MILES TOTAL PROJECT	SHEET No.	TOTAL SHEETS
07	LA	5	0.0/7.6	131	985

REGISTERED CIVIL ENGINEER 10/11/12 DATE

6-24-13
PLANS APPROVAL DATE

REGISTERED PROFESSIONAL ENGINEER DAVE BHALLA No. 34350 Exp. 9/30/13 CIVIL STATE OF CALIFORNIA

THE STATE OF CALIFORNIA OR ITS OFFICERS OR AGENTS SHALL NOT BE RESPONSIBLE FOR THE ACCURACY OR COMPLETENESS OF SCANNED COPIES OF THIS PLAN SHEET.

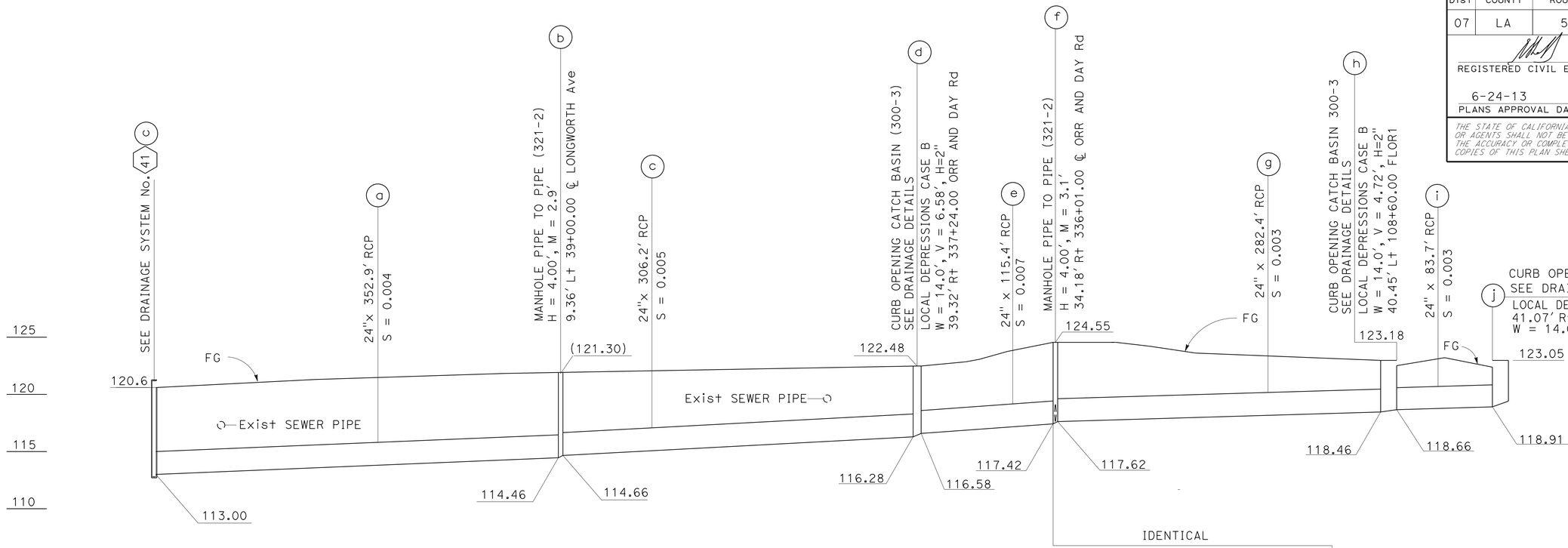

DRAINAGE SYSTEM No. 77

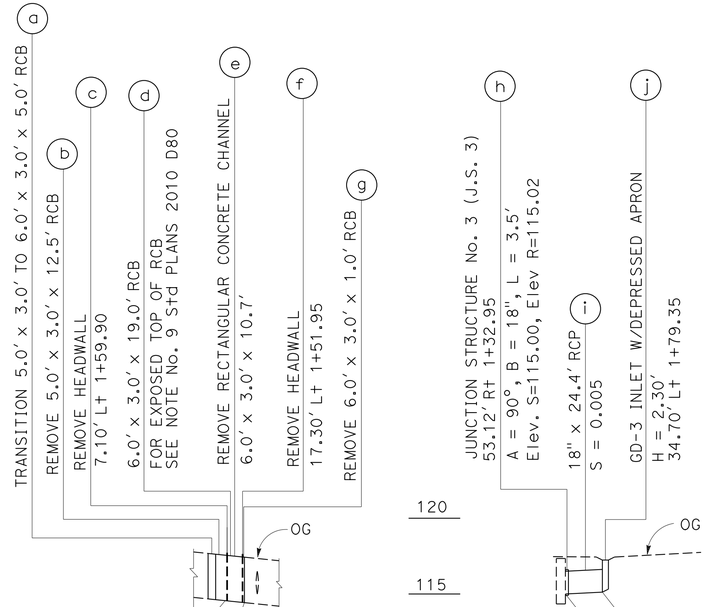

DRAINAGE SYSTEM No. 78

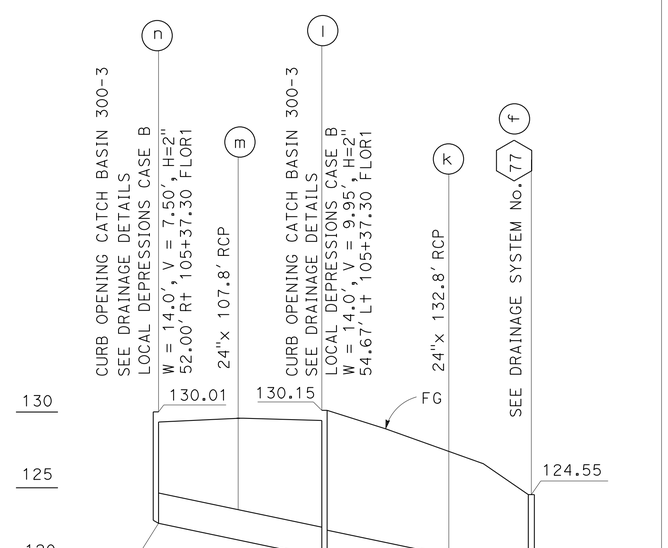

DRAINAGE SYSTEM No. 77

DRAINAGE PROFILES

SCALE: Horiz 1" = 50'
Vert 1" = 5'

DP-21

STATE OF CALIFORNIA - DEPARTMENT OF TRANSPORTATION
Caltrans
HYDRAULICS

FUNCTIONAL SUPERVISOR: DAVE BHALLA
CALCULATED-DESIGNED BY: VIC T. VALIDO
CHECKED BY: D. BHALLA
REVISED BY
DATE REVISED

LAST REVISION 08-31-10 | DATE PLOTTED => 26-JUN-2013 | TIME PLOTTED => 15:38

Dist	COUNTY	ROUTE	POST MILES TOTAL PROJECT	SHEET No.	TOTAL SHEETS
07	LA	5	0.0/7.6	132	985

REGISTERED CIVIL ENGINEER 10-11-12 DATE

6-24-13
PLANS APPROVAL DATE

REGISTERED PROFESSIONAL ENGINEER DAVE BHALLA No. 34350 Exp. 9/30/13 CIVIL STATE OF CALIFORNIA

THE STATE OF CALIFORNIA OR ITS OFFICERS OR AGENTS SHALL NOT BE RESPONSIBLE FOR THE ACCURACY OR COMPLETENESS OF SCANNED COPIES OF THIS PLAN SHEET.

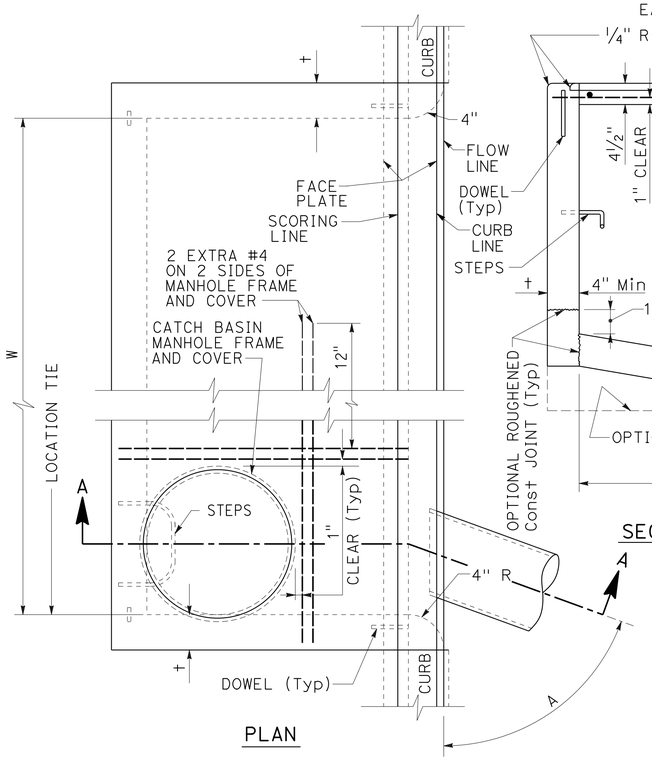

PLAN

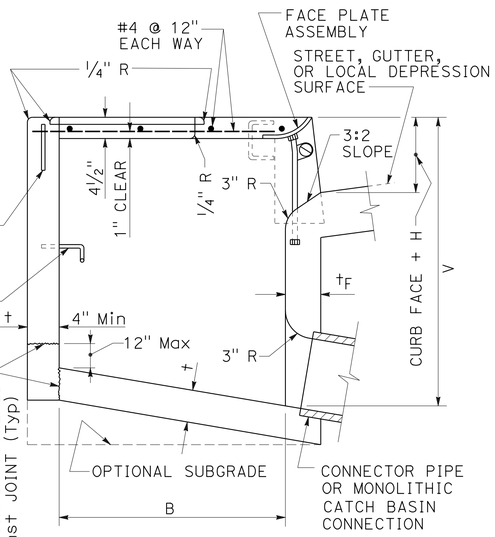

SECTION A-A

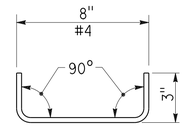

DOWEL DETAIL

NOTES:

1. WHERE THE BASIN IS TO BE CONSTRUCTED WITHIN THE LIMITS OF EXISTING OR PROPOSED SIDEWALK OR IS CONTIGUOUS TO SUCH SIDEWALK, THE TOP SLAB OF THE BASIN MAY BE POURED EITHER MONOLITHIC WITH THE SIDEWALK OR SEPARATELY, USING THE SAME CLASS OF CONCRETE AS IN THE BASIN. WHEN POURED MONOLITHICALLY, THE SIDEWALK SHALL BE PROVIDED WITH A WEAKENED PLANE OR A 1" DEEP SAWCUT CONTINUOUSLY AROUND THE EXTERNAL PERIMETER OF THE CATCH BASIN WALLS, INCLUDING ACROSS THE FULL WIDTH OF THE SIDEWALK. SURFACE OF ALL EXPOSED CONCRETE SHALL CONFORM IN SLOPE, GRADE, COLOR, FINISH, AND SCORING TO EXISTING OR PROPOSED CURB AND WALK ADJACENT TO THE BASIN.

2. ALL CURVED CONCRETE SURFACES SHALL BE FORMED BY CURVED FORMS, AND SHALL NOT BE SHAPED BY PLASTERING.

3. FLOOR OF BASIN SHALL BE GIVEN A STEEL TROWEL FINISH AND SHALL HAVE A LONGITUDINAL AND LATERAL SLOPE OF 1:12 MINIMUM AND 1:3 MAXIMUM, EXCEPT WHERE THE GUTTER GRADE EXCEEDS 8%, IN WHICH CASE THE LONGITUDINAL SLOPE OF THE FLOOR SHALL BE THE SAME AS THE GUTTER GRADE. SLOPE FLOOR FROM ALL DIRECTIONS TO THE OUTLET.

4. DIMENSIONS:

   B = 3′-2"

   V = THE DIFFERENCE IN ELEVATION BETWEEN THE TOP OF THE CURB AND THE INVERT OF THE CATCH BASIN AT THE OUTLET = 4.5′.

   V_U= THE DIFFERENCE IN ELEVATION BETWEEN THE TOP OF THE CURB AND THE INVERT AT THE UPSTREAM END OF THE BASIN, AND SHALL BE DETERMINED BY THE REQUIREMENTS OF NOTE 3, BUT SHALL NOT BE LESS THAN CURB FACE PLUS 12".

   V_I= THE DIFFERENCE IN ELEVATION BETWEEN THE TOP OF THE CURB AND THE INVERT OF THE INLET, NOTED ON THE PLANS.

   H = NOTED ON THE PLANS.

   W = NOTED ON THE PLANS.

   A = THE ANGLE, IN DEGREES, INTERCEPTED BY THE CENTERLINE OF THE CONNECTOR PIPE AND THE CATCH BASIN WALL TO WHICH THE CONNECTOR PIPE IS ATTACHED.

5. PLACE CONNECTOR PIPES AS INDICATED ON THE PLANS. UNLESS OTHERWISE SPECIFIED, THE CONNECTOR PIPE SHALL BE LOCATED AT THE DOWNSTREAM END OF THE BASIN. WHERE THE CONNECTOR PIPE IS SHOWN AT A CORNER, THE CENTERLINE OF THE PIPE SHALL INTERSECT THE INSIDE CORNER OF THE BASIN. THE PIPE MAY BE CUT AND TRIMMED AT A SKEW NECESSARY TO INSURE MINIMUM 3" PIPE EMBEDMENT, ALL AROUND, WITHIN THE CATCH BASIN WALL, AND 3" RADIUS OF ROUNDING OF STRUCTURE CONCRETE, ALL AROUND, ADJACENT TO PIPE ENDS. A MONOLITHIC CATCH BASIN CONNECTION SHALL BE USED TO JOIN THE CONNECTOR PIPE TO THE CATCH BASIN WHENEVER ANGLE "A" IS LESS THAN 70° OR GREATER THAN 110°, OR WHENEVER THE CONNECTOR PIPE IS LOCATED IN A CORNER. THE OPTIONAL USE OF A MONOLITHIC CATCH BASIN CONNECTION IN ANY CASE IS PERMITTED. MONOLITHIC CATCH BASIN CONNECTIONS MAY BE CONSTRUCTED TO AVOID CUTTING STANDARD LENGTHS OF PIPE.

6. STEPS SHALL BE LOCATED AS SHOWN. IF THE CONNECTOR PIPE INTERFERES WITH THE STEPS, THEY SHALL BE LOCATED AT THE CENTERLINE OF THE DOWNSTREAM END WALL. STEPS SHALL BE SPACED 12" APART. THE TOP STEP SHALL BE 7" BELOW THE TOP OF THE MANHOLE AND PROJECT 2 1/2". ALL OTHER STEPS SHALL PROJECT 5".

7. DOWELS ARE REQUIRED AT EACH CORNER AND AT 7′ ON CENTER (MAXIMUM) ALONG THE BACKWALL.

8. THE FOLLOWING DETAILS ARE INCORPORATED HEREIN:

   308-2 MONOLITHIC CATCH BASIN CONNECTION
   309-2 CATCH BASIN REINFORCEMENT
   310-3 CATCH BASIN FACE PLATE ASSEMBLY AND PROTECTION BAR
   312-3 CATCH BASIN MANHOLE FRAME AND COVER
   635-3 STEEL STEP
   636-2 POLYPROPYLENE PLASTIC STEP

STRUCTURAL DATA

WALL AND SLAB DIMENSIONS AND REINFORCEMENT REQUIREMENTS

Max W	Max V	t	t_F	REINFORCEMENT REQUIRED IN: FRONT WALL	REAR WALL	BOTTOM SLAB	END WALL
3.5′	8′	6"	6"	NO REINFORCEMENT REQUIRED			
3.5′	12′	8"	8"				
7′	6′	6"	6"				
7′	12′	8"	8"				
14′	4′	6"	6"	REINFORCEMENT REQUIRED			
↕	8′	6"	8"				
14′	12′	8"	10"				
21′ AND 28′	4′	6"	6"			REQUIRED	
	6′	6"	8"				
	8′	8"	8"				
	10′	8"	10"				
	12′	8"	10"				

FOR W > 28′, V > 12′ OR B > 4′ SEE PLANS

CURB OPENING CATCH BASIN (300-3)

DRAINAGE DETAILS

NO SCALE

DD-1

STATE OF CALIFORNIA - DEPARTMENT OF TRANSPORTATION
Caltrans HYDRAULICS

FUNCTIONAL SUPERVISOR: JAI P. THAKUR
CALCULATED-DESIGNED BY: DAVE BHALLA
CHECKED BY: JAI P. THAKUR
REVISED BY
DATE REVISED

LAST REVISION 00-00-00 | DATE PLOTTED => 26-JUN-2013 | TIME PLOTTED => 15:38

Dist	COUNTY	ROUTE	POST MILES TOTAL PROJECT	SHEET No.	TOTAL SHEETS
07	LA	5	0.0/7.6	133	985

REGISTERED CIVIL ENGINEER 10-11-12 DATE

6-24-13
PLANS APPROVAL DATE

REGISTERED PROFESSIONAL ENGINEER DAVE BHALLA No. 34350 Exp. 9/30/13 CIVIL STATE OF CALIFORNIA

THE STATE OF CALIFORNIA OR ITS OFFICERS OR AGENTS SHALL NOT BE RESPONSIBLE FOR THE ACCURACY OR COMPLETENESS OF SCANNED COPIES OF THIS PLAN SHEET.

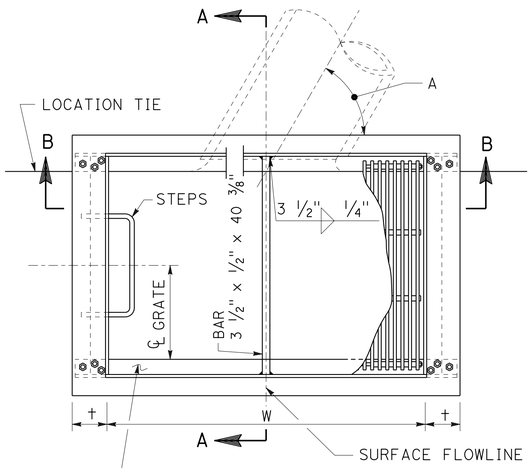

PLAN

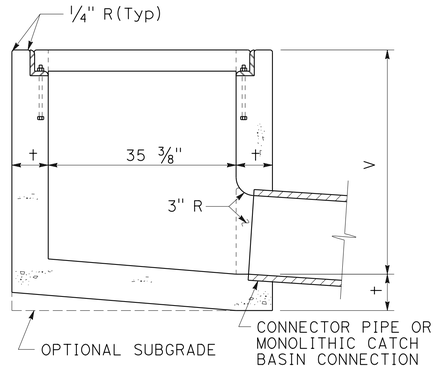

SECTION A-A

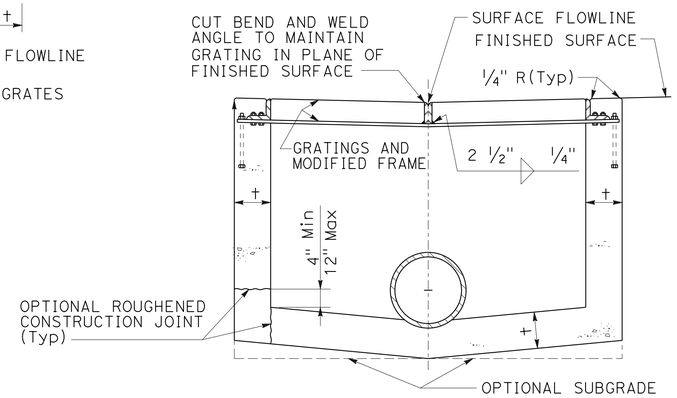

SECTION B-B

NOTES:

1. ALL CURVED CONCRETE SURFACES SHALL BE FORMED BY CURVED FORMS, AND SHALL NOT BE SHAPED BY PLASTERING.
2. TWO GRATINGS ARE REQUIRED UNLESS OTHERWISE SHOWN ON THE PLANS.
3. FLOOR OF BASIN SHALL BE GIVEN A STEEL TROWEL FINISH AND SHALL HAVE A LONGITUDINAL AND LATERAL SLOPE OF 1:12 MINIMUM AND 1:3 MAXIMUM. SLOPE FLOOR FROM ALL DIRECTIONS TO THE OUTLET.
4. DIMENSIONS:

   V = 3'-6"

   V_I = THE DEPTH AT THE INVERT OF THE INLET. NOTED ON THE PLANS.

   W = 4'-3 1/2" FOR TWO GRATINGS; ADD 2'-2" FOR EACH ADDITIONAL GRATING.

   A = THE ANGLE, IN DEGREES, INTERCEPTED BY THE CENTERLINE OF THE CONNECTOR PIPE AND THE CATCH BASIN WALL TO WHICH THE CONNECTOR PIPE IS ATTACHED.
5. PLACE CONNECTOR PIPES AS INDICATED ON THE PLANS. UNLESS OTHERWISE SPECIFIED, THE CONNECTOR PIPE SHALL BE LOCATED AT THE DOWNSTREAM END OF THE BASIN. WHERE THE CONNECTOR PIPE IS SHOWN AT A CORNER, THE CENTERLINE OF THE PIPE SHALL INTERSECT THE INSIDE CORNER OF THE BASIN. THE PIPE MAY BE CUT AND TRIMMED AT A SKEW NECESSARY TO INSURE MINIMUM 3" PIPE EMBEDMENT, ALL AROUND, WITHIN THE CATCH BASIN WALL, AND 3" RADIUS OF ROUNDING OF STRUCTURE CONCRETE, ALL AROUND, ADJACENT TO PIPE ENDS. A MONOLITHIC CATCH BASIN CONNECTION SHALL BE USED TO JOIN THE CONNECTOR PIPE TO THE CATCH BASIN WHENEVER ANGLE "A" IS LESS THAN 70° OR GREATER THAN 110°, OR WHENEVER THE CONNECTOR PIPE IS LOCATED IN A CORNER. THE OPTIONAL USE OF A MONOLITHIC CATCH BASIN CONNECTION IN ANY CASE IS PERMITTED. MONOLITHIC CATCH BASIN CONNECTIONS MAY BE CONSTRUCTED TO AVOID CUTTING STANDARD LENGTHS OF PIPE.
6. STEPS SHALL BE LOCATED AS SHOWN. IF THE CONNECTOR PIPE INTERFERES WITH THE STEPS, THEY SHALL BE LOCATED ON THE OPPOSITE WALL. STEPS SHALL BE SPACED 12" APART. THE TOP STEP SHALL BE 7" BELOW THE TOP OF THE GRATING AND PROJECT 2 1/2". ALL OTHER STEPS SHALL PROJECT 5".
7. THE FOLLOWING DETAILS ARE INCORPORATED HEREIN:

   308 MONOLITHIC CATCH BASIN CONNECTION
   309 CATCH BASIN REINFORCEMENT
   311 FRAME AND GRATING FOR CATCH BASINS
   635 STEEL STEP
   636 POLYPROPYLENE PLASTIC STEP

STRUCTURAL DATA

WALL AND SLAB DIMENSIONS AND REINFORCEMENT REQUIREMENTS

No. OF GRATES	Max V	t	REINFORCEMENT FOR WALLS AND SLABS
2-3	4'	6"	NOT REQUIRED
2-3	8'	8"	
2-3	10'	10"	
2-3	12'	10"	REQUIRED
4-6	4'	6"	NOT REQUIRED
4-6	7'	8"	
4-6	8'	8"	REQUIRED
4-6	12'	10"	
7-9	4'	6"	NOT REQUIRED
7-9	6'	8"	
7-9	8'	8"	REQUIRED
7-9	12'	10"	
> 9	4'	6"	
> 9	8'	8"	
> 9	12'	10"	

GRATING CATCH BASIN - ALLEY (305-3)

(TRANSVERSE)

DRAINAGE DETAILS

NO SCALE

DD-2

STATE OF CALIFORNIA - DEPARTMENT OF TRANSPORTATION
Caltrans
HYDRAULICS

FUNCTIONAL SUPERVISOR: DAVE BHALLA
CALCULATED-DESIGNED BY: VIC T. VALIDO
CHECKED BY: DAVE BHALLA
REVISED BY
DATE REVISED

LAST REVISION 00-00-00
DATE PLOTTED => 26-JUN-2013
TIME PLOTTED => 15:39

Dist	COUNTY	ROUTE	POST MILES TOTAL PROJECT	SHEET No.	TOTAL SHEETS
07	LA	5	0.0/7.6	134	985

REGISTERED CIVIL ENGINEER 10-11-12 DATE

6-24-13
PLANS APPROVAL DATE

REGISTERED PROFESSIONAL ENGINEER DAVE BHALLA No. 34350 Exp. 9/30/13 CIVIL STATE OF CALIFORNIA

THE STATE OF CALIFORNIA OR ITS OFFICERS OR AGENTS SHALL NOT BE RESPONSIBLE FOR THE ACCURACY OR COMPLETENESS OF SCANNED COPIES OF THIS PLAN SHEET.

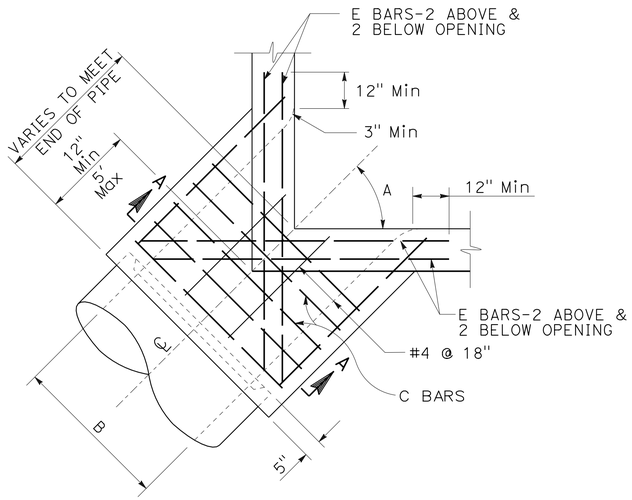

PLAN
CORNER CONNECTION

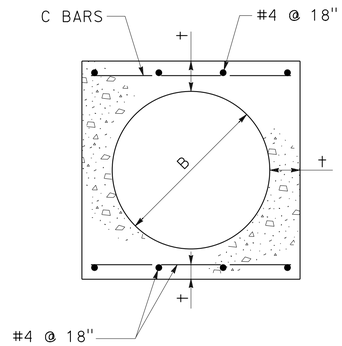

SECTION A-A

STRUCTURAL DATA

B	†	C BARS	D & E BARS	B	†	C BARS	D & E BARS
12"	4"	#4 @ 6"	#5	42"	7 1/2"	#5 @ 6"	#6
15"	4 1/4"			45"	7 3/4"		
18"	4 1/2"			48"	8"		
21"	5"			51"	8 1/2"		
24"	5 1/4"			54"	9"		
27"	5 1/2"			57"	9 1/4"		
30"	6"			60"	9 1/2"		
33"	6 1/4"			63"	10"		
36"	6 1/2"			66"	10 1/4"		
39"	7"			69"	10 3/4"		
				72"	11"		

FOR B GREATER THAN 72" SEE PLANS

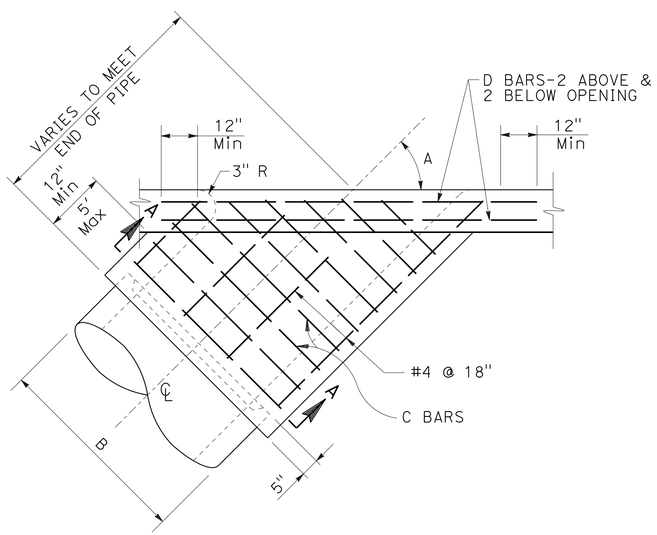

PLAN
SIDE CONNECTION

NOTES:

1. REINFORCING STEEL SHALL BE 1 1/2" CLEAR FROM FACE OF CONCRETE UNLESS OTHERWISE SHOWN.
2. REINFORCING STEEL FOR INSIDE FACE OF CATCH BASIN SHALL BE CUT AT CENTER OF OPENING AND BENT INTO WALLS OF MONOLITHIC CATCH BASIN CONNECTION. REINFORCING STEEL FOR OUTSIDE FACE OF CATCH BASIN SHALL BE CUT 2" CLEAR OF OPENING.
3. CONNECTION SHALL BE PLACED MONOLITHIC WITH CATCH BASIN. THE ROUNDED EDGE OF OUTLET SHALL BE CONSTRUCTED BY PLACING CONCRETE WITH THE SAME CLASS OF CONCRETE AS THE CATCH BASIN AGAINST A CURVED FORM WITH A RADIUS OF 3".
4. CONNECTIONS SHALL BE CONSTRUCTED WHEN:
   - (A) PIPES INLET OR OUTLET THROUGH CORNER OF CATCH BASIN
   - (B) ANGLE A FOR PIPES THROUGH 30" IN DIAMETER IS LESS THAN 70° OR GREATER THAN 110°.

MONOLITHIC CATCH BASIN CONNECTION (308-2)

DRAINAGE DETAILS

NO SCALE

DD-3

STATE OF CALIFORNIA - DEPARTMENT OF TRANSPORTATION
Caltrans
HYDRAULICS

FUNCTIONAL SUPERVISOR: JAI P. THAKUR
CALCULATED-DESIGNED BY: DAVE BHALLA
CHECKED BY: JAI P. THAKUR
REVISED BY
DATE REVISED

LAST REVISION 00-00-00
DATE PLOTTED => 26-JUN-2013
TIME PLOTTED => 15:39

Dist	COUNTY	ROUTE	POST MILES TOTAL PROJECT	SHEET No.	TOTAL SHEETS
07	LA	5	0.0/7.6	135	985

REGISTERED CIVIL ENGINEER 10-11-12 DATE

6-24-13
PLANS APPROVAL DATE

REGISTERED PROFESSIONAL ENGINEER DAVE BHALLA No. 34350 Exp. 9/30/13 CIVIL STATE OF CALIFORNIA

THE STATE OF CALIFORNIA OR ITS OFFICERS OR AGENTS SHALL NOT BE RESPONSIBLE FOR THE ACCURACY OR COMPLETENESS OF SCANNED COPIES OF THIS PLAN SHEET.

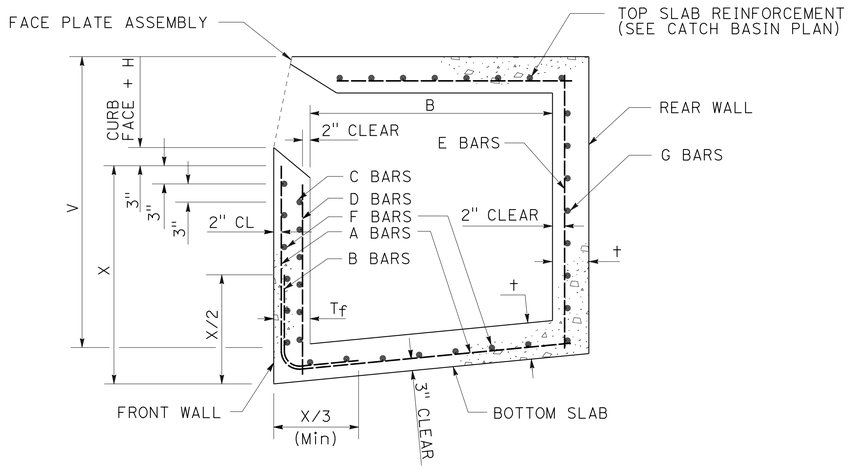

TYPICAL REINFORCEMENT DETAILS

Max W	Max V	t	tf	A & B BARS	C BARS	D BARS	E BARS	F BARS	G BARS
3.5′	8′	6"	6"	—	—	—	—	—	—
3.5′	12′	8"	8"	—	—	—	—	—	—
7′	6′	6"	6"	—	—	—	—	—	—
7′	12′	8"	8"	—	—	—	—	—	—
14′	4′	6"	6"	—	#4 @ 12"	#4 @ 18"	—	—	—
14′	8′	6"	8"	—	#4 @ 12"	#4 @ 18"	—	—	—
14′	12′	8"	10"	—	#4 @ 6"	#4 @ 18"	—	—	—
28′	4′	6"	6"	#4 @ 24"	—	—	—	#4 @ 18"	—
28′	5′	6"	8"	#4 @ 24"	—	—	—	#4 @ 18"	—
28′	6′	6"	8"	#4 @ 18"	—	—	—	#4 @ 18"	—
28′	7′	8"	8"	#4 @ 17"	—	—	—	#4 @ 18"	—
28′	8′	8"	8"	#4 @ 13"	—	—	—	#4 @ 18"	—
28′	9′	8"	10"	#4 @ 15"	—	—	—	#4 @ 18"	—
28′	10′	8"	10"	#4 @ 12"	—	—	—	#4 @ 18"	—
28′	11′	8"	10"	#5 @ 15"	—	—	#4 @ 10"	#4 @ 18"	#4 @ 18"
28′	12′	8"	10"	#4 @ 18"	—	—	#4 @ 10"	#4 @ 18"	#4 @ 18"
FOR W > 28 OR B > 4′ SEE PLANS									

CURB OPENING CATCH BASIN REINFORCEMENT

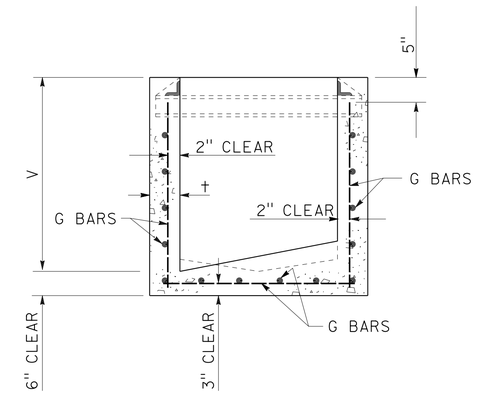

TYPICAL REINFORCEMENT DETAILS

V Max	t	SIDE AND END WALL STEEL G BARS
4′	6"	#4 @ 10"
8′	8"	#4 @ 6"
12′	10"	#5 @ 6"
FOR V > 12′ SEE PLANS		

GRATING CATCH BASIN REINFORCEMENT

NOTE:

UNLESS OTHERWISE SPECIFIED, REINFORCEMENT FOR CURB OPENINGS AND GRATING CATCH BASINS SHALL TERMINATE 2" FROM FACE OF CONCRETE.

CATCH BASIN REINFORCEMENT (309-2)

DRAINAGE DETAILS

NO SCALE

DD-4

STATE OF CALIFORNIA - DEPARTMENT OF TRANSPORTATION
Caltrans HYDRAULICS

FUNCTIONAL SUPERVISOR: JAI P. THAKUR
CALCULATED-DESIGNED BY: DAVE BHALLA
CHECKED BY: JAI P. THAKUR
REVISED BY
DATE REVISED

LAST REVISION 00-00-00
DATE PLOTTED => 26-JUN-2013
TIME PLOTTED => 15:39

Dist	COUNTY	ROUTE	POST MILES TOTAL PROJECT	SHEET No.	TOTAL SHEETS
07	LA	5	0.0/7.6	136	985

REGISTERED CIVIL ENGINEER 10-11-12 DATE

6-24-13
PLANS APPROVAL DATE

REGISTERED PROFESSIONAL ENGINEER DAVE BHALLA No. 34350 Exp. 9/30/13 CIVIL STATE OF CALIFORNIA

THE STATE OF CALIFORNIA OR ITS OFFICERS OR AGENTS SHALL NOT BE RESPONSIBLE FOR THE ACCURACY OR COMPLETENESS OF SCANNED COPIES OF THIS PLAN SHEET.

SUPPORT BOLT AND FACE PLATE 4 1/2" TOP SLAB

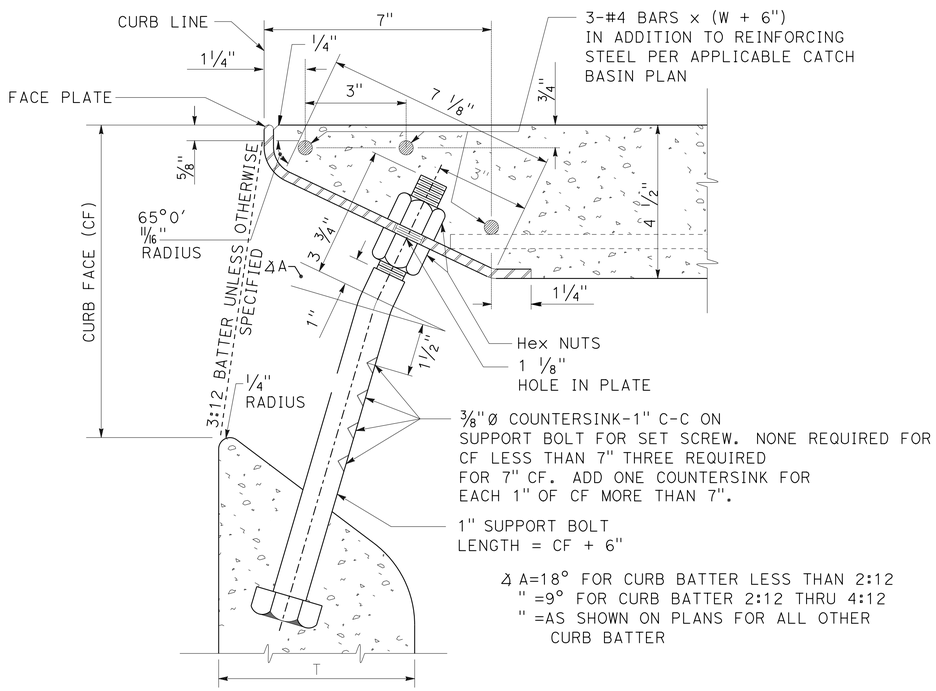

∡A=18° FOR CURB BATTER LESS THAN 2:12
" =9° FOR CURB BATTER 2:12 THRU 4:12
" =AS SHOWN ON PLANS FOR ALL OTHER CURB BATTER

SECTION

SUPPORT BOLT AND FACE PLATE 6" TOP SLAB

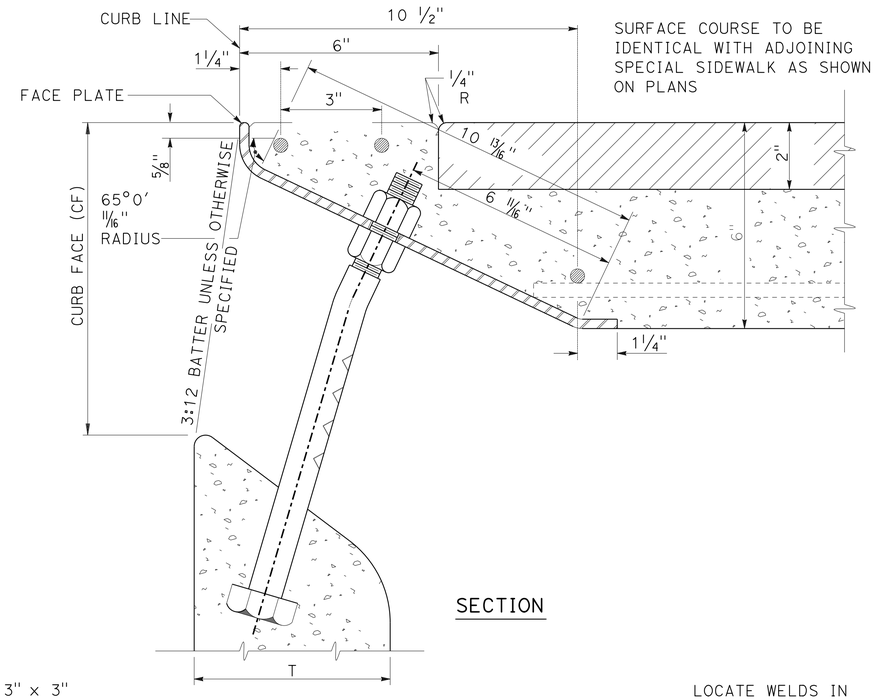

SECTION

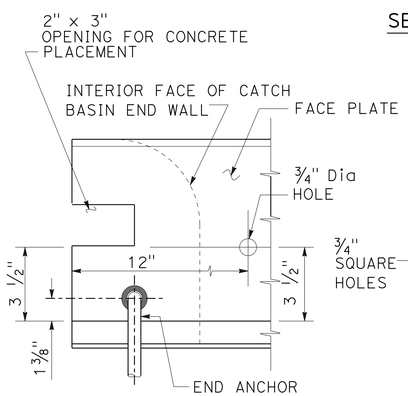

END DETAIL

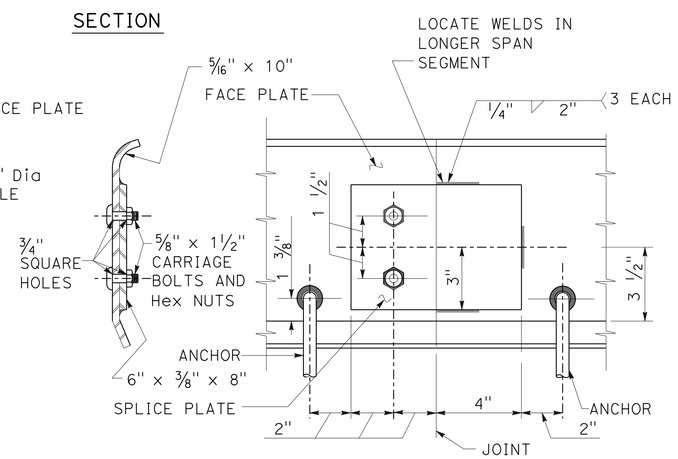

SPLICE DETAIL

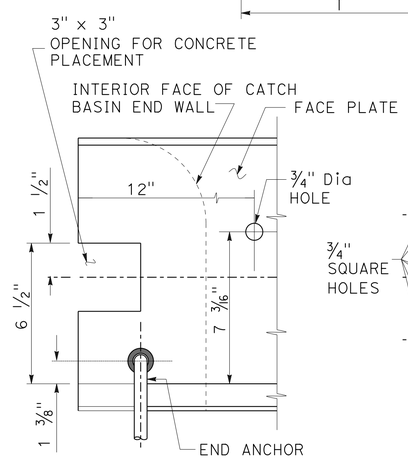

END DETAIL

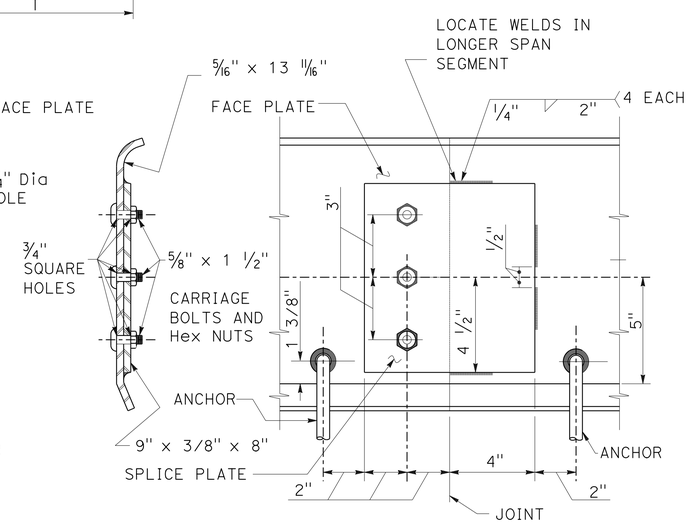

SPLICE DETAIL

CATCH BASIN FACE PLATE ASSEMBLY AND PROTECTION BAR (310-3)

(SHEET 1 OF 3)

DRAINAGE DETAILS

NO SCALE

DD-5

REVISED BY	DATE REVISED
DAVE BHALLA	JAI P. THAKUR
CALCULATED-DESIGNED BY	CHECKED BY
FUNCTIONAL SUPERVISOR	JAI P. THAKUR

STATE OF CALIFORNIA - DEPARTMENT OF TRANSPORTATION
Caltrans® HYDRAULICS

LAST REVISION 00-00-00 | DATE PLOTTED => 26-JUN-2013 | TIME PLOTTED => 15:39

Dist	COUNTY	ROUTE	POST MILES TOTAL PROJECT	SHEET No.	TOTAL SHEETS
07	LA	5	0.0/7.6	137	985

REGISTERED CIVIL ENGINEER 10-11-12 DATE

6-24-13
PLANS APPROVAL DATE

REGISTERED PROFESSIONAL ENGINEER DAVE BHALLA No. 34350 Exp. 9/30/13 CIVIL STATE OF CALIFORNIA

THE STATE OF CALIFORNIA OR ITS OFFICERS OR AGENTS SHALL NOT BE RESPONSIBLE FOR THE ACCURACY OR COMPLETENESS OF SCANNED COPIES OF THIS PLAN SHEET.

FACE PLATE ANCHORS

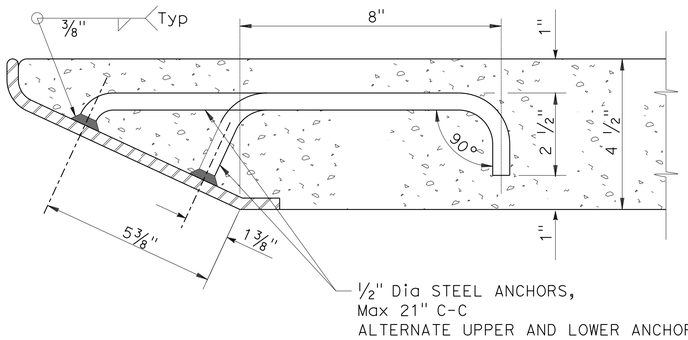

HOOK ANCHOR - 4 1/2 TOP SLAB

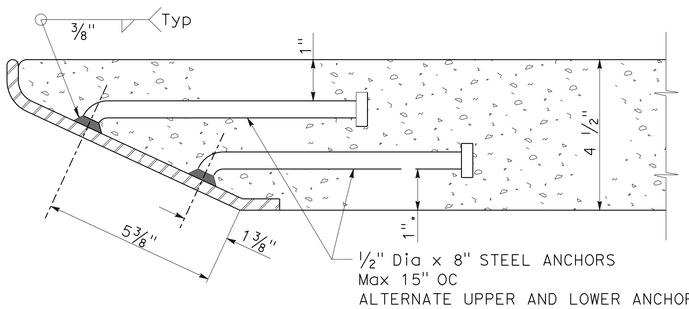

ROUND HEAD ANCHOR - 4 1/2 TOP SLAB

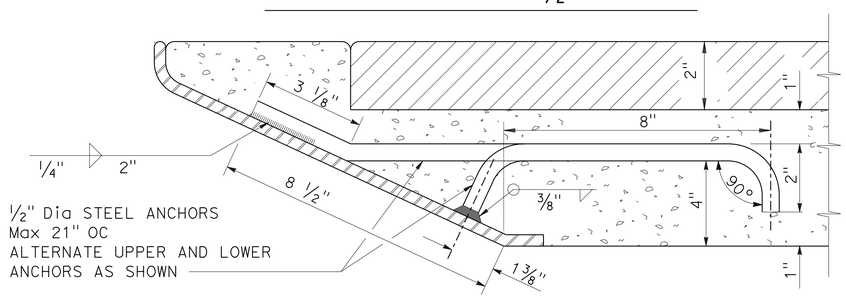

HOOK ANCHOR - 6" TOP SLAB

PROTECTION BAR AND SUPPOST BOLT(S) WITH ADJUSTABLE STIRRUP (S) - (TYPE A)

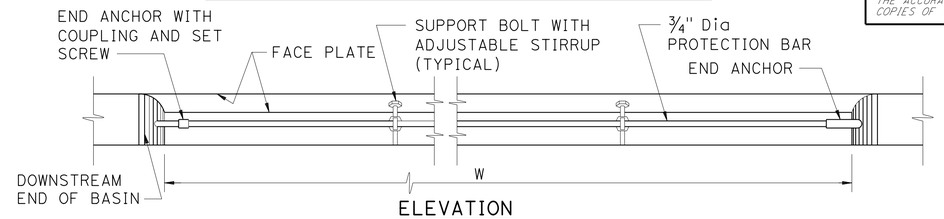

ELEVATION

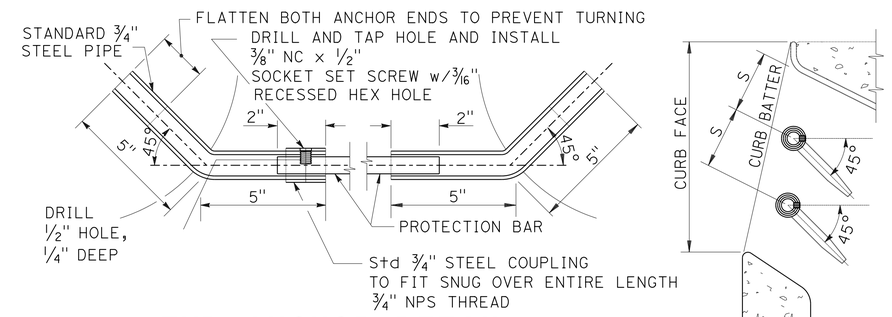

END ANCHOR DETAIL

DOUBLE PROTECTION BAR DETAIL

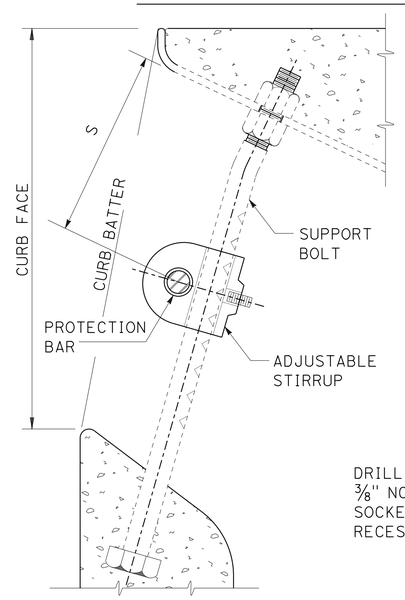

PROTECTION BAR & STIRRUP LOCATION

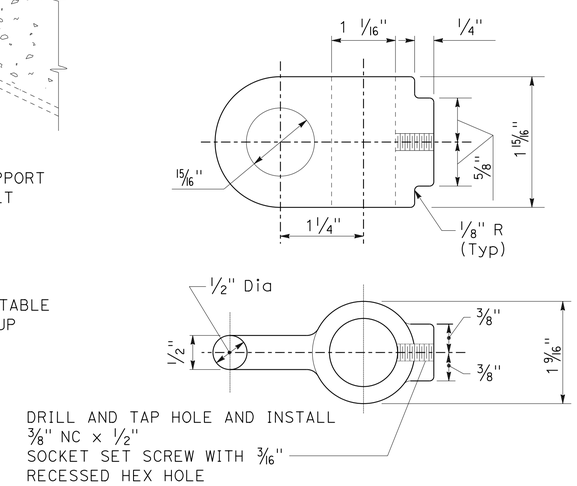

STIRRUP DETAIL

CATCH BASIN FACE PLATE ASSEMBLY AND PROTECTION BAR (310-3)

(SHEET 2 OF 3)

DRAINAGE DETAILS

NO SCALE

DD-6

STATE OF CALIFORNIA - DEPARTMENT OF TRANSPORTATION
Caltrans
HYDRAULICS

FUNCTIONAL SUPERVISOR: JAI P. THAKUR
CALCULATED-DESIGNED BY: DAVE BHALLA
CHECKED BY: JAI P. THAKUR
REVISED BY
DATE REVISED

LAST REVISION 00-00-00
DATE PLOTTED => 26-JUN-2013
TIME PLOTTED => 15:39

Dist	COUNTY	ROUTE	POST MILES TOTAL PROJECT	SHEET No.	TOTAL SHEETS
07	LA	5	0.0/7.6	138	985

REGISTERED CIVIL ENGINEER 10-11-12 DATE

6-24-13
PLANS APPROVAL DATE

REGISTERED PROFESSIONAL ENGINEER DAVE BHALLA No. 34350 Exp. 9/30/13 CIVIL STATE OF CALIFORNIA

THE STATE OF CALIFORNIA OR ITS OFFICERS OR AGENTS SHALL NOT BE RESPONSIBLE FOR THE ACCURACY OR COMPLETENESS OF SCANNED COPIES OF THIS PLAN SHEET.

PROTECTION BAR AND SUPPORT BOLT(S) WITH FIXED STIRRUP(S) - (TYPE B)

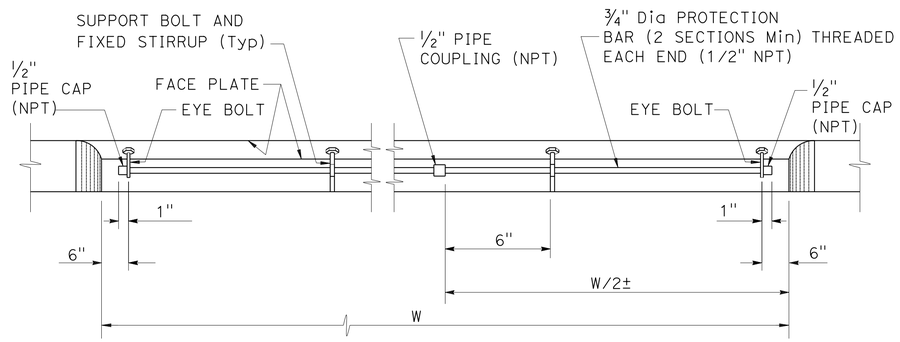

ELEVATION

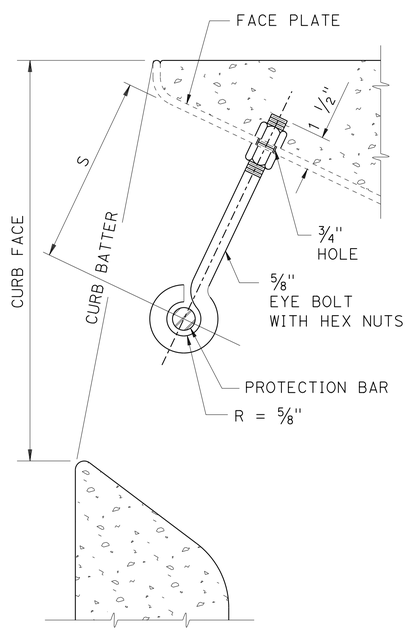

EYE BOLT DETAIL

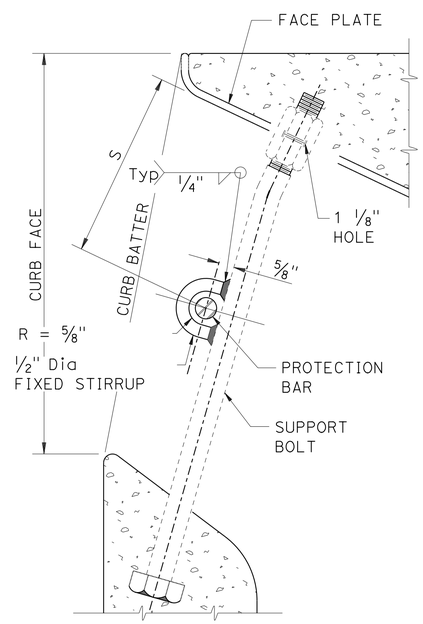

STIRRUP DETAIL

NOTES:

GENERAL

1. ALL PARTS SHALL BE STEEL, EXCEPT SET SCREWS, WHICH SHALL BE STAINLESS STEEL OR BRASS.
2. EXCLUDING SET SCREWS, ALL EXPOSED METAL PARTS SHALL BE GALVANIZED AFTER FABRICATION.
3. CURB FACE SHALL BE AS NOTED ON THE PLANS.
4. CURB BATTER SHALL BE 3:12 UNLESS OTHERWISE SPECIFIED.

FACE PLATE

5. FACE PLATE LENGTHS SHALL BE CATCH BASIN W PLUS 12" EXCEPT AS MODIFIED FOR "A" CURB OPENING CATCH BASIN AT DRIVEWAY.
6. WHEN THE LENGTH OF THE FACE PLATE IS BETWEEN 22′ AND 43′, TWO SECTIONS MAY BE USED. WHEN THE LENGTH EXCEEDS 43′, THREE SECTIONS MAY BE USED. SECTIONS SHALL BE SPLICED ACCORDING TO THE APPLICABLE SPLICE DETAIL. SPLICE SHALL BE PLACED 1′ FROM A SUPPORT BOLT.
7. WHERE CATCH BASINS ARE TO BE CONSTRUCTED ON CURVES, THE MAXIMUM CHORD LENGTH FOR THE FACE PLATE SHALL BE SUCH THAT THE MAXIMUM PERPENDICULAR DISTANCE TO THE TRUE CURVE SHALL NOT EXCEED 1". WHERE MORE THAN ONE CHORD IS REQUIRED, CHORD LENGTHS SHALL BE EQUAL. CHORD SECTIONS SHALL BE SPLICED ACCORDING TO THE APPLICABLE SPLICE DETAIL (MODIFIED TO FIT THE CHORD DEFLECTION) AND A SUPPORT BOLT SHALL BE PLACED 1′ FROM THE SPLICE.
8. ROUND HEAD ANCHORS FOR THE FACE PLATE SHALL BE NELSON H-4F SHEAR CONNECTOR, KSN WELDING SYSTEMS DIVISION SHEAR CONNECTOR OR EQUAL.

SUPPORT BOLT

9. SUPPORT BOLTS ARE REQUIRED WHEN THE LENGTH OF THE CATCH BASIN OPENING IS 7′ OR GREATER, AND SHALL BE EVENLY SPACED ACROSS THE OPENING. SPACING SHALL NOT BE LESS THAN 3′-6" ON CENTER NOR GREATER THAN 5′ ON CENTER.

STIRRUP

10. FOR TYPE A, MATERIAL SHALL BE CAST STEEL.

PROTECTION BAR

11. TYPE A SHALL BE USED UNLESS OTHERWISE SPECIFIED.
12. FOR TYPE A, THE BAR SHALL BE CUT TO FIT IN THE FIELD. WHEN "W" IS OVER 21′, THE PROTECTION BAR SHALL CONSIST OF 2 OR MORE SECTIONS. A SPECIAL CONNECTOR BETWEEN THE PROTECTION BAR PIECES SHALL CONSIST OF A 5" LENGTH OF STANDARD ¾" PIPE WITH STANDARD COUPLINGS FULLY THREADED ONTO EACH END DRILLED AND TAPPED FPR A SOCKET SET SCREW AS DETAILED FOR THE DOWNSTREAM END ANCHOR.
13. FOR TYPE B, THE BAR SHALL BE TWO PIECES. TWO EYE BOLTS AND A WELDED STIRRUP ON EACH SUPPORT BOLT ARE REQUIRED.
14. NUMBER OF PROTECTION BARS AND LOCATIONS ARE AS FOLLOWS:

CURB BATTER	MAXIMUM CURB FACE, INCHES													S DIMENSION
	6"	7"	8"	9"	10"	11"	12"	13"	14"	15"	16"	17"	18"	
0:12	0	0	3.5"	3.5"	4.5"	4.5"	4.5"	5.5"	3.5"	3.5"	4.5"	4.5"	4.5"	
1:12	0	0	3.5"	3.5"	4.5"	4.5"	4.5"	5.5"	3.5"	3.5"	4.5"	4.5"	5.5"	
2:12	0	0	3.5"	3.5"	4.5"	4.5"	5.5"	3.5"	3.5"	4.5"	4.5"	5.5"	5.5"	
3:12	0	0	3.5"	3.5"	4.5"	4.5"	5.5"	3.5"	4.5"	4.5"	5.5"	5.5"	4.5"	
4:12	0	3.5"	3.5"	4.5"	4.5"	5.5"	3.5"	3.5"	4.5"	4.5"	5.5"	4.5"	4.5"	
	0	1					2*					3*		
	NUMBER OF PROTECTION BARS													

FOR OTHER CURB FACE OR BATTER SEE PLANS
* TYPE A PROTECTION BAR ONLY

CATCH BASIN FACE PLATE ASSEMBLY AND PROTECTION BAR (310-3)

(SHEET 3 OF 3)

DRAINAGE DETAILS

NO SCALE

DD-7

STATE OF CALIFORNIA - DEPARTMENT OF TRANSPORTATION
Caltrans® HYDRAULICS
FUNCTIONAL SUPERVISOR JAI P. THAKUR
CALCULATED-DESIGNED BY DAVE BHALLA
CHECKED BY JAI P. THAKUR
REVISED BY
DATE REVISED

LAST REVISION 00-00-00
DATE PLOTTED => 26-JUN-2013
TIME PLOTTED => 15:39

Dist	COUNTY	ROUTE	POST MILES TOTAL PROJECT	SHEET No.	TOTAL SHEETS
07	LA	5	0.0/7.6	139	985

REGISTERED CIVIL ENGINEER 10-11-12 DATE

6-24-13
PLANS APPROVAL DATE

REGISTERED PROFESSIONAL ENGINEER DAVE BHALLA No. 34350 Exp. 9/30/13 CIVIL STATE OF CALIFORNIA

THE STATE OF CALIFORNIA OR ITS OFFICERS OR AGENTS SHALL NOT BE RESPONSIBLE FOR THE ACCURACY OR COMPLETENESS OF SCANNED COPIES OF THIS PLAN SHEET.

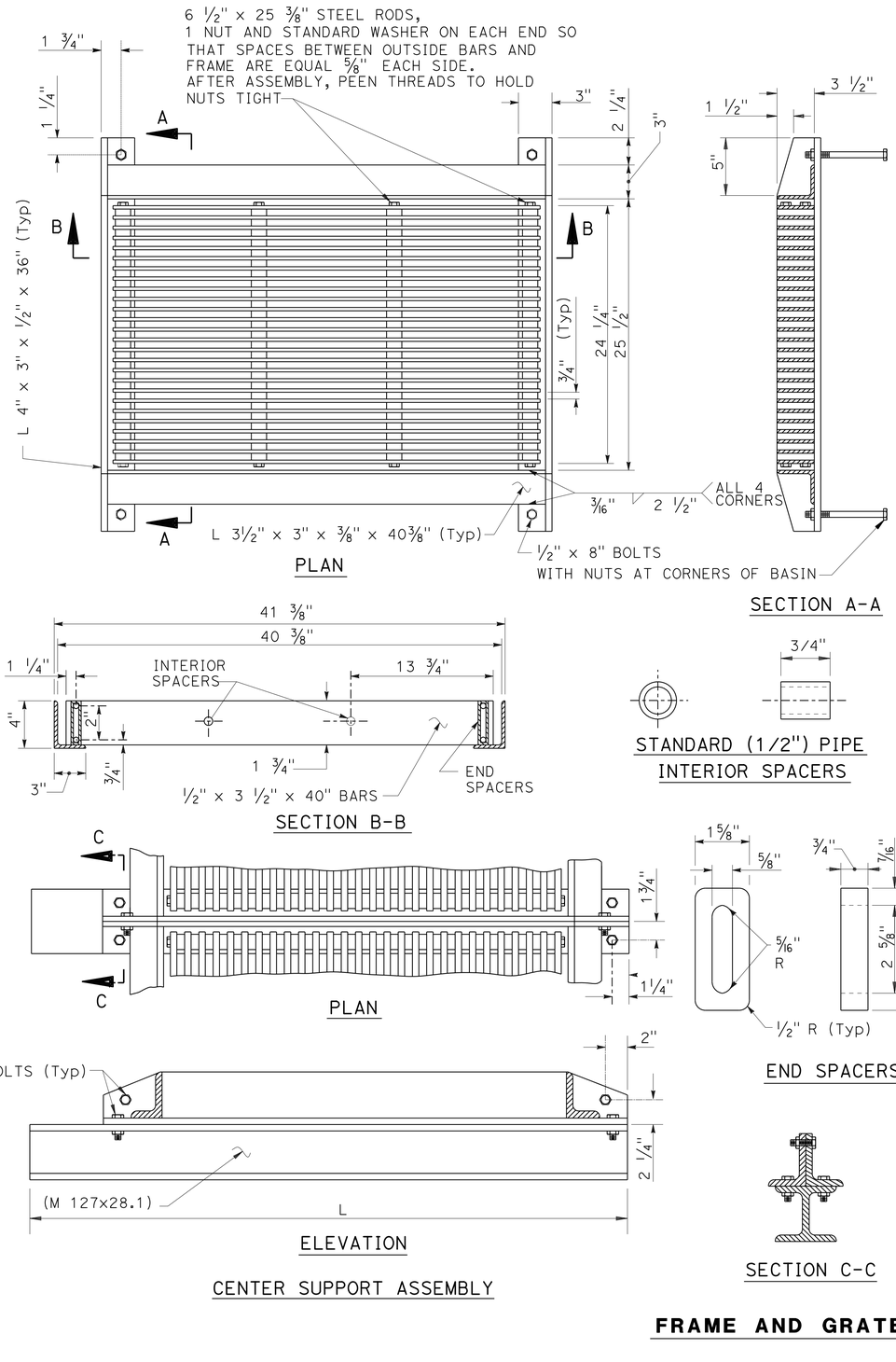

NOTES:

1. ALL PARTS SHALL BE STEEL, EXCEPT THAT END SPACERS MAY BE CAST IRON.
2. ALL PARTS SHALL BE GALVANIZED AFTER FABRICATION, EXCEPT THAT GRATINGS SHALL BE ASSEMBLED AFTER COMPONENT PARTS ARE GALVANIZED.
3. ALL DIMENSIONS ARE FINISHED DIMENSIONS AND INCLUDE GALVANIZING.
4. ALL BOLT HOLES SHALL BE 5/8" DIAMETER.
5. ALL THREADS SHALL BE NATIONAL COARSE SERIES (NC).
6. CENTER SUPPORT ASSEMBLY REQUIRED WHEN TWO OR MORE GRATINGS ARE SPECIFIED ON PLANS.

   L = 36" FOR CURBSIDE GRATING CATCH BASIN (303).

FRAME AND GRATE FOR CATCH BASINS (311-3)

DRAINAGE DETAILS

NO SCALE

DD-8

STATE OF CALIFORNIA - DEPARTMENT OF TRANSPORTATION
Caltrans HYDRAULICS

FUNCTIONAL SUPERVISOR: JAI P. THAKUR
CALCULATED-DESIGNED BY: DAVE BHALLA
CHECKED BY: JAI P. THAKUR
REVISED BY
DATE REVISED

LAST REVISION 00-00-00
DATE PLOTTED => 26-JUN-2013
TIME PLOTTED => 15:39

Dist	COUNTY	ROUTE	POST MILES TOTAL PROJECT	SHEET No.	TOTAL SHEETS
07	LA	5	0.0/7.6	140	985

REGISTERED CIVIL ENGINEER 10-11-12 DATE

6-24-13
PLANS APPROVAL DATE

REGISTERED PROFESSIONAL ENGINEER DAVE BHALLA No. 34350 Exp. 9/30/13 CIVIL STATE OF CALIFORNIA

THE STATE OF CALIFORNIA OR ITS OFFICERS OR AGENTS SHALL NOT BE RESPONSIBLE FOR THE ACCURACY OR COMPLETENESS OF SCANNED COPIES OF THIS PLAN SHEET.

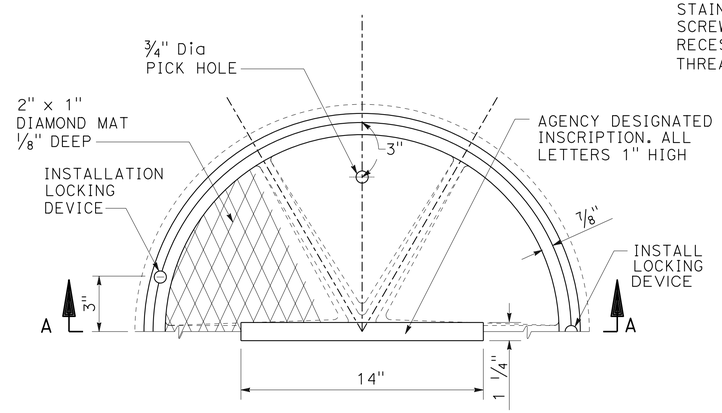

PLAN

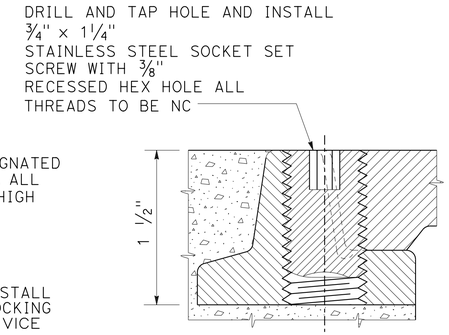

LOCKING DEVICE

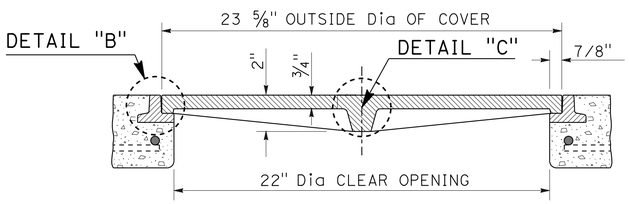

SECTION A-A

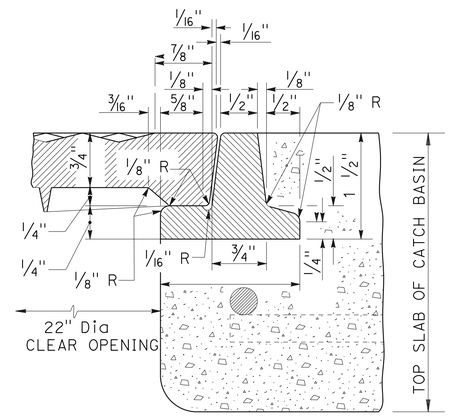

DETAIL "B"

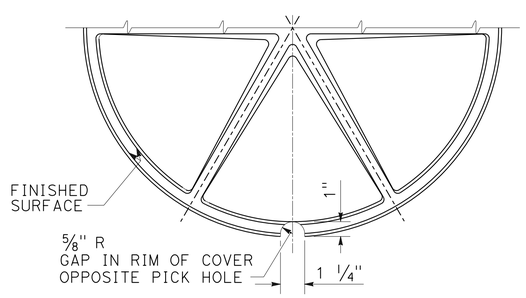

BOTTOM OF MANHOLE COVER

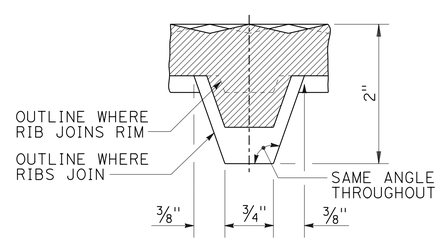

DETAIL "C"

NOTES:

1. THE CAST IRON USED SHALL CONFORM TO ASTM A-48 CLASS 35B.
2. THE FRAME AND COVER SHALL BE COATED WITH ASPHALTUM OR BITUMINOUS PAINT AFTER TESTING AND INSPECTION.
3. FOUNDRY IDENTIFYING MARK, HEAT AND DATE SHALL BE CAST ON THE BOTTOM OF THE COVER AND ON THE INSIDE OF THE FRAME.
4. IMPORTED COVERS AND FRAMES SHALL HAVE THE COUNTRY OF ORIGIN MARKING IN COMPLIANCE WITH FEDERAL REGULATIONS.
5. WEIGHT OF FRAME SHALL BE 30 POUNDS. WEIGHT OF COVER SHALL BE 85 POUNDS. ACTUAL WEIGHTS SHALL BE WITHIN A RANGE OF 95% TO 110% .
6. THE MANHOLE FRAME AND COVER SHALL BE INSPECTED BY THE ENGINEER PRIOR TO SHIPMENT TO THE WORK SITE. ACCEPTANCE WILL BE INDICATED BY THE AGENCY'S MARK.
7. THE PROOF-LOAD SHALL BE EQUIVALENT TO TEST METHOD B, IS 28,600 POUNDS .
8. INSCRIPTION SHALL BE AS SPECIFIED BY THE APPROPRIATE AGENCY.

CATCH BASIN MANHOLE FRAME AND COVER (312-3)

DRAINAGE DETAILS

NO SCALE

DD-9

STATE OF CALIFORNIA - DEPARTMENT OF TRANSPORTATION
Caltrans
HYDRAULICS

FUNCTIONAL SUPERVISOR: JAI P. THAKUR
CALCULATED-DESIGNED BY: DAVE BHALLA
CHECKED BY: JAI P. THAKUR
REVISED BY
DATE REVISED

LAST REVISION 00-00-00
DATE PLOTTED => 26-JUN-2013
TIME PLOTTED => 15:39

Dist	COUNTY	ROUTE	POST MILES TOTAL PROJECT	SHEET No.	TOTAL SHEETS
07	LA	5	0.0/7.6	141	985

REGISTERED CIVIL ENGINEER 10-11-12 DATE

6-24-13
PLANS APPROVAL DATE

REGISTERED PROFESSIONAL ENGINEER DAVE BHALLA No. 34350 Exp. 9/30/13 CIVIL STATE OF CALIFORNIA

THE STATE OF CALIFORNIA OR ITS OFFICERS OR AGENTS SHALL NOT BE RESPONSIBLE FOR THE ACCURACY OR COMPLETENESS OF SCANNED COPIES OF THIS PLAN SHEET.

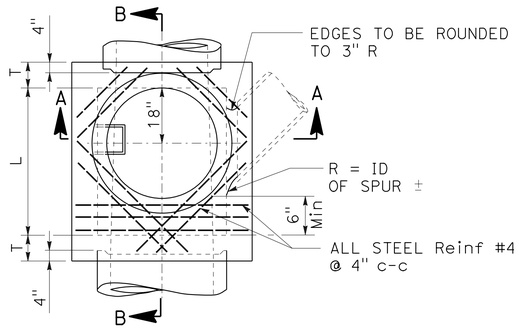

PLAN
(SHAFT NOT SHOWN)

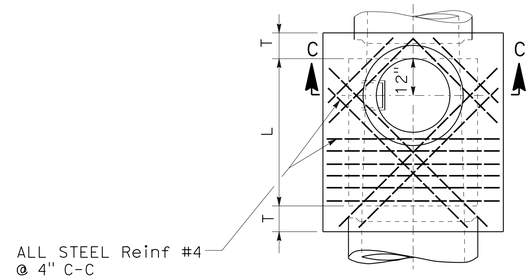

DETAIL "N" PLAN
(RINGS AND COVER NOT SHOWN)
SEE NOTE 1

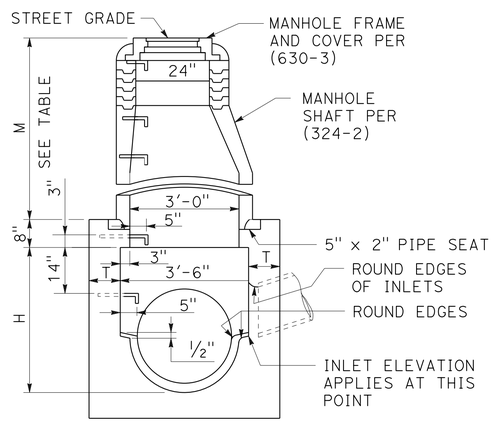

SECTION A-A

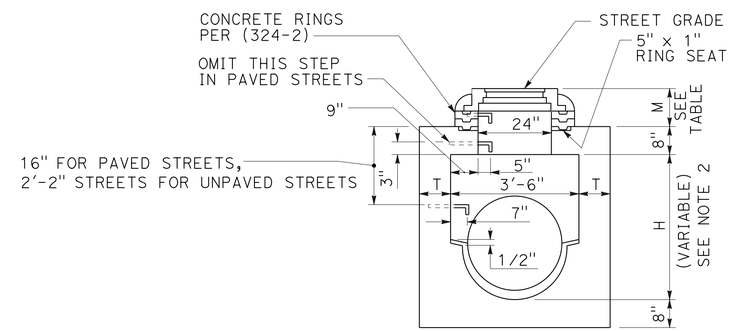

SECTION C-C

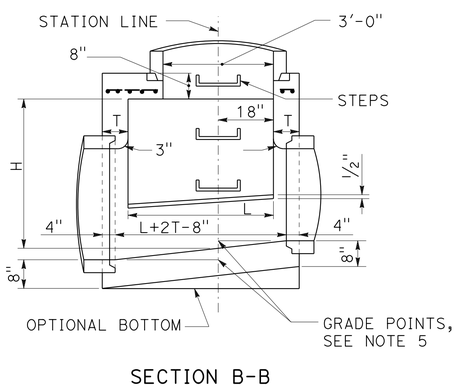

SECTION B-B

TABLE OF VALUES FOR M (SEE NOTE 1)				
SECTION	PAVED STREET		UNPAVED STREET	
	Max	Min	Max	Min
A-A		2'-10½"		3'-6"
C-C	11"	8½"	16"	15"

MANHOLE PIPE-TO-PIPE (321-2)

(ONE OR BOTH MAIN LINE IDS 33" OR SMALLER)

(SHEET 1 OF 2)

DRAINAGE DETAILS

NO SCALE

DD-10

STATE OF CALIFORNIA - DEPARTMENT OF TRANSPORTATION
Caltrans
HYDRAULICS

FUNCTIONAL SUPERVISOR: JAI P. THAKUR
CALCULATED-DESIGNED BY: DAVE BHALLA
CHECKED BY: JAI P. THAKUR
REVISED BY
DATE REVISED

LAST REVISION 00-00-00
DATE PLOTTED => 26-JUN-2013
TIME PLOTTED => 15:39

Dist	COUNTY	ROUTE	POST MILES TOTAL PROJECT	SHEET No.	TOTAL SHEETS
07	LA	5	0.0/7.6	142	985

REGISTERED CIVIL ENGINEER 10-11-12 DATE

6-24-13
PLANS APPROVAL DATE

REGISTERED PROFESSIONAL ENGINEER DAVE BHALLA No. 34350 Exp. 9/30/13 CIVIL STATE OF CALIFORNIA

THE STATE OF CALIFORNIA OR ITS OFFICERS OR AGENTS SHALL NOT BE RESPONSIBLE FOR THE ACCURACY OR COMPLETENESS OF SCANNED COPIES OF THIS PLAN SHEET.

NOTES:

1. WHEN DEPTH M FROM STREET GRADE TO THE TOP OF THE BOX IS LESS THAN 2′-10½" FOR PAVED STREETS OR 3′-6" FOR UNPAVED STREETS, CONSTRUCT SHAFT PER SECTION C-C AND DETAIL "N". DEPTH M MAY BE REDUCED TO AN ABSOLUTE LIMIT OF 6" WHEN LARGER VALUES OF M WOULD REDUCE H IN SECTION C-C TO 3′-6" OR LESS.

2. H (IN SECTION A-A AND B-B) SHALL NOT BE LESS THAN 4′-0", BUT MAY BE INCREASED PROVIDED THAT THE VALUE OF M SHALL NOT BE LESS THAN THE MINIMUM SPECIFIED AND THAT THE REDUCER SHALL BE USED. FOR H (IN SECTION C-C) SEE NOTE 1.

3. L SHALL BE 4′-0" UNLESS OTHERWISE SHOWN. L MAY BE INCREASED OR LOCATION OF MANHOLE SHIFTED TO MEET PIPE ENDS, BUT ANY CHANGE IN LOCATION OF THE SPUR MUST BE APPROVED BY THE ENGINEER.

4. T SHALL BE 8" FOR VALUES OF H UP TO AND INCLUDING 8′-0" AND 10" FOR VALUES OF H OVER 8′-0".

5. STATIONS OF MANHOLES SHOWN ON PLANS APPLY AT CENTERLINE OF SHAFT. ELEVATIONS ARE SHOWN AT CENTERLINE OF SHAFT AND REFER TO THE PROLONGED INVERT GRADE LINES. SEE NOTE 3.

6. REINFORCEMENT SHALL CONFORM TO ASTM A 615, GRADE 40, AND SHALL TERMINATE 1½" CLEAR OF CONCRETE SURFACES UNLESS OTHERWISE SHOWN.

7. FLOOR OF MANHOLE SHALL BE STEEL TROWELED TO SPRING LINE.

8. BODY OF MANHOLE SHALL BE POURED IN ONE CONTINUOUS OPERATION EXCEPT THAT A CONSTRUCTION JOINT WITH A LONGITUDINAL KEYWAY MAY BE PLACED AT SPRING LINE.

9. THICKNESS OF THE DECK SHALL VARY WHEN NECESSARY TO PROVIDE A LEVEL SEAT BUT SHALL NOT BE LESS THAN 8".

10. STEPS SHALL CONFORM TO (635-3) OR (636-2). UNLESS OTHERWISE SHOWN, STEPS SHALL BE UNIFORMLY SPACED 14" TO 15" C-C. THE LOWEST STEP SHALL NOT BE MORE THAN 24" ABOVE THE LEDGE AT THE SIDE OF THE MANHOLE.

11. THE FOLLOWING CRITERIA SHALL BE USED FOR THIS MANHOLE:

    A. MAIN LINE = 33" INSIDE DIAMETER OR LESS. (EXCEPTION - IF THE MAIN LINE RCP DOWNSTREAM OF THE MANHOLE IS 36" TO 42" INSIDE DIAMETER AND THE MAIN LINE RCP UPSTREAM IS 33" OR LESS.)

    B. SEE SECTION A - A. THE MAXIMUM SIZE LATERAL THAT MAY BE CONNECTED TO THIS MANHOLE IS SUCH THAT THE DISTANCE FROM THE OUTSIDE (TOP) OF THE LATERAL TO THE BOTTOM OF THE 8" THICK TOP OF THE MANHOLE CHAMBER, MEASURED VERTICALLY FROM THE END OF THE RCP, SHALL BE A MINIMUM OF 6"

    C. IF THE SIZE OF THE LATERAL IS SUCH THAT THE ABOVE-SPECIFIED MINIMUM DISTANCES CANNOT BE MAINTAINED, THEN ONE OF THE FOLLOWING ALTERNATE SOLUTIONS MUST BE USED.

        1. PROVIDE A SPECIAL STRUCTURE.

        2. PROVIDE TWO STANDARD STRUCTURES, CONSISTING OF THIS MANHOLE PLACED UPSTREAM OR DOWNSTREAM FROM THE APPLICABLE JUNCTION STRUCTURE OR TRANSITION STRUCTURE.

12. MANHOLE FRAME AND COVER SHALL CONFORM TO (630-3) UNLESS OTHERWISE SHOWN.

13. MANHOLE SHAFT SHALL CONFORM TO (324-2) UNLESS OTHERWISE SHOWN.

14. WHERE A PRESSURE MANHOLE SHAFT - WITH ECCENTRIC REDUCER IS SPECIFIED REFER TO (328-2).

15. WHERE A PRESSURE MANHOLE SHAFT - 36" WITHOUT REDUCER IS SPECIFIED REFER TO (329-2).

16. THE FOLLOWING DETAILS ARE INCORPORATED HEREIN:
    324-2 MANHOLE SHAFT - WITH ECCENTRIC REDUCER
    630-3 24" MANHOLE FRAME AND COVER
    635-3 STEEL STEP
    636-2 POLYPROPYLENE PLASTIC STEP

MANHOLE PIPE-TO-PIPE (321-2)

(ONE OR BOTH MAIN LINE IDS 33" OR SMALLER)

(SHEET 2 OF 2)

DRAINAGE DETAILS

NO SCALE

DD-11

STATE OF CALIFORNIA - DEPARTMENT OF TRANSPORTATION
Caltrans HYDRAULICS

FUNCTIONAL SUPERVISOR: JAI P. THAKUR
CALCULATED-DESIGNED BY: DAVE BHALLA
CHECKED BY: JAI P. THAKUR
REVISED BY
DATE REVISED

LAST REVISION 00-00-00
DATE PLOTTED => 26-JUN-2013
TIME PLOTTED => 15:39

Dist	COUNTY	ROUTE	POST MILES TOTAL PROJECT	SHEET No.	TOTAL SHEETS
07	LA	5	0.0/7.6	143	985

REGISTERED CIVIL ENGINEER 10-11-12 DATE

6-24-13
PLANS APPROVAL DATE

REGISTERED PROFESSIONAL ENGINEER DAVE BHALLA No. 34350 Exp. 9/30/13 CIVIL STATE OF CALIFORNIA

THE STATE OF CALIFORNIA OR ITS OFFICERS OR AGENTS SHALL NOT BE RESPONSIBLE FOR THE ACCURACY OR COMPLETENESS OF SCANNED COPIES OF THIS PLAN SHEET.

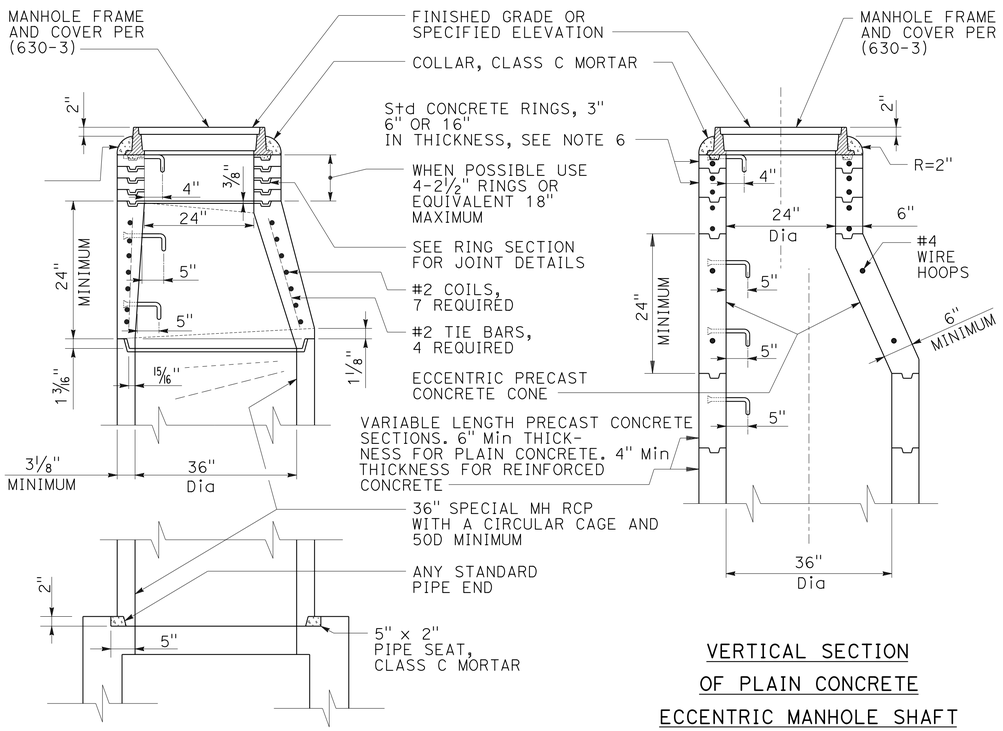

VERTICAL SECTION OF REINFORCED CONCRETE ECCENTRIC MANHOLE SHAFT

VERTICAL SECTION OF PLAIN CONCRETE ECCENTRIC MANHOLE SHAFT

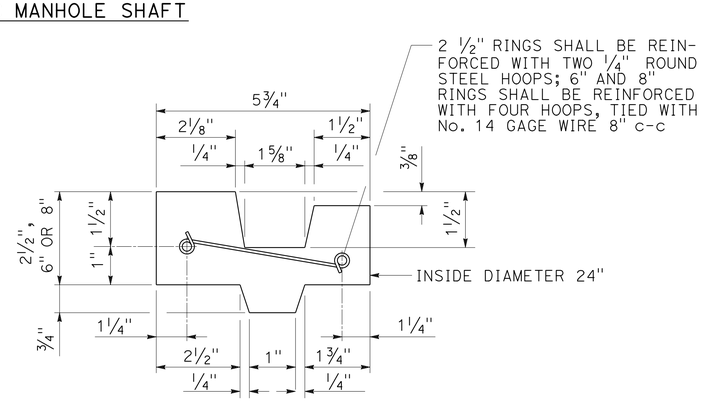

CROSS SECTION OF REINFORCED CONCRETE RING

NOTES:

1. UNLESS OTHERWISE INDICATED THIS STRUCTURE SHALL CONFORM TO ASTM C 478 AND ALL CONCRETE SHALL BE PER 201-1.2.
2. MANHOLE FRAME AND COVER SHALL CONFORM TO (630-3).
3. ALL JOINTS SHALL BE SEALED BY FILLING THE ANNULAR SPACES WITH CLASS C MORTAR. THE INSIDE OF THE SHAFT AT EACH JOINT SHALL BE WIPED CLEAN OF EXCESS MORTAR.
4. PROTECTIVE PLASTIC LINER (T LOCK) OR ENGINEER-APPROVED COATINGS WHERE REQUIRED BY THE PLANS SHALL BE IN ACCORDANCE WITH THE MANUFACTURER'S DIRECTIONS.
5. STEPS SHALL CONFORM TO (635-3) OR (636-2). THE TOP STEP SHALL BE PLACED DIRECTLY BENEATH THE MANHOLE FRAME. UNLESS OTHERWISE SHOWN, STEPS SHALL BE UNIFORMLY SPACED 14" TO 15" C-C.
6. THE ECCENTRIC MANHOLE SHAFT REDUCER AND RINGS MAY BE PLAIN CONCRETE. FOR PLAIN CONCRETE SECTIONS THE MINIMUM THICKNESS SHALL BE 6".
7. THE PRECAST CONCRETE MANHOLE STRUCTURES WILL BE INSPECTED BY THE ENGINEER WHO WILL INDICATE ACCEPTANCE FOR SHIPMENT TO THE JOB BY MARKING THE STRUCTURES WITH THE AGENCY'S STAMP.
8. THE VERTICAL SIDES OF THE MANHOLE SHAFT AND THE ECCENTRIC REDUCER SHALL BE LOCATED ABOVE AND IN LINE WITH THE SIDE OF THE STORM DRAIN CONDUIT.
9. CONSTRUCT MANHOLE SAFETY LEDGE PER (330-2) IF DEPTH OF MANHOLE TO INVERT IS GREATER THAN 20' AND MANHOLE SHAFT IS GREATER THAN 10'. WHEN SAFETY LEDGE IS REQUIRED AND MANHOLE SHAFT IS LESS THAN 12' (326-2) MUST BE USED.
10. THE FOLLOWING DETAILS ARE INCORPORATED HEREIN:

    630-3 24" MANHOLE FRAME AND COVER
    635-3 STEEL STEP
    636-2 POLYPROPYLENE PLASTIC STEP

MANHOLE SHAFT WITH ECCENTRIC REDUCER (324-2)

DRAINAGE DETAILS

NO SCALE

DD-12

STATE OF CALIFORNIA - DEPARTMENT OF TRANSPORTATION
Caltrans HYDRAULICS

FUNCTIONAL SUPERVISOR: JAI P. THAKUR
CALCULATED-DESIGNED BY: DAVE BHALLA
CHECKED BY: JAI P. THAKUR
REVISED BY
DATE REVISED

LAST REVISION 00-00-00
DATE PLOTTED => 26-JUN-2013
TIME PLOTTED => 15:39

Dist	COUNTY	ROUTE	POST MILES TOTAL PROJECT	SHEET No.	TOTAL SHEETS
07	LA	5	0.0/7.6	144	985

REGISTERED CIVIL ENGINEER 10-11-12 DATE

6-24-13
PLANS APPROVAL DATE

REGISTERED PROFESSIONAL ENGINEER DAVE BHALLA No. 34350 Exp. 9/30/13 CIVIL STATE OF CALIFORNIA

THE STATE OF CALIFORNIA OR ITS OFFICERS OR AGENTS SHALL NOT BE RESPONSIBLE FOR THE ACCURACY OR COMPLETENESS OF SCANNED COPIES OF THIS PLAN SHEET.

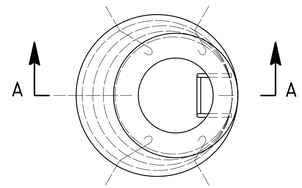

PLAN

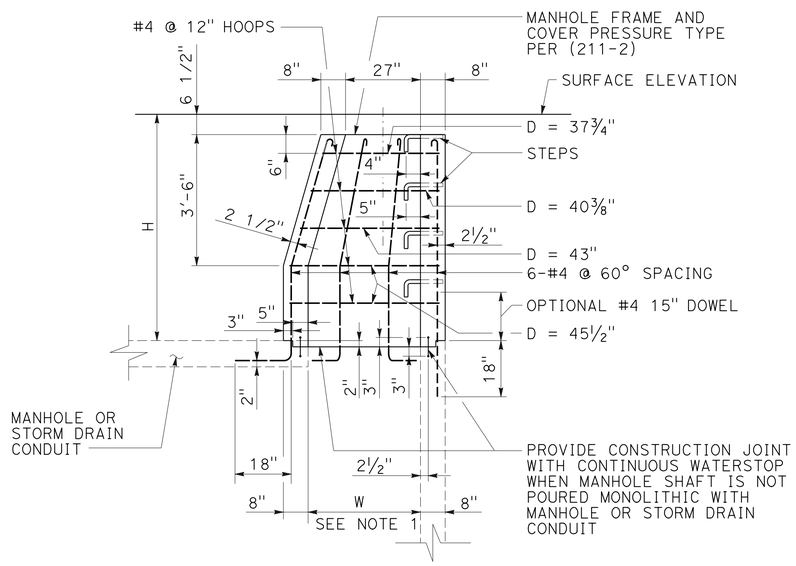

SECTION A-A

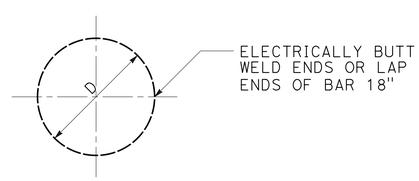

#4 HOOP BARS

NOTES:

1. IF H IS LESS THAN 18", W=27".
   IF H IS BETWEEN 18" AND 2'-6", W=2'-6".
   IF H IS 2'-6" OR MORE, W=3'-0".
   IF H IS MORE THAN 4'-1/2", BRING WALL VERTICALLY TO 4'-1/2" BELOW SURFACE AND TAPER FROM 3'-0" TO 27" AS SHOWN.

2. THIS STRUCTURE SHALL BE USED WITH MANHOLE FRAME AND COVER PRESSURE TYPE (211-2). IT MAY BE USED FOR HYDROSTATIC HEADS UP TO 25' ABOVE THE STEEL PLATE.

3. THE VERTICAL SIDE OF THE MANHOLE SHAFT AND THE ECCENTRIC REDUCER SHALL BE LOCATED ABOVE AND IN LINE WITH THE SIDE OF THE STORM DRAIN CONDUIT.

4. REINFORCEMENT SHALL CONFORM TO ASTM A 615, GRADE 40 AND SHALL TERMINATE 1½" CLEAR OF CONCRETE SURFACES UNLESS OTHERWISE SHOWN.

5. STEPS SHALL CONFORM TO (635-3) OR (636-2). THE TOP STEP SHALL BE PLACED DIRECTLY BENEATH THE MANHOLE FRAME. UNLESS OTHERWISE SHOWN, STEPS SHALL BE UNIFORMLY SPACED 14" TO 15" OC.

6. SEE STANDARD SPECIFICATIONS (SECTION 51-1.14) FOR PHYSICAL REQUIREMENTS OF WATERSTOP.

7. THE FOLLOWING DETAILS ARE INCORPORATED HEREIN:
   211-2 MANHOLE FRAME AND COVER PRESSURE TYPE
   635-3 STEEL STEP
   636-2 POLYPROPYLENE PLASTIC STEP.

PRESSURE MANHOLE SHAFT WITH ECCENTRIC REDUCER (328-2)

DRAINAGE DETAILS

NO SCALE

DD-13

STATE OF CALIFORNIA - DEPARTMENT OF TRANSPORTATION
Caltrans
HYDRAULICS

FUNCTIONAL SUPERVISOR: JAI P. THAKUR
CALCULATED-DESIGNED BY: DAVE BHALLA
CHECKED BY: JAI P. THAKUR
REVISED BY
DATE REVISED

LAST REVISION 00-00-00
DATE PLOTTED => 26-JUN-2013
TIME PLOTTED => 15:39

Dist	COUNTY	ROUTE	POST MILES TOTAL PROJECT	SHEET No.	TOTAL SHEETS
07	LA	5	0.0/7.6	145	985

REGISTERED CIVIL ENGINEER 10-11-12 DATE

6-24-13
PLANS APPROVAL DATE

REGISTERED PROFESSIONAL ENGINEER DAVE BHALLA No. 34350 Exp. 9/30/13 CIVIL STATE OF CALIFORNIA

THE STATE OF CALIFORNIA OR ITS OFFICERS OR AGENTS SHALL NOT BE RESPONSIBLE FOR THE ACCURACY OR COMPLETENESS OF SCANNED COPIES OF THIS PLAN SHEET.

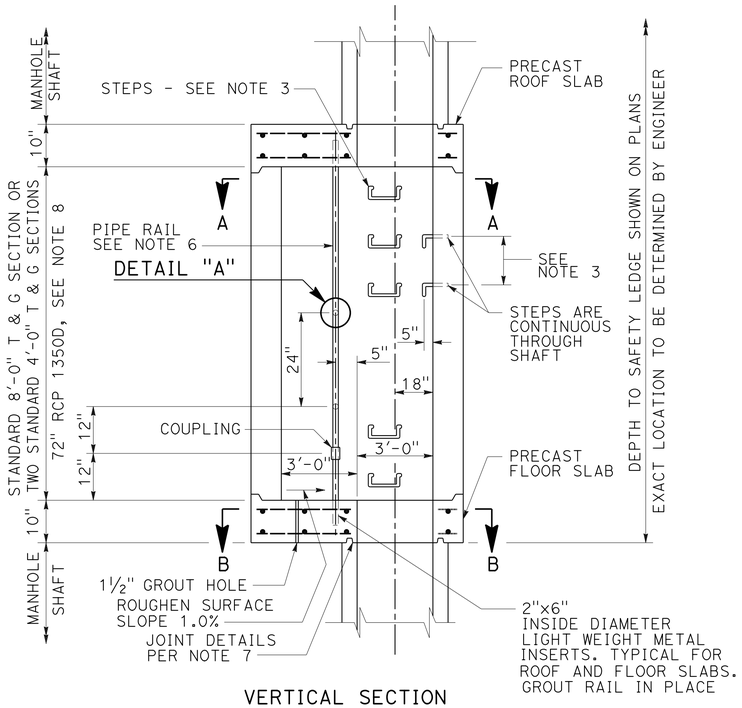

VERTICAL SECTION

NOTES:

1. MANHOLE SHAFT SAFETY LEDGE WILL BE NOTED ON THE PLANS WHEN REQUIRED. IT IS TO BE CONSTRUCTED WHEN DEPTH OF MANHOLE TO INVERT IS GREATER THAN 20' AND MANHOLE SHAFT IS GREATER THAN 10'.
2. A SAFETY LEDGE SHALL NOT BE USED IF A PRESSURE MANHOLE IS REQUIRED.
3. STEPS SHALL CONFORM TO 635 OR 636 AND SHALL BE ANCHORED 4" IN THE WALL OF THE STRUCTURE. STEPS SHALL BE PLACED TO MATCH THE SPACING OF THE MANHOLE SHAFT.
4. REINFORCEMENT SHALL BE PER ASTM A 615, GRADE 40 AND SHALL TERMINATE 2" CLEAR OF CONCRETE SURFACE UNLESS OTHERWISE SHOWN.
5. GROUT HOLES, PIPE AND FITTINGS SHALL BE PROVIDED IN THE FLOOR SLAB. PRESSURE GROUTING SHALL BE USED TO FILL VOIDS AND TO SECURE UNIFORM BEARING. THE GROUT SHALL BE NEAT CEMENT GROUT AND GROUTING PRESSURES SHALL BE AS DETERMINED IN THE FIELD BY THE ENGINEER.
6. PIPE RAIL SHALL BE FABRICATED OF 1¼" STANDARD GALVANIZED PIPE COMPOSED OF TWO SECTIONS 7'-6" & 18" IN LENGTH JOINED BY A GALVANIZED COUPLING. THE COUPLING SHALL BE THREADED A MINIMUM OF 2" ON EACH PIPE LENGTH.
7. ROOF AND FLOOR SLABS SHALL BE PRECAST AND KEYED FOR REINFORCED CONCRETE PIPE SECTIONS AS SHOWN. ALL JOINTS SHALL BE FILLED WITH CLASS C MORTAR AND NEATLY POINTED OR WIPED ON THE INSIDE.
8. 72" RCP SHALL BE PROVIDED WITH TWO CIRCULAR CAGES OF REINFORCEMENT.
9. THE FOLLOWING DETAILS ARE INCORPORATED HEREIN:

   324-2 MANHOLE SHAFT - WITH ECCENTRIC REDUCER
   635-3 STEEL STEP
   636-2 POLYPROPYLENE PLASTIC STEP

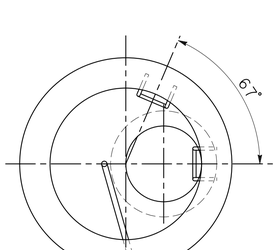

SECTION A-A

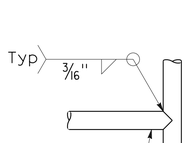

DETAIL "A"

ROTATED 90°

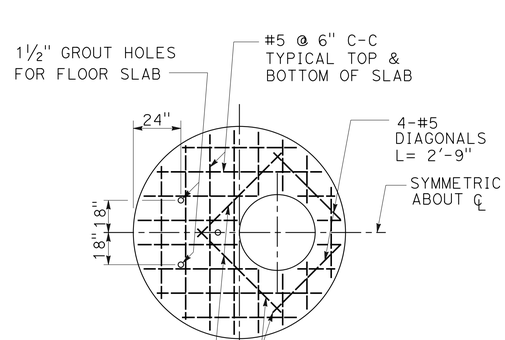

SECTION B-B
REINFORCEMENT DETAILS
FOR FLOOR AND ROOF SLABS

MANHOLE SHAFT SAFETY LEDGE (330-2)

DRAINAGE DETAILS

NO SCALE

DD-14

STATE OF CALIFORNIA - DEPARTMENT OF TRANSPORTATION
Caltrans
HYDRAULICS

FUNCTIONAL SUPERVISOR: JAI P. THAKUR
CALCULATED-DESIGNED BY: DAVE BHALLA
CHECKED BY: JAI P. THAKUR
REVISED BY
DATE REVISED

LAST REVISION 00-00-00
DATE PLOTTED => 26-JUN-2013
TIME PLOTTED => 15:39

Dist	COUNTY	ROUTE	POST MILES TOTAL PROJECT	SHEET No.	TOTAL SHEETS
07	LA	5	0.0/7.6	146	985

REGISTERED CIVIL ENGINEER 10-11-12 DATE

6-24-13
PLANS APPROVAL DATE

REGISTERED PROFESSIONAL ENGINEER DAVE BHALLA No. 34350 Exp. 9/30/13 CIVIL STATE OF CALIFORNIA

THE STATE OF CALIFORNIA OR ITS OFFICERS OR AGENTS SHALL NOT BE RESPONSIBLE FOR THE ACCURACY OR COMPLETENESS OF SCANNED COPIES OF THIS PLAN SHEET.

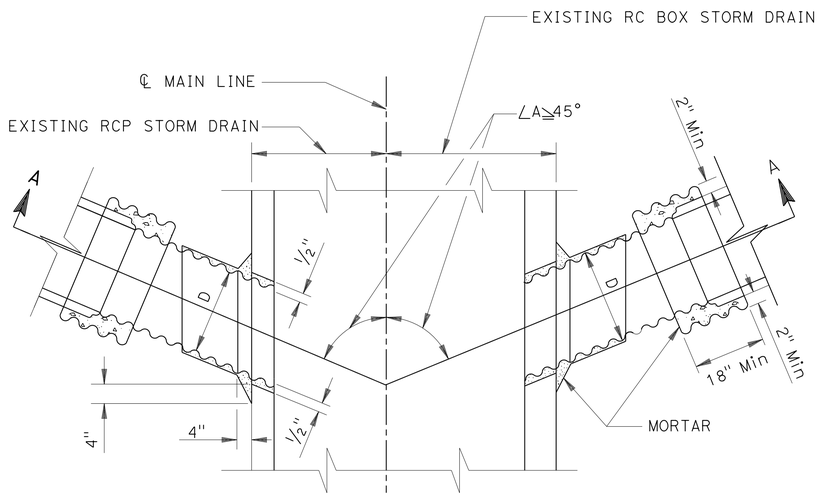

PLAN

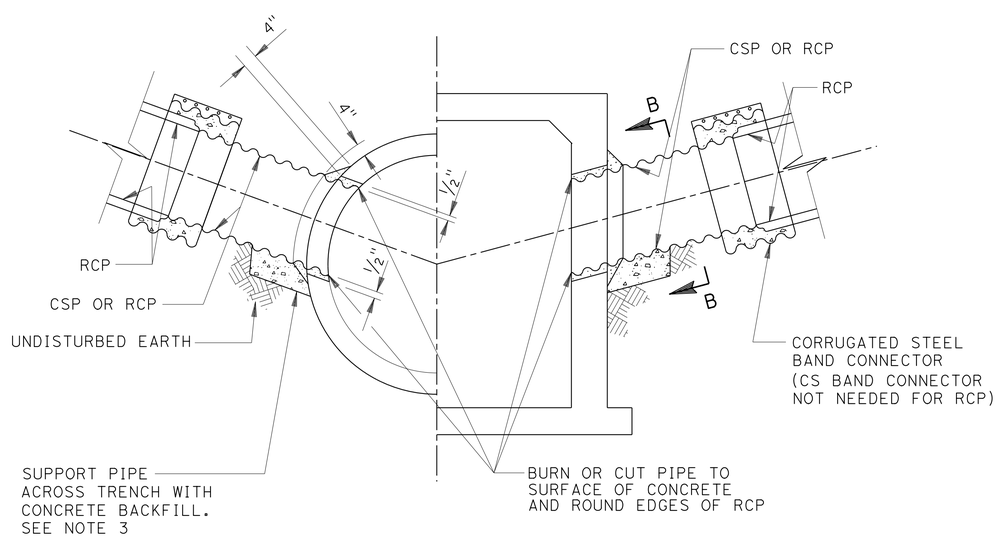

SECTION A-A

RCP OR CSP

D = 24" Max

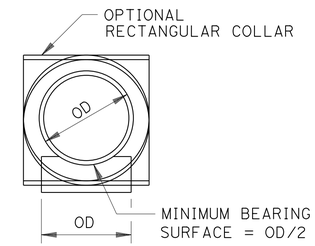

SECTION B-B

DIAMETER OF CSP	Min GAGE
15" - 21"	16
24"	14

NOTES:

1. OUTSIDE DIAMETER OF THE CONNECTOR PIPE SHALL NOT BE GREATER THAN 1/2 THE INSIDE DIAMETER OF THE RCP MAIN LINE.
2. INSIDE DIAMETER D OF THE CONNECTOR PIPE SHALL NOT BE GREATER THAN 24".
3. THE MINIMUM OPENING INTO THE EXISTING STORM DRAIN SHALL BE THE OUTSIDE DIAMETER OF THE CONNECTING PIPE PLUS 1". THE CONCRETE BACKFILL SUPPORTING THE CONNECTING PIPE MAY BE OMITTED IF THE PIPE IS LAID ON UNDISTURBED EARTH TO STORM DRAIN WALL.
4. ALL CSP AND FITTINGS SHALL BE GALVANIZED. BAND CONNECTORS MAY BE 2 GAGES LIGHTER THAN THE PIPE, BUT WITH A MINIMUM GAGE OF 16. THEY SHALL BE CONNECTED AT THE ENDS BY ANGLES HAVING MINIMUM DIMENSIONS OF 2" x 2" x 3/16" AND 5 1/2" BOLTS.
5. WHEN JOINING A RCP CONNECTOR PIPE TO A CSP CONNECTOR PIPE, THE INSIDE DIAMETER D OF THE CSP SHALL BE AT LEAST EQUAL TO BUT NOT MORE THAN 3" GREATER THAN THAT OF THE RCP.
6. CONNECTOR PIPES SHALL BE NOT MORE THAN 5' ABOVE THE INVERT.
7. CONNECTOR PIPES SHALL ENTER MAIN LINE RCP RADIALLY.

PIPE CONNECTIONS TO EXISTING STORM DRAINS (335-2)

DRAINAGE DETAILS

NO SCALE

DD-15

STATE OF CALIFORNIA - DEPARTMENT OF TRANSPORTATION
Caltrans
HYDRAULICS
FUNCTIONAL SUPERVISOR: JAI P. THAKUR
CALCULATED-DESIGNED BY: DAVE BHALLA
CHECKED BY: JAI P. THAKUR
REVISED BY
DATE REVISED

LAST REVISION 00-00-00 | DATE PLOTTED => 26-JUN-2013 | TIME PLOTTED => 15:40

Dist	COUNTY	ROUTE	POST MILES TOTAL PROJECT	SHEET No.	TOTAL SHEETS
07	LA	5	0.0/7.6	147	985

REGISTERED CIVIL ENGINEER 10-11-12 DATE

6-24-13
PLANS APPROVAL DATE

REGISTERED PROFESSIONAL ENGINEER DAVE BHALLA No. 34350 Exp. 9/30/13 CIVIL STATE OF CALIFORNIA

THE STATE OF CALIFORNIA OR ITS OFFICERS OR AGENTS SHALL NOT BE RESPONSIBLE FOR THE ACCURACY OR COMPLETENESS OF SCANNED COPIES OF THIS PLAN SHEET.

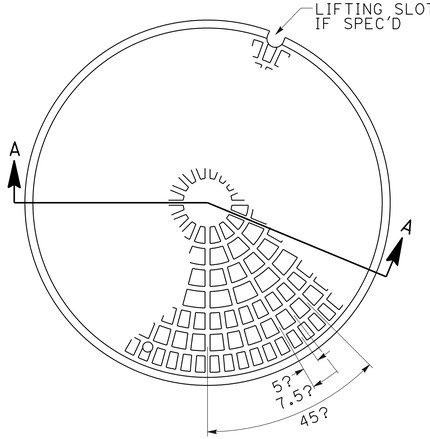

TOP OF COVER

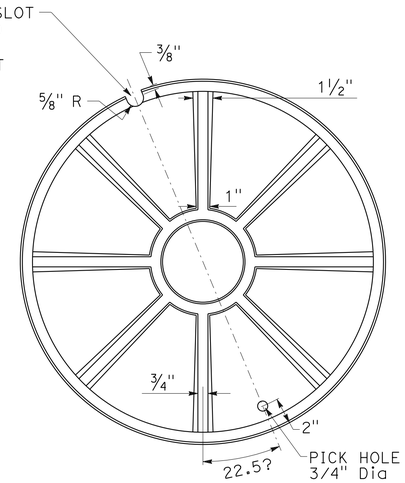

BOTTOM OF COVER

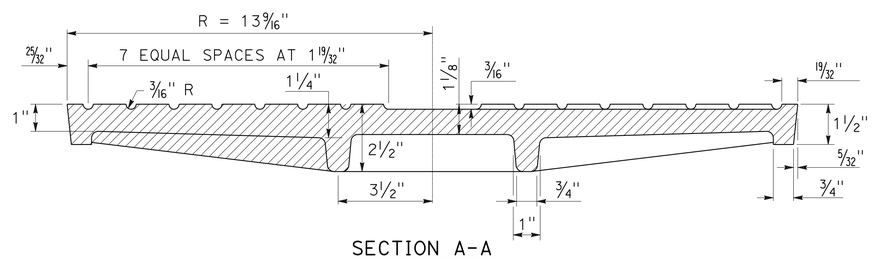

SECTION A-A

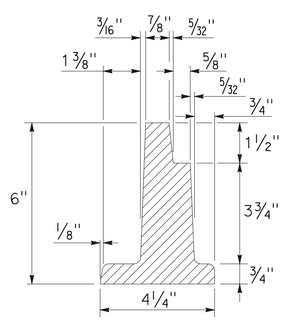

FRAME DETAIL

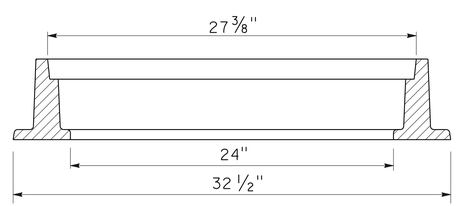

SECTION THRU FRAME

NOTES:

1. THE CAST IRON USED SHALL CONFORM TO ASTM A-48 CLASS 35B.
2. COVERS SHALL BE CAST WITH THE LETTER "D" FOR STORM DRAINS AND "S" FOR SEWERS, AND THE AGENCY'S IDENTIFICATION IN ACCORDANCE WITH INSTRUCTIONS FURNISHED BY THE AGENCY. THE LETTER "D" OR "S" SHALL BE APPROXIMATELY 2 1/2" HIGH WITH 1/2" LINE WIDTH, AND PLACED IN THE CENTER OF THE COVER ALL LETTERS SHALL BE FLUSH WITH THE FINISHED SURFACE OF THE COVER.
3. FOUNDRY IDENTIFYING MARK, HEAT AND DATE SHALL BE CAST ON THE BOTTOM OF THE COVER AND ON THE INSIDE OF THE FRAME.
4. IMPORTED COVERS AND FRAMES SHALL HAVE THE COUNTRY OF ORIGIN MARKING IN COMPLIANCE WITH FEDERAL REGULATIONS.
5. WEIGHT OF FRAME SHALL BE 260 LBS. WEIGHT OF COVER SHALL BE 175 LBS. ACTUAL WEIGHTS SHALL BE WITHIN A RANGE OF 95% TO 110%.
6. THE MANHOLE FRAME AND COVER SHALL BE INSPECTED BY THE ENGINEER PRIOR TO SHIPMENT TO THE JOBSITE. ACCEPTANCE WILL BE INDICATED BY THE AGENCY'S MARK.
7. THE PROOF-LOAD SHALL BE EQUIVALENT TO TEST METHOD B, IS 40,700 LBS.
8. COVERS FOR MANHOLES LOCATED IN EASEMENTS, ALLEYS, PARKWAYS AND ALL PLACES OTHER THAN PAVED STREETS SHALL BE PROVIDED WITH SOCKET-SET SCREW LOCKING DEVICES. DRILL AND TAP TWO HOLES TO A DEPTH OF 1" AT 90 DEGREES TO PICK HOLE AND INSTALL 3/4" x 3/4" STAINLESS STEEL SOCKET-SET SCREWS WITH 3/8" RECESSED HEX HEAD. ALL THREADS SHALL BE NC

24" MANHOLE FRAME AND COVER (630-3)

DRAINAGE DETAILS

NO SCALE

DD-16

STATE OF CALIFORNIA - DEPARTMENT OF TRANSPORTATION
Caltrans
HYDRAULICS

FUNCTIONAL SUPERVISOR: JAI P. THAKUR
CALCULATED-DESIGNED BY: DAVE BHALLA
CHECKED BY: JAI P. THAKUR
REVISED BY
DATE REVISED

LAST REVISION 00-00-00
DATE PLOTTED => 26-JUN-2013
TIME PLOTTED => 15:40

Dist	COUNTY	ROUTE	POST MILES TOTAL PROJECT	SHEET No.	TOTAL SHEETS
07	LA	5	0.0/7.6	148	985

REGISTERED CIVIL ENGINEER 10-11-12 DATE

6-24-13
PLANS APPROVAL DATE

REGISTERED PROFESSIONAL ENGINEER DAVE BHALLA No. 34350 Exp. 9/30/13 CIVIL STATE OF CALIFORNIA

THE STATE OF CALIFORNIA OR ITS OFFICERS OR AGENTS SHALL NOT BE RESPONSIBLE FOR THE ACCURACY OR COMPLETENESS OF SCANNED COPIES OF THIS PLAN SHEET.

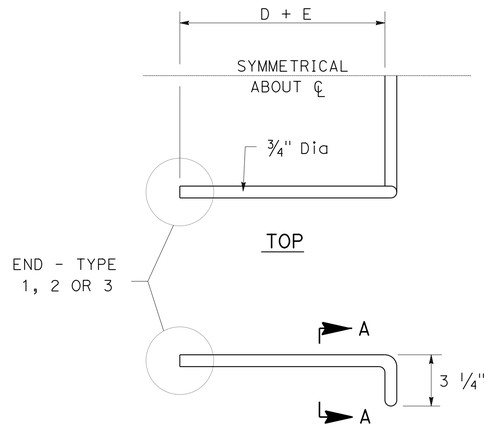

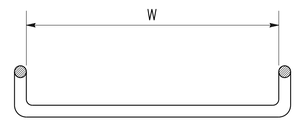

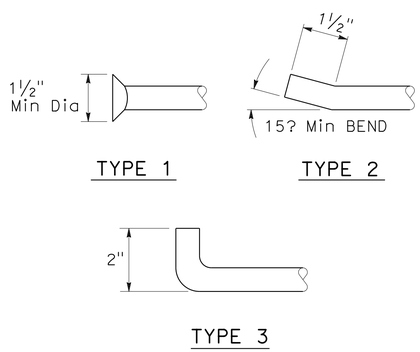

END DETAILS-SIDE VIEW

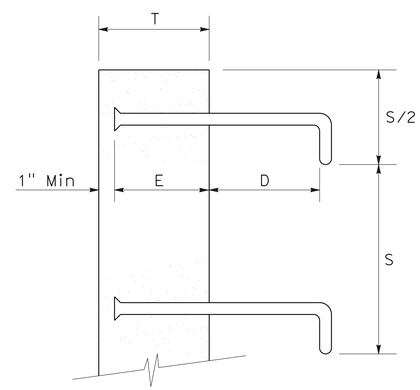

INSTALLATION DETAIL

UNLESS OTHERWISE NOTED:

D = 7"
E = 6" OR T - 1", WHICHEVER IS LESS
MINIMUM E IS 3"
S = 12" Max, EVENLY SPACED
W = 16" Min

FOR MANHOLES AND UNDERGROUND VAULTS:
S = 16" Max, EVENLY SPACED
W = 14" Min

NOTES:

1. STEPS SHALL BE STEEL CONFORMING TO ASTM A307 AND SHALL BE GALVANIZED AFTER FABRICATION. UNLESS OTHERWISE NOTED, STEPS MAY ALSO BE POLYPROPYLENE STEPS, STEEL REINFORCED, CONFORMING TO (636-2).
2. IF STAINLESS STEEL STEPS ARE REQUIRED, THE MATERIAL SHALL CONFORM TO ASTM A276, 300 SERIES.
3. STEP ENDS MAY BE TYPE 1, 2 OR 3, AS SHOWN.
4. BOTTOM STEP SHALL BE A MAXIMUM OF 2' ABOVE FLOOR OR SHELF.
5. STEPS WITH TYPE 1 OR 2 ENDS MAY BE CAST IN PLACE, OR PLACED IN THE CENTER OF 1½" Min Dia DRILLED OR FORMED HOLES AND SET WITH HIGH STRENGTH NON-SHRINK GROUT, 6000 PSI MINIMUM STEPS WITH TYPE 3 ENDS SHALL BE CAST-IN-PLACE.

STEEL STEP (635-3)

DRAINAGE DETAILS

NO SCALE

DD-17

STATE OF CALIFORNIA - DEPARTMENT OF TRANSPORTATION
Caltrans® HYDRAULICS

FUNCTIONAL SUPERVISOR: JAI P. THAKUR
CALCULATED-DESIGNED BY: DAVE BHALLA
CHECKED BY: JAI P. THAKUR
REVISED BY
DATE REVISED

LAST REVISION 00-00-00
DATE PLOTTED => 26-JUN-2013
TIME PLOTTED => 15:40

Dist	COUNTY	ROUTE	POST MILES TOTAL PROJECT	SHEET No.	TOTAL SHEETS
07	LA	5	0.0/7.6	149	985

REGISTERED CIVIL ENGINEER 10-11-12 DATE

6-24-13
PLANS APPROVAL DATE

REGISTERED PROFESSIONAL ENGINEER
DAVE BHALLA
No. 34350
Exp. 9/30/13
CIVIL
STATE OF CALIFORNIA

THE STATE OF CALIFORNIA OR ITS OFFICERS OR AGENTS SHALL NOT BE RESPONSIBLE FOR THE ACCURACY OR COMPLETENESS OF SCANNED COPIES OF THIS PLAN SHEET.

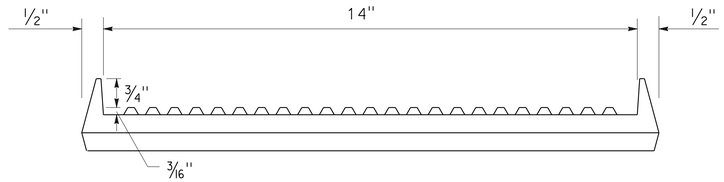

FRONT

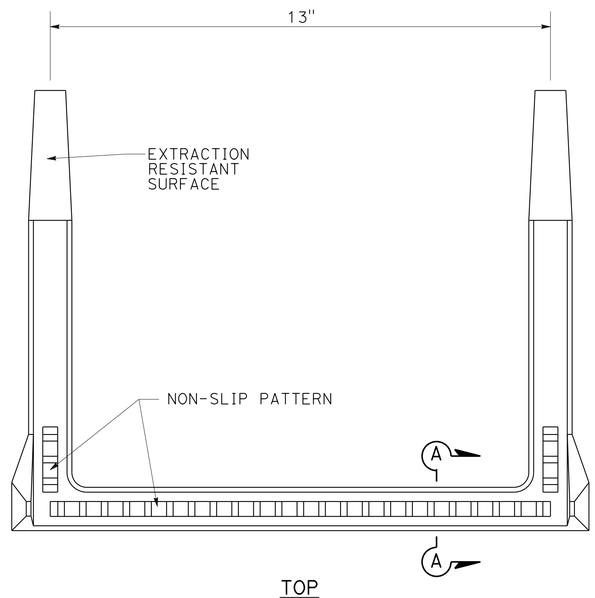

TOP

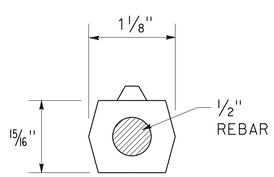

SECTION A-A

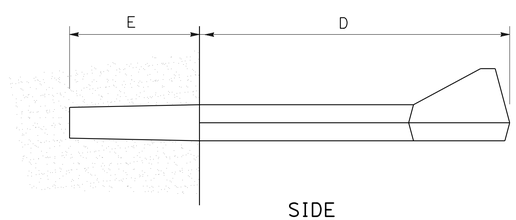

SIDE

NOTES:

1. STEPS SHALL BE STEEL-REINFORCED COPOLYMER POLYPROPYLENE PLASTIC CONFORMING TO:

   (A) ASTM D478 AND C497, EXCEPT THAT THE MINIMUM HORIZONTAL PULLOUT LOAD SHALL BE 1,500 LBS.
   (B) ASTM A615 GRADE 60 DEFORMED REINFORCING STEEL BAR.
   (C) CALIFORNIA CODE OF REGULATIONS TITLE 8, GENERAL INDUSTRY SAFETY ORDERS.

2. STEPS SHALL BE CAPABLE OF WITHSTANDING AN IMPACT LOAD OF 70 FEET-LBS AT 20?F WITHOUT CRACKING OR FRACTURING.

3. THE MINIMUM TOTAL CROSS-SECTIONAL AREA OF THE EXPOSED PORTION OF THE STEP, INCLUDING THE DEFORMED STEEL BAR AND EXCLUDING THE NON-SLIP TREAD SURFACE, SHALL BE 1.0 SQUARE INCH.

4. THE ENTIRE POLYPROPYLENE PLASTIC MATERIAL SURROUNDING THE REINFORCING STEEL BAR SHALL BE CAST MONOLITHICALLY. MINIMUM COVER SHALL BE 3/16".

5. A CERTIFICATION OF COMPLIANCE WITH THE REQUIREMENTS OF NOTES 1 THROUGH 4 PREPARED BY AN INDEPENDENT CERTIFIED LABORATORY SHALL BE SUBMITTED TO THE ENGINEER CONCURRENTLY WITH A REQUEST FOR APPROVAL.

6. E = 3 3/8". FOR VAULTS AND MANHOLES, D = 5 1/2" FOR OTHER INSTALLATIONS, D = 7 1/2". THESE DIMENSIONS MAY BE PLUS OR MINUS 1/4").

7. STEPS SHALL BE EVENLY SPACED. MAXIMUM VERTICAL SPACING OF STEPS SHALL BE 16", WITH THE BOTTOM STEP A MAXIMUM OF 2′ ABOVE FLOOR OR SHELF.

8. IF TAPERED STEPS ARE INSTALLED INTO STRAIGHT DRILLED OR FORMED HOLES, APPROVED NON-SHRINK GROUT SHALL BE INJECTED INTO THE HOLE PRIOR TO INSTALLATION. HOLES SHALL BE STRAIGHT AND PARALLEL. EXCEPT AS OTHERWISE NOTED, STEPS SHALL BE INSTALLED IN ACCORDANCE WITH MANUFACTURER'S RECOMMENDED PROCEDURES.

9. A DROP STEP WITH A MINIMUM DROP OF 3/4" MAY BE USED. THE DROP STEP SHALL MEET ALL OTHER CRITERIA OF THIS PLAN.

POLYPROPYLENE - PLASTIC STEP (636-2)

DRAINAGE DETAILS

NO SCALE

DD-18

STATE OF CALIFORNIA - DEPARTMENT OF TRANSPORTATION
Caltrans® HYDRAULICS

FUNCTIONAL SUPERVISOR: JAI P. THAKUR
CALCULATED-DESIGNED BY: DAVE BHALLA
CHECKED BY: JAI P. THAKUR
REVISED BY
DATE REVISED

LAST REVISION 00-00-00
DATE PLOTTED => 26-JUN-2013
TIME PLOTTED => 15:40

Dist	COUNTY	ROUTE	POST MILES TOTAL PROJECT	SHEET No.	TOTAL SHEETS
07	LA	5	0.0/7.6	150	985

REGISTERED CIVIL ENGINEER 10-11-12 DATE

6-24-13
PLANS APPROVAL DATE

REGISTERED PROFESSIONAL ENGINEER DAVE BHALLA No. 34350 Exp. 9/30/13 CIVIL STATE OF CALIFORNIA

THE STATE OF CALIFORNIA OR ITS OFFICERS OR AGENTS SHALL NOT BE RESPONSIBLE FOR THE ACCURACY OR COMPLETENESS OF SCANNED COPIES OF THIS PLAN SHEET.

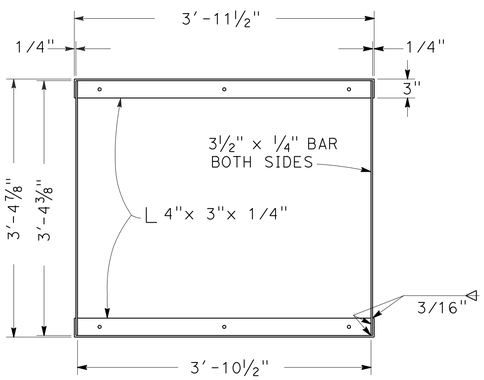

GRATE FRAME DETAIL

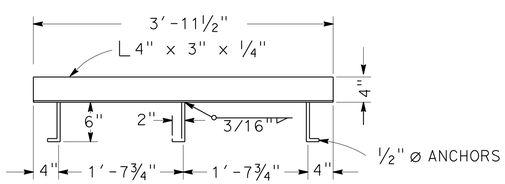

ANCHOR PLACEMENT DETAIL

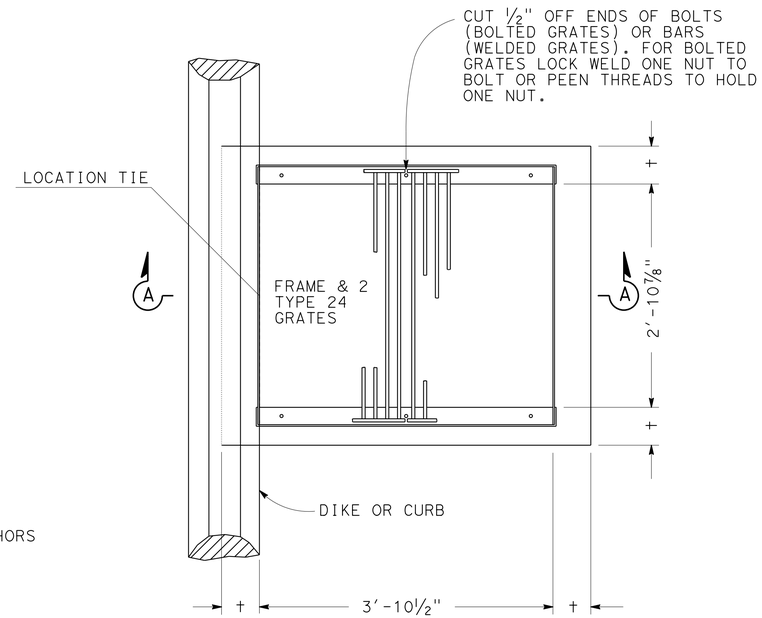

PLAN

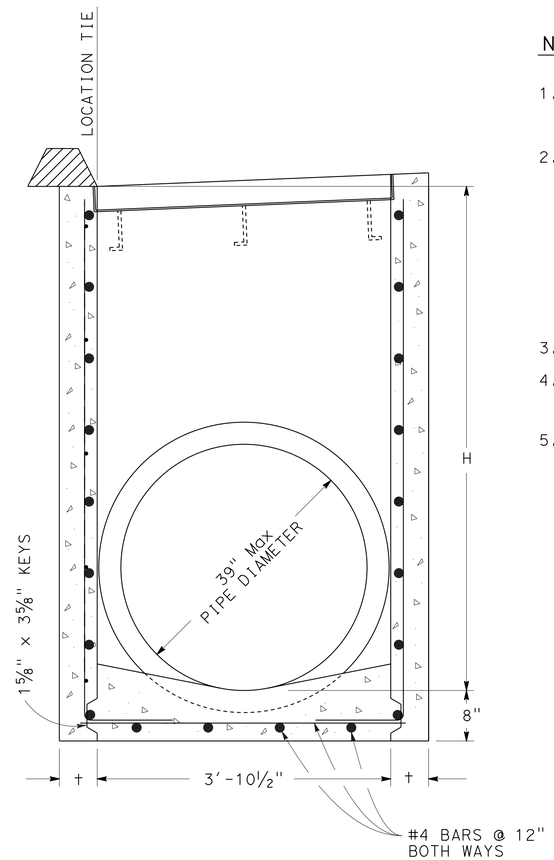

SECTION A-A

(FOR PIPE DIAMETERS 39" OR LESS)

GD-1
DRAINAGE INLET

NOTES:

1. 'h' is the difference in elevation between the outlet pipe flow line and the flow line of the grates.
2. Steps - none required when 'h' is 3'-6" or less. install one step 16"± above floor when 'h' is more than 3'-6" and less than 5'-0". Where 'h' is more than 5'-0" steps shall be evenly spaced @ 12"± intervals from 16"± above floor to within 12"± of the top of the box. Place steps in wall without pipe openings. See standard plan d74c for step detail.
3. Pipe(s) can be placed in any wall.
4. Reinforcing steel in walls and invert shall be #4 bars @ 12"± centers placed 1½" clear to inside of box.
5. For grate, frame and anchor placement details see standard plans.

MISCELLANEOUS IRON AND STEEL

INLET TYPE	GRATE TYPE	WEIGHT
GD-1 & GD-2	24 - 12	580
	24 - 10C	379
	24 - 10S	433
	24 - 12X	453
	24 - 13	351

H	t
8'-0" or less	6"
8'1" to 20'- 0"	8"

DRAINAGE DETAILS

NO SCALE

DD-19

STATE OF CALIFORNIA - DEPARTMENT OF TRANSPORTATION
Caltrans HYDRAULICS

FUNCTIONAL SUPERVISOR: DAVE BHALLA
CALCULATED-DESIGNED BY: VIC T. VALIDO
CHECKED BY: DAVE BHALLA
REVISED BY
DATE REVISED

LAST REVISION 00-00-00
DATE PLOTTED => 26-JUN-2013
TIME PLOTTED => 15:40

Dist	COUNTY	ROUTE	POST MILES TOTAL PROJECT	SHEET No.	TOTAL SHEETS
07	LA	5	0.0/7.6	151	985

REGISTERED CIVIL ENGINEER 10-11-12 DATE

6-24-13
PLANS APPROVAL DATE

REGISTERED PROFESSIONAL ENGINEER DAVE BHALLA No. 34350 Exp. 9/30/13 CIVIL STATE OF CALIFORNIA

THE STATE OF CALIFORNIA OR ITS OFFICERS OR AGENTS SHALL NOT BE RESPONSIBLE FOR THE ACCURACY OR COMPLETENESS OF SCANNED COPIES OF THIS PLAN SHEET.

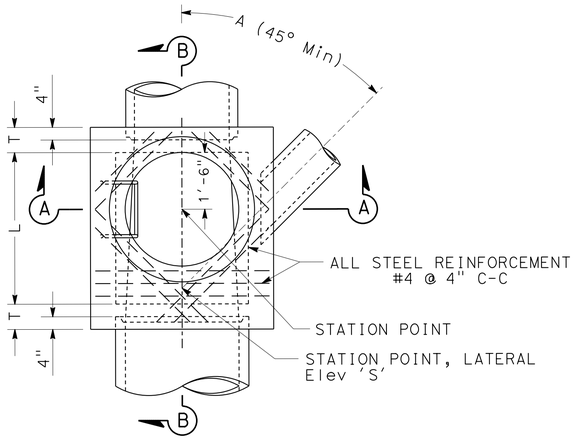

PLAN
(SHAFT NOT SHOWN)

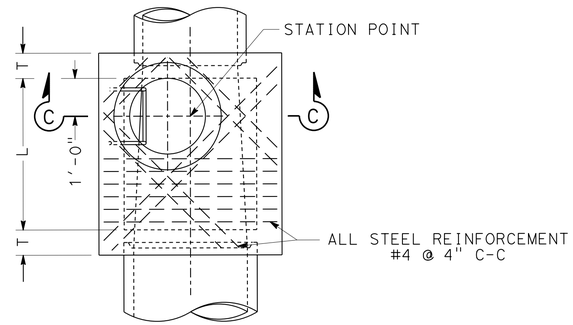

PLAN
DETAIL N
(SHAFT NOT SHOWN)

NOTES:

1. Height 'H' (in Sec A-A and Sec B-B) shall be not less than 4'-8", but may be increased provided that the value of 'M' shall be not less than the minimum specified and that the reducer shall be used. For 'H' (in Sec C-C) see Note 4.
2. Length 'L' shall be 4' unless otherwise shown on drainage plan.
3. Shaft shall be constructed as per Sec C-C and Detail N when depth 'M' from street grade to top of box is less than 2'-10 1/2" for paved streets or 3'-6" for unpaved streets.
4. Depth 'P' may be reduced to an absolute limit of 6" when larger values of 'P' would reduce 'H' (in Sec C-C) to 3'-6" or less.
5. 'T' shall be 8" for values of 'H' up to and including 8'. 'T' shall be 10" for values of 'H' over 8'.
6. Lowest step shall be not more than 16" above the ledge at the side of manhole floor.
7. Body of manhole shall be poured in one continuous operation, except that the Contractor shall have the option of placing at the spring line a construction joint with a longitudinal keyway.
8. Reinforcing steel shall be 1 1/2" clear from face of concrete.
9. Floor of manhole shall be steel-troweled to spring line.
10. Rings, reducer, and pipe for access shaft shall be seated in 1:2 cement mortar and neatly pointed or wiped inside shaft.
11. Manhole frame and cover per Standard Plan B7-11 detail 'U45'.
12. Step detail per Standard Plans D74C and D75C.

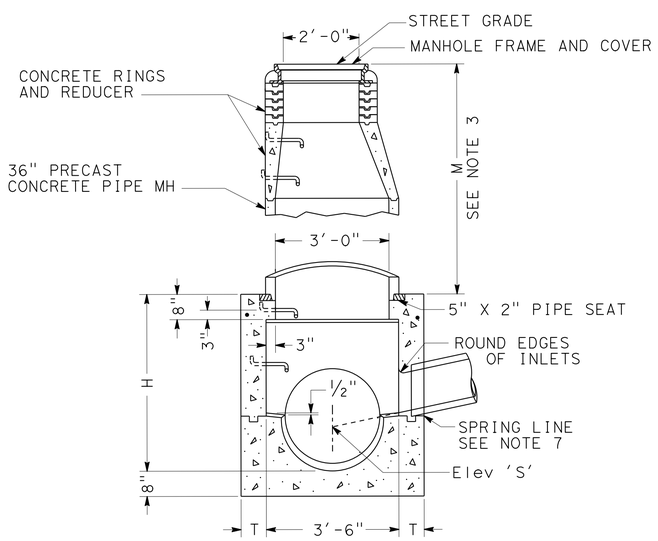

SECTION A-A

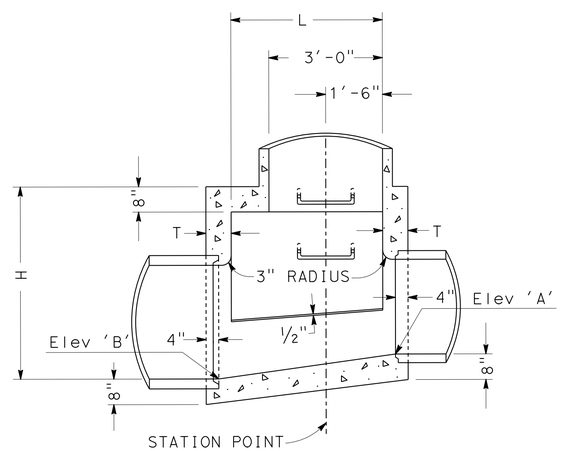

SECTION B-B

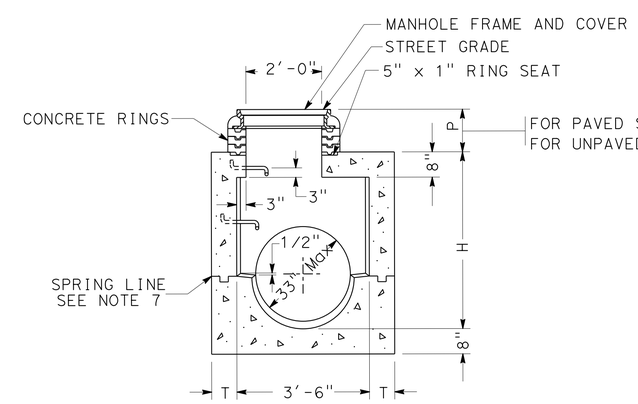

	Max	Min
FOR PAVED STREETS	11"	8½"
FOR UNPAVED STREETS	16"	15"

SECTION C-C

MANHOLE No. 1 (MH No. 1)

DRAINAGE DETAILS

NO SCALE

DD-20

STATE OF CALIFORNIA - DEPARTMENT OF TRANSPORTATION
Caltrans® HYDRAULICS

FUNCTIONAL SUPERVISOR: DAVE BHALLA
CALCULATED-DESIGNED BY: VIC T. VALIDO
CHECKED BY: DAVE BHALLA
REVISED BY / DATE REVISED

LAST REVISION 00-00-00
DATE PLOTTED => 26-JUN-2013
TIME PLOTTED => 15:40

Dist	COUNTY	ROUTE	POST MILES TOTAL PROJECT	SHEET No.	TOTAL SHEETS
07	LA	5	0.0/7.6	152	985

REGISTERED CIVIL ENGINEER 10-11-12 DATE

6-24-13
PLANS APPROVAL DATE

REGISTERED PROFESSIONAL ENGINEER DAVE BHALLA No. 34350 Exp. 9/30/13 CIVIL STATE OF CALIFORNIA

THE STATE OF CALIFORNIA OR ITS OFFICERS OR AGENTS SHALL NOT BE RESPONSIBLE FOR THE ACCURACY OR COMPLETENESS OF SCANNED COPIES OF THIS PLAN SHEET.

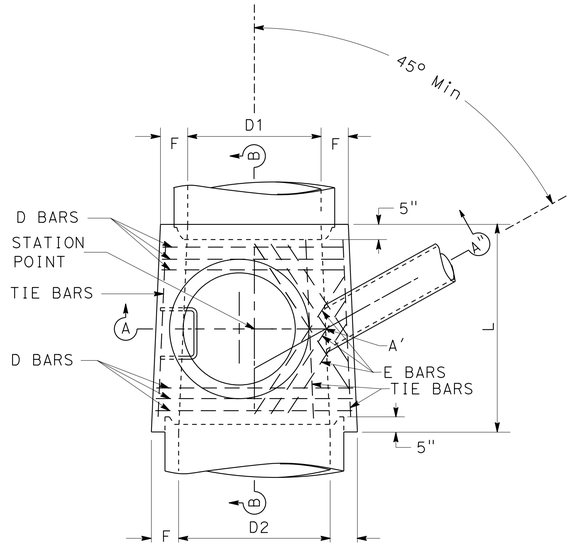

PLAN
(SHAFT NOT SHOWN)

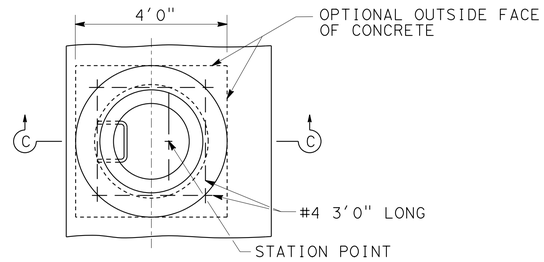

DETAIL N
(SHAFT NOT SHOWN)

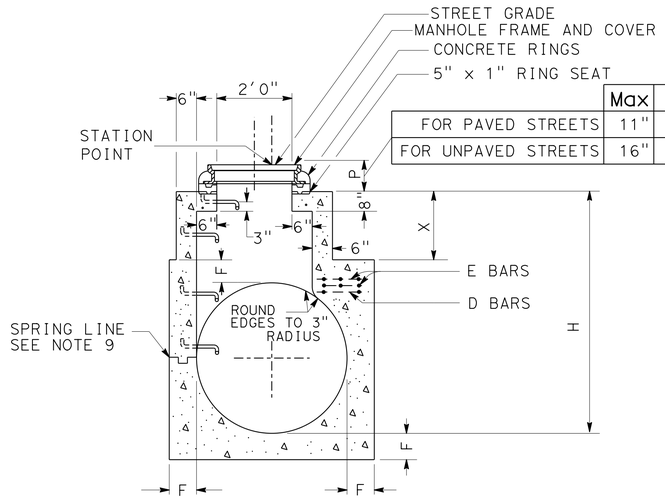

	Max	Min
FOR PAVED STREETS	11"	8½"
FOR UNPAVED STREETS	16"	15"

SECTION C-C
(SEE NOTE 10)

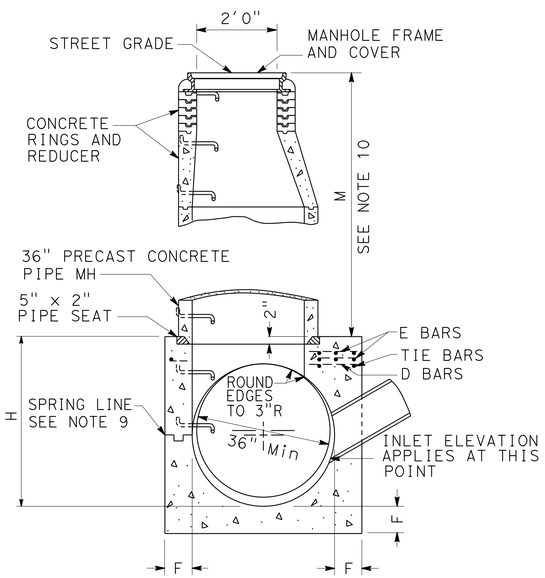

SECTION A-A'-A"

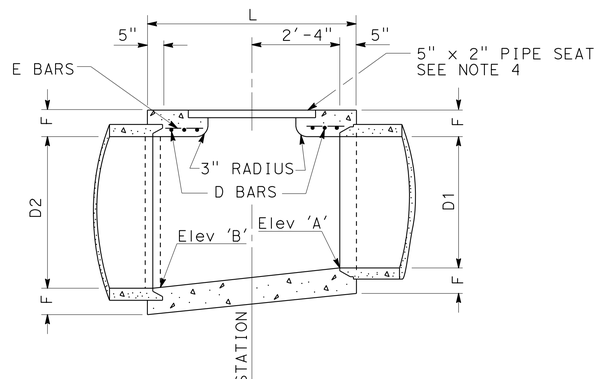

SECTION B-B

NOTES:

1. Values for Elev 'A', Elev 'B', 'H', 'L', 'M' or 'P' and 'X' are shown on the drainage plan.
2. Center of manhole shaft shall be located over centerline of storm drain when diameter 'D1' is 48" or less, in which case place E bar symmetrically around shaft at 45° with centerline.
3. Length 'L' shall be 5'-6" unless shown otherwise on drainage plan.
4. Thickness of 'F' shall vary when necessary to provide level pipeseat, but shall not be less than tabular values for 'F' shown on this plan.
5. Reinforcing steel shall be 1 1/2" clear from face of concrete unless shown otherwise. Sizes and lengths are shown in table below.
6. Unless otherwise shown, steps shall be placed 12" on centers. The lowest step shall be not more than 16" above the ledge at side of manhole floor.
7. Rings, reducer, and pipe for access shaft shall be seated in 1:2 cement mortar and neatly pointed or wiped inside the shaft.
8. Floor of manhole shall be steel-troweled to spring line.
9. Body of manhole shall be poured in one continous operation, except that the contractor shall have the option of placing at the spring line a construction joint with a longitudinal keyway.
10. Section C-C: When depth of manhole from street grade to top of box is less than 2'-10 1/2" for paved streets or 3'-6" for unpaved streets, construct monolithic shaft as per section. When diameter 'D' is 48" or less, center of shaft shall be located as per note 2.
11. Manhole frame and cover per Standard Plan B7-11 detail 'U45'.
12. Step detail per Standard Plans D74C and D75C.
13. D bars shall be placed 3" c-c. E bars shall be spaced 4" c-c. Tie bars shall be #3 spaced 18" c-c or less.
14. When 'L' greater than 5'-6" is specified on drainage plan, continue D bars at 6" c-c.
15. Lengths shown in table are for longest bars. Where shorter bars are required, bend or cut to meet field requirements.

TABLE OF VALUES FOR F	
D2	F
36"	6½"
39"	7"
42"	7½"
45"	7¾"
48"	8"
51"	8½"
54"	9"
57"	9¼"
60"	9½"
63"	10"
66"	10¼"
69"	10¾"
72"	11"
78"	11¾"
84"	12½"
90"	13¼"
96"	14"

STEEL TABLE						
D BARS				E BARS		
D2	No. Req	SIZE	LENGTH	No. Req	SIZE	LENGTH
36"	6	#4	3'-10"	4	#4	2'-9"
39"	6	"	4'-2"	4	"	2'-11"
42"	6	#5	4'-6"	4	"	3'-2"
45"	6	"	4'-10"	4	"	3'-5"
48"	6	"	5'-1"	4	"	3'-7"
51"	6	"	5'-5"	6	"	4'-9"
54"	6	"	5'-9"	6	"	5'-1"
57"	6	"	6'-1"	6	"	5'-6"
60"	6	"	6'-4"	6	"	5'-11"
63"	6	"	6'-8"	6	"	6'-3"
66"	6	"	7'-0"	8	"	6'-8"
69"	6	"	7'-4"	8	"	6'-8"
72"	6	"	7'-7"	8	"	6'-8"
78"	6	"	8'-3"	8	"	6'-8"
84"	6	"	8'-10"	10	"	6'-8"
90"	6	#6	9'-6"	10	"	6'-8"
96"	6	"	10'-1"	10	"	6'-8"

MANHOLE No. 2 (MH No. 2)

DRAINAGE DETAILS

NO SCALE

DD-21

STATE OF CALIFORNIA - DEPARTMENT OF TRANSPORTATION
Caltrans
HYDRAULICS

FUNCTIONAL SUPERVISOR: DAVE BHALLA
CALCULATED-DESIGNED BY: VIC T. VALIDO
CHECKED BY: DAVE BHALLA
REVISED BY
DATE REVISED

LAST REVISION 00-00-00
DATE PLOTTED => 26-JUN-2013
TIME PLOTTED => 15:40

Dist	COUNTY	ROUTE	POST MILES TOTAL PROJECT	SHEET No.	TOTAL SHEETS
07	LA	5	0.0/7.6	153	985

REGISTERED CIVIL ENGINEER 10-11-12 DATE

6-24-13
PLANS APPROVAL DATE

REGISTERED PROFESSIONAL ENGINEER DAVE BHALLA No. 34350 Exp. 9/30/13 CIVIL STATE OF CALIFORNIA

THE STATE OF CALIFORNIA OR ITS OFFICERS OR AGENTS SHALL NOT BE RESPONSIBLE FOR THE ACCURACY OR COMPLETENESS OF SCANNED COPIES OF THIS PLAN SHEET.

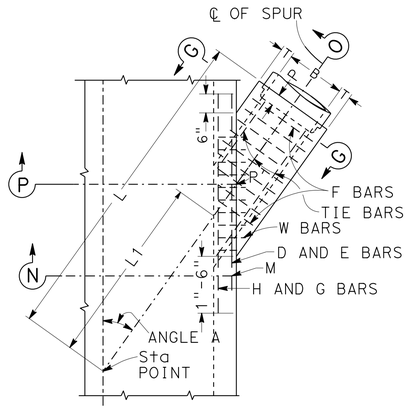

PLAN

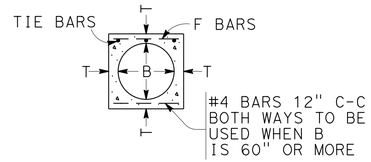

SECTION G-G

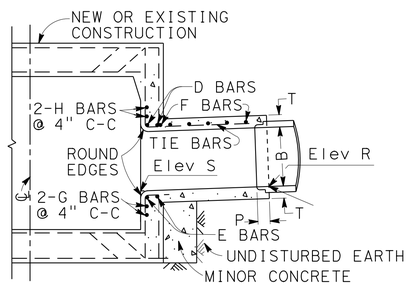

SECTION N-M-P'-O

PROJECTED ON P-P'-O

TABLE OF VALUES FOR T			
B	T	B	T
12"	4"	63"	10"
15"	4 1/4"	66"	10 1/4"
18"	4 1/2"	69"	10 3/4"
21"	5"	72"	11"
24"	5 1/4"	78"	11 3/4"
27"	5 1/2"	84"	12 1/2"
30"	6"	90"	13 1/4"
33"	6 1/4"	96"	14"
36"	6 1/2"	102"	15 1/2"
39"	7"	108"	16"
42"	7 1/2"	114"	16 1/2"
45"	7 3/4"	120"	17"
48"	8"	126"	17"
51"	8 1/2"	132"	17 1/2"
54"	9"	138"	17 1/2"
57"	9 1/4"	144"	18"
60"	9 1/2"		

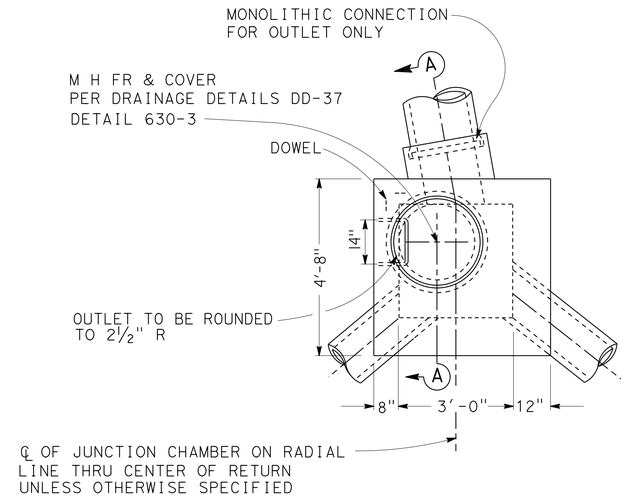

PLAN

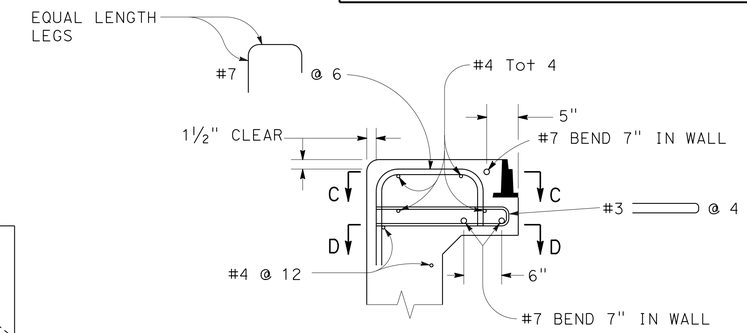

DETAIL "B"

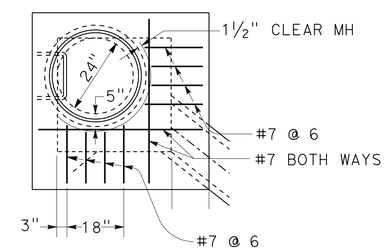

SECTION C-C

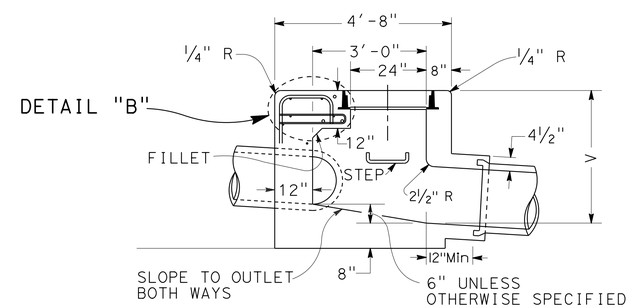

SECTION A-A

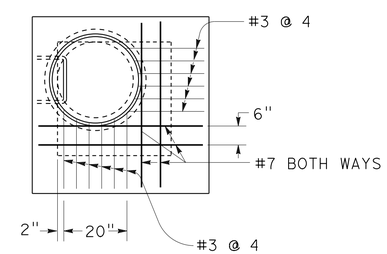

SECTION D-D

JUNCTION CHAMBER No. 3 Mod (JC 3 Mod)

NOTES:

1. VALUES for 'A', 'B', 'L', 'L1', 'Elev R' and 'Elev S' are shown on Drainage Plan.
2. STATIONS specified in Drainage Plan apply at intersection of centerlines of main line and lateral.
3. EMBEDMENT 'P' shall be 5" for pipe diameters 12" to 96" and 8" for pipe diameters 102" to 144".
4. REINFORCING STEEL shall be 1 1/2" clear from face of concrete unless otherwise shown. W BARS are of size and spacing specified for wall steel on Drainage Plan, and shall be cut in center of opening and bent into top and bottom of junction structure. OMIT H BARS when soffit of spur is 1' or less below soffit of main line, and omit G bars when invert of spur is 1' or less above floor of main line.
5. STEEL SCHEDULE:

Dia B	D,E,H,G Bars	F Bars
12" to 39"	#5	#4 @ 6" c-c
42" to 84"	#6	#5 @ 6" c-c
90" to 144"	#7	#6 @ 6" c-c
Tie bars - #4 @ 12" c-c		

6. JUNCTION STRUCTURE shall be poured monolithic with main line storm drain or manhole.
7. FLOOR of structure shall be steel-troweled.

JUNCTION STRUCTURE No. 3 (JS 3)

DRAINAGE DETAILS

NO SCALE

DD-22

STATE OF CALIFORNIA - DEPARTMENT OF TRANSPORTATION
Caltrans
HYDRAULICS

FUNCTIONAL SUPERVISOR: DAVE BHALLA
CALCULATED-DESIGNED BY: VIC T. VALIDO
CHECKED BY: DAVE BHALLA
REVISED BY
DATE REVISED

LAST REVISION 00-00-00
DATE PLOTTED => 26-JUN-2013
TIME PLOTTED => 15:40

Dist	COUNTY	ROUTE	POST MILES TOTAL PROJECT	SHEET No.	TOTAL SHEETS
07	LA	5	0.0/7.6	154	985

REGISTERED CIVIL ENGINEER 10-11-12 DATE

6-24-13
PLANS APPROVAL DATE

REGISTERED PROFESSIONAL ENGINEER DAVE BHALLA No. 34350 Exp. 9/30/13 CIVIL STATE OF CALIFORNIA

THE STATE OF CALIFORNIA OR ITS OFFICERS OR AGENTS SHALL NOT BE RESPONSIBLE FOR THE ACCURACY OR COMPLETENESS OF SCANNED COPIES OF THIS PLAN SHEET.

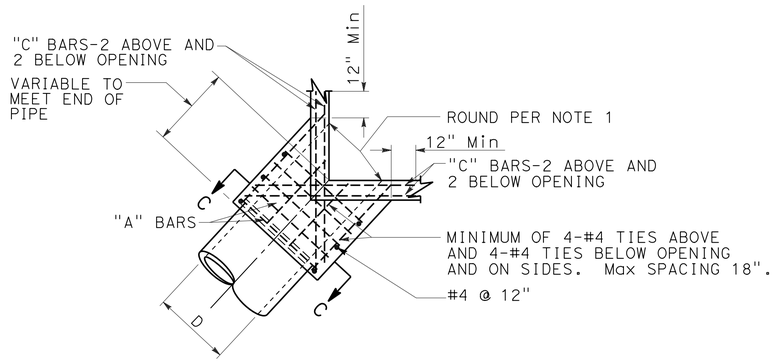

PLAN
CORNER CONNECTION

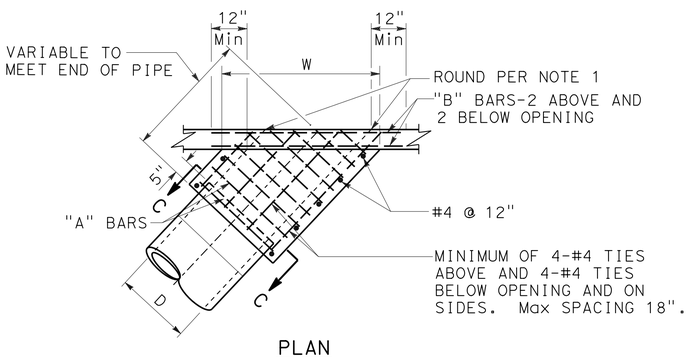

PLAN
SIDE CONNECTION

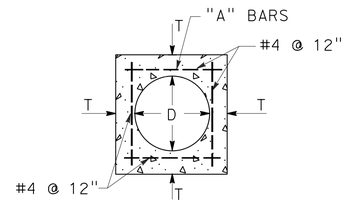

SECTION C-C

D	T	"A"	"B"-"C"
12"	4½"	#4 @ 6"	#5
15"	4½"		
18"	5"		
21"	5½"		
24"	6"		
27"	6½"		
30"	7"		
33"	7"		
36"	7½"		
39"	8"		
42"	8"		
45"	8"	#5 @ 6"	#6
48"	8"		
51"	8"		
54"	8"		
57"	10"		
60"	10"		
63"	10"		
66"	11"		
69"	11"		
72"	11"		

NOTES:

1. ROUND EDGE OF OUTLET TO 3" RADIUS.
2. REINFORCEMENT SHALL BE 1½" CLEAR FROM THE FACE OF CONCRETE.
3. IN CONNECTING TO AN EXISTING STRUCTURE BREAK OUT PORTIONS OF THE EXISTING STRUCTURE SIX INCHES OUTSIDE ITS INTERSECTION WITH THE NEW CONNECTION. BEND ENDS OF #4 BARS OVER CONNECTION OPENING AS REQUIRED.

MONOLITHIC CONNECTION FOR PIPES 12" TO 72" INCLUSIVE

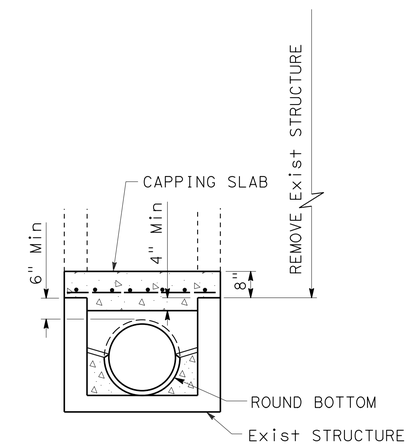

SECTION A-A

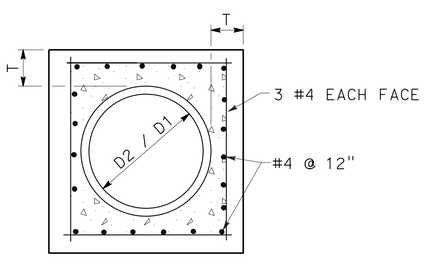

SECTION B-B

D	L	T
12"	1.0'	4"
18"	1.0'	5"
24"	1.0'	6"
36"	1.5'	8"
48"	1.5'	10"
54"	1.5'	10"
60"	1.75'	11"
66"	1.75'	11"
72"	2.0'	12"

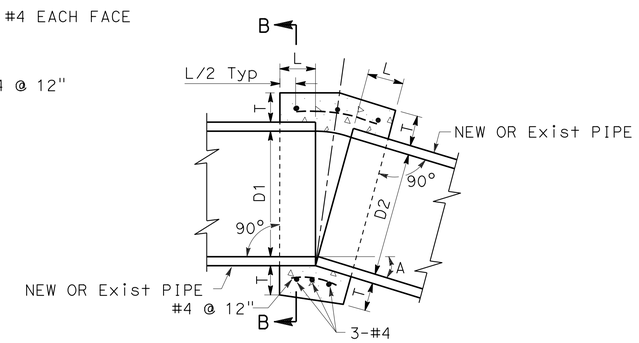

CONCRETE COLLAR

NOTES:

1. WHERE PIPES OF DIFFERENT DIAMETERS ARE JOINED WITH A CONCRETE COLLAR, 'L' AND 'T' SHALL BE THOSE OF THE LARGER PIPE. D=D1 OR D2, WHICHEVER IS GREATER.
2. FOR PIPE SIZE NOT LISTED USE NEXT SIZE LARGER.
3. OMIT REINFORCING ON PIPES 24" AND LESS IN DIAMETER AND ON ALL PIPES WHERE ANGLE A IS LESS THAN 10°.
4. JOIN PIPES AT INVERTS.
5. REINFORCEMENT SHALL BE PLACED 1½" CLEAR FROM OUTSIDE DIAMETER OF PIPE.

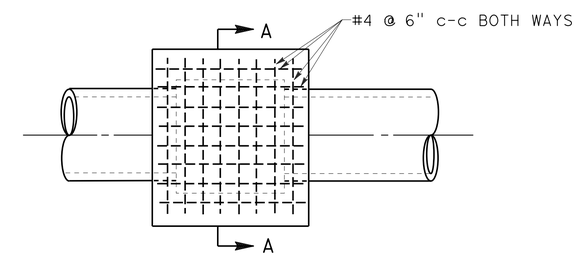

PLAN
CAP INLET DETAIL

DRAINAGE DETAILS

NO SCALE

DD-23

STATE OF CALIFORNIA - DEPARTMENT OF TRANSPORTATION
Caltrans
HYDRAULICS

FUNCTIONAL SUPERVISOR: DAVE BHALLA
CALCULATED-DESIGNED BY: VIC T. VALIDO
CHECKED BY: DAVE BHALLA
REVISED BY
DATE REVISED

LAST REVISION 00-00-00
DATE PLOTTED => 26-JUN-2013
TIME PLOTTED => 15:40

Dist	COUNTY	ROUTE	POST MILES TOTAL PROJECT	SHEET No.	TOTAL SHEETS
07	LA	5	0.0/7.6	155	985

REGISTERED CIVIL ENGINEER 10-11-12 DATE

6-24-13
PLANS APPROVAL DATE

REGISTERED PROFESSIONAL ENGINEER DAVE BHALLA No. 34350 Exp. 9/30/13 CIVIL STATE OF CALIFORNIA

THE STATE OF CALIFORNIA OR ITS OFFICERS OR AGENTS SHALL NOT BE RESPONSIBLE FOR THE ACCURACY OR COMPLETENESS OF SCANNED COPIES OF THIS PLAN SHEET.

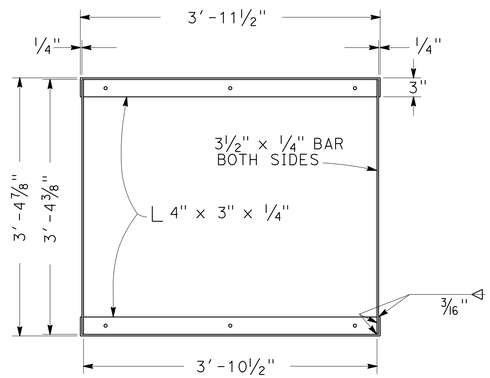

GRATE FRAME DETAIL

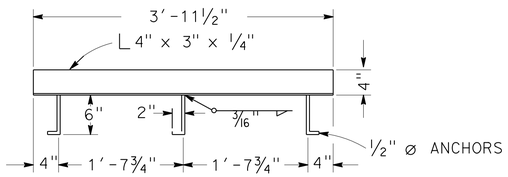

ANCHOR PLACEMENT DETAIL

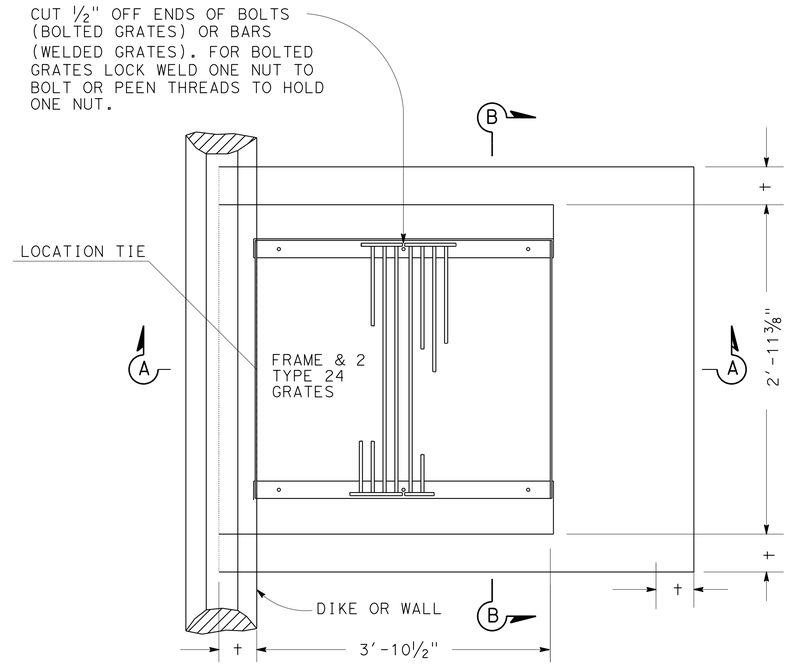

PLAN

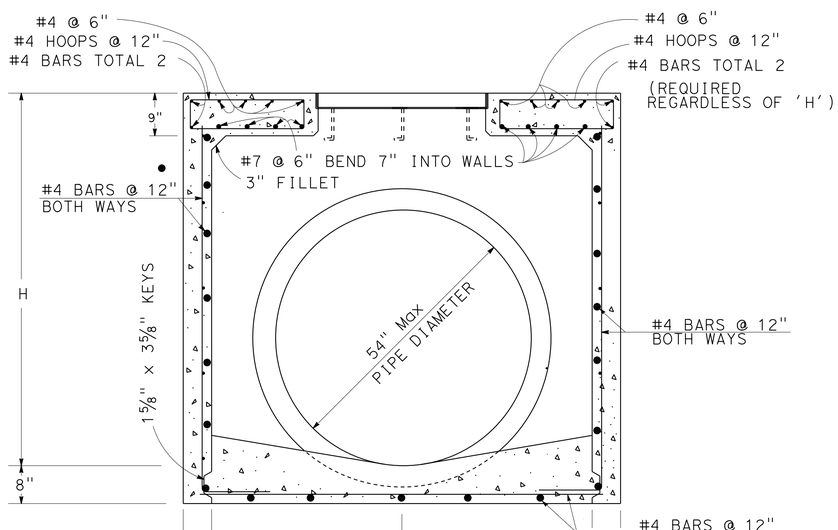

SECTION B-B

MODIFIED GD-2 INLET(CASE 1)

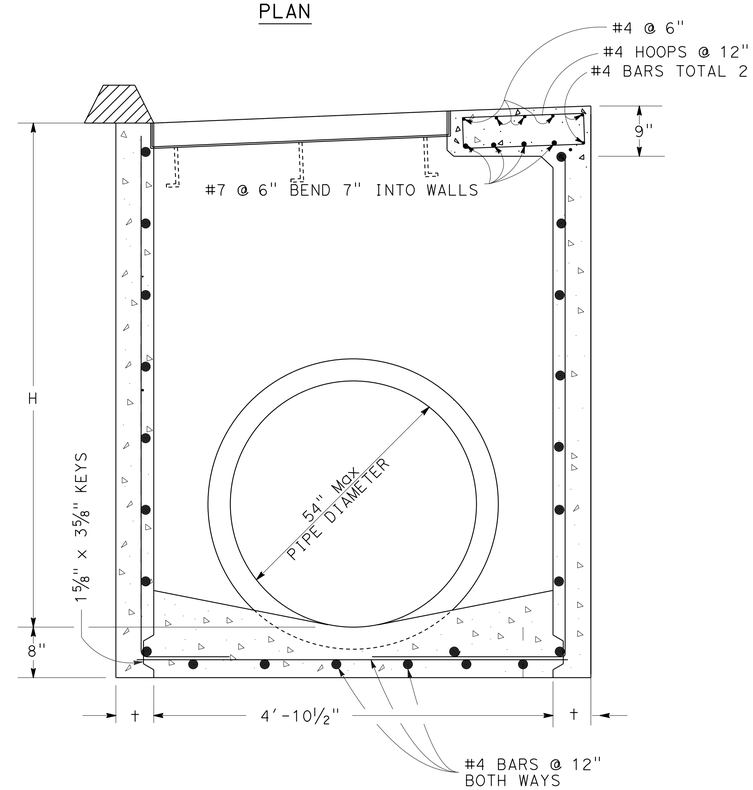

SECTION A-A

MODIFIED GD-2 INLET

NOTES:

1. 'H' is the difference in elevation between the outlet pipe flow line and the flow line of the grates.
2. Steps - None required when 'H' is 3′-6" or less. Install one step 16"± above floor when 'H' is more than 3′-6" and less than 5′-0". Where 'H' is more than 5′-0" steps shall be evenly spaced @ 12"± intervals from 16"± above floor to within 12"± of the top of the box. Place steps in wall without pipe openings. See Standard Plan D74C for step detail.
3. Pipe(s) can be placed in any wall.
4. Reinforcing steel in walls and invert shall be #4 bars @ 12"± centers placed 1½" clear to inside of box.
5. For grate, frame and anchor placement details see standard plans.

MISCELLANEOUS IRON AND STEEL

INLET TYPE	GRATE TYPE	WEIGHT
GD-1 & GD-2	24 - 12	580
	24 - 10C	379
	24 - 10S	433
	24 - 12X	453
	24 - 13	351

H	t
8′-0" OR LESS	6"
8′1" TO 20′- 0"	8"

DRAINAGE DETAILS

NO SCALE

DD-24

STATE OF CALIFORNIA - DEPARTMENT OF TRANSPORTATION
Caltrans
HYDRAULICS
FUNCTIONAL SUPERVISOR: DAVE BHALLA
CALCULATED-DESIGNED BY: VIC T. VALIDO
CHECKED BY: DAVE BHALLA
REVISED BY
DATE REVISED

LAST REVISION 00-00-00
DATE PLOTTED => 26-JUN-2013
TIME PLOTTED => 15:40

Dist	COUNTY	ROUTE	POST MILES TOTAL PROJECT	SHEET No.	TOTAL SHEETS
07	LA	5	0.0/7.6	156	985

REGISTERED CIVIL ENGINEER 10-11-12 DATE

6-24-13
PLANS APPROVAL DATE

REGISTERED PROFESSIONAL ENGINEER DAVE BHALLA No. 34350 Exp. 9/30/13 CIVIL STATE OF CALIFORNIA

THE STATE OF CALIFORNIA OR ITS OFFICERS OR AGENTS SHALL NOT BE RESPONSIBLE FOR THE ACCURACY OR COMPLETENESS OF SCANNED COPIES OF THIS PLAN SHEET.

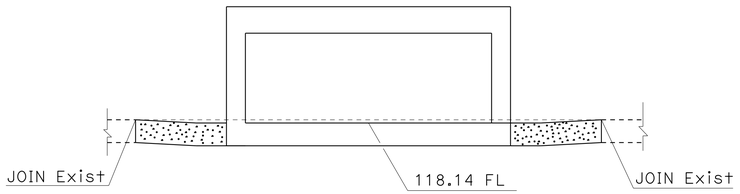

SECTION A-A

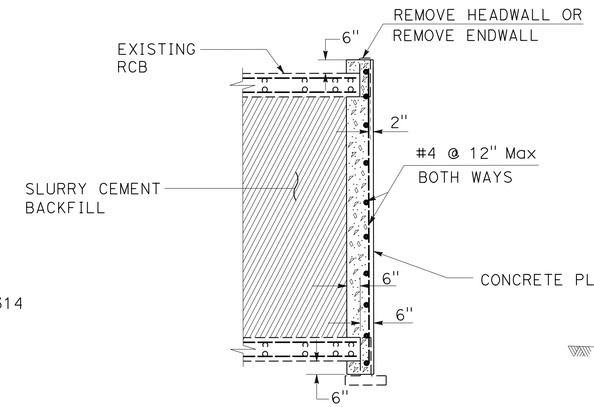

ABANDONMENT SEAL FOR RCB

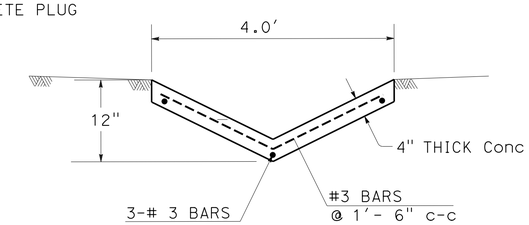

TYPE B DRAIN

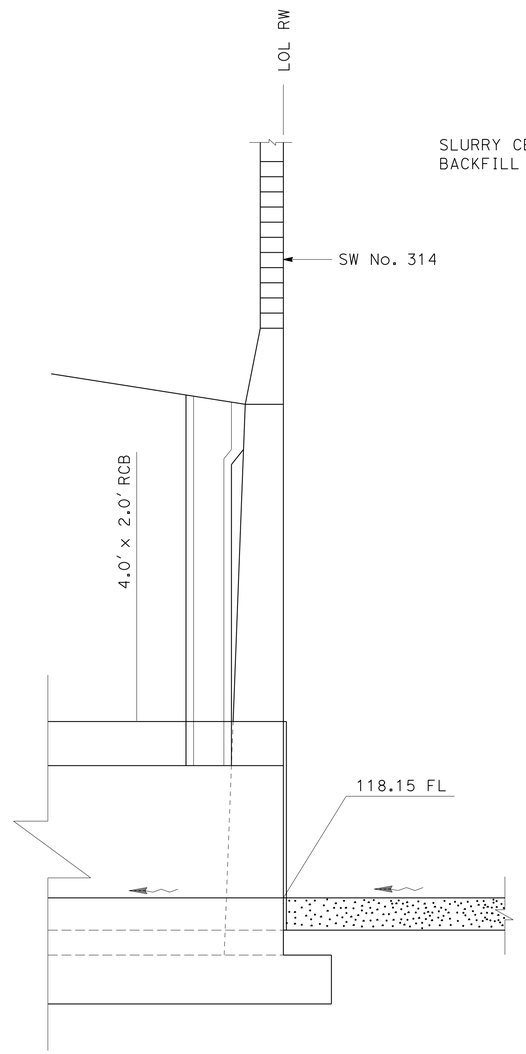

SECTION B-B

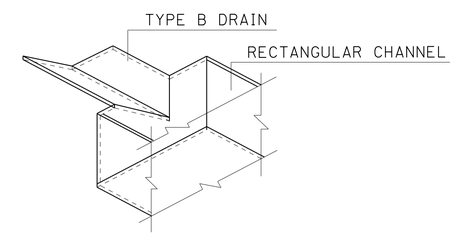

TYPE B DRAIN ON TOP OF CONCRETE CHANNEL

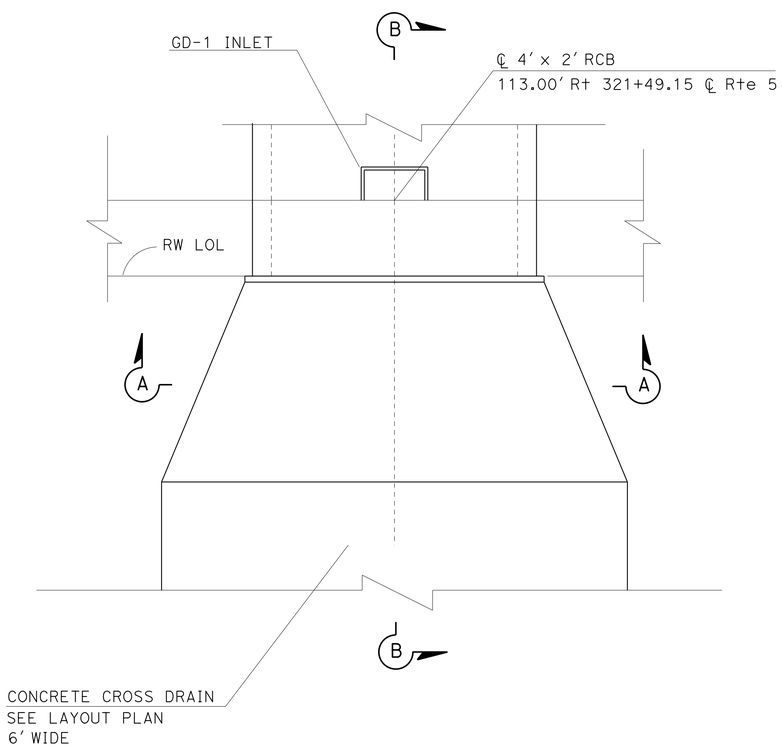

PLAN

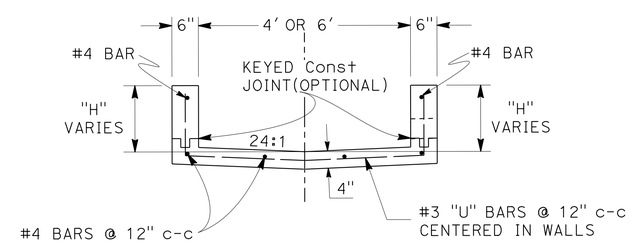

RECTANGULAR CONCRETE CHANNEL DETAIL

DRAINAGE SYSTEM No. 15

DRAINAGE DETAILS

NO SCALE

DD-25

STATE OF CALIFORNIA - DEPARTMENT OF TRANSPORTATION
Caltrans
HYDRAULICS

FUNCTIONAL SUPERVISOR: DAVE BHALLA
CALCULATED-DESIGNED BY: VIC T. VALIDO
CHECKED BY: DAVE BHALLA
REVISED BY
DATE REVISED

LAST REVISION 00-00-00
DATE PLOTTED => 26-JUN-2013
TIME PLOTTED => 15:29

Dist	COUNTY	ROUTE	POST MILES TOTAL PROJECT	SHEET No.	TOTAL SHEETS
07	LA	5	0.0/7.6	157	985

REGISTERED CIVIL ENGINEER 10-11-12 DATE

6-24-13
PLANS APPROVAL DATE

REGISTERED PROFESSIONAL ENGINEER DAVE BHALLA No. 34350 Exp. 9/30/13 CIVIL STATE OF CALIFORNIA

THE STATE OF CALIFORNIA OR ITS OFFICERS OR AGENTS SHALL NOT BE RESPONSIBLE FOR THE ACCURACY OR COMPLETENESS OF SCANNED COPIES OF THIS PLAN SHEET.

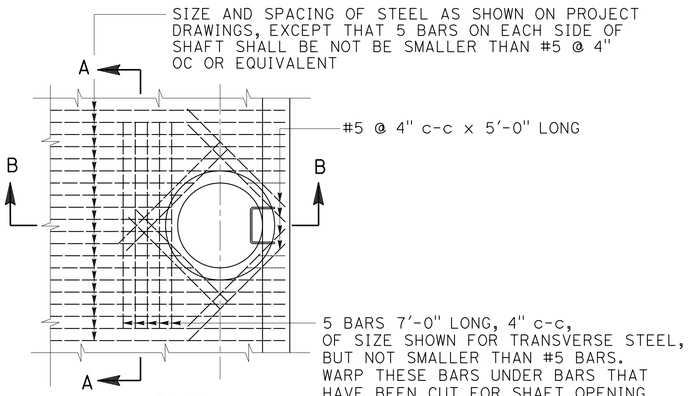

PLAN
(SHAFT NOT SHOWN)

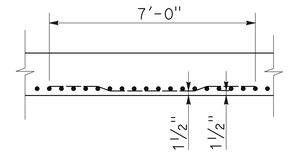

SECTION A-A

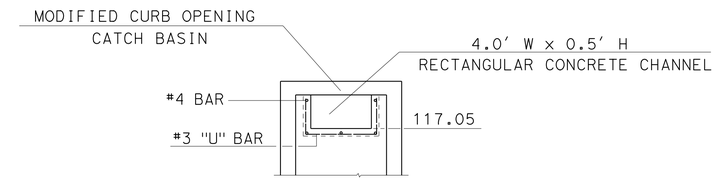

CHANNEL CONNECTION BACK OF CATCH BASIN

DRAINAGE SYSTEM No. 6 d

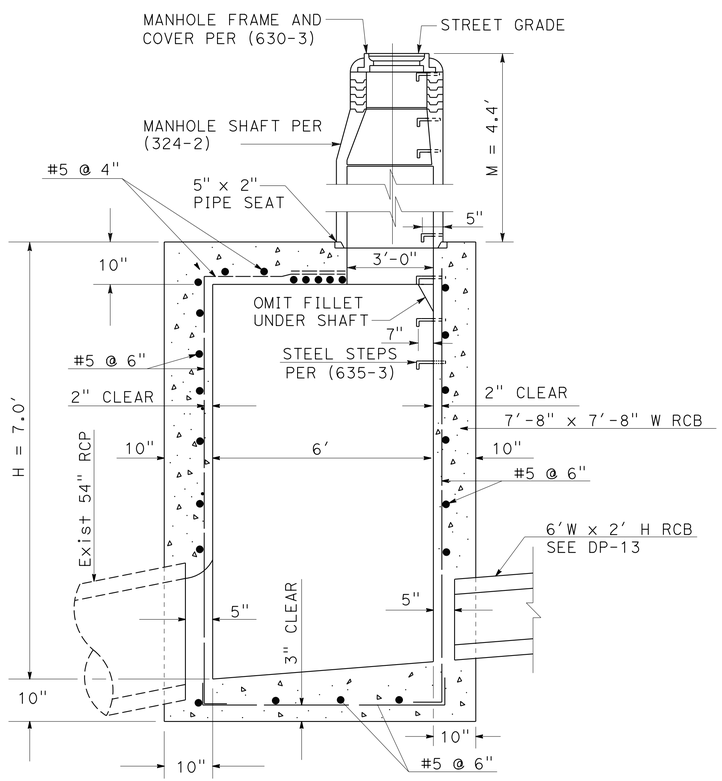

SECTION B-B

MANHOLE (REINFORCED CONCRETE BOX)

DRAINAGE SYSTEM No. 41 a

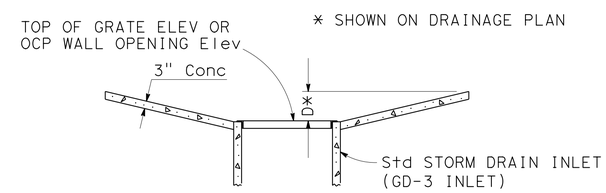

SECTION A-A

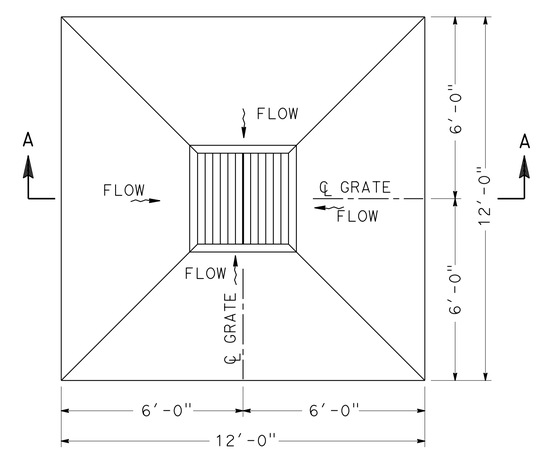

PLAN

DEPRESSED APRON DETAIL

DRAINAGE DETAILS

NO SCALE

DD-26

STATE OF CALIFORNIA - DEPARTMENT OF TRANSPORTATION
Caltrans®
HYDRAULICS

FUNCTIONAL SUPERVISOR: DAVE BHALLA
CALCULATED-DESIGNED BY: VIC T. VALIDO
CHECKED BY: DAVE BHALLA
REVISED BY
DATE REVISED

LAST REVISION 00-00-00
DATE PLOTTED => 26-JUN-2013
TIME PLOTTED => 15:29

Dist	COUNTY	ROUTE	POST MILES TOTAL PROJECT	SHEET No.	TOTAL SHEETS
07	LA	5	0.0/7.6	158	985

REGISTERED CIVIL ENGINEER 10-11-12 DATE

6-24-13
PLANS APPROVAL DATE

REGISTERED PROFESSIONAL ENGINEER DAVE BHALLA No. 34350 Exp. 9/30/13 CIVIL STATE OF CALIFORNIA

THE STATE OF CALIFORNIA OR ITS OFFICERS OR AGENTS SHALL NOT BE RESPONSIBLE FOR THE ACCURACY OR COMPLETENESS OF SCANNED COPIES OF THIS PLAN SHEET.

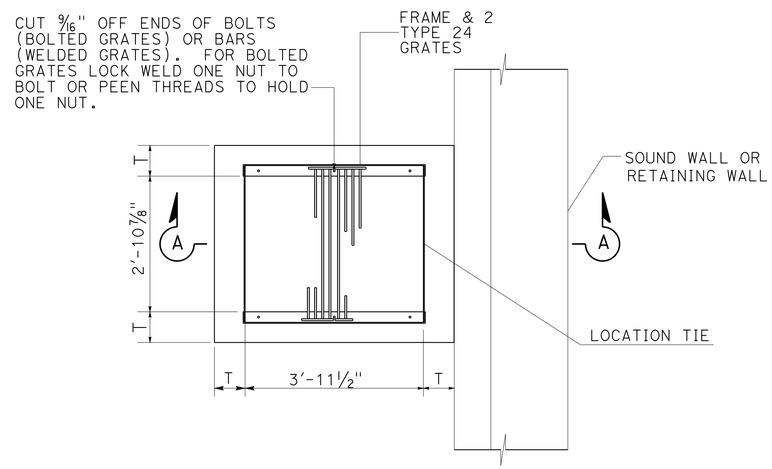

PLAN

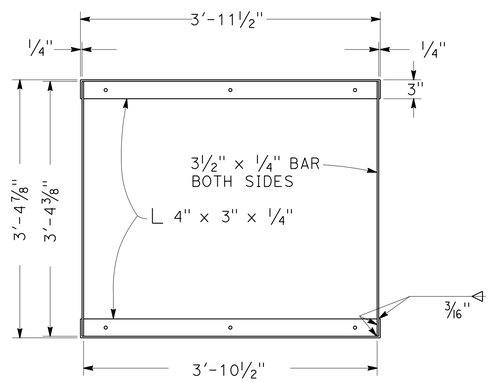

GRATE FRAME DETAIL

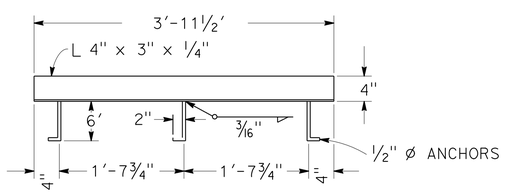

ANCHOR PLACEMENT DETAIL

For grate, frame and anchor placement details see Standard Plans D77A and D77B

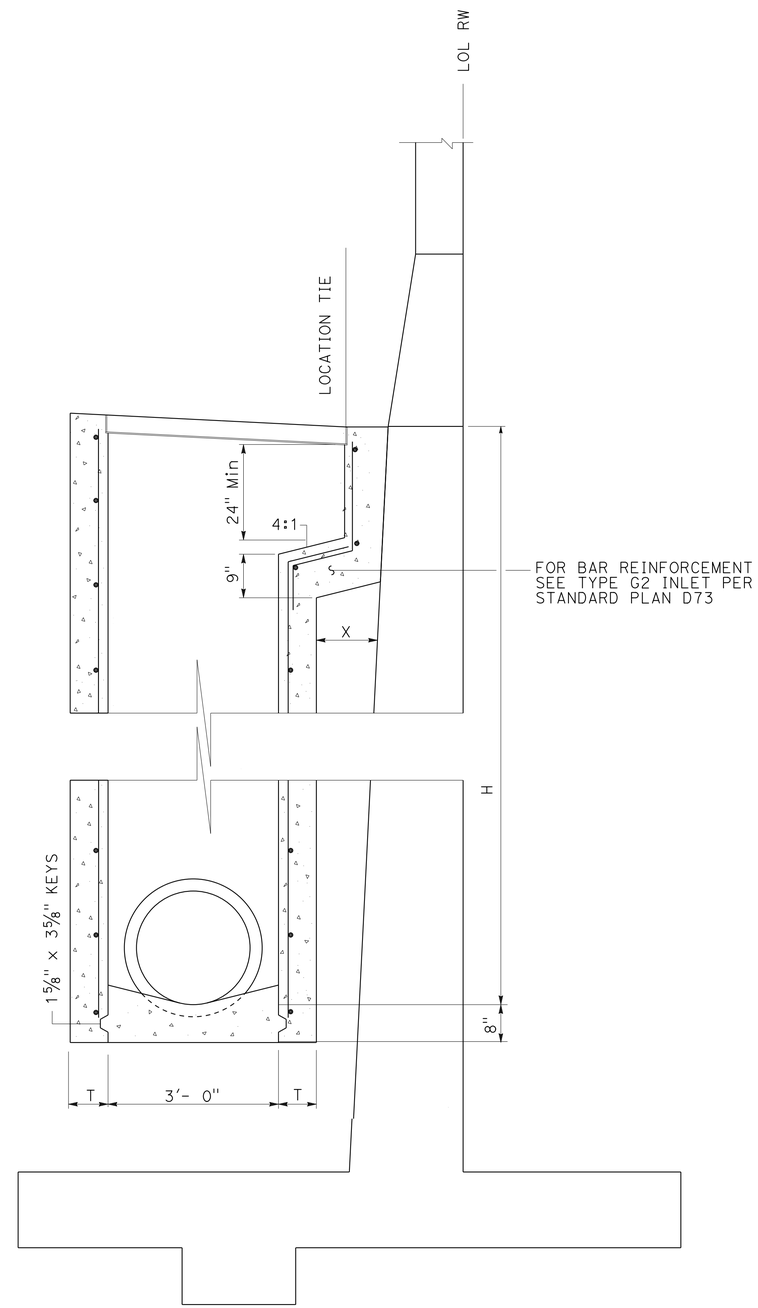

SECTION A-A

GD-1 (Mod) INLET

DRAINAGE INLET NEXT TO RETAINING WALL OR SOUNDWALL

NOTES:

1. 'H' is the difference in elevation between the outlet pipe flow line and the flow line of the grates.
2. Steps - None required where "H" is less than 2'-6". Where "H" is 2'-6" or more, install steps with lowest rung 1'-0" above the floor and highest rung not more than 6" below top of inlet. The distance between steps shall not exceed 1'-0" and shall be uniform throughout the length of the wall. Place steps in the wall without an opening. Steps inserts may be substituted for the bar steps. Step inserts shall comply with State Industrial Safety requirements. See Standard Plan D74C for step details.
3. Pipe(s) can be placed in any wall.
4. Reinforcing steel not required in walls when H=6' or less.
5. H> 6' to 20', Reinforcing steel in walls shall be #4 bars @ 12"± centers both ways, placed 1 1/2" clear to inside of box.
6. H> 20', Reinforcing steel in walls shall be: #5 bars @ 12" OC horizontal ; #4 bars @ 12" c-c vertical placed 2" clear to inside of box.
7. For isolation joint detail, see Standard Plans.

MISCELLANEOUS IRON AND STEEL

INLET TYPE	GRATE TYPE	WEIGHT
GD-1 (Mod)	24-12	580

H	t
8'-0" OR LESS	6"
8'-1" TO 20' - 0"	8"
> 20' - 0"	12"

H	X
22'-0" OR LESS	12"
> 22' -0"	24"

DRAINAGE DETAILS

NO SCALE

DD-27

STATE OF CALIFORNIA - DEPARTMENT OF TRANSPORTATION
Caltrans
HYDRAULICS

FUNCTIONAL SUPERVISOR: DAVE BHALLA
CALCULATED-DESIGNED BY: VIC T. VALIDO
CHECKED BY: DAVE BHALLA
REVISED BY
DATE REVISED

LAST REVISION 00-00-00
DATE PLOTTED => 26-JUN-2013
TIME PLOTTED => 15:29

Dist	COUNTY	ROUTE	POST MILES TOTAL PROJECT	SHEET No.	TOTAL SHEETS
07	LA	5	0.0/7.6	159	985

REGISTERED CIVIL ENGINEER 10-11-12 DATE

6-24-13
PLANS APPROVAL DATE

REGISTERED PROFESSIONAL ENGINEER DAVE BHALLA No. 34350 Exp. 9/30/13 CIVIL STATE OF CALIFORNIA

THE STATE OF CALIFORNIA OR ITS OFFICERS OR AGENTS SHALL NOT BE RESPONSIBLE FOR THE ACCURACY OR COMPLETENESS OF SCANNED COPIES OF THIS PLAN SHEET.

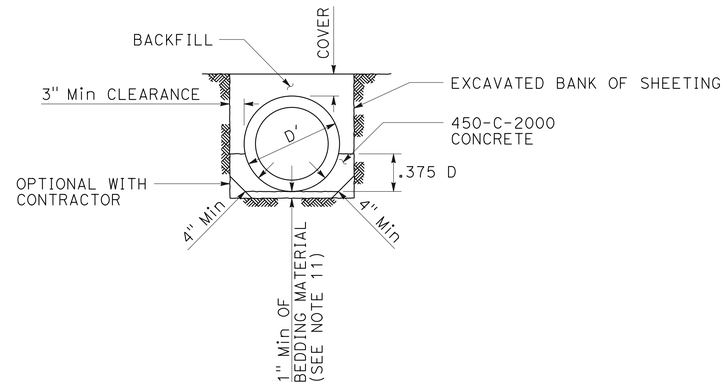

CASE 1

NOTES:

CASE 1 BEDDING (LOAD FACTOR 2.1)

SHALL BE USED WHERE SPECIFIED ON THE PLANS OR WHERE REQUIRED AS AN ALTERNATIVE TO CASE 2 OR CASE 3 BEDDING AS PROVIDED HEREON AND ON Sht 2. CASE 4 BEDDING SHALL BE USED INSTEAD OF CASE 1 AGAINST SHEETING OR UNSTABLE TRENCH SIDES IF SO REQUIRED BY THE ENGINEER.

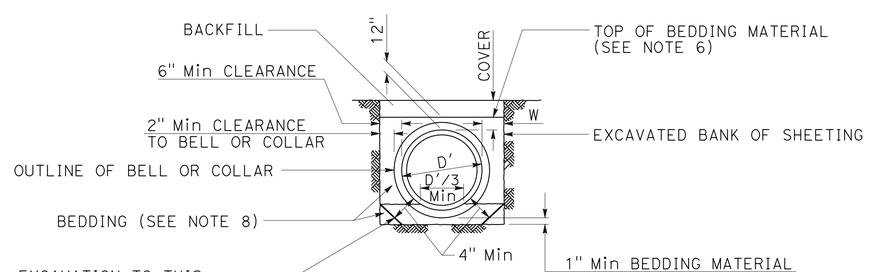

CASE 2

VITRIFIED CLAY AND PLAIN CONCRETE PIPE

NOTES:

CASE 2 BEDDING & BACKFILL AROUND PIPE (LOAD FACTOR 1.8)

(a) W AT SPRING LINE SHALL NOT BE LESS THAN 6" FOR ANY DEPTH OF TRENCH. THIS DIMENSION MAY INCLUDE THE THICKNESS OF ANY SHEETING.

(b) WHERE COVER IS GREATER THAN 8'-0", W MEASURED AT TOP OF PIPE SHALL NOT BE GREATER THAN 8'-0", UNLESS THE CONTRACTOR AT ITS OWN EXPENSE PROVIDES CASE 1 BEDDING OR STRONGER PIPE. THE STATED 8" INCLUDES THE THICKNESS OF ANY SHEETING.

(c) SCREED BEDDING MATERIAL TO FIT CURVATURE AND GRADE OF THE PIPE. TYPE OF SCREED AND THE METHOD OF USE TO BE APPROVED BY THE ENGINEER.

PIPE BEDDING IN TRENCHES (3080-3)

SHEET 1 OF 3

DRAINAGE DETAILS
NO SCALE

DD-28

STATE OF CALIFORNIA - DEPARTMENT OF TRANSPORTATION
Caltrans
HYDRAULICS

FUNCTIONAL SUPERVISOR: DAVE BHALLA
CALCULATED-DESIGNED BY: VIC T. VALIDO
CHECKED BY: DAVE BHALLA
REVISED BY
DATE REVISED

LAST REVISION 00-00-00
DATE PLOTTED => 26-JUN-2013
TIME PLOTTED => 15:29

Dist	COUNTY	ROUTE	POST MILES TOTAL PROJECT	SHEET No.	TOTAL SHEETS
07	LA	5	0.0/7.6	160	985

REGISTERED CIVIL ENGINEER 10-11-12 DATE

6-24-13
PLANS APPROVAL DATE

REGISTERED PROFESSIONAL ENGINEER DAVE BHALLA No. 34350 Exp. 9/30/13 CIVIL STATE OF CALIFORNIA

THE STATE OF CALIFORNIA OR ITS OFFICERS OR AGENTS SHALL NOT BE RESPONSIBLE FOR THE ACCURACY OR COMPLETENESS OF SCANNED COPIES OF THIS PLAN SHEET.

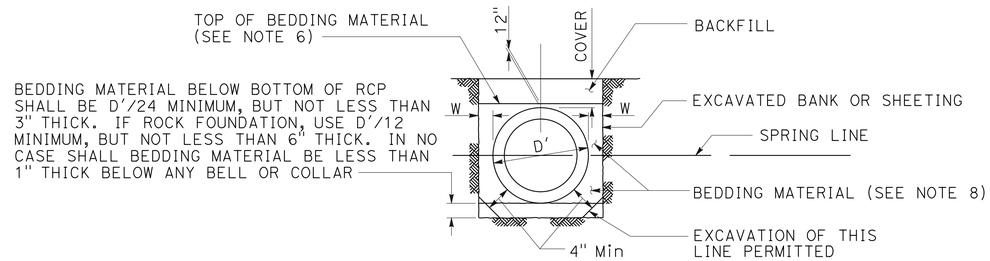

CASE 3
REINFORCED CONCRETE PIPE

NOTES:

CASE 3 BEDDING & BACKFILL AROUND RCP (LOAD FACTOR 2.2 TO 2.5)

(a) W AT SPRING LINE SHALL NOT BE LESS THAN THE FOLLOWING: 6" FOR RCP 60" OR LESS IN DIAMETER, 10" FOR RCP 63" TO 108" INCLUSIVE IN DIAMETER, AND 12" FOR PIPE LARGER THAN 108" IN DIAMETER. THESE DIMENSIONS MAY INCLUDE THE THICKNESS OF ANY SHEETING.

(b) WHERE COVER IS GREATER THAN 10'-0", W MEASURED AT TOP OF PIPE SHALL NOT BE GREATER THAN 10" FOR RCP 108" IN DIAMETER OR LESS OR 12" FOR RCP OVER 108" IN DIAMETER. THESE DIMENSIONS INCLUDE THE THICKNESS OR ANY SHEETING.

(c) SCREED BEDDING MATERIAL TO FIT CURVATURE AND GRADE OF RCP. TYPE OF SCREED AND THE METHOD OF USE TO BE APPROVED BY THE ENGINEER.

(d) BEDDING MATERIAL BELOW THE SPRING LINE FOR RCP 54" OR LARGER SHALL BE COMPACTED BEFORE PLACING BEDDING MATERIAL ABOVE THE SPRING LINE.

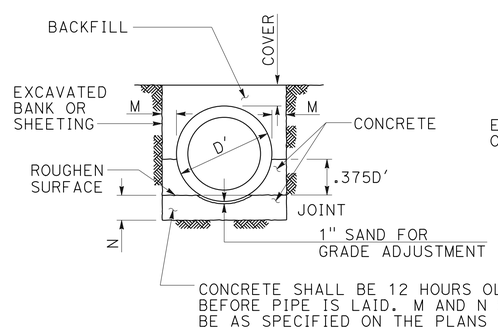

CASE 4

NOTES:

CASE 4 BEDDING (LOAD FACTOR 3.0)

WHERE REQUIRED BY THE ENGINEER AS AN ALTERNATIVE TO CASE 1 OR CASE 5 TO MEET CONDITIONS ARISING DURING CONSTRUCTION.

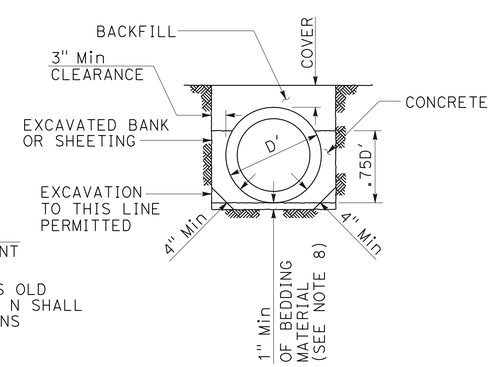

CASE 5

NOTES:

CASE 5 BEDDING (LOAD FACTOR 2.7)

SHALL BE USED WHERE SPECIFIED ON THE PLANS. CASE 4 BEDDING SHALL BE USED INSTEAD OF CASE 5 AGAINST SHEETING OR UNSTABLE TRENCH WALLS IF SO REQUIRED BY THE ENGINEER.

PIPE BEDDING IN TRENCHES (3080-3)

SHEET 2 OF 3

DRAINAGE DETAILS

NO SCALE

DD-29

STATE OF CALIFORNIA - DEPARTMENT OF TRANSPORTATION
Caltrans® HYDRAULICS

FUNCTIONAL SUPERVISOR: DAVE BHALLA
CALCULATED-DESIGNED BY: VIC T. VALIDO
CHECKED BY: DAVE BHALLA
REVISED BY
DATE REVISED

LAST REVISION 00-00-00
DATE PLOTTED => 26-JUN-2013
TIME PLOTTED => 15:30

Dist	COUNTY	ROUTE	POST MILES TOTAL PROJECT	SHEET No.	TOTAL SHEETS
07	LA	5	0.0/7.6	161	985

REGISTERED CIVIL ENGINEER 10-11-12 DATE

6-24-13
PLANS APPROVAL DATE

REGISTERED PROFESSIONAL ENGINEER DAVE BHALLA No. 34350 Exp. 9/30/13 CIVIL STATE OF CALIFORNIA

THE STATE OF CALIFORNIA OR ITS OFFICERS OR AGENTS SHALL NOT BE RESPONSIBLE FOR THE ACCURACY OR COMPLETENESS OF SCANNED COPIES OF THIS PLAN SHEET.

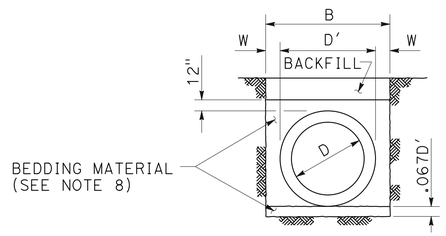

CASE 6

NOTES:

CASE 6 BEDDING (LOAD FACTOR 1.5)

(a) NOTE (a), (b), and (c) FROM CASE 3 SHALL APPLY.

(b) WHERE SUBGRADE IS COMPOSED OF OTHER THAN GRANULAR OR SANDY MATERIAL, THE TRENCH SHALL BE EXCAVATED TO DEPTH OF AT LEAST 3" BELOW THE PIPE AND BACKFILLED WITH BEDDING MATERIAL OR OTHER MATERIALS AS MAY BE SPECIFIED OR OTHERWISE APPROVED BY THE AGENCY.

NOTES:

1. USE CASE 3 FOR RCP, CASE 2 FOR VITRIFIED CLAY, AND PLAIN CONCRETE PIPE UNLESS OTHERWISE SPECIFIED OR SHOWN ON THE PLANS. SEE PLANS FOR BEDDING DETAILS FOR PIPE OF OTHER MATERIALS.
2. BEDDING MATERIAL SHALL CONFORM TO 306-1.2.1 OF THE ADDITIONS AND AMENDMENTS.
3. CONCRETE BACKFILL SHALL BE POURED FROM WALL TO WALL OF THE TRENCH AND FROM THE BOTTOM OF THE TRENCH TO A MINIMUM DEPTH OF 4" OVER THE TOP OF THE PIPE.
4. CONCRETE BACKFILL SHALL BE PROVIDED FOR RCP 21" IN DIAMETER OR LESS WHERE THE COVER IS EQUAL TO OR LESS THAN 24". FOR RCP GREATER THAN 21" IN DIAMETER BUT LESS THAN 39" WHERE THE COVER IS LESS THAN 15" AND FOR RCP 39" OR GREATER WHERE THE COVER IS LESS THAN 12", CONCRETE BACKFILL SHALL CONFORM TO NOTE 3.
5. 3-EDGE BEARING TEST LOAD FACTOR (D-LOAD) = 1.0.
6. TOP OF BEDDING MATERIAL AS SHOWN, UNLESS OTHERWISE SHOWN ON THE PLANS OR SPECIFIED IN THE SPECIAL PROVISIONS.
7. D-LOADS FOR RCP TO BE PLACED IN ACCORDANCE WITH THIS STANDARD PLAN MUST BE DESIGNED FOR AN EMBANKMENT CONDITION, EVEN WHEN PLACED IN A TRENCH.
8. BEDDING MATERIAL BELOW THE PIPE SHALL BE LOOSELY PLACED TO AVOID STRESS CONCENTRATIONS AT THE BOTTOM OF THE PIPE. BEDDING MATERIAL BELOW THE SPRING LINE, UNLESS CONCRETE, SHALL BE COMPACTED AFTER PLACEMENT OF THE PIPE.

PIPE BEDDING IN TRENCHES (3080-3)

SHEET 3 OF 3

DRAINAGE DETAILS
NO SCALE

DD-30

STATE OF CALIFORNIA - DEPARTMENT OF TRANSPORTATION
Caltrans® HYDRAULICS

FUNCTIONAL SUPERVISOR: JAI P. THAKUR
CALCULATED-DESIGNED BY: DAVE BHALLA
CHECKED BY: JAI P. THAKUR
REVISED BY
DATE REVISED

LAST REVISION 00-00-00
DATE PLOTTED => 26-JUN-2013
TIME PLOTTED => 15:30

Dist	COUNTY	ROUTE	POST MILES TOTAL PROJECT	SHEET No.	TOTAL SHEETS
07	LA	5	0.0/7.6	162	985

REGISTERED CIVIL ENGINEER 10-11-12 DATE

6-24-13
PLANS APPROVAL DATE

REGISTERED PROFESSIONAL ENGINEER DAVE BHALLA No. 34350 Exp. 9/30/13 CIVIL STATE OF CALIFORNIA

THE STATE OF CALIFORNIA OR ITS OFFICERS OR AGENTS SHALL NOT BE RESPONSIBLE FOR THE ACCURACY OR COMPLETENESS OF SCANNED COPIES OF THIS PLAN SHEET.

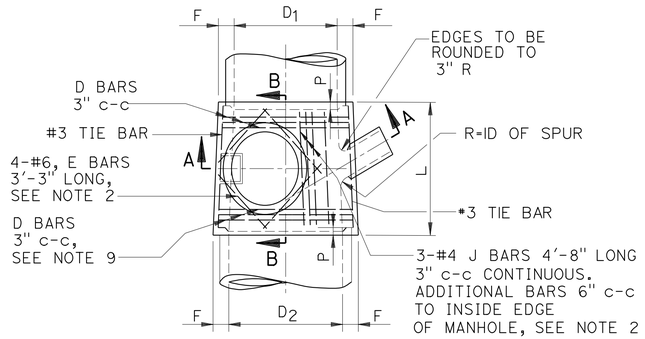

PLAN
(SHAFT NOT SHOWN)

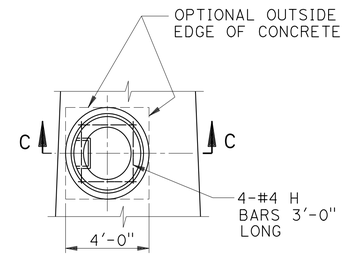

DETAIL "N"
(RINGS AND COVER NOT SHOWN)
(SEE NOTE 1)

TABLE OF VALUES FOR F	
D_2	F
36"	6½"
39"	7"
42"	7½"
45"	7¾"
48"	8"
51"	8½"
54"	9"
57"	9¼"
60"	9½"
63"	10"
66"	10¼"
69"	10¾"
72"	11"
78"	11¾"
84"	12½"
90"	13¼"
96"	14"
102"	15½"
108"	16"
114"	16½"
120"	17"
126"	17"
132"	17½"
138"	17½"
144"	18"

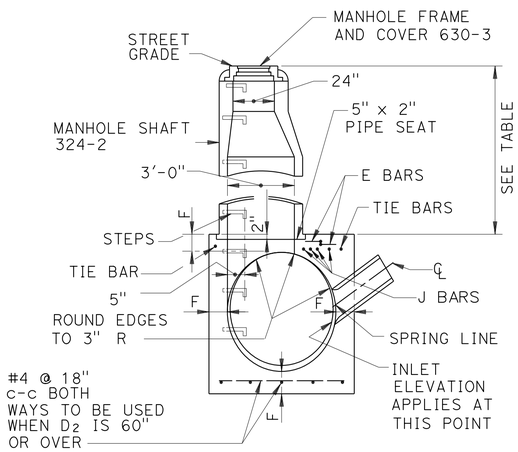

SECTION A-A

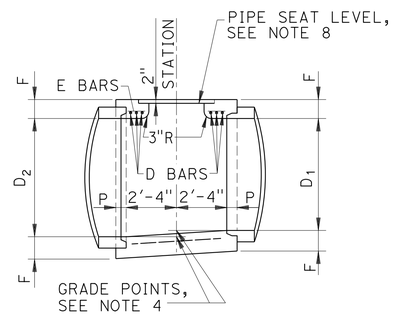

SECTION B-B

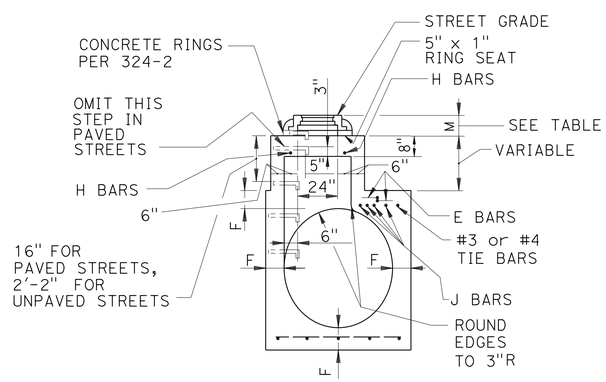

SECTION C-C

TABLE OF VALUES FOR M (SEE NOTE 1)				
SECTION	PAVED STREET		UNPAVED STREET	
	Max	Min	Max	Min
A-A		2'-10½"		3'-6"
C-C	11"	8½"	16"	15"

MANHOLE PIPE - TO -PIPE (320-3)
MAIN LINE ID = 36" OR LARGER
(SHEET 1 OF 2)

DRAINAGE DETAILS
NO SCALE
DD-31

STATE OF CALIFORNIA - DEPARTMENT OF TRANSPORTATION
Caltrans® HYDRAULICS

FUNCTIONAL SUPERVISOR: JAI P. THAKUR
CALCULATED-DESIGNED BY: DAVE BHALLA
CHECKED BY: JAI P. THAKUR
REVISED BY
DATE REVISED

LAST REVISION 00-00-00
DATE PLOTTED => 26-JUN-2013
TIME PLOTTED => 15:30

Dist	COUNTY	ROUTE	POST MILES TOTAL PROJECT	SHEET No.	TOTAL SHEETS
07	LA	5	0.0/7.6	163	985

REGISTERED CIVIL ENGINEER 10-11-12 DATE

6-24-13
PLANS APPROVAL DATE

REGISTERED PROFESSIONAL ENGINEER DAVE BHALLA No. 34350 Exp. 9/30/13 CIVIL STATE OF CALIFORNIA

THE STATE OF CALIFORNIA OR ITS OFFICERS OR AGENTS SHALL NOT BE RESPONSIBLE FOR THE ACCURACY OR COMPLETENESS OF SCANNED COPIES OF THIS PLAN SHEET.

NOTES:

1. WHEN DEPTH M FROM STREET GRADE TO THE TOP OF THE BOX IS LESS THAN 2'-10½" FOR PAVED STREETS OR 3'-6" FOR UNPAVED STREETS, CONSTRUCT MONOLITHIC SHAFT PER SECTION C-C AND DETAIL "N". SHAFT FOR ANY DEPTH OF MANHOLE MAY BE CONSTRUCTED PER SECTION C-C. WHEN DIAMETER D_1 IS 48" OR LESS, CENTER OF SHAFT MAY BE LOCATED PER NOTE 2.

2. CENTER OF MANHOLE SHAFT SHALL BE LOCATED OVER CENTER LINE OF STORM DRAIN WHEN DIAMETER D_1 IS 48" OR LESS, IN WHICH CASE PLACE E BARS SYMMETRICALLY AROUND SHAFT AT 45° WITH CENTERLINE AND OMIT J BARS.

3. L AND P SHALL HAVE THE FOLLOWING VALUES UNLESS OTHERWISE SHOWN ON THE PROJECT DRAWINGS:
   A. D_2=96" OR LESS, L=5'-6", P=5"
   B. D_2 OVER 96" L=6'-0", P=8"
   L MAY BE INCREASED OR LOCATION OF MANHOLE SHIFTED TO MEET PIPE ENDS. WHEN L GREATER THAN THAT SHOWN ABOVE IS SPECIFIED, D BARS SHALL BE CONTINUED 6" c-c.

4. STATIONS OF MANHOLES SHOWN ON PLANS APPLY AT CENTERLINE OF SHAFT. ELEVATIONS ARE SHOWN AT CENTERLINE OF SHAFT AND REFER TO THE PROLONGED INVERT GRADE LINES.

5. REINFORCEMENT SHALL CONFORM TO ASTM A 615, GRADE 40, AND SHALL TERMINATE 1½" CLEAR OF CONCRETE SURFACES UNLESS OTHERWISE SHOWN.

6. FLOOR OF MANHOLE SHALL BE STEEL TROWELED TO SPRING LINE.

7. BODY OF MANHOLE SHALL BE POURED IN ONE CONTINUOUS OPERATION EXCEPT THAT A CONSTRUCTION JOINT WITH A LONGITUDINAL KEYWAY MAY BE PLACED AT SPRING LINE.

8. THICKNESS OF THE DECK SHALL VARY WHEN NECESSARY TO PROVIDE A LEVEL SEAT BUT SHALL NOT BE LESS THAN THE TABULAR VALUES FOR F SHOWN ON SHEET 2.

9. D BARS SHALL BE #4 FOR D_2=39" OR LESS, #5 FOR D_2= 42" TO 84" INCLUSIVE AND #6 FOR D_2=90" OR OVER.

10. CENTERLINE OF INLET PIPE SHALL INTERSECT INSIDE FACE OF CONE AT SPRING LINE UNLESS OTHERWISE SHOWN.

11. STEPS SHALL CONFORM TO 635 OR 636. UNLESS OTHERWISE SHOWN, STEPS SHALL BE UNIFORMLY SPACED 14" TO 15" c-c. THE LOWEST STEP SHALL NOT BE MORE THAN 24" ABOVE THE INVERT.

12. THE FOLLOWING CRITERIA SHALL BE USED FOR THIS MANHOLE:
    A. MAIN LINE = 36" INSIDE DIAMETER OR LARGER. EXCEPT IF THE MAIN LINE RCP DOWNSTREAM OF MANHOLE IS 36" TO 42" INSIDE DIAMETER AND THE MAIN LINE RCP UPSTREAM IS 33" OR LESS 321 SHALL BE USED.
    B. THE OUTSIDE DIAMETER OF THE LATERAL MUST BE LESS THAN OR EQUAL TO 1/2 THE INSIDE DIAMETER OF THE MAIN LINE. IF THE UPSTREAM AND DOWNSTREAM DIAMETERS OF THE MANHOLE ARE NOT THE SAME, THE GOVERNING INSIDE DIAMETER OF THE MAIN LINE SHALL BE CONSIDERED TO BE THAT WHERE THE EXTENDED CENTERLINE OF THE LATERAL ENTERS THE MANHOLE.
    C. IN NO INSTANCE SHALL THE INSIDE DIAMETER OF THE LATERAL TO THE MANHOLE BE GREATER THAN 30"

13. MANHOLE FRAME AND COVER SHALL CONFORM TO 630 UNLESS OTHERWISE SHOWN.

14. MANHOLE SHAFT SHALL CONFORM TO 324 UNLESS OTHERWISE SHOWN.

15. WHERE A MANHOLE SHAFT - 36" WITHOUT REDUCER IS SPECIFIED REFER TO 326.

16. WHERE A PRESSURE MANHOLE SHAFT - WITH ECCENTRIC REDUCER IS SPECIFIED REFER TO 328.

17. WHERE A PRESSURE MANHOLE SHAFT - (36") WITHOUT REDUCER IS SPECIFIED REFER TO 329.

18. THE FOLLOWING SPPWC ARE INCORPORATED HEREIN:
    324 MANHOLE SHAFT - WITH ECCENTRIC REDUCER
    328 PRESSURE MANHOLE SHAFT - WITH ECCENTRIC
    630 24" MANHOLE FRAME AND COVER
    635 STEEL STEP
    636 POLYPROPYLENE PLASTIC STEP

MANHOLE PIPE - TO -PIPE (320-3)
MAIN LINE ID = 36" OR LARGER
(SHEET 2 OF 2)

DRAINAGE DETAILS

DD-32

STATE OF CALIFORNIA - DEPARTMENT OF TRANSPORTATION
Caltrans
HYDRAULICS

FUNCTIONAL SUPERVISOR: JAI P. THAKUR
CALCULATED-DESIGNED BY: DAVE BHALLA
CHECKED BY: JAI P. THAKUR
REVISED BY
DATE REVISED

LAST REVISION 00-00-00
DATE PLOTTED => 26-JUN-2013
TIME PLOTTED => 15:30

Dist	COUNTY	ROUTE	POST MILES TOTAL PROJECT	SHEET No.	TOTAL SHEETS
07	LA	5	0.0/7.6	164	985

REGISTERED CIVIL ENGINEER 10-11-12 DATE

6-24-13
PLANS APPROVAL DATE

REGISTERED PROFESSIONAL ENGINEER DAVE BHALLA No. 34350 Exp. 9/30/13 CIVIL STATE OF CALIFORNIA

THE STATE OF CALIFORNIA OR ITS OFFICERS OR AGENTS SHALL NOT BE RESPONSIBLE FOR THE ACCURACY OR COMPLETENESS OF SCANNED COPIES OF THIS PLAN SHEET.

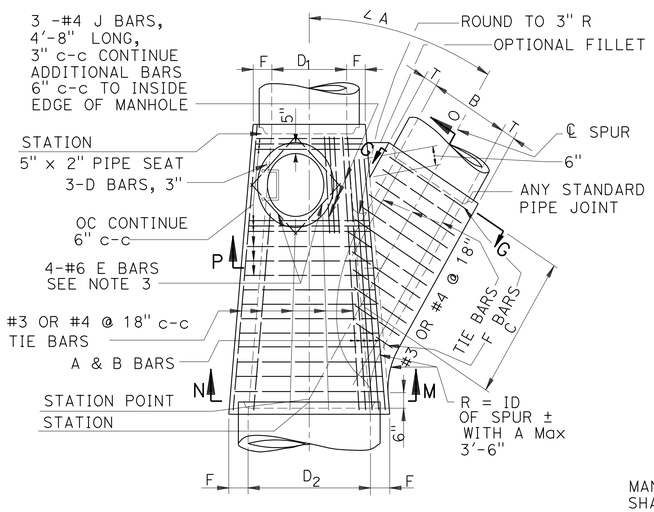

PLAN
(SHAFT NOT SHOWN)

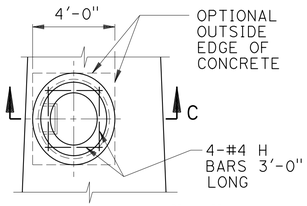

DETAIL "N"
(RINGS AND COVER NOT SHOWN)
SEE NOTE 2

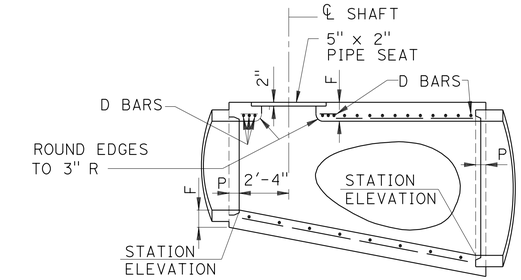

LONGITUDINAL SECTION

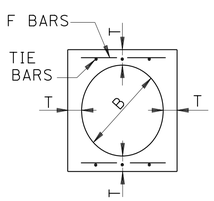

SECTION G-G

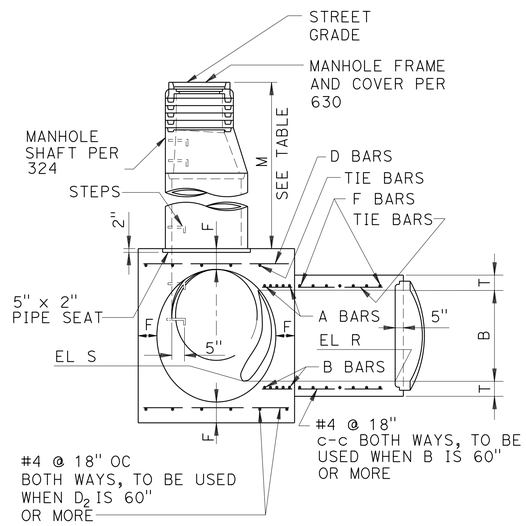

SECTION N-M-P-O

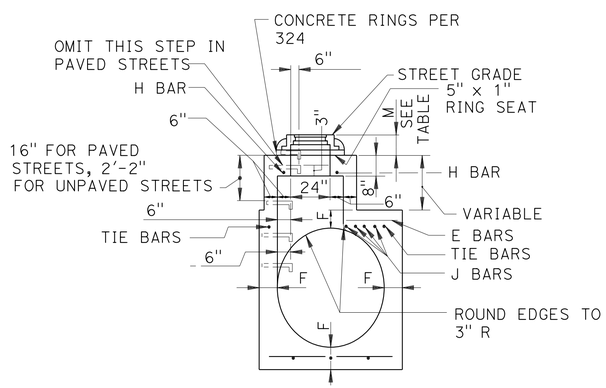

SECTION C-C

TABLE OF BARS SIZES		
D_2 OR B	A & B	D OR F
12" - 39"	#5 @ 3"	#4 @ 6"
42" - 84"	#6 @ 3"	#5 @ 6"
90" - 144"	#7 @ 3"	#6 @ 6"

TABLE OF VALUES FOR M (SEE NOTE 2)				
SECTION	PAVED STREET		UNPAVED STREET	
	Max	Min	Max	Min
N-M-P-O		2'-10½"		3'-6"
C-C	11"	8½"	16"	15"

TABLE OF VALUES FOR F	
D_2	F
36"	6½"
39"	7"
42"	7½"
45"	7¾"
48"	8"
51"	8½"
54"	9"
57"	9¼"
60"	9½"
63"	10"
66"	10¼"
69"	10¾"
72"	11"
78"	11¾"
84"	12½"
90"	13¼"
96"	14"
102"	15½"
108"	16"
114"	16½"
120"	17"
126"	17"
132"	17½"
138"	17½"
144"	18"

TABLE OF VALUES FOR T	
B	T
12"	4"
15"	4¼"
18"	4½"
21"	5"
24"	5¼"
27"	5½"
30"	6"
33"	6¼"
36"	6½"
39"	7"
42"	7½"
45"	7¾"
48"	8"
51"	8½"
54"	9"
57"	9¼"
60"	9½"
63"	10"
66"	10¼"
69"	10¾"
72"	11"
78"	11¾"
84"	12½"
90"	13¼"
96"	14"
102"	15½"
108"	16"
114"	16½"
120"	17"
126"	17"
132"	17½"
138"	17½"
144"	18"

MANHOLE PIPE - TO -PIPE (322-3)
(LARGE SIDE INLET)
(SHEET 1 OF 2)

DRAINAGE DETAILS
NO SCALE
DD-33

STATE OF CALIFORNIA - DEPARTMENT OF TRANSPORTATION
Caltrans® HYDRAULICS
FUNCTIONAL SUPERVISOR: JAI P. THAKUR
CALCULATED-DESIGNED BY: DAVE BHALLA
CHECKED BY: JAI P. THAKUR
REVISED BY / DATE REVISED

LAST REVISION 00-00-00
DATE PLOTTED => 26-JUN-2013
TIME PLOTTED => 15:30

Dist	COUNTY	ROUTE	POST MILES TOTAL PROJECT	SHEET No.	TOTAL SHEETS
07	LA	5	0.0/7.6	165	985

REGISTERED CIVIL ENGINEER 10-11-12 DATE

6-24-13
PLANS APPROVAL DATE

REGISTERED PROFESSIONAL ENGINEER DAVE BHALLA No. 34350 Exp. 9/30/13 CIVIL STATE OF CALIFORNIA

THE STATE OF CALIFORNIA OR ITS OFFICERS OR AGENTS SHALL NOT BE RESPONSIBLE FOR THE ACCURACY OR COMPLETENESS OF SCANNED COPIES OF THIS PLAN SHEET.

NOTES:

1. VALUES FOR A, B, C, D_1, D_2 ELEVATION R AND ELEVATION S ARE SHOWN ON THE PLANS. ELEVATION S APPLIES AT INSIDE WALL OF STRUCTURE.

2. WHEN DEPTH M FROM STREET GRADE TO THE TOP OF THE BOX IS LESS THAN 2'-10 1/2" FOR PAVED STREETS OR 3'-6" FOR UNPAVED STREETS, CONSTRUCT MONOLITHIC SHAFT PER SECTION C-C AND DETAIL N". SHAFT FOR ANY DEPTH OF MANHOLE MAY BE CONSTRUCTED PER SECTION C-C. WHEN DIAMETER D1 IS 48" OR LESS, CENTER OF SHAFT MAY BE LOCATED PER NOTE 3.

3. CENTER OF MANHOLE SHAFT SHALL BE LOCATED OVER CENTERLINE OF STORM DRAIN WHEN DIAMETER D_1 IS 48" OR LESS, IN WHICH CASE PLACE E BARS SYMMETRICALLY AROUND SHAFT AT 45° WITH CENTERLINE.

4. LENGTH OF MANHOLE MAY BE INCREASED AT OPTION TO MEET PIPE ENDS, BUT ANY CHANGE IN LOCATION OF SPUR MUST BE APPROVED BY THE ENGINEER.

5. P SHALL BE 5" FOR D2=96 33/64 OR LESS AND 8" FOR D2 OVER 96"

6. REINFORCEMENT SHALL CONFORM TO ASTM A 615, GRADE 40 (ASTM A GRADE 300), AND SHALL TERMINATE 1 1/2" (CLEAR OF CONCRETE SURFACES UNLESS OTHERWISE SHOWN.

7. FLOOR OF MANHOLE SHALL BE STEEL TROWELED TO SPRING LINE.

8. BODY OF MANHOLE SHALL BE POURED IN ONE CONTINUOUS OPERATION EXCEPT THAT A CONSTRUCTION JOINT WITH A LONGITUDINAL KEYWAY MAY BE PLACED AT SPRING LINE.

9. THICKNESS OF THE DECK SHALL VARY WHEN NECESSARY TO PROVIDE A LEVEL SEAT BUT SHALL NOT BE LESS THAN THE TABULAR VALUES OF F SHOWN ON TABLE, SHEET 1.

10. IF LATERALS ENTER ON BOTH SIDES OF MANHOLE, SHAFT SHALL BE LOCATED ON SIDE RECEIVING THE SMALLER LATERAL.

11. STEPS SHALL CONFORM TO 635 OR 636. UNLESS OTHERWISE SHOWN, STEPS SHALL BE UNIFORMLY SPACED 14" TO 15" c-c. THE LOWEST STEP SHALL NOT BE MORE THAN 24" ABOVE THE INVERT.

12. THE FOLLOWING CRITERIA SHALL BE USED FOR THIS MANHOLE:

    A. THIS STANDARD PLAN IS USED WHEN 320 IS INADEQUATE. MAIN LINE = 36" INSIDE DIAMETER OR LARGE.

    B. LATERAL = 12" TO 144" INSIDE DIAMETER; HOWEVER, THE INSIDE DIAMETER SHALL NOT EXCEED THE INSIDE DIAMETER OF THE MAIN LINE.

13. MANHOLE FRAME AND COVER SHALL CONFORM TO 630 UNLESS OTHERWISE SHOWN.

14. MANHOLE SHAFT SHALL CONFORM TO 324 UNLESS OTHERWISE SHOWN.

15. WHERE A MANHOLE SHAFT - 36" WITHOUT REDUCER IS SPECIFIED REFER TO 326.

16. WHERE PRESSURE A MANHOLE SHAFT - WITH ECENTRIC REDUCER IS SPECIFIED REFER TO 328.

17. WHERE PRESSURE A MANHOLE SHAFT - 36" WITHOUT REDUCER IS SPECIFIED REFER TO 329.

18. THE FOLLOWING SPPWC ARE INCORPORATED HEREIN:

    324 MANHOLE SHAFT - WITH ECENTRIC REDUCER
    328 PRESSURE MANHOLE SHAFT - WITH ECCENTRIC
    630 24" MANHOLE FRAME AND COVER
    635 STEEL STEP
    636 POLYPROPYLENE PLASTIC STEP

MANHOLE PIPE - TO - PIPE (322-3)
LARGE SIDE INLET
(SHEET 2 OF 2)

DRAINAGE DETAILS

DD-34

STATE OF CALIFORNIA - DEPARTMENT OF TRANSPORTATION
Caltrans
HYDRAULICS

FUNCTIONAL SUPERVISOR: JAI P. THAKUR
CALCULATED-DESIGNED BY: DAVE BHALLA
CHECKED BY: JAI P. THAKUR
REVISED BY
DATE REVISED

LAST REVISION 00-00-00
DATE PLOTTED => 26-JUN-2013
TIME PLOTTED => 15:30

Dist	COUNTY	ROUTE	POST MILES TOTAL PROJECT	SHEET No.	TOTAL SHEETS
07	LA	5	0.0/7.6	166	985

REGISTERED CIVIL ENGINEER 10-11-12 DATE

6-24-13
PLANS APPROVAL DATE

REGISTERED PROFESSIONAL ENGINEER
DAVE BHALLA
No. 34350
Exp. 9/30/13
CIVIL
STATE OF CALIFORNIA

THE STATE OF CALIFORNIA OR ITS OFFICERS OR AGENTS SHALL NOT BE RESPONSIBLE FOR THE ACCURACY OR COMPLETENESS OF SCANNED COPIES OF THIS PLAN SHEET.

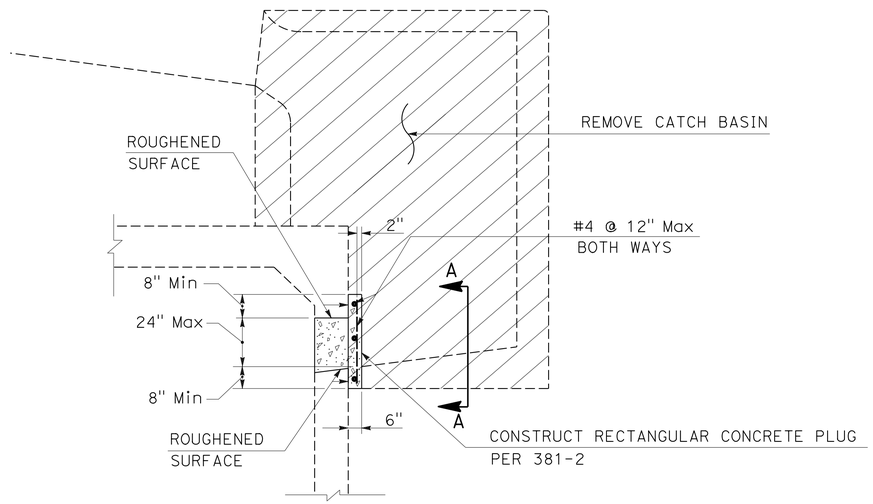

ABANDONMENT SEAL FOR RCB INLET

DRAINAGE SYSTEM No. 9

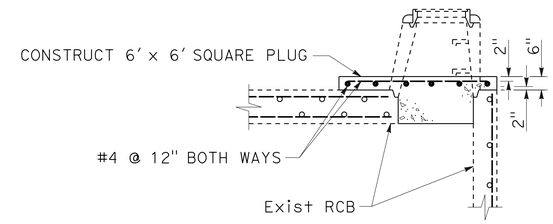

MANHOLE ABANDONMENT SEAL FOR RCB

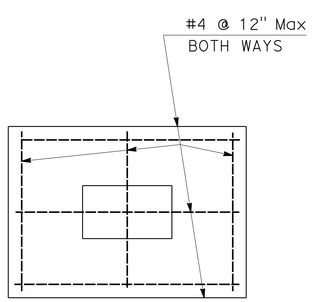

SECTION A-A

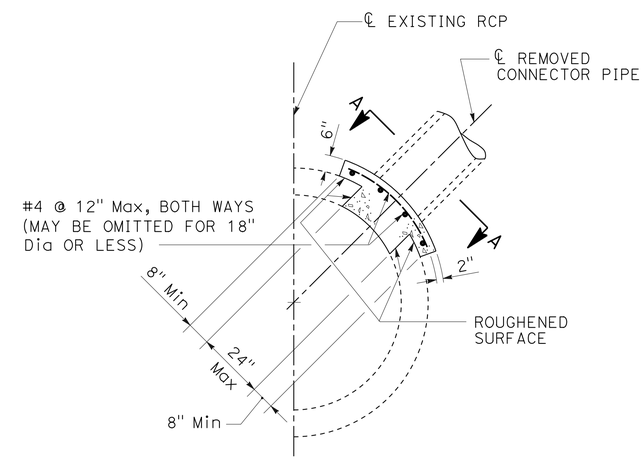

ABANDONMENT SEAL FOR RCP INLET

ABANDONMENT SEALS FOR MANHOLES AND INLETS (381-2)

DRAINAGE DETAILS

NO SCALE

DD-35

STATE OF CALIFORNIA - DEPARTMENT OF TRANSPORTATION
Caltrans
HYDRAULICS

FUNCTIONAL SUPERVISOR: JAI P. THAKUR
CALCULATED-DESIGNED BY: DAVE BHALLA
CHECKED BY: JAI P. THAKUR
REVISED BY
DATE REVISED

LAST REVISION 00-00-00
DATE PLOTTED => 26-JUN-2013
TIME PLOTTED => 15:30

Dist	COUNTY	ROUTE	POST MILES TOTAL PROJECT	SHEET No.	TOTAL SHEETS
07	LA	5	0.0/7.6	167	985

REGISTERED CIVIL ENGINEER 10-11-12 DATE

6-24-13
PLANS APPROVAL DATE

REGISTERED PROFESSIONAL ENGINEER DAVE BHALLA No. 34350 Exp. 9/30/13 CIVIL STATE OF CALIFORNIA

THE STATE OF CALIFORNIA OR ITS OFFICERS OR AGENTS SHALL NOT BE RESPONSIBLE FOR THE ACCURACY OR COMPLETENESS OF SCANNED COPIES OF THIS PLAN SHEET.

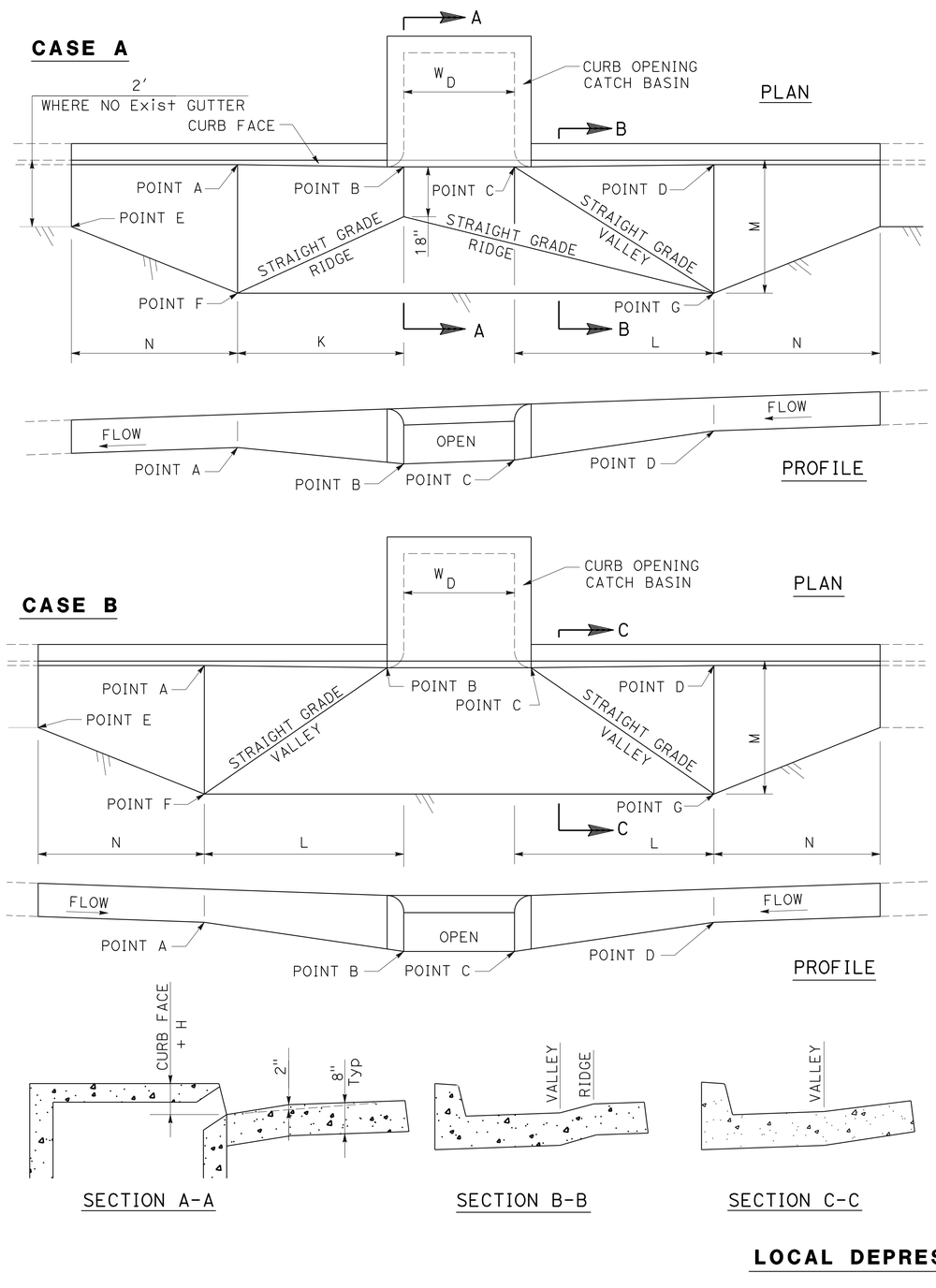

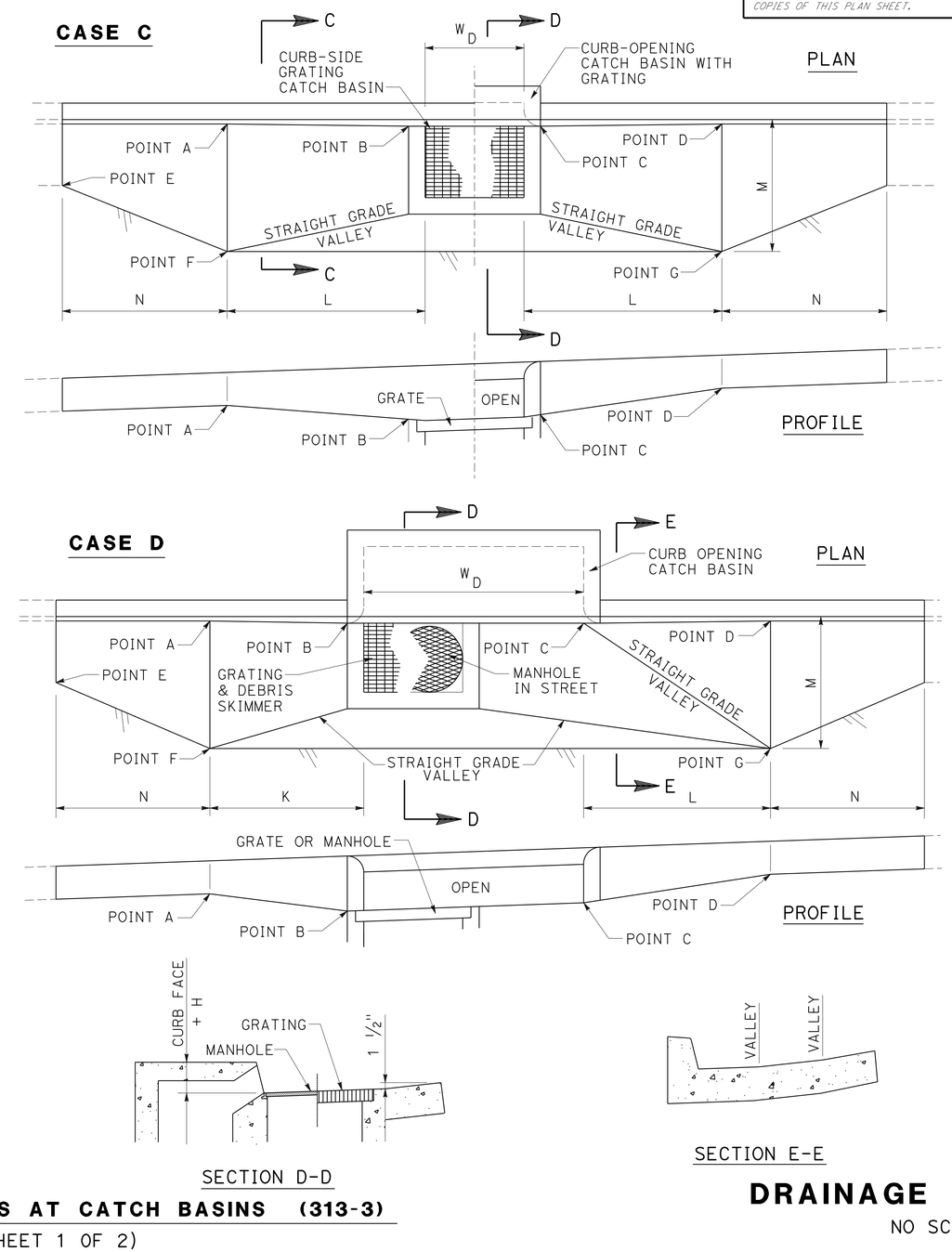

LOCAL DEPRESSIONS AT CATCH BASINS (313-3)

(SHEET 1 OF 2)

DRAINAGE DETAILS

NO SCALE

DD-36

STATE OF CALIFORNIA - DEPARTMENT OF TRANSPORTATION
Caltrans
HYDRAULICS

FUNCTIONAL SUPERVISOR: JAI P. THAKUR
CALCULATED-DESIGNED BY: DAVE BHALLA
CHECKED BY: JAI P. THAKUR
REVISED BY
DATE REVISED

LAST REVISION 00-00-00
DATE PLOTTED => 26-JUN-2013
TIME PLOTTED => 15:30

Dist	COUNTY	ROUTE	POST MILES TOTAL PROJECT	SHEET No.	TOTAL SHEETS
07	LA	5	0.0/7.6	168	985

REGISTERED CIVIL ENGINEER 10-11-12 DATE

6-24-13
PLANS APPROVAL DATE

REGISTERED PROFESSIONAL ENGINEER DAVE BHALLA No. 34350 Exp. 9/30/13 CIVIL STATE OF CALIFORNIA

THE STATE OF CALIFORNIA OR ITS OFFICERS OR AGENTS SHALL NOT BE RESPONSIBLE FOR THE ACCURACY OR COMPLETENESS OF SCANNED COPIES OF THIS PLAN SHEET.

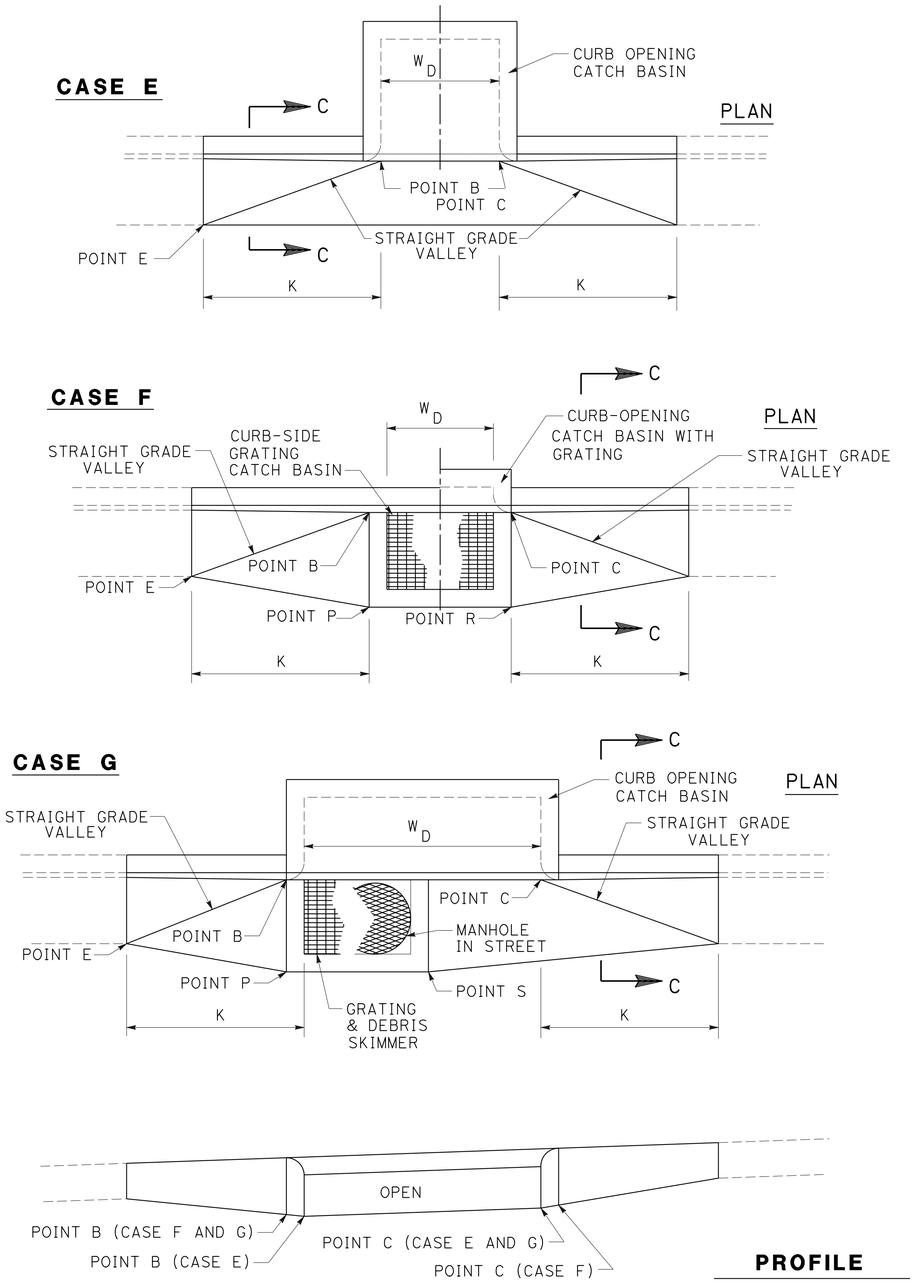

NOTES:

1. ALL EXPOSED EDGES SHALL BE ROUNDED TO A ½" RADIUS.

2. THE CURB FACE AT POINTS A AND D SHALL BE THE NORMAL CURB FACE OF THE ADJACENT CURB. AT POINTS B AND C, THE CURB FACE SHALL BE THE NORMAL CURB FACE OF THE ADJACENT CURB PLUS H. (SEE APPLICABLE CATCH BASIN STANDARD PLAN.)

3. IN EXISTING STREETS WHERE NO PAVEMENT RECONSTRUCTION IS SPECIFIED ON THE PLANS, THE ELEVATION OF THE OUTER EDGE OF THE LOCAL DEPRESSION SHALL MEET THE FINISHED STREET SURFACE.

4. IN NEW STREETS OR IN EXISTING STREETS WHERE PAVEMENT RECONSTRUCTION IS SPECIFIED ON THE PLANS:

   THE ELEVATIONS OF POINTS F AND G SHALL BE SET H1 HIGHER THAN THE GUTTER FLOW LINE ELEVATIONS AT POINTS A AND D, RESPECTIVELY.

   THE ELEVATIONS OF POINTS P AND R SHALL BE SET H2 HIGHER THAN THE GUTTER FLOW LINE ELEVATIONS AT POINTS B AND C, RESPECTIVELY.

   THE ELEVATION OF POINT S SHALL BE SET H2 HIGHER THAN THE ELEVATION AT THE NEAREST GUTTER FLOW LINE.

   WHERE THERE IS NO GUTTER ADJACENT TO THE LOCAL DEPRESSION, THE ELEVATION OF POINT E SHALL BE SET H3 HIGHER THAN THE ELEVATION AT THE NEAREST TOE OF CURB.

5. DIMENSIONS:

   H, H1, H2 AND H3 SHALL BE AS NOTED ON THE PLANS.

   G = 24"

   K = 5'-0"

   L = 6'-0"

   M = 4'-0"

   N = 5'-0"

   W_D = CATCH BASIN W FOR SINGLE CATCH BASIN OR DISTANCE BETWEEN EXTREME END WALLS FOR MULTIPLE CATCH BASINS.

LOCAL DEPRESSIONS AT CATCH BASINS (313-3)

(SHEET 2 OF 2)

DRAINAGE DETAILS

NO SCALE

DD-37

STATE OF CALIFORNIA - DEPARTMENT OF TRANSPORTATION
Caltrans®
HYDRAULICS

FUNCTIONAL SUPERVISOR: JAI P. THAKUR
CALCULATED-DESIGNED BY: DAVE BHALLA
CHECKED BY: JAI P. THAKUR
REVISED BY
DATE REVISED

LAST REVISION 00-00-00
DATE PLOTTED => 26-JUN-2013
TIME PLOTTED => 15:30

Dist	COUNTY	ROUTE	POST MILES TOTAL PROJECT	SHEET No.	TOTAL SHEETS
07	LA	5	0.0/7.6	169	985

REGISTERED CIVIL ENGINEER DATE 10-11-12

PLANS APPROVAL DATE 6-24-13

REGISTERED PROFESSIONAL ENGINEER DAVE BHALLA No. 34350 Exp. 9/30/13 CIVIL STATE OF CALIFORNIA

THE STATE OF CALIFORNIA OR ITS OFFICERS OR AGENTS SHALL NOT BE RESPONSIBLE FOR THE ACCURACY OR COMPLETENESS OF SCANNED COPIES OF THIS PLAN SHEET.

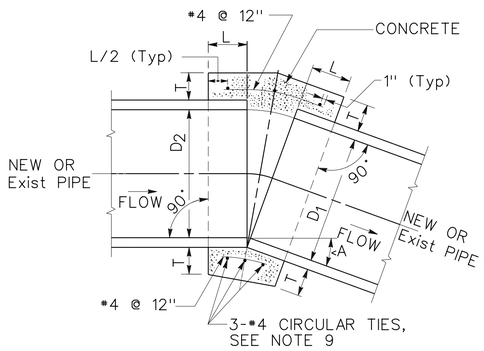

D	L	T
12"	12"	4"
18"	12"	5"
24"	12"	6"
30"	18"	7"
36"	18"	9"
42"	18"	9"
48"	18"	10"
57"	18"	10"
60"	21"	11"
66"	21"	11"
72"	24"	12"

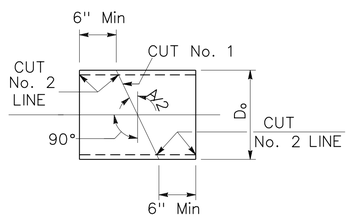

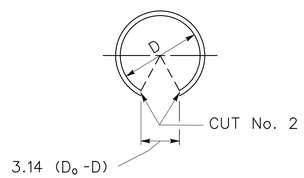

DETAIL "A" (SEE NOTE 10)

SONO-TUBE, OR EQUAL, INTERIOR FORM

CUT No. 1: SAW THE TUBE AT AN ANGLE OF A/2 WITH THE TRANSVERSE PLANE. REVERSE ONE SECTION AND TAPE BOTH SECTIONS TOGETHER FORMING THE DEFLECTION ANGLE A.

CUT No. 2: SAW THE TUBE LONGITUDINALLY REMOVING A STRIP 3.14 (D_o -D) WIDE ON THE SIDE OPPOSITE THE OPEN JOINT. BEND THE ENDS OF THE CUT TOGETHER AND INSERT THE TUBE IN THE PIPE.

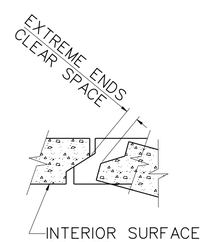

DETAIL "B"

TYPICAL JOINT FOR
REINFORCED CONCRETE PIPE

NOTES:

1. A CONCRETE COLLAR IS REQUIRED WHERE THE CHANGE IN GRADE EXCEEDS 10%.
2. FOR CURVE JOINTS (SEE DETAIL B)
   IF THE EXTREME ENDS OF THE PIPE LEAVE A CLEAR SPACE THAT IS GREATER THAN 1", BUT IS LESS THAN 3" A CONCRETE COVER IS REQUIRED IN ACCORDANCE WITH 306-1.2.4

   IF THE EXTREME ENDS OF THE PIPE LEAVE A CLEAR SPACE THAT IS EQUAL TO OR GREATER THAN 3", BUT LESS THAN 6", A CONCRETE COLLAR IS REQUIRED. IF THE CLEAR SPACE IS 6" OR GREATER, A TRANSITION STRUCTURE IS REQUIRED.
3. CONCRETE COLLAR SHALL NOT BE USED FOR A SIZE CHANGE ON THE MAIN LINE.
4. CONNECTOR PIPES
   A. WHERE PIPES OF DIFFERENT DIAMETERS ARE JOINED WITH A CONCRETE COLLAR, L AND T SHALL BE THOSE OF THE LARGER PIPE. $D=D_1$ OR D_2, WHICHEVER IS GREATER.
   B. WHEN D_1 IS EQUAL TO OR LESS THAN D_2, JOIN INVERTS AND WHEN D_1 IS GREATER THAN D_2, JOIN SOFFITS.
5. FOR PIPE LARGER THAN 72" SPECIAL COLLAR DETAILS ARE REQUIRED.
6. FOR PIPE SIZE NOT LISTED USE NEXT SIZE LARGER.
7. REINFORCEMENT SHALL CONFORM TO ASTM A 615 GRADE 40 (300).
8. WHERE REINFORCING IS REQUIRED THE DIAMETER OF THE CIRCULAR TIES SHALL BE D+(2X WALL THICKNESS) + T.
9. REINFORCING SHALL BE USED WHERE THE PIPE DIAMETER IS GREATER THAN 21" AND ON ALL PIPES WHERE THE SPACES BETWEEN THE EXTREME OUTER ENDS IS 3" OR LARGER.

   CIRCULAR TIES:

PIPE DIAMETER	No. OF CIRCULAR TIES
21" OR LESS	3
24" TO 30"	3
33" TO 57"	4
60" TO 72"	5

   WHERE THE SPACE BETWEEN PIPE ENDS EXCEEDS 3", THE NUMBER OF CIRCULAR TIES SHALL BE INCREASED TO MAINTAIN AN APPROXIMATE SPACING OF 6" c-c.
10. WHERE THE PIPE IS 21" OR LESS IN DIAMETER AN INTERIOR FORM OF UNSEALED SONO-TUBE OR EQUAL SHALL BE USED TO PROVIDE A SMOOTH INTERIOR JOINT. THE PAPER FORM MAY BE LEFT IN PLACE (SEE DETAIL A). WHEN THE PIPE IS 24" OR LARGER A REMOVABLE INTERIOR FORM SHALL BE USED OR THE INTERIOR JOINT SHALL BE COMPLETELY FILLED WITH MORTAR AND NEATLY POINTED.

CONCRETE COLLAR FOR RCP 12" THROUGH 72" (380-4)

DRAINAGE DETAILS

NO SCALE

DD-38

STATE OF CALIFORNIA - DEPARTMENT OF TRANSPORTATION
Caltrans® HYDRAULICS

FUNCTIONAL SUPERVISOR: JAI P. THAKUR
CALCULATED-DESIGNED BY: DAVE BHALLA
CHECKED BY: JAI P. THAKUR
REVISED BY
DATE REVISED

LAST REVISION 00-00-00
DATE PLOTTED => 26-JUN-2013
TIME PLOTTED => 15:31

Dist	COUNTY	ROUTE	POST MILES TOTAL PROJECT	SHEET No.	TOTAL SHEETS
07	LA	5	0.0/7.6	170	985

REGISTERED CIVIL ENGINEER 10-11-12 DATE

6-24-13
PLANS APPROVAL DATE

REGISTERED PROFESSIONAL ENGINEER DAVE BHALLA No. 34350 Exp. 9/30/13 CIVIL STATE OF CALIFORNIA

THE STATE OF CALIFORNIA OR ITS OFFICERS OR AGENTS SHALL NOT BE RESPONSIBLE FOR THE ACCURACY OR COMPLETENESS OF SCANNED COPIES OF THIS PLAN SHEET.

NOTES:

1. JOINTS ARE STANDARD JOINT TYPE
2. (N) - NOT A SEPARATE PAY ITEM, FOR INFORMATION ONLY
3. (*) - ROADWAY ITEM, SEE ADDITIONAL QUANTITIES IN ROADWAY QUANTITY SHEET

SUMMARY OF DRAINAGE QUANTITIES

DRAINAGE PLAN SHEET No.	DRAINAGE SYSTEM No. ⬡	DRAINAGE UNIT ◯	"H" OR "V" FT	MINOR CONCRETE (MINOR STRUCTURE) CY	CONCRETE (CHANNEL LINING) CY	MINOR CONCRETE (BACKFILL) CY	STRUCTURAL CONCRETE, BOX CULVERT CY	BAR REINFORCING STEEL (BOX CULVERT) LB	MISCELLANEOUS IRON AND STEEL LB	18" RCP LF	24" RCP LF	27" RCP LF	48" RCP LF	JACKED 48" RCP (CLASS V) LF	18" PLASTIC PIPE LF	36" PRECAST CONCRETE PIPE MANHOLE LF	18" CONCRETE FES EA	ADJUST MANHOLE TO GRADE EA	ABANDON INLET EA	SAND BACKFILL CY	CAP INLET EA	REMOVE FES EA	REMOVE HEADWALL EA	REMOVE CONCRETE CY	REMOVE PIPE LF	REMOVE RCB CULVERT CY	REMOVE INLET EA	REMOVE CATCH BASIN EA	TYPE 24-12 FRAME AND GRATE (N) EA	CATCH BASIN MH FRAME AND COVER (N) EA	SEAL ISOLATION JOINT (*) LF	MANHOLE FRAME AND COVER (N) EA	MAXIMUM COVER (N) FT			DESCRIPTION	STATION
1	1	a	6.68	2.42					580																				2		14.8					GD-1 INLET	113.00' L+ 315+00.00 ℄ Rte 5
		b									291.0																						10.0			24" RCP	
		c	7.00	2.51					580																				2		14.8					GD-1 INLET	113.00' L+ 317+95.00 ℄ Rte 5
1	1	d									325.4																						10.0			24" RCP	
1	2	a																						3.46												REMOVE CONCRETE CHANNEL 6.0'x 2.0'x 17.0'	
		b																					1													REMOVE HEADWALL	100.50' L+ 313+43.70 ℄ Rte 5
1	2	c																		59.2																ABANDON RCB 4.0'x 2.0'x 199.6'	
1	3	a																					1													REMOVE HEADWALL	104.20' L+ 316+81.00 ℄ Rte 5
		b																	1																	ABANDON INLET	67.50' L+ 316+80.00 ℄ Rte 5
		c																		58.7																ABANDON RCB 4.0' x 2.0' x 198.0'	
1	3	d																					1													REMOVE HEADWALL	87.00' L+ 317+31.70 ℄ Rte 5
1	4	a																									1									REMOVE INLET	50' R+ 314+89.40 ℄ Rte 5
		b																							43.0											REMOVE 18" CSP DOWNDRAIN	
1	5	a	6.61	2.39					580																				2		14.8					GD-1 INLET	113.00' R+ 316+20.00 ℄ Rte 5
		b									249.0																						7.0			24" RCP	
		c	7.77	2.74					580																				2		14.8					GD-1 INLET	113.00' R+ 318+73.00 ℄ Rte 5
1	5	d									273.1																						7.0			24" RCP	
SHEET TOTAL				10.06					2320		1138.5								1	117.9			3	3.46	43.0		1		8		59.2						

DRAINAGE QUANTITIES
DQ-1

CALCULATED-DESIGNED BY VIC T. VALIDO
CHECKED BY DAVE BHALLA
REVISED BY
DATE REVISED
FUNCTIONAL SUPERVISOR DAVE BHALLA

STATE OF CALIFORNIA - DEPARTMENT OF TRANSPORTATION
Caltrans
HYDRAULICS

LAST REVISION 00-00-00
DATE PLOTTED => 26-JUN-2013
TIME PLOTTED => 15:31

Dist	COUNTY	ROUTE	POST MILES TOTAL PROJECT	SHEET No.	TOTAL SHEETS
07	LA	5	0.0/7.6	171	985

REGISTERED CIVIL ENGINEER 10-11-12 DATE

6-24-13
PLANS APPROVAL DATE

REGISTERED PROFESSIONAL ENGINEER DAVE BHALLA No. 34350 Exp. 9/30/13 CIVIL STATE OF CALIFORNIA

THE STATE OF CALIFORNIA OR ITS OFFICERS OR AGENTS SHALL NOT BE RESPONSIBLE FOR THE ACCURACY OR COMPLETENESS OF SCANNED COPIES OF THIS PLAN SHEET.

NOTES:

1. JOINTS ARE STANDARD JOINT TYPE
2. (N) - NOT A SEPARATE PAY ITEM, FOR INFORMATION ONLY
3. (*) - ROADWAY ITEM, SEE ADDITIONAL QUANTITIES IN ROADWAY QUANTITY SHEET

SUMMARY OF DRAINAGE QUANTITIES

DRAINAGE PLAN SHEET No.	DRAINAGE SYSTEM No. ⬡	DRAINAGE UNIT ◯	"H" OR "V" FT	MINOR CONCRETE (MINOR STRUCTURE) CY	CONCRETE (CHANNEL LINING) CY	MINOR CONCRETE (BACKFILL) CY	STRUCTURAL CONCRETE, BOX CULVERT CY	BAR REINFORCING STEEL (BOX CULVERT) LB	MISCELLANEOUS IRON AND STEEL LB	18" RCP LF	24" RCP LF	27" RCP LF	48" RCP LF	JACKED 48" RCP (CLASS V) LF	18" PLASTIC PIPE LF	36" PRECAST CONCRETE PIPE MANHOLE LF	18" CONCRETE FES EA	ADJUST MANHOLE TO GRADE EA	ABANDON INLET EA	SAND BACKFILL CY	CAP INLET EA	REMOVE FES EA	REMOVE HEADWALL EA	REMOVE CONCRETE CY	REMOVE PIPE LF	REMOVE RCB CULVERT CY	REMOVE INLET EA	REMOVE CATCH BASIN EA	TYPE 24-12 FRAME AND GRATE (N) EA	CATCH BASIN MH FRAME AND COVER (N) EA	SEAL ISOLATION JOINT (*) LF	MANHOLE FRAME AND COVER (N) EA	MAXIMUM COVER (N) FT	DESCRIPTION	STATION
1	6	a																						29.00											REMOVE RECTANGULAR CHANNEL	
		b			21.40				625																										RECTANGULAR CONCRETE CHANNEL 6.0′ W x 0.87′ & Var 0.50′ H	
		c			1.70				54																										RECTANGULAR CONCRETE CHANNEL 6.0′ & Var 3.0′ W x 0.87′ & Var 0.50′ H	
		d			1.60				54																										RECTANGULAR CONCRETE CHANNEL 4.0′ W x 0.87′ & Var 0.50′ H	
		e	5.00	2.35					130																				1						MODIFIED CURB OPENING CATCH BASIN (300-3)	21.91′ Rt 315+80.00 ℄ MONDON Ave
		f								8.8																							6.0		18" RCP	
1	6	g		0.75																															JUNCTION STRUCTURE- PIPE TO RCB	110+96.00 Exist LACFCD = 26.70′ Lt 315+86.85 ℄ MONDON Ave
1	7	a																										1							REMOVE CATCH BASIN	28.50′ Lt 315+73.00 ℄ MONDON Ave
1	7	b																						0.80	16.0										REMOVE 18" RCP AND JUNCTION STRUCTURE	
1	8	a																1																	ADJUST MANHOLE TO GRADE	7.50′ Rt 315+51.12 ℄ MONDON Ave
1	9	a																										1							REMOVE CATCH BASIN	17.20′ Rt 315+41.30 ℄ MONDON Ave
1	10	a	4.70	5.80					130																				1						CURB OPENING CATCH BASIN (300-3) W/LOCAL DEPRESSION	16.00′ Rt 316+33.00 ℄ MONDON Ave
		b								18.6																							6.0		18" RCP, 2000D	
	10	c																										1							REMOVE CATCH BASIN	6.70′ Rt 316+23.00 ℄ MONDON Ave
1	11	a	5.0′	5.68					130																				1						CURB OPENING CATCH BASIN (300-3) W/LOCAL DEPRESSION	16.00′ Rt 315+25.00 ℄ MONDON Ave
		b								5.2																							7.0		18" RCP	
1	11	c		1.20																															JUNCTION STRUCTURE PIPE TO RCB (333-2)	12.70′ Rt 315+25.00 ℄ MONDON Ave
1	12	a																									1								REMOVE INLET	50′ Rt 318+89.40 ℄ Rte 5
1	12	b																							16.0										REMOVE 18" RCP	
SHEET TOTAL				15.78	24.70				1123	32.6								1						29.80	32.0		1	3		3						

DRAINAGE QUANTITIES
DQ-2

STATE OF CALIFORNIA - DEPARTMENT OF TRANSPORTATION
Caltrans
HYDRAULICS

FUNCTIONAL SUPERVISOR: DAVE BHALLA
CALCULATED-DESIGNED BY: VIC T. VALIDO
CHECKED BY: DAVE BHALLA
REVISED BY
DATE REVISED

LAST REVISION 00-00-00
DATE PLOTTED => 26-JUN-2013
TIME PLOTTED => 15:31

Dist	COUNTY	ROUTE	POST MILES TOTAL PROJECT	SHEET No.	TOTAL SHEETS
07	LA	5	0.0/7.6	172	985

REGISTERED CIVIL ENGINEER 10-11-12 DATE

6-24-13
PLANS APPROVAL DATE

REGISTERED PROFESSIONAL ENGINEER DAVE BHALLA No. 34350 Exp. 9/30/13 CIVIL STATE OF CALIFORNIA

THE STATE OF CALIFORNIA OR ITS OFFICERS OR AGENTS SHALL NOT BE RESPONSIBLE FOR THE ACCURACY OR COMPLETENESS OF SCANNED COPIES OF THIS PLAN SHEET.

NOTES:

1. JOINTS ARE STANDARD JOINT TYPE
2. (N) - NOT A SEPARATE PAY ITEM, FOR INFORMATION ONLY
3. (*) - ROADWAY ITEM, SEE ADDITIONAL QUANTITIES IN ROADWAY QUANTITY SHEET

SUMMARY OF DRAINAGE QUANTITIES

DRAINAGE PLAN SHEET No.	DRAINAGE SYSTEM No. ⬡	DRAINAGE UNIT ○	"H" OR "V" (FT)	MINOR CONCRETE (MINOR STRUCTURE) (CY)	CONCRETE (CHANNEL LINING) (CY)	MINOR CONCRETE (BACKFILL) (CY)	STRUCTURAL CONCRETE, BOX CULVERT (CY)	BAR REINFORCING STEEL (BOX CULVERT) (LB)	MISCELLANEOUS IRON AND STEEL (LB)	18" RCP (LF)	24" RCP (LF)	27" RCP (LF)	48" RCP (LF)	JACKED 48" RCP (CLASS V) (LF)	18" PLASTIC PIPE (LF)	36" PRECAST CONCRETE PIPE MANHOLE (LF)	18" CONCRETE FES (EA)	ADJUST MANHOLE TO GRADE (EA)	ABANDON INLET (EA)	SAND BACKFILL (CY)	CAP INLET (EA)	REMOVE FES (EA)	REMOVE HEADWALL (EA)	REMOVE CONCRETE (CY)	REMOVE PIPE (LF)	REMOVE RCB CULVERT (CY)	REMOVE INLET (EA)	REMOVE CATCH BASIN (EA)	TYPE 24-12 FRAME AND GRATE (N) (EA)	CATCH BASIN MH FRAME AND COVER (N) (EA)	SEAL ISOLATION JOINT (*) (LF)	MANHOLE FRAME AND COVER (N) (EA)	MAXIMUM COVER (N) (FT)			DESCRIPTION	STATION
1	13	a																									1										REMOVE INLET	50.00' Rt 320+10.05 ℄ Rte 5
2	14	a	7.00	2.51					580																				2		14.8						GD-1 INLET	116.70' Lt 323+85.00 ℄ Rte 5
		b									296.0																						9.0				24" RCP	
		c	7.00	2.51					580																				2		14.8						GD-1 INLET	122.71' Lt 326+85.00 ℄ Rte 5
		d									296.0																						9.0				24" RCP	
		e	10.06	4.87					580																				2		14.8						GD-1 INLET	28.63' Lt 329+85.00 FL3 S/B ON-RAMP
		f									25.2																						9.0				24" RCP	
		g	10.46	9.00					580																				2		16.7						MODIFIED GD-2 INLET	29.53' Lt 330+10.17 FL3 S/B ON-RAMP
		h											24.8																				10.0				48" RCP	
		i	10.61	6.20					580																				2		16.7						MODIFIED GD-2 INLET (CASE 2)	30.43' Lt 330+35.00 FL3 S/B ON-RAMP
		j											215.0																				12.0				48" RCP	
2	14	k	11.26	6.30					580																				2		16.7						MODIFIED GD-2 INLET (CASE 2)	39.90' Lt 332+50.00 FL3 S/B ON-RAMP
3	14	l											187.5																				12.0				48" RCP	
		m	13.29	7.00					580																				2		16.7						MODIFIED GD-2 INLET (CASE 2)	113.00' Lt 334+35.00 ℄ Rte 5
		n											311.0																				13.0				48" RCP	
		o	14.91	7.50					580																				2		16.7						MODIFIED GD-2 INLET (CASE 2)	108.09' Lt 337+50.00 ℄ Rte 5
		p											321.0																				13.0				48" RCP	
		q	6.0	2.80					235							11.2																1					MANHOLE No. 2 (MH No. 2)	91.68' Lt 340+75.00 ℄ Rte 5
		r											321.0																				15.0				48" RCP	
		s	6.0	2.80					235							13.4																1					MANHOLE No. 2 (MH No. 2)	76.37' Lt 344+00.00 ℄ Rte 5
3/4	14	t											346.0																				17.0				48" RCP	
SHEET TOTAL				51.49					5110		617.2		1726.3			24.6											1		16		127.9							

DRAINAGE QUANTITIES
DQ-3

STATE OF CALIFORNIA - DEPARTMENT OF TRANSPORTATION
Caltrans® HYDRAULICS

FUNCTIONAL SUPERVISOR: DAVE BHALLA
CALCULATED-DESIGNED BY: VIC T. VALIDO
CHECKED BY: DAVE BHALLA
REVISED BY
DATE REVISED

LAST REVISION 00-00-00
DATE PLOTTED => 27-JUN-2013
TIME PLOTTED => 12:05

Dist	COUNTY	ROUTE	POST MILES TOTAL PROJECT	SHEET No.	TOTAL SHEETS
07	LA	5	0.0/7.6	173	985

REGISTERED CIVIL ENGINEER 10-11-12 DATE

6-24-13
PLANS APPROVAL DATE

REGISTERED PROFESSIONAL ENGINEER DAVE BHALLA No. 34350 Exp. 9/30/13 CIVIL STATE OF CALIFORNIA

THE STATE OF CALIFORNIA OR ITS OFFICERS OR AGENTS SHALL NOT BE RESPONSIBLE FOR THE ACCURACY OR COMPLETENESS OF SCANNED COPIES OF THIS PLAN SHEET.

NOTES:

1. JOINTS ARE STANDARD JOINT TYPE
2. (N) - NOT A SEPARATE PAY ITEM, FOR INFORMATION ONLY
3. (*) - ROADWAY ITEM, SEE ADDITIONAL QUANTITIES IN ROADWAY QUANTITY SHEET

SUMMARY OF DRAINAGE QUANTITIES

DRAINAGE PLAN SHEET No.	DRAINAGE SYSTEM No. ⬡	DRAINAGE UNIT ◯	"H" OR "V"	MINOR CONCRETE (MINOR STRUCTURE)	CONCRETE (CHANNEL LINING)	MINOR CONCRETE (BACKFILL)	STRUCTURAL CONCRETE, BOX CULVERT	BAR REINFORCING STEEL (BOX CULVERT)	MISCELLANEOUS IRON AND STEEL	18" RCP	24" RCP	27" RCP	48" RCP	JACKED 48" RCP (CLASS V)	18" PLASTIC PIPE	36" PRECAST CONCRETE PIPE MANHOLE	18" CONCRETE FES	ADJUST MANHOLE TO GRADE	ABANDON INLET	SAND BACKFILL	CAP INLET	REMOVE FES	REMOVE HEADWALL	REMOVE CONCRETE	REMOVE PIPE	REMOVE RCB CULVERT	REMOVE INLET	REMOVE CATCH BASIN	TYPE 24-12 FRAME AND GRATE (N)	CATCH BASIN MH FRAME AND COVER (N)	SEAL ISOLATION JOINT (*)	MANHOLE FRAME AND COVER (N)	MAXIMUM COVER (N)			DESCRIPTION	STATION
			FT	CY	CY	CY	CY	LB	LB	LF	LF	LF	LF	LF	LF	LF	EA	EA	LF	CY	EA	EA	EA	CY	LF	CY	EA	EA	EA	EA	LF	EA	FT				
4	14	u	6.0	2.80					235							15.5																1				MODIFIED MANHOLE No. 2 (MH No. 2)	75.57' L+ 347+50.00 ℄ Rte 5
		v											296.0																				19.0				48" RCP	
		w	6.0	2.80					235							17.4																1				MODIFIED MANHOLE No. 2 (MH No. 2)	71.00' L+ 350+50.00 ℄ Rte 5
		x											246.0																				20.0				48" RCP	
		y	6.0	2.80					235							18.8																1				MODIFIED MANHOLE No. 2 (MH No. 2)	57.10' L+ 353+00.00 ℄ Rte 5
		z											119.2																				20.0				48" RCP	
		aa	6.0	2.80					235							18.6																1				MODIFIED MANHOLE No. 2 (MH No. 2)	138.50' L+ 353+88.40 ℄ Rte 5
4	14	bb												341.4																			25.0				JACKED 48" RCP (CLASS V)	
2	15	a		1.00																																	TYPE "D" STRAIGHT HEADWALL	115.30' L+ 321+24.41 ℄ Rte 5
		b																						1.60													REMOVE CONCRETE CHANNEL	
		c	14.14	6.30					580																				2		14.8						GD-1 INLET	113.00' L+ 321+24.40 ℄ Rte 5
		d					10.10	1771																									14.0				4.0' x 2.0' x 36.90' RCB	
		e																								2.54											REMOVE RCB	
		f																					1														REMOVE HEADWALL	88.33' L+ 321+23.18 ℄ Rte 5
		g																									1										REMOVE INLET	81.85' L+ 321+24.85 ℄ Rte 5
		h																					1														REMOVE HEADWALL	62.75' R+ 321+49.15 ℄ Rte 5
		i																						8.80														REMOVE CONCRETE CHANNEL 4.0' x 2.0' x 53.00' RCB	
		j					14.50	2496																									14.0				4.0' x 2.0'x 52.00' RCB	
2	15	k	12.74	5.70					580																				2		14.8						GD-1 INLET	113.00' R+ 321+49.15 ℄ Rte 5
2	16	a																									1										REMOVE INLET	52.50' R+ 321+87.00 ℄ Rte 5
SHEET TOTAL				24.20			24.60	4267	2100				661.2	341.4		70.3							2	10.40		2.54	2		4		29.6						

DRAINAGE QUANTITIES
DQ-4

STATE OF CALIFORNIA - DEPARTMENT OF TRANSPORTATION
Caltrans
HYDRAULICS

FUNCTIONAL SUPERVISOR: DAVE BHALLA
CALCULATED-DESIGNED BY: VIC T. VALIDO
CHECKED BY: DAVE BHALLA
REVISED BY
DATE REVISED

LAST REVISION 00-00-00
DATE PLOTTED => 27-JUN-2013
TIME PLOTTED => 12:05

Dist	COUNTY	ROUTE	POST MILES TOTAL PROJECT	SHEET No.	TOTAL SHEETS
07	LA	5	0.0/7.6	174	985

REGISTERED CIVIL ENGINEER 10-11-12 DATE

6-24-13
PLANS APPROVAL DATE

REGISTERED PROFESSIONAL ENGINEER DAVE BHALLA No. 34350 Exp. 9/30/13 CIVIL STATE OF CALIFORNIA

THE STATE OF CALIFORNIA OR ITS OFFICERS OR AGENTS SHALL NOT BE RESPONSIBLE FOR THE ACCURACY OR COMPLETENESS OF SCANNED COPIES OF THIS PLAN SHEET.

NOTES:

1. JOINTS ARE STANDARD JOINT TYPE
2. (N) - NOT A SEPARATE PAY ITEM, FOR INFORMATION ONLY
3. (*) - ROADWAY ITEM, SEE ADDITIONAL QUANTITIES IN ROADWAY QUANTITY SHEET

SUMMARY OF DRAINAGE QUANTITIES

DRAINAGE PLAN SHEET No.	DRAINAGE SYSTEM No. ⬡	DRAINAGE UNIT ○	"H" OR "V" (FT)	MINOR CONCRETE (MINOR STRUCTURE) (CY)	CONCRETE (CHANNEL LINING) (CY)	MINOR CONCRETE (BACKFILL) (CY)	STRUCTURAL CONCRETE, BOX CULVERT (CY)	BAR REINFORCING STEEL (BOX CULVERT) (LB)	MISCELLANEOUS IRON AND STEEL (LB)	18" RCP (LF)	24" RCP (LF)	27" RCP (LF)	48" RCP (LF)	JACKED 48" RCP (CLASS V) (LF)	18" PLASTIC PIPE (LF)	36" PRECAST CONCRETE PIPE MANHOLE (LF)	18" CONCRETE FES (EA)	ADJUST MANHOLE TO GRADE (EA)	ABANDON INLET (EA)	SAND BACKFILL (CY)	CAP INLET (EA)	REMOVE FES (EA)	REMOVE HEADWALL (EA)	REMOVE CONCRETE (CY)	REMOVE PIPE (LF)	REMOVE RCB CULVERT (CY)	REMOVE INLET (EA)	REMOVE CATCH BASIN (EA)	TYPE 24-12 FRAME AND GRATE (N) (EA)	CATCH BASIN MH FRAME AND COVER (N) (EA)	SEAL ISOLATION JOINT (*) (LF)	MANHOLE FRAME AND COVER (N) (EA)	MAXIMUM COVER (FT)			DESCRIPTION	STATION
2	17	a																									1									REMOVE INLET	67.25' Lt 323+34.00 ℄ Rte 5
2	18	a																									1									REMOVE INLET	67.25' Lt 323+79.00 ℄ Rte 5
2	19	a																									1									REMOVE INLET	67.25' Lt 324+50.00 ℄ Rte 5
2	20	a																						11.10												REMOVE CONCRETE DRAIN 6.0' W x L = 66.30'	
		b																		81.0																ABANDON 4' x 2' x 199.6' RCB	
2	20	c																						11.10												REMOVE CONCRETE DRAIN 6.0' W x L = 66.30'	
2	21	a																									1									REMOVE INLET	67.25' Lt 325+18.00 ℄ Rte 5
2	22	a																									1									REMOVE INLET	67.25' Lt 325+98.00 ℄ Rte 5
2	23	a																									1									REMOVE INLET	67.25' Lt 326+78.00 ℄ Rte 5
2	24	a																									1									REMOVE INLET	67.25' Lt 327+58.00 ℄ Rte 5
2	25	a																									1									REMOVE INLET	67.25' Lt 328+38.00 ℄ Rte 5
2	26	a																									1									REMOVE INLET	67.25' Lt 329+18.00 ℄ Rte 5
SHEET TOTAL																				81.0				22.20			9										

DRAINAGE QUANTITIES
DQ-5

STATE OF CALIFORNIA - DEPARTMENT OF TRANSPORTATION
Caltrans HYDRAULICS

FUNCTIONAL SUPERVISOR: DAVE BHALLA
CALCULATED-DESIGNED BY: VIC T. VALIDO
CHECKED BY: DAVE BHALLA
REVISED BY
DATE REVISED

LAST REVISION 00-00-00
DATE PLOTTED => 26-JUN-2013
TIME PLOTTED => 15:31

Dist	COUNTY	ROUTE	POST MILES TOTAL PROJECT	SHEET No.	TOTAL SHEETS
07	LA	5	0.0/7.6	175	985

REGISTERED CIVIL ENGINEER 10-11-12 DATE

6-24-13
PLANS APPROVAL DATE

REGISTERED PROFESSIONAL ENGINEER DAVE BHALLA No. 34350 Exp. 9/30/13 CIVIL STATE OF CALIFORNIA

THE STATE OF CALIFORNIA OR ITS OFFICERS OR AGENTS SHALL NOT BE RESPONSIBLE FOR THE ACCURACY OR COMPLETENESS OF SCANNED COPIES OF THIS PLAN SHEET.

NOTES:

1. JOINTS ARE STANDARD JOINT TYPE
2. (N) - NOT A SEPARATE PAY ITEM, FOR INFORMATION ONLY
3. (*) - ROADWAY ITEM, SEE ADDITIONAL QUANTITIES IN ROADWAY QUANTITY SHEET

SUMMARY OF DRAINAGE QUANTITIES

DRAINAGE PLAN SHEET No.	DRAINAGE SYSTEM No. ⬡	DRAINAGE UNIT ◯	"H" OR "V"	MINOR CONCRETE (MINOR STRUCTURE)	CONCRETE (CHANNEL LINING)	MINOR CONCRETE (BACKFILL)	STRUCTURAL CONCRETE, BOX CULVERT	BAR REINFORCING STEEL (BOX CULVERT)	MISCELLANEOUS IRON AND STEEL	18" RCP	24" RCP	27" RCP	48" RCP	JACKED 48" RCP (CLASS V)	18" PLASTIC PIPE	36" PRECAST CONCRETE PIPE MANHOLE	18" CONCRETE FES	ADJUST MANHOLE TO GRADE	ABANDON INLET	SAND BACKFILL	CAP INLET	REMOVE FES	REMOVE HEADWALL	REMOVE CONCRETE	REMOVE PIPE	REMOVE RCB CULVERT	REMOVE INLET	REMOVE CATCH BASIN	TYPE 24-12 FRAME AND GRATE (N)	CATCH BASIN MH FRAME AND COVER (N)	SEAL ISOLATION JOINT (*)	MANHOLE FRAME AND COVER (N)	MAXIMUM COVER (N)			DESCRIPTION	STATION
			FT	CY	CY	CY	CY	LB	LB	LF	LF	LF	LF	LF	LF	LF	EA	EA	EA	CY	EA	EA	EA	CY	LF	CY	EA	EA	EA	EA	LF	EA	FT				
2	27	a																									1									REMOVE INLET	67.25' Lt 329+97.00 ℄ Rte 5
2	28	a																									1									REMOVE INLET	67.25' Lt 330+17.00 ℄ Rte 5
2	29	a																									1									REMOVE INLET	67.25' Lt 331+58.00 ℄ Rte 5
2	30	a																									1									REMOVE INLET	67.25' Lt 332+16.00 ℄ Rte 5
2	31	a	6.67	2.42					580																				2		14.6					GD-1 INLET	22.00' Rt 324+25.00 FL4 (N/B OFF-RAMP)
		b									296.0																						6.0			24" RCP	
		c	6.46	2.37					580																				2		14.6					GD-1 INLET	22.00' Rt 327+25.00 FL4 (N/B OFF-RAMP)
		d									18.0																						6.0			24" RCP	
		e	7.07	2.54					580																				2		14.6					GD-1 INLET	22.00' Rt 327+45.00 FL4 (N/B OFF-RAMP)
		f									36.9																						7.0			24" RCP	
		g	7.01	2.52					580																				2		14.6					GD-1 INLET	113.00' Rt 327+50.00 ℄ Rte 5
		h									228.7																						7.0			24" RCP	
		i	7.95	2.80					580																				2		14.6					GD-1 INLET	113.00' Rt 329+81.67 ℄ Rte 5
		j										24.3																					7.0			27" RCP	
		k	8.19	3.87					580																				2		16.7					MODIFIED GD-2 INLET (CASE 1)	113.00' Rt 330+10.17 ℄ Rte 5
		l										24.3																					7.0			27" RCP	
		m	10.96	5.00					580																				2		14.6					GD-1 INLET	113.00' Rt 330+38.67 ℄ Rte 5
2	31	n										207.3																					7.0			27" RCP	
SHEET TOTAL				21.52					4060		579.6	255.9															4		14		104.3						

DRAINAGE QUANTITIES
DQ-6

STATE OF CALIFORNIA - DEPARTMENT OF TRANSPORTATION
Caltrans
HYDRAULICS

FUNCTIONAL SUPERVISOR: DAVE BHALLA
CALCULATED-DESIGNED BY: VIC T. VALIDO
CHECKED BY: DAVE BHALLA
REVISED BY
DATE REVISED

LAST REVISION 00-00-00
DATE PLOTTED => 26-JUN-2013
TIME PLOTTED => 15:31

Dist	COUNTY	ROUTE	POST MILES TOTAL PROJECT	SHEET No.	TOTAL SHEETS
07	LA	5	0.0/7.6	176	985

REGISTERED CIVIL ENGINEER 10-11-12 DATE

6-24-13
PLANS APPROVAL DATE

REGISTERED PROFESSIONAL ENGINEER DAVE BHALLA No. 34350 Exp. 9/30/13 CIVIL STATE OF CALIFORNIA

THE STATE OF CALIFORNIA OR ITS OFFICERS OR AGENTS SHALL NOT BE RESPONSIBLE FOR THE ACCURACY OR COMPLETENESS OF SCANNED COPIES OF THIS PLAN SHEET.

NOTES:

1. JOINTS ARE STANDARD JOINT TYPE
2. (N) - NOT A SEPARATE PAY ITEM, FOR INFORMATION ONLY
3. (*) - ROADWAY ITEM, SEE ADDITIONAL QUANTITIES IN ROADWAY QUANTITY SHEET

SUMMARY OF DRAINAGE QUANTITIES

DRAINAGE PLAN SHEET No.	DRAINAGE SYSTEM No. ⬡	DRAINAGE UNIT ◯	"H" OR "V" FT	MINOR CONCRETE (MINOR STRUCTURE) CY	CONCRETE (CHANNEL LINING) CY	MINOR CONCRETE (BACKFILL) CY	STRUCTURAL CONCRETE, BOX CULVERT CY	BAR REINFORCING STEEL (BOX CULVERT) LB	MISCELLANEOUS IRON AND STEEL LB	18" RCP LF	24" RCP LF	27" RCP LF	48" RCP LF	JACKED 48" RCP (CLASS V) LF	18" PLASTIC PIPE LF	36" PRECAST CONCRETE PIPE MANHOLE LF	18" CONCRETE FES EA	ADJUST MANHOLE TO GRADE EA	ABANDON INLET EA	SAND BACKFILL CY	CAP INLET EA	REMOVE FES EA	REMOVE HEADWALL EA	REMOVE CONCRETE CY	REMOVE PIPE LF	REMOVE RCB CULVERT CY	REMOVE INLET EA	REMOVE CATCH BASIN EA	TYPE 24-12 FRAME AND GRATE (N) EA	CATCH BASIN MH FRAME AND COVER (N) EA	SEAL ISOLATION JOINT (*) LF	MANHOLE FRAME AND COVER (N) EA	MAXIMUM COVER (N) FT			DESCRIPTION	STATION
2	31	o	7.98	2.80					580																				2		14.6					GD-1 INLET	113.00' Rt 332+50.00 ℄ Rte 5
3		p										246.0																					7.0			27" RCP	
		q	7.39	2.63					580																				2		14.6					GD-1 INLET	113.00' Rt 335+00.00 ℄ Rte 5
		r										246.0																					7.0			27" RCP	
		s	7.20	2.57					580																				2		14.6					GD-1 INLET	113.00' Rt 337+50.00 ℄ Rte 5
		t										296.0																					7.0			27" RCP	
		u				1.50																														CONCRETE BACKFILL	
		v	5.93	2.22					580																				2		14.6					GD-1 INLET	114.97' Rt 340+50.00 ℄ Rte 5
		w									246.0																						6.0			24" RCP	
		x	5.80	2.16					580																				2		14.6					GD-1 INLET	34.00' Rt 343+00.00 FL2
		y									246.0																						6.0			24" RCP	
		z	5.77	2.15					580																				2		14.6					GD-1 INLET	34.00' Rt 345+00.00 FL2
3/4	31	aa									91.3																						6.0			24" RCP	
		bb	5.86	2.18					580																				2		14.6					GD-1 INLET	81.85' Rt 345+80.00 ℄ Rte 5
		cc									296.0																						6.0			24" RCP	
		dd	6.00	2.22					580																				2		14.6					GD-1 INLET	76.16' Rt 348+80.00 ℄ Rte 5
		ee									296.0																						6.0			24" RCP	
4	31	ff	5.96	2.20					580																				2		14.6					GD-1 INLET	71.22' Rt 351+80.00 ℄ Rte 5
2	32	a								22.0																							6.0			18" RCP	
		b	6.39	2.34					580																				2							GD-1 INLET	22.00' Rt 327+70.00 FL4 (N/B OFF-RAMP)
2	32	c								227.0																							6.0			18" RCP	
SHEET TOTAL				23.47		1.50			5800	249.0	1175.3	788.0																	20		131.4						

DRAINAGE QUANTITIES
DQ-7

STATE OF CALIFORNIA - DEPARTMENT OF TRANSPORTATION
Caltrans HYDRAULICS

FUNCTIONAL SUPERVISOR: DAVE BHALLA
CALCULATED-DESIGNED BY: VIC T. VALIDO
CHECKED BY: DAVE BHALLA
REVISED BY
DATE REVISED

LAST REVISION 00-00-00
DATE PLOTTED => 26-JUN-2013
TIME PLOTTED => 15:31

Dist	COUNTY	ROUTE	POST MILES TOTAL PROJECT	SHEET No.	TOTAL SHEETS
07	LA	5	0.0/7.6	177	985

REGISTERED CIVIL ENGINEER 10-11-12 DATE

6-24-13
PLANS APPROVAL DATE

REGISTERED PROFESSIONAL ENGINEER DAVE BHALLA No. 34350 Exp. 9/30/13 CIVIL STATE OF CALIFORNIA

THE STATE OF CALIFORNIA OR ITS OFFICERS OR AGENTS SHALL NOT BE RESPONSIBLE FOR THE ACCURACY OR COMPLETENESS OF SCANNED COPIES OF THIS PLAN SHEET.

NOTES:

1. JOINTS ARE STANDARD JOINT TYPE
2. (N) - NOT A SEPARATE PAY ITEM, FOR INFORMATION ONLY
3. (*) - ROADWAY ITEM, SEE ADDITIONAL QUANTITIES IN ROADWAY QUANTITY SHEET

SUMMARY OF DRAINAGE QUANTITIES

DRAINAGE PLAN SHEET No.	DRAINAGE SYSTEM No. ⬡	DRAINAGE UNIT ◯	"H" OR "V"	MINOR CONCRETE (MINOR STRUCTURE)	CONCRETE (CHANNEL LINING)	MINOR CONCRETE (BACKFILL)	STRUCTURAL CONCRETE, BOX CULVERT	BAR REINFORCING STEEL (BOX CULVERT)	MISCELLANEOUS IRON AND STEEL	18" RCP	24" RCP	27" RCP	48" RCP	JACKED 48" RCP (CLASS V)	18" PLASTIC PIPE	36" PRECAST CONCRETE PIPE MANHOLE	18" CONCRETE FES	ADJUST MANHOLE TO GRADE	ABANDON INLET	SAND BACKFILL	CAP INLET	REMOVE FES	REMOVE HEADWALL	REMOVE CONCRETE	REMOVE PIPE	REMOVE RCB CULVERT	REMOVE INLET	REMOVE CATCH BASIN	TYPE 24-12 FRAME AND GRATE (N)	CATCH BASIN MH FRAME AND COVER (N)	SEAL ISOLATION JOINT (*)	MAHOLE FRAME AND COVER (N)	MAXIMUM COVER (N)			DESCRIPTION	STATION
			FT	CY	CY	CY	CY	LB	LB	LF	LF	LF	LF	LF	LF	LF	EA	EA	EA	CY	EA	EA	EA	CY	LF	CY	EA	EA	EA	EA	LF	EA	FT				
2	32	d	6.00	2.22					580																			2							GD-1 INLET	34.00' Rt 330+00.00 FL4 (N/B OFF-RAMP)
2/3	32	e								297.0																						6.0			18" RCP	
3	32	f	8.11	3.84					580																			2							GD-1 INLET	34.00' Rt 333+00.00 FL4 (N/B OFF-RAMP)
2	33	a											241.8																			7.0			48" RCP	
2	34	a	3.96	6.57					130																				1						CURB OPENING CATCH BASIN (300-3) W/LOCAL DEPRESSION	30.06' Rt 329+19.90 MONDON Ave
		b								58.7																						7.0			18" RCP	
		c	4.78	7.53					130																				1						CURB OPENING CATCH BASIN (300-3) W/LOCAL DEPRESSION	28.67' Lt 329+19.90 MONDON Ave
		d								34.1																						7.0			18" RCP	
		e	4.28	1.75					580																			2							GD-3 INLET W/DEPRESSED APRON	62.00' Lt 328+97.76 MONDON Ave
		f								136.9																						7.0			18" RCP	
		g	4.83	1.85					435																						1				MANHOLE No. 1 (MH No. 1)	28.07' Lt 327+72.20 MONDON Ave
2	34	h								5.0																						7.0			18" RCP	
3	35	a																									1								REMOVE INLET	53.40'Lt 332+78.00 ℄ Rte 5
		b																								19.0									REMOVE RCB 2.0'x 2.0'x 128.75'	
3	35	c																					1												REMOVE HEADWALL	50.60' Rt 332+78.00 ℄ Rte 5
3	36	a																									1								REMOVE INLET	64.90' Lt 333+37.00 ℄ Rte 5
3	37	a																									1								REMOVE INLET	64.90' Lt 333+98.00 ℄ Rte 5
3	38	a																									1								REMOVE INLET	64.90' Lt 335+58.00 ℄ Rte 5
3	39	a																									1								REMOVE INLET	64.90' Lt 336+38.00 ℄ Rte 5
3	40	a																							34.9										REMOVE 54" RCP	
SHEET TOTAL				23.76					2435	531.7			241.8										1		34.9	19.0	5		6	2						

STATE OF CALIFORNIA - DEPARTMENT OF TRANSPORTATION
Caltrans
HYDRAULICS

FUNCTIONAL SUPERVISOR: DAVE BHALLA
CALCULATED-DESIGNED BY: VIC T. VALIDO
CHECKED BY: DAVE BHALLA
REVISED BY
DATE REVISED

DRAINAGE QUANTITIES
DQ-8

LAST REVISION 00-00-00
DATE PLOTTED => 26-JUN-2013
TIME PLOTTED => 15:31

Dist	COUNTY	ROUTE	POST MILES TOTAL PROJECT	SHEET No.	TOTAL SHEETS
07	LA	5	0.0/7.6	178	985

REGISTERED CIVIL ENGINEER 10-11-12 DATE

6-24-13
PLANS APPROVAL DATE

REGISTERED PROFESSIONAL ENGINEER DAVE BHALLA No. 34350 Exp. 9/30/13 CIVIL STATE OF CALIFORNIA

THE STATE OF CALIFORNIA OR ITS OFFICERS OR AGENTS SHALL NOT BE RESPONSIBLE FOR THE ACCURACY OR COMPLETENESS OF SCANNED COPIES OF THIS PLAN SHEET.

NOTES:

1. JOINTS ARE STANDARD JOINT TYPE
2. (N) - NOT A SEPARATE PAY ITEM, FOR INFORMATION ONLY
3. (*) - ROADWAY ITEM, SEE ADDITIONAL QUANTITIES IN ROADWAY QUANTITY SHEET

SUMMARY OF DRAINAGE QUANTITIES

DRAINAGE PLAN SHEET No.	DRAINAGE SYSTEM No. ⬡	DRAINAGE UNIT ◯	"H" OR "V"	MINOR CONCRETE (MINOR STRUCTURE)	CONCRETE (CHANNEL LINING)	MINOR CONCRETE (BACKFILL)	STRUCTURAL CONCRETE, BOX CULVERT	BAR REINFORCING STEEL (BOX CULVERT)	MISCELLANEOUS IRON AND STEEL	18" RCP	24" RCP	27" RCP	48" RCP	JACKED 48" RCP (CLASS V)	18" PLASTIC PIPE	36" PRECAST CONCRETE PIPE MANHOLE	18" CONCRETE FES	ADJUST MANHOLE TO GRADE	ABANDON INLET	SAND BACKFILL	CAP INLET	REMOVE FES	REMOVE HEADWALL	REMOVE CONCRETE	REMOVE PIPE	REMOVE RCB CULVERT	REMOVE INLET	REMOVE CATCH BASIN	TYPE 24-12 FRAME AND GRATE (N)	CATCH BASIN MH FRAME AND COVER (N)	SEAL ISOLATION JOINT (*)	MANHOLE FRAME AND COVER (N)	MAXIMUM COVER	DESCRIPTION	STATION
			FT	CY	CY	CY	CY	LB	LB	LF	LF	LF	LF	LF	LF	LF	EA	EA	EA	CY	EA	EA	EA	CY	LF	CY	EA	EA	EA	EA	LF	EA	FT		
3	40	b																								9.4								REMOVE 7.7′ x 7.7′ x 10.5′ CONCRETE BOX	47.40′ Lt 337+81.90 FL3
		c																		83.0														ABANDON 6′ x 2′ x 186.0′ RCB	
		d																					1											REMOVE HEADWALL	83.60′ Rt 339+46.90 ℄ Rte 5
		e																						4.10										REMOVE 6′ x 2′ x 18.4′ CONCRETE FLUME	
		f																					1											REMOVE HEADWALL	73.80′ Rt 340+46.90 ℄ Rte 5
		g																								65.0								REMOVE 6′ x 2′ x 150.1′ RCB	
		h																					1											REMOVE HEADWALL	136.30′ Rt 340+00.00 ℄ Rte 5
3	40	i																						62.00										REMOVE 6′ x 2.5′ x 223.00′ CONCRETE CHANNEL	
3	41	a	7.00	11.00					435							4.4															1			MANHOLE (RC BOX)	75.67′ Lt 337+95.45 FL3
		b					227.0	36667																								13.0		6.0′ x 2.0′ x 523.80′ RCB	
		c																						1.50										REMOVE SIDEWALK CULVERT AND CONCRETE DRAIN	
3	41	d	8.47	7.50					130																					1				CURB OPENING CATCH BASIN (300-3) W/LOCAL DEPRESSION	46.80′ Rt 339+83.72 FL1
3	42	a																					1											REMOVE HEADWALL	80.30′ Lt 343+28.50 ℄ Rte 5
		b																							172.2									REMOVE 24" RCP	
3	42	c																				1												REMOVE 24" FES	91.90′ Rt 343+28.50 ℄ Rte 5
3	43	a																									1							REMOVE INLET	51.30′ Rt 338+48.75 ℄ Rte 5
		b																							17.0									REMOVE 18" RCP	
		c																									1							REMOVE INLET	51.30′ Rt 338+28.50 ℄ Rte 5
		d																							98.0									REMOVE 18" RCP	
		e																					1											REMOVE HEADWALL	7.75′ Rt 338+43.07 FL1
3	43	f																						3.40										REMOVE 6.0′ x 1.5′ x 17.8′ CONCRETE CHANNEL	
SHEET TOTAL				18.50			227.0	36667	565							4.4				83.0		1	5	71.00	287.2	74.4	2			1					

DRAINAGE QUANTITIES
DQ-9

STATE OF CALIFORNIA - DEPARTMENT OF TRANSPORTATION
Caltrans®
HYDRAULICS

FUNCTIONAL SUPERVISOR: DAVE BHALLA
CALCULATED-DESIGNED BY: VIC T. VALIDO
CHECKED BY: DAVE BHALLA
REVISED BY
DATE REVISED

LAST REVISION 00-00-00
DATE PLOTTED => 27-JUN-2013
TIME PLOTTED => 12:06

Dist	COUNTY	ROUTE	POST MILES TOTAL PROJECT	SHEET No.	TOTAL SHEETS
07	LA	5	0.0/7.6	179	985

REGISTERED CIVIL ENGINEER 10-11-12 DATE

6-24-13
PLANS APPROVAL DATE

REGISTERED PROFESSIONAL ENGINEER DAVE BHALLA No. 34350 Exp. 9/30/13 CIVIL STATE OF CALIFORNIA

THE STATE OF CALIFORNIA OR ITS OFFICERS OR AGENTS SHALL NOT BE RESPONSIBLE FOR THE ACCURACY OR COMPLETENESS OF SCANNED COPIES OF THIS PLAN SHEET.

NOTES:

1. JOINTS ARE STANDARD JOINT TYPE
2. (N) - NOT A SEPARATE PAY ITEM, FOR INFORMATION ONLY
3. (*) - ROADWAY ITEM, SEE ADDITIONAL QUANTITIES IN ROADWAY QUANTITY SHEET

SUMMARY OF DRAINAGE QUANTITIES

DRAINAGE PLAN SHEET No.	DRAINAGE SYSTEM No. ⬡	DRAINAGE UNIT ◯	"H" OR "V" FT	MINOR CONCRETE (MINOR STRUCTURE) CY	CONCRETE (CHANNEL LINING) CY	MINOR CONCRETE (BACKFILL) CY	STRUCTURAL CONCRETE, BOX CULVERT CY	BAR REINFORCING STEEL (BOX CULVERT) LB	MISCELLANEOUS IRON AND STEEL LB	18" RCP LF	24" RCP LF	27" RCP LF	48" RCP LF	JACKED 48" RCP (CLASS V) LF	18" PLASTIC PIPE LF	36" PRECAST CONCRETE PIPE MANHOLE LF	18" CONCRETE FES EA	ADJUST MANHOLE TO GRADE EA	ABANDON INLET EA	SAND BACKFILL CY	CAP INLET EA	REMOVE FES EA	REMOVE HEADWALL EA	REMOVE CONCRETE CY	REMOVE PIPE LF	REMOVE RCB CULVERT CY	REMOVE INLET EA	REMOVE CATCH BASIN EA	TYPE 24-12 FRAME AND GRATE (N) EA	CATCH BASIN MH FRAME AND COVER (N) EA	SEAL ISOLATION JOINT (*) LF	MANHOLE FRAME AND COVER (N) EA	MAXIMUM COVER (N) FT			DESCRIPTION	STATION
3	44	a													47.0																		10.0			18" PLASTIC PIPE	
		b	9.93	4.20					326																				1							TYPE G4 INLET	15.85' L+ 343+02.45 FL1
3	45	a																				1														REMOVE 24" FES	105.50' R+ 343+28.50 ℄ Rte 5
		b																							45.0											REMOVE 24" RCP	
3	45	c																									1									REMOVE INLET	151.20' R+ 343+21.30 ℄ Rte 5
3	46	a		24.00																																TYPE B DRAIN (L=465.60')	
		b			31.10				630																32.10											CONCRETE CHANNEL 6.0' x 2.0' x 131.80'	
		c	4.96	1.40					326																				1							TYPE G1 INLET	40.60' R+ 339+26.10 ℄ FLOR1
3	46	d									50.0																						6.0			24" RCP	
3	47	a																									1									REMOVE INLET	135.90' R+ 341+65.50 ℄ Rte 5
		b																							17.0											REMOVE 18" RCP	
3	47	c																					1													REMOVE HEADWALL	153.60' R+ 341+68.70 ℄ Rte 5
3	48	a									54.4																						10.0			24" RCP	
3	49	a	9.88	4.55					580																				2							GD-1 INLET	34.00' R+ 342+60.00 FL1
		b									21.0																						9.0			24" RCP	
		c	10.02	4.70					580																				2							GD-1 INLET	34.00' R+ 342+85.00 FL1
		d									21.0																						9.0			24" RCP	
3	49	e	9.90	4.60					580																				2							GD-1 INLET	34.00' R+ 343+10.00 FL1
SHEET TOTAL				43.45	31.10				3022		146.4				47.0							1	1	32.10	62.0		2		8								

DRAINAGE QUANTITIES
DQ-10

STATE OF CALIFORNIA - DEPARTMENT OF TRANSPORTATION
Caltrans® HYDRAULICS

FUNCTIONAL SUPERVISOR: DAVE BHALLA
CALCULATED-DESIGNED BY: VIC T. VALIDO
CHECKED BY: DAVE BHALLA
REVISED BY
DATE REVISED

LAST REVISION 00-00-00
DATE PLOTTED => 26-JUN-2013
TIME PLOTTED => 15:32

Dist	COUNTY	ROUTE	POST MILES TOTAL PROJECT	SHEET No.	TOTAL SHEETS
07	LA	5	0.0/7.6	180	985

REGISTERED CIVIL ENGINEER 10-11-12 DATE

6-24-13
PLANS APPROVAL DATE

REGISTERED PROFESSIONAL ENGINEER DAVE BHALLA No. 34350 Exp. 9/30/13 CIVIL STATE OF CALIFORNIA

THE STATE OF CALIFORNIA OR ITS OFFICERS OR AGENTS SHALL NOT BE RESPONSIBLE FOR THE ACCURACY OR COMPLETENESS OF SCANNED COPIES OF THIS PLAN SHEET.

NOTES:

1. JOINTS ARE STANDARD JOINT TYPE
2. (N) - NOT A SEPARATE PAY ITEM, FOR INFORMATION ONLY
3. (*) - ROADWAY ITEM, SEE ADDITIONAL QUANTITIES IN ROADWAY QUANTITY SHEET

SUMMARY OF DRAINAGE QUANTITIES

DRAINAGE PLAN SHEET No.	DRAINAGE SYSTEM No. ⬡	DRAINAGE UNIT ◯	"H" OR "V"	MINOR CONCRETE (MINOR STRUCTURE)	CONCRETE (CHANNEL LINING)	MINOR CONCRETE (BACKFILL)	STRUCTURAL CONCRETE, BOX CULVERT	BAR REINFORCING STEEL (BOX CULVERT)	MISCELLANEOUS IRON AND STEEL	18" RCP	24" RCP	27" RCP	48" RCP	JACKED 48" RCP (CLASS V)	18" PLASTIC PIPE	36" PRECAST CONCRETE PIPE MANHOLE	18" CONCRETE FES	ADJUST MANHOLE TO GRADE	ABANDON INLET	SAND BACKFILL	CAP INLET	REMOVE FES	REMOVE HEADWALL	REMOVE CONCRETE	REMOVE PIPE	REMOVE RCB CULVERT	REMOVE INLET	REMOVE CATCH BASIN	TYPE 24-12 FRAME AND GRATE (N)	CATCH BASIN MH FRAME AND COVER (N)	SEAL ISOLATION JOINT (*)	MANHOLE FRAME AND COVER (N)	MAXIMUM COVER (N)			DESCRIPTION	STATION
			FT	CY	CY	CY	CY	LB	LB	LF	LF	LF	LF	LF	LF	LF	EA	EA	EA	CY	EA	EA	EA	CY	LF	CY	EA	EA	EA	EA	LF	EA	FT				
3	49	f								136.0																							9.0			18" RCP	
		g	7.66	2.70					580																				2							GD-1 INLET	34.00' R+ 344+50.00 FL1
3/4	49	h								286.6																							11.0			18" RCP	
4	49	i	8.24	3.89					580																				2							GD-1 INLET	4.00' L+ 347+40.00 FL1
3	50	a																										1								REMOVE CATCH BASIN	49.04' L+ 337+66.60 FL3
		b																							18.8											REMOVE 18" RCP	
3	51	a	6.28	4.60					473																				2							GRATING CATCH BASIN-ALLEY (TRANSVERSE) 305-3	69.54' L+ 337+58.83 FL3
		b								33.3																							6.0			18" RCP	
		c								134.6																							6.0			18" RCP	
3	51	d	5.20	3.56					130																					1						MODIFIED CURB OPENING (300-3) W/LOCAL DEPRESSION	16.80' L+ 3+76.15 DOLLISON Dr
3	52	a		1.20																																JUNCTION STRUCTURE No. 3	27.50' L+ 338+74.19 FL3
		b								62.2																							4.0			18" RCP	
		c	4.31	1.74					580																				2							GD-1 INLET	51.33'L+ 339+35.00 FL3
		d								21.0																							4.0			18" RCP	
		e	4.02	1.65					580																				2							GD-1 INLET	62.50' L+ 339+60.00 FL3
		f								21.0																							4.0			18" RCP	
		g	4.05	1.66					580																				2							GD-1 INLET	53.65' L+ 339+85.00 FL3
		h								111.1																							4.0			18" RCP	
3	52	i	3.91	1.62					580																				2							GD-1 INLET	59.02' L+ 341+00.00 FL3
3	53	a																							38.5											REMOVE 18" RCP	
3	53	b																					1													REMOVE HEADWALL	98.50' L+ 339+69.60 ℄ Rte 5
SHEET TOTAL				22.62					4083	805.8													1		57.3			1	14	1							

DRAINAGE QUANTITIES
DQ-11

VIC T. VALIDO — REVISED BY
DAVE BHALLA — DATE REVISED
CALCULATED-DESIGNED BY
CHECKED BY
FUNCTIONAL SUPERVISOR
DAVE BHALLA
STATE OF CALIFORNIA - DEPARTMENT OF TRANSPORTATION
Caltrans
HYDRAULICS

LAST REVISION 00-00-00
DATE PLOTTED => 26-JUN-2013
TIME PLOTTED => 15:32

Dist	COUNTY	ROUTE	POST MILES TOTAL PROJECT	SHEET No.	TOTAL SHEETS
07	LA	5	0.0/7.6	181	985

REGISTERED CIVIL ENGINEER 10-11-12 DATE

6-24-13
PLANS APPROVAL DATE

REGISTERED PROFESSIONAL ENGINEER DAVE BHALLA No. 34350 Exp. 9/30/13 CIVIL STATE OF CALIFORNIA

THE STATE OF CALIFORNIA OR ITS OFFICERS OR AGENTS SHALL NOT BE RESPONSIBLE FOR THE ACCURACY OR COMPLETENESS OF SCANNED COPIES OF THIS PLAN SHEET.

NOTES:

1. JOINTS ARE STANDARD JOINT TYPE
2. (N) - NOT A SEPARATE PAY ITEM, FOR INFORMATION ONLY
3. (*) - ROADWAY ITEM, SEE ADDITIONAL QUANTITIES IN ROADWAY QUANTITY SHEET

SUMMARY OF DRAINAGE QUANTITIES

DRAINAGE PLAN SHEET No.	DRAINAGE SYSTEM No. ⬡	DRAINAGE UNIT ◯	"H" OR "V" FT	MINOR CONCRETE (MINOR STRUCTURE) CY	CONCRETE (CHANNEL LINING) CY	MINOR CONCRETE (BACKFILL) CY	STRUCTURAL CONCRETE, BOX CULVERT CY	BAR REINFORCING STEEL (BOX CULVERT) LB	MISCELLANEOUS IRON AND STEEL LB	18" RCP LF	24" RCP LF	27" RCP LF	48" RCP LF	JACKED 48" RCP (CLASS V) LF	18" PLASTIC PIPE LF	36" PRECAST CONCRETE PIPE MANHOLE LF	18" CONCRETE FES EA	ADJUST MANHOLE TO GRADE EA	ABANDON INLET EA	SAND BACKFILL CY	CAP INLET EA	REMOVE FES EA	REMOVE HEADWALL EA	REMOVE CONCRETE CY	REMOVE PIPE LF	REMOVE RCB CULVERT CY	REMOVE INLET EA	REMOVE CATCH BASIN EA	TYPE 24-12 FRAME AND GRATE (N) EA	CATCH BASIN MH FRAME AND COVER (N) EA	SEAL ISOLATION JOINT (*) LF	MANHOLE FRAME AND COVER (N) EA	MAXIMUM COVER (N) FT			DESCRIPTION	STATION
3	54	a																					1														REMOVE HEADWALL	111.60' L+ 344+08.80 ℄ Rte 5
		b																							46.4												REMOVE 18" RCP	
3	54	c																					1														REMOVE HEADWALL	77.90' L+ 344+39.90 ℄ Rte 5
3	55	a								20.4																											18" RCP	
3/6		b	4.03	1.54					326																				1							TYPE G4 INLET	44.00' L+ 96+10.00 FLOR1
		c								215.8																										18" RCP	
		d	4.19	1.58					326																				1							TYPE G4 INLET	51.97' L+ 93+90.00 FLOR1
		e				4.50				107.9																											18" RCP 46.0' W/CONCRETE BACKFILL	
		f	2.36	1.35					580																				2							GD-1 INLET	74.55' L+ 344+38.00 ℄ FL3
		g								15.9																										18" RCP	
3	55	h															1																				CONCRETE FES	88.75' L+ 344+22.00 ℄ FL3
3	56	a	6.00	2.04					326																				1								TYPE G4 INLET	4.50' R+ 95+00.00 ℄ FLOR1
3		b								122.5																											18" RCP	
3	57	a								137.7																											18" RCP	
		b	6.00	2.04					326																				1							TYPE G4 INLET	59.25' L+ 102+68.00 ℄ FLOR1
3	57	c								260.5																											18" RCP	
4	58	a																					1														REMOVE HEADWALL	88.00' L+ 347+78.40 ℄ Rte 5
		b																							143.8												REMOVE 24" RCP	
4	58	c																					1														REMOVE HEADWALL	55.00' R+ 347+78.40 ℄ Rte 5
SHEET TOTAL				8.55		4.50			1884	880.7							1						4		190.2				6								

DRAINAGE QUANTITIES
DQ-12

VIC T. VALIDO — REVISED BY
DAVE BHALLA — DATE REVISED
CALCULATED-DESIGNED BY
CHECKED BY
FUNCTIONAL SUPERVISOR
DAVE BHALLA

STATE OF CALIFORNIA - DEPARTMENT OF TRANSPORTATION
Caltrans
HYDRAULICS

LAST REVISION 00-00-00
DATE PLOTTED => 26-JUN-2013
TIME PLOTTED => 15:32

Dist	COUNTY	ROUTE	POST MILES TOTAL PROJECT	SHEET No.	TOTAL SHEETS
07	LA	5	0.0/7.6	182	985

REGISTERED CIVIL ENGINEER 10-11-12 DATE

6-24-13
PLANS APPROVAL DATE

REGISTERED PROFESSIONAL ENGINEER DAVE BHALLA No. 34350 Exp. 9/30/13 CIVIL STATE OF CALIFORNIA

THE STATE OF CALIFORNIA OR ITS OFFICERS OR AGENTS SHALL NOT BE RESPONSIBLE FOR THE ACCURACY OR COMPLETENESS OF SCANNED COPIES OF THIS PLAN SHEET.

NOTES:

1. JOINTS ARE STANDARD JOINT TYPE
2. (N) - NOT A SEPARATE PAY ITEM, FOR INFORMATION ONLY
3. (*) - ROADWAY ITEM, SEE ADDITIONAL QUANTITIES IN ROADWAY QUANTITY SHEET

SUMMARY OF DRAINAGE QUANTITIES

DRAINAGE PLAN SHEET No.	DRAINAGE SYSTEM No. ⬡	DRAINAGE UNIT ○	"H" OR "V" FT	MINOR CONCRETE (MINOR STRUCTURE) CY	CONCRETE (CHANNEL LINING) CY	MINOR CONCRETE (BACKFILL) CY	STRUCTURAL CONCRETE, BOX CULVERT CY	BAR REINFORCING STEEL (BOX CULVERT) LB	MISCELLANEOUS IRON AND STEEL LB	18" RCP LF	24" RCP LF	27" RCP LF	48" RCP LF	JACKED 48" RCP (CLASS V) LF	18" PLASTIC PIPE LF	36" PRECAST CONCRETE PIPE MANHOLE LF	18" CONCRETE FES EA	ADJUST MANHOLE TO GRADE EA	ABANDON INLET EA	SAND BACKFILL CY	CAP INLET EA	REMOVE FES EA	REMOVE HEADWALL EA	REMOVE CONCRETE CY	REMOVE PIPE LF	REMOVE RCB CULVERT CY	REMOVE INLET EA	REMOVE CATCH BASIN EA	TYPE 24-12 FRAME AND GRATE (N) EA	CATCH BASIN MH FRAME AND COVER (N) EA	SEAL ISOLATION JOINT (*) LF	MANHOLE FRAME AND COVER (N) EA	MAXIMUM COVER (N) FT			DESCRIPTION	STATION
4	59	a																							148.5												REMOVE 24" RCP	
4	59	b																					1														REMOVE HEADWALL	57.00' R+ 351+61.35 ℄ Rte 5
4	60	a	7.47	2.66					580																				2								GD-1 INLET	4.00' L+ 353+40.00 FL1(N/B)
		b								187.7																							7.0			18" RCP	
		c	4.47	1.79					580																				2								GD-1 INLET	34.00' R+ 355+31.70 FL1(N/B)
4	60	d									18.8																						7.0			24" RCP	
4	61	a																									1										REMOVE INLET	5.15' R+ 355+31.70 FL1(N/B)
		b																							18.8												REMOVE 24" RCP	
		c																									1										REMOVE INLET	5.15' R+ 355+54.50 FL1(N/B)
		d																							10.3												REMOVE 24" RCP	
4	61	e	4.89	1.90					580																				2		14.6						GD-1 INLET	34.00' R+ 355+54.50 FL1(N/B)
4	62	a																									1										REMOVE INLET	4.90' R+ 358+02.00 FL1(N/B)
		b																							18.0												REMOVE 24" RCP	
		c																									1										REMOVE INLET	4.90' R+ 357+81.85 FL1(N/B)
		d																							23.2												REMOVE 24" RCP	
4	62	e																					1														REMOVE HEADWALL	29.50' R+ 357+81.85 FL1(N/B)
4	63	a	4.64	1.83					580																				2		14.6						GD-1 INLET	22.00' R+ 358+02.00 FL1(N/B)
		b									18.0																						4.0			24" RCP	
SHEET TOTAL				8.18					2320	187.7	36.8												2		218.8		4		8		29.2							

DRAINAGE QUANTITIES
DQ-13

STATE OF CALIFORNIA - DEPARTMENT OF TRANSPORTATION
HYDRAULICS
Caltrans

FUNCTIONAL SUPERVISOR: DAVE BHALLA
CALCULATED-DESIGNED BY: VIC T. VALIDO
CHECKED BY: DAVE BHALLA
REVISED BY
DATE REVISED

LAST REVISION 00-00-00
DATE PLOTTED => 27-JUN-2013
TIME PLOTTED => 12:06

Dist	COUNTY	ROUTE	POST MILES TOTAL PROJECT	SHEET No.	TOTAL SHEETS
07	LA	5	0.0/7.6	183	985

REGISTERED CIVIL ENGINEER 10-11-12 DATE

6-24-13
PLANS APPROVAL DATE

REGISTERED PROFESSIONAL ENGINEER DAVE BHALLA No. 34350 Exp. 9/30/13 CIVIL STATE OF CALIFORNIA

THE STATE OF CALIFORNIA OR ITS OFFICERS OR AGENTS SHALL NOT BE RESPONSIBLE FOR THE ACCURACY OR COMPLETENESS OF SCANNED COPIES OF THIS PLAN SHEET.

NOTES:

1. JOINTS ARE STANDARD JOINT TYPE
2. (N) - NOT A SEPARATE PAY ITEM, FOR INFORMATION ONLY
3. (*) - ROADWAY ITEM, SEE ADDITIONAL QUANTITIES IN ROADWAY QUANTITY SHEET

SUMMARY OF DRAINAGE QUANTITIES

DRAINAGE PLAN SHEET No.	DRAINAGE SYSTEM No. ⬡	DRAINAGE UNIT ◯	"H" OR "V" (FT)	MINOR CONCRETE (MINOR STRUCTURE) (CY)	CONCRETE (CHANNEL LINING) (CY)	MINOR CONCRETE (BACKFILL) (CY)	STRUCTURAL CONCRETE, BOX CULVERT (CY)	BAR REINFORCING STEEL (BOX CULVERT) (LB)	MISCELLANEOUS IRON AND STEEL (LB)	18" RCP (LF)	24" RCP (LF)	27" RCP (LF)	48" RCP (LF)	JACKED 48" RCP (CLASS V) (LF)	18" PLASTIC PIPE (LF)	36" PRECAST CONCRETE PIPE MANHOLE (LF)	18" CONCRETE FES (EA)	ADJUST MANHOLE TO GRADE (EA)	ABANDON INLET (EA)	SAND BACKFILL (CY)	CAP INLET (EA)	REMOVE FES (EA)	REMOVE HEADWALL (EA)	REMOVE CONCRETE (CY)	REMOVE PIPE (LF)	REMOVE RCB CULVERT (CY)	REMOVE INLET (EA)	REMOVE CATCH BASIN (EA)	TYPE 24-12 FRAME AND GRATE (N) (EA)	CATCH BASIN MH FRAME AND COVER (N) (EA)	SEAL ISOLATION JOINT (*) (LF)	MANHOLE FRAME AND COVER (N) (EA)	MAXIMUM COVER (FT)	DESCRIPTION	STATION
4	63	c	4.78	1.87					580																				2					TYPE GD-1 INLET	22.00′ R+ 357+81.00 FL1(N/B)
↓		d									23.8																						4.0	24" RCP	
4	63	e		1.20																														STRAIGHT HEADWALL	45.40′ R+ 357+76.95 FL1(N/B)
4	64	a																						8.0										REMOVE CONCRETE RIPRAP	7.05′ R+ 1+97.30 "BA1 LINE"
↓	↓	b																					1											REMOVE HEADWALL	5.05′ R+ 1+97.30 "BA1 LINE"
↓	↓	c																							27.70									REMOVE 24" RCP	
↓	↓	d																			1													CAP INLET	22.20′ R+ 1+96.60 "BA1 LINE"
↓	↓	e									19.4																							24" RCP	
↓	↓	f	8.40	3.61					326																									TYPE G2 INLET	1.60′ R+ 1+87.70 "BA1 LINE"
4	64	g									7.0																							24" RCP	
4	65	a																						8.0										REMOVE CONCRETE RIPRAP	18.50′ R+ 4+59.20 "BA1 LINE"
↓		b																					1											REMOVE HEADWALL	18.50′ R+ 4+59.20 "BA1 LINE"
↓		c																							36.20									REMOVE 24" RCP	
4	65	d	4.0	1.30					435							5.3																1		MANHOLE No. 1 (MH No. 1)	1,800,341.35 / 6,532,441.39 AT ℄ MH
4	66	a									279.0																						10.0	24" RCP	
4		b	4.0	1.30					435							7.4																1		MANHOLE No. 1 (MH No. 1)	1,800,585.52 / 6,532,423.40 AT ℄ MH
		c									48.1																						10.0	24" RCP	
4	66	d		5.00																														JUNCTION STRUCTURE No. 3 (JS3)	1,800,627.94 / 6,532,380.27 AT Sta POINT
4	67	a																								2.30								REMOVE 5.0′ x 2.0′ x 6.90′ RCB	
↓	↓	b					2.32	410																										RCB TRANSITION	
↓	↓	c																					1											REMOVE HEADWALL	1,800,627.29 / 6,532,384.83 AT ℄ ENDWALL
4	67	d																						3.30										REMOVE CONCRETE CHANNEL	
SHEET TOTAL				14.28			2.32	410	1776		377.3					12.7					1		3	19.3	63.90	2.30			2						

DRAINAGE QUANTITIES
DQ-14

STATE OF CALIFORNIA - DEPARTMENT OF TRANSPORTATION
Caltrans® HYDRAULICS

FUNCTIONAL SUPERVISOR: DAVE BHALLA
CALCULATED-DESIGNED BY: VIC T. VALIDO
CHECKED BY: DAVE BHALLA
REVISED BY
DATE REVISED

LAST REVISION 00-00-00
DATE PLOTTED => 27-JUN-2013
TIME PLOTTED => 12:06

Dist	COUNTY	ROUTE	POST MILES TOTAL PROJECT	SHEET No.	TOTAL SHEETS
07	LA	5	0.0/7.6	184	985

REGISTERED CIVIL ENGINEER 10-11-12 DATE

6-24-13
PLANS APPROVAL DATE

REGISTERED PROFESSIONAL ENGINEER DAVE BHALLA No. 34350 Exp. 9/30/13 CIVIL STATE OF CALIFORNIA

THE STATE OF CALIFORNIA OR ITS OFFICERS OR AGENTS SHALL NOT BE RESPONSIBLE FOR THE ACCURACY OR COMPLETENESS OF SCANNED COPIES OF THIS PLAN SHEET.

NOTES:

1. JOINTS ARE STANDARD JOINT TYPE
2. (N) - NOT A SEPARATE PAY ITEM, FOR INFORMATION ONLY
3. (*) - ROADWAY ITEM, SEE ADDITIONAL QUANTITIES IN ROADWAY QUANTITY SHEET

SUMMARY OF DRAINAGE QUANTITIES

DRAINAGE PLAN SHEET No.	DRAINAGE SYSTEM No. ⬡	DRAINAGE UNIT ◯	"H" OR "V" (FT)	MINOR CONCRETE (MINOR STRUCTURE) (CY)	CONCRETE (CHANNEL LINING) (CY)	MINOR CONCRETE (BACKFILL) (CY)	STRUCTURAL CONCRETE, BOX CULVERT (CY)	BAR REINFORCING STEEL (BOX CULVERT) (LB)	MISCELLANEOUS IRON AND STEEL (LB)	18" RCP (LF)	24" RCP (LF)	27" RCP (LF)	48" RCP (LF)	JACKED 48" RCP (CLASS V) (LF)	18" PLASTIC PIPE (LF)	36" PRECAST CONCRETE PIPE MANHOLE (LF)	18" CONCRETE FES (EA)	ADJUST MANHOLE TO GRADE (EA)	ABANDON INLET (EA)	SAND BACKFILL (CY)	CAP INLET (EA)	REMOVE FES (EA)	REMOVE HEADWALL (EA)	REMOVE CONCRETE (CY)	REMOVE PIPE (LF)	REMOVE RCB CULVERT (CY)	REMOVE INLET (EA)	REMOVE CATCH BASIN (EA)	TYPE 24-12 FRAME AND GRATE (N) (EA)	CATCH BASIN MH FRAME AND COVER (N) (EA)	SEAL ISOLATION JOINT (*) (LF)	MANHOLE FRAME AND COVER (N) (EA)	MAXIMUM COVER (FT)			DESCRIPTION	STATION
4	67	e					5.10	902																									4.0			5.0′ x 5.0′ x 11.0′ RCB	
		f	3.3						435							3.3																1				MANHOLE No. 3 (MH No. 3)	1,800,628.65 / 6,532,374.64 AT ℄ MH
		g					2.32	410																												RCB TRANSITION	
4	67	h																					1													REMOVE HEADWALL	1,800,630.62 / 6,532,362.81 AT ℄ HEADWALL
4	68	a																					1													REMOVE HEADWALL	
		b	3.88	2.30					435																							1				MANHOLE No. 1 (MH No. 1)	1,800,523.07 / 6,532,344.33 AT ℄ MH
		c									45.5																						5.0			24" RCP	
		d	3.67	3.00					652																				2							GD-3 INLET/ DEPRESSED APRON	1,800,562.05 / 6,532,344.25 AT ℄ INLET
		e									66.9																						5.0			24" RCP	
4	68	f		4.70																																JUNCTION STRUCTURE No. 3	1,800,630.49 / 6,532,364.82 AT Sta POINT
5	69	a																							21.5											REMOVE 18" RCP	
		b	3.54	1.81					580																				2		14.6					GD-1 INLET	67.74′ Rt 361+95.00 ℄ Rte 5
		c								17.4																							4.0			18" RCP	
5	69	d															1																			18" CONCRETE FES	95.00′ Rt 361+97.00 ℄ Rte 5
6	70	a																							192.0											REMOVE 27" RCP	
		b										192.0																					16			27" RCP	
		c																1																		ADJUST MANHOLE TO GRADE	2+20.45 AT ℄ FAIRFORD
		d																							324.0											REMOVE 27" RCP	
		e										324.0																					16			27" RCP	
		f								80.3																							20			18" RCP	
6	70	g	19.54	7.60					326																				1							TYPE G4 INLET	50.52′ Rt 93+95.00 FLOR1
SHEET TOTAL				19.41			7.42	1312	2428	97.7	112.4	516.0				3.3	1	1					2		537.5				5		14.6						

DRAINAGE QUANTITIES
DQ-15

STATE OF CALIFORNIA - DEPARTMENT OF TRANSPORTATION
Caltrans
HYDRAULICS

FUNCTIONAL SUPERVISOR: DAVE BHALLA
CALCULATED-DESIGNED BY: VIC T. VALIDO
CHECKED BY: DAVE BHALLA
REVISED BY
DATE REVISED

LAST REVISION 00-00-00
DATE PLOTTED => 27-JUN-2013
TIME PLOTTED => 12:06

Dist	COUNTY	ROUTE	POST MILES TOTAL PROJECT	SHEET No.	TOTAL SHEETS
07	LA	5	0.0/7.6	185	985

REGISTERED CIVIL ENGINEER 10-11-12 DATE

6-24-13
PLANS APPROVAL DATE

REGISTERED PROFESSIONAL ENGINEER DAVE BHALLA No. 34350 Exp. 9/30/13 CIVIL STATE OF CALIFORNIA

THE STATE OF CALIFORNIA OR ITS OFFICERS OR AGENTS SHALL NOT BE RESPONSIBLE FOR THE ACCURACY OR COMPLETENESS OF SCANNED COPIES OF THIS PLAN SHEET.

NOTES:

1. JOINTS ARE STANDARD JOINT TYPE
2. (N) - NOT A SEPARATE PAY ITEM, FOR INFORMATION ONLY
3. (*) - ROADWAY ITEM, SEE ADDITIONAL QUANTITIES IN ROADWAY QUANTITY SHEET

SUMMARY OF DRAINAGE QUANTITIES

DRAINAGE PLAN SHEET No.	DRAINAGE SYSTEM No. ⬡	DRAINAGE UNIT ◯	"H" OR "V"	MINOR CONCRETE (MINOR STRUCTURE)	CONCRETE (CHANNEL LINING)	MINOR CONCRETE (BACKFILL)	STRUCTURAL CONCRETE, BOX CULVERT	BAR REINFORCING STEEL (BOX CULVERT)	MISCELLANEOUS IRON AND STEEL	18" RCP	24" RCP	27" RCP	48" RCP	JACKED 48" RCP (CLASS V)	18" PLASTIC PIPE	36" PRECAST CONCRETE PIPE MANHOLE	18" CONCRETE FES	ADJUST MANHOLE TO GRADE	ABANDON INLET	SAND BACKFILL	CAP INLET	REMOVE FES	REMOVE HEADWALL	REMOVE CONCRETE	REMOVE PIPE	REMOVE RCB CULVERT	REMOVE INLET	REMOVE CATCH BASIN	TYPE 24-12 FRAME AND GRATE (N)	CATCH BASIN MH FRAME AND COVER (N)	SEAL ISOLATION JOINT (*)	MANHOLE FRAME AND COVER (N)	MAXIMUM COVER			DESCRIPTION	STATION
			FT	CY	CY	CY	CY	LB	LB	LF	LF	LF	LF	LF	LF	LF	EA	EA	EA	CY	EA	EA	EA	CY	LF	CY	EA	EA	EA	EA	LF	EA	FT				
6	71	a																1																		ADJUST MANHOLE TO GRADE	30.90′ R+ 90+11.72 FLOR1
6	72	a																1																		ADJUST MANHOLE TO GRADE	32.06′ R+ 87+60.10 FLOR1
6	73	a	4.14	7.29					130																					1						Mod CURB OPENING CATCH BASIN (300-3) W/LOCAL DEPRESSION	40.67′ R+ 87+14.46 FLOR1
6		b																										1								REMOVE CATCH BASIN	40.58′ R+ 87+14.46 FLOR1
6	74	a	3.91	8.75					130																					1						CURB OPENING CATCH BASIN (300-3) W/LOCAL DEPRESSION	53.50′ L+ 87+19.95 FLOR1
		b								3.4																							5.0			18" RCP	
6	74	c																										1								REMOVE CATCH BASIN	49.10′ L+ 87+19.95 FLOR1
7	75	a																										1								REMOVE CATCH BASIN	53.56′ L+ 104+68.10 FLOR1
		b																							16.5											REMOVE 18" RCP	
7	75	c																						42.5												REMOVE 6.0′x 2.0′x 170.0′ CONCRETE CHANNEL	
7	76	a																								40.60										REMOVE 8.0′ x 1.5′ x 97.0′ RCB	
		b																								17.00										REMOVE 4.0′ x 0.67′ x 75.0′ RCB	
7	76	c																								17.50										REMOVE 4.0′ x 0.67′ x 77.0′ RCB	
7	77	a									352.9																						6.0			24" RCP	
		b	4.00	1.90					435							2.9															1				MANHOLE PIPE TO PIPE (321-2)	9.36′ L+ 39+00.00 ℄ LONGWORTH Ave
		c									306.2																						6.0			24" RCP	
		d	6.58	10.87					130																					1						CURB OPENING CATCH BASIN (300-3) W/LOCAL DEPRESSION	39.32′ R+ 337+24.00 ℄ ORR AND DAY Rd
		e									115.4																						5.0			24" RCP	
		f	4.00	1.90					435							3.1															1				MANHOLE PIPE TO PIPE (321-2)	34.18′ R+ 336+01.00 ℄ ORR AND DAY Rd
		g									282.4																						9.0			24" RCP	
7	77	h	4.72	10.00					130																					1						CURB OPENING CATCH BASIN (300-3) W/LOCAL DEPRESSION	40.45′ L+ 108+60.00 FLOR1
SHEET TOTAL				40.71					1390	3.4	1056.9					6.0		2						42.5	16.5	75.10		3		4							

DRAINAGE QUANTITIES
DQ-16

VIC T. VALIDO — REVISED BY
DAVE BHALLA — DATE REVISED
CALCULATED-DESIGNED BY
CHECKED BY
FUNCTIONAL SUPERVISOR
DAVE BHALLA

STATE OF CALIFORNIA - DEPARTMENT OF TRANSPORTATION
Caltrans
HYDRAULICS

LAST REVISION 00-00-00
DATE PLOTTED => 26-JUN-2013
TIME PLOTTED => 15:32

Dist	COUNTY	ROUTE	POST MILES TOTAL PROJECT	SHEET No.	TOTAL SHEETS
07	LA	5	0.0/7.6	186	985

REGISTERED CIVIL ENGINEER 10-11-12 DATE

6-24-13
PLANS APPROVAL DATE

REGISTERED PROFESSIONAL ENGINEER DAVE BHALLA No. 34350 Exp. 9/30/13 CIVIL STATE OF CALIFORNIA

THE STATE OF CALIFORNIA OR ITS OFFICERS OR AGENTS SHALL NOT BE RESPONSIBLE FOR THE ACCURACY OR COMPLETENESS OF SCANNED COPIES OF THIS PLAN SHEET.

NOTES:

1. JOINTS ARE STANDARD JOINT TYPE
2. (N) - NOT A SEPARATE PAY ITEM, FOR INFORMATION ONLY
3. (*) - ROADWAY ITEM, SEE ADDITIONAL QUANTITIES IN ROADWAY QUANTITY SHEET

SUMMARY OF DRAINAGE QUANTITIES

DRAINAGE PLAN SHEET No.	DRAINAGE SYSTEM No. ⬡	DRAINAGE UNIT ◯	"H" OR "V" (FT)	MINOR CONCRETE (MINOR STRUCTURE) (CY)	CONCRETE (CHANNEL LINING) (CY)	MINOR CONCRETE (BACKFILL) (CY)	STRUCTURAL CONCRETE, BOX CULVERT (CY)	BAR REINFORCING STEEL (BOX CULVERT) (LB)	MISCELLANEOUS IRON AND STEEL (LB)	18" RCP (LF)	24" RCP (LF)	27" RCP (LF)	48" RCP (LF)	JACKED 48" RCP (CLASS V) (LF)	18" PLASTIC PIPE (LF)	36" PRECAST CONCRETE PIPE MANHOLE (LF)	18" CONCRETE FES (EA)	ADJUST MANHOLE TO GRADE (EA)	ABANDON INLET (EA)	SAND BACKFILL (CY)	CAP INLET (EA)	REMOVE FES (EA)	REMOVE HEADWALL (EA)	REMOVE CONCRETE (CY)	REMOVE PIPE (LF)	REMOVE RCB CULVERT (CY)	REMOVE INLET (EA)	REMOVE CATCH BASIN (EA)	TYPE 24-12 FRAME AND GRATE (N) (EA)	CATCH BASIN MH FRAME AND COVER (N) (EA)	SEAL ISOLATION JOINT (*) (LF)	MANHOLE FRAME AND COVER (N) (EA)	MAXIMUM COVER (N) (FT)			DESCRIPTION	STATION
7	77	i									83.7																						10.0			24" RCP	
		j	4.14	9.70					130																					1						CURB OPENING CATCH BASIN (300-3) W/LOCAL DEPRESSION	41.07′ R+ 108+60.00 FLOR1
		k									132.8																						10.0			24" RCP	
		l	9.95	15.80					130																					1						CURB OPENING CATCH BASIN (300-3) W/LOCAL DEPRESSION	54.67′ L+ 105+37.30 FLOR1
		m									107.8																						10.0			24" RCP	
7	77	n	7.50	11.60					130																					1						CURB OPENING CATCH BASIN (300-3) W/LOCAL DEPRESSION	52.00′ R+ 105+37.30 FLOR1
8	78	a					3.80	930																												TRANSITION 5.0′ x 3.0′ TO 6.0′ x 3.0′ x 5.0′ RCB	
		b																								5.40										REMOVE 6.0′ x 3.0′ x 12.5′ RCB	
		c																					1													REMOVE HEADWALL	7.10′ L+ 1+59.90
		d					14.50	3534																												6.0′ x 3.0′ x 19.0′ RCB	
		e																						3.40												REMOVE RECTANGULAR CONCRETE CHANNEL	
		f																					1													REMOVE HEADWALL	17.30′ L+ 1+51.95
		g																								0.80										REMOVE 6.0′ x 3.0′ x 1.0′ RCB	
		h		1.50																																JUNCTION STRUCTURE No. 3	53.12′ L+ 1+32.95
		i								24.4																							5			18" RCP	
8	78	j	2.30	2.80					652																				2							GD-3 INLET W/DEPRESSED APRON	34.70′ L+ 1+79.35
SHEET TOTAL				41.40			18.30	4464	1042	24.4	324.3												2	3.40		6.20			2	3							

DRAINAGE QUANTITIES
DQ-17

STATE OF CALIFORNIA - DEPARTMENT OF TRANSPORTATION
Caltrans HYDRAULICS

FUNCTIONAL SUPERVISOR: DAVE BHALLA
CALCULATED-DESIGNED BY: VIC T. VALIDO
CHECKED BY: DAVE BHALLA
REVISED BY
DATE REVISED

LAST REVISION 00-00-00
DATE PLOTTED => 26-JUN-2013
TIME PLOTTED => 15:32

Dist	COUNTY	ROUTE	POST MILES TOTAL PROJECT	SHEET No.	TOTAL SHEETS
07	LA	5	0.0/7.6	187	985

REGISTERED CIVIL ENGINEER 10-11-12 DATE

6-24-13
PLANS APPROVAL DATE

REGISTERED PROFESSIONAL ENGINEER DAVE BHALLA No. 34350 Exp. 9/30/13 CIVIL STATE OF CALIFORNIA

THE STATE OF CALIFORNIA OR ITS OFFICERS OR AGENTS SHALL NOT BE RESPONSIBLE FOR THE ACCURACY OR COMPLETENESS OF SCANNED COPIES OF THIS PLAN SHEET.

NOTES:

1. JOINTS ARE STANDARD JOINT TYPE
2. (N) - NOT A SEPARATE PAY ITEM, FOR INFORMATION ONLY
3. (*) - ROADWAY ITEM, SEE ADDITIONAL QUANTITIES IN ROADWAY QUANTITY SHEET
4. (**) - ADDITIONAL QUANTITIES FROM WQ-2 SHEET

SUMMARY OF DRAINAGE QUANTITIES

DRAINAGE QUANTITY SHEET No.	DRAINAGE SYSTEM No. ⬡	DRAINAGE UNIT ◯	"H" OR "V"	MINOR CONCRETE (MINOR STRUCTURE)	CONCRETE (CHANNEL LINING)	MINOR CONCRETE (BACKFILL)	STRUCTURAL CONCRETE, BOX CULVERT	BAR REINFORCING STEEL (BOX CULVERT)	MISCELLANEOUS IRON AND STEEL	18" RCP	24" RCP	27" RCP	48" RCP	JACKED 48" RCP (CLASS V)	18" PLASTIC PIPE	36" PRECAST CONCRETE PIPE MANHOLE	18" CONCRETE FES	ADJUST MANHOLE TO GRADE	ABANDON INLET	SAND BACKFILL	CAP INLET	REMOVE FES	REMOVE HEADWALL		REMOVE CONCRETE	REMOVE PIPE	REMOVE RCB CULVERT	REMOVE INLET	REMOVE CATCH BASIN	(N) TYPE 24-12 FRAME AND GRATE	(N) CATCH BASIN MH FRAME AND COVER	SEAL ISOLATION JOINT (*)	(N) MANHOLE FRAME AND COVER	(N) MAXIMUM COVER			DESCRIPTION	STATION
			FT	CY	CY	CY	CY	LB	LB	LF	LF	LF	LF	LF	LF	LF	EA	EA	EA	CY	EA	EA	EA		CY	LF	CY	EA	EA	EA	EA	LF	EA	FT				
1	1-5			10.06					2320		1138.5								1	117.9			3		3.46	43.0		1		8		59.2					SYSTEM No. 1 a - SYSTEM No. 5 d	
2	6-12			15.78	24.70				1123	32.6								1							29.80	32.0		1	3		3						SYSTEM No. 6 a - SYSTEM No. 12 b	
3	13-14			51.49					5110		617.2		1726.3			24.6												1		16		127.9					SYSTEM No. 13 a - SYSTEM No. 14 t	
4	14-16			24.20			24.60	4267	2100				661.2	341.4		70.3							2		10.40		2.54	2		4		29.6					SYSTEM No. 14 u - SYSTEM No. 16 a	
5	17-26																			81.0					22.20			9									SYSTEM No. 17 a - SYSTEM No. 26 a	
6	27-31			21.52					4060		579.6	255.9																4		14		104.3					SYSTEM No. 27 a - SYSTEM No. 31 n	
7	31-32			23.47		1.50			5800	249.0	1175.3	788.0																		20		131.4					SYSTEM No. 31 o - SYSTEM No. 32 c	
8	32-40			23.76					2435	531.7			241.8										1			34.9	19.0	5		6	2						SYSTEM No. 32 d - SYSTEM No. 40 a	
9	40-43			18.50			227.00	36667	565							4.4				83		1	5		71.00	287.2	74.4	2			1						SYSTEM No. 40 b - SYSTEM No. 43 f	
10	44-49			43.45	31.10				3022		146.4				47.0							1	1		32.10	62.0		2		8							SYSTEM No. 44 a - SYSTEM No. 49 e	
11	49-53			22.62					4083	805.8													1			57.3			1	14	1						SYSTEM No. 49 f - SYSTEM No. 53 b	
12	54-58			8.55		4.50			1884	880.7							1						4			190.2				6							SYSTEM No. 54 a - SYSTEM No. 58 c	
13	59-63			8.18					2320	187.7	36.8												2			218.8		4		8		29.2					SYSTEM No. 59 a - SYSTEM No. 63 b	
14	63-67			14.28			2.32	410	1776		377.3					12.7					1		3		19.30	63.9	2.30			2							SYSTEM No. 63 c - SYSTEM No. 67 d	
15	67-70			19.41			7.42	1312	2428	97.7	112.4	516.0				3.3	1	1					2			537.5				5		14.6					SYSTEM No. 67 e - SYSTEM No. 70 g	
16	71-77			40.71					1390	3.4	1056.9					6.0		2							42.5	16.5	75.10		3		4						SYSTEM No. 71 a - SYSTEM No. 77 h	
17	77-78			41.40			18.30	4464	1042	24.4	324.3												2		3.40		6.20			2	3						SYSTEM No. 77 i - SYSTEM No. 78 j	
ADDITIONAL FROM WQ-2				70.9					1340	45	198.4																											
GRAND TOTAL				458.28	55.80	6.00	279.64	47120	42798	2858	5763.1	1559.9	2629.3	341.4	47.0	121.3	2	4	1	281.9	1	2	26		234.16	1543.3	179.54	31	7	113	14	496.2						

DRAINAGE QUANTITIES
DQ-18

STATE OF CALIFORNIA - DEPARTMENT OF TRANSPORTATION
Caltrans® HYDRAULICS

FUNCTIONAL SUPERVISOR: DAVE BHALLA
CALCULATED-DESIGNED BY: VIC T. VALIDO
CHECKED BY: DAVE BHALLA
REVISED BY
DATE REVISED

LAST REVISION 00-00-00
DATE PLOTTED => 26-JUN-2013
TIME PLOTTED => 15:32

Dist	COUNTY	ROUTE	POST MILES TOTAL PROJECT	SHEET No.	TOTAL SHEETS
07	LA	5	0.0/7.6	188	985

REGISTERED CIVIL ENGINEER 10-11-12 DATE

6-24-13
PLANS APPROVAL DATE

REGISTERED PROFESSIONAL ENGINEER NGIM NANCY PE No. 58161 Exp. 6/30/14 CIVIL STATE OF CALIFORNIA

THE STATE OF CALIFORNIA OR ITS OFFICERS OR AGENTS SHALL NOT BE RESPONSIBLE FOR THE ACCURACY OR COMPLETENESS OF SCANNED COPIES OF THIS PLAN SHEET.

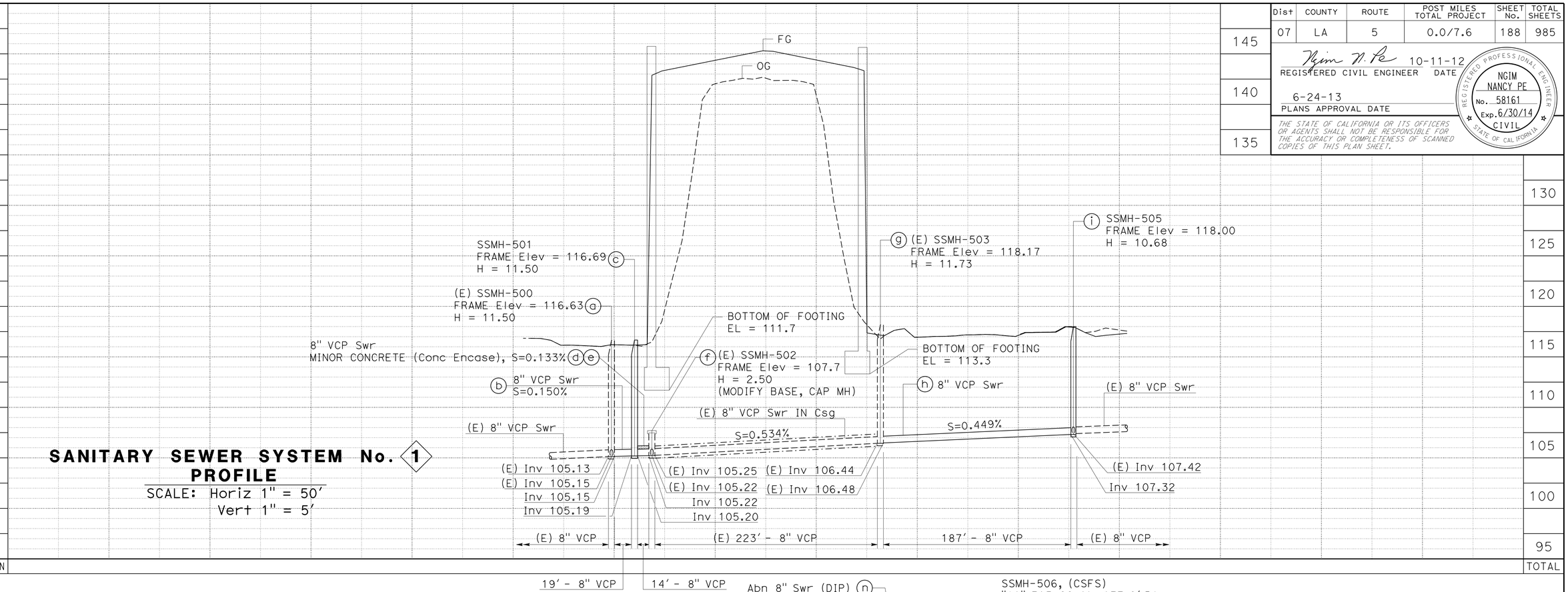

SANITARY SEWER SYSTEM No. 1
PROFILE
SCALE: Horiz 1" = 50'
Vert 1" = 5'

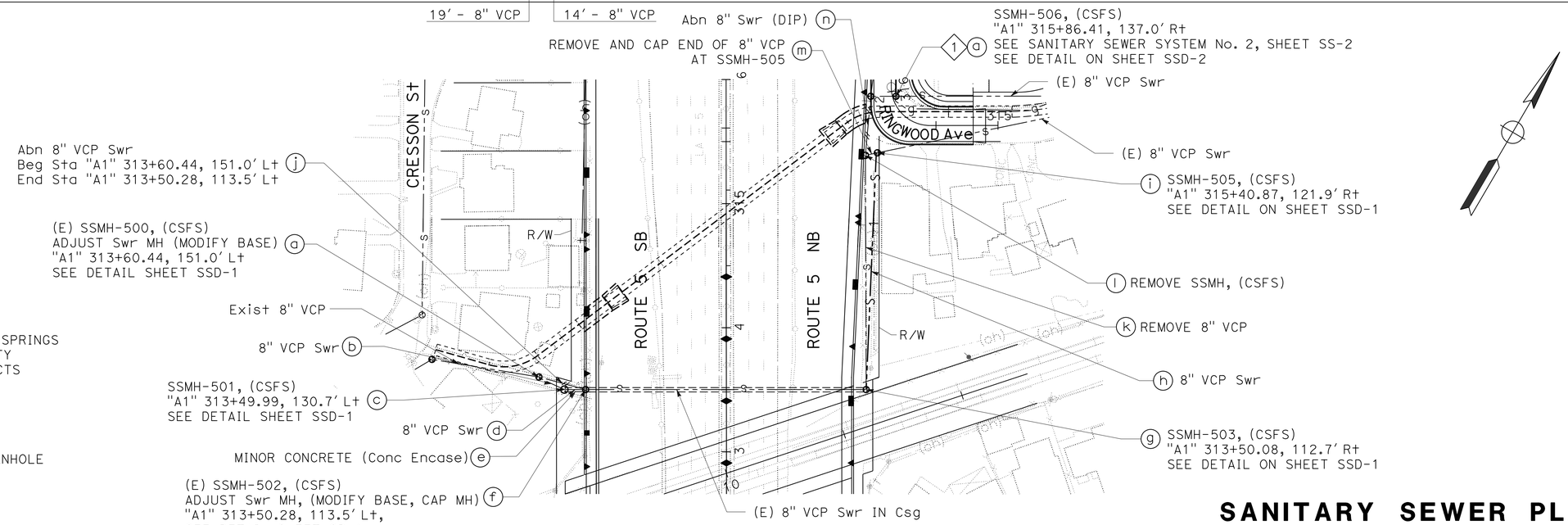

LEGEND:

SEWER OWNERS:

- CD - CITY OF DOWNEY
- CN - CITY OF NORWALK
- CSFS - CITY OF SANTA FE SPRINGS
- LACSD - LOS ANGELES COUNTY SANITATION DISTRICTS

ABBREVIATIONS:

- Csg - CASING
- Encase - ENCASEMENT
- (E) - EXISTING
- SSMH - SANITARY SEWER MANHOLE
- Stl - STEEL

SANITARY SEWER SYSTEM No. 1
PLAN
SCALE: 1" = 50'

APPROVED FOR SANITARY SEWER WORK ONLY

SANITARY SEWER PLAN AND PROFILE
SCALE AS SHOWN

SS-1

REVISED BY | DATE REVISED
YIM T. TSE | NGIM NANCY PE
CALCULATED-DESIGNED BY | CHECKED BY
FUNCTIONAL SUPERVISOR: NGIM NANCY PE

STATE OF CALIFORNIA - DEPARTMENT OF TRANSPORTATION
Caltrans® OFFICE OF DESIGN A

S:\projects\215951\721595ja001.dgn

LAST REVISION 00-00-00 | DATE PLOTTED => 26-JUN-2013 | TIME PLOTTED => 16:06

BORDER LAST REVISED 7/2/2010 | USERNAME => s119571 | DGN FILE => 721595ja001.dgn | RELATIVE BORDER SCALE IS IN INCHES 0 1 2 3 | UNIT 1797 | PROJECT NUMBER & PHASE 07000018351

Dist	COUNTY	ROUTE	POST MILES TOTAL PROJECT	SHEET No.	TOTAL SHEETS
07	LA	5	0.0/7.6	189	985

REGISTERED CIVIL ENGINEER 10-11-12 DATE

6-24-13
PLANS APPROVAL DATE

REGISTERED PROFESSIONAL ENGINEER NGIM NANCY PE No. 58161 Exp. 6/30/14 CIVIL STATE OF CALIFORNIA

THE STATE OF CALIFORNIA OR ITS OFFICERS OR AGENTS SHALL NOT BE RESPONSIBLE FOR THE ACCURACY OR COMPLETENESS OF SCANNED COPIES OF THIS PLAN SHEET.

SANITARY SEWER SYSTEM NO. 2
PROFILE
SCALE: Horiz 1" = 50'
Vert 1" = 5'

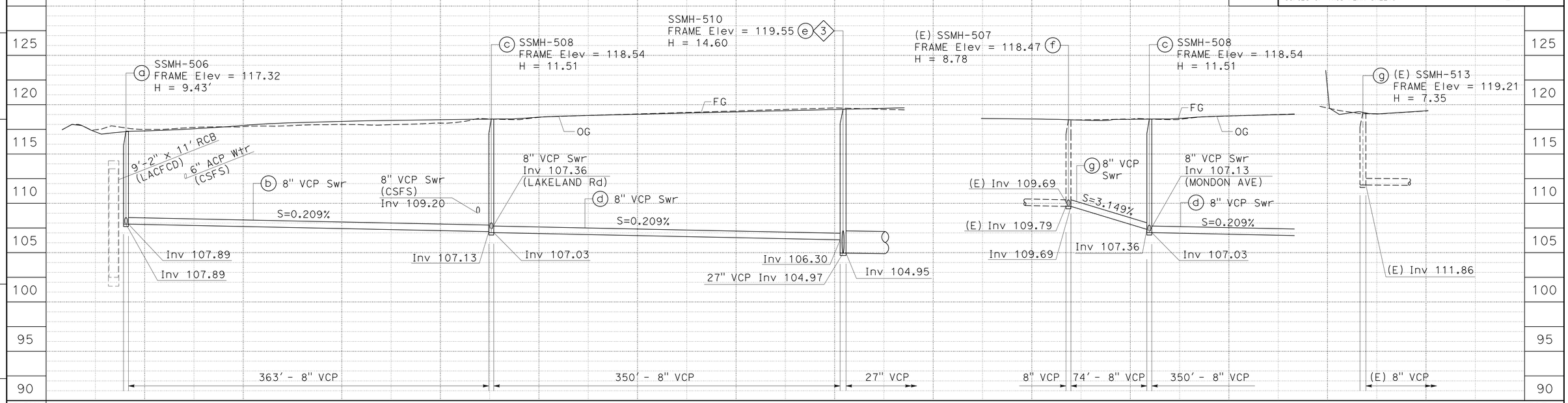

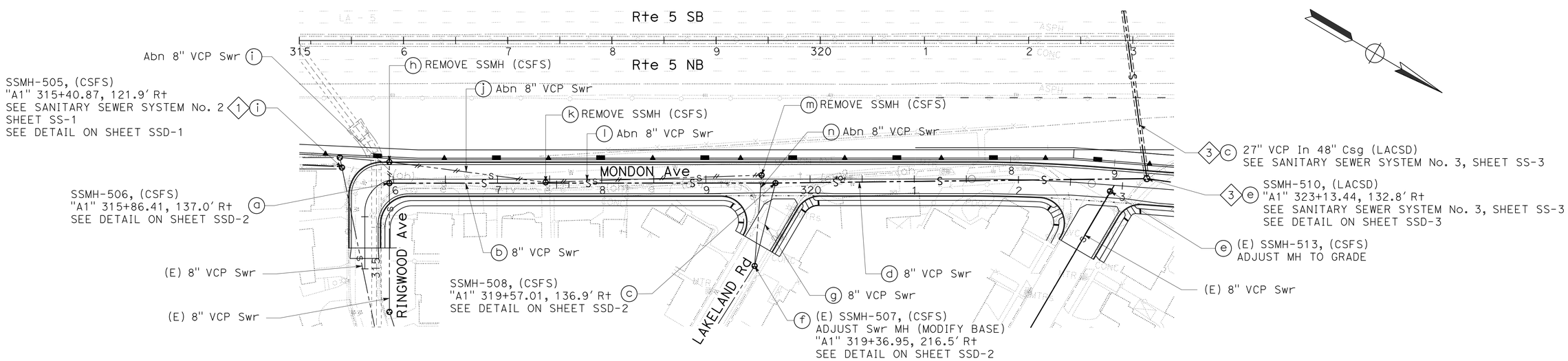

SANITARY SEWER SYSTEM No. 2
PLAN
SCALE: 1" = 50'

APPROVED FOR SANITARY SEWER WORK ONLY

SANITARY SEWER PLAN AND PROFILE
SCALE AS SHOWN

SS-2

REVISED BY | DATE REVISED
YIM T. TSE | NGIM NANCY PE
CALCULATED-DESIGNED BY | CHECKED BY
FUNCTIONAL SUPERVISOR: NGIM NANCY PE

STATE OF CALIFORNIA - DEPARTMENT OF TRANSPORTATION
Caltrans® OFFICE OF DESIGN A

S:\projects\215951\RESUBMIT-2\721595ja002.dgn

LAST REVISION 00-00-00 | DATE PLOTTED => 26-JUN-2013 | TIME PLOTTED => 16:06

BORDER LAST REVISED 7/2/2010 | USERNAME => s119571 | DGN FILE => 721595ja002.dgn | RELATIVE BORDER SCALE IS IN INCHES 0 1 2 3 | UNIT 1797 | PROJECT NUMBER & PHASE 07000018351

Dist	COUNTY	ROUTE	POST MILES TOTAL PROJECT	SHEET No.	TOTAL SHEETS
07	LA	5	0.0/7.6	190	985

REGISTERED CIVIL ENGINEER 10-11-12 DATE

6-24-13
PLANS APPROVAL DATE

REGISTERED PROFESSIONAL ENGINEER NGIM NANCY PE No. 58161 Exp. 6/30/14 CIVIL STATE OF CALIFORNIA

THE STATE OF CALIFORNIA OR ITS OFFICERS OR AGENTS SHALL NOT BE RESPONSIBLE FOR THE ACCURACY OR COMPLETENESS OF SCANNED COPIES OF THIS PLAN SHEET.

SANITARY SEWER SYSTEM No. 3
PROFILE

SCALE: Horiz 1" = 50'
Vert 1" = 5'

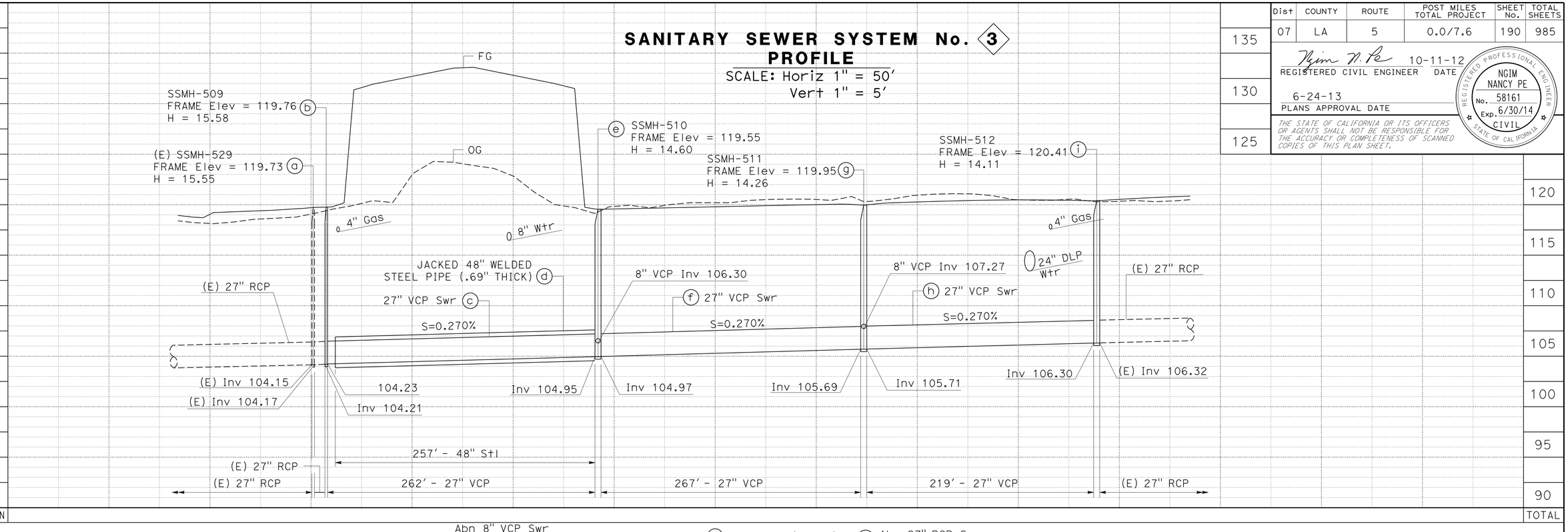

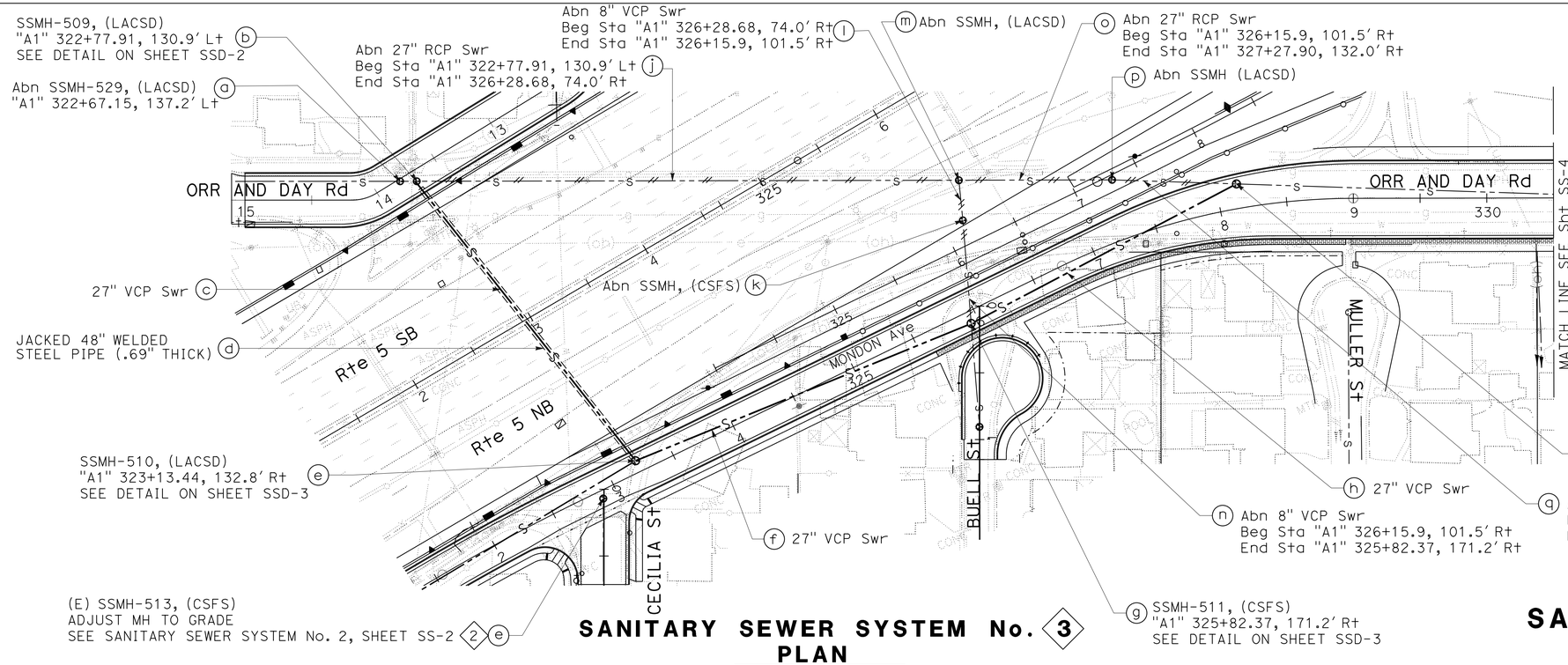

SANITARY SEWER SYSTEM No. 3
PLAN

SCALE: 1" = 50'

APPROVED FOR SANITARY SEWER WORK ONLY

NOTES:

1. 27" SEWER OWNED AND MAINTAINED BY LACSD.
2. 8" SEWER OWNED BY CITY OF SANTA FE SPRINGS AND MAINTAINED BY LOS ANGELES COUNTY CONSOLIDATED SEWER MAINTENANCE DISTRICT.
3. SEE DRAWINGS APPROVED BY LACSD FOR COMPLETE NOTES AND DETAILS ON 27" SEWER RELOCATION SHOWN HEREON.

SANITARY SEWER PLAN AND PROFILE

SCALE AS SHOWN

SS-3

STATE OF CALIFORNIA - DEPARTMENT OF TRANSPORTATION
OFFICE OF DESIGN A

FUNCTIONAL SUPERVISOR: NGIM NANCY PE
CALCULATED-DESIGNED BY: YIM T. TSE
CHECKED BY: NGIM NANCY PE
REVISED BY
DATE REVISED

S:\projects\21595\721595ja003.dgn

LAST REVISION 00-00-00
DATE PLOTTED => 26-JUN-2013
TIME PLOTTED => 16:06

Dist	COUNTY	ROUTE	POST MILES TOTAL PROJECT	SHEET No.	TOTAL SHEETS
07	LA	5	0.0/7.6	191	985

REGISTERED CIVIL ENGINEER 10-11-12 DATE

6-24-13
PLANS APPROVAL DATE

REGISTERED PROFESSIONAL ENGINEER NGIM NANCY PE No. 58161 Exp. 6/30/14 CIVIL STATE OF CALIFORNIA

THE STATE OF CALIFORNIA OR ITS OFFICERS OR AGENTS SHALL NOT BE RESPONSIBLE FOR THE ACCURACY OR COMPLETENESS OF SCANNED COPIES OF THIS PLAN SHEET.

SANITARY SEWER SYSTEM NO. 3
PROFILE
SCALE: Horiz 1" = 50'
Vert 1" = 5'

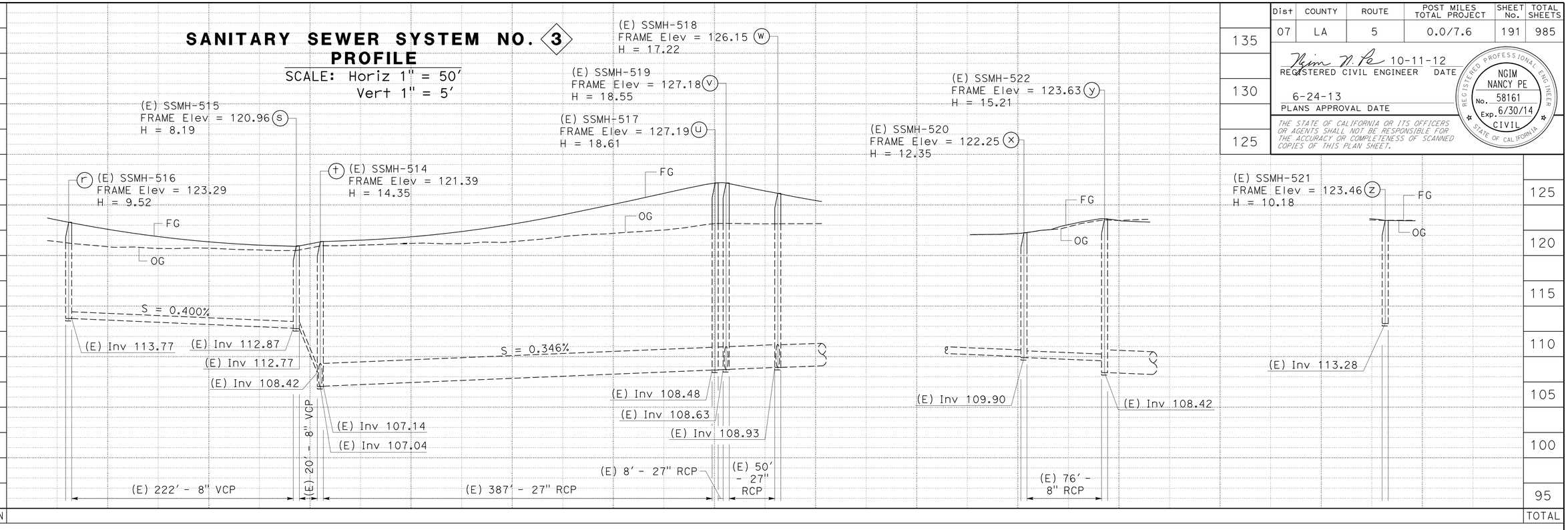

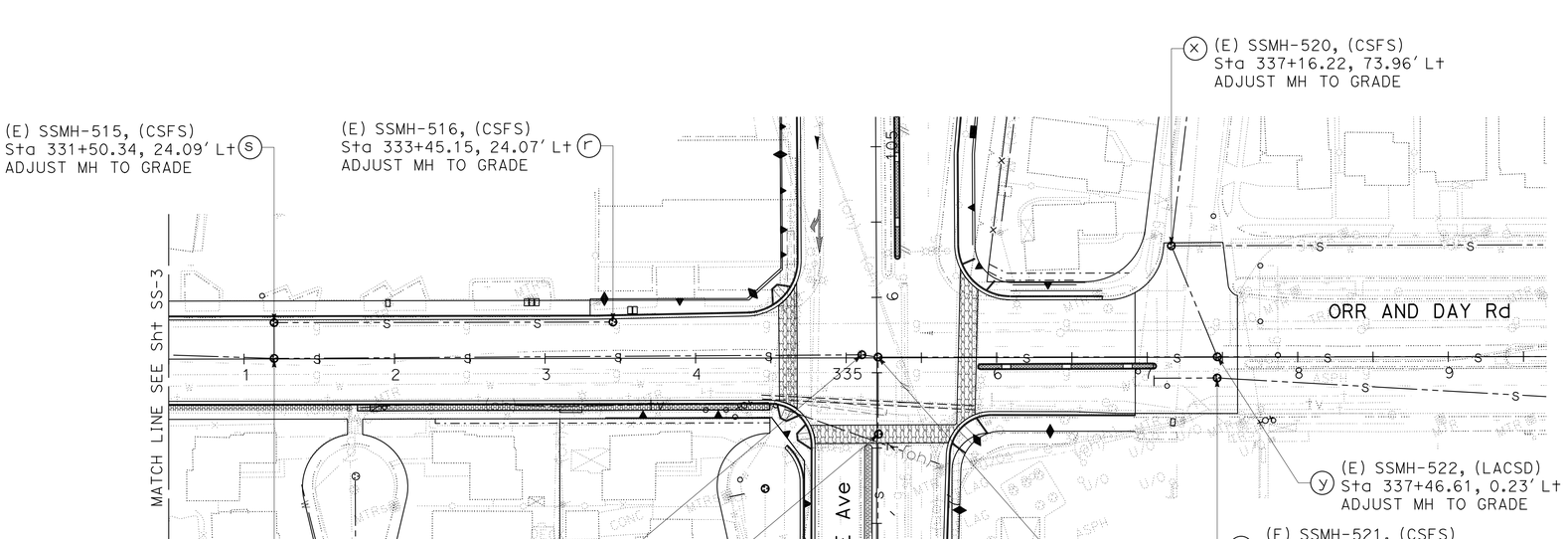

SANITARY SEWER SYSTEM NO. 3
PLAN
SCALE: 1" = 50'
APPROVED FOR SANITARY SEWER WORK ONLY

LACSD SEWER MH ADJUSTMENT NOTE:

CONTRACTOR SHALL FIELD VERIFY MANHOLE SHAFT TYPE (I.E., BRICK OR CONCRETE) PRIOR TO ADJUSTMENT, WHICH SHALL BE PERFORMED IN ACCORDANCE WITH THE REQUIREMENTS ON SS-7.

SANITARY SEWER PLAN AND PROFILE
SCALE AS SHOWN

SS-4

REVISED BY | DATE REVISED
YIM T. TSE | NGIM NANCY PE
CALCULATED-DESIGNED BY | CHECKED BY
FUNCTIONAL SUPERVISOR | NGIM NANCY PE

STATE OF CALIFORNIA - DEPARTMENT OF TRANSPORTATION
Caltrans® OFFICE OF DESIGN A

S:\projects\215951\721595ja004.dgn

LAST REVISION 00-00-00 | DATE PLOTTED => 26-JUN-2013 | TIME PLOTTED => 16:06

Dist	COUNTY	ROUTE	POST MILES TOTAL PROJECT	SHEET No.	TOTAL SHEETS
07	LA	5	0.0/7.6	192	985

REGISTERED CIVIL ENGINEER 10-11-12 DATE

6-24-13
PLANS APPROVAL DATE

REGISTERED PROFESSIONAL ENGINEER NGIM NANCY PE No. 58161 Exp. 6/30/14 CIVIL STATE OF CALIFORNIA

THE STATE OF CALIFORNIA OR ITS OFFICERS OR AGENTS SHALL NOT BE RESPONSIBLE FOR THE ACCURACY OR COMPLETENESS OF SCANNED COPIES OF THIS PLAN SHEET.

SANITARY SEWER SYSTEM No. 4
PROFILE

SCALE: Horiz 1" = 50'
Vert 1" = 5'

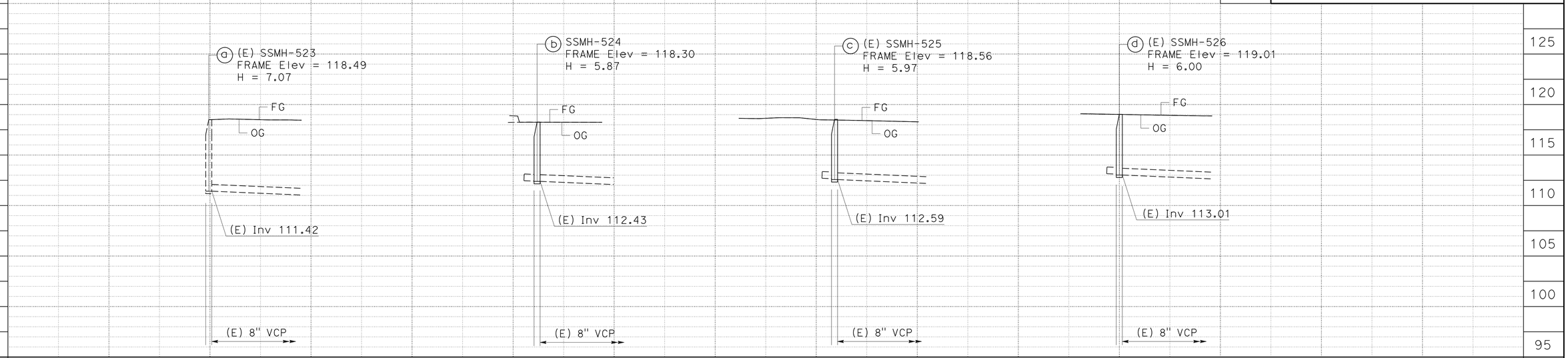

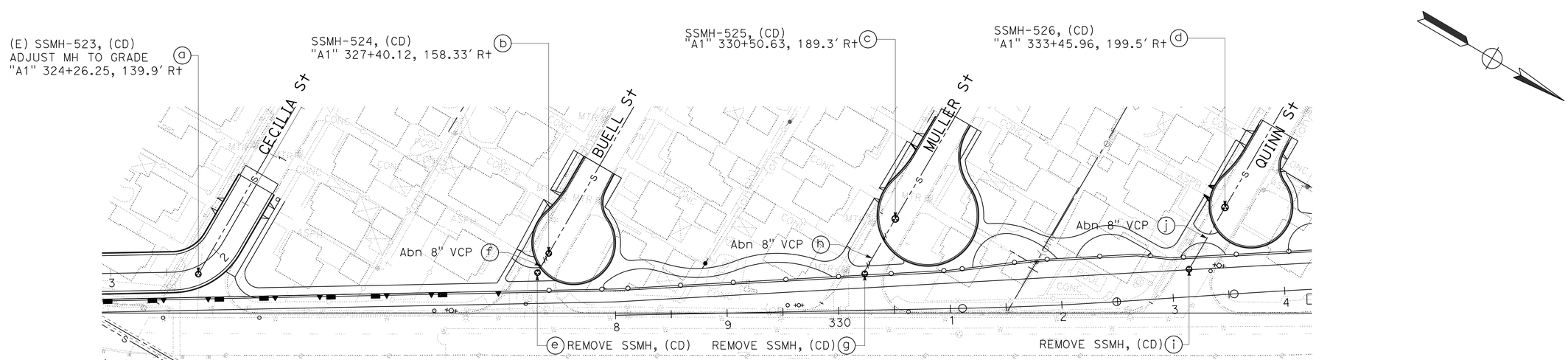

SANITARY SEWER SYSTEM No. 4
PLAN

SCALE: 1" = 50'

APPROVED FOR SANITARY SEWER WORK ONLY

SANITARY SEWER PLAN AND PROFILE

SCALE AS SHOWN

SS-5

REVISED BY | DATE REVISED
YIM T. TSE | NGIM NANCY PE
CALCULATED-DESIGNED BY | CHECKED BY
FUNCTIONAL SUPERVISOR | NGIM NANCY PE

STATE OF CALIFORNIA - DEPARTMENT OF TRANSPORTATION
Caltrans® OFFICE OF DESIGN A

S:\projects\215951\RESUBMIT-2\721595ja005.dgn

LAST REVISION 00-00-00 | DATE PLOTTED => 26-JUN-2013 | TIME PLOTTED => 16:06

BORDER LAST REVISED 7/2/2010 | USERNAME => s119571 | DGN FILE => 721595ja005.dgn | RELATIVE BORDER SCALE IS IN INCHES 0 1 2 3 | UNIT 1797 | PROJECT NUMBER & PHASE 07000018351

Dist	COUNTY	ROUTE	POST MILES TOTAL PROJECT	SHEET No.	TOTAL SHEETS
07	LA	5	0.0/7.6	193	985

REGISTERED CIVIL ENGINEER 10-11-12 DATE

6-24-13
PLANS APPROVAL DATE

REGISTERED PROFESSIONAL ENGINEER NGIM NANCY PE No. 58161 Exp. 6/30/14 CIVIL STATE OF CALIFORNIA

THE STATE OF CALIFORNIA OR ITS OFFICERS OR AGENTS SHALL NOT BE RESPONSIBLE FOR THE ACCURACY OR COMPLETENESS OF SCANNED COPIES OF THIS PLAN SHEET.

SANITARY SEWER SYSTEM No. 4
PROFILE

SCALE: Horiz 1" = 50'
Vert 1" = 5'

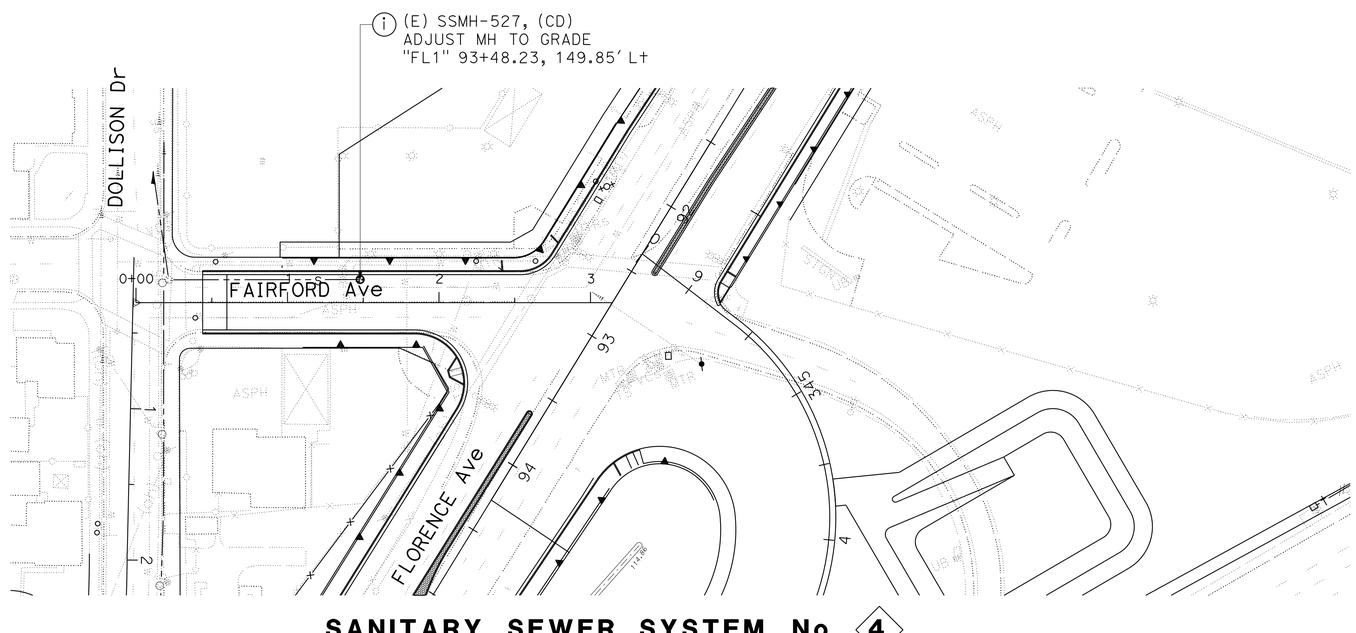

SANITARY SEWER SYSTEM No. 4
PLAN

SCALE: 1" = 50'

APPROVED FOR SANITARY SEWER WORK ONLY

SANITARY SEWER PLAN AND PROFILE

SCALE AS SHOWN

SS-6

REVISED BY | DATE REVISED
YIM T. TSE | NGIM NANCY PE
CALCULATED-DESIGNED BY | CHECKED BY
FUNCTIONAL SUPERVISOR: NGIM NANCY PE

STATE OF CALIFORNIA - DEPARTMENT OF TRANSPORTATION
Caltrans® OFFICE OF DESIGN A

S:\projects\215951\721595ja006.dgn

LAST REVISION 00-00-00 | DATE PLOTTED => 26-JUN-2013 | TIME PLOTTED => 16:06

Dist	COUNTY	ROUTE	POST MILES TOTAL PROJECT	SHEET No.	TOTAL SHEETS
07	LA	5	0.0/7.6	194	985

REGISTERED CIVIL ENGINEER DATE 10-11-12

6-24-13
PLANS APPROVAL DATE

REGISTERED PROFESSIONAL ENGINEER NGIM NANCY PE No. 58161 Exp. 6-30-14 CIVIL STATE OF CALIFORNIA

THE STATE OF CALIFORNIA OR ITS OFFICERS OR AGENTS SHALL NOT BE RESPONSIBLE FOR THE ACCURACY OR COMPLETENESS OF SCANNED COPIES OF THIS PLAN SHEET.

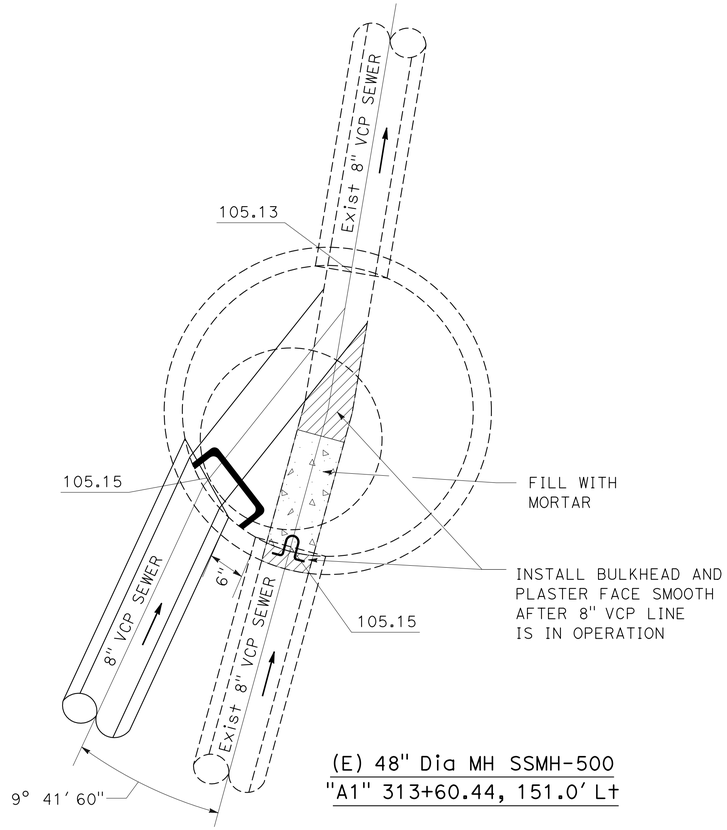

(E) 48" Dia MH SSMH-500
"A1" 313+60.44, 151.0' Lt

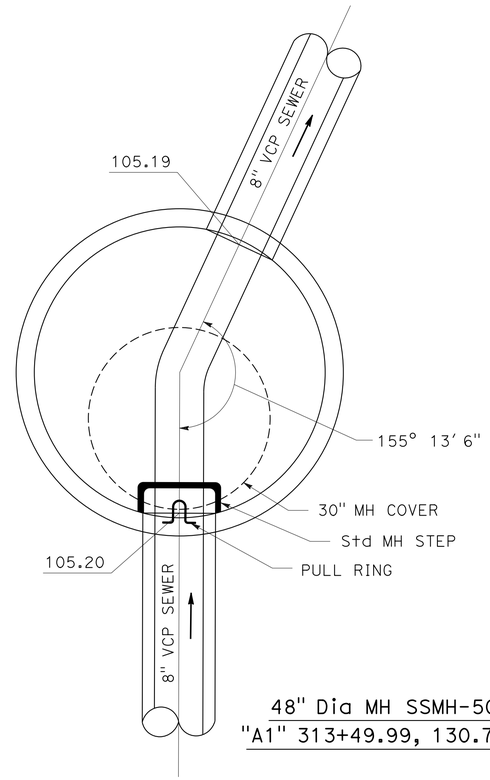

48" Dia MH SSMH-501
"A1" 313+49.99, 130.7' Lt

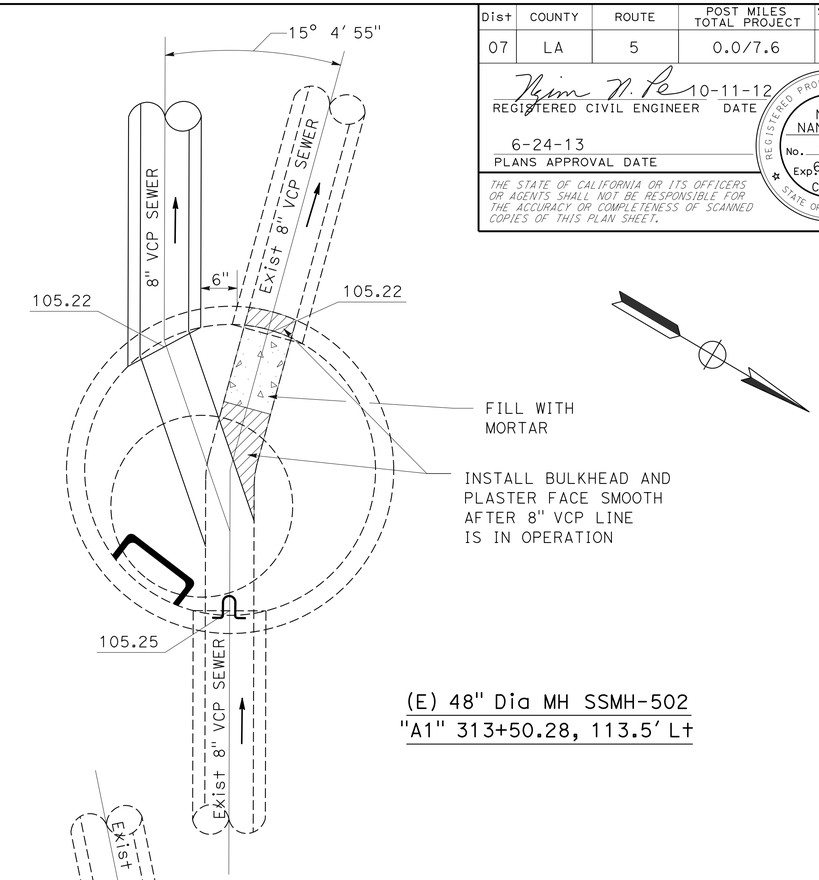

(E) 48" Dia MH SSMH-502
"A1" 313+50.28, 113.5' Lt

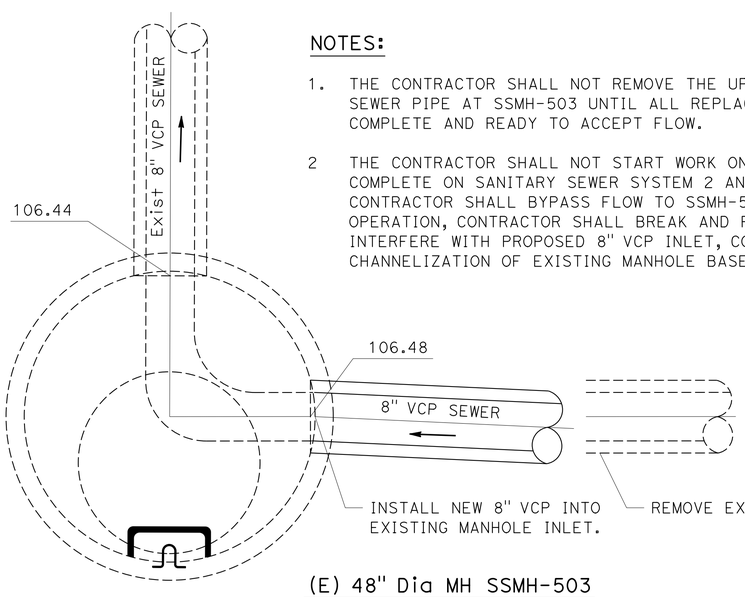

(E) 48" Dia MH SSMH-503
"A1" 313+50.08, 112.7' Rt

NOTES:

1. THE CONTRACTOR SHALL NOT REMOVE THE UPSTREAM INTERFERING PORTION OF SEWER PIPE AT SSMH-503 UNTIL ALL REPLACEMENT UPSTREAM SYSTEMS ARE COMPLETE AND READY TO ACCEPT FLOW.

2 THE CONTRACTOR SHALL NOT START WORK ON THIS SYSTEM UNTIL WORK IS COMPLETE ON SANITARY SEWER SYSTEM 2 AND SANITARY SEWER SYSTEM 3. CONTRACTOR SHALL BYPASS FLOW TO SSMH-506. ONCE BYPASS SYSTEM IS IN OPERATION, CONTRACTOR SHALL BREAK AND REMOVE EXISTING 8" VCP, THAT INTERFERE WITH PROPOSED 8" VCP INLET, CONNECT THE 8" VCP, COMPLETE CHANNELIZATION OF EXISTING MANHOLE BASE IN THE DRY.

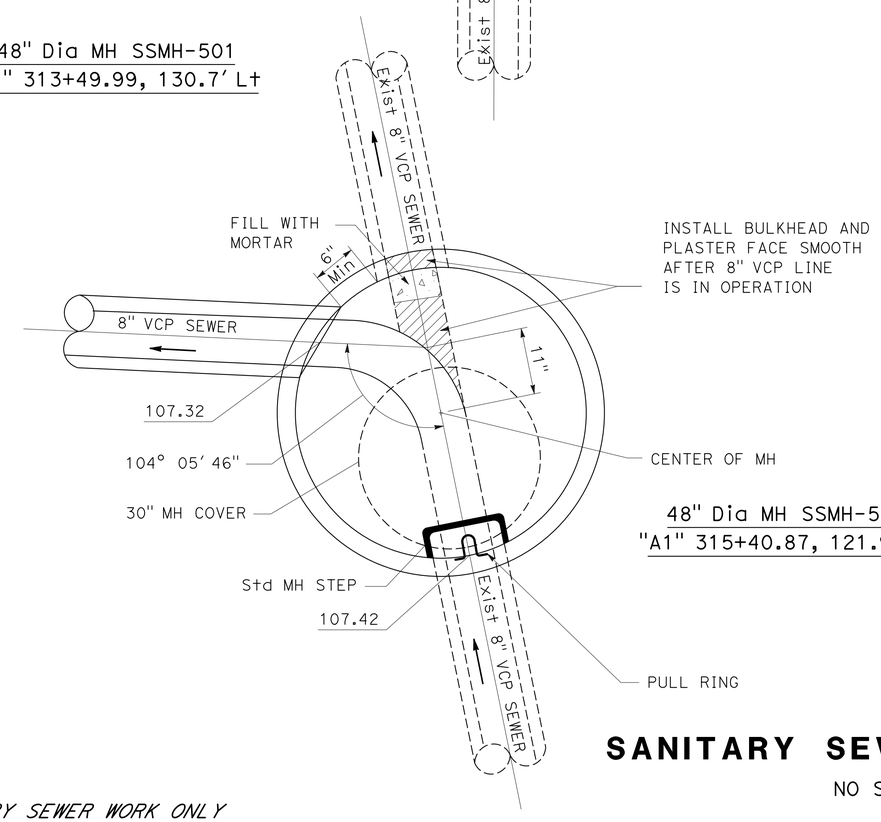

48" Dia MH SSMH-505
"A1" 315+40.87, 121.9' Rt

SANITARY SEWER DETAILS

NO SCALE

SSD-1

APPROVED FOR SANITARY SEWER WORK ONLY

REVISED BY	DATE REVISED
YIM T. TSE	NGIM NANCY PE
CALCULATED-DESIGNED BY	CHECKED BY
FUNCTIONAL SUPERVISOR	NGIM NANCY PE

STATE OF CALIFORNIA - DEPARTMENT OF TRANSPORTATION
Caltrans® OFFICE OF DESIGN A

S:\projects\215951\721595jc001.dgn

LAST REVISION 09-11-12 | DATE PLOTTED => 26-JUN-2013 | TIME PLOTTED => 16:06

Dist	COUNTY	ROUTE	POST MILES TOTAL PROJECT	SHEET No.	TOTAL SHEETS
07	LA	5	0.0/7.6	195	985

REGISTERED CIVIL ENGINEER 10-11-12 DATE

6-24-13
PLANS APPROVAL DATE

REGISTERED PROFESSIONAL ENGINEER NGIM NANCY PE No. 58161 Exp. 6-30-14 CIVIL STATE OF CALIFORNIA

THE STATE OF CALIFORNIA OR ITS OFFICERS OR AGENTS SHALL NOT BE RESPONSIBLE FOR THE ACCURACY OR COMPLETENESS OF SCANNED COPIES OF THIS PLAN SHEET.

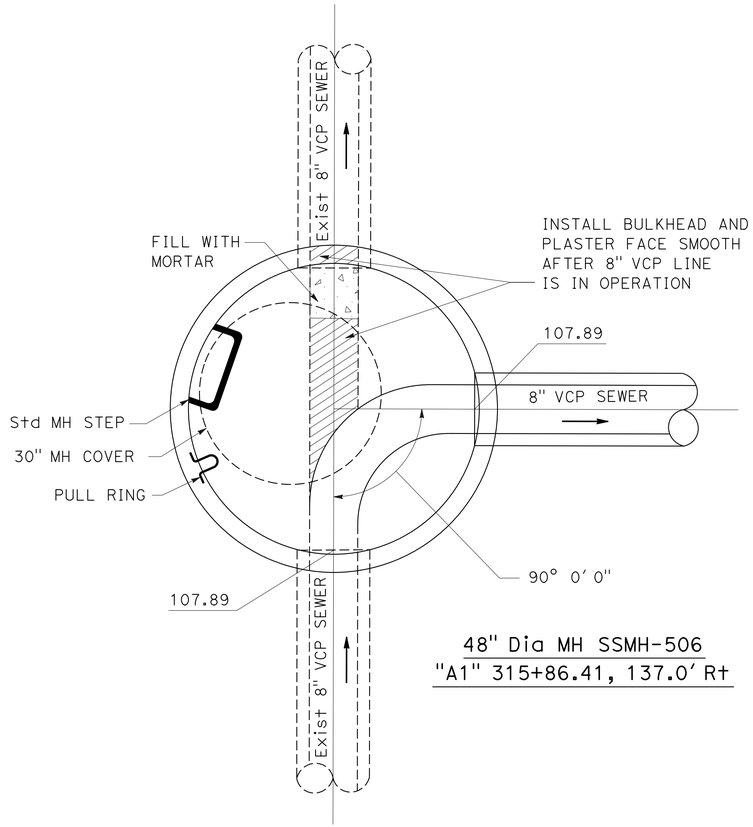

48" Dia MH SSMH-506
"A1" 315+86.41, 137.0′ Rt

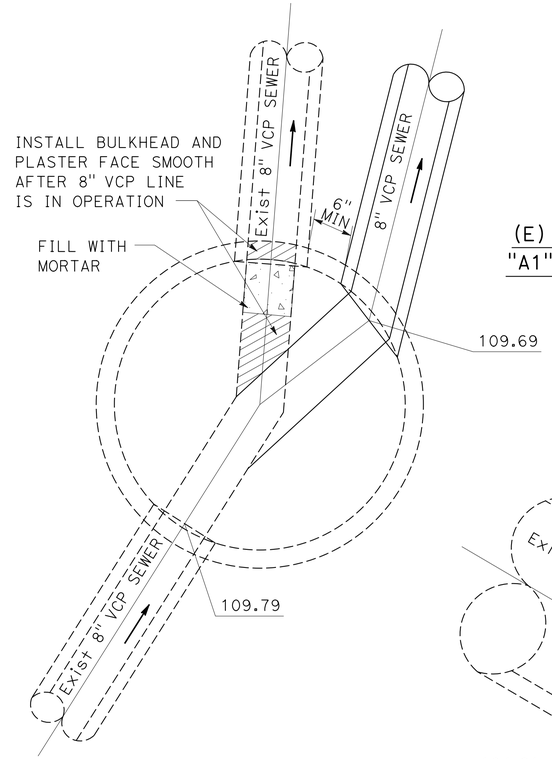

(E) 48" Dia MH SSMH-507
"A1" 319+36.95, 216.5′ Rt

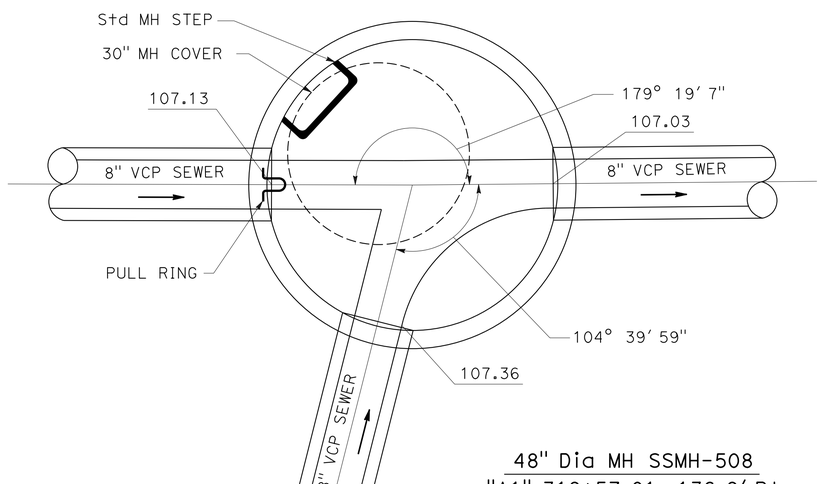

48" Dia MH SSMH-508
"A1" 319+57.01, 136.9′ Rt

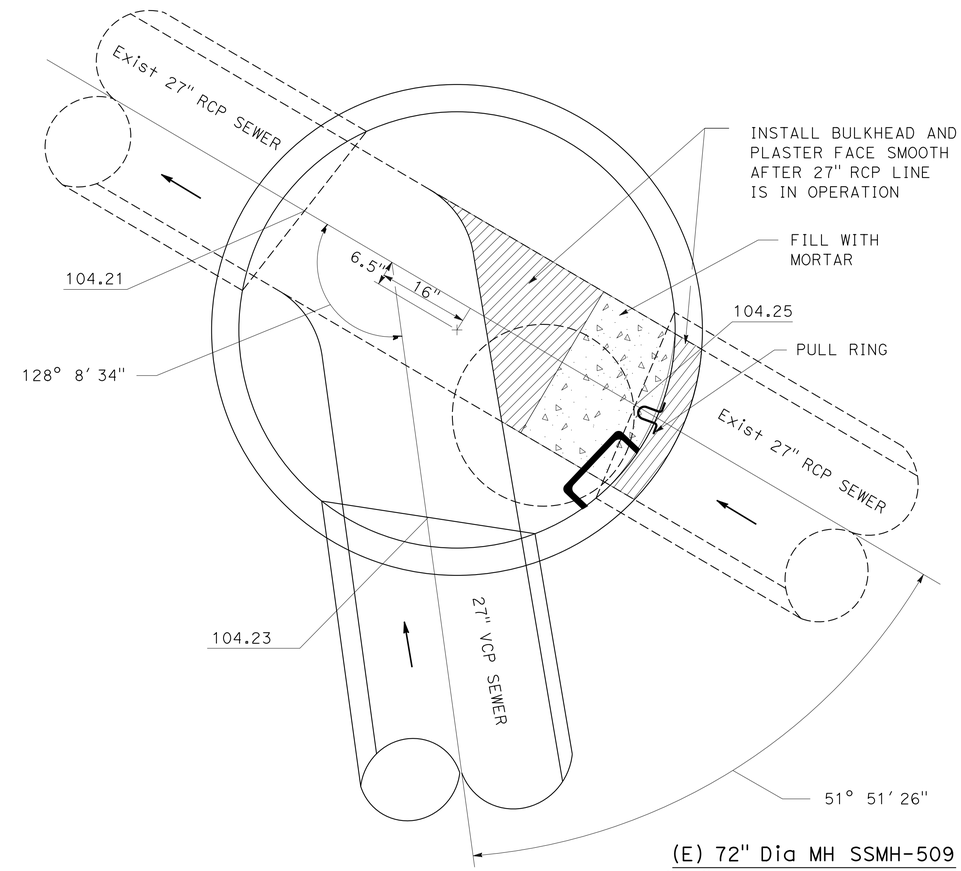

(E) 72" Dia MH SSMH-509
"A1" 322+77.91, 130.9′ Lt

SANITARY SEWER DETAILS

NO SCALE

SSD-2

APPROVED FOR SANITARY SEWER WORK ONLY

REVISED BY	DATE REVISED

CALCULATED-DESIGNED BY: YIM T. TSE
CHECKED BY: NGIM NANCY PE
FUNCTIONAL SUPERVISOR: NGIM NANCY PE

STATE OF CALIFORNIA - DEPARTMENT OF TRANSPORTATION
Caltrans® OFFICE OF DESIGN A

S:\projects\215951\RESUBMIT-2\721595jc002.dgn

LAST REVISION 09-11-12 | DATE PLOTTED => 26-JUN-2013 | TIME PLOTTED => 16:06

Dist	COUNTY	ROUTE	POST MILES TOTAL PROJECT	SHEET No.	TOTAL SHEETS
07	LA	5	0.0/7.6	196	985

REGISTERED CIVIL ENGINEER 10-11-12 DATE

6-24-13
PLANS APPROVAL DATE

REGISTERED PROFESSIONAL ENGINEER
NGIM NANCY PE
No. 58161
Exp 6-30-14
CIVIL
STATE OF CALIFORNIA

THE STATE OF CALIFORNIA OR ITS OFFICERS OR AGENTS SHALL NOT BE RESPONSIBLE FOR THE ACCURACY OR COMPLETENESS OF SCANNED COPIES OF THIS PLAN SHEET.

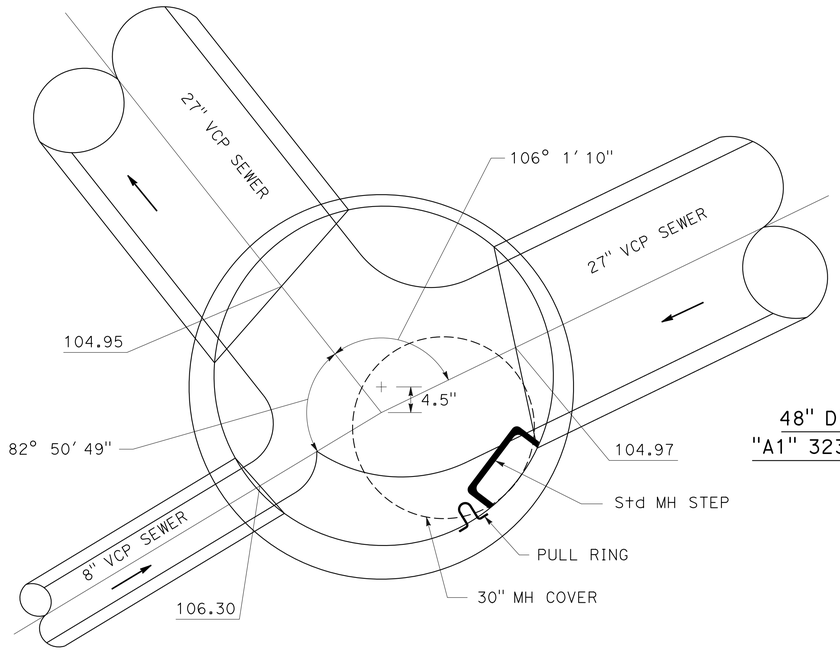

48" Dia MH SSMH-510
"A1" 323+13.44, 132.8′ Rt

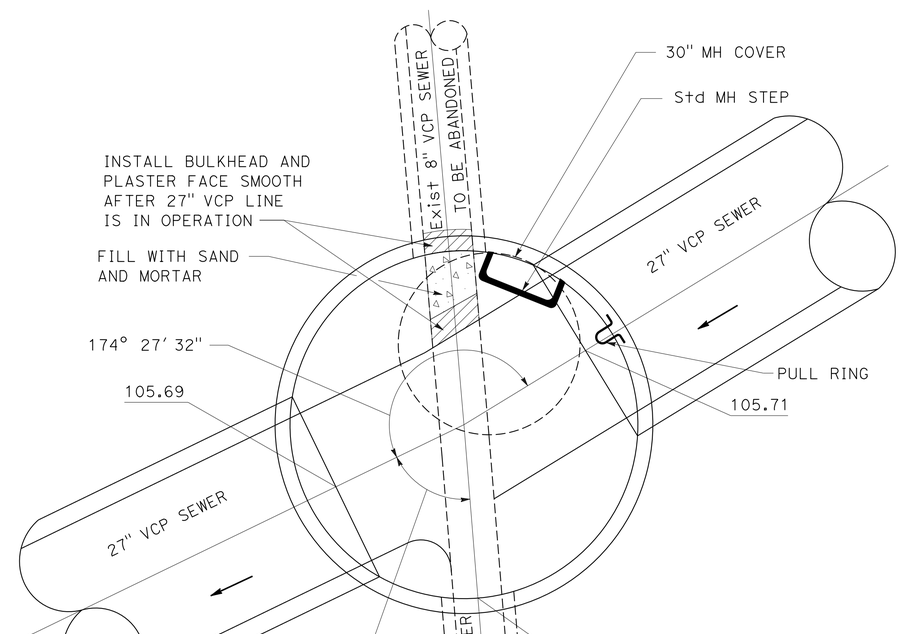

60" Dia MH SSMH-511
"A1" 325+82.37, 171.2′ Rt

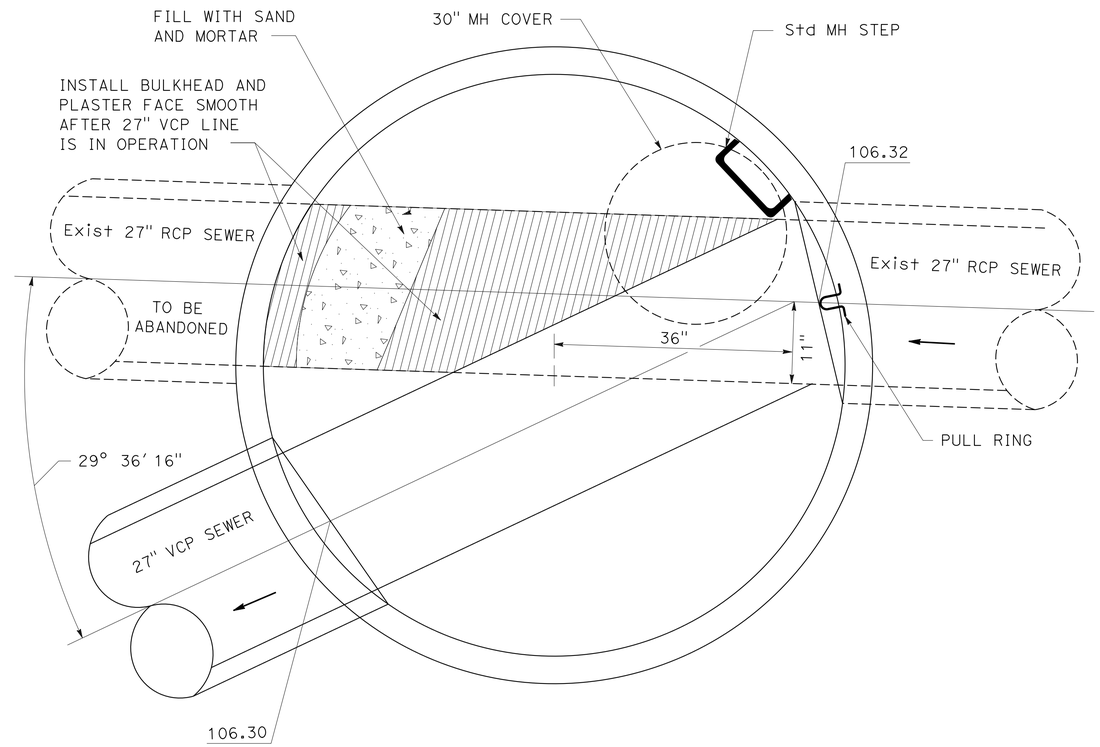

96" Dia MH SSMH-512
"A1" 328+06.71, 181.6′ Rt

SANITARY SEWER DETAILS

NO SCALE

SSD-3

APPROVED FOR SANITARY SEWER WORK ONLY

REVISED BY	DATE REVISED
YIM T. TSE	NGIM NANCY PE
CALCULATED-DESIGNED BY	CHECKED BY
FUNCTIONAL SUPERVISOR	NGIM NANCY PE

STATE OF CALIFORNIA - DEPARTMENT OF TRANSPORTATION
Caltrans® OFFICE OF DESIGN A

S:\projects\215951\721595jc003.dgn

LAST REVISION 09-11-12 | DATE PLOTTED => 26-JUN-2013 | TIME PLOTTED => 16:07

BORDER LAST REVISED 7/2/2010 | USERNAME => s119571 | DGN FILE => 721595jc003.dgn | RELATIVE BORDER SCALE IS IN INCHES 0 1 2 3 | UNIT 1797 | PROJECT NUMBER & PHASE 07000018351

Dist	COUNTY	ROUTE	POST MILES TOTAL PROJECT	SHEET No.	TOTAL SHEETS
07	LA	5	0.0/7.6	197	985

REGISTERED CIVIL ENGINEER 10-11-12 DATE

6-24-13
PLANS APPROVAL DATE

REGISTERED PROFESSIONAL ENGINEER NGIM NANCY PE No. 58161 Exp 6-30-14 CIVIL STATE OF CALIFORNIA

THE STATE OF CALIFORNIA OR ITS OFFICERS OR AGENTS SHALL NOT BE RESPONSIBLE FOR THE ACCURACY OR COMPLETENESS OF SCANNED COPIES OF THIS PLAN SHEET.

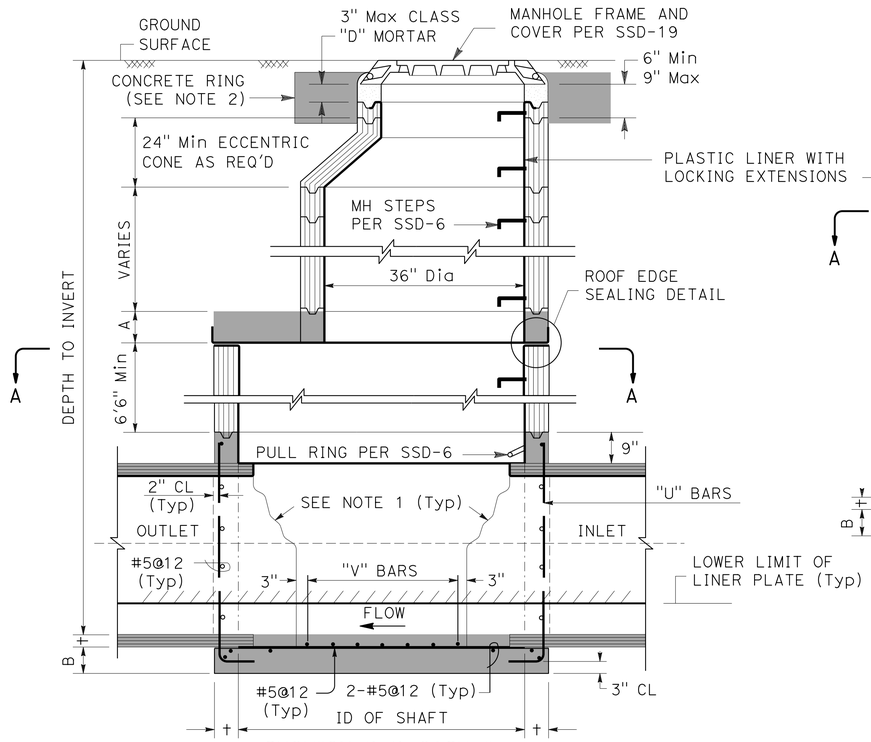

SECTION B-B CASE I

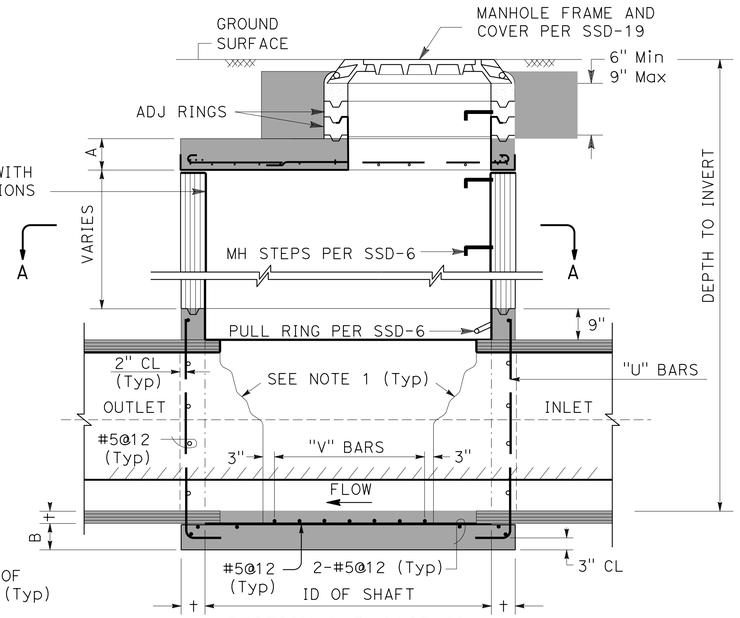

SECTION B-B CASE II

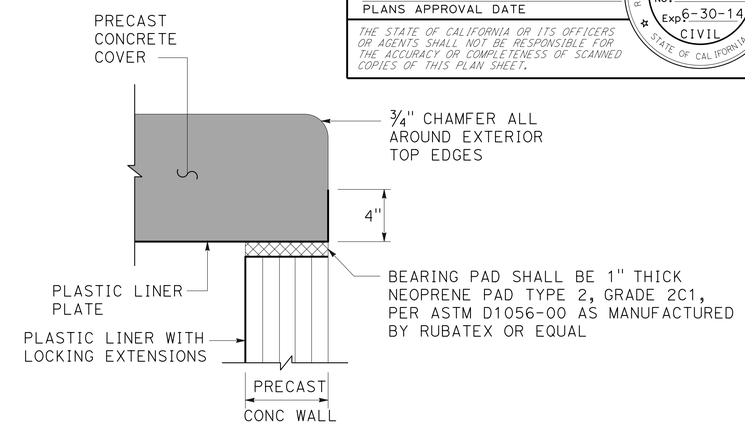

ROOF EDGE SEALING DETAIL

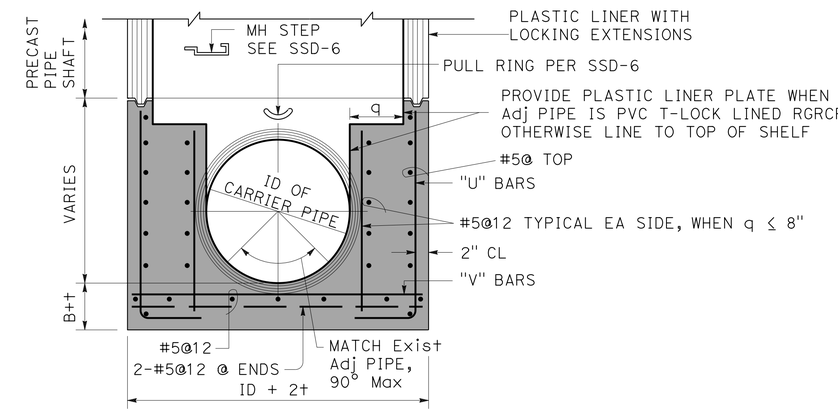

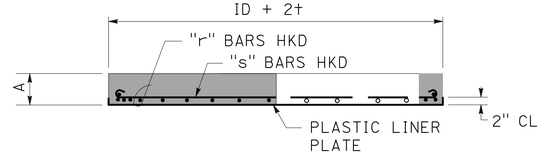

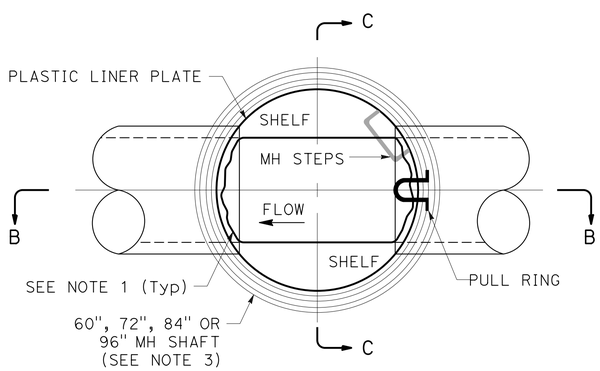

PLAN - SECTION A-A

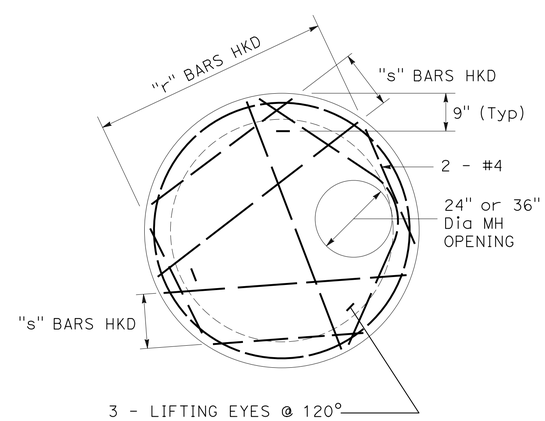

DETAIL OF FLAT SLAB TOP
24" OR 36" X 60", 72", 84" OR 96"

TABLE OF REINFORCING BARS							
SHAFT DIAMETER	DEPTH TO Inv	DIMENSIONS		REINFORCING BARS			
		A	B	"r"	"s"	"u"	"v"
60"	UP TO 15'	10"	8"	#6@6	#6@6	#5@12	#5@12
	16' TO 30'	12"	10"	#7@6	#7@6	#6@10	#6@12
72"	UP TO 15'	10"	8"	#6@6	#6@6	#5@12	#5@12
	16' TO 30'	12"	10"	#8@6	#8@6	#7@12	#7@12
84"	UP TO 15'	10"	10"	#7@6	#7@6	#5@12	#5@12
	16' TO 30'	14"	10"	#8@6	#8@6	#7@12	#8@12
96"	UP TO 15'	12"	10"	#7@6	#7@6	#6@12	#6@12
	16' TO 30'	15"	12"	#8@6	#8@6	#7@6	#8@12

STANDARD 72" AND 96" MANHOLE

APPROVED FOR SANITARY SEWER WORK ONLY.

CONSTRUCTION NOTES:

1. THE TOP PORTION OF THE PIPE WITHIN THE MANHOLE SHALL BE CUT OUT AS NECESSARY TO PROVIDE A CIRCULAR OPENING BETWEEN THE PIPE ENDS OF AT LEAST 54" IN THE 60" DIAMETER MANHOLE, 66" IN THE 72" DIAMETER MANHOLE, 78" IN THE 84" DIAMETER MANHOLE, AND 90" IN THE 96" DIAMETER MANHOLE. THE CUT ENDS SHALL BE PLASTERED SMOOTH WITH CEMENT MORTAR FOR CONCRETE PIPE AND EPOXY FOR CLAY PIPE. THE CIRCULAR OPENING SHALL BE CUT PRIOR TO INSTALLATION OF THE RISER SECTIONS.
2. A 12" WIDE BY 12" HIGH CONCRETE RING SHALL BE PROVIDED AROUND THE MANHOLE FRAME. IN UNPAVED AREAS, THE CONCRETE RING SHALL BE PROVIDED WITH #3 REBAR, 30 DIAMETER LAP.
3. RISER SECTIONS 60" THROUGH 96" I.D. SHALL BE REINFORCED IN ACCORDANCE WITH ASTM C 478 AND SHALL HAVE THE FOLLOWING MINIMUM WALL THICKNESS (t).

   60" I.D. - 5", 72" I.D. - 6", 84" I.D. - 7", 96" I.D. - 8"

SANITARY SEWER DETAILS

NO SCALE

SSD-4

REVISED BY | DATE REVISED
YIM T. TSE | NGIM NANCY PE
CALCULATED-DESIGNED BY | CHECKED BY
FUNCTIONAL SUPERVISOR | NGIM NANCY PE

STATE OF CALIFORNIA - DEPARTMENT OF TRANSPORTATION
Caltrans® OFFICE OF DESIGN A

S:\projects\21595\721595jc004.dgn

LAST REVISION 09-11-12 | DATE PLOTTED => 28-JUN-2013 | TIME PLOTTED => 05:43

Dist	COUNTY	ROUTE	POST MILES TOTAL PROJECT	SHEET No.	TOTAL SHEETS
07	LA	5	0.0/7.6	198	985

REGISTERED CIVIL ENGINEER DATE 10-11-12

6-24-13
PLANS APPROVAL DATE

REGISTERED PROFESSIONAL ENGINEER NGIM NANCY PE No. 58161 Exp. 6-30-14 CIVIL STATE OF CALIFORNIA

THE STATE OF CALIFORNIA OR ITS OFFICERS OR AGENTS SHALL NOT BE RESPONSIBLE FOR THE ACCURACY OR COMPLETENESS OF SCANNED COPIES OF THIS PLAN SHEET.

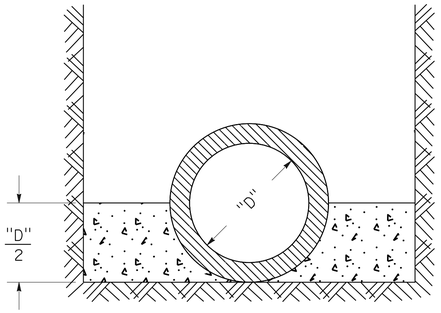

CASE I - CONCRETE CRADLE

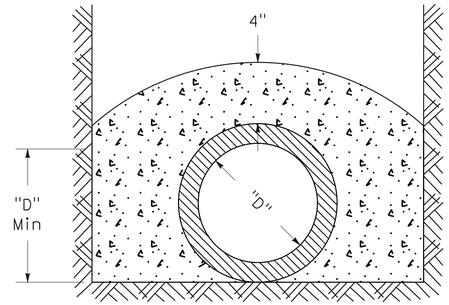

CASE II - CONCRETE ENCASEMENT

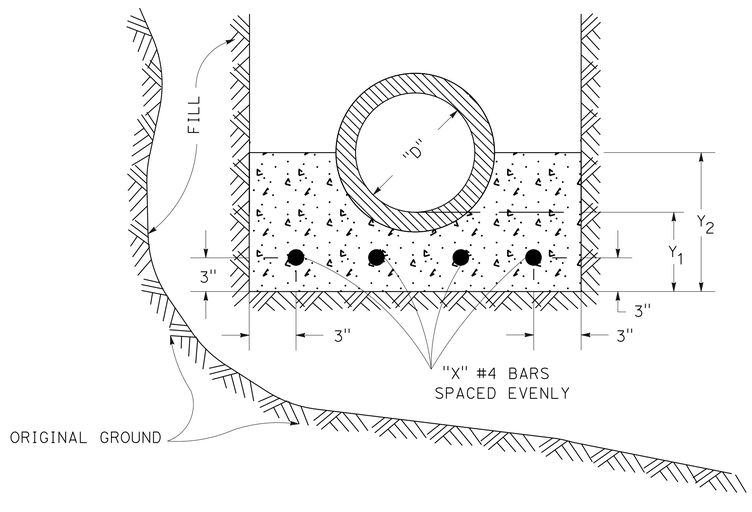

CASE III - SPECIAL CRADLE

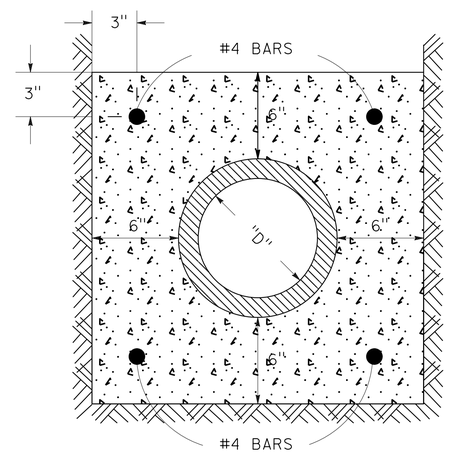

CASE IV - SPECIAL ENCASEMENT

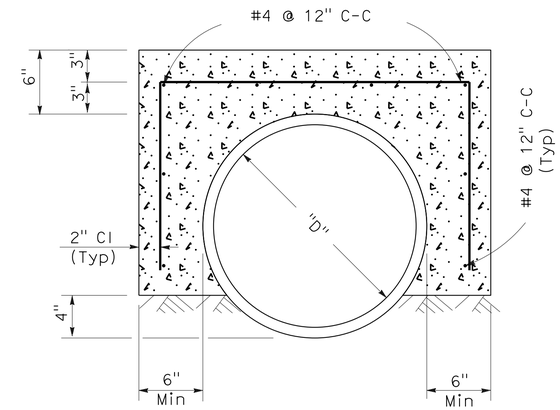

CASE V - CONCRETE ENCASEMENT

SCHEDULE OF DIMENSIONS AND REINFORCING BARS
FOR SPECIAL CRADLE CASE III

"D" (DIAMETER)	"X" NUMBER OF #4 BARS	THICKNESS	
		Y_1	Y_2
6"	2	4"	8"
8"	4	5"	10"
10"	4	6"	12"
12"	4	7"	15"
15"	5	9"	19"
18"	5	10"	22"
21"	6	12"	26"
24"	6	13"	28"

CRADLING AND ENCASEMENT

GENERAL NOTES

1. EXTEND BOTH ENDS OF CRADLE OR ENCASEMENT TO A POINT 25 (ONE INCH) SHORT OF FIRST PIPE JOINT BEYOND LOCATIONS SPECIFIED ON PLAN.

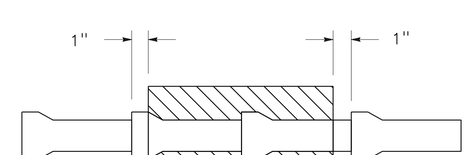

PLAN VIEW

2. APPLY FORM OIL, THIN PLASTIC SHEET, OR OTHER ACCEPTABLE MATERIAL TO PIPE, TO PREVENT BOND BETWEEN PIPE AND CONCRETE.

3. USE TYPE 2 CONCRETE.

APPROVED FOR SANITARY SEWER WORK ONLY.

SANITARY SEWER DETAILS

NO SCALE

SSD-5

REVISED BY | DATE REVISED
YIM T. TSE | NGIM NANCY PE
CALCULATED-DESIGNED BY | CHECKED BY
FUNCTIONAL SUPERVISOR | NGIM NANCY PE

STATE OF CALIFORNIA - DEPARTMENT OF TRANSPORTATION
Caltrans® OFFICE OF DESIGN A

S:\projects\215951\721595jc005.dgn

LAST REVISION 09-11-12 | DATE PLOTTED => 26-JUN-2013 | TIME PLOTTED => 16:07

Dist	COUNTY	ROUTE	POST MILES TOTAL PROJECT	SHEET No.	TOTAL SHEETS
07	LA	5	0.0/7.6	199	985

REGISTERED CIVIL ENGINEER 10-11-12 DATE

6-24-13
PLANS APPROVAL DATE

REGISTERED PROFESSIONAL ENGINEER NGIM NANCY PE No. 58161 Exp 6-30-14 CIVIL STATE OF CALIFORNIA

THE STATE OF CALIFORNIA OR ITS OFFICERS OR AGENTS SHALL NOT BE RESPONSIBLE FOR THE ACCURACY OR COMPLETENESS OF SCANNED COPIES OF THIS PLAN SHEET.

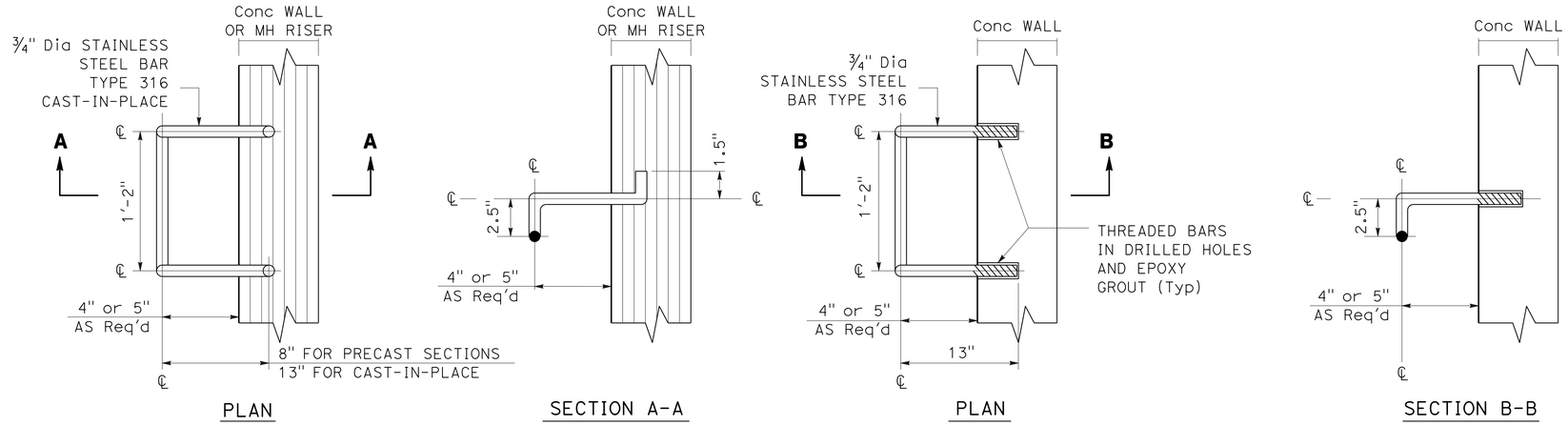

TYPE I MANHOLE STEP

TYPE II MANHOLE STEP

STANDARD MANHOLE STEP

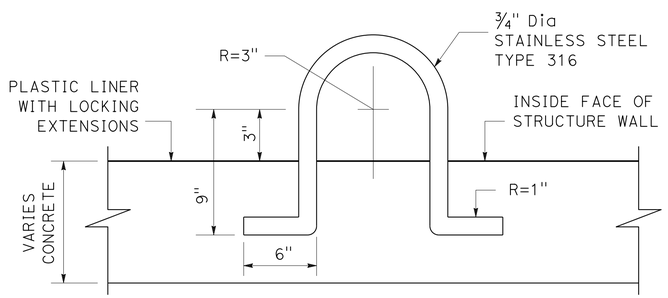

FOR CONCRETE STRUCTURE OR TYPE "A" MANHOLE WALL

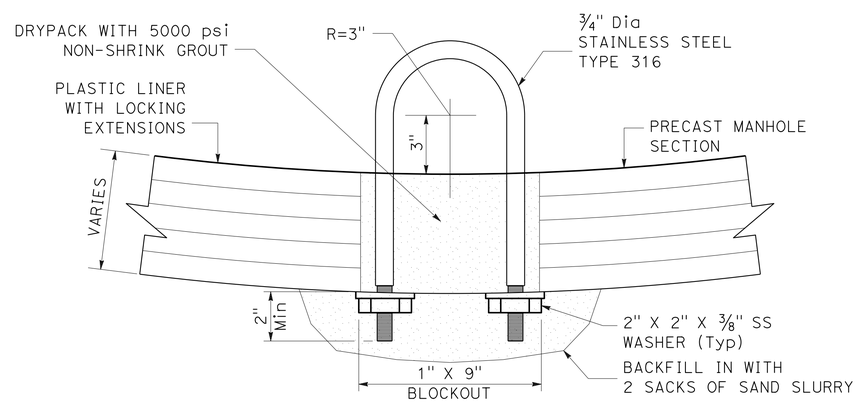

FOR PRECAST MANHOLE SECTION OR CONCRETE WALL LESS THAN 102

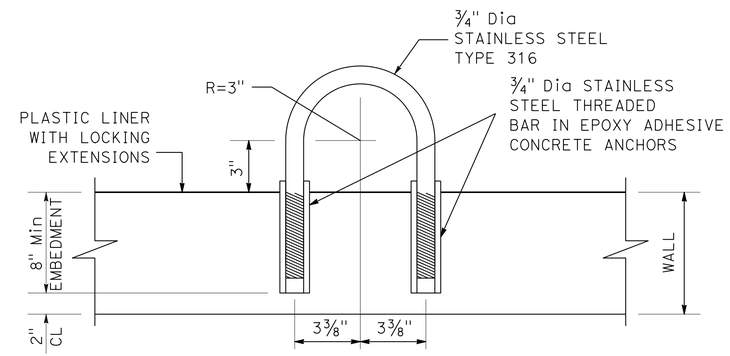

ALTERNATE PULL RING FOR CONCRETE STRUCTURE

STANDARD PULL RING

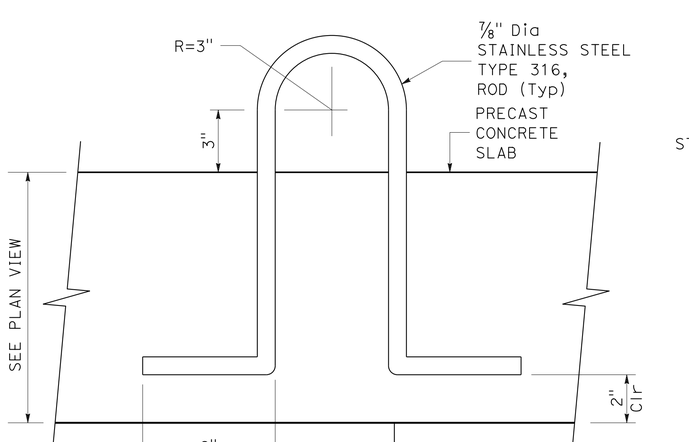

TYPE I LIFTING EYE DETAIL

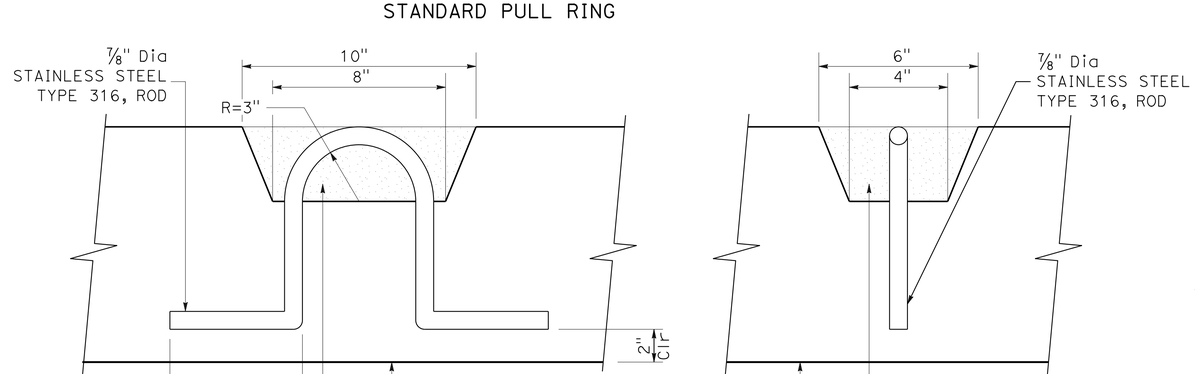

SECTION A-A

SECTION B-B

STANDARD LIFTING EYE

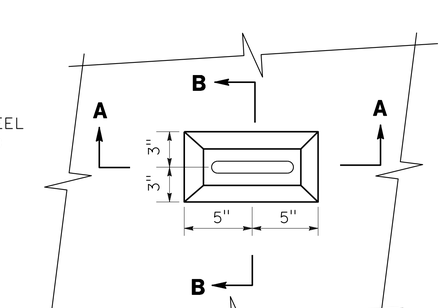

PLAN

APPROVED FOR SANITARY SEWER WORK ONLY.

SANITARY SEWER DETAILS

NO SCALE

SSD-6

REVISED BY	DATE REVISED

CALCULATED-DESIGNED BY	CHECKED BY
YIM T. TSE	NGIM NANCY PE

FUNCTIONAL SUPERVISOR: NGIM NANCY PE

STATE OF CALIFORNIA - DEPARTMENT OF TRANSPORTATION
Caltrans® OFFICE OF DESIGN A

S:\projects\215951\721595jc006.dgn

LAST REVISION 09-11-12 | DATE PLOTTED => 26-JUN-2013 | TIME PLOTTED => 16:07

Dist	COUNTY	ROUTE	POST MILES TOTAL PROJECT	SHEET No.	TOTAL SHEETS
07	LA	5	0.0/7.6	200	985

REGISTERED CIVIL ENGINEER 10-11-12 DATE

6-24-13
PLANS APPROVAL DATE

REGISTERED PROFESSIONAL ENGINEER NGIM NANCY PE No. 58161 Exp 6-30-14 CIVIL STATE OF CALIFORNIA

THE STATE OF CALIFORNIA OR ITS OFFICERS OR AGENTS SHALL NOT BE RESPONSIBLE FOR THE ACCURACY OR COMPLETENESS OF SCANNED COPIES OF THIS PLAN SHEET.

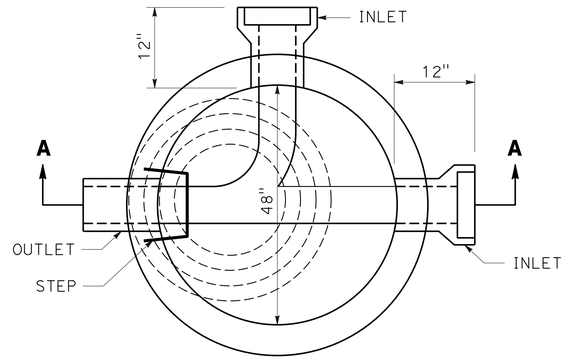

PLAN
SHOWING BASE

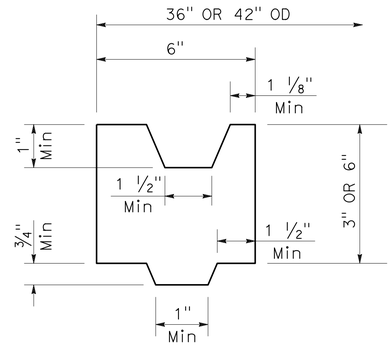

ADJUSTING RING DETAIL

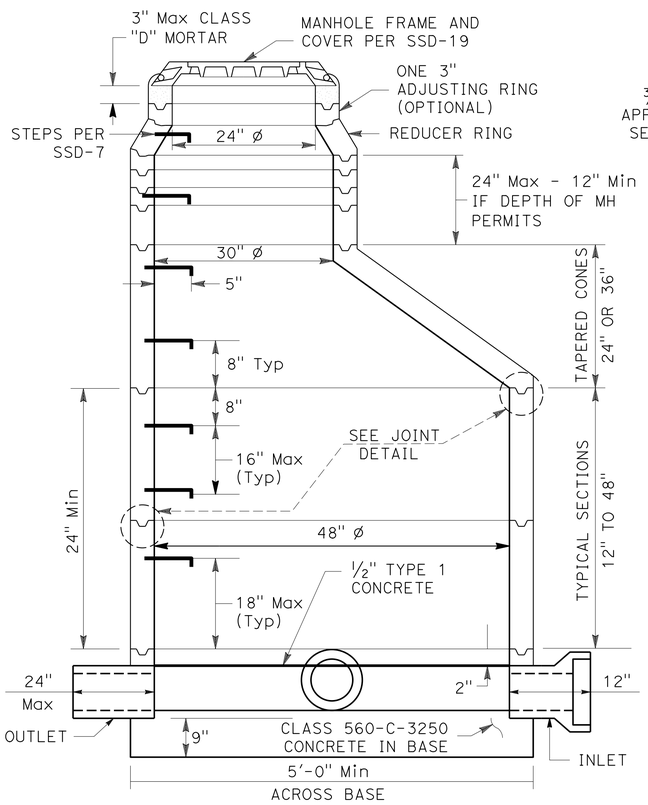

SECTION A-A

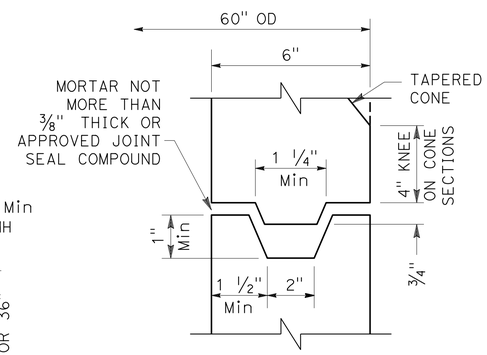

JOINT DETAIL
NON-REINFORCED

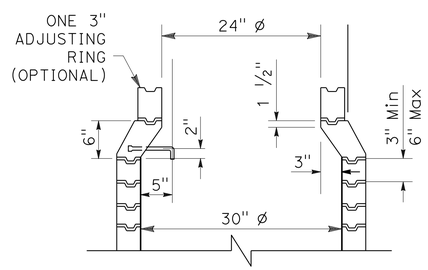

REDUCER RING AND ADJUSTING RINGS

PRECAST CONCRETE SEWER MANHOLE

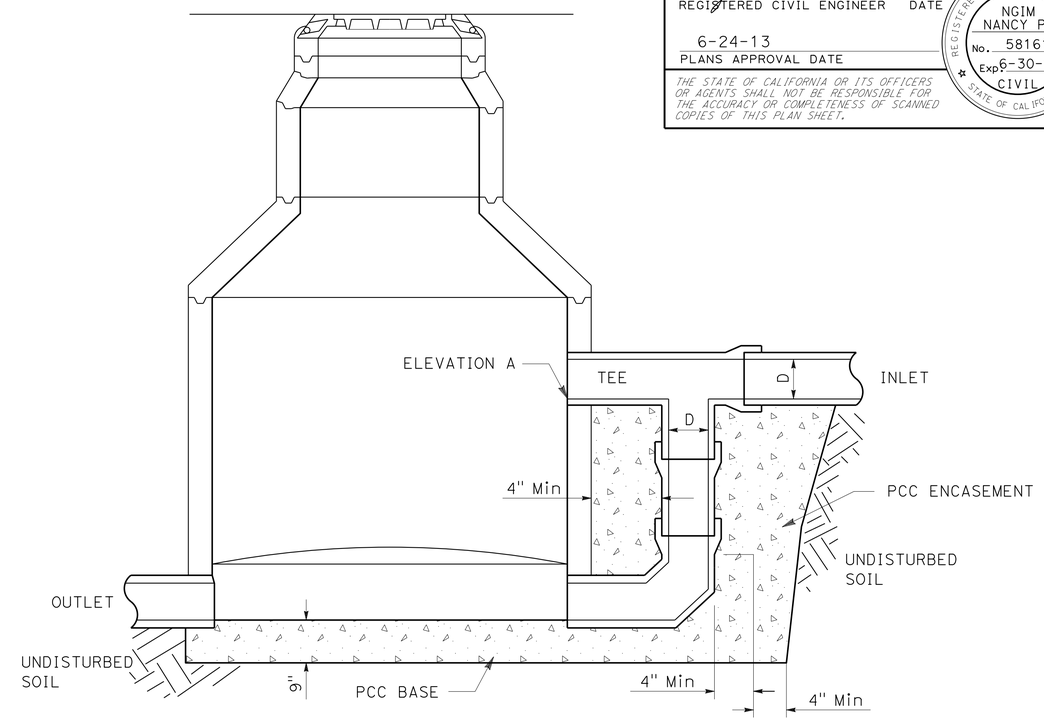

SECTION A-A

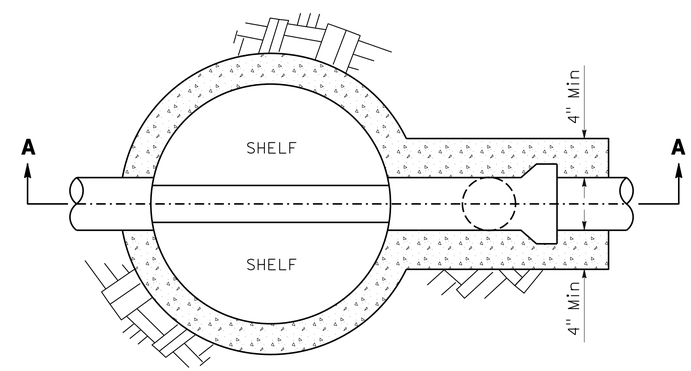

PLAN

DROP SEWER MANHOLE

SANITARY SEWER DETAILS

NO SCALE

SSD-7

APPROVED FOR SANITARY SEWER WORK ONLY.

REVISED BY | DATE REVISED
YIM T. TSE | NGIM NANCY PE
CALCULATED-DESIGNED BY | CHECKED BY
FUNCTIONAL SUPERVISOR | NGIM NANCY PE

STATE OF CALIFORNIA - DEPARTMENT OF TRANSPORTATION
Caltrans® OFFICE OF DESIGN A

S:\projects\215951\721595jc007.dgn

LAST REVISION 09-11-12 | DATE PLOTTED => 26-JUN-2013 | TIME PLOTTED => 16:07