REFERENCE: CALTRANS SOIL & ROCK LOGGING, CLASSIFICATION, AND PRESENTATION MANUAL (2010)

DIST	COUNTY	ROUTE	POST MILES TOTAL PROJECT	SHEET No.	TOTAL SHEETS
07	LA	5	4.0/5.9	701	1597

REGISTERED CIVIL ENGINEER — DATE 12-19-11

4-9-12
PLANS APPROVAL DATE

REGISTERED PROFESSIONAL ENGINEER — Amare Tsegie — No. C67529 — Exp. 6-30-13 — CIVIL — STATE OF CALIFORNIA

The State of California or its officers or agents shall not be responsible for the accuracy or completeness of electronic copies of this plan sheet.

This LOTB sheet was prepared in accordance with the Caltrans Soil & Rock Logging, Classification, & Presentation Manual (2010 Edition).

CEMENTATION

Description	Criteria
Weak	Crumbles or breaks with handling or little finger pressure.
Moderate	Crumbles or breaks with considerable finger pressure.
Strong	Will not crumble or break with finger pressure.

BOREHOLE IDENTIFICATION

Symbol	Hole Type	Description
Size	A	Auger Boring (hollow or solid stem bucket)
Size	R RW RC P	Rotary drilled boring (conventional) Rotary drilled with self-casing wire-line Rotary core with continuously-sampled, self-casing wire-line Rotary percussion boring (air)
Size	R	Rotary drilled diamond core
Size	HD HA	Hand driven (1-inch soil tube) Hand Auger
●	D	Dynamic Cone Penetration Boring
▲	CPT	Cone Penetration Test (ASTM D 5778)
⬚	O	Other (note on LOTB)

Note: Size in inches.

CONSISTENCY OF COHESIVE SOILS

Description	Shear Strength (tsf)	Pocket Penetrometer Measurement, PP, (tsf)	Torvane Measurement, TV, (tsf)	Vane Shear Measurement, VS, (tsf)
Very Soft	Less than 0.12	Less than 0.25	Less than 0.12	Less than 0.12
Soft	0.12 - 0.25	0.25 - 0.5	0.12 - 0.25	0.12 - 0.25
Medium Stiff	0.25 - 0.5	0.5 - 1	0.25 - 0.5	0.25 - 0.5
Stiff	0.5 - 1	1 - 2	0.5 - 1	0.5 - 1
Very Stiff	1 - 2	2 - 4	1 - 2	1 - 2
Hard	Greater than 2	Greater than 4	Greater than 2	Greater than 2

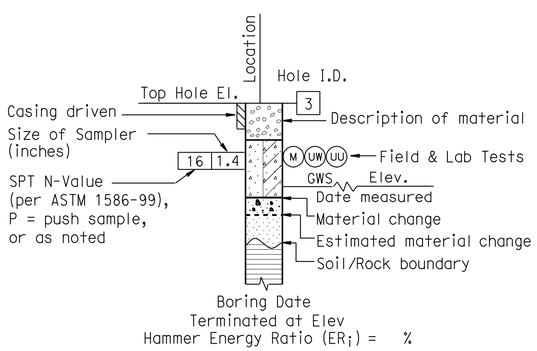

ROTARY BORING

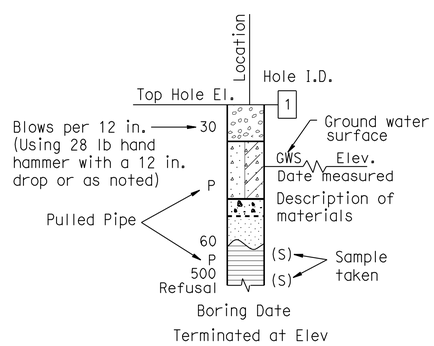

HAND BORING

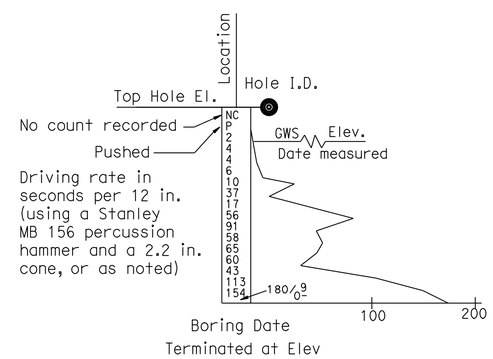

DYNAMIC CONE PENETRATION BORING

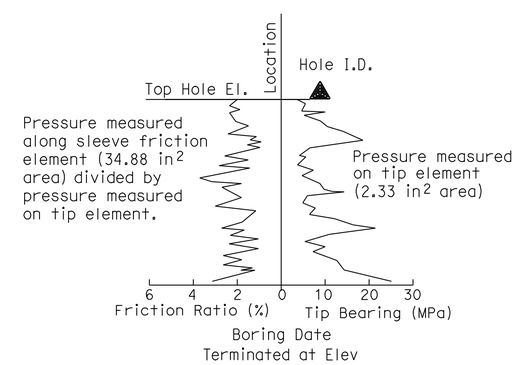

CONE PENETRATION TEST (CPT) BORING

SW-3

ENGINEERING SERVICES	MATERIALS AND GEOTECHNICAL SERVICES	STATE OF CALIFORNIA DEPARTMENT OF TRANSPORTATION	DIVISION OF ENGINEERING SERVICES STRUCTURE DESIGN DESIGN BRANCH 21	BRIDGE NO. / POST MILE 4.01/4.06	SOUND WALL 212
FUNCTIONAL SUPERVISOR NAME: CHI-TSENG LIU	DRAWN BY: P.QUACH / T.Panah (URS CORP) CHECKED BY: F.GERAMI	FIELD INVESTIGATION BY: A.TSEGIE/M.ISLAM			LOG OF TEST BORINGS SHEET 2 OF 3

OGS CIVIL LOG OF TEST BORINGS SHEET — ORIGINAL SCALE IN INCHES FOR REDUCED PLANS 0 1 2 3 — UNIT: 3658 — PROJECT NUMBER & PHASE: 0700001834 240 — CONTRACT NO.: 07-215941 — DISREGARD PRINTS BEARING EARLIER REVISION DATES — REVISION DATES — SHEET OF

FILE => 721594ra003.dgn

USERNAME => s114326 DATE PLOTTED => 14-APR-2012 TIME PLOTTED => 09:51

REFERENCE: CALTRANS SOIL & ROCK LOGGING, CLASSIFICATION, AND PRESENTATION MANUAL (2010)

DIST	COUNTY	ROUTE	POST MILES TOTAL PROJECT	SHEET No.	TOTAL SHEETS
07	LA	5	4.0/5.9	702	1597

REGISTERED CIVIL ENGINEER — DATE 12-19-11

4-9-12
PLANS APPROVAL DATE

REGISTERED PROFESSIONAL ENGINEER — Amare Tsegie — No. C67529 — Exp. 6-30-13 — CIVIL — STATE OF CALIFORNIA

The State of California or its officers or agents shall not be responsible for the accuracy or completeness of electronic copies of this plan sheet.

This LOTB sheet was prepared in accordance with the Caltrans Soil & Rock Logging, Classification, & Presentation Manual (2010 Edition).

GROUP SYMBOLS AND NAMES

Graphic/Symbol	Group Names	Graphic/Symbol	Group Names
GW	Well-graded GRAVEL Well-graded GRAVEL with SAND	CL	Lean CLAY Lean CLAY with SAND Lean CLAY with GRAVEL SANDY lean CLAY SANDY lean CLAY with GRAVEL GRAVELLY lean CLAY GRAVELLY lean CLAY with SAND
GP	Poorly-graded GRAVEL Poorly-graded GRAVEL with SAND		
GW-GM	Well-graded GRAVEL with SILT Well-graded GRAVEL with SILT and SAND	CL-ML	SILTY CLAY SILTY CLAY with SAND SILTY CLAY with GRAVEL SANDY SILTY CLAY SANDY SILTY CLAY with GRAVEL GRAVELLY SILTY CLAY GRAVELLY SILTY CLAY with SAND
GW-GC	Well-graded GRAVEL with CLAY (or SILTY CLAY) Well-graded GRAVEL with CLAY and SAND (or SILTY CLAY and SAND)		
GP-GM	Poorly-graded GRAVEL with SILT Poorly-graded GRAVEL with SILT and SAND	ML	SILT SILT with SAND SILT with GRAVEL SANDY SILT SANDY SILT with GRAVEL GRAVELLY SILT GRAVELLY SILT with SAND
GP-GC	Poorly-graded GRAVEL with CLAY (or SILTY CLAY) Poorly-graded GRAVEL with CLAY and SAND (or SILTY CLAY and SAND)		
GM	SILTY GRAVEL SILTY GRAVEL with SAND	OL	ORGANIC lean CLAY ORGANIC lean CLAY with SAND ORGANIC lean CLAY with GRAVEL SANDY ORGANIC lean CLAY SANDY ORGANIC lean CLAY with GRAVEL GRAVELLY ORGANIC lean CLAY GRAVELLY ORGANIC lean CLAY with SAND
GC	CLAYEY GRAVEL CLAYEY GRAVEL with SAND		
GC-GM	SILTY, CLAYEY GRAVEL SILTY, CLAYEY GRAVEL with SAND	OL	ORGANIC SILT ORGANIC SILT with SAND ORGANIC SILT with GRAVEL SANDY ORGANIC SILT SANDY ORGANIC SILT with GRAVEL GRAVELLY ORGANIC SILT GRAVELLY ORGANIC SILT with SAND
SW	Well-graded SAND Well-graded SAND with GRAVEL		
SP	Poorly-graded SAND Poorly-graded SAND with GRAVEL	CH	Fat CLAY Fat CLAY with SAND Fat CLAY with GRAVEL SANDY fat CLAY SANDY fat CLAY with GRAVEL GRAVELLY fat CLAY GRAVELLY fat CLAY with SAND
SW-SM	Well-graded SAND with SILT Well-graded SAND with SILT and GRAVEL		
SW-SC	Well-graded SAND with CLAY (or SILTY CLAY) Well-graded SAND with CLAY and GRAVEL (or SILTY CLAY and GRAVEL)	MH	Elastic SILT Elastic SILT with SAND Elastic SILT with GRAVEL SANDY elastic SILT SANDY elastic SILT with GRAVEL GRAVELLY elastic SILT GRAVELLY elastic SILT with SAND
SP-SM	Poorly-graded SAND with SILT Poorly-graded SAND with SILT and GRAVEL		
SP-SC	Poorly-graded SAND with CLAY (or SILTY CLAY) Poorly-graded SAND with CLAY and GRAVEL (or SILTY CLAY and GRAVEL)	OH	ORGANIC fat CLAY ORGANIC fat CLAY with SAND ORGANIC fat CLAY with GRAVEL SANDY ORGANIC fat CLAY SANDY ORGANIC fat CLAY with GRAVEL GRAVELLY ORGANIC fat CLAY GRAVELLY ORGANIC fat CLAY with SAND
SM	SILTY SAND SILTY SAND with GRAVEL		
SC	CLAYEY SAND CLAYEY SAND with GRAVEL	OH	ORGANIC elastic SILT ORGANIC elastic SILT with SAND ORGANIC elastic SILT with GRAVEL SANDY ORGANIC elastic SILT SANDY ORGANIC elastic SILT with GRAVEL GRAVELLY ORGANIC elastic SILT GRAVELLY ORGANIC elastic SILT with SAND
SC-SM	SILTY, CLAYEY SAND SILTY, CLAYEY SAND with GRAVEL		
PT	PEAT	OL/OH	ORGANIC SOIL ORGANIC SOIL with SAND ORGANIC SOIL with GRAVEL SANDY ORGANIC SOIL SANDY ORGANIC SOIL with GRAVEL GRAVELLY ORGANIC SOIL GRAVELLY ORGANIC SOIL with SAND
	COBBLES COBBLES and BOULDERS BOULDERS		

FIELD AND LABORATORY TESTING

- (C) Consolidation (ASTM D 2435)
- (CL) Collapse Potential (ASTM D 5333)
- (CP) Compaction Curve (CTM 216)
- (CR) Corrosivity Testing (CTM 643, CTM 422, CTM 417)
- (CU) Consolidated Undrained Triaxial (ASTM D 4767)
- (DS) Direct Shear (ASTM D 3080)
- (EI) Expansion Index (ASTM D 4829)
- (M) Moisture Content (ASTM D 2216)
- (OC) Organic Content-% (ASTM D 2974)
- (P) Permeability (CTM 220)
- (PA) Particle Size Analysis (ASTM D 422)
- (PI) Plasticity Index (AASHTO T 90) Liquid Limit (AASHTO T 89)
- (PL) Point Load Index (ASTM D 5731)
- (PM) Pressure Meter
- (R) R-Value (CTM 301)
- (SE) Sand Equivalent (CTM 217)
- (SG) Specific Gravity (AASHTO T 100)
- (SL) Shrinkage Limit (ASTM D 427)
- (SW) Swell Potential (ASTM D 4546)
- (UC) Unconfined Compression-Soil (ASTM D 2166) Unconfined Compression-Rock (ASTM D 2938)
- (UU) Unconsolidated Undrained Triaxial (ASTM D 2850)
- (UW) Unit Weight (ASTM D 4767)

APPARENT DENSITY OF COHESIONLESS SOILS

Description	SPT N_{60} (Blows / 12 in.)
Very Loose	0 - 5
Loose	5 - 10
Medium Dense	10 - 30
Dense	30 - 50
Very Dense	Greater than 50

MOISTURE

Description	Criteria
Dry	No discernable moisture
Moist	Moisture present, but no free water
Wet	Visible free water

PERCENT OR PROPORTION OF SOILS

Description	Criteria
Trace	Particles are present but estimated to be less than 5%
Few	5% - 10%
Little	15% - 25%
Some	30% - 45%
Mostly	50% - 100%

PARTICLE SIZE

Description		Size (in.)
Boulder		Greater than 12
Cobble		3 - 12
Gravel	Coarse	3/4 - 3
	Fine	1/5 - 3/4
Sand	Coarse	1/16 - 1/5
	Medium	1/64 - 1/16
	Fine	1/300 - 1/64
Silt and Clay		Less than 1/300

SW-4

ENGINEERING SERVICES — MATERIALS AND GEOTECHNICAL SERVICES

FUNCTIONAL SUPERVISOR
NAME: CHI-TSENG LIU

DRAWN BY: P.QUACH / T.Panah (URS CORP)
CHECKED BY: F.GERAMI

FIELD INVESTIGATION BY:
A.TSEGIE/M.ISLAM

STATE OF CALIFORNIA
DEPARTMENT OF TRANSPORTATION

DIVISION OF ENGINEERING SERVICES
STRUCTURE DESIGN
DESIGN BRANCH 21

BRIDGE NO.
POST MILE 4.01/4.06

SOUND WALL 212

LOG OF TEST BORINGS SHEET 3 OF 3

OGS CIVIL LOG OF TEST BORINGS SHEET

ORIGINAL SCALE IN INCHES FOR REDUCED PLANS 0 1 2 3

UNIT: 3658
PROJECT NUMBER & PHASE: 0700001834 240 CONTRACT NO.: 07-215941

DISREGARD PRINTS BEARING EARLIER REVISION DATES

REVISION DATES — SHEET — OF

FILE => 721594ra004.dgn

USERNAME => s114926 DATE PLOTTED => 14-APR-2012 TIME PLOTTED => 09:51

Dist	COUNTY	ROUTE	POST MILES TOTAL PROJECT	SHEET No.	TOTAL SHEETS
07	LA	5	4.0/5.9	703	1597

REGISTERED CIVIL ENGINEER 12-19-11 DATE

4-9-12
PLANS APPROVAL DATE

REGISTERED PROFESSIONAL ENGINEER TJANDRA GUNAWAN No. C54965 Exp 6/30/12 CIVIL STATE OF CALIFORNIA

THE STATE OF CALIFORNIA OR ITS OFFICERS OR AGENTS SHALL NOT BE RESPONSIBLE FOR THE ACCURACY OR COMPLETENESS OF SCANNED COPIES OF THIS PLAN SHEET.

NOTE:

FOR ACCURATE RIGHT OF WAY DATA, CONTACT RIGHT OF WAY ENGINEERING AT THE DISTRICT OFFICE.

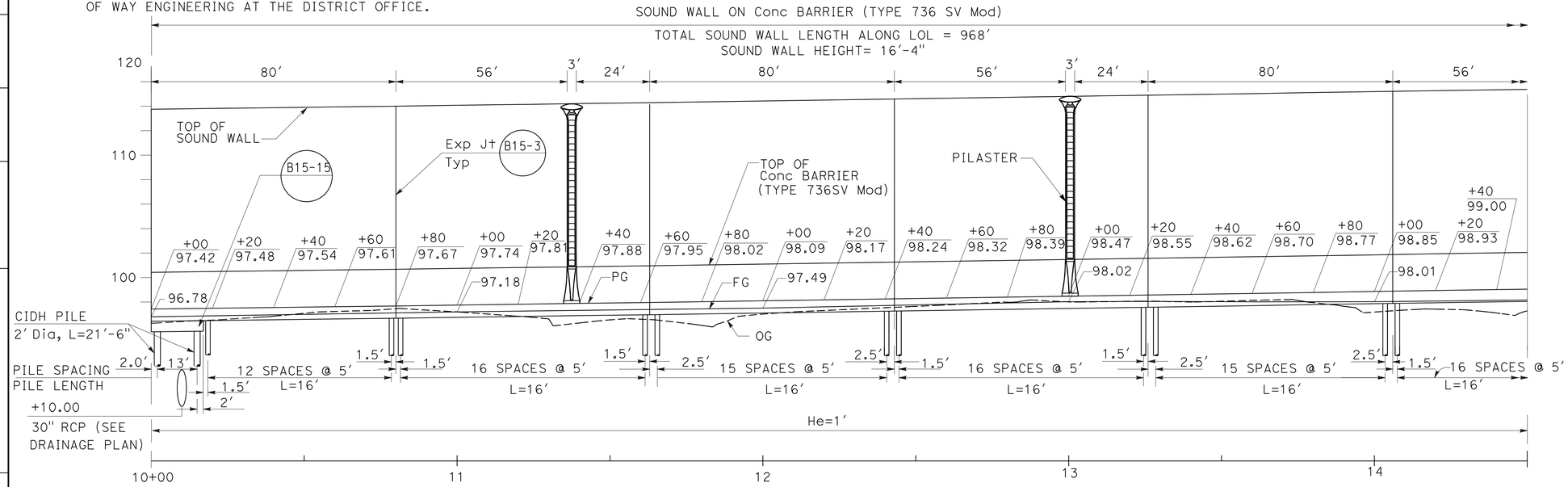

ELEVATION

SCALE: Horiz 1" = 20'
Vert 1" = 5'

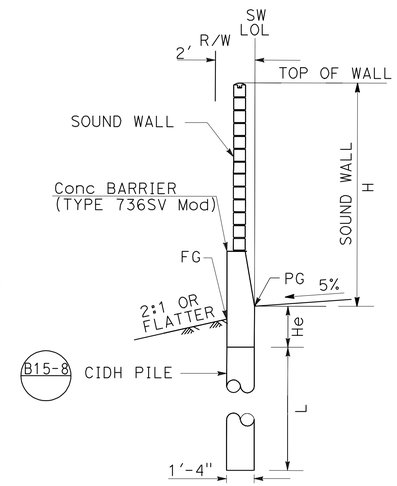

TYPICAL SECTION

NO SCALE
Sta 10+17 TO 19+68

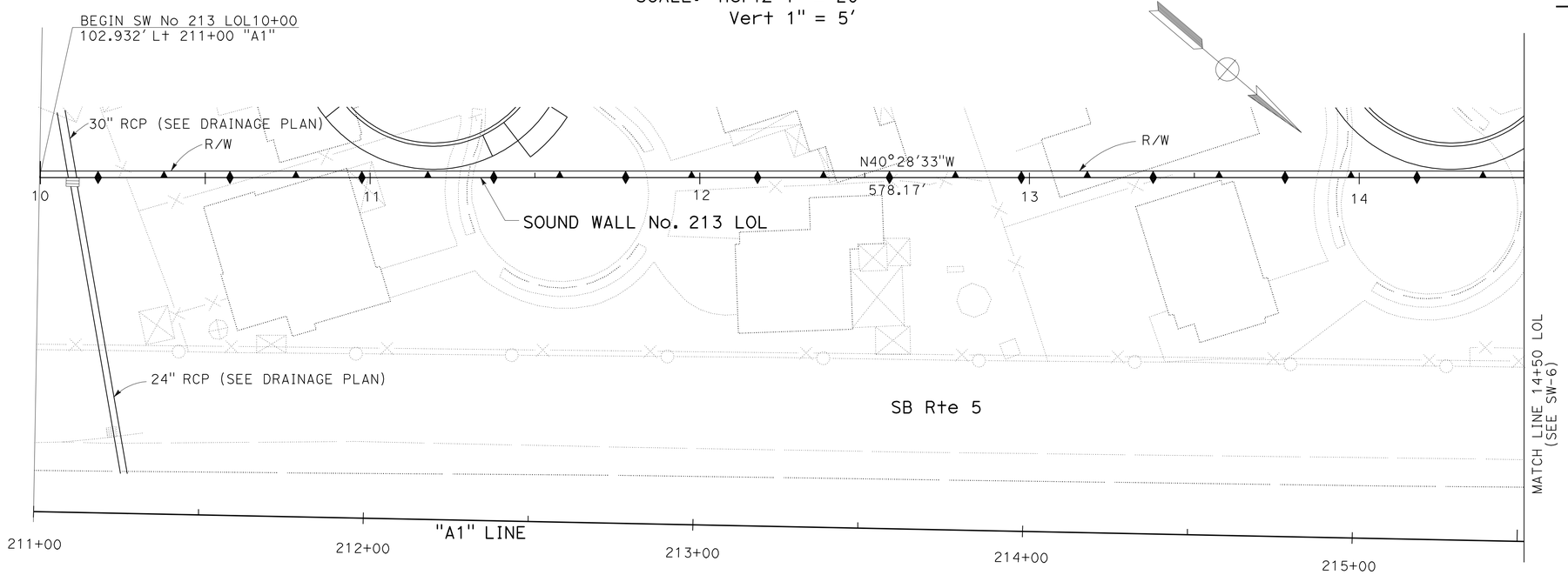

PLAN

SCALE: 1" = 20'

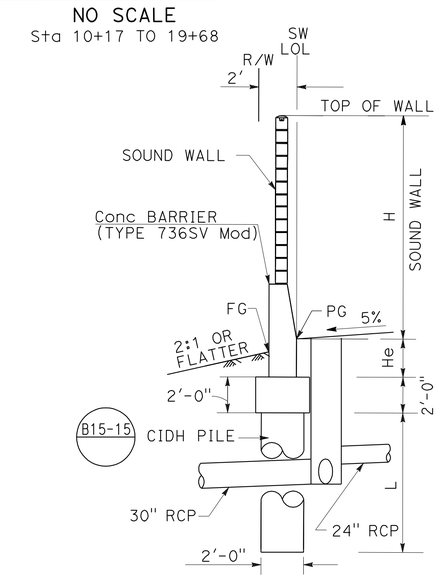

TYPICAL SECTION

NO SCALE
Sta 10+00 TO 10+17

APPROVED FOR RETAINING WALL WORK ONLY

SOUND WALL PLAN
SW No. 213

SCALE AS SHOWN

SW-5

STATE OF CALIFORNIA - DEPARTMENT OF TRANSPORTATION
Caltrans® OFFICE OF DESIGN A

FUNCTIONAL SUPERVISOR: SIMON KUO
CALCULATED-DESIGNED BY: WILFRIDO MORALES
CHECKED BY: TJANDRA GUNAWAN
REVISED BY
DATE REVISED

LAST REVISION 00-00-00
DATE PLOTTED => 14-APR-2012
TIME PLOTTED => 09:52

Dist	COUNTY	ROUTE	POST MILES TOTAL PROJECT	SHEET No.	TOTAL SHEETS
07	LA	5	4.0/5.9	704	1597

REGISTERED CIVIL ENGINEER 12-19-11 DATE

4-9-12
PLANS APPROVAL DATE

REGISTERED PROFESSIONAL ENGINEER TJANDRA GUNAWAN No. C54965 Exp. 6/30/12 CIVIL STATE OF CALIFORNIA

THE STATE OF CALIFORNIA OR ITS OFFICERS OR AGENTS SHALL NOT BE RESPONSIBLE FOR THE ACCURACY OR COMPLETENESS OF SCANNED COPIES OF THIS PLAN SHEET.

NOTE:

1. FOR ACCURATE RIGHT OF WAY DATA, CONTACT RIGHT OF WAY ENGINEERING AT THE DISTRICT OFFICE.

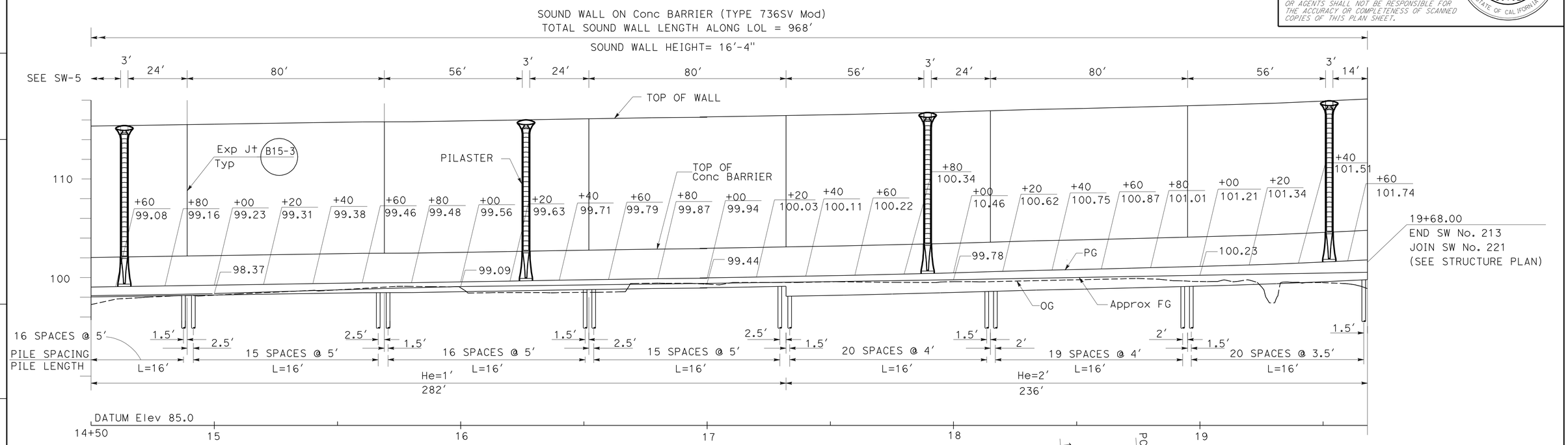

ELEVATION

SCALE: Horiz 1" = 20'
Vert 1" = 5'

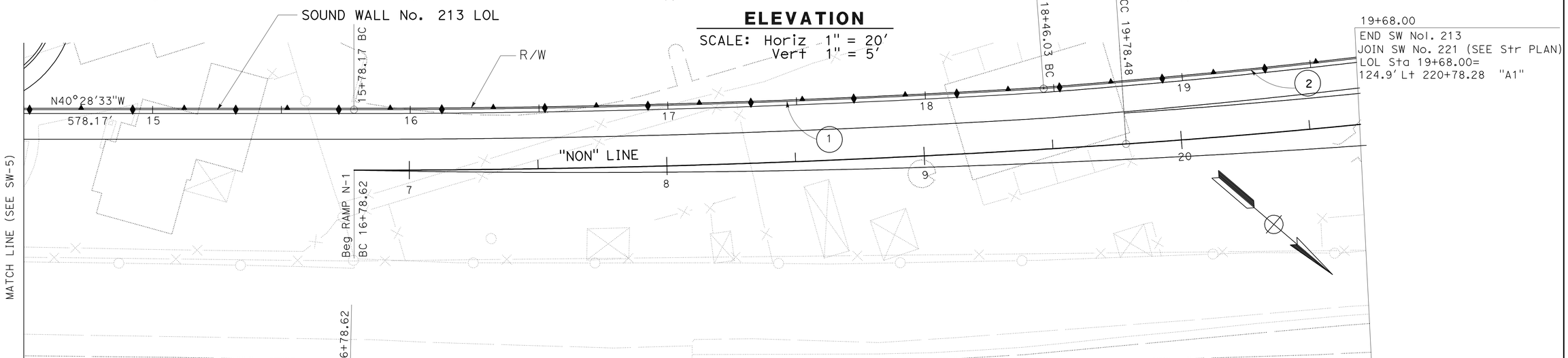

PLAN

SCALE: 1" = 20'

CURVE DATA

No.	R	Δ	T	L
1	4,385.50'	3°29'58.9"	134.0'	267.9'
2	2,976.50'	6°26'54.1"	167.7'	335.0'

APPROVED FOR RETAINING WALL WORK ONLY

SOUND WALL PLAN
SW No. 213

SCALE AS SHOWN

SW-6

REVISED BY | DATE REVISED
WILFRIDO MORALES | TJANDRA GUNAWAN
CALCULATED-DESIGNED BY | CHECKED BY
FUNCTIONAL SUPERVISOR
SIMON KUO

STATE OF CALIFORNIA - DEPARTMENT OF TRANSPORTATION
Caltrans® OFFICE OF DESIGN A

LAST REVISION 00-00-00 | DATE PLOTTED => 14-APR-2012 | TIME PLOTTED => 09:52

DIST	COUNTY	ROUTE	POST MILES TOTAL PROJECT	SHEET No.	TOTAL SHEETS
07	LA	5	4.0/5.9	705	1597

REGISTERED CIVIL ENGINEER — DATE 12-19-11

PLANS APPROVAL DATE 4-9-12

REGISTERED PROFESSIONAL ENGINEER — Amare Tsegie — No. C67529 — Exp. 6-30-13 — CIVIL — STATE OF CALIFORNIA

The State of California or its officers or agents shall not be responsible for the accuracy or completeness of electronic copies of this plan sheet.

This LOTB sheet was prepared in accordance with the Caltrans Soil & Rock Logging, Classification, & Presentation Manual (2010 Edition).

BENCH MARK

ELEVATION 105.78 FT
LA 5 PM 4.8, 1995
FOUND 2-1/2 INCH CADT DISK IN CONCRETE CURB, FLUSH, STAMPED "LA5 4.8 1995"
THE MARK IS LOCATED ON THE EASTERLY CURB OF THE OFFRAMP GORE FROM
THE SOUTH BOUND 5 (SANTA ANA FWY) TO NORWALK BLVD. AND SAN ANTONIO ST.
NORTHING 1791107.943
EASTING 6538243.925
VERTICAL NAVD88, 0405-CALIFORNIA 5 US FEET.

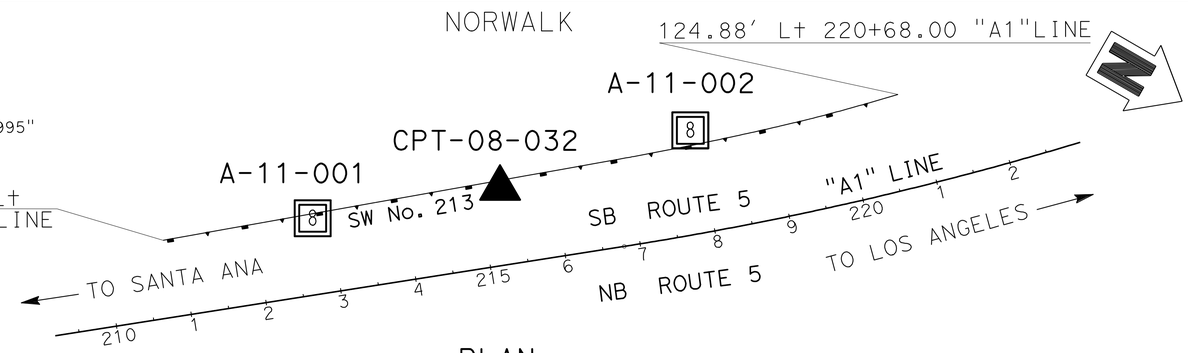

PLAN

SCALE: 1"= 100'

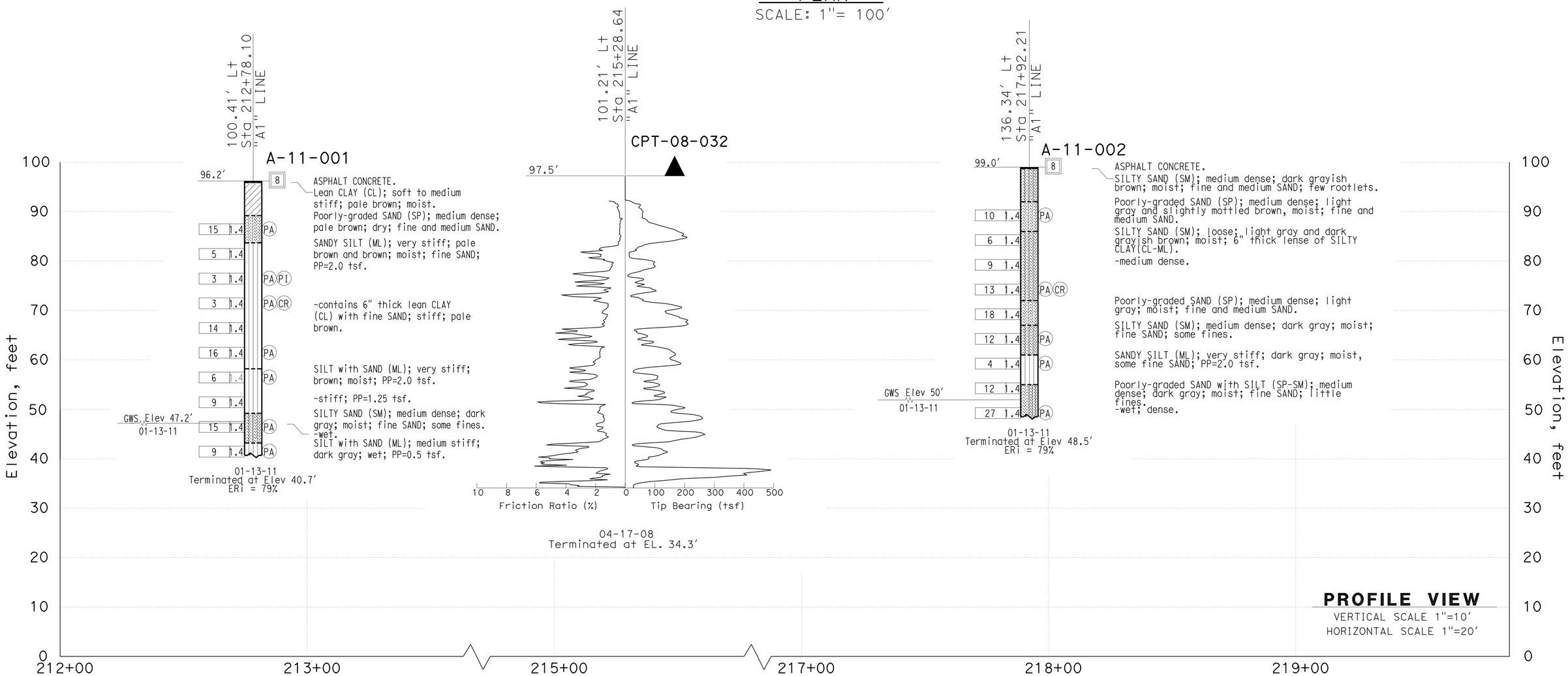

SW-7

ENGINEERING SERVICES	MATERIALS AND GEOTECHNICAL SERVICES	STATE OF CALIFORNIA DEPARTMENT OF TRANSPORTATION	DIVISION OF ENGINEERING SERVICES STRUCTURE DESIGN DESIGN BRANCH 21	BRIDGE NO. / POST MILE 4.00/4.19	SOUND WALL 213
FUNCTIONAL SUPERVISOR NAME: CHI-TSENG LIU	DRAWN BY: P.QUACH / T.Panah (URS CORP) CHECKED BY: F.GERAMI	FIELD INVESTIGATION BY: A.TSEGIE/M.ISLAM/P.MCDONALD			LOG OF TEST BORINGS SHEET 1 OF 3

OGS CIVIL LOG OF TEST BORINGS SHEET — ORIGINAL SCALE IN INCHES FOR REDUCED PLANS 0 1 2 3 — UNIT: 3658 — PROJECT NUMBER & PHASE: 0700001834 240 — CONTRACT NO.: 07-215941 — DISREGARD PRINTS BEARING EARLIER REVISION DATES — REVISION DATES — SHEET — OF

FILE => 721594rb003.dgn

USERNAME => s114926 DATE PLOTTED => 14-APR-2012 TIME PLOTTED => 09:52

REFERENCE: CALTRANS SOIL & ROCK LOGGING, CLASSIFICATION, AND PRESENTATION MANUAL (2010)

DIST	COUNTY	ROUTE	POST MILES TOTAL PROJECT	SHEET No.	TOTAL SHEETS
07	LA	5	4.0/5.9	706	1597

REGISTERED CIVIL ENGINEER 12-19-11 DATE

4-9-12
PLANS APPROVAL DATE

REGISTERED PROFESSIONAL ENGINEER
Amare Tsegie
No. C67529
Exp. 6-30-13
CIVIL
STATE OF CALIFORNIA

The State of California or its officers or agents shall not be responsible for the accuracy or completeness of electronic copies of this plan sheet.

This LOTB sheet was prepared in accordance with the Caltrans Soil & Rock Logging, Classification, & Presentation Manual (2010 Edition).

CEMENTATION

Description	Criteria
Weak	Crumbles or breaks with handling or little finger pressure.
Moderate	Crumbles or breaks with considerable finger pressure.
Strong	Will not crumble or break with finger pressure.

BOREHOLE IDENTIFICATION

Symbol	Hole Type	Description
Size	A	Auger Boring (hollow or solid stem bucket)
Size	R RW RC P	Rotary drilled boring (conventional) Rotary drilled with self-casing wire-line Rotary core with continuously-sampled, self-casing wire-line Rotary percussion boring (air)
Size	R	Rotary drilled diamond core
Size	HD HA	Hand driven (1-inch soil tube) Hand Auger
●	D	Dynamic Cone Penetration Boring
▲	CPT	Cone Penetration Test (ASTM D 5778)
⬚	O	Other (note on LOTB)

Note: Size in inches.

CONSISTENCY OF COHESIVE SOILS

Description	Shear Strength (tsf)	Pocket Penetrometer Measurement, PP, (tsf)	Torvane Measurement, TV, (tsf)	Vane Shear Measurement, VS, (tsf)
Very Soft	Less than 0.12	Less than 0.25	Less than 0.12	Less than 0.12
Soft	0.12 - 0.25	0.25 - 0.5	0.12 - 0.25	0.12 - 0.25
Medium Stiff	0.25 - 0.5	0.5 - 1	0.25 - 0.5	0.25 - 0.5
Stiff	0.5 - 1	1 - 2	0.5 - 1	0.5 - 1
Very Stiff	1 - 2	2 - 4	1 - 2	1 - 2
Hard	Greater than 2	Greater than 4	Greater than 2	Greater than 2

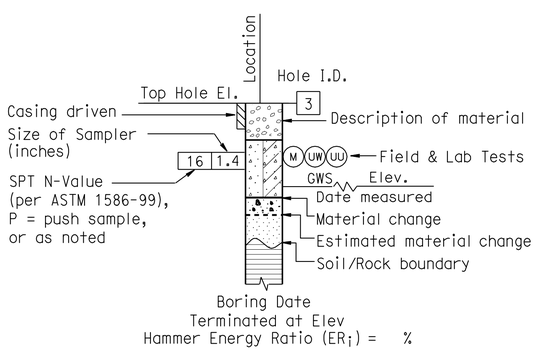

ROTARY BORING

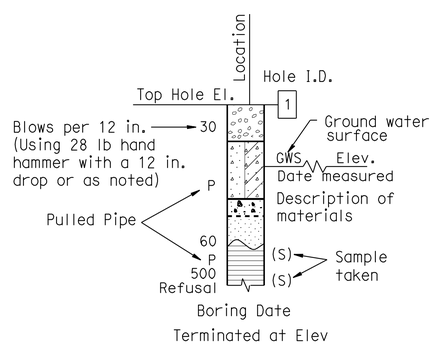

HAND BORING

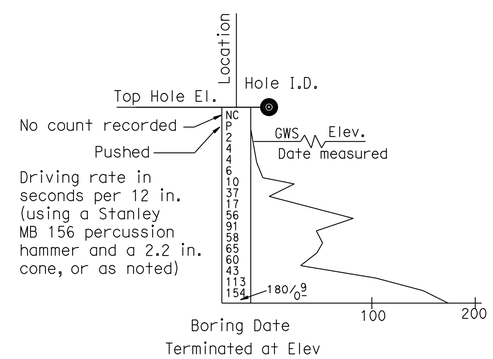

DYNAMIC CONE PENETRATION BORING

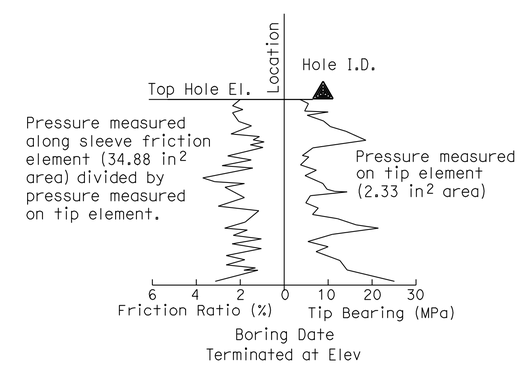

CONE PENETRATION TEST (CPT) BORING

SW-8

ENGINEERING SERVICES	MATERIALS AND GEOTECHNICAL SERVICES	STATE OF CALIFORNIA DEPARTMENT OF TRANSPORTATION	DIVISION OF ENGINEERING SERVICES STRUCTURE DESIGN DESIGN BRANCH 21	BRIDGE NO. / POST MILE 4.00/4.19	SOUND WALL 213
FUNCTIONAL SUPERVISOR NAME: CHI-TSENG LIU	DRAWN BY: P.QUACH / T.Panah (URS CORP) CHECKED BY: F.GERAMI	FIELD INVESTIGATION BY: A.TSEGIE/M.ISLAM/P.MCDONALD			LOG OF TEST BORINGS SHEET 2 OF 3

OGS CIVIL LOG OF TEST BORINGS SHEET

ORIGINAL SCALE IN INCHES FOR REDUCED PLANS 0 1 2 3

UNIT: 3658
PROJECT NUMBER & PHASE: 0700001834 240 CONTRACT NO.: 07-215941

DISREGARD PRINTS BEARING EARLIER REVISION DATES

REVISION DATES | SHEET | OF

FILE => 721594rb004.dgn

USERNAME => s114326 DATE PLOTTED => 14-APR-2012 TIME PLOTTED => 09:52

REFERENCE: CALTRANS SOIL & ROCK LOGGING, CLASSIFICATION, AND PRESENTATION MANUAL (2010)

DIST	COUNTY	ROUTE	POST MILES TOTAL PROJECT	SHEET No.	TOTAL SHEETS
07	LA	5	4.0/5.9	707	1597

REGISTERED CIVIL ENGINEER 12-19-11 DATE

4-9-12
PLANS APPROVAL DATE

REGISTERED PROFESSIONAL ENGINEER Amare Tsegie No. C67529 Exp. 6-30-13 CIVIL STATE OF CALIFORNIA

The State of California or its officers or agents shall not be responsible for the accuracy or completeness of electronic copies of this plan sheet.

This LOTB sheet was prepared in accordance with the Caltrans Soil & Rock Logging, Classification, & Presentation Manual (2010 Edition).

GROUP SYMBOLS AND NAMES

Graphic/Symbol	Group Names	Graphic/Symbol	Group Names
GW	Well-graded GRAVEL Well-graded GRAVEL with SAND	CL	Lean CLAY Lean CLAY with SAND Lean CLAY with GRAVEL SANDY lean CLAY SANDY lean CLAY with GRAVEL GRAVELLY lean CLAY GRAVELLY lean CLAY with SAND
GP	Poorly-graded GRAVEL Poorly-graded GRAVEL with SAND		
GW-GM	Well-graded GRAVEL with SILT Well-graded GRAVEL with SILT and SAND	CL-ML	SILTY CLAY SILTY CLAY with SAND SILTY CLAY with GRAVEL SANDY SILTY CLAY SANDY SILTY CLAY with GRAVEL GRAVELLY SILTY CLAY GRAVELLY SILTY CLAY with SAND
GW-GC	Well-graded GRAVEL with CLAY (or SILTY CLAY) Well-graded GRAVEL with CLAY and SAND (or SILTY CLAY and SAND)		
GP-GM	Poorly-graded GRAVEL with SILT Poorly-graded GRAVEL with SILT and SAND	ML	SILT SILT with SAND SILT with GRAVEL SANDY SILT SANDY SILT with GRAVEL GRAVELLY SILT GRAVELLY SILT with SAND
GP-GC	Poorly-graded GRAVEL with CLAY (or SILTY CLAY) Poorly-graded GRAVEL with CLAY and SAND (or SILTY CLAY and SAND)		
GM	SILTY GRAVEL SILTY GRAVEL with SAND	OL	ORGANIC lean CLAY ORGANIC lean CLAY with SAND ORGANIC lean CLAY with GRAVEL SANDY ORGANIC lean CLAY SANDY ORGANIC lean CLAY with GRAVEL GRAVELLY ORGANIC lean CLAY GRAVELLY ORGANIC lean CLAY with SAND
GC	CLAYEY GRAVEL CLAYEY GRAVEL with SAND		
GC-GM	SILTY, CLAYEY GRAVEL SILTY, CLAYEY GRAVEL with SAND	OL	ORGANIC SILT ORGANIC SILT with SAND ORGANIC SILT with GRAVEL SANDY ORGANIC SILT SANDY ORGANIC SILT with GRAVEL GRAVELLY ORGANIC SILT GRAVELLY ORGANIC SILT with SAND
SW	Well-graded SAND Well-graded SAND with GRAVEL		
SP	Poorly-graded SAND Poorly-graded SAND with GRAVEL	CH	Fat CLAY Fat CLAY with SAND Fat CLAY with GRAVEL SANDY fat CLAY SANDY fat CLAY with GRAVEL GRAVELLY fat CLAY GRAVELLY fat CLAY with SAND
SW-SM	Well-graded SAND with SILT Well-graded SAND with SILT and GRAVEL		
SW-SC	Well-graded SAND with CLAY (or SILTY CLAY) Well-graded SAND with CLAY and GRAVEL (or SILTY CLAY and GRAVEL)	MH	Elastic SILT Elastic SILT with SAND Elastic SILT with GRAVEL SANDY elastic SILT SANDY elastic SILT with GRAVEL GRAVELLY elastic SILT GRAVELLY elastic SILT with SAND
SP-SM	Poorly-graded SAND with SILT Poorly-graded SAND with SILT and GRAVEL		
SP-SC	Poorly-graded SAND with CLAY (or SILTY CLAY) Poorly-graded SAND with CLAY and GRAVEL (or SILTY CLAY and GRAVEL)	OH	ORGANIC fat CLAY ORGANIC fat CLAY with SAND ORGANIC fat CLAY with GRAVEL SANDY ORGANIC fat CLAY SANDY ORGANIC fat CLAY with GRAVEL GRAVELLY ORGANIC fat CLAY GRAVELLY ORGANIC fat CLAY with SAND
SM	SILTY SAND SILTY SAND with GRAVEL		
SC	CLAYEY SAND CLAYEY SAND with GRAVEL	OH	ORGANIC elastic SILT ORGANIC elastic SILT with SAND ORGANIC elastic SILT with GRAVEL SANDY ORGANIC elastic SILT SANDY ORGANIC elastic SILT with GRAVEL GRAVELLY ORGANIC elastic SILT GRAVELLY ORGANIC elastic SILT with SAND
SC-SM	SILTY, CLAYEY SAND SILTY, CLAYEY SAND with GRAVEL		
PT	PEAT	OL/OH	ORGANIC SOIL ORGANIC SOIL with SAND ORGANIC SOIL with GRAVEL SANDY ORGANIC SOIL SANDY ORGANIC SOIL with GRAVEL GRAVELLY ORGANIC SOIL GRAVELLY ORGANIC SOIL with SAND
	COBBLES COBBLES and BOULDERS BOULDERS		

FIELD AND LABORATORY TESTING

- (C) Consolidation (ASTM D 2435)
- (CL) Collapse Potential (ASTM D 5333)
- (CP) Compaction Curve (CTM 216)
- (CR) Corrosivity Testing (CTM 643, CTM 422, CTM 417)
- (CU) Consolidated Undrained Triaxial (ASTM D 4767)
- (DS) Direct Shear (ASTM D 3080)
- (EI) Expansion Index (ASTM D 4829)
- (M) Moisture Content (ASTM D 2216)
- (OC) Organic Content-% (ASTM D 2974)
- (P) Permeability (CTM 220)
- (PA) Particle Size Analysis (ASTM D 422)
- (PI) Plasticity Index (AASHTO T 90) Liquid Limit (AASHTO T 89)
- (PL) Point Load Index (ASTM D 5731)
- (PM) Pressure Meter
- (R) R-Value (CTM 301)
- (SE) Sand Equivalent (CTM 217)
- (SG) Specific Gravity (AASHTO T 100)
- (SL) Shrinkage Limit (ASTM D 427)
- (SW) Swell Potential (ASTM D 4546)
- (UC) Unconfined Compression-Soil (ASTM D 2166) Unconfined Compression-Rock (ASTM D 2938)
- (UU) Unconsolidated Undrained Triaxial (ASTM D 2850)
- (UW) Unit Weight (ASTM D 4767)

APPARENT DENSITY OF COHESIONLESS SOILS

Description	SPT N_{60} (Blows / 12 in.)
Very Loose	0 - 5
Loose	5 - 10
Medium Dense	10 - 30
Dense	30 - 50
Very Dense	Greater than 50

MOISTURE

Description	Criteria
Dry	No discernable moisture
Moist	Moisture present, but no free water
Wet	Visible free water

PERCENT OR PROPORTION OF SOILS

Description	Criteria
Trace	Particles are present but estimated to be less than 5%
Few	5% - 10%
Little	15% - 25%
Some	30% - 45%
Mostly	50% - 100%

PARTICLE SIZE

Description		Size (in.)
Boulder		Greater than 12
Cobble		3 - 12
Gravel	Coarse	3/4 - 3
	Fine	1/5 - 3/4
Sand	Coarse	1/16 - 1/5
	Medium	1/64 - 1/16
	Fine	1/300 - 1/64
Silt and Clay		Less than 1/300

SW-9

ENGINEERING SERVICES | MATERIALS AND GEOTECHNICAL SERVICES

FUNCTIONAL SUPERVISOR
NAME: CHI-TSENG LIU

DRAWN BY: P.QUACH / T.Panah (URS CORP)
CHECKED BY: F.GERAMI

FIELD INVESTIGATION BY:
A.TSEGIE/M.ISLAM/P.MCDONALD

STATE OF CALIFORNIA
DEPARTMENT OF TRANSPORTATION

DIVISION OF ENGINEERING SERVICES
STRUCTURE DESIGN
DESIGN BRANCH 21

BRIDGE NO.
POST MILE 4.00/4.19

SOUND WALL 213

LOG OF TEST BORINGS SHEET 3 OF 3

OGS CIVIL LOG OF TEST BORINGS SHEET

ORIGINAL SCALE IN INCHES FOR REDUCED PLANS 0 1 2 3

UNIT: 3658
PROJECT NUMBER & PHASE: 0700001834 240 CONTRACT NO.: 07-215941

DISREGARD PRINTS BEARING EARLIER REVISION DATES

REVISION DATES | SHEET | OF

FILE => 721594rb005.dgn

USERNAME => s114926 DATE PLOTTED => 14-APR-2012 TIME PLOTTED => 09:52

Dist	COUNTY	ROUTE	POST MILES TOTAL PROJECT	SHEET No.	TOTAL SHEETS
07	LA	5	4.0/5.9	708	1597

REGISTERED CIVIL ENGINEER 12-19-11 DATE

4-9-12
PLANS APPROVAL DATE

REGISTERED PROFESSIONAL ENGINEER TJANDRA GUNAWAN No. C54965 Exp. 6-30-12 CIVIL STATE OF CALIFORNIA

THE STATE OF CALIFORNIA OR ITS OFFICERS OR AGENTS SHALL NOT BE RESPONSIBLE FOR THE ACCURACY OR COMPLETENESS OF SCANNED COPIES OF THIS PLAN SHEET.

NOTES:

1. FOR ACCURATE RIGHT OF WAY DATA, CONTACT RIGHT OF WAY ENGINEERING AT THE DISTRICT OFFICE.
2. FOR SOUND WALL AESTHETIC FEATURES, SEE CONSTRUCTION DETAIL SHEET C-53.
3. FOR BARRIER DIMENSIONS AND ARCHITECTURAL DETAILS, SEE SW-20
4. FOR BARRIER REINFORCEMENT DETAILS, SEE BARRIER SECTIONS SHEET SW-18 AND STANDARD PLAN SHEET B15-6

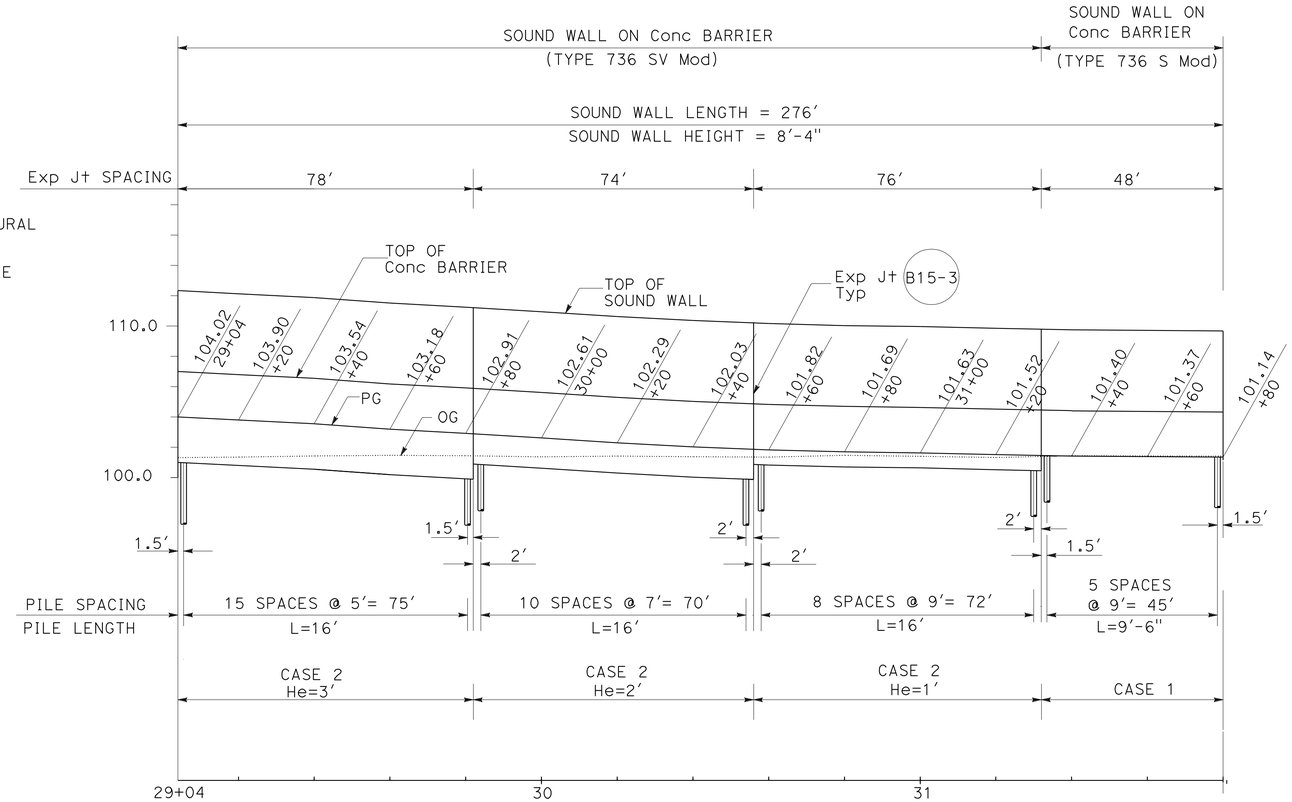

ELEVATION

SCALE: Horiz 1" = 20'
Vert 1" = 5'

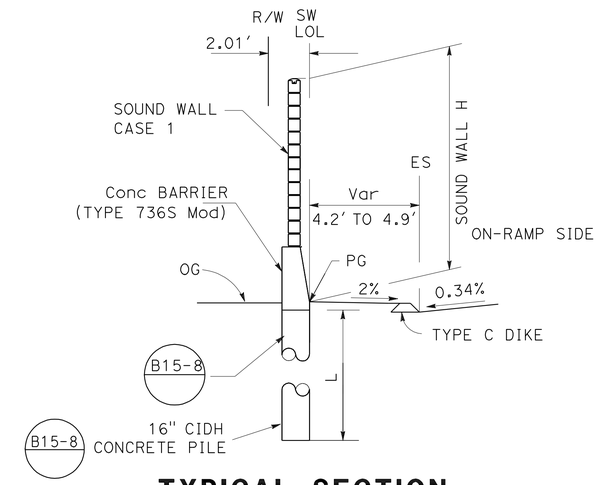

TYPICAL SECTION

NO SCALE
Sta 31+32 TO 31+80

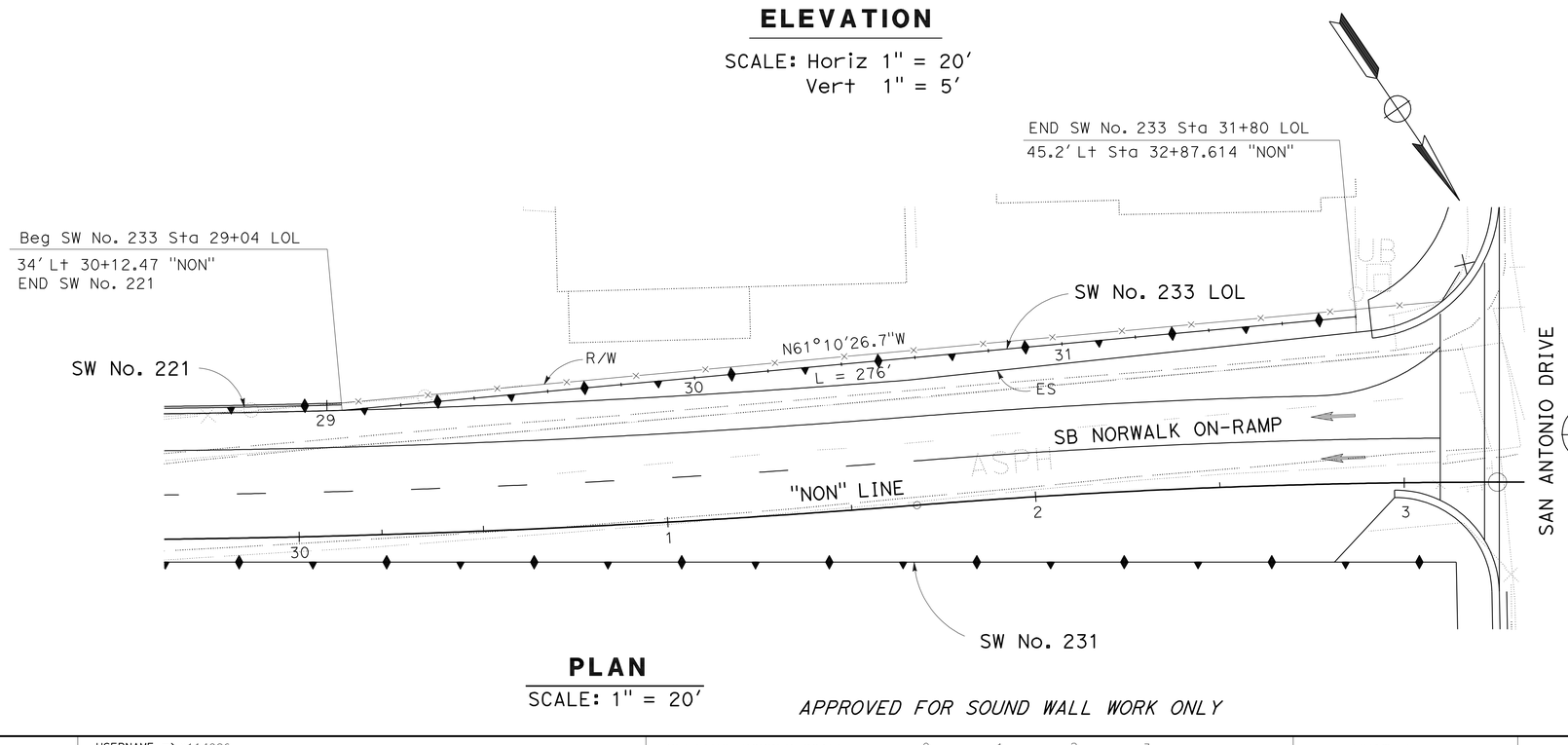

PLAN

SCALE: 1" = 20'

APPROVED FOR SOUND WALL WORK ONLY

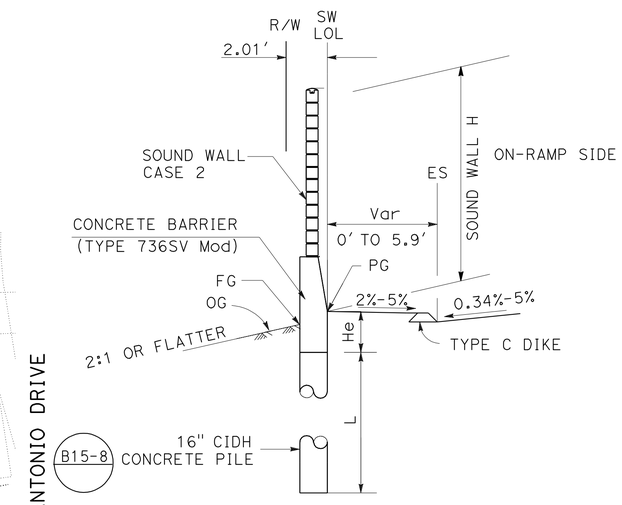

TYPICAL SECTION

NO SCALE
Sta 29+04 TO 31+32

SOUND WALL PLAN
SW No. 233

SCALE AS SHOWN

SW-10

STATE OF CALIFORNIA - DEPARTMENT OF TRANSPORTATION
Caltrans® OFFICE OF DESIGN A

FUNCTIONAL SUPERVISOR: SIMON KUO
CALCULATED-DESIGNED BY: TJANDRA GUNAWAN
CHECKED BY
REVISED BY
DATE REVISED

LAST REVISION 00-00-00
DATE PLOTTED => 14-APR-2012
TIME PLOTTED => 09:53

DIST	COUNTY	ROUTE	POST MILES TOTAL PROJECT	SHEET No.	TOTAL SHEETS
07	LA	5	4.0/5.9	709	1597

REGISTERED CIVIL ENGINEER 12-19-11 DATE

4-9-12
PLANS APPROVAL DATE

REGISTERED PROFESSIONAL ENGINEER MICHAEL G. SMITH No. 2229 Exp. 3-31-2012 GEOTECHNICAL STATE OF CALIFORNIA

The State of California or its officers or agents shall not be responsible for the accuracy or completeness of electronic copies of this plan sheet.

This LOTB sheet was prepared in accordance with the Caltrans Soil & Rock Logging, Classification, & Presentation Manual (2010 Edition).

BENCH MARK

ELEVATION 105.78 FT
LA 5 PM 4.8, 1995
FOUND 2-1/2 INCH CADT DISK IN CONCRETE CURB, FLUSH, STAMPED "LA5 4.8 1995"
THE MARK IS LOCATED ON THE EASTERLY CURB OF THE OFFRAMP GORE FROM
THE SOUTH BOUND 5 (SANTA ANA FWY) TO NORWALK BLVD. AND SAN ANTONIO ST.
NORTHING 1791107.943
EASTING 6538243.925
VERTICAL NAVD88, 0405-CALIFORNIA 5 US FEET.

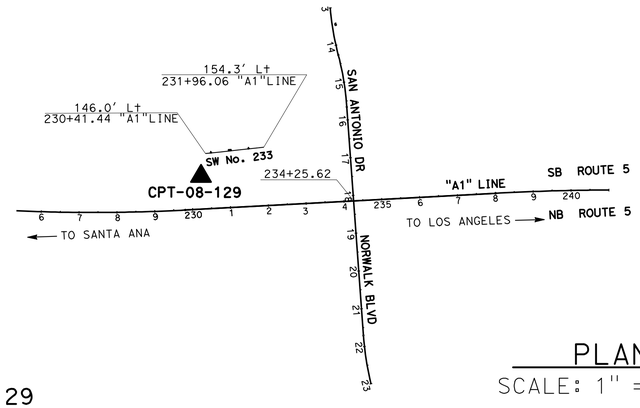

PLAN
SCALE: 1" = 200'

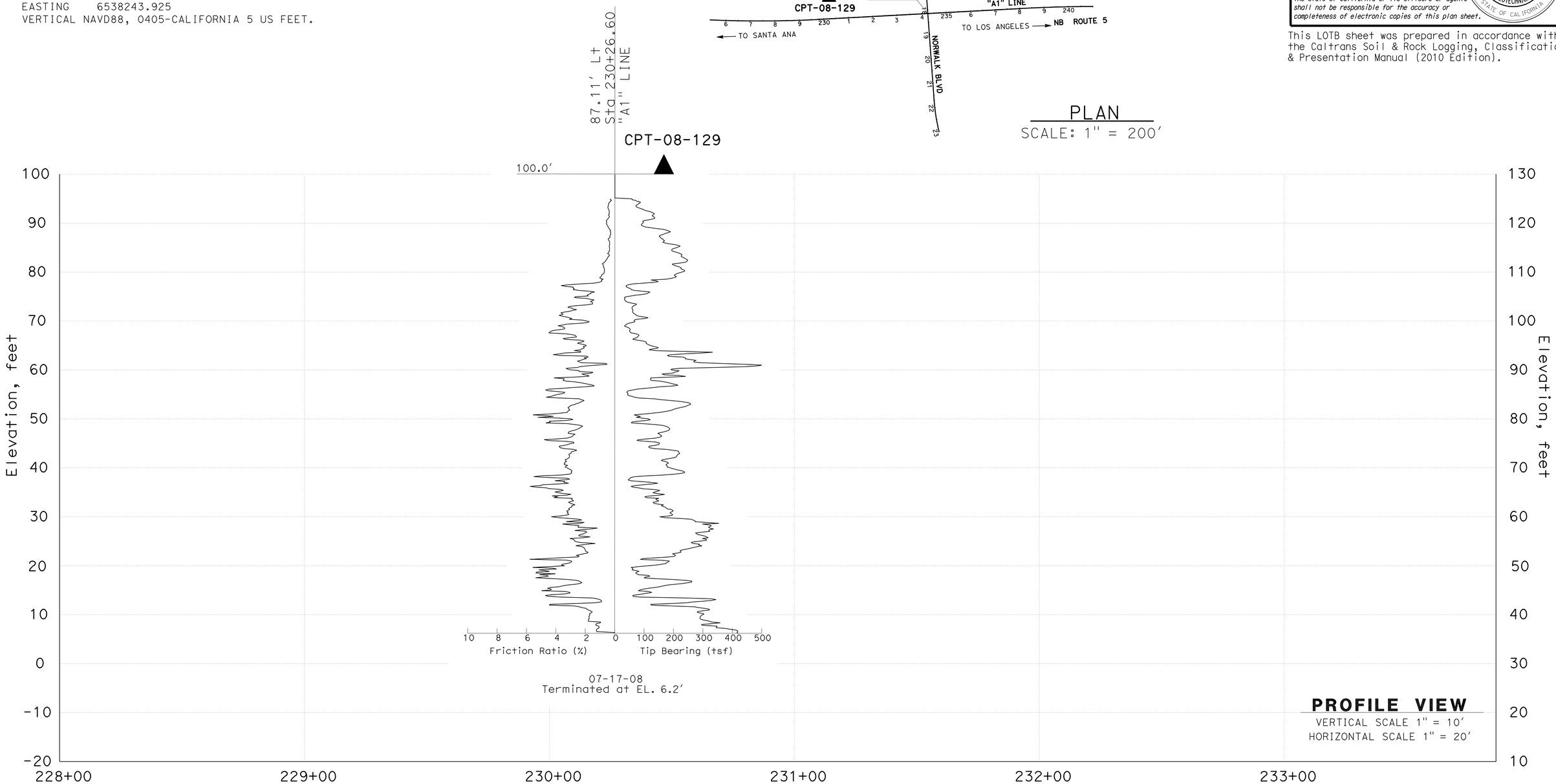

PROFILE VIEW
VERTICAL SCALE 1" = 10'
HORIZONTAL SCALE 1" = 20'

SW-11

ENGINEERING SERVICES	MATERIALS AND GEOTECHNICAL SERVICES	STATE OF CALIFORNIA DEPARTMENT OF TRANSPORTATION	DIVISION OF ENGINEERING SERVICES STRUCTURE DESIGN DESIGN BRANCH 21	BRIDGE NO. / POST MILE 4.37/4.40	SOUND WALL 233
FUNCTIONAL SUPERVISOR NAME: M.SMITH	DRAWN BY: T.Panah (URS CORP) CHECKED BY: F.GERAMI	FIELD INVESTIGATION BY: P.MCDONALD			LOG OF TEST BORINGS SHEET 1 OF 3

OGS CIVIL LOG OF TEST BORINGS SHEET
ORIGINAL SCALE IN INCHES FOR REDUCED PLANS 0 1 2 3
UNIT: 3658
PROJECT NUMBER & PHASE: 0700001834 240 CONTRACT NO.: 07-215941
DISREGARD PRINTS BEARING EARLIER REVISION DATES
REVISION DATES SHEET OF
FILE => 721594rc002.dgn
USERNAME => s114926 DATE PLOTTED => 14-APR-2012 TIME PLOTTED => 09:53

REFERENCE: CALTRANS SOIL & ROCK LOGGING, CLASSIFICATION, AND PRESENTATION MANUAL (2010)

DIST	COUNTY	ROUTE	POST MILES TOTAL PROJECT	SHEET No.	TOTAL SHEETS
07	LA	5	4.0/5.9	710	1597

REGISTERED CIVIL ENGINEER 12-19-11 DATE

4-9-12
PLANS APPROVAL DATE

REGISTERED PROFESSIONAL ENGINEER
Amare Tsegie
No. C67529
Exp. 6-30-13
GEOTECHNICAL
STATE OF CALIFORNIA

The State of California or its officers or agents shall not be responsible for the accuracy or completeness of electronic copies of this plan sheet.

This LOTB sheet was prepared in accordance with the Caltrans Soil & Rock Logging, Classification, & Presentation Manual (2010 Edition).

CEMENTATION

Description	Criteria
Weak	Crumbles or breaks with handling or little finger pressure.
Moderate	Crumbles or breaks with considerable finger pressure.
Strong	Will not crumble or break with finger pressure.

BOREHOLE IDENTIFICATION

Symbol	Hole Type	Description
Size	A	Auger Boring (hollow or solid stem bucket)
Size	R RW RC P	Rotary drilled boring (conventional) Rotary drilled with self-casing wire-line Rotary core with continuously-sampled, self-casing wire-line Rotary percussion boring (air)
Size	R	Rotary drilled diamond core
Size	HD HA	Hand driven (1-inch soil tube) Hand Auger
●	D	Dynamic Cone Penetration Boring
▲	CPT	Cone Penetration Test (ASTM D 5778)
⬚	O	Other (note on LOTB)

Note: Size in inches.

CONSISTENCY OF COHESIVE SOILS

Description	Shear Strength (tsf)	Pocket Penetrometer Measurement, PP, (tsf)	Torvane Measurement, TV, (tsf)	Vane Shear Measurement, VS, (tsf)
Very Soft	Less than 0.12	Less than 0.25	Less than 0.12	Less than 0.12
Soft	0.12 - 0.25	0.25 - 0.5	0.12 - 0.25	0.12 - 0.25
Medium Stiff	0.25 - 0.5	0.5 - 1	0.25 - 0.5	0.25 - 0.5
Stiff	0.5 - 1	1 - 2	0.5 - 1	0.5 - 1
Very Stiff	1 - 2	2 - 4	1 - 2	1 - 2
Hard	Greater than 2	Greater than 4	Greater than 2	Greater than 2

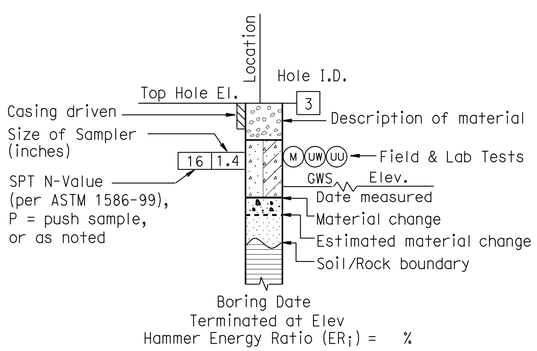

ROTARY BORING

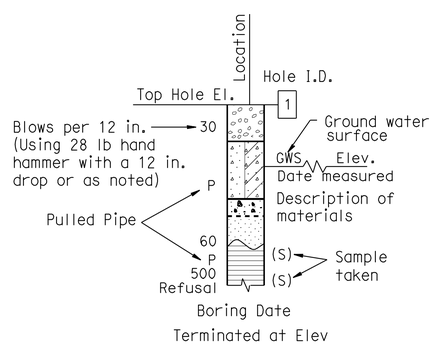

HAND BORING

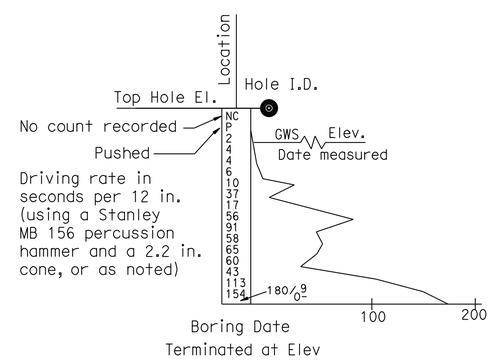

DYNAMIC CONE PENETRATION BORING

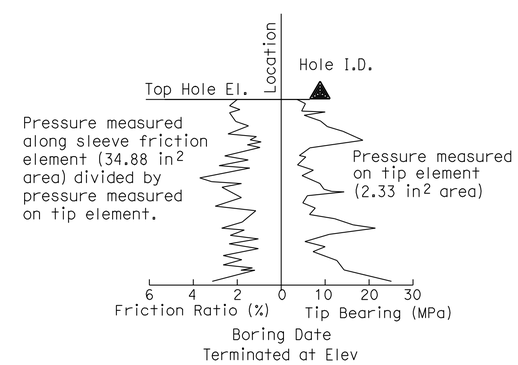

CONE PENETRATION TEST (CPT) BORING

SW-12

ENGINEERING SERVICES	MATERIALS AND GEOTECHNICAL SERVICES	STATE OF CALIFORNIA DEPARTMENT OF TRANSPORTATION	DIVISION OF ENGINEERING SERVICES STRUCTURE DESIGN DESIGN BRANCH 21	BRIDGE NO. / POST MILE 4.37/4.40	SOUND WALL 233
FUNCTIONAL SUPERVISOR NAME: M.SMITH	DRAWN BY: T.Panah (URS CORP) CHECKED BY: F.GERAMI	FIELD INVESTIGATION BY: P.MCDONALD			LOG OF TEST BORINGS SHEET 2 OF 3

OGS CIVIL LOG OF TEST BORINGS SHEET

ORIGINAL SCALE IN INCHES FOR REDUCED PLANS 0 1 2 3

UNIT: 3658
PROJECT NUMBER & PHASE: 0700001834 240 CONTRACT NO.: 07-215941

DISREGARD PRINTS BEARING EARLIER REVISION DATES

REVISION DATES | SHEET | OF

FILE => 721594rc003.dgn

USERNAME => s114326 DATE PLOTTED => 14-APR-2012 TIME PLOTTED => 09:53

REFERENCE: CALTRANS SOIL & ROCK LOGGING, CLASSIFICATION, AND PRESENTATION MANUAL (2010)

DIST	COUNTY	ROUTE	POST MILES TOTAL PROJECT	SHEET No.	TOTAL SHEETS
07	LA	5	4.0/5.9	711	1597

REGISTERED CIVIL ENGINEER — DATE 12-19-11

PLANS APPROVAL DATE 4-9-12

REGISTERED PROFESSIONAL ENGINEER — Amare Tsegie — No. C67529 — Exp. 6-30-13 — GEOTECHNICAL — STATE OF CALIFORNIA

The State of California or its officers or agents shall not be responsible for the accuracy or completeness of electronic copies of this plan sheet.

This LOTB sheet was prepared in accordance with the Caltrans Soil & Rock Logging, Classification, & Presentation Manual (2010 Edition).

GROUP SYMBOLS AND NAMES

Graphic/Symbol	Group Names	Graphic/Symbol	Group Names
GW	Well-graded GRAVEL Well-graded GRAVEL with SAND	CL	Lean CLAY Lean CLAY with SAND Lean CLAY with GRAVEL SANDY lean CLAY SANDY lean CLAY with GRAVEL GRAVELLY lean CLAY GRAVELLY lean CLAY with SAND
GP	Poorly-graded GRAVEL Poorly-graded GRAVEL with SAND		
GW-GM	Well-graded GRAVEL with SILT Well-graded GRAVEL with SILT and SAND	CL-ML	SILTY CLAY SILTY CLAY with SAND SILTY CLAY with GRAVEL SANDY SILTY CLAY SANDY SILTY CLAY with GRAVEL GRAVELLY SILTY CLAY GRAVELLY SILTY CLAY with SAND
GW-GC	Well-graded GRAVEL with CLAY (or SILTY CLAY) Well-graded GRAVEL with CLAY and SAND (or SILTY CLAY and SAND)		
GP-GM	Poorly-graded GRAVEL with SILT Poorly-graded GRAVEL with SILT and SAND	ML	SILT SILT with SAND SILT with GRAVEL SANDY SILT SANDY SILT with GRAVEL GRAVELLY SILT GRAVELLY SILT with SAND
GP-GC	Poorly-graded GRAVEL with CLAY (or SILTY CLAY) Poorly-graded GRAVEL with CLAY and SAND (or SILTY CLAY and SAND)		
GM	SILTY GRAVEL SILTY GRAVEL with SAND	OL	ORGANIC lean CLAY ORGANIC lean CLAY with SAND ORGANIC lean CLAY with GRAVEL SANDY ORGANIC lean CLAY SANDY ORGANIC lean CLAY with GRAVEL GRAVELLY ORGANIC lean CLAY GRAVELLY ORGANIC lean CLAY with SAND
GC	CLAYEY GRAVEL CLAYEY GRAVEL with SAND		
GC-GM	SILTY, CLAYEY GRAVEL SILTY, CLAYEY GRAVEL with SAND	OL	ORGANIC SILT ORGANIC SILT with SAND ORGANIC SILT with GRAVEL SANDY ORGANIC SILT SANDY ORGANIC SILT with GRAVEL GRAVELLY ORGANIC SILT GRAVELLY ORGANIC SILT with SAND
SW	Well-graded SAND Well-graded SAND with GRAVEL		
SP	Poorly-graded SAND Poorly-graded SAND with GRAVEL	CH	Fat CLAY Fat CLAY with SAND Fat CLAY with GRAVEL SANDY fat CLAY SANDY fat CLAY with GRAVEL GRAVELLY fat CLAY GRAVELLY fat CLAY with SAND
SW-SM	Well-graded SAND with SILT Well-graded SAND with SILT and GRAVEL		
SW-SC	Well-graded SAND with CLAY (or SILTY CLAY) Well-graded SAND with CLAY and GRAVEL (or SILTY CLAY and GRAVEL)	MH	Elastic SILT Elastic SILT with SAND Elastic SILT with GRAVEL SANDY elastic SILT SANDY elastic SILT with GRAVEL GRAVELLY elastic SILT GRAVELLY elastic SILT with SAND
SP-SM	Poorly-graded SAND with SILT Poorly-graded SAND with SILT and GRAVEL		
SP-SC	Poorly-graded SAND with CLAY (or SILTY CLAY) Poorly-graded SAND with CLAY and GRAVEL (or SILTY CLAY and GRAVEL)	OH	ORGANIC fat CLAY ORGANIC fat CLAY with SAND ORGANIC fat CLAY with GRAVEL SANDY ORGANIC fat CLAY SANDY ORGANIC fat CLAY with GRAVEL GRAVELLY ORGANIC fat CLAY GRAVELLY ORGANIC fat CLAY with SAND
SM	SILTY SAND SILTY SAND with GRAVEL		
SC	CLAYEY SAND CLAYEY SAND with GRAVEL	OH	ORGANIC elastic SILT ORGANIC elastic SILT with SAND ORGANIC elastic SILT with GRAVEL SANDY ORGANIC elastic SILT SANDY ORGANIC elastic SILT with GRAVEL GRAVELLY ORGANIC elastic SILT GRAVELLY ORGANIC elastic SILT with SAND
SC-SM	SILTY, CLAYEY SAND SILTY, CLAYEY SAND with GRAVEL		
PT	PEAT	OL/OH	ORGANIC SOIL ORGANIC SOIL with SAND ORGANIC SOIL with GRAVEL SANDY ORGANIC SOIL SANDY ORGANIC SOIL with GRAVEL GRAVELLY ORGANIC SOIL GRAVELLY ORGANIC SOIL with SAND
	COBBLES COBBLES and BOULDERS BOULDERS		

FIELD AND LABORATORY TESTING

- (C) Consolidation (ASTM D 2435)
- (CL) Collapse Potential (ASTM D 5333)
- (CP) Compaction Curve (CTM 216)
- (CR) Corrosivity Testing (CTM 643, CTM 422, CTM 417)
- (CU) Consolidated Undrained Triaxial (ASTM D 4767)
- (DS) Direct Shear (ASTM D 3080)
- (EI) Expansion Index (ASTM D 4829)
- (M) Moisture Content (ASTM D 2216)
- (OC) Organic Content-% (ASTM D 2974)
- (P) Permeability (CTM 220)
- (PA) Particle Size Analysis (ASTM D 422)
- (PI) Plasticity Index (AASHTO T 90) Liquid Limit (AASHTO T 89)
- (PL) Point Load Index (ASTM D 5731)
- (PM) Pressure Meter
- (R) R-Value (CTM 301)
- (SE) Sand Equivalent (CTM 217)
- (SG) Specific Gravity (AASHTO T 100)
- (SL) Shrinkage Limit (ASTM D 427)
- (SW) Swell Potential (ASTM D 4546)
- (UC) Unconfined Compression-Soil (ASTM D 2166) Unconfined Compression-Rock (ASTM D 2938)
- (UU) Unconsolidated Undrained Triaxial (ASTM D 2850)
- (UW) Unit Weight (ASTM D 4767)

APPARENT DENSITY OF COHESIONLESS SOILS

Description	SPT N_{60} (Blows / 12 in.)
Very Loose	0 - 5
Loose	5 - 10
Medium Dense	10 - 30
Dense	30 - 50
Very Dense	Greater than 50

MOISTURE

Description	Criteria
Dry	No discernable moisture
Moist	Moisture present, but no free water
Wet	Visible free water

PERCENT OR PROPORTION OF SOILS

Description	Criteria
Trace	Particles are present but estimated to be less than 5%
Few	5% - 10%
Little	15% - 25%
Some	30% - 45%
Mostly	50% - 100%

PARTICLE SIZE

Description		Size (in.)
Boulder		Greater than 12
Cobble		3 - 12
Gravel	Coarse	3/4 - 3
	Fine	1/5 - 3/4
Sand	Coarse	1/16 - 1/5
	Medium	1/64 - 1/16
	Fine	1/300 - 1/64
Silt and Clay		Less than 1/300

SW-13

ENGINEERING SERVICES	MATERIALS AND GEOTECHNICAL SERVICES	STATE OF CALIFORNIA DEPARTMENT OF TRANSPORTATION	DIVISION OF ENGINEERING SERVICES STRUCTURE DESIGN DESIGN BRANCH 21	BRIDGE NO. / POST MILE 4.37/4.40	SOUND WALL 233
FUNCTIONAL SUPERVISOR NAME: M.SMITH	DRAWN BY: T.Panah (URS CORP) CHECKED BY: F.GERAMI	FIELD INVESTIGATION BY: P.MCDONALD			LOG OF TEST BORINGS SHEET 3 OF 3

OGS CIVIL LOG OF TEST BORINGS SHEET

ORIGINAL SCALE IN INCHES FOR REDUCED PLANS 0 1 2 3

UNIT: 3658
PROJECT NUMBER & PHASE: 0700001834 240 CONTRACT NO.: 07-215941

DISREGARD PRINTS BEARING EARLIER REVISION DATES → REVISION DATES SHEET OF

FILE => 721594rc004.dgn

USERNAME => s114926 DATE PLOTTED => 14-APR-2012 TIME PLOTTED => 09:53

Dist	COUNTY	ROUTE	POST MILES TOTAL PROJECT	SHEET No.	TOTAL SHEETS
07	LA	5	4.0/5.9	712	1597

REGISTERED CIVIL ENGINEER 12-19-11 DATE

4-9-12
PLANS APPROVAL DATE

REGISTERED PROFESSIONAL ENGINEER TJANDRA GUNAWAN No. C54965 Exp. 6/30/12 CIVIL STATE OF CALIFORNIA

THE STATE OF CALIFORNIA OR ITS OFFICERS OR AGENTS SHALL NOT BE RESPONSIBLE FOR THE ACCURACY OR COMPLETENESS OF SCANNED COPIES OF THIS PLAN SHEET.

NOTE:

FOR ACCURATE RIGHT OF WAY DATA, CONTACT RIGHT OF WAY ENGINEERING AT THE DISTRICT OFFICE.

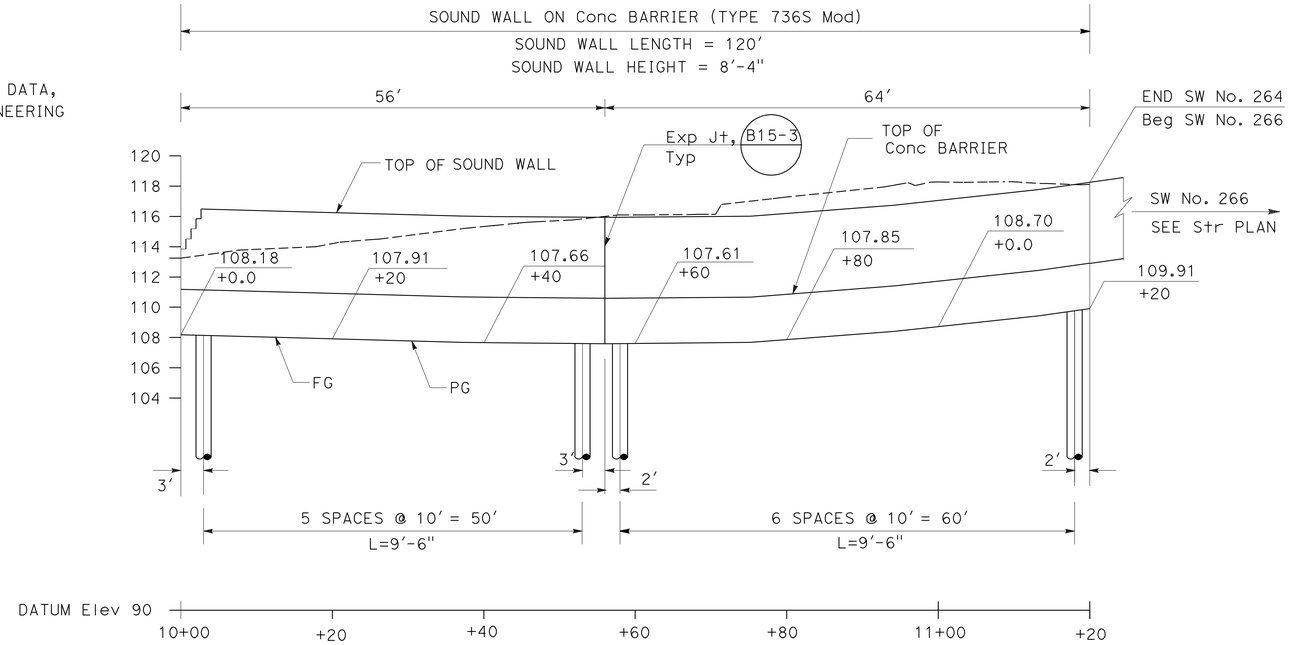

ELEVATION

SCALE: Horiz 1" = 10'
Vert 1" = 5'

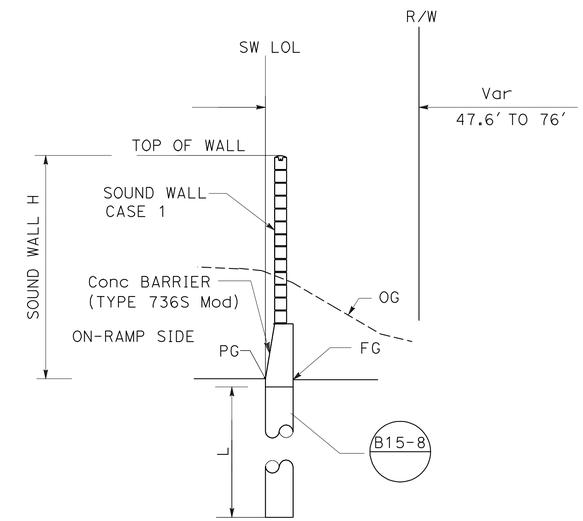

TYPICAL SECTION

NO SCALE
Sta 10+00.00 TO 11+20.00

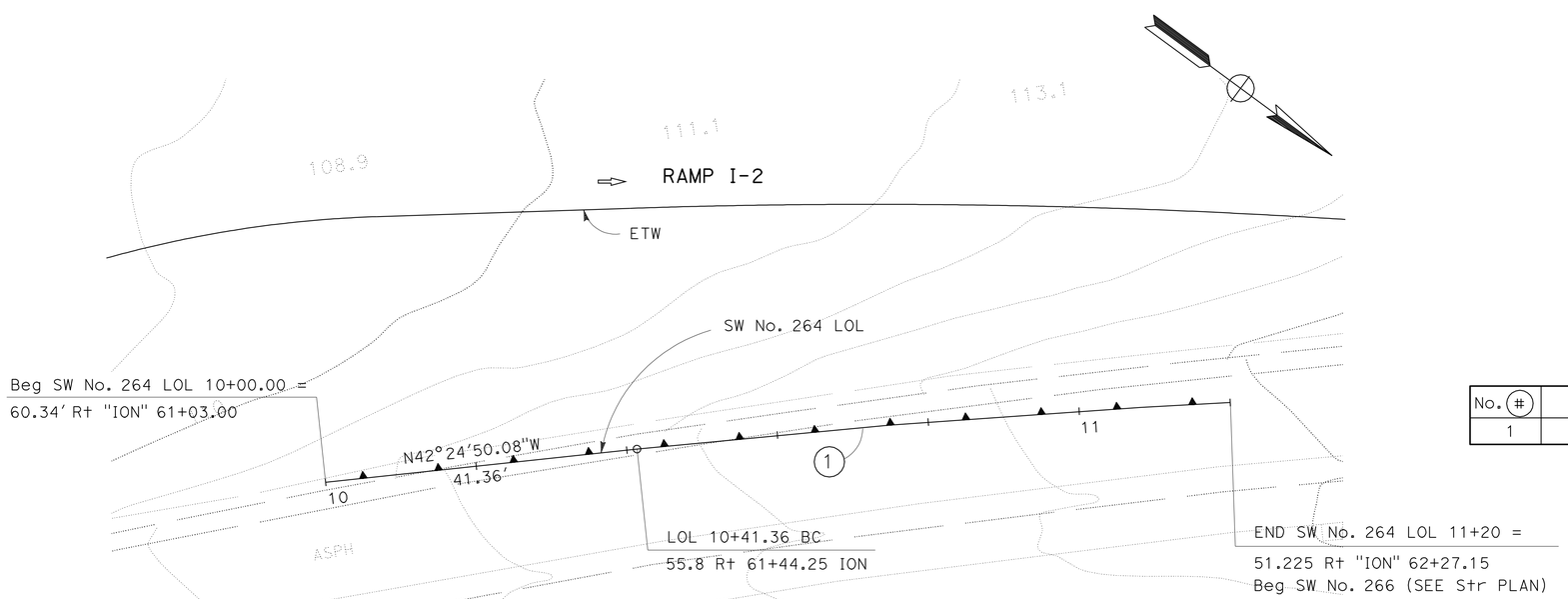

PLAN

SCALE: 1" = 10'

CURVE DATA

No. #	R	△	T	L
1	1,395.36'	3°13'44.7"	39.33'	78.64'

SOUND WALL PLAN
SW No. 264

SCALE AS SHOWN

APPROVED FOR RETAINING WALL WORK ONLY

SW-14

REVISED BY | DATE REVISED
WILFRIDO MORALES | TJANDRA GUNAWAN
CALCULATED-DESIGNED BY | CHECKED BY
FUNCTIONAL SUPERVISOR: SIMON KUO
STATE OF CALIFORNIA - DEPARTMENT OF TRANSPORTATION
Caltrans® OFFICE OF DESIGN A

LAST REVISION 00-00-00 | DATE PLOTTED => 14-APR-2012 | TIME PLOTTED => 09:53

DIST	COUNTY	ROUTE	POST MILES TOTAL PROJECT	SHEET No.	TOTAL SHEETS
07	LA	5	4.0/5.9	713	1597

REGISTERED CIVIL ENGINEER 12-19-11 DATE

4-9-12
PLANS APPROVAL DATE

REGISTERED PROFESSIONAL ENGINEER Amare Tsegie No. C67529 Exp. 6-30-13 CIVIL STATE OF CALIFORNIA

The State of California or its officers or agents shall not be responsible for the accuracy or completeness of electronic copies of this plan sheet.

This LOTB sheet was prepared in accordance with the Caltrans Soil & Rock Logging, Classification, & Presentation Manual (2010 Edition).

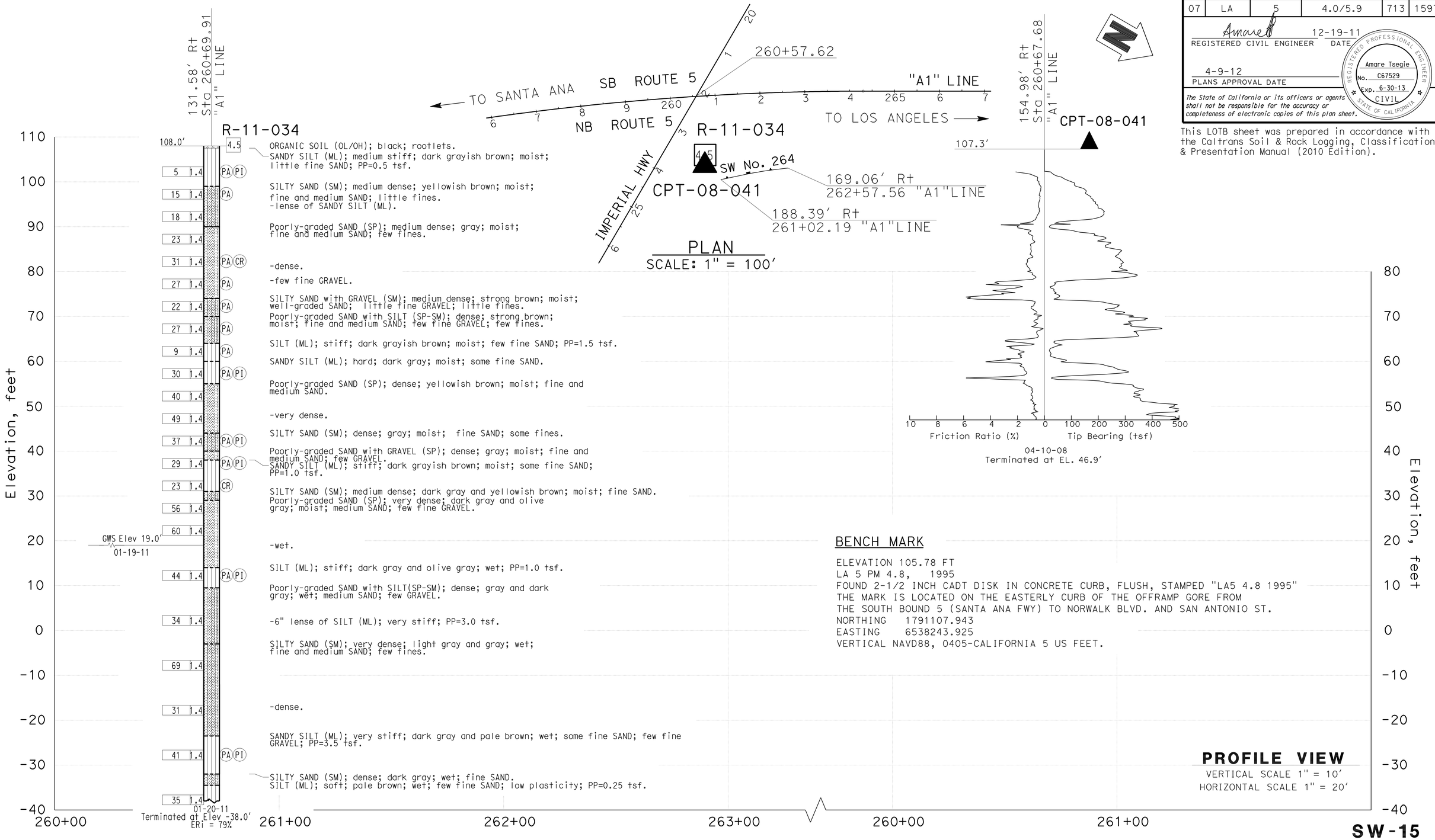

BENCH MARK

ELEVATION 105.78 FT
LA 5 PM 4.8, 1995
FOUND 2-1/2 INCH CADT DISK IN CONCRETE CURB, FLUSH, STAMPED "LA5 4.8 1995"
THE MARK IS LOCATED ON THE EASTERLY CURB OF THE OFFRAMP GORE FROM
THE SOUTH BOUND 5 (SANTA ANA FWY) TO NORWALK BLVD. AND SAN ANTONIO ST.
NORTHING 1791107.943
EASTING 6538243.925
VERTICAL NAVD88, 0405-CALIFORNIA 5 US FEET.

SW-15

ENGINEERING SERVICES	MATERIALS AND GEOTECHNICAL SERVICES	STATE OF CALIFORNIA DEPARTMENT OF TRANSPORTATION	DIVISION OF ENGINEERING SERVICES STRUCTURE DESIGN DESIGN BRANCH 21	BRIDGE NO. / POST MILE 4.91/4.92	SOUND WALL 264
FUNCTIONAL SUPERVISOR NAME: CHI-TSENG LIU	DRAWN BY: P.QUACH / T.Panah (URS CORP) CHECKED BY: F.GERAMI	FIELD INVESTIGATION BY: A.TSEGIE/M.ISLAM/P.MCDONALD			LOG OF TEST BORINGS SHEET 1 OF 3

OGS CIVIL LOG OF TEST BORINGS SHEET

ORIGINAL SCALE IN INCHES FOR REDUCED PLANS 0 1 2 3

UNIT: 3658
PROJECT NUMBER & PHASE: 0700001834 240 CONTRACT NO.: 07-215941

DISREGARD PRINTS BEARING EARLIER REVISION DATES → REVISION DATES SHEET OF

FILE => 721594rd002.dgn

USERNAME => s114926 DATE PLOTTED => 14-APR-2012 TIME PLOTTED => 09:53

REFERENCE: CALTRANS SOIL & ROCK LOGGING, CLASSIFICATION, AND PRESENTATION MANUAL (2010)

DIST	COUNTY	ROUTE	POST MILES TOTAL PROJECT	SHEET No.	TOTAL SHEETS
07	LA	5	4.0/5.9	714	1597

REGISTERED CIVIL ENGINEER — DATE 12-19-11

4-9-12
PLANS APPROVAL DATE

REGISTERED PROFESSIONAL ENGINEER — Amare Tsegie — No. C67529 — Exp. 6-30-13 — CIVIL — STATE OF CALIFORNIA

The State of California or its officers or agents shall not be responsible for the accuracy or completeness of electronic copies of this plan sheet.

This LOTB sheet was prepared in accordance with the Caltrans Soil & Rock Logging, Classification, & Presentation Manual (2010 Edition).

CEMENTATION

Description	Criteria
Weak	Crumbles or breaks with handling or little finger pressure.
Moderate	Crumbles or breaks with considerable finger pressure.
Strong	Will not crumble or break with finger pressure.

BOREHOLE IDENTIFICATION

Symbol	Hole Type	Description
Size	A	Auger Boring (hollow or solid stem bucket)
Size	R RW RC P	Rotary drilled boring (conventional) Rotary drilled with self-casing wire-line Rotary core with continuously-sampled, self-casing wire-line Rotary percussion boring (air)
Size	R	Rotary drilled diamond core
Size	HD HA	Hand driven (1-inch soil tube) Hand Auger
●	D	Dynamic Cone Penetration Boring
▲	CPT	Cone Penetration Test (ASTM D 5778)
⬚	O	Other (note on LOTB)

Note: Size in inches.

CONSISTENCY OF COHESIVE SOILS

Description	Shear Strength (tsf)	Pocket Penetrometer Measurement, PP, (tsf)	Torvane Measurement, TV, (tsf)	Vane Shear Measurement, VS, (tsf)
Very Soft	Less than 0.12	Less than 0.25	Less than 0.12	Less than 0.12
Soft	0.12 - 0.25	0.25 - 0.5	0.12 - 0.25	0.12 - 0.25
Medium Stiff	0.25 - 0.5	0.5 - 1	0.25 - 0.5	0.25 - 0.5
Stiff	0.5 - 1	1 - 2	0.5 - 1	0.5 - 1
Very Stiff	1 - 2	2 - 4	1 - 2	1 - 2
Hard	Greater than 2	Greater than 4	Greater than 2	Greater than 2

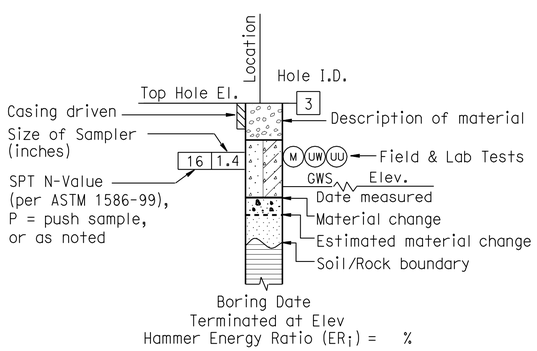

ROTARY BORING

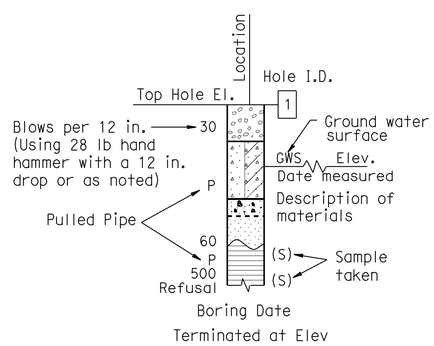

HAND BORING

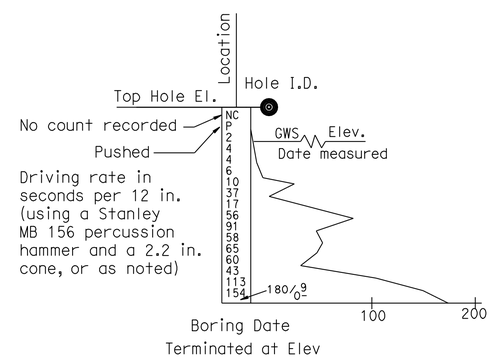

DYNAMIC CONE PENETRATION BORING

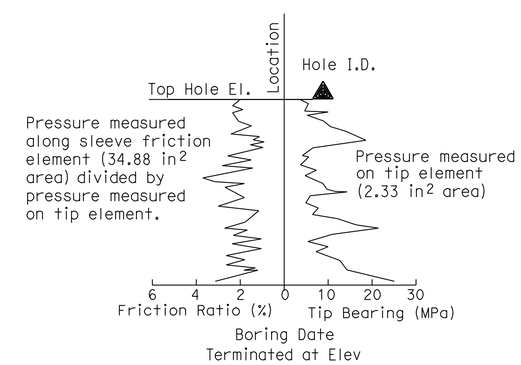

CONE PENETRATION TEST (CPT) BORING

SW-16

ENGINEERING SERVICES	MATERIALS AND GEOTECHNICAL SERVICES	STATE OF CALIFORNIA DEPARTMENT OF TRANSPORTATION	DIVISION OF ENGINEERING SERVICES STRUCTURE DESIGN DESIGN BRANCH 21	BRIDGE NO. / POST MILE 4.91/4.92	SOUND WALL 264
FUNCTIONAL SUPERVISOR NAME: CHI-TSENG LIU	DRAWN BY: P.QUACH / T.Panah (URS CORP) CHECKED BY: F.GERAMI	FIELD INVESTIGATION BY: A.TSEGIE/M.ISLAM/P.MCDONALD			LOG OF TEST BORINGS SHEET 2 OF 3

OGS CIVIL LOG OF TEST BORINGS SHEET

ORIGINAL SCALE IN INCHES FOR REDUCED PLANS 0 1 2 3

UNIT: 3658
PROJECT NUMBER & PHASE: 0700001834 240 CONTRACT NO.: 07-215941

DISREGARD PRINTS BEARING EARLIER REVISION DATES → REVISION DATES SHEET OF

FILE => 721594rd003.dgn

USERNAME => s114326 DATE PLOTTED => 14-APR-2012 TIME PLOTTED => 09:54

REFERENCE: CALTRANS SOIL & ROCK LOGGING, CLASSIFICATION, AND PRESENTATION MANUAL (2010)

DIST	COUNTY	ROUTE	POST MILES TOTAL PROJECT	SHEET No.	TOTAL SHEETS
07	LA	5	4.0/5.9	715	1597

REGISTERED CIVIL ENGINEER — DATE 12-19-11

4-9-12
PLANS APPROVAL DATE

REGISTERED PROFESSIONAL ENGINEER — Amare Tsegie — No. C67529 — Exp. 6-30-13 — CIVIL — STATE OF CALIFORNIA

The State of California or its officers or agents shall not be responsible for the accuracy or completeness of electronic copies of this plan sheet.

This LOTB sheet was prepared in accordance with the Caltrans Soil & Rock Logging, Classification, & Presentation Manual (2010 Edition).

GROUP SYMBOLS AND NAMES

Graphic/Symbol	Group Names	Graphic/Symbol	Group Names
GW	Well-graded GRAVEL Well-graded GRAVEL with SAND	CL	Lean CLAY Lean CLAY with SAND Lean CLAY with GRAVEL SANDY lean CLAY SANDY lean CLAY with GRAVEL GRAVELLY lean CLAY GRAVELLY lean CLAY with SAND
GP	Poorly-graded GRAVEL Poorly-graded GRAVEL with SAND		
GW-GM	Well-graded GRAVEL with SILT Well-graded GRAVEL with SILT and SAND	CL-ML	SILTY CLAY SILTY CLAY with SAND SILTY CLAY with GRAVEL SANDY SILTY CLAY SANDY SILTY CLAY with GRAVEL GRAVELLY SILTY CLAY GRAVELLY SILTY CLAY with SAND
GW-GC	Well-graded GRAVEL with CLAY (or SILTY CLAY) Well-graded GRAVEL with CLAY and SAND (or SILTY CLAY and SAND)		
GP-GM	Poorly-graded GRAVEL with SILT Poorly-graded GRAVEL with SILT and SAND	ML	SILT SILT with SAND SILT with GRAVEL SANDY SILT SANDY SILT with GRAVEL GRAVELLY SILT GRAVELLY SILT with SAND
GP-GC	Poorly-graded GRAVEL with CLAY (or SILTY CLAY) Poorly-graded GRAVEL with CLAY and SAND (or SILTY CLAY and SAND)		
GM	SILTY GRAVEL SILTY GRAVEL with SAND	OL	ORGANIC lean CLAY ORGANIC lean CLAY with SAND ORGANIC lean CLAY with GRAVEL SANDY ORGANIC lean CLAY SANDY ORGANIC lean CLAY with GRAVEL GRAVELLY ORGANIC lean CLAY GRAVELLY ORGANIC lean CLAY with SAND
GC	CLAYEY GRAVEL CLAYEY GRAVEL with SAND		
GC-GM	SILTY, CLAYEY GRAVEL SILTY, CLAYEY GRAVEL with SAND	OL	ORGANIC SILT ORGANIC SILT with SAND ORGANIC SILT with GRAVEL SANDY ORGANIC SILT SANDY ORGANIC SILT with GRAVEL GRAVELLY ORGANIC SILT GRAVELLY ORGANIC SILT with SAND
SW	Well-graded SAND Well-graded SAND with GRAVEL		
SP	Poorly-graded SAND Poorly-graded SAND with GRAVEL	CH	Fat CLAY Fat CLAY with SAND Fat CLAY with GRAVEL SANDY fat CLAY SANDY fat CLAY with GRAVEL GRAVELLY fat CLAY GRAVELLY fat CLAY with SAND
SW-SM	Well-graded SAND with SILT Well-graded SAND with SILT and GRAVEL		
SW-SC	Well-graded SAND with CLAY (or SILTY CLAY) Well-graded SAND with CLAY and GRAVEL (or SILTY CLAY and GRAVEL)	MH	Elastic SILT Elastic SILT with SAND Elastic SILT with GRAVEL SANDY elastic SILT SANDY elastic SILT with GRAVEL GRAVELLY elastic SILT GRAVELLY elastic SILT with SAND
SP-SM	Poorly-graded SAND with SILT Poorly-graded SAND with SILT and GRAVEL		
SP-SC	Poorly-graded SAND with CLAY (or SILTY CLAY) Poorly-graded SAND with CLAY and GRAVEL (or SILTY CLAY and GRAVEL)	OH	ORGANIC fat CLAY ORGANIC fat CLAY with SAND ORGANIC fat CLAY with GRAVEL SANDY ORGANIC fat CLAY SANDY ORGANIC fat CLAY with GRAVEL GRAVELLY ORGANIC fat CLAY GRAVELLY ORGANIC fat CLAY with SAND
SM	SILTY SAND SILTY SAND with GRAVEL		
SC	CLAYEY SAND CLAYEY SAND with GRAVEL	OH	ORGANIC elastic SILT ORGANIC elastic SILT with SAND ORGANIC elastic SILT with GRAVEL SANDY ORGANIC elastic SILT SANDY ORGANIC elastic SILT with GRAVEL GRAVELLY ORGANIC elastic SILT GRAVELLY ORGANIC elastic SILT with SAND
SC-SM	SILTY, CLAYEY SAND SILTY, CLAYEY SAND with GRAVEL		
PT	PEAT	OL/OH	ORGANIC SOIL ORGANIC SOIL with SAND ORGANIC SOIL with GRAVEL SANDY ORGANIC SOIL SANDY ORGANIC SOIL with GRAVEL GRAVELLY ORGANIC SOIL GRAVELLY ORGANIC SOIL with SAND
	COBBLES COBBLES and BOULDERS BOULDERS		

FIELD AND LABORATORY TESTING

- (C) Consolidation (ASTM D 2435)
- (CL) Collapse Potential (ASTM D 5333)
- (CP) Compaction Curve (CTM 216)
- (CR) Corrosivity Testing (CTM 643, CTM 422, CTM 417)
- (CU) Consolidated Undrained Triaxial (ASTM D 4767)
- (DS) Direct Shear (ASTM D 3080)
- (EI) Expansion Index (ASTM D 4829)
- (M) Moisture Content (ASTM D 2216)
- (OC) Organic Content-% (ASTM D 2974)
- (P) Permeability (CTM 220)
- (PA) Particle Size Analysis (ASTM D 422)
- (PI) Plasticity Index (AASHTO T 90) Liquid Limit (AASHTO T 89)
- (PL) Point Load Index (ASTM D 5731)
- (PM) Pressure Meter
- (R) R-Value (CTM 301)
- (SE) Sand Equivalent (CTM 217)
- (SG) Specific Gravity (AASHTO T 100)
- (SL) Shrinkage Limit (ASTM D 427)
- (SW) Swell Potential (ASTM D 4546)
- (UC) Unconfined Compression-Soil (ASTM D 2166) Unconfined Compression-Rock (ASTM D 2938)
- (UU) Unconsolidated Undrained Triaxial (ASTM D 2850)
- (UW) Unit Weight (ASTM D 4767)

APPARENT DENSITY OF COHESIONLESS SOILS

Description	SPT N_{60} (Blows / 12 in.)
Very Loose	0 - 5
Loose	5 - 10
Medium Dense	10 - 30
Dense	30 - 50
Very Dense	Greater than 50

MOISTURE

Description	Criteria
Dry	No discernable moisture
Moist	Moisture present, but no free water
Wet	Visible free water

PERCENT OR PROPORTION OF SOILS

Description	Criteria
Trace	Particles are present but estimated to be less than 5%
Few	5% - 10%
Little	15% - 25%
Some	30% - 45%
Mostly	50% - 100%

PARTICLE SIZE

Description		Size (in.)
Boulder		Greater than 12
Cobble		3 - 12
Gravel	Coarse	3/4 - 3
	Fine	1/5 - 3/4
Sand	Coarse	1/16 - 1/5
	Medium	1/64 - 1/16
	Fine	1/300 - 1/64
Silt and Clay		Less than 1/300

SW-17

ENGINEERING SERVICES — MATERIALS AND GEOTECHNICAL SERVICES

FUNCTIONAL SUPERVISOR
NAME: CHI-TSENG LIU

DRAWN BY: P.QUACH / T.Panah (URS CORP)
CHECKED BY: F.GERAMI

FIELD INVESTIGATION BY:
A.TSEGIE/M.ISLAM/P.MCDONALD

STATE OF CALIFORNIA
DEPARTMENT OF TRANSPORTATION

DIVISION OF ENGINEERING SERVICES
STRUCTURE DESIGN
DESIGN BRANCH 21

BRIDGE NO.
POST MILE 4.91/4.92

SOUND WALL 264

LOG OF TEST BORINGS SHEET 3 OF 3

OGS CIVIL LOG OF TEST BORINGS SHEET

ORIGINAL SCALE IN INCHES FOR REDUCED PLANS 0 1 2 3

UNIT: 3658
PROJECT NUMBER & PHASE: 0700001834 240 CONTRACT NO.: 07-215941

DISREGARD PRINTS BEARING EARLIER REVISION DATES

REVISION DATES — SHEET — OF

FILE => 721594rd004.dgn

USERNAME => s114926 DATE PLOTTED => 14-APR-2012 TIME PLOTTED => 09:54

Dist	COUNTY	ROUTE	POST MILES TOTAL PROJECT	SHEET No.	TOTAL SHEETS
07	LA	5	4.0/5.9	716	1597

REGISTERED CIVIL ENGINEER 12-19-11 DATE

4-9-12
PLANS APPROVAL DATE

REGISTERED PROFESSIONAL ENGINEER TJANDRA GUNAWAN No. C54965 Exp. 6/30/12 CIVIL STATE OF CALIFORNIA

THE STATE OF CALIFORNIA OR ITS OFFICERS OR AGENTS SHALL NOT BE RESPONSIBLE FOR THE ACCURACY OR COMPLETENESS OF SCANNED COPIES OF THIS PLAN SHEET.

NOTE:

FOR BARRIER REINFORCEMENT DETAILS NOT SHOWN, SEE STANDARD PLAN SHEET No. B15-6.

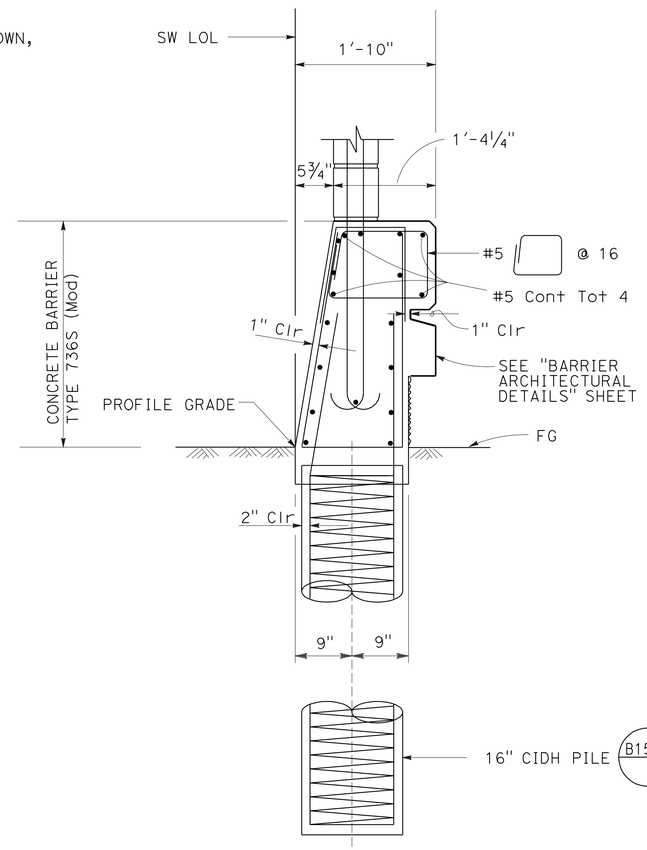

CONCRETE BARRIER TYPE 736S (MOD)

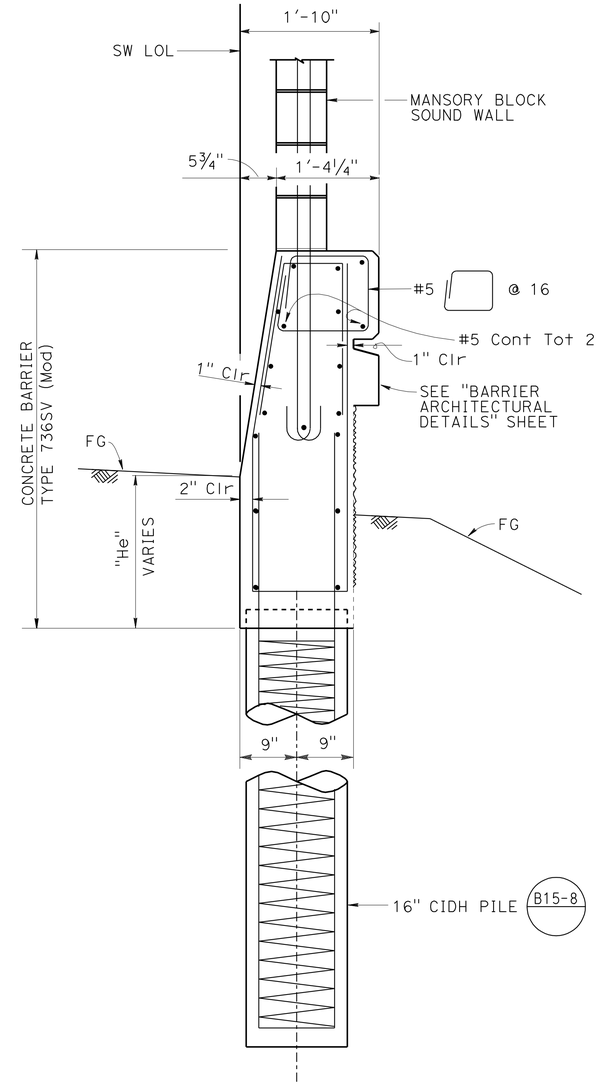

CONCRETE BARRIER TYPE 736SV (MOD)

STANDARD PLAN SHEET No.

DETAIL No.

BARRIER SECTIONS

NO SCALE

SW-18

STATE OF CALIFORNIA - DEPARTMENT OF TRANSPORTATION
Caltrans OFFICE OF DESIGN A

FUNCTIONAL SUPERVISOR: SIMON KUO

CALCULATED-DESIGNED BY: TJANDRA GUNAWAN

CHECKED BY

REVISED BY

DATE REVISED

LAST REVISION 00-00-00

DATE PLOTTED => 14-APR-2012
TIME PLOTTED => 09:54

Dist	COUNTY	ROUTE	POST MILES TOTAL PROJECT	SHEET No.	TOTAL SHEETS
07	LA	5	4.0/5.9	717	1597

REGISTERED CIVIL ENGINEER 12-19-11 DATE

4-9-12
PLANS APPROVAL DATE

REGISTERED PROFESSIONAL ENGINEER TJANDRA GUNAWAN No. C54965 Exp. 6/30/12 CIVIL STATE OF CALIFORNIA

THE STATE OF CALIFORNIA OR ITS OFFICERS OR AGENTS SHALL NOT BE RESPONSIBLE FOR THE ACCURACY OR COMPLETENESS OF SCANNED COPIES OF THIS PLAN SHEET.

NOTES:

1. FOR BARRIER REINFORCEMENT, SEE BARRIER SECTION SHEET SW-18 AND STANDARD PLAN SHEET B15-6.
2. FOR SOUND WALL ARCHITECTURAL TREATMENT, SEE CONSTRUCTION DETAILS SHEET C-53.
3. THE CONTRACTOR SHALL VERIFY ALL CONTROLLING FIELD DIMENSIONS BEFORE ORDERING OR FABRICATING ANY MATERIAL.

* - HE VARIES FROM 1' TO 3'

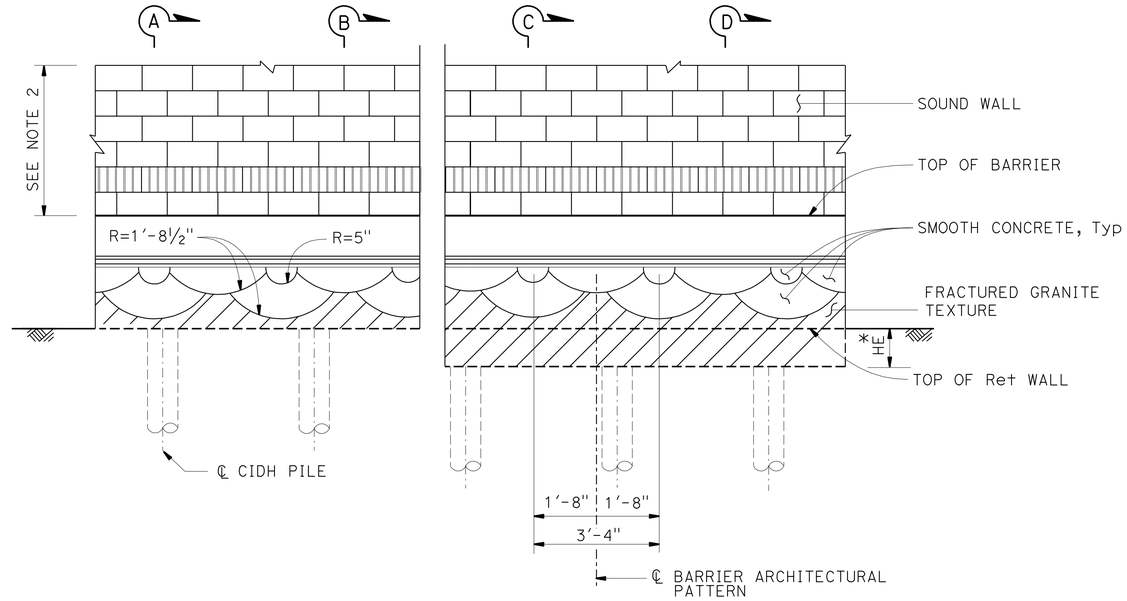

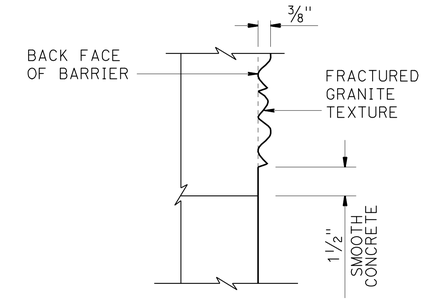

DETAIL D

NO SCALE

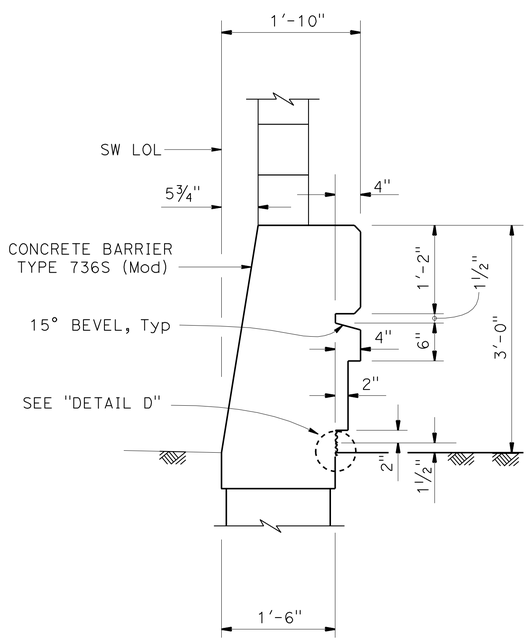

SECTION A-A

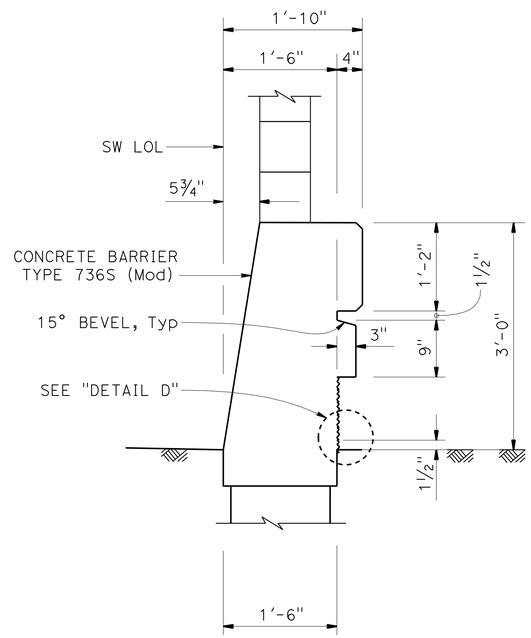

SECTION B-B

MASONRY BLOCK ON TYPE 736S BARRIER

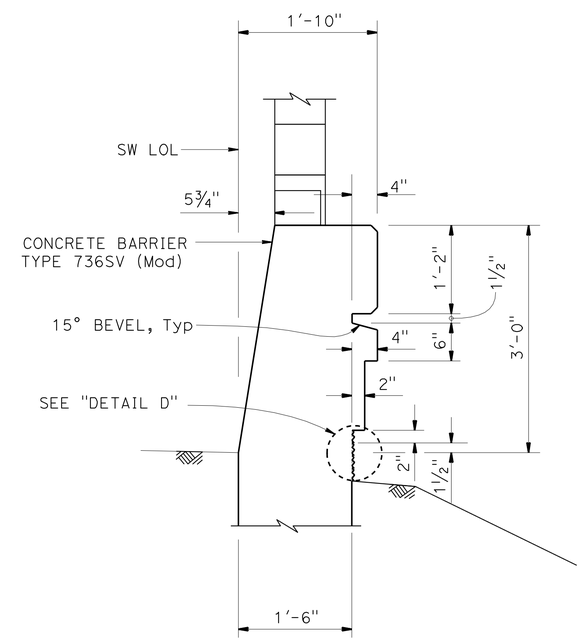

SECTION C-C

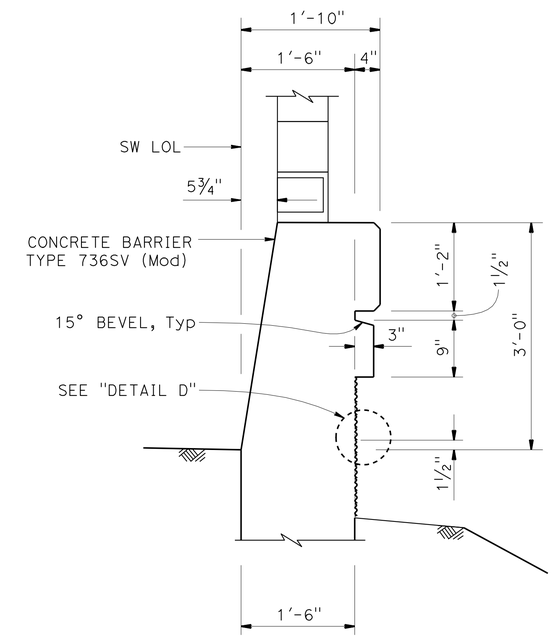

SECTION D-D

MASONRY BLOCK ON TYPE 736SV BARRIER

SOUND WALL AND BARRIER ARCHITECTURAL DETAILS

NO SCALE

SW-19

STATE OF CALIFORNIA - DEPARTMENT OF TRANSPORTATION
Caltrans® OFFICE OF DESIGN A

FUNCTIONAL SUPERVISOR: SIMON KUO
CALCULATED-DESIGNED BY: TJANDRA GUNAWAN
CHECKED BY
REVISED BY
DATE REVISED

LAST REVISION 00-00-00 | DATE PLOTTED => 14-APR-2012 | TIME PLOTTED => 09:54

Dist	COUNTY	ROUTE	POST MILES TOTAL PROJECT	SHEET No.	TOTAL SHEETS
07	LA	5	4.0/5.9	718	1597

REGISTERED CIVIL ENGINEER 12-19-11 DATE

4-9-12
PLANS APPROVAL DATE

REGISTERED PROFESSIONAL ENGINEER TJANDRA GUNAWAN No. C54965 Exp. 6/30/12 CIVIL STATE OF CALIFORNIA

THE STATE OF CALIFORNIA OR ITS OFFICERS OR AGENTS SHALL NOT BE RESPONSIBLE FOR THE ACCURACY OR COMPLETENESS OF SCANNED COPIES OF THIS PLAN SHEET.

NOTES:

1. ALL DIMENSIONS SYMETRICAL ABOUT ℄ PILASTER.
2. BEVELED EDGES ARE 45° UNLESS OTHERWISE NOTED.
3. ALL VERTICAL DIMENSIONS ARE MEASU;RED ALONG THE ℄ PILASTER (PILASTER SHALL BE VERTICAL).

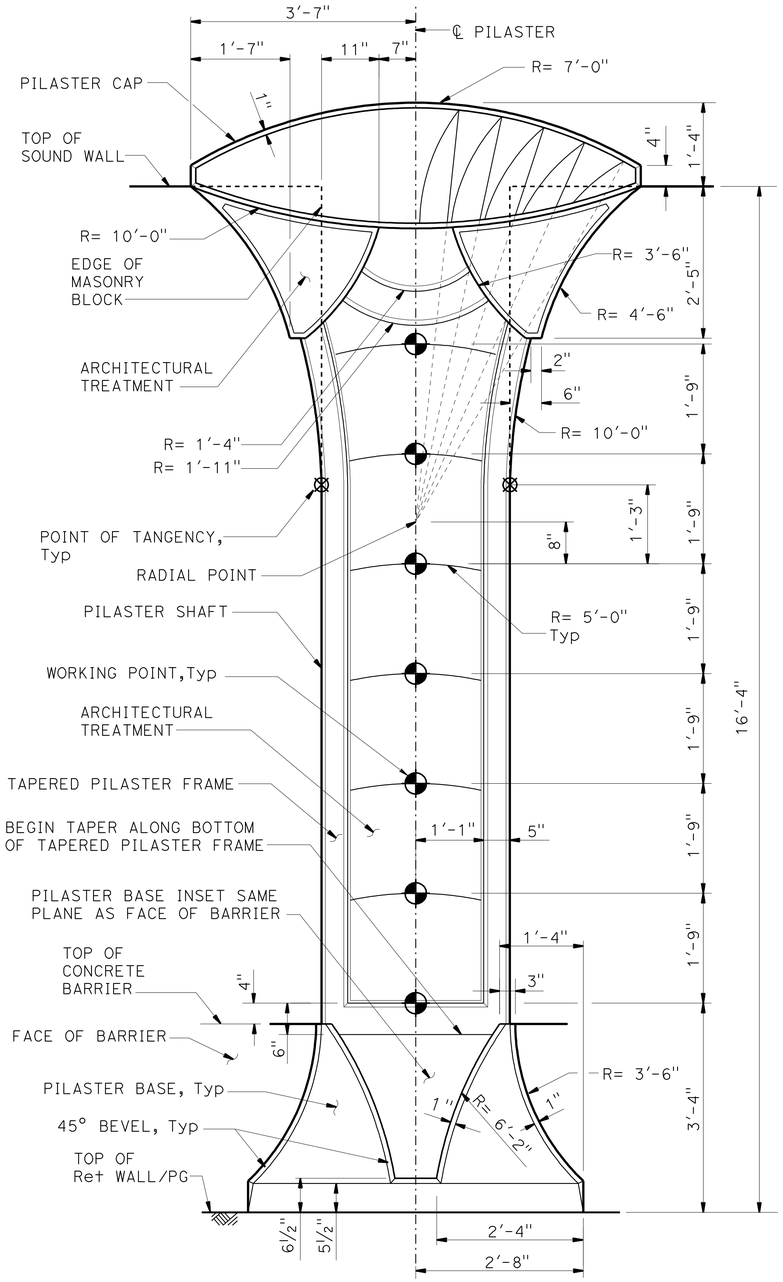

16'-4" SOUND WALL

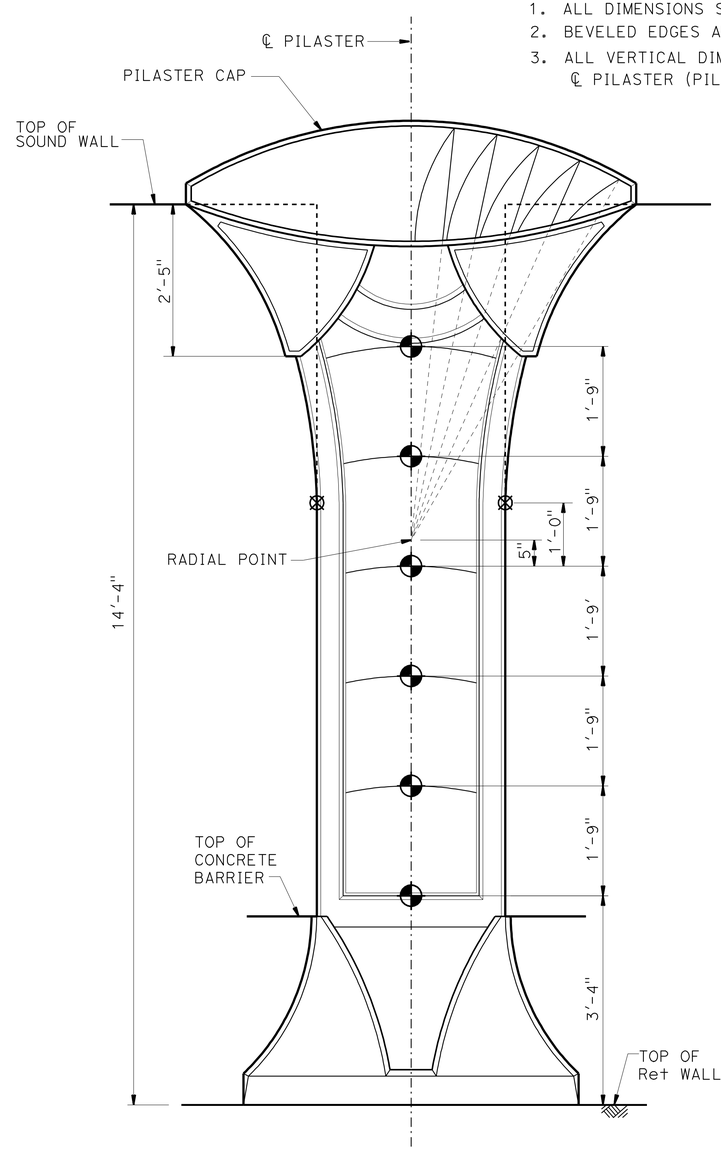

NOTE : FOR DIMENSIONS AND DETAILS NOT SHOWN, SEE "16'-4" SOUND WALL DETAILS

14'-4" SOUND WALL

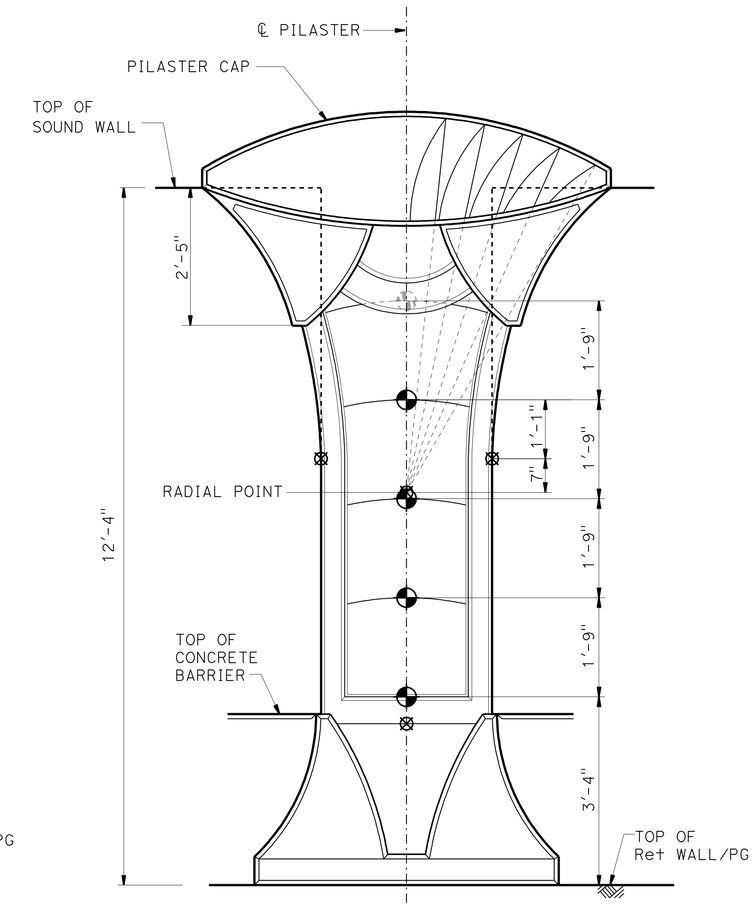

NOTE : FOR DIMENSIONS AND DETAILS NOT SHOWN, SEE "16'-4" SOUND WALL DETAILS

12'-4" SOUND WALL

PILASTER ELEVATION - FREEWAY SIDE

NOTE:

THE CONTRACTOR SHALL VERIFY ALL CONTROLLING FIELD DIMENSIONS BEFORE ORDERING OR FABRICATING ANY MATERIAL.

PILASTER ARCHITECTURAL DETAILS No. 1

NO SCALE

SW-20

STATE OF CALIFORNIA - DEPARTMENT OF TRANSPORTATION
Caltrans® OFFICE OF DESIGN A

FUNCTIONAL SUPERVISOR: SIMON KUO
CALCULATED-DESIGNED BY: TJANDRA GUNAWAN
CHECKED BY
REVISED BY
DATE REVISED

LAST REVISION 00-00-00 | DATE PLOTTED => 14-APR-2012 | TIME PLOTTED => 09:54

Dist	COUNTY	ROUTE	POST MILES TOTAL PROJECT	SHEET No.	TOTAL SHEETS
07	LA	5	4.0/5.9	719	1597

REGISTERED CIVIL ENGINEER 12-19-11 DATE

4-9-12
PLANS APPROVAL DATE

REGISTERED PROFESSIONAL ENGINEER TJANDRA GUNAWAN No. C54965 Exp. 6/30/12 CIVIL STATE OF CALIFORNIA

THE STATE OF CALIFORNIA OR ITS OFFICERS OR AGENTS SHALL NOT BE RESPONSIBLE FOR THE ACCURACY OR COMPLETENESS OF SCANNED COPIES OF THIS PLAN SHEET.

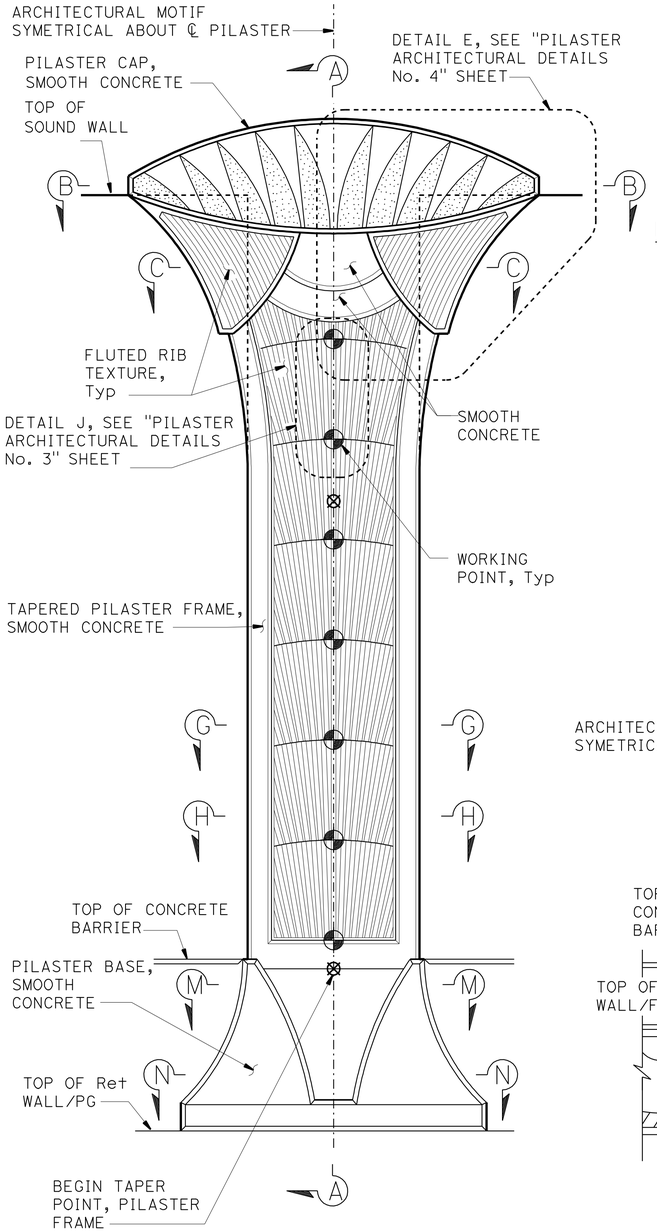

NOTE:

FOR ADDITIONAL DETAILS NOT SHOWN, SEE "16'-4" SOUND WALL - PILASTER ELEVATION" ON "PILASTER ARCHITECTURAL DETAILS NO. 1" SHEET.

FREEWAY SIDE

NOTES:

1. FOR "SECTION B-B", "SECTION C-C", "SECTION G-G","SECTION H-H" AND "SECTION L-L", SEE "PILASTER ARCHITECTURAL DETAILS No. 3" SHEET.
2. FOR "SECTION M-M" and "SECTION N-N"' SEE "PILASTER ARCHITECTURAL DETAIL No. 4" SHEET.
3. PILASTER SECTIONS ON RETAINING WALL SHOWN. FOR PILASTER ON BARRIER TYPE 736SV (Mod), SEE "PILASTER SECTION ON TYPE 736SV (Mod) BARRIER" on "PILASTER ARCHITECTURAL DETAILS No. 4" SHEET.
4. ALL DIMENSIONS SYMETRICAL ABOUT ℄ PILASTER.
5. BELEVELED EDGES ARE 45° UNLESS OTHERWISE NOTED.
6. ALL VERTICAL DIMENSIONS ARE MEASURED ALONG THE ℄ PILASTER (PILASTER SHALL BE VERTICAL).

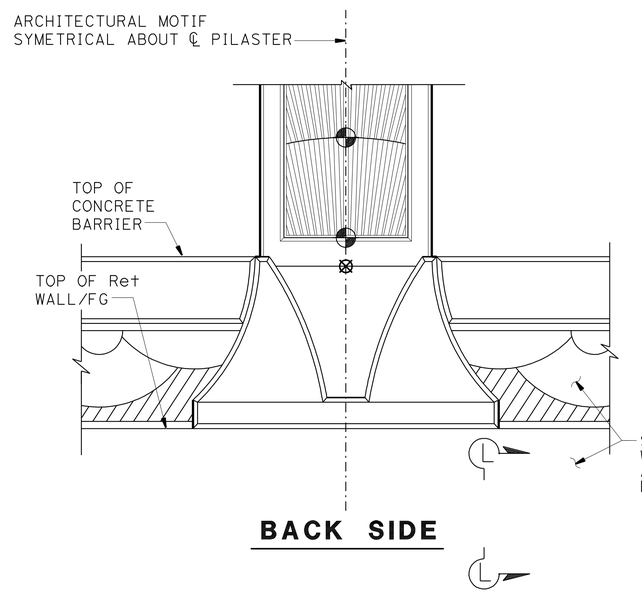

BACK SIDE

PILASTER ARCHITECTURAL MOTIF

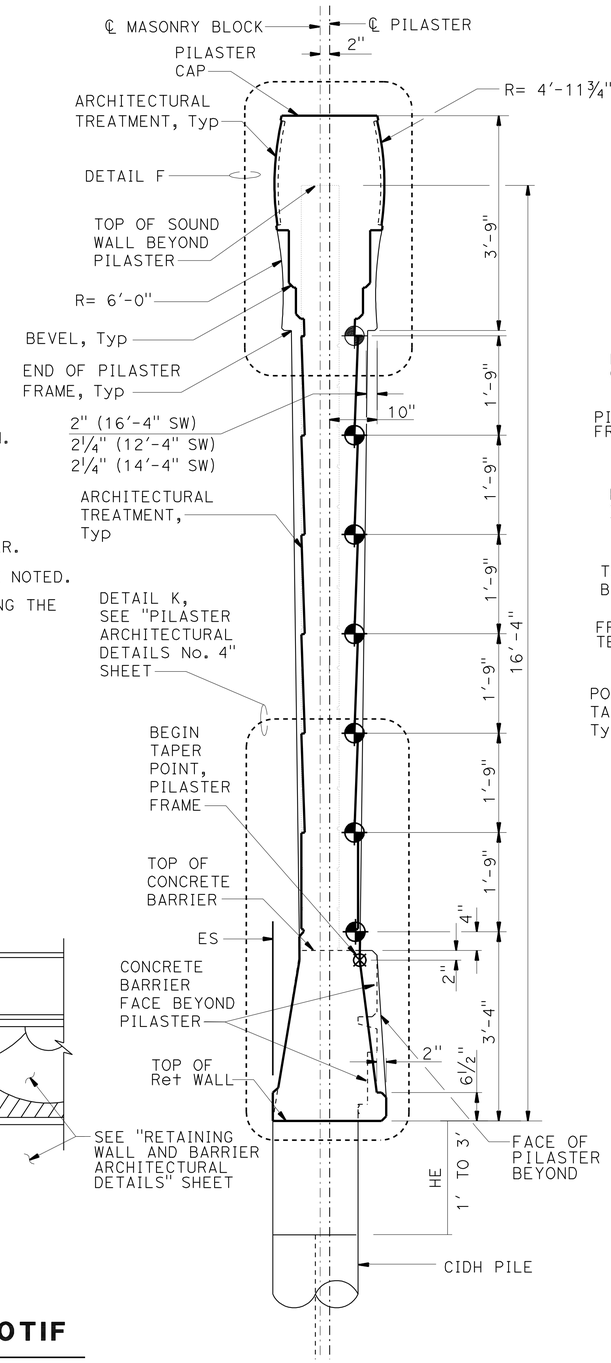

SECTION A-A

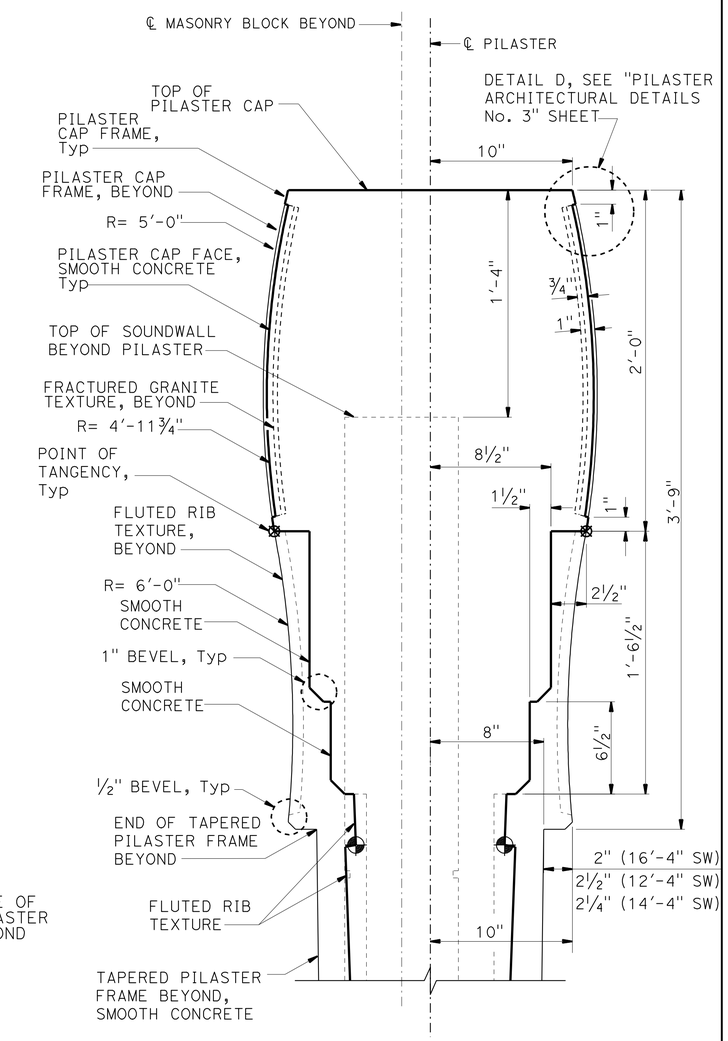

DETAIL F

NOTE:

THE CONTRACTOR SHALL VERIFY ALL CONTROLLING FIELD DIMENSIONS BEFORE ORDERING OR FABRICATING ANY MATERIAL.

PILASTER ARCHITECTURAL DETAILS No. 2

NO SCALE

SW-21

STATE OF CALIFORNIA - DEPARTMENT OF TRANSPORTATION
Caltrans® OFFICE OF DESIGN A

FUNCTIONAL SUPERVISOR: SIMON KUO
CALCULATED-DESIGNED BY: TJANDRA GUNAWAN
CHECKED BY
REVISED BY
DATE REVISED

LAST REVISION 00-00-00
DATE PLOTTED => 14-APR-2012
TIME PLOTTED => 09:55

Dist	COUNTY	ROUTE	POST MILES TOTAL PROJECT	SHEET No.	TOTAL SHEETS
07	LA	5	4.0/5.9	720	1597

REGISTERED CIVIL ENGINEER 12-19-11 DATE

4-9-12
PLANS APPROVAL DATE

REGISTERED PROFESSIONAL ENGINEER TJANDRA GUNAWAN No. C54965 Exp. 6/30/12 CIVIL STATE OF CALIFORNIA

THE STATE OF CALIFORNIA OR ITS OFFICERS OR AGENTS SHALL NOT BE RESPONSIBLE FOR THE ACCURACY OR COMPLETENESS OF SCANNED COPIES OF THIS PLAN SHEET.

NOTES:

1. ALL NOTES AND DIMENSIONS SYMETRICALABOUT ℄ PILASTER.
2. BEVELED EDGES ARE 45° UNLESS OTHERWISE NOTED.
3. FOR LOCATION OF "DETAIL J", "DETAIL D" AND "SECTION B-B", "SECTION C-C", "SECTION G-G", "SECTION H-H" AND "SECTION L-L", SEE "PILASTER RCHITECTURAL DETAILS No. 2" SHEET.

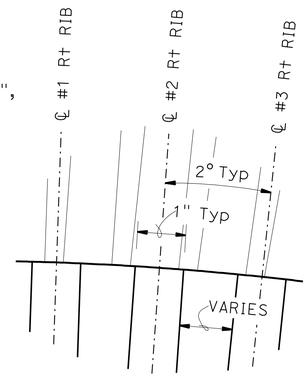

DETAIL P

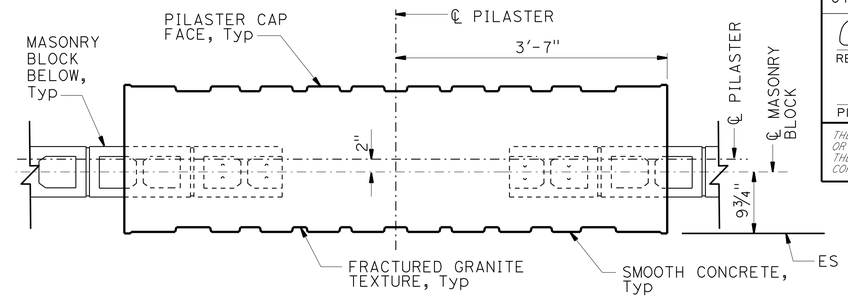

SECTION B-B

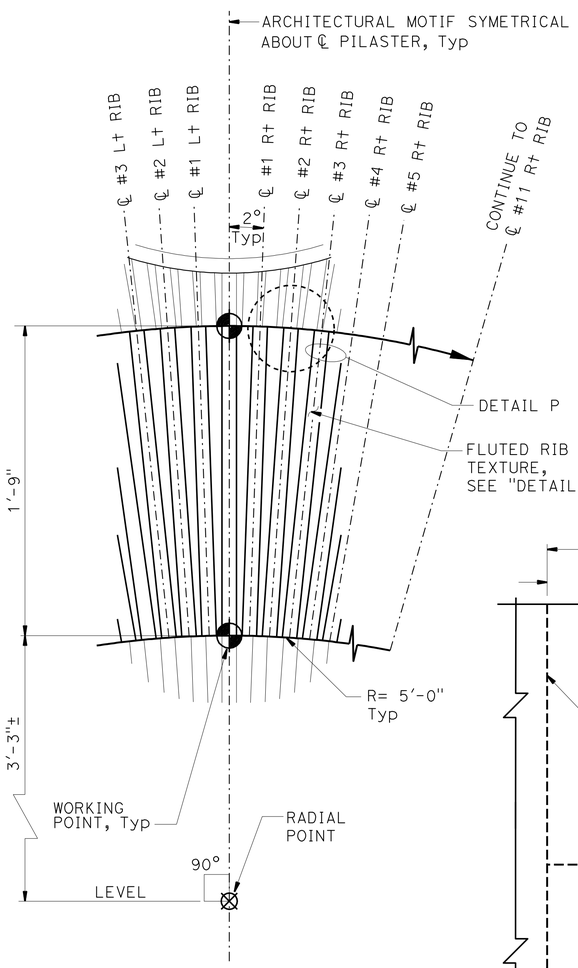

DETAIL J
NO SCALE

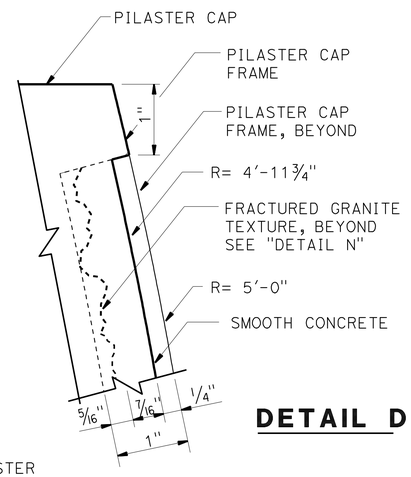

DETAIL D

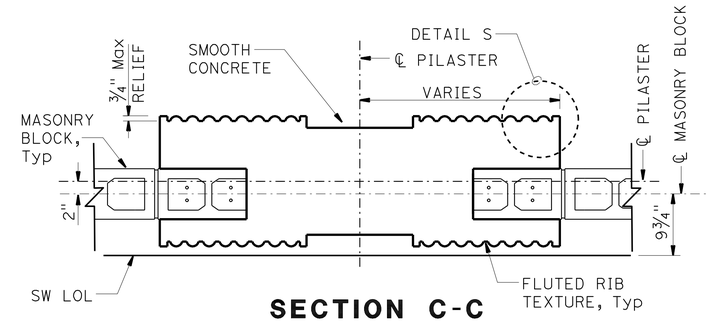

SECTION C-C

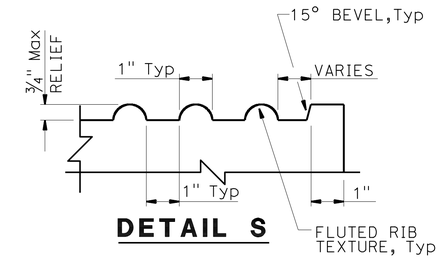

DETAIL S

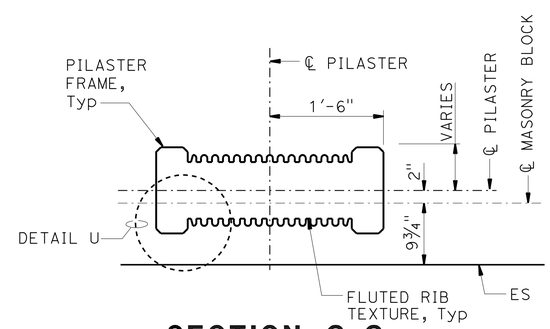

SECTION G-G

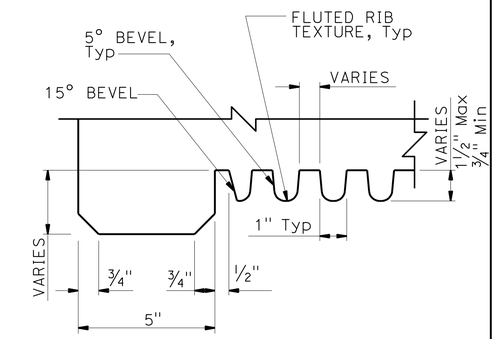

DETAIL U

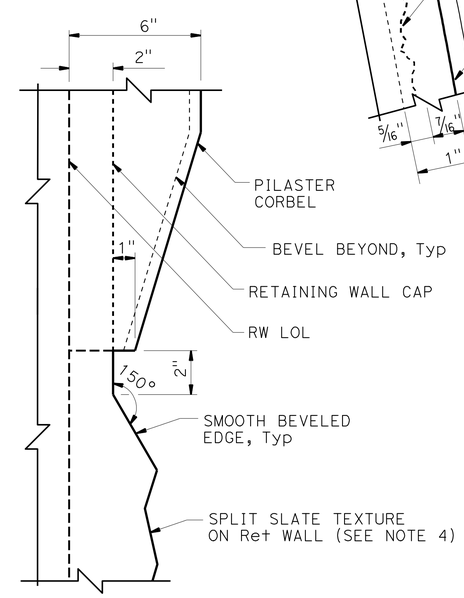

SECTION L-L

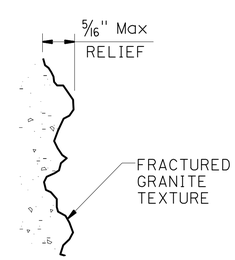

DETAIL N

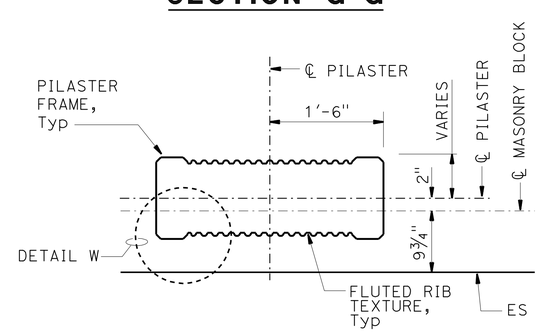

SECTION H-H

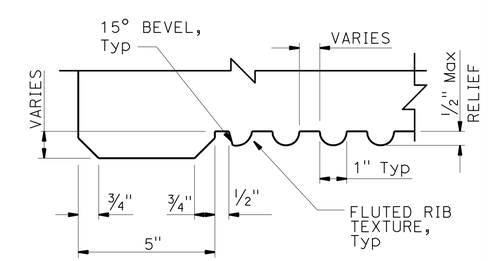

DETAIL W

NOTE:
THE CONTRACTOR SHALL VERIFY ALL CONTROLLING FIELD DIMENSIONS BEFORE ORDERING OR FABRICATING ANY MATERIAL.

PILASTER ARCHITECTURAL DETAILS No. 3

NO SCALE

SW-22

STATE OF CALIFORNIA - DEPARTMENT OF TRANSPORTATION
Caltrans® OFFICE OF DESIGN A

FUNCTIONAL SUPERVISOR: SIMON KUO
CALCULATED-DESIGNED BY: TJANDRA GUNAWAN
CHECKED BY
REVISED BY
DATE REVISED

LAST REVISION 00-00-00 | DATE PLOTTED => 14-APR-2012 | TIME PLOTTED => 09:55

Dist	COUNTY	ROUTE	POST MILES TOTAL PROJECT	SHEET No.	TOTAL SHEETS
07	LA	5	4.0/5.9	721	1597

REGISTERED CIVIL ENGINEER 12-19-11 DATE

4-9-12
PLANS APPROVAL DATE

REGISTERED PROFESSIONAL ENGINEER TJANDRA GUNAWAN No. C54965 Exp. 6/30/12 CIVIL STATE OF CALIFORNIA

THE STATE OF CALIFORNIA OR ITS OFFICERS OR AGENTS SHALL NOT BE RESPONSIBLE FOR THE ACCURACY OR COMPLETENESS OF SCANNED COPIES OF THIS PLAN SHEET.

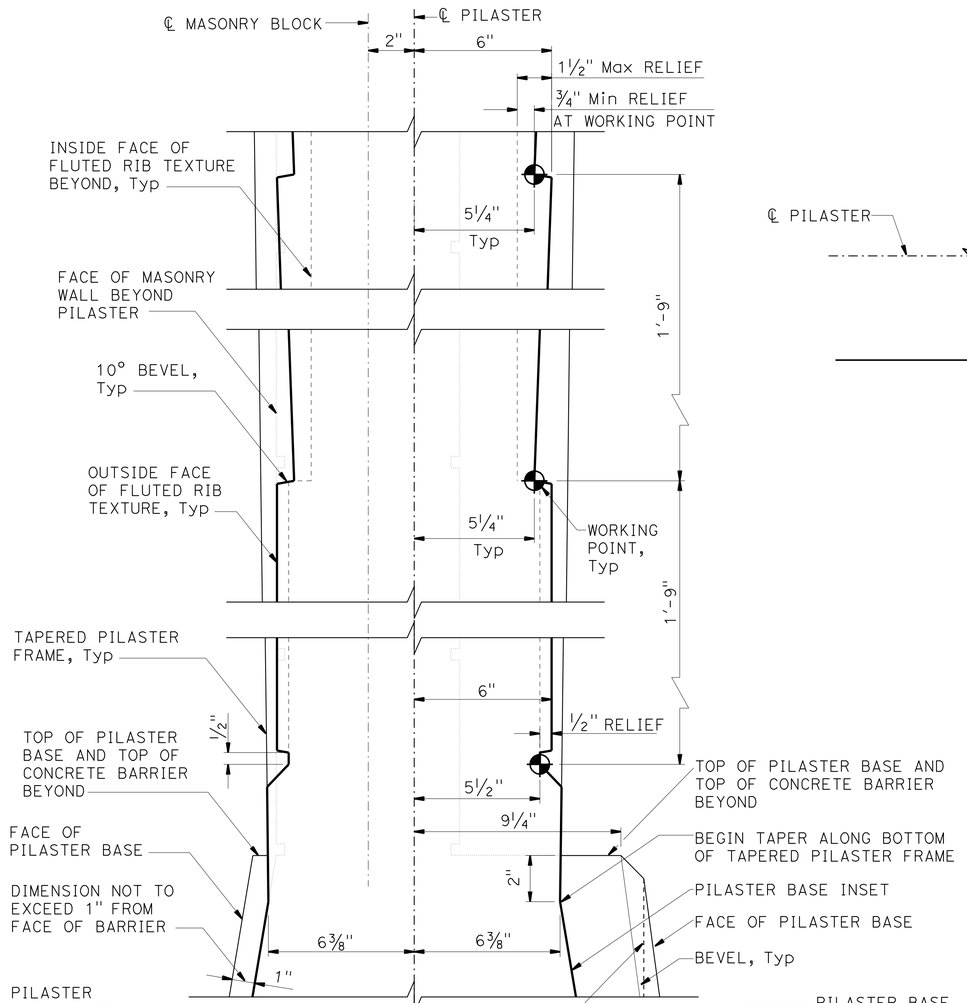

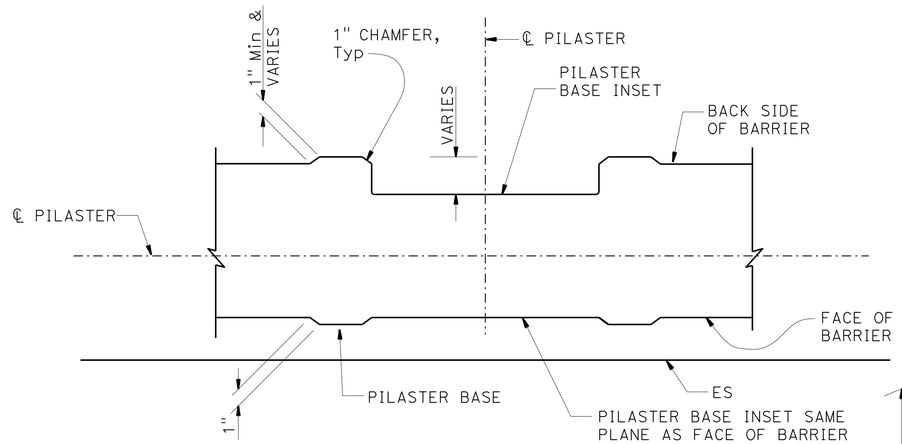

SECTION M-M

1½" = 1'-0"

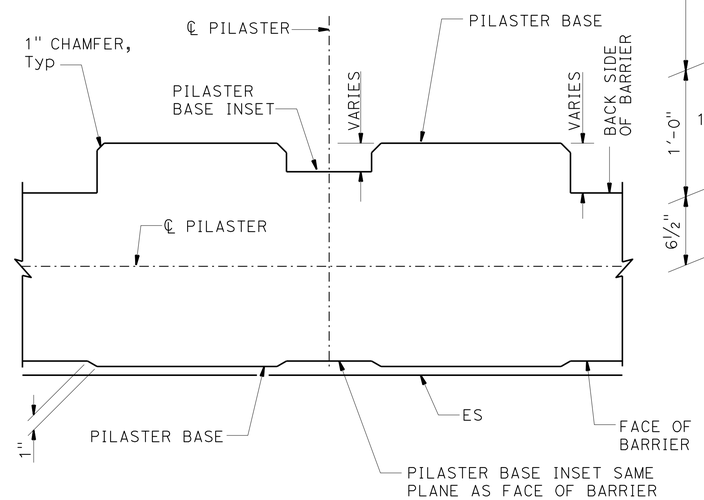

SECTION N-N

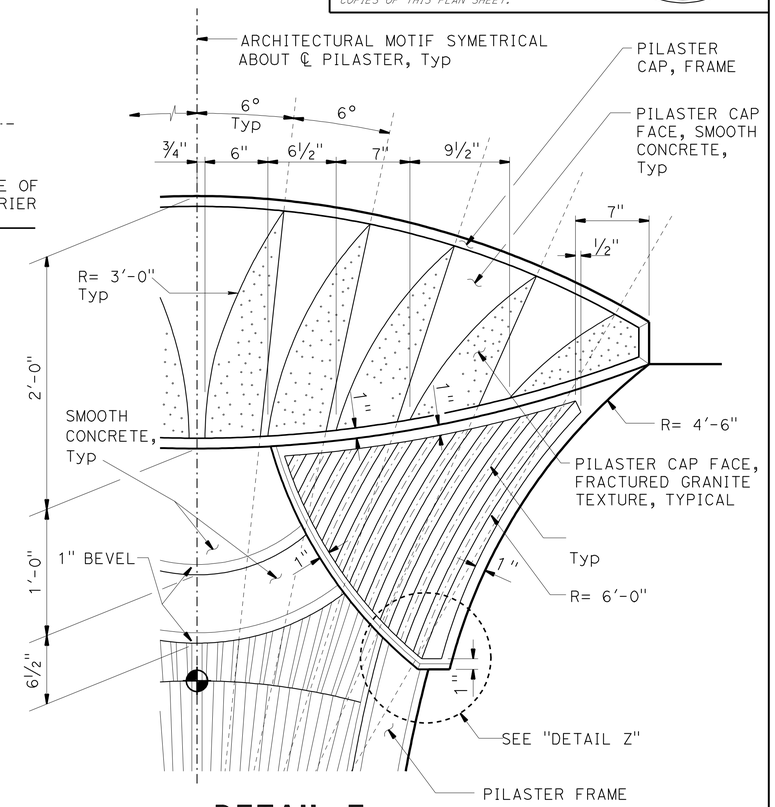

DETAIL E

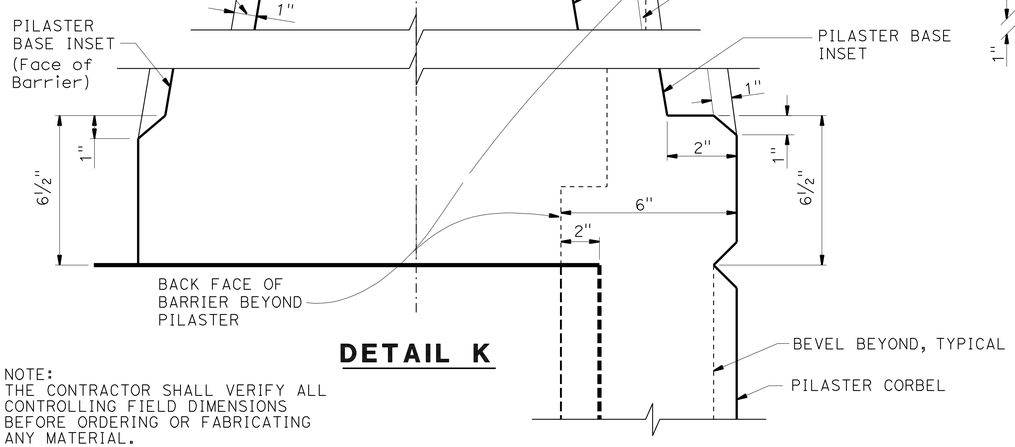

DETAIL K

NOTE:
THE CONTRACTOR SHALL VERIFY ALL CONTROLLING FIELD DIMENSIONS BEFORE ORDERING OR FABRICATING ANY MATERIAL.

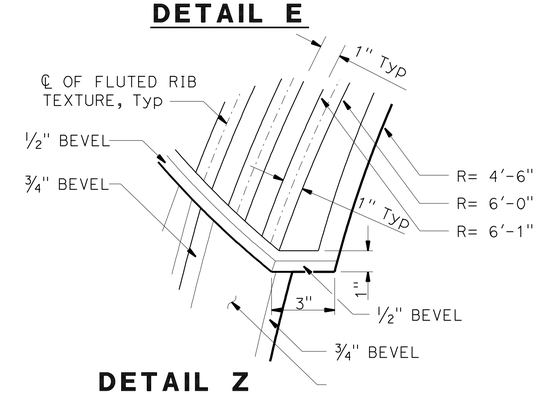

DETAIL Z

NOTES:

1. FOR LOCATION OF "SECTION M-M", "SECTION N-N" AND "DETAIL K", SEE "PILASTER ARCHITECTURAL DETAILS No. 2" SHEET.
2. ALL DEMINSIONS SYMETRICAL ABOUT # PILASTER.
3. ALL VERTICAL DIMENSIONS ARE MEASURED ALONG THE # PILASTER (PILASTER SHALL BE VERTICAL).
4. FOR LOCATION OF DETAIL E, SEE "PILASTER ARCHITECTURAL DETAILS No. 2" SHEET.

PILASTER ARCHITECTURAL DETAILS No. 4

NO SCALE

SW-23

REVISED BY	DATE REVISED	TJANDRA GUNAWAN	CALCULATED-DESIGNED BY	CHECKED BY	FUNCTIONAL SUPERVISOR	SIMON KUO

STATE OF CALIFORNIA - DEPARTMENT OF TRANSPORTATION
Caltrans® OFFICE OF DESIGN A

LAST REVISION 00-00-00 | DATE PLOTTED => 14-APR-2012 | TIME PLOTTED => 14:28

Dist	COUNTY	ROUTE	POST MILES TOTAL PROJECT	SHEET No.	TOTAL SHEETS
07	LA	5	4.0/5.9	722	1597

REGISTERED CIVIL ENGINEER 12-19-11 DATE

4-9-12
PLANS APPROVAL DATE

REGISTERED PROFESSIONAL ENGINEER TJANDRA GUNAWAN No. C54965 Exp. 6/30/12 CIVIL STATE OF CALIFORNIA

THE STATE OF CALIFORNIA OR ITS OFFICERS OR AGENTS SHALL NOT BE RESPONSIBLE FOR THE ACCURACY OR COMPLETENESS OF SCANNED COPIES OF THIS PLAN SHEET.

NOTE:

FOR "SECTION B-B", "SECTION C-C", "SECTION D-D" AND SECTION "G-G" SEE "PILASTER STRUCTURAL DETAILS No. 2" SHEET.

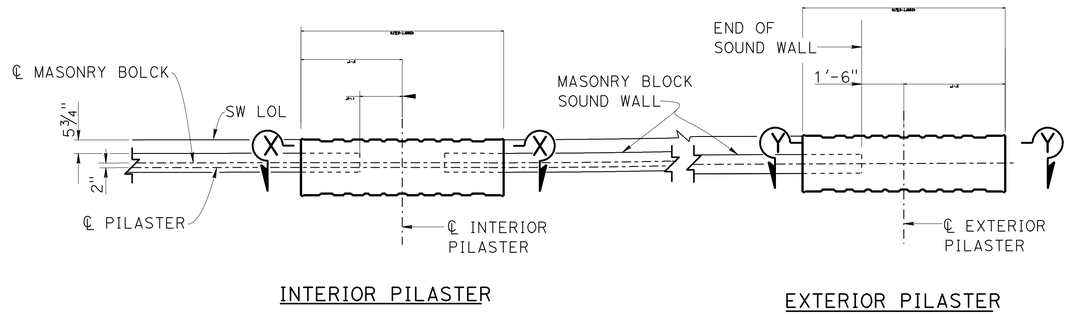

PART SOUND WALL PLAN

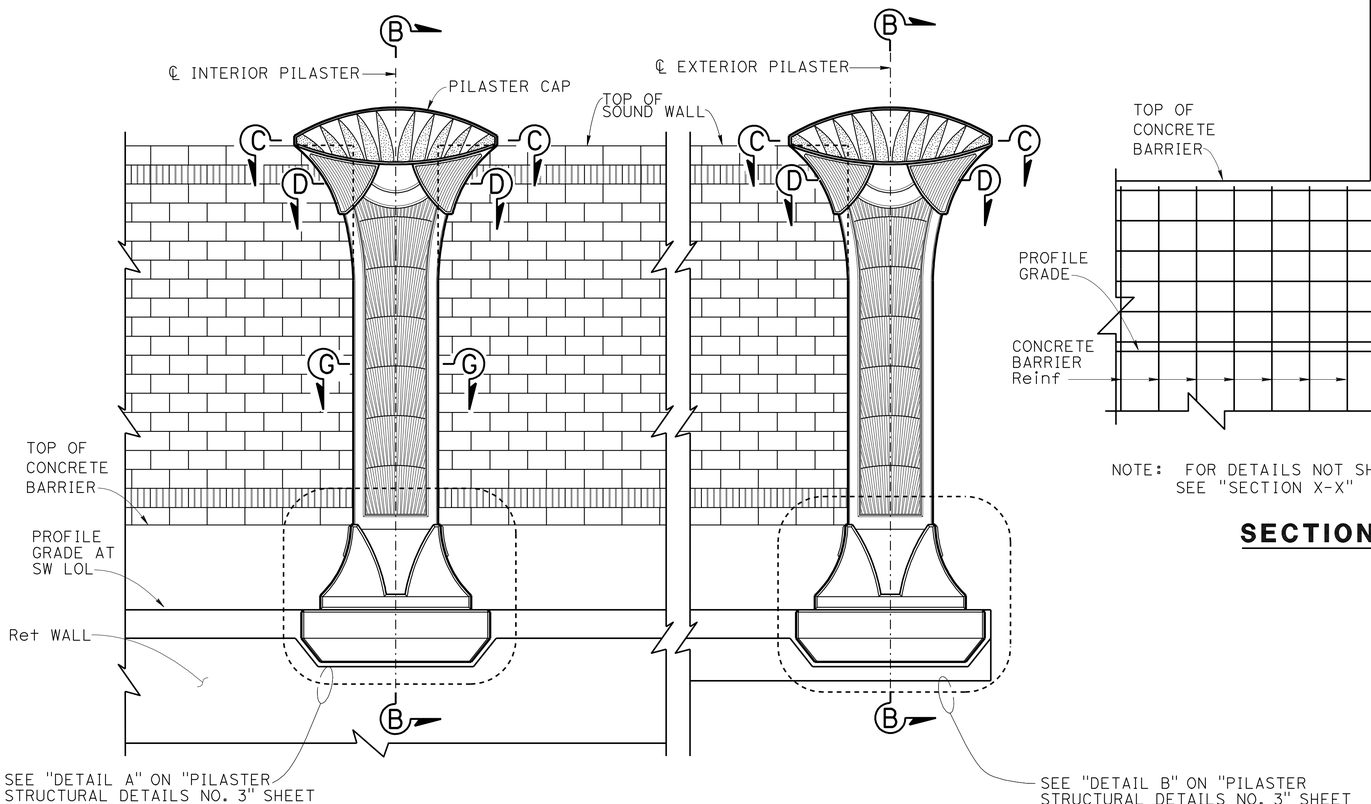

PART SOUND WALL ELEVATION

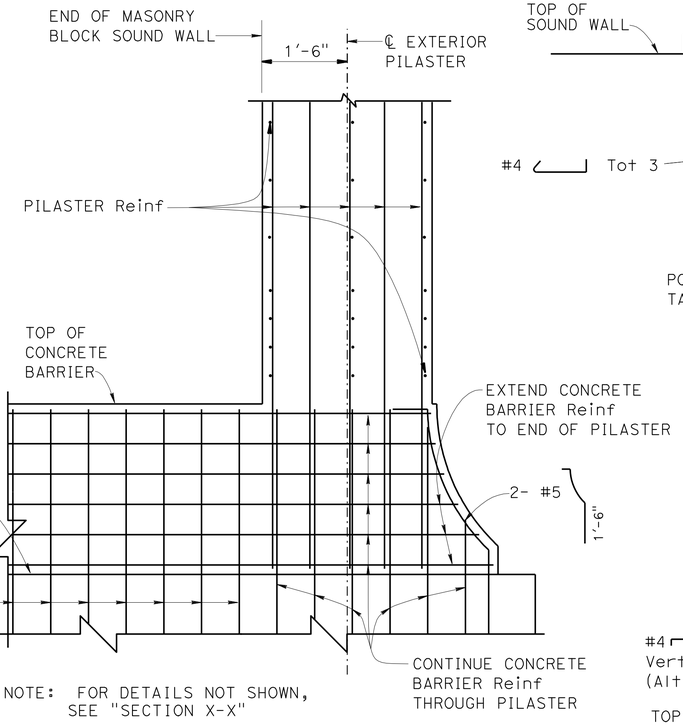

NOTE: FOR DETAILS NOT SHOWN, SEE "SECTION X-X"

SECTION Y-Y

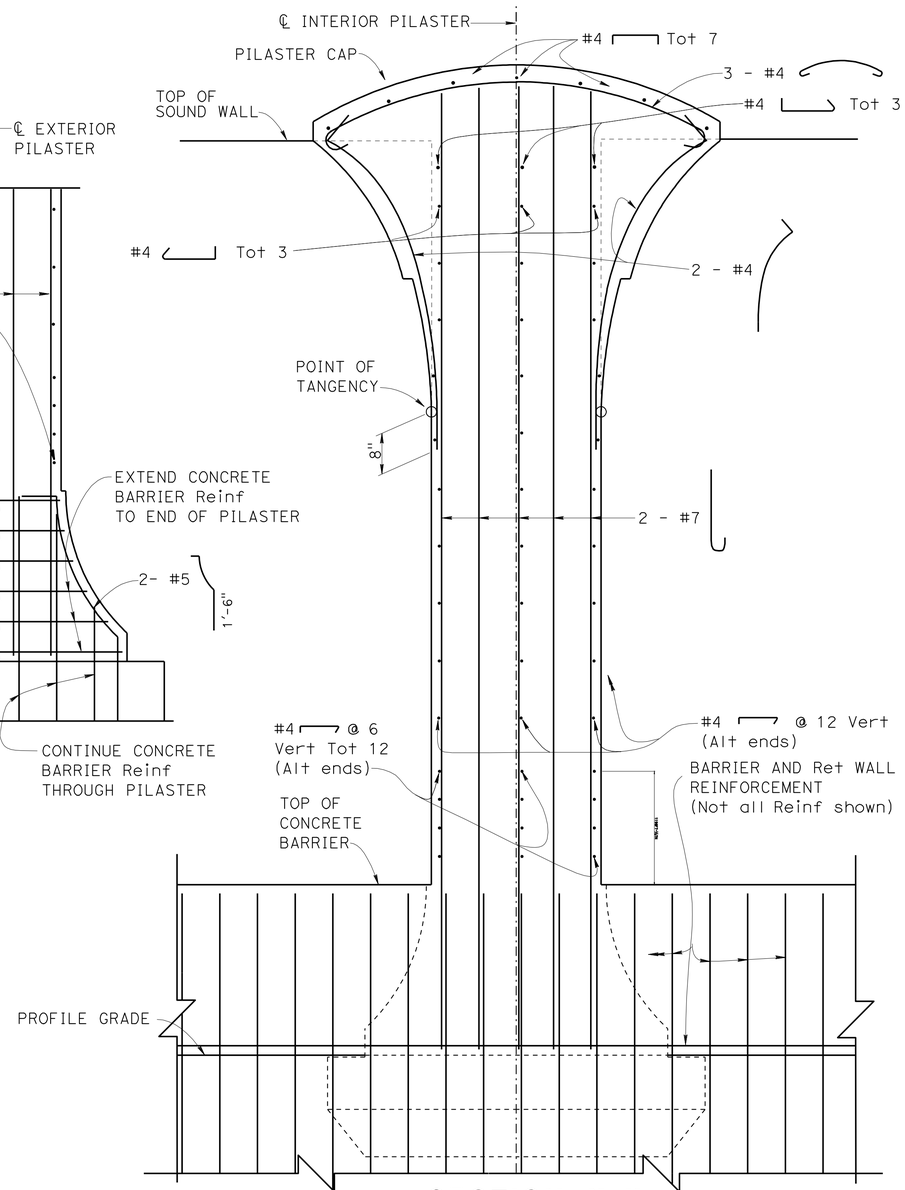

NOTE: PILASTER CORBEL REINFORCEMENT NOT SHOWN.

SECTION X-X

PILASTER STRUCTURAL DETAILS No. 1

NO SCALE

SW-24

STATE OF CALIFORNIA - DEPARTMENT OF TRANSPORTATION
Caltrans® OFFICE OF DESIGN A

FUNCTIONAL SUPERVISOR: SIMON KUO
CALCULATED-DESIGNED BY: TJANDRA GUNAWAN
CHECKED BY
REVISED BY
DATE REVISED

LAST REVISION 00-00-00
DATE PLOTTED => 14-APR-2012
TIME PLOTTED => 14:29

Dist	COUNTY	ROUTE	POST MILES TOTAL PROJECT	SHEET No.	TOTAL SHEETS
07	LA	5	4.0/5.9	723	1597

REGISTERED CIVIL ENGINEER 12-19-11 DATE

4-9-12
PLANS APPROVAL DATE

REGISTERED PROFESSIONAL ENGINEER TJANDRA GUNAWAN No. C54965 Exp. 6/30/12 CIVIL STATE OF CALIFORNIA

THE STATE OF CALIFORNIA OR ITS OFFICERS OR AGENTS SHALL NOT BE RESPONSIBLE FOR THE ACCURACY OR COMPLETENESS OF SCANNED COPIES OF THIS PLAN SHEET.

NOTES:

1. FOR LOCATION OF "SECTION B-B", "SECTION C-C" "SECTION D-D" AND "SECTION G-G", SEE "PILASTER STRUCTURAL DETAILS No. 1" SHEET.
2. FOR PILASTER GEOMETRY, DIMENSIONS AND ARCHITECTURAL TREATMENTS, SEE "PILASTER ARCHITECTURAL DETAILS" SHEETS

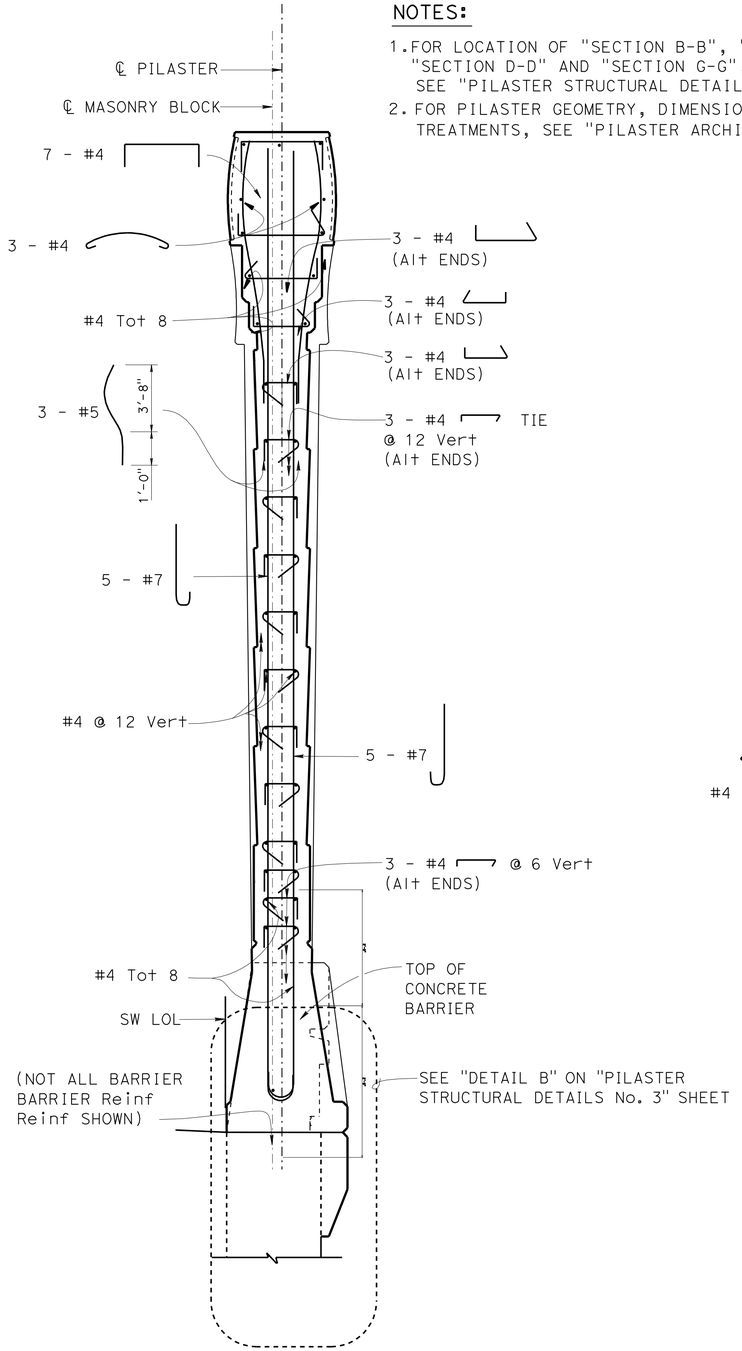

SECTION B-B

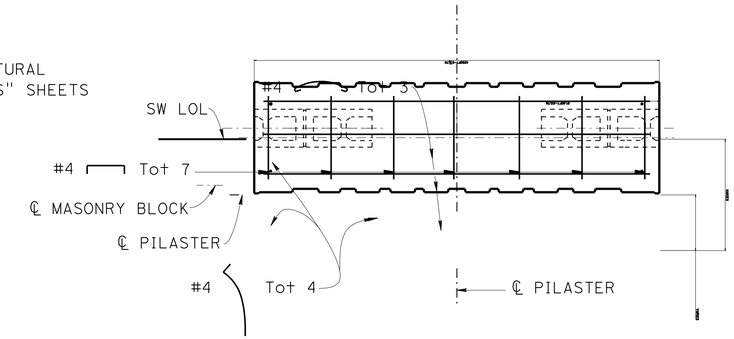

SECTION C-C

NOTE: INTERIOR PILSTER SHOWN. EXTERIOR PILASTER SIMILAR.

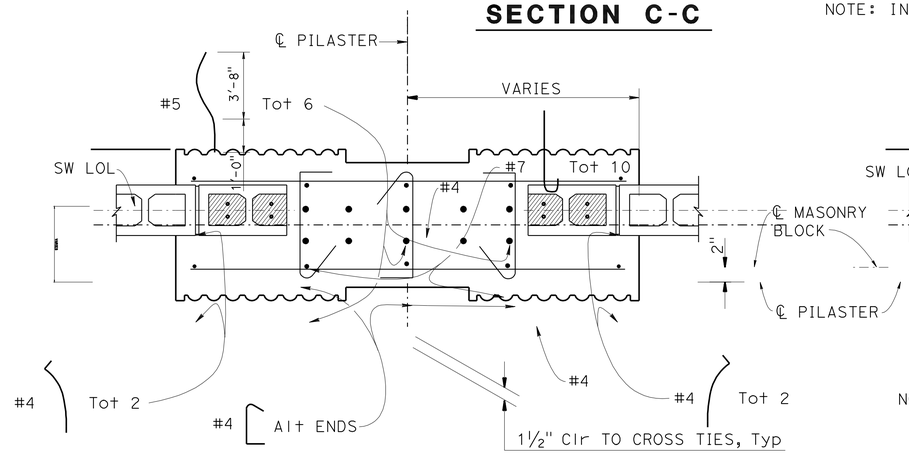

INTERIOR PILASTER

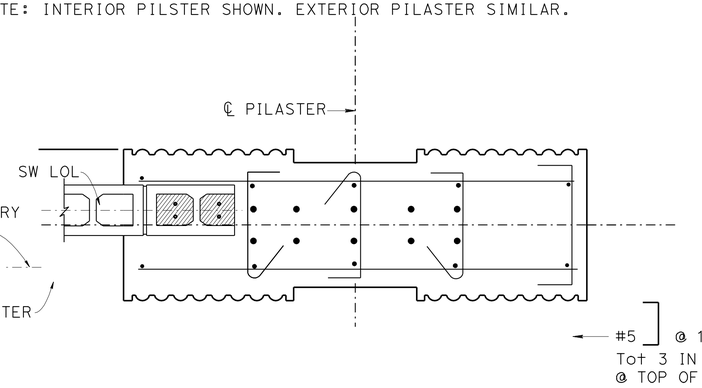

NOTE: FOR DIMENSIONS AND REINFORCEMENT NOT SHOWN, SEE "INTERIOR PILASTER"

EXTERIOR PILASTER

SECTION D-D

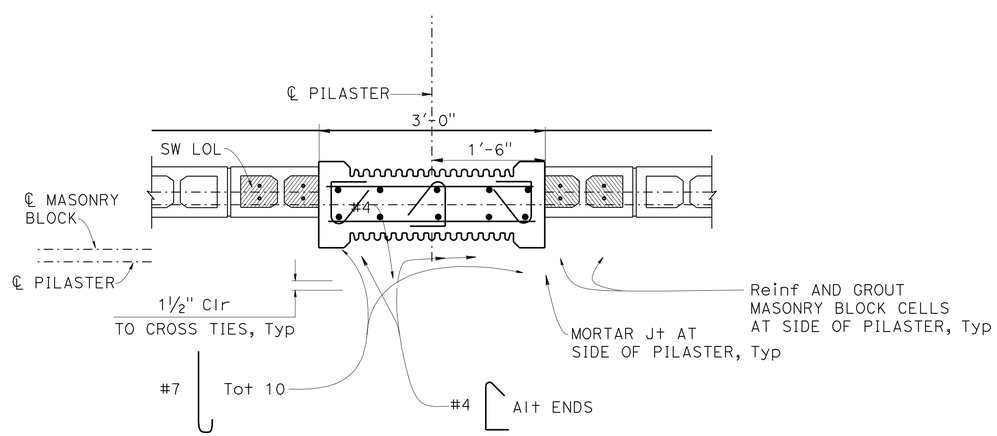

SECTION G-G

PILASTER STRUCTURAL DETAILS No. 2

NO SCALE

SW-25

REVISED BY	DATE REVISED

TJANDRA GUNAWAN

CALCULATED-DESIGNED BY | CHECKED BY

FUNCTIONAL SUPERVISOR: SIMON KUO

STATE OF CALIFORNIA - DEPARTMENT OF TRANSPORTATION
Caltrans OFFICE OF DESIGN A

LAST REVISION 00-00-00 | DATE PLOTTED => 14-APR-2012 | TIME PLOTTED => 14:29

Dist	COUNTY	ROUTE	POST MILES TOTAL PROJECT	SHEET No.	TOTAL SHEETS
07	LA	5	4.0/5.9	724	1597

REGISTERED CIVIL ENGINEER 12-19-11 DATE

4-9-12
PLANS APPROVAL DATE

REGISTERED PROFESSIONAL ENGINEER TJANDRA GUNAWAN No. C54965 Exp. 6/30/12 CIVIL STATE OF CALIFORNIA

THE STATE OF CALIFORNIA OR ITS OFFICERS OR AGENTS SHALL NOT BE RESPONSIBLE FOR THE ACCURACY OR COMPLETENESS OF SCANNED COPIES OF THIS PLAN SHEET.

NOTES:

1. FOR LOCATION OF "DETAIL A", SEE "PILASTER STRUCTURAL DETAILS No. 1" SHEET.
2. FOR LOCATION OF "DETAIL B", SEE "PILASTER STRUCTURAL DETAILS No. 2" SHEET.

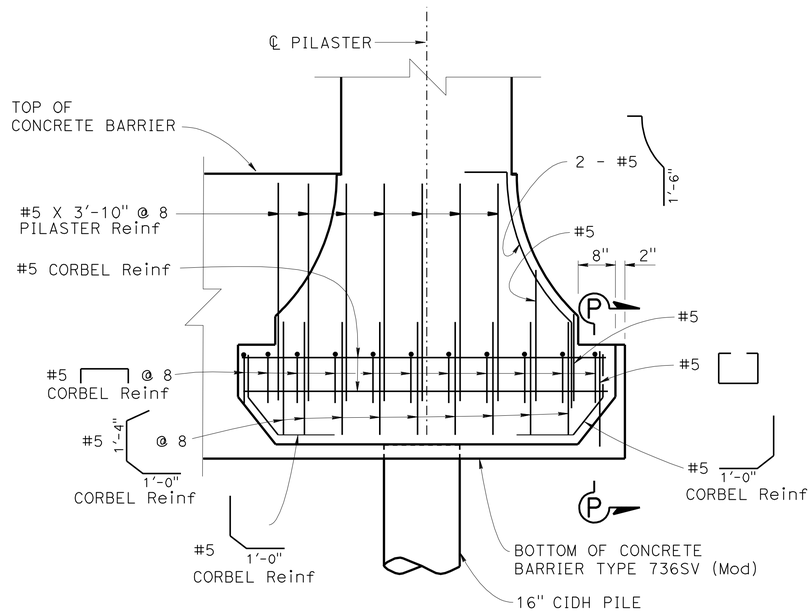

NOTE: Conc BARRIER REINFORCEMENT NOT SHOWN

DETAIL A

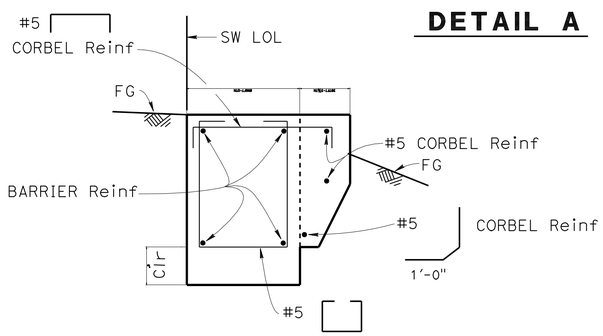

SECTION P-P

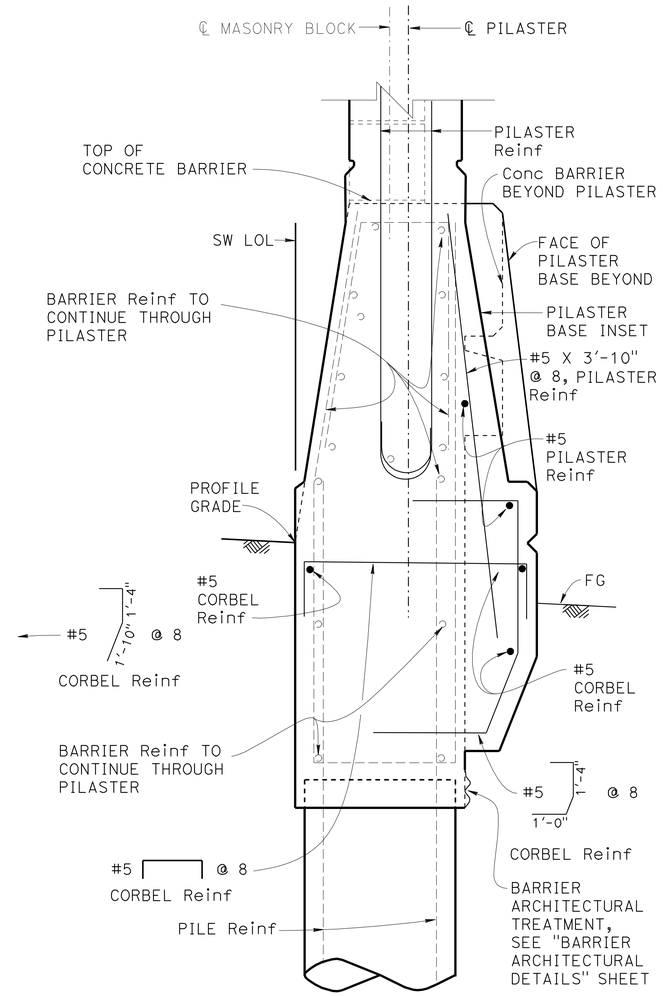

PILASTER CORBEL ON CONCRETE BARRIER TYPE 736SV (MOD)

DETAIL B

PILASTER STRUCTURAL DETAILS No. 3

NO SCALE

SW-26

STATE OF CALIFORNIA - DEPARTMENT OF TRANSPORTATION
Caltrans® OFFICE OF DESIGN A

FUNCTIONAL SUPERVISOR: SIMON KUO
CALCULATED-DESIGNED BY: TJANDRA GUNAWAN
CHECKED BY
REVISED BY
DATE REVISED

LAST REVISION 00-00-00
DATE PLOTTED => 14-APR-2012
TIME PLOTTED => 14:29

Dist	COUNTY	ROUTE	POST MILES TOTAL PROJECT	SHEET No.	TOTAL SHEETS
07	LA	5	4.0/5.9	725	1597

George Olguin
LICENSED LANDSCAPE ARCHITECT

4-9-12
PLANS APPROVAL DATE

LICENSED LANDSCAPE ARCHITECT GEORGE OLGUIN No. 4332 George Olguin signature 08-31-12 Renewal date 09-10-11 Date STATE OF CALIFORNIA

THE STATE OF CALIFORNIA OR ITS OFFICERS OR AGENTS SHALL NOT BE RESPONSIBLE FOR THE ACCURACY OR COMPLETENESS OF SCANNED COPIES OF THIS PLAN SHEET.

ABBREVIATIONS:

AMEND — amendment
B & B — balled and burlapped
Dia — diameter
EA — each
LB — pound
Oz — ounce
Ft — foot/feet
SQFT — square feet
SQYD — square yard
CF — cubic feet
Max — maximum
Min — minimum
NCN — no common name
No. — number
Pkt — packet
PLT ESTB — plant establishment
Pvmt — pavement
R/W — right of way
SF — state furnished
TRVD — traveled

PLANT LIST AND PLANTING SPECIFICATIONS

PLANT GROUP	PLANT No.	SYMBOL	BOTANICAL NAME	COMMON NAME	SIZE	QUANTITY EACH	HOLE SIZE (INCH) Dia	HOLE SIZE (INCH) DEPTH	BASIN TYPE	IRON SULFATE ①	SOIL AMEND ①	COMMERCIAL FERTILIZER ① PLANTING	COMMERCIAL FERTILIZER ① PLT ESTB	BASIN MULCH (CY)	STAKING	PLANTING LIMITS MINIMUM DISTANCE (ft) FROM ETW	Pvmt	FENCE	WALL	PAVED DITCH	EARTH DITCH	ON CENTER (ft)	REMARKS
A	1		ACACIA REDOLENS	DESERT CARPET	No. 1	184	③	③	I	—	—	0.5 Oz	0.5 Oz	0.05 CY	—	—	20	20	20	20	22	20	SHRUB
	2		DIETES GRANDIFLORA 'VARIEGATA'	STRIPE FORTNIGHT LILY	No. 1	328	③	③	I	—	—	0.5 Oz	0.5 Oz	0.05 CY	—	—	—	—	—	—	—	3	SHRUB
	3		DISTICTIS BUCCINATORIA	BLOOD RED TRUMPET VINE	No. 1	674	③	③	I I I	—	—	0.5 Oz	0.5 Oz	—	—	—	—	—	—	—	—	20	⑨ VINE
	4		PARTHENOCISSUS TRICUSPIDATA	BOSTON IVY	No. 1	1354	③	③	I I I	—	—	0.5 Oz	0.5 Oz	0.05 CY	④	—	—		—	—	—	10	VINE
	5		XYLOSMA CONGESTUM 'COMPACTA'	COMPACT XYLOSMA	No. 1	13	③	③	I	—	—	0.5 Oz	0.5 Oz	0.05 CY	—	—	—	—	—	—	—	⑦	SHRUB
B	6		PHORMIUM TENAX 'GUARDSMAN'	NEW ZEALAND FLAX	No. 5	15	③	③	I	—	—	0.5 Oz	0.5 Oz	0.05 CY	—	—	—	—	—	—	—	⑦	SHRUB
H	7		CARISSA MACROCARPA 'GREEN CARPET'	NATAL PLUM	CUTTING	710	③	③			1.5 CY/ 1,000 SQFT	6.6 LBS/ 1,000 SQFT	6.6 LBS/ 1,000 SQFT	—	—	—						1.5	GROUND COVER
	8		CARPOBROTUS EDULIS	HOTTENTOT FIG	CUTTING	22,030	⑥	⑥	—	—	1.5 CY/ 1,000 SQFT	6.6 LBS/ 1,000 SQFT	6.6 LBS/ 1,000 SQFT	—	—	—	6	6	6	6	8	1.5	GROUND COVER
	9		TRACHELOSPERUM JASMINOIDES	STAR JASMINE	CUTTING	4,242	③	③	—	—	1.5 CY/ 1,000 SQFT	6.6 LBS/ 1,000 SQFT	6.6 LBS/ 1,000 SQFT	—	—	—	—	—	—	—	—	1.5	GROUND COVER
T	10		TURF -SOD	NO COMMON NAME	SOD	323 SQYD	—	—	—	—	3 CY/ 1,000 SQFT	6.6 LBS/ 1,000 SQFT	6.6 LBS/ 1,000 SQFT	—	—	—	—	—	—	—	—	—	TURF
U	11		ALNUS RHOMBIFOLIA	WHITE ALDER	No. 15	25	③	③	I	—	—	5 Oz	5 Oz	0.15 CY	④	40	—	20	20	10	12	⑦	TREE
	12		LAGERSTROEMIA INDICA CHEROKEE	DARK PINK CRAPE MYRTLE	No. 15	164	③	③	I	—	—	5 Oz	5 Oz	0.15 CY	④	40	—	15	15	15	17	⑦	⑧ STANDARD TREE
	13		PINUS CANARIENSIS	CANARY ISLAND PINE	No. 15	136	③	③	I	—	—	5 Oz	5 Oz	0.15 CY	④	40	—	20	20	10	12	⑦	TREE
	14		PLATANUS ACERIFOLIA 'BLOODGOOD'	LONDON PLANE	No. 15	18	③	③	I	—	—	5 Oz	5 Oz	0.15 CY	④	40	—	20	20	10	12	⑦	⑧ TREE
	15		PLATANUS RACEMOSA	CALIFORNIA SYCAMORE	No. 15	89	③	③	I	—	—	5 Oz	5 Oz	0.15 CY	④	40	—	20	20	10	12	⑦	⑧ TREE

APPLICABLE WHEN CIRCLED:

① - QUANTITIES SHOWN ARE "PER PLANT" UNLESS SHOWN AS SQFT OR SQYD APPLICATION RATES
2 - BASIN MULCH IS INCLUDED WITH MULCH QUANTITIES SHOWN ON PLANTING PLAN
3 - SUFFICIENT TO RECEIVE ROOT BALL AND AMENDMENTS IF REQUIRED
④ - SEE DETAIL
5 - SEE SPECIAL PROVISIONS
⑥ - SEE STANDARD SPECIFICATIONS
⑦ - AS SHOWN ON PLANS
⑧ - FOR PLANT MATERIAL WITHIN THE CITY'S R/W, SPACING IS AS SHOWN ON THE PLANS
⑨ - PLANT IN SAME PLANT HOLE AS PAR TRI
10 - ROOT PROTECTOR REQUIRED
11 - ROOT BARRIER REQUIRED
12 - STATE-FURNISHED

NOTE:
UNDERLINED PORTIONS OF BOTANICAL NAME INDICATE ABBREVIATIONS USED ON PLANTING PLANS.

LEGEND

ROCK BLANKET 5,119 SQYD

MULCH 1,747 CY

EROSION CONTROL (HYDROSEED)

PLANT LIST

PL-1

REVISED BY | DATE REVISED
YI SU | GEORGE OLGUIN
CALCULATED-DESIGNED BY | CHECKED BY
SENIOR LANDSCAPE ARCHITECT | JENNIFER TAIRA
STATE OF CALIFORNIA - DEPARTMENT OF TRANSPORTATION
Caltrans LANDSCAPE ARCHITECTURE

LAST REVISION 00-00-00 | DATE PLOTTED => 14-APR-2012 | TIME PLOTTED => 14:29

Dist	COUNTY	ROUTE	POST MILES TOTAL PROJECT	SHEET No.	TOTAL SHEETS
07	LA	5	4.0/5.9	726	1597

George Olguin
LICENSED LANDSCAPE ARCHITECT

4-9-12
PLANS APPROVAL DATE

LICENSED LANDSCAPE ARCHITECT
GEORGE OLGUIN
NO. 4333
George Olguin
Signature
08-31-12
Renewal Date
10-10-10
Date
STATE OF CALIFORNIA

THE STATE OF CALIFORNIA OR ITS OFFICERS OR AGENTS SHALL NOT BE RESPONSIBLE FOR THE ACCURACY OR COMPLETENESS OF SCANNED COPIES OF THIS PLAN SHEET.

NOTE:
FOR ACCURATE RIGHT OF WAY DATA, CONTACT RIGHT OF WAY ENGINEERING AT THE DISTRICT OFFICE.

APPROVED FOR PLANTING WORK ONLY

PLANTING PLAN
SCALE: 1" = 50'
PP-1

STATE OF CALIFORNIA - DEPARTMENT OF TRANSPORTATION
Caltrans LANDSCAPE ARCHITECTURE

SENIOR LANDSCAPE ARCHITECT: JENNIFER TAIRA
CALCULATED-DESIGNED BY: GEORGE OLGUIN
CHECKED BY: YI SU
REVISED BY
DATE REVISED

LAST REVISION 00-00-00
DATE PLOTTED => 14-APR-2012
TIME PLOTTED => 14:29

Dist	COUNTY	ROUTE	POST MILES TOTAL PROJECT	SHEET No.	TOTAL SHEETS
07	LA	5	4.0/5.9	727	1597

George Olguin
LICENSED LANDSCAPE ARCHITECT

4-9-12
PLANS APPROVAL DATE

LICENSED LANDSCAPE ARCHITECT
GEORGE OLGUIN
NO. 4333
George Olguin
Signature
08-31-12
Renewal Date
10-10-10
Date
STATE OF CALIFORNIA

THE STATE OF CALIFORNIA OR ITS OFFICERS OR AGENTS SHALL NOT BE RESPONSIBLE FOR THE ACCURACY OR COMPLETENESS OF SCANNED COPIES OF THIS PLAN SHEET.

NOTE:

FOR ACCURATE RIGHT OF WAY DATA, CONTACT RIGHT OF WAY ENGINEERING AT THE DISTRICT OFFICE.

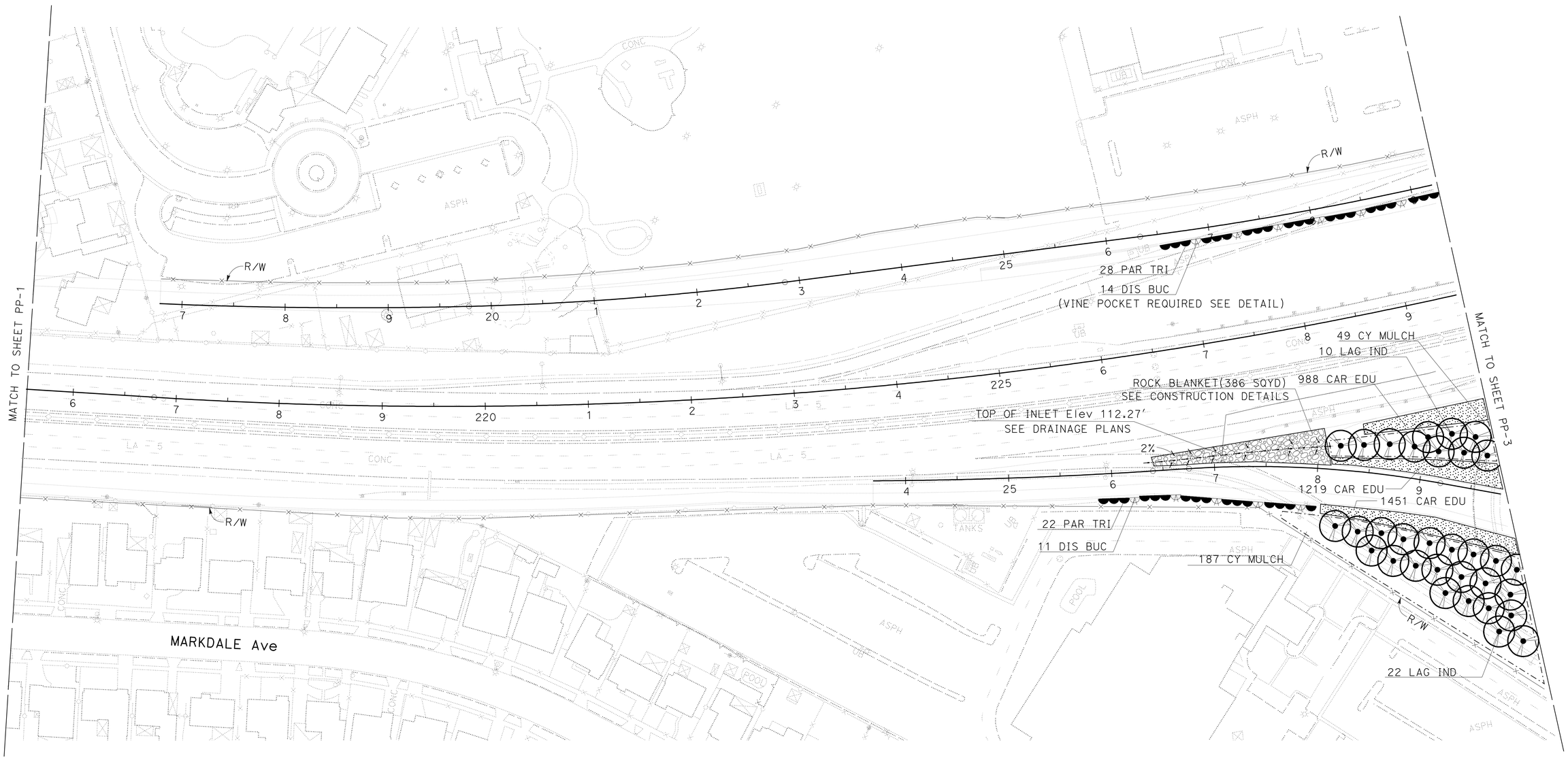

PLANTING PLAN

SCALE: 1" = 50'

PP-2

APPROVED FOR PLANTING WORK ONLY

STATE OF CALIFORNIA - DEPARTMENT OF TRANSPORTATION
Caltrans® LANDSCAPE ARCHITECTURE

SENIOR LANDSCAPE ARCHITECT: JENNIFER TAIRA

CALCULATED-DESIGNED BY: GEORGE OLGUIN
CHECKED BY:

REVISED BY: YI SU
DATE REVISED:

LAST REVISION 00-00-00
DATE PLOTTED => 15-APR-2012
TIME PLOTTED => 08:01

Dist	COUNTY	ROUTE	POST MILES TOTAL PROJECT	SHEET No.	TOTAL SHEETS
07	LA	5	4.0/5.9	728	1597

George Olguin
LICENSED LANDSCAPE ARCHITECT

4-9-12
PLANS APPROVAL DATE

LICENSED LANDSCAPE ARCHITECT
GEORGE OLGUIN
NO. 4333
George Olguin
Signature
08-31-12
Renewal Date
10-10-10
Date
STATE OF CALIFORNIA

THE STATE OF CALIFORNIA OR ITS OFFICERS OR AGENTS SHALL NOT BE RESPONSIBLE FOR THE ACCURACY OR COMPLETENESS OF SCANNED COPIES OF THIS PLAN SHEET.

NOTE:

FOR ACCURATE RIGHT OF WAY DATA, CONTACT RIGHT OF WAY ENGINEERING AT THE DISTRICT OFFICE.

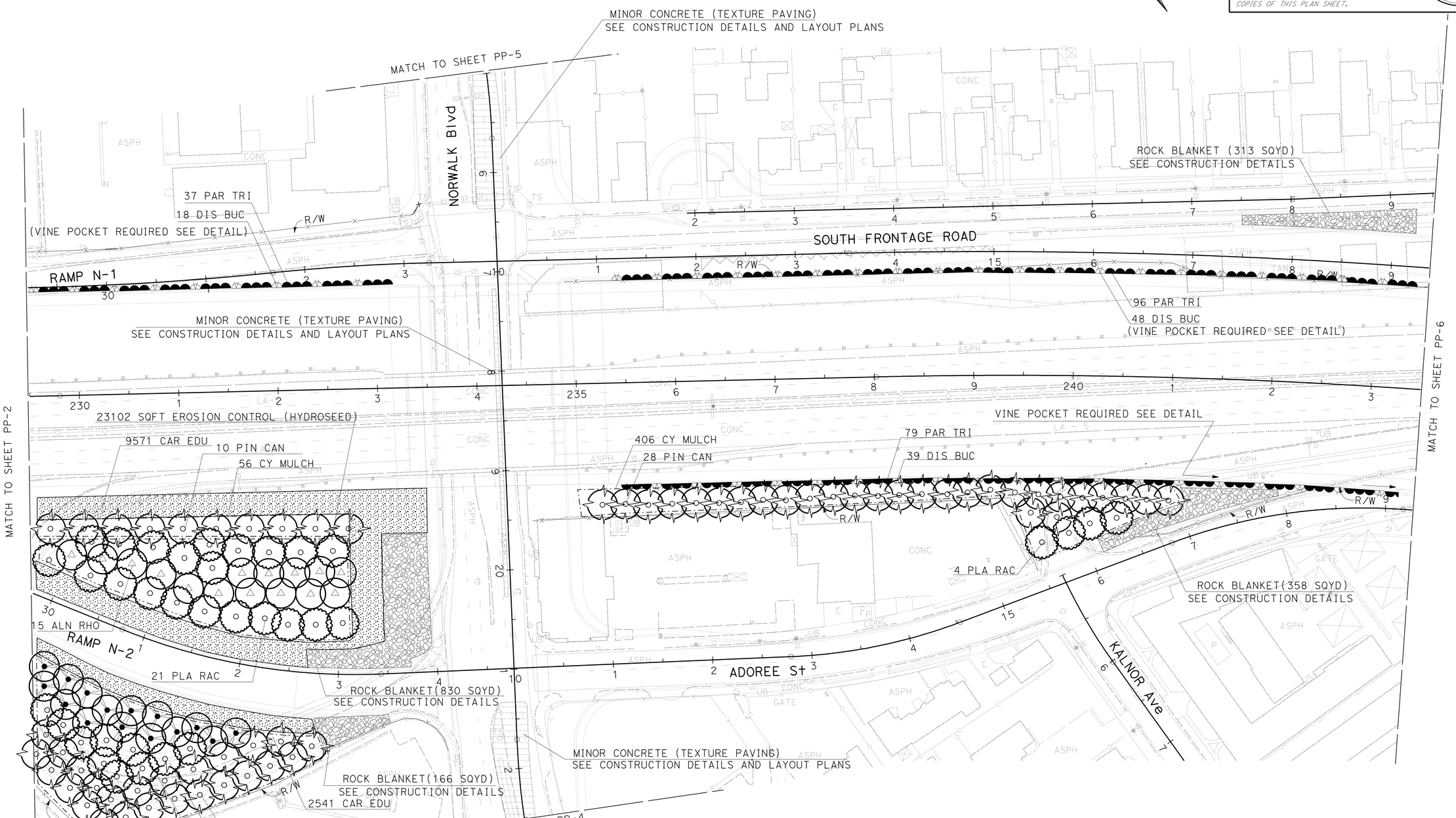

APPROVED FOR PLANTING WORK ONLY

PLANTING PLAN

SCALE: 1" = 50'

PP-3

STATE OF CALIFORNIA - DEPARTMENT OF TRANSPORTATION
Caltrans® LANDSCAPE ARCHITECTURE
SENIOR LANDSCAPE ARCHITECT: JENNIFER TAIRA
CALCULATED-DESIGNED BY: GEORGE OLGUIN
CHECKED BY: YI SU
REVISED BY
DATE REVISED

LAST REVISION 00-00-00
DATE PLOTTED => 14-APR-2012
TIME PLOTTED => 14:29

Dist	COUNTY	ROUTE	POST MILES TOTAL PROJECT	SHEET No.	TOTAL SHEETS
07	LA	5	4.0/5.9	729	1597

George Olguin
LICENSED LANDSCAPE ARCHITECT

4-9-12
PLANS APPROVAL DATE

LICENSED LANDSCAPE ARCHITECT
GEORGE OLGUIN
NO. 4333
George Olguin
Signature
08-31-12
Renewal Date
10-10-10
Date
STATE OF CALIFORNIA

THE STATE OF CALIFORNIA OR ITS OFFICERS OR AGENTS SHALL NOT BE RESPONSIBLE FOR THE ACCURACY OR COMPLETENESS OF SCANNED COPIES OF THIS PLAN SHEET.

NOTE:

FOR ACCURATE RIGHT OF WAY DATA, CONTACT RIGHT OF WAY ENGINEERING AT THE DISTRICT OFFICE.

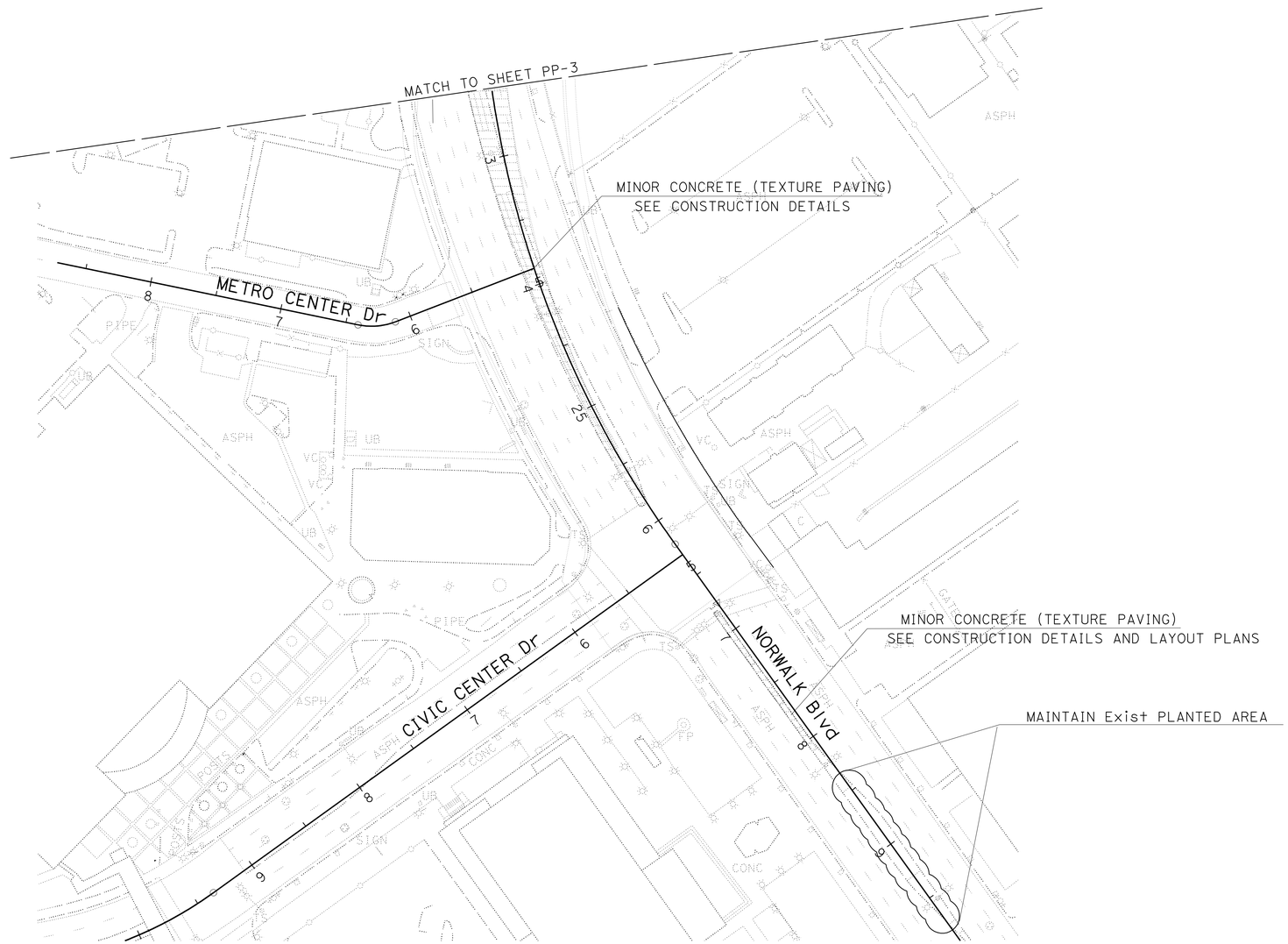

APPROVED FOR PLANTING WORK ONLY

PLANTING PLAN

SCALE: 1" = 50'

PP-4

STATE OF CALIFORNIA - DEPARTMENT OF TRANSPORTATION
Caltrans® LANDSCAPE ARCHITECTURE

SENIOR LANDSCAPE ARCHITECT: JENNIFER TAIRA
CALCULATED-DESIGNED BY: YI SU
CHECKED BY: GEORGE OLGUIN
REVISED BY
DATE REVISED

LAST REVISION 00-00-00
DATE PLOTTED => 18-APR-2012
TIME PLOTTED => 05:40

Dist	COUNTY	ROUTE	POST MILES TOTAL PROJECT	SHEET No.	TOTAL SHEETS
07	LA	5	4.0/5.9	730	1597

George Olguin
LICENSED LANDSCAPE ARCHITECT

4-9-12
PLANS APPROVAL DATE

LICENSED LANDSCAPE ARCHITECT
GEORGE OLGUIN
NO. 4333
George Olguin
Signature
08-31-12
Renewal Date
10-10-10
Date
STATE OF CALIFORNIA

THE STATE OF CALIFORNIA OR ITS OFFICERS OR AGENTS SHALL NOT BE RESPONSIBLE FOR THE ACCURACY OR COMPLETENESS OF SCANNED COPIES OF THIS PLAN SHEET.

NOTE:

FOR ACCURATE RIGHT OF WAY DATA, CONTACT RIGHT OF WAY ENGINEERING AT THE DISTRICT OFFICE.

PLANTING PLAN

SCALE: 1" = 50'

PP-5

APPROVED FOR PLANTING WORK ONLY

STATE OF CALIFORNIA - DEPARTMENT OF TRANSPORTATION
Caltrans® LANDSCAPE ARCHITECTURE

SENIOR LANDSCAPE ARCHITECT: JENNIFER TAIRA

CALCULATED-DESIGNED BY: YI SU
CHECKED BY: GEORGE OLGUIN

REVISED BY
DATE REVISED

LAST REVISION 00-00-00
DATE PLOTTED => 14-APR-2012
TIME PLOTTED => 14:30

Dist	COUNTY	ROUTE	POST MILES TOTAL PROJECT	SHEET No.	TOTAL SHEETS
07	LA	5	4.0/5.9	731	1597

George Olguin
LICENSED LANDSCAPE ARCHITECT

4-9-12
PLANS APPROVAL DATE

LICENSED LANDSCAPE ARCHITECT
GEORGE OLGUIN
NO. 4333
George Olguin
Signature
08-31-12
Renewal Date
10-10-10
Date
STATE OF CALIFORNIA

THE STATE OF CALIFORNIA OR ITS OFFICERS OR AGENTS SHALL NOT BE RESPONSIBLE FOR THE ACCURACY OR COMPLETENESS OF SCANNED COPIES OF THIS PLAN SHEET.

NOTE:

FOR ACCURATE RIGHT OF WAY DATA, CONTACT RIGHT OF WAY ENGINEERING AT THE DISTRICT OFFICE.

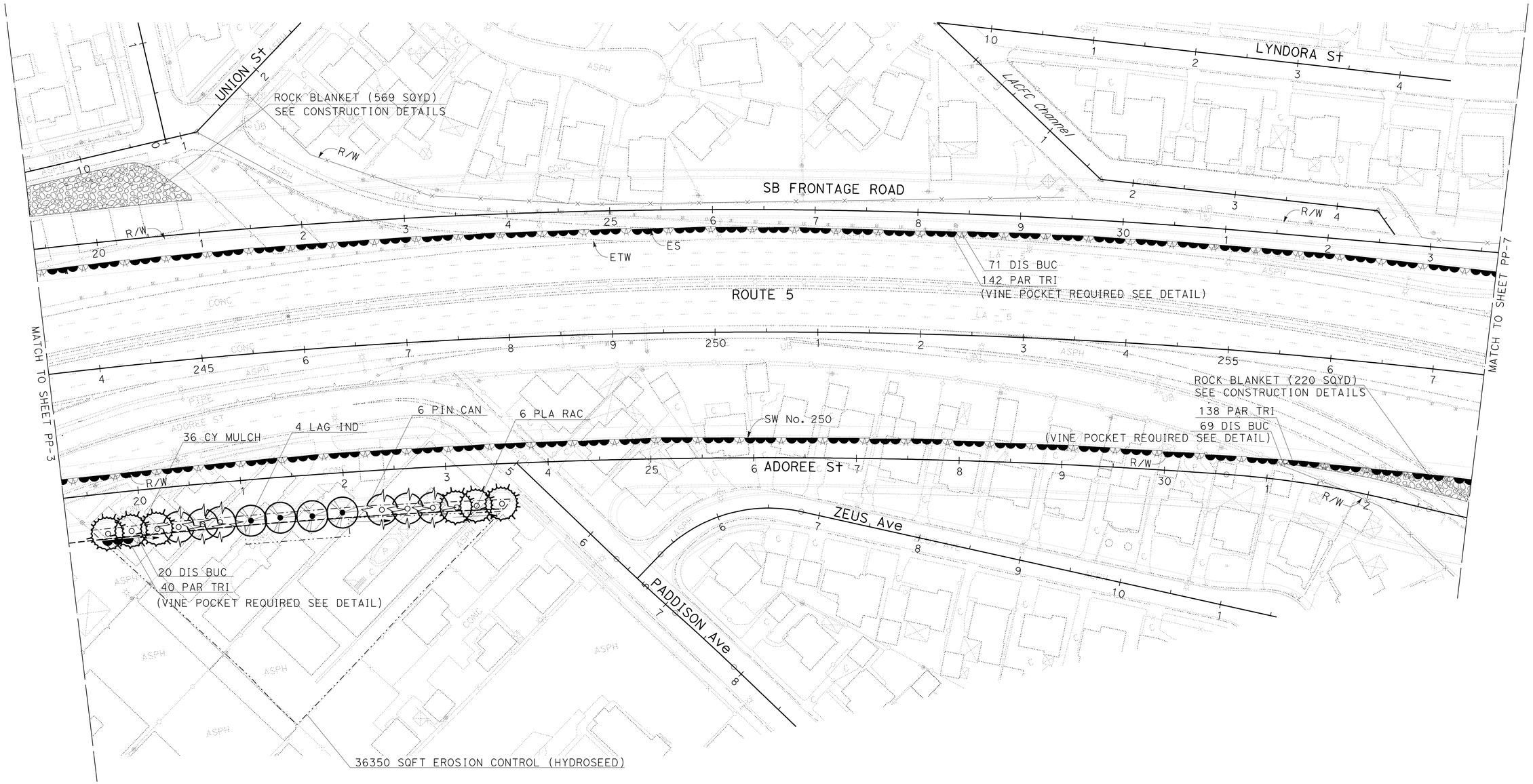

PLANTING PLAN

SCALE: 1" = 50'

PP-6

APPROVED FOR PLANTING WORK ONLY

STATE OF CALIFORNIA - DEPARTMENT OF TRANSPORTATION
Caltrans® LANDSCAPE ARCHITECTURE

SENIOR LANDSCAPE ARCHITECT: JENNIFER TAIRA

CALCULATED-DESIGNED BY: Y1 SU
CHECKED BY: GEORGE OLGUIN

REVISED BY
DATE REVISED

LAST REVISION 00-00-00
DATE PLOTTED => 14-APR-2012
TIME PLOTTED => 14:30

Dist	COUNTY	ROUTE	POST MILES TOTAL PROJECT	SHEET No.	TOTAL SHEETS
07	LA	5	4.0/5.9	732	1597

George Olguin
LICENSED LANDSCAPE ARCHITECT

4-9-12
PLANS APPROVAL DATE

LICENSED LANDSCAPE ARCHITECT GEORGE OLGUIN NO. 4333 George Olguin Signature 08-31-12 Renewal Date 10-10-10 Date STATE OF CALIFORNIA

THE STATE OF CALIFORNIA OR ITS OFFICERS OR AGENTS SHALL NOT BE RESPONSIBLE FOR THE ACCURACY OR COMPLETENESS OF SCANNED COPIES OF THIS PLAN SHEET.

NOTES:

FOR ACCURATE RIGHT OF WAY DATA, CONTACT RIGHT OF WAY ENGINEERING AT THE DISTRICT OFFICE.

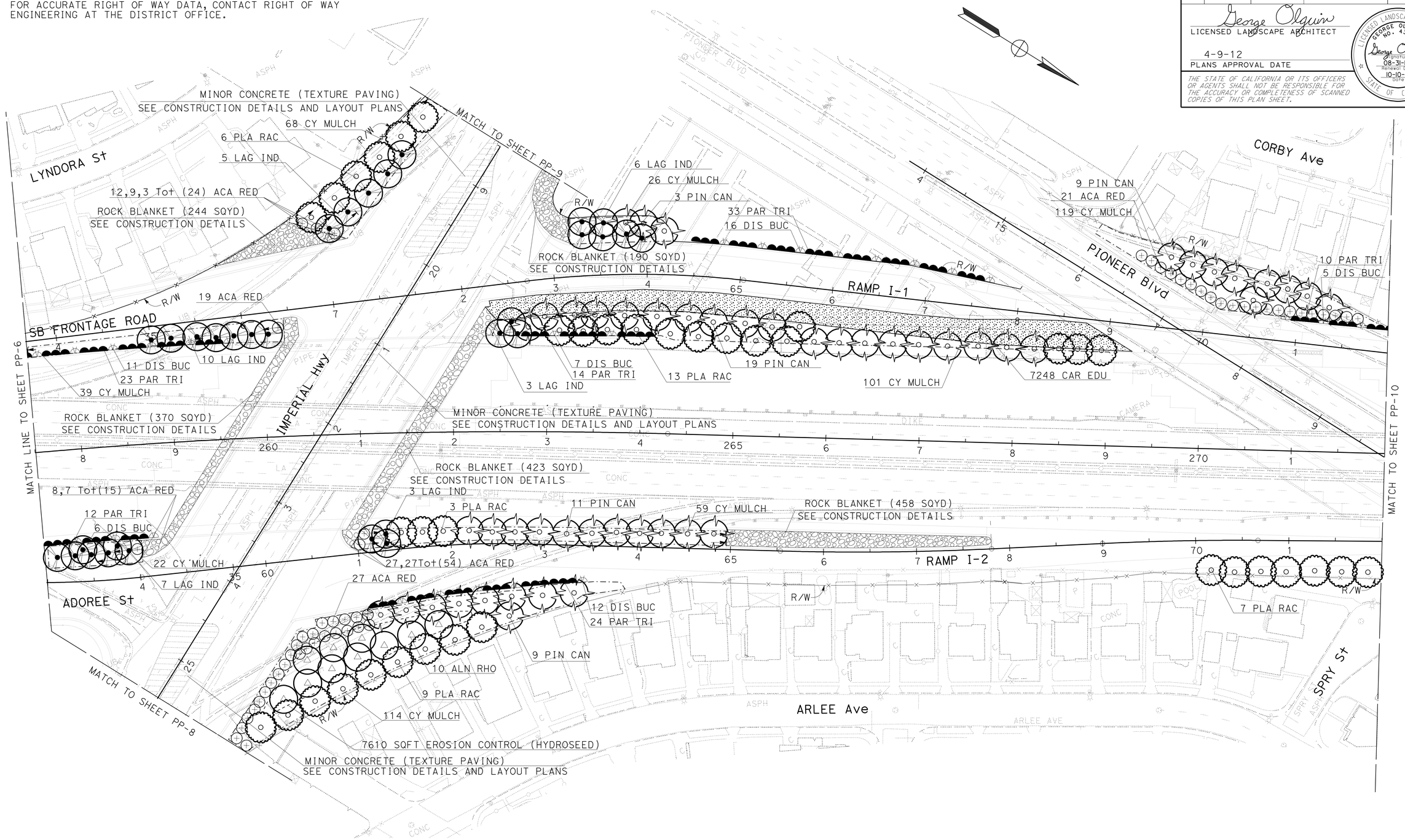

PLANTING PLAN

SCALE: 1" = 50'

APPROVED FOR PLANTING WORK ONLY

PP-7

STATE OF CALIFORNIA - DEPARTMENT OF TRANSPORTATION
Caltrans® LANDSCAPE ARCHITECTURE

SENIOR LANDSCAPE ARCHITECT: JENNIFER TAIRA

CALCULATED-DESIGNED BY: XUAN WU
CHECKED BY: GEORGE OLGUIN

REVISED BY | DATE REVISED

LAST REVISION 00-00-00 | DATE PLOTTED => 14-APR-2012 | TIME PLOTTED => 14:30

Dist	COUNTY	ROUTE	POST MILES TOTAL PROJECT	SHEET No.	TOTAL SHEETS
07	LA	5	4.0/5.9	733	1597

George Olguin
LICENSED LANDSCAPE ARCHITECT

4-9-12
PLANS APPROVAL DATE

LICENSED LANDSCAPE ARCHITECT
GEORGE OLGUIN
NO. 4333
George Olguin
Signature
08-31-12
Renewal Date
10-10-10
Date
STATE OF CALIFORNIA

THE STATE OF CALIFORNIA OR ITS OFFICERS OR AGENTS SHALL NOT BE RESPONSIBLE FOR THE ACCURACY OR COMPLETENESS OF SCANNED COPIES OF THIS PLAN SHEET.

NOTE:

FOR ACCURATE RIGHT OF WAY DATA, CONTACT RIGHT OF WAY ENGINEERING AT THE DISTRICT OFFICE.

APPROVED FOR PLANTING WORK ONLY

PLANTING PLAN

SCALE: 1" = 50'

PP-8

STATE OF CALIFORNIA - DEPARTMENT OF TRANSPORTATION
Caltrans® LANDSCAPE ARCHITECTURE

SENIOR LANDSCAPE ARCHITECT: JENNIFER TAIRA
CALCULATED-DESIGNED BY: XUAN WU
CHECKED BY: GEORGE OLGUIN
REVISED BY
DATE REVISED

LAST REVISION 00-00-00
DATE PLOTTED => 14-APR-2012
TIME PLOTTED => 14:30

Dist	COUNTY	ROUTE	POST MILES TOTAL PROJECT	SHEET No.	TOTAL SHEETS
07	LA	5	4.0/5.9	734	1597

George Olguin
LICENSED LANDSCAPE ARCHITECT

4-9-12
PLANS APPROVAL DATE

LICENSED LANDSCAPE ARCHITECT
GEORGE OLGUIN
NO. 4333
George Olguin
Signature
08-31-12
Renewal Date
10-10-10
Date
STATE OF CALIFORNIA

THE STATE OF CALIFORNIA OR ITS OFFICERS OR AGENTS SHALL NOT BE RESPONSIBLE FOR THE ACCURACY OR COMPLETENESS OF SCANNED COPIES OF THIS PLAN SHEET.

NOTE:

FOR ACCURATE RIGHT OF WAY DATA, CONTACT RIGHT OF WAY ENGINEERING AT THE DISTRICT OFFICE.

APPROVED FOR PLANTING WORK ONLY

PLANTING PLAN

SCALE: 1" = 50'

PP-9

STATE OF CALIFORNIA - DEPARTMENT OF TRANSPORTATION
Caltrans® LANDSCAPE ARCHITECTURE

SENIOR LANDSCAPE ARCHITECT: JENNIFER TAIRA

CALCULATED-DESIGNED BY: XUAN WU
CHECKED BY: GEORGE OLGUIN

REVISED BY
DATE REVISED

LAST REVISION 00-00-00
DATE PLOTTED => 14-APR-2012
TIME PLOTTED => 14:30

Dist	COUNTY	ROUTE	POST MILES TOTAL PROJECT	SHEET No.	TOTAL SHEETS
07	LA	5	4.0/5.9	735	1597

George Olguin
LICENSED LANDSCAPE ARCHITECT

4-9-12
PLANS APPROVAL DATE

LICENSED LANDSCAPE ARCHITECT
GEORGE OLGUIN
NO. 4333
George Olguin
Signature
08-31-12
Renewal Date
10-10-10
Date
STATE OF CALIFORNIA

THE STATE OF CALIFORNIA OR ITS OFFICERS OR AGENTS SHALL NOT BE RESPONSIBLE FOR THE ACCURACY OR COMPLETENESS OF SCANNED COPIES OF THIS PLAN SHEET.

NOTE:

FOR ACCURATE RIGHT OF WAY DATA, CONTACT RIGHT OF WAY ENGINEERING AT THE DISTRICT OFFICE.

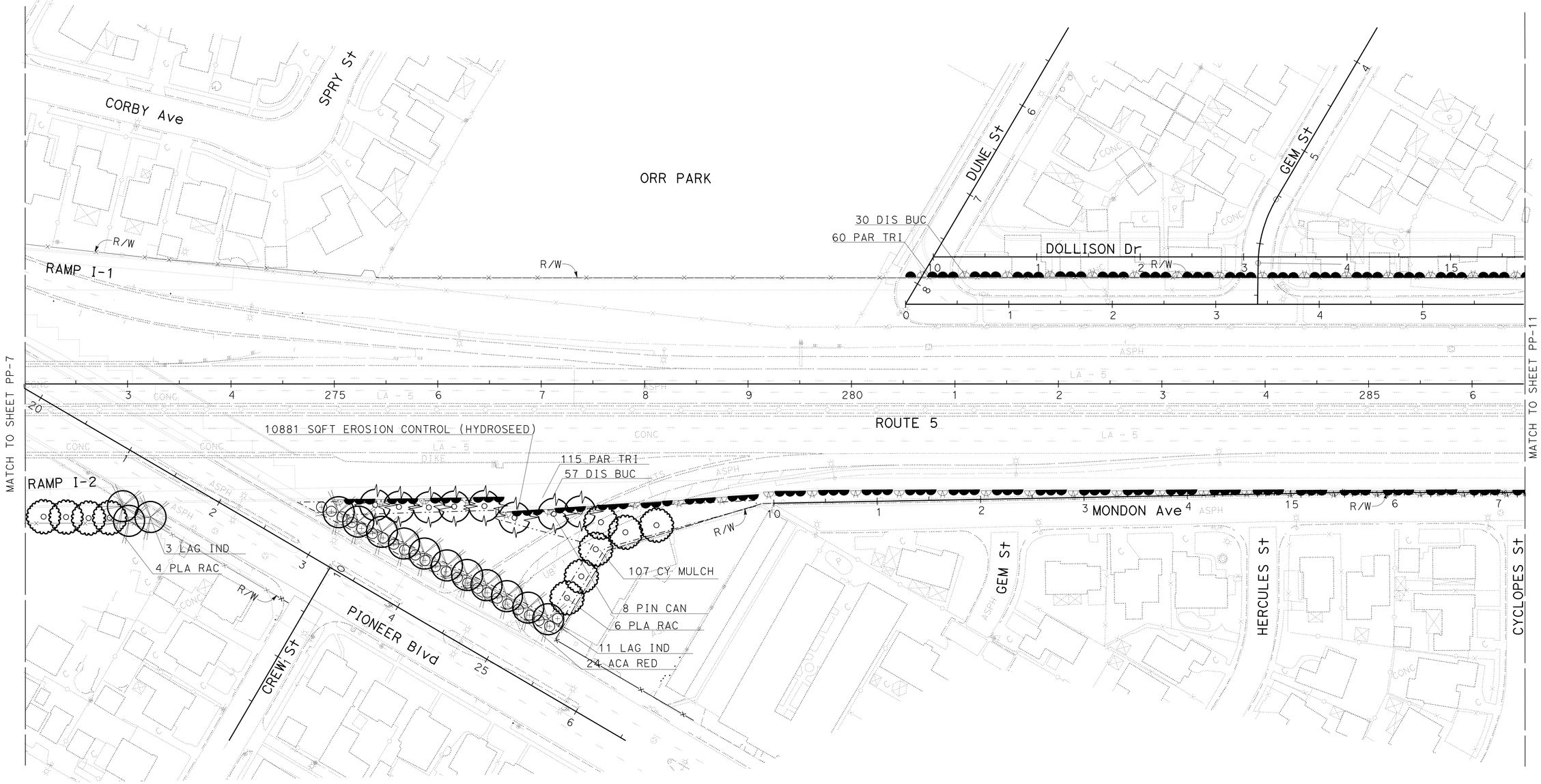

APPROVED FOR PLANTING WORK ONLY

PLANTING PLAN

SCALE: 1" = 50'

PP-10

STATE OF CALIFORNIA - DEPARTMENT OF TRANSPORTATION
Caltrans® LANDSCAPE ARCHITECTURE

SENIOR LANDSCAPE ARCHITECT: JENNIFER TAIRA

CALCULATED-DESIGNED BY: XUAN WU
CHECKED BY: GEORGE OLGUIN

REVISED BY / DATE REVISED

LAST REVISION 00-00-00 | DATE PLOTTED => 14-APR-2012 | TIME PLOTTED => 14:31

Dist	COUNTY	ROUTE	POST MILES TOTAL PROJECT	SHEET No.	TOTAL SHEETS
07	LA	5	4.0/5.9	736	1597

George Olguin
LICENSED LANDSCAPE ARCHITECT

4-9-12
PLANS APPROVAL DATE

LICENSED LANDSCAPE ARCHITECT
GEORGE OLGUIN
NO. 4333
George Olguin
Signature
08-31-12
Renewal Date
10-10-10
Date
STATE OF CALIFORNIA

THE STATE OF CALIFORNIA OR ITS OFFICERS OR AGENTS SHALL NOT BE RESPONSIBLE FOR THE ACCURACY OR COMPLETENESS OF SCANNED COPIES OF THIS PLAN SHEET.

NOTE:

FOR ACCURATE RIGHT OF WAY DATA, CONTACT RIGHT OF WAY ENGINEERING AT THE DISTRICT OFFICE.

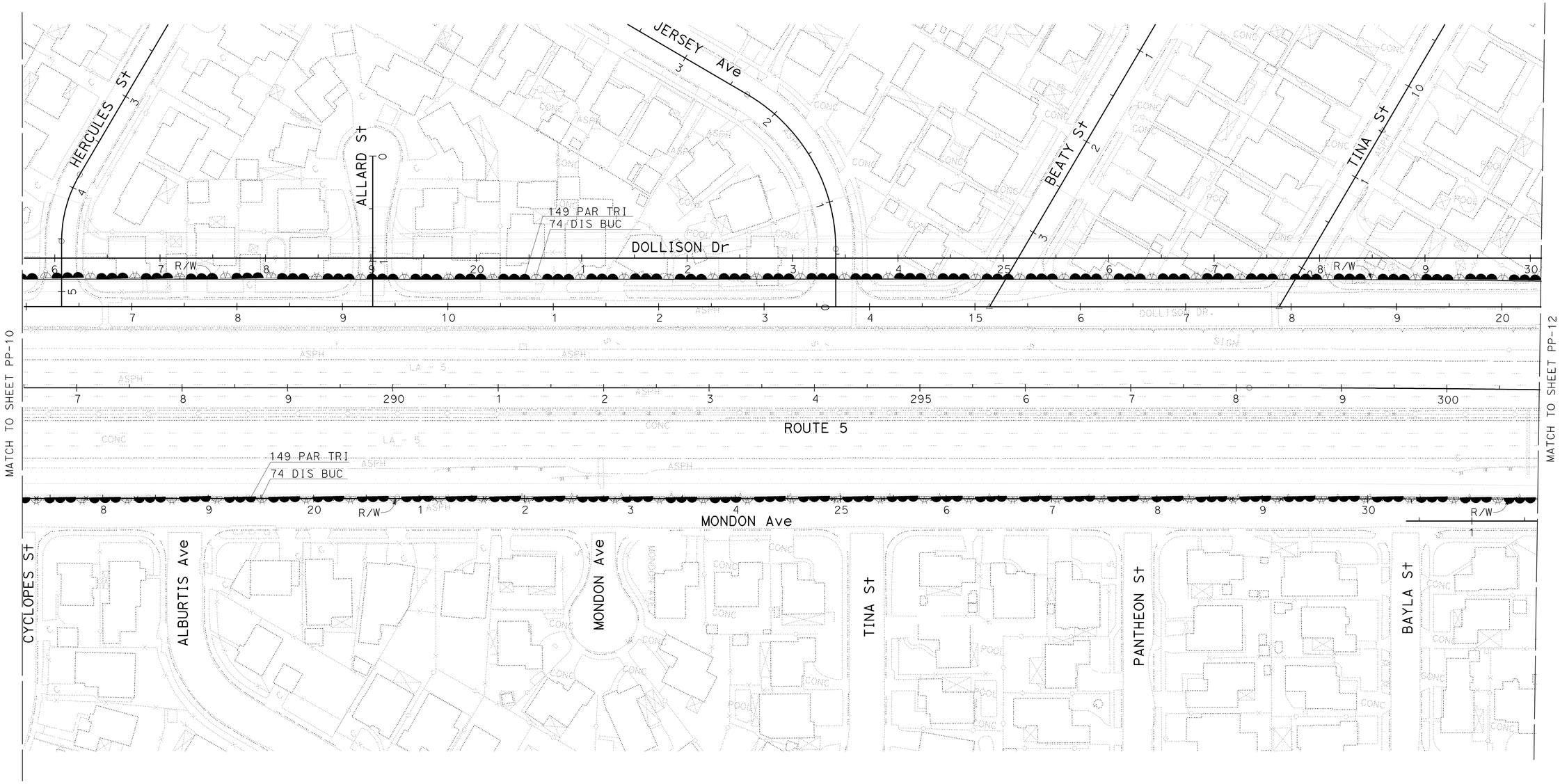

PLANTING PLAN

SCALE: 1" = 50'

PP-11

APPROVED FOR PLANTING WORK ONLY

STATE OF CALIFORNIA - DEPARTMENT OF TRANSPORTATION
Caltrans® LANDSCAPE ARCHITECTURE

SENIOR LANDSCAPE ARCHITECT: JENNIFER TAIRA

CALCULATED-DESIGNED BY: XUAN WU
CHECKED BY: GEORGE OLGUIN

REVISED BY
DATE REVISED

LAST REVISION 00-00-00
DATE PLOTTED => 14-APR-2012
TIME PLOTTED => 14:31

Dist	COUNTY	ROUTE	POST MILES TOTAL PROJECT	SHEET No.	TOTAL SHEETS
07	LA	5	4.0/5.9	737	1597

George Olguin
LICENSED LANDSCAPE ARCHITECT

4-9-12
PLANS APPROVAL DATE

LICENSED LANDSCAPE ARCHITECT
GEORGE OLGUIN
NO. 4333
George Olguin
Signature
08-31-12
Renewal Date
10-10-10
Date
STATE OF CALIFORNIA

THE STATE OF CALIFORNIA OR ITS OFFICERS OR AGENTS SHALL NOT BE RESPONSIBLE FOR THE ACCURACY OR COMPLETENESS OF SCANNED COPIES OF THIS PLAN SHEET.

NOTE:

FOR ACCURATE RIGHT OF WAY DATA, CONTACT RIGHT OF WAY ENGINEERING AT THE DISTRICT OFFICE.

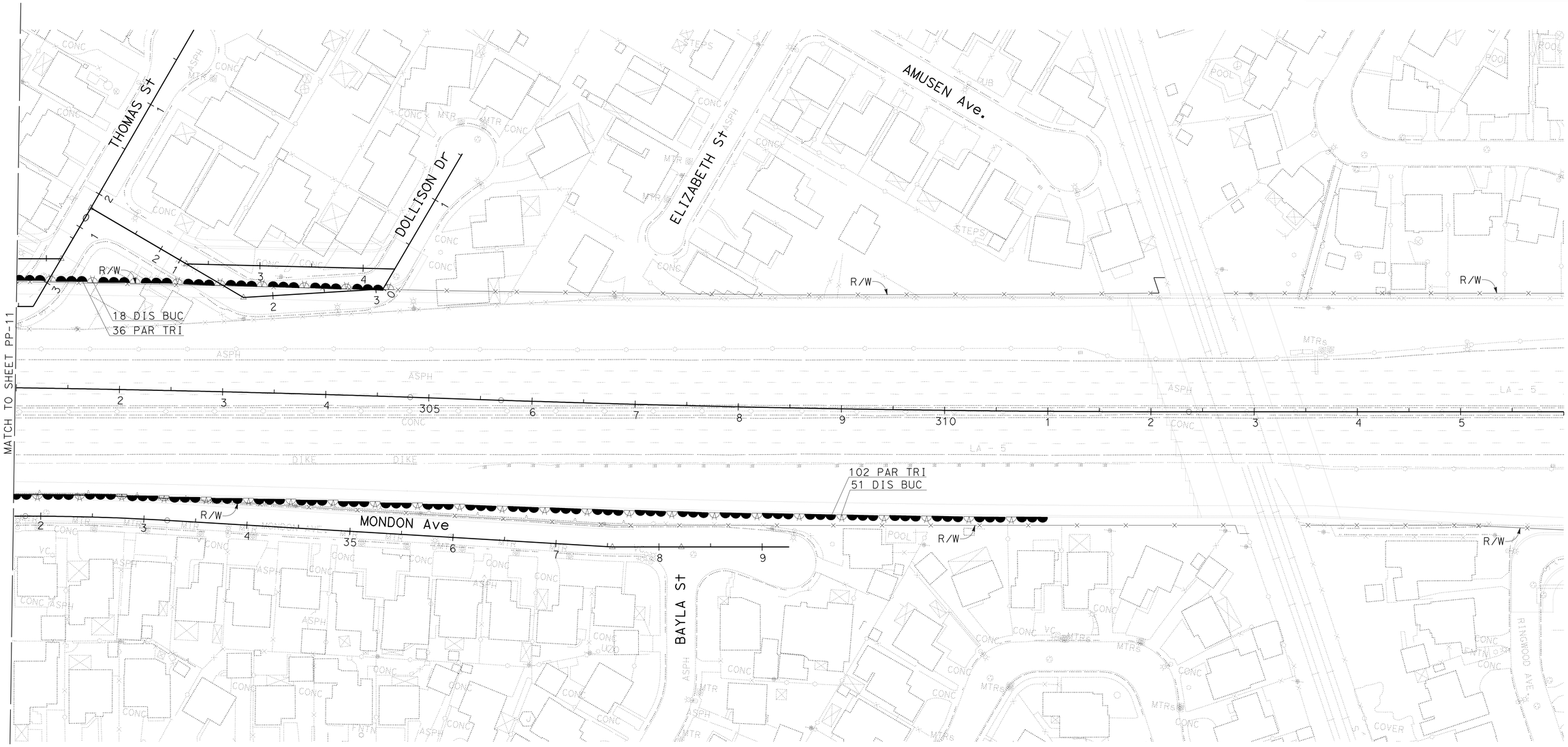

PLANTING PLAN

SCALE: 1" = 50'

PP-12

APPROVED FOR PLANTING WORK ONLY

STATE OF CALIFORNIA - DEPARTMENT OF TRANSPORTATION
Caltrans® LANDSCAPE ARCHITECTURE

SENIOR LANDSCAPE ARCHITECT: JENNIFER TAIRA
CALCULATED-DESIGNED BY: XUAN WU
CHECKED BY: GEORGE OLGUIN
REVISED BY
DATE REVISED

LAST REVISION 00-00-00
DATE PLOTTED => 14-APR-2012
TIME PLOTTED => 14:31

Dist	COUNTY	ROUTE	POST MILES TOTAL PROJECT	SHEET No.	TOTAL SHEETS
07	LA	5	4.0/5.9	738	1597

George Olguin
LICENSED LANDSCAPE ARCHITECT

4-9-12
PLANS APPROVAL DATE

LICENSED LANDSCAPE ARCHITECT GEORGE OLGUIN NO. 4335 STATE OF CALIFORNIA
George Olguin Signature
08-31-12 Renewal Date
10-10-10 Date

THE STATE OF CALIFORNIA OR ITS OFFICERS OR AGENTS SHALL NOT BE RESPONSIBLE FOR THE ACCURACY OR COMPLETENESS OF SCANNED COPIES OF THIS PLAN SHEET.

NOTES:

FOR ACCURATE RIGHT OF WAY DATA,
CONTACT RIGHT OF WAY ENGINEERING AT THE DISTRICT OFFICE.
Exist UTILITY FACILITIES HAVE NOT BEEN SHOWN ON THESE PLANS.

NOTES
1. A 1" LAYER OF COMPOST (INCORPORATED) SHALL BE APPLIED ON ALL EXPOSED SOIL SURFACE AREAS IN THE CITY'S PLANTING MEDIANS, EXCEPT TURF AREAS.

LEGEND
RELOCATE TREE GRATE
RELOCATED TREE GRATE

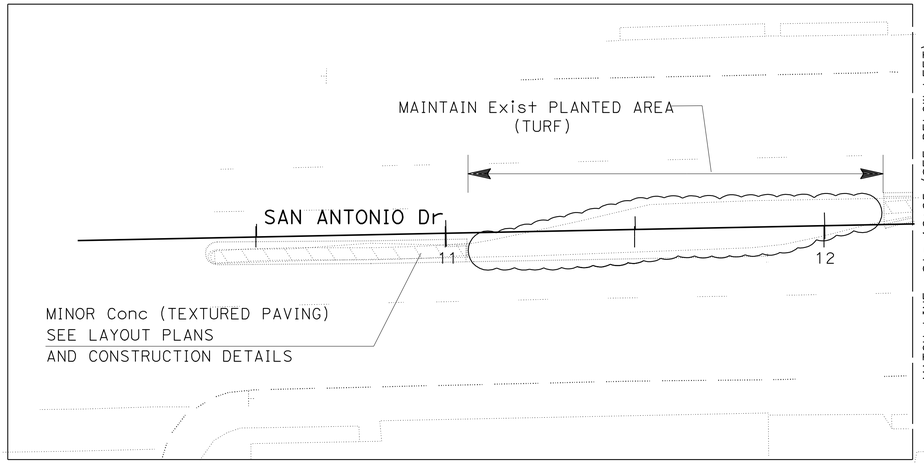

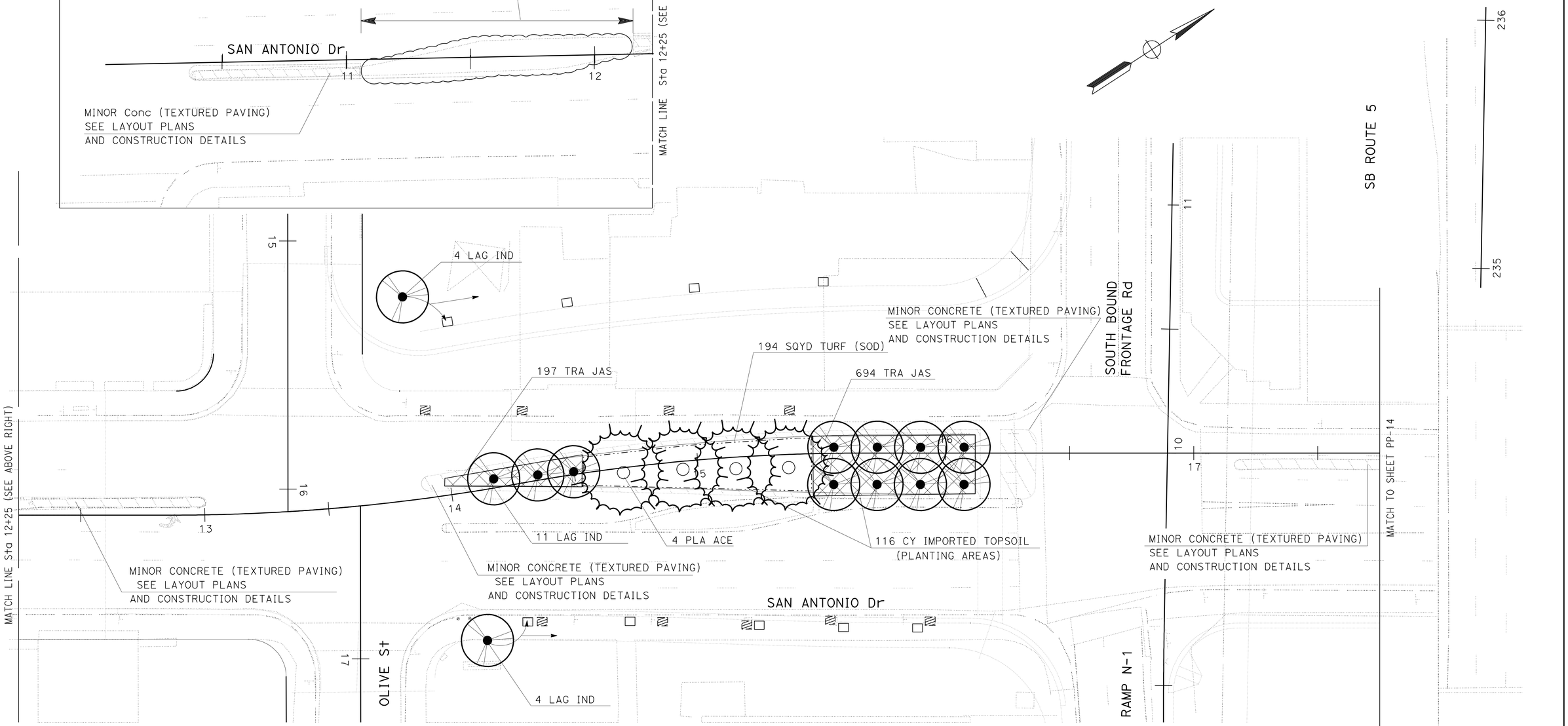

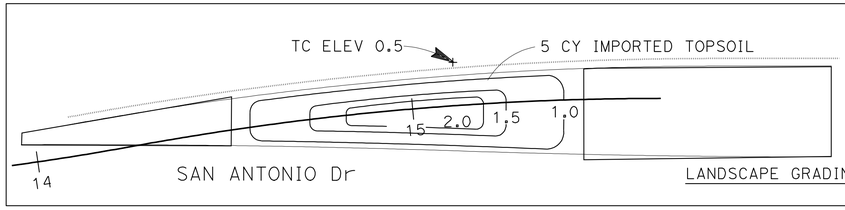

NOTES
1. TOP SOIL SHALL BE CONTOURED TO CREATE A SMOOTH MOUNDING LANDSCAPE BERM.

APPROVED FOR PLANTING WORK ONLY

PLANTING PLAN
(SAN ANTONIO Dr)
SCALE: 1" = 20'

PP-13

STATE OF CALIFORNIA - DEPARTMENT OF TRANSPORTATION
Caltrans LANDSCAPE ARCHITECTURE
SENIOR LANDSCAPE ARCHITECT: JENNIFER TAIRA
CALCULATED-DESIGNED BY: XUAN WU
CHECKED BY: GEORGE OLGUIN
REVISED BY
DATE REVISED

LAST REVISION 00-00-00
DATE PLOTTED => 18-APR-2012
TIME PLOTTED => 05:40

Dist	COUNTY	ROUTE	POST MILES TOTAL PROJECT	SHEET No.	TOTAL SHEETS
07	LA	5	4.0/5.9	739	1597

George Olguin
LICENSED LANDSCAPE ARCHITECT

4-9-12
PLANS APPROVAL DATE

LICENSED LANDSCAPE ARCHITECT
GEORGE OLGUIN
NO. 4333
George Olguin
Signature
08-31-12
Renewal Date
10-10-10
Date
STATE OF CALIFORNIA

THE STATE OF CALIFORNIA OR ITS OFFICERS OR AGENTS SHALL NOT BE RESPONSIBLE FOR THE ACCURACY OR COMPLETENESS OF SCANNED COPIES OF THIS PLAN SHEET.

NOTES:

FOR ACCURATE RIGHT OF WAY DATA,
CONTACT RIGHT OF WAY ENGINEERING AT THE DISTRICT OFFICE.
Exist UTILITY FACILITIES HAVE NOT BEEN SHOWN ON THESE PLANS.

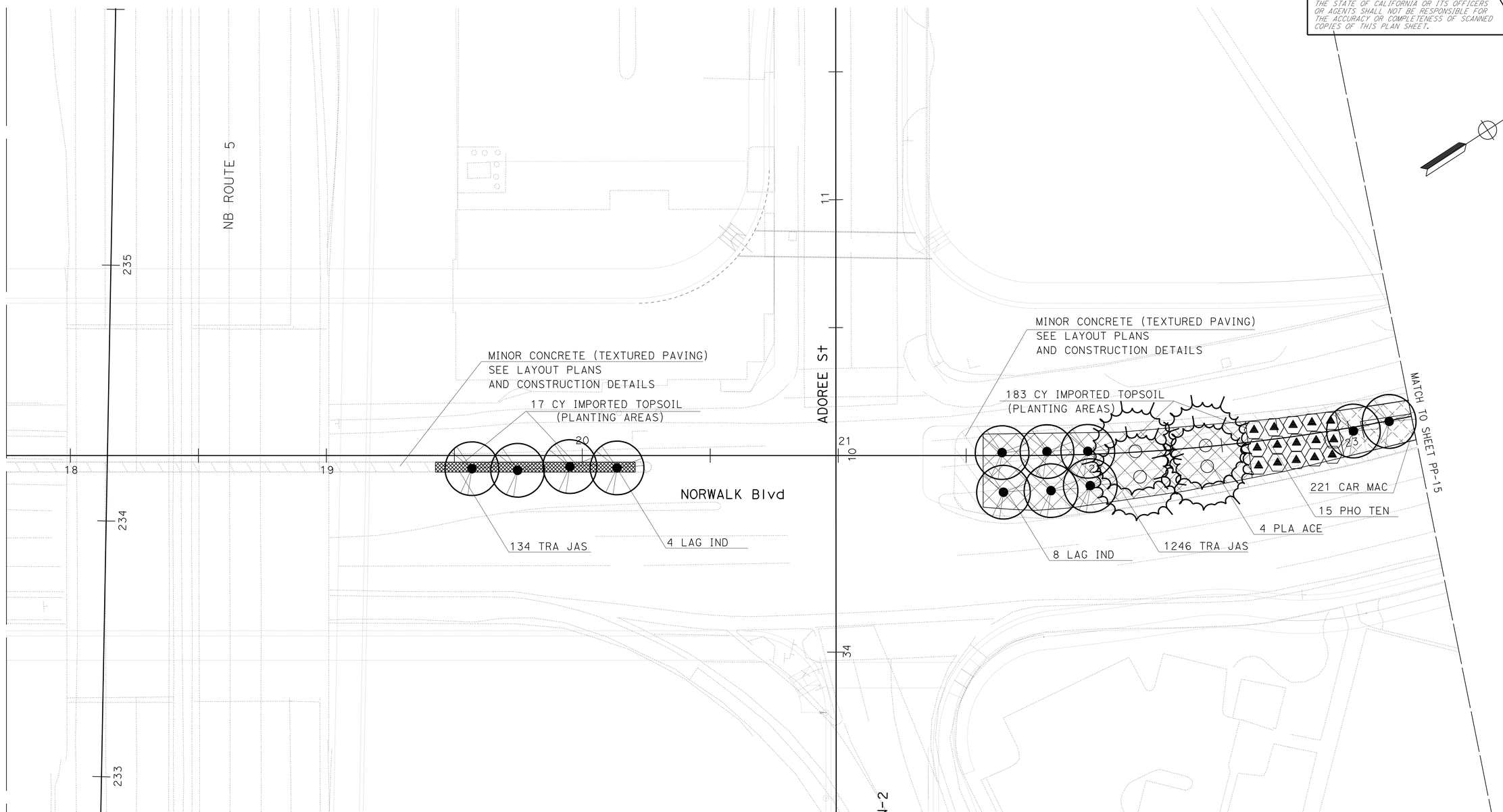

PLANTING PLAN

(NORWALK Blvd)

SCALE: 1" = 20'

PP-14

APPROVED FOR PLANTING WORK ONLY

STATE OF CALIFORNIA - DEPARTMENT OF TRANSPORTATION
Caltrans® LANDSCAPE ARCHITECTURE

SENIOR LANDSCAPE ARCHITECT: JENNIFER TAIRA
CALCULATED-DESIGNED BY: GEORGE OLGUIN
CHECKED BY: XUAN WU
REVISED BY
DATE REVISED

LAST REVISION 00-00-00
DATE PLOTTED => 18-APR-2012
TIME PLOTTED => 05:40

BORDER LAST REVISED 7/2/2010
USERNAME => s121614
DGN FILE => 721594ti014.dgn
RELATIVE BORDER SCALE IS IN INCHES 0 1 2 3
UNIT 1850
PROJECT NUMBER & PHASE 07000018341

Dist	COUNTY	ROUTE	POST MILES TOTAL PROJECT	SHEET No.	TOTAL SHEETS
07	LA	5	4.0/5.9	740	1597

George Olguin
LICENSED LANDSCAPE ARCHITECT

4-9-12
PLANS APPROVAL DATE

LICENSED LANDSCAPE ARCHITECT
GEORGE OLGUIN
NO. 4333
George Olguin
Signature
08-31-12
Renewal Date
10-10-10
Date
STATE OF CALIFORNIA

THE STATE OF CALIFORNIA OR ITS OFFICERS OR AGENTS SHALL NOT BE RESPONSIBLE FOR THE ACCURACY OR COMPLETENESS OF SCANNED COPIES OF THIS PLAN SHEET.

NOTES:

FOR ACCURATE RIGHT OF WAY DATA,
CONTACT RIGHT OF WAY ENGINEERING AT THE DISTRICT OFFICE.
Exist UTILITY FACILITIES HAVE NOT BEEN SHOWN ON THESE PLANS.

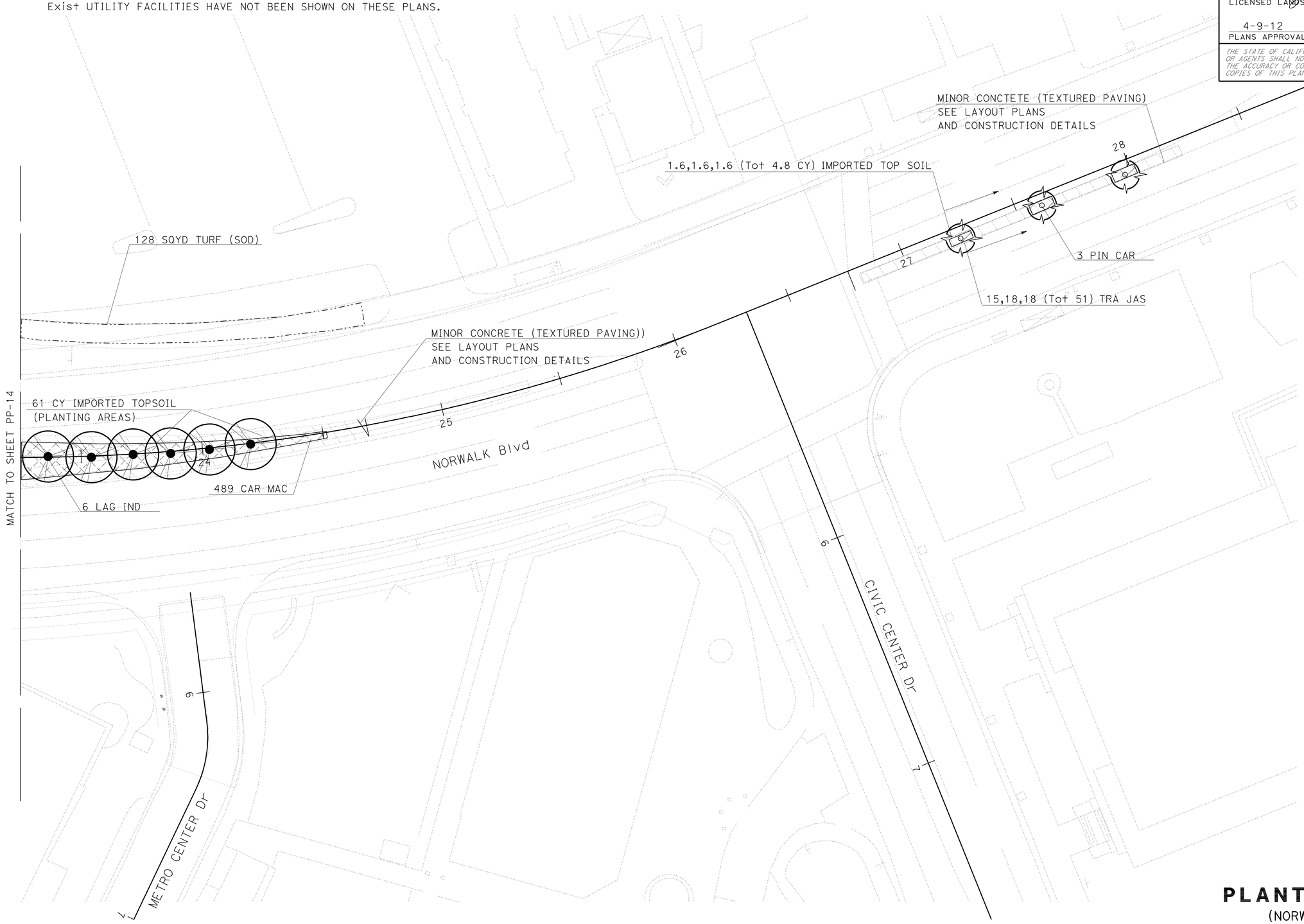

APPROVED FOR PLANTING WORK ONLY

PLANTING PLAN

(NORWALK Blvd)

SCALE: 1" = 20'

PP-15

STATE OF CALIFORNIA - DEPARTMENT OF TRANSPORTATION
Caltrans LANDSCAPE ARCHITECTURE

SENIOR LANDSCAPE ARCHITECT: JENNIFER TAIRA

CALCULATED-DESIGNED BY: XUAN WU
CHECKED BY: GEORGE OLGUIN

REVISED BY
DATE REVISED

LAST REVISION 00-00-00
DATE PLOTTED => 18-APR-2012
TIME PLOTTED => 05:40

Dist	COUNTY	ROUTE	POST MILES TOTAL PROJECT	SHEET No.	TOTAL SHEETS
07	LA	5	4.0/5.9	741	1597

George Olguin
LICENSED LANDSCAPE ARCHITECT

4-9-12
PLANS APPROVAL DATE

LICENSED LANDSCAPE ARCHITECT
GEORGE OLGUIN
No. 4333
George Olguin
Signature
08-31-12
Renewal Date
10-10-10
Date
STATE OF CALIFORNIA

THE STATE OF CALIFORNIA OR ITS OFFICERS OR AGENTS SHALL NOT BE RESPONSIBLE FOR THE ACCURACY OR COMPLETENESS OF SCANNED COPIES OF THIS PLAN SHEET.

NOTES:

FOR ACCURATE RIGHT OF WAY DATA,
CONTACT RIGHT OF WAY ENGINEERING AT THE DISTRICT OFFICE.
Exist UTILITY FACILITIES HAVE NOT BEEN SHOWN ON THESE PLANS.

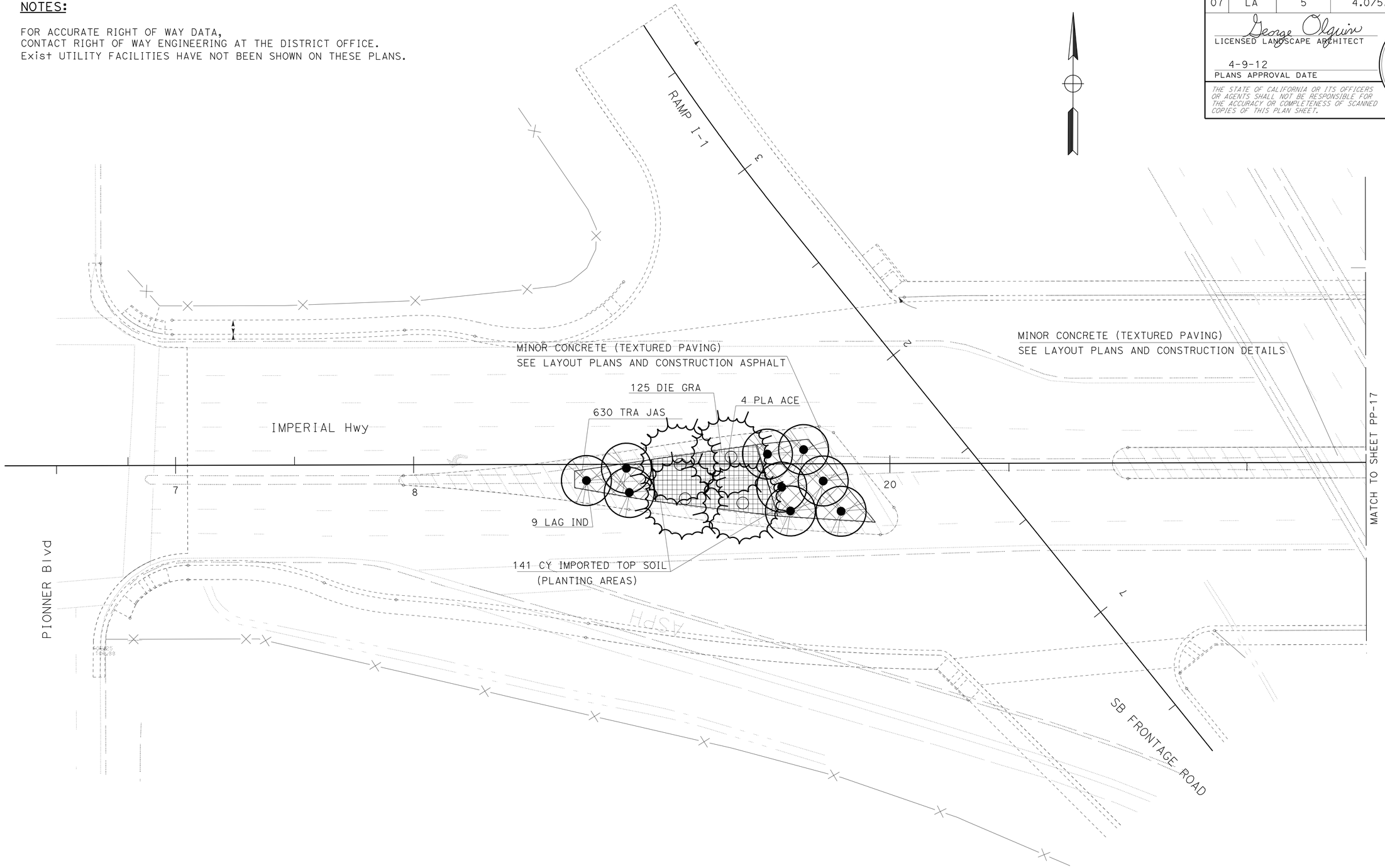

PLANTING PLAN

(IMPERIAL Hwy)

SCALE: 1" = 20'

PP-16

APPROVED FOR PLANTING WORK ONLY

STATE OF CALIFORNIA - DEPARTMENT OF TRANSPORTATION
Caltrans® LANDSCAPE ARCHITECTURE

SENIOR LANDSCAPE ARCHITECT: JENNIFER TAIRA
CALCULATED-DESIGNED BY: GEORGE OLGUIN
CHECKED BY: XUAN WU
REVISED BY
DATE REVISED

LAST REVISION 00-00-00
DATE PLOTTED => 14-APR-2012
TIME PLOTTED => 14:31

Dist	COUNTY	ROUTE	POST MILES TOTAL PROJECT	SHEET No.	TOTAL SHEETS
07	LA	5	4.0/5.9	742	1597

George Olguin
LICENSED LANDSCAPE ARCHITECT

4-9-12
PLANS APPROVAL DATE

LICENSED LANDSCAPE ARCHITECT
GEORGE OLGUIN
NO. 4333
George Olguin
Signature
08-31-12
Renewal Date
10-10-10
Date
STATE OF CALIFORNIA

THE STATE OF CALIFORNIA OR ITS OFFICERS OR AGENTS SHALL NOT BE RESPONSIBLE FOR THE ACCURACY OR COMPLETENESS OF SCANNED COPIES OF THIS PLAN SHEET.

NOTES:

FOR ACCURATE RIGHT OF WAY DATA,
CONTACT RIGHT OF WAY ENGINEERING AT THE DISTRICT OFFICE.
Exist UTILITY FACILITIES HAVE NOT BEEN SHOWN ON THESE PLANS.

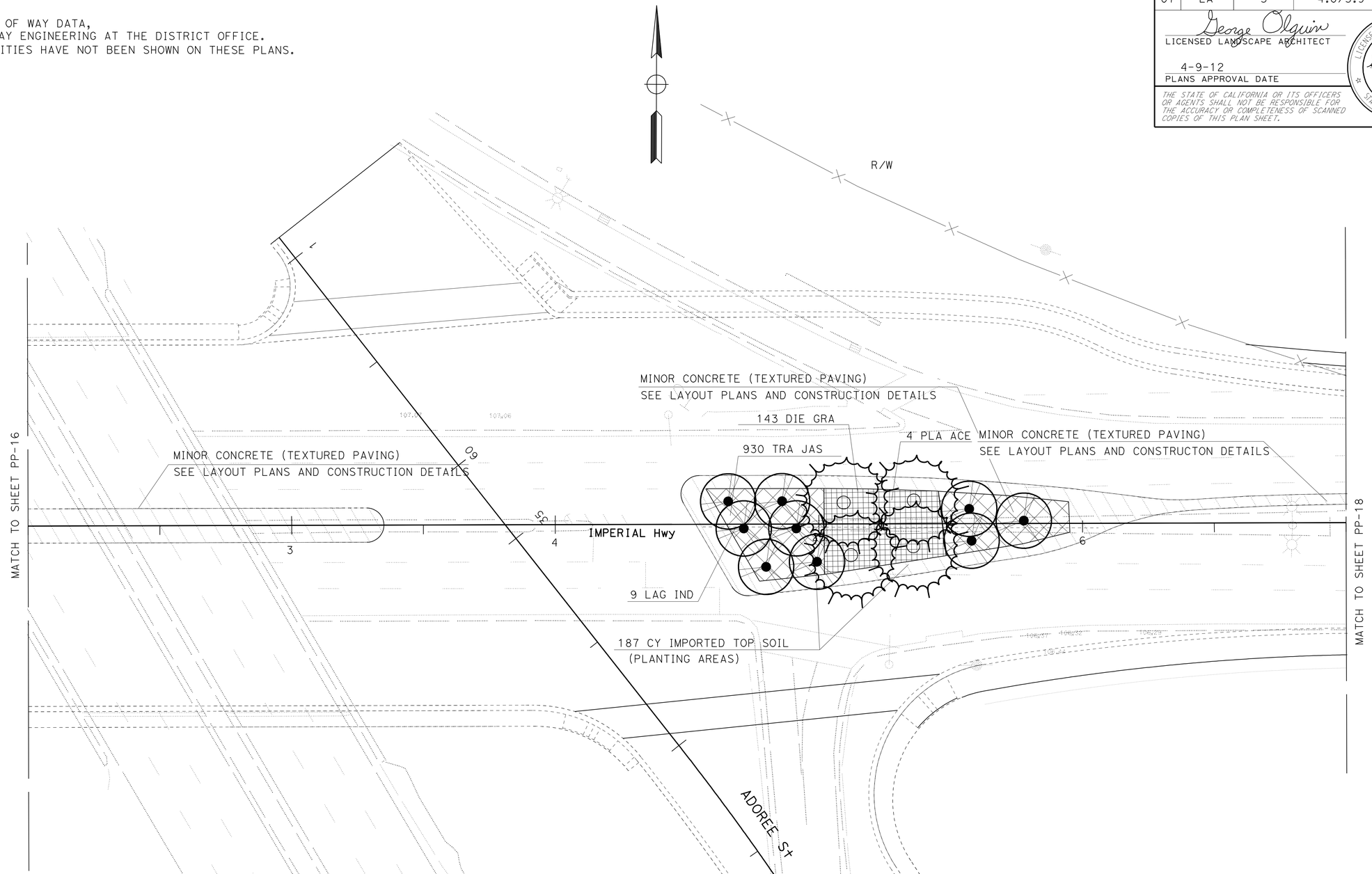

APPROVED FOR PLANTING WORK ONLY

PLANTING PLAN

(IMPERIAL Hwy)
SCALE: 1" = 20'

PP-17

STATE OF CALIFORNIA - DEPARTMENT OF TRANSPORTATION
Caltrans LANDSCAPE ARCHITECTURE
SENIOR LANDSCAPE ARCHITECT: JENNIFER TAIRA
CALCULATED-DESIGNED BY: GEORGE OLGUIN
CHECKED BY: XUAN WU
REVISED BY
DATE REVISED

LAST REVISION 00-00-00
DATE PLOTTED => 14-APR-2012
TIME PLOTTED => 14:31

Dist	COUNTY	ROUTE	POST MILES TOTAL PROJECT	SHEET No.	TOTAL SHEETS
07	LA	5	4.0/5.9	743	1597

George Olguin
LICENSED LANDSCAPE ARCHITECT

4-9-12
PLANS APPROVAL DATE

LICENSED LANDSCAPE ARCHITECT
GEORGE OLGUIN
NO. 4339
George Olguin
Signature
08-31-12
Renewal Date
10-10-10
Date
STATE OF CALIFORNIA

THE STATE OF CALIFORNIA OR ITS OFFICERS OR AGENTS SHALL NOT BE RESPONSIBLE FOR THE ACCURACY OR COMPLETENESS OF SCANNED COPIES OF THIS PLAN SHEET.

NOTES:

FOR ACCURATE RIGHT OF WAY DATA,
CONTACT RIGHT OF WAY ENGINEERING AT THE DISTRICT OFFICE.
Exist UTILITY FACILITIES HAVE NOT BEEN SHOWN ON THESE PLANS.

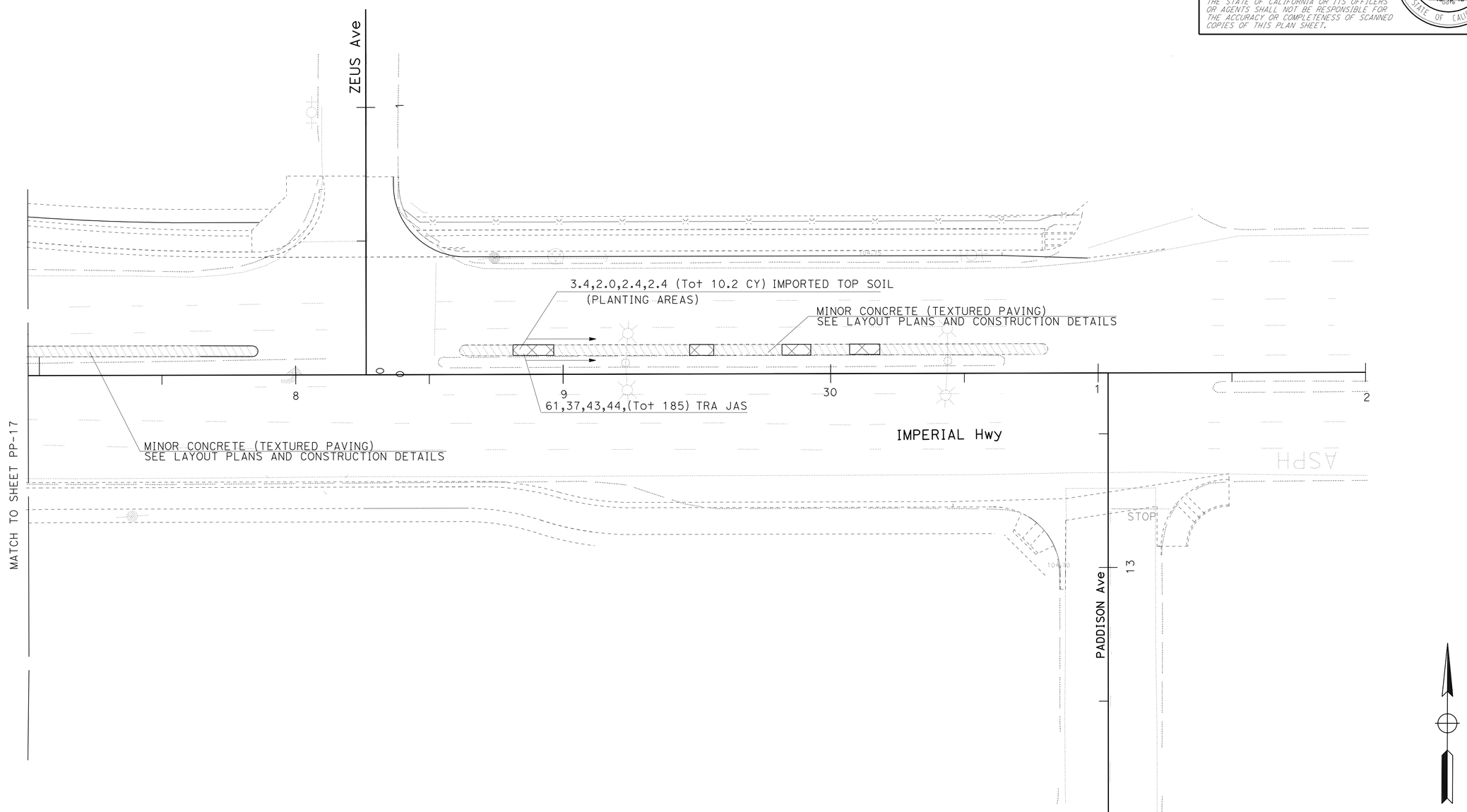

PLANTING PLAN

(IMPERIAL Hwy)
SCALE: 1" = 20'

PP-18

APPROVED FOR PLANTING WORK ONLY

STATE OF CALIFORNIA - DEPARTMENT OF TRANSPORTATION
Caltrans® LANDSCAPE ARCHITECTURE

SENIOR LANDSCAPE ARCHITECT: JENNIFER TAIRA
CALCULATED-DESIGNED BY: GEORGE OLGUIN
CHECKED BY: XUAN WU
REVISED BY
DATE REVISED

LAST REVISION 00-00-00
DATE PLOTTED => 14-APR-2012
TIME PLOTTED => 14:31

Dist	COUNTY	ROUTE	POST MILES TOTAL PROJECT	SHEET No.	TOTAL SHEETS
07	LA	5	4.0/5.9	744	1597

George Olguin
LICENSED LANDSCAPE ARCHITECT

4-9-12
PLANS APPROVAL DATE

LICENSED LANDSCAPE ARCHITECT
GEORGE OLGUIN
NO. 4333
George Olguin
Signature
08-31-12
Renewal Date
10-10-10
Date
STATE OF CALIFORNIA

THE STATE OF CALIFORNIA OR ITS OFFICERS OR AGENTS SHALL NOT BE RESPONSIBLE FOR THE ACCURACY OR COMPLETENESS OF SCANNED COPIES OF THIS PLAN SHEET.

NOTES:

FOR ACCURATE RIGHT OF WAY DATA,
CONTACT RIGHT OF WAY ENGINEERING AT THE DISTRICT OFFICE.
Exist UTILITY FACILITIES HAVE NOT BEEN SHOWN ON THESE PLANS.

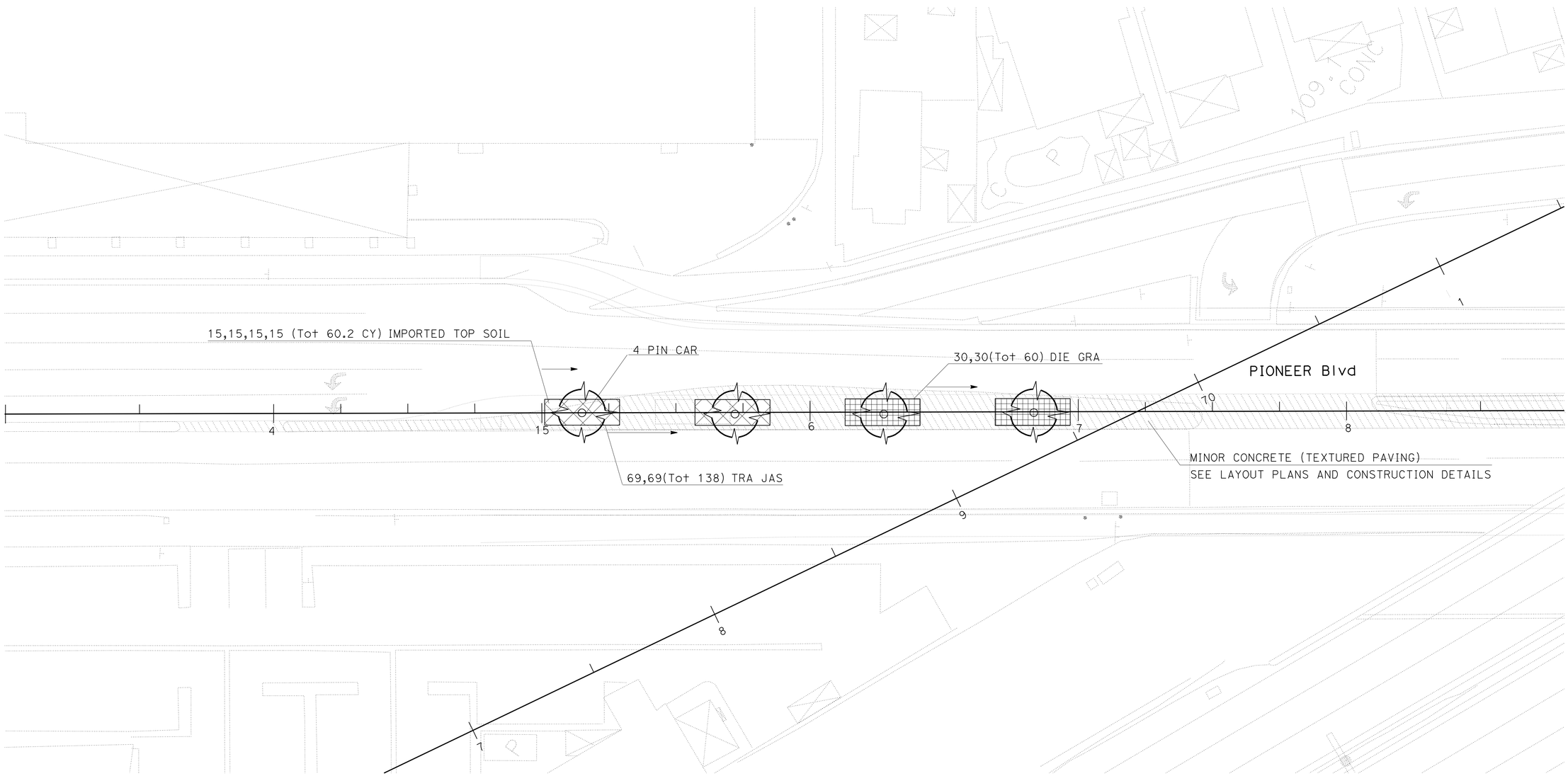

APPROVED FOR PLANTING WORK ONLY

PLANTING PLAN

(PIONEER Blvd)
SCALE: 1" = 20'

PP-19

REVISED BY	DATE REVISED
XUAN WU	

CALCULATED-DESIGNED BY	CHECKED BY
GEORGE OLGUIN	

SENIOR LANDSCAPE ARCHITECT
JENNIFER TAIRA

STATE OF CALIFORNIA - DEPARTMENT OF TRANSPORTATION
Caltrans® LANDSCAPE ARCHITECTURE

LAST REVISION 00-00-00
DATE PLOTTED => 14-APR-2012
TIME PLOTTED => 14:32

Dist	COUNTY	ROUTE	POST MILES TOTAL PROJECT	SHEET No.	TOTAL SHEETS
07	LA	5	4.0/5.9	745	1597

George Olguin
LICENSED LANDSCAPE ARCHITECT

4-9-12
PLANS APPROVAL DATE

LICENSED LANDSCAPE ARCHITECT
GEORGE OLGUIN
NO. 4333
George Olguin
Signature
08-31-12
Renewal Date
10-10-10
Date
STATE OF CALIFORNIA

THE STATE OF CALIFORNIA OR ITS OFFICERS OR AGENTS SHALL NOT BE RESPONSIBLE FOR THE ACCURACY OR COMPLETENESS OF SCANNED COPIES OF THIS PLAN SHEET.

NOTES:

FOR ACCURATE RIGHT OF WAY DATA,
CONTACT RIGHT OF WAY ENGINEERING AT THE DISTRICT OFFICE.
Exist UTILITY FACILITIES HAVE NOT BEEN SHOWN ON THESE PLANS.

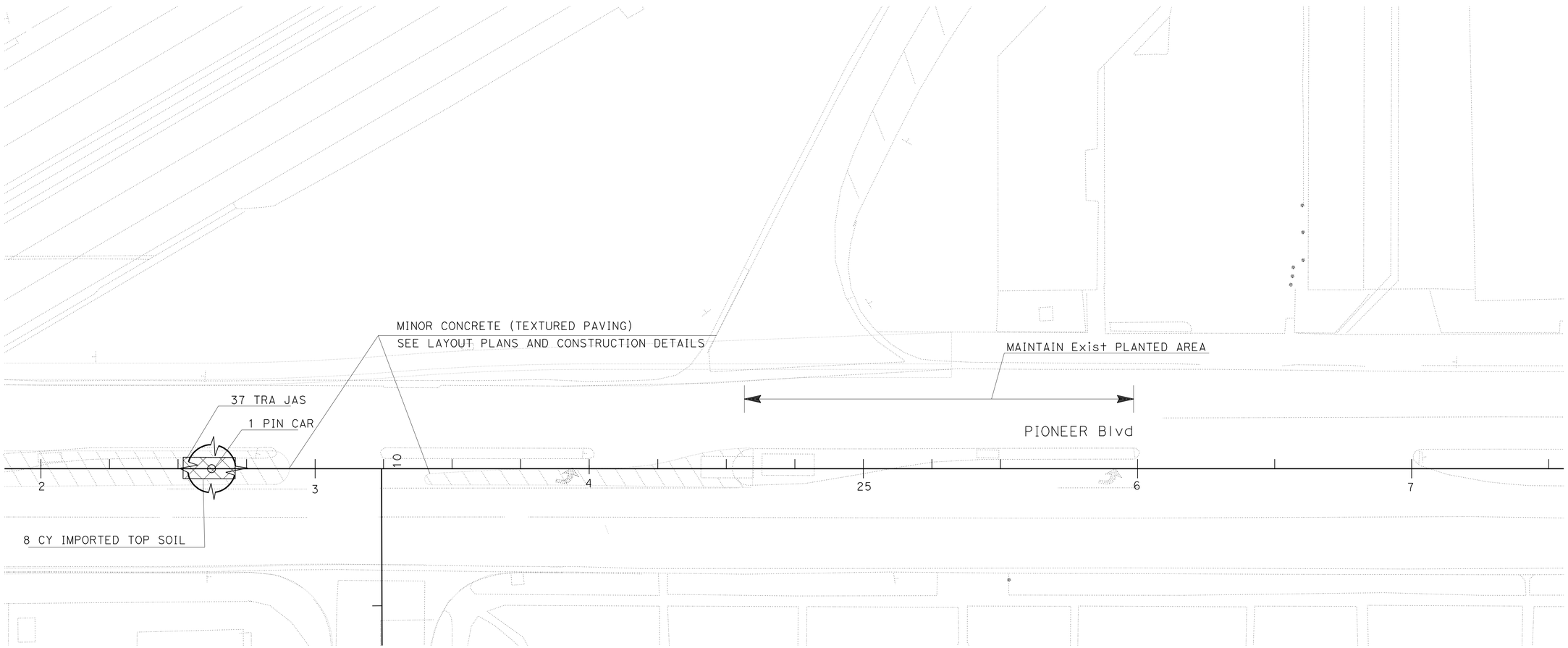

APPROVED FOR PLANTING WORK ONLY

PLANTING PLAN
(PIONEER Blvd)
SCALE: 1" = 20'

PP-20

REVISED BY | DATE REVISED
XUAN WU | GEORGE OLGUIN
CALCULATED-DESIGNED BY | CHECKED BY
SENIOR LANDSCAPE ARCHITECT
JENNIFER TAIRA
STATE OF CALIFORNIA - DEPARTMENT OF TRANSPORTATION
Caltrans LANDSCAPE ARCHITECTURE

LAST REVISION 00-00-00 | DATE PLOTTED => 14-APR-2012 | TIME PLOTTED => 14:32

Dist	COUNTY	ROUTE	POST MILES TOTAL PROJECT	SHEET No.	TOTAL SHEETS
07	LA	5	4.0/5.9	746	1597

George Olguin
LICENSED LANDSCAPE ARCHITECT

4-9-12
PLANS APPROVAL DATE

LICENSED LANDSCAPE ARCHITECT
GEORGE OLGUIN
NO. 4333
George Olguin
Signature
08-31-12
Renewal Date
10-10-10
Date
STATE OF CALIFORNIA

THE STATE OF CALIFORNIA OR ITS OFFICERS OR AGENTS SHALL NOT BE RESPONSIBLE FOR THE ACCURACY OR COMPLETENESS OF SCANNED COPIES OF THIS PLAN SHEET.

NOTE:

FOR ACCURATE RIGHT OF WAY DATA, CONTACT RIGHT OF WAY ENGINEERING AT THE DISTRICT OFFICE.

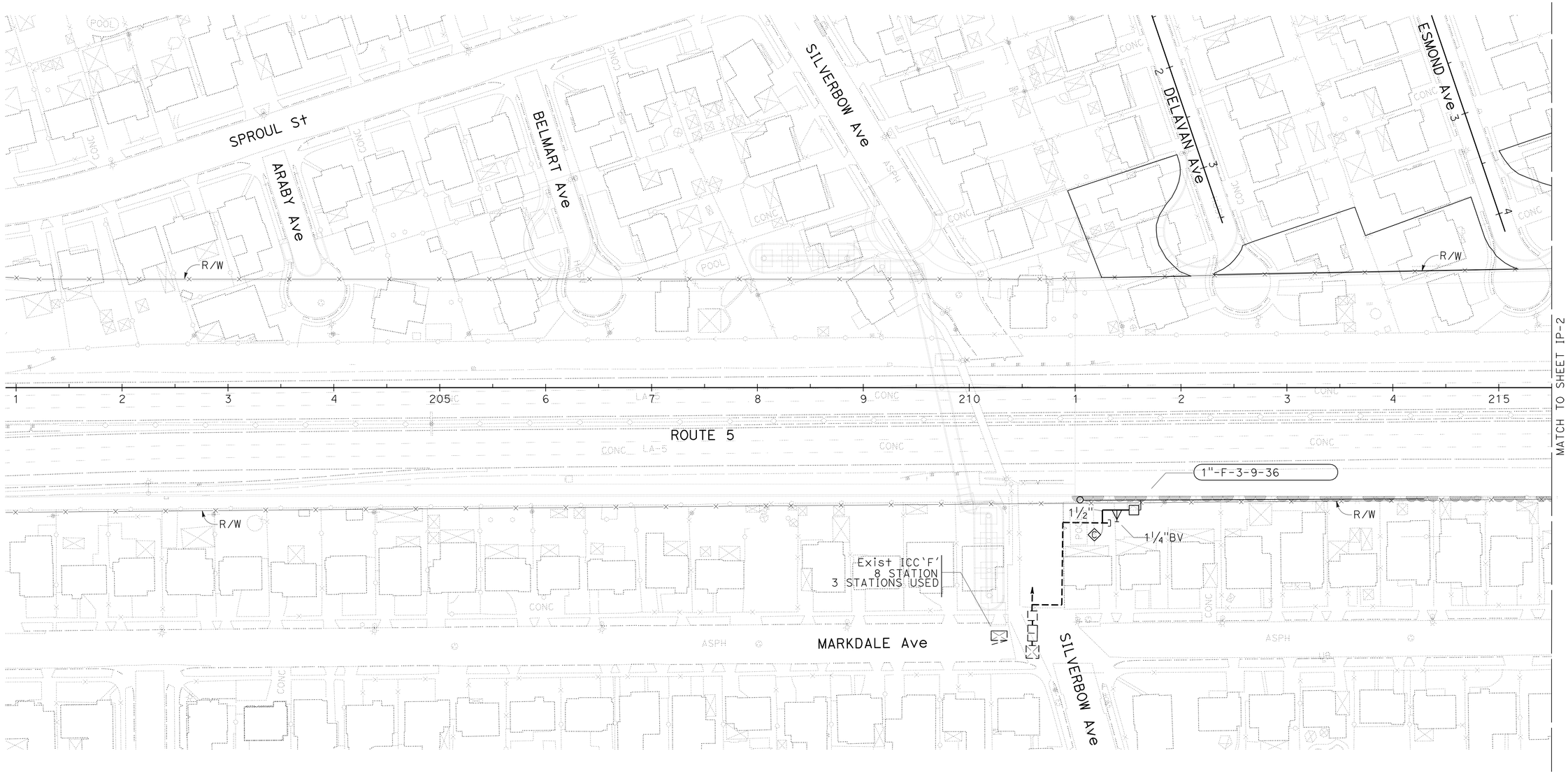

APPROVED FOR IRRIGATION WORK ONLY

IRRIGATION PLAN

SCALE: 1" = 50'

IP-1

STATE OF CALIFORNIA - DEPARTMENT OF TRANSPORTATION
Caltrans LANDSCAPE ARCHITECTURE

SENIOR LANDSCAPE ARCHITECT: JENNIFER TAIRA

CALCULATED-DESIGNED BY: YI SU
CHECKED BY: GEORGE OLGUIN

REVISED BY | DATE REVISED

LAST REVISION 00-00-00 | DATE PLOTTED => 14-APR-2012 | TIME PLOTTED => 14:32

Dist	COUNTY	ROUTE	POST MILES TOTAL PROJECT	SHEET No.	TOTAL SHEETS
07	LA	5	4.0/5.9	747	1597

George Olguin
LICENSED LANDSCAPE ARCHITECT

4-9-12
PLANS APPROVAL DATE

LICENSED LANDSCAPE ARCHITECT
GEORGE OLGUIN
NO. 4333
George Olguin
Signature
08-31-12
Renewal Date
10-10-10
Date
STATE OF CALIFORNIA

THE STATE OF CALIFORNIA OR ITS OFFICERS OR AGENTS SHALL NOT BE RESPONSIBLE FOR THE ACCURACY OR COMPLETENESS OF SCANNED COPIES OF THIS PLAN SHEET.

NOTE:

FOR ACCURATE RIGHT OF WAY DATA, CONTACT RIGHT OF WAY ENGINEERING AT THE DISTRICT OFFICE.

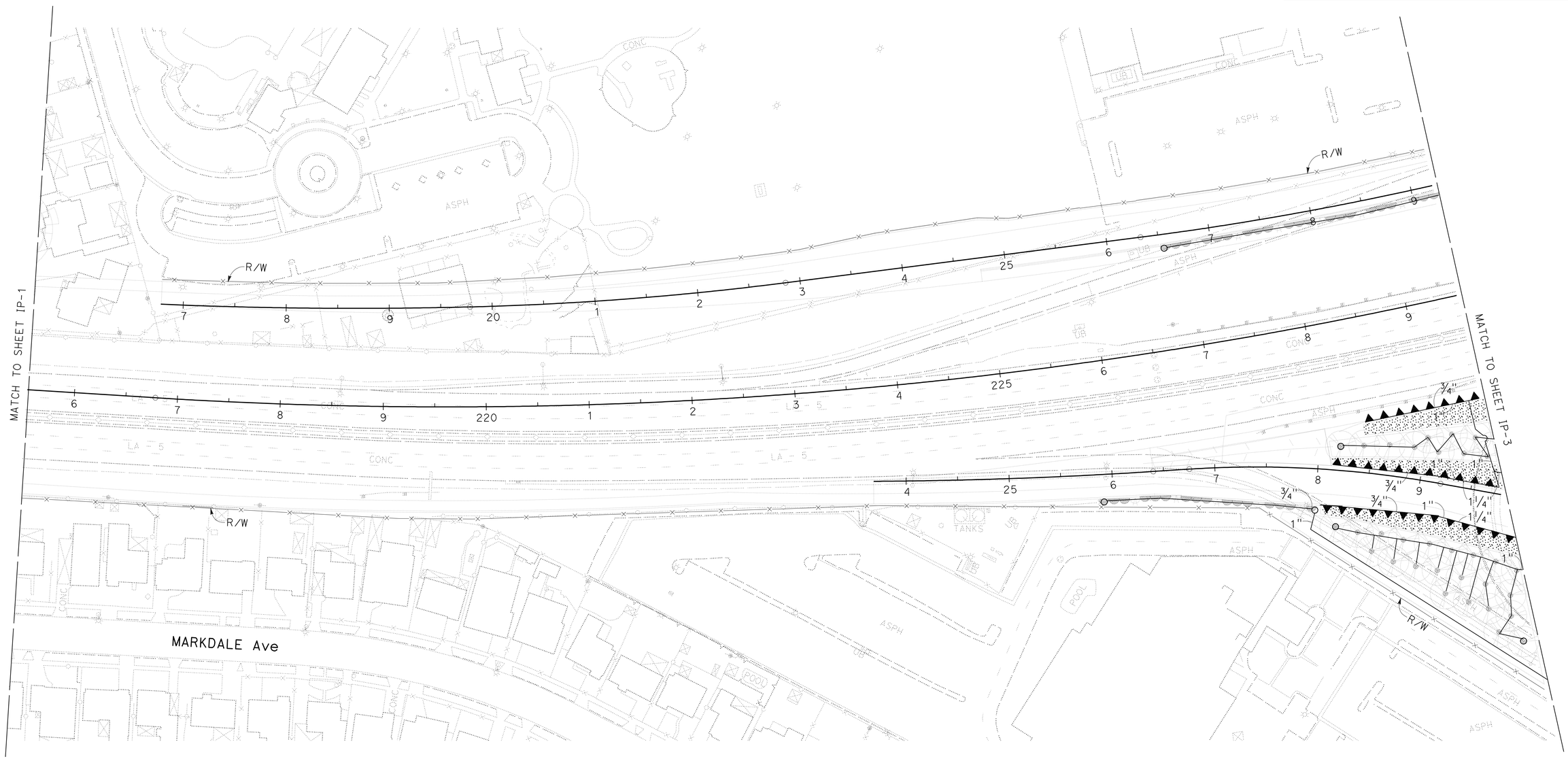

IRRIGATION PLAN

SCALE: 1" = 50'

IP-2

APPROVED FOR IRRIGATION WORK ONLY

STATE OF CALIFORNIA - DEPARTMENT OF TRANSPORTATION
Caltrans® LANDSCAPE ARCHITECTURE

SENIOR LANDSCAPE ARCHITECT: JENNIFER TAIRA

CALCULATED-DESIGNED BY: YI SU
CHECKED BY: GEORGE OLGUIN

REVISED BY
DATE REVISED

LAST REVISION 00-00-00
DATE PLOTTED => 14-APR-2012
TIME PLOTTED => 14:32

Dist	COUNTY	ROUTE	POST MILES TOTAL PROJECT	SHEET No.	TOTAL SHEETS
07	LA	5	4.0/5.9	748	1597

George Olguin
LICENSED LANDSCAPE ARCHITECT

4-9-12
PLANS APPROVAL DATE

LICENSED LANDSCAPE ARCHITECT
GEORGE OLGUIN
NO. 4333
George Olguin
Signature
08-31-12
Renewal Date
10-10-10
Date
STATE OF CALIFORNIA

THE STATE OF CALIFORNIA OR ITS OFFICERS OR AGENTS SHALL NOT BE RESPONSIBLE FOR THE ACCURACY OR COMPLETENESS OF SCANNED COPIES OF THIS PLAN SHEET.

NOTE:

FOR ACCURATE RIGHT OF WAY DATA, CONTACT RIGHT OF WAY ENGINEERING AT THE DISTRICT OFFICE.

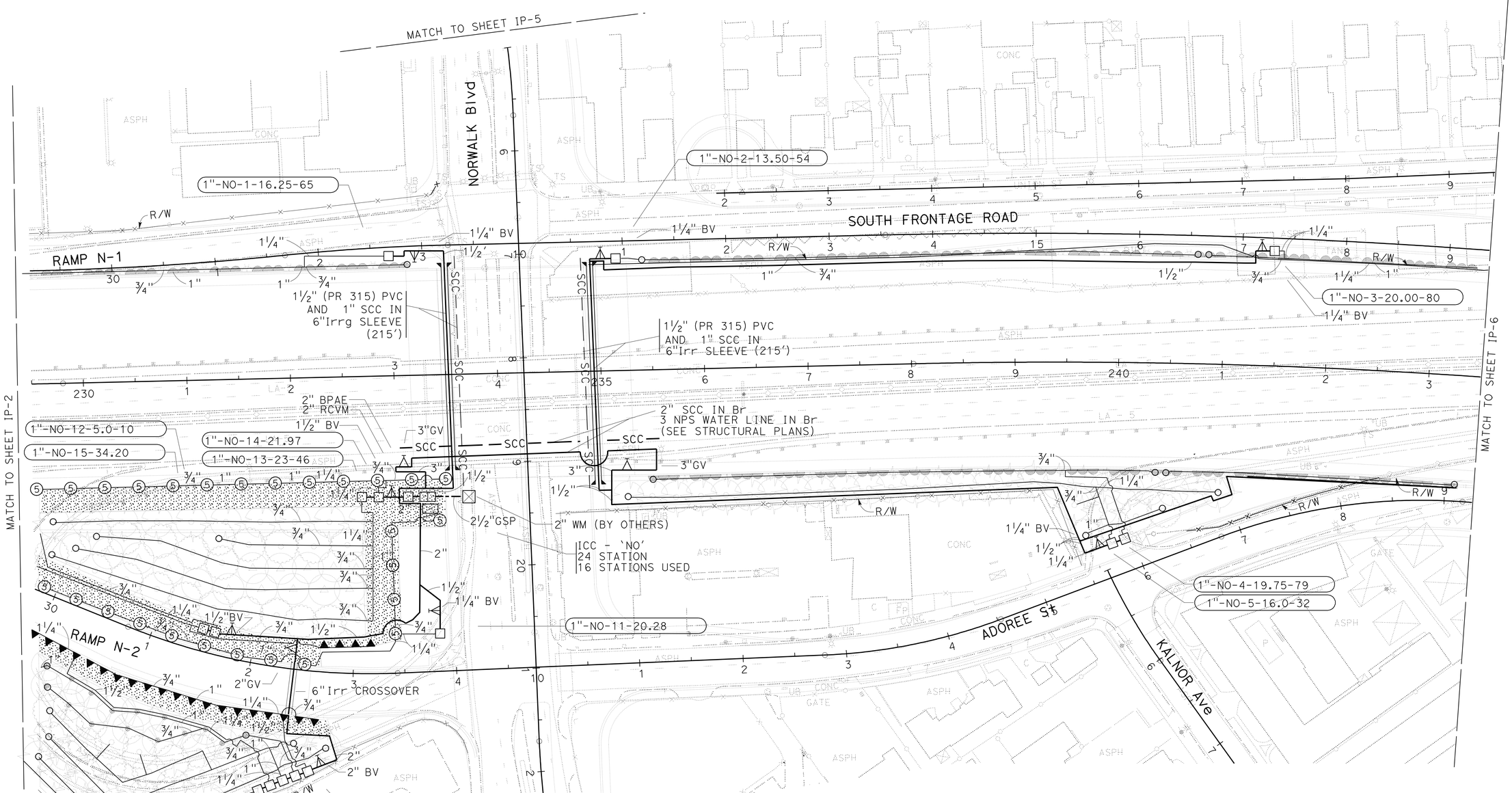

IRRIGATION PLAN

SCALE: 1" = 50'

IP-3

APPROVED FOR IRRIGATION WORK ONLY

STATE OF CALIFORNIA - DEPARTMENT OF TRANSPORTATION
Caltrans® LANDSCAPE ARCHITECTURE
SENIOR LANDSCAPE ARCHITECT: JENNIFER TAIRA
CALCULATED-DESIGNED BY: GEORGE OLGUIN
CHECKED BY: YI SU
REVISED BY
DATE REVISED

LAST REVISION 00-00-00
DATE PLOTTED => 14-APR-2012
TIME PLOTTED => 14:32

Dist	COUNTY	ROUTE	POST MILES TOTAL PROJECT	SHEET No.	TOTAL SHEETS
07	LA	5	4.0/5.9	749	1597

George Olguin
LICENSED LANDSCAPE ARCHITECT

4-9-12
PLANS APPROVAL DATE

LICENSED LANDSCAPE ARCHITECT
GEORGE OLGUIN
NO. 4333
George Olguin
Signature
08-31-12
Renewal Date
10-10-10
Date
STATE OF CALIFORNIA

THE STATE OF CALIFORNIA OR ITS OFFICERS OR AGENTS SHALL NOT BE RESPONSIBLE FOR THE ACCURACY OR COMPLETENESS OF SCANNED COPIES OF THIS PLAN SHEET.

NOTE:
FOR ACCURATE RIGHT OF WAY DATA, CONTACT RIGHT OF WAY ENGINEERING AT THE DISTRICT OFFICE.

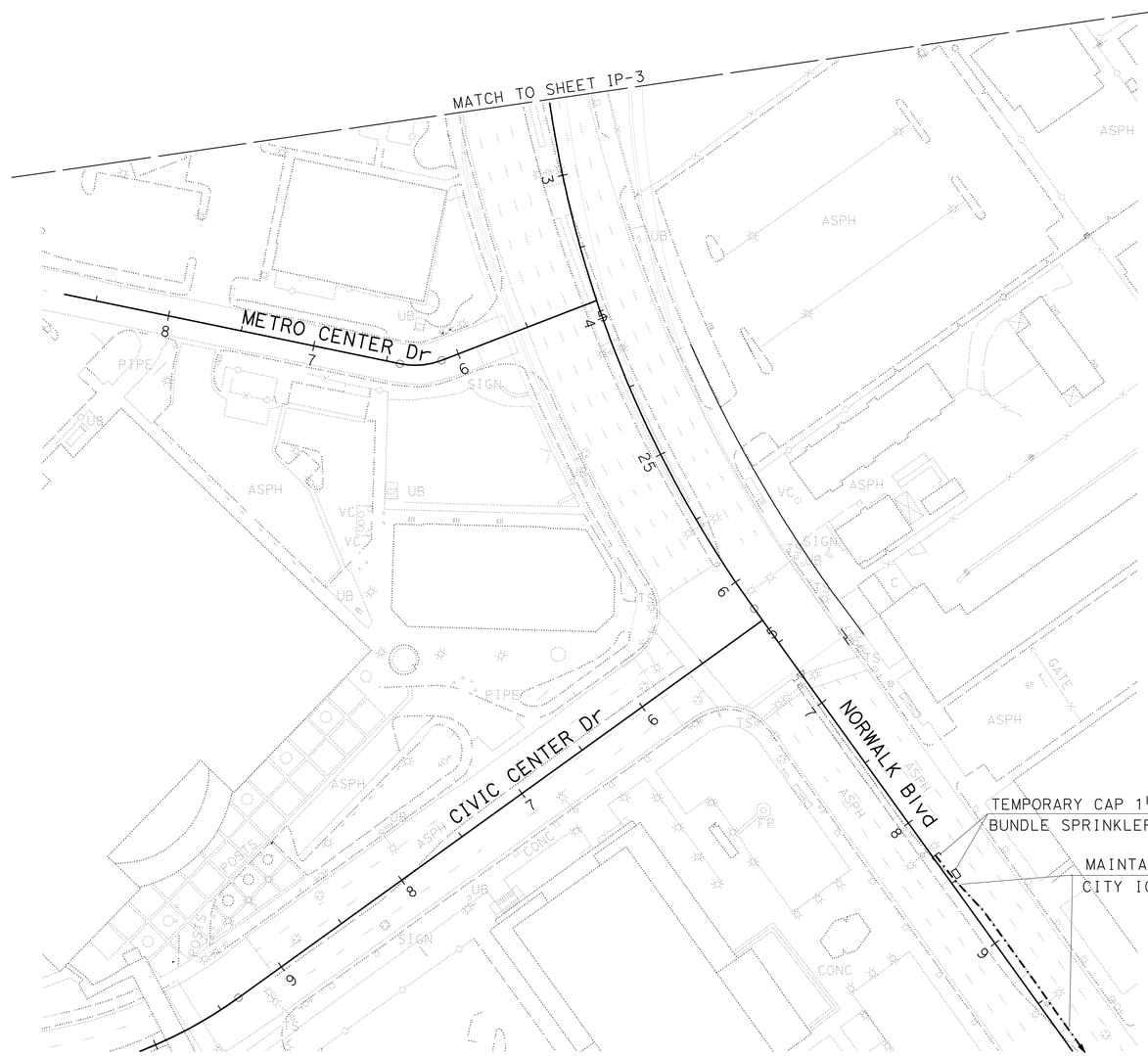

TEMPORARY CAP 1¼" IRRIGATION MAIN SUPPLY LINE
BUNDLE SPRINKLER CONTROL WIRES IN PB

MAINTAIN Exist IRRIGATION SYSTEM
CITY ICC LOCATED AT IMPERIAL HIGHWAY AND NORWALK Blvd

APPROVED FOR IRRIGATION WORK ONLY

IRRIGATION PLAN

SCALE: 1" = 50'

IP-4

STATE OF CALIFORNIA - DEPARTMENT OF TRANSPORTATION
Caltrans® LANDSCAPE ARCHITECTURE

SENIOR LANDSCAPE ARCHITECT: JENNIFER TAIRA
CALCULATED-DESIGNED BY: YI SU
CHECKED BY: GEORGE OLGUIN
REVISED BY
DATE REVISED

LAST REVISION 00-00-00
DATE PLOTTED => 14-APR-2012
TIME PLOTTED => 14:32

Dist	COUNTY	ROUTE	POST MILES TOTAL PROJECT	SHEET No.	TOTAL SHEETS
07	LA	5	4.0/5.9	750	1597

George Olguin
LICENSED LANDSCAPE ARCHITECT

4-9-12
PLANS APPROVAL DATE

LICENSED LANDSCAPE ARCHITECT
GEORGE OLGUIN
NO. 4333
George Olguin
Signature
08-31-12
Renewal Date
10-10-10
Date
STATE OF CALIFORNIA

THE STATE OF CALIFORNIA OR ITS OFFICERS OR AGENTS SHALL NOT BE RESPONSIBLE FOR THE ACCURACY OR COMPLETENESS OF SCANNED COPIES OF THIS PLAN SHEET.

NOTE:

FOR ACCURATE RIGHT OF WAY DATA, CONTACT RIGHT OF WAY ENGINEERING AT THE DISTRICT OFFICE.

APPROVED FOR IRRIGATION WORK ONLY

IRRIGATION PLAN

SCALE: 1" = 50'

IP-5

REVISED BY	DATE REVISED

CALCULATED-DESIGNED BY	CHECKED BY
Y1 SU	GEORGE OLGUIN

SENIOR LANDSCAPE ARCHITECT: JENNIFER TAIRA

STATE OF CALIFORNIA - DEPARTMENT OF TRANSPORTATION
Caltrans® LANDSCAPE ARCHITECTURE

LAST REVISION 00-00-00 | DATE PLOTTED => 14-APR-2012 | TIME PLOTTED => 14:32

Dist	COUNTY	ROUTE	POST MILES TOTAL PROJECT	SHEET No.	TOTAL SHEETS
07	LA	5	4.0/5.9	751	1597

George Olguin
LICENSED LANDSCAPE ARCHITECT

4-9-12
PLANS APPROVAL DATE

LICENSED LANDSCAPE ARCHITECT
GEORGE OLGUIN
NO. 4333
George Olguin
Signature
08-31-12
Renewal Date
10-10-10
Date
STATE OF CALIFORNIA

THE STATE OF CALIFORNIA OR ITS OFFICERS OR AGENTS SHALL NOT BE RESPONSIBLE FOR THE ACCURACY OR COMPLETENESS OF SCANNED COPIES OF THIS PLAN SHEET.

NOTE:

FOR ACCURATE RIGHT OF WAY DATA, CONTACT RIGHT OF WAY ENGINEERING AT THE DISTRICT OFFICE.

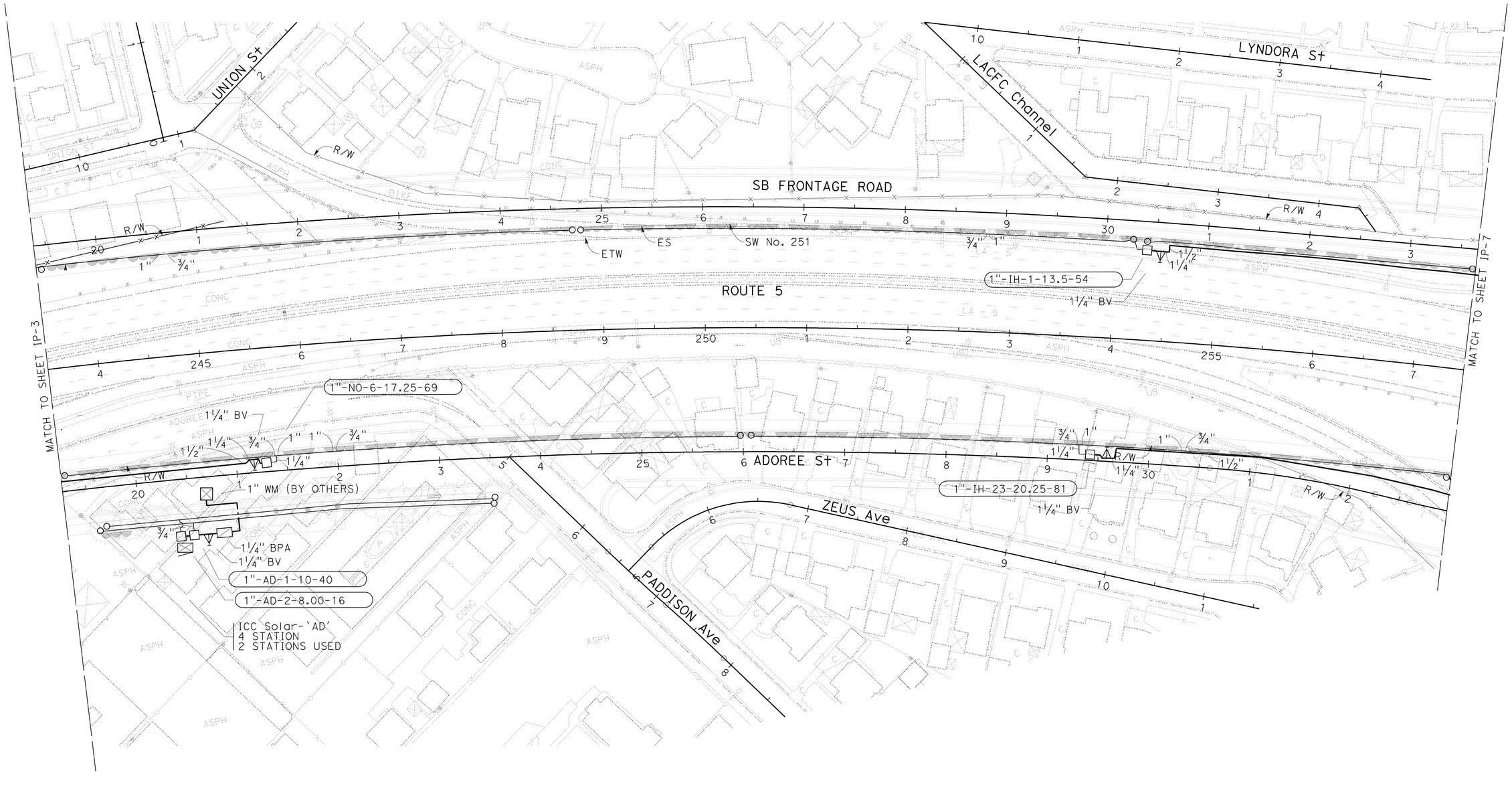

APPROVED FOR IRRIGATION WORK ONLY

IRRIGATION PLAN

SCALE: 1" = 50'

IP-6

STATE OF CALIFORNIA - DEPARTMENT OF TRANSPORTATION
Caltrans® LANDSCAPE ARCHITECTURE

SENIOR LANDSCAPE ARCHITECT: JENNIFER TAIRA
CALCULATED-DESIGNED BY: GEORGE OLGUIN
CHECKED BY: Y1 SU
REVISED BY
DATE REVISED

LAST REVISION 00-00-00
DATE PLOTTED => 14-APR-2012
TIME PLOTTED => 14:33

Dist	COUNTY	ROUTE	POST MILES TOTAL PROJECT	SHEET No.	TOTAL SHEETS
07	LA	5	4.0/5.9	752	1597

George Olguin
LICENSED LANDSCAPE ARCHITECT

4-9-12
PLANS APPROVAL DATE

LICENSED LANDSCAPE ARCHITECT GEORGE OLGUIN NO. 4333 STATE OF CALIFORNIA
George Olguin Signature
08-31-12 Renewal Date
10-10-10 Date

THE STATE OF CALIFORNIA OR ITS OFFICERS OR AGENTS SHALL NOT BE RESPONSIBLE FOR THE ACCURACY OR COMPLETENESS OF SCANNED COPIES OF THIS PLAN SHEET.

NOTES:

FOR ACCURATE RIGHT OF WAY DATA, CONTACT RIGHT OF WAY ENGINEERING AT THE DISTRICT OFFICE.

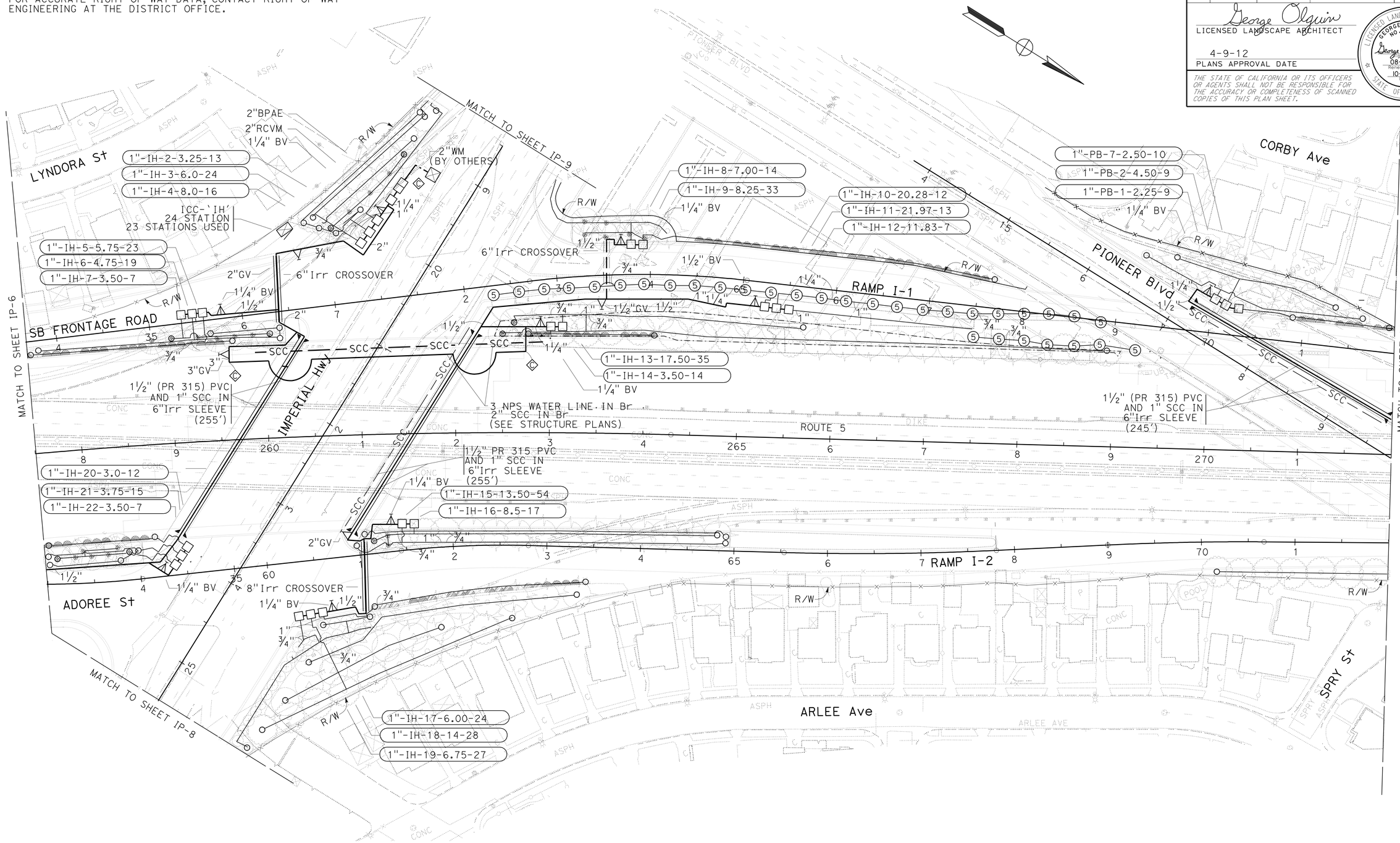

APPROVED FOR IRRIGATION WORK ONLY

IRRIGATION PLAN

SCALE: 1" = 50'

IP-7

STATE OF CALIFORNIA - DEPARTMENT OF TRANSPORTATION
Caltrans® LANDSCAPE ARCHITECTURE

SENIOR LANDSCAPE ARCHITECT: JENNIFER TAIRA
CALCULATED-DESIGNED BY: XUAN WU
CHECKED BY: GEORGE OLGUIN
REVISED BY / DATE REVISED

LAST REVISION 00-00-00
DATE PLOTTED => 14-APR-2012
TIME PLOTTED => 14:33

Dist	COUNTY	ROUTE	POST MILES TOTAL PROJECT	SHEET No.	TOTAL SHEETS
07	LA	5	4.0/5.9	753	1597

George Olguin
LICENSED LANDSCAPE ARCHITECT

4-9-12
PLANS APPROVAL DATE

LICENSED LANDSCAPE ARCHITECT
GEORGE OLGUIN
NO. 4333
George Olguin
Signature
08-31-12
Renewal Date
10-10-10
Date
STATE OF CALIFORNIA

THE STATE OF CALIFORNIA OR ITS OFFICERS OR AGENTS SHALL NOT BE RESPONSIBLE FOR THE ACCURACY OR COMPLETENESS OF SCANNED COPIES OF THIS PLAN SHEET.

NOTE:
FOR ACCURATE RIGHT OF WAY DATA, CONTACT RIGHT OF WAY ENGINEERING AT THE DISTRICT OFFICE.

APPROVED FOR IRRIGATION WORK ONLY

IRRIGATION PLAN

SCALE: 1" = 50'

IP-8

STATE OF CALIFORNIA - DEPARTMENT OF TRANSPORTATION
Caltrans® LANDSCAPE ARCHITECTURE

SENIOR LANDSCAPE ARCHITECT: JENNIFER TAIRA
CALCULATED-DESIGNED BY: XUAN WU
CHECKED BY: GEORGE OLGUIN
REVISED BY
DATE REVISED

LAST REVISION 00-00-00
DATE PLOTTED => 14-APR-2012
TIME PLOTTED => 14:33

Dist	COUNTY	ROUTE	POST MILES TOTAL PROJECT	SHEET No.	TOTAL SHEETS
07	LA	5	4.0/5.9	754	1597

George Olguin
LICENSED LANDSCAPE ARCHITECT

4-9-12
PLANS APPROVAL DATE

LICENSED LANDSCAPE ARCHITECT
GEORGE OLGUIN
NO. 4333
George Olguin
Signature
08-31-12
Renewal Date
10-10-10
Date
STATE OF CALIFORNIA

THE STATE OF CALIFORNIA OR ITS OFFICERS OR AGENTS SHALL NOT BE RESPONSIBLE FOR THE ACCURACY OR COMPLETENESS OF SCANNED COPIES OF THIS PLAN SHEET.

NOTE:

FOR ACCURATE RIGHT OF WAY DATA, CONTACT RIGHT OF WAY ENGINEERING AT THE DISTRICT OFFICE.

IRRIGATION PLAN

SCALE: 1" = 50'

IP-9

APPROVED FOR IRRIGATION WORK ONLY

STATE OF CALIFORNIA - DEPARTMENT OF TRANSPORTATION
Caltrans® LANDSCAPE ARCHITECTURE

SENIOR LANDSCAPE ARCHITECT: JENNIFER TAIRA
CALCULATED-DESIGNED BY: XUAN WU
CHECKED BY: GEORGE OLGUIN
REVISED BY
DATE REVISED

LAST REVISION 00-00-00
DATE PLOTTED => 14-APR-2012
TIME PLOTTED => 14:33

Dist	COUNTY	ROUTE	POST MILES TOTAL PROJECT	SHEET No.	TOTAL SHEETS
07	LA	5	4.0/5.9	755	1597

George Olguin
LICENSED LANDSCAPE ARCHITECT

4-9-12
PLANS APPROVAL DATE

LICENSED LANDSCAPE ARCHITECT
GEORGE OLGUIN
NO. 4333
George Olguin
Signature
08-31-12
Renewal Date
10-10-10
Date
STATE OF CALIFORNIA

THE STATE OF CALIFORNIA OR ITS OFFICERS OR AGENTS SHALL NOT BE RESPONSIBLE FOR THE ACCURACY OR COMPLETENESS OF SCANNED COPIES OF THIS PLAN SHEET.

NOTE:

FOR ACCURATE RIGHT OF WAY DATA, CONTACT RIGHT OF WAY ENGINEERING AT THE DISTRICT OFFICE.

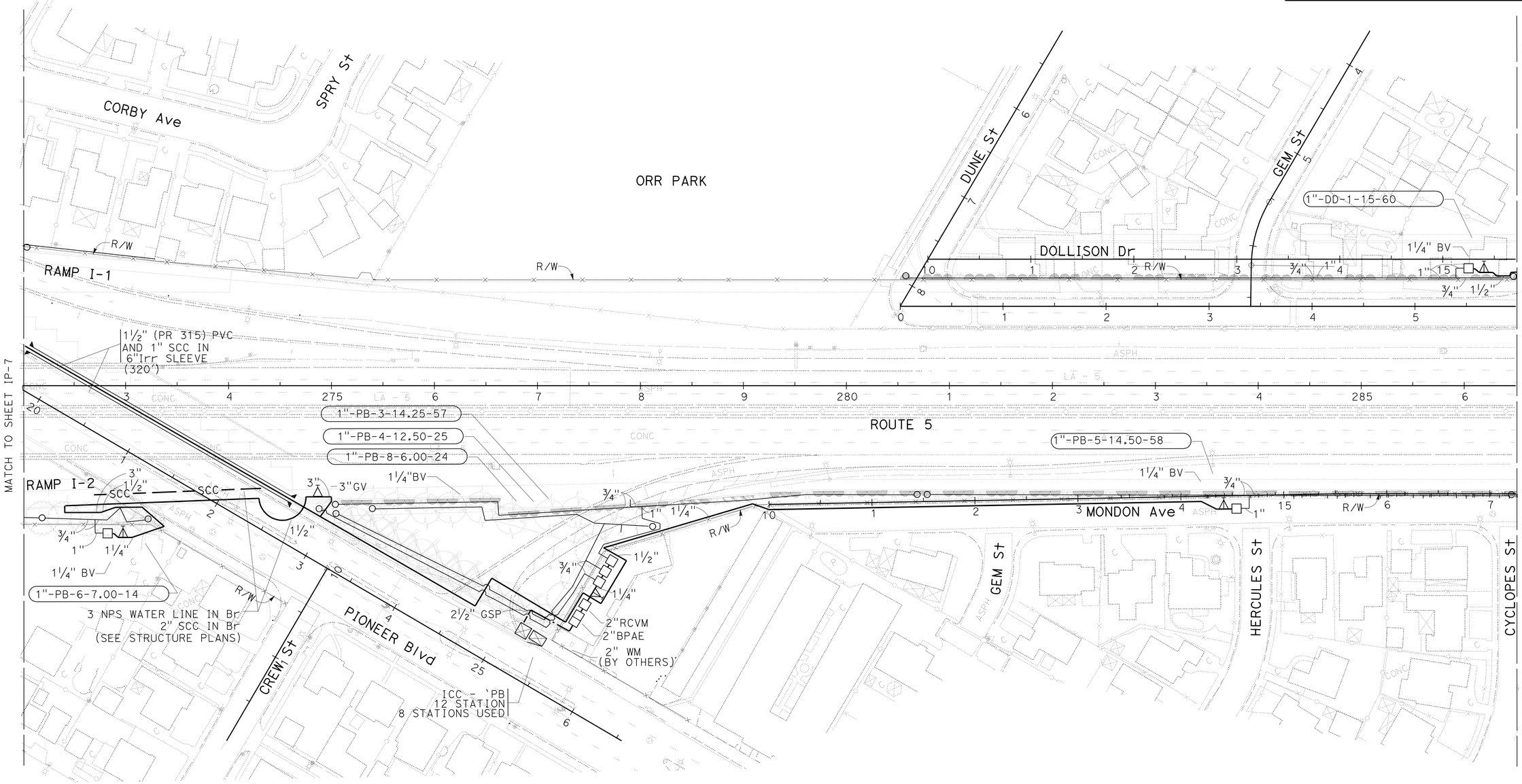

APPROVED FOR IRRIGATION WORK ONLY

IRRIGATION PLAN

SCALE: 1" = 50'

IP-10

STATE OF CALIFORNIA - DEPARTMENT OF TRANSPORTATION
Caltrans® LANDSCAPE ARCHITECTURE

SENIOR LANDSCAPE ARCHITECT: JENNIFER TAIRA
CALCULATED-DESIGNED BY: GEORGE OLGUIN
CHECKED BY: XUAN WU
REVISED BY
DATE REVISED

LAST REVISION 00-00-00
DATE PLOTTED => 14-APR-2012
TIME PLOTTED => 14:33

Dist	COUNTY	ROUTE	POST MILES TOTAL PROJECT	SHEET No.	TOTAL SHEETS
07	LA	5	4.0/5.9	756	1597

George Olguin
LICENSED LANDSCAPE ARCHITECT

4-9-12
PLANS APPROVAL DATE

LICENSED LANDSCAPE ARCHITECT GEORGE OLGUIN NO. 4333 George Olguin Signature 08-31-12 Renewal Date 10-10-10 Date STATE OF CALIFORNIA

THE STATE OF CALIFORNIA OR ITS OFFICERS OR AGENTS SHALL NOT BE RESPONSIBLE FOR THE ACCURACY OR COMPLETENESS OF SCANNED COPIES OF THIS PLAN SHEET.

NOTE:

FOR ACCURATE RIGHT OF WAY DATA, CONTACT RIGHT OF WAY ENGINEERING AT THE DISTRICT OFFICE.

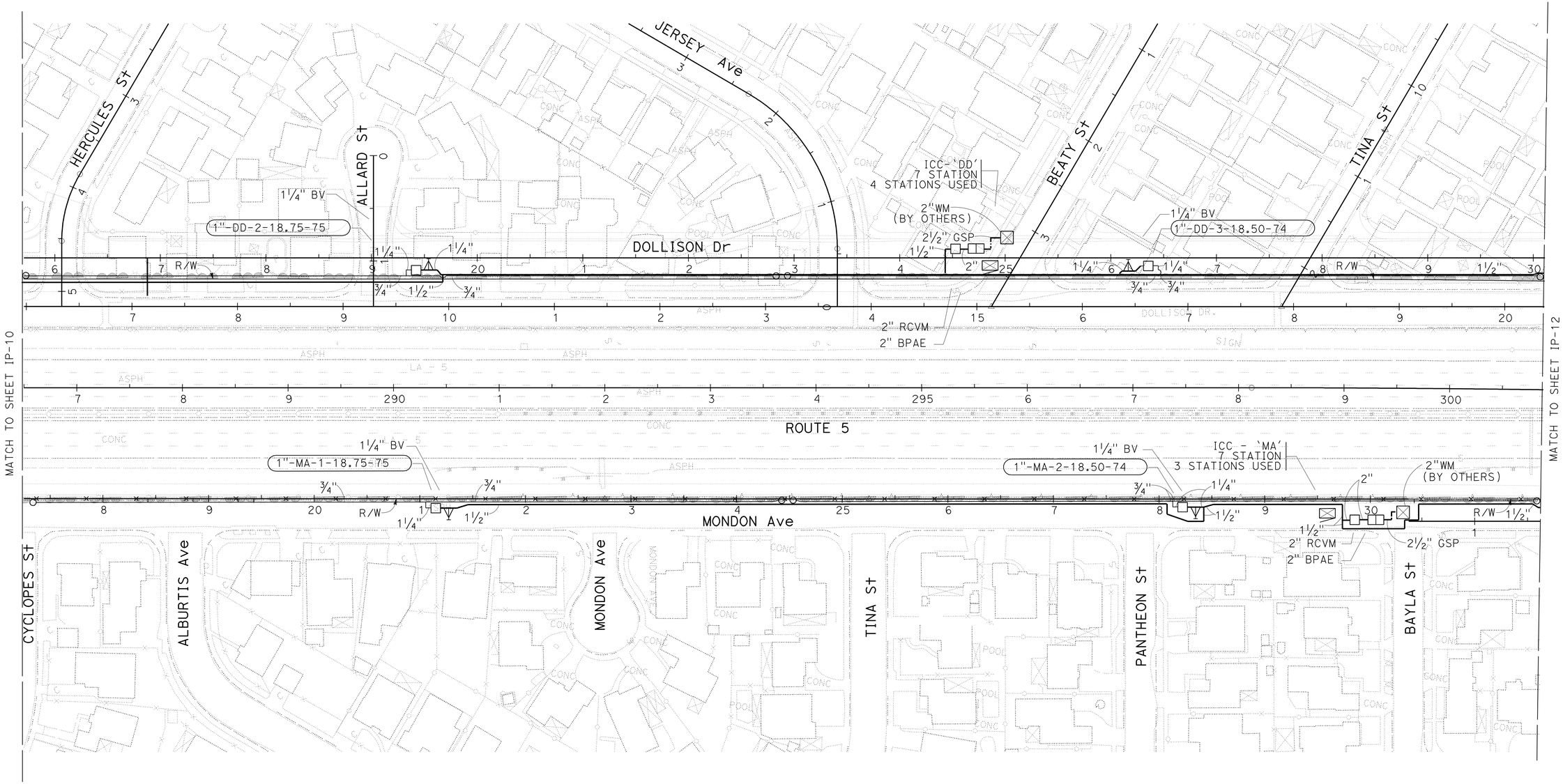

IRRIGATION PLAN

SCALE: 1" = 50'

IP-11

APPROVED FOR IRRIGATION WORK ONLY

STATE OF CALIFORNIA - DEPARTMENT OF TRANSPORTATION
LANDSCAPE ARCHITECTURE

SENIOR LANDSCAPE ARCHITECT: JENNIFER TAIRA
CALCULATED-DESIGNED BY: GEORGE OLGUIN
CHECKED BY: XUAN WU
REVISED BY / DATE REVISED

LAST REVISION 00-00-00
DATE PLOTTED => 14-APR-2012
TIME PLOTTED => 14:33

Dist	COUNTY	ROUTE	POST MILES TOTAL PROJECT	SHEET No.	TOTAL SHEETS
07	LA	5	4.0/5.9	757	1597

George Olguin
LICENSED LANDSCAPE ARCHITECT

4-9-12
PLANS APPROVAL DATE

LICENSED LANDSCAPE ARCHITECT
GEORGE OLGUIN
NO. 4333
George Olguin
Signature
08-31-12
Renewal Date
12-19-11
Date
STATE OF CALIFORNIA

THE STATE OF CALIFORNIA OR ITS OFFICERS OR AGENTS SHALL NOT BE RESPONSIBLE FOR THE ACCURACY OR COMPLETENESS OF SCANNED COPIES OF THIS PLAN SHEET.

NOTE:

FOR ACCURATE RIGHT OF WAY DATA, CONTACT RIGHT OF WAY ENGINEERING AT THE DISTRICT OFFICE.

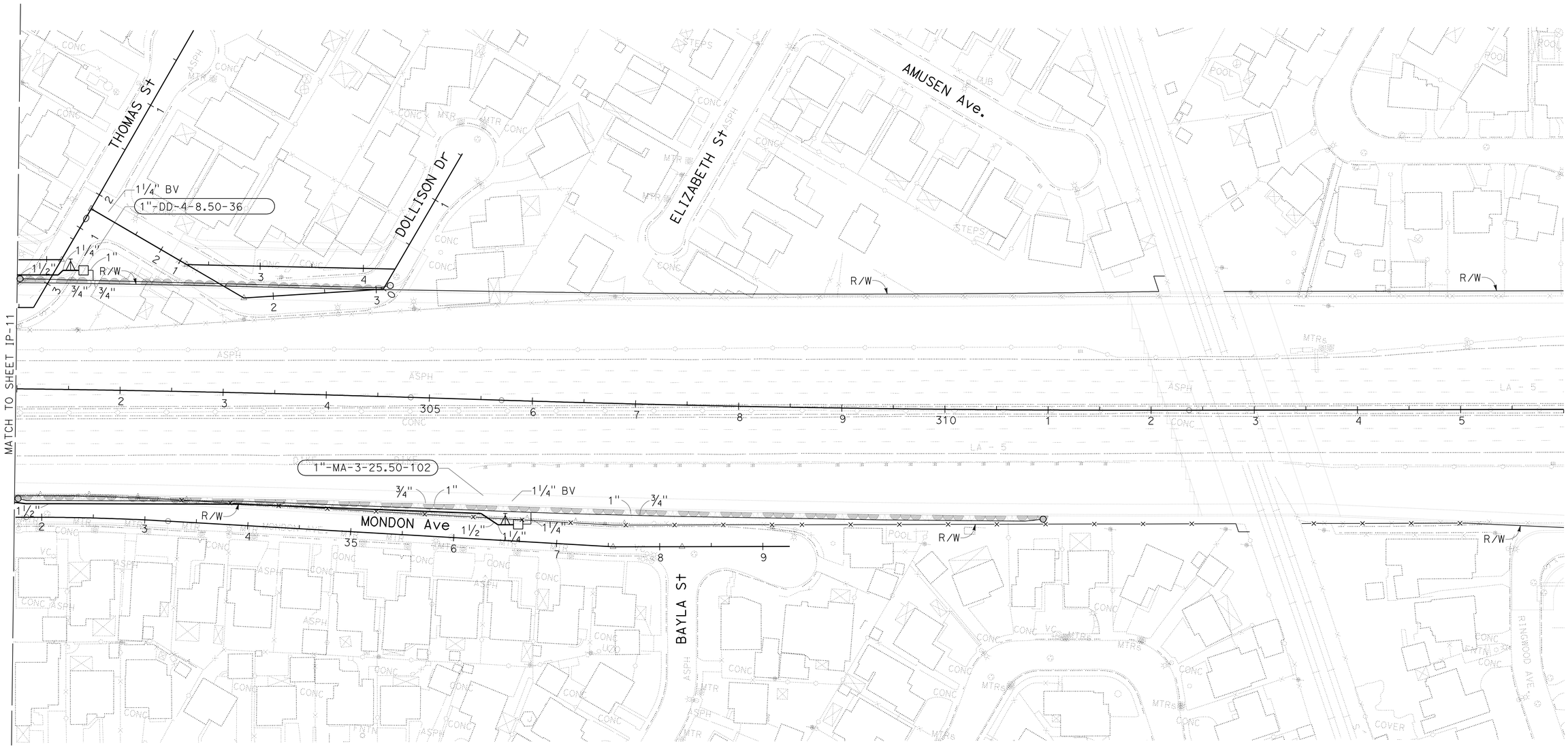

APPROVED FOR IRRIGATION WORK ONLY

IRRIGATION PLAN

SCALE: 1" = 50'

IP-12

REVISED BY | DATE REVISED
XUAN WU | GEORGE OLGUIN
CALCULATED-DESIGNED BY | CHECKED BY
SENIOR LANDSCAPE ARCHITECT | JENNIFER TAIRA

STATE OF CALIFORNIA - DEPARTMENT OF TRANSPORTATION
Caltrans® LANDSCAPE ARCHITECTURE

LAST REVISION 00-00-00 | DATE PLOTTED => 14-APR-2012 | TIME PLOTTED => 14:34

Dist	COUNTY	ROUTE	POST MILES TOTAL PROJECT	SHEET No.	TOTAL SHEETS
07	LA	5	4.0/5.9	758	1597

George Olguin
LICENSED LANDSCAPE ARCHITECT

4-9-12
PLANS APPROVAL DATE

LICENSED LANDSCAPE ARCHITECT
GEORGE OLGUIN
NO. 4333
George Olguin
Signature
08-31-12
Renewal Date
10-10-10
Date
STATE OF CALIFORNIA

THE STATE OF CALIFORNIA OR ITS OFFICERS OR AGENTS SHALL NOT BE RESPONSIBLE FOR THE ACCURACY OR COMPLETENESS OF SCANNED COPIES OF THIS PLAN SHEET.

NOTES:

FOR ACCURATE RIGHT OF WAY DATA,
CONTACT RIGHT OF WAY ENGINEERING AT THE DISTRICT OFFICE.
Exist UTILITY FACILITIES HAVE NOT BEEN SHOWN ON THESE PLANS.

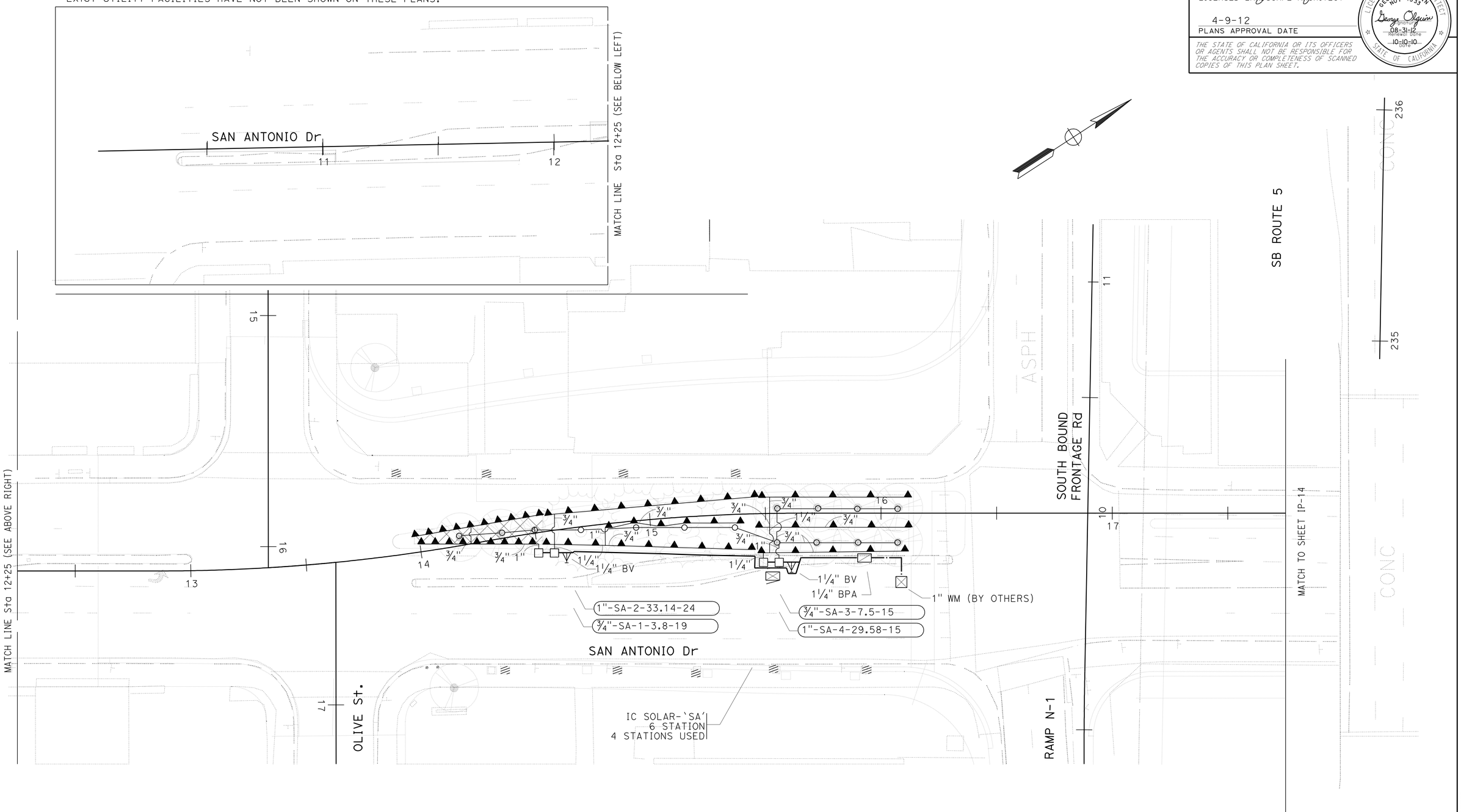

IRRIGATION PLAN

(SAN ANTONIO Dr)
SCALE: 1" = 20'

IP-13

APPROVED FOR IRRIGATION WORK ONLY

STATE OF CALIFORNIA - DEPARTMENT OF TRANSPORTATION
Caltrans LANDSCAPE ARCHITECTURE

SENIOR LANDSCAPE ARCHITECT: JENNIFER TAIRA
CALCULATED-DESIGNED BY: XUAN WU
CHECKED BY: GEORGE OLGUIN
REVISED BY / DATE REVISED

LAST REVISION 00-00-00
DATE PLOTTED => 14-APR-2012
TIME PLOTTED => 14:34

Dist	COUNTY	ROUTE	POST MILES TOTAL PROJECT	SHEET No.	TOTAL SHEETS
07	LA	5	4.0/5.9	759	1597

George Olguin
LICENSED LANDSCAPE ARCHITECT

4-9-12
PLANS APPROVAL DATE

LICENSED LANDSCAPE ARCHITECT
GEORGE OLGUIN
NO. 4333
George Olguin
Signature
08-31-12
Renewal Date
10-10-10
Date
STATE OF CALIFORNIA

THE STATE OF CALIFORNIA OR ITS OFFICERS OR AGENTS SHALL NOT BE RESPONSIBLE FOR THE ACCURACY OR COMPLETENESS OF SCANNED COPIES OF THIS PLAN SHEET.

NOTES:

FOR ACCURATE RIGHT OF WAY DATA,
CONTACT RIGHT OF WAY ENGINEERING AT THE DISTRICT OFFICE.
Exist UTILITY FACILITIES HAVE NOT BEEN SHOWN ON THESE PLANS.

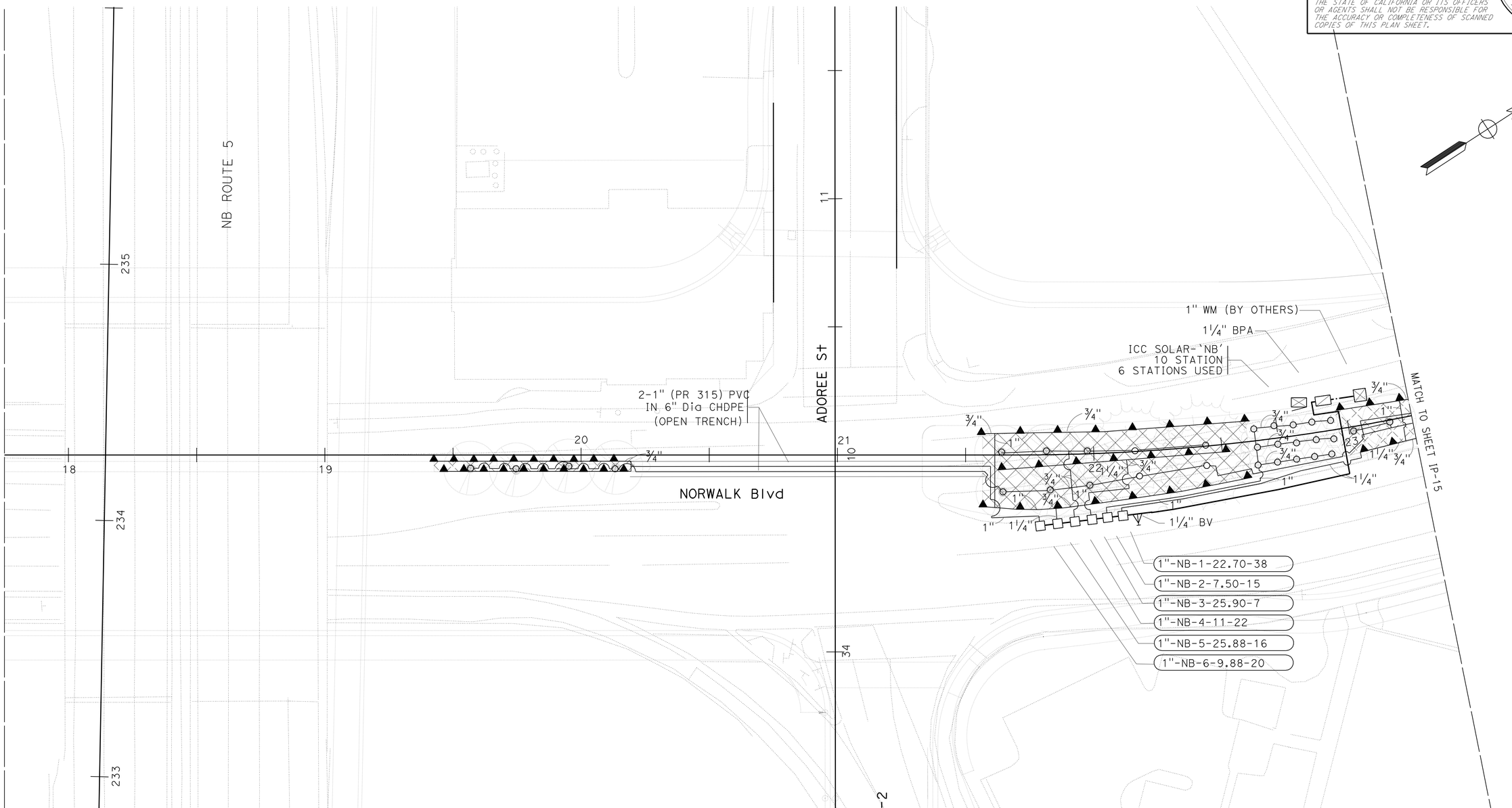

IRRIGATION PLAN

(NORWALK Blvd)
SCALE: 1" = 20'

IP-14

APPROVED FOR IRRIGATION WORK ONLY

STATE OF CALIFORNIA - DEPARTMENT OF TRANSPORTATION
Caltrans® LANDSCAPE ARCHITECTURE

SENIOR LANDSCAPE ARCHITECT: JENNIFER TAIRA
CALCULATED-DESIGNED BY: XUAN WU
CHECKED BY: GEORGE OLGUIN
REVISED BY
DATE REVISED

LAST REVISION 00-00-00
DATE PLOTTED => 14-APR-2012
TIME PLOTTED => 14:34

Dist	COUNTY	ROUTE	POST MILES TOTAL PROJECT	SHEET No.	TOTAL SHEETS
07	LA	5	4.0/5.9	760	1597

George Olguin
LICENSED LANDSCAPE ARCHITECT

4-9-12
PLANS APPROVAL DATE

LICENSED LANDSCAPE ARCHITECT
GEORGE OLGUIN
NO. 4333
George Olguin
Signature
08-31-12
Renewal Date
10-10-10
Date
STATE OF CALIFORNIA

THE STATE OF CALIFORNIA OR ITS OFFICERS OR AGENTS SHALL NOT BE RESPONSIBLE FOR THE ACCURACY OR COMPLETENESS OF SCANNED COPIES OF THIS PLAN SHEET.

NOTES:

FOR ACCURATE RIGHT OF WAY DATA,
CONTACT RIGHT OF WAY ENGINEERING AT THE DISTRICT OFFICE.
Exist UTILITY FACILITIES HAVE NOT BEEN SHOWN ON THESE PLANS.

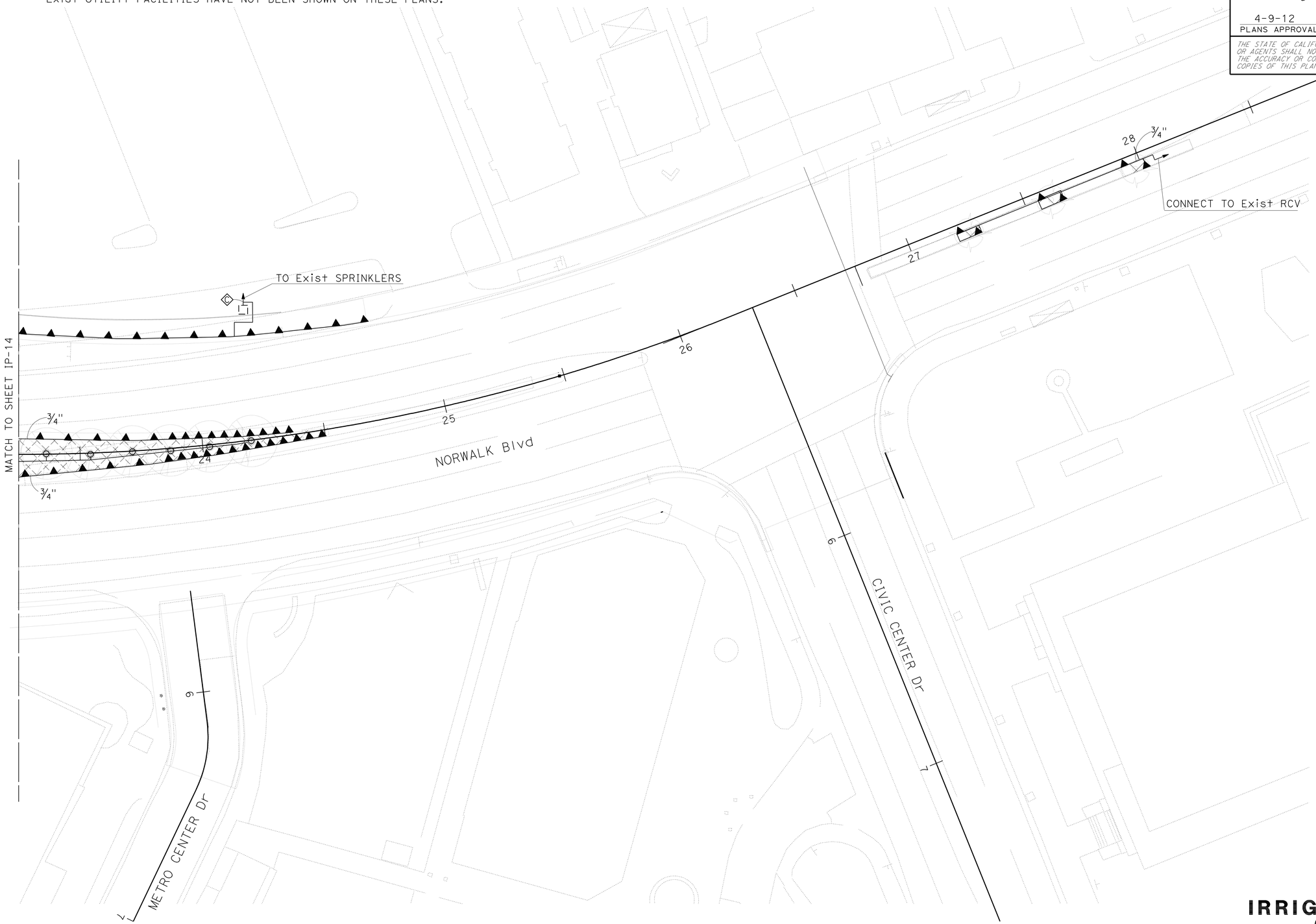

APPROVED FOR IRRIGATION WORK ONLY

IRRIGATION PLAN
(NORWALK Blvd)
SCALE: 1" = 20'

IP-15

REVISED BY	DATE REVISED

CALCULATED-DESIGNED BY: XUAN WU
CHECKED BY: GEORGE OLGUIN
SENIOR LANDSCAPE ARCHITECT: JENNIFER TAIRA

STATE OF CALIFORNIA - DEPARTMENT OF TRANSPORTATION
Caltrans LANDSCAPE ARCHITECTURE

LAST REVISION 00-00-00
DATE PLOTTED => 14-APR-2012
TIME PLOTTED => 14:34

Dist	COUNTY	ROUTE	POST MILES TOTAL PROJECT	SHEET No.	TOTAL SHEETS
07	LA	5	4.0/5.9	761	1597

George Olguin
LICENSED LANDSCAPE ARCHITECT

4-9-12
PLANS APPROVAL DATE

LICENSED LANDSCAPE ARCHITECT
GEORGE OLGUIN
NO. 4333
George Olguin
signature
08-31-12
Renewal date
10-10-10
date
STATE OF CALIFORNIA

THE STATE OF CALIFORNIA OR ITS OFFICERS OR AGENTS SHALL NOT BE RESPONSIBLE FOR THE ACCURACY OR COMPLETENESS OF SCANNED COPIES OF THIS PLAN SHEET.

NOTES:

FOR ACCURATE RIGHT OF WAY DATA,
CONTACT RIGHT OF WAY ENGINEERING AT THE DISTRICT OFFICE.
Exist UTILITY FACILITIES HAVE NOT BEEN SHOWN ON THESE PLANS.

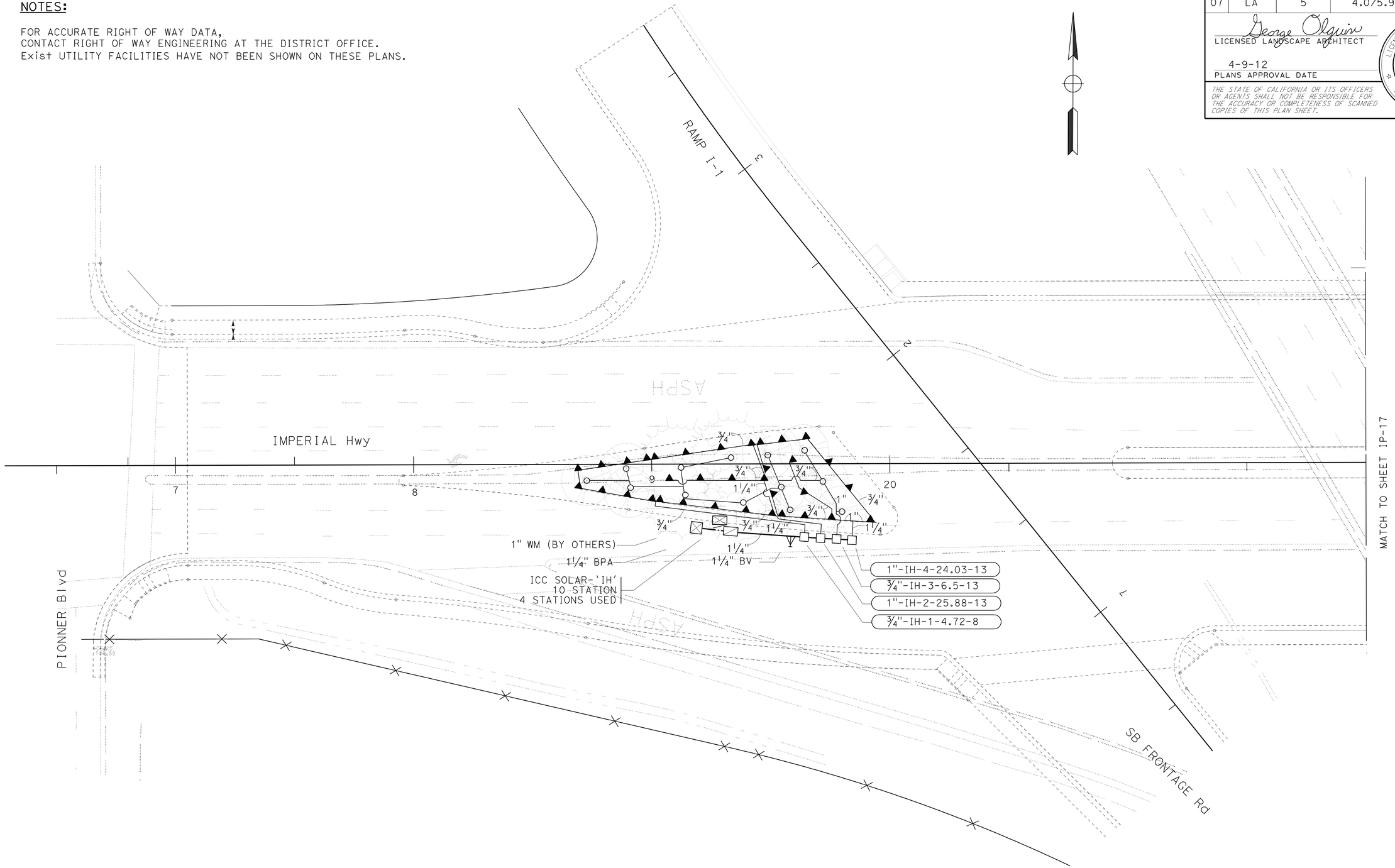

APPROVED FOR IRRIGATION WORK ONLY

IRRIGATION PLAN
(IMPERIAL Hwy)
SCALE: 1" = 20'

IP-16

STATE OF CALIFORNIA - DEPARTMENT OF TRANSPORTATION
Caltrans® LANDSCAPE ARCHITECTURE

SENIOR LANDSCAPE ARCHITECT: JENNIFER TAIRA
CALCULATED-DESIGNED BY: GEORGE OLGUIN
CHECKED BY: XUAN WU
REVISED BY
DATE REVISED

LAST REVISION 00-00-00
DATE PLOTTED => 14-APR-2012
TIME PLOTTED => 14:34

Dist	COUNTY	ROUTE	POST MILES TOTAL PROJECT	SHEET No.	TOTAL SHEETS
07	LA	5	4.0/5.9	762	1597

George Olguin
LICENSED LANDSCAPE ARCHITECT

4-9-12
PLANS APPROVAL DATE

LICENSED LANDSCAPE ARCHITECT
GEORGE OLGUIN
NO. 4333
George Olguin
Signature
08-31-12
Renewal Date
10-10-10
Date
STATE OF CALIFORNIA

THE STATE OF CALIFORNIA OR ITS OFFICERS OR AGENTS SHALL NOT BE RESPONSIBLE FOR THE ACCURACY OR COMPLETENESS OF SCANNED COPIES OF THIS PLAN SHEET.

NOTES:

FOR ACCURATE RIGHT OF WAY DATA,
CONTACT RIGHT OF WAY ENGINEERING AT THE DISTRICT OFFICE.
Exist UTILITY FACILITIES HAVE NOT BEEN SHOWN ON THESE PLANS.

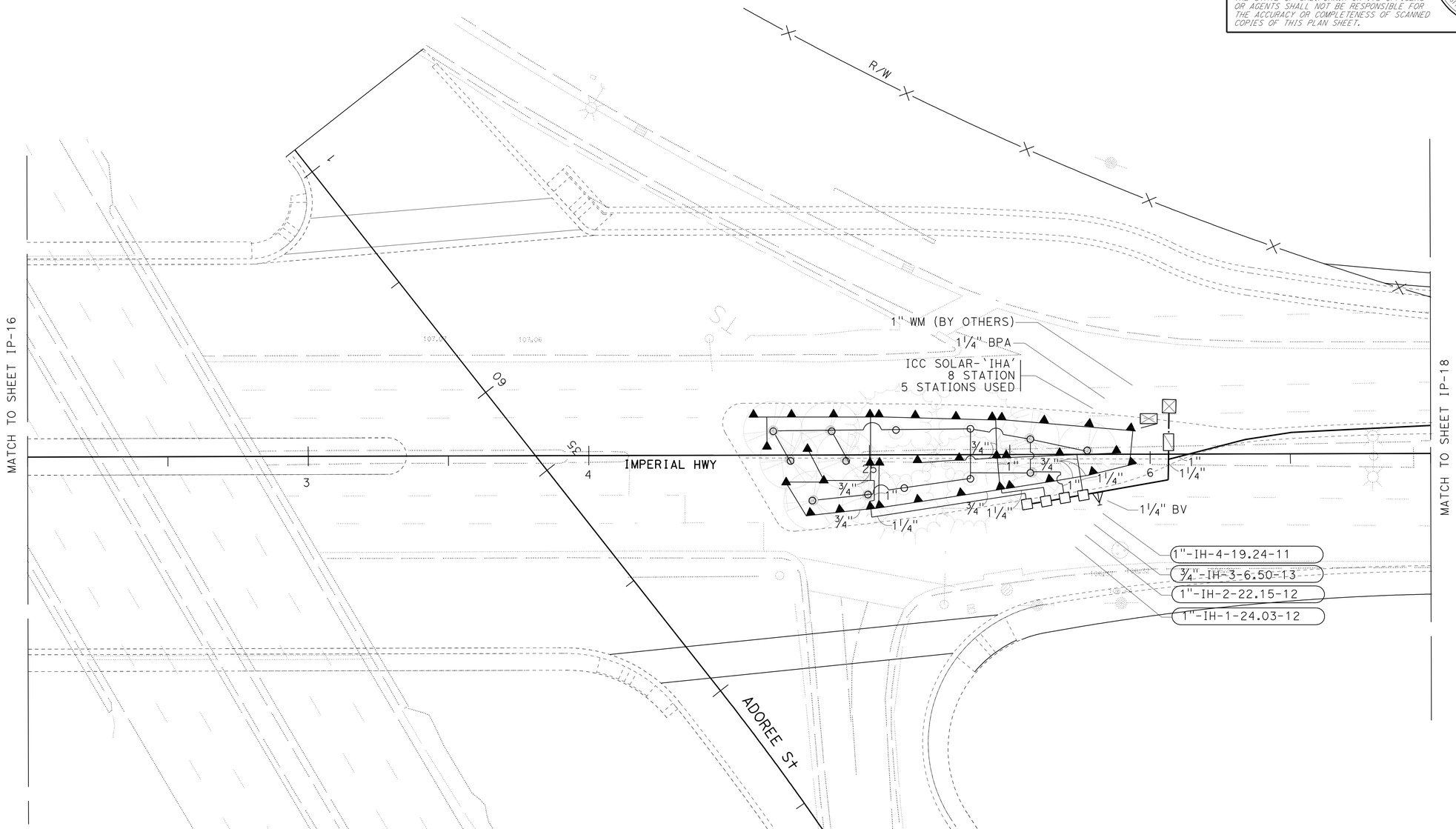

APPROVED FOR IRRIGATION WORK ONLY

IRRIGATION PLAN

(IMPERIAL Hwy)
SCALE: 1" = 20'

IP-17

STATE OF CALIFORNIA - DEPARTMENT OF TRANSPORTATION
Caltrans® LANDSCAPE ARCHITECTURE

SENIOR LANDSCAPE ARCHITECT: JENNIFER TAIRA

CALCULATED-DESIGNED BY: XUAN WU
CHECKED BY: GEORGE OLGUIN

REVISED BY
DATE REVISED

LAST REVISION 00-00-00
DATE PLOTTED => 14-APR-2012
TIME PLOTTED => 14:34

Dist	COUNTY	ROUTE	POST MILES TOTAL PROJECT	SHEET No.	TOTAL SHEETS
07	LA	5	4.0/5.9	763	1597

George Olguin
LICENSED LANDSCAPE ARCHITECT

4-9-12
PLANS APPROVAL DATE

LICENSED LANDSCAPE ARCHITECT
GEORGE OLGUIN
NO. 4339
George Olguin
Signature
08-31-12
Renewal Date
10-10-10
Date
STATE OF CALIFORNIA

THE STATE OF CALIFORNIA OR ITS OFFICERS OR AGENTS SHALL NOT BE RESPONSIBLE FOR THE ACCURACY OR COMPLETENESS OF SCANNED COPIES OF THIS PLAN SHEET.

NOTES:

FOR ACCURATE RIGHT OF WAY DATA,
CONTACT RIGHT OF WAY ENGINEERING AT THE DISTRICT OFFICE.
Exist UTILITY FACILITIES HAVE NOT BEEN SHOWN ON THESE PLANS.

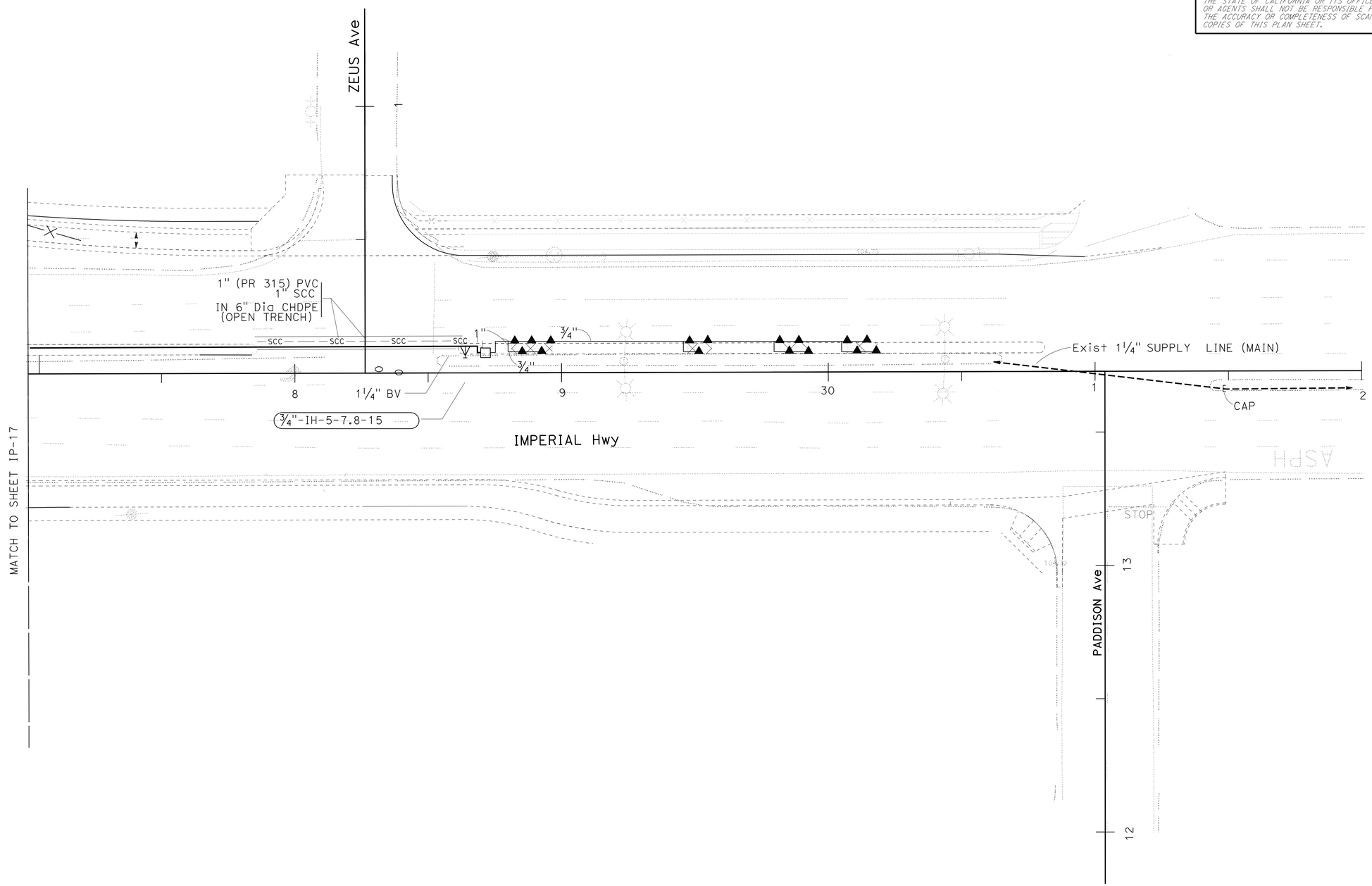

APPROVED FOR IRRIGATION WORK ONLY

IRRIGATION PLAN
(IMPERIAL Hwy)
SCALE: 1" = 20'

IP-18

STATE OF CALIFORNIA - DEPARTMENT OF TRANSPORTATION
Caltrans® LANDSCAPE ARCHITECTURE

SENIOR LANDSCAPE ARCHITECT: JENNIFER TAIRA
CALCULATED-DESIGNED BY: XUAN WU
CHECKED BY: GEORGE OLGUIN
REVISED BY
DATE REVISED

LAST REVISION 00-00-00
DATE PLOTTED => 14-APR-2012
TIME PLOTTED => 14:34

Dist	COUNTY	ROUTE	POST MILES TOTAL PROJECT	SHEET No.	TOTAL SHEETS
07	LA	5	4.0/5.9	764	1597

George Olguin
LICENSED LANDSCAPE ARCHITECT

4-9-12
PLANS APPROVAL DATE

LICENSED LANDSCAPE ARCHITECT
GEORGE OLGUIN
NO. 4333
George Olguin
Signature
08-31-12
Renewal Date
10-10-10
Date
STATE OF CALIFORNIA

THE STATE OF CALIFORNIA OR ITS OFFICERS OR AGENTS SHALL NOT BE RESPONSIBLE FOR THE ACCURACY OR COMPLETENESS OF SCANNED COPIES OF THIS PLAN SHEET.

NOTES:

FOR ACCURATE RIGHT OF WAY DATA,
CONTACT RIGHT OF WAY ENGINEERING AT THE DISTRICT OFFICE.
Exist UTILITY FACILITIES HAVE NOT BEEN SHOWN ON THESE PLANS.

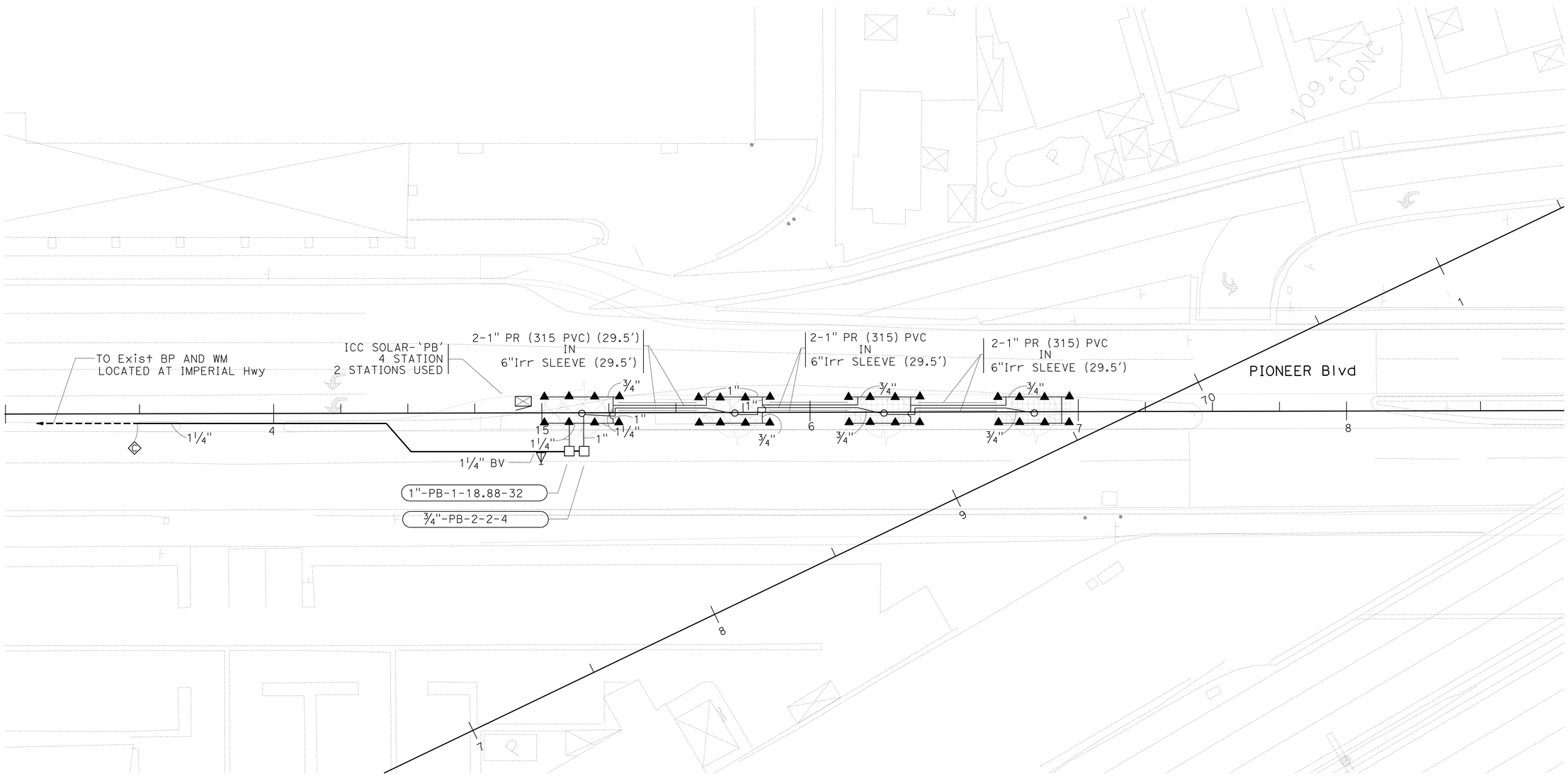

APPROVED FOR IRRIGATION WORK ONLY

IRRIGATION PLAN
(PIONEER Blvd)
SCALE: 1" = 20'

IP-19

STATE OF CALIFORNIA - DEPARTMENT OF TRANSPORTATION
Caltrans LANDSCAPE ARCHITECTURE

SENIOR LANDSCAPE ARCHITECT: JENNIFER TAIRA
CALCULATED-DESIGNED BY: XUAN WU
CHECKED BY: GEORGE OLGUIN
REVISED BY
DATE REVISED

LAST REVISION 00-00-00
DATE PLOTTED => 18-APR-2012
TIME PLOTTED => 05:40

Dist	COUNTY	ROUTE	POST MILES TOTAL PROJECT	SHEET No.	TOTAL SHEETS
07	LA	5	4.0/5.9	765	1597

George Olguin
LICENSED LANDSCAPE ARCHITECT

4-9-12
PLANS APPROVAL DATE

LICENSED LANDSCAPE ARCHITECT
GEORGE OLGUIN
NO. 4333
George Olguin
Signature
08-31-12
Renewal Date
10-10-10
Date
STATE OF CALIFORNIA

THE STATE OF CALIFORNIA OR ITS OFFICERS OR AGENTS SHALL NOT BE RESPONSIBLE FOR THE ACCURACY OR COMPLETENESS OF SCANNED COPIES OF THIS PLAN SHEET.

NOTES:

FOR ACCURATE RIGHT OF WAY DATA,
CONTACT RIGHT OF WAY ENGINEERING AT THE DISTRICT OFFICE.
Exist UTILITY FACILITIES HAVE NOT BEEN SHOWN ON THESE PLANS.

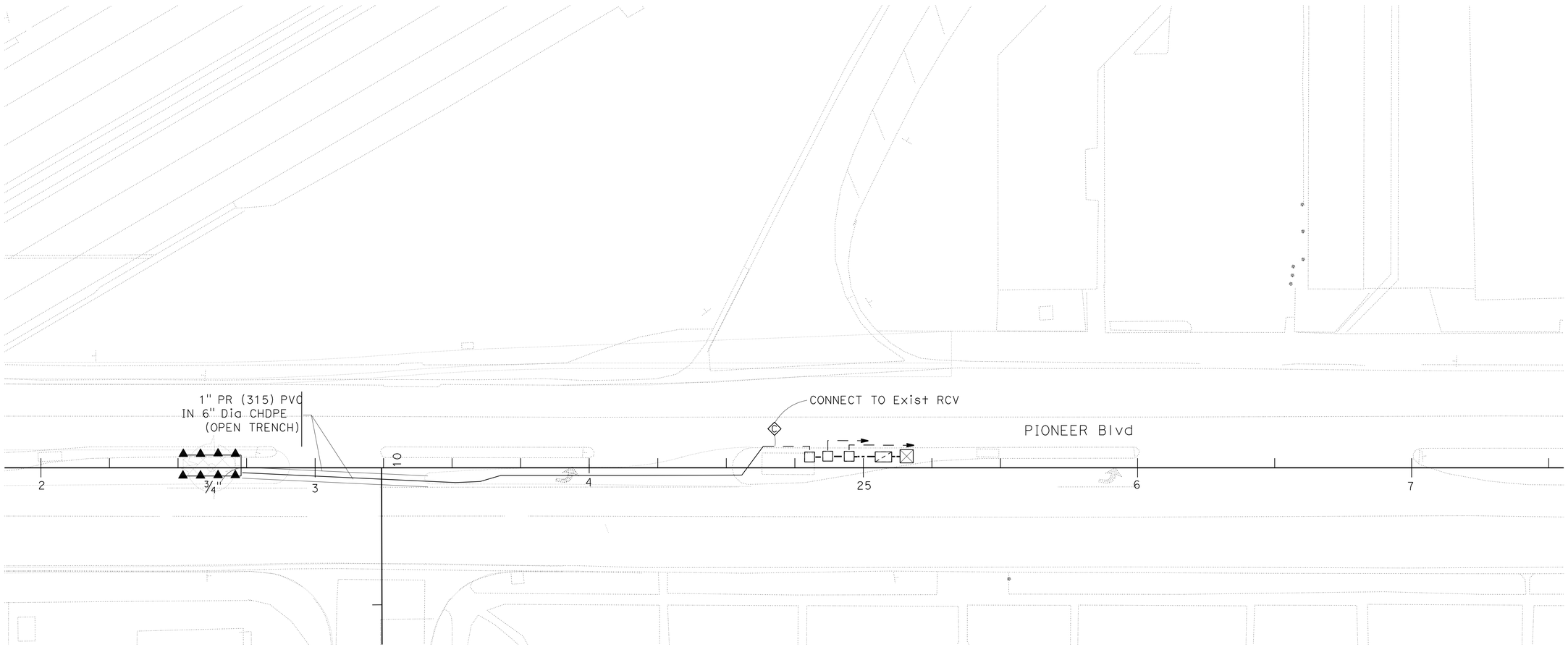

APPROVED FOR IRRIGATION WORK ONLY

IRRIGATION PLAN

(PIONEER Blvd)
SCALE: 1" = 20'

IP-20

REVISED BY | DATE REVISED
XUAN WU | GEORGE OLGUIN
CALCULATED-DESIGNED BY | CHECKED BY
SENIOR LANDSCAPE ARCHITECT
JENNIFER TAIRA
STATE OF CALIFORNIA - DEPARTMENT OF TRANSPORTATION
Caltrans® LANDSCAPE ARCHITECTURE

LAST REVISION 00-00-00 | DATE PLOTTED => 14-APR-2012 | TIME PLOTTED => 14:34

Dist	COUNTY	ROUTE	POST MILES TOTAL PROJECT	SHEET No.	TOTAL SHEETS
07	LA	5	4.0/5.9	766	1597

George Olguin
LICENSED LANDSCAPE ARCHITECT

4-9-12
PLANS APPROVAL DATE

LICENSED LANDSCAPE ARCHITECT
GEORGE OLGUIN
NO. 4333
George Olguin
Signature
08-31-12
Renewal Date
10-10-10
Date
STATE OF CALIFORNIA

THE STATE OF CALIFORNIA OR ITS OFFICERS OR AGENTS SHALL NOT BE RESPONSIBLE FOR THE ACCURACY OR COMPLETENESS OF SCANNED COPIES OF THIS PLAN SHEET.

NOTES:

1. FOR ACCURATE RIGHT OF WAY DATA, CONTACT RIGHT OF WAY ENGINEERING AT THE DISTRICT OFFICE.
2. Exist UTILITY FACILITIES HAVE NOT BEEN SHOWN ON THESE PLANS.

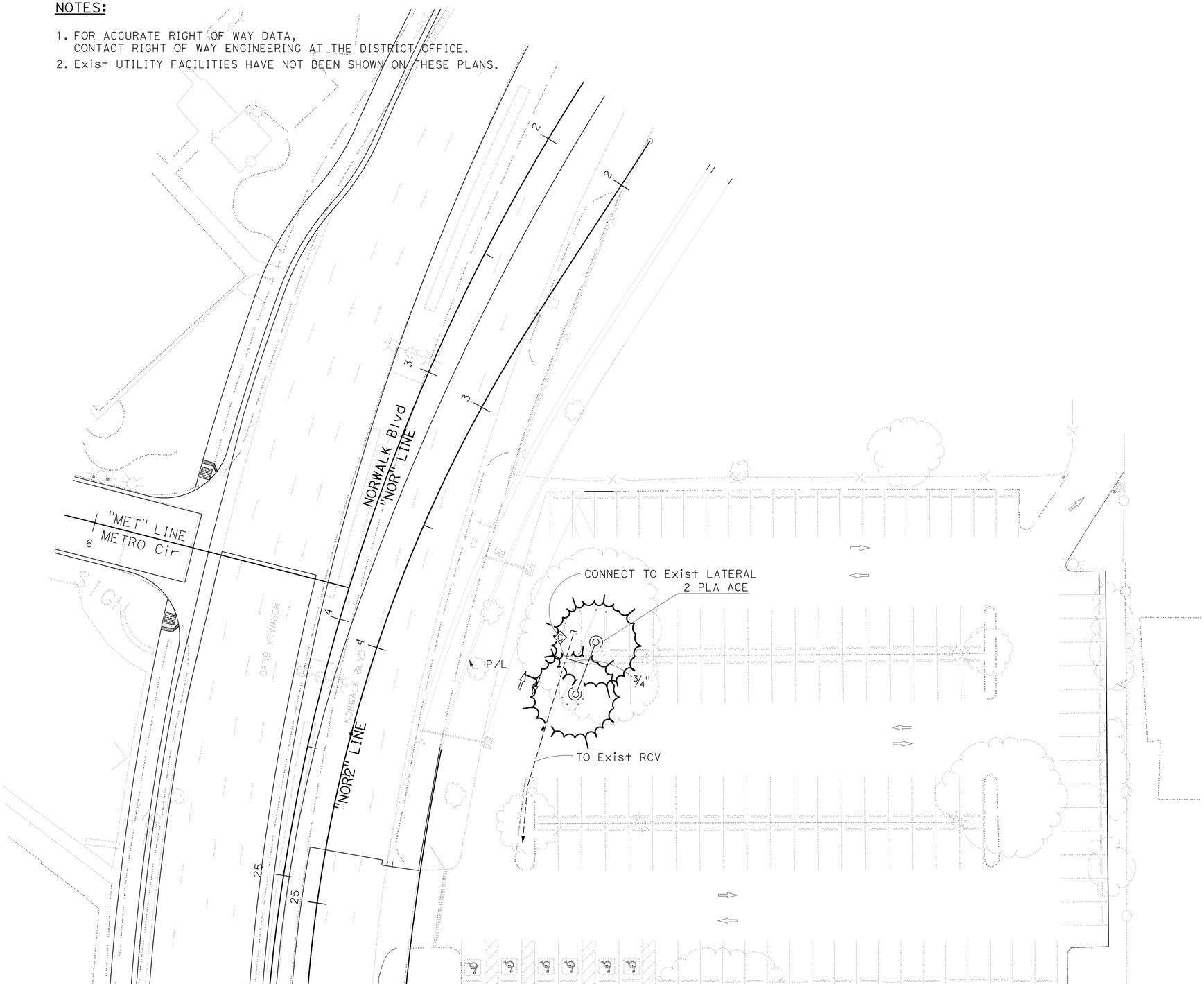

PLANTING AND IRRIGATION
NORWALK Blvd
PARKING LOT

SCALE: 1" = 20'

PI-1

APPROVED FOR PLANTING AND IRRIGATION WORK ONLY

STATE OF CALIFORNIA - DEPARTMENT OF TRANSPORTATION
Caltrans® LANDSCAPE ARCHITECTURE

SENIOR LANDSCAPE ARCHITECT: JENNIFER TAIRA

CALCULATED-DESIGNED BY: XUAN WU
CHECKED BY: GEORGE OLGUIN

REVISED BY
DATE REVISED

LAST REVISION 00-00-00
DATE PLOTTED => 14-APR-2012
TIME PLOTTED => 14:34

Dist	COUNTY	ROUTE	POST MILES TOTAL PROJECT	SHEET No.	TOTAL SHEETS
07	LA	5	4.0/5.9	767	1597

George Olguin
LICENSED LANDSCAPE ARCHITECT

4-9-12
PLANS APPROVAL DATE

LICENSED LANDSCAPE ARCHITECT GEORGE OLGUIN No. 4333 George Olguin 08-31-12 Renewal Date 10-10-10 Date STATE OF CALIFORNIA

THE STATE OF CALIFORNIA OR ITS OFFICERS OR AGENTS SHALL NOT BE RESPONSIBLE FOR THE ACCURACY OR COMPLETENESS OF SCANNED COPIES OF THIS PLAN SHEET.

SPRINKLER SCHEDULE

SYMBOL	TYPE	DESCRIPTION	SPRAY PATTERN	OPERATING PRESSURE (psi)	PRESSURE COMPENSATING	PLUS/MINUS 5% ② DISCHARGE GALLONS PER MINUTE (GPM)	GALLONS PER HOUR (GPH)	RADIUS (ft)	WIDTH x LENGTH (ft)	MATERIAL	INLET CONNECTION (NPT INCH)	POSITIVE-LOCKING Adj ARC STOP	BACKSPLASH PREVENTER	DIFFUSER PIN	DISTANCE CONTROL FLAP	Adj DISCHARGE	RISER TYPE	RISER MATERIAL PLASTIC	RISER MATERIAL GALVANIZED	RISER SIZE (IPS INCH)	RISER HEIGHT (INCH)	RISER FLOW SHUTOFF DEVICE	⑤ SWING JOINT (TYPE)	RISER SUPPORT	SPRINKLER PROTECTOR (TYPE)	REMARKS
⑤	A-5	GEAR DRIVEN	P	35		1.69	—	27	—	PL	½	—	—	—	—	—	IV	—	X	½	18	X	III	X	—	①
▲	B-2	SHRUB SPRAY	Q/H	30		0.10/0.20	—	5	—	PL	½	—	—	—	—	—	—	X	—	½	—	—	I	—	—	POP-UP ⑦
▲	B-2	SHRUB SPRAY	Q/H	30		0.26/0.52	—	8	—	PL	½	—	—	—	—	—	—	X	—	½	—	—	I	—	—	POP-UP ⑦
▲	B-2	SHRUB SPRAY	Q/H	30		0.39/0.79	—	10	—	PL	½	—	—	—	—	—	—	X	—	½	—	—	I	—	—	POP-UP ⑦
▲	B-2	SHRUB SPRAY	Q H F	30		0.65 1.30 2.60	—	12	—	PL	½	—	—	—	—	—	—	X	—	½	—	—	I	—	—	POP-UP ⑦
▲	B-2	SHRUB SPRAY	Q H F	30		0.92 1.85 3.70	—	15	—	PL	½	—	—	—	—	—	—	X	—	½	—	—	I	—	—	POP-UP ⑦
○	C-2	FLOOD BUBBLER	—	30	X	0.25/0.50	—	—	—	PL	½	—	—	—	—	—	III	X	—	½	—	—	—	—	—	SHRUBS
○	C-2 Mod	MODIFIED FLOOD BUBBLER	—	30	X	0.25/0.5	—	—	—	PL	½	—	—	—	—	—	III	X	—	½	—	—	—	—	—	TREES

APPLICABLE WHEN CIRCLED BELOW:

1 - SEE SPECIAL PROVISIONS.
2 - IF A PRESSURE COMPENSATING DEVICE IS SPECIFIED, THE DISCHARGE AND RADII SHOWN REFLECT ITS USE.
3 - ARC STOP SHALL BE FITTED WITH A NUT AND BOLT.
4 - VINYL-COATED CAST IRON HOUSING.
⑤ - SWING JOINTS REQUIRED ADJACENT TO SHOULDERS, CURBS, SIDEWALKS, AND DIKES.
6 - UNLESS OTHERWISE SHOWN ON PLANS.

X IN BOX DENOTES REQUIREMENT

⑦ - 6" POP-UP FOR TURF 12" POP-UP FOR GROUNDCOVER AREAS.

SPRINKLERS SIZING CHART (0.5 GPM)
(FOR INFORMATION ONLY)

(C-2) TREES

NUMBER OF SPRINKLERS	SIZE OF PIPE
1---20	¾"
21---32	1"
33---52	1¼"
53---72	1½"

SPRINKLERS SIZING CHART (0.25 GPM)
(FOR INFORMATION ONLY)

(C-2) VINES

NUMBER OF SPRINKLERS	SIZE OF PIPE
1---40	¾"
41---64	1"
65---104	1¼"

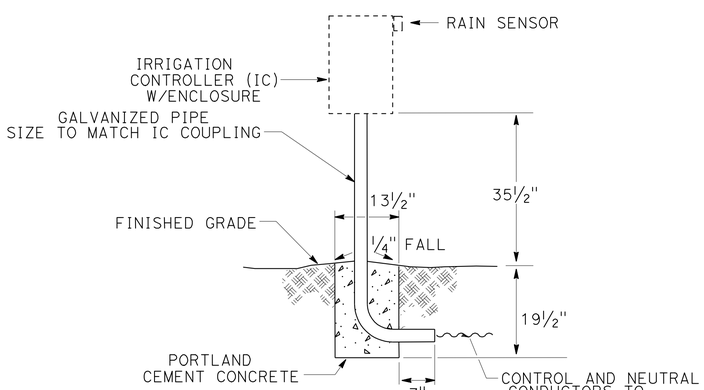

SOLAR IRRIGATION CONTROLLER

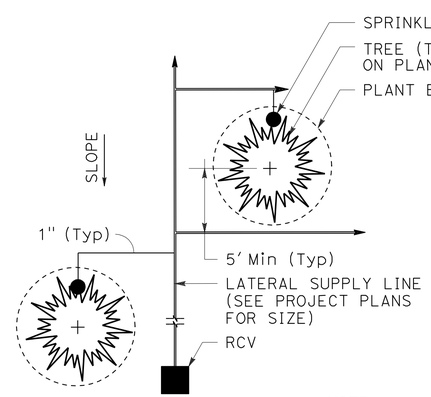

PLAN

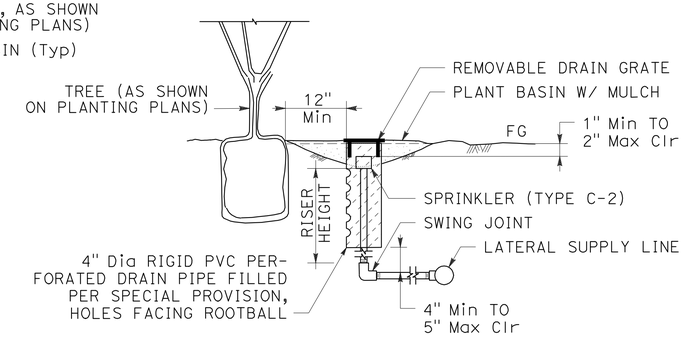

SECTION

NOTE:
INSTALL SPRINKLER (TYPE C-2 Mod) ON UP-HILL SIDE OF PLANT WHEN ON SLOPE.

SPRINKLER (TYPE C-2 MOD)

SPRINKLER SCHEDULE

NO SCALE

LD-1

STATE OF CALIFORNIA - DEPARTMENT OF TRANSPORTATION
Gates® LANDSCAPE ARCHITECTURE
SENIOR LANDSCAPE ARCHITECT: JENNIFER TAIRA
CALCULATED-DESIGNED BY: XUAN WU
CHECKED BY: GEORGE OLGUIN
REVISED BY
DATE REVISED

LAST REVISION 00-00-00
DATE PLOTTED => 14-APR-2012
TIME PLOTTED => 14:34

Dist	COUNTY	ROUTE	POST MILES TOTAL PROJECT	SHEET No.	TOTAL SHEETS
07	LA	5	4.0/5.9	768	1597

George Olguin
LICENSED LANDSCAPE ARCHITECT

4-9-12
PLANS APPROVAL DATE

LICENSED LANDSCAPE ARCHITECT
GEORGE OLGUIN
No. 4333
George Olguin
Expiration Date
08-31-12
Renewal Date
10-10-10
Date
STATE OF CALIFORNIA

THE STATE OF CALIFORNIA OR ITS OFFICERS OR AGENTS SHALL NOT BE RESPONSIBLE FOR THE ACCURACY OR COMPLETENESS OF SCANNED COPIES OF THIS PLAN SHEET.

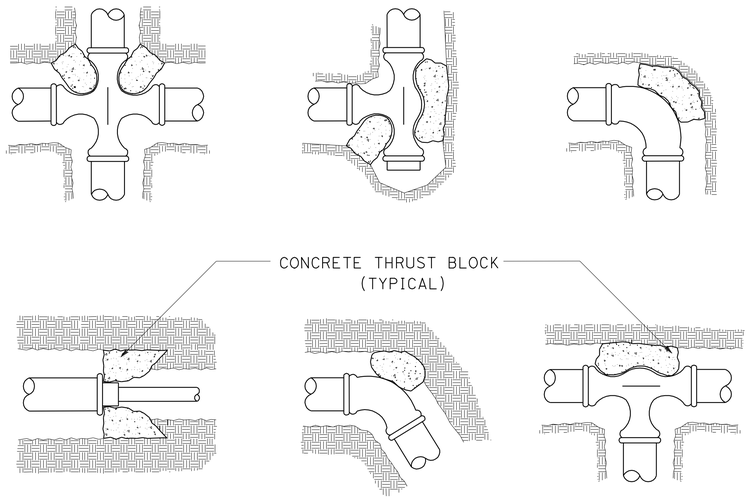

THRUST BLOCKS

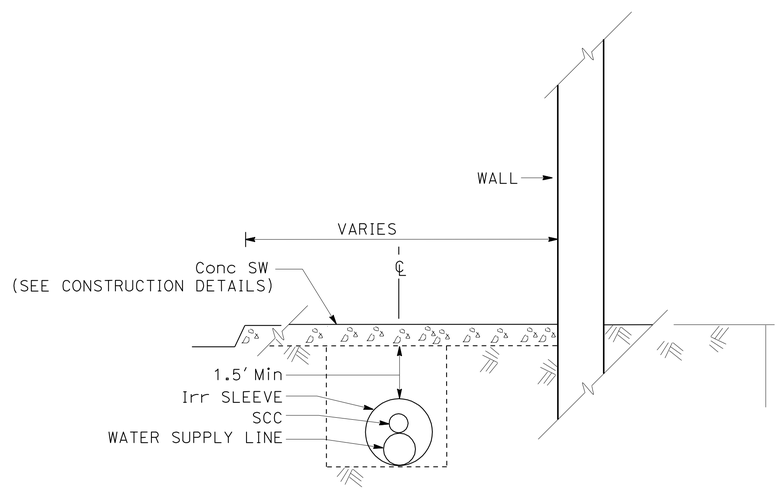

SECTION

IRRIGATION SLEEVE IN SIDEWALK

IRRIGATION CROSSOVERS

LOCATION		SIDE		CONDUIT TYPE (3)		CONDUIT TYPE (3)		(N) WATER LINE CROSSOVER	(N) SPRINKLER CONTROL CROSSOVER
LINE	STATION	R†	L†	SIZE (INCH) 6 LENGTH (LF)		SIZE (INCH) 8 LENGTH (LF)		SIZE (INCH)	SIZE (INCH)
RAMP N-2	32+50	X	X	60	—	—	—	2	2
SB FRONTAGE ROAD	36+50	X	X	73	—	—	—	2	2
RAMP I-1	63+50	X	X	52	—	—	—	1½	1
RAMP I-2	61+00	X	X	—	—	70	—	2	1½
NORWALK Blvd	20+25	X	X	138	—	—	—	2-(1)	—
IMPERIAL Hwy	27+85	X	X	80	—	—	—	1	1
PIONEER Blvd	22+85	X	X	70	—	—	—	1	1
TOTAL				473		70			

(N) - NOT A SEPARATE PAY ITEM FOR INFORMATION ONLY
X - DENOTES REQUIREMENT

CONDUIT TYPE:

(APPLICABLE WHEN CIRCLED BELOW AND SHOWN UNDER THE 'CONDUIT TYPE' COLUMN HEADING)

1 BITUMINOUS COATED CORRUGATED STEEL PIPE (0.064 INCH THICK)
2 CORRUGATED STEEL PIPE (0.064 INCH THICK)
(3) CORRUGATED HIGH DENSITY POLYETHYLENE PIPE
4 ALTERNATIVE CONDUIT
5 WELDED STEEL PIPE

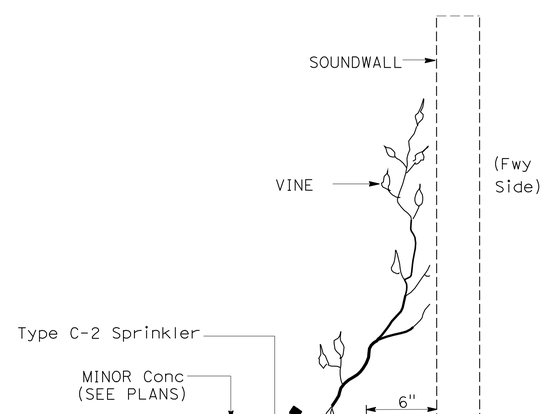

ELEVATION

VINE POCKET

LANDSCAPE DETAILS

NO SCALE

LD-2

STATE OF CALIFORNIA - DEPARTMENT OF TRANSPORTATION
Caltrans® LANDSCAPE ARCHITECTURE

SENIOR LANDSCAPE ARCHITECT: JENNIFER TAIRA
CALCULATED-DESIGNED BY: XUAN WU
CHECKED BY: GEORGE OLGUIN
REVISED BY
DATE REVISED

LAST REVISION 00-00-00
DATE PLOTTED => 14-APR-2012
TIME PLOTTED => 14:35

Dist	COUNTY	ROUTE	POST MILES TOTAL PROJECT	SHEET No.	TOTAL SHEETS
07	LA	5	4.0/5.9	769	1597

REGISTERED ELECTRICAL ENGINEER — DATE 1/4/12

4-9-12
PLANS APPROVAL DATE

REGISTERED PROFESSIONAL ENGINEER — PATRICK P. LUI — No. E17534 — Exp. 06/30/13 — ELECTRICAL — STATE OF CALIFORNIA

THE STATE OF CALIFORNIA OR ITS OFFICERS OR AGENTS SHALL NOT BE RESPONSIBLE FOR THE ACCURACY OR COMPLETENESS OF SCANNED COPIES OF THIS PLAN SHEET.

GENERAL NOTES: (SHEETS E-2 TO E-24)

1. EXISTING COMMUNICATION CABLES, WHERE SHOWN ON THE PLANS TO BE MODIFIED, MUST BE SPLICED TO THE SAME ASSIGNED TWISTED PAIR AND/OR FIBER NUMBER.
2. EXISTING UTILITY FACILITIES HAVE NOT BEEN PLOTTED ON THESE PLANS.
3. CONDUIT CONTAINING FIBER OPTIC CABLE MUST ENTER PULL BOXES ON THE SHORT SIDE ONLY. PULL BOXES MUST NOT BE USED TO CHANGE ALIGNMENT OF THE COMUNICATION CONDUIT.
4. EXISTING IRRIGATION SYSTEMS ARE NOT SHOWN FOR CLARITY.
5. NEW FIBER OPTIC COMMUNICATION CONDUIT RUNS MUST HAVE A TRACER WIRE.
6. NUMBER OF CONDUITS IN SOME COMMUNICATION RUNS MAY NOT BE SHOWN FOR CLARITY. THE CONTRACTOR MUST REROUTE IMPACTED CONDUITS AND REPLACE ITS CONTENTS AS NOTED ON THE PLANS.
7. EXISTING FOUNDATIONS OF VARIOUS ELEMENTS TO BE REMOVED THAT ARE IN THE AREAS OF ROADWAY WIDENING MUST BE REMOVED AS PART OF ROADWAY EXCAVATION.
8. CONDUITS INSTALLED ACROSS NEW WALLS MUST BE CORED THRU THE WALL OR MUST BE INSTALLED DURING SOUNDWALL CONSTRUCTION.
9. ALL ABANDONED CONDUITS AND CONDUIT CONCRETE ENCASEMENTS IN THE AREAS OF ROADWAY EXCAVATION AND INTERFERING WITH THE NEW STRUCTURAL SECTION MUST BE REMOVED AND DISPOSED AS PART OF ROADWAY EXCAVATION.
10. ALL PULL BOXES AND SPLICE VAULTS INSTALLED IN THE SHOULDER MUST BE TRAFFIC RATED.
11. INSTALL ALL CABLES IN THE LOWER SIZE 4"C, UPPER SIZE 4"C IS EMPTY.

ABBREVIATIONS: (SHEETS E-2 TO E-24)

#	NUMBER
4WTO	4 WIRE TRANSMIT ONLY
6P22	6 PAIR 22 AWG TWISTED PAIR CABLE
4SMFO	4 SINGLEMODE FIBER OPTIC CABLE
12SMFO	12 SINGLEMODE FIBER OPTIC CABLE
36SMFO	36 SINGLEMODE FIBER OPTIC CABLE
48SMFO	48 SINGLEMODE FIBER OPTIC CABLE
50P22	50 PAIR 22 AWG TWISTED PAIR CABLE
AC	ALTERNATING CURRENT
ATMS	ADVANCED TRANSPORTATION MANAGEMENT SYSTEM
BNC	BAYONET NEILL-CONCELMAN CONNECTOR
CAT-5E	ANSI/TIA-568 STANDARD NETWORK CABLE
COAX	COAXIAL CABLE
CTID	CALTRANS IDENTIFICATION
CTS	CLEAR TO SEND
DE-9	9 PIN SUBMINIATURE CONNECTOR
DCD	DATA CARRIER DETECT
TIA-232	BINARY SERIAL COMMUNICATIONS STANDARD
TIA-422	BALANCED SERIAL COMMUNICATION STANDARD
FDU	FIBER DISTRIBUTION UNIT
FEP	FRONT END PROCESSOR
FOSC	FIBER OPTIC SPLICE CLOSURE
GBIC	GIGABIT INTERFACE CONVERTER
HT	HIGH TEMPERATURE
ID	IDENTIFICATION NUMBER
LARTMC	LOS ANGLELES REGIONAL TRANSPORTATION MANAGEMENT CENTER
MMFO	MULTIMODE FIBER OPTIC CABLE
P22	PAIR 22 AMERICAN WIRE GAUGE
PC	PERSONAL COMPUTER
PDA	POWER DISTRIBUTION ASSEMBLY
PR	PAIR
RD	RECEIVE DATA
RG-6A/U	COAXIAL CABLE
8P8C	8 PIN 8 CONDUCTOR MODULAR CONNECTOR
RMS	RAMP METERING SYSTEM
RTS	REQUEST TO SEND
RX	RECEIVE OR RECEIVER
SFP	SMALL FORM FACTOR PLUGGABLE TRANSCEIVER (LX TYPE)
SMFO	SINGLEMODE FIBER OPTIC CABLE
T1	1.544 MEGABIT PER SECOND
TD	TRANSMIT DATA
TS	TEMPERATURE SENSOR
TX	TRANSMIT OR TRANSMITTER
W/GFI	WITH GROUND FAULT INTERRUPTER

LEGEND: (SHEETS E-2 TO E-24)

NEW	EXISTING	
V	V	SPLICE VAULT
CCTV	CCTV	CCTV CABINET
V S	V S	SPLICE VAULT WITH SPLICE CLOSURE
		FIBER OPTIC CABLE
		SURGE PROTECTOR
HT	HT	HIGH TEMPERATURE RELAY COIL
HT	HT	RELAY CONTACT NORMALLY CLOSED
6	6	WIRE SIZE, IF NOT INDICATED SHALL BE #12 AWG
F	F	FAN
L	L	INDICATOR LAMP
		THERMOSTATIC CONTROL
THERMO	THERMO	ADJUSTABLE CALIBRATED THERMOSTAT
R	R	DUPLEX RECEPTACLE
		PORTABLE CHANGEABLE MESSAGE SIGN

TEMPORARY AND MODIFY COMMUNICATION SYSTEM (NOTES, ABBREVIATIONS AND LEGENDS)

NO SCALE

E-1

STATE OF CALIFORNIA - DEPARTMENT OF TRANSPORTATION — OFFICE OF ITS — Caltrans

FUNCTIONAL SUPERVISOR: JACQUELINE C. TAN

CALCULATED-DESIGNED BY: PATRICK P. LUI — CHECKED BY: JACQUELINE C. TAN — REVISED BY — DATE REVISED

LAST REVISION 00-00-00 — DATE PLOTTED => 18-APR-2012 — TIME PLOTTED => 10:26

Dist	COUNTY	ROUTE	POST MILES TOTAL PROJECT	SHEET No.	TOTAL SHEETS
07	LA	5	4.0/5.9	770	1597

REGISTERED ELECTRICAL ENGINEER 1/4/12 DATE

4-9-12
PLANS APPROVAL DATE

REGISTERED PROFESSIONAL ENGINEER
PATRICK P. LUI
No. E17534
Exp. 06/30/13
ELECTRICAL
STATE OF CALIFORNIA

THE STATE OF CALIFORNIA OR ITS OFFICERS OR AGENTS SHALL NOT BE RESPONSIBLE FOR THE ACCURACY OR COMPLETENESS OF SCANNED COPIES OF THIS PLAN SHEET.

NOTE:

FOR ACCURATE RIGHT OF WAY DATA, CONTACT RIGHT OF WAY ENGINEERING AT THE DISTRICT OFFICE.

PROJECT NOTES: (THIS SHEET ONLY)

1. INSTALL WIRELESS MODEM, BOOSTER AND ANTENNA, AC ADAPTOR, SERIAL CABLE, MOUNTING HARDWARE, CORD AND CABLES IN MODEL 344 CONTROLLER CABINET. SEE SHEET E-5 FOR DETAILS.
2. ESTABLISH WIRELESS SERVICE WITH UTILITY PROVIDER. PROVIDE WIRELESS MODEM TO LARTMC SUPPORT STAFF FOR CONFIGURATION. LARTMC SUPPORT STAFF RETURNS CONFIGURED WIRELESS MODEM BACK TO THE CONTRACTOR FOR INSTALLATION.

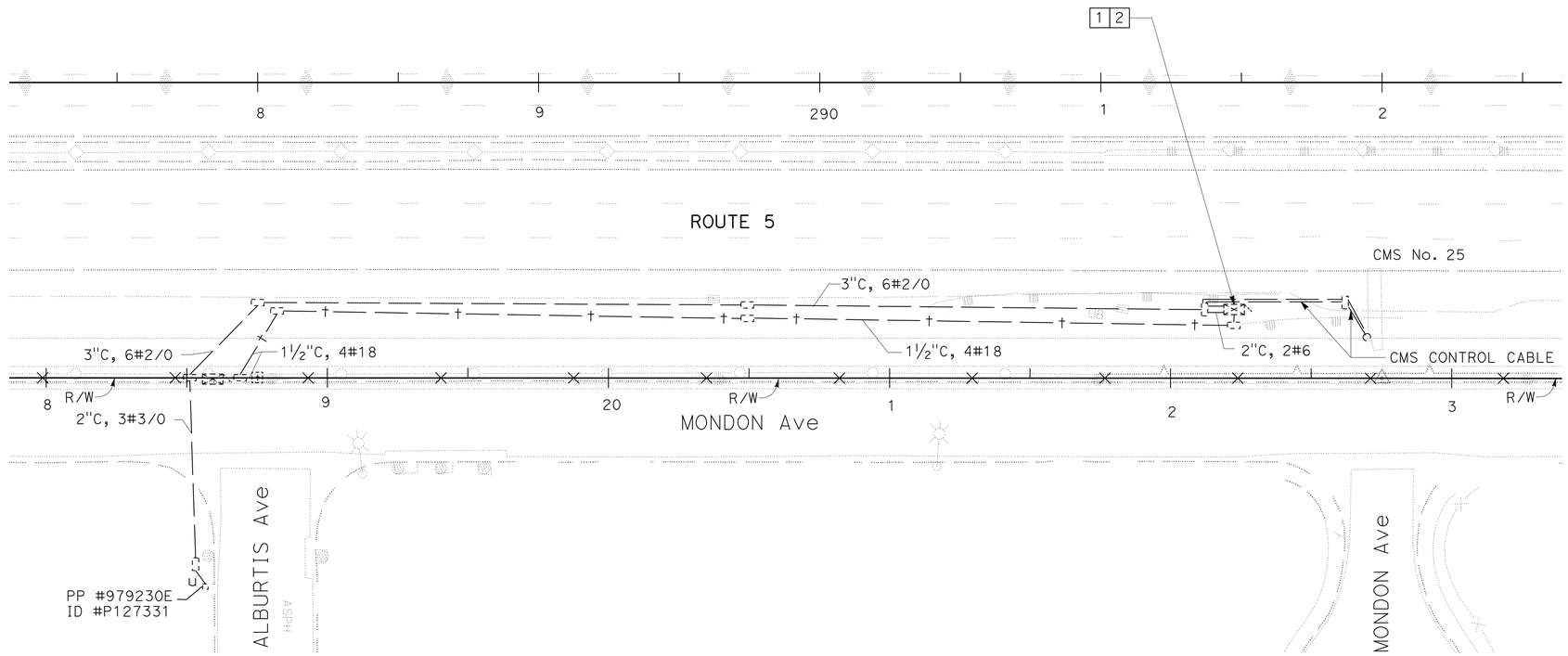

TEMPORARY COMMUNICATION SYSTEM
(STAGE CONSTRUCTION 1A THROUGH 3A)

SCALE: 1" = 50'

APPROVED FOR ELECTRICAL WORK ONLY

FOR LEGEND, ABBREVIATIONS AND GENERAL NOTES SEE SHEET E-1.

E-2

STATE OF CALIFORNIA - DEPARTMENT OF TRANSPORTATION
Caltrans
OFFICE OF ITS

FUNCTIONAL SUPERVISOR: JACQUELINE C. TAN
CALCULATED-DESIGNED BY: PATRICK P. LUI
CHECKED BY: JACQUELINE C. TAN
REVISED BY
DATE REVISED

LAST REVISION 00-00-00
DATE PLOTTED => 16-APR-2012
TIME PLOTTED => 12:17

Dist	COUNTY	ROUTE	POST MILES TOTAL PROJECT	SHEET No.	TOTAL SHEETS
07	LA	5	4.0/5.9	771	1597

REGISTERED ELECTRICAL ENGINEER — DATE 1/4/12

PLANS APPROVAL DATE 4-9-12

REGISTERED PROFESSIONAL ENGINEER — PATRICK P. LUI — No. E17534 — Exp. 06/30/13 — ELECTRICAL — STATE OF CALIFORNIA

THE STATE OF CALIFORNIA OR ITS OFFICERS OR AGENTS SHALL NOT BE RESPONSIBLE FOR THE ACCURACY OR COMPLETENESS OF SCANNED COPIES OF THIS PLAN SHEET.

NOTE:

FOR ACCURATE RIGHT OF WAY DATA, CONTACT RIGHT OF WAY ENGINEERING AT THE DISTRICT OFFICE.

PROJECT NOTES: (THIS SHEET ONLY)

1. INSTALL WIRELESS MODEM, ANTENNA, AC ADAPTOR, SERIAL CABLE, MOUNTING HARDWARE, CORD AND CABLES IN MODEL 334 CMS CONTROLLER CABINET. SEE SHEET E-4 FOR DETAILS. ESTABLISH WIRELESS SERVICE WITH WIRELESS SERVICE PROVIDER.
2. SHOWN FOR REFERENCE ONLY. SEE SHEET E-15 AND "LIGHTING AND SIGN ILLUMINATION ELECTRICAL SERVICE (IRRIGATION)" PLANS.
3. SHOWN FOR INFORMATION ONLY. SEE PLAN SHEET S-10 FOR SIGN STRUCTURE 5332.
4. SHOWN FOR REFERENCE ONLY. SEE MODIFY COMMUNICATION SYSTEM SHEET E-15.
5. SHOWN FOR REFERENCE ONLY. SEE "LIGHTING AND SIGN ILLUMINATION ELECTRICAL SERVICE (IRRGATION)" PLANS FOR SERVICE EQUIPMENT INSTALLATION.
6. INSTALL PCMS ON RTE 5 NB AT STA. 277 AND OPERATIONAL ONLY DURING STAGE CONSTRUCTION 3A TO 3B, EXACT LOCATION OF PCMS WILL BE DETERMINED BY THE ENGINEER.

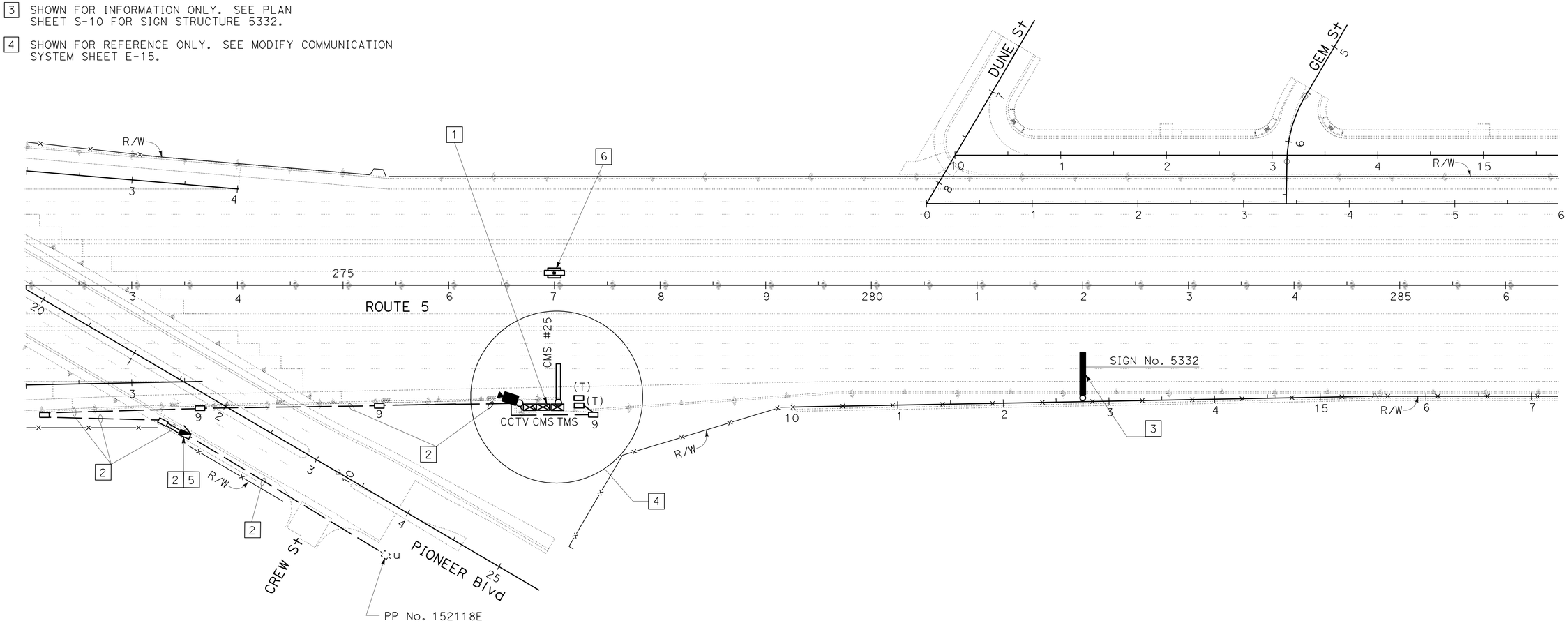

TEMPORARY COMMUNICATION SYSTEM
(STAGE CONSTRUCTION 3A TO 3B)

SCALE: 1" = 50'

APPROVED FOR ELECTRICAL WORK ONLY

FOR LEGENDS, ABBREVIATIONS AND GENERAL NOTES SEE SHEET E-1.

E-3

STATE OF CALIFORNIA - DEPARTMENT OF TRANSPORTATION — OFFICE OF ITS

FUNCTIONAL SUPERVISOR: JACQUELINE C. TAN

CALCULATED-DESIGNED BY: PATRICK P. LUI — CHECKED BY: JACQUELINE C. TAN

REVISED BY — DATE REVISED

LAST REVISION 00-00-00 — DATE PLOTTED => 16-APR-2012 — TIME PLOTTED => 12:17

Dist	COUNTY	ROUTE	POST MILES TOTAL PROJECT	SHEET No.	TOTAL SHEETS
07	LA	5	4.0/5.9	772	1597

REGISTERED ELECTRICAL ENGINEER — DATE 1/4/12

PLANS APPROVAL DATE 4-9-12

REGISTERED PROFESSIONAL ENGINEER — PATRICK P. LUI — No. E17534 — Exp. 06/30/13 — ELECTRICAL — STATE OF CALIFORNIA

THE STATE OF CALIFORNIA OR ITS OFFICERS OR AGENTS SHALL NOT BE RESPONSIBLE FOR THE ACCURACY OR COMPLETENESS OF SCANNED COPIES OF THIS PLAN SHEET.

NOTES: (THIS SHEET ONLY)

1. ANTENNA IS MOUNTED TO THE WIRELESS MODEM BY SUBMINATURE VERSION A (SMA) CONNECTOR.
2. SEE E-5 FOR C-2 CABLE INSTALLATION.
3. DISCONNECT 6P22 CABLE
4. FOR REFERENCE ONLY.

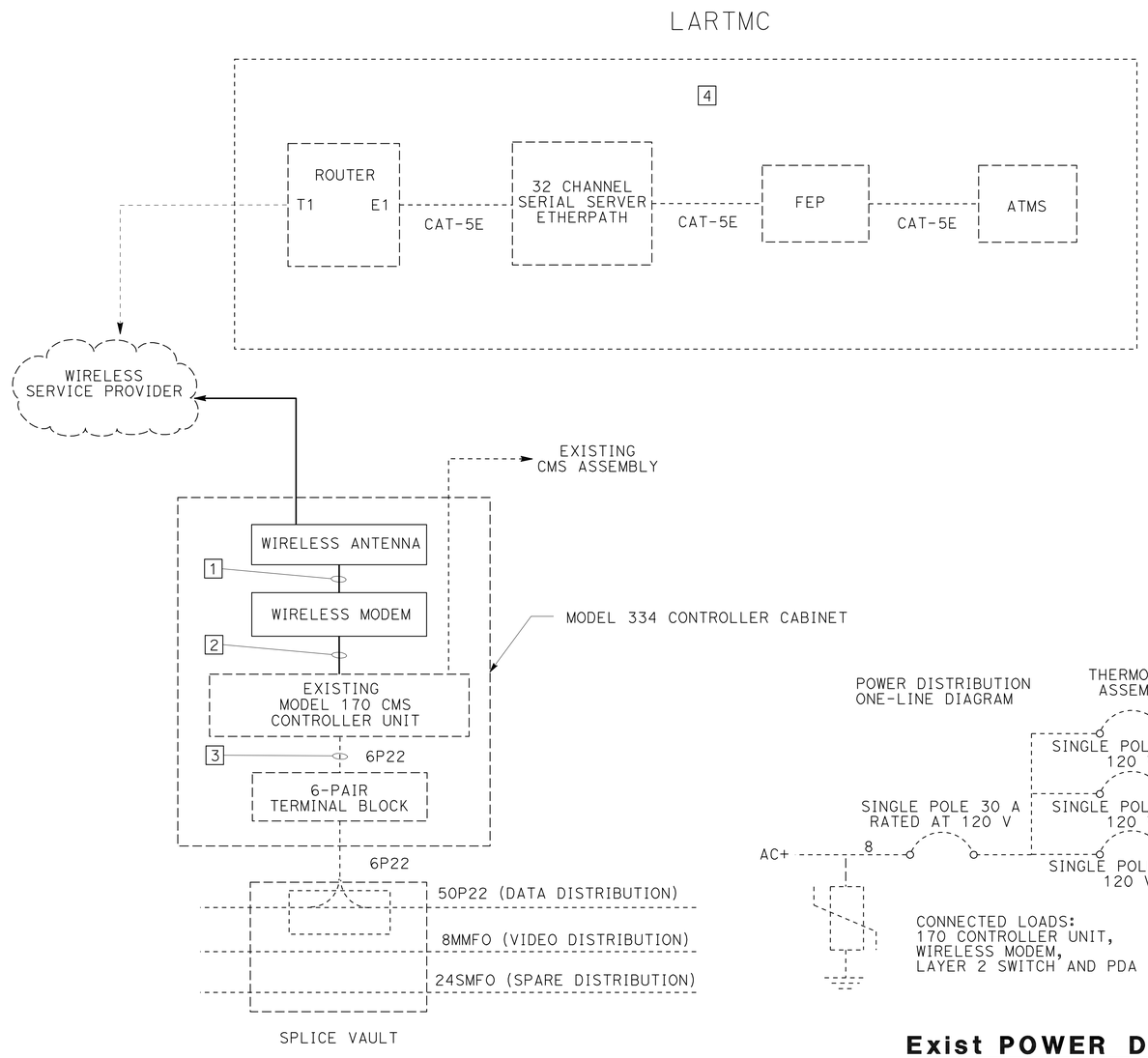

TYPICAL MODEL 344 CONTROLLER CABINET WIRING DETAIL

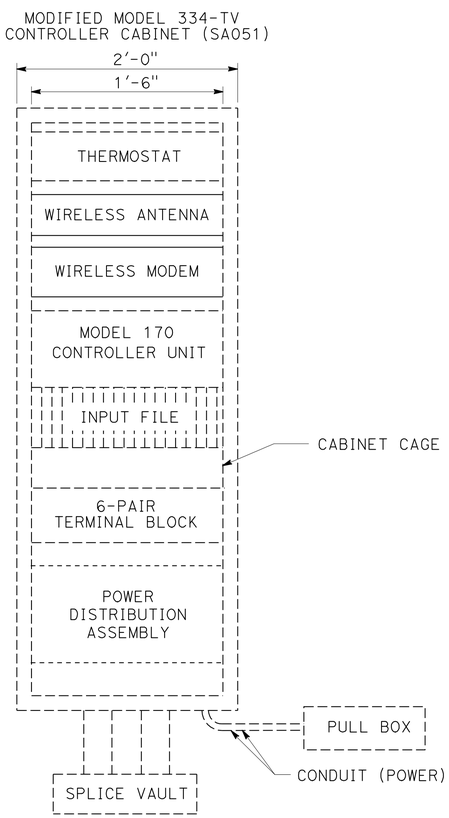

TYPICAL MODEL 334 CONTROLLER CABINET EQUIPMENT LAYOUT

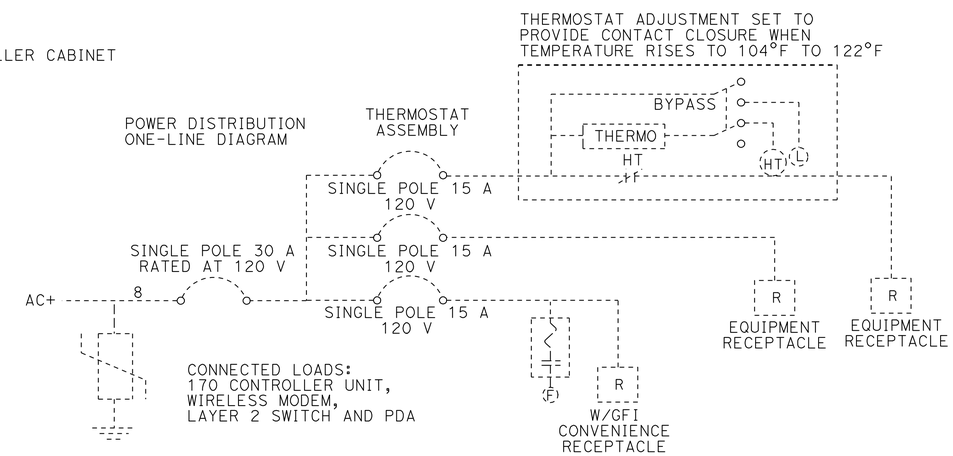

Exist POWER DISTRIBUTION ASSEMBLY

FOR LEGEND, ABBREVIATIONS AND GENERAL NOTES SEE SHEET E-1.

TEMPORARY COMMUNICATION SYSTEM
(WIRELESS MODEM SCHEMATIC)

NO SCALE

E-4

STATE OF CALIFORNIA - DEPARTMENT OF TRANSPORTATION — OFFICE OF ITS — Caltrans

FUNCTIONAL SUPERVISOR: JACQUELINE C. TAN

CALCULATED-DESIGNED BY: PATRICK P. LUI — CHECKED BY: JACQUELINE C. TAN

REVISED BY — DATE REVISED

LAST REVISION 00-00-00 — DATE PLOTTED => 18-APR-2012 — TIME PLOTTED => 10:26

Dist	COUNTY	ROUTE	POST MILES TOTAL PROJECT	SHEET No.	TOTAL SHEETS
07	LA	5	4.0/5.9	773	1597

REGISTERED ELECTRICAL ENGINEER 1/4/12 DATE

4-9-12
PLANS APPROVAL DATE

REGISTERED PROFESSIONAL ENGINEER PATRICK P. LUI No. E17534 Exp. 06/30/13 ELECTRICAL STATE OF CALIFORNIA

THE STATE OF CALIFORNIA OR ITS OFFICERS OR AGENTS SHALL NOT BE RESPONSIBLE FOR THE ACCURACY OR COMPLETENESS OF SCANNED COPIES OF THIS PLAN SHEET.

PROJECT NOTE: (THIS SHEET ONLY)

1. ALL COMPONENTS AND CONNECTORS MUST MEET NEMA TS 2 REQUIREMENTS.

CAUTION

ORIENT THE C-2 PLUG AS SHOWN.

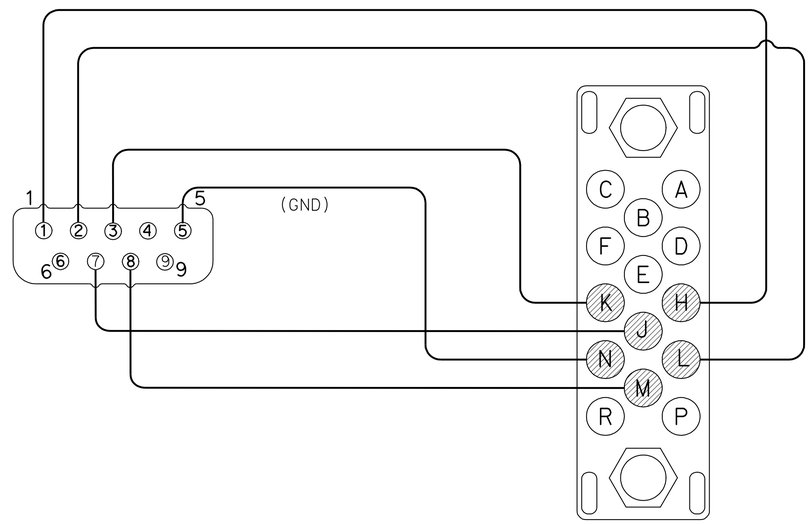

1 - ORANGE TO PIN H, DCD
2 - WHITE/BLUE TO PIN L, RD
3 - BLUE TO PIN K, TD
4 - NOT USED
5 - WHITE/ORANGE TO PIN N, GND
6 - NOT USED
7 - BROWN TO PIN J, RTS
8 - WHITE/BROWN TO PIN M, CTS
9 - NOT USED

A - NOT USED
B - NOT USED
C - NOT USED
D - NOT USED
E - NOT USED
F - NOT USED
H - ORANGE TO PIN 1, DCD
J - BROWN TO 7, RTS
K - BLUE TO PIN 3, TD
L - WHITE/BLUE TO PIN 2, RD
M - WHITE/BROWN TO PIN 8, CTS
N - WHITE/ORANGE TO PIN 5, GND
P - NOT USED
R - NOT USED

DE-9 (MALE) TO C-2 CONNECTOR FOR WIRELESS MODEM TO CMS CABLE DIAGRAM/ MODEL 170 CONTROLLER SERIAL INTERFACE

TEMPORARY COMMUNICATION SYSTEM
(WIRELESS MODEM BLOCK DIAGRAM DETAILS)

NO SCALE

FOR LEGEND, ABBREVIATIONS AND GENERAL NOTES SEE SHEET E-1.

E-5

STATE OF CALIFORNIA - DEPARTMENT OF TRANSPORTATION
Caltrans
OFFICE OF ITS

FUNCTIONAL SUPERVISOR: JACQUELINE C. TAN
CALCULATED-DESIGNED BY: PATRICK P. LUI
CHECKED BY: JACQUELINE C. TAN
REVISED BY
DATE REVISED

LAST REVISION 00-00-00
DATE PLOTTED => 18-APR-2012
TIME PLOTTED => 10:27

Dist	COUNTY	ROUTE	POST MILES TOTAL PROJECT	SHEET No.	TOTAL SHEETS
07	LA	5	4.0/5.9	774	1597

REGISTERED ELECTRICAL ENGINEER 1/4/12 DATE

4-9-12
PLANS APPROVAL DATE

REGISTERED PROFESSIONAL ENGINEER
PATRICK P. LUI
No. E17534
Exp. 06/30/13
ELECTRICAL
STATE OF CALIFORNIA

THE STATE OF CALIFORNIA OR ITS OFFICERS OR AGENTS SHALL NOT BE RESPONSIBLE FOR THE ACCURACY OR COMPLETENESS OF SCANNED COPIES OF THIS PLAN SHEET.

NOTE:

FOR ACCURATE RIGHT OF WAY DATA, CONTACT RIGHT OF WAY ENGINEERING AT THE DISTRICT OFFICE.

PROJECT NOTES: (THIS SHEET ONLY)

1. RC AS PART OF ROADWAY EXCAVATION.
2. INSTALL SPLICE CLOSURE, SPLICE IN KIND WITH EXISTING 48SMFO, 36SMFO AND 48SMFO IN EXISTING SPLICE VAULT.
3. REFER TO PROJECT 0700001833 (EA 07-215934) FOR DETAILS.

CONDUIT AND CONDUCTOR SCHEDULE (THIS SHEET ONLY)

CONDUIT/ CONDUCTOR	FUNCTION	RUN							
						1			
48SMFO CABLE	TRUNK CABLE					1			
36SMFO CABLE	SPARE DISTRIBUTION						1		
48SMFO CABLE	DATA DISTRIBUTION							1	
1 INCH INNERDUCT						1	1	1	
#12 AWG	TRACER WIRE	1							
CONDUIT SIZE		4", MT				4"			

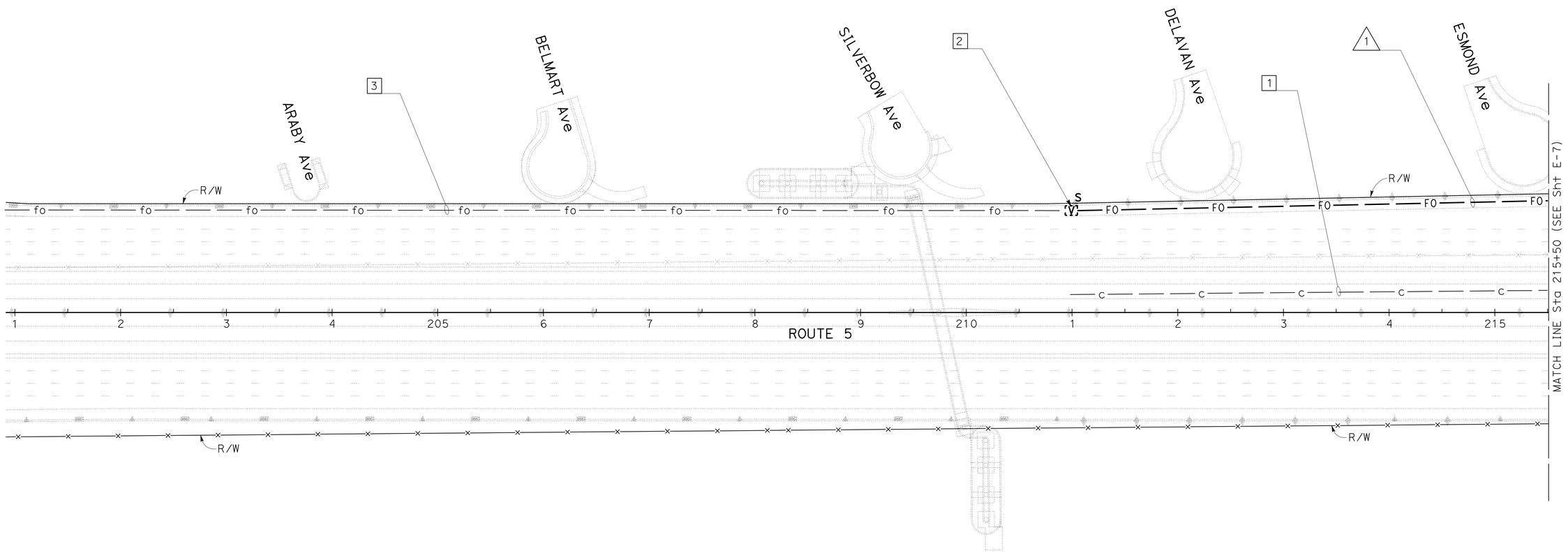

APPROVED FOR ELECTRICAL WORK ONLY

FOR LEGEND, ABBREVIATIONS AND GENERAL NOTES SEE SHEET E-1.

MODIFY COMMUNICATION SYSTEM

SCALE: 1" = 50'

E-6

STATE OF CALIFORNIA - DEPARTMENT OF TRANSPORTATION
Caltrans
OFFICE OF ITS

FUNCTIONAL SUPERVISOR: JACQUELINE C. TAN
CALCULATED-DESIGNED BY: PATRICK P. LUI
CHECKED BY: JACQUELINE C. TAN
REVISED BY
DATE REVISED

LAST REVISION 00-00-00
DATE PLOTTED => 16-APR-2012
TIME PLOTTED => 12:17

Dist	COUNTY	ROUTE	POST MILES TOTAL PROJECT	SHEET No.	TOTAL SHEETS
07	LA	5	4.0/5.9	775	1597

REGISTERED ELECTRICAL ENGINEER 1/4/12 DATE

4-9-12
PLANS APPROVAL DATE

REGISTERED PROFESSIONAL ENGINEER PATRICK P. LUI No. E17534 Exp. 06/30/13 ELECTRICAL STATE OF CALIFORNIA

THE STATE OF CALIFORNIA OR ITS OFFICERS OR AGENTS SHALL NOT BE RESPONSIBLE FOR THE ACCURACY OR COMPLETENESS OF SCANNED COPIES OF THIS PLAN SHEET.

NOTE:

FOR ACCURATE RIGHT OF WAY DATA, CONTACT RIGHT OF WAY ENGINEERING AT THE DISTRICT OFFICE.

PROJECT NOTES: (THIS SHEET ONLY)

1. RC COMMUNICATION CONDUITS, SPLICE VAULT, PULL BOXES AND CONTENTS, FOUNDATIONS AS PART OF ROADWAY EXCAVATION.
2. SEE SHEET E-28 FOR JACKING DETAILS.
3. RS CCTV CAMERA ASSEMBLY, CCTV POLE, CCTV CABINET AND ITS CONTENTS.

CONDUIT AND CONDUCTOR SCHEDULE (THIS SHEET ONLY)

CONDUIT/ CONDUCTOR	FUNCTION	RUN								
						1				2
48SMFO CABLE	TRUNK CABLE					1				
36SMFO CABLE	SPARE DISTRIBUTION						1			
48SMFO CABLE	DATA DISTRIBUTION							1		
1 INCH INNERDUCT						1	1	1		1
12SMFO CABLE	DISTRIBUTION									1
#12 AWG	TRACER WIRE					1				1
CONDUIT SIZE		4", MT				4"				2"

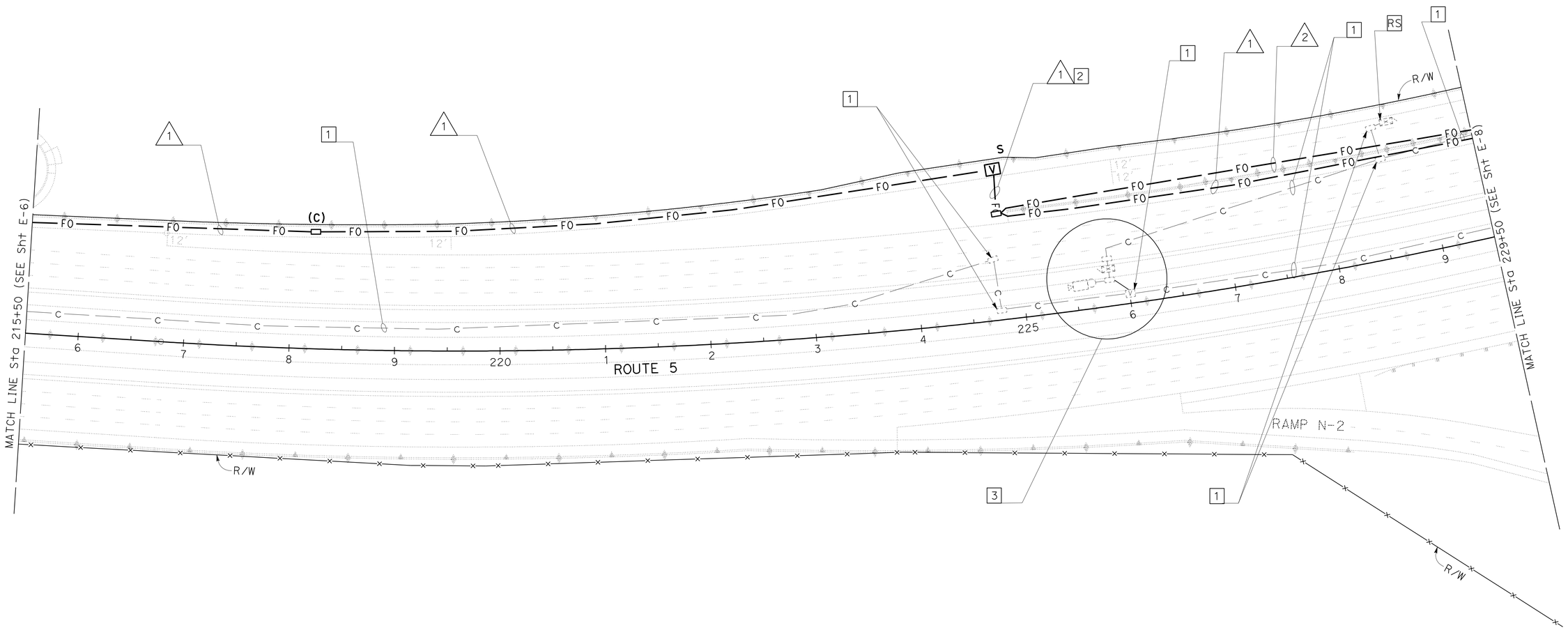

APPROVED FOR ELECTRICAL WORK ONLY

FOR LEGEND, ABBREVIATIONS AND GENERAL NOTES SEE SHEET E-1.

MODIFY COMMUNICATION SYSTEM

SCALE: 1" = 50'

E-7

STATE OF CALIFORNIA - DEPARTMENT OF TRANSPORTATION
Caltrans
OFFICE OF ITS

FUNCTIONAL SUPERVISOR: JACQUELINE C. TAN
CALCULATED-DESIGNED BY: PATRICK P. LUI
CHECKED BY: JACQUELINE C. TAN
REVISED BY
DATE REVISED

LAST REVISION 00-00-00
DATE PLOTTED => 18-APR-2012
TIME PLOTTED => 15:46

Dist	COUNTY	ROUTE	POST MILES TOTAL PROJECT	SHEET No.	TOTAL SHEETS
07	LA	5	4.0/5.9	776	1597

REGISTERED ELECTRICAL ENGINEER 1/4/12 DATE

4-9-12
PLANS APPROVAL DATE

REGISTERED PROFESSIONAL ENGINEER PATRICK P. LUI No. E17534 Exp. 06/30/13 ELECTRICAL STATE OF CALIFORNIA

THE STATE OF CALIFORNIA OR ITS OFFICERS OR AGENTS SHALL NOT BE RESPONSIBLE FOR THE ACCURACY OR COMPLETENESS OF SCANNED COPIES OF THIS PLAN SHEET.

NOTE:

FOR ACCURATE RIGHT OF WAY DATA, CONTACT RIGHT OF WAY ENGINEERING AT THE DISTRICT OFFICE.

PROJECT NOTES: (THIS SHEET ONLY)

1. RC COMMUNICATION CONDUITS, PULL BOXES AND CONTENTS AS PART OF ROADWAY EXCAVATION.
2. SEE SHEET E-14 FOR CCTV No. SA042 AND CMS No. 128.
3. SHOWN FOR REFERENCE ONLY. SEE SHEET E-37 FOR INSTALLATION OF RMS No. 0090.
4. SHOWN FOR REFERENCE ONLY. SEE SHEET E-47 FOR INSTALLATION OF TMS No. 2580.
5. INSTALL SERIAL SERVER, LAYER 2 ETHERNET SWITCH WITH 2 SFP MODULES AND FDU IN RMS CONTROLLER CABINET. RMS CONTROLLER CABINET AND PULL BOX SHOWN FOR REFERENCE ONLY, SEE SHEET E-37.
6. PULL BOXES AND CONDUITS SHOWN FOR REFERENCE ONLY. SEE SHEET E-53 FOR INSTALLATION OF SERVICE EQUIPMENT ENCLOSURE.
7. PULL BOXES AND CONDUITS SHOWN FOR REFERENCE ONLY, SEE SHEET E-47.
8. SEE STRUCTURE PLANS FOR CONDUIT INSTALLATION DETAILS.
9. ADD 5#4, 2#6.

CONDUIT AND CONDUCTOR SCHEDULE (THIS SHEET ONLY)

CONDUIT/ CONDUCTOR	FUNCTION	RUN 1								RUN 2							RUN 3	RUN 4
48SMFO CABLE	TRUNK CABLE					1							1					
36SMFO CABLE	SPARE DISTRIBUTION						1							1				
48SMFO CABLE	DATA DISTRIBUTION							1							1			
1 INCH INNERDUCT						1	1	1					1	1	1		1	
12SMFO CABLE	DISTRIBUTION																1	
#12 AWG	TRACER WIRE							1						1			1	
#4 AWG	POWER CONDUCTOR																	5
#6 AWG	POWER CONDUCTOR																	2
CONDUIT SIZE		4", MT				4"				3½", MT			3½"				2"	3"*

* - SHOWN FOR REFERENCE ONLY. SEE ELECTRICAL PLANS FOR INSTALLATION OF CONDUITS.

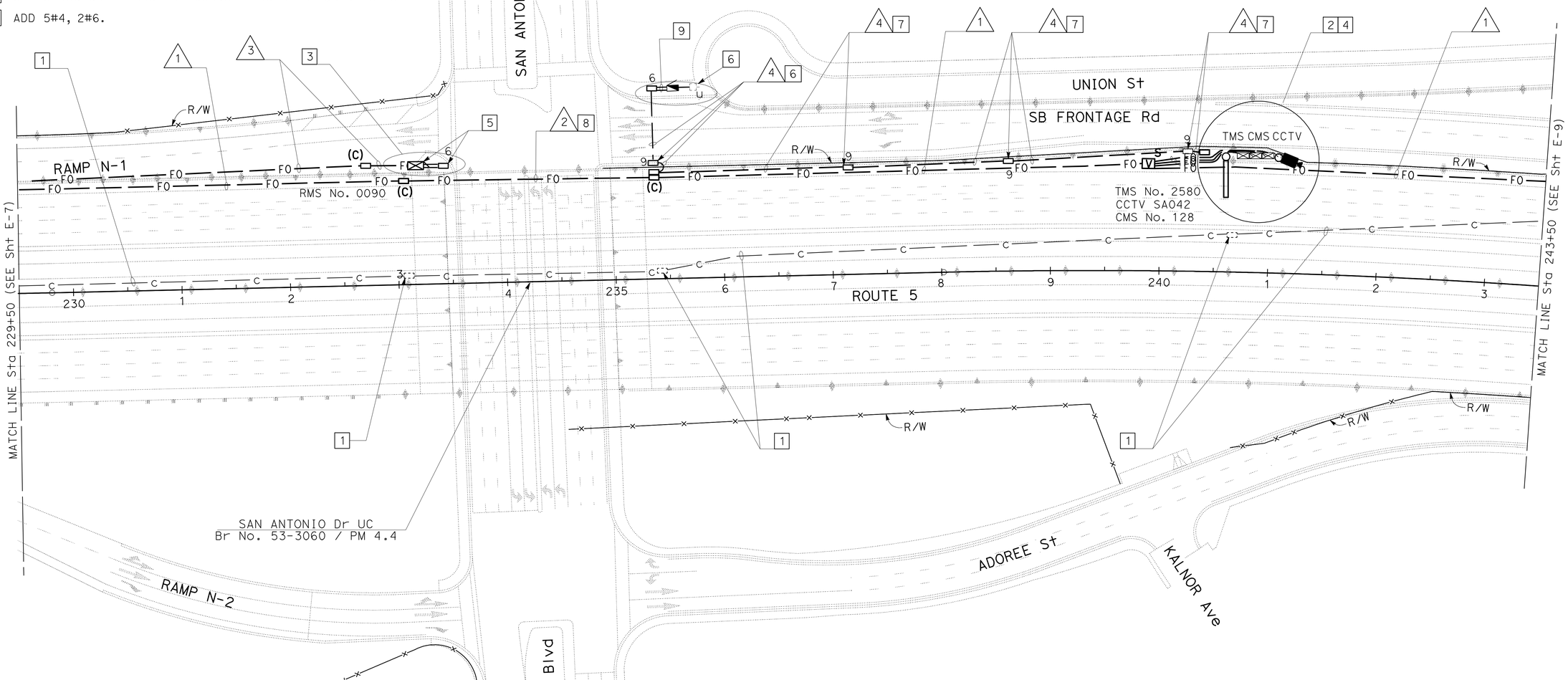

APPROVED FOR ELECTRICAL WORK ONLY

FOR LEGENDS, ABBREVIATIONS AND GENERAL NOTES SEE SHEET E-1.

MODIFY COMMUNICATION SYSTEM

SCALE: 1" = 50'

E-8

STATE OF CALIFORNIA - DEPARTMENT OF TRANSPORTATION
Caltrans
OFFICE OF ITS

PATRICK P. LUI — JACQUELINE C. TAN — CALCULATED-DESIGNED BY
JACQUELINE C. TAN — CHECKED BY
FUNCTIONAL SUPERVISOR
REVISED BY — DATE REVISED

LAST REVISION 00-00-00
DATE PLOTTED => 18-APR-2012
TIME PLOTTED => 10:27

Dist	COUNTY	ROUTE	POST MILES TOTAL PROJECT	SHEET No.	TOTAL SHEETS
07	LA	5	4.0/5.9	777	1597

REGISTERED ELECTRICAL ENGINEER 1/4/12 DATE

4-9-12
PLANS APPROVAL DATE

REGISTERED PROFESSIONAL ENGINEER PATRICK P. LUI No. E17534 Exp. 06/30/13 ELECTRICAL STATE OF CALIFORNIA

THE STATE OF CALIFORNIA OR ITS OFFICERS OR AGENTS SHALL NOT BE RESPONSIBLE FOR THE ACCURACY OR COMPLETENESS OF SCANNED COPIES OF THIS PLAN SHEET.

NOTE:

FOR ACCURATE RIGHT OF WAY DATA, CONTACT RIGHT OF WAY ENGINEERING AT THE DISTRICT OFFICE.

PROJECT NOTES: (THIS SHEET ONLY)

1 RC COMMUNICATION CONDUITS, PULL BOXES AND CONTENTS AS PART OF ROADWAY EXCAVATION.

CONDUIT AND CONDUCTOR SCHEDULE (THIS SHEET ONLY)

CONDUIT/ CONDUCTOR	FUNCTION	RUN							
						1			
48SMFO CABLE	TRUNK CABLE					1			
36SMFO CABLE	SPARE DISTRIBUTION						1		
48SMFO CABLE	DATA DISTRIBUTION							1	
1 INCH INNERDUCT						1	1	1	
#12 AWG	TRACER WIRE	1							
CONDUIT SIZE		4", MT				4"			

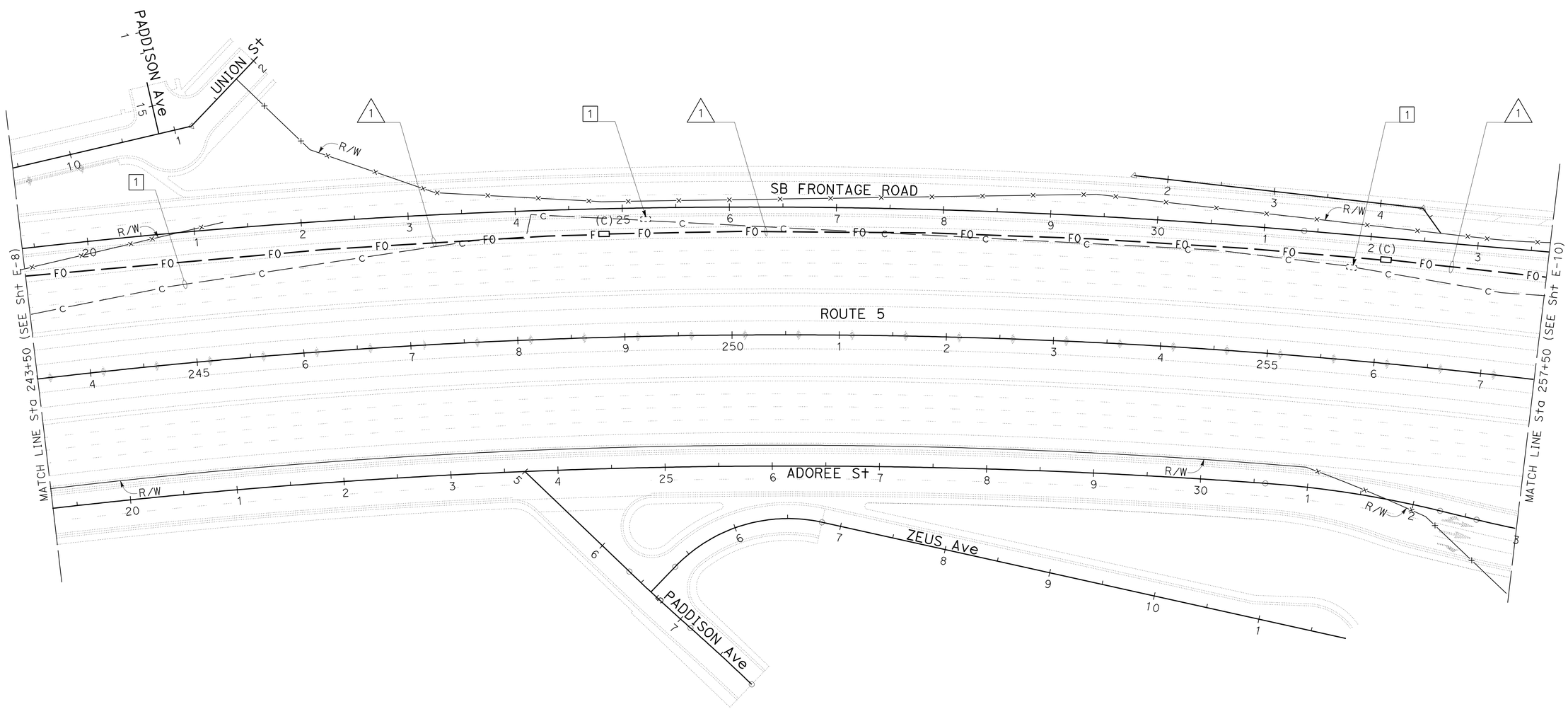

APPROVED FOR ELECTRICAL WORK ONLY

FOR LEGEND, ABBREVIATIONS AND GENERAL NOTES SEE SHEET E-1.

MODIFY COMMUNICATION SYSTEM

SCALE: 1" = 50'

E-9

STATE OF CALIFORNIA - DEPARTMENT OF TRANSPORTATION
OFFICE OF ITS

FUNCTIONAL SUPERVISOR: JACQUELINE C. TAN
CALCULATED-DESIGNED BY: PATRICK P. LUI
CHECKED BY: JACQUELINE C. TAN
REVISED BY
DATE REVISED

LAST REVISION 00-00-00
DATE PLOTTED => 16-APR-2012
TIME PLOTTED => 12:17

Dist	COUNTY	ROUTE	POST MILES TOTAL PROJECT	SHEET No.	TOTAL SHEETS
07	LA	5	4.0/5.9	778	1597

REGISTERED ELECTRICAL ENGINEER 1/4/12 DATE

4-9-12
PLANS APPROVAL DATE

REGISTERED PROFESSIONAL ENGINEER PATRICK P. LUI No. E17534 Exp. 06/30/13 ELECTRICAL STATE OF CALIFORNIA

THE STATE OF CALIFORNIA OR ITS OFFICERS OR AGENTS SHALL NOT BE RESPONSIBLE FOR THE ACCURACY OR COMPLETENESS OF SCANNED COPIES OF THIS PLAN SHEET.

NOTE:

FOR ACCURATE RIGHT OF WAY DATA, CONTACT RIGHT OF WAY ENGINEERING AT THE DISTRICT OFFICE.

PROJECT NOTES: (THIS SHEET ONLY)

1. RC SPLICE VAULT, COMMUNICATION CONDUITS, PULL BOXES AND CONTENTS AS PART OF ROADWAY EXCAVATION.
2. SHOWN FOR REFERENCE ONLY. SEE SHHET E-38 FOR INSTALLATION OF RMS No. 0274.
3. RS CCTV CAMERA ASSEMBLY, CCTV CONTROLLER CABINET AND ITS CONTENTS.
4. ADD LAYER 2 ETHERNET SWITCH WITH 2 SFP MODULES AND FDU IN RMS CONTROLLER CABINET.
5. SEE STRUCTURE PLANS FOR CONDUIT INSTALLATION DETAILS.
6. SEE SHEET E-28 FOR JACKING DETAILS.
7. SEE SHEET E-26 NOTE FOR ADDITIONAL KNOCKOUTS.

CONDUIT AND CONDUCTOR SCHEDULE (THIS SHEET ONLY)

CONDUIT/ CONDUCTOR	FUNCTION	RUN 1								RUN 2							RUN 3
48SMFO CABLE	TRUNK CABLE					1							1				
36SMFO CABLE	SPARE DISTRIBUTION						1							1			
48SMFO CABLE	DATA DISTRIBUTION							1							1		
1 INCH INNERDUCT						1	1	1					1	1	1		1
12SMFO CABLE	DISTRIBUTION																1
#12 AWG	TRACER WIRE						1							1			
CONDUIT SIZE		4", MT				4"				3½", MT			3½"				3"

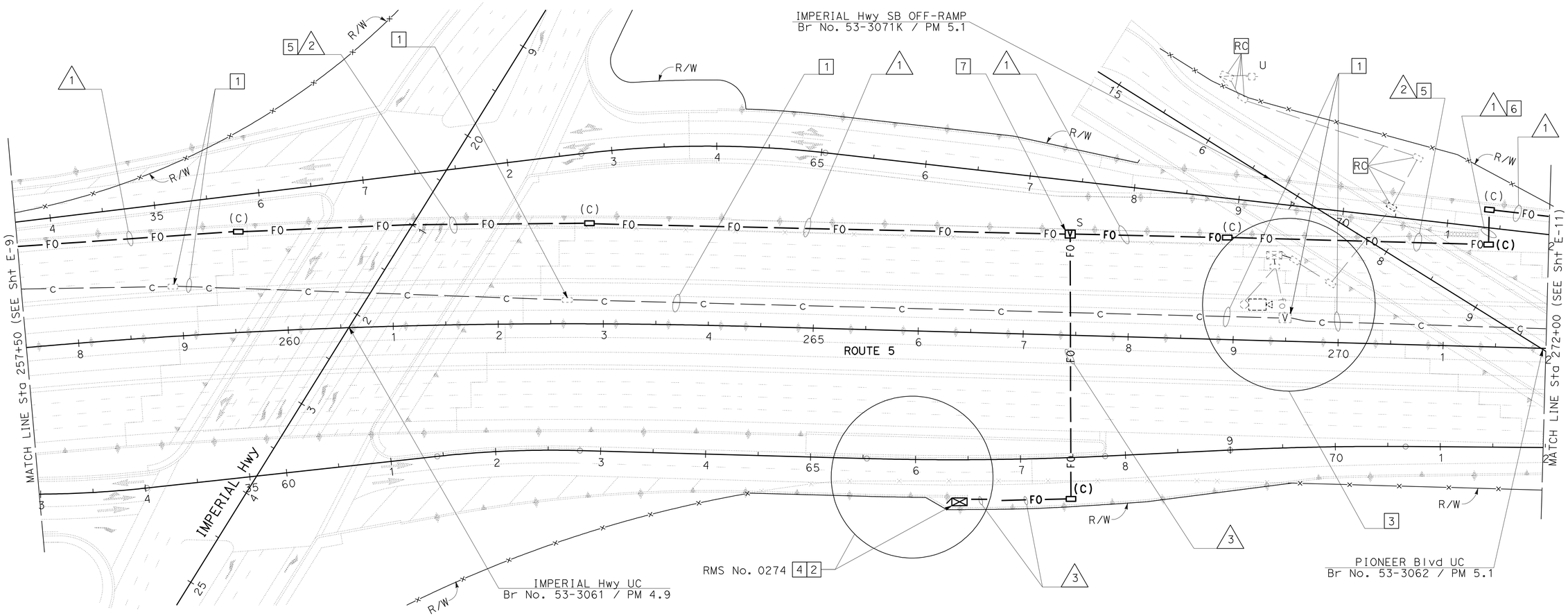

APPROVED FOR ELECTRICAL WORK ONLY

FOR LEGEND, ABBREVIATIONS AND GENERAL NOTES SEE SHEET E-1.

MODIFY COMMUNICATION SYSTEM

SCALE: 1" = 50'

E-10

STATE OF CALIFORNIA - DEPARTMENT OF TRANSPORTATION
Caltrans
OFFICE OF ITS

FUNCTIONAL SUPERVISOR: JACQUELINE C. TAN
CALCULATED-DESIGNED BY: PATRICK P. LUI
CHECKED BY: JACQUELINE C. TAN
REVISED BY
DATE REVISED

LAST REVISION 00-00-00
DATE PLOTTED => 16-APR-2012
TIME PLOTTED => 12:17

Dist	COUNTY	ROUTE	POST MILES TOTAL PROJECT	SHEET No.	TOTAL SHEETS
07	LA	5	4.0/5.9	779	1597

REGISTERED ELECTRICAL ENGINEER — DATE 1/4/12

4-9-12
PLANS APPROVAL DATE

REGISTERED PROFESSIONAL ENGINEER — PATRICK P. LUI — No. E17534 — Exp. 06/30/13 — ELECTRICAL — STATE OF CALIFORNIA

THE STATE OF CALIFORNIA OR ITS OFFICERS OR AGENTS SHALL NOT BE RESPONSIBLE FOR THE ACCURACY OR COMPLETENESS OF SCANNED COPIES OF THIS PLAN SHEET.

NOTE:

FOR ACCURATE RIGHT OF WAY DATA, CONTACT RIGHT OF WAY ENGINEERING AT THE DISTRICT OFFICE.

PROJECT NOTES: (THIS SHEET ONLY)

1. RC COMMUNICATION CONDUITS, PULL BOXES AND CONTENTS AS PART OF ROADWAY EXCAVATION.
2. SEE SHEET E-15 FOR CCTV SA052 AND CMS No. 25.
3. SEE SHEET E-28 FOR JACKING DETAILS.
4. ADD 5#4, 2#6. SEE SHEET E-55 FOR CONDUIT INSTALLATION.
5. SHOWN FOR REFERENCE ONLY. SEE SHEET E-55 FOR NEW SERVICE EQUIPMENT ENCLOSURE, PULL BOXES AND CONDUITS INSTALLATION.
6. SHOWN FOR REFERENCE ONLY. SEE SHEET E-49 FOR INSTALLATION OF TMS 2026.
7. SEE SHEET E-26 NOTE 10 FOR ADDITIONAL KNOCKOUTS.

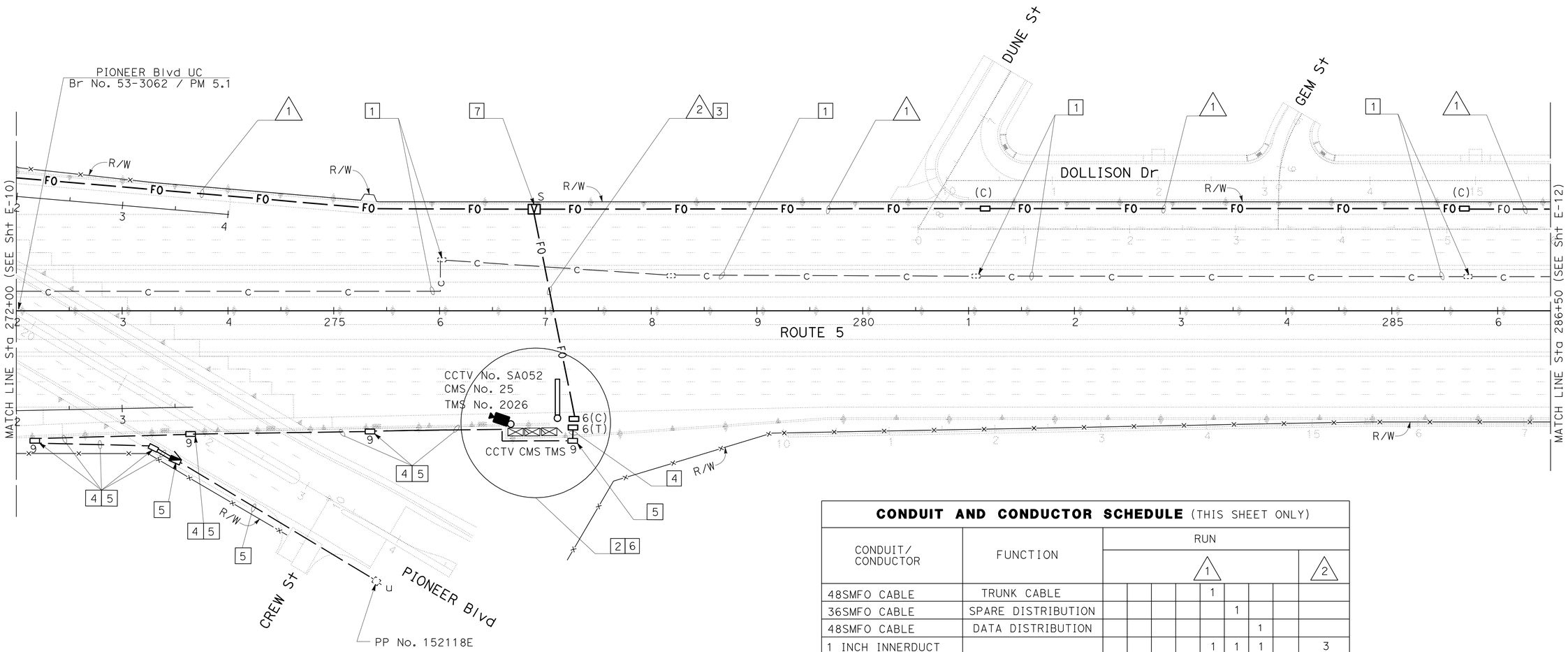

CONDUIT AND CONDUCTOR SCHEDULE (THIS SHEET ONLY)

CONDUIT/ CONDUCTOR	FUNCTION	RUN								
						1				2
48SMFO CABLE	TRUNK CABLE					1				
36SMFO CABLE	SPARE DISTRIBUTION						1			
48SMFO CABLE	DATA DISTRIBUTION							1		
1 INCH INNERDUCT						1	1	1		3
12SMFO	DISTRIBUTION									3
#12 AWG	TRACER WIRE						1			
CONDUIT SIZE				4", MT			4"			3"

APPROVED FOR ELECTRICAL WORK ONLY

FOR LEGEND, ABBREVIATIONS AND GENERAL NOTES SEE SHEET E-1.

MODIFY COMMUNICATION SYSTEM

SCALE: 1" = 50'

E-11

STATE OF CALIFORNIA - DEPARTMENT OF TRANSPORTATION
Caltrans
OFFICE OF ITS

FUNCTIONAL SUPERVISOR: JACQUELINE C. TAN
CALCULATED-DESIGNED BY: PATRICK P. LUI
CHECKED BY: JACQUELINE C. TAN
REVISED BY
DATE REVISED

LAST REVISION 00-00-00 | DATE PLOTTED => 16-APR-2012 | TIME PLOTTED => 12:18

Dist	COUNTY	ROUTE	POST MILES TOTAL PROJECT	SHEET No.	TOTAL SHEETS
07	LA	5	4.0/5.9	780	1597

REGISTERED ELECTRICAL ENGINEER 1/4/12 DATE

4-9-12
PLANS APPROVAL DATE

REGISTERED PROFESSIONAL ENGINEER PATRICK P. LUI No. E17534 Exp. 06/30/13 ELECTRICAL STATE OF CALIFORNIA

THE STATE OF CALIFORNIA OR ITS OFFICERS OR AGENTS SHALL NOT BE RESPONSIBLE FOR THE ACCURACY OR COMPLETENESS OF SCANNED COPIES OF THIS PLAN SHEET.

NOTE:

FOR ACCURATE RIGHT OF WAY DATA, CONTACT RIGHT OF WAY ENGINEERING AT THE DISTRICT OFFICE.

PROJECT NOTES: (THIS SHEET ONLY)

1. RC PULL BOXES, COMMUNICATION CONDUITS AND CONTENTS AS PART OF ROADWAY EXCAVATION.
2. RS CMS CONTROLLER CABINET AND ITS CONTENTS,
3. RS CMS PANEL MODULES, CMS CONTROL COMPARTMENT AND ITS CONTENTS. RC CMS CABLES.

CONDUIT AND CONDUCTOR SCHEDULE (THIS SHEET ONLY)

CONDUIT/ CONDUCTOR	FUNCTION	RUN 1							
48SMFO CABLE	TRUNK CABLE					1			
36SMFO CABLE	SPARE DISTRIBUTION						1		
48SMFO CABLE	DATA DISTRIBUTION							1	
1 INCH INNERDUCT						1	1	1	
#12 AWG	TRACER WIRE	1							
CONDUIT SIZE		4", MT				4"			

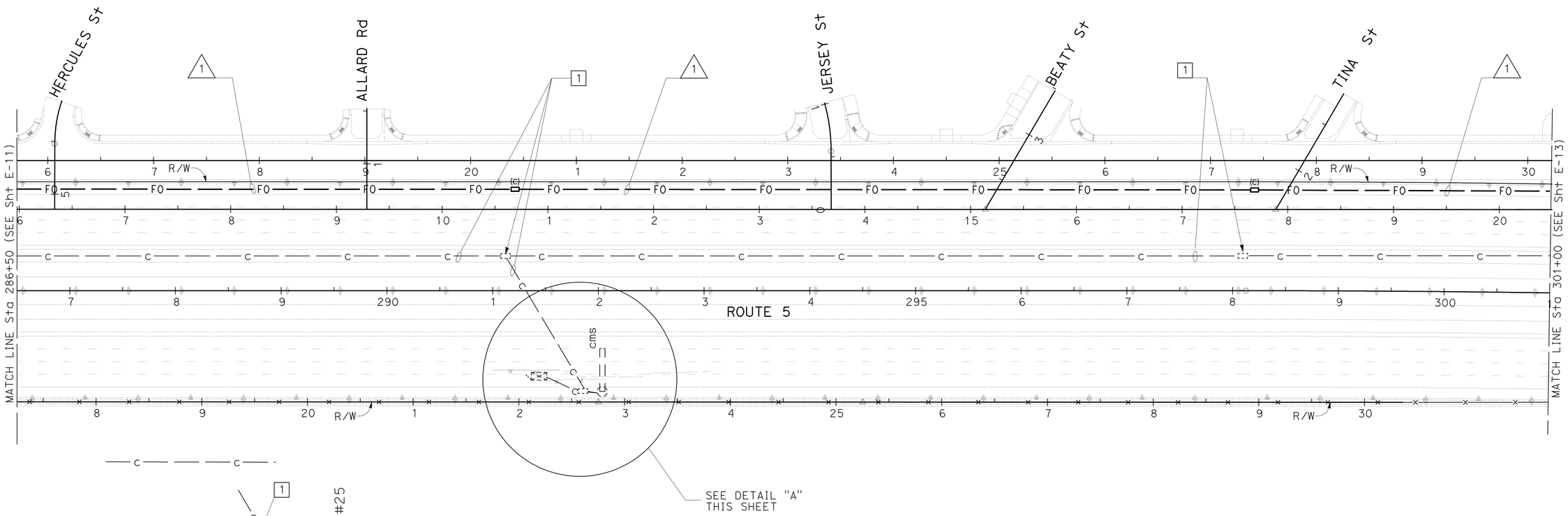

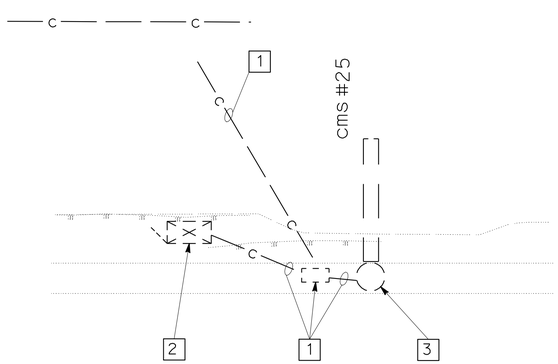

DETAIL "A"

APPROVED FOR ELECTRICAL WORK ONLY

FOR LEGEND, ABBREVIATIONS AND GENERAL NOTES SEE SHEET E-1.

MODIFY COMMUNICATION SYSTEM

SCALE: 1" = 50'

E-12

REVISED BY	DATE REVISED

CALCULATED-DESIGNED BY	CHECKED BY
PATRICK P. LUI	JACQUELINE C. TAN

FUNCTIONAL SUPERVISOR: JACQUELINE C. TAN

STATE OF CALIFORNIA - DEPARTMENT OF TRANSPORTATION
Caltrans
OFFICE OF ITS

LAST REVISION 00-00-00 | DATE PLOTTED => 16-APR-2012 | TIME PLOTTED => 12:18

Dist	COUNTY	ROUTE	POST MILES TOTAL PROJECT	SHEET No.	TOTAL SHEETS
07	LA	5	4.0/5.9	781	1597

REGISTERED ELECTRICAL ENGINEER 1/4/12 DATE

4-9-12
PLANS APPROVAL DATE

REGISTERED PROFESSIONAL ENGINEER PATRICK P. LUI No. E17534 Exp. 06/30/13 ELECTRICAL STATE OF CALIFORNIA

THE STATE OF CALIFORNIA OR ITS OFFICERS OR AGENTS SHALL NOT BE RESPONSIBLE FOR THE ACCURACY OR COMPLETENESS OF SCANNED COPIES OF THIS PLAN SHEET.

NOTE:

FOR ACCURATE RIGHT OF WAY DATA, CONTACT
RIGHT OF WAY ENGINEERING AT THE DISTRICT OFFICE.

PROJECT NOTES: (THIS SHEET ONLY)

1. RC PULL BOX, COMMUNICATION CONDUITS AND CONTENTS AS PART OF ROADWAY EXCAVATION.
2. COIL AND CAP ENDS OF 60 FEET OF SMFO CABLES INSIDE SPLICE VAULT.
3. INSTALL 3 FOSC IN THE SPLICE VAULT. SEE SHEETS E-22 AND E-26.
4. REFER TO PROJECT 0700001835 (EA 07-215954) FOR DETAILS.

CONDUIT AND CONDUCTOR SCHEDULE (THIS SHEET ONLY)

CONDUIT/ CONDUCTOR	FUNCTION	RUN 1							
48SMFO CABLE	TRUNK CABLE					1			
36SMFO CABLE	SPARE DISTRIBUTION						1		
48SMFO CABLE	DATA DISTRIBUTION							1	
1 INCH INNERDUCT						1	1	1	
#12 AWG	TRACER WIRE	1							
CONDUIT SIZE		4", MT				4"			

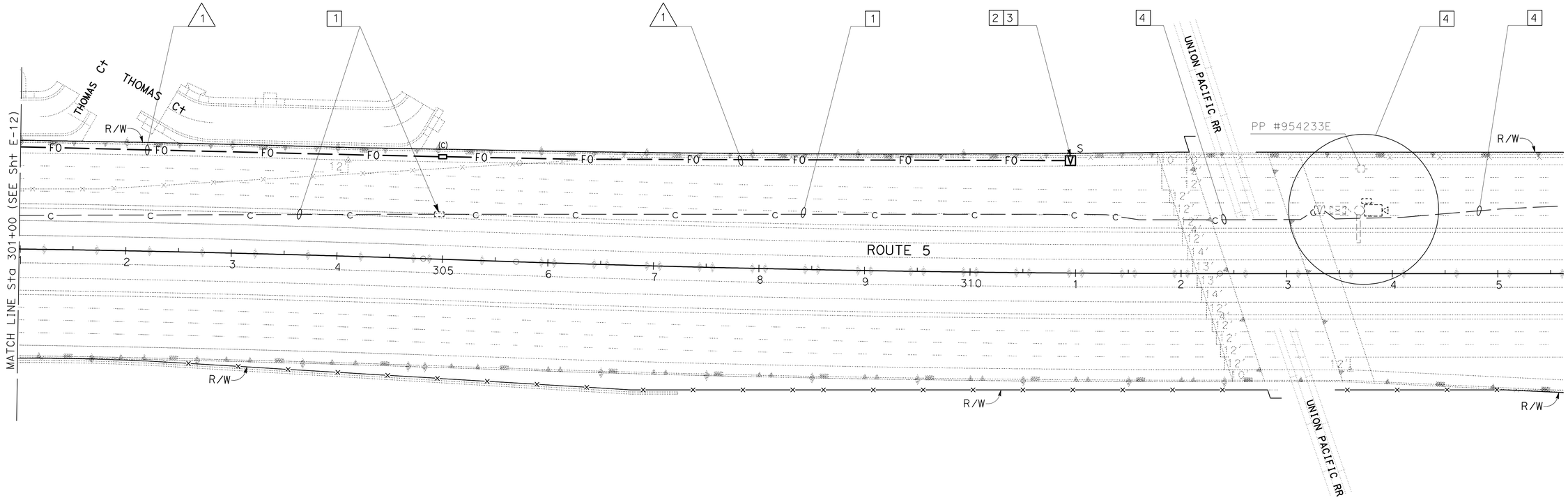

APPROVED FOR ELECTRICAL WORK ONLY

FOR LEGEND AND ABBREVIATIONS AND GENEREAL NOTES SEE SHEET E-1.

MODIFY COMMUNICATION SYSTEM

SCALE: 1" = 50'

E-13

STATE OF CALIFORNIA - DEPARTMENT OF TRANSPORTATION
Caltrans
OFFICE OF ITS

FUNCTIONAL SUPERVISOR: JACQUELINE C. TAN
CALCULATED-DESIGNED BY: PATRICK P. LUI
CHECKED BY: JACQUELINE C. TAN
REVISED BY
DATE REVISED

LAST REVISION 00-00-00
DATE PLOTTED => 16-APR-2012
TIME PLOTTED => 12:18

Dist	COUNTY	ROUTE	POST MILES TOTAL PROJECT	SHEET No.	TOTAL SHEETS
07	LA	5	4.0/5.9	782	1597

REGISTERED ELECTRICAL ENGINEER 1/4/12 DATE

4-9-12
PLANS APPROVAL DATE

REGISTERED PROFESSIONAL ENGINEER PATRICK P. LUI No. E17534 Exp. 06/30/13 ELECTRICAL STATE OF CALIFORNIA

THE STATE OF CALIFORNIA OR ITS OFFICERS OR AGENTS SHALL NOT BE RESPONSIBLE FOR THE ACCURACY OR COMPLETENESS OF SCANNED COPIES OF THIS PLAN SHEET.

NOTE:

FOR ACCURATE RIGHT OF WAY DATA, CONTACT RIGHT OF WAY ENGINEERING AT THE DISTRICT OFFICE.

PROJECT NOTES: (THIS SHEET ONLY)

1. FOR THE PULL BOXES AND CONDUIT INSTALLATION, SEE SHEET E-47.
2. ADD 5#4, 2#6. SEE SHEET E-47 FOR THE PULL BOX AND CONDUIT INSTALLATION.
3. INSTALL 2"C, 2#4, 2#6, 1#8G.
4. INSTALL 2"C, 2#4, 1#8G.
5. INSTALL 2"C, 12SMFO.
6. ADD 12SMFO.
7. INSTALL 2-3"C, 12SMFO, COMPOSITE VIDEO CABLE.
8. INSTALL 2-3"C, 12SMFO, STATE-FURNISHED CMS CONTROL CABLES.
9. INSTALL 2"C, COMPOSITE VIDEO CABLE (CCTV). SEE SHEET E-17 FOR DETAILS.
10. INSTALL 3"C, STATE-FURNISHED CMS CONTROL CABLES.
11. SHOWN FOR REFERENCE ONLY. SEE SHEET E-8.
12. INSTALL STATE-FURNISHED MODEL 170 CONTROLLER ASSEMBLY SERIAL SERVER, LAYER 2 ETHERNET SWITCH WITH 2 SFP MODULES AND FDU ON NEW FOUNDATION. SEE SHEETS E-19 AND E-21 FOR CONTROLLER CABINET FOUNDATION AND CABINET WIRING DETAILS.
13. INSTALL STATE-FURNISHED MODEL 500 LED CMS PANEL ON SIGN STRUCTURE. SEE SHEET SQ-14 FOR LOCATION DETAILS.
14. INSTALL 3"C, 2#4, 1#4G. SEE SHEET E-19 FOR WIRING DETAILS.
15. INSTALL MODEL 334-TV CONTROLLER CABINET, TIA-232 TO TIA-422 CONVERTER, DIGITAL FIELD VIDEO ENCODER, LAYER 2 ETHERNET SWITCH WITH 2 SFP MODULES, FDU AND TEMPERATURE SENSOR ON NEW FOUNDATION. SEE SHEET E-18 AND E-21 FOR CONTROLLER CABINET FOUNDATION AND CABINET WIRING DETAILS.
16. INSTALL CCTV CAMERA POLE TYPE CCTV 35 ON NEW FOUNDATION. INSTALL CCTV CAMERA ASSEMBLY ON POLE. SEE SHEET E-16 FOR DETAILS.
17. SHOWN FOR REFERENCE ONLY. SEE SHEET E-47 FOR INSTALLATION OF TMS 2580.
18. INSTALL 2"C, 2#6.

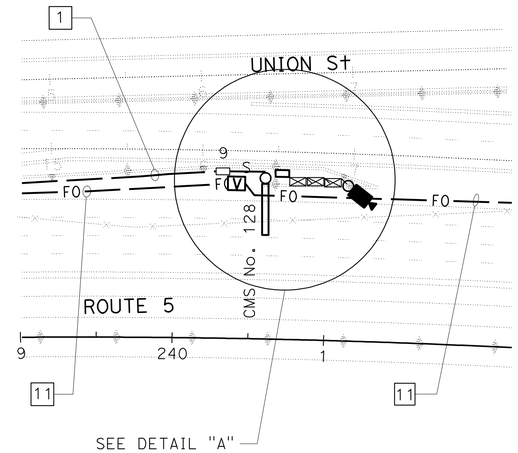

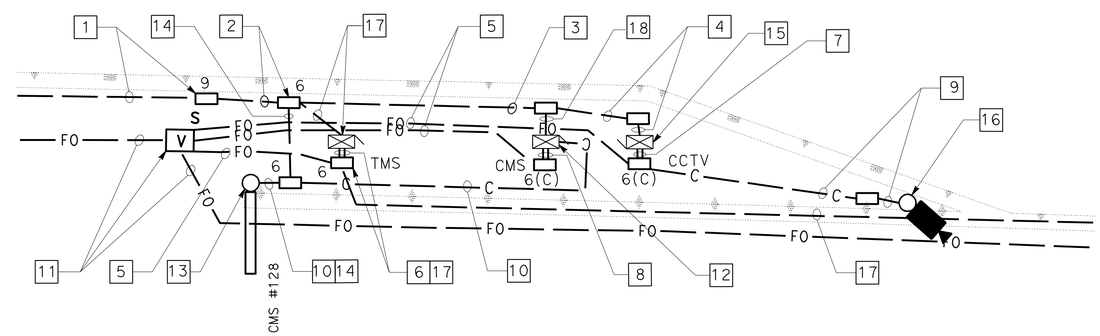

DETAIL "A"
NO SCALE

MODIFY COMMUNICATION SYSTEM
(CHANGEABLE MESSAGE SIGN SYSTEM LOCATION #128)
(CLOSED CIRCUIT TELEVISION SYSTEM LOCATION SA042)

SCALE: 1" = 50'

APPROVED FOR ELECTRICAL WORK ONLY

FOR LEGEND, ABBREVIATIONS AND GENERAL NOTES SEE SHEET E-1.

E-14

STATE OF CALIFORNIA - DEPARTMENT OF TRANSPORTATION
Caltrans
OFFICE OF ITS

FUNCTIONAL SUPERVISOR: JACQUELINE C. TAN
CALCULATED-DESIGNED BY: PATRICK P. LUI
CHECKED BY: JACQUELINE C. TAN
REVISED BY
DATE REVISED

LAST REVISION 00-00-00 | DATE PLOTTED => 16-APR-2012 | TIME PLOTTED => 12:18

Dist	COUNTY	ROUTE	POST MILES TOTAL PROJECT	SHEET No.	TOTAL SHEETS
07	LA	5	4.0/5.9	783	1597

REGISTERED ELECTRICAL ENGINEER 1/4/12 DATE

4-9-12
PLANS APPROVAL DATE

REGISTERED PROFESSIONAL ENGINEER PATRICK P. LUI No. E17534 Exp. 06/30/13 ELECTRICAL STATE OF CALIFORNIA

THE STATE OF CALIFORNIA OR ITS OFFICERS OR AGENTS SHALL NOT BE RESPONSIBLE FOR THE ACCURACY OR COMPLETENESS OF SCANNED COPIES OF THIS PLAN SHEET.

NOTE:

FOR ACCURATE RIGHT OF WAY DATA, CONTACT
RIGHT OF WAY ENGINEERING AT THE DISTRICT OFFICE.

PROJECT NOTES: (THIS SHEET ONLY)

1. ADD 5#4, 2#6. SEE SHEET E-55 FOR CONDUITS INSTALLATION.
2. INSTALL 2"C, 2#4, 2#6, 1#8G.
3. INSTALL 2"C, 2#4, 1#8G.
4. INSTALL 2"C, 12SMFO.
5. ADD 12SMFO.
6. INSTALL 2-3"C, 12SMFO, STATE-FURNISHED CMS CONTROL CABLES.
7. INSTALL 2-3"C, 12SMFO, COMPOSITE VIDEO CABLE.
8. INSTALL 2"C, COMPOSITE VIDEO CABLE.
9. INSTALL 3"C, STATE-FURNISHED CMS CONTROL CABLES.
10. SHOWN FOR REFERENCE ONLY. SEE SHEET E-11.
11. INSTALL STATE-FURNISHED MODEL 170 CONTROLLER ASSEMBLY, SERIAL SERVER, LAYER 2 ETHERNET SWITCH WITH 2 SFP MODULES AND FDU ON NEW FOUNDATION. SEE SHEET E- 21 AND E-22 FOR CONTROLLER CABINET FOUNDATION AND CABINET WIRING DETAILS.
12. INSTALL STATE-FURNISHED MODEL 500 CMS LED PANEL ON SIGN STRUCTURE. SEE SHEET SQ-14 FOR LOCATION DETAILS.
13. INSTALL 3"C, 3#4, 1#4G. SEE SHEET E-19 FOR WIRING DETAILS.
14. INSTALL MODEL 334-TV CONTROLLER CABINET, EIA-232 TO EIA-422 CONVERTER, VIDEO ENCODER, LAYER 2 ETHERNET SWITCH WITH 2 SFP MODULES, FDU AND TEMPERATURE SENSOR ON NEW FOUNDATION. SEE SHEET E- 20 AND E-21 FOR CONTROLLER CABINET FOUNDATION AND CABINET WIRING DETAILS.
15. INSTALL CCTV CAMERA POLE TYPE CCTV 35 ON NEW FOUNDATION. INSTALL CCTV CAMERA ASSEMBLY ON POLE. SEE SHEET E-16 FOR DETAILS.
16. SHOWN FOR REFERENCE ONLY. SEE ELECTRICAL PLAN SHEET E-49 FOR TMS 2026.
17. SHOWN FOR REFERENCE ONLY. SEE SHEET E-55 FOR SERVICE EQUIPMENT ENCLOSURE INSTALLATION.
18. INSTALL 2"C, 2#6.

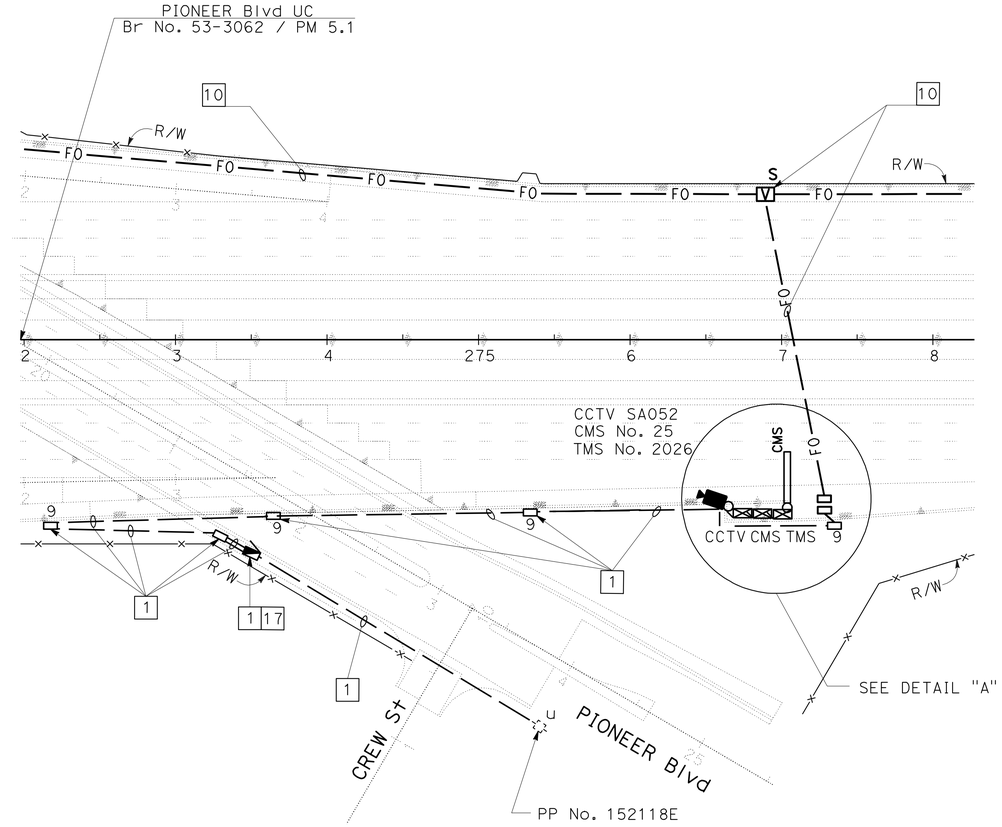

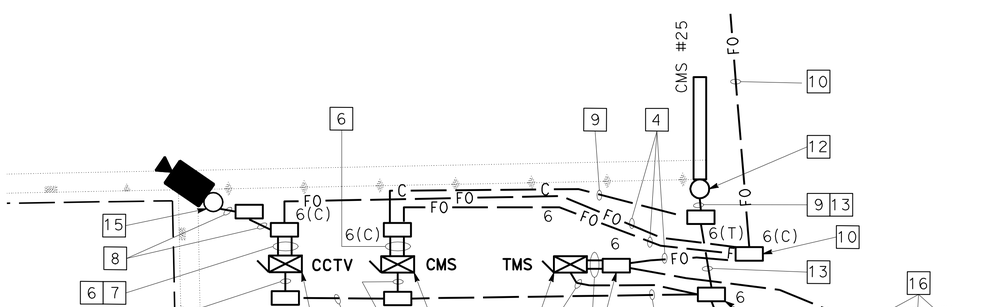

DETAIL "A"
NO SCALE

APPROVED FOR ELECTRICAL WORK ONLY

FOR LEGEND, ABBREVIATIONS AND GENERAL NOTES SEE SHEET E-1.

MODIFY COMMUNICATION SYSTEM
(CHANGEABLE MESSAGE SIGN SYSTEM LOCATION #25)
(CLOSED CIRCUIT TELEVISION SYSTEM LOCATION SA052)

SCALE: 1" = 50'

E-15

STATE OF CALIFORNIA - DEPARTMENT OF TRANSPORTATION
OFFICE OF ITS

FUNCTIONAL SUPERVISOR: JACQUELINE C. TAN
CALCULATED-DESIGNED BY: PATRICK P. LUI
CHECKED BY: JACQUELINE C. TAN
REVISED BY
DATE REVISED

LAST REVISION 00-00-00
DATE PLOTTED => 16-APR-2012
TIME PLOTTED => 12:18

Dist	COUNTY	ROUTE	POST MILES TOTAL PROJECT	SHEET No.	TOTAL SHEETS
07	LA	5	4.0/5.9	784	1597

REGISTERED ELECTRICAL ENGINEER — DATE 1/4/12

4-9-12
PLANS APPROVAL DATE

REGISTERED PROFESSIONAL ENGINEER — PATRICK P. LUI — No. E17534 — Exp. 06/30/13 — ELECTRICAL — STATE OF CALIFORNIA

THE STATE OF CALIFORNIA OR ITS OFFICERS OR AGENTS SHALL NOT BE RESPONSIBLE FOR THE ACCURACY OR COMPLETENESS OF SCANNED COPIES OF THIS PLAN SHEET.

NOTES: (THIS SHEET ONLY)

1. THE CONTRACTOR MUST PROVIDE CABLE LENGTH FROM THE CAMERA ASSEMBLY TO THE VIDEO ENCODER AND PDA INCLUDING CONNECTORS AS SHOWN IN THIS SHEET.
2. ALL CABLES MUST BE ALUMINUM SHIELDED TO PREVENT CROSS TALK.
3. IN THE CCTV CAMERA CONTROLLER CABINET, THE NUMBER INDENTIFIES THE SPECIFIC CONDUCTOR TO BE USED FOR THE INDICATED FUNCTION.
4. CONNECT ALL DRAIN WIRES OF SHIELDED-CONDUCTORS TO CABINET GROUND AT THE LOCAL PATCH PANEL.
5. INSTALL CONNECTORS IN ACCORDANCE WITH THE MANUFACTURER'S INSTRUCTIONS.
6. WATERPROOF ALL CONNECTORS AND CABLES USING WATER-TIGHT GROMMETS, SEALING COMPOUNDS AND TAPE.
7. IF REQUIRED, THE CONTRACTOR MUST INSTALL ADAPTER MOUNTING PLATES TO MOUNT CCTV CAMERA ON POLE.

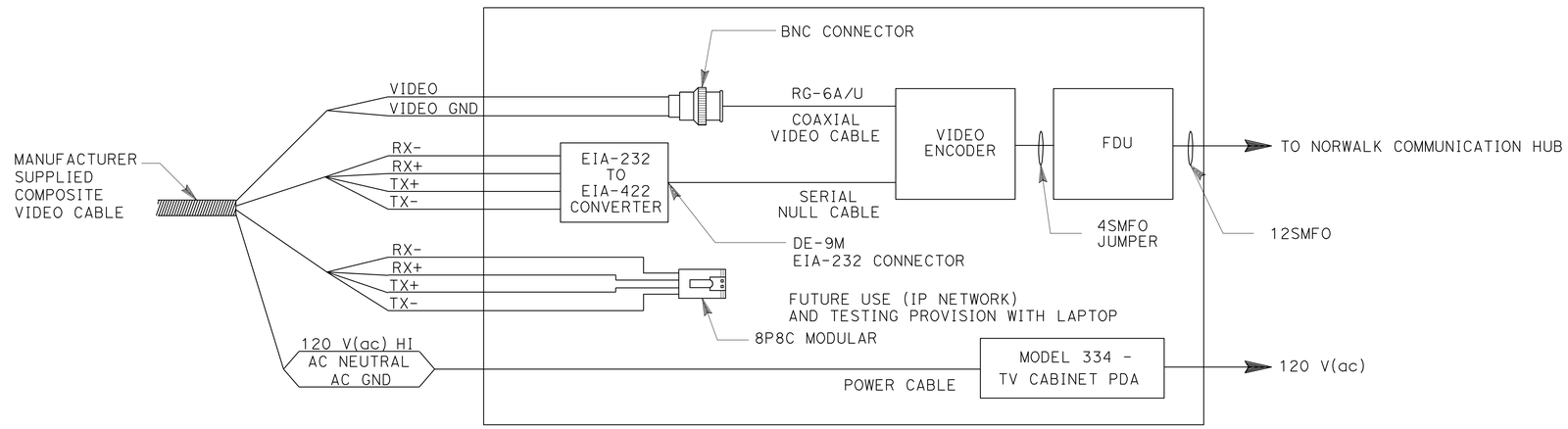

MODEL 334-TV CCTV CAMERA CONTROLLER CABINET

TYPICAL WIRING DIAGRAM

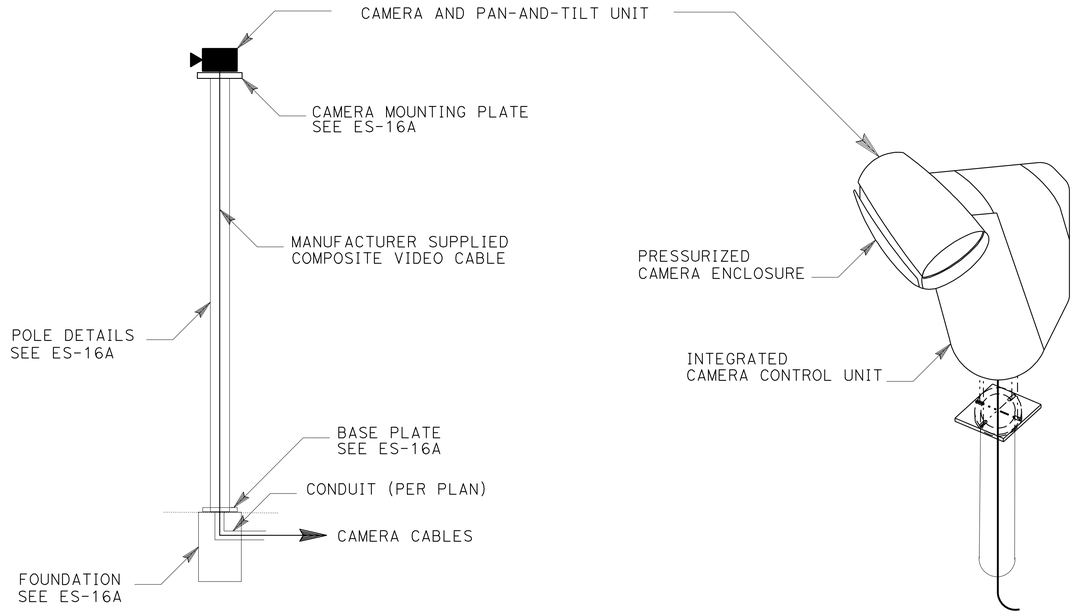

TYPICAL CAMERA WITH PAN-AND-TILT UNIT

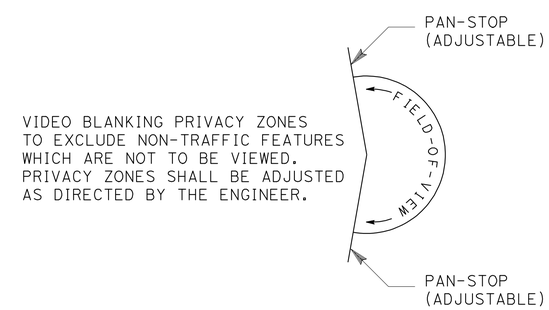

ADJUSTABLE PAN-STOP DETAIL

MODIFY COMMUNICATION SYSTEM
(CLOSED CIRCUIT TELEVISION CAMERA SYSTEM WIRING DIAGRAM WITH PAN-AND-TILT UNIT)

NO SCALE

FOR LEGEND, ABBREVIATIONS AND GENERAL NOTES SEE SHEET E-1.

E-16

STATE OF CALIFORNIA - DEPARTMENT OF TRANSPORTATION — OFFICE OF ITS — Caltrans

FUNCTIONAL SUPERVISOR: JACQUELINE C. TAN
CALCULATED-DESIGNED BY: PATRICK P. LUI — CHECKED BY: JACQUELINE C. TAN
REVISED BY — DATE REVISED

LAST REVISION 00-00-00 — DATE PLOTTED => 16-APR-2012 — TIME PLOTTED => 12:18

Dist	COUNTY	ROUTE	POST MILES TOTAL PROJECT	SHEET No.	TOTAL SHEETS
07	LA	5	4.0/5.9	785	1597

REGISTERED ELECTRICAL ENGINEER 1/4/12 DATE

4-9-12
PLANS APPROVAL DATE

REGISTERED PROFESSIONAL ENGINEER PATRICK P. LUI No. E17534 Exp. 06/30/11 ELECTRICAL STATE OF CALIFORNIA

THE STATE OF CALIFORNIA OR ITS OFFICERS OR AGENTS SHALL NOT BE RESPONSIBLE FOR THE ACCURACY OR COMPLETENESS OF SCANNED COPIES OF THIS PLAN SHEET.

PROJECT NOTE: (THIS SHEET ONLY)

1 CONNECTORIZING DONE BY THE CONTRACTOR AT THE MODEL 334-TV CONTROLLER CABINET

NOTE: (SHEETS E-16 TO E-17)

ALL COMPONENTS AND CONNECTORS MUST MEET NEMA TS 2 REQUIREMENTS.

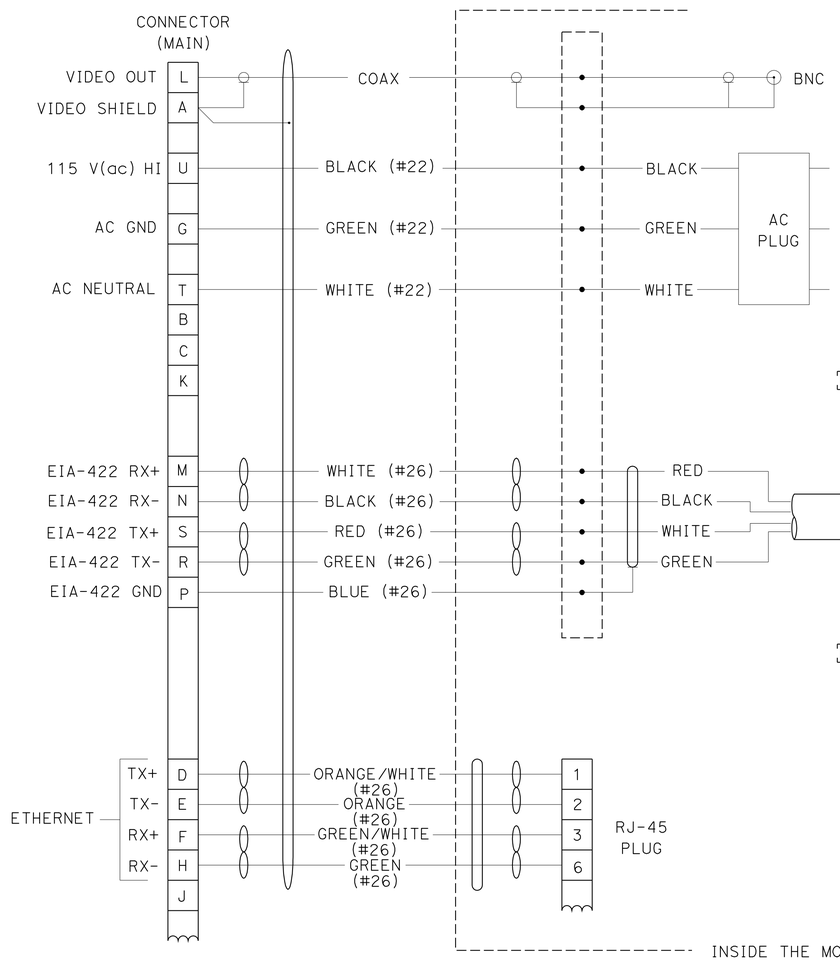

CABLE SCHEMATIC

SEE SHEET E-16 FOR DETAIL

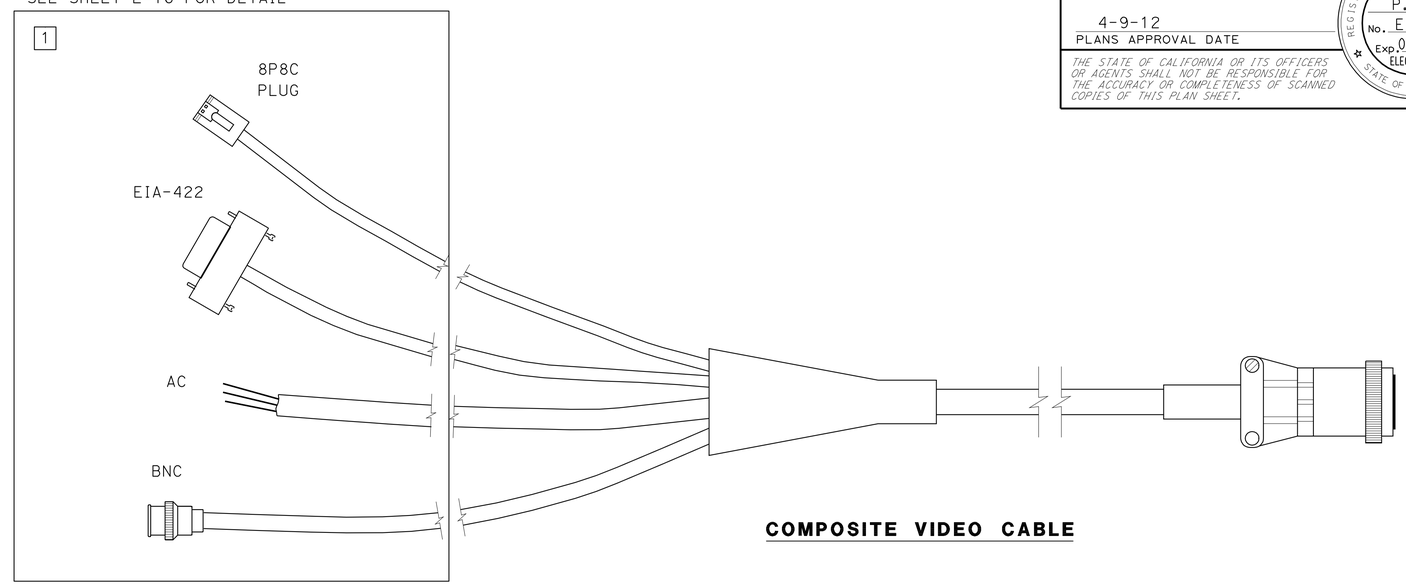

COMPOSITE VIDEO CABLE

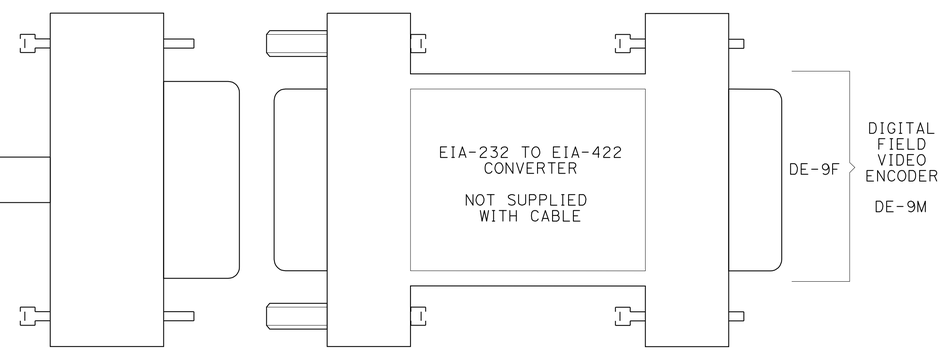

EIA-232 TO EIA-422 CONVERTER

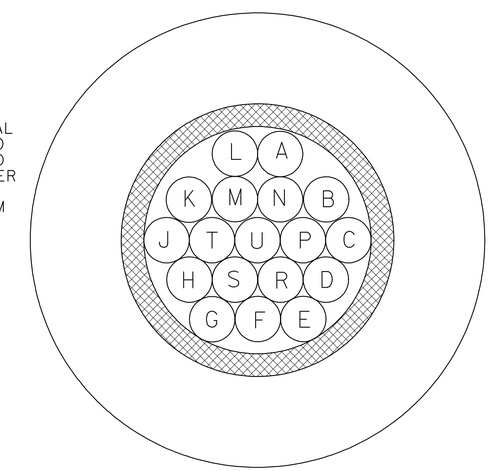

COMPOSITE VIDEO CABLE CROSS SECTION

MODIFY COMMUNICATION SYSTEM
(CLOSED CIRCUIT TELEVISION CAMERA SYSTEM COMPOSITE VIDEO CABLE DETAILS)

NO SCALE

FOR LEGENDS, ABBREVIATIONS AND GENERAL NOTES SEE SHEET E-1.

E-17

STATE OF CALIFORNIA - DEPARTMENT OF TRANSPORTATION
Caltrans® OFFICE OF ITS

FUNCTIONAL SUPERVISOR: JACQUELINE TAN
CALCULATED-DESIGNED BY: PATRICK P. LUI
CHECKED BY: JACQUELINE C. TAN
REVISED BY
DATE REVISED

LAST REVISION 00-00-00
DATE PLOTTED => 16-APR-2012
TIME PLOTTED => 12:18

Dist	COUNTY	ROUTE	POST MILES TOTAL PROJECT	SHEET No.	TOTAL SHEETS
07	LA	5	4.0/5.9	786	1597

REGISTERED ELECTRICAL ENGINEER 1/4/12 DATE

4-9-12
PLANS APPROVAL DATE

REGISTERED PROFESSIONAL ENGINEER PATRICK P. LUI No. E17534 Exp. 06/30/13 ELECTRICAL STATE OF CALIFORNIA

THE STATE OF CALIFORNIA OR ITS OFFICERS OR AGENTS SHALL NOT BE RESPONSIBLE FOR THE ACCURACY OR COMPLETENESS OF SCANNED COPIES OF THIS PLAN SHEET.

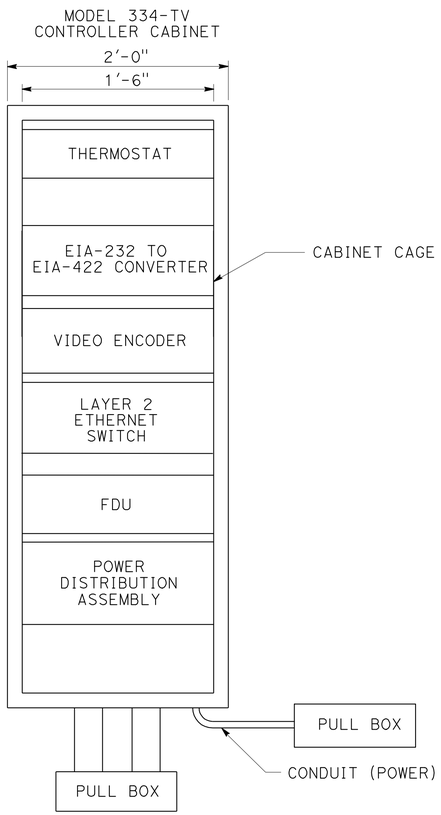

TYPICAL MODEL 334-TV CONTROLLER CABINET EQUIPMENT LAYOUT

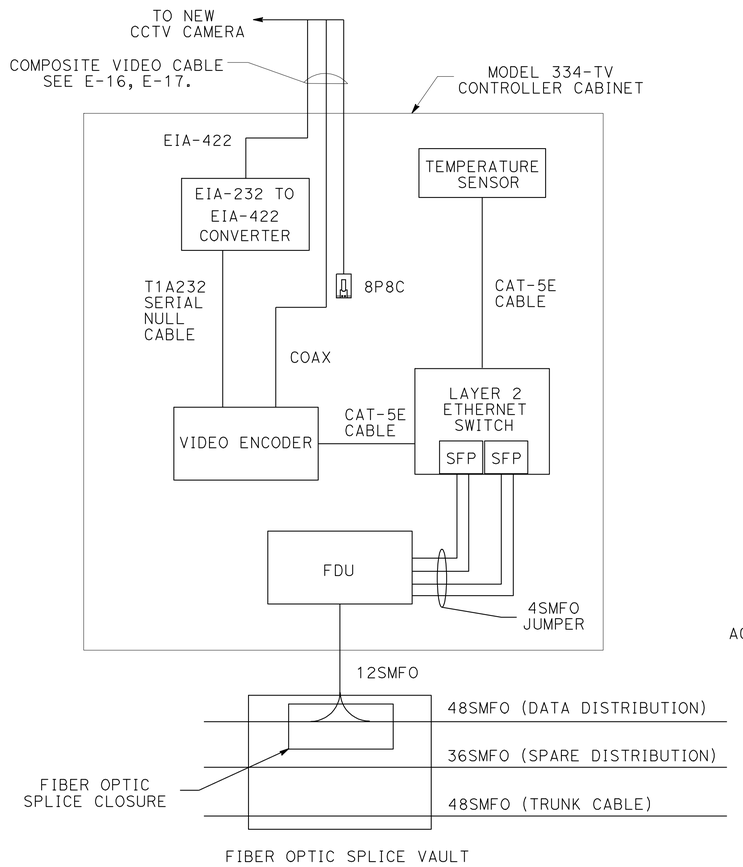

TYPICAL MODEL 344-TV CONTROLLER CABINET WIRING DETAIL

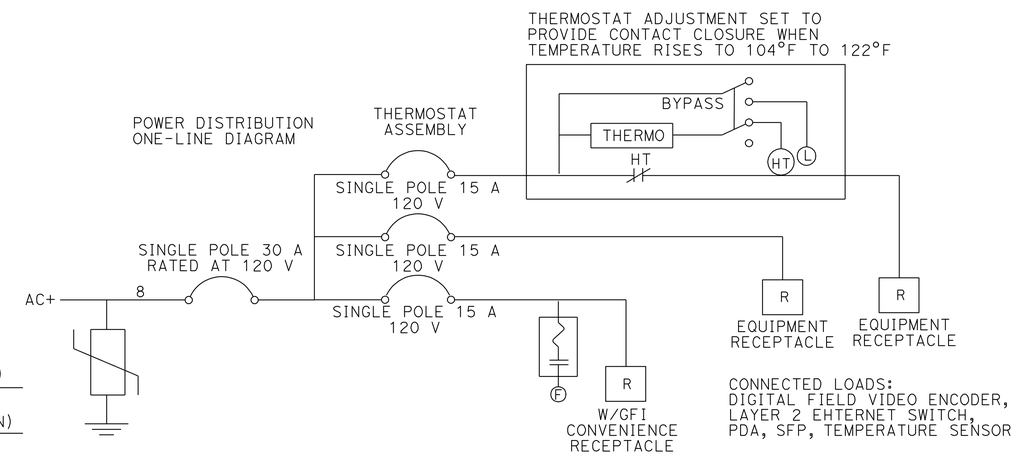

TYPICAL POWER DISTRIBUTION ASSEMBLY

MODIFY COMMUNICATION SYSTEM
(CLOSED CIRCUIT TELEVISION CAMERA SYSTEM MODEL 334-TV CONTROLLER CABINET DETAILS)

NO SCALE

FOR LEGEND, ABBREVIATIONS AND GENERAL NOTES SEE SHEET E-1.

E-18

STATE OF CALIFORNIA - DEPARTMENT OF TRANSPORTATION
Caltrans® OFFICE OF ITS

FUNCTIONAL SUPERVISOR: JACQUELINE C. TAN
CALCULATED-DESIGNED BY: PATRICK P. LUI
CHECKED BY: JACQUELINE C. TAN
REVISED BY
DATE REVISED

LAST REVISION 00-00-00 | DATE PLOTTED => 16-APR-2012 | TIME PLOTTED => 12:18

Dist	COUNTY	ROUTE	POST MILES TOTAL PROJECT	SHEET No.	TOTAL SHEETS
07	LA	5	4.0/5.9	787	1597

REGISTERED ELECTRICAL ENGINEER 1/4/12 DATE

4-9-12
PLANS APPROVAL DATE

REGISTERED PROFESSIONAL ENGINEER PATRICK P. LUI No. E17534 Exp. 06/30/13 ELECTRICAL STATE OF CALIFORNIA

THE STATE OF CALIFORNIA OR ITS OFFICERS OR AGENTS SHALL NOT BE RESPONSIBLE FOR THE ACCURACY OR COMPLETENESS OF SCANNED COPIES OF THIS PLAN SHEET.

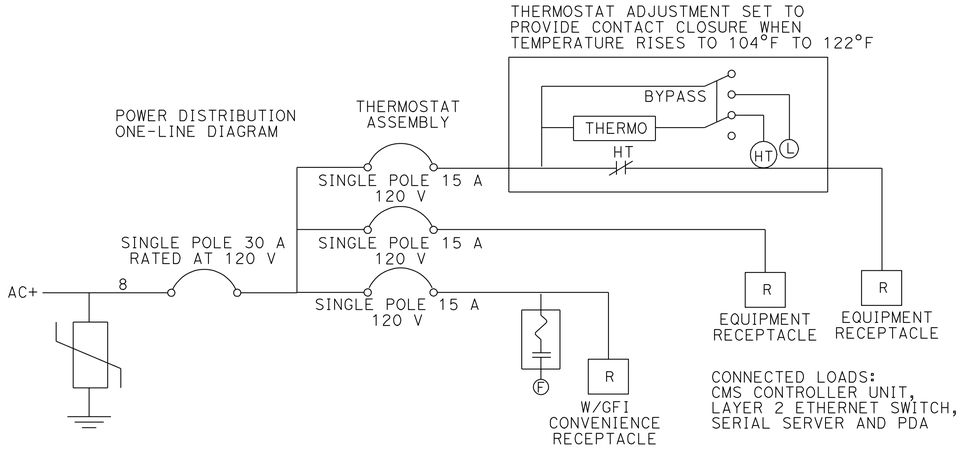

TYPICAL POWER DISTRIBUTION ASSEMBLY

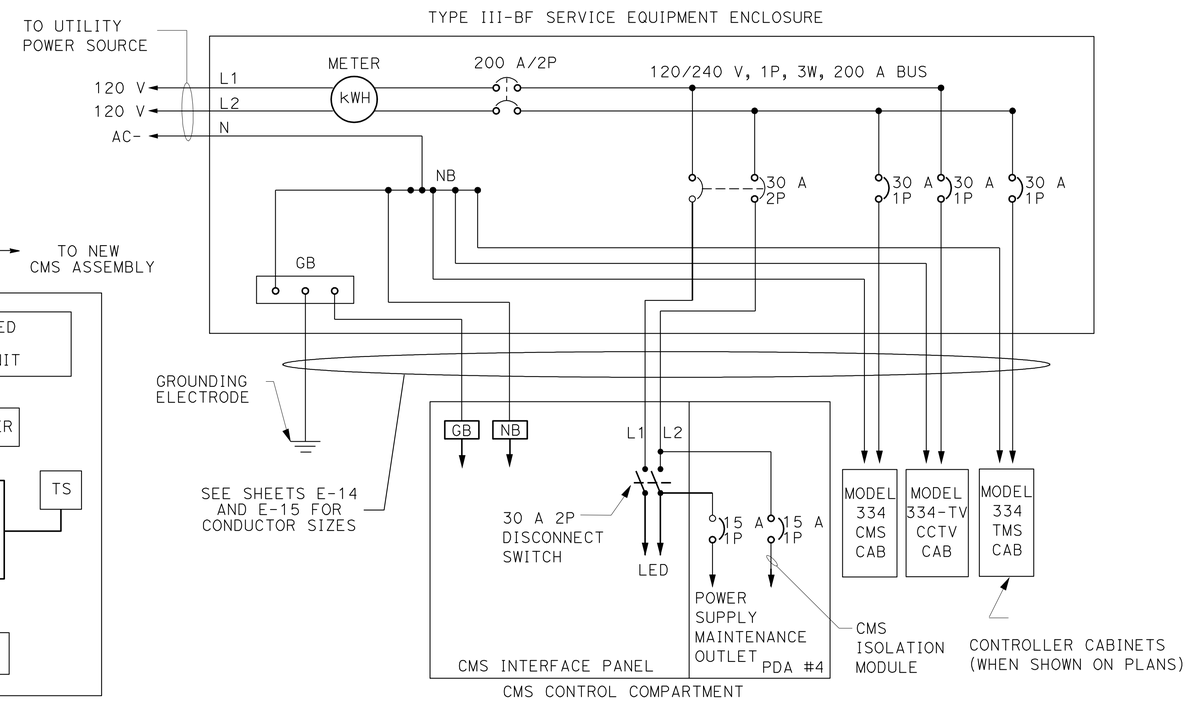

TYPICAL MODEL 500 CMS SYSTEM WIRING AND CIRCUIT BREAKERS

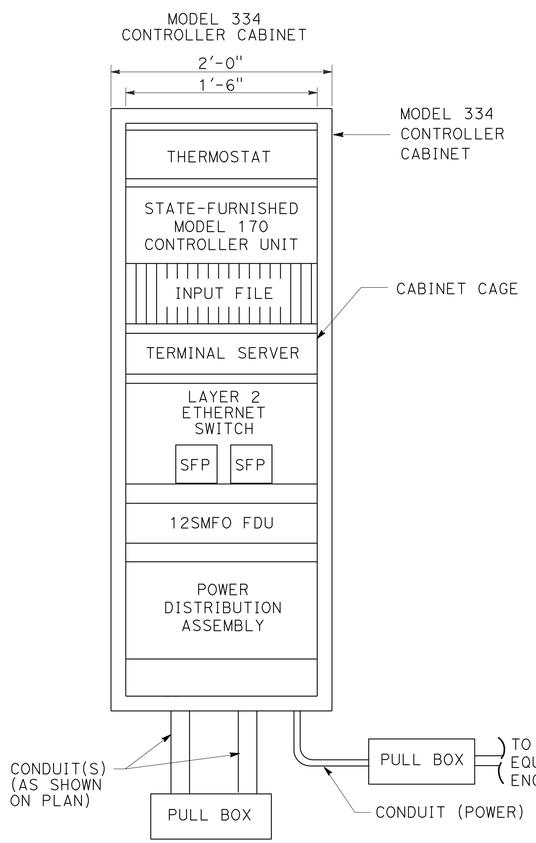

TYPICAL MODEL 334 CONTROLLER CABINET EQUIPMENT LAYOUT FOR RMS/TMS

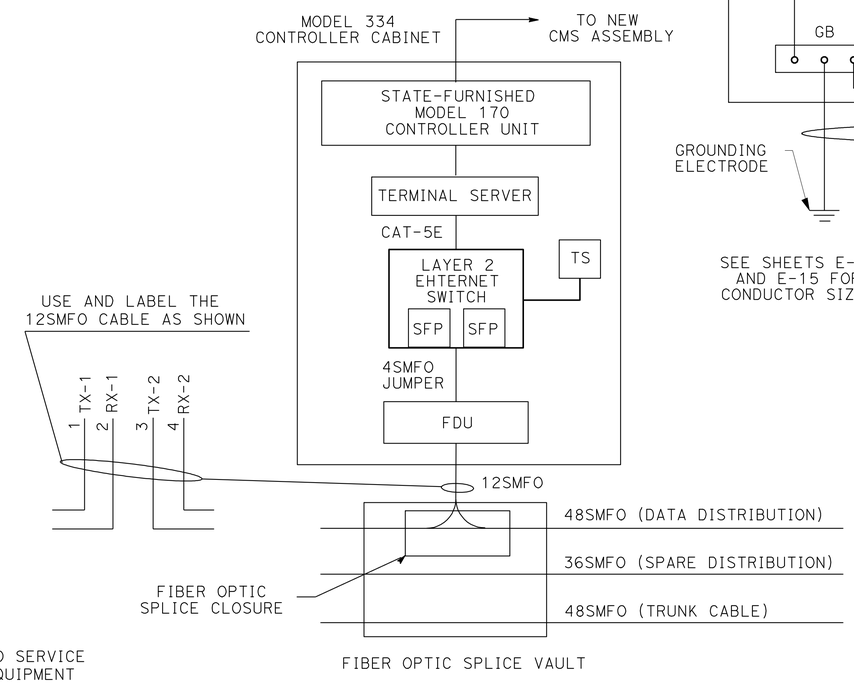

TYPICAL MODEL 334 CONTROLLER CABINET WIRING DETAIL

MODIFY COMMUNICATION SYSTEM
(CHANGEABLE MESSAGE SIGN SYSTEM CHANGEABLE MESSAGE SIGN WIRING DETAILS)

NO SCALE

FOR LEGENDS, ABBREVIATIONS AND GENERAL NOTES SEE SHEET E-1.

E-19

STATE OF CALIFORNIA - DEPARTMENT OF TRANSPORTATION
OFFICE OF ITS
Caltrans

FUNCTIONAL SUPERVISOR: JACQUELINE C. TAN
CALCULATED-DESIGNED BY: PATRICK P. LUI
CHECKED BY: JACQUELINE C. TAN
REVISED BY
DATE REVISED

LAST REVISION 00-00-00
DATE PLOTTED => 16-APR-2012
TIME PLOTTED => 12:18

Dist	COUNTY	ROUTE	POST MILES TOTAL PROJECT	SHEET No.	TOTAL SHEETS
07	LA	5	4.0/5.9	788	1597

REGISTERED ELECTRICAL ENGINEER 1/4/12 DATE

4-9-12
PLANS APPROVAL DATE

REGISTERED PROFESSIONAL ENGINEER PATRICK P. LUI No. E17534 Exp. 06/30/13 ELECTRICAL STATE OF CALIFORNIA

THE STATE OF CALIFORNIA OR ITS OFFICERS OR AGENTS SHALL NOT BE RESPONSIBLE FOR THE ACCURACY OR COMPLETENESS OF SCANNED COPIES OF THIS PLAN SHEET.

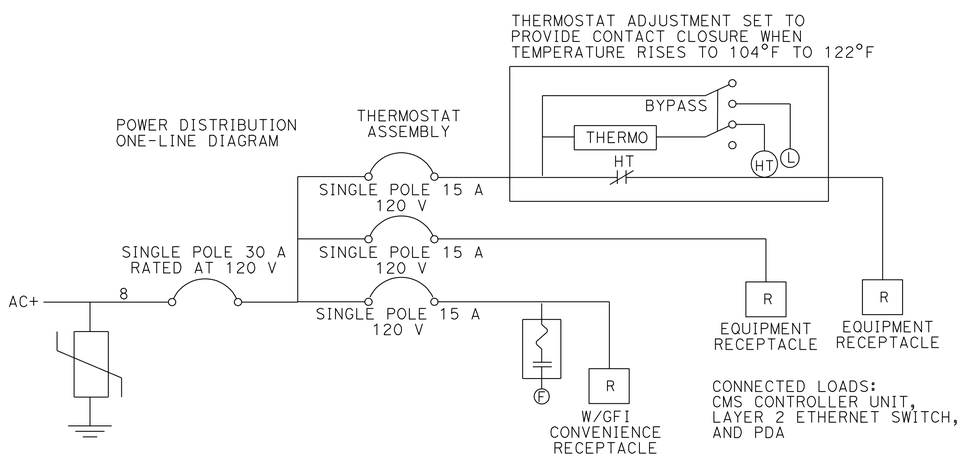

TYPICAL POWER DISTRIBUTION ASSEMBLY

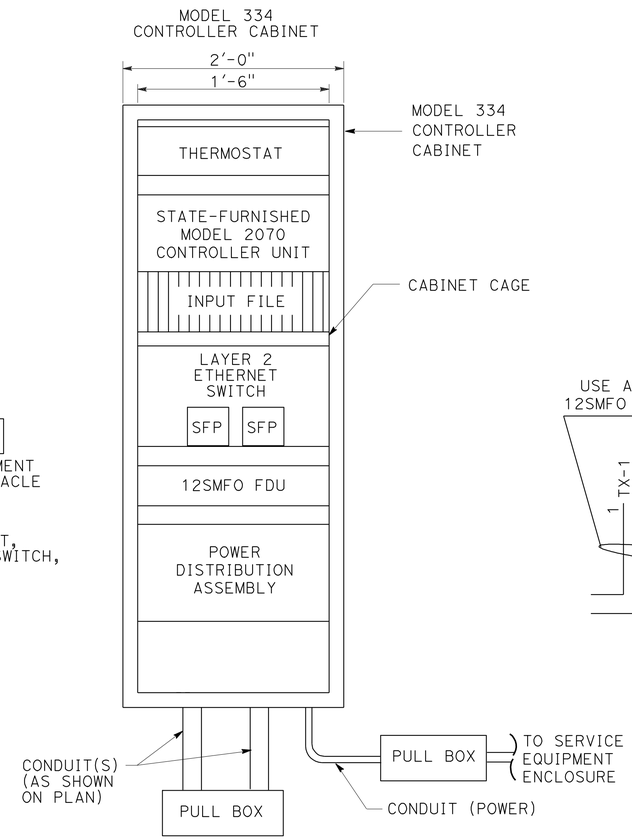

TYPICAL MODEL 344 CONTROLLER CABINET EQUIPMENT LAYOUT FOR RMS/TMS

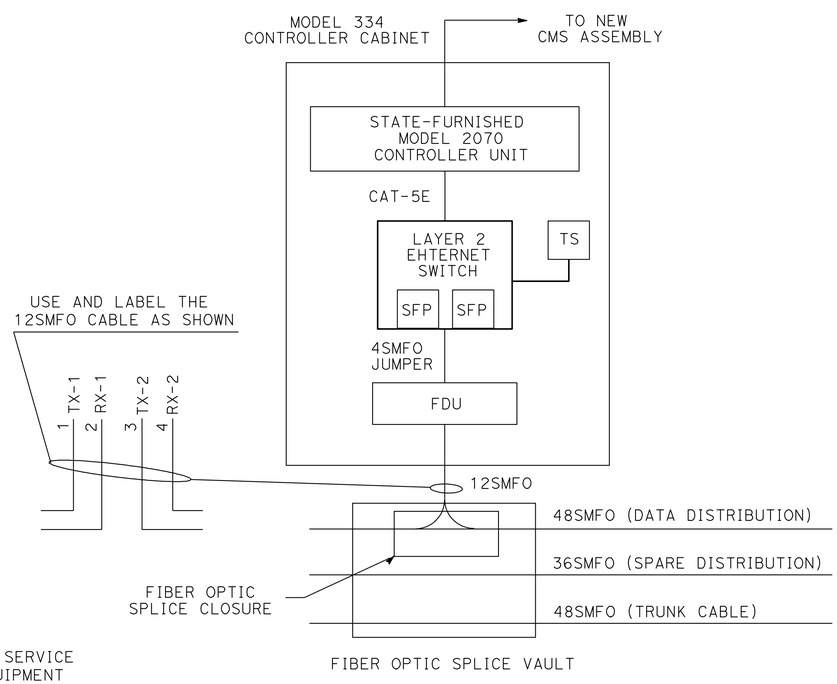

TYPICAL MODEL 344 CONTROLLER CABINET WIRING DETAIL

MODIFY COMMUNICATION SYSTEM
(RAMP METERING SYSTEM AND TRAFFIC MONITORING STATION WIRING DETAILS)

NO SCALE

FOR LEGEND, ABBREVIATIONS AND GENERAL NOTES SEE SHEET E-1.

E-20

STATE OF CALIFORNIA - DEPARTMENT OF TRANSPORTATION
Caltrans
OFFICE OF ITS

FUNCTIONAL SUPERVISOR: JACQUELINE C. TAN
CALCULATED-DESIGNED BY: PATRICK P. LUI
CHECKED BY: JACQUELINE C. TAN
REVISED BY
DATE REVISED

LAST REVISION 00-00-00
DATE PLOTTED => 16-APR-2012
TIME PLOTTED => 12:18

Dist	COUNTY	ROUTE	POST MILES TOTAL PROJECT	SHEET No.	TOTAL SHEETS
07	LA	5	4.0/5.9	789	1597

REGISTERED ELECTRICAL ENGINEER 1/4/12 DATE

4-9-12
PLANS APPROVAL DATE

REGISTERED PROFESSIONAL ENGINEER PATRICK P. LUI No. E17534 Exp. 06/30/13 ELECTRICAL STATE OF CALIFORNIA

THE STATE OF CALIFORNIA OR ITS OFFICERS OR AGENTS SHALL NOT BE RESPONSIBLE FOR THE ACCURACY OR COMPLETENESS OF SCANNED COPIES OF THIS PLAN SHEET.

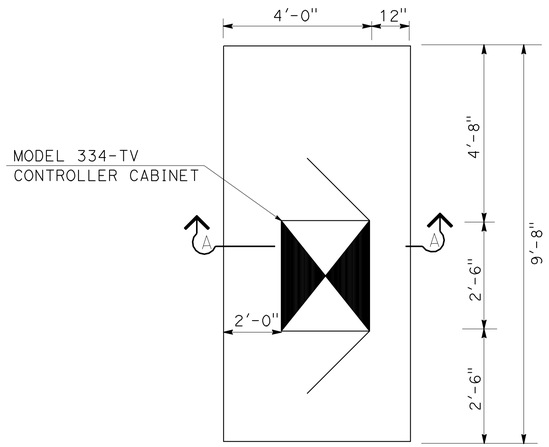

DETAIL A
PLAN VIEW

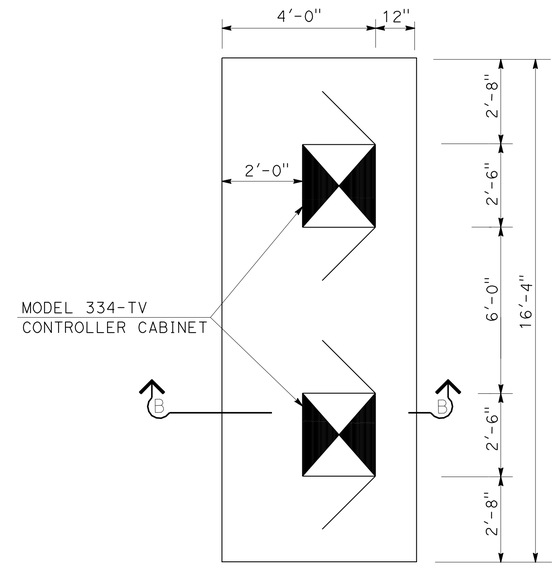

DETAIL B
PLAN VIEW

NOTES: (THIS SHEET ONLY)

1. FOR INFORMATION NOT SHOWN, SEE STANDARD PLANS SHEET RSP ES-3C.
2. CONSTRUCT PAD AND GRADE TO DRAIN AROUND AND AWAY FOR CABINET IN KEEPING WITH EXISTING DRAINAGE PATTERN.
3. CABINET DOOR MUST BE LOCATED PER PLAN AND HINGED TO AWAY FROM TRAVEL WAY.
4. SECTION OF PAD IS LOWER TO 4" WHEN REQUIRED BY FIELD CONDITION.

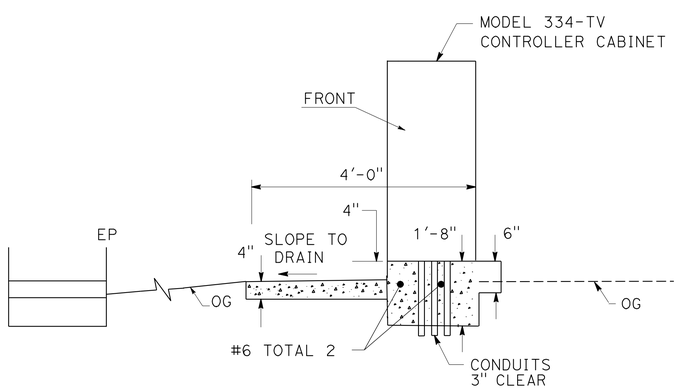

SECTION A-A
ELEVATION VIEW FOR DETAIL A

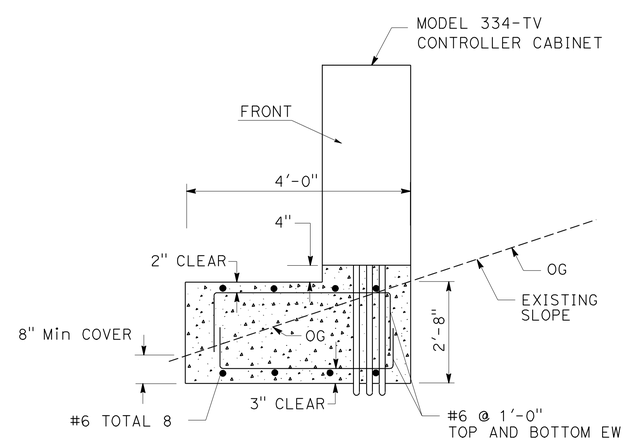

SECTION B-B
ELEVATION VIEW FOR DETAIL B

MODIFY COMMUNICATION SYSTEM
(CONTROLLER CABINET FOUNDATION DETAILS)

NO SCALE

FOR LEGEND, ABBREVIATIONS AND GENERAL NOTES SEE SHEET E-1.

E-21

STATE OF CALIFORNIA - DEPARTMENT OF TRANSPORTATION
Caltrans
OFFICE OF ITS

FUNCTIONAL SUPERVISOR: JACQUELINE C. TAN
CALCULATED-DESIGNED BY: PATRICK P. LUI
CHECKED BY: JACQUELINE C. TAN
REVISED BY
DATE REVISED

LAST REVISION 00-00-00
DATE PLOTTED => 16-APR-2012
TIME PLOTTED => 12:18

Dist	COUNTY	ROUTE	POST MILES TOTAL PROJECT	SHEET No.	TOTAL SHEETS
07	LA	5	4.0/5.9	790	1597

REGISTERED ELECTRICAL ENGINEER 1/4/12 DATE

4-9-12
PLANS APPROVAL DATE

REGISTERED PROFESSIONAL ENGINEER PATRICK P. LUI No. E17534 Exp. 06/30/13 ELECTRICAL STATE OF CALIFORNIA

THE STATE OF CALIFORNIA OR ITS OFFICERS OR AGENTS SHALL NOT BE RESPONSIBLE FOR THE ACCURACY OR COMPLETENESS OF SCANNED COPIES OF THIS PLAN SHEET.

NOTES: (THIS SHEET ONLY)

1. LAYER 2 ETHERNET SWITCH WITH 2 SFP-LX MODULES WITH POWER SUPPLY.
2. SEE SHEET E-18 FOR COMPONENT DETAILS.
3. FOR REFERENCE ONLY. SEE SHEET E-20 FOR COMPONENT DETAILS.
4. FOR REFERENCE ONLY. SEE SHEET E-19 FOR COMPONENT DETAILS.
5. COILED EXISTING 50P22 CABLE.
6. COILED EXISTING 12MMFO CABLE.

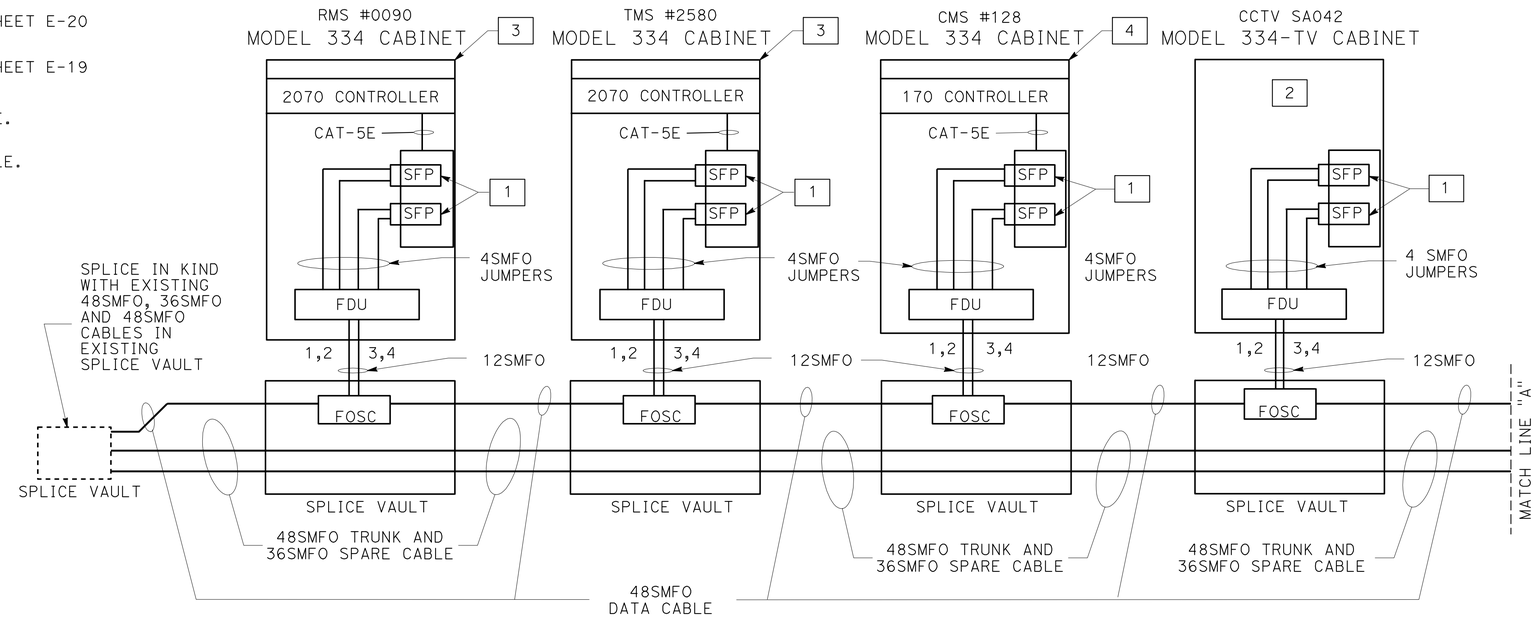

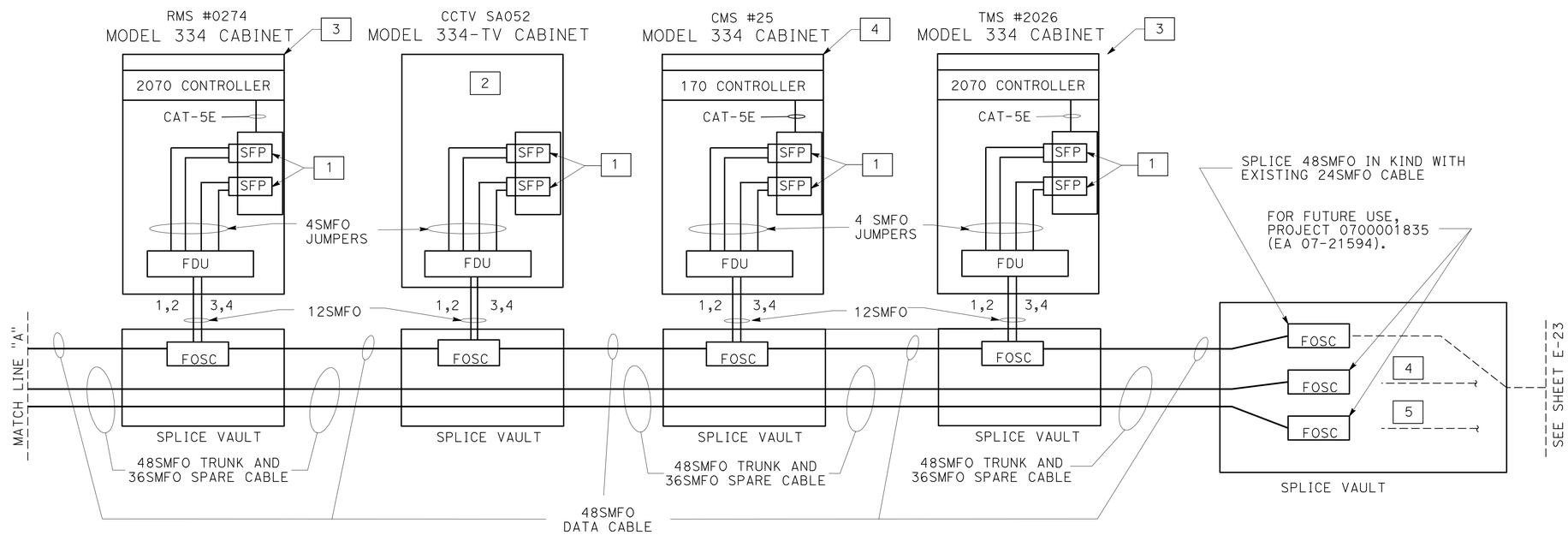

MODIFY COMMUNICATION SYSTEM
(BLOCK DIAGRAM)
NO SCALE

FOR LEGEND, ABBREVIATIONS AND GENERAL NOTES SEE SHEET E-1.

E-22

STATE OF CALIFORNIA - DEPARTMENT OF TRANSPORTATION
OFFICE OF ITS
FUNCTIONAL SUPERVISOR: JACQUELINE C. TAN
CALCULATED-DESIGNED BY: PATRICK P. LUI
CHECKED BY: JACQUELINE C. TAN
REVISED BY / DATE REVISED

LAST REVISION 00-00-00
DATE PLOTTED => 16-APR-2012
TIME PLOTTED => 12:18

Dist	COUNTY	ROUTE	POST MILES TOTAL PROJECT	SHEET No.	TOTAL SHEETS
07	LA	5	4.0/5.9	791	1597

REGISTERED ELECTRICAL ENGINEER 1/4/12 DATE

4-9-12
PLANS APPROVAL DATE

REGISTERED PROFESSIONAL ENGINEER PATRICK P. LUI No. E17534 Exp. 06/30/13 ELECTRICAL STATE OF CALIFORNIA

THE STATE OF CALIFORNIA OR ITS OFFICERS OR AGENTS SHALL NOT BE RESPONSIBLE FOR THE ACCURACY OR COMPLETENESS OF SCANNED COPIES OF THIS PLAN SHEET.

NOTES: (THIS SHEET ONLY)

1 LAYER 2 ETHERNET SWITCH WITH 2 SFP-LX AND 2 SFP-ZX MODULES WITH POWER SUPPLY.

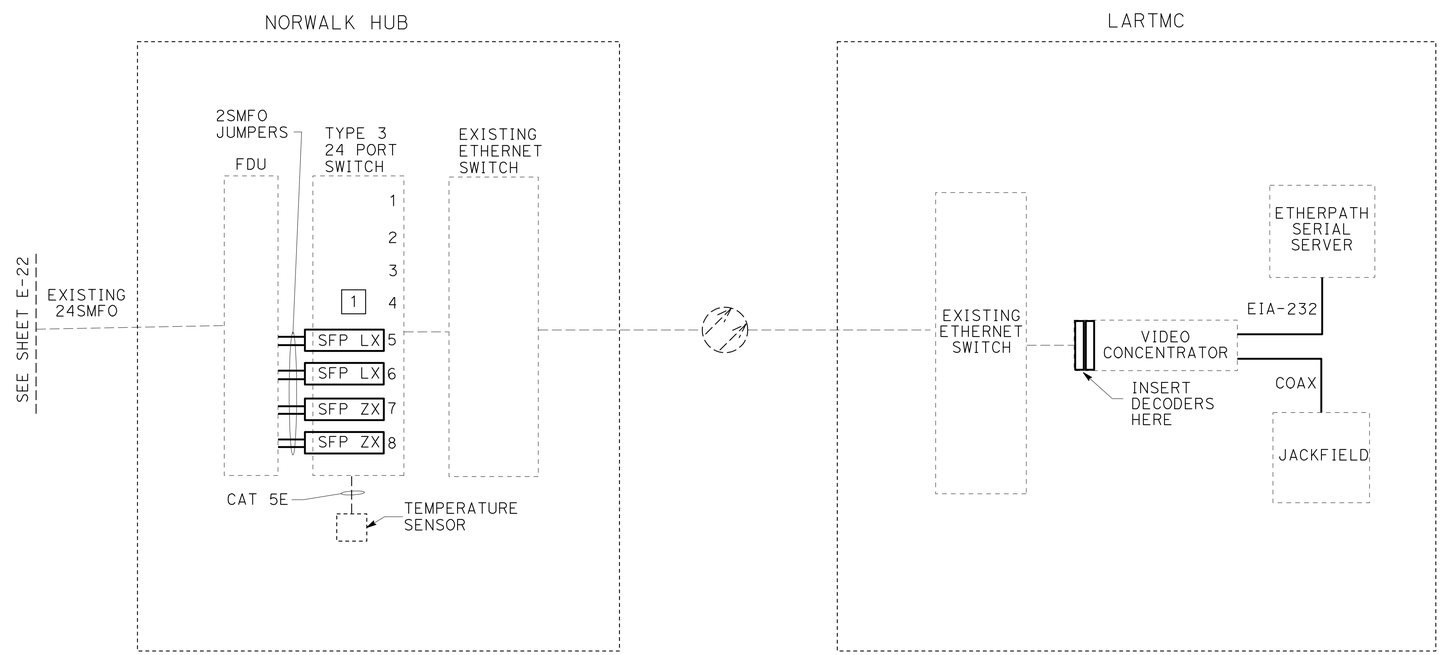

WORK AT NORWALK HUB BUILDING AND LOS ANGELES REGIONAL TRANSPORTATION MANAGEMENT CENTER

(BLOCK DIAGRAM)

NO SCALE

FOR LEGEND, ABBREVIATIONS AND GENERAL NOTES SEE SHEET E-1.

E-23

STATE OF CALIFORNIA - DEPARTMENT OF TRANSPORTATION
Caltrans
OFFICE OF ITS

FUNCTIONAL SUPERVISOR: JACQUELINE C. TAN
CALCULATED-DESIGNED BY: PATRICK P. LUI
CHECKED BY: JACQUELINE C. TAN
REVISED BY
DATE REVISED

LAST REVISION 00-00-00
DATE PLOTTED => 16-APR-2012
TIME PLOTTED => 12:19

Dist	COUNTY	ROUTE	POST MILES TOTAL PROJECT	SHEET No.	TOTAL SHEETS
07	LA	5	4.0/5.9	792	1597

REGISTERED ELECTRICAL ENGINEER 1/4/12 DATE

4-9-12
PLANS APPROVAL DATE

REGISTERED PROFESSIONAL ENGINEER PATRICK P. LUI No. E17534 Exp. 06/30/13 ELECTRICAL STATE OF CALIFORNIA

THE STATE OF CALIFORNIA OR ITS OFFICERS OR AGENTS SHALL NOT BE RESPONSIBLE FOR THE ACCURACY OR COMPLETENESS OF SCANNED COPIES OF THIS PLAN SHEET.

VIDEO AND DATA DISTRIBUTION FIBER OPTIC CABLE (48SMFO) ASSIGNMENT TABLE (PM 4.0 TO PM 5.9)

FIBER	USE	SB SILVER BOW SPLICE VAULT	SB SAN ANTONIO DR RMS 0090	SB SAN ANTONIO DR TMS 2580	SN SAN ANTONIO DR CMS 128	SB SAN ANTONIO DR CCTV SA042	SB IMPERIAL HWY RMS 274	NB PIONEER BLVD CCTV SA052	NB PIONEER BLVD CMS 025	SB PIONEER BLVD TMS 2026	SB ORR AND DAY SPLICE VAULT	FIBER
	PM	4.0	4.2	4.54	4.54	4.54	5.0	5.2	5.2	5.2	05.9	
FIBER 1		--									--	FIBER 1
FIBER 2		--									--	FIBER 2
FIBER 3		--									--	FIBER 3
FIBER 4		--									--	FIBER 4
FIBER 5		--									--	FIBER 5
FIBER 6		--									--	FIBER 6
FIBER 7		--									--	FIBER 7
FIBER 8		--									--	FIBER 8
FIBER 9	TRANSMIT IN 1	--	X		X		X		X		*	FIBER 9
FIBER 10	TRANSMIT OUT 1	--	X		X		X		X		*	FIBER 10
FIBER 11	TRANSMIT IN 2	--		X		X		X		X	*	FIBER 11
FIBER 12	TRANSMIT OUT 2	--		X		X		X		X	*	FIBER 12
FIBER 13		--									--	FIBER 13
FIBER 14		--									--	FIBER 14
FIBER 15		--									--	FIBER 15
FIBER 16		--									--	FIBER 16
FIBER 17		--									--	FIBER 17
FIBER 18		--									--	FIBER 18
FIBER 19		--									--	FIBER 19
FIBER 20		--									--	FIBER 20
FIBER 21		--									--	FIBER 21
FIBER 22		--									--	FIBER 22
FIBER 23		--									--	FIBER 23
FIBER 24		--									--	FIBER 24
FIBER 25		--									--	FIBER 25
FIBER 26		--									--	FIBER 26
FIBER 27		--									--	FIBER 27
FIBER 28		--									--	FIBER 28
FIBER 29		--									--	FIBER 29
FIBER 30		--									--	FIBER 30
FIBER 31		--									--	FIBER 31
FIBER 32		--									--	FIBER 32
FIBER 33		--									--	FIBER 33
FIBER 34		--									--	FIBER 34
FIBER 35		--									--	FIBER 35
FIBER 36		--									--	FIBER 36
FIBER 37		--									--	FIBER 37
FIBER 38		--									--	FIBER 38
FIBER 39		--									--	FIBER 39
FIBER 40		--									--	FIBER 40
FIBER 41		--									--	FIBER 41
FIBER 42		--									--	FIBER 42
FIBER 43		--									--	FIBER 43
FIBER 44		--									--	FIBER 44
FIBER 45		--									--	FIBER 45
FIBER 46		--									--	FIBER 46
FIBER 47		--									--	FIBER 47
FIBER 48		--									--	FIBER 48

LEGEND: (THIS SHEET ONLY)

X - TERMINATED ACTIVE ON FDU

O - TERMINATED SPARE WITH F/O PIGTAIL IN CABINET

-- - SPLICE WITH EXISTING DATA DISTRIBUTION 48SMFO CABLE

* - SPLICE WITH EXISTING 24SMFO CABLE IN KIND

NOTE: (THIS SHEET ONLY)

1. FIBER NUMBERS MAY BE RE-ASSIGNED BY THE ENGINEER DURING CONSTRUCTION.
2. SPLICE WITH ADJACENT TRUNK AND SPARE FIBER OPTIC CABLES WITH ON GOING PROJECT(S).

FOR LEGEND, ABBREVIATIONS AND GENERAL NOTES SEE SHEET E-1.

MODIFY COMMUNICATION SYSTEM

(FIBER ASSIGNMENT TABLE) (VIDEO AND DATA DISTRIBUTION)

NO SCALE

E-24

STATE OF CALIFORNIA - DEPARTMENT OF TRANSPORTATION
Caltrans
OFFICE OF ITS

FUNCTIONAL SUPERVISOR: JACQUELINE C. TAN
CALCULATED-DESIGNED BY: PATRICK P. LUI
CHECKED BY: JACQUELINE C. TAN
REVISED BY
DATE REVISED

LAST REVISION 00-00-00
DATE PLOTTED => 16-APR-2012
TIME PLOTTED => 12:19

Dist	COUNTY	ROUTE	POST MILES TOTAL PROJECT	SHEET No.	TOTAL SHEETS
07	LA	5	4.0/5.9	793	1597

REGISTERED ELECTRICAL ENGINEER 1/4/12 DATE

4-9-12
PLANS APPROVAL DATE

REGISTERED PROFESSIONAL ENGINEER PATRICK P. LUI No. E17534 Exp. 06/30/13 ELECTRICAL STATE OF CALIFORNIA

THE STATE OF CALIFORNIA OR ITS OFFICERS OR AGENTS SHALL NOT BE RESPONSIBLE FOR THE ACCURACY OR COMPLETENESS OF SCANNED COPIES OF THIS PLAN SHEET.

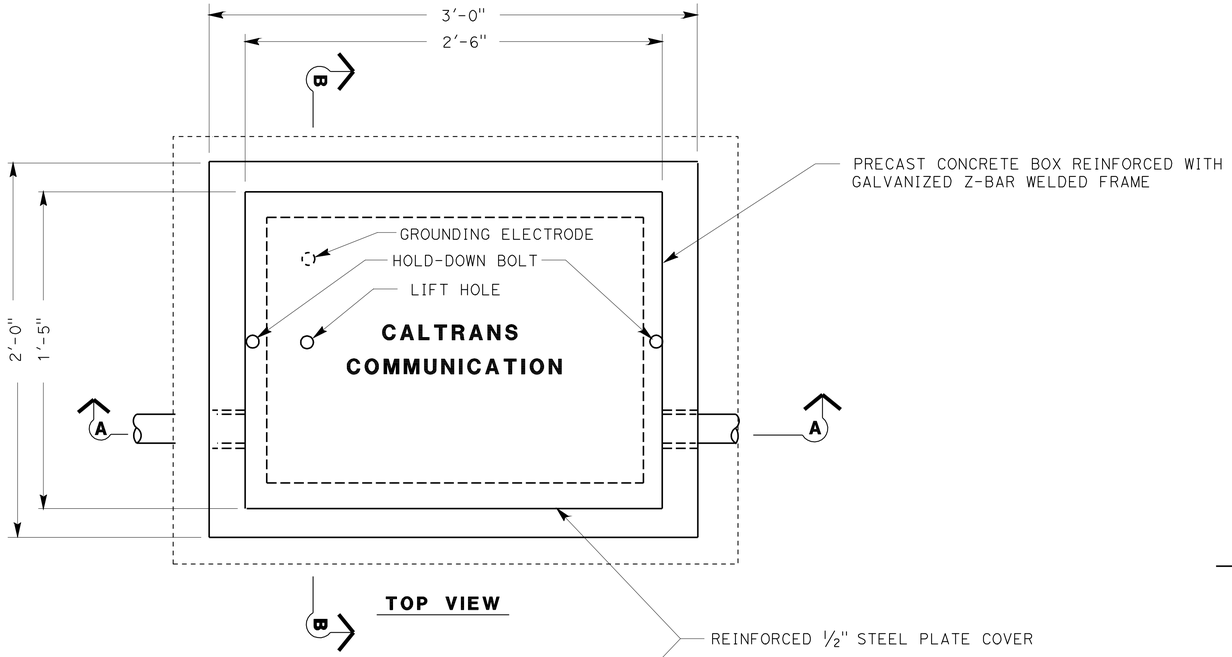

TOP VIEW

NOTES: (THIS SHEET ONLY)

1. FOR DETAILS NOT SHOWN SEE STD PLAN ES-8.
2. CONDUITS SHOWN ARE FOR EXAMPLE ONLY. ADDITIONAL CONDUITS MAY BE REQUIRED AS SHOWN ON THE PLAN SHEETS.
3. SEE SPECIAL PROVISIONS REGARDING HOLDDOWN BOLTS FOR TRAFFIC RATE COVERS.

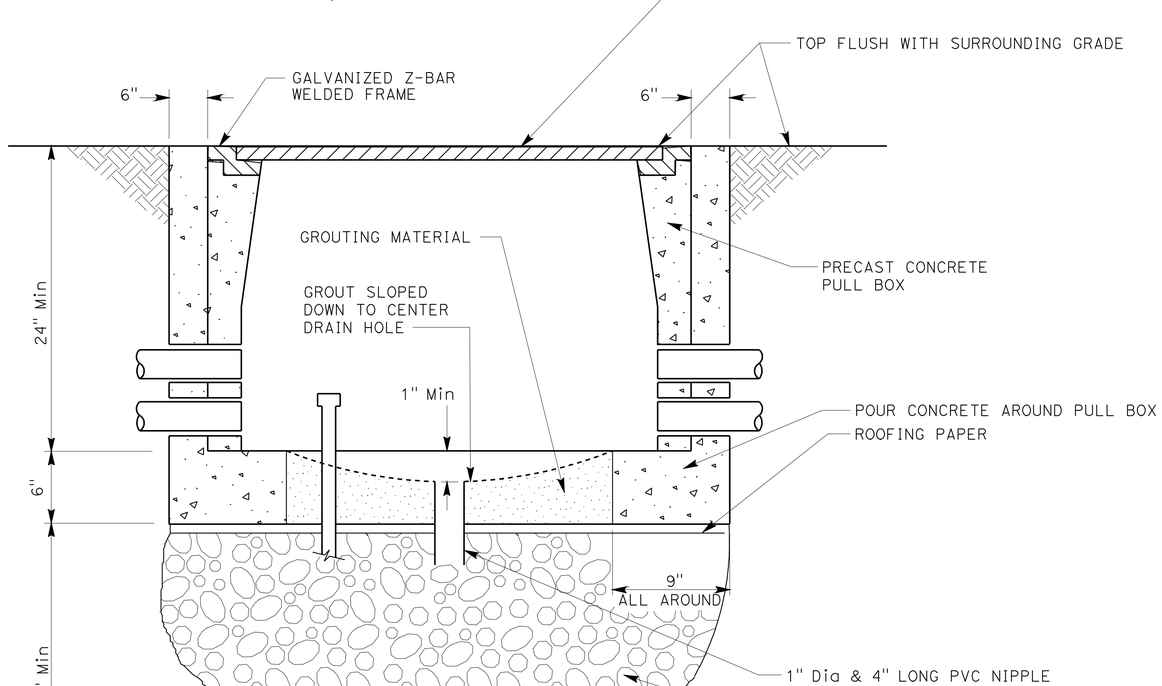

SECTION A-A

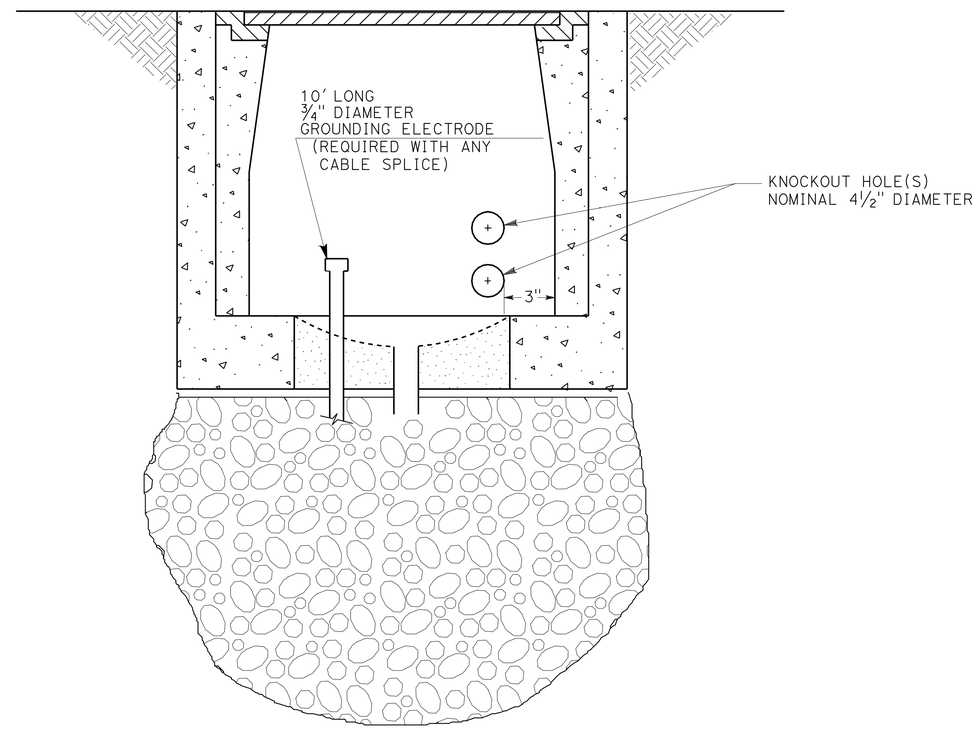

SECTION B-B

MODIFY COMMUNICATION SYSTEM
(COMMUNICATION PULL BOX DETAILS)

NO SCALE

E-25

STATE OF CALIFORNIA - DEPARTMENT OF TRANSPORTATION
Caltrans® OFFICE OF ITS

FUNCTIONAL SUPERVISOR: JACQUELINE C. TAN
PATRICK P. LUI — JACQUELINE C. TAN
CALCULATED-DESIGNED BY / CHECKED BY
REVISED BY / DATE REVISED

LAST REVISION 00-00-00 — DATE PLOTTED => 16-APR-2012 — TIME PLOTTED => 12:19

Dist	COUNTY	ROUTE	POST MILES TOTAL PROJECT	SHEET No.	TOTAL SHEETS
07	LA	5	4.0/5.9	794	1597

REGISTERED ELECTRICAL ENGINEER 1/4/12 DATE

4-9-12
PLANS APPROVAL DATE

REGISTERED PROFESSIONAL ENGINEER PATRICK P. LUI No. E17534 Exp. 06/30/13 ELECTRICAL STATE OF CALIFORNIA

THE STATE OF CALIFORNIA OR ITS OFFICERS OR AGENTS SHALL NOT BE RESPONSIBLE FOR THE ACCURACY OR COMPLETENESS OF SCANNED COPIES OF THIS PLAN SHEET.

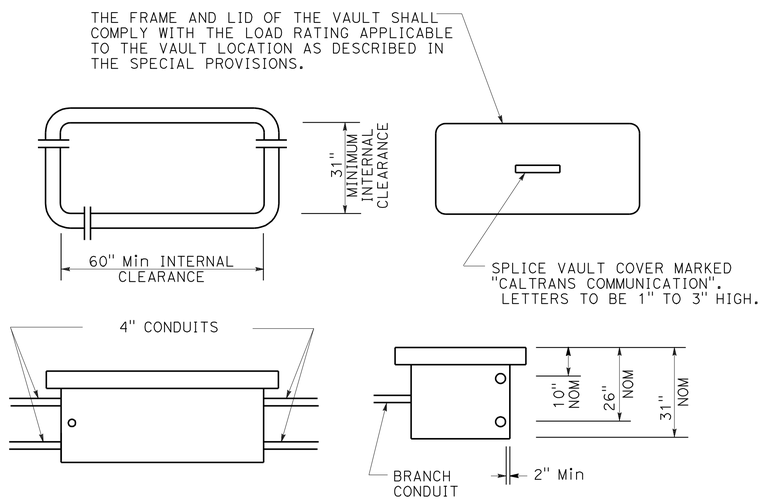

SPLICE VAULT DIMENSIONS

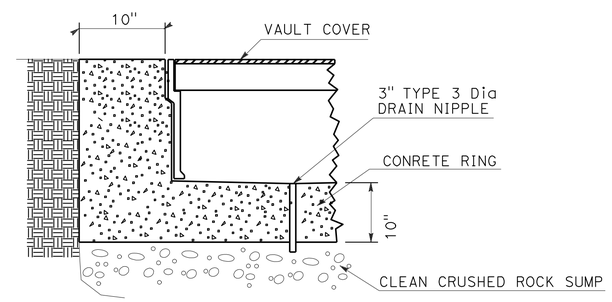

DETAIL A

INSTALLATION IN ASPHALT PAVEMENT

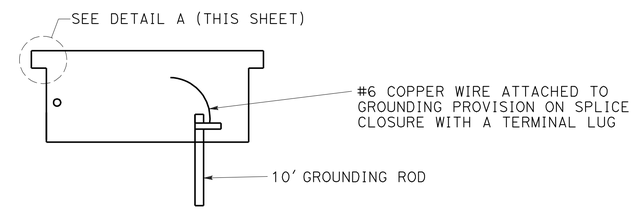

SPLICE VAULT INSTALLATION

INSTALLATION NOTES

1. CONCRETE ENCASEMENT AROUND SPLICE VAULT SHALL BE MINOR CONCRETE.
2. PAVEMENT AND SUBGRADE TO BE AS DIRECTED BY THE ENGINEER.
3. LONGER SIDE OF THE SPLICE VAULT MUST BE PARALLEL TO THE DIRECTION OF TRVAEL.

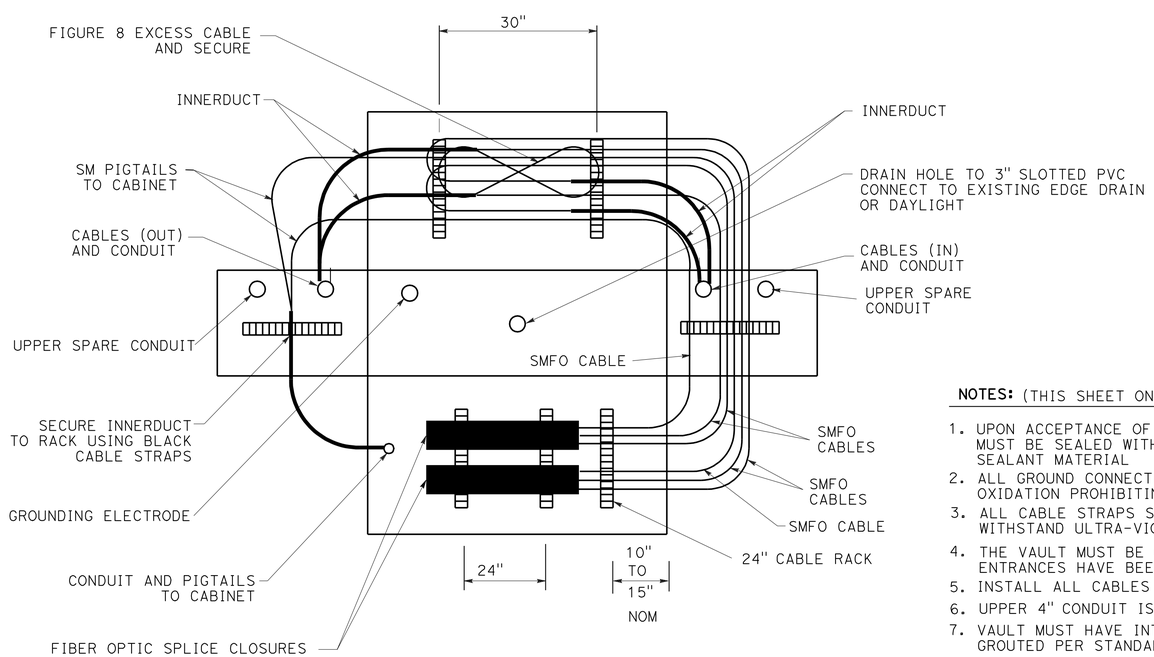

CABLE INSTALLATION

TOP VIEW - WALLS FOLDED DOWN FOR CLARITY

NOTES: (THIS SHEET ONLY)

1. UPON ACCEPTANCE OF THE WORK ALL CONDUITS MUST BE SEALED WITH COMPATIBLE SEALANT MATERIAL
2. ALL GROUND CONNECTIONS MUST BE COATED WITH OXIDATION PROHIBITING COMPOUND.
3. ALL CABLE STRAPS SHALL BE DESIGNED TO WITHSTAND ULTRA-VIOLET EXPOSURE.
4. THE VAULT MUST BE CAULKED AFTER ALL KNOWN ENTRANCES HAVE BEEN MADE.
5. INSTALL ALL CABLES IN LOWER 4" CONDUIT.
6. UPPER 4" CONDUIT IS SPARE ONLY.
7. VAULT MUST HAVE INTEGRAL BASE OR SHALL BE GROUTED PER STANDARD SPECIFICATION OF PULL BOXES.
8. NUMBER OF SPLICE CLOSURES MAY VARY.
9. SPLICE VAULTS MUST BE STEEL PLATED.
10. ADDITIONAL KNOCKOUTS ARE NEEDED ON THE LONGER SIDE OF THE SPLICE VAULT.

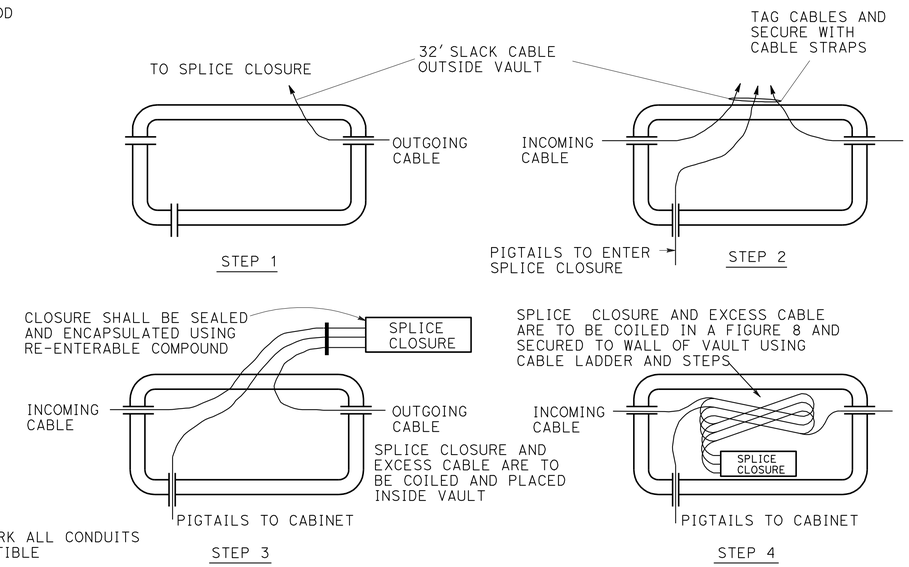

SPLICE PROCEDURE

MODIFY COMMUNICATION SYSTEM
(SPLICE VAULT DETAILS)

NO SCALE

(SPLICE VAULT DETAILS)

E-26

STATE OF CALIFORNIA - DEPARTMENT OF TRANSPORTATION
Caltrans
OFFICE OF ITS

FUNCTIONAL SUPERVISOR: JACQUELINE C. TAN
CALCULATED-DESIGNED BY: PATRICK P. LUI
CHECKED BY: JACQUELINE C. TAN
REVISED BY
DATE REVISED

LAST REVISION 00-00-00
DATE PLOTTED => 18-APR-2012
TIME PLOTTED => 10:27

Dist	COUNTY	ROUTE	POST MILES TOTAL PROJECT	SHEET No.	TOTAL SHEETS
07	LA	5	4.0/5.9	795	1597

REGISTERED ELECTRICAL ENGINEER 1/4/12 DATE

4-9-12
PLANS APPROVAL DATE

REGISTERED PROFESSIONAL ENGINEER PATRICK P. LUI No. E17534 Exp. 06/30/13 ELECTRICAL STATE OF CALIFORNIA

THE STATE OF CALIFORNIA OR ITS OFFICERS OR AGENTS SHALL NOT BE RESPONSIBLE FOR THE ACCURACY OR COMPLETENESS OF SCANNED COPIES OF THIS PLAN SHEET.

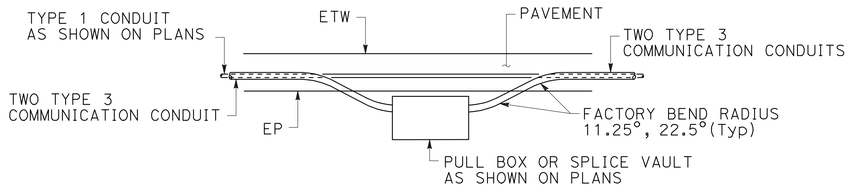

OUTSIDE SHOULDER PULL BOX INSTALLATION (TOP VIEW)

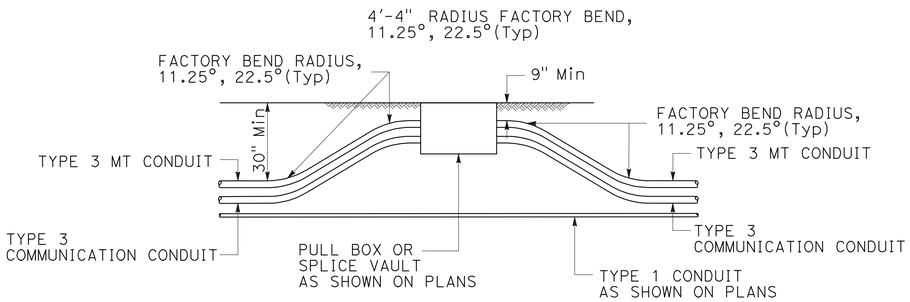

PULL BOX FOR SOIL AREA TRENCHING (ELEVATION)

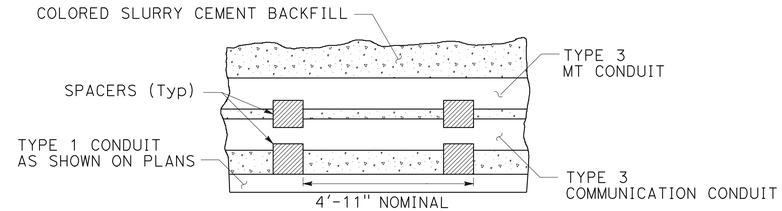

CONDUIT SPACER PLACEMENT (SIDE VIEW)

NOTES: (THIS SHEET ONLY)

1. REPLACE AC DIKE IN KIND, AS NECESSARY.
2. TRENCH TO BE CENTERED IN SHOULDER OR AS DIRECTED BY ENGINEER.
3. MAINTAIN 24" MINIMUM COVER AND BACKFILL TRENCH WITH SLURRY CEMENT BETWEEN PULL BOX AND PAVED SHOULDER.
4. WHERE TRENCH TRANSITIONS FROM ASPHALT TO UNPAVED AREA, EXCEPT AT PULL BOXES, CONDUIT TO GRADUALLY TRANSITION FROM 24" MINIMUM DEPTH TO 30" MINIMUM DEPTH WITHIN THE ASPHALT AREA.
5. 24" MINIMUM COVER MAY BE REDUCED TO 9" MINIMUM COVER IF NEEDED TO CLEAR A STORM DRAIN OR OTHER FIXED OBJECT AS DIRECTED BY RESIDENT ENGINEER.
6. PROVIDE MINIMUM 4'-11" CLEARANCE BETWEEN ANY CONDUIT AND EXISTING STRUCTURE FOUNDATIONS.
7. ANCHOR/RESTRAIN TOP CONDUIT FROM FLOATING DURING SLURRY CEMENT BACKFILL.
8. CONDUITS MUST BE INSTALLED IN NEW ASPHALT PAVEMENT AFTER AGGREGATE BASE IS PLACED AND COMPACTED. CONDUIT INSTALLATION MUST PRECLUDE ROADWAY PAVING.

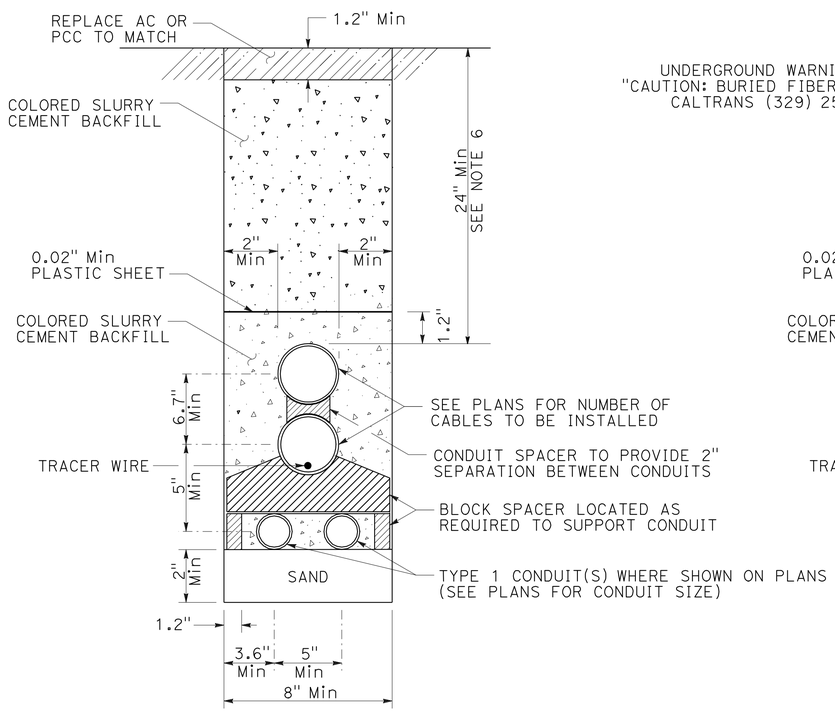

TRENCH IN PAVEMENT (CONCRETE OR ASPHALT)
WITH TYPE 3 COMMUNICATION CONDUIT(S)
AND TYPE 1 CONDUIT(S)

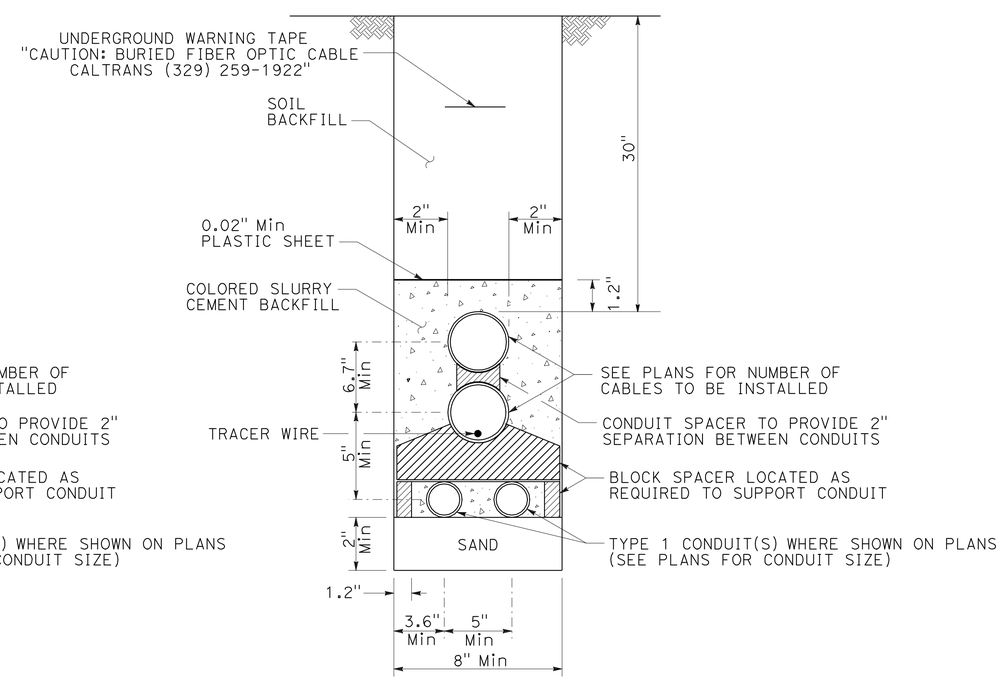

TRENCH IN SOIL
WITH TYPE 1 COMMUNICATION CONDUIT(S)
AND TYPE 1 CONDUIT(S)

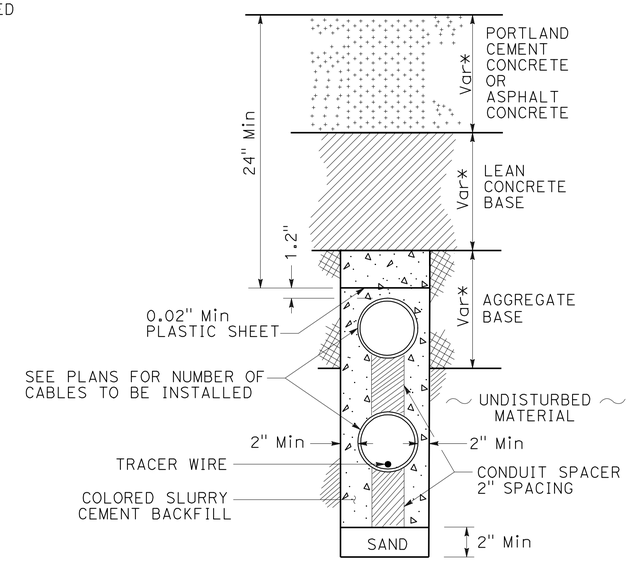

NEW PAVEMENT (PCC or ASPHALT)
WITH TYPE 3 COMMUNICATION CONDUIT(S)

(* PAVEMENT THICKNESS, SEE TYPICAL CROSS SECTION PLANS)

MODIFY COMMUNICATION SYSTEM
(TYPICAL COMMUNICATION CONDUIT INSTALLATION DETAILS)

NO SCALE

E-27

STATE OF CALIFORNIA - DEPARTMENT OF TRANSPORTATION
Caltrans®
OFFICE OF ITS

FUNCTIONAL SUPERVISOR: JACQUELINE C. TAN
CALCULATED-DESIGNED BY: PATRICK P. LUI
CHECKED BY: JACQUELINE C. TAN
REVISED BY
DATE REVISED

LAST REVISION 00-00-00
DATE PLOTTED => 16-APR-2012
TIME PLOTTED => 12:19

Dist	COUNTY	ROUTE	POST MILES TOTAL PROJECT	SHEET No.	TOTAL SHEETS
07	LA	5	4.0/5.9	796	1597

REGISTERED ELECTRICAL ENGINEER 1/4/12 DATE

4-9-12
PLANS APPROVAL DATE

REGISTERED PROFESSIONAL ENGINEER PATRICK P. LUI No. E17534 Exp. 06/30/13 ELECTRICAL STATE OF CALIFORNIA

THE STATE OF CALIFORNIA OR ITS OFFICERS OR AGENTS SHALL NOT BE RESPONSIBLE FOR THE ACCURACY OR COMPLETENESS OF SCANNED COPIES OF THIS PLAN SHEET.

NOTES: (THIS SHEET ONLY)

1. JACKED COMMUNICATION CONDUITS SHALL BE 30" MINIMUM BELOW FINISHED GRADE.
2. PLACE PULL BOXES OR SPLICE VAULTS AS SHOWN PER PLANS.
3. BENDS MUST BE FACTORY BENDS.

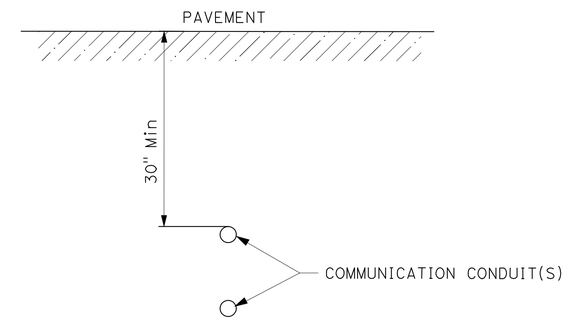

SECTION A-A

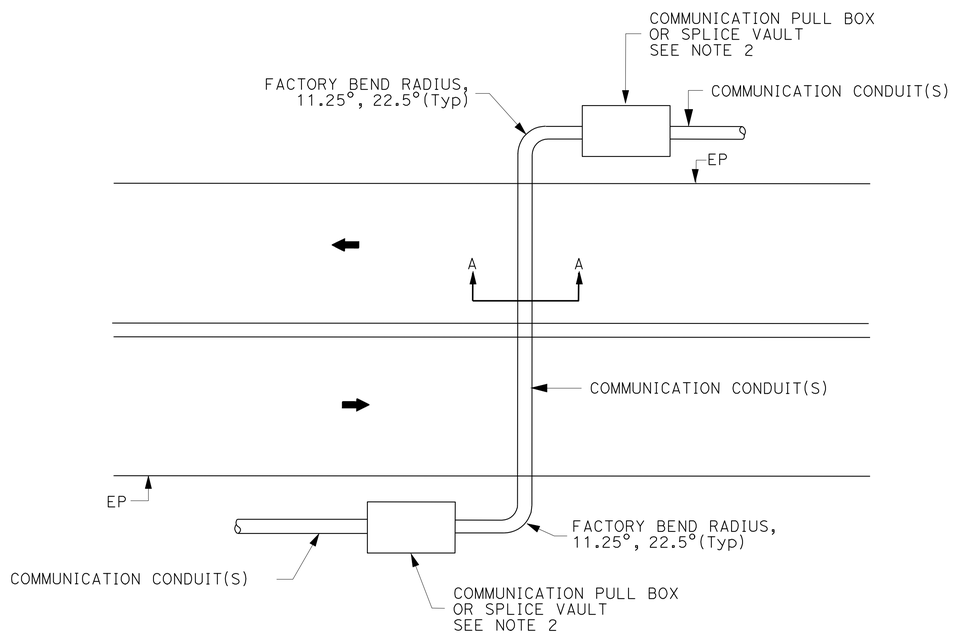

TYPICAL MAINLINE CROSSING (4 OR MORE LANES)

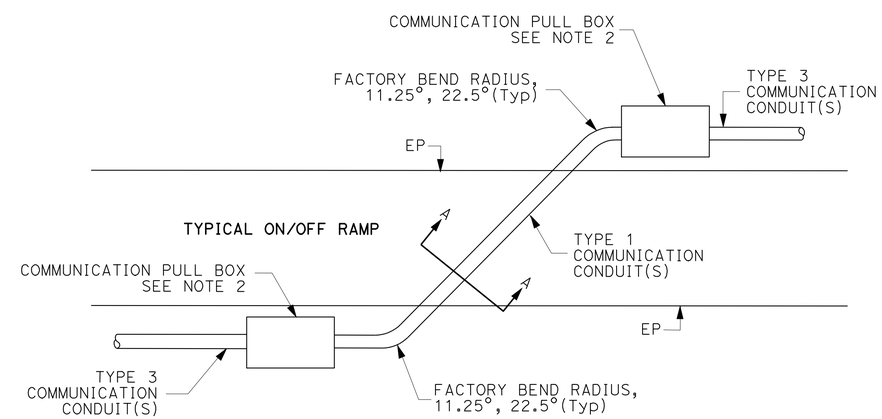

TYPICAL ON/OFF RAMP CROSSING

MODIFY COMMUNICATION SYSTEM
(COMMUNICATION CONDUIT JACKING DETAILS)

NO SCALE

E-28

STATE OF CALIFORNIA - DEPARTMENT OF TRANSPORTATION
Caltrans®
OFFICE OF ITS

FUNCTIONAL SUPERVISOR: JACQUELINE C. TAN
CALCULATED-DESIGNED BY: PATRICK P. LUI
CHECKED BY: JACQUELINE C. TAN
REVISED BY
DATE REVISED

LAST REVISION 00-00-00
DATE PLOTTED => 16-APR-2012
TIME PLOTTED => 12:19

Dist	COUNTY	ROUTE	POST MILES TOTAL PROJECT	SHEET No.	TOTAL SHEETS
07	LA	5	4.0/5.9	797	1597

REGISTERED ELECTRICAL ENGINEER 1/4/12 DATE

4-9-12
PLANS APPROVAL DATE

REGISTERED PROFESSIONAL ENGINEER PATRICK P. LUI No. E17534 Exp. 06/30/13 ELECTRICAL STATE OF CALIFORNIA

THE STATE OF CALIFORNIA OR ITS OFFICERS OR AGENTS SHALL NOT BE RESPONSIBLE FOR THE ACCURACY OR COMPLETENESS OF SCANNED COPIES OF THIS PLAN SHEET.

NOTES: (THIS SHEET ONLY)

1. CONDUIT(S) TO GRADUALLY TRANSITION FROM 24" TO DEPTH REQUIRED TO CROSS BENEATH CONCRETE BARRIER.
2. ROUTE TYPE 1 CONDUIT UP FROM BENEATH COMMUNICATION CONDUITS INTO No. 5 OR 5(T) PULL BOX.
3. COMMUNICATION CONDUITS REMAIN IN TRENCH.

TOP VIEW

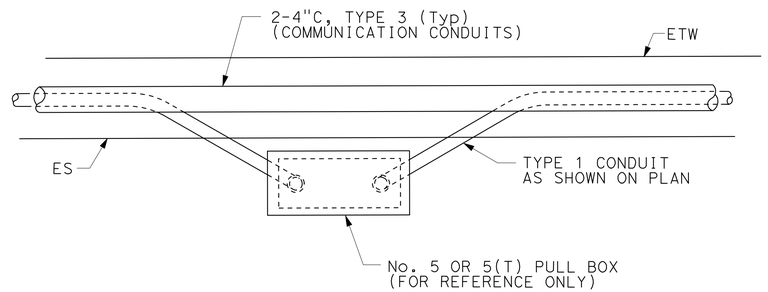

SIDE VIEW

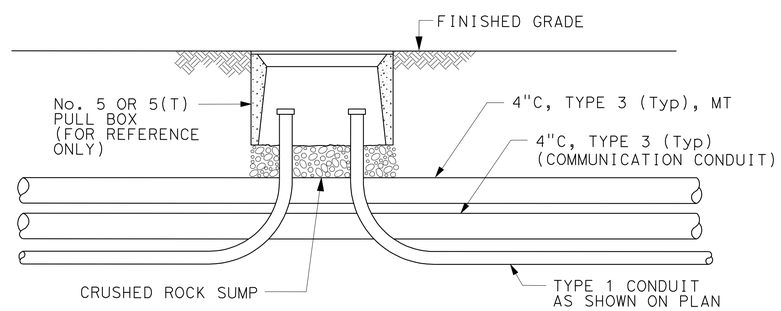

TYPE 1 CONDUIT BREAKOUT FROM COMMUNICATION CONDUIT SHARED TRENCH

MODIFY COMMUNICATION SYSTEM
(CONDUIT INSTALLATION DETAILS)

NO SCALE

FOR LEGENDS, ABBREVIATIONS AND GENERAL NOTES SEE SHEET E-1.

E-29

STATE OF CALIFORNIA - DEPARTMENT OF TRANSPORTATION
Caltrans® OFFICE OF ITS

FUNCTIONAL SUPERVISOR: JACQUELINE C. TAN
CALCULATED-DESIGNED BY: PATRICK P. LUI
CHECKED BY: JACQUELINE C. TAN
REVISED BY
DATE REVISED

LAST REVISION 00-00-00
DATE PLOTTED => 16-APR-2012
TIME PLOTTED => 12:19

Dist	COUNTY	ROUTE	POST MILES TOTAL PROJECT	SHEET No.	TOTAL SHEETS
07	LA	5	4.0/5.9	798	1597

REGISTERED ELECTRICAL ENGINEER 1/4/12 DATE

4-9-12
PLANS APPROVAL DATE

REGISTERED PROFESSIONAL ENGINEER PATRICK P. LUI No. E17534 Exp. 06/30/13 ELECTRICAL STATE OF CALIFORNIA

THE STATE OF CALIFORNIA OR ITS OFFICERS OR AGENTS SHALL NOT BE RESPONSIBLE FOR THE ACCURACY OR COMPLETENESS OF SCANNED COPIES OF THIS PLAN SHEET.

NOTES: (THIS SHEET ONLY)

1. DETAIL APPLIES ONLY WHEN 4" MINIMUM COVER CAN BE OBTAINED. SEE CASE 1.
2. IF 4" MINIMUM COVER CANNOT BE OBTAINED, THEN TRUNK LINE CONDUIT SHALL BE JACKED UNDER STORM DRAIN. SEE CASE 2, THIS SHEET.

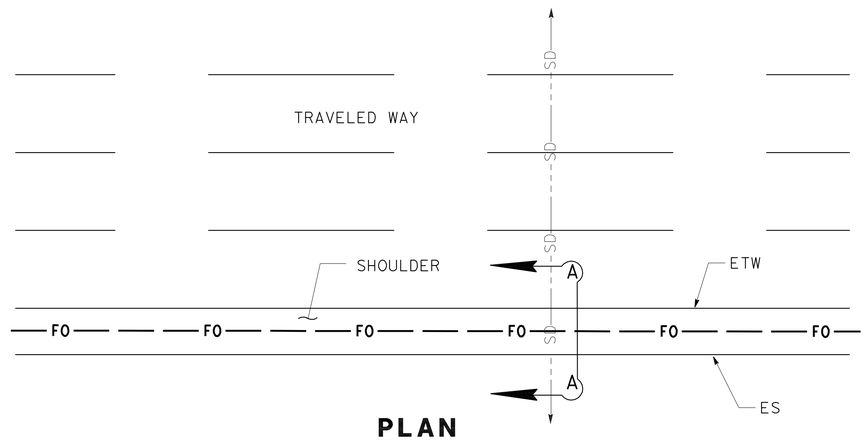

PLAN

CASE 1 - COMMUNICATION CONDUIT CROSSING OVER EXISTING STORM DRAIN

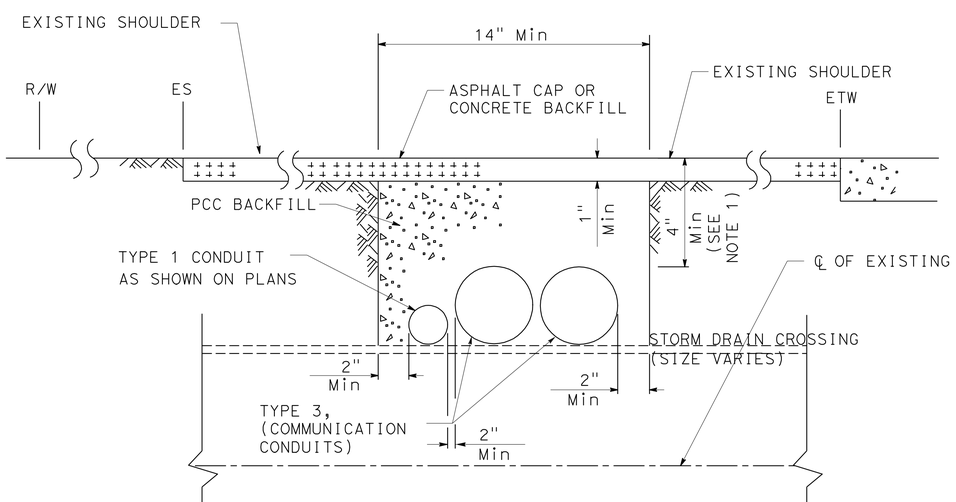

SECTION A-A

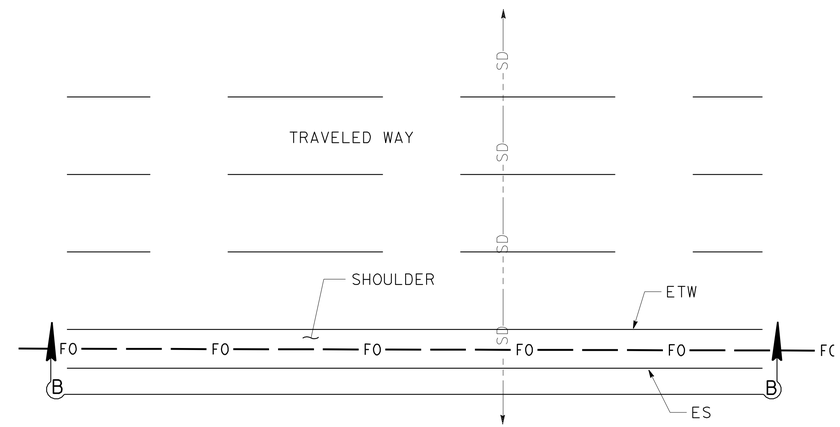

PLAN

CASE 2 - COMMUNICATION CONDUIT CROSSING UNDER EXISTING STORM DRAIN

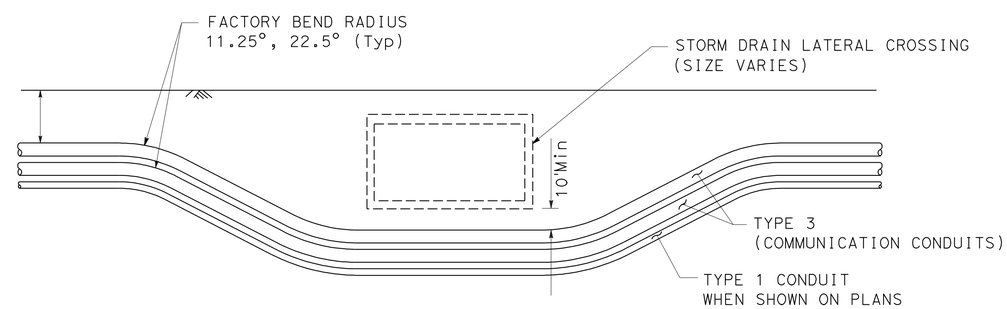

SECTION B-B

MODIFY COMMUNICATION SYSTEM

(CONDUIT CROSSING OVER OR UNDER STORM DRAIN DETAILS)

NO SCALE

E-30

FOR LEGENDS, ABBREVIATIONS AND GENERAL NOTES SEE SHEET E-1.

STATE OF CALIFORNIA - DEPARTMENT OF TRANSPORTATION
Caltrans
OFFICE OF ITS

FUNCTIONAL SUPERVISOR: JACQUELINE C. TAN
CALCULATED-DESIGNED BY: PATRICK P. LUI
CHECKED BY: JACQUELINE C. TAN
REVISED BY
DATE REVISED

LAST REVISION 00-00-00
DATE PLOTTED => 18-APR-2012
TIME PLOTTED => 10:27

Dist	COUNTY	ROUTE	POST MILES TOTAL PROJECT	SHEET No.	TOTAL SHEETS
07	LA	5	4.0/5.9	799	1597

REGISTERED ELECTRICAL ENGINEER 1/17/12 DATE

4-9-12
PLANS APPROVAL DATE

REGISTERED PROFESSIONAL ENGINEER C. BURCIAGA No. E015302 Exp. 3/31/13 ELECTRICAL STATE OF CALIFORNIA

THE STATE OF CALIFORNIA OR ITS OFFICERS OR AGENTS SHALL NOT BE RESPONSIBLE FOR THE ACCURACY OR COMPLETENESS OF SCANNED COPIES OF THIS PLAN SHEET.

FOR ACCURATE RIGHT OF WAY DATA, CONTACT
RIGHT OF WAY ENGINEERING AT THE DISTRICT OFFICE.

GENERAL NOTES: (SHEETS E-31 TO E-113)

1. FOR INSTALLATION OF CONDUIT, PULL BOXES, FOUNDATIONS AND RELATED ELECTROLIER EQUIPMENT IN SOUNDWALL BARRIER AND BRIDGE CONCRETE BARRIER, SEE SOUNDWALL AND STRUCTURE PLANS DETAIL SHEETS.
2. FOR INSTALLATION OF MVDS, TYPE 21 ON STEEL PLATE AND CONCRETE BLOCKS, TYPE 15TS MODIFIED STANDARD, 40' WOOD POLE WITH OR WITHOUT 15' LUMINAIRE MAST ARM, SEE STRUCTURES SPECIAL DESIGNS DETAIL SHEETS.
3. ALL FREEWAY LIGHTING MUST USE LED LUMINAIRE.

ABBREVIATIONS: (SHEETS E-31 TO E-113)

ATMS	AUTOMATIC TRAFFIC MANAGEMENT SYSTEM
CTID	CALTRANS IDENTIFICATION
CTNET	CALTRAN ADVANCED TRAFFIC SIGNAL MANAGEMENT NETWORK SYSTEM
GPRS	GENERAL PACKET RADIO SERVICE
GPS	GLOBAL POSITIONING SYSTEM
IP	INTERNET PROTOCOL
LARTMC	LOS ANGELES REGIONAL TRANSPORTATION MANAGEMENT CENTER
MTA	MVDS TERMINATION ASSEMBLY
MVDS	MICROWAVE VEHICLE DETECTION SYSYTEM
PDA	POWER DISTRIBUTION ASSEMBLY
SCE	SOUTHERN CALIFORNIA EDISON
VPN	VIRTUAL PRIVATE NETWORK
#12DLC	#12 STRANDED TINNED COPPER SHIELDED TWISTED PAIR CONDUCTORS.

GENERAL NOTES: (SHEET E-31 TO E-33)

1. RC RAMP METERING COMPLETE INCLUDING †dc, FOUNDATIONS AND PULL BOXES.
2. RS MODEL 170 CONTROLLER ASSEMBLY AND 120/240 V TYPE III-BF SERVICE EQUIPMENT ENCLOSURE.
3. AB CONDUITS AND INDUCTIVE LOOP DETECTORS.

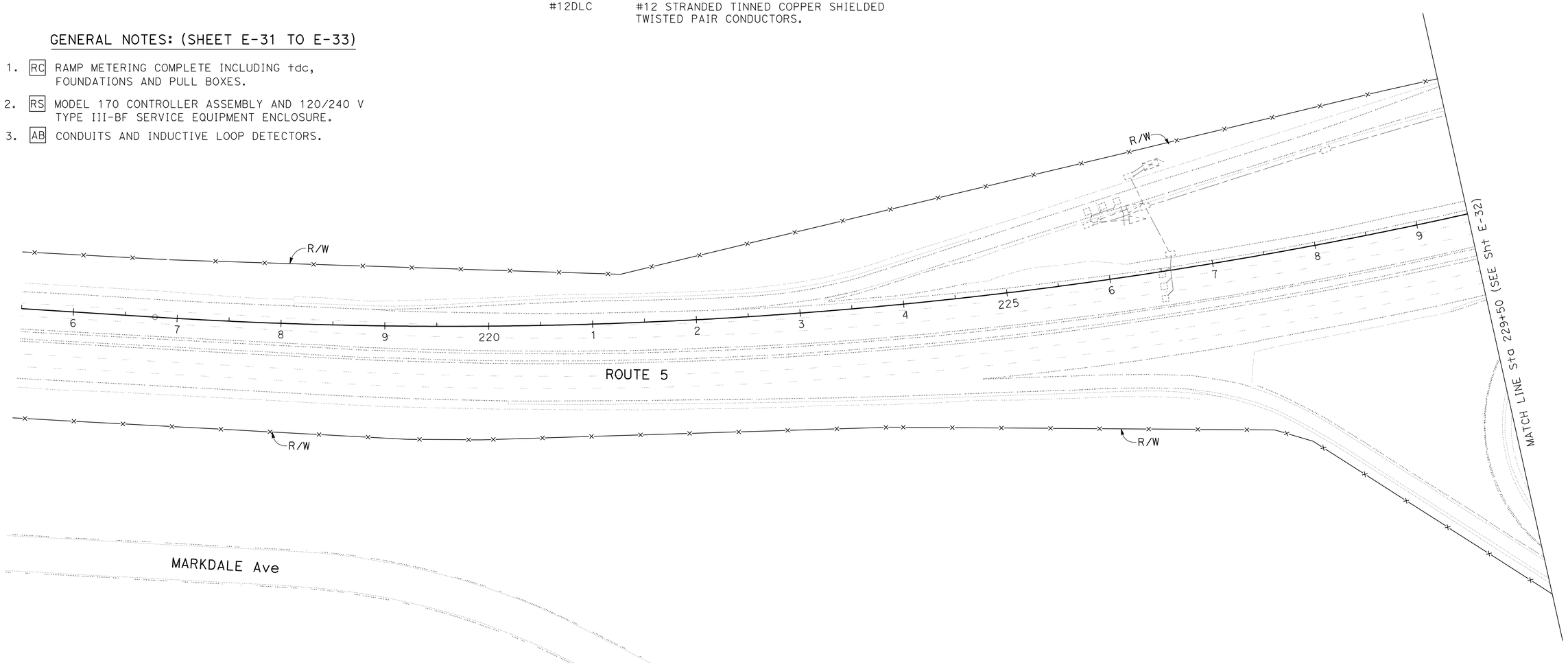

APPROVED FOR ELECTRICAL WORK ONLY

RAMP METERING SYSTEM
(REMOVE)

SCALE: 1" = 50'

E-31

STATE OF CALIFORNIA - DEPARTMENT OF TRANSPORTATION
Caltrans® **TRAFFIC DESIGN**

FUNCTIONAL SUPERVISOR: YI TSAU
CALCULATED-DESIGNED BY: FARIDA MAHMOOD
CHECKED BY: CECILIO BURCIAGA
REVISED BY
DATE REVISED

LAST REVISION 00-00-00
DATE PLOTTED => 16-APR-2012
TIME PLOTTED => 12:19

Dist	COUNTY	ROUTE	POST MILES TOTAL PROJECT	SHEET No.	TOTAL SHEETS
07	LA	5	4.0/5.9	800	1597

REGISTERED ELECTRICAL ENGINEER 1/17/12 DATE

4-9-12
PLANS APPROVAL DATE

REGISTERED PROFESSIONAL ENGINEER C. BURCIAGA No. E015302 Exp. 3/31/13 ELECTRICAL STATE OF CALIFORNIA

THE STATE OF CALIFORNIA OR ITS OFFICERS OR AGENTS SHALL NOT BE RESPONSIBLE FOR THE ACCURACY OR COMPLETENESS OF SCANNED COPIES OF THIS PLAN SHEET.

FOR ACCURATE RIGHT OF WAY DATA, CONTACT
RIGHT OF WAY ENGINEERING AT THE DISTRICT OFFICE.

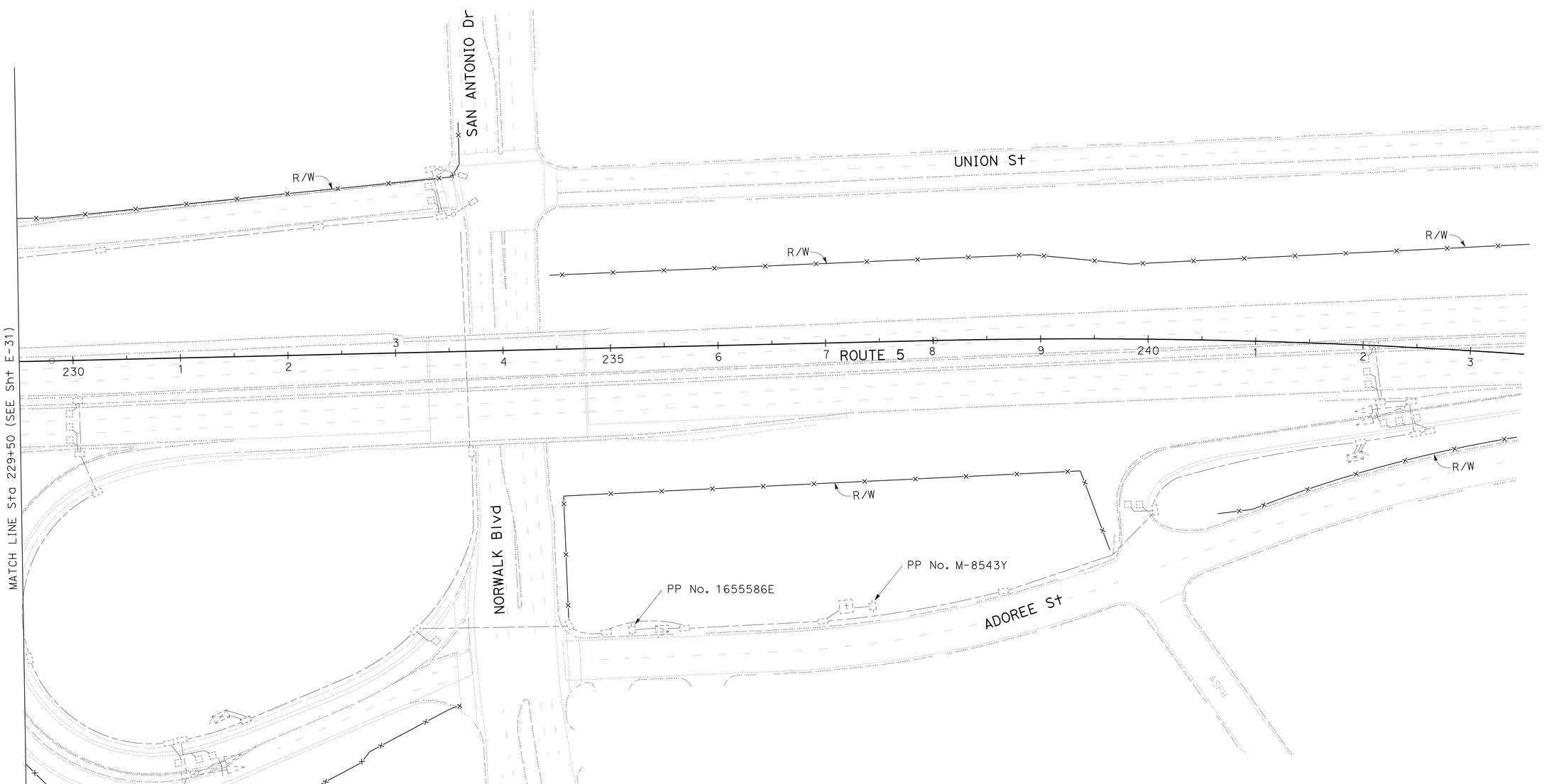

APPROVED FOR ELECTRICAL WORK ONLY

FOR GENERAL NOTES SEE SHEET E-31.

RAMP METERING SYSTEM
(REMOVE)

SCALE: 1" = 50'

E-32

STATE OF CALIFORNIA - DEPARTMENT OF TRANSPORTATION
Caltrans® **TRAFFIC DESIGN**

FUNCTIONAL SUPERVISOR: Y1 TSAU
CALCULATED-DESIGNED BY: FARIDA MAHMOOD
CHECKED BY: CECILIO BURCIAGA
REVISED BY
DATE REVISED

LAST REVISION 00-00-00 | DATE PLOTTED => 16-APR-2012 | TIME PLOTTED => 12:19