DIST	COUNTY	ROUTE	POST MILES TOTAL PROJECT	SHEET No	TOTAL SHEETS
07	LA	5	2.4/4.0	701	1288

REGISTERED CIVIL ENGINEER 12-12-11 DATE

3-26-12
PLANS APPROVAL DATE

REGISTERED PROFESSIONAL ENGINEER
PAUL A. PETERSON
No. C66764
Exp. 09-30-12
CIVIL
STATE OF CALIFORNIA

The State of California or its officers or agents shall not be responsible for the accuracy or completeness of electronic copies of this plan sheet.

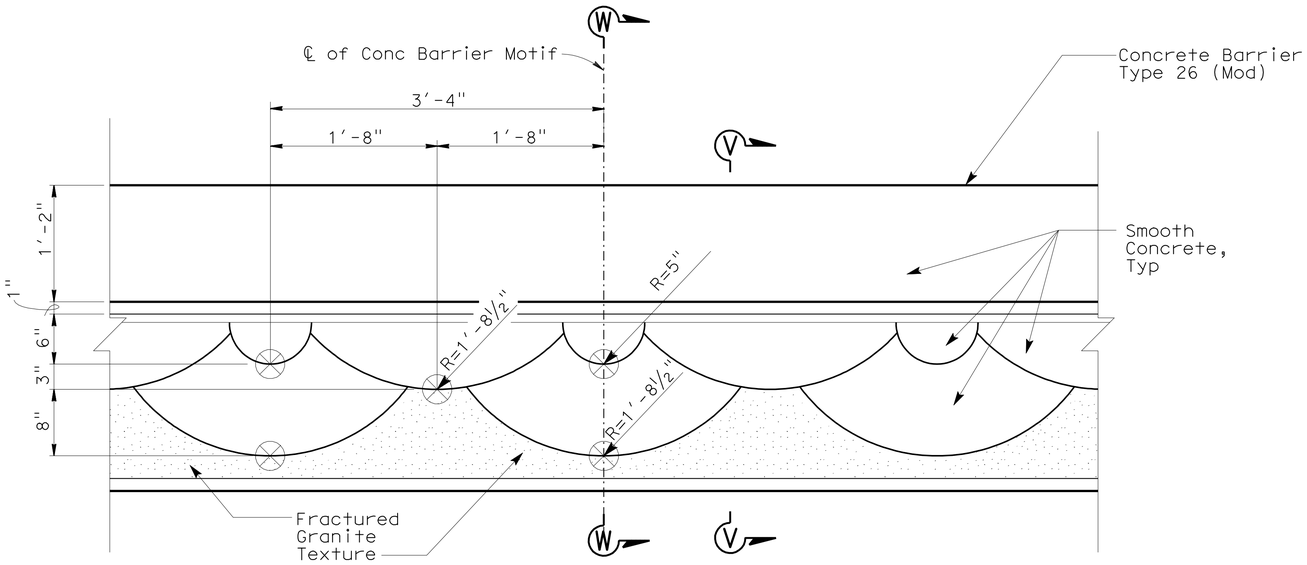

ELEVATION - BARRIER MOTIF

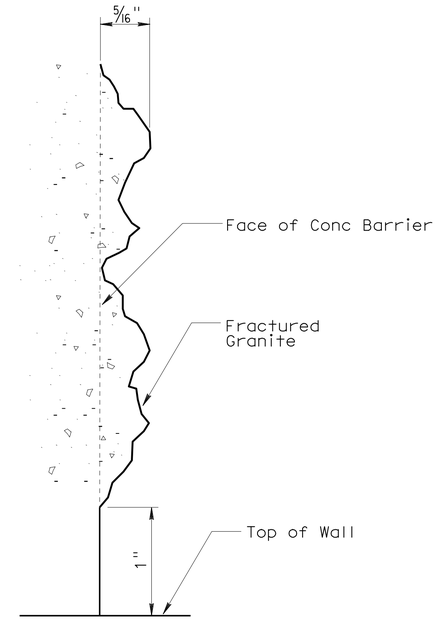

DETAIL E

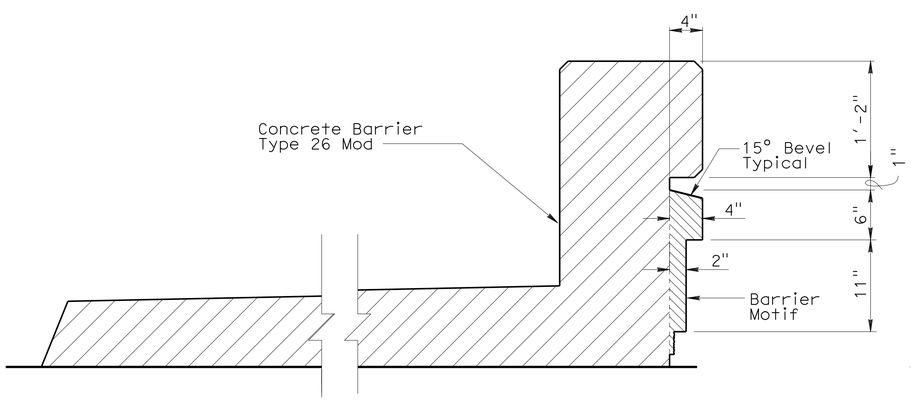

SECTION W-W

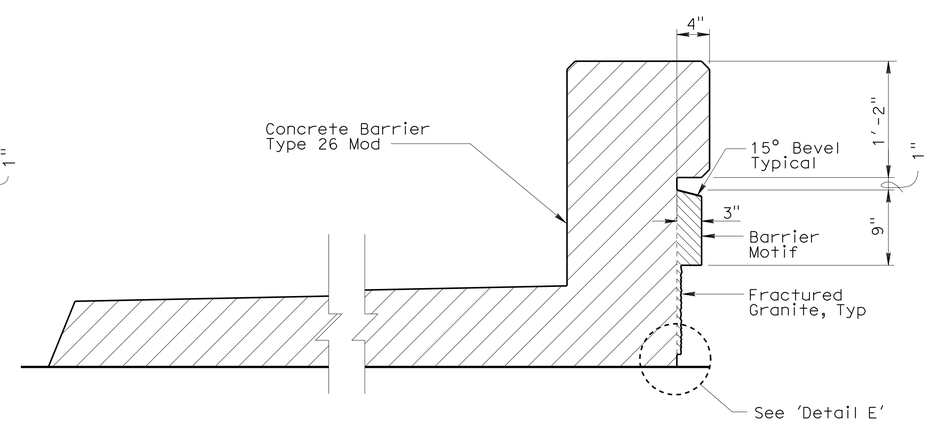

SECTION V-V

LEGEND:

- Fractured Granite Texture
- Smooth Concrete Surface
- Secondary Working Point

NO SCALE

DESIGN	BY H. Javier Chavez	CHECKED Isacc Tasabia	
DETAILS	BY Jaime Ramirez	CHECKED H. Javier Chavez	
QUANTITIES	BY John Peterson	CHECKED Paul Peterson	

STATE OF CALIFORNIA
DEPARTMENT OF TRANSPORTATION

DIVISION OF ENGINEERING SERVICES
STRUCTURE DESIGN
DESIGN BRANCH 14

BRIDGE NO. 53-3039
POST MILE 3.04

SHOEMAKER AVE OC (REPLACE)
BARRIER MOTIF DETAILS

STRUCTURES DESIGN DETAIL SHEET (ENGLISH) (REV. 10/25/05)

ORIGINAL SCALE IN INCHES FOR REDUCED PLANS 0 1 2 3

CU 07
EA 215931

DISREGARD PRINTS BEARING EARLIER REVISION DATES

REVISION DATES: 10-28-09 12-15-09 1-28-10 3-30-10 4-13-10 4-15-10 6-2-10 2-17-11 3-21-11 11-30-11

SHEET 26 OF 38

FILE => 53-3039-u-motif_barrier.dgn

USERNAME => s113946 DATE PLOTTED => 28-MAR-2012 TIME PLOTTED => 12:32

DIST	COUNTY	ROUTE	KILOMETER POST TOTAL PROJECT	SHEET No	TOTAL SHEETS
07	LA	5	2.4/4.0	702	1288

REGISTERED CIVIL ENGINEER 12-12-11 DATE

3-26-12
PLANS APPROVAL DATE

REGISTERED PROFESSIONAL ENGINEER PAUL A. PETERSON No. C66764 Exp. 09-30-12 CIVIL STATE OF CALIFORNIA

The State of California or its officers or agents shall not be responsible for the accuracy or completeness of electronic copies of this plan sheet.

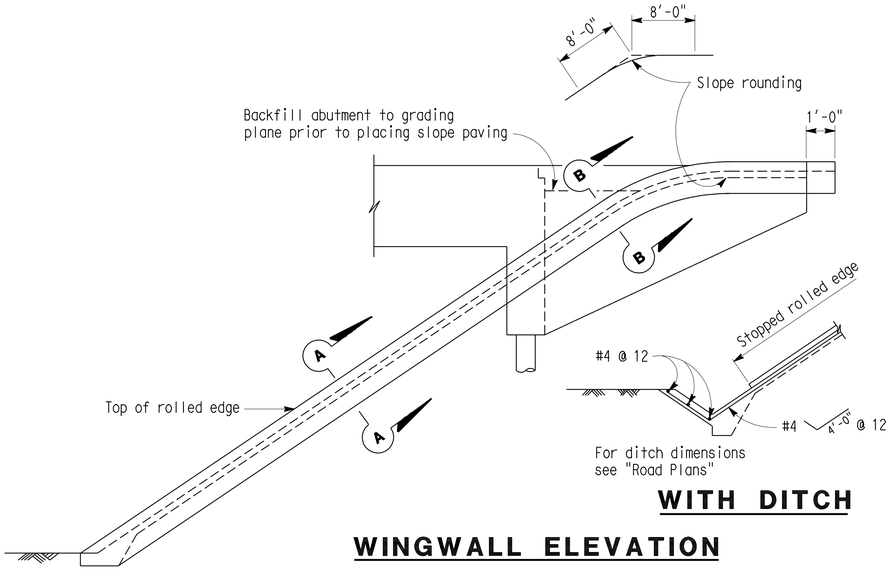

WITH DITCH

WINGWALL ELEVATION

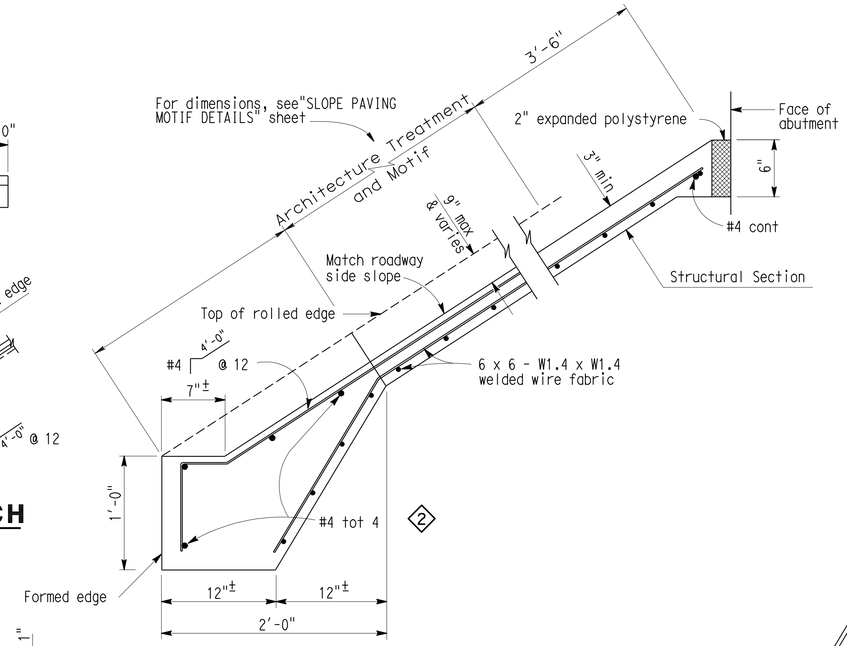

TYPICAL SECTION - CONCRETE PAVING

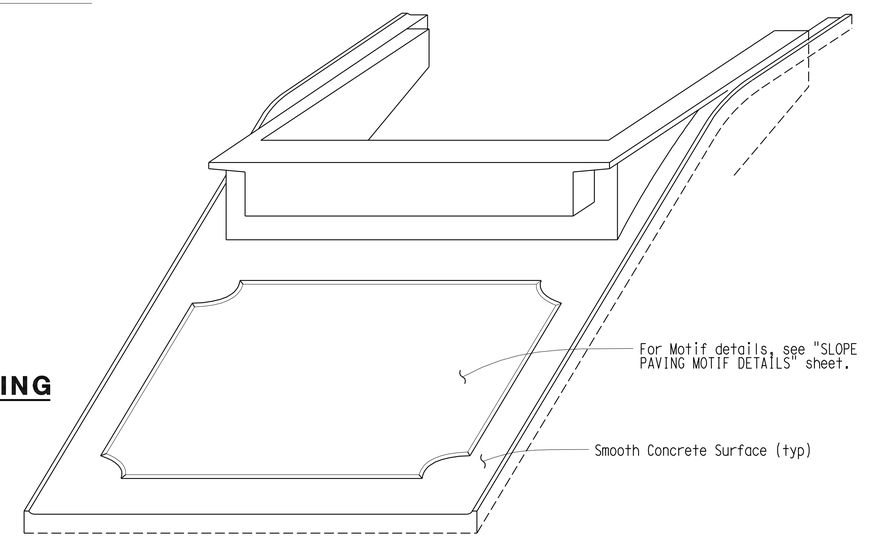

2 **PICTORIAL VIEW OF TYPICAL INSTALLATION**

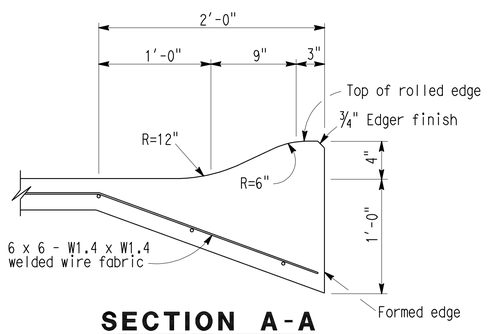

SECTION A-A

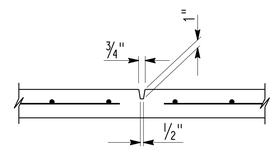

PREFORMED GROOVE

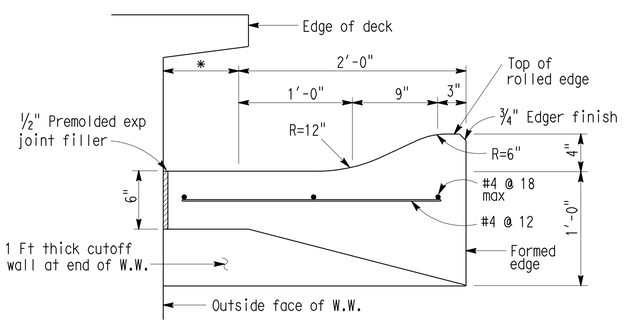

SECTION B-B

* This dimension becomes zero when edge of deck is at outside face of W.W.

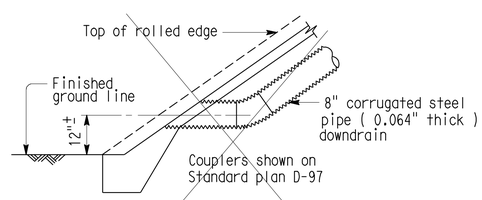

TYPICAL - NO CURB

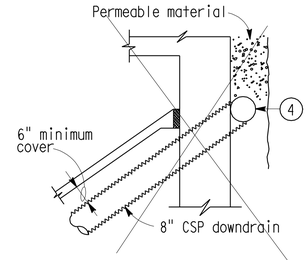

TYPICAL - DRAIN CONNECTION

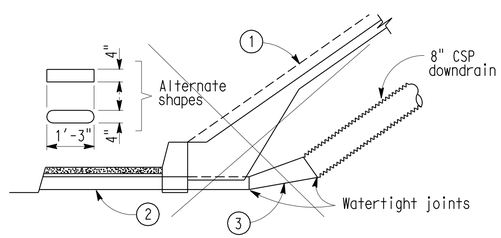

TYPICAL - WITH SIDEWALK

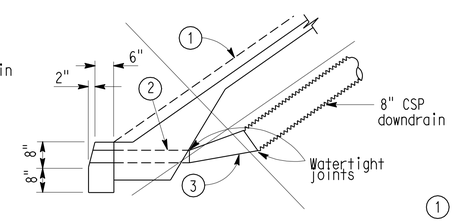

TYPICAL - WITH CURB

1 **DRAINAGE DETAILS**

Note: Drainage details are only applicable when B0-3 / 3-5

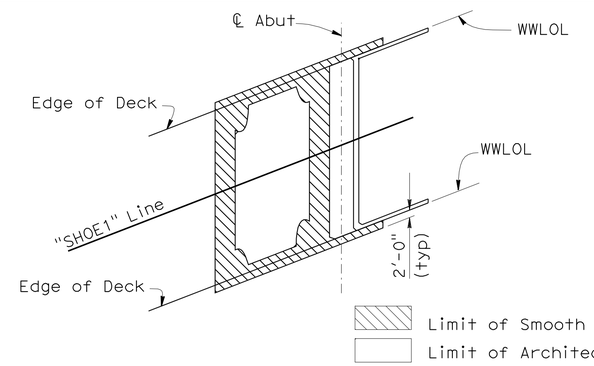

LIMITS OF SLOPE PAVING

1. Top of rolled edge
2. Conduit: 0.064" galv corrugated steel or 0.109" smooth galv steel
3. Taper: { 0.064" galv corrugated steel or 0.109" smooth galv steel
4. 8" perforated steel pipe (0.064" thick) underdrain behind abutment. Connect to downdrain as shown on limits of Slope Paving & Drainage layout.

No Scale

STANDARD DRAWING				
RELEASE DATE	DESIGN	BY	CHECKED	RELEASED BY
	DETAILS	BY D. Wooten	CHECKED	Susan Hida
FILE NO. xs4-210	SUBMITTED	BY Dan Adams	DRAWING DATE 6/07	OFFICE CHIEF

1 Deleted Details
2 Modified Details

STATE OF CALIFORNIA
DEPARTMENT OF TRANSPORTATION

DIVISION OF ENGINEERING SERVICES

BRIDGE NO. 53-3039
POST MILE 3.04

SHOEMAKER AVE OC (REPLACE)
SLOPE PAVING - FULL SLOPE

DS OSD 2147A (CADD) (REV. 4/07)

ORIGINAL SCALE IN INCHES FOR REDUCED PLANS 0 1 2 3

CU 07
EA 215931

DISREGARD PRINTS BEARING EARLIER REVISION DATES 11-30-11

REVISION DATES

SHEET 27 OF 38

FILE => 53-3039-u-slopepaving.dgn

USERNAME => s113946 DATE PLOTTED => 28-MAR-2012 TIME PLOTTED => 12:32

DIST	COUNTY	ROUTE	POST MILES TOTAL PROJECT	SHEET No	TOTAL SHEETS
07	LA	5	2.4/4.0	703	1288

REGISTERED CIVIL ENGINEER — DATE 12-12-11

3-26-12
PLANS APPROVAL DATE

REGISTERED PROFESSIONAL ENGINEER — PAUL A. PETERSON — No. C66764 — Exp. 09-30-12 — CIVIL — STATE OF CALIFORNIA

The State of California or its officers or agents shall not be responsible for the accuracy or completeness of electronic copies of this plan sheet.

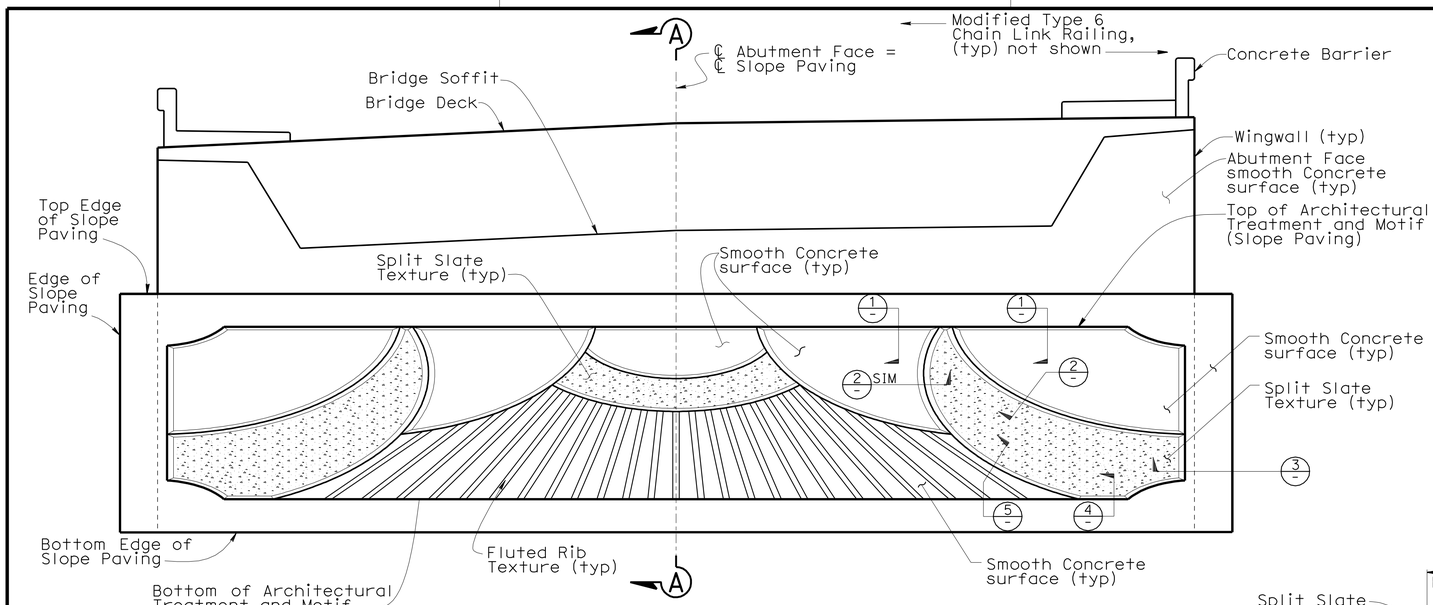

DEVELOPED ELEVATION AT ABUTMENT 1

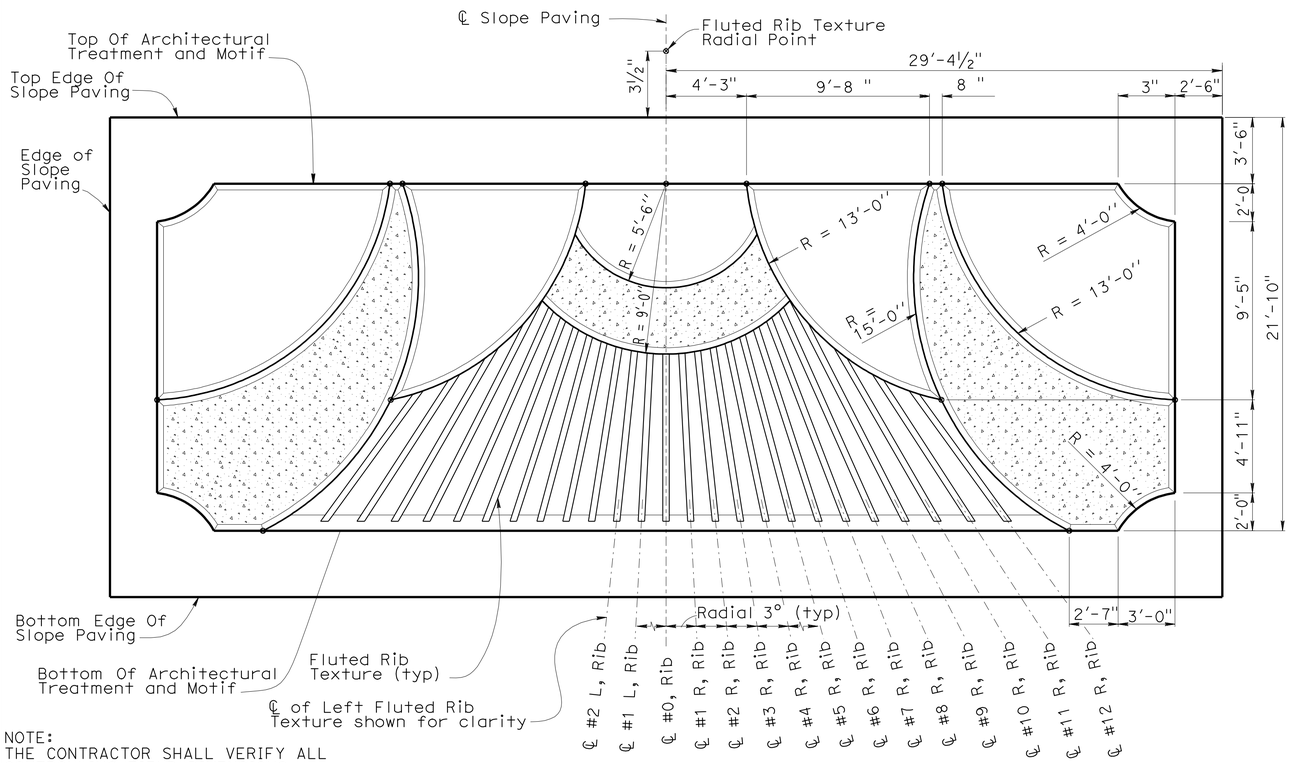

NOTE:
THE CONTRACTOR SHALL VERIFY ALL CONTROLLING FIELD DIMENSIONS BEFORE ORDERING OR FABRICATING ANY MATERIAL.

ARCHITECTURAL MOTIF AT SLOPE PAVING

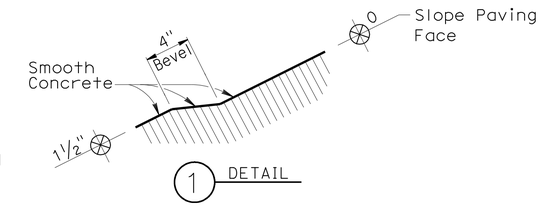

1 DETAIL

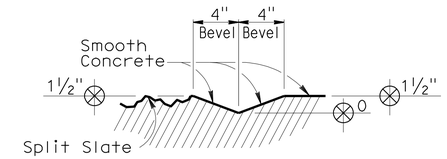

2 DETAIL

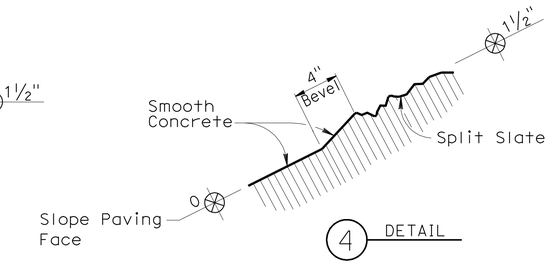

4 DETAIL

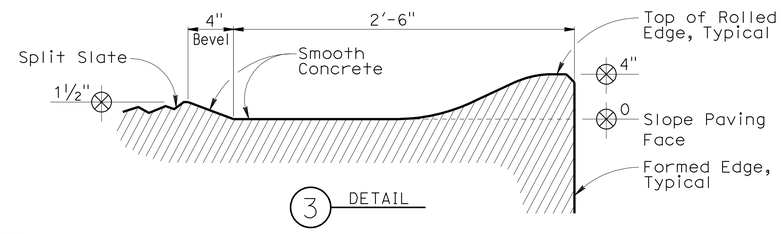

3 DETAIL

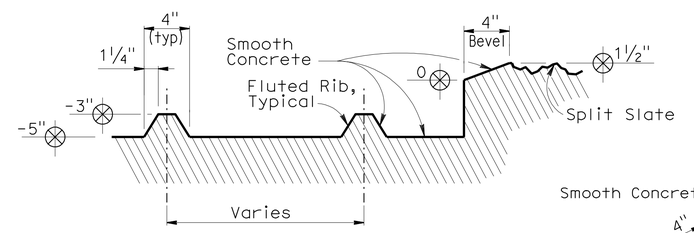

5 DETAIL

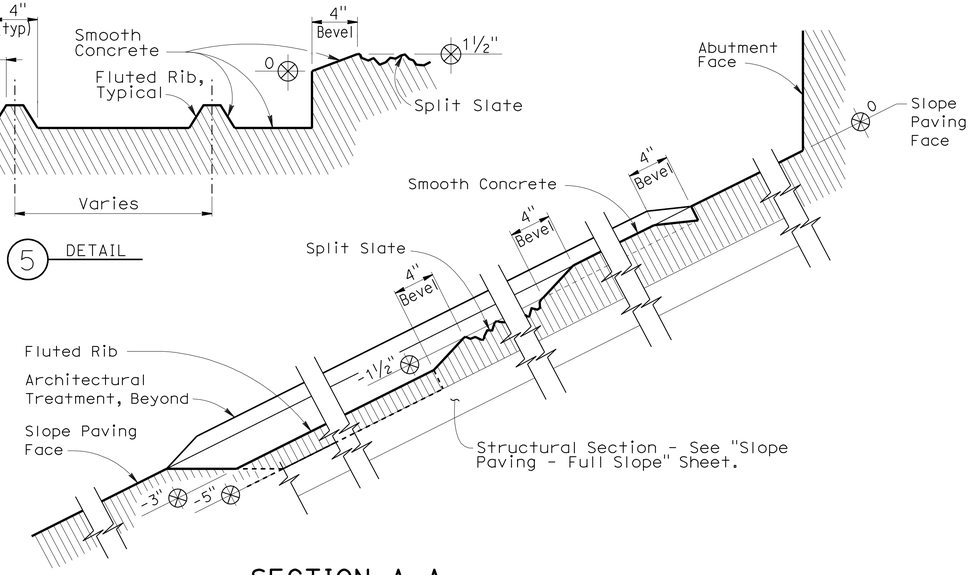

SECTION A-A

NO SCALE

	BY	CHECKED
DESIGN	H. Javier Chavez	Isacc Tasabia
DETAILS	Jaime Ramirez	H. Javier Chavez
QUANTITIES	John Peterson	Paul Peterson

STATE OF CALIFORNIA
DEPARTMENT OF TRANSPORTATION

DIVISION OF ENGINEERING SERVICES
STRUCTURE DESIGN
DESIGN BRANCH 14

BRIDGE NO. 53-3039
POST MILE 3.04

SHOEMAKER AVE OC (REPLACE)
SLOPE PAVING MOTIF DETAILS

STRUCTURES DESIGN DETAIL SHEET (ENGLISH) (REV. 10/25/05)

ORIGINAL SCALE IN INCHES FOR REDUCED PLANS 0 1 2 3

CU 07
EA 215931

DISREGARD PRINTS BEARING EARLIER REVISION DATES

REVISION DATES: 8-28-09, 8-11-09, 4-26-10, 6-3-10, 3-15-11, 05-13-11, 11-30-11

SHEET 28 OF 38

FILE => 53-3039-u-ssloppmotifdd.dgn

USERNAME => s113946 DATE PLOTTED => 28-MAR-2012 TIME PLOTTED => 12:32

DIST	COUNTY	ROUTE	POST MILES TOTAL PROJECT	SHEET No	TOTAL SHEETS
07	LA	5	2.4/4.0	704	1288

REGISTERED GEOTECHNICAL ENGINEER — DATE 06/2011

3-26-12
PLANS APPROVAL DATE

REGISTERED PROFESSIONAL ENGINEER — FARID MOTAMED — No. 2738 — Exp. 6/30/11 — GEOTECHNICAL — STATE OF CALIFORNIA

The State of California or its officers or agents shall not be responsible for the accuracy or completeness of electronic copies of this plan sheet.

URS CORPORATION
2020 EAST FIRST STREET, SUITE 400
SANTA ANA, CA 92705

BENCH MARK

PRHV 110 Elev. 77 .99′
FD L & "LACO DPW" TAG @. NE CORNER OF FIRESTONE BLVD
AND SHOEMAKER AVE, N/O 1-5
NAVD 88

PRHV 115 Elev. 79.95′
SET PK NAIL & TIN ON TC @. SE CORNER OF SHOEMAKER
AVE AND FIRESTONE BLVD, S/O 1-5
NAVD 88

Notes

1. This LOTB sheet was prepared in accordance with the Caltrans Soil & Rock Logging, Classification, and Presentation Manual (2010) except three digit sequence number in boring identification starting with the segment number per exception request approved on April 08, 2009

2. For protection of underground utility lines, hand-auger was used to remove top 5 to 10 feet of subsurface material for exploratory borings and cone penetration testings.

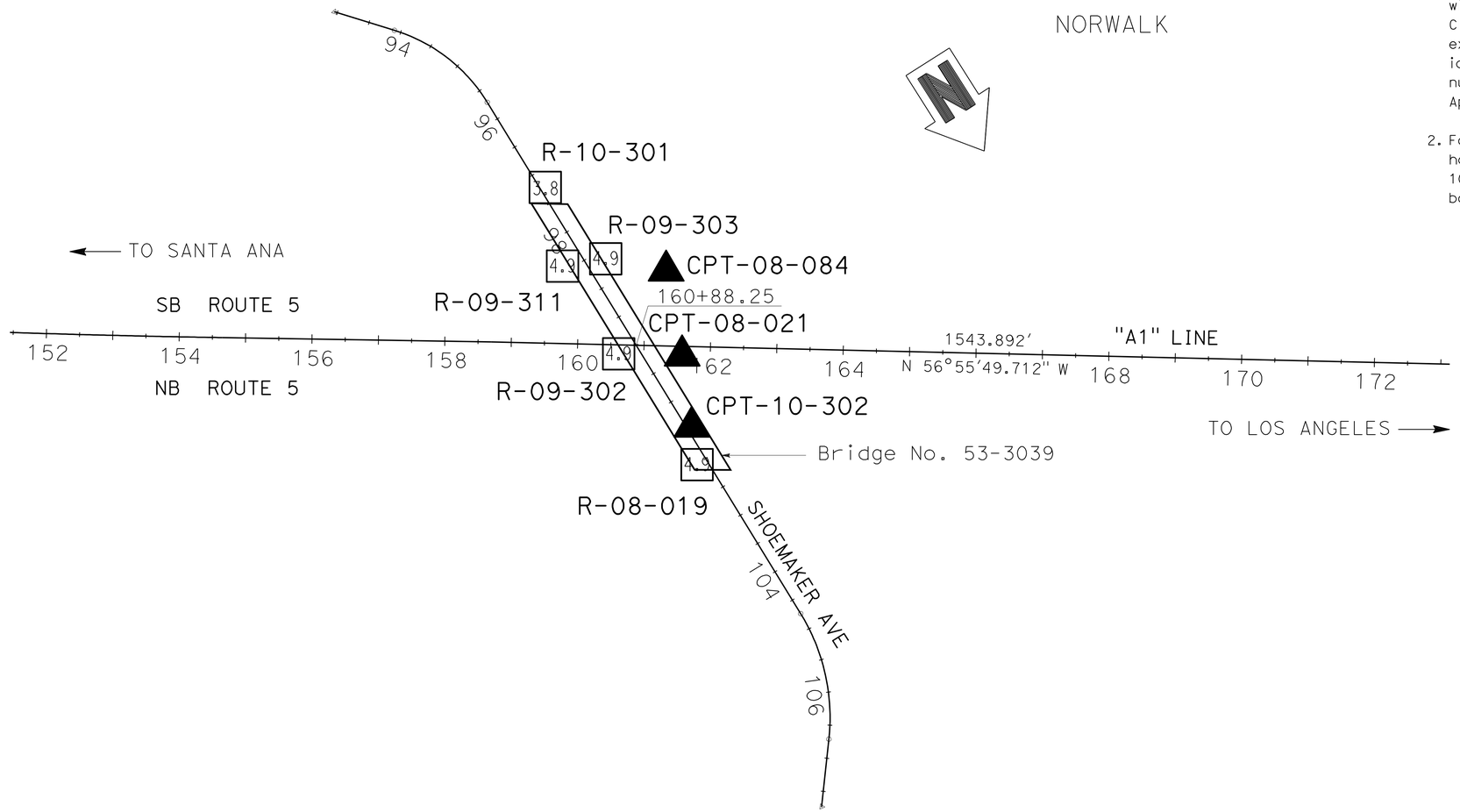

PLAN
SCALE 1"=100′

ENGINEERING SERVICES	GEOTECHNICAL SERVICES	STATE OF CALIFORNIA DEPARTMENT OF TRANSPORTATION	DIVISION OF ENGINEERING SERVICES STRUCTURE DESIGN DESIGN BRANCH	BRIDGE NO. 53-3039 POST MILE 3.0	SHOEMAKER AVE OVERCROSSING LOG OF TEST BORINGS SHEET 1 OF 10
FUNCTIONAL SUPERVISOR NAME: F.MOTAMED	DRAWN BY: P.QUACH CHECKED BY: D.ORRIS	FIELD INVESTIGATION BY: EJ.JEON/P.MCDONALD/M.ISLAM/L.GOMEZ/P.CHAU			
OGS CIVIL LOG OF TEST BORINGS SHEET	ORIGINAL SCALE IN INCHES FOR REDUCED PLANS 0 1 2 3	CU 59A0590 EA 215931	DISREGARD PRINTS BEARING EARLIER REVISION DATES	REVISION DATES 06/17/11	SHEET 29 OF 38

FILE => 53-3039-z-lltb01.dgn

USERNAME => s113946 DATE PLOTTED => 28-MAR-2012 TIME PLOTTED => 12:33

DIST	COUNTY	ROUTE	POST MILES TOTAL PROJECT	SHEET No	TOTAL SHEETS
07	LA	5	2.4/4.0	705	1288

REGISTERED GEOTECHNICAL ENGINEER — DATE 06/2011

3-26-12
PLANS APPROVAL DATE

REGISTERED PROFESSIONAL ENGINEER — CHUNGKEUN LEE — No. C69450 — Exp. 6/30/12 — CIVIL — STATE OF CALIFORNIA

The State of California or its officers or agents shall not be responsible for the accuracy or completeness of electronic copies of this plan sheet.

FOR PLAN VIEW, SEE
"LOG OF TEST BORINGS" 1 OF 10

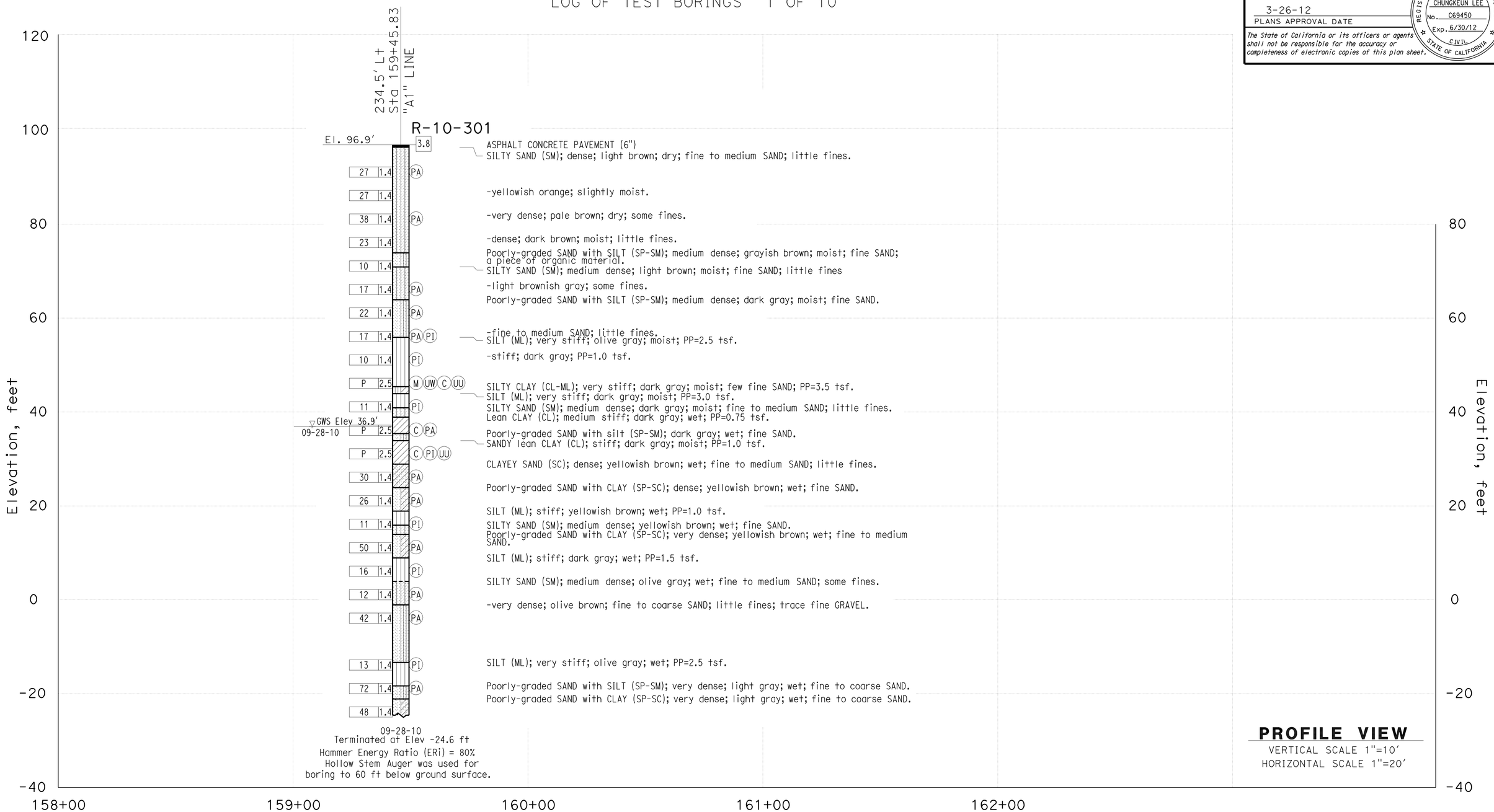

PROFILE VIEW
VERTICAL SCALE 1"=10'
HORIZONTAL SCALE 1"=20'

ENGINEERING SERVICES	GEOTECHNICAL SERVICES	STATE OF CALIFORNIA DEPARTMENT OF TRANSPORTATION	DIVISION OF ENGINEERING SERVICES STRUCTURE DESIGN DESIGN BRANCH	BRIDGE NO. 53-3039 POST MILE 3.0	SHOEMAKER AVE OVERCROSSING
FUNCTIONAL SUPERVISOR	DRAWN BY: P.QUACH (URS)	FIELD INVESTIGATION BY:			LOG OF TEST BORINGS SHEET 2 OF 10
NAME: C.LIU	CHECKED BY: C.HARRIS	M.ISLAM/L.GOMEZ			

OGS CIVIL LOG OF TEST BORINGS SHEET

ORIGINAL SCALE IN INCHES FOR REDUCED PLANS 0 1 2 3

CU 59A0590
EA 215931

DISREGARD PRINTS BEARING EARLIER REVISION DATES → 06/27/11 11-30-11

REVISION DATES — SHEET 30 OF 38

FILE => 53-3039-z-ltb02.dgn

USERNAME => s113946 DATE PLOTTED => 28-MAR-2012 TIME PLOTTED => 12:33

DIST	COUNTY	ROUTE	POST MILES TOTAL PROJECT	SHEET No	TOTAL SHEETS
07	LA	5	2.4/4.0	706	1288

REGISTERED GEOTECHNICAL ENGINEER — DATE 06/2011

3-26-12
PLANS APPROVAL DATE

REGISTERED PROFESSIONAL ENGINEER — FARID MOTAMED — No. 2738 — Exp. 6/30/11 — GEOTECHNICAL — STATE OF CALIFORNIA

The State of California or its officers or agents shall not be responsible for the accuracy or completeness of electronic copies of this plan sheet.

URS CORPORATION
2020 EAST FIRST STREET, SUITE 400
SANTA ANA, CA 92705

FOR PLAN VIEW, SEE
"LOG OF TEST BORINGS" 1 OF 10

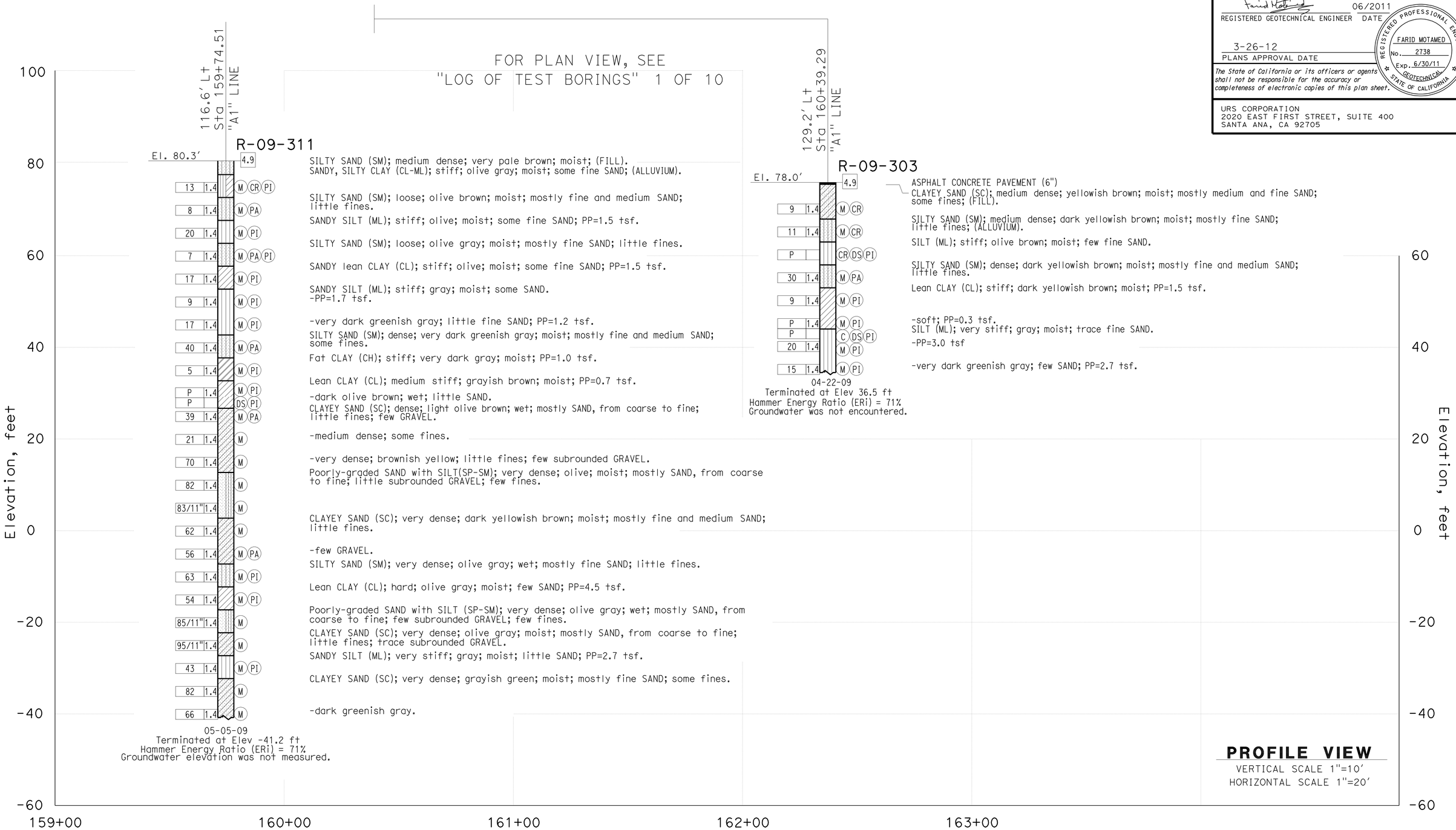

ENGINEERING SERVICES	GEOTECHNICAL SERVICES	STATE OF CALIFORNIA DEPARTMENT OF TRANSPORTATION	DIVISION OF ENGINEERING SERVICES STRUCTURE DESIGN DESIGN BRANCH	BRIDGE NO. 53-3039 / POST MILE 3.0	SHOEMAKER AVE OVERCROSSING
FUNCTIONAL SUPERVISOR	DRAWN BY: P.QUACH	FIELD INVESTIGATION BY:			LOG OF TEST BORINGS SHEET 3 OF 10
NAME: F.MOTAMED	CHECKED BY: D.ORRIS	EJ.JEON/P.MCDONALD/M.ISLAM/L.GOMEZ/P.CHAU			

OGS CIVIL LOG OF TEST BORINGS SHEET

ORIGINAL SCALE IN INCHES FOR REDUCED PLANS 0 1 2 3

CU 59A0590
EA 215931

DISREGARD PRINTS BEARING EARLIER REVISION DATES → 06/07/11 11-30-11

REVISION DATES

SHEET 31 OF 38

FILE => 53-3039-z-ltb03.dgn

USERNAME => s113946 DATE PLOTTED => 28-MAR-2012 TIME PLOTTED => 12:33

DIST	COUNTY	ROUTE	POST MILES TOTAL PROJECT	SHEET No	TOTAL SHEETS
07	LA	5	2.4/4.0	707	1288

REGISTERED GEOTECHNICAL ENGINEER — DATE 06/2011

3-26-12
PLANS APPROVAL DATE

REGISTERED PROFESSIONAL ENGINEER — FARID MOTAMED — No. 2738 — Exp. 6/30/11 — GEOTECHNICAL — STATE OF CALIFORNIA

The State of California or its officers or agents shall not be responsible for the accuracy or completeness of electronic copies of this plan sheet.

URS CORPORATION
2020 EAST FIRST STREET, SUITE 400
SANTA ANA, CA 92705

FOR PLAN VIEW, SEE
"LOG OF TEST BORINGS" 1 OF 10

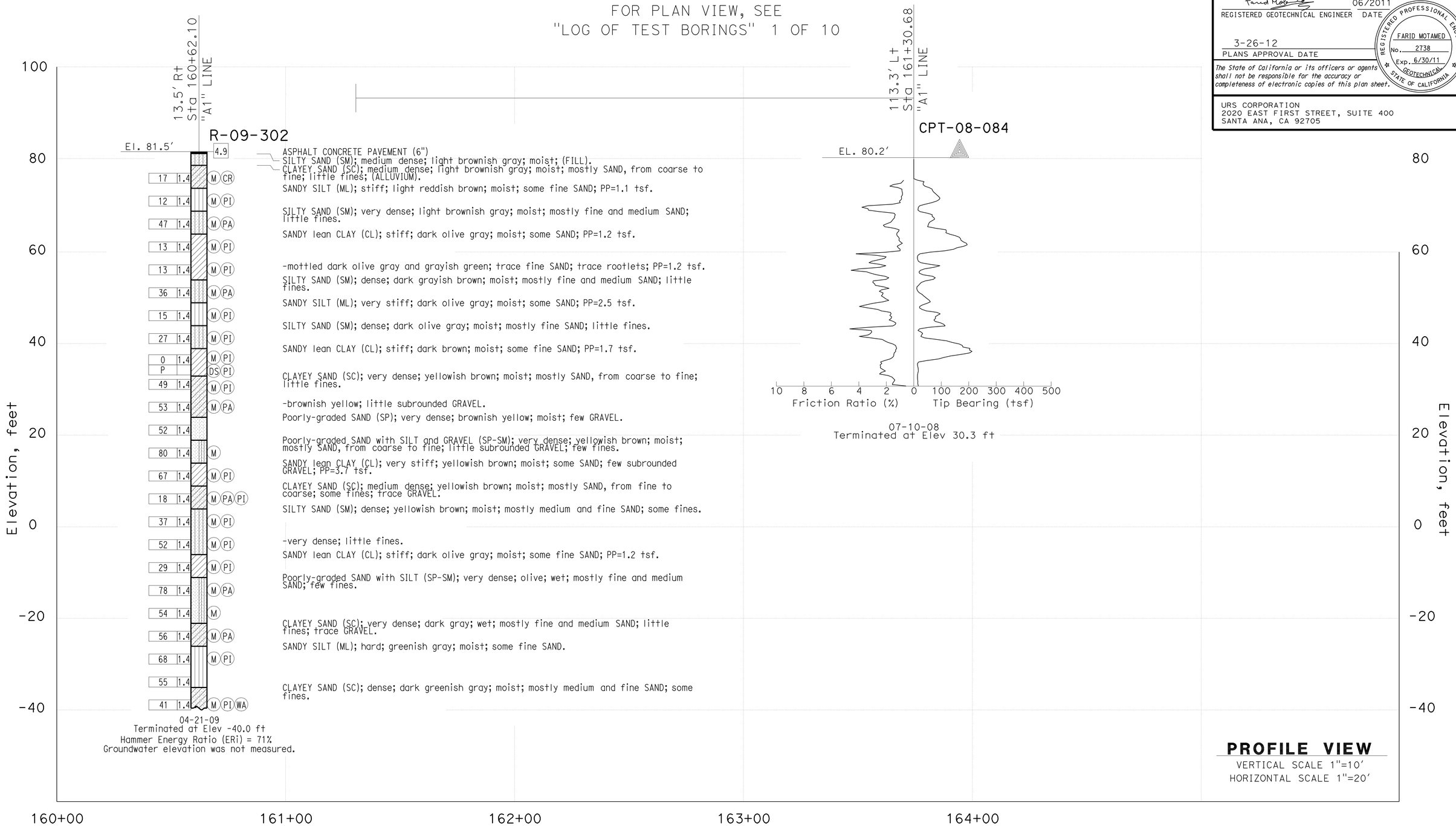

ENGINEERING SERVICES		GEOTECHNICAL SERVICES	STATE OF CALIFORNIA DEPARTMENT OF TRANSPORTATION	DIVISION OF ENGINEERING SERVICES STRUCTURE DESIGN DESIGN BRANCH	BRIDGE NO. 53-3039	SHOEMAKER AVE OVERCROSSING
FUNCTIONAL SUPERVISOR	DRAWN BY: P.QUACH	FIELD INVESTIGATION BY:			POST MILE 3.0	LOG OF TEST BORINGS SHEET 4 OF 10
NAME: F.MOTAMED	CHECKED BY: D.ORRIS	EJ.JEON/P.MCDONALD/M.ISLAM/L.GOMEZ/P.CHAU				

OGS CIVIL LOG OF TEST BORINGS SHEET

ORIGINAL SCALE IN INCHES FOR REDUCED PLANS 0 1 2 3

CU 59A0590
EA 215931

DISREGARD PRINTS BEARING EARLIER REVISION DATES → 06/07/11 11-30-11

REVISION DATES

SHEET 32 OF 38

FILE => 53-3039-z-ltb04.dgn

USERNAME => s113946 DATE PLOTTED => 28-MAR-2012 TIME PLOTTED => 12:33

DIST	COUNTY	ROUTE	POST MILES TOTAL PROJECT	SHEET No	TOTAL SHEETS
07	LA	5	2.4/4.0	708	1288

REGISTERED GEOTECHNICAL ENGINEER — DATE 06/2011

3-26-12
PLANS APPROVAL DATE

REGISTERED PROFESSIONAL ENGINEER — FARID MOTAMED — No. 2738 — Exp. 6/30/11 — GEOTECHNICAL — STATE OF CALIFORNIA

The State of California or its officers or agents shall not be responsible for the accuracy or completeness of electronic copies of this plan sheet.

URS CORPORATION
2020 EAST FIRST STREET, SUITE 400
SANTA ANA, CA 92705

FOR PLAN VIEW, SEE
"LOG OF TEST BORINGS" 1 OF 10

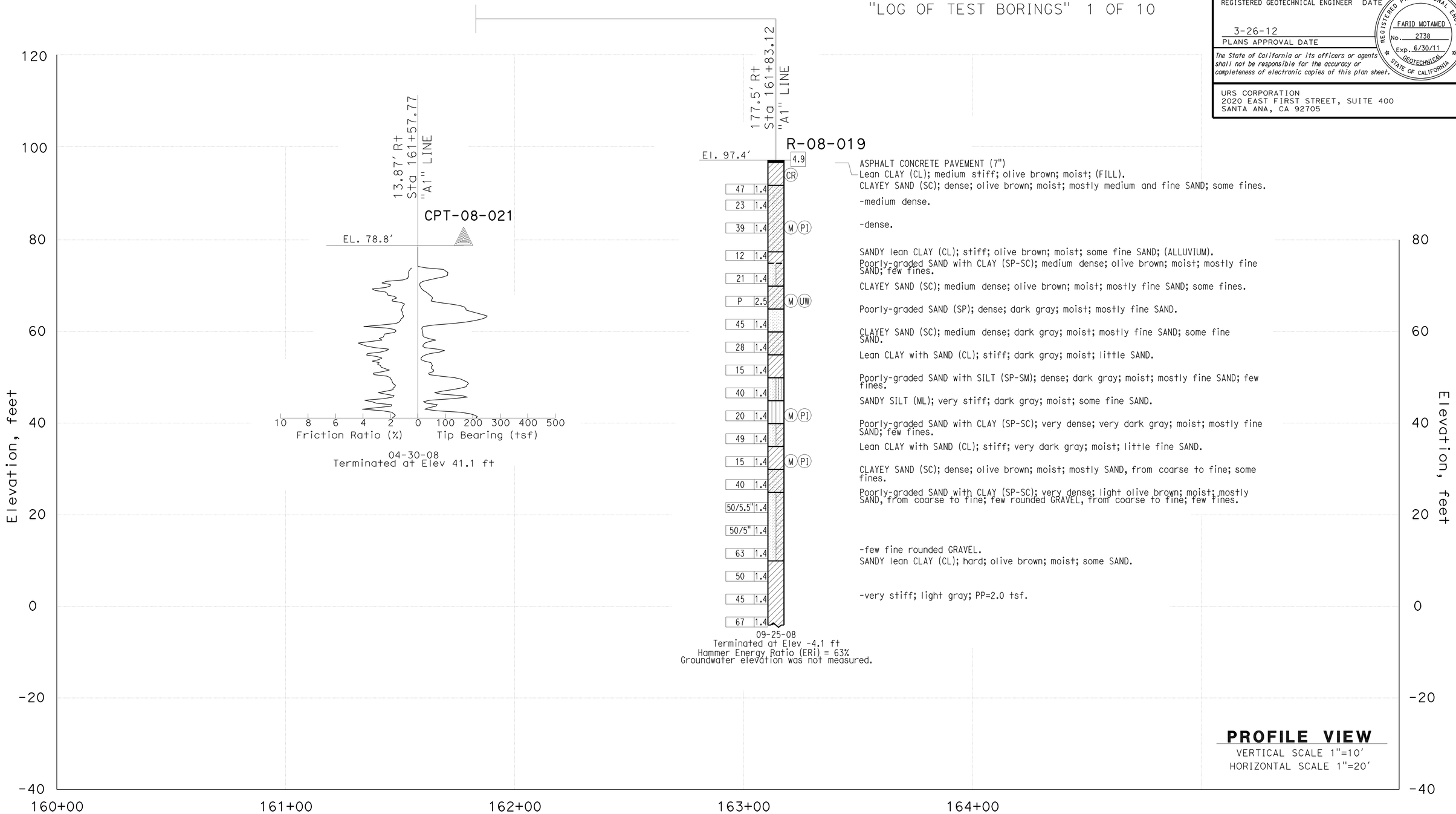

ENGINEERING SERVICES		GEOTECHNICAL SERVICES
FUNCTIONAL SUPERVISOR	DRAWN BY: P.QUACH	FIELD INVESTIGATION BY:
NAME: F.MOTAMED	CHECKED BY: D.ORRIS	EJ.JEON/P.MCDONALD/M.ISLAM/L.GOMEZ/P.CHAU

STATE OF CALIFORNIA
DEPARTMENT OF TRANSPORTATION

DIVISION OF ENGINEERING SERVICES
STRUCTURE DESIGN
DESIGN BRANCH

BRIDGE NO. 53-3039
POST MILE 3.0

SHOEMAKER AVE OVERCROSSING

LOG OF TEST BORINGS SHEET 5 OF 10

OGS CIVIL LOG OF TEST BORINGS SHEET

ORIGINAL SCALE IN INCHES FOR REDUCED PLANS 0 1 2 3

CU 59A0590
EA 215931

DISREGARD PRINTS BEARING EARLIER REVISION DATES → 06/27/11 11-30-11

REVISION DATES

SHEET 33 OF 38

FILE => 53-3039-z-ltb05.dgn

USERNAME => s113946 DATE PLOTTED => 28-MAR-2012 TIME PLOTTED => 12:33

DIST	COUNTY	ROUTE	POST MILES TOTAL PROJECT	SHEET No	TOTAL SHEETS
07	LA	5	2.4/4.0	709	1288

REGISTERED GEOTECHNICAL ENGINEER 06/2011 DATE

3-26-12
PLANS APPROVAL DATE

REGISTERED PROFESSIONAL ENGINEER CHUNGKEUN LEE No. C69450 Exp. 6/30/12 CIVIL STATE OF CALIFORNIA

The State of California or its officers or agents shall not be responsible for the accuracy or completeness of electronic copies of this plan sheet.

FOR PLAN VIEW, SEE
"LOG OF TEST BORINGS" 1 OF 10

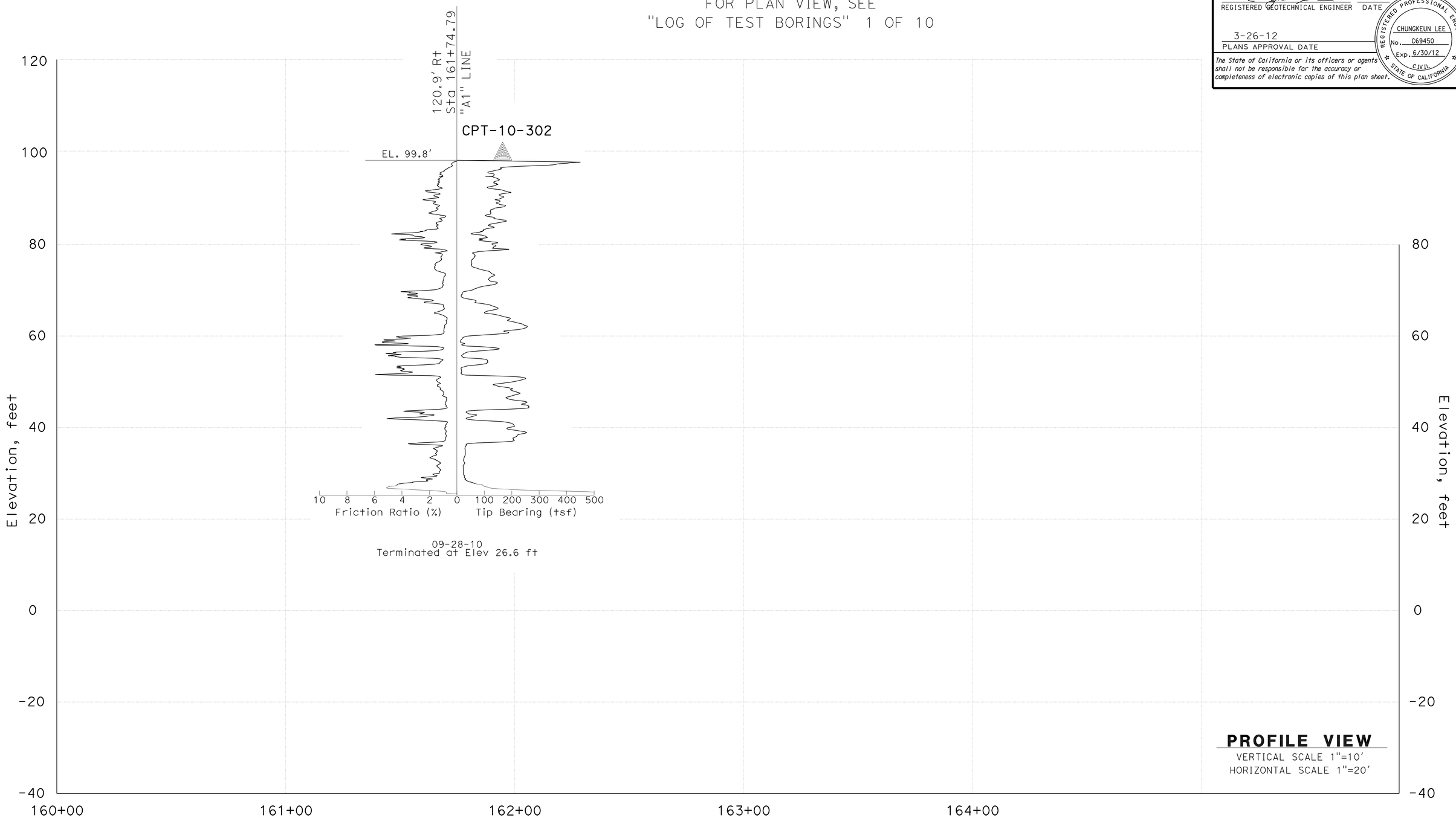

ENGINEERING SERVICES		GEOTECHNICAL SERVICES	STATE OF CALIFORNIA DEPARTMENT OF TRANSPORTATION	DIVISION OF ENGINEERING SERVICES STRUCTURE DESIGN	BRIDGE NO. 53-3039	SHOEMAKER AVE OVERCROSSING
FUNCTIONAL SUPERVISOR	DRAWN BY: P.QUACH (URS)	FIELD INVESTIGATION BY:		DESIGN BRANCH	POST MILE 3.0	LOG OF TEST BORINGS SHEET 6 OF 10
NAME: C.LIU	CHECKED BY: C.HARRIS	M.ISLAM/L.GOMEZ				

OGS CIVIL LOG OF TEST BORINGS SHEET

ORIGINAL SCALE IN INCHES FOR REDUCED PLANS 0 1 2 3

CU 59A0590
EA 215931

DISREGARD PRINTS BEARING EARLIER REVISION DATES

REVISION DATES: 06/27/11 11-30-11

SHEET 34 OF 38

FILE => 53-3039-z-ltb06.dgn

USERNAME => s113946 DATE PLOTTED => 28-MAR-2012 TIME PLOTTED => 12:33

DIST	COUNTY	ROUTE	POST MILES TOTAL PROJECT	SHEET No	TOTAL SHEETS
07	LA	5	2.4/4.0	710	1288

REGISTERED GEOTECHNICAL ENGINEER — DATE 06/2011

3-26-12
PLANS APPROVAL DATE

REGISTERED PROFESSIONAL ENGINEER — FARID MOTAMED — No. 2738 — Exp. 6/30/11 — GEOTECHNICAL — STATE OF CALIFORNIA

The State of California or its officers or agents shall not be responsible for the accuracy or completeness of electronic copies of this plan sheet.

URS CORPORATION
2020 EAST FIRST STREET, SUITE 400
SANTA ANA, CA 92705

REFERENCE: CALTRANS SOIL & ROCK LOGGING, CLASSIFICATION, AND PRESENTATION MANUAL (2010)

CEMENTATION

Description	Criteria
Weak	Crumbles or breaks with handling or little finger pressure.
Moderate	Crumbles or breaks with considerable finger pressure.
Strong	Will not crumble or break with finger pressure.

BOREHOLE IDENTIFICATION

Symbol	Hole Type	Description
Size	A	Auger Boring (hollow or solid stem bucket)
Size	R RW RC P	Rotary drilled boring (conventional) Rotary drilled with self-casing wire-line Rotary core with continuously-sampled, self-casing wire-line Rotary percussion boring (air)
Size	R	Rotary drilled diamond core
Size	HD HA	Hand driven (1-inch soil tube) Hand Auger
●	D	Dynamic Cone Penetration Boring
▲	CPT	Cone Penetration Test (ASTM D 5778)
⬚	O	Other (note on LOTB)

Note: Size in inches.

CONSISTENCY OF COHESIVE SOILS

Description	Shear Strength (tsf)	Pocket Penetrometer Measurement, PP, (tsf)	Torvane Measurement, TV, (tsf)	Vane Shear Measurement, VS, (tsf)
Very Soft	Less than 0.12	Less than 0.25	Less than 0.12	Less than 0.12
Soft	0.12 - 0.25	0.25 - 0.5	0.12 - 0.25	0.12 - 0.25
Medium Stiff	0.25 - 0.5	0.5 - 1	0.25 - 0.5	0.25 - 0.5
Stiff	0.5 - 1	1 - 2	0.5 - 1	0.5 - 1
Very Stiff	1 - 2	2 - 4	1 - 2	1 - 2
Hard	Greater than 2	Greater than 4	Greater than 2	Greater than 2

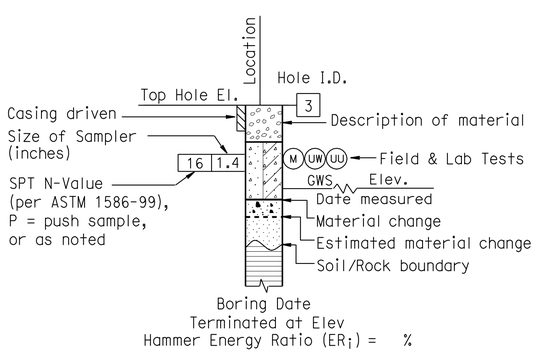

ROTARY BORING

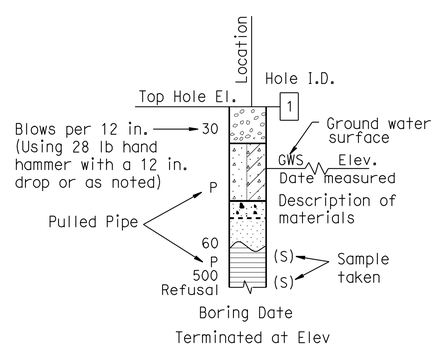

HAND BORING

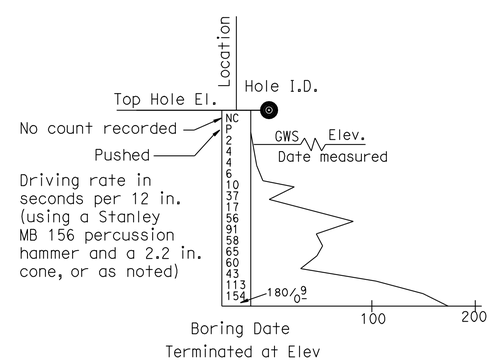

DYNAMIC CONE PENETRATION BORING

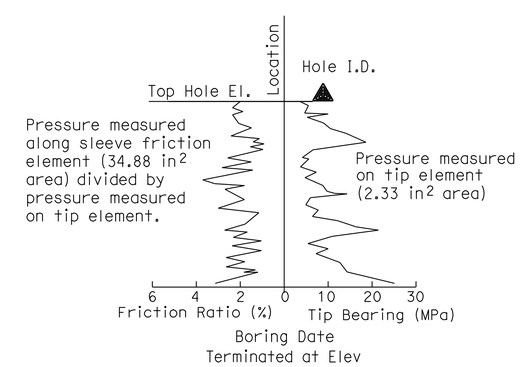

CONE PENETRATION TEST (CPT) BORING

ENGINEERING SERVICES	GEOTECHNICAL SERVICES	STATE OF CALIFORNIA DEPARTMENT OF TRANSPORTATION	DIVISION OF ENGINEERING SERVICES STRUCTURE DESIGN DESIGN BRANCH	BRIDGE NO. 53-3039 / POST MILE 3.0	SHOEMAKER AVE OVERCROSSING
FUNCTIONAL SUPERVISOR NAME: F.MOTAMED	DRAWN BY: P.QUACH CHECKED BY: D.ORRIS	FIELD INVESTIGATION BY: EJ.JEON/P.MCDONALD/M.ISLAM/L.GOMEZ/P.CHAU			**LOG OF TEST BORINGS SHEET 7 OF 10**

OGS CIVIL LOG OF TEST BORINGS SHEET

ORIGINAL SCALE IN INCHES FOR REDUCED PLANS 0 1 2 3

CU 59A0590
EA 215931

DISREGARD PRINTS BEARING EARLIER REVISION DATES — REVISION DATES 06/17/11 11-30-11

SHEET 35 OF 38

FILE => 53-3039-z-ltb07.dgn

USERNAME => s113946 DATE PLOTTED => 28-MAR-2012 TIME PLOTTED => 12:33

REFERENCE: CALTRANS SOIL & ROCK LOGGING, CLASSIFICATION, AND PRESENTATION MANUAL (2010)

DIST	COUNTY	ROUTE	POST MILES TOTAL PROJECT	SHEET No	TOTAL SHEETS
07	LA	5	2.4/4.0	711	1288

REGISTERED GEOTECHNICAL ENGINEER — DATE 06/2011

3-26-12
PLANS APPROVAL DATE

REGISTERED PROFESSIONAL ENGINEER — FARID MOTAMED — No. 2738 — Exp. 6/30/11 — GEOTECHNICAL — STATE OF CALIFORNIA

The State of California or its officers or agents shall not be responsible for the accuracy or completeness of electronic copies of this plan sheet.

URS CORPORATION
2020 EAST FIRST STREET, SUITE 400
SANTA ANA, CA 92705

GROUP SYMBOLS AND NAMES

Graphic/Symbol	Group Names	Graphic/Symbol	Group Names
GW	Well-graded GRAVEL Well-graded GRAVEL with SAND	CL	Lean CLAY Lean CLAY with SAND Lean CLAY with GRAVEL SANDY lean CLAY SANDY lean CLAY with GRAVEL GRAVELLY lean CLAY GRAVELLY lean CLAY with SAND
GP	Poorly-graded GRAVEL Poorly-graded GRAVEL with SAND		
GW-GM	Well-graded GRAVEL with SILT Well-graded GRAVEL with SILT and SAND	CL-ML	SILTY CLAY SILTY CLAY with SAND SILTY CLAY with GRAVEL SANDY SILTY CLAY SANDY SILTY CLAY with GRAVEL GRAVELLY SILTY CLAY GRAVELLY SILTY CLAY with SAND
GW-GC	Well-graded GRAVEL with CLAY (or SILTY CLAY) Well-graded GRAVEL with CLAY and SAND (or SILTY CLAY and SAND)		
GP-GM	Poorly-graded GRAVEL with SILT Poorly-graded GRAVEL with SILT and SAND	ML	SILT SILT with SAND SILT with GRAVEL SANDY SILT SANDY SILT with GRAVEL GRAVELLY SILT GRAVELLY SILT with SAND
GP-GC	Poorly-graded GRAVEL with CLAY (or SILTY CLAY) Poorly-graded GRAVEL with CLAY and SAND (or SILTY CLAY and SAND)		
GM	SILTY GRAVEL SILTY GRAVEL with SAND	OL	ORGANIC lean CLAY ORGANIC lean CLAY with SAND ORGANIC lean CLAY with GRAVEL SANDY ORGANIC lean CLAY SANDY ORGANIC lean CLAY with GRAVEL GRAVELLY ORGANIC lean CLAY GRAVELLY ORGANIC lean CLAY with SAND
GC	CLAYEY GRAVEL CLAYEY GRAVEL with SAND		
GC-GM	SILTY, CLAYEY GRAVEL SILTY, CLAYEY GRAVEL with SAND	OL	ORGANIC SILT ORGANIC SILT with SAND ORGANIC SILT with GRAVEL SANDY ORGANIC SILT SANDY ORGANIC SILT with GRAVEL GRAVELLY ORGANIC SILT GRAVELLY ORGANIC SILT with SAND
SW	Well-graded SAND Well-graded SAND with GRAVEL		
SP	Poorly-graded SAND Poorly-graded SAND with GRAVEL	CH	Fat CLAY Fat CLAY with SAND Fat CLAY with GRAVEL SANDY fat CLAY SANDY fat CLAY with GRAVEL GRAVELLY fat CLAY GRAVELLY fat CLAY with SAND
SW-SM	Well-graded SAND with SILT Well-graded SAND with SILT and GRAVEL		
SW-SC	Well-graded SAND with CLAY (or SILTY CLAY) Well-graded SAND with CLAY and GRAVEL (or SILTY CLAY and GRAVEL)	MH	Elastic SILT Elastic SILT with SAND Elastic SILT with GRAVEL SANDY elastic SILT SANDY elastic SILT with GRAVEL GRAVELLY elastic SILT GRAVELLY elastic SILT with SAND
SP-SM	Poorly-graded SAND with SILT Poorly-graded SAND with SILT and GRAVEL		
SP-SC	Poorly-graded SAND with CLAY (or SILTY CLAY) Poorly-graded SAND with CLAY and GRAVEL (or SILTY CLAY and GRAVEL)	OH	ORGANIC fat CLAY ORGANIC fat CLAY with SAND ORGANIC fat CLAY with GRAVEL SANDY ORGANIC fat CLAY SANDY ORGANIC fat CLAY with GRAVEL GRAVELLY ORGANIC fat CLAY GRAVELLY ORGANIC fat CLAY with SAND
SM	SILTY SAND SILTY SAND with GRAVEL		
SC	CLAYEY SAND CLAYEY SAND with GRAVEL	OH	ORGANIC elastic SILT ORGANIC elastic SILT with SAND ORGANIC elastic SILT with GRAVEL SANDY ORGANIC elastic SILT SANDY ORGANIC elastic SILT with GRAVEL GRAVELLY ORGANIC elastic SILT GRAVELLY ORGANIC elastic SILT with SAND
SC-SM	SILTY, CLAYEY SAND SILTY, CLAYEY SAND with GRAVEL		
PT	PEAT	OL/OH	ORGANIC SOIL ORGANIC SOIL with SAND ORGANIC SOIL with GRAVEL SANDY ORGANIC SOIL SANDY ORGANIC SOIL with GRAVEL GRAVELLY ORGANIC SOIL GRAVELLY ORGANIC SOIL with SAND
	COBBLES COBBLES and BOULDERS BOULDERS		

FIELD AND LABORATORY TESTING

- (C) Consolidation (ASTM D 2435)
- (CL) Collapse Potential (ASTM D 5333)
- (CP) Compaction Curve (CTM 216)
- (CR) Corrosivity Testing (CTM 643, CTM 422, CTM 417)
- (CU) Consolidated Undrained Triaxial (ASTM D 4767)
- (DS) Direct Shear (ASTM D 3080)
- (EI) Expansion Index (ASTM D 4829)
- (M) Moisture Content (ASTM D 2216)
- (OC) Organic Content-% (ASTM D 2974)
- (P) Permeability (CTM 220)
- (PA) Particle Size Analysis (ASTM D 422)
- (PI) Plasticity Index (AASHTO T 90) Liquid Limit (AASHTO T 89)
- (PL) Point Load Index (ASTM D 5731)
- (PM) Pressure Meter
- (R) R-Value (CTM 301)
- (SE) Sand Equivalent (CTM 217)
- (SG) Specific Gravity (AASHTO T 100)
- (SL) Shrinkage Limit (ASTM D 427)
- (SW) Swell Potential (ASTM D 4546)
- (UC) Unconfined Compression-Soil (ASTM D 2166) Unconfined Compression-Rock (ASTM D 2938)
- (UU) Unconsolidated Undrained Triaxial (ASTM D 2850)
- (UW) Unit Weight (ASTM D 4767)

APPARENT DENSITY OF COHESIONLESS SOILS

Description	SPT N_{60} (Blows / 12 in.)
Very Loose	0 - 5
Loose	5 - 10
Medium Dense	10 - 30
Dense	30 - 50
Very Dense	Greater than 50

MOISTURE

Description	Criteria
Dry	No discernable moisture
Moist	Moisture present, but no free water
Wet	Visible free water

PERCENT OR PROPORTION OF SOILS

Description	Criteria
Trace	Particles are present but estimated to be less than 5%
Few	5% - 10%
Little	15% - 25%
Some	30% - 45%
Mostly	50% - 100%

PARTICLE SIZE

Description		Size (in.)
Boulder		Greater than 12
Cobble		3 - 12
Gravel	Coarse	3/4 - 3
	Fine	1/5 - 3/4
Sand	Coarse	1/16 - 1/5
	Medium	1/64 - 1/16
	Fine	1/300 - 1/64
Silt and Clay		Less than 1/300

ENGINEERING SERVICES	GEOTECHNICAL SERVICES	STATE OF CALIFORNIA DEPARTMENT OF TRANSPORTATION	DIVISION OF ENGINEERING SERVICES STRUCTURE DESIGN DESIGN BRANCH	BRIDGE NO. 53-3039 POST MILE 3.0	SHOEMAKER AVE OVERCROSSING
FUNCTIONAL SUPERVISOR NAME: F.MOTAMED	DRAWN BY: P.QUACH CHECKED BY: D.ORRIS	FIELD INVESTIGATION BY: EJ.JEON/P.MCDONALD/M.ISLAM/L.GOMEZ/P.CHAU	CU 59A0590 EA 215931		LOG OF TEST BORINGS SHEET 8 OF 10

OGS CIVIL LOG OF TEST BORINGS SHEET

ORIGINAL SCALE IN INCHES FOR REDUCED PLANS 0 1 2 3

DISREGARD PRINTS BEARING EARLIER REVISION DATES — REVISION DATES 06/27/11 11-30-11

SHEET 36 OF 38

FILE => 53-3039-z-ltb08.dgn

USERNAME => s113946 DATE PLOTTED => 28-MAR-2012 TIME PLOTTED => 12:34

DIST.	COUNTY	ROUTE	POST MILES TOTAL PROJECT	SHEET NO	TOTAL SHEETS
07	LA	5	12/51	92	109

W. C. Cain

REGISTERED GEOLOGIST W.C. CAIN No. 732 Exp. 3-30-96 STATE OF CALIFORNIA

11-15-96
PLANS APPROVAL DATE

THE STATE OF CALIFORNIA OR ITS OFFICERS OR AGENTS SHALL NOT BE RESPONSIBLE FOR THE ACCURACY OR COMPLETENESS OF ELECTRONIC COPIES OF THIS PLAN SHEET.

BENCH MARK

BM Elev. 97.82±
THE PAVING NOTCH SPOT ELEVATION AT INTERSECTION OF B.B. & C/L SHOEMAKER AVE. O.C., AT STA. 8+92.64±.

BM Elev. 100.26±
THE PAVING NOTCH SPOT ELEVATION AT INTERSECTION OF E.E. & C/L SHOEMAKER AVE. O.C., AT STA. 12+41.18±.

(AS BUILT PLAN)

TO ACCOMPANY PLANS DATED 3-26-12

DIVISION OF ENGINEERING SERVICES - MATERIALS AND GEOTECHNICAL SERVICES

As-Built Log of Test Borings sheet is considered an informational document only. As such, the State of California registration seal with signature, license number and registration certificate expiration date confirm that this is a true and accurate copy of the original document. It does not attest to the accuracy or validity of the information contained in the original document. This drawing is available and presented only for the convenience of any bidder, contractor or other interested party.

DIST.	COUNTY	ROUTE	POST MILE-TOTAL PROJECT	Sheet No.	Total Sheets
07	LA	5	2.4/4.0	712	1288

REGISTERED CIVIL ENGINEER DATE

SHOEMAKER AVE OVERCROSSING
LOG OF TEST BORINGS 9 OF 10

UNIT: ENGLISH	CONTRACT No.	BRIDGE No.
PROJECT NUMBER & PHASE: EA 215931	CU 59A0590	53-3039

NOTE: A COPY OF THIS LOG OF TEST BORINGS IS AVAILABLE AT OFFICE OF STRUCTURE MAINTENANCE AND INVESTIGATIONS, SACRAMENTO, CALIFORNIA — Sheet 37 of 38

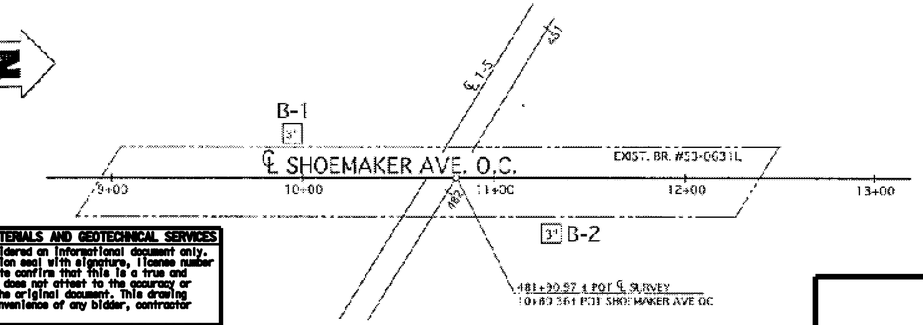

PLAN
1" = 40

06/2011
REGISTERED GEOTECHNICAL ENGINEER DATE

REGISTERED PROFESSIONAL ENGINEER CHUNGKEUN LEE No. C69450 Exp. CIVIL STATE OF CALIFORNIA

PLANS APPROVAL DATE

NO AS BUILT CHANGES
AS BUILT
CORRECTIONS BY L. FELLOWS
CONTRACT NO. 07-123804
DATE 3-26-98 MV

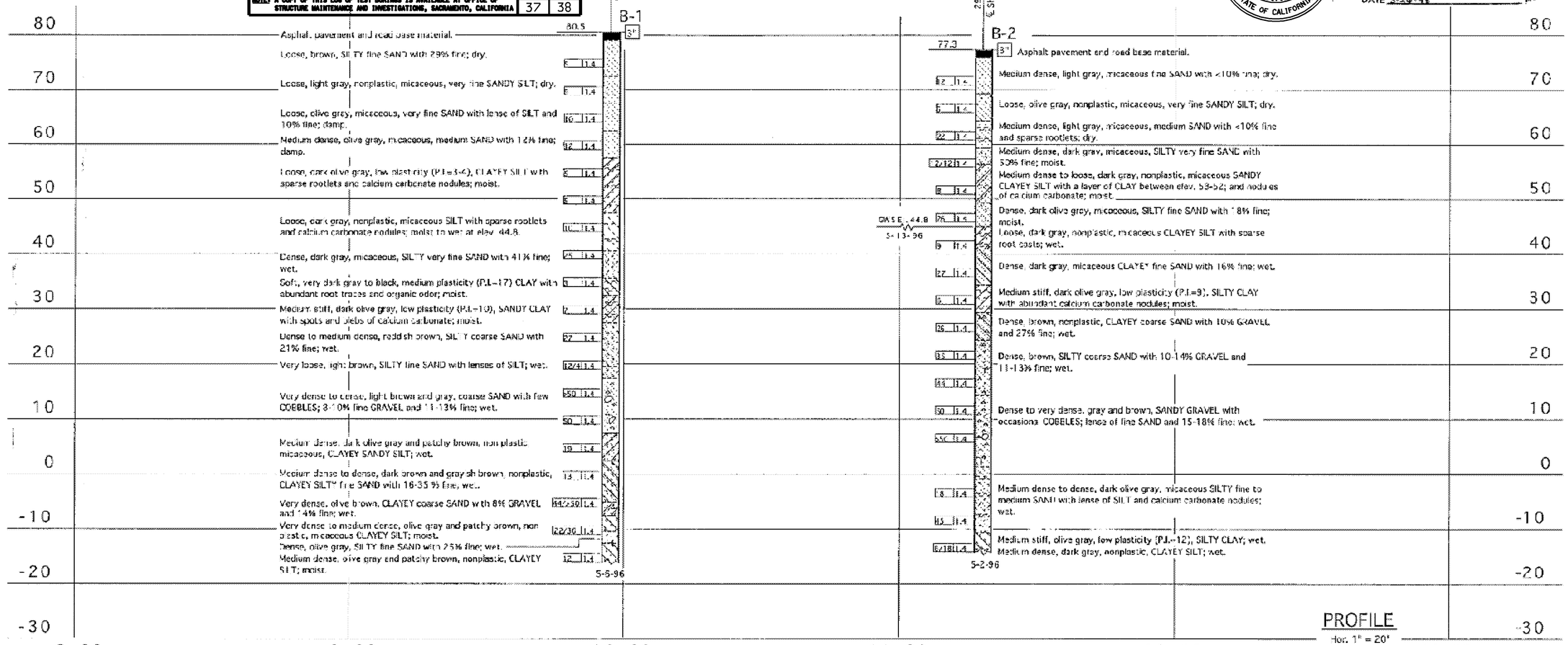

PROFILE
Hor. 1" = 20'
Ver. 1" = 10'

SEISMIC RETROFIT - PROJECT No. 222

ENGINEERING SERVICE CENTER	STRUCTURE FOUNDATIONS
DRAWN BY	6-96
CHECKED BY	7-96

FIELD INVESTIGATION BY: E. JERAMI

State of CALIFORNIA DEPARTMENT OF TRANSPORTATION

DIVISION OF STRUCTURES STRUCTURE MAINTENANCE DESIGN

CU: 07264
EA: 123801

BRIDGE NO. 53-1015
POST MILE 3.04

SHOEMAKER AVE. OVERCROSSING
LOG OF TEST BORINGS 1 OF 2

DISREGARD PRINTS BEARING EARLIER REVISION DATES

REVISION DATES (PRELIMINARY STAGE ONLY) | SHEET 11 | OF 12

ORIGINAL SCALE IN INCHES FOR REDUCED PLANS 0 1 2 3

FILENAME => 53-3039-z-lotb09.tif

LEGEND OF BORING OPERATIONS

LEGEND OF EARTH MATERIALS

CONSISTENCY CLASSIFICATION FOR SOILS
According to the Standard Penetration Test

Penetration Resist. Blows/Ft.	Granular	Cohesive
0-4	Very Loose	Very Soft
5-9	Loose	Soft
10-19	Slightly compact	Stiff
20-34	Compact	Very Stiff
35-59	Dense	Hard
>70	Very Dense	Very Hard

NOTE: Classification of earth material as shown on this sheet is based upon field inspection and is not to be construed to imply mechanical analysis.

7L 5051 REV. 5/95

FI-254 (12)

DIST.	COUNTY	ROUTE	POST MILE	SHEET NO.	TOTAL SHEETS
7	LA			36	64

DIST.	COUNTY	ROUTE	SECTION	SHEET NO.	TOTAL SHEETS
VII	LA				

JANUARY 23 1954

DIVISION OF ENGINEERING SERVICES - MATERIALS AND GEOTECHNICAL SERVICES

As-Built Log of Test Borings sheet is considered an informational document only. As such, the State of California registration seal with signature, license number and registration certificate expiration date confirms that this is a true and accurate copy of the original document. It does not attest to the accuracy or validity of the information contained in the original document. This drawing is available and presented only for the convenience of any bidder, contractor or other interested party.

DIST.	COUNTY	ROUTE	POST MILE-TOTAL PROJECT	Sheet No.	Total Sheets
07	LA	5	2.4/4.0	713	1288

REGISTERED CIVIL ENGINEER DATE

SHOEMAKER AVE OVERCROSSING

LOG OF TEST BORINGS 10 OF 10

UNIT: ENGLISH	CONTRACT No.	BRIDGE No.
PROJECT NUMBER & PHASE: EA 215931	CU 59A0590	53-3039

NOTE: A COPY OF THIS LOG OF TEST BORINGS IS AVAILABLE AT OFFICE OF STRUCTURE MAINTENANCE AND INVESTIGATIONS, SACRAMENTO, CALIFORNIA — Sheet 38 of 38

TO ACCOMPANY PLANS DATED 3-26-12

06/2011
REGISTERED GEOTECHNICAL ENGINEER DATE

PLANS APPROVAL DATE

REGISTERED PROFESSIONAL ENGINEER — CHUNGKEUN LEE — No. C69450 — Exp. — CIVIL — STATE OF CALIFORNIA

Notes

1. As-Built Vertical Datum = NGVD29
2. Datum Conversion
   NAVD88 = NGVD29+2.408 ft

AS BUILT PLANS
Contract No. 59-1N013
Date Completed
Document No. 7000 2178

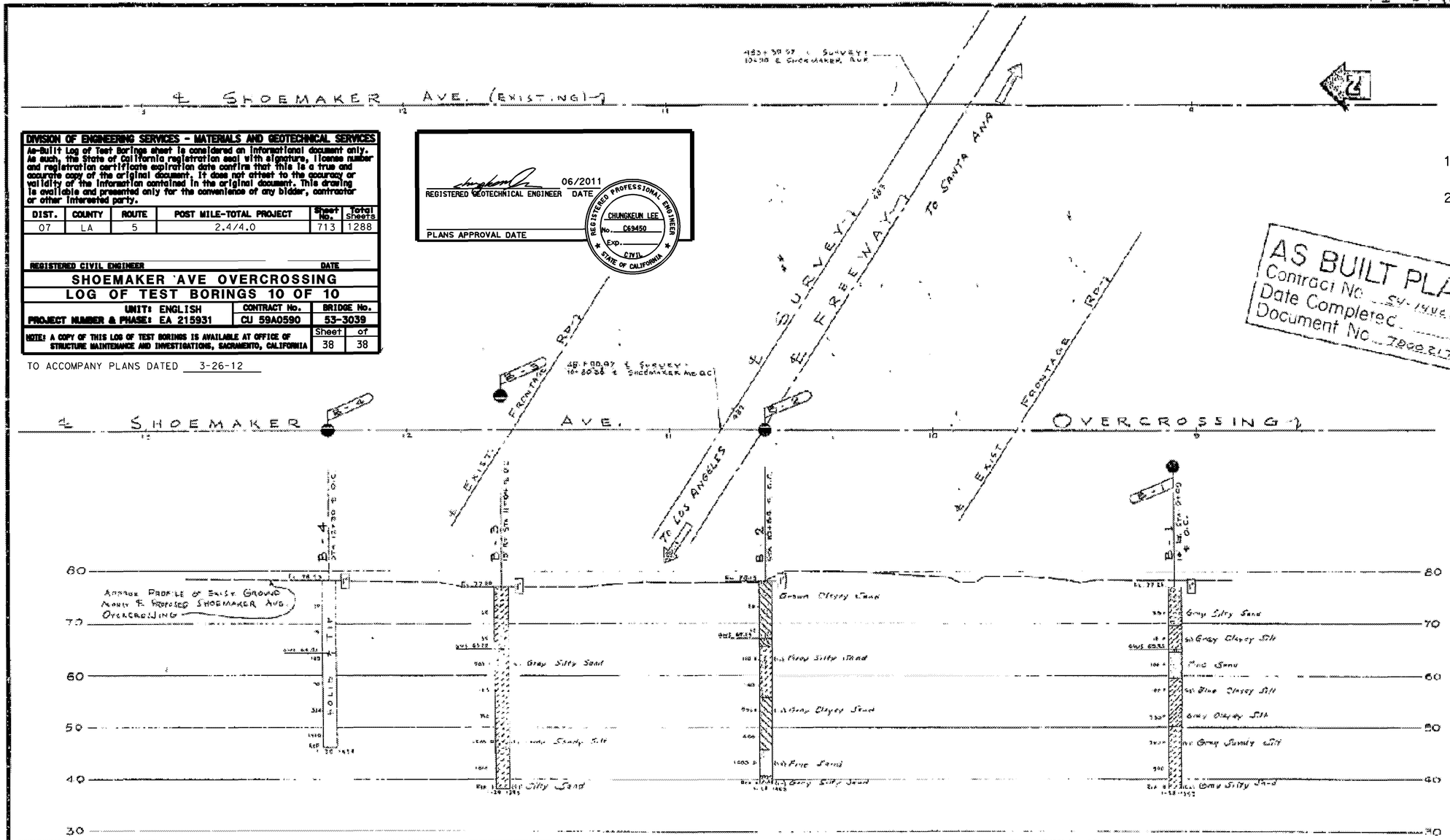

Test Boring By Bridge Dept.

AS BUILT
BRIDGE DEPARTMENT
DATE 2-19-80

B.M. 27-B-41
NAIL IN CONCRETE CURB, MEAS. 0.7'W BRASS DISC STAMPED "SURVEY BM 27-B-41" 30'± SE OF 3rd PROP SHOEMAKER AVE. 10' NO. N.C.T. 3' HIGH IN W SIDE OF 1814959 E
ELEV. 77.09

B.M. 5-97
STANDARD DISC "5-97 1932" IN SOUTH P.C.C. CULVERT 8'W 360' NW ALONG S.P.R.R. FROM INTERSECTION OF S.P.R.R. & SHOEMAKER AVE.
ELEV. 77.91

Classification of Material Based on Standard Grade Size Limits

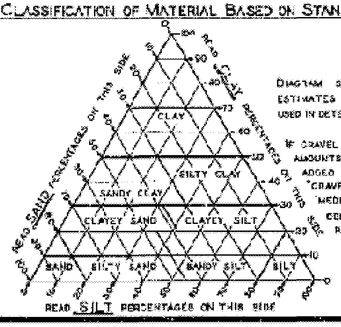

DIAGRAM SHOWING THE BASIS FOR ESTIMATES OF GRADE SIZE DISTRIBUTION USED IN DETERMINATION OF CLASS NAMES

IF GRAVEL IS PRESENT IN APPRECIABLE AMOUNTS THE TERM "GRAVELLY" MAY BE ADDED TO THE CLASS NAME, VIS. "GRAVELLY SAND". THE TERMS "COARSE", "MEDIUM" AND "FINE" WHEN USED TO DESCRIBE GRAVEL, SAND AND SILT REFER TO STANDARD GRADE SIZE LIMITS.

Legend of Earth Materials

- Gravel
- Sand
- Silt
- Clay
- Sandy Clay or Clayey Sand
- Sandy Silt or Silty Sand
- Silty Clay or Clayey Silt
- Peat and/or Organic Clay
- Filled Material
- Igneous Rock
- Sedimentary Rock
- Metamorphic Rock

Legend of Boring Operations

- Plan of any boring
- Penetrometer
- 2½" Cone Penetrometer
- Sampler boring (dry)
- Rotary boring (wet)
- Auger boring (dry)
- Jet boring
- Core boring
- Test pit

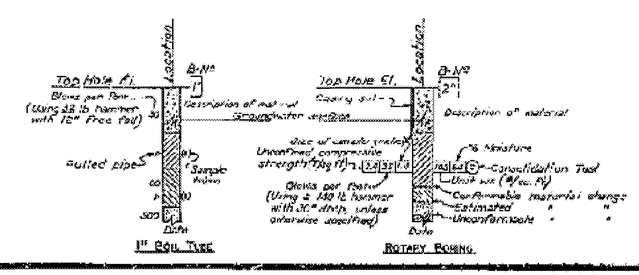

Notes

THE CONTRACTOR'S ATTENTION IS DIRECTED TO SECTION 2, ARTICLE (C) OF THE STANDARD SPECIFICATIONS AND TO THE SPECIAL PROVISIONS ACCOMPANYING THIS SET OF PLANS. CLASSIFICATION OF EARTH MATERIAL AS SHOWN ON THIS SHEET IS BASED UPON FIELD INSPECTION AND IS NOT TO BE CONSTRUED TO IMPLY MECHANICAL ANALYSIS. PENETROMETER BORINGS HAVING A RATE OF PENETRATION MEASURED IN SECONDS PER FOOT ARE DRIVEN WITH A NO. 2 McKIERNAN-TERRY AIR HAMMER AT 115 PSI.

STATE OF CALIFORNIA
DEPARTMENT OF PUBLIC WORKS
DIVISION OF HIGHWAYS

SHOEMAKER AVE. O.C.

LOG OF TEST BORINGS

SCALE HORIZ. 1" = 20' VERT. 1" = 10' | BRIDGE 53-1015 | FILE | DRAWING P-3304-6

PREL. DRAWING NO. P-3304-12

I HEREBY VERIFY THAT THIS IS A TRUE AND ACCURATE COPY OF THE LOGS SHOWN TAKEN UPON MY DIRECTION AND CONTROL DURING THE PERIOD [illegible] PURSUANT TO AUTHORIZATION BY THE DIRECTOR OF PUBLIC WORKS.

DATE [illegible] SIGNATURE [illegible] TITLE [illegible]

FILENAME => 53-3039-z-lotb10.tif

BRIDGE DEPARTMENT

DIST	COUNTY	ROUTE	POST MILES TOTAL PROJECT	SHEET No	TOTAL SHEETS
07	LA	5	2.4/4.0	714	1288

Andrew Rittenhouse 12-12-11
REGISTERED CIVIL ENGINEER DATE

3-26-12
PLANS APPROVAL DATE

REGISTERED PROFESSIONAL ENGINEER Andrew P. Rittenhouse No. 61006 Exp. 12-31-12 STATE OF CALIFORNIA

The State of California or its officers or agents shall not be responsible for the accuracy or completeness of electronic copies of this plan sheet.

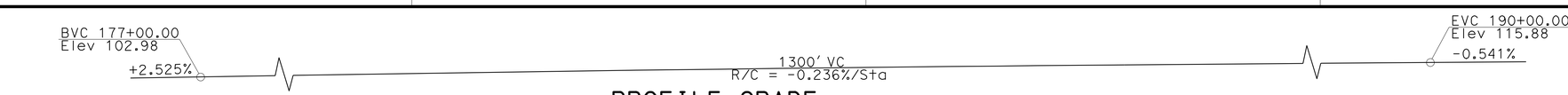

PROFILE GRADE

1" = 30'

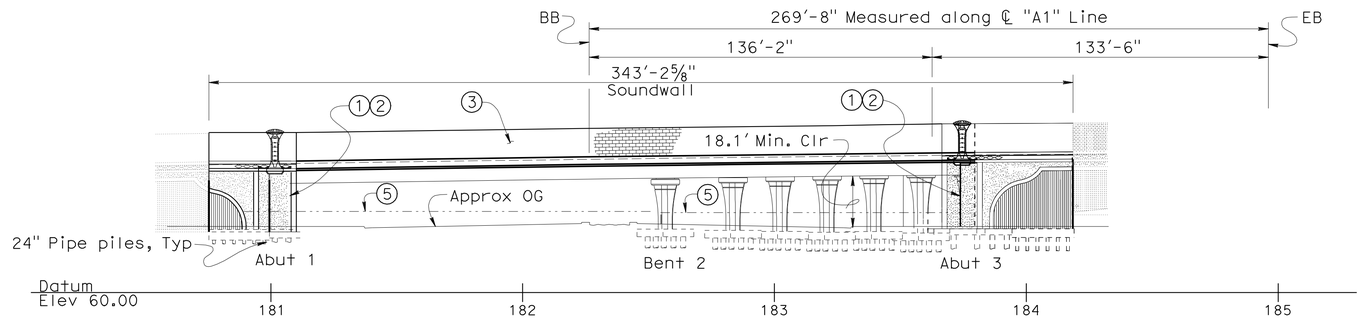

ELEVATION

1" = 30'

NOTES:

1. Paint "Bridge No. 53-3040"
2. Paint "Rosecrans Ave UC"
3. Concrete Barrier Type 736 (Mod 2) with masonry block soundwall
4. Concrete Barrier Type 736 (Mod 1)
5. Existing 6' high masonry block retaining wall to be removed
6. Structure Approach Type N (30S)
7. Bridge Mounted Sign, see "ROAD PLANS"

LEGEND:

- Indicates existing structures to be removed
- Indicates closure pour
- Indicates Point of Minimum Vertical Clearance
- Indicates Deck Drain

CURVE DATA (A)
R = 8357.252'
Δ = 17°36'01"
T = 1293.800'
L = 2567.220'

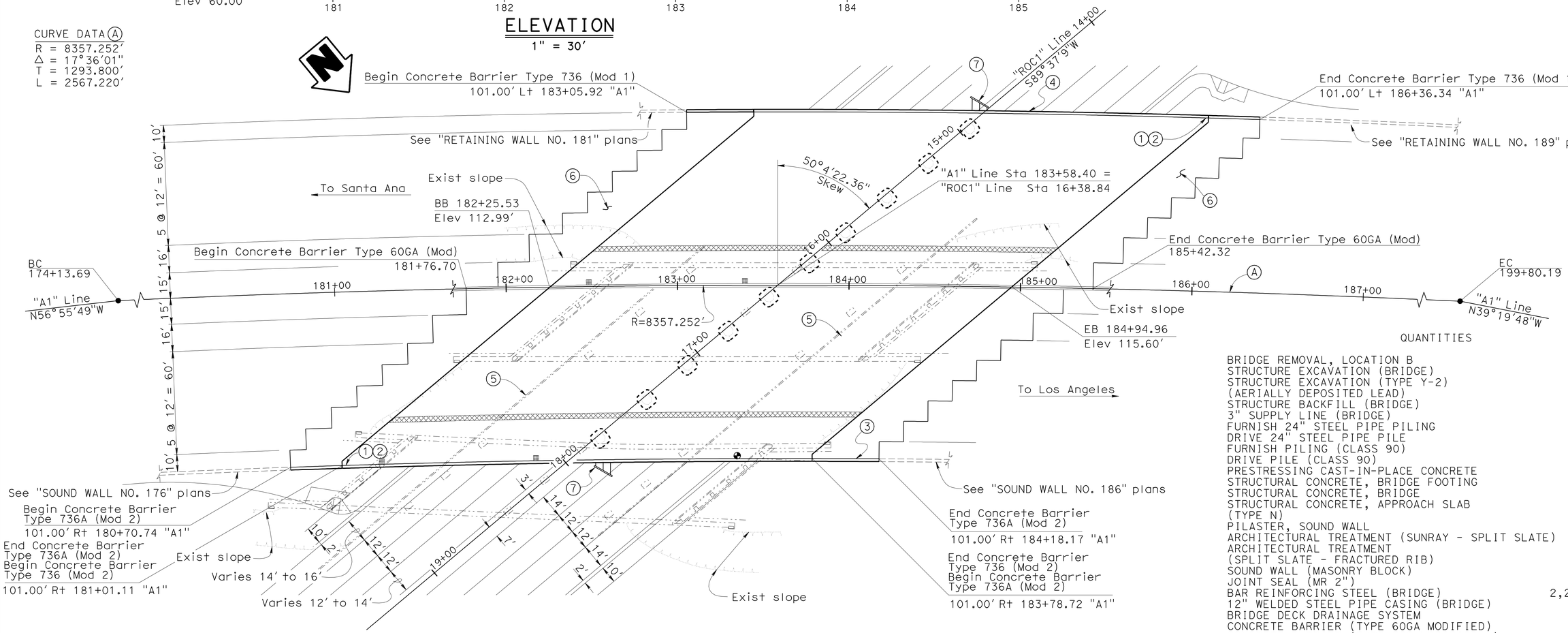

PLAN

1" = 30'

QUANTITIES

BRIDGE REMOVAL, LOCATION B	LUMP	SUM
STRUCTURE EXCAVATION (BRIDGE)	11,300	CY
STRUCTURE EXCAVATION (TYPE Y-2) (AERIALLY DEPOSITED LEAD)	945	CY
STRUCTURE BACKFILL (BRIDGE)	7,200	CY
3" SUPPLY LINE (BRIDGE)	340	LF
FURNISH 24" STEEL PIPE PILING	20,200	LF
DRIVE 24" STEEL PIPE PILE	425	EA
FURNISH PILING (CLASS 90)	2,525	LF
DRIVE PILE (CLASS 90)	83	EA
PRESTRESSING CAST-IN-PLACE CONCRETE	LUMP	SUM
STRUCTURAL CONCRETE, BRIDGE FOOTING	2,065	CY
STRUCTURAL CONCRETE, BRIDGE	7,240	CY
STRUCTURAL CONCRETE, APPROACH SLAB (TYPE N)	560	CY
PILASTER, SOUND WALL	5	CY
ARCHITECTURAL TREATMENT (SUNRAY - SPLIT SLATE)	11,630	SQFT
ARCHITECTURAL TREATMENT (SPLIT SLATE - FRACTURED RIB)	8,500	SQFT
SOUND WALL (MASONRY BLOCK)	3,890	SQFT
JOINT SEAL (MR 2")	640	LF
BAR REINFORCING STEEL (BRIDGE)	2,212,000	LB
12" WELDED STEEL PIPE CASING (BRIDGE)	106	LF
BRIDGE DECK DRAINAGE SYSTEM	4,040	LB
CONCRETE BARRIER (TYPE 60GA MODIFIED)	366	LF
CONCRETE BARRIER (TYPE 736 MODIFIED 1)	334	LF
CONCRETE BARRIER (TYPE 736 MODIFIED 2)	274	LF
CONCRETE BARRIER (TYPE 736A MODIFIED 2)	69	LF
COMMUNICATION CONDUIT (BRIDGE) (LF)	710	LF

Traci Menard
DESIGN ENGINEER

	BY	CHECKED
DESIGN	Laith Bahia	Shervin Pahlavan
DETAILS	Tim Trefz	Shervin Pahlavan
QUANTITIES	Suzan Moradi	Traci Menard

LOAD & RESISTANCE FACTOR DESIGN — LIVE LOADING: HL93 W/"LOW-BOY"; PERMIT DESIGN VEHICLE

	BY	CHECKED
LAYOUT	Laith Bahia	Shervin Pahlavan
SPECIFICATIONS	Theresa Nedwick	PLANS AND SPECS COMPARED Theresa Nedwick

ORIGINAL SCALE IN INCHES FOR REDUCED PLANS 0 1 2 3

STATE OF CALIFORNIA
DEPARTMENT OF TRANSPORTATION

DIVISION OF ENGINEERING SERVICES
STRUCTURE DESIGN
DESIGN BRANCH 15

CU 07
EA 215931

BRIDGE NO. 53-3040
POST MILE 3.44

ROSECRANS AVENUE UC (REPLACE)

GENERAL PLAN NO. 1

DISREGARD PRINTS BEARING EARLIER REVISION DATES

REVISION DATES: 12-5-11 01-20-12 02-14-12 03-10-12 01-23-11 05-17-11 10-13-11 10-17-11 12-12-09

SHEET 1 OF 81

STRUCTURES DESIGN GENERAL PLAN SHEET (ENGLISH) (REV.07-24-06)

FILE => 53-3040-a-gp01.dgn

USERNAME => s113946 DATE PLOTTED => 28-MAR-2012 TIME PLOTTED => 12:47

DIST	COUNTY	ROUTE	POST MILES TOTAL PROJECT	SHEET No	TOTAL SHEETS
07	LA	5	2.4/4.0	715	1288

Andrew Rittenhouse 12-12-11
REGISTERED CIVIL ENGINEER DATE

3-26-12
PLANS APPROVAL DATE

REGISTERED PROFESSIONAL ENGINEER
Andrew P. Rittenhouse
No. 61006
Exp. 12-31-12
STATE OF CALIFORNIA

The State of California or its officers or agents shall not be responsible for the accuracy or completeness of electronic copies of this plan sheet.

GENERAL NOTES
LOAD AND RESISTANCE FACTOR DESIGN

DESIGN: AASHTO LRFD BRIDGE DESIGN SPECIFICATIONS, 4th Edition and California Amendments, dated December 2008

SEISMIC DESIGN: CALTRANS SEISMIC DESIGN CRITERIA (SDC) Version 1.5 September 2009

DEAD LOAD: Includes 35 psf for future wearing surface.

LIVE LOADING: HL93 and permit design load

SEISMIC LOADING: See "SITE SPECIFIC ACCELERATION RESPONSE SPECTRA"

REINFORCED CONCRETE: f_y = 60 ksi
f'_c = See "CONCRETE STRENGTH AND TYPE LIMITS"

PRESTRESSED CONCRETE: See "PRESTRESSING NOTES" on "GIRDER LAYOUT" sheets.

NOTES:

1. Concrete Barrier Type 736 (Mod 1)
2. Temporary Railing (Type K), see "Road Plans"
3. 3' closure pour
4. Concrete Barrier Type 736 (Mod 2) with masonry block soundwall (H=14'-4").
5. Existing Southbound I-5 UC (Br No. 53-0634R), remove prior to Stage 2 Construction
6. Existing Northbound I-5 UC (Br No. 53-0634L), remove prior to Stage 3 Construction
7. Concrete Barrier Type 60GA (MOD)
8. Pipe Pile, Typical
9. 2 - 3½" Communication Conduits
10. Deck Drain pipe (Span 1 only)
11. 3" Water Supply line

LEGEND:

Indicates existing structure to be removed

Indicates closure pour

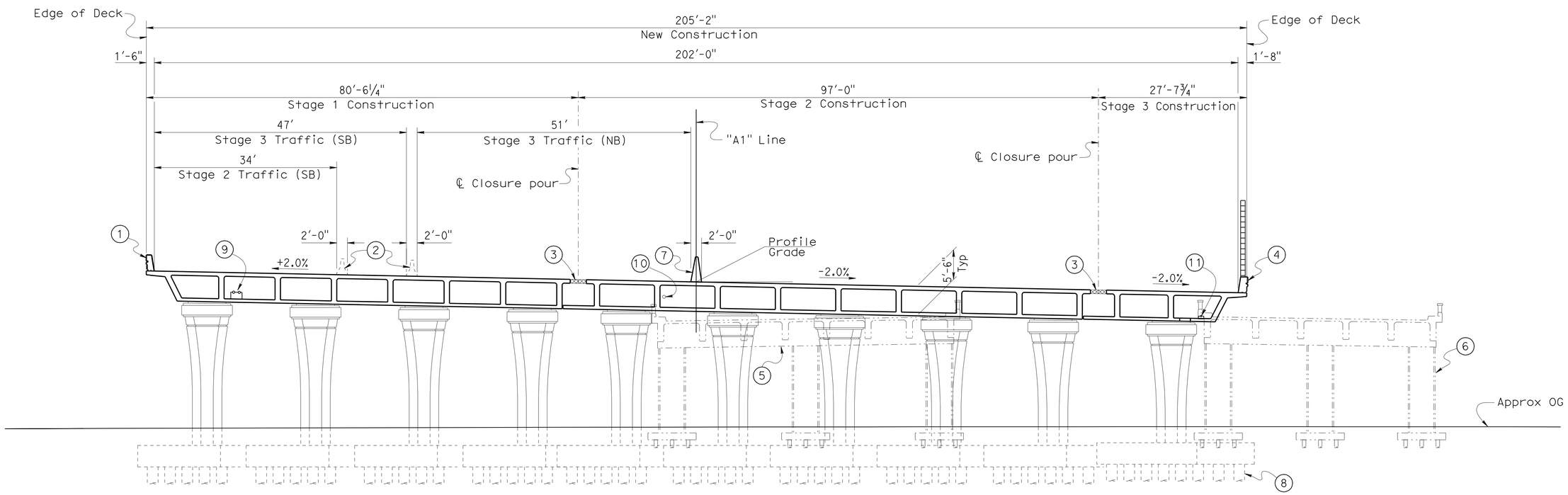

SECTION
1" = 10'
@ Bent 2

Traci Menard DESIGN ENGINEER	DESIGN	BY Laith Bahia	CHECKED Shervin Pahlavan	LOAD & RESISTANCE FACTOR DESIGN	LIVE LOADING: HL93 W/"LOW-BOY"; PERMIT DESIGN VEHICLE
	DETAILS	BY Tim Trefz	CHECKED Shervin Pahlavan	LAYOUT: BY Laith Bahia	CHECKED Shervin Pahlavan
	QUANTITIES	BY Suzan Moradi	CHECKED Traci Menard	SPECIFICATIONS: BY Theresa Nedwick	PLANS AND SPECS COMPARED Theresa Nedwick

STATE OF CALIFORNIA
DEPARTMENT OF TRANSPORTATION

DIVISION OF ENGINEERING SERVICES
STRUCTURE DESIGN
DESIGN BRANCH 15

BRIDGE NO. 53-3040
POST MILE 3.44

ROSECRANS AVENUE UC (REPLACE)
GENERAL PLAN NO. 2

ORIGINAL SCALE IN INCHES FOR REDUCED PLANS 0 1 2 3

CU 07
EA 215931

DISREGARD PRINTS BEARING EARLIER REVISION DATES

REVISION DATES: 07-29-10 01-28-11 06-17-11 12-6-11 01-28-12 09-24-09 10-27-09 12-18-09 04-23-10

SHEET 2 OF 81

STRUCTURES DESIGN GENERAL PLAN SHEET (ENGLISH) (REV.07-24-06)

FILE => 53-3040-a-gp02.dgn

USERNAME => s113946 DATE PLOTTED => 28-MAR-2012 TIME PLOTTED => 12:47

DIST	COUNTY	ROUTE	POST MILES TOTAL PROJECT	SHEET No	TOTAL SHEETS
07	LA	5	2.4/4.0	716	1288

Andrew Rittenhouse 12-12-11
REGISTERED CIVIL ENGINEER DATE

3-26-12
PLANS APPROVAL DATE

REGISTERED PROFESSIONAL ENGINEER
Andrew P. Rittenhouse
No. 61006
Exp. 12-31-12
STATE OF CALIFORNIA

The State of California or its officers or agents shall not be responsible for the accuracy or completeness of electronic copies of this plan sheet.

INDEX TO PLANS

SHEET NO.	TITLE
1	GENERAL PLAN NO. 1
2	GENERAL PLAN NO. 2
3	INDEX TO PLANS
4	DECK CONTOUR PLAN
5	FOUNDATION PLAN NO. 1 OF 2
6	FOUNDATION PLAN NO. 2 OF 2
7	ABUTMENT 1 LAYOUT STAGE 1
8	ABUTMENT 1 LAYOUT STAGE 2
9	ABUTMENT 1 LAYOUT STAGE 3
10	ABUTMENT 3 LAYOUT STAGE 1
11	ABUTMENT 3 LAYOUT STAGE 2
12	ABUTMENT 3 LAYOUT STAGE 3
13	ABUTMENT DETAILS NO. 1
14	ABUTMENT DETAILS NO. 2
15	ABUTMENT DETAILS NO. 3
16	ABUTMENT DETAILS NO. 4
17	ABUTMENT 1 NB WINGWALL
18	ABUTMENT 1 SB WINGWALL
19	ABUTMENT 3 NB WINGWALL
20	ABUTMENT 3 SB WINGWALL
21	WINGWALL DETAILS
22	BENT 2 LAYOUT STAGE 1
23	BENT 2 LAYOUT STAGE 2
24	BENT 2 LAYOUT STAGE 3
25	BENT 2 DETAILS STAGE 1
26	BENT 2 DETAILS STAGE 2
27	BENT 2 DETAILS STAGE 3
28	BENT 2 DETAILS
29	BENT FOOTING DETAILS
30	COLUMN DETAILS STAGE 1 & 2
31	COLUMN DETAILS STAGE 3
32	COLUMN GEOMETRY
33	TYPICAL SECTION
34	PARTIAL TYPICAL SECTION STAGE 1
35	PARTIAL TYPICAL SECTION STAGE 2
36	PARTIAL TYPICAL SECTION STAGE 3
37	GIRDER LAYOUT STAGE 1
38	GIRDER LAYOUT STAGE 2
39	GIRDER LAYOUT STAGE 3
40	STAGE 1 GIRDER REINFORCEMENT
41	STAGE 2 GIRDER REINFORCEMENT
42	STAGE 3 GIRDER REINFORCEMENT
43	DECK REINFORCEMENT DETAILS
44	DECK DRAIN LAYOUT
45	BARRIER ARCHITECTURAL DETAILS NO. 1
46	BARRIER ARCHITECTURAL DETAILS NO. 2
47	ARCHITECTURAL SHEET A0
48	ARCHITECTURAL SHEET A1
49	ARCHITECTURAL SHEET A2
50	ARCHITECTURAL SHEET A3
51	ARCHITECTURAL SHEET A4
52	ARCHITECTURAL SHEET A5
53	ARCHITECTURAL SHEET A6
54	ARCHITECTURAL SHEET A7
55	ARCHITECTURAL SHEET A8
56	ARCHITECTURAL SHEET A9
57	ARCHITECTURAL SHEET A10
58	ARCHITECTURAL SHEET A11
59	ARCHITECTURAL SHEET A12
60	ARCHITECTURAL SHEET A13
61	ARCHITECTURAL SHEET A14
62	RETAINING WALL TYPE 1SWBP DETAIL NO.1
63	RETAINING WALL TYPE 1SWBP DETAIL NO.2
64	SOUNDWALL - MASONRY BLOCK ON BRIDGE
65	SOUNDWALL ARCHITECTURAL DETAILS NO. 1
66	SOUNDWALL ARCHITECTURAL DETAILS NO. 2
67	SOUNDWALL ARCHITECTURAL DETAILS NO. 3
68	SOUNDWALL ARCHITECTURAL DETAILS NO. 4
69	SOUNDWALL ARCHITECTURAL DETAILS NO. 5
70	SOUNDWALL ARCHITECTURAL DETAILS NO. 6
71	SOUNDWALL ARCHITECTURAL DETAILS NO. 7
72	SOUNDWALL ARCHITECTURAL DETAILS NO. 8
73	STRUCTURE APPROACH TYPE N (30S)
74	STRUCTURE APPROACH DRAINAGE DETAILS
75	LOG OF TEST BORINGS SHEET 1 OF 7
76	LOG OF TEST BORINGS SHEET 2 OF 7
77	LOG OF TEST BORINGS SHEET 3 OF 7
78	LOG OF TEST BORINGS SHEET 4 OF 7
79	LOG OF TEST BORINGS SHEET 5 OF 7
80	LOG OF TEST BORINGS SHEET 6 OF 7
81	LOG OF TEST BORINGS SHEET 7 OF 7

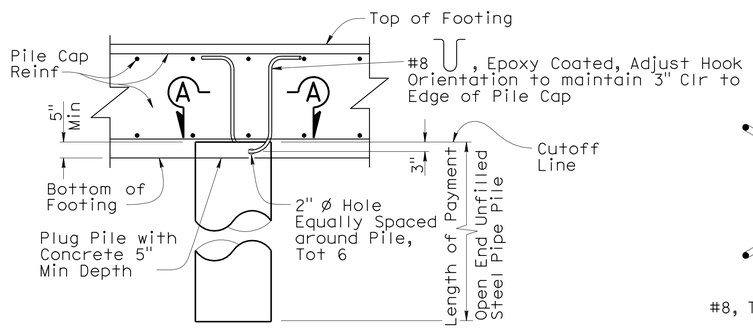

24" STEEL PIPE PILE

½" = 1'-0"

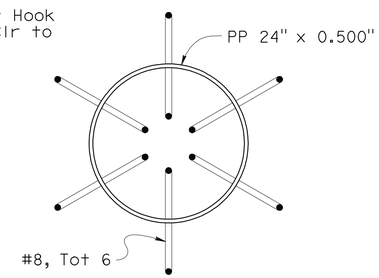

SECTION A-A

½" = 1'-0"

STANDARD PLANS DATED MAY 2006

A10A	ACRONYMS AND ABBREVIATIONS (A-L)
A10B	ACRONYMS AND ABBREVIATIONS (M-Z)
A62B	LIMITS OF PAYMENT FOR EXCAVATION AND BACKFILL BRIDGE SURCHARGE AND WALL
A62C	LIMITS OF PAYMENT FOR EXCAVATION AND BACKFILL BRIDGE
A76D	CONCRETE BARRIER TYPE 60G
B0-1	BRIDGE DETAILS
B0-3	BRIDGE DETAILS
B0-5	BRIDGE DETAILS
B2-5	PILE DETAILS CLASS 90 AND CLASS 140
B3-2	RETAINING WALL TYPE 1 H=32' THRU H=36'
B3-8	RETAINING WALL DETAILS NO. 1
RSP B6-21	JOINT SEALS (MAXIMUM MOVEMENT RATING = 2")
B7-1	BOX GIRDER DETAILS
B7-8	DECK DRAINAGE DETAILS
B7-10	UTILITY OPENING BOX GIRDER
B8-5	CAST-IN-PLACE PRESTRESSED GIRDER DETAILS
B11-56	CONCRETE BARRIER TYPE 736

STANDARD PLAN SHEET NO.

DETAIL NO.

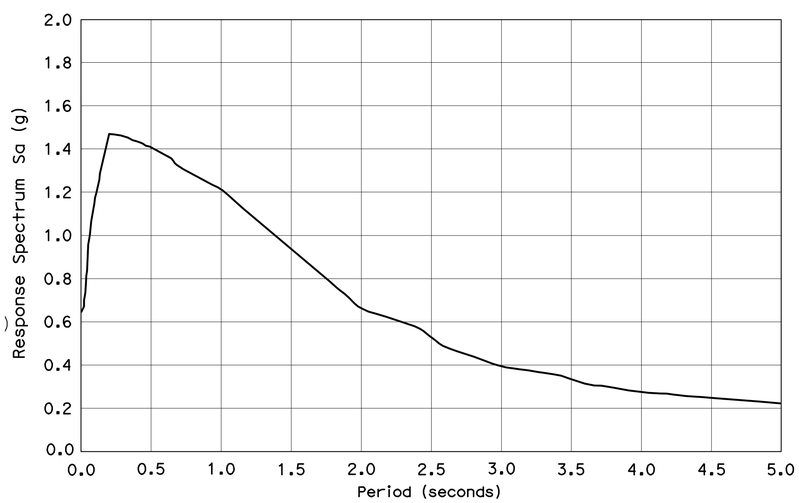

SITE SPECIFIC - ACCELERATION RESPONSE SPECTRUM

PILE DATA TABLE

LOCATION	PILE TYPE	NOMINAL RESISTANCE (kips)		DESIGN TIP ELEVATIONS (ft)	SPECIFIED TIP ELEVATION (ft)	NOMINAL DRIVING RESISTANCE (kips)
		Compression	Tension			
Abut 1 (Stage 1)	24"ø Pipe Pile	400	0	31.4 (a) 60.9 (d)	31.4	510
Abut 1 (Stage 2)	24"ø Pipe Pile	400	0	31.4 (a) 60.9 (d)	31.4	510
Abut 1 (Stage 3)	24"ø Pipe Pile	380	0	31.9 (a) 61.5 (c) 60.9 (d)	31.9	500
Abut 1 Lt (SB) WW	Class 90	180	0	51.0 (a)	51.0	180
Abut 1 Rt (NB) WW	Class 90	180	0	51.0 (a)	51.0	180
Bent 2 (Stage 1)	24"ø Pipe Pile	310	120	33.6 (a) 40.5 (b) 51.7 (c) 59.4 (d)	33.6	540
Bent 2 (Stage 2)	24"ø Pipe Pile	290	120	34.7 (a) 40.5 (b) 51.7 (c) 59.4 (d)	34.7	520
Bent 2 (Stage 3)	24"ø Pipe Pile	400	100	32.6 (a) 42.1 (b) 51.7 (c) 59.9 (d)	32.6	560
Abut 3 (Stage 1)	24"ø Pipe Pile	400	0	38.1 (a) 60.9 (d)	38.1	400
Abut 3 (Stage 2)	24"ø Pipe Pile	400	0	38.1 (a) 60.9 (d)	38.1	400
Abut 3 (Stage 3)	24"ø Pipe Pile	400	0	38.1 (a) 60.9 (d)	38.1	400
Abut 3 Lt (SB) WW	Class 90	180	0	52.4 (a)	52.4	180
Abut 3 Rt (NB) WW	Class 90	180	0	53.2 (a)	53.2	180

Note: Design tip elevations are controlled by: (a) Compression, (b) Tension, (c) Settlement, (d) Lateral Load, respectively.

	BY	CHECKED
DESIGN	Laith Bahia	Shervin Pahlavan
DETAILS	Tim Trefz	Shervin Pahlavan
QUANTITIES	Suzan Moradi	Traci Menard

STATE OF CALIFORNIA
DEPARTMENT OF TRANSPORTATION

DIVISION OF ENGINEERING SERVICES
STRUCTURE DESIGN
DESIGN BRANCH 15

BRIDGE NO. 53-3040
POST MILE 3.44

ROSECRANS AVENUE UC (REPLACE)
INDEX TO PLANS

STRUCTURES DESIGN DETAIL SHEET (ENGLISH) (REV. 10/25/05)

ORIGINAL SCALE IN INCHES FOR REDUCED PLANS 0 1 2 3

CU 07
EA 215931

DISREGARD PRINTS BEARING EARLIER REVISION DATES

REVISION DATES: 12-6-11 1-26-12 01-28-12 04-26-10 07-27-10 08-13-10 01-24-11 02-11-11 10-26-11

SHEET 3 OF 81

FILE => 53-3040-a-itp.dgn

USERNAME => s113946 DATE PLOTTED => 28-MAR-2012 TIME PLOTTED => 12:34

DIST	COUNTY	ROUTE	POST MILES TOTAL PROJECT	SHEET No	TOTAL SHEETS
07	LA	5	2.4/4.0	717	1288

Andrew Rittenhouse 12-12-11
REGISTERED CIVIL ENGINEER DATE

3-26-12
PLANS APPROVAL DATE

REGISTERED PROFESSIONAL ENGINEER
Andrew P. Rittenhouse
No. 61006
Exp. 12-31-12
STATE OF CALIFORNIA

The State of California or its officers or agents shall not be responsible for the accuracy or completeness of electronic copies of this plan sheet.

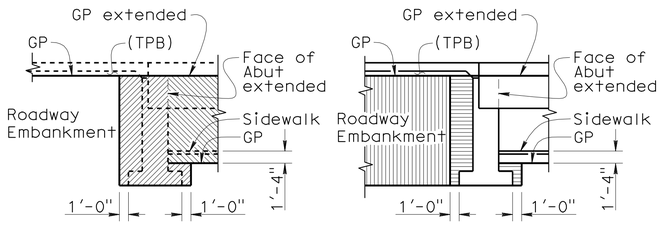

LEGEND:

- Structure Excavation*
- Roadway Excavation (See "Road Plans")
- Roadway Embankment (See "Road Plans")
- Structure Backfill

*Upper 3 feet of Structure Excavation in unpaved areas is to be considered as Structure Excavation (Type Y-2) (Aerially Deposited Lead)

EXCAVATION & BACKFILL

No Scale

For additional details see A62-B and A62-C

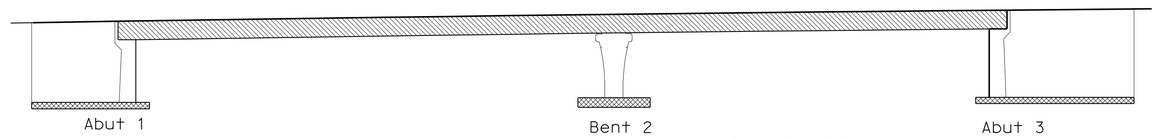

Structural Concrete, Bridge 4000 psi @ 28 days

Structural Concrete, Bridge Footing

CONCRETE STRENGTH AND TYPE LIMITS

NO SCALE

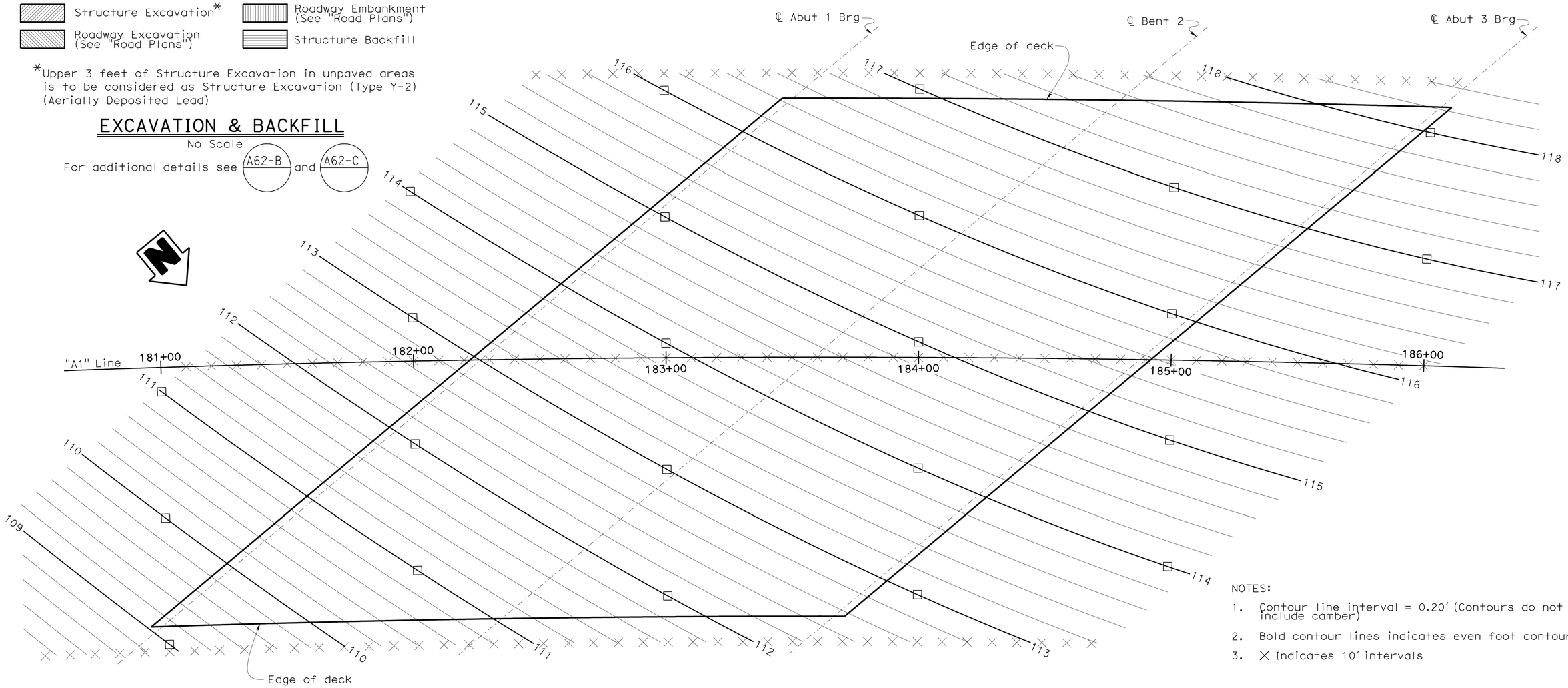

NOTES:

1. Contour line interval = 0.20' (Contours do not include camber)
2. Bold contour lines indicates even foot contours
3. X Indicates 10' intervals

PLAN

1" = 20'

DESIGN	BY Laith Bahia	CHECKED Shervin Pahlavan
DETAILS	BY Tim Trefz	CHECKED Shervin Pahlavan
QUANTITIES	BY Suzan Moradi	CHECKED Traci Menard

STATE OF CALIFORNIA
DEPARTMENT OF TRANSPORTATION

DIVISION OF ENGINEERING SERVICES
STRUCTURE DESIGN
DESIGN BRANCH 15

BRIDGE NO. 53-3040
POST MILE 3.44

ROSECRANS AVENUE UC (REPLACE)
DECK CONTOUR PLAN

STRUCTURES DESIGN DETAIL SHEET (ENGLISH) (REV. 10/25/05)

ORIGINAL SCALE IN INCHES FOR REDUCED PLANS 0 1 2 3

CU 07
EA 215931

DISREGARD PRINTS BEARING EARLIER REVISION DATES

REVISION DATES: 04-22-10 07-23-10 11-25-11

SHEET 4 OF 81

FILE => 53-3040-d-dc.dgn

USERNAME => s113946 DATE PLOTTED => 28-MAR-2012 TIME PLOTTED => 12:34

DIST	COUNTY	ROUTE	POST MILES TOTAL PROJECT	SHEET No	TOTAL SHEETS
07	LA	5	2.4/4.0	718	1288

Andrew Rittenhouse 12-12-11
REGISTERED CIVIL ENGINEER DATE

3-26-12
PLANS APPROVAL DATE

REGISTERED PROFESSIONAL ENGINEER
Andrew P. Rittenhouse
No. 61006
Exp. 12-31-12
CIVIL
STATE OF CALIFORNIA

The State of California or its officers or agents shall not be responsible for the accuracy or completeness of electronic copies of this plan sheet.

Bridge Location

1 - 14.531 Lt. "A1" Line, Sta 182+68.710, Elev 104.225
2 - 36.498 Rt. "A1" Line, Sta 182+06.609, Elev 103.857
3 - 14.909 Lt. "A1" Line, Sta 184+81.250, Elev 107.415
4 - 37.675 Rt. "A1" Line, Sta 184+19.873, Elev 107.583

No.	R	Δ	T	L
11	230.000	32°48'01"	67.693	131.669
12	8357.252	17°36'01"	1293.800	2567.220

NOTE:
Underground utilities as shown are approximate

LEGEND:

XX.X Indicates bottom of footing elevation

SURVEY CONTROL (EPOCH 1991.35)

PRHV102
Pd: Fd PK/Tin on Island @ begin SB "A1" Line on Ramp
42.002 Rt. "ROC1" Line
Sta 14+92.782
N 1 786 799.046
E 6 542 730.425
Elev 86.670

PRHV100
PD: Fd PK/Tin on Island E "A1" Line on Rosecrans
41.930 Lt. "ROC1" Line
Sta 19+82.983
N 1 786 886.235
E 6 543 220.057
Elev 87.040

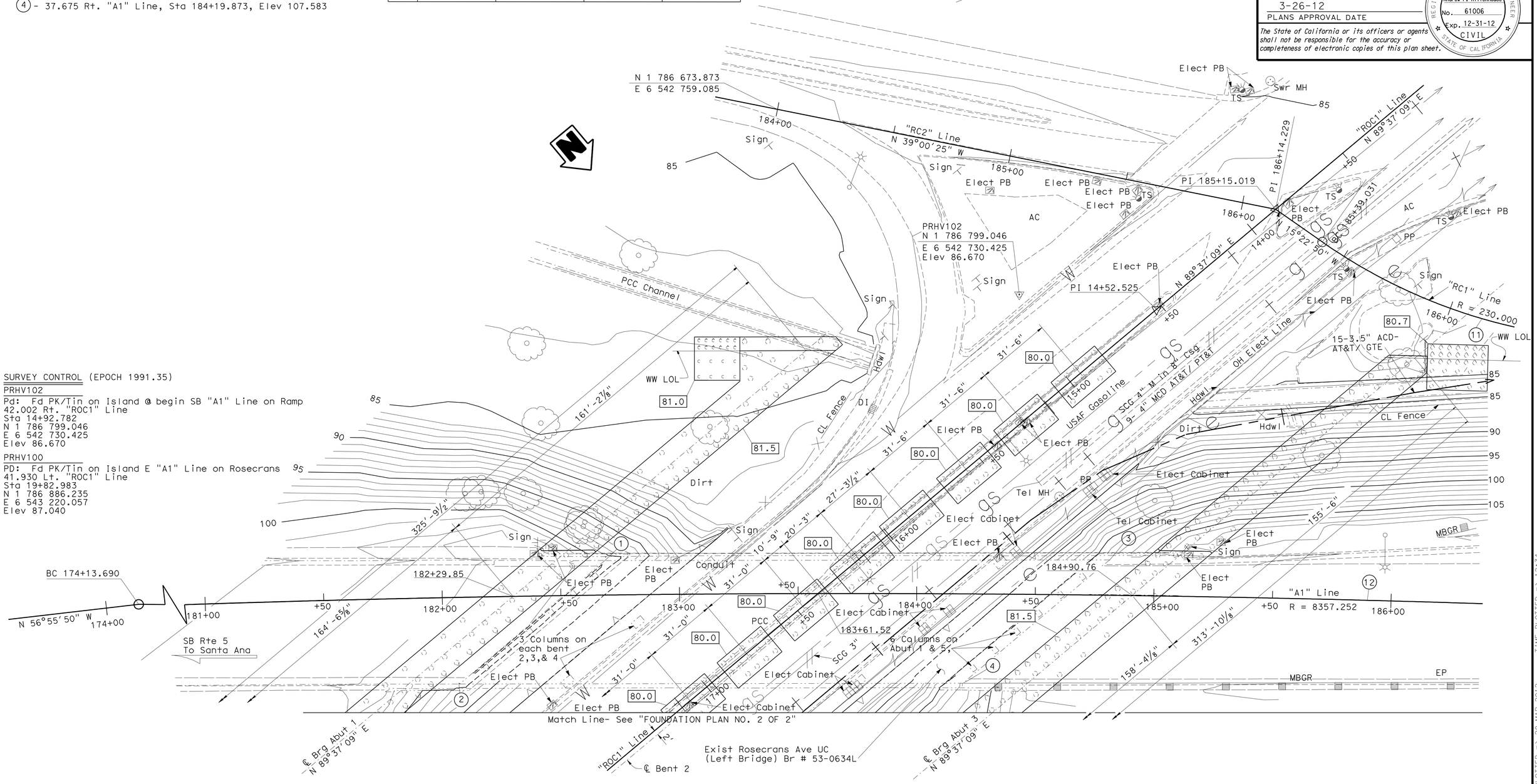

PRELIMINARY INVESTIGATION SECTION											
SCALE 1:20'	VERT.DATUM NAVD88	PHOTOGRAMMETRY AS OF: X				DESIGN	BY Laith Bahia	CHECKED Shervin Pahlavan	STATE OF CALIFORNIA DEPARTMENT OF TRANSPORTATION	DIVISION OF ENGINEERING SERVICES STRUCTURE DESIGN DESIGN BRANCH 15	BRIDGE NO. 53-3040
	HORZ.DATUM NAD83	SURVEYED	BY D12	CHECKED	BY T. Phung/C. Stewart	DETAILS	BY Tim Trefz	CHECKED Shervin Pahlavan			POST MILE 3.44
ALIGNMENT TIES Dist Traverse Sheets		DRAFTED	BY C. Pham	CHECKED	BY E. Viajar	QUANTITIES	BY Suzan Moradi	CHECKED Traci Menard			

ROSECRANS AVENUE UC (REPLACE)
FOUNDATION PLAN NO. 1

STRUCTURES FOUNDATION PLAN SHEET (ENGLISH) (REV. 10/25/05)

ORIGINAL SCALE IN INCHES FOR REDUCED PLANS 0 1 2 3

CU 07-255
EA 215931

DISREGARD PRINTS BEARING EARLIER REVISION DATES

REVISION DATES: 07-13-10 09-20-10 01-26-11 02-08-11 05-11-11 10-26-11 10-26-11 12-6-11 01-28-12

SHEET 5 OF 81

FILE => 53-3040-e-fdp101.dgn

USERNAME => s113946 DATE PLOTTED => 28-MAR-2012 TIME PLOTTED => 12:34

DIST	COUNTY	ROUTE	POST MILES TOTAL PROJECT	SHEET No	TOTAL SHEETS
07	LA	5	2.4/4.0	719	1288

Andrew Rittenhouse 12-12-11
REGISTERED CIVIL ENGINEER DATE

3-26-12
PLANS APPROVAL DATE

REGISTERED PROFESSIONAL ENGINEER
Andrew P. Rittenhouse
No. 61006
Exp. 12-31-12
CIVIL
STATE OF CALIFORNIA

The State of California or its officers or agents shall not be responsible for the accuracy or completeness of electronic copies of this plan sheet.

Bridge Location

(5) - 83.433 Rt. "A1" Line, Sta 181+41.537, Elev 107.096
(6) - 119.805 Rt. "A1" Line, Sta 180+94.841, Elev 106.001
(7) - 91.480 Rt. "A1" Line, Sta 183+60.574, Elev 107.771
(8) - 133.258 Rt. "A1" Line, Sta 183+09.703, Elev 107.229

No.	R	Δ	T	L
(9)	229.670	47°56'23"	102.111	192.167
(10)	256.630	42°24'39"	99.568	189.960

NOTE:
Underground utilities as shown are approximate

LEGEND:

XX.X Indicates bottom of footing elevation

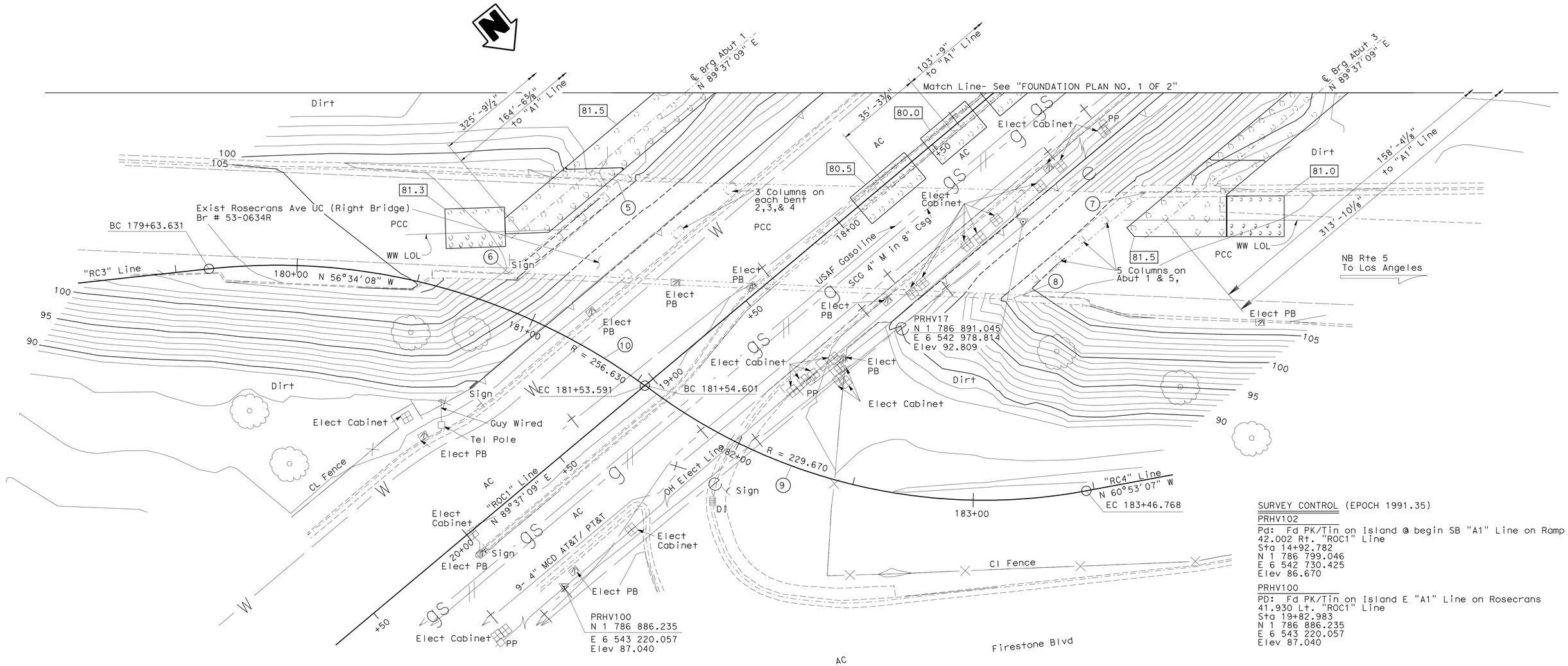

SURVEY CONTROL (EPOCH 1991.35)

PRHV102
Pd: Fd PK/Tin on Island @ begin SB "A1" Line on Ramp
42.002 Rt. "ROC1" Line
Sta 14+92.782
N 1 786 799.046
E 6 542 730.425
Elev 86.670

PRHV100
PD: Fd PK/Tin on Island E "A1" Line on Rosecrans
41.930 Lt. "ROC1" Line
Sta 19+82.983
N 1 786 886.235
E 6 543 220.057
Elev 87.040

PRELIMINARY INVESTIGATION SECTION

SCALE	VERT.DATUM NAVD88	PHOTOGRAMMETRY AS OF: X		
1:20	HORZ.DATUM NAD83	SURVEYED	BY D12	CHECKED BY T. Phung/C. Stewart
ALIGNMENT TIES Dist Traverse Sheets		DRAFTED	BY C. Pham	CHECKED BY E. Viajar

	BY	CHECKED
DESIGN	Laith Bahia	Shervin Pahlavan
DETAILS	Tim Trefz	Shervin Pahlavan
QUANTITIES	Suzan Moradi	Traci Menard

STATE OF CALIFORNIA
DEPARTMENT OF TRANSPORTATION

DIVISION OF ENGINEERING SERVICES
STRUCTURE DESIGN
DESIGN BRANCH 15

BRIDGE NO. 53-3040
POST MILE 3.44

ROSECRANS AVENUE UC (REPLACE)
FOUNDATION PLAN NO. 2

STRUCTURES FOUNDATION PLAN SHEET (ENGLISH) (REV. 10/25/05)

ORIGINAL SCALE IN INCHES FOR REDUCED PLANS 0 1 2 3

CU 07-225
EA 215931

DISREGARD PRINTS BEARING EARLIER REVISION DATES

REVISION DATES: 10-27-09 07-12-10 09-28-10 01-28-11 05-17-11 10-26-11 10-26-11 12-12-11 01-28-12

SHEET 6 OF 81

FILE => 53-3040-e-fdp102.dgn

USERNAME => s113946 DATE PLOTTED => 28-MAR-2012 TIME PLOTTED => 12:35

DIST	COUNTY	ROUTE	POST MILES TOTAL PROJECT	SHEET No	TOTAL SHEETS
07	LA	5	2.4/4.0	720	1288

REGISTERED CIVIL ENGINEER — DATE 12-12-11

3-26-12
PLANS APPROVAL DATE

REGISTERED PROFESSIONAL ENGINEER — Andrew P. Rittenhouse — No. 61006 — Exp. 12-31-12 — STATE OF CALIFORNIA

The State of California or its officers or agents shall not be responsible for the accuracy or completeness of electronic copies of this plan sheet.

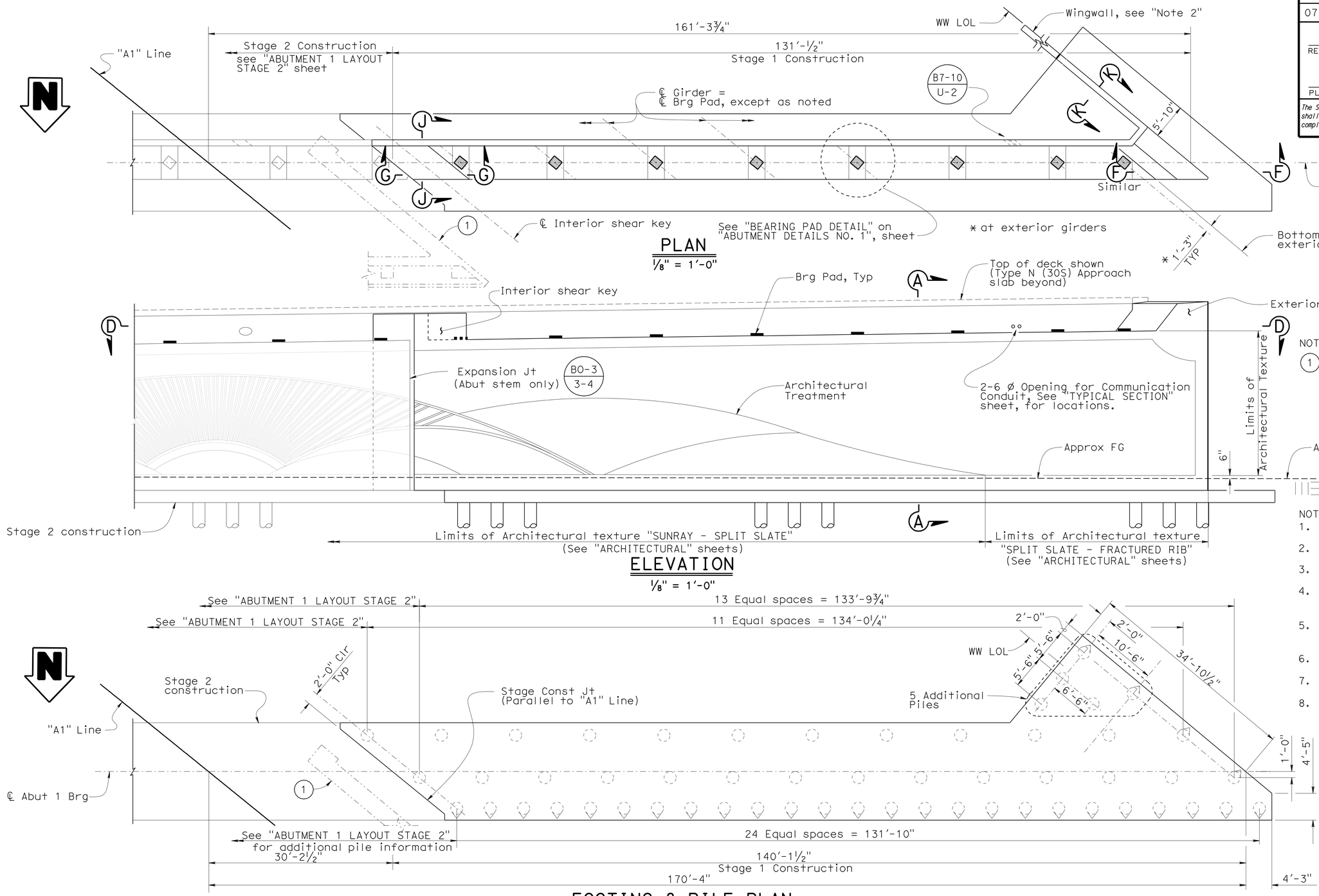

NOTES:

1. Existing Structure to remain in place during stage 1 construction.

NOTES:

1. See "PILE DATA TABLE" on "INDEX OF PLANS" sheet for additional information.
2. See "SECTION A-A" on "ABUTMENT DETAILS NO. 1" sheet for additional information.
3. See "SECTION D-D" on "ABUTMENT DETAILS NO. 2" sheet for additional information.
4. See "SECTION F-F", "SECTION G-G" & "SECTION J-J" on "ABUTMENT DETAILS NO. 3" sheet for additional information.
5. See "ABUTMENT 1 SB WINGWALL" sheet for additional information not shown or noted.
6. See "SECTION K-K" on "WINGWALL DETAILS" sheet for additional information.
7. For Wingwall, see "ABUTMENT 1 SB WINGWALL" sheet.
8. For Architectural Treatment details see "ARCHITECTURAL" sheets.

LEGEND:

- Indicates 1:3 battered pile
- Indicates vertical pile

	BY	CHECKED
DESIGN	Shervin Pahlavan	Laith Bahia
DETAILS	Tim Trefz	Laith Bahia
QUANTITIES	Suzan Moradi	T.M. / A.R.

STATE OF CALIFORNIA
DEPARTMENT OF TRANSPORTATION

DIVISION OF ENGINEERING SERVICES
STRUCTURE DESIGN
DESIGN BRANCH 15

BRIDGE NO. 53-3040
POST MILE 3.44

ROSECRANS AVENUE UC (REPLACE)
ABUTMENT 1 LAYOUT STAGE 1

STRUCTURES DESIGN DETAIL SHEET (ENGLISH) (REV. 10/25/05)

ORIGINAL SCALE IN INCHES FOR REDUCED PLANS 0 1 2 3

CU 07
EA 215931

DISREGARD PRINTS BEARING EARLIER REVISION DATES

REVISION DATES: 07-26-11 10-24-11 10-25-11 10-26-11 12-8-11 2-14-12 06-11-10 01-23-11 05-24-11

SHEET 7 OF 81

FILE => 53-3040-f-a01_lo1.dgn

USERNAME => s113946 DATE PLOTTED => 28-MAR-2012 TIME PLOTTED => 12:35

DIST	COUNTY	ROUTE	POST MILES TOTAL PROJECT	SHEET No	TOTAL SHEETS
07	LA	5	2.4/4.0	721	1288

Andrew Rittenhouse 12-12-11
REGISTERED CIVIL ENGINEER DATE

3-26-12
PLANS APPROVAL DATE

REGISTERED PROFESSIONAL ENGINEER Andrew P. Rittenhouse No. 61006 Exp. 12-31-12 STATE OF CALIFORNIA

The State of California or its officers or agents shall not be responsible for the accuracy or completeness of electronic copies of this plan sheet.

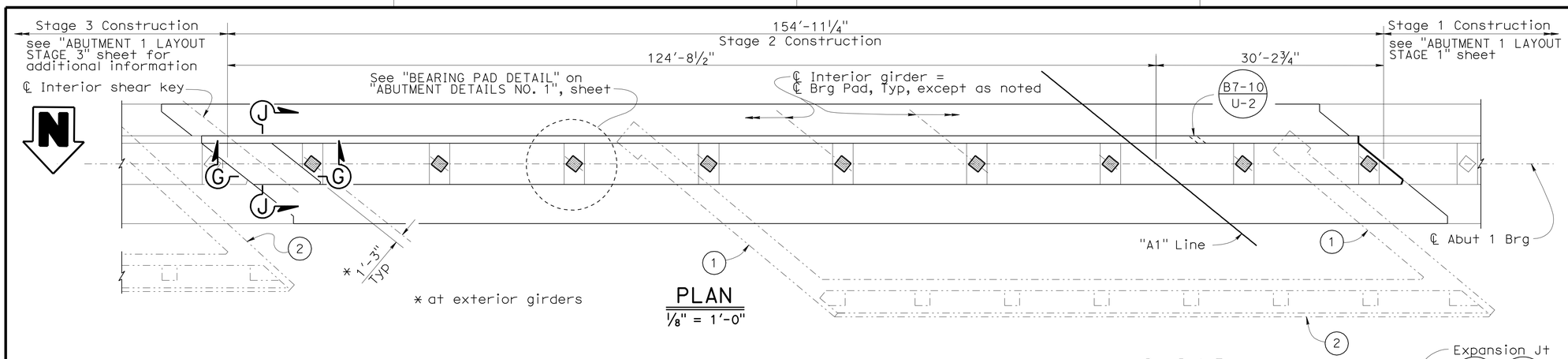

PLAN
⅛" = 1'-0"

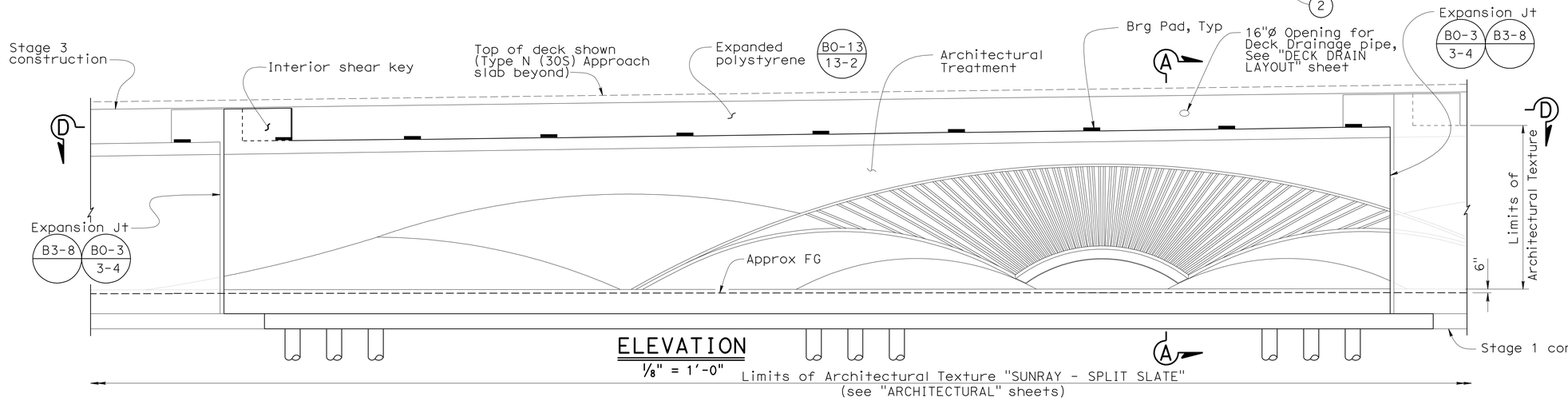

ELEVATION
⅛" = 1'-0"

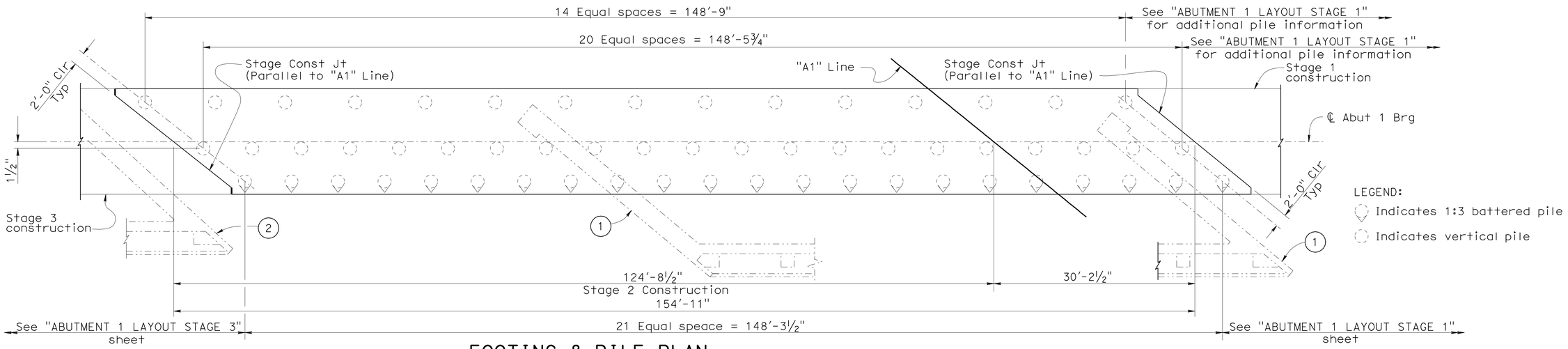

FOOTING & PILE PLAN
⅛" = 1'-0"

NOTES:

1. See "PILE DATA TABLE" on "INDEX OF PLANS" sheet for additional information.
2. See "SECTION A-A" on "ABUTMENT DETAILS NO. 1" sheet for additional information.
3. See "SECTION D-D" on "ABUTMENT DETAILS NO. 2" sheet for additional information.
4. See "SECTION G-G" & "SECTION J-J" on "ABUTMENT DETAILS NO. 3" sheet for additional information.
5. For Architectural Treatment details see "ARCHITECTURAL" sheets.

NOTES:

(1) Existing Structure to be removed.

(2) Existing Structure to remain in place during stage 2 construction.

LEGEND:

Indicates 1:3 battered pile

Indicates vertical pile

	BY	CHECKED
DESIGN	Shervin Pahlavan	Laith Bahia
DETAILS	Tim Trefz	Laith Bahia
QUANTITIES	Suzan Moradi	T.M. / A.R.

STATE OF CALIFORNIA
DEPARTMENT OF TRANSPORTATION

DIVISION OF ENGINEERING SERVICES
STRUCTURE DESIGN
DESIGN BRANCH 15

BRIDGE NO. 53-3040
POST MILE 3.44

ROSECRANS AVENUE UC (REPLACE)
ABUTMENT 1 LAYOUT STAGE 2

STRUCTURES DESIGN DETAIL SHEET (ENGLISH) (REV. 10/25/05)

ORIGINAL SCALE IN INCHES FOR REDUCED PLANS 0 1 2 3

CU 07
EA 215931

DISREGARD PRINTS BEARING EARLIER REVISION DATES

REVISION DATES: 01-26-11 10-28-11 10-14-11 12-7-11 02-14-12 01-29-10 08-26-10 01-21-11 05-19-11

SHEET 8 OF 81

FILE => 53-3040-f-a01_lo2.dgn

USERNAME => s113946 DATE PLOTTED => 28-MAR-2012 TIME PLOTTED => 12:35

DIST	COUNTY	ROUTE	POST MILES TOTAL PROJECT	SHEET No	TOTAL SHEETS
07	LA	5	2.4/4.0	722	1288

Andrew Rittenhouse 12-12-11
REGISTERED CIVIL ENGINEER DATE

3-26-12
PLANS APPROVAL DATE

REGISTERED PROFESSIONAL ENGINEER Andrew P. Rittenhouse No. 61006 Exp. 12-31-12 STATE OF CALIFORNIA

The State of California or its officers or agents shall not be responsible for the accuracy or completeness of electronic copies of this plan sheet.

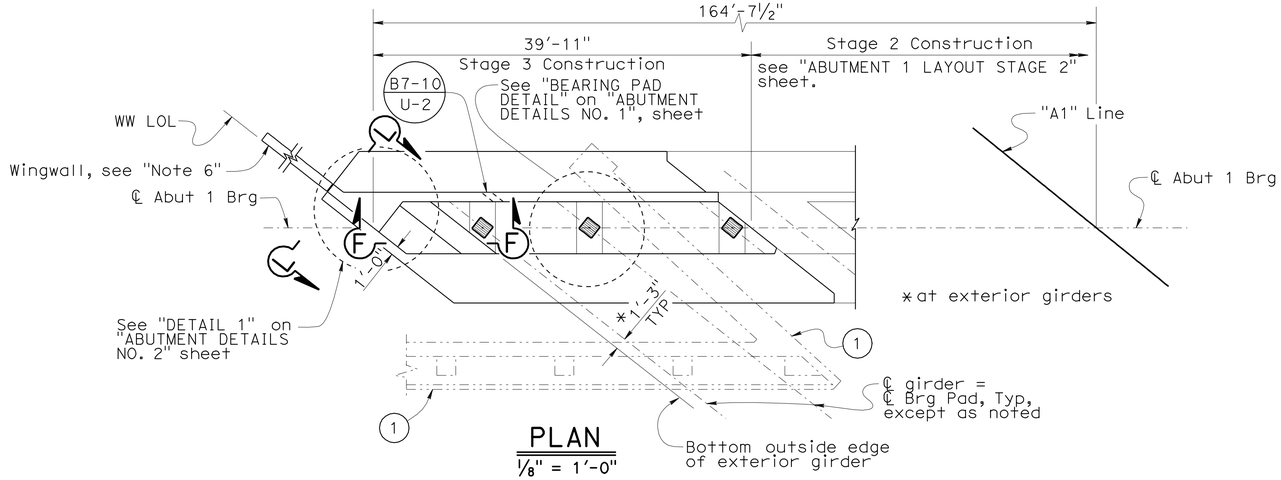

PLAN
⅛" = 1'-0"

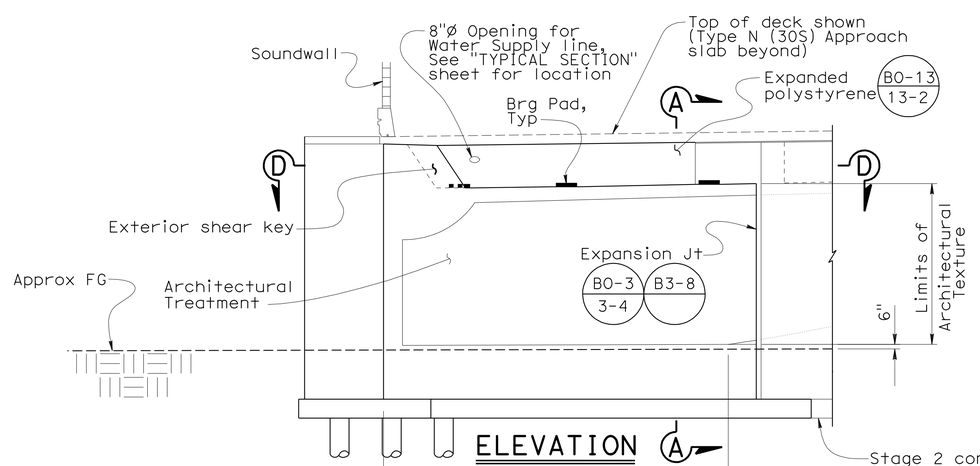

ELEVATION
⅛" = 1'-0"

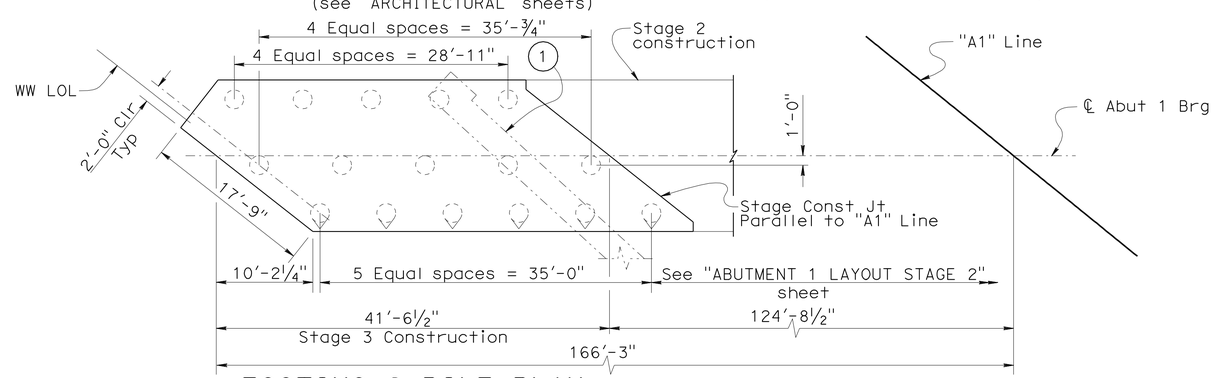

FOOTING & PILE PLAN
⅛" = 1'-0"

NOTES:

1. See "SECTION A-A" on "ABUTMENT DETAILS NO. 1" sheet for additional information.
2. See "SECTION D-D" on "ABUTMENT DETAILS NO. 2" sheet for additional information.
3. See "SECTION F-F" on "ABUTMENT DETAILS NO. 3" sheet for additional information.
4. See "ABUTMENT 1 NB WINGWALL" sheet for additional information not shown or noted.
5. See "SECTION L-L" on "WINGWALL DETAILS" sheet for additional information.
6. For Wingwall, see "ABUTMENT 1 SB WINGWALL" sheet.
7. For Architectural Treatment details see "ARCHITECTURAL" sheets.

NOTES:

(1) Existing structure to be removed.

LEGEND:

Indicates 1:3 battered pile

Indicates vertical pile

	BY	CHECKED
DESIGN	Shervin Pahlavan	Laith Bahia
DETAILS	Tim Trefz	Laith Bahia
QUANTITIES	Suzan Moradi	T.M. / A.R.

STATE OF CALIFORNIA
DEPARTMENT OF TRANSPORTATION

DIVISION OF ENGINEERING SERVICES
STRUCTURE DESIGN
DESIGN BRANCH 15

BRIDGE NO. 53-3040
POST MILE 3.44

ROSECRANS AVENUE UC (REPLACE)
ABUTMENT 1 LAYOUT STAGE 3

STRUCTURES DESIGN DETAIL SHEET (ENGLISH) (REV. 10/25/05)

ORIGINAL SCALE IN INCHES FOR REDUCED PLANS 0 1 2 3

CU 07
EA 215931

DISREGARD PRINTS BEARING EARLIER REVISION DATES

REVISION DATES: 06-17-11 01-18-11 10-28-11 10-28-11 12-12-11 01-18-12 02-14-12 06-14-10 06-14-11

SHEET 9 OF 81

FILE => 53-3040-f-a01_1o3.dgn

USERNAME => s113946 DATE PLOTTED => 28-MAR-2012 TIME PLOTTED => 12:35

DIST	COUNTY	ROUTE	POST MILES TOTAL PROJECT	SHEET No	TOTAL SHEETS
07	LA	5	2.4/4.0	723	1288

Andrew Rittenhouse 12-12-11
REGISTERED CIVIL ENGINEER DATE

3-26-12
PLANS APPROVAL DATE

REGISTERED PROFESSIONAL ENGINEER Andrew P. Rittenhouse No. 61006 Exp. 12-31-12 STATE OF CALIFORNIA

The State of California or its officers or agents shall not be responsible for the accuracy or completeness of electronic copies of this plan sheet.

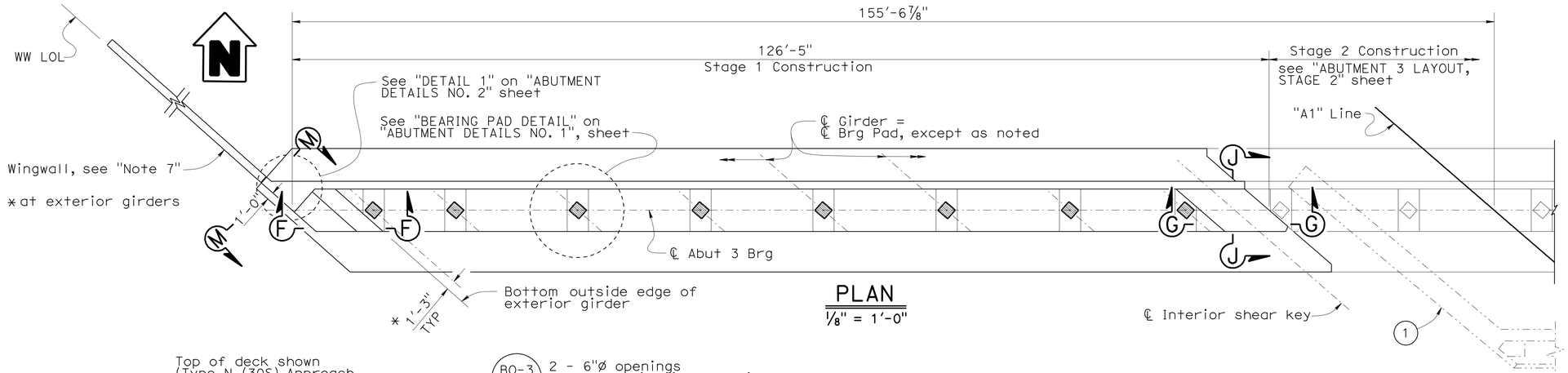

PLAN
⅛" = 1'-0"

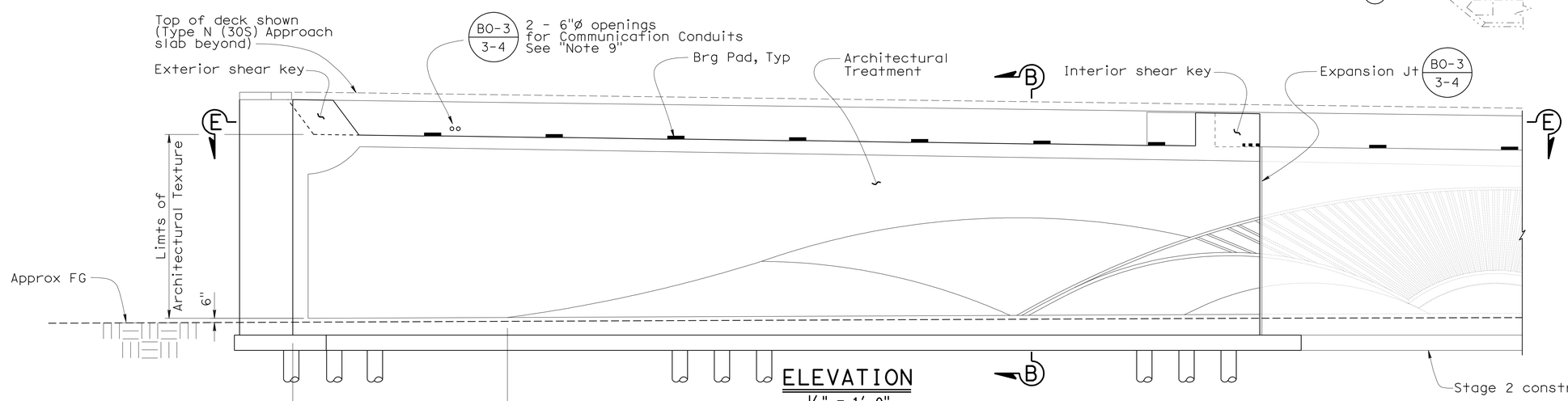

ELEVATION
⅛" = 1'-0"

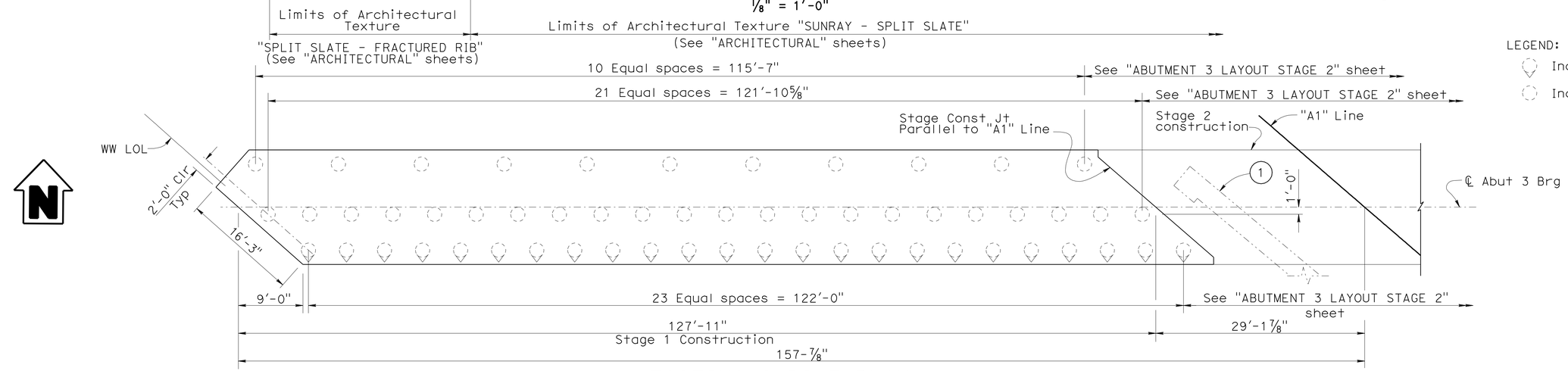

FOOTING & PILE PLAN
⅛" = 1'-0"

NOTES:

1. See "PILE DATA TABLE" on "INDEX OF PLANS" sheet for additional information.
2. See "SECTION B-B" on "ABUTMENT DETAILS NO. 1" sheet for additional information.
3. See "SECTION E-E" on "ABUTMENT DETAILS NO. 2" sheet for additional information.
4. See "SECTION F-F", "SECTION G-G" & "SECTION J-J" on "ABUTMENT DETAILS NO. 3" sheet for additional information.
5. See "ABUTMENT 3 NB WINGWALL" sheet for additional information not shown or noted.
6. See "SECTION M-M" on "WINGWALL DETAILS" sheet for additional information.
7. For Wingwall, see "ABUTMENT 1 SB WINGWALL" sheet.
8. For Architectural Treatment details see "ARCHITECTURAL" sheets.
9. For Communication Conduits location, see "TYPICAL SECTION" sheet.

NOTES:

(1) Existing structure to remain in place during Stage 1 Construction.

LEGEND:

Indicates 1:3 battered pile

Indicates vertical pile

	BY	CHECKED
DESIGN	Shervin Pahlavan	Laith Bahia
DETAILS	Tim Trefz	Laith Bahia
QUANTITIES	Suzan Moradi	T.M. / A.R.

STATE OF CALIFORNIA
DEPARTMENT OF TRANSPORTATION

DIVISION OF ENGINEERING SERVICES
STRUCTURE DESIGN
DESIGN BRANCH 15

BRIDGE NO. 53-3040
POST MILE 3.44

ROSECRANS AVENUE UC (REPLACE)
ABUTMENT 3 LAYOUT STAGE 1

STRUCTURES DESIGN DETAIL SHEET (ENGLISH) (REV. 10/25/05)

ORIGINAL SCALE IN INCHES FOR REDUCED PLANS 0 1 2 3

CU 07
EA 215931

DISREGARD PRINTS BEARING EARLIER REVISION DATES

REVISION DATES: 10-25-11 10-25-11 12-1-11 02-14-12 05-15-10 08-26-10 01-21-11 05-19-11 01-26-11

SHEET 10 OF 81

FILE => 53-3040-f-a03_lo1.dgn

USERNAME => s113946 DATE PLOTTED => 28-MAR-2012 TIME PLOTTED => 12:35

DIST	COUNTY	ROUTE	POST MILES TOTAL PROJECT	SHEET No	TOTAL SHEETS
07	LA	5	2.4/4.0	724	1288

Andrew Rittenhouse 12-12-11
REGISTERED CIVIL ENGINEER DATE

3-26-12
PLANS APPROVAL DATE

REGISTERED PROFESSIONAL ENGINEER Andrew P. Rittenhouse No. 61006 Exp. 12-31-12 STATE OF CALIFORNIA

The State of California or its officers or agents shall not be responsible for the accuracy or completeness of electronic copies of this plan sheet.

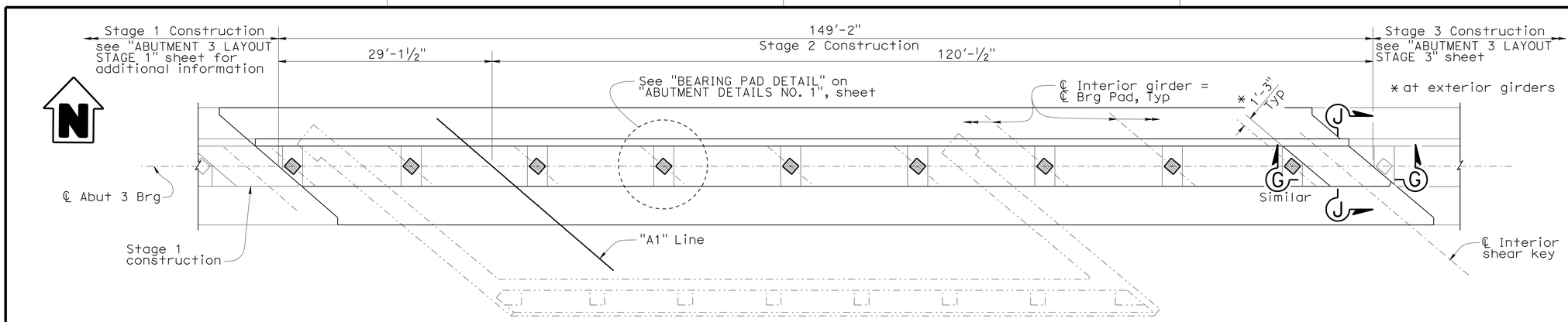

PLAN
1/8" = 1'-0"

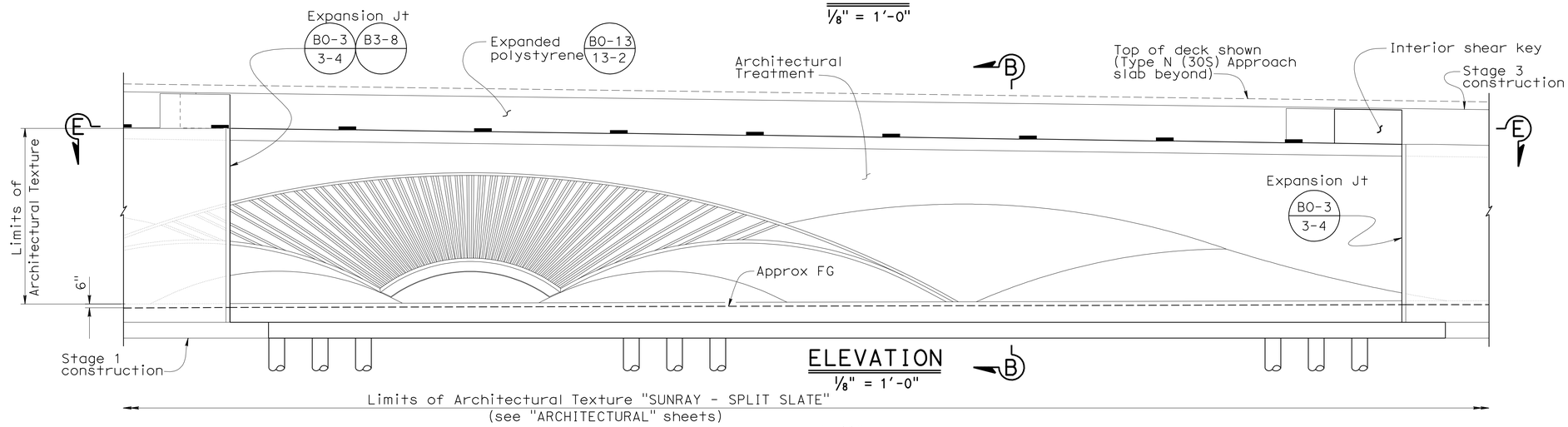

ELEVATION
1/8" = 1'-0"

Limits of Architectural Texture "SUNRAY - SPLIT SLATE"
(see "ARCHITECTURAL" sheets)

NOTES:

1. See "PILE DATA TABLE" on "INDEX OF PLANS" sheet for additional information.
2. See "SECTION B-B" on "ABUTMENT DETAILS NO. 1" sheet for additional information.
3. See "SECTION E-E" on "ABUTMENT DETAILS NO. 2" sheet for additional information.
4. See "SECTION G-G" & "SECTION J-J" on "ABUTMENT DETAILS NO. 3" sheet for additional information.
4. For Architectural Treatment details see "ARCHITECTURAL" sheets.

NOTES:

(1) Existing Structure to be removed.

LEGEND:

Indicates 1:3 battered pile

Indicates vertical pile

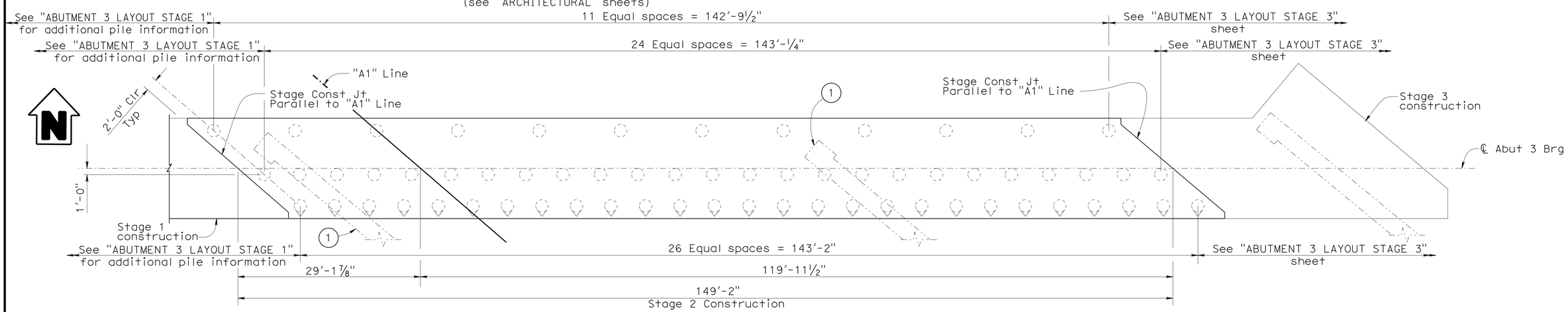

FOOTING & PILE PLAN
1/8" = 1'-0"

DESIGN	BY Shervin Pahlavan	CHECKED Laith Bahia	
DETAILS	BY Tim Trefz	CHECKED Laith Bahia	
QUANTITIES	BY Suzan Moradi	CHECKED T.M. / A.R.	

STATE OF CALIFORNIA
DEPARTMENT OF TRANSPORTATION

DIVISION OF ENGINEERING SERVICES
STRUCTURE DESIGN
DESIGN BRANCH 15

BRIDGE NO. 53-3040
POST MILE 3.44

ROSECRANS AVENUE UC (REPLACE)
ABUTMENT 3 LAYOUT STAGE 2

STRUCTURES DESIGN DETAIL SHEET (ENGLISH) (REV. 10/25/05)

ORIGINAL SCALE IN INCHES FOR REDUCED PLANS 0 1 2 3

CU 07
EA 215931

DISREGARD PRINTS BEARING EARLIER REVISION DATES

REVISION DATES: 10-28-11 12-12-11 02-14-12 11-16-09 06-18-10 08-26-10 01-27-11 05-19-11 01-26-11

SHEET 11 OF 81

FILE => 53-3040-f-a03_lo2.dgn

USERNAME => s113946 DATE PLOTTED => 28-MAR-2012 TIME PLOTTED => 12:35

DIST	COUNTY	ROUTE	POST MILES TOTAL PROJECT	SHEET No	TOTAL SHEETS
07	LA	5	2.4/4.0	725	1288

Andrew Rittenhouse 12-12-11
REGISTERED CIVIL ENGINEER DATE

3-26-12
PLANS APPROVAL DATE

REGISTERED PROFESSIONAL ENGINEER Andrew P. Rittenhouse No. 61006 Exp. 12-31-12 STATE OF CALIFORNIA

The State of California or its officers or agents shall not be responsible for the accuracy or completeness of electronic copies of this plan sheet.

NOTES:

1. See "PILE DATA TABLE" on "INDEX OF PLANS" sheet for additional information.
2. See "SECTION B-B" on "ABUTMENT DETAILS NO. 1" sheet for additional information.
3. See "SECTION E-E" on "ABUTMENT DETAILS NO. 2" sheet for additional information.
4. See "SECTION F-F" on "ABUTMENT DETAILS NO. 3" sheet for additional information.
5. See "ABUTMENT 3 SB WINGWALL" sheet for additional information not shown or noted.
6. See "SECTION N-N" on "WINGWALL DETAILS" sheet for additional information.
7. For Wingwall, see "ABUTMENT 1 SB WINGWALL" sheet.
8. For Architectural Treatment details see "ARCHITECTURAL" sheets.

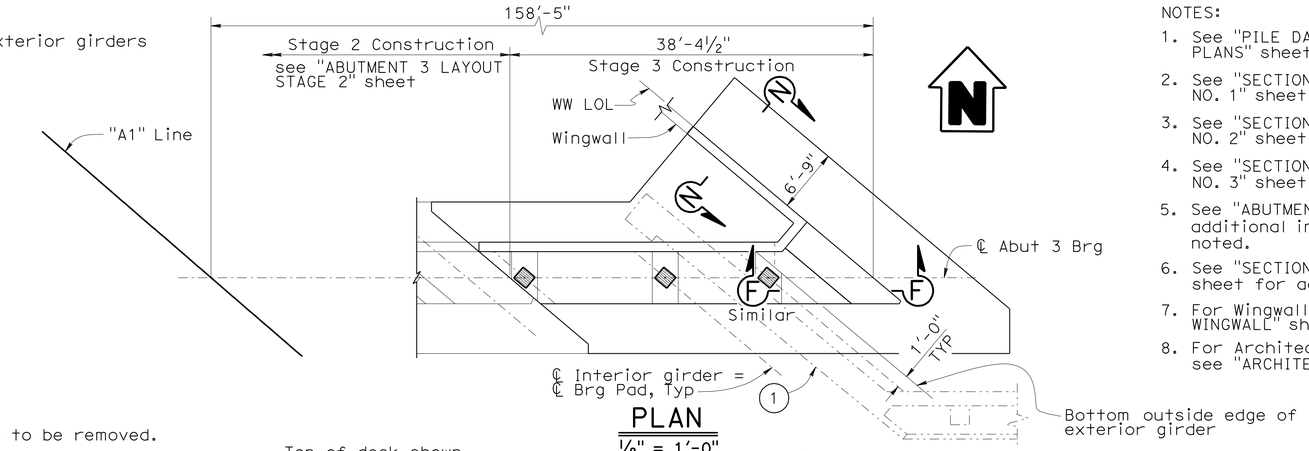

PLAN
⅛" = 1'-0"

NOTES:

(1) Existing structure to be removed.

LEGEND:

Indicates 1:3 battered pile

Indicates vertical pile

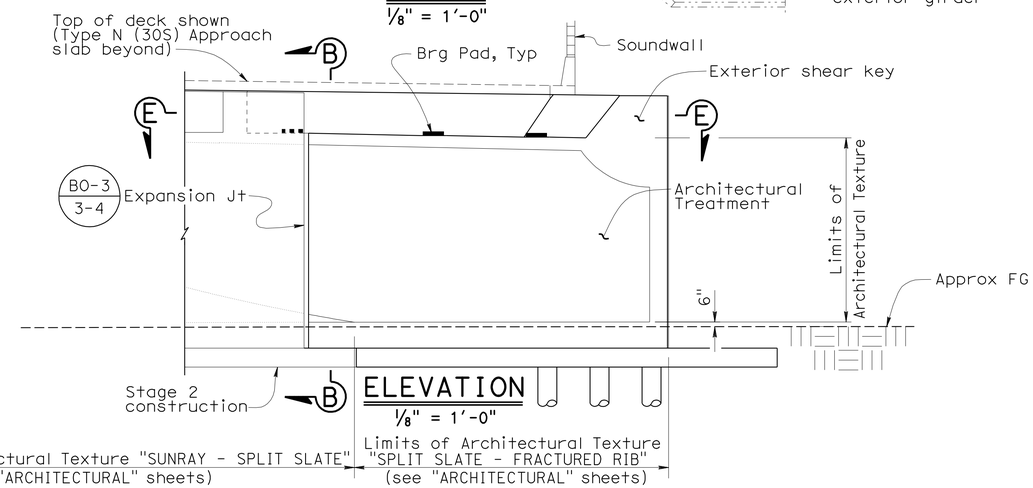

ELEVATION
⅛" = 1'-0"

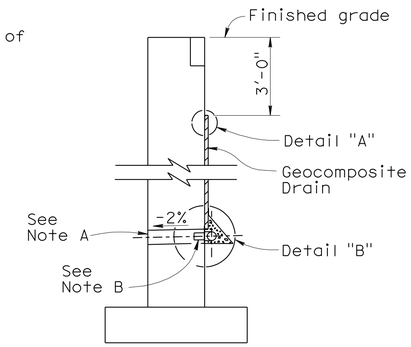

WALL SECTION

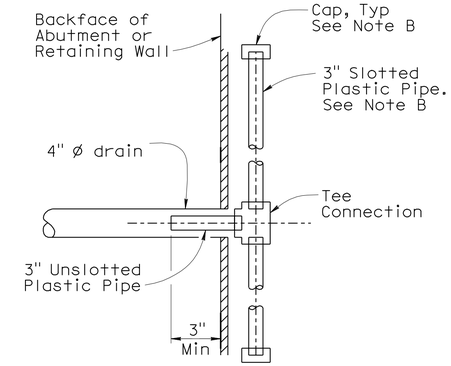

SECTION A-A

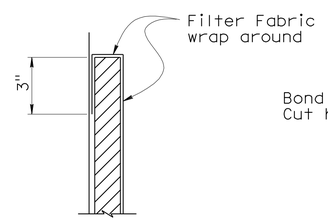

DETAIL "A"

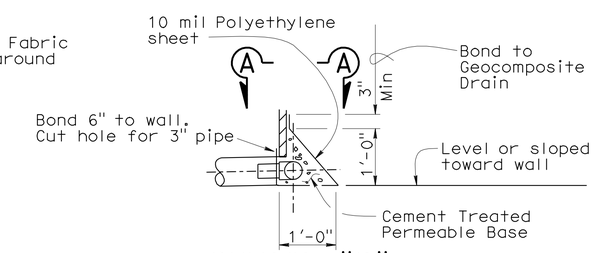

DETAIL "B"

WEEP HOLE AND GEOCOMPOSITE DRAIN

ALTERNATIVE TO BRIDGE DETAIL B0-3 / 3-1

NOTES:

A. 4" ø drains at intermediate sag points and at 25' Max center to center (9' ℄ to ℄ for Type 3 and 9'-3" ℄ to ℄ for Type 4 retaining walls). For walls adjacent to sidewalks or curbs, provide 4" cast iron or asbestos cement pipe under the sidewalk to discharge through curb face. Exposed wall drains shall be located 3"± above finished grade.

B. Geocomposite drain, cement treated permeable base, and 3" ø slotted plastic pipe continuous behind retaining wall or abutment. Cap ends of pipe. Provide "Tee" connection at each 4" ø drain.

C. Connect the low end of plastic pipe to the main outlet pipe as applicable.

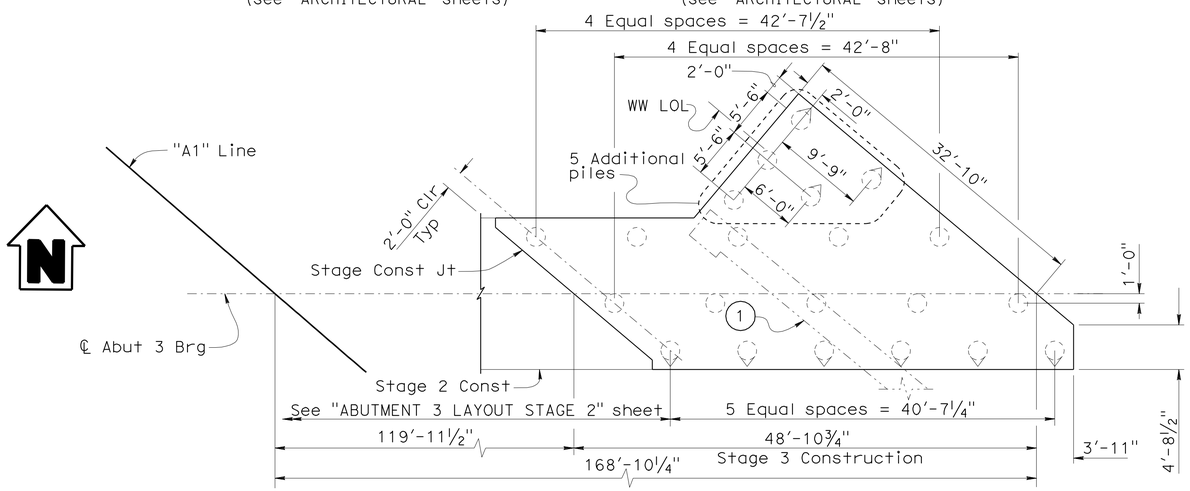

FOOTING & PILE PLAN
⅛" = 1'-0"

DESIGN	BY Shervin Pahlavan	CHECKED Laith Bahia	
DETAILS	BY Tim Trefz	CHECKED Laith Bahia	
QUANTITIES	BY Suzan Moradi	CHECKED T.M. / A.R.	

STATE OF CALIFORNIA
DEPARTMENT OF TRANSPORTATION

DIVISION OF ENGINEERING SERVICES
STRUCTURE DESIGN
DESIGN BRANCH 15

BRIDGE NO. 53-3040
POST MILE 3.44

ROSECRANS AVENUE UC (REPLACE)
ABUTMENT 3 LAYOUT STAGE 3

STRUCTURES DESIGN DETAIL SHEET (ENGLISH) (REV. 10/25/05)

ORIGINAL SCALE IN INCHES FOR REDUCED PLANS 0 1 2 3

CU 07
EA 215931

DISREGARD PRINTS BEARING EARLIER REVISION DATES

REVISION DATES: 10-24-11 10-26-11 11-18-09 10-26-11 12-2-11 02-14-12 06-17-10 05-19-11 07-26-11

SHEET 12 OF 81

FILE => 53-3040-f-a03_io3.dgn

USERNAME => s113946 DATE PLOTTED => 28-MAR-2012 TIME PLOTTED => 12:35

DIST	COUNTY	ROUTE	POST MILES TOTAL PROJECT	SHEET No	TOTAL SHEETS
07	LA	5	2.4/4.0	726	1288

Andrew Rittenhouse 12-12-11
REGISTERED CIVIL ENGINEER DATE

3-26-12
PLANS APPROVAL DATE

REGISTERED PROFESSIONAL ENGINEER Andrew P. Rittenhouse No. 61006 Exp. 12-31-12 STATE OF CALIFORNIA

The State of California or its officers or agents shall not be responsible for the accuracy or completeness of electronic copies of this plan sheet.

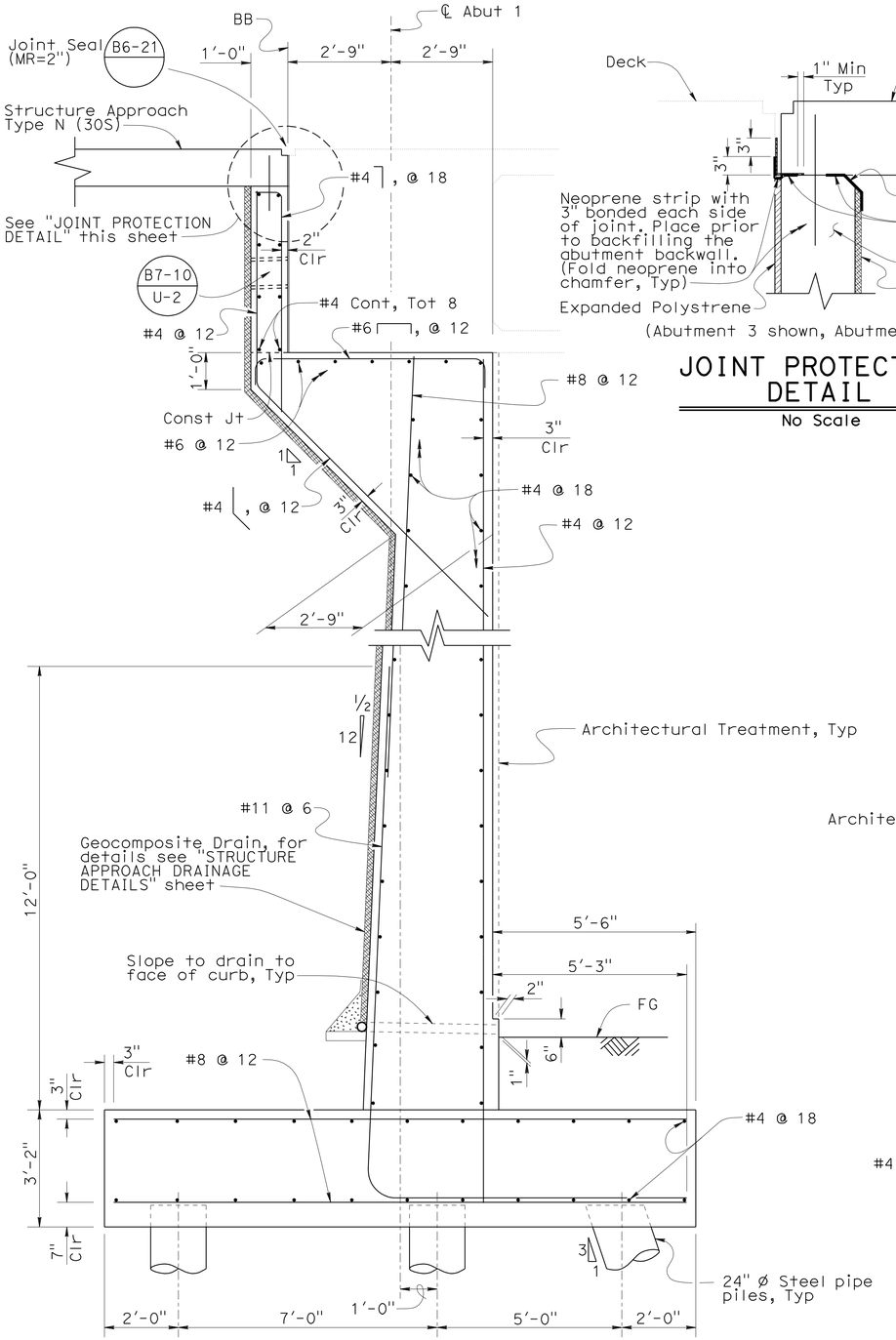

ABUTMENT 1

SECTION A-A

½" = 1'-0"

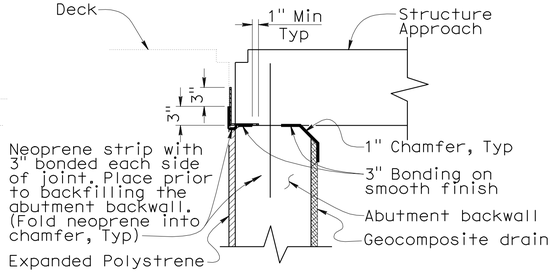

(Abutment 3 shown, Abutment 1 similar)

JOINT PROTECTION DETAIL

No Scale

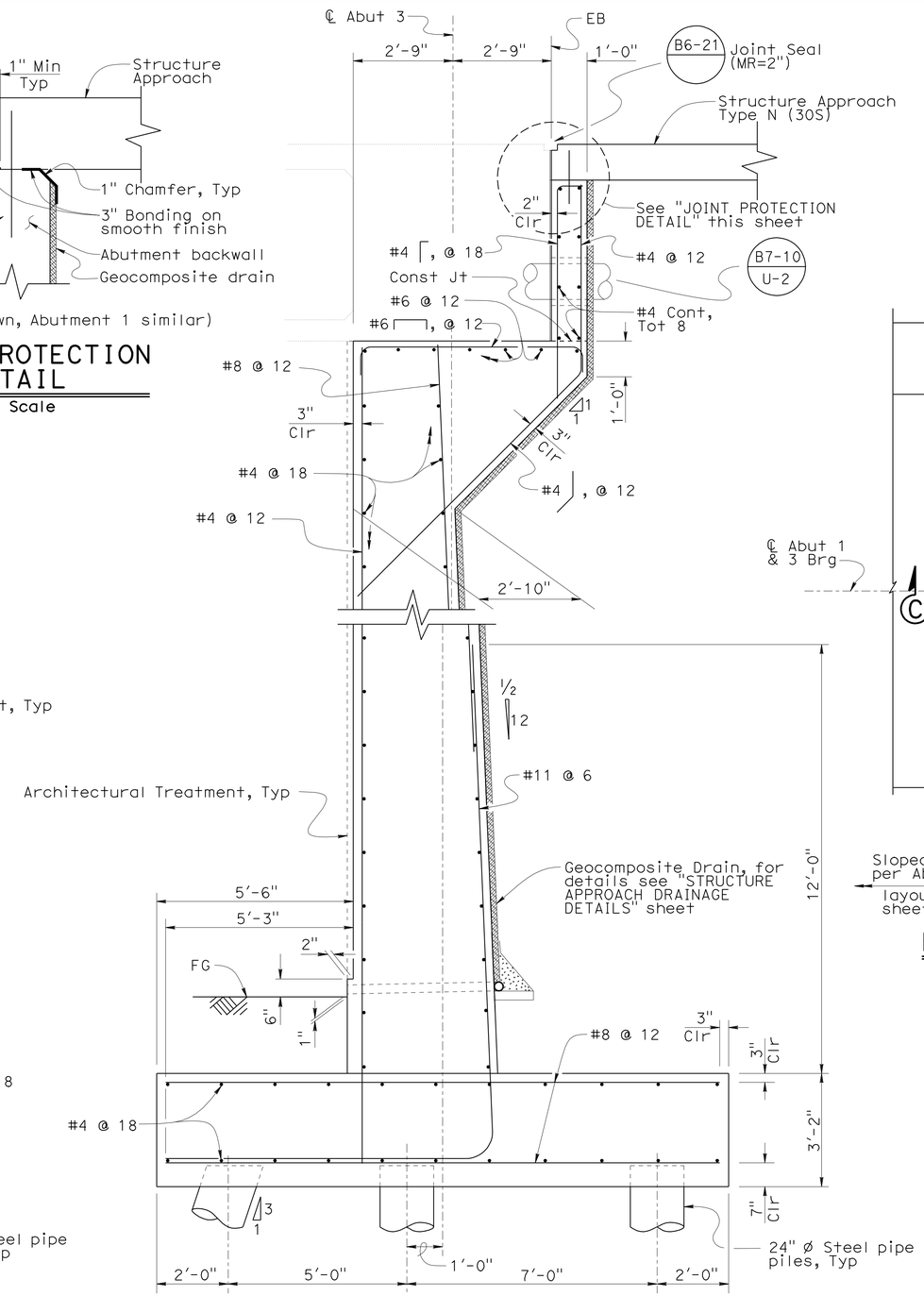

ABUTMENT 3

SECTION B-B

½" = 1'-0"

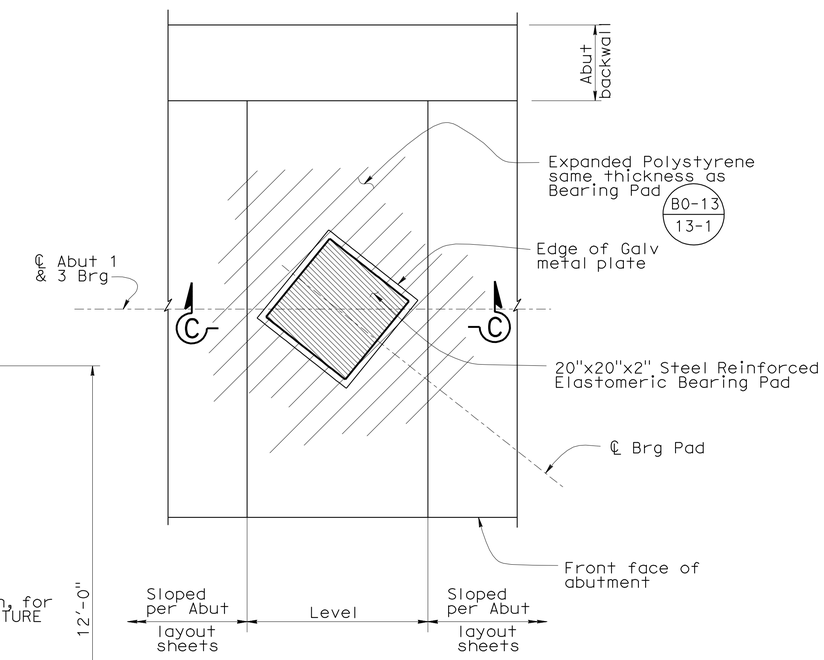

BEARING PAD DETAIL

1" = 1'-0"

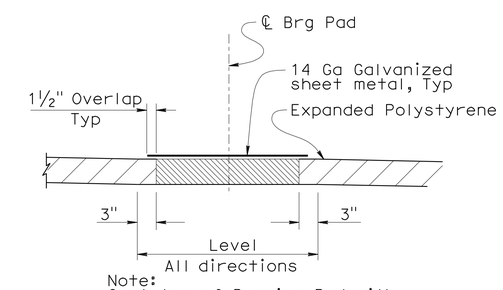

Note:
Coat top of Bearing Pad with silicone grease prior to placing Galvanized metal plate

SECTION C-C

1" = 1'-0"

DESIGN	BY Shervin Pahlavan	CHECKED Laith Bahia	
DETAILS	BY Tim Trefz	CHECKED Laith Bahia	
QUANTITIES	BY Suzan Moradi	CHECKED T.M. / A.R.	

STATE OF CALIFORNIA
DEPARTMENT OF TRANSPORTATION

DIVISION OF ENGINEERING SERVICES
STRUCTURE DESIGN
DESIGN BRANCH 15

BRIDGE NO. 53-3040
POST MILE 3.44

ROSECRANS AVENUE UC (REPLACE)
ABUTMENT DETAILS NO. 1

STRUCTURES DESIGN DETAIL SHEET (ENGLISH) (REV. 10/25/05)

ORIGINAL SCALE IN INCHES FOR REDUCED PLANS 0 1 2 3

CU 07
EA 215931

DISREGARD PRINTS BEARING EARLIER REVISION DATES

REVISION DATES: 10-17-09 11-17-09 05-17-10 09-17-10 01-28-11 10-17-11 12-7-11

SHEET 13 OF 81

FILE => 53-3040-g-a01_dt01.dgn

USERNAME => s113946 DATE PLOTTED => 28-MAR-2012 TIME PLOTTED => 12:36

DIST	COUNTY	ROUTE	POST MILES TOTAL PROJECT	SHEET No	TOTAL SHEETS
07	LA	5	2.4/4.0	727	1288

Andrew Rittenhouse 12-12-11
REGISTERED CIVIL ENGINEER DATE

3-26-12
PLANS APPROVAL DATE

REGISTERED PROFESSIONAL ENGINEER Andrew P. Rittenhouse No. 61006 Exp. 12-31-12 STATE OF CALIFORNIA

The State of California or its officers or agents shall not be responsible for the accuracy or completeness of electronic copies of this plan sheet.

NOTES:

1. See "SECTION A-A" & "SECTION B-B" on "ABUTMENT DETAILS NO. 1" sheet for additional information not shown or noted.
2. See "SECTION F-F" & "SECTION G-G" on "ABUTMENT DETAILS NO. 3" sheet for additional information not shown or noted.

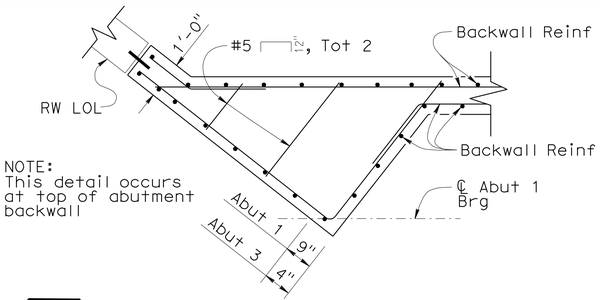

NOTE:
This detail occurs at top of abutment backwall

ABUTMENT 1 SHOWN, (ABUTMENT 3 SIMILAR)

DETAIL 1
½" = 1'-0"

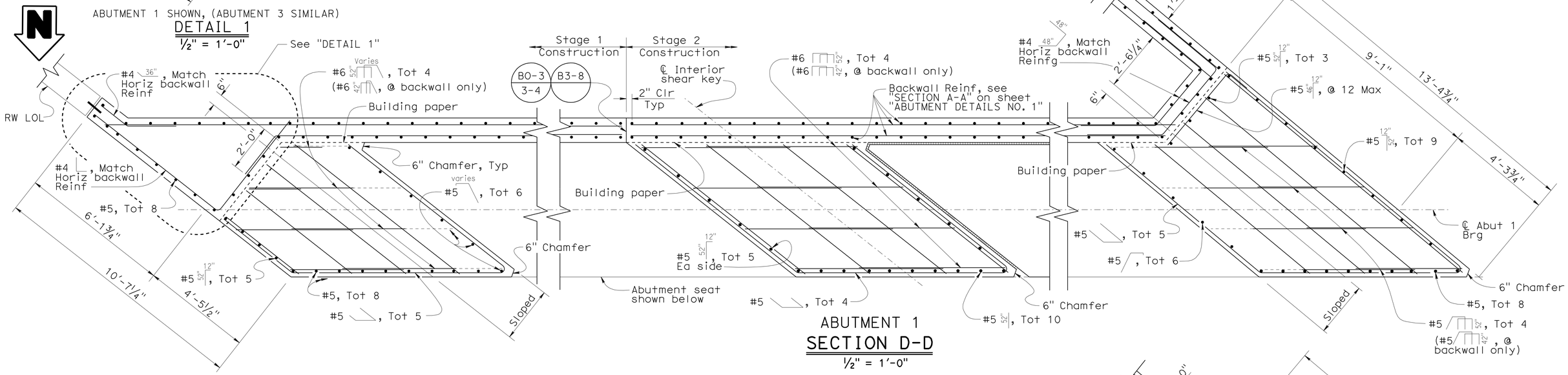

ABUTMENT 1
SECTION D-D
½" = 1'-0"

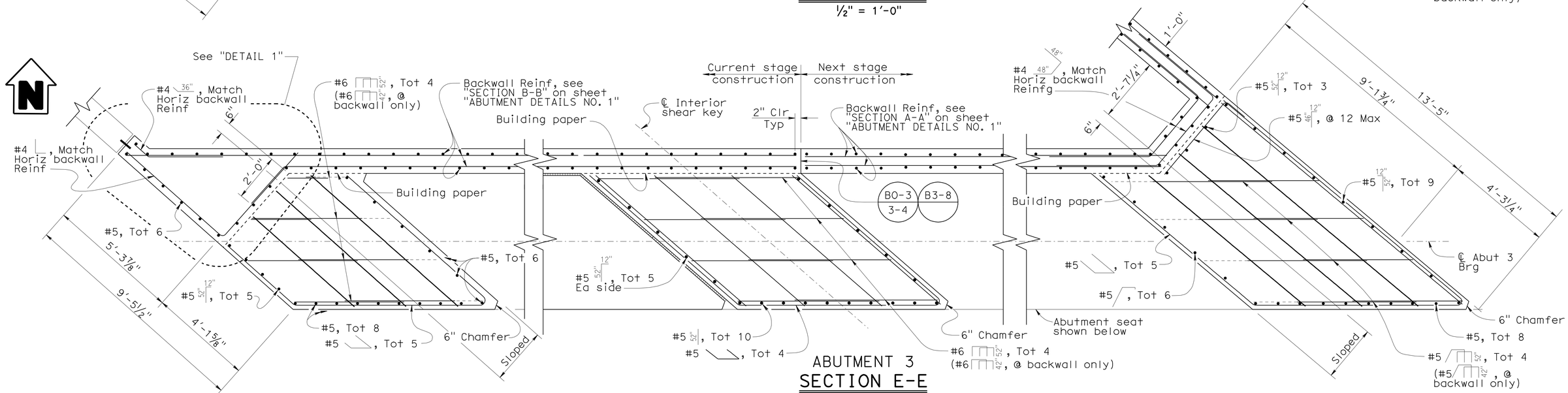

ABUTMENT 3
SECTION E-E
½" = 1'-0"

DESIGN	BY Shervin Pahlavan	CHECKED Laith Bahia	
DETAILS	BY Tim Trefz	CHECKED Laith Bahia	
QUANTITIES	BY Suzan Moradi	CHECKED T.M. / A.R.	

STATE OF CALIFORNIA
DEPARTMENT OF TRANSPORTATION

DIVISION OF ENGINEERING SERVICES
STRUCTURE DESIGN
DESIGN BRANCH 15

BRIDGE NO. 53-3040
POST MILE 3.44

ROSECRANS AVENUE UC (REPLACE)
ABUTMENT DETAILS NO. 2

STRUCTURES DESIGN DETAIL SHEET (ENGLISH) (REV. 10/25/05)

ORIGINAL SCALE IN INCHES FOR REDUCED PLANS 0 1 2 3

CU 07
EA 215931

DISREGARD PRINTS BEARING EARLIER REVISION DATES

REVISION DATES: 10-26-11 12-7-11 06-14-10 08-17-10 10-18-10 01-21-11 02-24-11 05-24-11 06-17-11 01-26-12

SHEET 14 OF 81

FILE => 53-3040-g-a01_dt02.dgn

USERNAME => s113946 DATE PLOTTED => 28-MAR-2012 TIME PLOTTED => 12:36

DIST	COUNTY	ROUTE	POST MILES TOTAL PROJECT	SHEET No	TOTAL SHEETS
07	LA	5	2.4/4.0	728	1288

Andrew Rittenhouse 12-12-11
REGISTERED CIVIL ENGINEER DATE

3-26-12
PLANS APPROVAL DATE

REGISTERED PROFESSIONAL ENGINEER Andrew P. Rittenhouse No. 61006 Exp. 12-31-12 STATE OF CALIFORNIA

The State of California or its officers or agents shall not be responsible for the accuracy or completeness of electronic copies of this plan sheet.

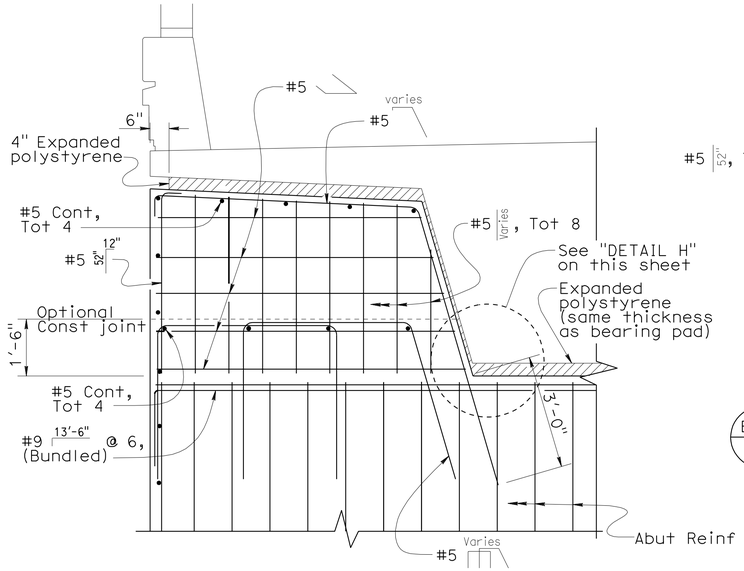

EXTERIOR SHEAR KEY
ABUT 1 SHOWN (ABUT 3 SIMILAR)

SECTION F-F
½" = 1'-0"

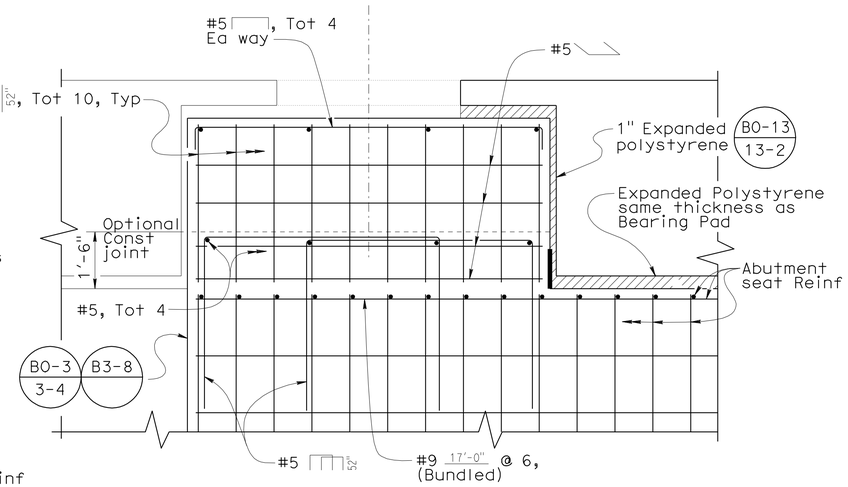

INTERIOR SHEAR KEY
ABUT 1 SHOWN (ABUT 3 SIMILAR)

SECTION G-G
½" = 1'-0"

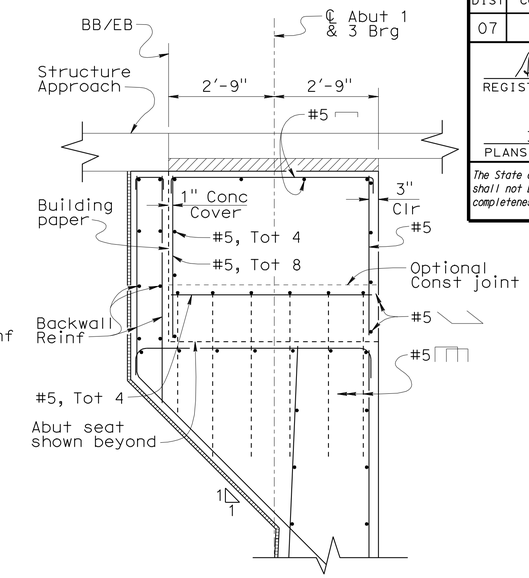

INTERIOR SHEAR KEY

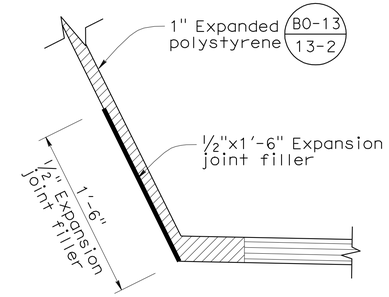

SECTION J-J
½" = 1'-0"

DETAIL H
NO SCALE

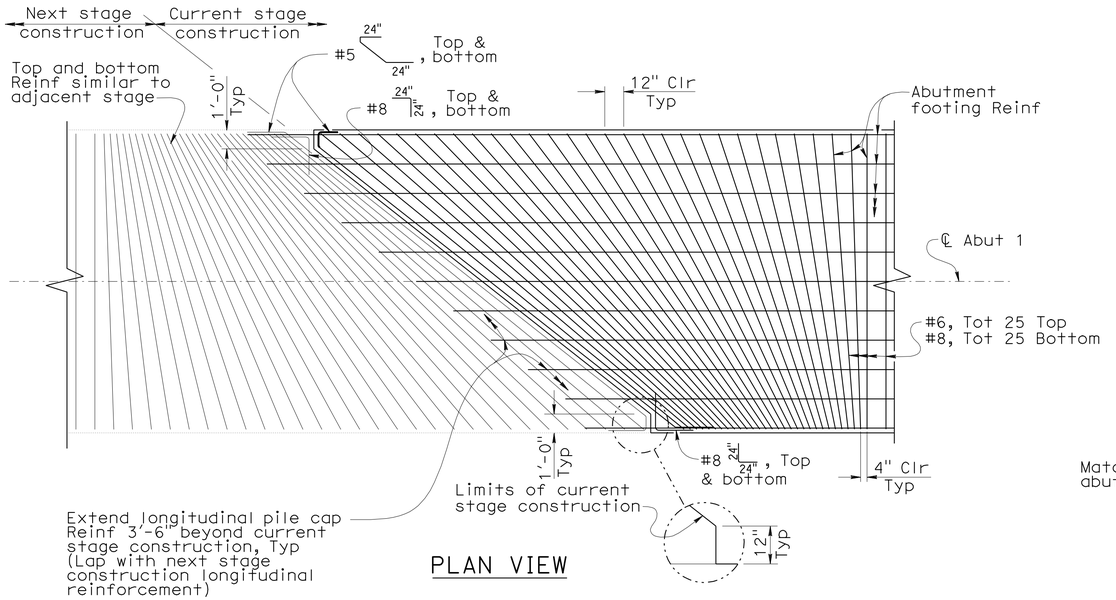

PLAN VIEW

STAGE CONSTRUCTION FOOTING
¼" = 1'-0"

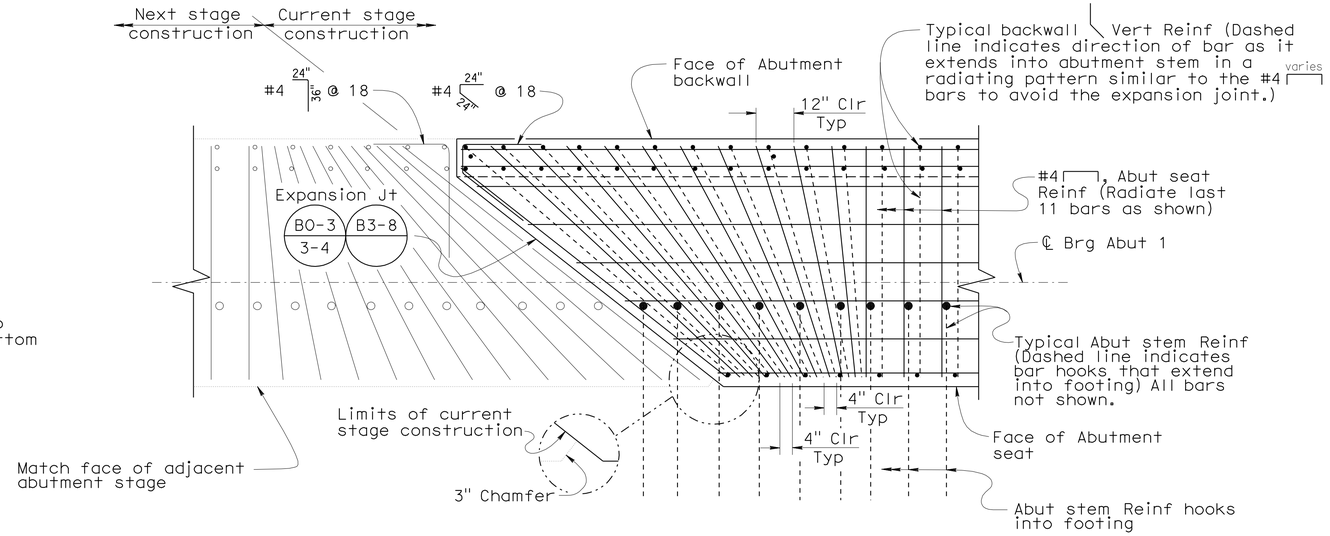

PLAN VIEW

STAGE CONSTRUCTION STEM
½" = 1'-0"

NOTES:
1. Abut 1 shown, Abut 3 similar. For clarity next stage of longitudinal Reinf not shown.
2. Intertior shear key Reinf not shown

DESIGN	BY Shervin Pahlavan	CHECKED Laith Bahia	
DETAILS	BY Tim Trefz	CHECKED Laith Bahia	
QUANTITIES	BY Suzan Moradi	CHECKED T.M. / A.R.	

STATE OF CALIFORNIA
DEPARTMENT OF TRANSPORTATION

DIVISION OF ENGINEERING SERVICES
STRUCTURE DESIGN
DESIGN BRANCH 15

BRIDGE NO. 53-3040
POST MILE 3.44

ROSECRANS AVENUE UC (REPLACE)
ABUTMENT DETAILS NO. 3

STRUCTURES DESIGN DETAIL SHEET (ENGLISH) (REV. 10/25/05)

ORIGINAL SCALE IN INCHES FOR REDUCED PLANS 0 1 2 3

CU 07
EA 215931

DISREGARD PRINTS BEARING EARLIER REVISION DATES

REVISION DATES: 05-09-11 07-26-11 10-13-11 12-7-11 05-13-10 09-13-10 01-28-11 02-23-11 04-26-11

SHEET 15 OF 81

FILE => 53-3040-g-a01_dt03.dgn

USERNAME => s113946 DATE PLOTTED => 28-MAR-2012 TIME PLOTTED => 12:36

DIST	COUNTY	ROUTE	POST MILES TOTAL PROJECT	SHEET No	TOTAL SHEETS
07	LA	5	2.4/4.0	729	1288

Andrew Rittenhouse 12-12-11
REGISTERED CIVIL ENGINEER DATE

3-26-12
PLANS APPROVAL DATE

REGISTERED PROFESSIONAL ENGINEER
Andrew P. Rittenhouse
No. 61006
Exp. 12-31-12
STATE OF CALIFORNIA

The State of California or its officers or agents shall not be responsible for the accuracy or completeness of electronic copies of this plan sheet.

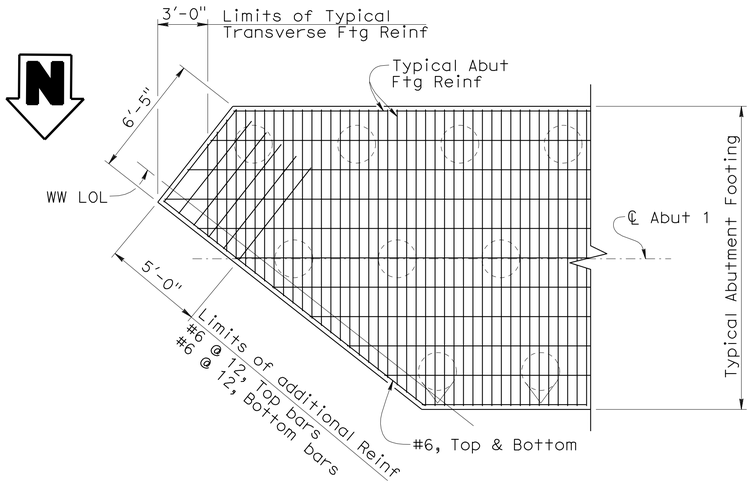

ABUTMENT 1 -STAGE 3

FOOTING CORNER REINFORCING

¼" = 1'-0"

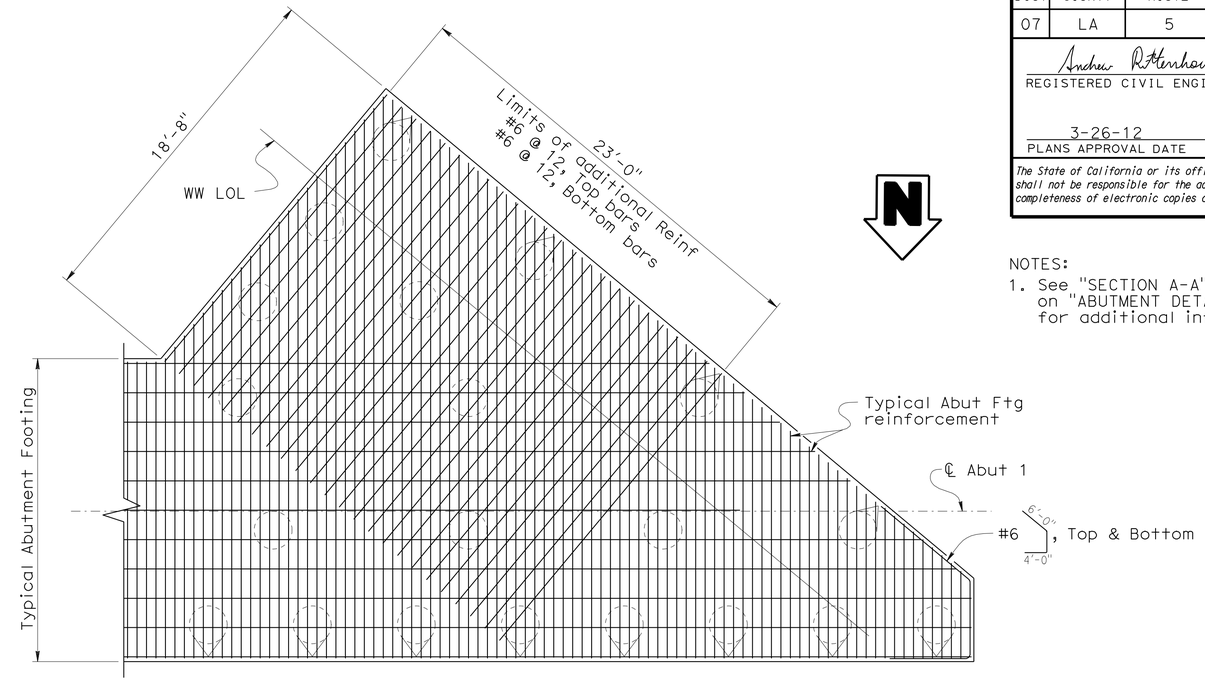

NOTES:

1. See "SECTION A-A" & "SECTION B-B" on "ABUTMENT DETAILS NO. 1" sheet for additional information.

ABUTMENT 1 -STAGE 1

FOOTING CORNER REINFORCING

¼" = 1'-0"

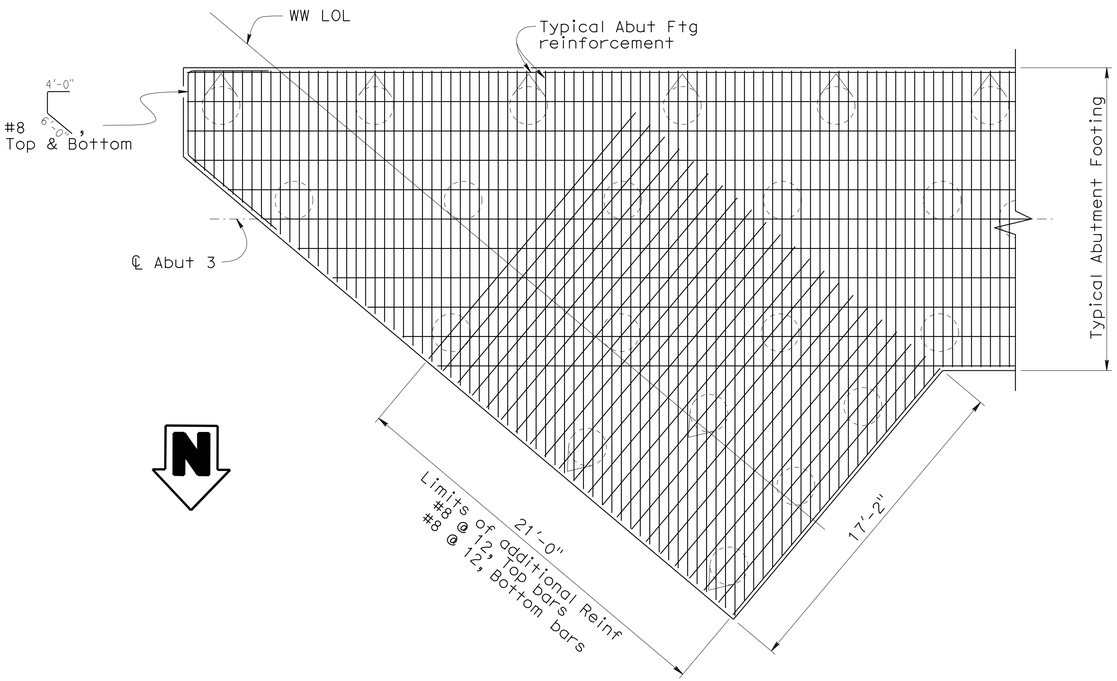

ABUTMENT 3 -STAGE 3

FOOTING CORNER REINFORCING

¼" = 1'-0"

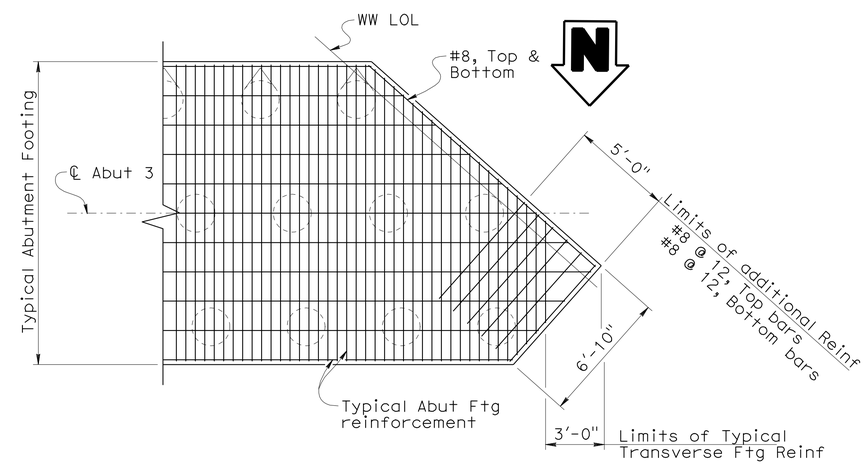

ABUTMENT 3 -STAGE 1

FOOTING CORNER REINFORCING

¼" = 1'-0"

DESIGN	BY Shervin Pahlavan	CHECKED Laith Bahia	
DETAILS	BY Tim Trefz	CHECKED Laith Bahia	
QUANTITIES	BY Suzan Moradi	CHECKED T.M. / A.R.	

STATE OF CALIFORNIA
DEPARTMENT OF TRANSPORTATION

DIVISION OF ENGINEERING SERVICES
STRUCTURE DESIGN
DESIGN BRANCH 15

BRIDGE NO. 53-3040
POST MILE 3.44

ROSECRANS AVENUE UC (REPLACE)

ABUTMENT DETAILS NO. 4

STRUCTURES DESIGN DETAIL SHEET (ENGLISH) (REV. 10/25/05)

ORIGINAL SCALE IN INCHES FOR REDUCED PLANS 0 1 2 3

CU 07
EA 215931

DISREGARD PRINTS BEARING EARLIER REVISION DATES

REVISION DATES: 02-14-11 02-23-11 06-17-11 06-29-11 10-28-11 12-7-11

SHEET 16 OF 81

FILE => 53-3040-g-a01_dt04.dgn

USERNAME => s113946 DATE PLOTTED => 28-MAR-2012 TIME PLOTTED => 12:36

DIST	COUNTY	ROUTE	POST MILES TOTAL PROJECT	SHEET No	TOTAL SHEETS
07	LA	5	2.4/4.0	730	1288

Andrew Rittenhouse 12-12-11
REGISTERED CIVIL ENGINEER DATE

3-26-12
PLANS APPROVAL DATE

REGISTERED PROFESSIONAL ENGINEER
Andrew P. Rittenhouse
No. 61006
Exp. 12-31-12
STATE OF CALIFORNIA

The State of California or its officers or agents shall not be responsible for the accuracy or completeness of electronic copies of this plan sheet.

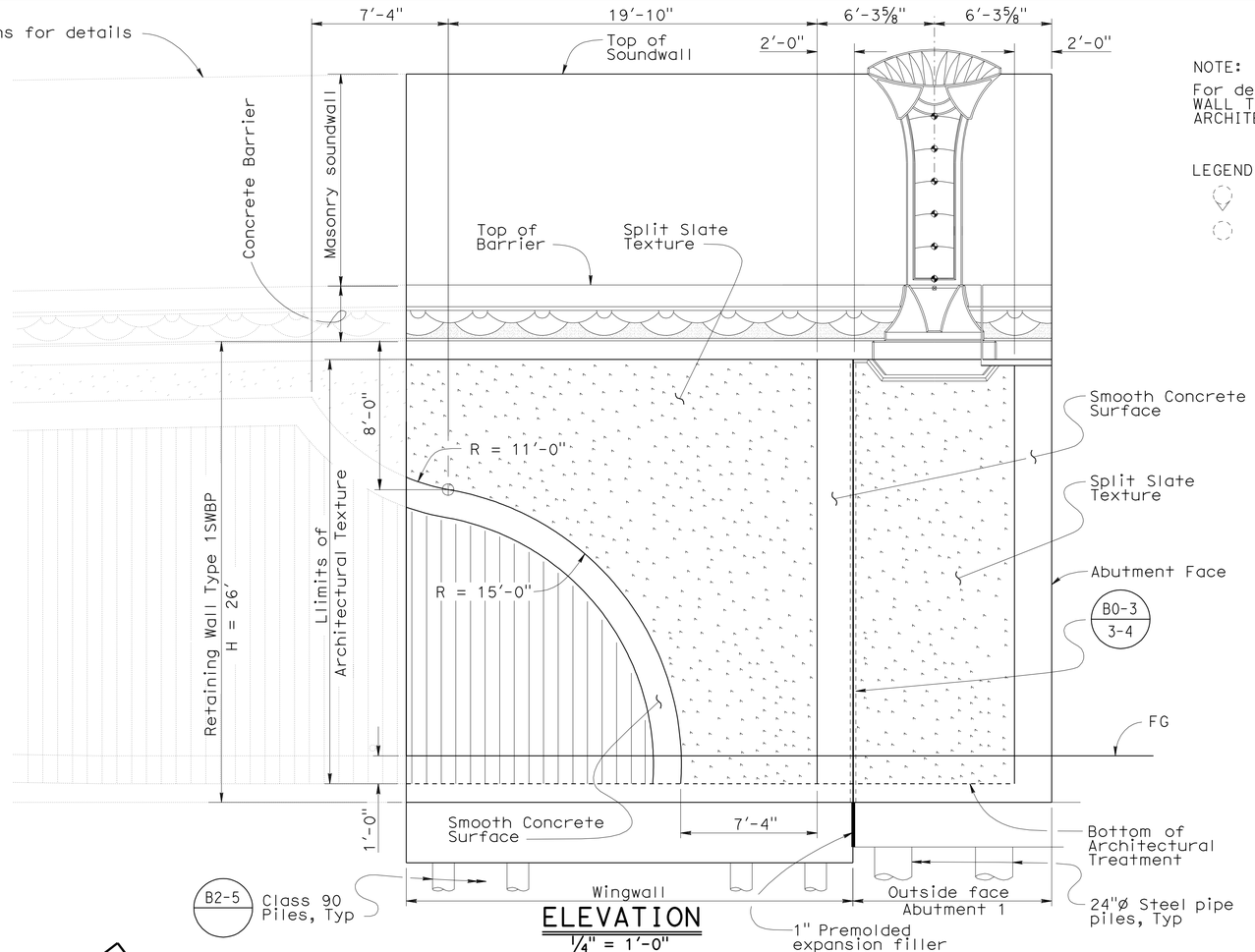

ELEVATION
¼" = 1'-0"

NOTE:

For details not shown, see "RETAINING WALL TYPE 1SWBP" details and "BARRIER ARCHITECTURAL DETAILS" sheet.

LEGEND:

Indicates 1:3 battered pile

Indicates vertical pile

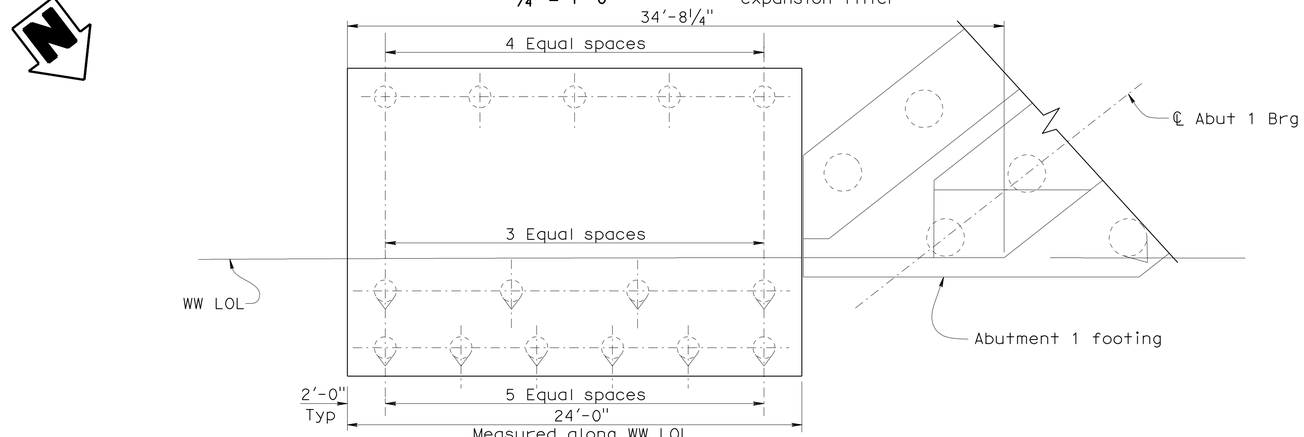

PLAN
¼" = 1'-0"

DESIGN	BY Shervin Pahlavan	CHECKED Traci Menard	
DETAILS	BY Tim Trefz	CHECKED Traci Menard	
QUANTITIES	BY Suzan Moradi	CHECKED T.M. / A.R.	

STATE OF CALIFORNIA
DEPARTMENT OF TRANSPORTATION

DIVISION OF ENGINEERING SERVICES
STRUCTURE DESIGN
DESIGN BRANCH 15

BRIDGE NO. 53-3040
POST MILE 3.44

ROSECRANS AVENUE UC (REPLACE)
ABUTMENT 1 NB WINGWALL

STRUCTURES DESIGN DETAIL SHEET (ENGLISH) (REV. 10/25/05)

ORIGINAL SCALE IN INCHES FOR REDUCED PLANS 0 1 2 3

CU 07
EA 215931

DISREGARD PRINTS BEARING EARLIER REVISION DATES

REVISION DATES: 10-29-09 11-13-09 09-10-10 10-06-10 10-15-10 01-21-11 02-16-11 10-14-11 12-9-11 3-10-12

SHEET 17 OF 81

FILE => 53-3040-g-a01_wwdt01.dgn

USERNAME => s113946 DATE PLOTTED => 28-MAR-2012 TIME PLOTTED => 12:36

DIST	COUNTY	ROUTE	POST MILES TOTAL PROJECT	SHEET No	TOTAL SHEETS
07	LA	5	2.4/4.0	731	1288

Andrew Rittenhouse 12-12-11
REGISTERED CIVIL ENGINEER DATE

3-26-12
PLANS APPROVAL DATE

The State of California or its officers or agents shall not be responsible for the accuracy or completeness of electronic copies of this plan sheet.

REGISTERED PROFESSIONAL ENGINEER
Andrew P. Rittenhouse
No. 61006
Exp. 12-31-12
STATE OF CALIFORNIA

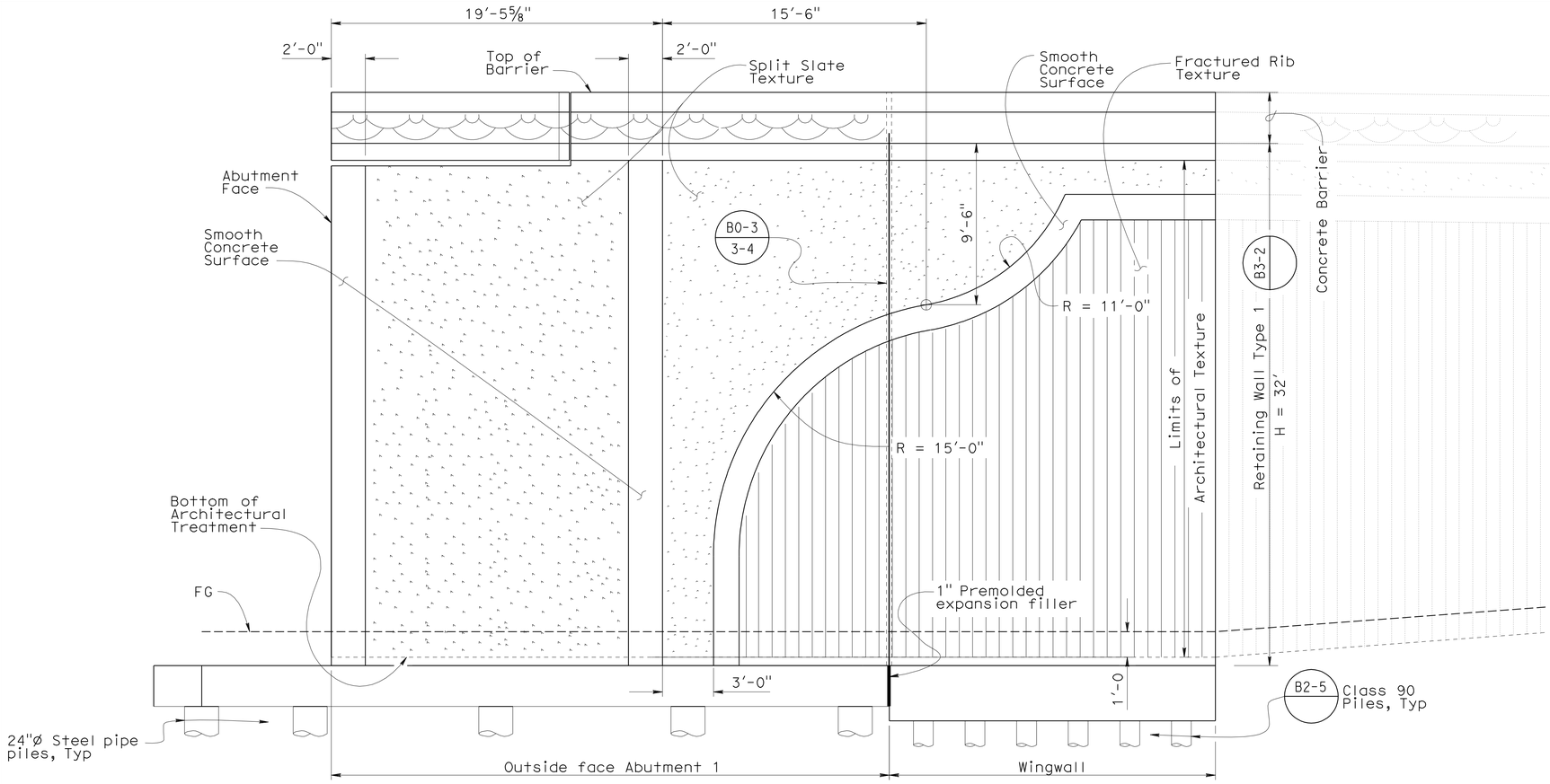

Note:
Not all piles shown

ELEVATION
1/4" = 1'-0"

NOTE:

For details not shown, see "RETAINING WALL TYPE 1SWBP" details and "BARRIER ARCHITECTURAL DETAILS" sheet.

LEGEND:

Indicates 1:3 battered pile

Indicates vertical pile

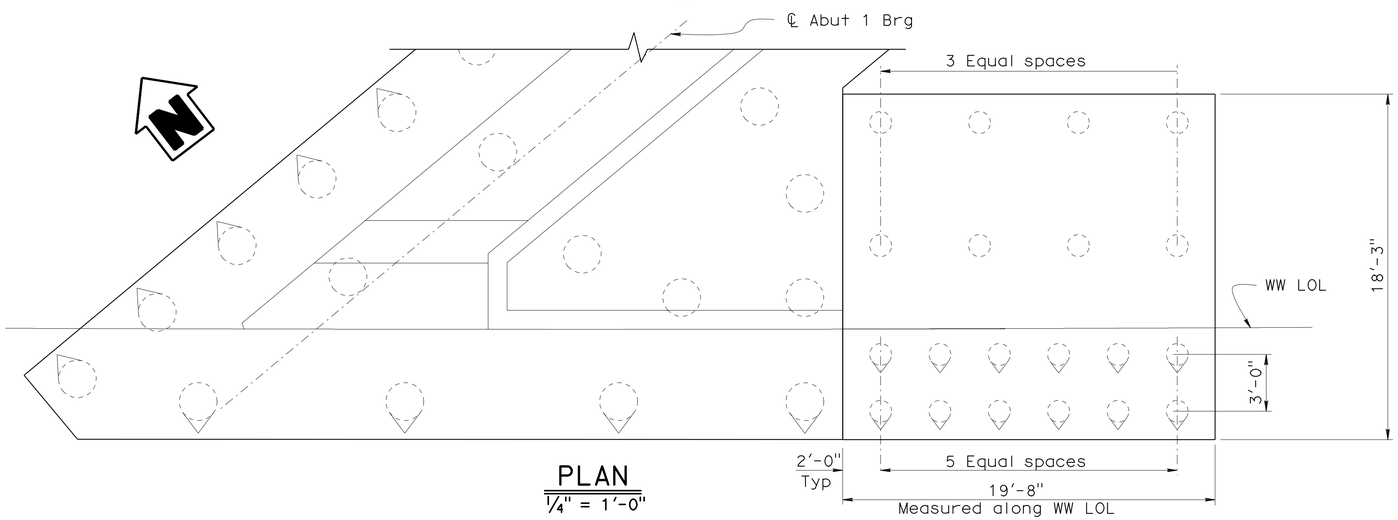

PLAN
1/4" = 1'-0"

DESIGN	BY Shervin Pahlavan	CHECKED Traci Menard	
DETAILS	BY Tim Trefz	CHECKED Traci Menard	
QUANTITIES	BY Suzan Moradi	CHECKED T.M. / A.R.	

STATE OF CALIFORNIA
DEPARTMENT OF TRANSPORTATION

DIVISION OF ENGINEERING SERVICES
STRUCTURE DESIGN
DESIGN BRANCH 15

BRIDGE NO. 53-3040
POST MILE 3.44

ROSECRANS AVENUE UC (REPLACE)
ABUTMENT 1 SB WINGWALL

STRUCTURES DESIGN DETAIL SHEET (ENGLISH) (REV. 10/25/05)

ORIGINAL SCALE IN INCHES FOR REDUCED PLANS 0 1 2 3

CU 07
EA 215931

DISREGARD PRINTS BEARING EARLIER REVISION DATES

REVISION DATES: 03-10-10 | 07-01-10 | 10-25-10 | 10-15-10 | 01-21-11 | 02-11-02 | 10-25-11 | 10-25-11 | 12-5-11

SHEET 18 OF 81

FILE => 53-3040-g-a01_wwdt02.dgn

DATE PLOTTED => 28-MAR-2012 TIME PLOTTED => 09:06

DIST	COUNTY	ROUTE	POST MILES TOTAL PROJECT	SHEET No	TOTAL SHEETS
07	LA	5	2.4/4.0	732	1288

Andrew Rittenhouse 12-12-11
REGISTERED CIVIL ENGINEER DATE

3-26-12
PLANS APPROVAL DATE

REGISTERED PROFESSIONAL ENGINEER
Andrew P. Rittenhouse
No. 61006
Exp. 12-31-12
STATE OF CALIFORNIA

The State of California or its officers or agents shall not be responsible for the accuracy or completeness of electronic copies of this plan sheet.

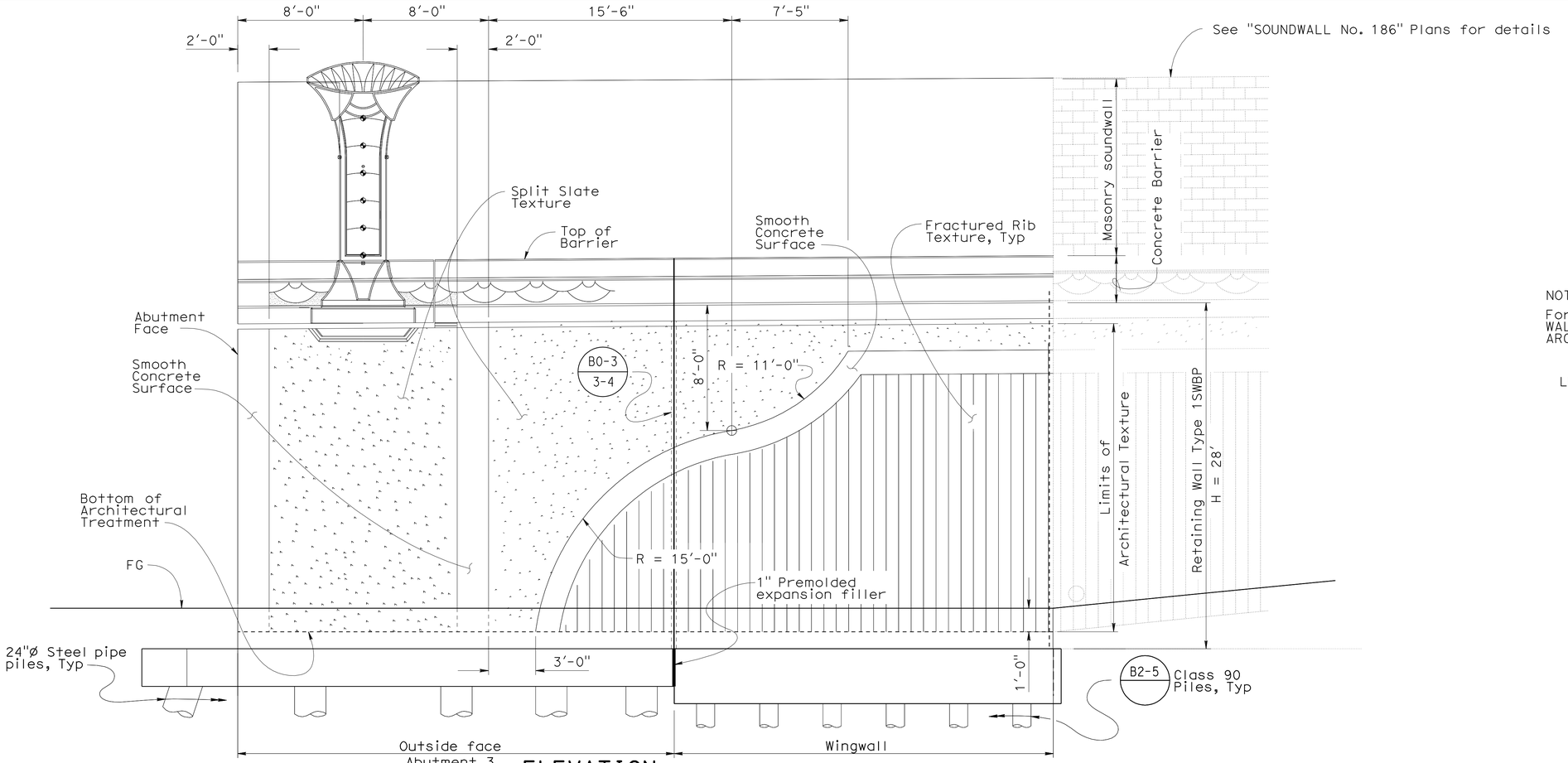

ELEVATION
1/4" = 1'-0"

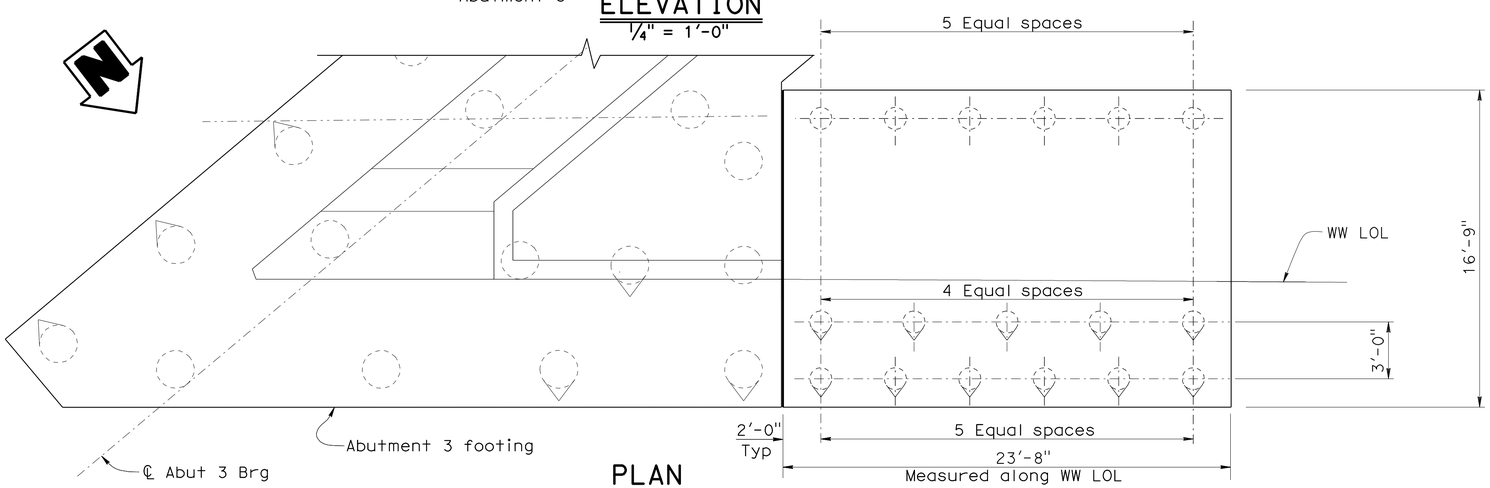

PLAN
1/4" = 1'-0"

NOTE:

For details not shown, see "RETAINING WALL TYPE 1SWBP" details and "BARRIER ARCHITECTURAL DETAILS" sheet.

LEGEND:

Indicates 1:3 battered pile

Indicates vertical pile

DESIGN	BY Shervin Pahlavan	CHECKED Traci Menard	
DETAILS	BY Tim Trefz	CHECKED Traci Menard	
QUANTITIES	BY Suzan Moradi	CHECKED T.M. / A.R.	

STATE OF CALIFORNIA
DEPARTMENT OF TRANSPORTATION

DIVISION OF ENGINEERING SERVICES
STRUCTURE DESIGN
DESIGN BRANCH 15

BRIDGE NO. 53-3040
POST MILE 3.44

ROSECRANS AVENUE UC (REPLACE)
ABUTMENT 3 NB WINGWALL

STRUCTURES DESIGN DETAIL SHEET (ENGLISH) (REV. 10/25/05)

ORIGINAL SCALE IN INCHES FOR REDUCED PLANS 0 1 2 3

CU 07
EA 215931

DISREGARD PRINTS BEARING EARLIER REVISION DATES

REVISION DATES: 10-27-09 11-23-09 07-26-10 10-1-10 10-18-10 02-11-02 10-3-11 10-26-11 12-1-11 03-10-12

SHEET 19 OF 81

FILE => 53-3040-g-a03_wwdt03.dgn

USERNAME => s124496 DATE PLOTTED => 28-MAR-2012 TIME PLOTTED => 03:06

DIST	COUNTY	ROUTE	POST MILES TOTAL PROJECT	SHEET No	TOTAL SHEETS
07	LA	5	2.4/4.0	733	1288

Andrew Rittenhouse 12-12-11
REGISTERED CIVIL ENGINEER DATE

3-26-12
PLANS APPROVAL DATE

REGISTERED PROFESSIONAL ENGINEER Andrew P. Rittenhouse No. 61006 Exp. 12-31-12 STATE OF CALIFORNIA

The State of California or its officers or agents shall not be responsible for the accuracy or completeness of electronic copies of this plan sheet.

NOTE:

For details not shown, see "RETAINING WALL TYPE 1SWBP" details and "BARRIER ARCHITECTURAL DETAILS" sheet.

LEGEND:

Indicates 1:3 battered pile

Indicates vertical pile

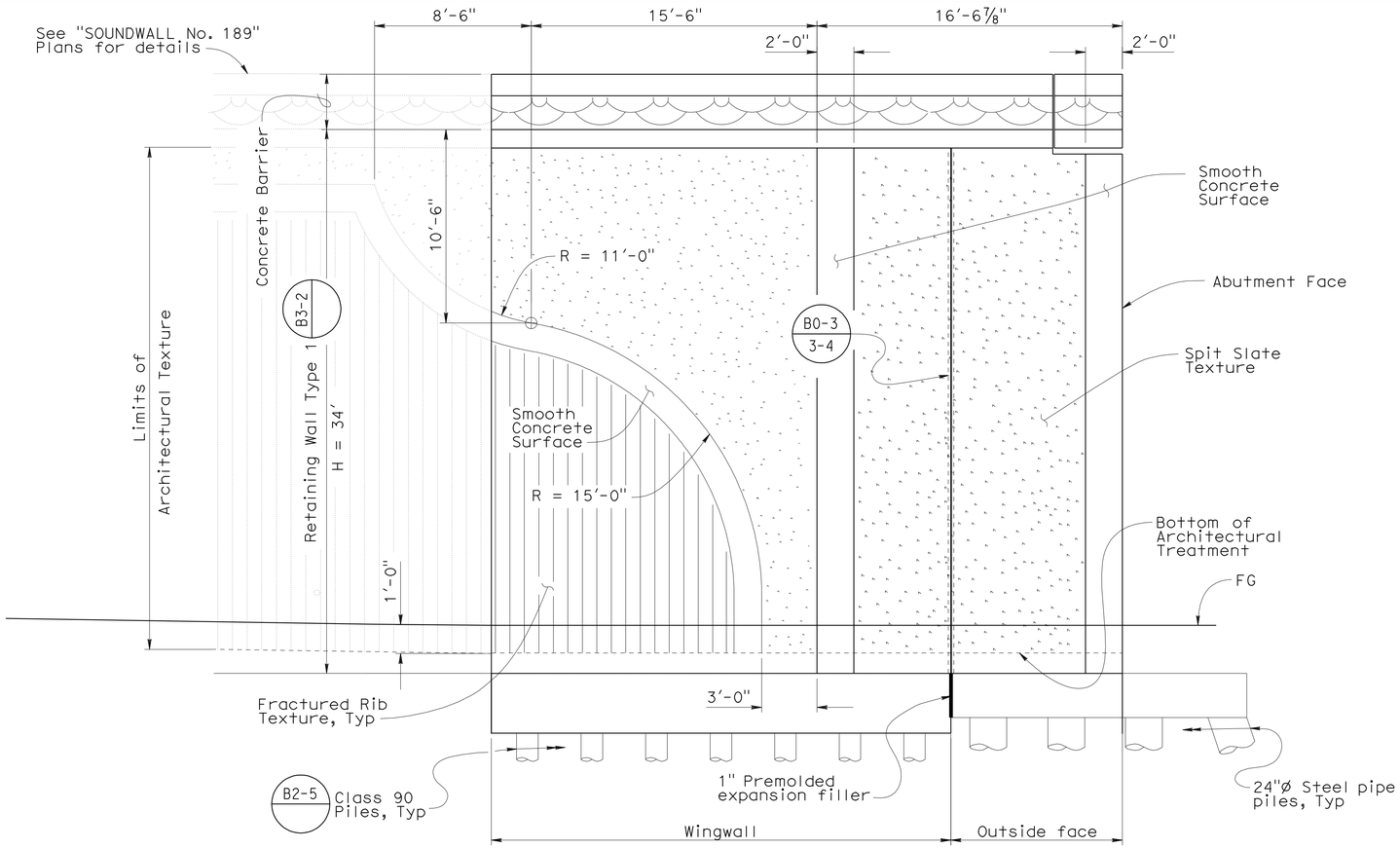

ELEVATION
1/4" = 1'-0"

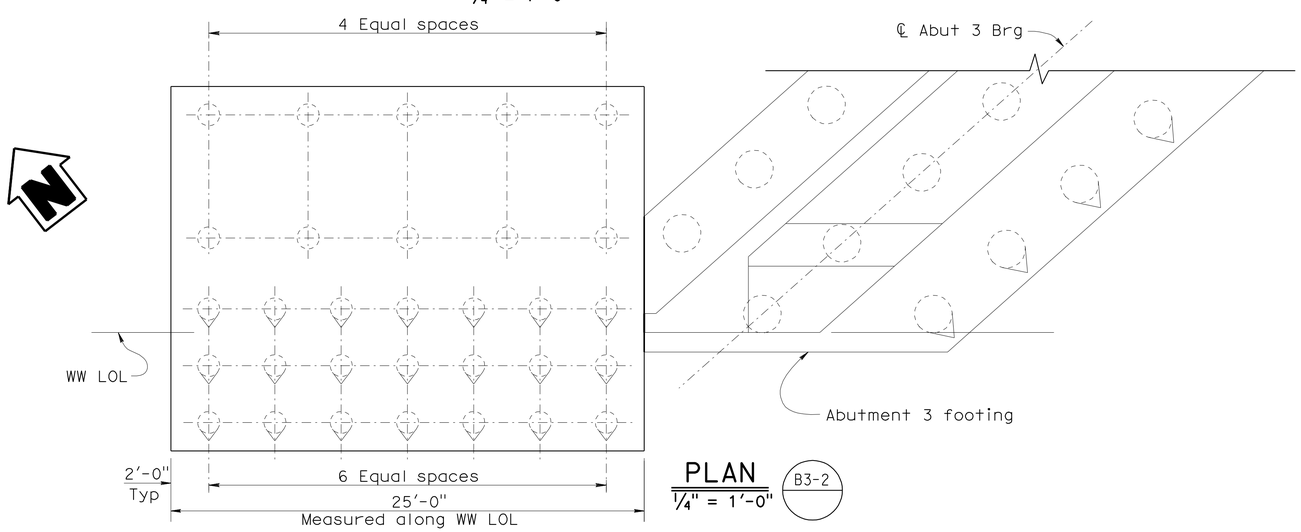

PLAN
1/4" = 1'-0"
B3-2

DESIGN	BY Shervin Pahlavan	CHECKED Traci Menard	
DETAILS	BY Tim Trefz	CHECKED Traci Menard	
QUANTITIES	BY Suzan Moradi	CHECKED T.M. / A.R.	

STATE OF CALIFORNIA
DEPARTMENT OF TRANSPORTATION

DIVISION OF ENGINEERING SERVICES
STRUCTURE DESIGN
DESIGN BRANCH 15

BRIDGE NO. 53-3040
POST MILE 3.44

ROSECRANS AVENUE UC (REPLACE)
ABUTMENT 3 SB WINGWALL

STRUCTURES DESIGN DETAIL SHEET (ENGLISH) (REV. 10/25/05)

ORIGINAL SCALE IN INCHES FOR REDUCED PLANS 0 1 2 3

CU 07
EA 215931

DISREGARD PRINTS BEARING EARLIER REVISION DATES

REVISION DATES: 10-26-09 11-23-09 07-16-10 10-15-10 02-11-11 10-12-11 12-1-11 03-10-12

SHEET 20 OF 81

FILE => 53-3040-g-a03_wwdt04.dgn

USERNAME => s124196 DATE PLOTTED => 28-MAR-2012 TIME PLOTTED => 09:07

DIST	COUNTY	ROUTE	POST MILES TOTAL PROJECT	SHEET No	TOTAL SHEETS
07	LA	5	2.4/4.0	734	1288

Andrew Rittenhouse 12-12-11
REGISTERED CIVIL ENGINEER DATE

3-26-12
PLANS APPROVAL DATE

REGISTERED PROFESSIONAL ENGINEER
Andrew P. Rittenhouse
No. 61006
Exp. 12-31-12
STATE OF CALIFORNIA

The State of California or its officers or agents shall not be responsible for the accuracy or completeness of electronic copies of this plan sheet.

NOTES:

1. See "SECTION A-A" & "SECTION B-B" on "ABUTMENT DETAILS NO. 1" sheet for footing reinforcement.
2. See "RETAINING WALL TYPE 1SWBP DETAIL NO. 1" and "RETAINING WALL TYPE 1SWBP DETAIL NO. 2" for information not shown.

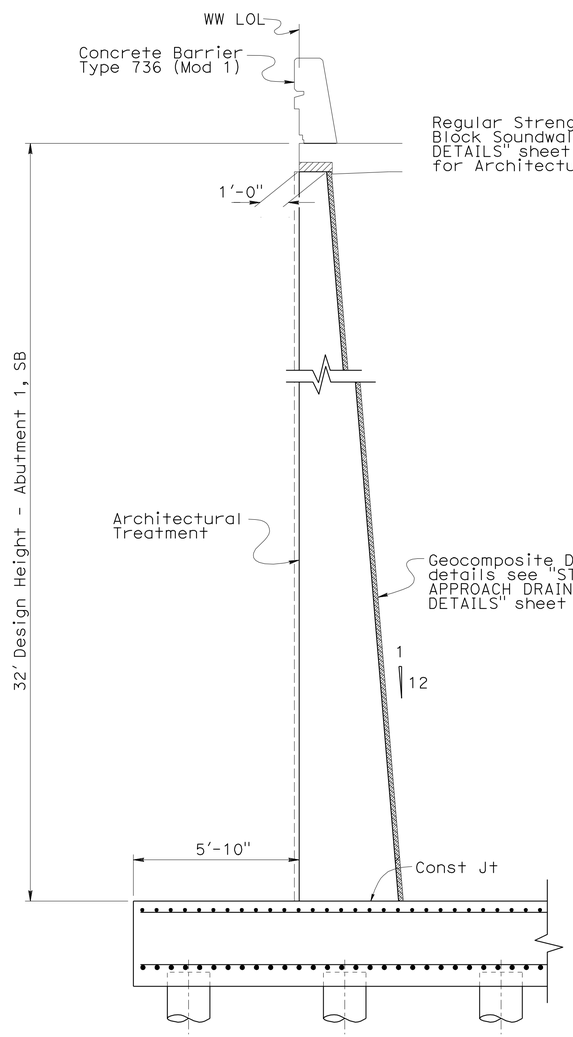

SECTION K-K
3/8" = 1'-0"

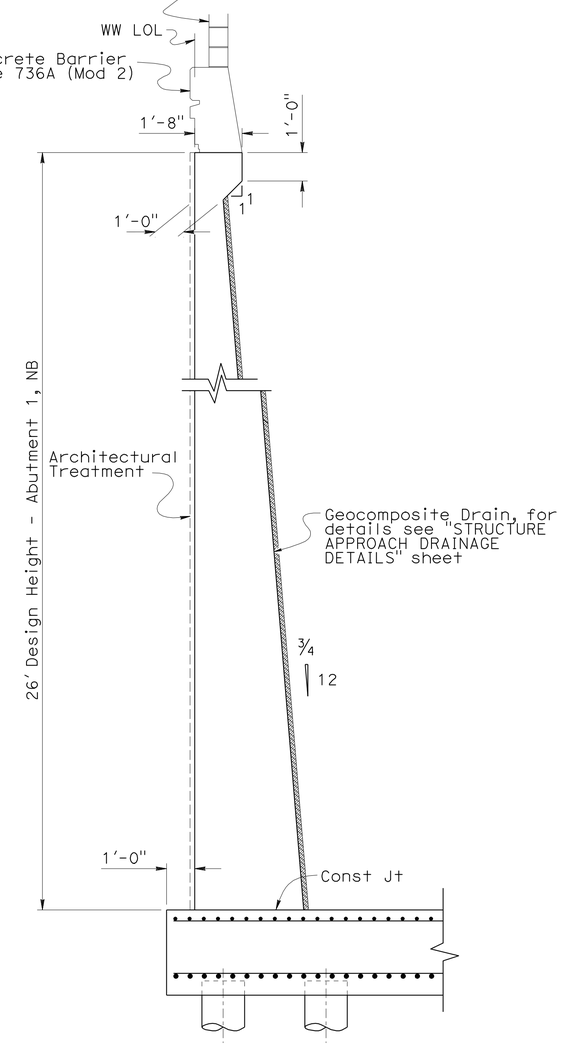

SECTION L-L
3/8" = 1'-0"

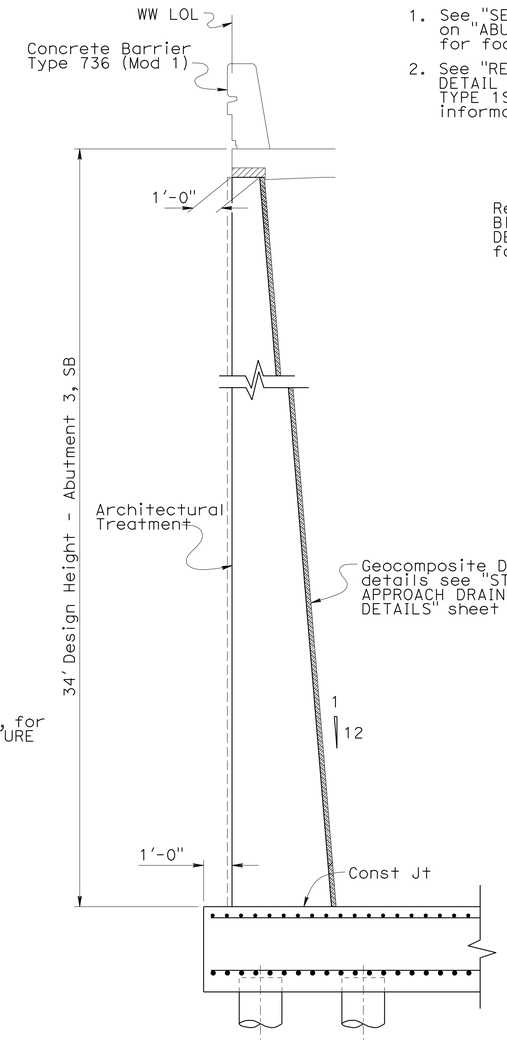

SECTION M-M
3/8" = 1'-0"

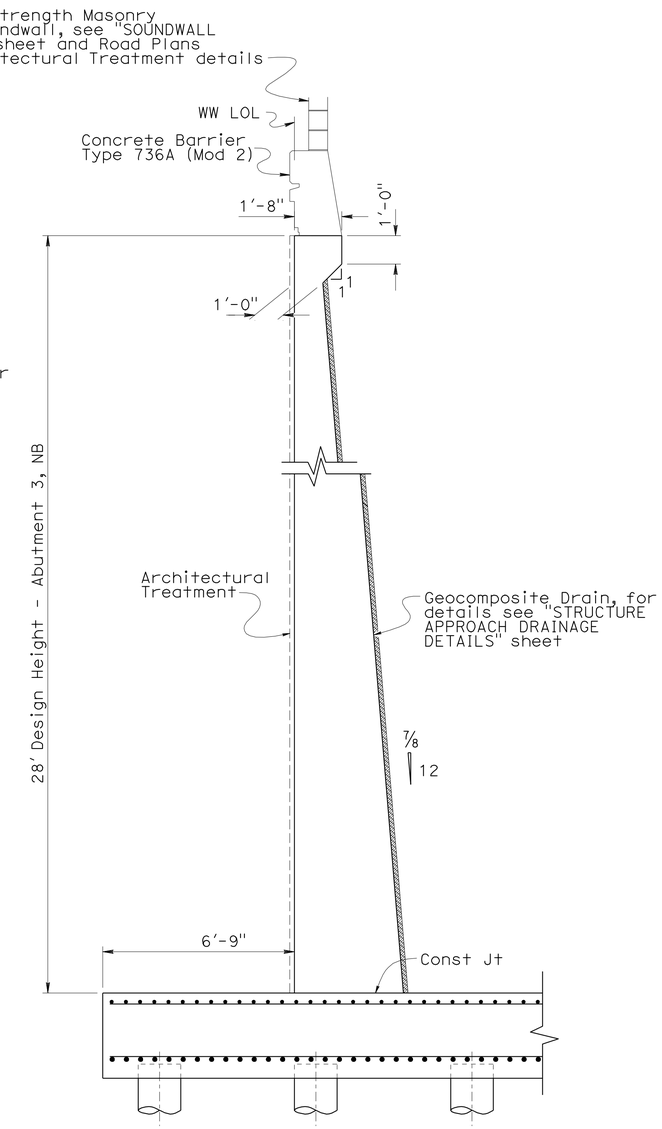

SECTION N-N
3/8" = 1'-0"

DESIGN	BY Shervin Pahlavan	CHECKED Traci Menard	
DETAILS	BY Tim Trefz	CHECKED Traci Menard	
QUANTITIES	BY Suzan Moradi	CHECKED T.M. / A.R.	

STATE OF CALIFORNIA
DEPARTMENT OF TRANSPORTATION

DIVISION OF ENGINEERING SERVICES
STRUCTURE DESIGN
DESIGN BRANCH 15

BRIDGE NO. 53-3040
POST MILE 3.44

ROSECRANS AVENUE UC (REPLACE)
WINGWALL DETAILS

STRUCTURES DESIGN DETAIL SHEET (ENGLISH) (REV. 10/25/05)

ORIGINAL SCALE IN INCHES FOR REDUCED PLANS 0 1 2 3

CU 07
EA 215931

DISREGARD PRINTS BEARING EARLIER REVISION DATES

REVISION DATES: 02-14-02 02-24-11 10-26-11 10-28-11 12-1-11 03-10-12

SHEET 21 OF 81

FILE => 53-3040-g-wwdt05.dgn

USERNAME => s124496 DATE PLOTTED => 28-MAR-2012 TIME PLOTTED => 09:07

DIST	COUNTY	ROUTE	POST MILES TOTAL PROJECT	SHEET No	TOTAL SHEETS
07	LA	5	2.4/4.0	735	1288

REGISTERED CIVIL ENGINEER 12-12-11 DATE

3-26-12
PLANS APPROVAL DATE

REGISTERED PROFESSIONAL ENGINEER Andrew P. Rittenhouse No. 61006 Exp. 12-31-12 STATE OF CALIFORNIA

The State of California or its officers or agents shall not be responsible for the accuracy or completeness of electronic copies of this plan sheet.

LEGEND

-·-·-·- Indicates existing structures to be removed

* Limits for Distribution of J-Dowels and horizontal stirrups. See "BENT 2 DETAILS" sheet.

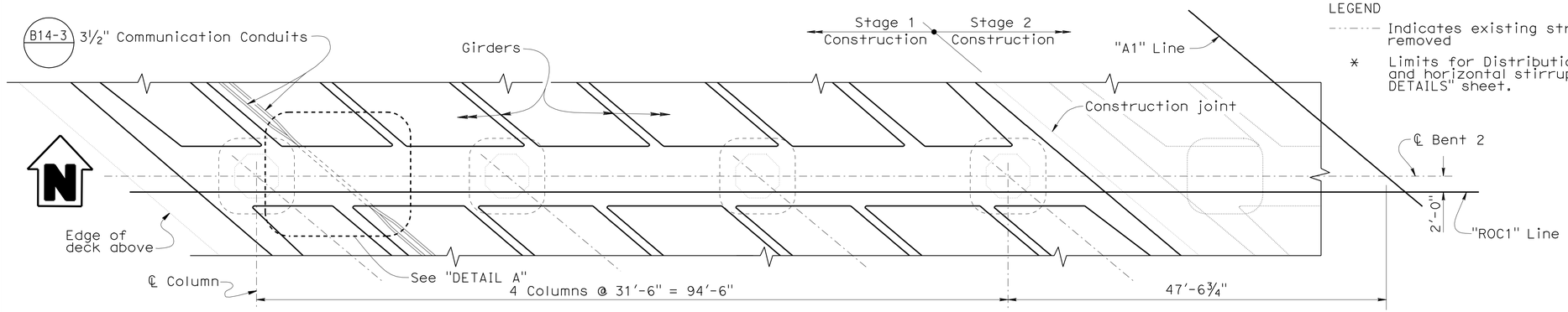

PLAN
⅛" = 1'-0"

NOTES:
1. Existing pile cap and piles to remain undistrubed during Stage 1 construction.
2. Stirrups shall be placed perpendicular to ℄ Bent 2.
3. Stirrups to be cut or modified to provide 1½" Clr to opening. For each altered sirrup, provide 2 additional #6 adjacent to the affected bar maintaining 1½" Clr to the opening.

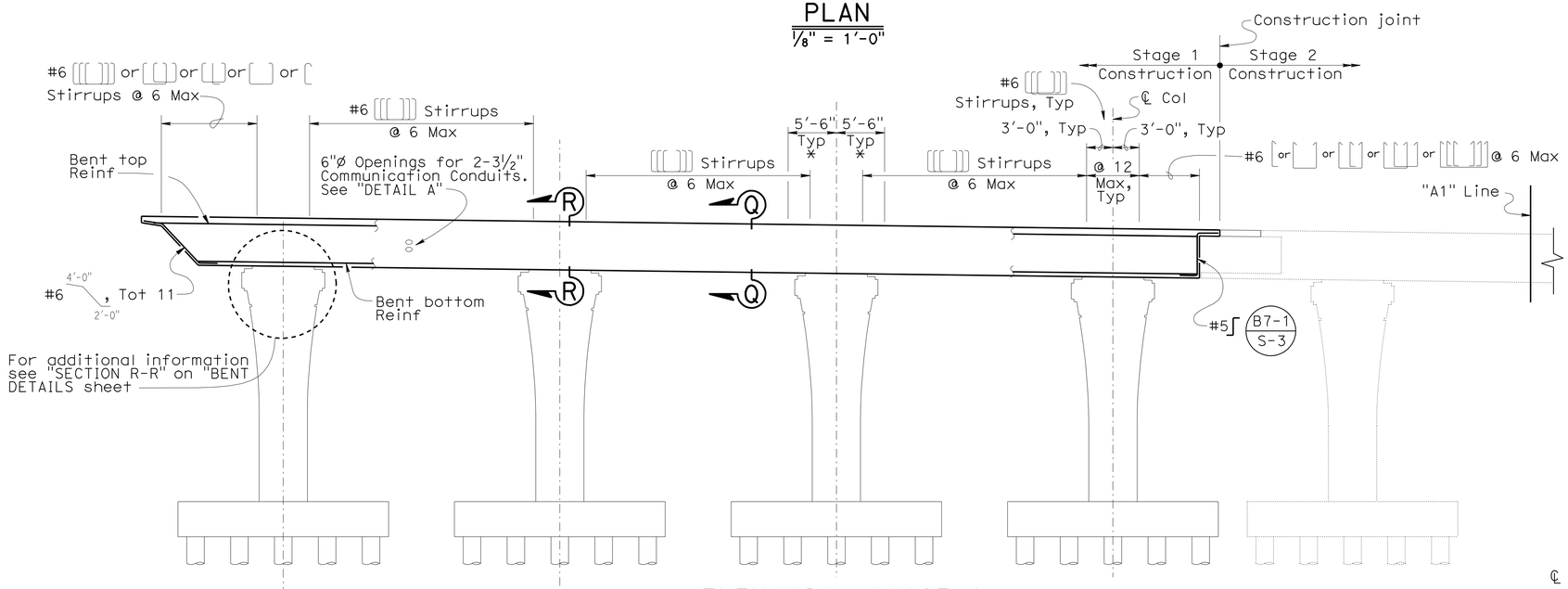

ELEVATION STAGE 1
⅛" = 1'-0"

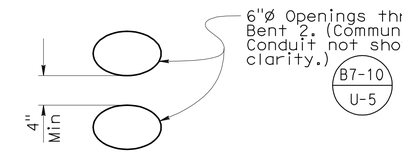

DETAIL B
NO SCALE

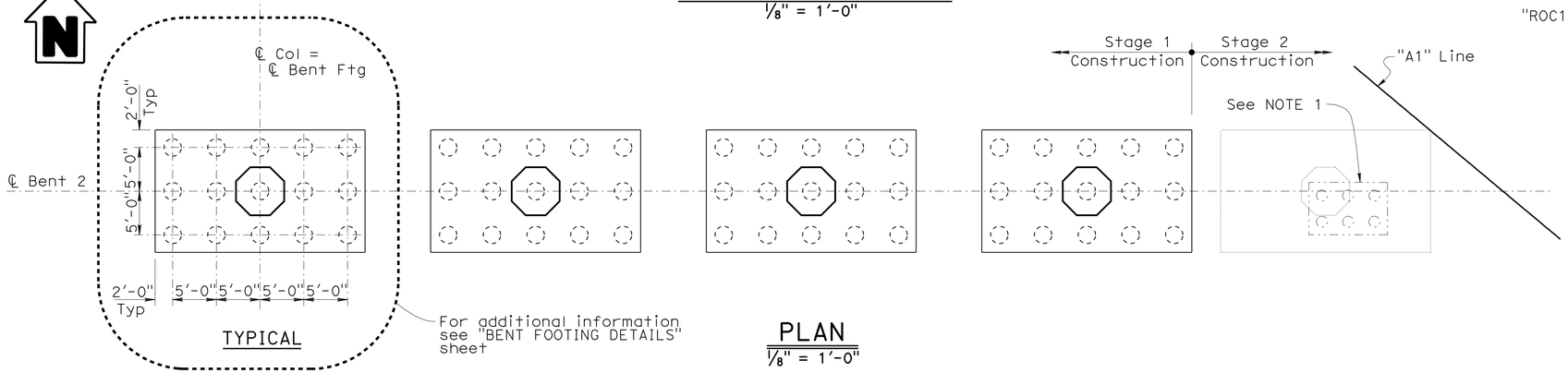

PLAN
⅛" = 1'-0"

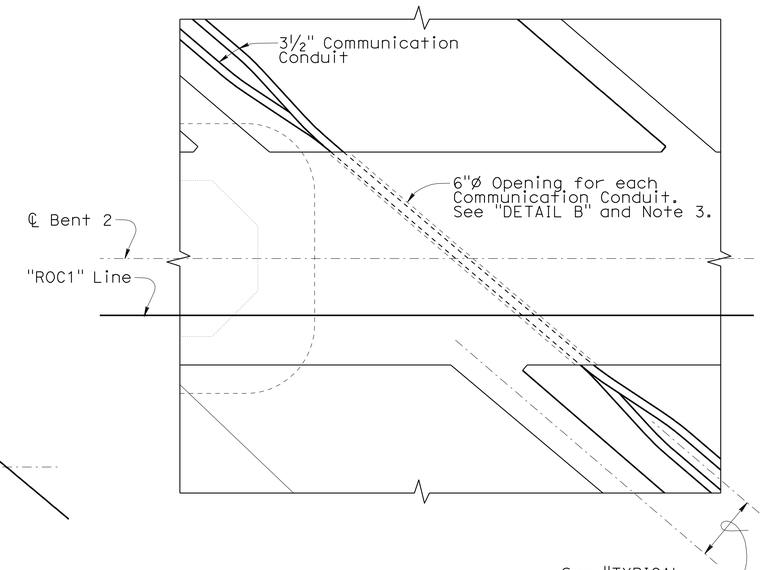

DETAIL A
⅜" = 1'-0"

DESIGN	BY Laith Bahia	CHECKED Shervin Pahlavan	
DETAILS	BY Tim Trefz	CHECKED Shervin Pahlavan	
QUANTITIES	BY Suzan Moradi	CHECKED A.R. / G.G.	

STATE OF CALIFORNIA DEPARTMENT OF TRANSPORTATION

DIVISION OF ENGINEERING SERVICES STRUCTURE DESIGN DESIGN BRANCH 15

BRIDGE NO. 53-3040
POST MILE 3.44

ROSECRANS AVENUE UC (REPLACE)
BENT 2 LAYOUT STAGE 1

STRUCTURES DESIGN DETAIL SHEET (ENGLISH) (REV. 10/25/05)

ORIGINAL SCALE IN INCHES FOR REDUCED PLANS 0 1 2 3

CU 07
EA 215931

DISREGARD PRINTS BEARING EARLIER REVISION DATES

REVISION DATES: 01-27-11 06-27-11 11-14-11 12-7-11 01-26-12 02-16-12 01-29-10 04-19-10 07-21-10

SHEET 22 OF 81

FILE => 53-3040-h-b02_lo1.dgn

USERNAME => s124496 DATE PLOTTED => 28-MAR-2012 TIME PLOTTED => 09:07

DIST	COUNTY	ROUTE	POST MILES TOTAL PROJECT	SHEET No	TOTAL SHEETS
07	LA	5	2.4/4.0	736	1288

Andrew Rittenhouse 12-12-11
REGISTERED CIVIL ENGINEER DATE

3-26-12
PLANS APPROVAL DATE

REGISTERED PROFESSIONAL ENGINEER
Andrew P. Rittenhouse
No. 61006
Exp. 12-31-12
STATE OF CALIFORNIA

The State of California or its officers or agents shall not be responsible for the accuracy or completeness of electronic copies of this plan sheet.

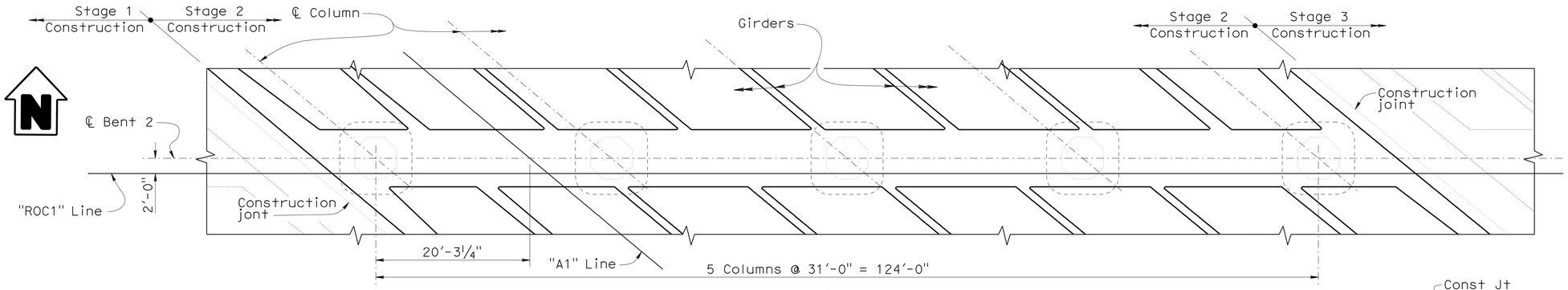

PLAN
⅛" = 1'-0"

NOTES:
1. Stirrups shall be placed perpendicular to ℄ Bent 2.
2. Existing pile cap and piles to be removed to 3 Ft below Grading Plane or 1 foot below bottom of pile cap, whichever is lower. Where existing piles conflict with proposed pile layout, pile layout and size of pile cap to be adjusted at the direction of the Engineer.

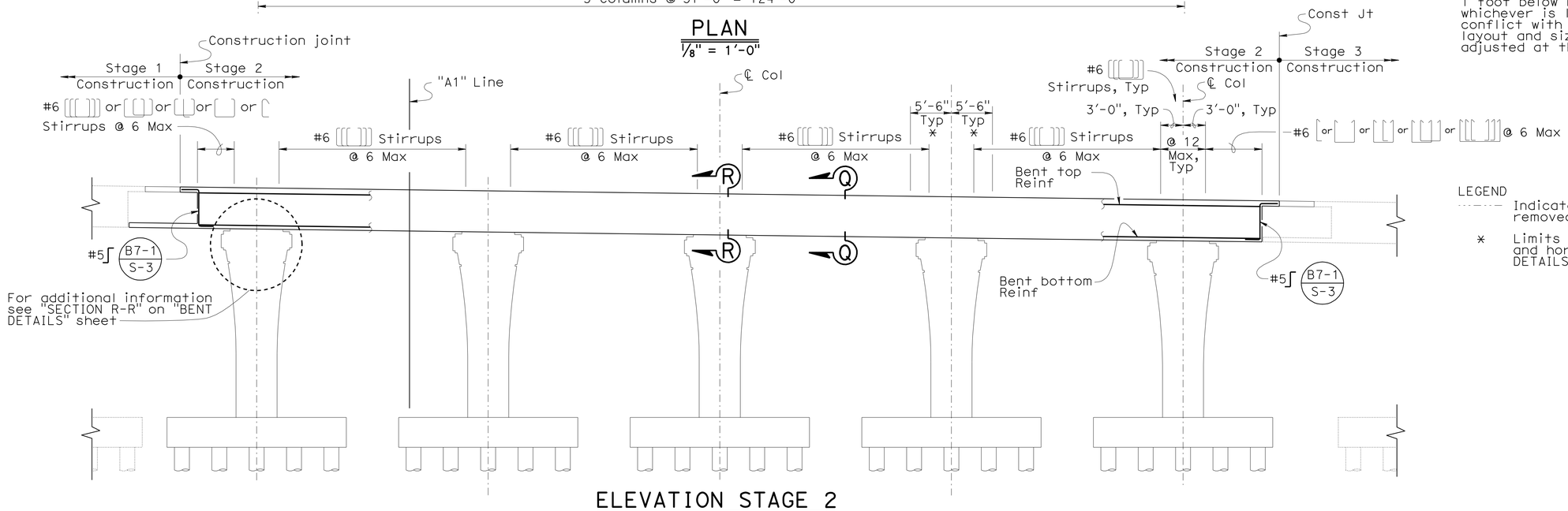

LEGEND
- - - - Indicates existing structures to be removed
* Limits for Distribution of J-Dowels and horizontal stirrups. See "BENT 2 DETAILS" sheet.

ELEVATION STAGE 2
⅛" = 1'-0"

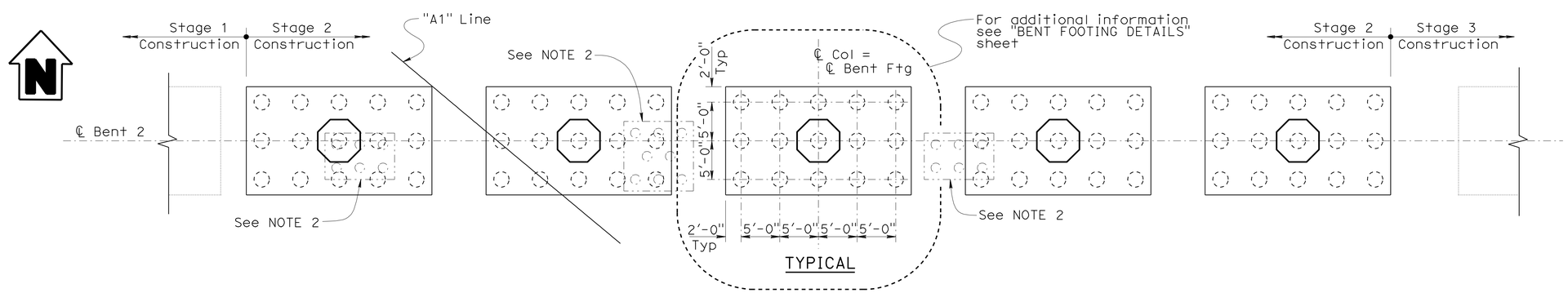

PLAN
⅛" = 1'-0"

	BY	CHECKED
DESIGN	Laith Bahia	Shervin Pahlavan
DETAILS	Tim Trefz	Shervin Pahlavan
QUANTITIES	Suzan Moradi	A.R. / G.G.

STATE OF CALIFORNIA
DEPARTMENT OF TRANSPORTATION

DIVISION OF ENGINEERING SERVICES
STRUCTURE DESIGN
DESIGN BRANCH 15

BRIDGE NO. 53-3040
POST MILE 3.44

ROSECRANS AVENUE UC (REPLACE)
BENT 2 LAYOUT STAGE 2

STRUCTURES DESIGN DETAIL SHEET (ENGLISH) (REV. 10/25/05)

ORIGINAL SCALE IN INCHES FOR REDUCED PLANS 0 1 2 3

CU 07
EA 215931

DISREGARD PRINTS BEARING EARLIER REVISION DATES

REVISION DATES: 03-25-10 04-16-10 07-2-10 01-31-11 06-16-11 11-11-11 12-2-11 01-16-12 02-16-12

SHEET 23 OF 81

FILE => 53-3040-h-b02_lo2.dgn

USERNAME => s124496 DATE PLOTTED => 28-MAR-2012 TIME PLOTTED => 09:07

DIST	COUNTY	ROUTE	POST MILES TOTAL PROJECT	SHEET No	TOTAL SHEETS
07	LA	5	2.4/4.0	737	1288

Andrew Rittenhouse 12-12-11
REGISTERED CIVIL ENGINEER DATE

3-26-12
PLANS APPROVAL DATE

REGISTERED PROFESSIONAL ENGINEER
Andrew P. Rittenhouse
No. 61006
Exp. 12-31-12
STATE OF CALIFORNIA

The State of California or its officers or agents shall not be responsible for the accuracy or completeness of electronic copies of this plan sheet.

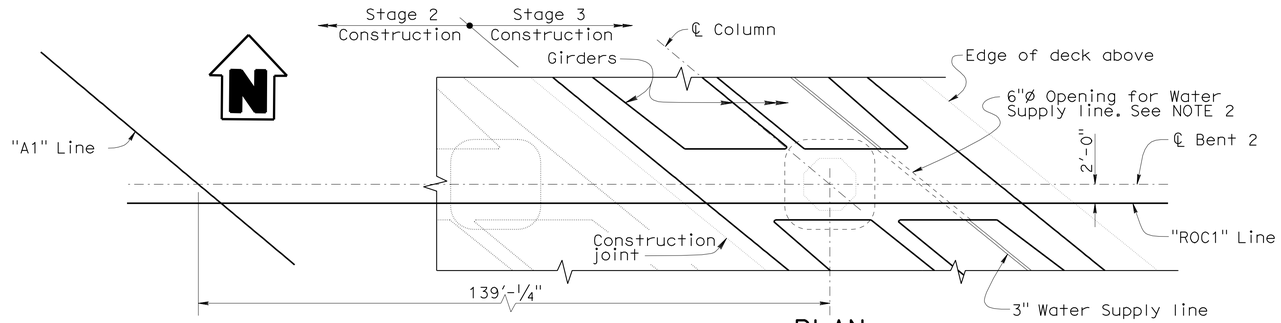

PLAN
1/8" = 1'-0"

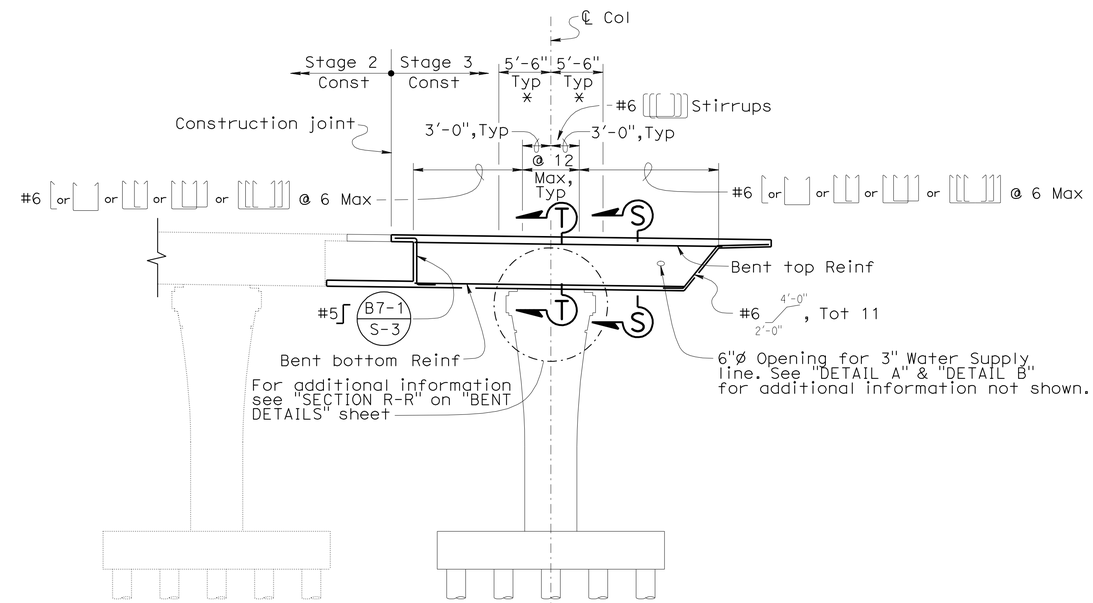

ELEVATION STAGE 3
1/8" = 1'-0"

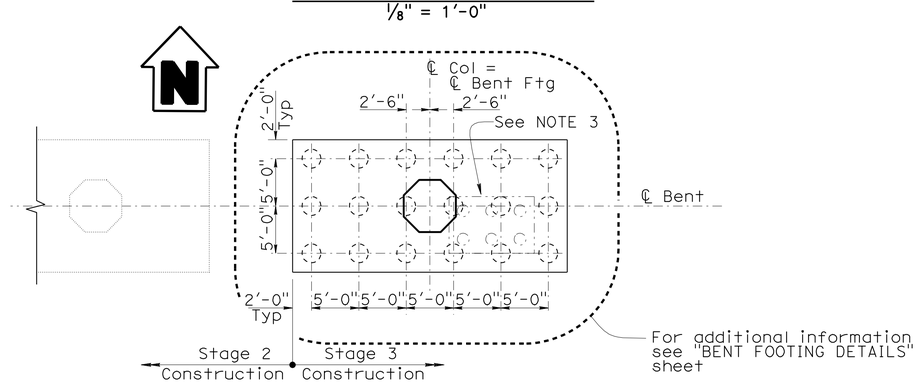

PLAN
1/8" = 1'-0"

NOTES:

1. Stirrups shall be placed perpendicular to ℄ Bent 2.
2. Stirrups to be cut or modified to provide 1½" Clr to opening. For each altered sirrup, provide 2 additional #6 adjacent to the affected bar maintaining 1½" Clr to the opening.
3. Existing pile cap and piles to be removed to 3 Ft below Grading Plane or 1 foot below bottom of pile cap, whichever is lower. Where existing piles conflict with proposed pile layout, pile layout and size of pile cap to be adjusted at the direction of the Engineer.

LEGEND

- - - - - Indicates existing structures to be removed

* Limits for Distribution of J-Dowels and horizontal stirrups. See "BENT 2 DETAILS" sheet.

	BY	CHECKED
DESIGN	Laith Bahia	Shervin Pahlavan
DETAILS	Tim Trefz	Shervin Pahlavan
QUANTITIES	Suzan Moradi	A.R. / G.G.

STATE OF CALIFORNIA
DEPARTMENT OF TRANSPORTATION

DIVISION OF ENGINEERING SERVICES
STRUCTURE DESIGN
DESIGN BRANCH 15

BRIDGE NO. 53-3040
POST MILE 3.44

ROSECRANS AVENUE UC (REPLACE)
BENT 2 LAYOUT STAGE 3

STRUCTURES DESIGN DETAIL SHEET (ENGLISH) (REV. 10/25/05)

ORIGINAL SCALE IN INCHES FOR REDUCED PLANS 0 1 2 3

CU 07
EA 215931

DISREGARD PRINTS BEARING EARLIER REVISION DATES

REVISION DATES: 02-11-10 03-25-10 07-26-10 02-02-11 06-13-11 12-9-11 01-26-12 02-16-12

SHEET 24 OF 81

FILE => 53-3040-h-b02_lo3.dgn

USERNAME => s124496 DATE PLOTTED => 28-MAR-2012 TIME PLOTTED => 09:07

DIST	COUNTY	ROUTE	POST MILES TOTAL PROJECT	SHEET No	TOTAL SHEETS
07	LA	5	2.4/4.0	738	1288

Andrew Rittenhouse 12-12-11
REGISTERED CIVIL ENGINEER DATE

3-26-12
PLANS APPROVAL DATE

REGISTERED PROFESSIONAL ENGINEER
Andrew P. Rittenhouse
No. 61006
Exp. 12-31-12
STATE OF CALIFORNIA

The State of California or its officers or agents shall not be responsible for the accuracy or completeness of electronic copies of this plan sheet.

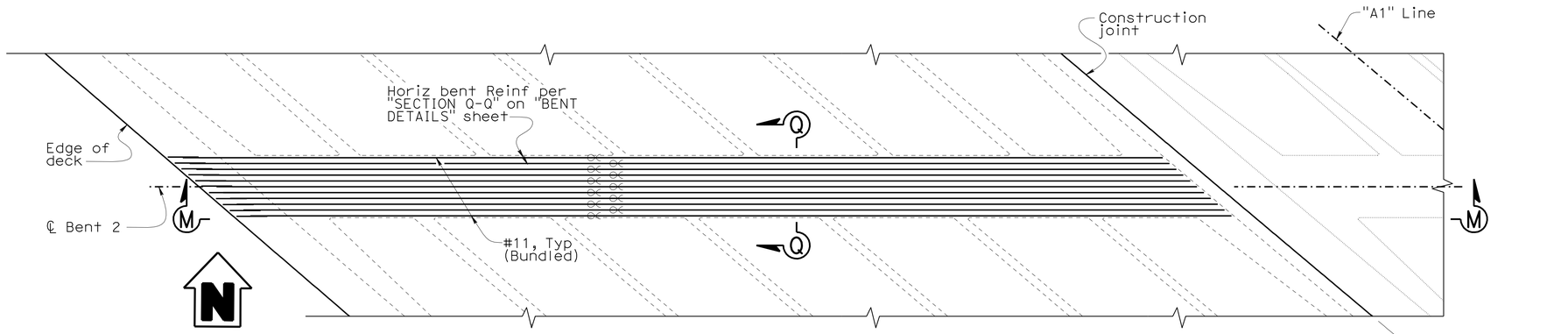

TOP REINFORCEMENT

1/8" = 1'-0"

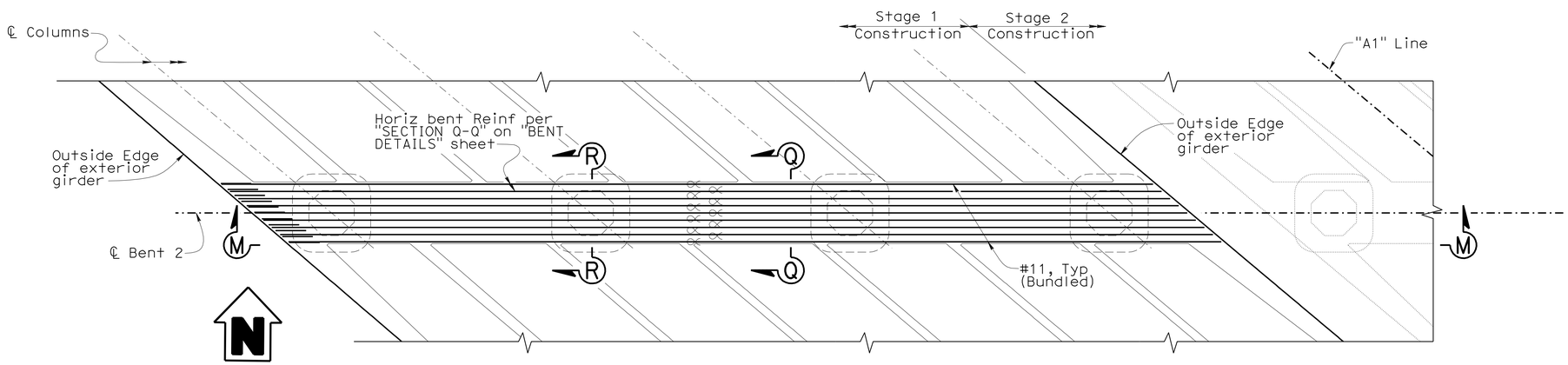

BOTTOM REINFORCEMENT

1/8" = 1'-0"

DESIGN	BY Laith Bahia	CHECKED Shervin Pahlavan	STATE OF CALIFORNIA DEPARTMENT OF TRANSPORTATION
DETAILS	BY Tim Trefz	CHECKED Shervin Pahlavan	
QUANTITIES	BY Suzan Moradi	CHECKED A.R. / G.G.	

DIVISION OF ENGINEERING SERVICES
STRUCTURE DESIGN
DESIGN BRANCH 15

BRIDGE NO. 53-3040
POST MILE 3.44

ROSECRANS AVENUE UC (REPLACE)
BENT 2 DETAILS STAGE 1

STRUCTURES DESIGN DETAIL SHEET (ENGLISH) (REV. 10/25/05)

ORIGINAL SCALE IN INCHES FOR REDUCED PLANS 0 1 2 3

CU 07
EA 215931

DISREGARD PRINTS BEARING EARLIER REVISION DATES

REVISION DATES: 01-31-11 06-24-11 12-7-11

SHEET 25 OF 81

FILE => 53-3040-1-b02_dt01.dgn

USERNAME => s124196 DATE PLOTTED => 28-MAR-2012 TIME PLOTTED => 09:07

DIST	COUNTY	ROUTE	POST MILES TOTAL PROJECT	SHEET No	TOTAL SHEETS
07	LA	5	2.4/4.0	739	1288

Andrew Rittenhouse 12-12-11
REGISTERED CIVIL ENGINEER DATE

3-26-12
PLANS APPROVAL DATE

The State of California or its officers or agents shall not be responsible for the accuracy or completeness of electronic copies of this plan sheet.

REGISTERED PROFESSIONAL ENGINEER
Andrew P. Rittenhouse
No. 61006
Exp. 12-31-12
STATE OF CALIFORNIA

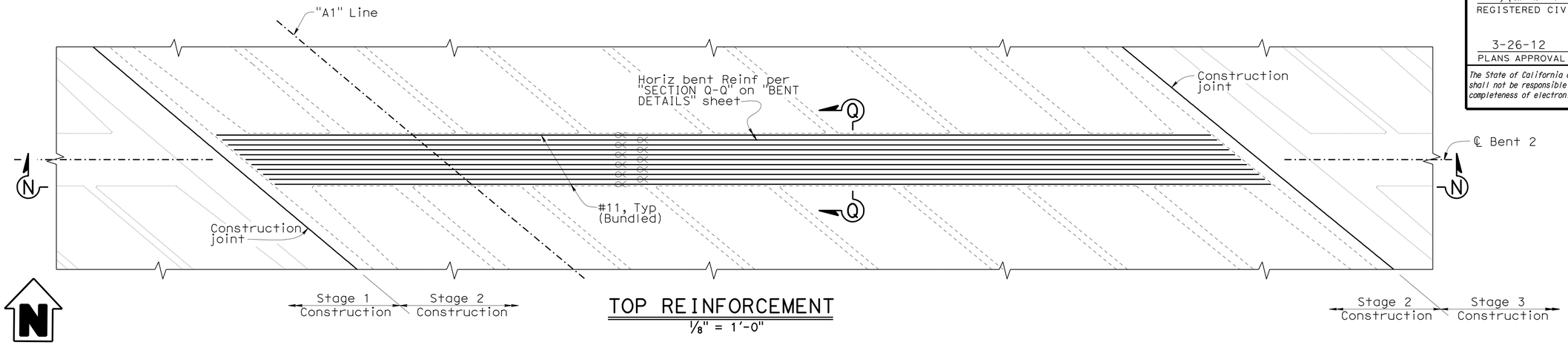

TOP REINFORCEMENT

1/8" = 1'-0"

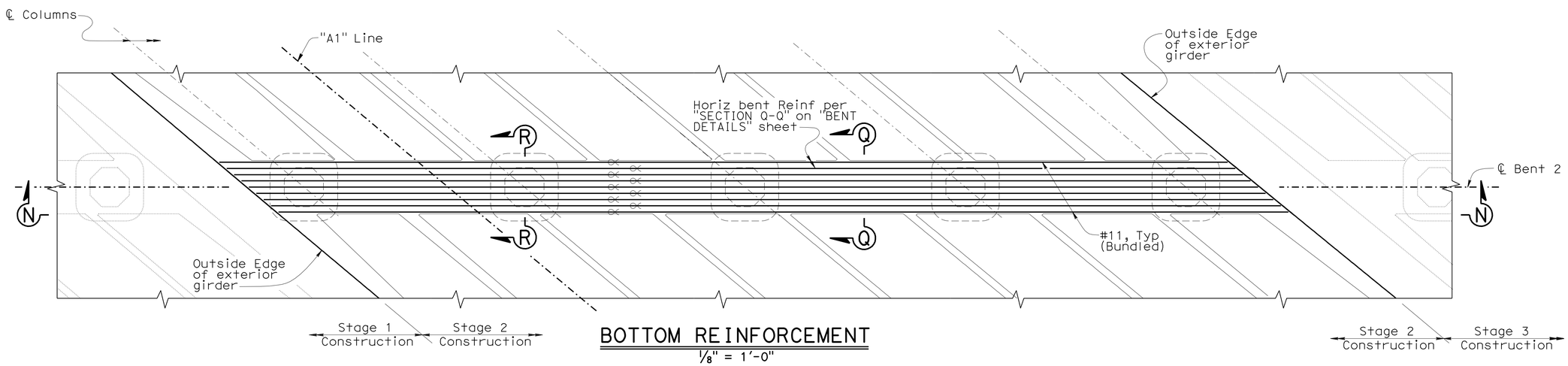

BOTTOM REINFORCEMENT

1/8" = 1'-0"

DESIGN	BY Laith Bahia	CHECKED Shervin Pahlavan	
DETAILS	BY Tim Trefz	CHECKED Shervin Pahlavan	
QUANTITIES	BY Suzan Moradi	CHECKED A.R. / G.G.	

STATE OF CALIFORNIA
DEPARTMENT OF TRANSPORTATION

DIVISION OF ENGINEERING SERVICES
STRUCTURE DESIGN
DESIGN BRANCH 15

BRIDGE NO. 53-3040
POST MILE 3.44

ROSECRANS AVENUE UC (REPLACE)
BENT 2 DETAILS STAGE 2

STRUCTURES DESIGN DETAIL SHEET (ENGLISH) (REV. 10/25/05)

ORIGINAL SCALE IN INCHES FOR REDUCED PLANS 0 1 2 3

CU 07
EA 215931

DISREGARD PRINTS BEARING EARLIER REVISION DATES

REVISION DATES: 01-31-11 06-24-11 12-7-11

SHEET 26 OF 81

FILE => 53-3040-i-b02_dt02.dgn

USERNAME => s124196 DATE PLOTTED => 28-MAR-2012 TIME PLOTTED => 09:07

DIST	COUNTY	ROUTE	POST MILES TOTAL PROJECT	SHEET No	TOTAL SHEETS
07	LA	5	2.4/4.0	740	1288

Andrew Rittenhouse 12-12-11
REGISTERED CIVIL ENGINEER DATE

3-26-12
PLANS APPROVAL DATE

REGISTERED PROFESSIONAL ENGINEER
Andrew P. Rittenhouse
No. 61006
Exp. 12-31-12
STATE OF CALIFORNIA

The State of California or its officers or agents shall not be responsible for the accuracy or completeness of electronic copies of this plan sheet.

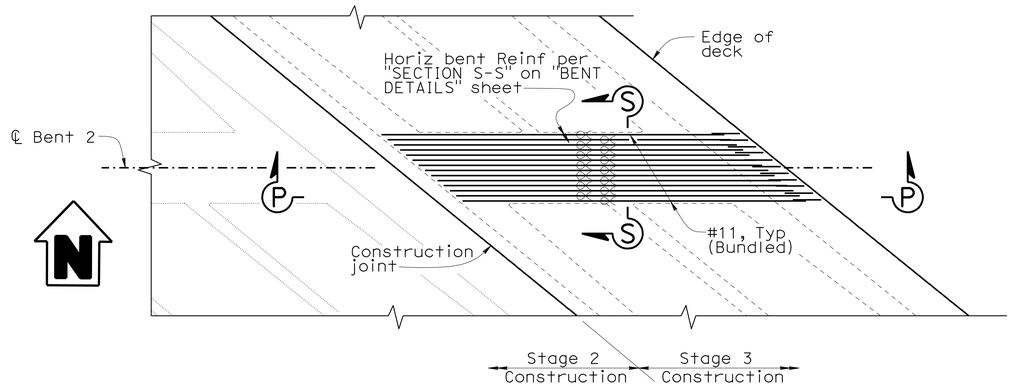

TOP REINFORCEMENT

1/8" = 1'-0"

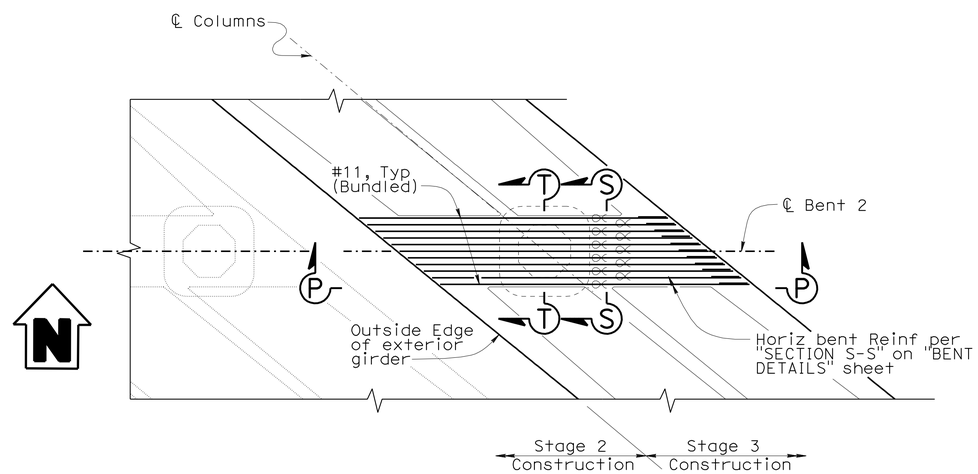

BOTTOM REINFORCEMENT

1/8" = 1'-0"

DESIGN	BY Laith Bahia	CHECKED Shervin Pahlavan	
DETAILS	BY Tim Trefz	CHECKED Shervin Pahlavan	
QUANTITIES	BY Suzan Moradi	CHECKED A.R. / G.G.	

STATE OF CALIFORNIA
DEPARTMENT OF TRANSPORTATION

DIVISION OF ENGINEERING SERVICES
STRUCTURE DESIGN
DESIGN BRANCH 15

BRIDGE NO. 53-3040
POST MILE 3.44

ROSECRANS AVENUE UC (REPLACE)
BENT 2 DETAILS STAGE 3

STRUCTURES DESIGN DETAIL SHEET (ENGLISH) (REV. 10/25/05)

ORIGINAL SCALE IN INCHES FOR REDUCED PLANS 0 1 2 3

CU 07
EA 215931

DISREGARD PRINTS BEARING EARLIER REVISION DATES

REVISION DATES: 01-13-11 06-28-11 12-7-11

SHEET 27 OF 81

FILE => 53-3040-i-b02_dt03.dgn

USERNAME => s124496 DATE PLOTTED => 28-MAR-2012 TIME PLOTTED => 09:07

DIST	COUNTY	ROUTE	POST MILES TOTAL PROJECT	SHEET No	TOTAL SHEETS
07	LA	5	2.4/4.0	741	1288

Andrew Rittenhouse 12-12-11
REGISTERED CIVIL ENGINEER DATE

3-26-12
PLANS APPROVAL DATE

REGISTERED PROFESSIONAL ENGINEER Andrew P. Rittenhouse No. 61006 Exp. 12-31-12 STATE OF CALIFORNIA

The State of California or its officers or agents shall not be responsible for the accuracy or completeness of electronic copies of this plan sheet.

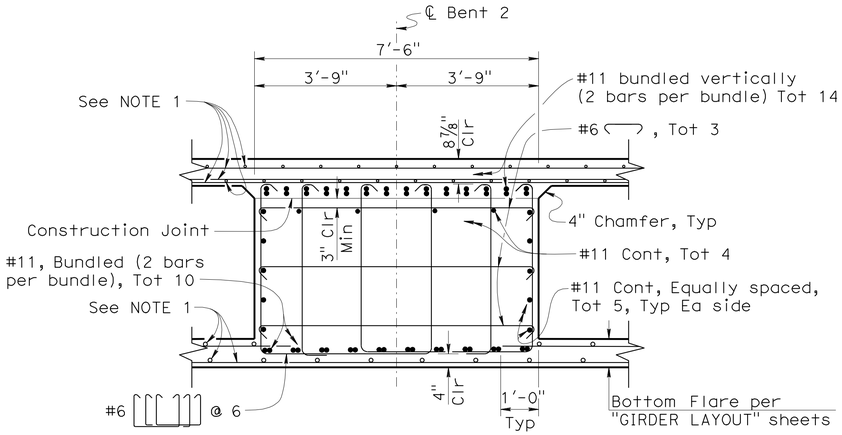

SECTION Q-Q

1/2" = 1'-0"

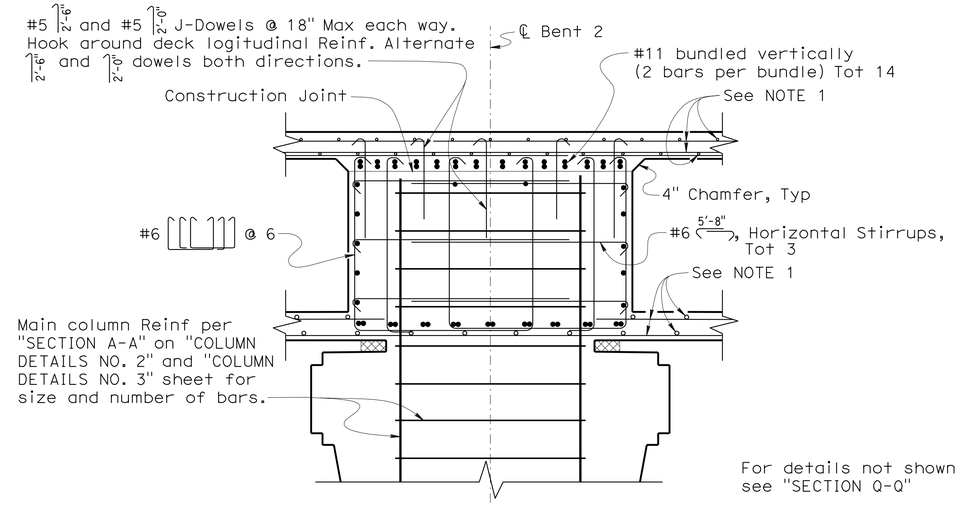

For details not shown see "SECTION Q-Q"

SECTION R-R

1/2" = 1'-0"

NOTES:

1. See "PARTIAL TYPICAL SECTION STAGE 1", "PARTIAL TYPICAL SECTION STAGE 2", "PARTIAL TYPICAL SECTION STAGE 3" sheets for additional information.

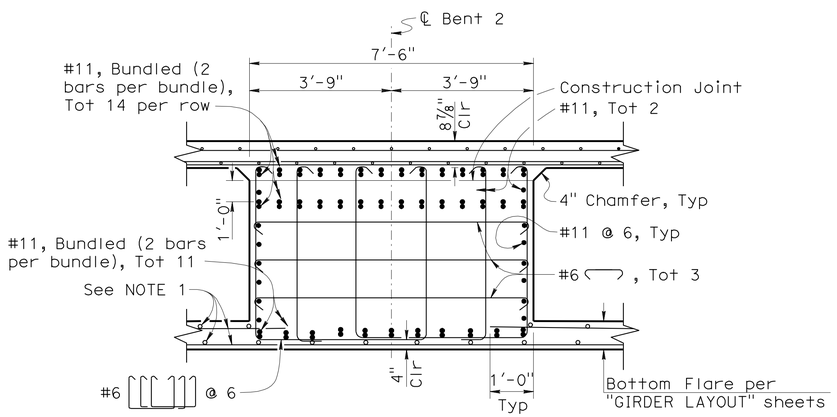

SECTION S-S

1/2" = 1'-0"

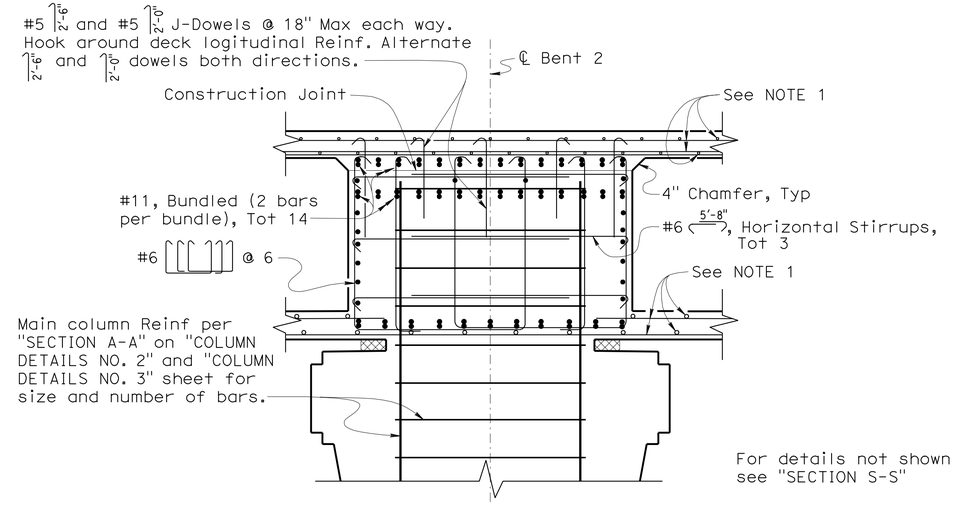

For details not shown see "SECTION S-S"

SECTION T-T

1/2" = 1'-0"

DESIGN	BY Laith Bahia	CHECKED Shervin Pahlavan	
DETAILS	BY Tim Trefz	CHECKED Shervin Pahlavan	
QUANTITIES	BY Suzan Moradi	CHECKED A.R. / G.G.	

STATE OF CALIFORNIA
DEPARTMENT OF TRANSPORTATION

DIVISION OF ENGINEERING SERVICES
STRUCTURE DESIGN
DESIGN BRANCH 15

BRIDGE NO. 53-3040
POST MILE 3.44

ROSECRANS AVENUE UC (REPLACE)
BENT 2 DETAILS

STRUCTURES DESIGN DETAIL SHEET (ENGLISH) (REV. 10/25/05)

ORIGINAL SCALE IN INCHES FOR REDUCED PLANS 0 1 2 3

CU 07
EA 215931

DISREGARD PRINTS BEARING EARLIER REVISION DATES

REVISION DATES: 02-16-12 | 03-17-10 | 07-19-10 | 01-27-11 | 02-24-11 | 07-08-11 | 11-08-11 | 11-18-11 | 12-1-11

SHEET 28 OF 81

FILE => 53-3040-i-b02_dt04.dgn

USERNAME => s124496 DATE PLOTTED => 28-MAR-2012 TIME PLOTTED => 09:07

DIST	COUNTY	ROUTE	POST MILES TOTAL PROJECT	SHEET No	TOTAL SHEETS
07	LA	5	2.4/4.0	742	1288

Andrew P. Rittenhouse 12-12-11
REGISTERED CIVIL ENGINEER DATE

3-26-12
PLANS APPROVAL DATE

REGISTERED PROFESSIONAL ENGINEER Andrew P. Rittenhouse No. 61006 Exp. 12-31-12 CIVIL STATE OF CALIFORNIA

The State of California or its officers or agents shall not be responsible for the accuracy or completeness of electronic copies of this plan sheet.

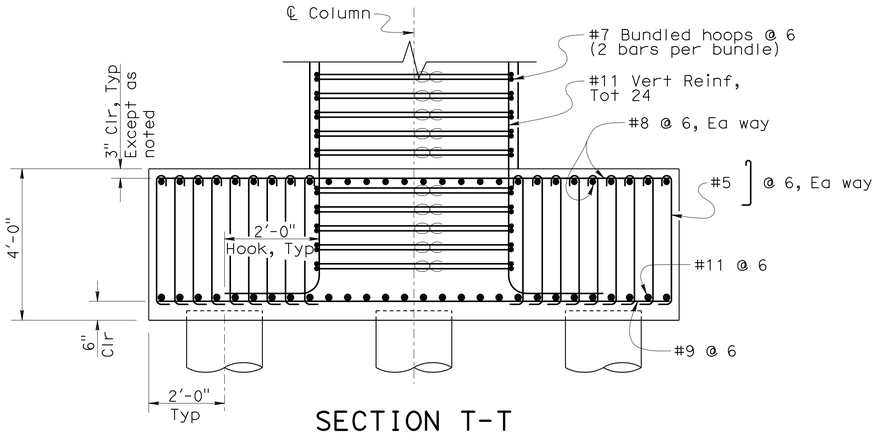

SECTION T-T

½" = 1'-0"

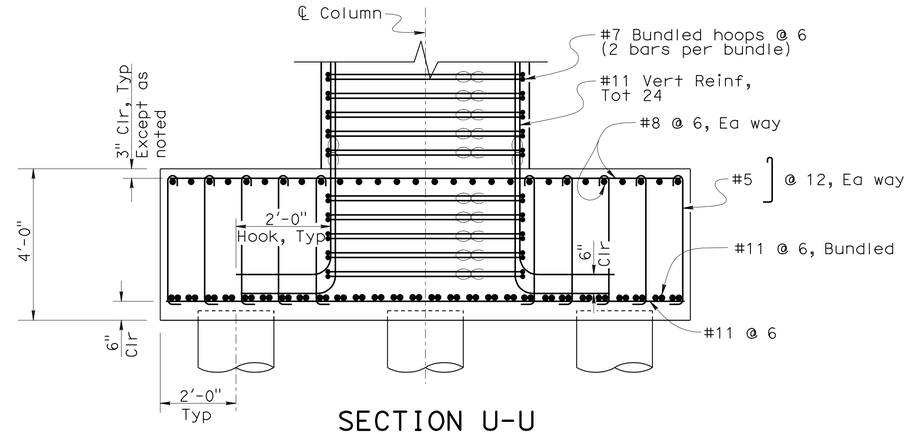

SECTION U-U

½" = 1'-0"

NOTES:

1. See "COLUMN LAYOUT" sheet for pile cap locations.

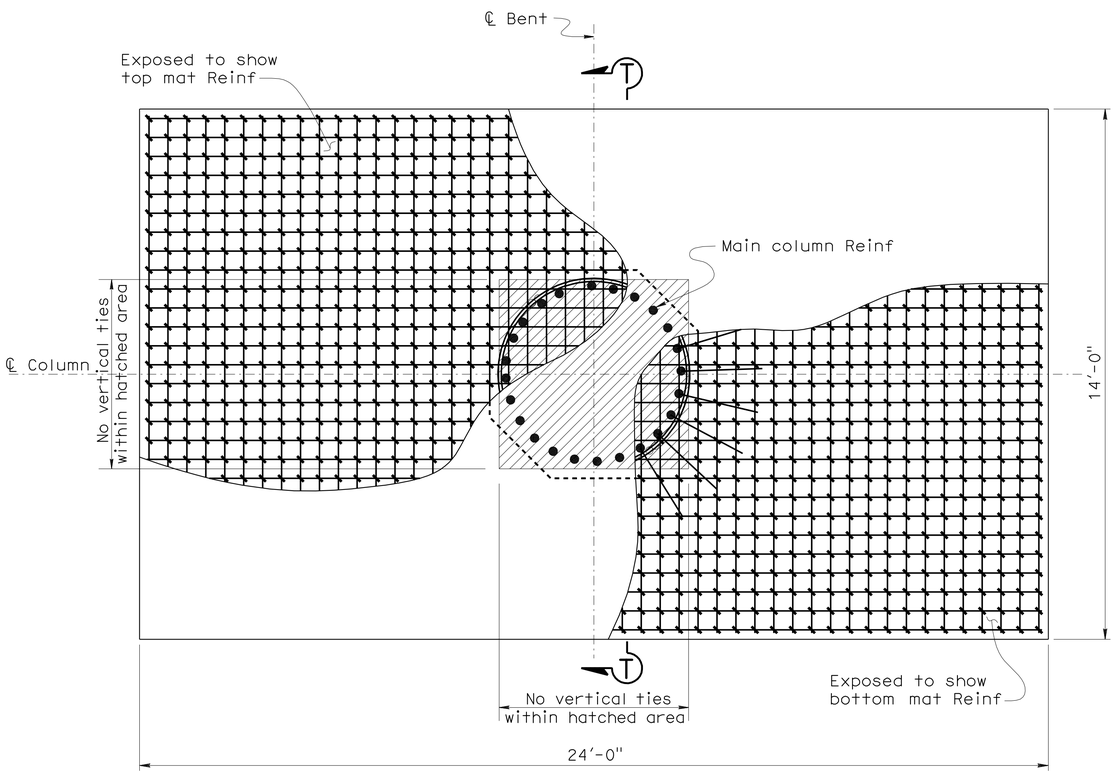

STAGE 1 & 2

PILE CAP PLAN

½" = 1'-0"

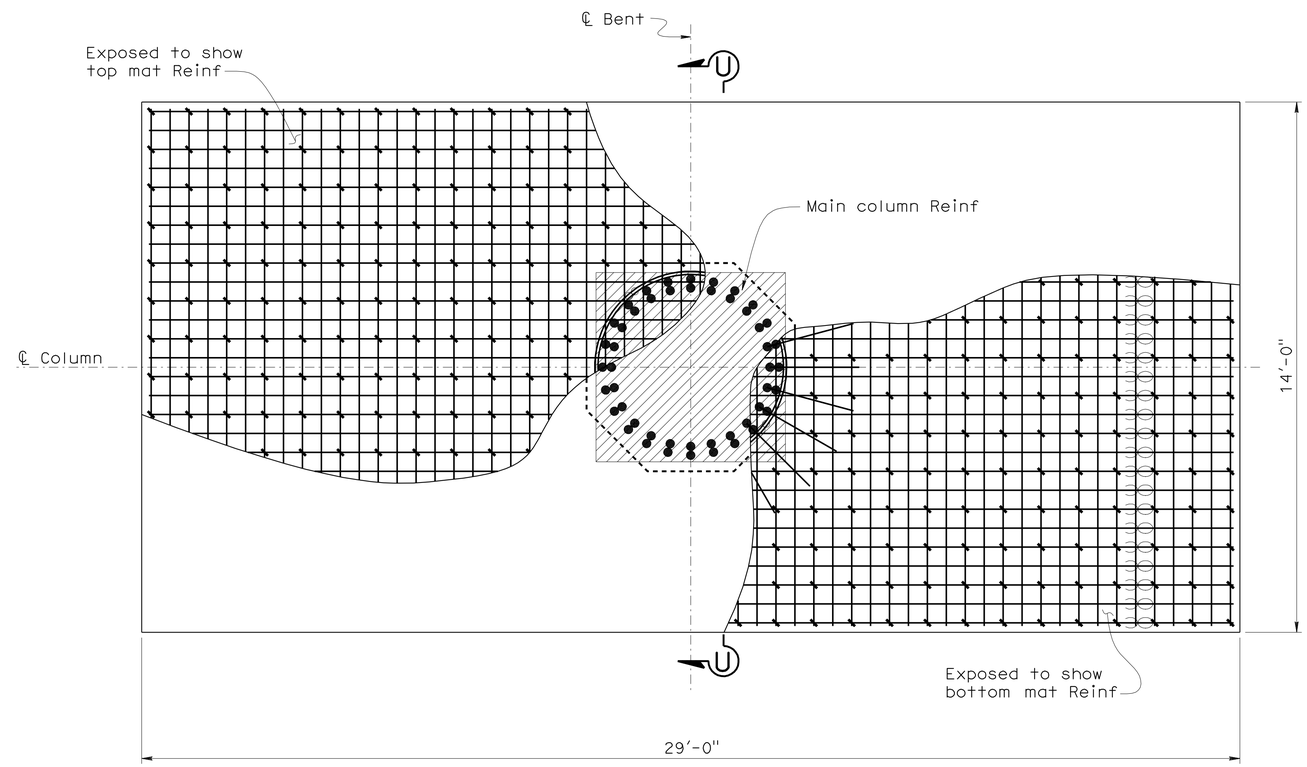

STAGE 3

PILE CAP PLAN

½" = 1'-0"

FOOTING PLANS

½" = 1'-0"

	BY	CHECKED
DESIGN	Laith Bahia	Shervin Pahlavan
DETAILS	Tim Trefz	Shervin Pahlavan
QUANTITIES	Suzan Moradi	A.R. / C.C.

STATE OF CALIFORNIA
DEPARTMENT OF TRANSPORTATION

DIVISION OF ENGINEERING SERVICES
STRUCTURE DESIGN
DESIGN BRANCH 15

BRIDGE NO. 53-3040
POST MILE 3.44

ROSECRANS AVENUE UC (REPLACE)
BENT FOOTING DETAILS

STRUCTURES DESIGN DETAIL SHEET (ENGLISH) (REV. 10/25/05)

ORIGINAL SCALE IN INCHES FOR REDUCED PLANS 0 1 2 3

CU 07
EA 215931

DISREGARD PRINTS BEARING EARLIER REVISION DATES

REVISION DATES: 04-29-10 07-13-10 10-15-10 02-04-11 12-7-11

SHEET 29 OF 81

FILE => 53-3040-j-col_dt01.dgn

USERNAME => s124496 DATE PLOTTED => 28-MAR-2012 TIME PLOTTED => 09:07

DIST	COUNTY	ROUTE	POST MILES TOTAL PROJECT	SHEET No	TOTAL SHEETS
07	LA	5	2.4/4.0	743	1288

REGISTERED CIVIL ENGINEER 12-12-11 DATE

3-26-12
PLANS APPROVAL DATE

REGISTERED PROFESSIONAL ENGINEER Andrew P. Rittenhouse No. 61006 Exp. 12-31-12 CIVIL STATE OF CALIFORNIA

The State of California or its officers or agents shall not be responsible for the accuracy or completeness of electronic copies of this plan sheet.

LEGEND:
Indicates Expanded Polystyrene

NOTES:
1. See "COLUMN GEOMETRY" sheet for additional column dimensions.
2. Column reinforcement shall be symmetrical about ℄ column & ℄ Bent
3. See "BENT FOOTING DETAILS" sheet for additional information not shown or noted.
4. Hoops (D) to be made continuous with Ultimate splice (stagger splices)
5. No splices allowed in main column vertical reinforcement.

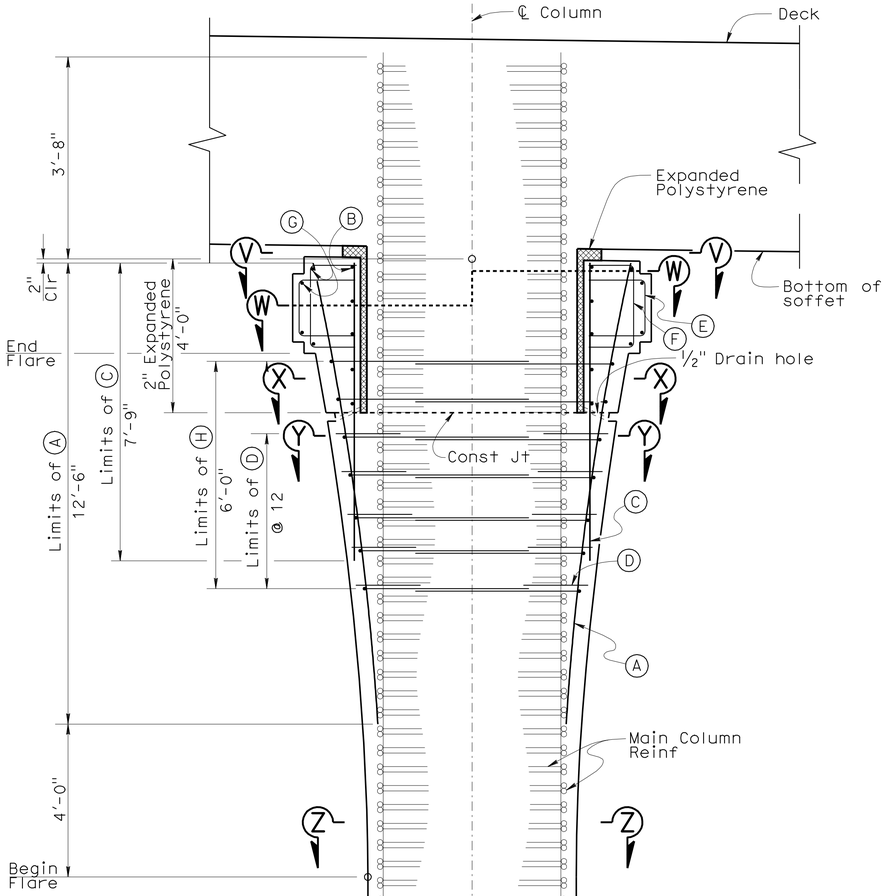

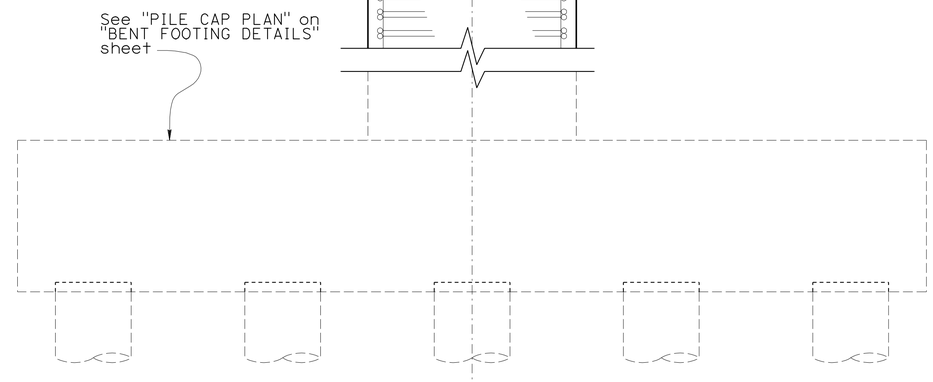

ELEVATION
½" = 1'-0"

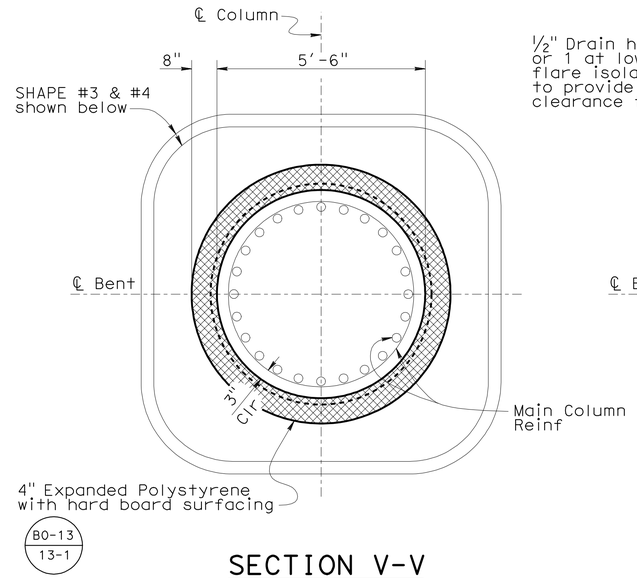

SECTION V-V
½" = 1'-0"

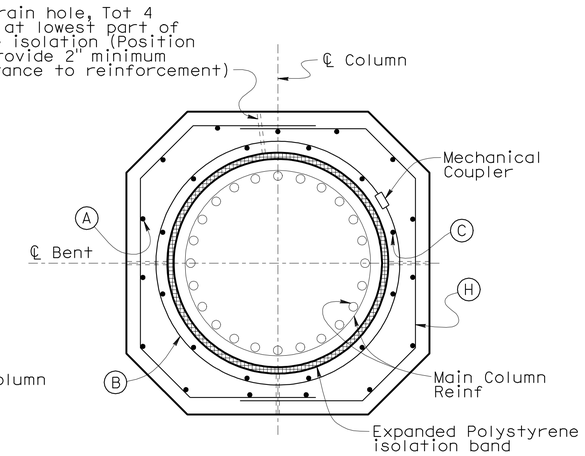

SHAPE #2

SECTION X-X
½" = 1'-0"

REINFORCEMENT TABLE

ID	DIA.	SHAPE	TOTAL
(A)	#6	12'-6"	16
(B)	#4	*	5
(C)	#6	7'-9"	12
(D)	#4	24" 30"	20
(E)	#4	18" 16"	24
(F)	#4	26" 12"	24
(G)	#4	**	4
(H)	#4	**	7

* Stagger mechanical couplers
** 2'-0" Lap splice, Typ

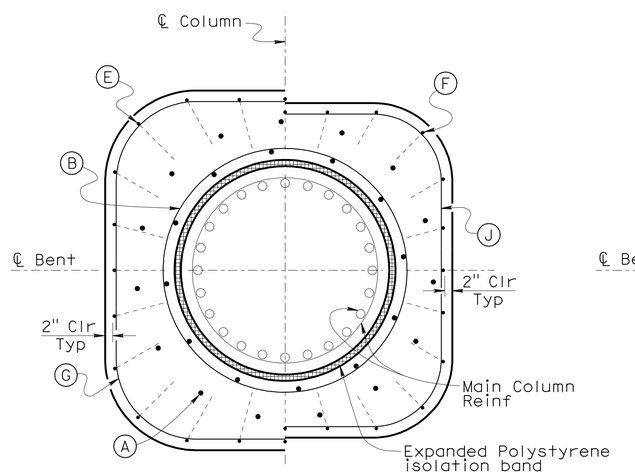

SHAPE #3 & #4

SECTION W-W
½" = 1'-0"

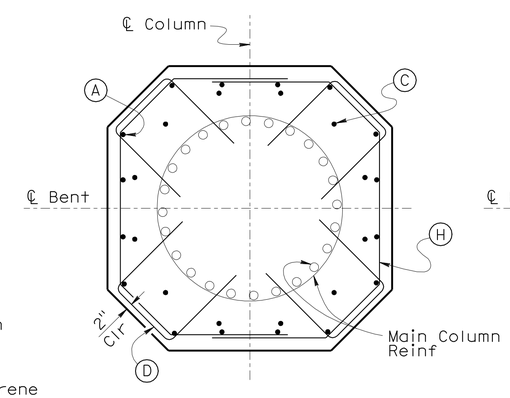

SHAPE #2

SECTION Y-Y
½" = 1'-0"

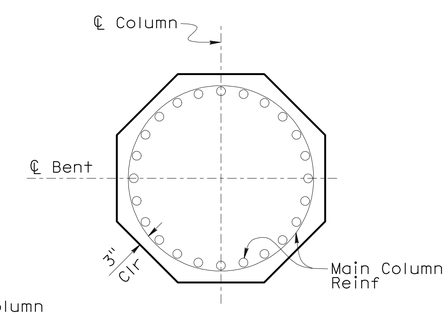

SHAPE #1

SECTION Z-Z
½" = 1'-0"

	BY	CHECKED
DESIGN	Laith Bahia	Shervin Pahlavan
DETAILS	Tim Trefz	Shervin Pahlavan
QUANTITIES	Suzan Moradi	A.R. / C.C.

STATE OF CALIFORNIA
DEPARTMENT OF TRANSPORTATION

DIVISION OF ENGINEERING SERVICES
STRUCTURE DESIGN
DESIGN BRANCH 15

BRIDGE NO. 53-3040
POST MILE 3.44

ROSECRANS AVENUE UC (REPLACE)
COLUMN DETAILS STAGE 1 & 2

STRUCTURES DESIGN DETAIL SHEET (ENGLISH) (REV. 10/25/05)

ORIGINAL SCALE IN INCHES FOR REDUCED PLANS 0 1 2 3

CU 07
EA 215931

DISREGARD PRINTS BEARING EARLIER REVISION DATES

REVISION DATES: 09-25-09 10-23-09 04-22-10 07-14-10 10-13-10 02-18-11 12-7-11

SHEET 30 OF 81

FILE => 53-3040-j-col_dt02.dgn

USERNAME => s124496 DATE PLOTTED => 28-MAR-2012 TIME PLOTTED => 09:07

DIST	COUNTY	ROUTE	POST MILES TOTAL PROJECT	SHEET No	TOTAL SHEETS
07	LA	5	2.4/4.0	744	1288

REGISTERED CIVIL ENGINEER 12-12-11 DATE

3-26-12
PLANS APPROVAL DATE

REGISTERED PROFESSIONAL ENGINEER Andrew P. Rittenhouse No. 61006 Exp. 12-31-12 CIVIL STATE OF CALIFORNIA

The State of California or its officers or agents shall not be responsible for the accuracy or completeness of electronic copies of this plan sheet.

LEGEND:
Indicates Expanded Polystyrene

NOTES:
1. See "COLUMN GEOMETRY" sheet for additional column dimensions.
2. Column reinforcement shall be symmetrical about ℄ column & ℄ Bent
3. See "BENT FOOTING DETAILS" sheet for additional information not shown or noted.
4. Hoops (D) to be made continuous with Ultimate splice (stagger splices)
5. No splices allowed in main column vertical reinforcement.

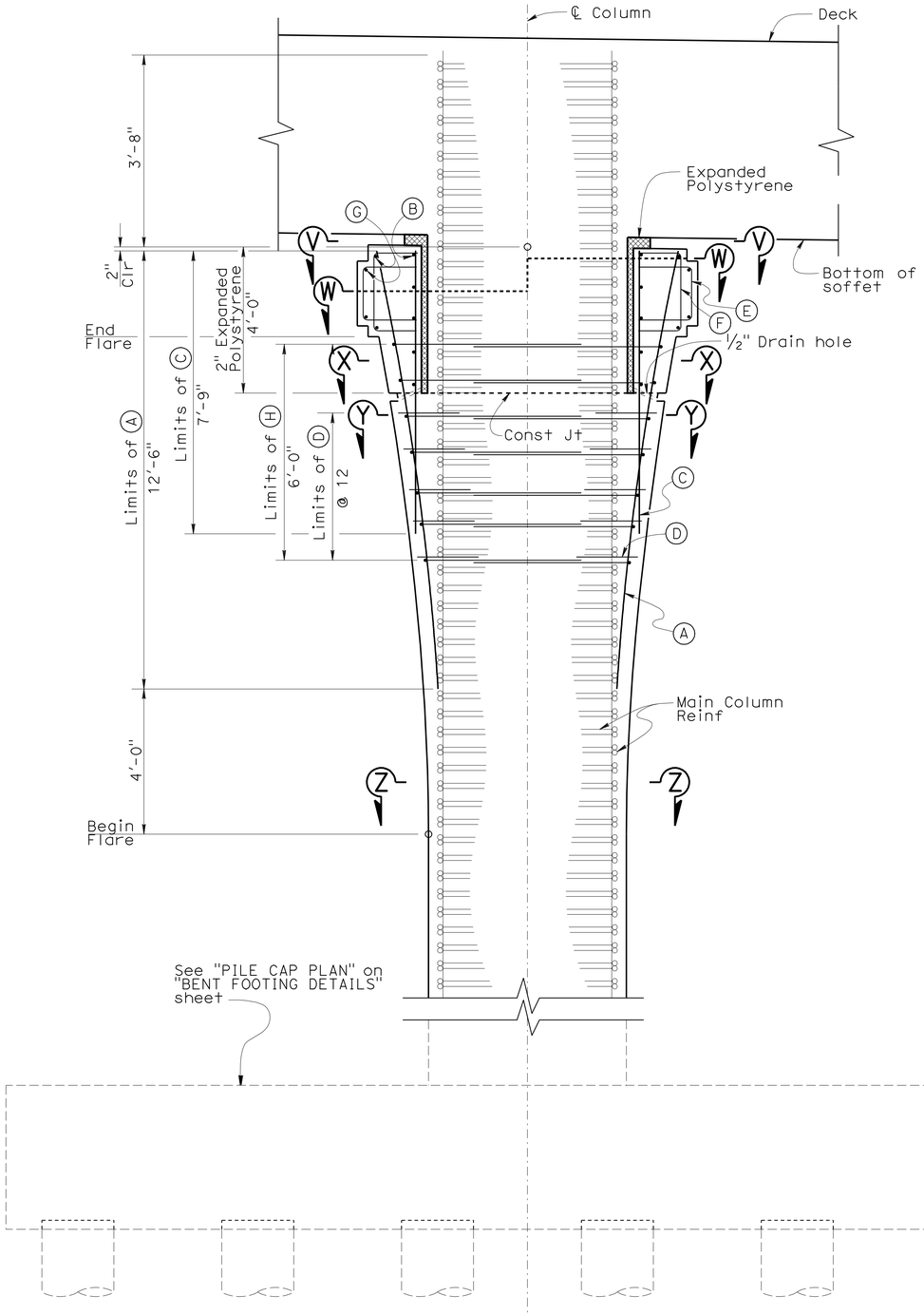

ELEVATION
½" = 1'-0"

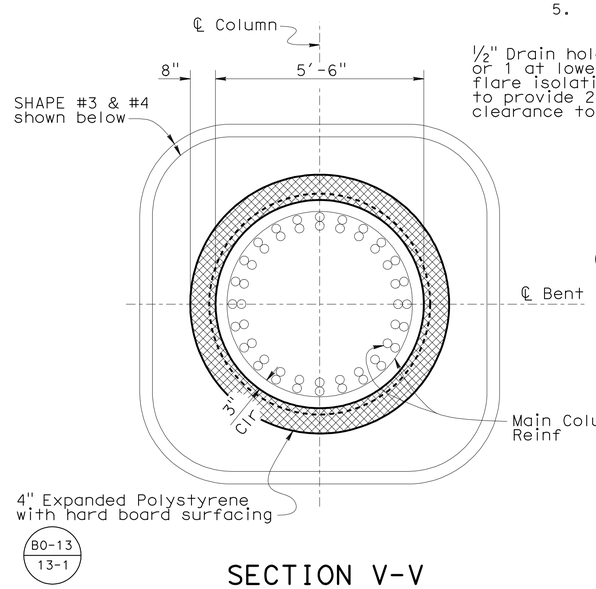

SECTION V-V
½" = 1'-0"

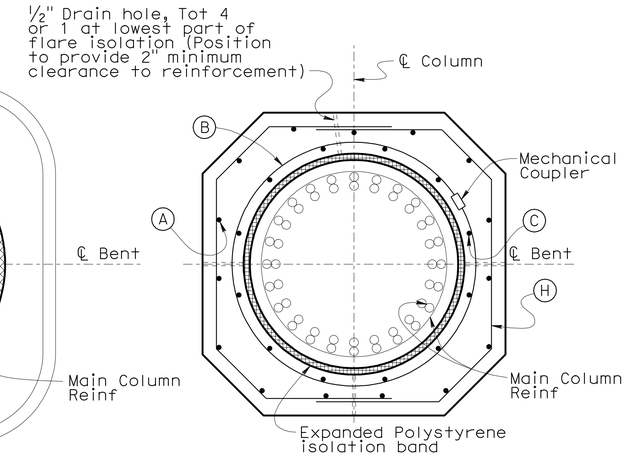

SECTION X-X
½" = 1'-0"

REINFORCEMENT TABLE			
ID	DIA.	SHAPE	TOTAL
(A)	#6	12'-6"	16
(B)	#4	*	5
(C)	#6	7'-9"	12
(D)	#4	24" 30"	20
(E)	#4	18" 16"	24
(F)	#4	26" 12"	24
(G)	#4	**	4
(H)	#4	**	7

* Stagger mechanical couplers
** 2'-0" Lap splice, Typ

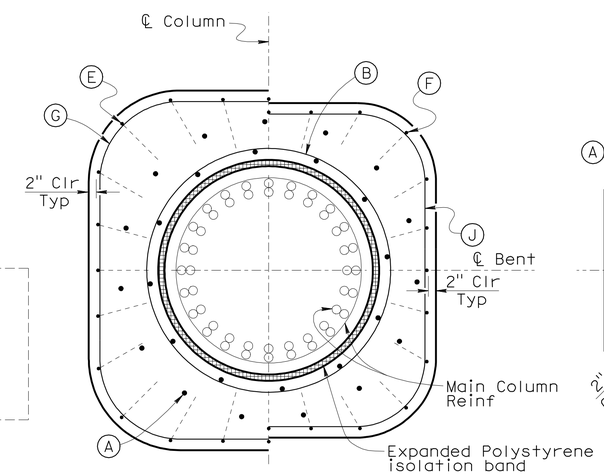

SECTION W-W
½" = 1'-0"

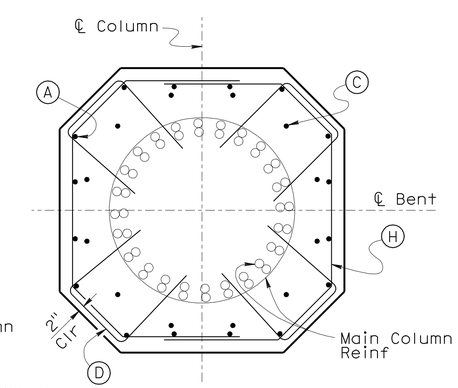

SECTION Y-Y
½" = 1'-0"

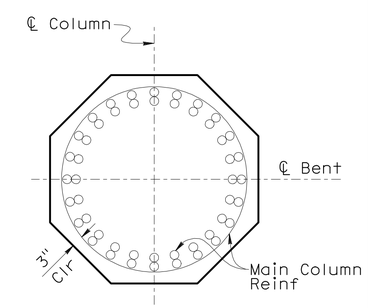

SECTION Z-Z
½" = 1'-0"

	BY	CHECKED
DESIGN	Laith Bahia	Shervin Pahlavan
DETAILS	Tim Trefz	Shervin Pahlavan
QUANTITIES	Suzan Moradi	A.R. / C.C.

STATE OF CALIFORNIA
DEPARTMENT OF TRANSPORTATION

DIVISION OF ENGINEERING SERVICES
STRUCTURE DESIGN
DESIGN BRANCH 15

BRIDGE NO. 53-3040
POST MILE 3.44

ROSECRANS AVENUE UC (REPLACE)
COLUMN DETAILS STAGE 3

STRUCTURES DESIGN DETAIL SHEET (ENGLISH) (REV. 10/25/05)

ORIGINAL SCALE IN INCHES FOR REDUCED PLANS 0 1 2 3

CU 07
EA 215931

DISREGARD PRINTS BEARING EARLIER REVISION DATES

REVISION DATES 07-14-10 10-14-10 02-18-11 12-7-11

SHEET 31 OF 81

FILE => 53-3040-j-col_dt03.dgn

USERNAME => s124496 DATE PLOTTED => 28-MAR-2012 TIME PLOTTED => 09:08

DIST	COUNTY	ROUTE	POST MILES TOTAL PROJECT	SHEET No	TOTAL SHEETS
07	LA	5	2.4/4.0	745	1288

Andrew Rittenhouse 12-12-11
REGISTERED CIVIL ENGINEER DATE

3-26-12
PLANS APPROVAL DATE

REGISTERED PROFESSIONAL ENGINEER
Andrew P. Rittenhouse
No. 61006
Exp. 12-31-12
CIVIL
STATE OF CALIFORNIA

The State of California or its officers or agents shall not be responsible for the accuracy or completeness of electronic copies of this plan sheet.

NOTE:

1. Column geometry shall be symetrical about ℄ of Column and ℄ of Bent.

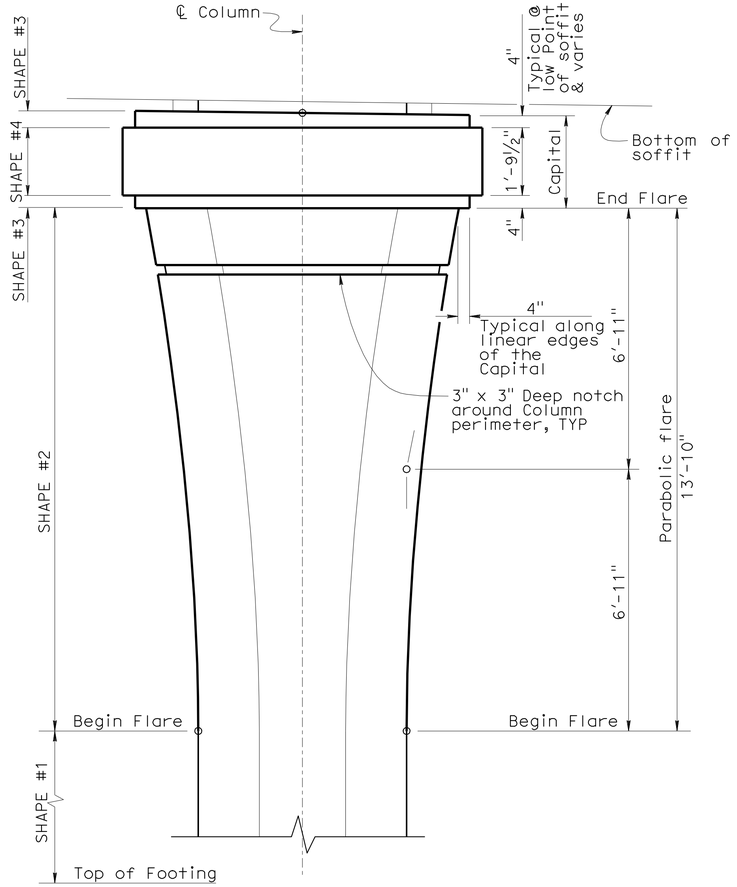

COLUMN GEOMETRY
½" = 1'-0"

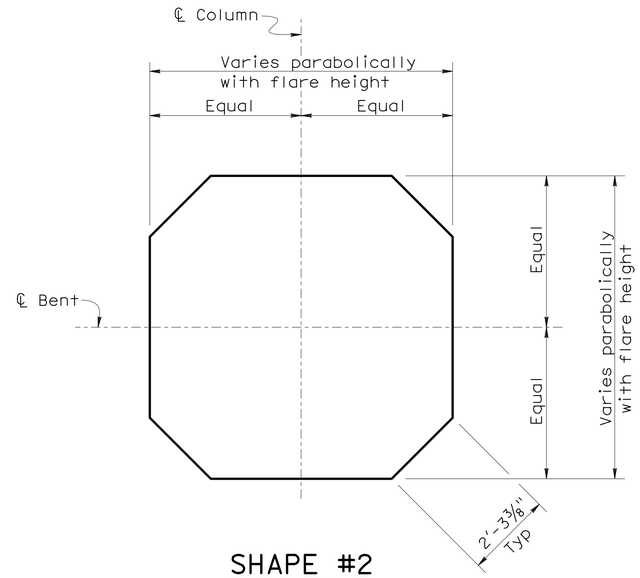

SHAPE #2
½" = 1'-0"

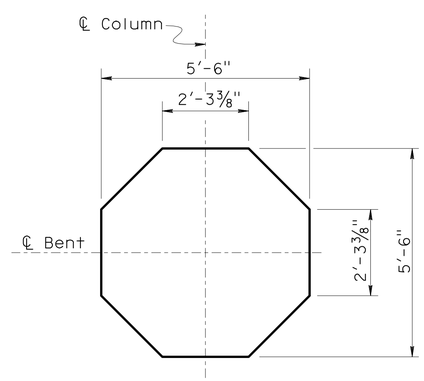

SHAPE #1
½" = 1'-0"

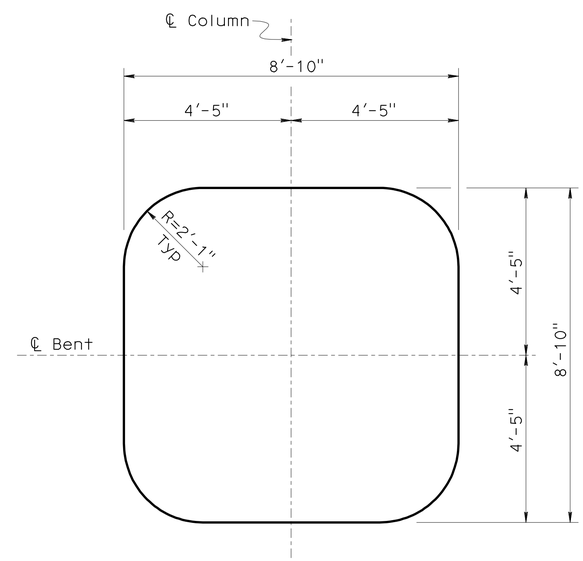

SHAPE #3
½" = 1'-0"

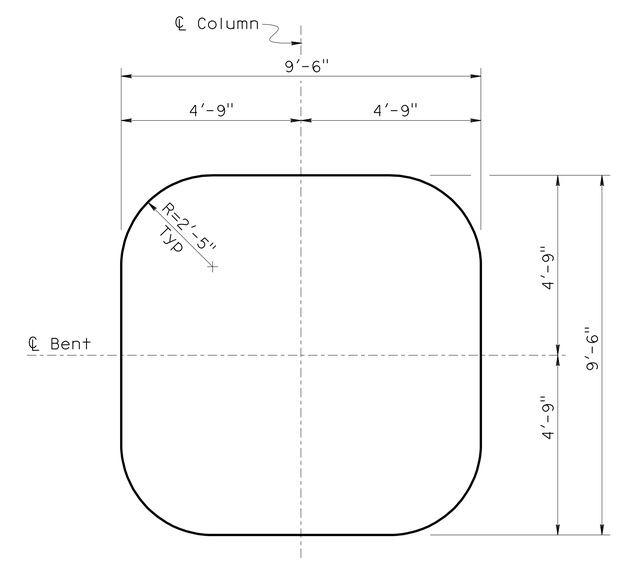

SHAPE #4
½" = 1'-0"

DESIGN	BY Laith Bahia	CHECKED Shervin Pahlavan	
DETAILS	BY Tim Trefz	CHECKED Shervin Pahlavan	
QUANTITIES	BY Suzan Moradi	CHECKED A.R. / C.C.	

STATE OF CALIFORNIA
DEPARTMENT OF TRANSPORTATION

DIVISION OF ENGINEERING SERVICES
STRUCTURE DESIGN
DESIGN BRANCH 15

BRIDGE NO. 53-3040
POST MILE 3.44

ROSECRANS AVENUE UC (REPLACE)
COLUMN GEOMETRY

STRUCTURES DESIGN DETAIL SHEET (ENGLISH) (REV. 10/25/05)

ORIGINAL SCALE IN INCHES FOR REDUCED PLANS 0 1 2 3

CU 07
EA 215931

DISREGARD PRINTS BEARING EARLIER REVISION DATES 10-04-09 12-07-11

REVISION DATES

SHEET 32 OF 81

FILE => 53-3040-j-col_dt04.dgn

USERNAME => s124436 DATE PLOTTED => 28-MAR-2012 TIME PLOTTED => 09:08

DIST	COUNTY	ROUTE	POST MILES TOTAL PROJECT	SHEET No	TOTAL SHEETS
07	LA	5	2.4/4.0	746	1288

REGISTERED CIVIL ENGINEER — DATE 12-12-11

PLANS APPROVAL DATE 3-26-12

REGISTERED PROFESSIONAL ENGINEER — Andrew P. Rittenhouse — No. 61006 — Exp. 12-31-12 — CIVIL — STATE OF CALIFORNIA

The State of California or its officers or agents shall not be responsible for the accuracy or completeness of electronic copies of this plan sheet.

LEGEND

Indicates deck closure pour

NOTES:

1. For additional reinforcement, see "GIRDER REINFORCEMENT" sheet
2. Bridge mounted sign and electrical conduit, see "ROAD PLANS"
3. See "TYPE 736 (MOD 1)" and "TYPE 736 (MOD 2)" on "BARRIER DETAILS" sheet.
4. Terminate Longitudinal slab reinforcing as required to avoid Prestess Blockout

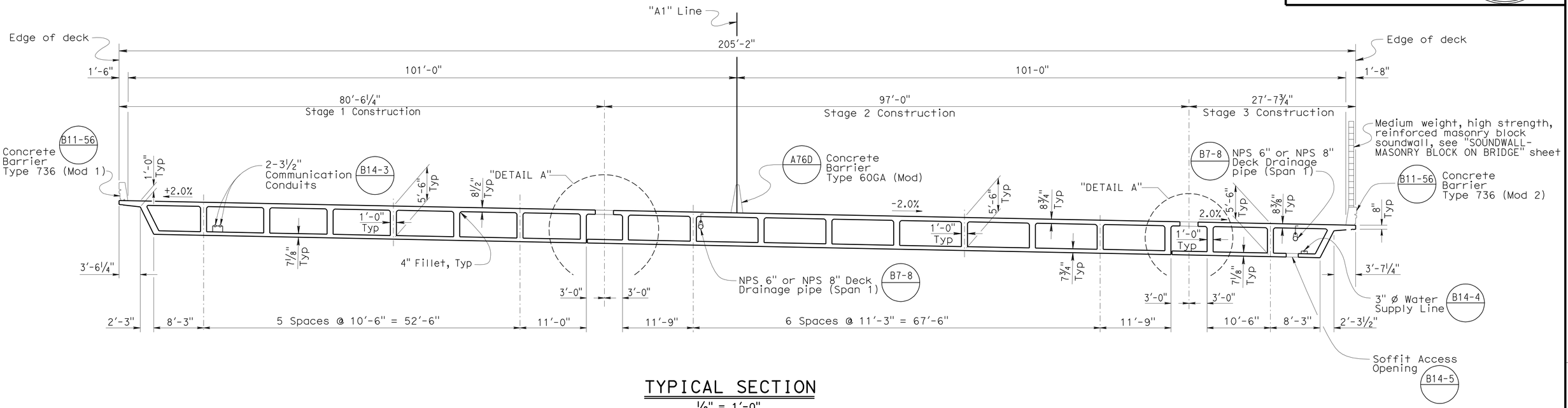

TYPICAL SECTION

⅛" = 1'-0"

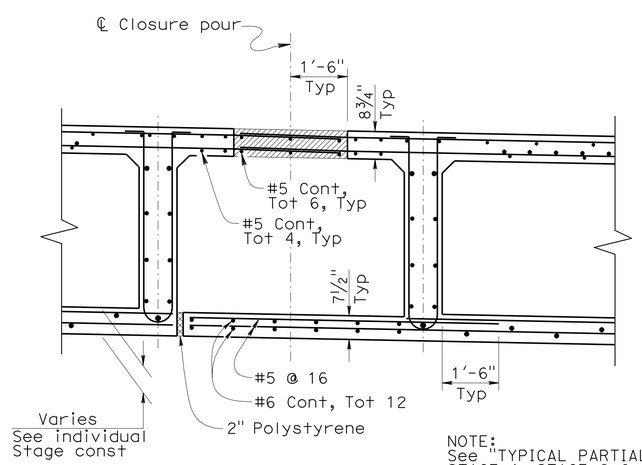

NOTE:
See "TYPICAL PARTIAL SECTION, STAGE 1, STAGE 2 & STAGE 3" sheets for additional reinforcement information.

DETAIL A

½" = 1'-0"

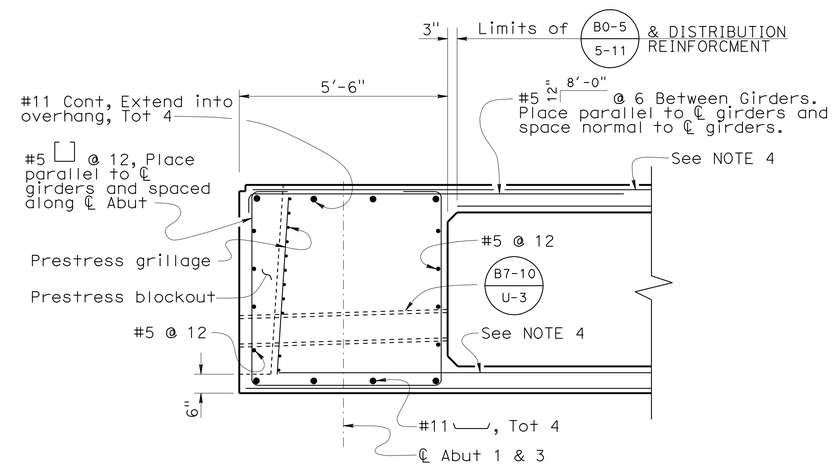

END DIAPHRAGM

B8-5

½" = 1'-0"

	BY	CHECKED
DESIGN	Laith Bahia	Shervin Pahlavan
DETAILS	Tim Trefz	Shervin Pahlavan
QUANTITIES	Suzan Moradi	A.R. / G.G.

STATE OF CALIFORNIA
DEPARTMENT OF TRANSPORTATION

DIVISION OF ENGINEERING SERVICES
STRUCTURE DESIGN
DESIGN BRANCH 15

BRIDGE NO. 53-3040
POST MILE 3.44

ROSECRANS AVENUE UC (REPLACE)
TYPICAL SECTION

STRUCTURES DESIGN DETAIL SHEET (ENGLISH) (REV. 10/25/05)

ORIGINAL SCALE IN INCHES FOR REDUCED PLANS 0 1 2 3

CU 07
EA 215931

DISREGARD PRINTS BEARING EARLIER REVISION DATES

REVISION DATES: 12-07-11 | 08-11-09 | 08-17-09 | 09-22-09 | 10-19-09 | 11-16-09 | 01-29-10 | 02-05-11 | 10-14-11

SHEET 33 OF 81

FILE => 53-3040-k-ts01.dgn

USERNAME => s124496 DATE PLOTTED => 28-MAR-2012 TIME PLOTTED => 09:08

LEGEND

○ Indicates additional reinforcement

✳ See "STAGE 1 GIRDER REINFORCEMENT PLAN" sheet for additional information

DIST	COUNTY	ROUTE	POST MILES TOTAL PROJECT	SHEET No	TOTAL SHEETS
07	LA	5	2.4/4.0	747	1288

Andrew Rittenhouse 12-12-11
REGISTERED CIVIL ENGINEER DATE

3-26-12
PLANS APPROVAL DATE

REGISTERED PROFESSIONAL ENGINEER
Andrew P. Rittenhouse
No. 61006
Exp. 12-31-12
CIVIL
STATE OF CALIFORNIA

The State of California or its officers or agents shall not be responsible for the accuracy or completeness of electronic copies of this plan sheet.

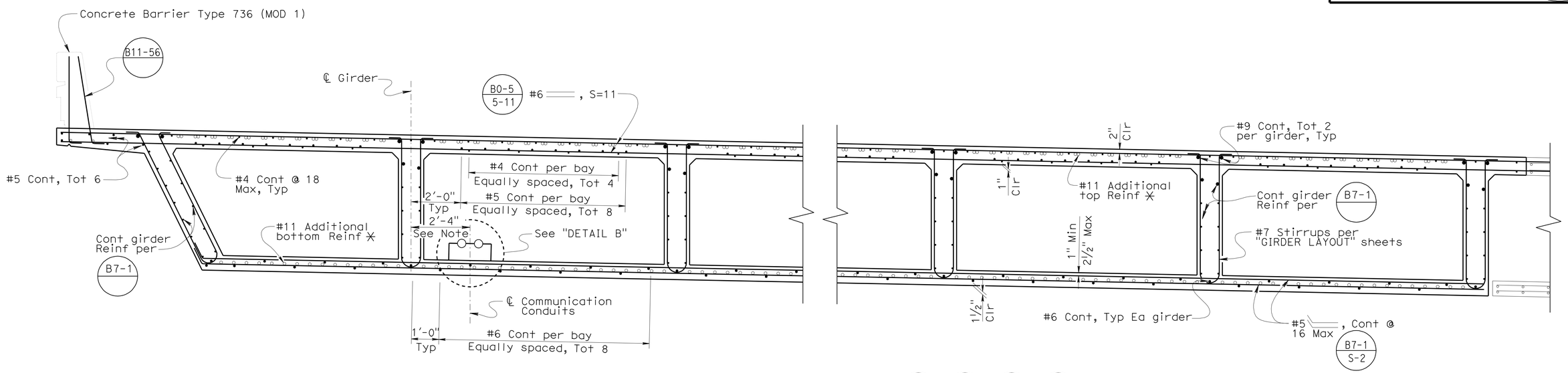

PART SECTION B0-5 B7-1 B8-5 B11-56

½" = 1'-0"

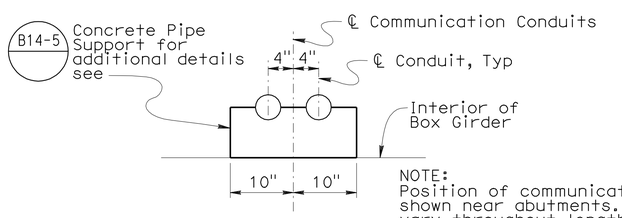

NOTE:
Position of communication Conduits shown near abutments. Position will vary throughout length of bridge to accomodate bent cap penetration.

DETAIL B

1" = 1'-0"

DESIGN	BY Laith Bahia	CHECKED Shervin Pahlavan	
DETAILS	BY Tim Trefz	CHECKED Shervin Pahlavan	
QUANTITIES	BY Suzan Moradi	CHECKED A.R. / G.G.	

STATE OF CALIFORNIA
DEPARTMENT OF TRANSPORTATION

DIVISION OF ENGINEERING SERVICES
STRUCTURE DESIGN
DESIGN BRANCH 15

BRIDGE NO. 53-3040
POST MILE 3.44

ROSECRANS AVENUE UC (REPLACE)
PARTIAL TYPICAL SECTION STAGE 1

STRUCTURES DESIGN DETAIL SHEET (ENGLISH) (REV. 10/25/05)

ORIGINAL SCALE IN INCHES FOR REDUCED PLANS 0 1 2 3

CU 07
EA 215931

DISREGARD PRINTS BEARING EARLIER REVISION DATES

REVISION DATES: 08-27-09 09-21-09 10-13-09 10-14-09 08-04-10 02-18-11 07-15-11 10-14-11 12-07-11

SHEET 34 OF 81

FILE => 53-3040-k-tsp01.dgn

USERNAME => s124496 DATE PLOTTED => 28-MAR-2012 TIME PLOTTED => 09:08

DIST	COUNTY	ROUTE	POST MILES TOTAL PROJECT	SHEET No	TOTAL SHEETS
07	LA	5	2.4/4.0	748	1288

Andrew Rittenhouse 12-12-11
REGISTERED CIVIL ENGINEER DATE

3-26-12
PLANS APPROVAL DATE

REGISTERED PROFESSIONAL ENGINEER
Andrew P. Rittenhouse
No. 61006
Exp. 12-31-12
CIVIL
STATE OF CALIFORNIA

The State of California or its officers or agents shall not be responsible for the accuracy or completeness of electronic copies of this plan sheet.

LEGEND

○ Indicates additional reinforcement

✳ See "STAGE 2 GIRDER REINFORCEMENT PLAN" sheet for additional information

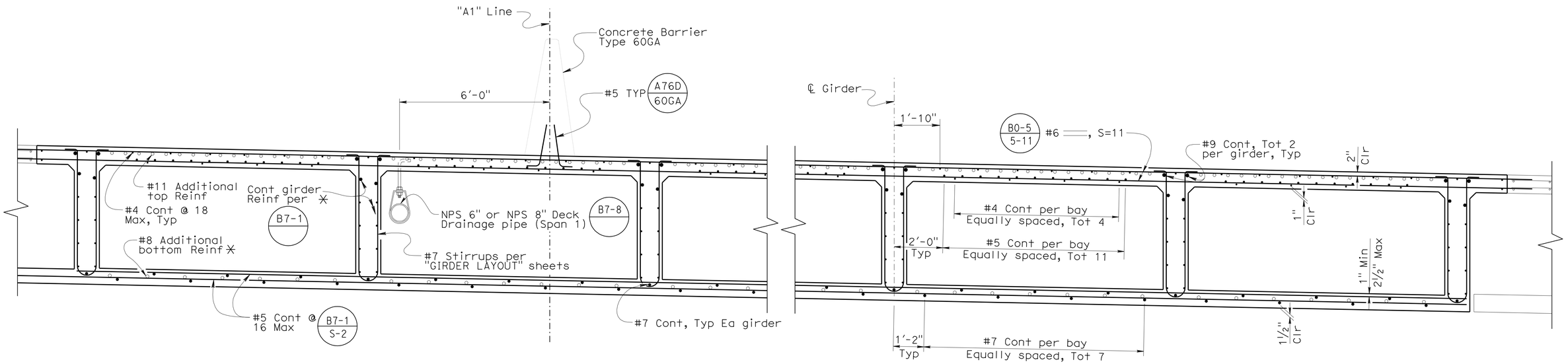

PART SECTION B0-5 B7-1 A76D
½" = 1'-0"

DESIGN	BY Laith Bahia	CHECKED Shervin Pahlavan	
DETAILS	BY Tim Trefz	CHECKED Shervin Pahlavan	
QUANTITIES	BY Suzan Moradi	CHECKED A.R. / G.G.	

STATE OF CALIFORNIA
DEPARTMENT OF TRANSPORTATION

DIVISION OF ENGINEERING SERVICES
STRUCTURE DESIGN
DESIGN BRANCH 15

BRIDGE NO. 53-3040
POST MILE 3.44

ROSECRANS AVENUE UC (REPLACE)
PARTIAL TYPICAL SECTION STAGE 2

STRUCTURES DESIGN DETAIL SHEET (ENGLISH) (REV. 10/25/05)

ORIGINAL SCALE IN INCHES FOR REDUCED PLANS 0 1 2 3

CU 07
EA 215931

DISREGARD PRINTS BEARING EARLIER REVISION DATES
REVISION DATES 10-12-09 10-19-09 02-03-11 12-07-11

SHEET 35 OF 81

FILE => 53-3040-k-tsp02.dgn

USERNAME => s124436 DATE PLOTTED => 28-MAR-2012 TIME PLOTTED => 09:08

DIST	COUNTY	ROUTE	POST MILES TOTAL PROJECT	SHEET No	TOTAL SHEETS
07	LA	5	2.4/4.0	749	1288

Andrew Rittenhouse 12-12-11
REGISTERED CIVIL ENGINEER DATE

3-26-12
PLANS APPROVAL DATE

REGISTERED PROFESSIONAL ENGINEER
Andrew P. Rittenhouse
No. 61006
Exp. 12-31-12
CIVIL
STATE OF CALIFORNIA

The State of California or its officers or agents shall not be responsible for the accuracy or completeness of electronic copies of this plan sheet.

LEGEND

○ Indicates additional reinforcement

✳ See "STAGE 3 GIRDER REINFORCEMENT PLAN" sheet for additional information

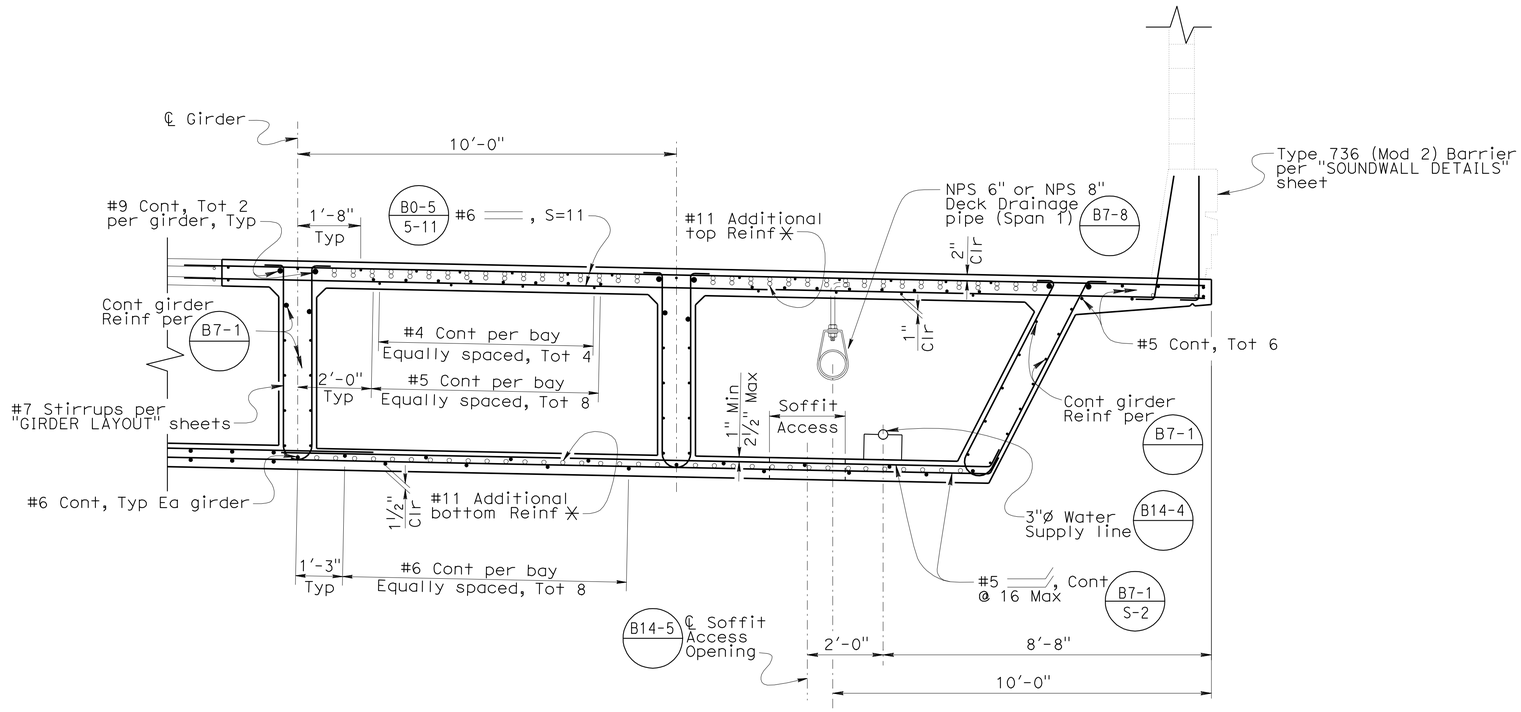

PART SECTION
1/2" = 1'-0"

B0-5 B7-1 B8-5 B11-56

DESIGN	BY Laith Bahia	CHECKED Shervin Pahlavan	
DETAILS	BY Tim Trefz	CHECKED Shervin Pahlavan	
QUANTITIES	BY Suzan Moradi	CHECKED A.R. / G.G.	

STATE OF CALIFORNIA
DEPARTMENT OF TRANSPORTATION

DIVISION OF ENGINEERING SERVICES
STRUCTURE DESIGN
DESIGN BRANCH 15

BRIDGE NO. 53-3040
POST MILE 3.44

ROSECRANS AVENUE UC (REPLACE)
PARTIAL TYPICAL SECTION STAGE 3

STRUCTURES DESIGN DETAIL SHEET (ENGLISH) (REV. 10/25/05)

ORIGINAL SCALE IN INCHES FOR REDUCED PLANS 0 1 2 3

CU 07
EA 215931

DISREGARD PRINTS BEARING EARLIER REVISION DATES

REVISION DATES: 10-12-09 10-20-09 08-09-10 02-02-11 07-05-11 10-14-11 12-01-11 3-02-11

SHEET 36 OF 81

FILE => 53-3040-k-tsp03.dgn

USERNAME => s124496 DATE PLOTTED => 28-MAR-2012 TIME PLOTTED => 09:08

DIST	COUNTY	ROUTE	POST MILES TOTAL PROJECT	SHEET No	TOTAL SHEETS
07	LA	5	2.4/4.0	750	1288

Andrew Rittenhouse 12-12-11
REGISTERED CIVIL ENGINEER DATE

3-26-12
PLANS APPROVAL DATE

REGISTERED PROFESSIONAL ENGINEER Andrew P. Rittenhouse No. 61006 Exp. 12-31-12 STATE OF CALIFORNIA

The State of California or its officers or agents shall not be responsible for the accuracy or completeness of electronic copies of this plan sheet.

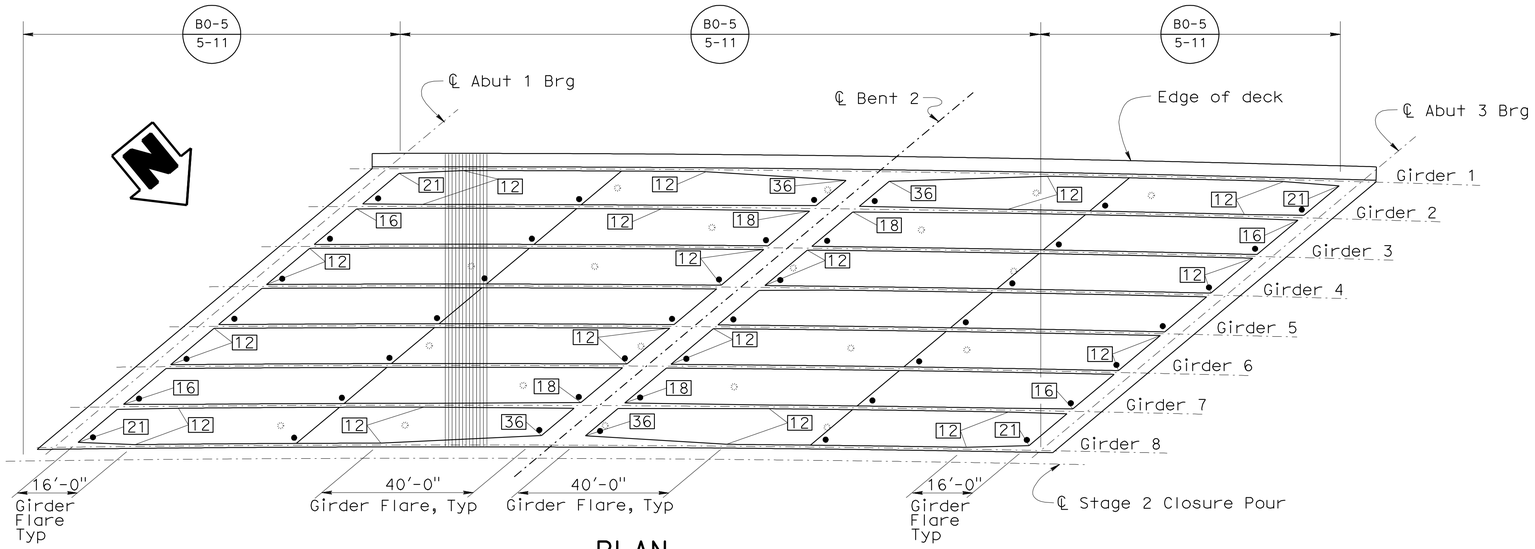

PLAN
1" = 20'

NOTE:
See "TYPICAL SECTION" sheet for "END DIAPHRAGM" detail.

LEGEND:

▭ Indicates girder stem width, shown in inches

☼ Indicates Soffit Lighting (B7-1 / F-1) See "Road Plans". (Fixtures to be centered between girders and located over each painted lane line, edge of median and centered over Number 3 Lane of completed Rosecrans Ave.)

• Indicates soffit vent (B7-1 / V-1)

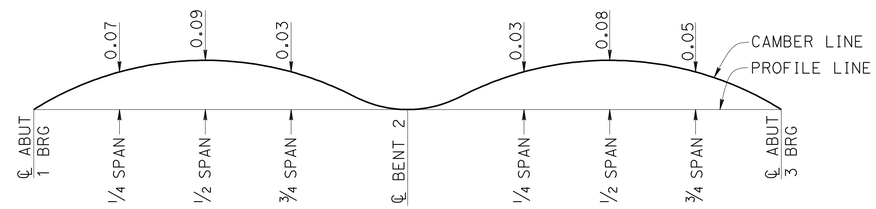

CAMBER DIAGRAM
NO SCALE

DOES NOT INCLUDE ALLOWANCE FOR FALSEWORK SETTLEMENT

PRESTRESSING NOTES
STAGE 1 CONSTRUCTION

270 ksi Low Relaxation Strand:

P_{jack} = 16 500 Kip

Anchor Set = 3/8 in

Total Number of Girders = 8

Distribution of prestress force (Pjack) between girders shall not exceed the ratio of 3:2. Maximum final force variation between girders shall not exceed 725 Kips.

Concrete: f'c = 4.00 Ksi @ 28 days

f'ci = 3.50 Ksi @ time of stressing

Contractor shall submit elongation calculations based on initial stress at

X = 0.9391 Times jacking stress.

One end stressing shall be performed from the long-span end only.

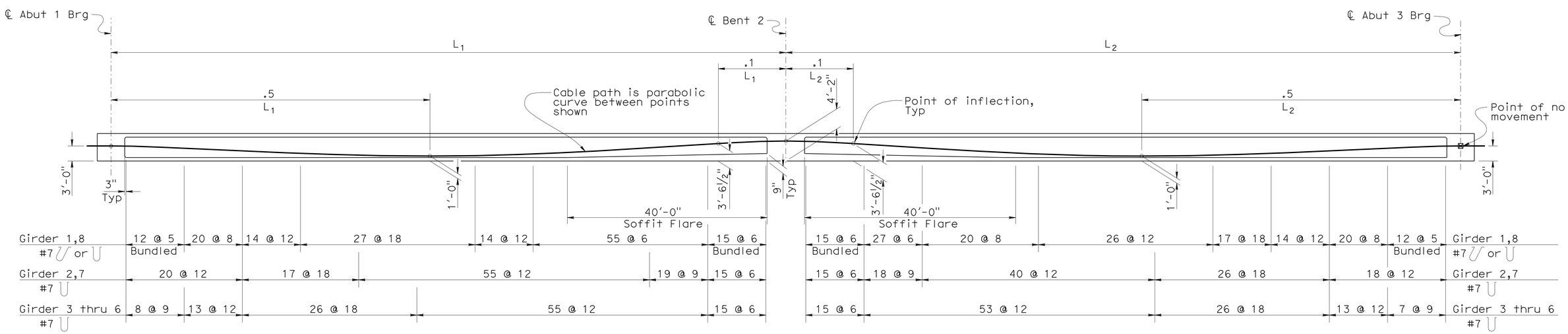

LONGITUDINAL SECTION
No Scale

DESIGN	BY Laith Bahia	CHECKED Shervin Pahlavan	
DETAILS	BY Tim Trefz	CHECKED Shervin Pahlavan	
QUANTITIES	BY Suzan Moradi	CHECKED Andrew Rittenhouse	

STATE OF CALIFORNIA
DEPARTMENT OF TRANSPORTATION

DIVISION OF ENGINEERING SERVICES
STRUCTURE DESIGN
DESIGN BRANCH 15

BRIDGE NO. 53-3040
POST MILE 3.44

ROSECRANS AVENUE UC (REPLACE)
GIRDER LAYOUT STAGE 1

STRUCTURES DESIGN DETAIL SHEET (ENGLISH) (REV. 10/25/05)

ORIGINAL SCALE IN INCHES FOR REDUCED PLANS 0 1 2 3

CU 07
EA 215931

DISREGARD PRINTS BEARING EARLIER REVISION DATES

REVISION DATES: 07-05-11 10-14-11 12-01-11 1-09-12 11-18-09 02-16-10 02-22-10 07-23-10 02-03-11

SHEET 37 OF 81

FILE => 53-3040-1-g_lo1.dgn

USERNAME => s124196 DATE PLOTTED => 28-MAR-2012 TIME PLOTTED => 09:08

DIST	COUNTY	ROUTE	POST MILES TOTAL PROJECT	SHEET No	TOTAL SHEETS
07	LA	5	2.4/4.0	751	1288

Andrew Rittenhouse 12-12-11
REGISTERED CIVIL ENGINEER DATE

3-26-12
PLANS APPROVAL DATE

REGISTERED PROFESSIONAL ENGINEER Andrew P. Rittenhouse No. 61006 Exp. 12-31-12 STATE OF CALIFORNIA

The State of California or its officers or agents shall not be responsible for the accuracy or completeness of electronic copies of this plan sheet.

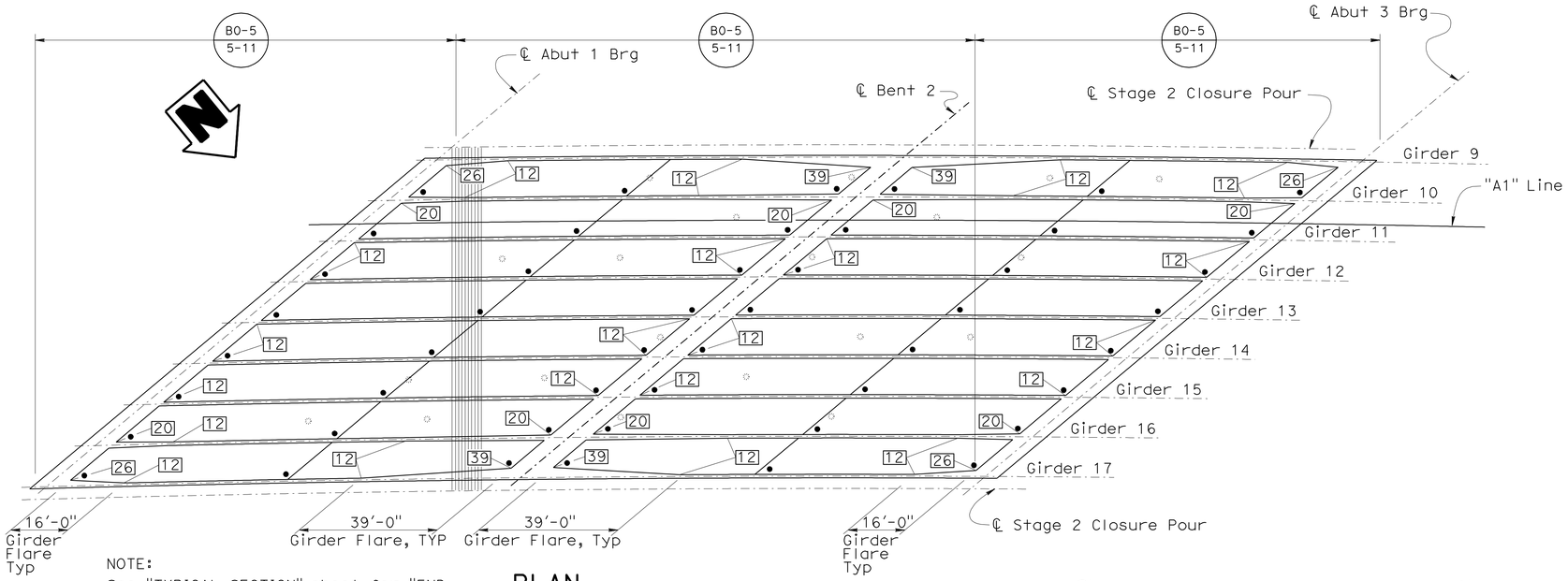

NOTE:
See "TYPICAL SECTION" sheet for "END DIAPHRAGM" detail.

PLAN
1" = 20'

LEGEND:

☐ Indicates girder stem width, shown in inches

○ Indicates Soffit Lighting (B7-1 / F-1) See "Road Plans". (Fixtures to be centered between girders and located over each painted lane line, edge of median and centered over Number 3 Lane of completed Rosecrans Ave.)

• Indicates soffit vent (B7-1 / V-1)

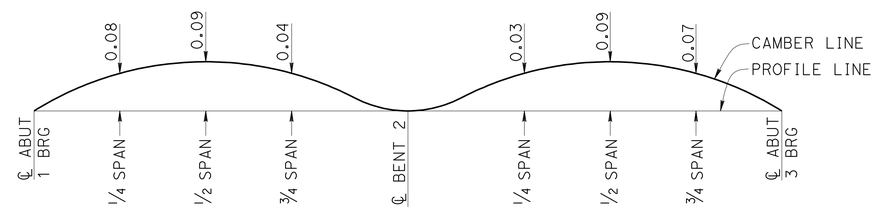

CAMBER DIAGRAM
NO SCALE

DOES NOT INCLUDE ALLOWANCE FOR FALSEWORK SETTLEMENT

PRESTRESSING NOTES
STAGE 2 CONSTRUCTION

270 Ksi Low Relaxation Strand:

P_{jack} = 18 300 Kip

Anchor Set = 3/8 in

Total Number of Girders = 9

Distribution of prestress force (Pjack) between girders shall not exceed the ratio of 3:2. Maximum final force variation between girders shall not exceed 725 Kips.

Concrete: f'c = 4.00 Ksi @ 28 days
f'ci = 3.50 Ksi @ time of stressing

Contractor shall submit elongation calculations based on initial stress at
☒ = 0.9391 Times jacking stress.

One end stressing shall be performed from the long-span end only.

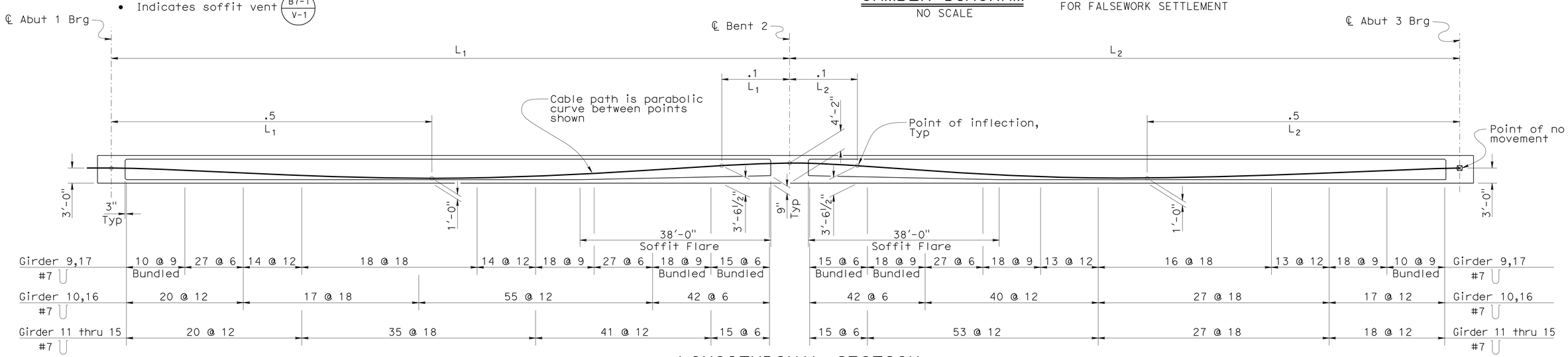

LONGITUDINAL SECTION
No Scale

DESIGN	BY Laith Bahia	CHECKED Shervin Pahlavan	
DETAILS	BY Tim Trefz	CHECKED Shervin Pahlavan	
QUANTITIES	BY Suzan Moradi	CHECKED Andrew Rittenhouse	

STATE OF CALIFORNIA
DEPARTMENT OF TRANSPORTATION

DIVISION OF ENGINEERING SERVICES
STRUCTURE DESIGN
DESIGN BRANCH 15

BRIDGE NO. 53-3040
POST MILE 3.44

ROSECRANS AVENUE UC (REPLACE)
GIRDER LAYOUT STAGE 2

STRUCTURES DESIGN DETAIL SHEET (ENGLISH) (REV. 10/25/05)

ORIGINAL SCALE IN INCHES FOR REDUCED PLANS 0 1 2 3

CU 07
EA 215931

DISREGARD PRINTS BEARING EARLIER REVISION DATES

REVISION DATES: 10-17-09 12-03-11 1-09-12 01-11-10 02-25-10 07-26-10 02-25-11 07-05-11 11-2-11

SHEET 38 OF 81

FILE => 53-3040-1-g_lo2.dgn

DATE PLOTTED => 28-MAR-2012 TIME PLOTTED => 10:49

DIST	COUNTY	ROUTE	POST MILES TOTAL PROJECT	SHEET No	TOTAL SHEETS
07	LA	5	2.4/4.0	752	1288

Andrew Rittenhouse 12-12-11
REGISTERED CIVIL ENGINEER DATE

3-26-12
PLANS APPROVAL DATE

REGISTERED PROFESSIONAL ENGINEER Andrew P. Rittenhouse No. 61006 Exp. 12-31-12 STATE OF CALIFORNIA

The State of California or its officers or agents shall not be responsible for the accuracy or completeness of electronic copies of this plan sheet.

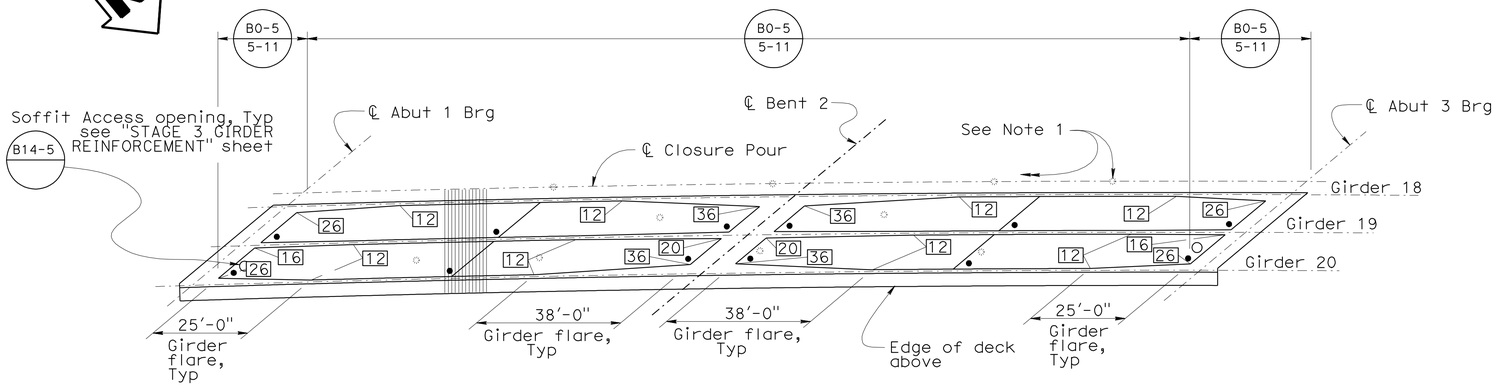

PLAN

1" = 20'

NOTES:
1. Lighting and vent holes installed in soffit closure slab.
2. See "TYPICAL SECTION" sheet for "END DIAPHRAGM" detail.

LEGEND:

▭ Indicates girder stem width, shown in inches

☼ Indicates Soffit Lighting (B7-1 / F-1) See "Road Plans". (Fixtures to be centered between girders and located over each painted lane line, edge of median and centered over Number 3 Lane of completed Rosecrans Ave.)

• Indicates soffit vent (B7-1 / V-1)

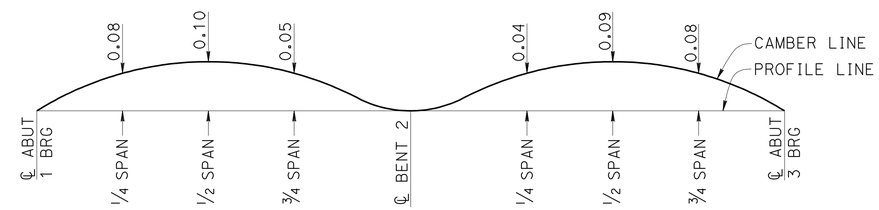

CAMBER DIAGRAM

NO SCALE

DOES NOT INCLUDE ALLOWANCE FOR FALSEWORK SETTLEMENT

PRESTRESSING NOTES

STAGE 3 CONSTRUCTION

270 Ksi Low Relaxation Strand:

P_{jack} = 7200 Kip

Anchor Set = 3/8 in

Total Number of Girders = 3

Distribution of prestress force (Pjack) between girders shall not exceed the ratio of 3:2. Maximum final force variation between girders shall not exceed 725 Kips.

Concrete: f'c = 4.00 Ksi @ 28 days

f'ci = 3.50 Ksi @ time of stressing

Contractor shall submit elongation calculations based on initial stress at ☒ = 0.9391 Times jacking stress.

One end stressing shall be performed from the long-span end only.

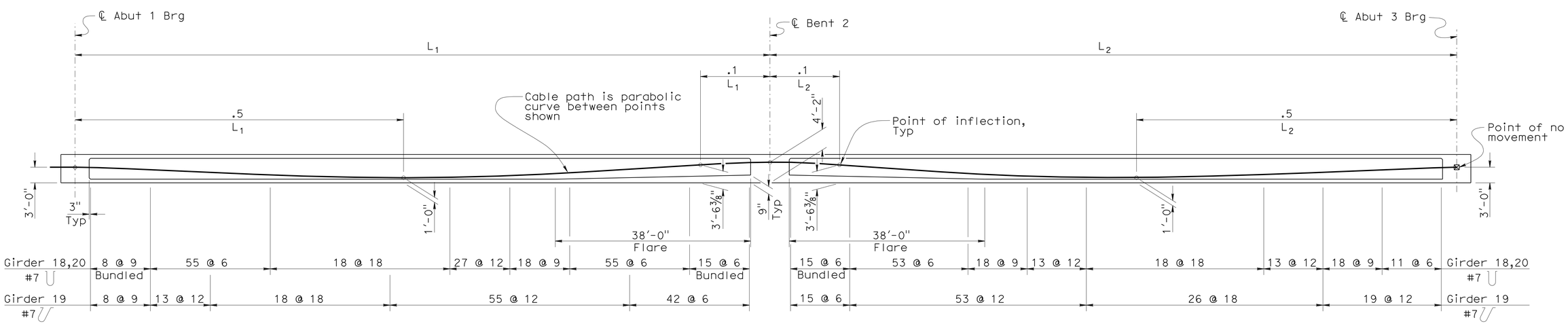

LONGITUDINAL SECTION

No Scale

DESIGN	BY Laith Bahia	CHECKED Shervin Pahlavan	
DETAILS	BY Tim Trefz	CHECKED Shervin Pahlavan	
QUANTITIES	BY Suzan Moradi	CHECKED Andrew Rittenhouse	

STATE OF CALIFORNIA DEPARTMENT OF TRANSPORTATION

DIVISION OF ENGINEERING SERVICES STRUCTURE DESIGN DESIGN BRANCH 15

BRIDGE NO. 53-3040

POST MILE 3.44

ROSECRANS AVENUE UC (REPLACE)
GIRDER LAYOUT STAGE 3

STRUCTURES DESIGN DETAIL SHEET (ENGLISH) (REV. 10/25/05)

ORIGINAL SCALE IN INCHES FOR REDUCED PLANS 0 1 2 3

CU 07
EA 215931

DISREGARD PRINTS BEARING EARLIER REVISION DATES

REVISION DATES: 10-12-09 10-23-09 11-18-09 02-22-10 07-26-10 02-15-11 07-25-11 10-27-11 1-09-12

SHEET 39 OF 81

FILE => 53-3040-1-g_lo3.dgn

USERNAME => s123631 DATE PLOTTED => 28-MAR-2012 TIME PLOTTED => 10:50

DIST	COUNTY	ROUTE	POST MILES TOTAL PROJECT	SHEET No	TOTAL SHEETS
07	LA	5	2.4/4.0	753	1288

Andrew Rittenhouse 12-12-11
REGISTERED CIVIL ENGINEER DATE

3-26-12
PLANS APPROVAL DATE

REGISTERED PROFESSIONAL ENGINEER
Andrew P. Rittenhouse
No. 61006
Exp. 12-31-12
STATE OF CALIFORNIA

The State of California or its officers or agents shall not be responsible for the accuracy or completeness of electronic copies of this plan sheet.

NOTE:

1. For deck corner reinforcement see "DECK REINFORCEMENT DETAILS" sheet.
2. For location of soffit lighting, see"GIRDER LAYOUT STAGE 1" sheet. Adjust reinforcing as directed by the Engineer to avoid soffit lighting.

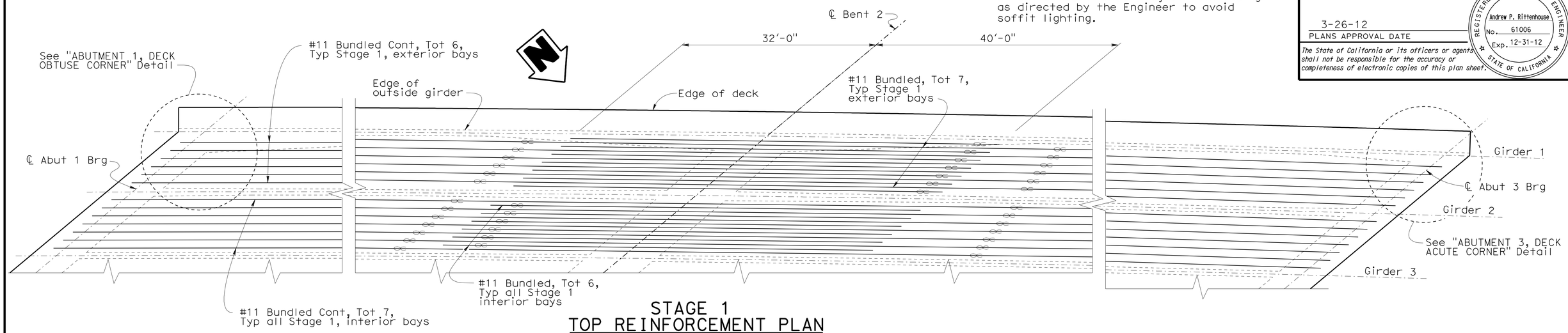

STAGE 1
TOP REINFORCEMENT PLAN

1/8" = 1'-0"

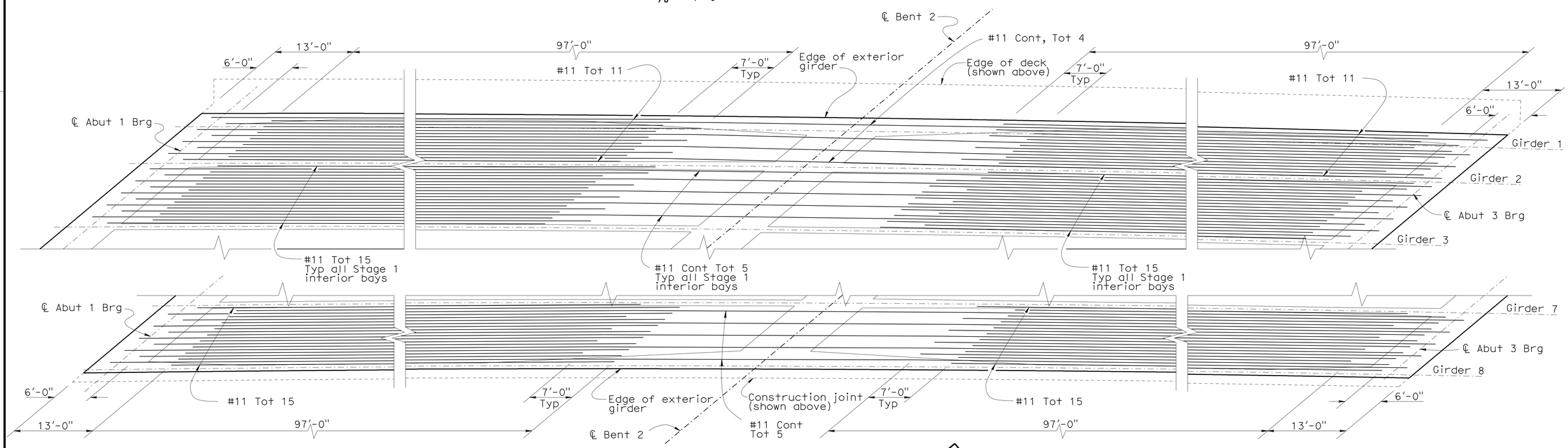

STAGE 1
BOTTOM REINFORCEMENT PLAN

1/8" = 1'-0"

DESIGN	BY Laith Bahia	CHECKED Shervin Pahlavan	
DETAILS	BY Tim Trefz	CHECKED Shervin Pahlavan	
QUANTITIES	BY Suzan Moradi	CHECKED Gabriel Galo	

STATE OF CALIFORNIA
DEPARTMENT OF TRANSPORTATION

DIVISION OF ENGINEERING SERVICES
STRUCTURE DESIGN
DESIGN BRANCH 15

BRIDGE NO. 53-3040
POST MILE 3.44

ROSECRANS AVENUE UC (REPLACE)
STAGE 1 GIRDER REINFORCEMENT

STRUCTURES DESIGN DETAIL SHEET (ENGLISH) (REV. 10/25/05)

ORIGINAL SCALE IN INCHES FOR REDUCED PLANS 0 1 2 3

CU 07
EA 215931

DISREGARD PRINTS BEARING EARLIER REVISION DATES

REVISION DATES: 02-04-10, 04-01-10, 04-14-10, 02-04-11, 03-23-11, 11-18-11, 12-07-11

SHEET 40 OF 81

FILE => 53-3040-m-g_rf01.dgn

USERNAME => s123631 DATE PLOTTED => 28-MAR-2012 TIME PLOTTED => 10:50

DIST	COUNTY	ROUTE	POST MILES TOTAL PROJECT	SHEET No	TOTAL SHEETS
07	LA	5	2.4/4.0	754	1288

Andrew Rittenhouse 12-12-11
REGISTERED CIVIL ENGINEER DATE

3-26-12
PLANS APPROVAL DATE

REGISTERED PROFESSIONAL ENGINEER
Andrew P. Rittenhouse
No. 61006
Exp. 12-31-12
STATE OF CALIFORNIA

The State of California or its officers or agents shall not be responsible for the accuracy or completeness of electronic copies of this plan sheet.

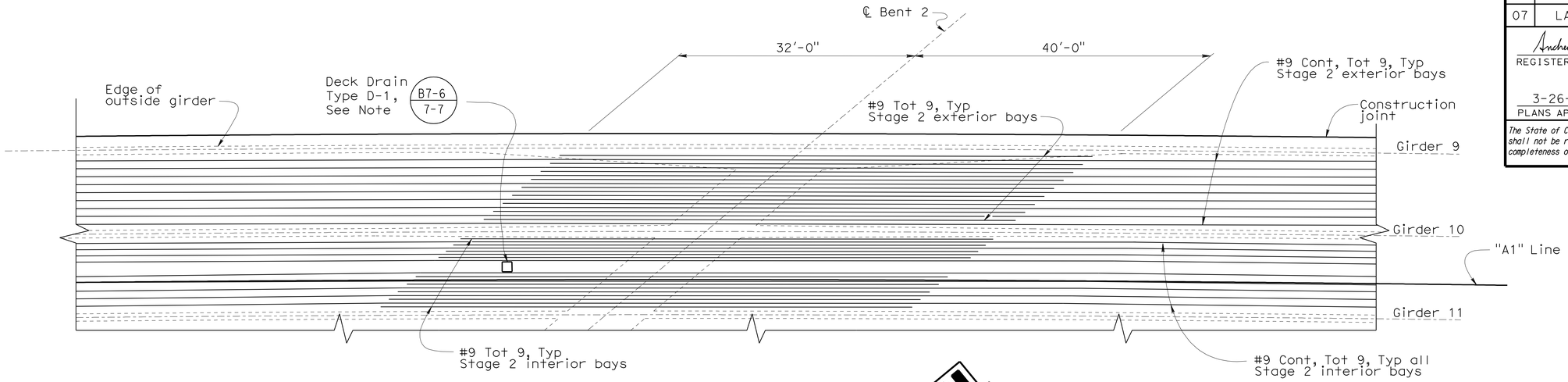

STAGE 2
TOP REINFORCEMENT PLAN

1/8" = 1'-0"

NOTES:

Adjust position of reinforcement to avoid interference with deck drain.

For details not shown see "DECK DRAIN LAYOUT" sheet.

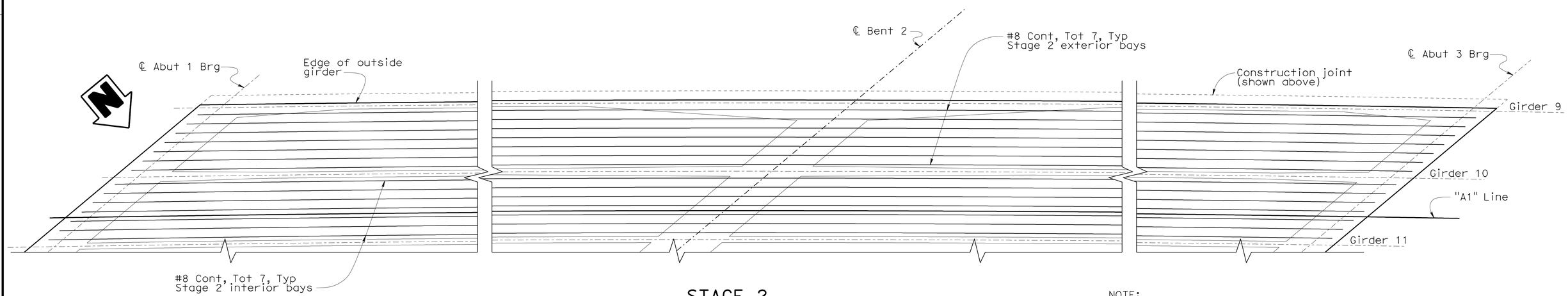

STAGE 2
BOTTOM REINFORCEMENT PLAN

1/8" = 1'-0"

NOTE:

For location of soffit lighting, see "GIRDER LAYOUT STAGE 2" sheet
Adjust reinforcing as directed by the Engineer to avoid soffit lighting.

DESIGN	BY Laith Bahia	CHECKED Shervin Pahlavan	
DETAILS	BY Tim Trefz	CHECKED Shervin Pahlavan	
QUANTITIES	BY Suzan Moradi	CHECKED Gabriel Galo	

STATE OF CALIFORNIA
DEPARTMENT OF TRANSPORTATION

DIVISION OF ENGINEERING SERVICES
STRUCTURE DESIGN
DESIGN BRANCH 15

BRIDGE NO. 53-3040
POST MILE 3.44

ROSECRANS AVENUE UC (REPLACE)
STAGE 2 GIRDER REINFORCEMENT

STRUCTURES DESIGN DETAIL SHEET (ENGLISH) (REV. 10/25/05)

ORIGINAL SCALE IN INCHES FOR REDUCED PLANS 0 1 2 3

CU 07
EA 215931

DISREGARD PRINTS BEARING EARLIER REVISION DATES

REVISION DATES: 12-08-09 04-12-10 04-14-10 02-01-11 11-15-11 12-07-11

SHEET 41 OF 81

FILE => 53-3040-m-g_rf02.dgn

USERNAME => s123631 DATE PLOTTED => 28-MAR-2012 TIME PLOTTED => 10:50

DIST	COUNTY	ROUTE	POST MILES TOTAL PROJECT	SHEET No	TOTAL SHEETS
07	LA	5	2.4/4.0	755	1288

Andrew Rittenhouse 12-12-11
REGISTERED CIVIL ENGINEER DATE

3-26-12
PLANS APPROVAL DATE

REGISTERED PROFESSIONAL ENGINEER
Andrew P. Rittenhouse
No. 61006
Exp. 12-31-12
STATE OF CALIFORNIA

The State of California or its officers or agents shall not be responsible for the accuracy or completeness of electronic copies of this plan sheet.

NOTES:

1. For deck corner reinforcement see "DECK REINFORCEMENT DETAILS" sheet.
2. For location of soffit lighting, see "GIRDER LAYOUT STAGE 3" sheet. Adjust reinforcing as directed by the Engineer to avoid soffit lighting.
3. Stagger non-continuous bars as indicated.

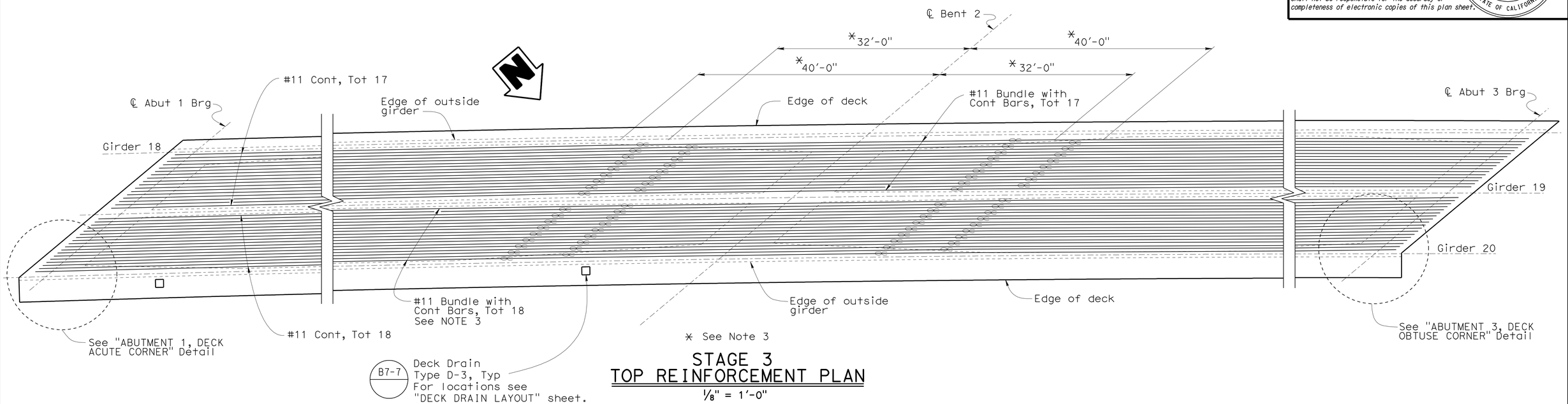

STAGE 3
TOP REINFORCEMENT PLAN

1/8" = 1'-0"

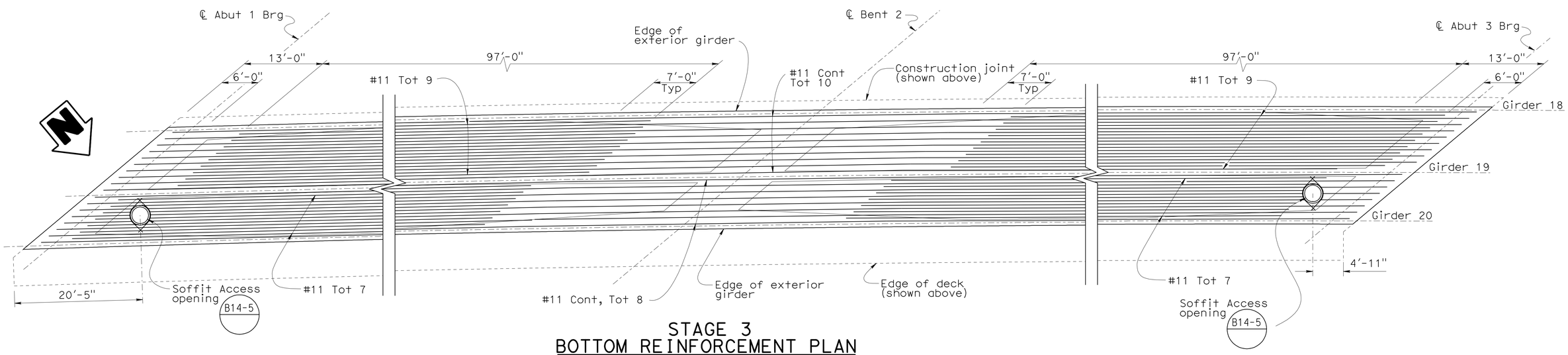

STAGE 3
BOTTOM REINFORCEMENT PLAN

1/8" = 1'-0"

DESIGN	BY Laith Bahia	CHECKED Shervin Pahlavan	
DETAILS	BY Tim Trefz	CHECKED Shervin Pahlavan	
QUANTITIES	BY Suzan Moradi	CHECKED Gabriel Galo	

STATE OF CALIFORNIA
DEPARTMENT OF TRANSPORTATION

DIVISION OF ENGINEERING SERVICES
STRUCTURE DESIGN
DESIGN BRANCH 15

BRIDGE NO. 53-3040
POST MILE 3.44

ROSECRANS AVENUE UC (REPLACE)
STAGE 3 GIRDER REINFORCEMENT

STRUCTURES DESIGN DETAIL SHEET (ENGLISH) (REV. 10/25/05)

ORIGINAL SCALE IN INCHES FOR REDUCED PLANS 0 1 2 3

CU 07
EA 215931

DISREGARD PRINTS BEARING EARLIER REVISION DATES

REVISION DATES: 12-05-09 04-13-10 02-01-11 07-21-11 10-13-11 11-16-11 12-07-11

SHEET 42 OF 81

FILE => 53-3040-m-g_rf03.dgn

USERNAME => s123631 DATE PLOTTED => 28-MAR-2012 TIME PLOTTED => 10:50

DIST	COUNTY	ROUTE	POST MILES TOTAL PROJECT	SHEET No	TOTAL SHEETS
07	LA	5	2.4/4.0	756	1288

Andrew Rittenhouse 12-12-11
REGISTERED CIVIL ENGINEER DATE

3-26-12
PLANS APPROVAL DATE

REGISTERED PROFESSIONAL ENGINEER
Andrew P. Rittenhouse
No. 61006
Exp. 12-31-12
STATE OF CALIFORNIA

The State of California or its officers or agents shall not be responsible for the accuracy or completeness of electronic copies of this plan sheet.

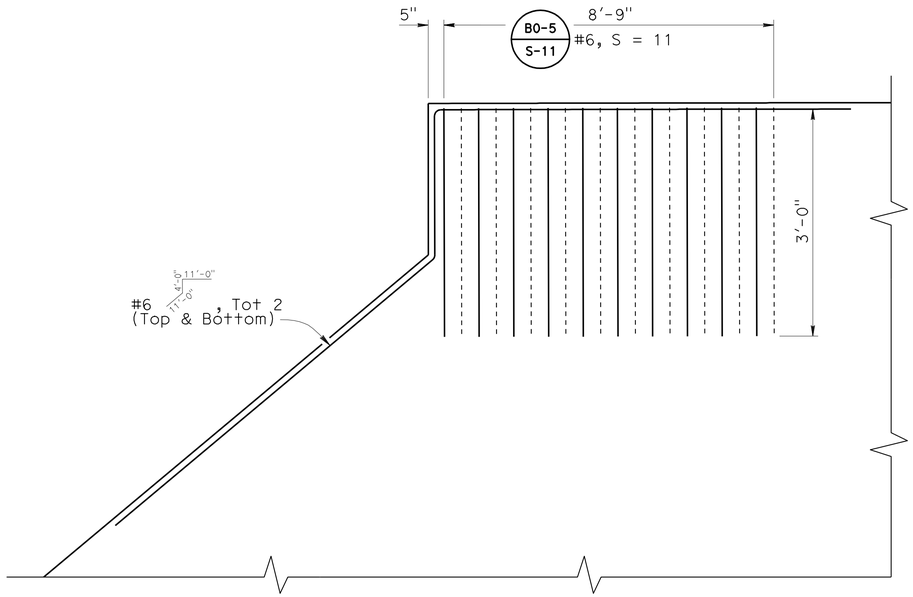

STAGE 1
DECK OBTUSE CORNER
½" = 1'-0"

ABUTMENT 1

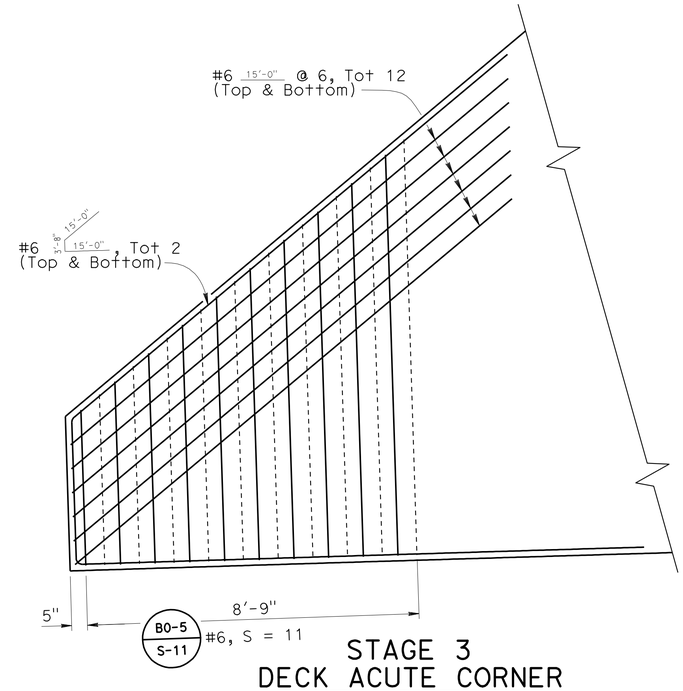

STAGE 3
DECK ACUTE CORNER
½" = 1'-0"

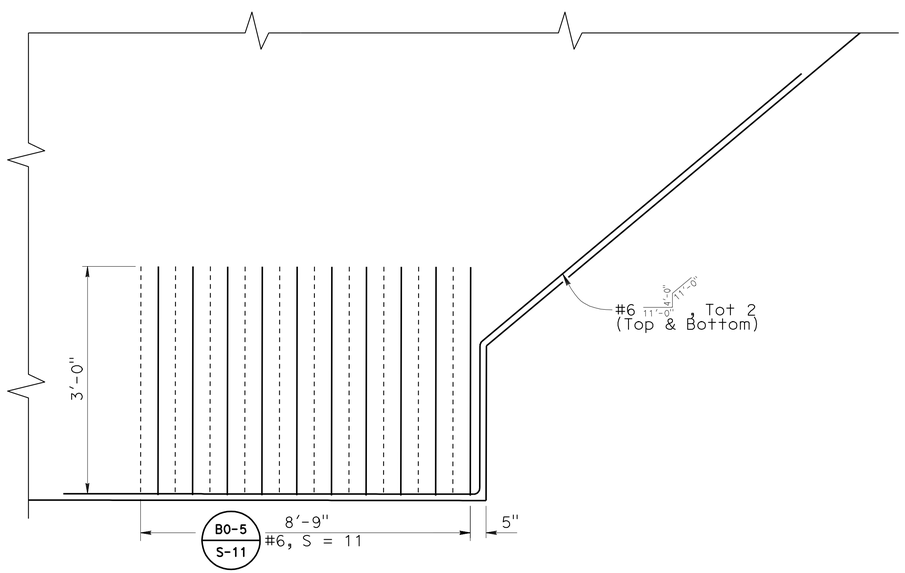

STAGE 3
DECK OBTUSE CORNER
½" = 1'-0"

ABUTMENT 3

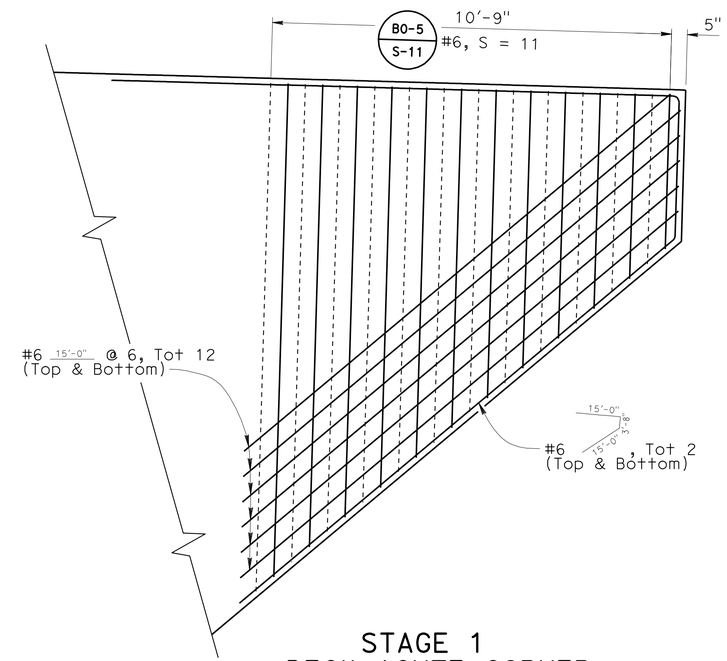

STAGE 1
DECK ACUTE CORNER
½" = 1'-0"

	BY	CHECKED
DESIGN	Laith Bahia	Shervin Pahlavan
DETAILS	Tim Trefz	Shervin Pahlavan
QUANTITIES	Suzan Moradi	Gabriel Galo

STATE OF CALIFORNIA
DEPARTMENT OF TRANSPORTATION

DIVISION OF ENGINEERING SERVICES
STRUCTURE DESIGN
DESIGN BRANCH 15

BRIDGE NO. 53-3040
POST MILE 3.44

ROSECRANS AVENUE UC (REPLACE)
DECK REINFORCEMENT DETAILS

STRUCTURES DESIGN DETAIL SHEET (ENGLISH) (REV. 10/25/05)

ORIGINAL SCALE IN INCHES FOR REDUCED PLANS 0 1 2 3

CU 07
EA 215931

DISREGARD PRINTS BEARING EARLIER REVISION DATES

REVISION DATES: 07-07-11 12-07-11

SHEET 43 OF 81

FILE => 53-3040-m-g_rf04.dgn

USERNAME => s123631 DATE PLOTTED => 28-MAR-2012 TIME PLOTTED => 10:50

DIST	COUNTY	ROUTE	POST MILES TOTAL PROJECT	SHEET No	TOTAL SHEETS
07	LA	5	2.4/4.0	757	1288

Andrew Rittenhouse 12-12-11
REGISTERED CIVIL ENGINEER DATE

3-26-12
PLANS APPROVAL DATE

The State of California or its officers or agents shall not be responsible for the accuracy or completeness of electronic copies of this plan sheet.

REGISTERED PROFESSIONAL ENGINEER
Andrew P. Rittenhouse
No. 61006
Exp. 12-31-12
STATE OF CALIFORNIA

NOTES:

1. For details not shown, see B7-6, B7-7, and B7-8.
2. Use 45° Wye pipe fitting for connection of Type D-1 and D-3 Type Drains to drainage pipe.

LEGEND:

▦ Indicates Deck Drains, see plan for type and locations.

---◄-- Indicates drainage pipe with direction of flow.

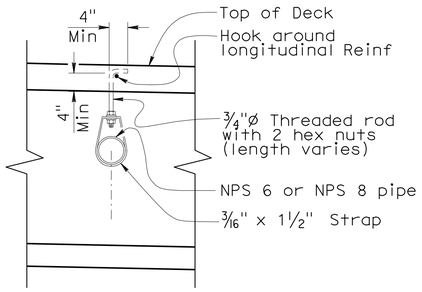

NOTE:
Pipe Hanger spacing = 10'-0" (Max)

HANGER SUPPORT DETAIL

NO SCALE

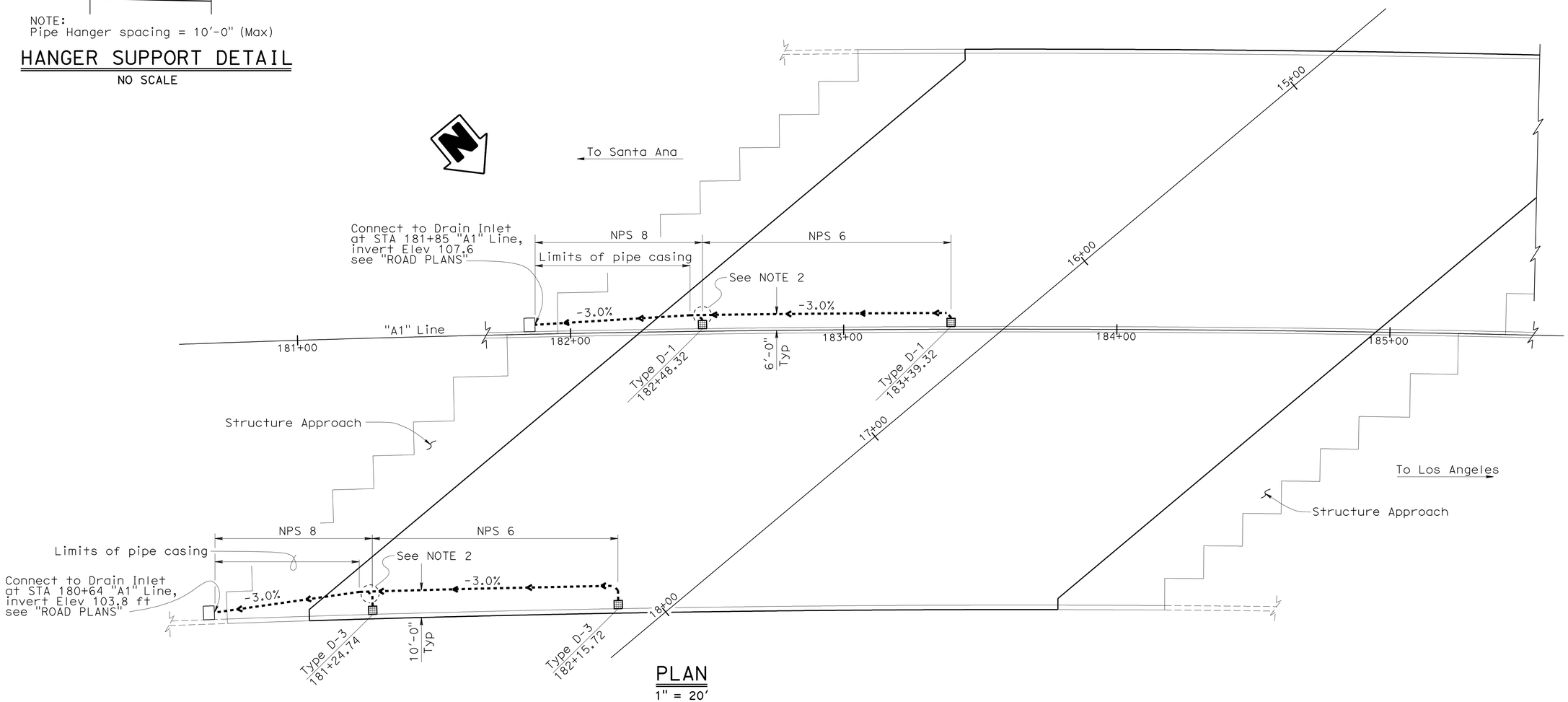

PLAN

1" = 20'

DESIGN	BY Oleg Kreydich	CHECKED Laith Bahia	
DETAILS	BY Tim Trefz	CHECKED Laith Bahia	
QUANTITIES	BY Suzan Moradi	CHECKED Gabriel Galo	

STATE OF CALIFORNIA
DEPARTMENT OF TRANSPORTATION

DIVISION OF ENGINEERING SERVICES
STRUCTURE DESIGN
DESIGN BRANCH 15

BRIDGE NO. 53-3040
POST MILE 3.44

ROSECRANS AVENUE UC (REPLACE)
DECK DRAIN LAYOUT

STRUCTURES DESIGN DETAIL SHEET (ENGLISH) (REV. 10/25/05)

ORIGINAL SCALE IN INCHES FOR REDUCED PLANS 0 1 2 3

CU 07
EA 215931

DISREGARD PRINTS BEARING EARLIER REVISION DATES

REVISION DATES: 03-08-11 08-12-11 12-08-11 01-24-12

SHEET 44 OF 81

FILE => 53-3040-n-dd_lo.dgn

USERNAME => s123631 DATE PLOTTED => 28-MAR-2012 TIME PLOTTED => 10:50

DIST	COUNTY	ROUTE	POST MILES TOTAL PROJECT	SHEET No	TOTAL SHEETS
07	LA	5	2.4/4.0	758	1288

Andrew Rittenhouse 12-12-11
REGISTERED CIVIL ENGINEER DATE

3-26-12
PLANS APPROVAL DATE

REGISTERED PROFESSIONAL ENGINEER Andrew P. Rittenhouse No. 61006 Exp. 12-31-12 STATE OF CALIFORNIA

The State of California or its officers or agents shall not be responsible for the accuracy or completeness of electronic copies of this plan sheet.

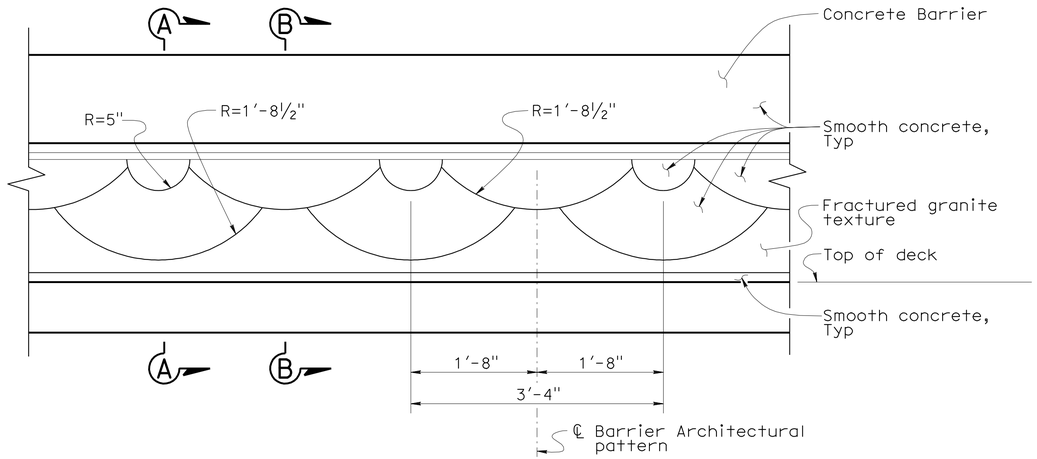

CONCRETE BARRIER TYPE 736 (MOD 1)
1" = 1'-0"

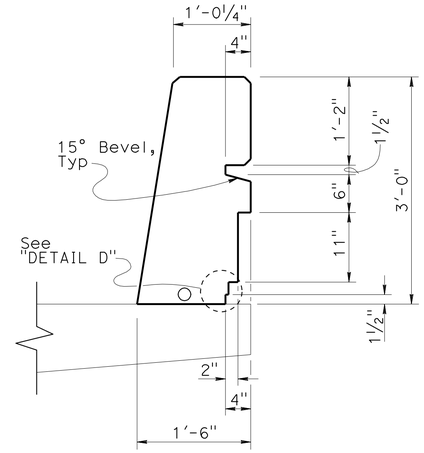

SECTION A-A
1" = 1'-0"

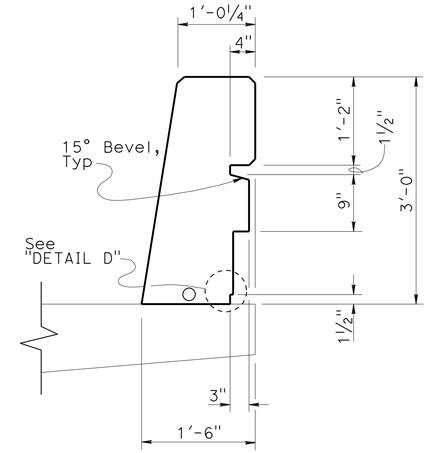

SECTION B-B
1" = 1'-0"

For details not shown see B11-56

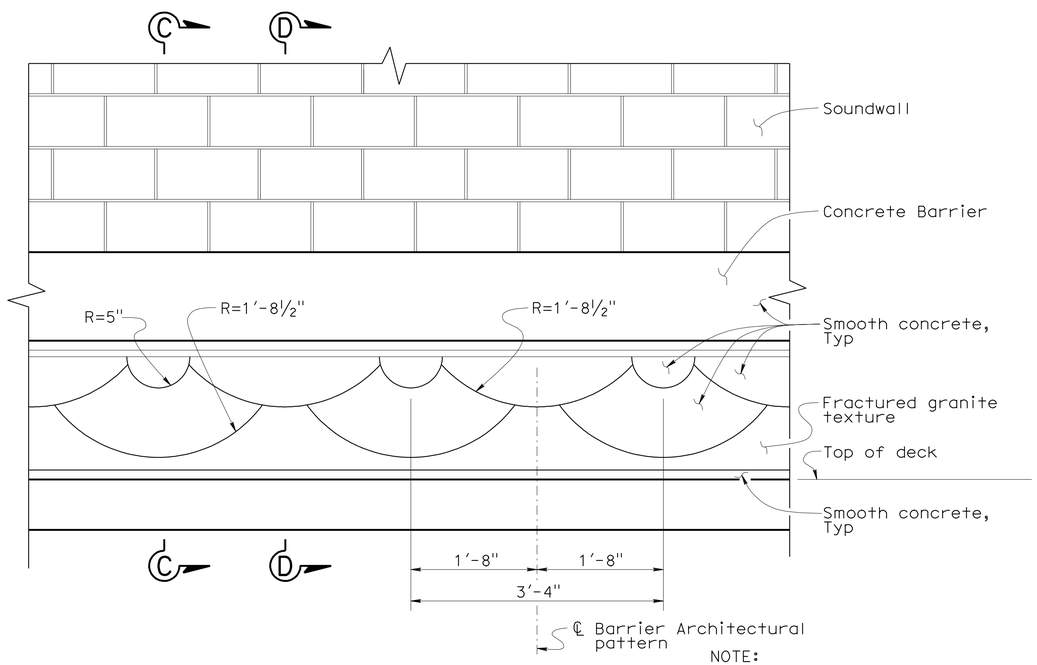

NOTE:
Concrete Barrier Type 736 (Mod 2) shown,
Concrete Barrier Type 736A Mod 2) similar.

CONCRETE BARRIER TYPE 736 (MOD 2)
1" = 1'-0"

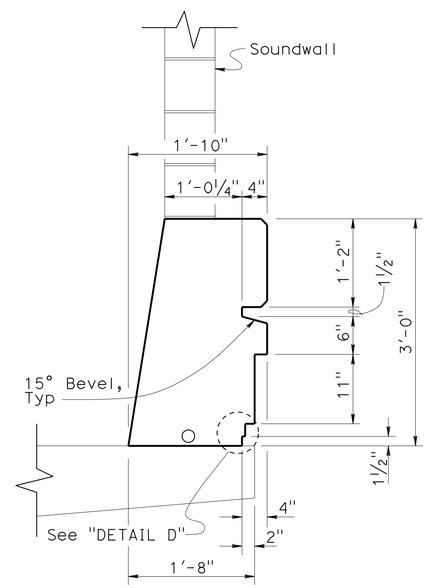

SECTION C-C
1" = 1'-0"

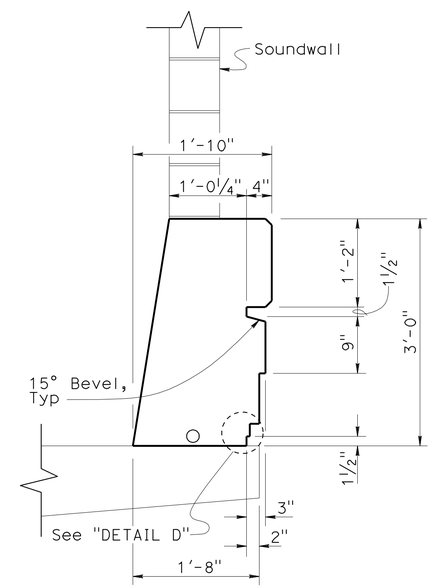

SECTION D-D
1" = 1'-0"

For details not shown see B11-56

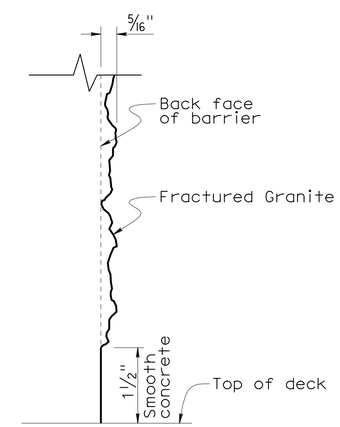

DETAIL D
NO SCALE

DESIGN	BY Isaac Tasabia	CHECKED H. Chavez	
DETAILS	BY Tim Trefz	CHECKED H. Chavez	
QUANTITIES	BY Suzan Moradi	CHECKED Gabriel Galo	

STATE OF CALIFORNIA
DEPARTMENT OF TRANSPORTATION

DIVISION OF ENGINEERING SERVICES
STRUCTURE DESIGN
DESIGN BRANCH 15

BRIDGE NO. 53-3040
POST MILE 3.44

ROSECRANS AVENUE UC (REPLACE)
BARRIER ARCHITECTURAL DETAILS NO. 1

STRUCTURES DESIGN DETAIL SHEET (ENGLISH) (REV. 10/25/05)

ORIGINAL SCALE IN INCHES FOR REDUCED PLANS 0 1 2 3

CU 07
EA 215931

DISREGARD PRINTS BEARING EARLIER REVISION DATES

REVISION DATES: 07-16-10 09-20-10 02-08-11 07-08-11 12-01-11 2-10-12 3-10-12

SHEET 45 OF 81

FILE => 53-3040-p-brdt01.dgn

USERNAME => s123631 DATE PLOTTED => 28-MAR-2012 TIME PLOTTED => 12:34

Dist	COUNTY	ROUTE	POST MILES TOTAL PROJECT	SHEET No.	TOTAL SHEETS
07	LA	5	2.4/4.0	759	1288

George Olguin
LICENSED LANDSCAPE ARCHITECT

3-26-12
PLANS APPROVAL DATE

LICENSED LANDSCAPE ARCHITECT
GEORGE OLGUIN
No. 4333
George Olguin
Signature
08-31-12
Renewal Date
10-10-10
Date
STATE OF CALIFORNIA

THE STATE OF CALIFORNIA OR ITS OFFICERS OR AGENTS SHALL NOT BE RESPONSIBLE FOR THE ACCURACY OR COMPLETENESS OF SCANNED COPIES OF THIS PLAN SHEET.

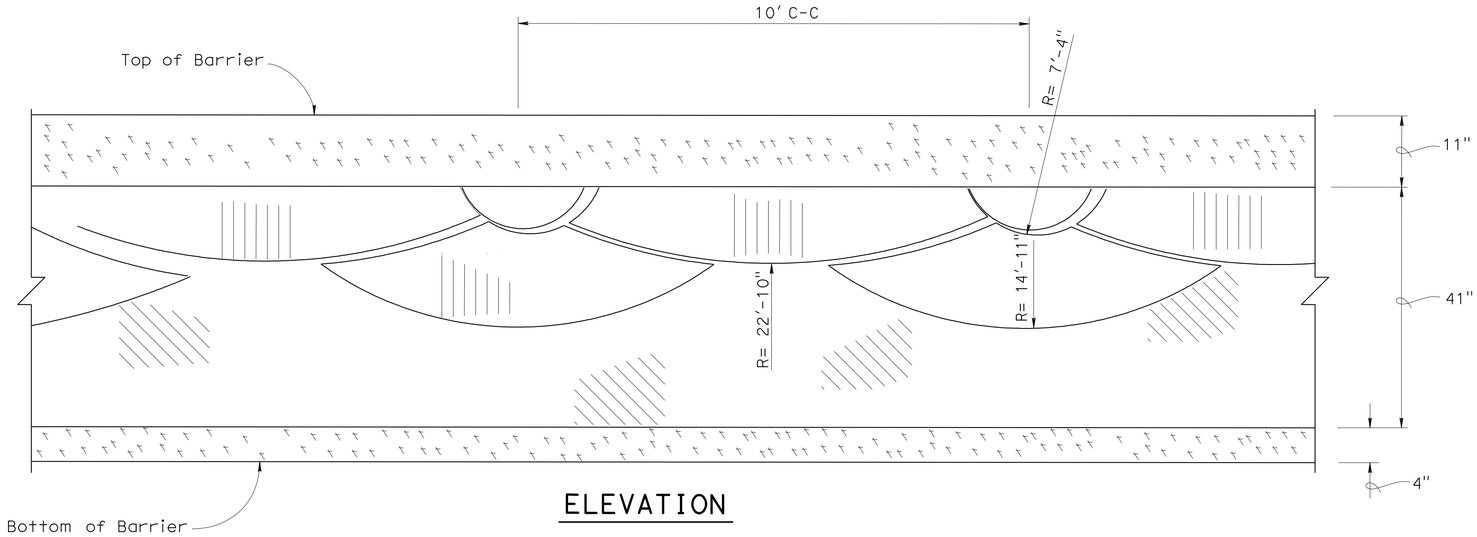

ELEVATION

CONCRETE BARRIER TYPE 60GA (MOD) ARCHITECTURAL SURFACE TREATMENT (SCALLOP WALL PATTERN)

No Scale

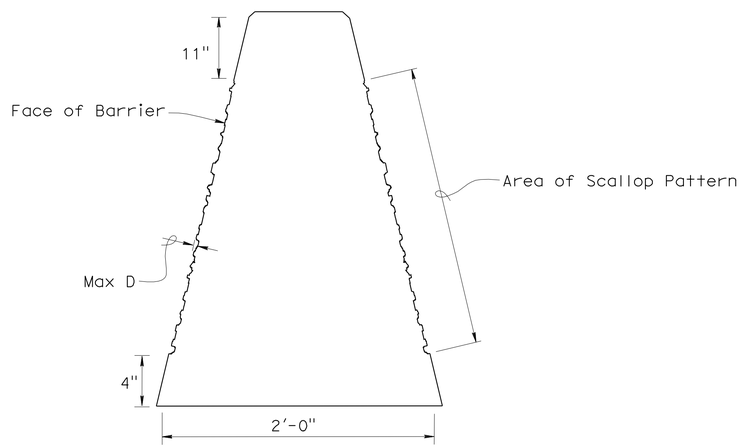

Note:
For details not shown see A76D

TYPICAL SECTION

CONCRETE BARRIER TYPE 60GA (MOD) (SCALLOP PATTERN DIFFERENTIAL)

No Scale

Legend:

- Smooth Finish
- Light Fractured Granite Finish Max D 1/4"-1/2"
- Heavy Fractured Granite Finish Max D 3/4"-1"

	BY	CHECKED
DESIGN	George Olguin	Jennifer Taira
DETAILS	Herman Mauroschadt	Jennifer Taira
QUANTITIES	Suzan Moradi	Gabriel Galo

STATE OF CALIFORNIA
DEPARTMENT OF TRANSPORTATION

DIVISION OF ENGINEERING SERVICES
STRUCTURE DESIGN
DESIGN BRANCH 15

BRIDGE NO. 53-3040
POST MILE 3.44

ROSECRANS AVENUE UC (REPLACE)
BARRIER ARCHITECTURAL DETAILS NO. 2

STRUCTURES DESIGN DETAIL SHEET (ENGLISH) (REV. 10/25/05)

ORIGINAL SCALE IN INCHES FOR REDUCED PLANS 0 1 2 3

CU 07
EA 215931

DISREGARD PRINTS BEARING EARLIER REVISION DATES 2-3-12

REVISION DATES

SHEET 46 OF 81

FILE => 53-3040-p-brdt02.dgn

USERNAME => s123631 DATE PLOTTED => 28-MAR-2012 TIME PLOTTED => 10:51

ARCHITECTURAL ABBREVIATIONS

&	AND
∟	ANGLE
℄	CENTER LINE
Ø	DIAMETER OR ROUND
□	SQUARE
d	PENNY
°	DEGREE
AB	ANCHOR BOLT
ABUT	ABUTMENT
ABV	ABOVE
AC	ASPHALT CONCRETE
ACOUS	ACOUSTICAL
ADJ	ADJUSTABLE
ALT	ALTERNATE
ALUM	ALUMINUM
APA	AMERICAN PLYWOOD ASSOCIATION
ARCH	ARCHITECTURAL, ARCHITECT
ASPH	ASPHALT
BD	BOARD
BIT	BITUMINOUS
BLDG	BUILDING
BLK	BLOCK
BLKG	BLOCKING
BM	BEAM
BN	BOUNDARY NAILING
BOT	BOTTOM
BR	BRIDGE
BTM	BOTTOM
BTWN	BETWEEN
BUR	BUILT-UP-ROOFING
CJ	CONTROL JOINT
CL	CHAIN LINK
CAB	CABINET
CB	CATCH BASIN
CEM	CEMENT
CER	CERAMIC
CH	CLOTHES HOOK
CIDH	CAST IN DRILLED HOLE
CIP	CAST IN PLACE
CKBD	CHALKBOARD
CLG	CEILING
CMU	CONCRETE MASONRY UNIT
CLO	CLOSET
CLR	CLEAR
COL	COLUMN
CONC	CONCRETE
CONN	CONNECTION
CONST	CONSTRUCTION
CONT	CONTINUOUS
CORR	CORRIDOR
CPT	CARPET
CT	CERAMIC TILE
CTR	CENTER
CTSK	COUNTERSUNK
CY	CUBIC YARD
DBL	DOUBLE
DEPT	DEPARTMENT
DET	DETAIL
DF	DOUGLAS FIR
DIA	DIAMETER
DIM	DIMENSION
DN	DOWN
DP	DEEP
DR	DOOR
DS	DOWNSPOUT
DWG	DRAWING
DWR	DRAWER
(E)	EXISTING
E	EAST
EA	EACH
EF	EXHAUST FAN
EHD	ELECTRIC HAND DRYER
EJ	EXPANSION JOINT
EL	ELEVATION (HEIGHT)
ELEC	ELECTRICAL
ELEV	ELEVATION (VIEW)
ELVR	ELEVATOR
EMER	EMERGENCY
ENCL	ENCLOSURE
EP	EDGE OF PAVEMENT
EQ	EQUAL
EPB	ELECTRICAL PANELBOARD
EQUIP	EQUIPMENT
ESCL	ESCALATOR
ETW	EDGE OF TRAVEL WAY
EWC	ELECTRIC WATER COOLER
EXP	EXPANSION
EXPO	EXPOSED, EXPOSURE
EXT	EXTERIOR
FD	FLOOR DRAIN
FDN	FOUNDATION
FE	FIRE EXTINGUISHER
FEC	FIRE EXTINGUISHER CABINET
FF	FINISH FLOOR
FG	FINISH GRADE
FH	FIRE HYDRANT
FHC	FIRE HOSE CABINET
FHMS	FLATHEAD METAL SCREW
FHWS	FLATHEAD WOOD SCREW
FIN	FINISH
FJ	FLOOR JOIST
FLASH	FLASHING
FLR	FLOOR
FLUOR	FLUORESCENT
FOC	FACE OF CONCRETE
FOF	FACE OF FINISH
FOM	FACE OF MASONRY
FOS	FACE OF STUD
FRMG	FRAMING
FRPP	FIBERGLASS REINFORCED PLASTIC PANEL
FT	FEET, FOOT
FTG	FOOTING
FURR	FURRING
FWY	FREEWAY
GA	GAUGE
GAL	GALLON
GALV	GALVANIZED
GB	GRAB BAR
GI	GALVANIZED IRON
GL	GLASS
GLM	GLUE LAMINATED MEMBER
GLZ	GLAZING
GR	GRADE
GSM	GALVANIZED SHEET METAL
GYP	GYPSUM
GYP SHTG	GYPSUM SHEATHING
HB	HOSE BIB
HC	HOLLOW CORE
HD	HEAD, HOLD DOWN
HDR	HEADER
HDWD	HARDWOOD
HDWR	HARDWARE
HEX	HEXAGONAL
HF	HEMLOCK-FIR
HGR	HANGER
HM	HOLLOW METAL
HORIZ	HORIZONTAL
HP	HIGH POINT
HR	HOUR
HSB	HIGH STRENGTH BOLT
HT	HEIGHT
HVAC	HEATING, VENTILATING, AIR CONDITIONING
HWY	HIGHWAY
ID	INSIDE DIAMETER
IN	INCH
INFO	INFORMATION
INSUL	INSULATION
INT	INTERIOR
JAN	JANITOR
JB	JUNCTION BOX
JH	JOIST HANGER
JST	JOIST
JT	JOINT
KIT	KITCHEN
LAB	LABORATORY
LAV	LAVATORY
LBS	POUNDS
LF	LINEAR FEET
LKR	LOCKER
LLV	LONG LEG VERTICAL
LOL	LAYOUT LINE
LPG	LIQUIFIED PETROLEUM GAS
LS	LAG SCREW
M	METER
MAT	MATERIAL
MAX	MAXIMUM
MB	MACHINE BOLT
MBR	MEMBER
MECH	MECHANICAL
MEMB	MEMBRANE
MET	METAL
MFR	MANUFACTURER
MH	MAN HOLE
MIN	MINIMUM
MIR	MIRROR
MISC	MISCELLANEOUS
mm	MILLIMETER
MO	MASONRY OPENING
MOD	MODIFIED
MTD	MOUNTED
MUL	MULLION
N	NORTH
ND	NAPKIN DISPOSAL
NIC	NOT IN CONTRACT
NO	NUMBER
NOM	NOMINAL
NTS	NOT TO SCALE
OBSC	OBSCURE
OC	OVERCROSSING
OD	OUTSIDE DIAMETER
OFF	OFFICE
OFD	OVERFLOW DRAIN
OG	ORIGINAL GROUND
OH	OVERHEAD
OHWS	OVALHEAD WOOD SCREW
OP	OPERATIONS
OPNG	OPENING
OPP	OPPOSITE
OPT	OPTION, OPTIONAL
P	PITCH
PB	POST BASE
PC	POST CAP
PCC	PORTLAND CEMENT CONCRETE
PDF	POWDER DRIVEN FASTENERS
PH	PHILLIPS HEAD
PL	PLATE
PLAM	PLASTIC LAMINATE
PLAS	PLASTER
PLYWD	PLYWOOD
PMF	PRESSED METAL FRAME
PR	PAIR
PRTN	PARTITION
PT	POINT
PTD	PAPER TOWEL DISPENSER
PTD/R	PAPER TOWEL DISPENSER /RECEPTACLE
PVC	POLYVINYL CHLORIDE
PWB	PREFABRICATED WOOD I BEAM
QT	QUARRY TILE
(R)	RELOCATED
R	RADIUS, RISER
R/W	RIGHT OF WAY
RD	ROOF DRAIN
RDWD	REDWOOD
REF	REFERENCE
REFG	REFRIGERATOR
REINF	REINFORCED(ING)
REQ	REQUIRED
RFG	ROOFING
RFSWN	ROUGHSAWN
RH	ROUND HEAD
RHWS	ROUND HEAD WOOD SCREWS
RJ	ROOF JOIST
RM	ROOM
RO	ROUGH OPENING
RSWN	RESAWN
RTE	ROUTE
RW	RETAINING WALL
S	SOUTH
SC	SOLID CORE
SCHED	SCHEDULE
SD	SOAP DISPENSER
SDST	SELF DRILLING SELF TAPPING
SF	SQUARE FEET
SH	SHELF
SHWR	SHOWER
SHT	SHEET
SHTG	SHEATHING
SIM	SIMILAR
SL	SCORE LINE
SMS	SHEET METAL SCREW
SOHD	SECTIONAL OVERHEAD DOOR
SPEC	SPECIFICATION
SPS	STRUCTURAL PLYWOOD SHEATHING
SQ	SQUARE
SRRA	SAFETY ROADSIDE REST AREA
SS	SERVICE SINK
SST	STAINLESS STEEL
STA	STATION
STAG	STAGGER
STD	STANDARD
STL	STEEL
STOR	STORAGE
STRUC	STRUCTURAL
SUSP	SUSPENDED
T	TREAD
T&G	TONGUE & GROOVE
TB	TOLL BOOTH
TEL	TELEPHONE
TEMP	TEMPERED
TER	TERRAZZO
THK	THICK
THLD	THRESHOLD
TJ	TOOLED JOINT
TKBD	TACKBOARD
TN	TOE NAIL
TNVM	TAMPON/NAPKIN VENDING MACHINE
TOC	TOP OF CURB OR CONCRETE
TOP	TOP OF PAVEMENT
TOS	TOE OF SLOPE
TOT	TOTAL
TOW	TOP OF WALL
TS	TUBE STEEL
TSCD	TOILET SEAT COVER DISPENSER
TTD	TOILET TISSUE DISPENSER
TTY	TELETYPEWRITER
TYP	TYPICAL
UNF	UNFINISHED
UON	UNLESS OTHERWISE NOTED
UR	URINAL
VAR	VARIES
VCT	VINYL COMPOSITION TILE
VERT	VERTICAL
VEST	VESTIBULE
VR	VENT RISER
VTR	VENT THRU ROOF
W	WEST
W/	WITH
W/O	WITHOUT
WC	WATER CLOSET
WD	WOOD
WDW	WINDOW
WH	WATER HEATER
WP	WORKING POINT
WR	WATER RESISTANT
WSCT	WAINSCOT
WT	WEIGHT
WTPR	WATERPROOFING
WWF	WELDED WIRE FABRIC
YD	YARD

ARCHITECTURAL GENERAL NOTES

1. THE CONTRACTOR SHALL VERIFY ALL CONTROLLING DIMENSIONS AND FIELD CONDITIONS PRIOR TO ORDERING OR FABRICATING ANY MATERIALS OR ASSEMBLIES FOR CONSTRUCTION
2. THE CONTRACTOR SHALL NOTIFY THE ENGINEER IN WRITING OF ANY DISCREPANCIES BETWEEN THESE PLANS AND ACTUAL MEASUREMENTS OR FIELD CONDITIONS PRIOR TO ORDERING OR FABRICATING ANY MATERIALS OR ASSEMBLIES FOR CONSTRUCTION.

DIST	COUNTY	ROUTE	POST MILES TOTAL PROJECT	SHEET No	TOTAL SHEETS
07	LA	5	2.4/4.0	760	1288

LICENSED ARCHITECT — DATE 12/12/11

3-26-12
PLANS APPROVAL DATE

LICENSED ARCHITECT H. Javier Chavez 14073 03-31-13 Renewal Date STATE OF CALIFORNIA

The State of California or its officers or agents shall not be responsible for the accuracy or completeness of electronic copies of this plan sheet.

SYMBOLS FOR ARCHITECTURAL SHEETS

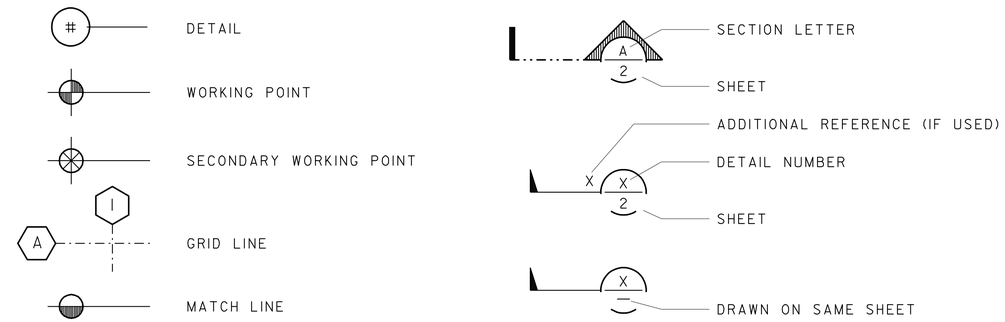

INDEX FOR ARCHITECTURAL SHEETS

A0 ARCHITECTURAL ABBREVIATIONS, SYMBOLS & INDEX
A1 SITE PLAN
A2 ELEVATION AND ARCHITECTURAL MOTIF AT ABUTMENT 1
A3 ELEVATION AND ARCHITECTURAL MOTIF AT ABUTMENT 1
A4 ELEVATION AND ARCHITECTURAL MOTIF AT ABUTMENT 3
A5 ELEVATION AND ARCHITECTURAL MOTIF AT ABUTMENT 3
A6 SECTIONS AT ABUTMENTS 1 AND 3
A7 ARCHITECTURAL MOTIF DETAILS AT ABUTMENT 1 & 3
A8 ARCHITECTURAL TILE MOTIF DETAILS
A9 ELEVATION AND ARCHITECTURAL MOTIF AT ABUTMENT 1
A10 ELEVATION AND ARCHITECTURAL MOTIF AT ABUTMENT 1
A11 ELEVATION AND ARCHITECTURAL MOTIF AT ABUTMENT 3
A12 ELEVATION AND ARCHITECTURAL MOTIF AT ABUTMENT 3
A13 ARCHITECTURAL TILE FINISH SCHEDULE AT ABUTMENT 1
A14 ARCHITECTURAL TILE FINISH SCHEDULE AT ABUTMENT 3

	BY	CHECKED
DESIGN	H. CHAVEZ	S. HEATH
DETAILS	S. HEATH	H. CHAVEZ
QUANTITIES	S. Moradi	T. Menard

STATE OF CALIFORNIA
DEPARTMENT OF TRANSPORTATION

DIVISION OF ENGINEERING SERVICES
BRIDGE ARCHITECTURE AND AESTHETICS

BRIDGE NO. 53-3040
POST MILE 3.44

ROSECRANS AVENUE UC (REPLACE)
ARCHITECTURAL ABBREVIATIONS, SYMBOLS & INDEX

SHEET A0

STRUCTURES DESIGN DETAIL SHEET (ENGLISH) (REV. 09-01-10)

ORIGINAL SCALE IN INCHES FOR REDUCED PLANS 0 1 2 3

CU 07
EA 215931

DISREGARD PRINTS BEARING EARLIER REVISION DATES

REVISION DATES 1-20-12

SHEET 47 OF 81

FILE => 53-3040-p-r-a0.dgn

USERNAME => s123631 DATE PLOTTED => 28-MAR-2012 TIME PLOTTED => 10:51

DIST	COUNTY	ROUTE	POST MILES TOTAL PROJECT	SHEET No	TOTAL SHEETS
07	LA	5	2.4/4.0	761	1288

LICENSED ARCHITECT — DATE 12/12/11

PLANS APPROVAL DATE 3-26-12

LICENSED ARCHITECT H. Javier Chavez 14073 03-31-13 Renewal Date STATE OF CALIFORNIA

The State of California or its officers or agents shall not be responsible for the accuracy or completeness of electronic copies of this plan sheet.

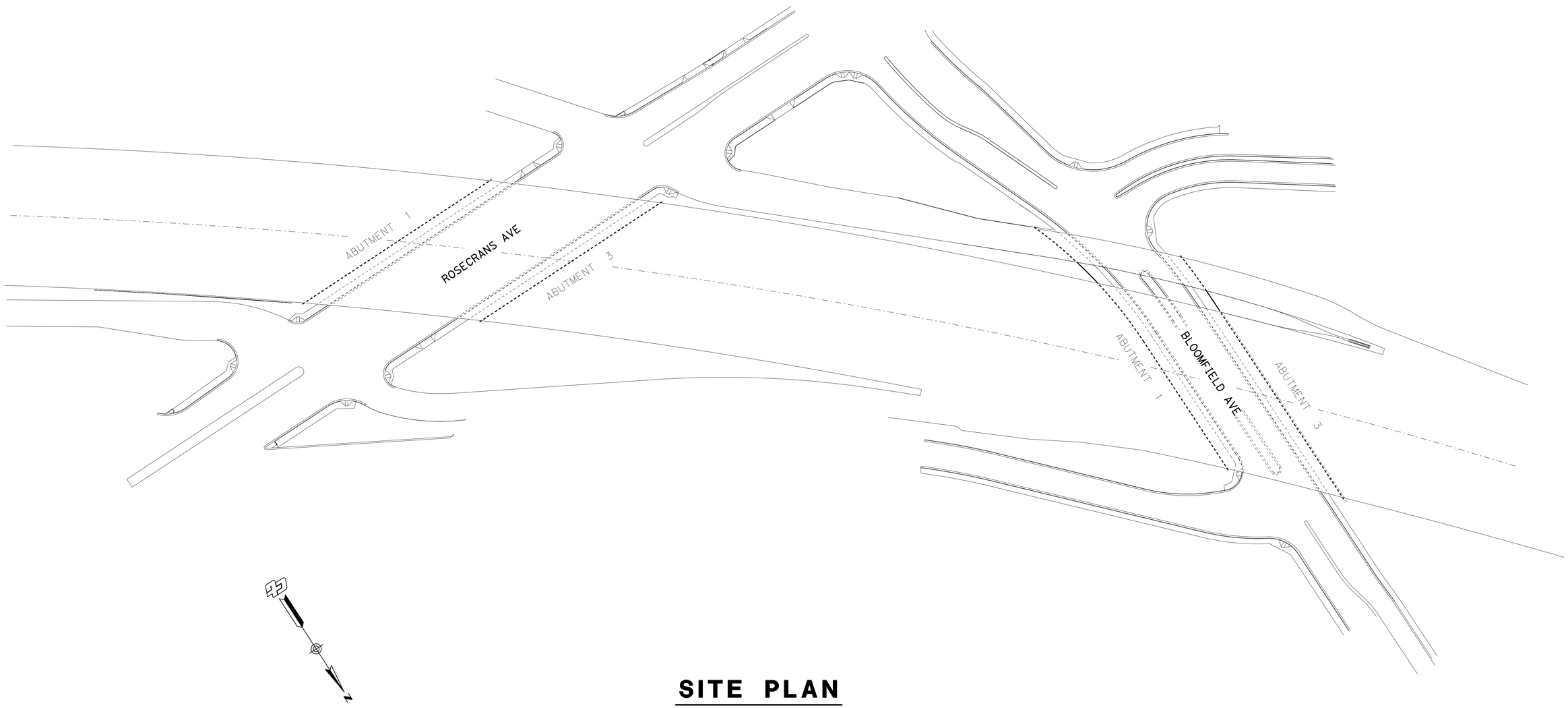

SITE PLAN

NO SCALE

DESIGN	BY H. CHAVEZ	CHECKED S. HEATH	
DETAILS	BY S. HEATH	CHECKED H. CHAVEZ	
QUANTITIES	BY S. Moradi	CHECKED T. Menard	

STATE OF CALIFORNIA
DEPARTMENT OF TRANSPORTATION

DIVISION OF ENGINEERING SERVICES
BRIDGE ARCHITECTURE AND AESTHETICS

BRIDGE NO. 53-3040
POST MILE 3.44

ROSECRANS AVENUE UC (REPLACE)
SITE PLAN

SHEET A1

STRUCTURES DESIGN DETAIL SHEET (ENGLISH) (REV. 09-01-10)

ORIGINAL SCALE IN INCHES FOR REDUCED PLANS 0 1 2 3

CU 07
EA 215931

DISREGARD PRINTS BEARING EARLIER REVISION DATES

REVISION DATES 1-20-12

SHEET 48 OF 81

FILE => 53-3040-p-r-a1.dgn

USERNAME => s123631 DATE PLOTTED => 28-MAR-2012 TIME PLOTTED => 10:51

DIST	COUNTY	ROUTE	POST MILES TOTAL PROJECT	SHEET No	TOTAL SHEETS
07	LA	5	2.4/4.0	762	1288

LICENSED ARCHITECT — DATE 12/12/11

3-26-12
PLANS APPROVAL DATE

LICENSED ARCHITECT H. Javier Chavez 14073 03-31-13 Renewal Date STATE OF CALIFORNIA

The State of California or its officers or agents shall not be responsible for the accuracy or completeness of electronic copies of this plan sheet.

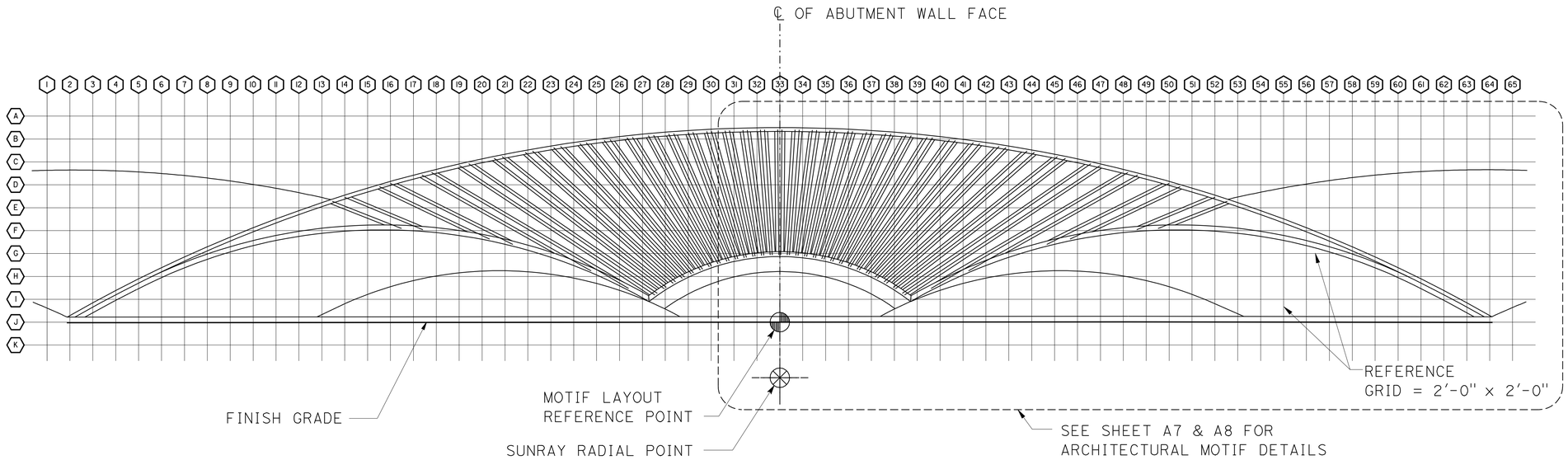

PARTIAL ARCHITECTURAL MOTIF AT SOUTH ABUTMENT 1

NO SCALE

LEGEND:

- TILE-SEE SHT A13 FOR PATTERN LAYOUT
- TEXTURED CONCRETE SURFACE = SPLIT SLATE TEXTURE. SEE DETAIL 1/A6
- SMOOTH CONCRETE SURFACE

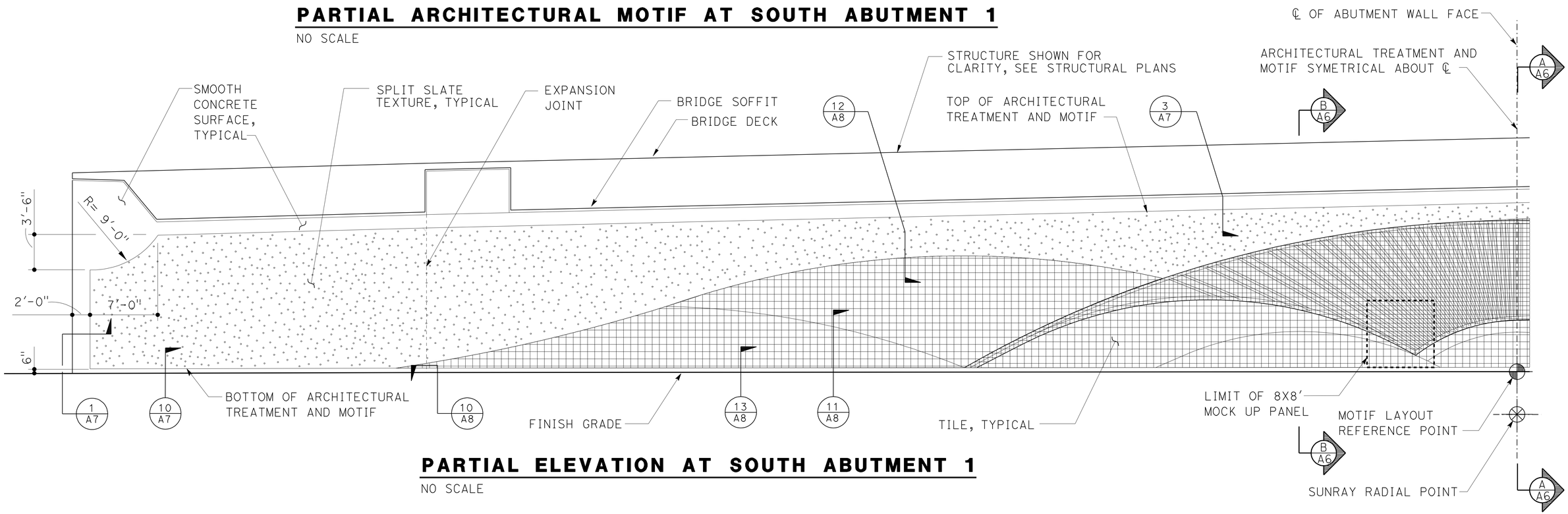

PARTIAL ELEVATION AT SOUTH ABUTMENT 1

NO SCALE

DESIGN	BY H. CHAVEZ	CHECKED S. HEATH	
DETAILS	BY S. HEATH	CHECKED H. CHAVEZ	
QUANTITIES	BY S. Moradi	CHECKED T. Menard	

STATE OF CALIFORNIA DEPARTMENT OF TRANSPORTATION

DIVISION OF ENGINEERING SERVICES BRIDGE ARCHITECTURE AND AESTHETICS

BRIDGE NO. 53-3040 POST MILE 3.44

ROSECRANS AVENUE UC (REPLACE)

ELEVATION AND ARCHITECTURAL MOTIF ABUTMENT 1

SHEET A2

STRUCTURES DESIGN DETAIL SHEET (ENGLISH) (REV. 09-01-10)

ORIGINAL SCALE IN INCHES FOR REDUCED PLANS 0 1 2 3

CU 07
EA 215931

DISREGARD PRINTS BEARING EARLIER REVISION DATES → 1-20-12

REVISION DATES

SHEET 49 OF 81

FILE => 53-3040-p-r-a2.dgn

USERNAME => s123631 DATE PLOTTED => 28-MAR-2012 TIME PLOTTED => 10:51

DIST	COUNTY	ROUTE	POST MILES TOTAL PROJECT	SHEET No	TOTAL SHEETS
07	LA	5	2.4/4.0	763	1288

LICENSED ARCHITECT — DATE 12/12/11

3-26-12
PLANS APPROVAL DATE

LICENSED ARCHITECT H. Javier Chavez 14073 03-31-13 Renewal Date STATE OF CALIFORNIA

The State of California or its officers or agents shall not be responsible for the accuracy or completeness of electronic copies of this plan sheet.

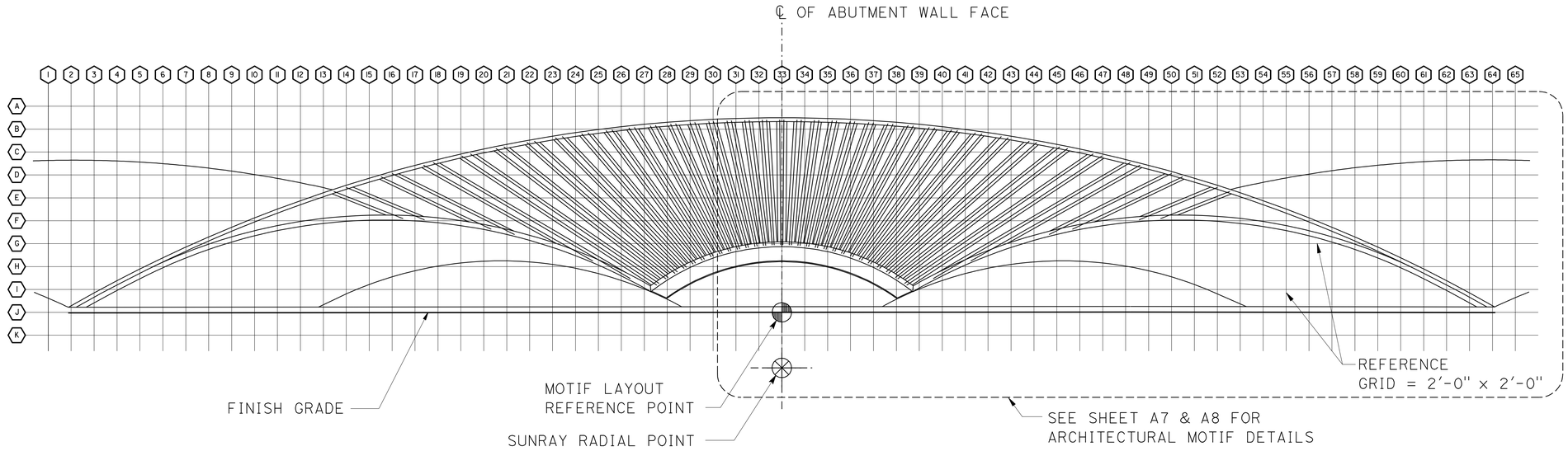

PARTIAL ARCHITECTURAL MOTIF AT SOUTH ABUTMENT 1

NO SCALE

LEGEND:

- TILE-SEE SHT A13 FOR PATTERN LAYOUT
- TEXTURED CONCRETE SURFACE = SPLIT SLATE TEXTURE. SEE DETAIL 1/A6
- SMOOTH CONCRETE SURFACE

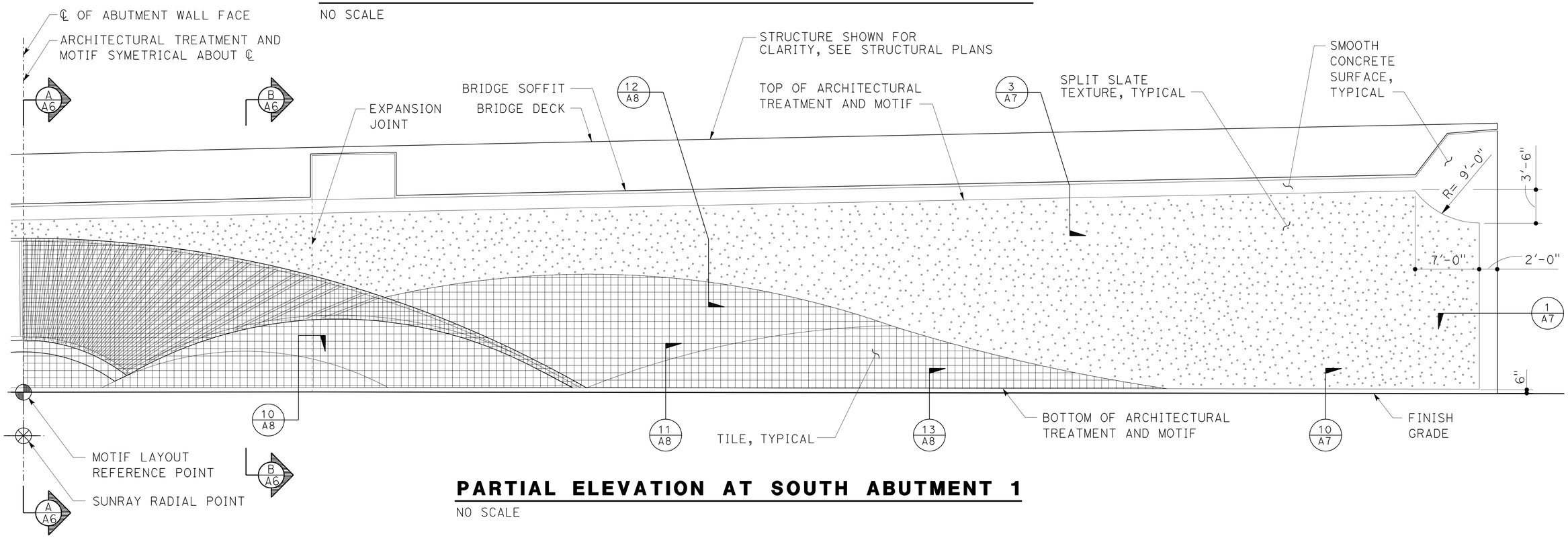

PARTIAL ELEVATION AT SOUTH ABUTMENT 1

NO SCALE

	BY	CHECKED
DESIGN	H. CHAVEZ	S. HEATH
DETAILS	S. HEATH	H. CHAVEZ
QUANTITIES	S. Moradi	T. Menard

STATE OF CALIFORNIA DEPARTMENT OF TRANSPORTATION

DIVISION OF ENGINEERING SERVICES BRIDGE ARCHITECTURE AND AESTHETICS

BRIDGE NO. 53-3040 POST MILE 3.44

ROSECRANS AVENUE UC (REPLACE)

ELEVATION AND ARCHITECTURAL MOTIF ABUTMENT 1

SHEET A3

STRUCTURES DESIGN DETAIL SHEET (ENGLISH) (REV. 09-01-10)

ORIGINAL SCALE IN INCHES FOR REDUCED PLANS 0 1 2 3

CU 07
EA 215931

DISREGARD PRINTS BEARING EARLIER REVISION DATES

REVISION DATES 1-20-12

SHEET 50 OF 81

FILE => 53-3040-p-r-a3.dgn

USERNAME => s123631 DATE PLOTTED => 28-MAR-2012 TIME PLOTTED => 10:51

DIST	COUNTY	ROUTE	POST MILES TOTAL PROJECT	SHEET No	TOTAL SHEETS
07	LA	5	2.4/4.0	764	1288

LICENSED ARCHITECT — DATE 12/12/11

3-26-12
PLANS APPROVAL DATE

LICENSED ARCHITECT H. Javier Chavez 14073 03-31-13 Renewal Date STATE OF CALIFORNIA

The State of California or its officers or agents shall not be responsible for the accuracy or completeness of electronic copies of this plan sheet.

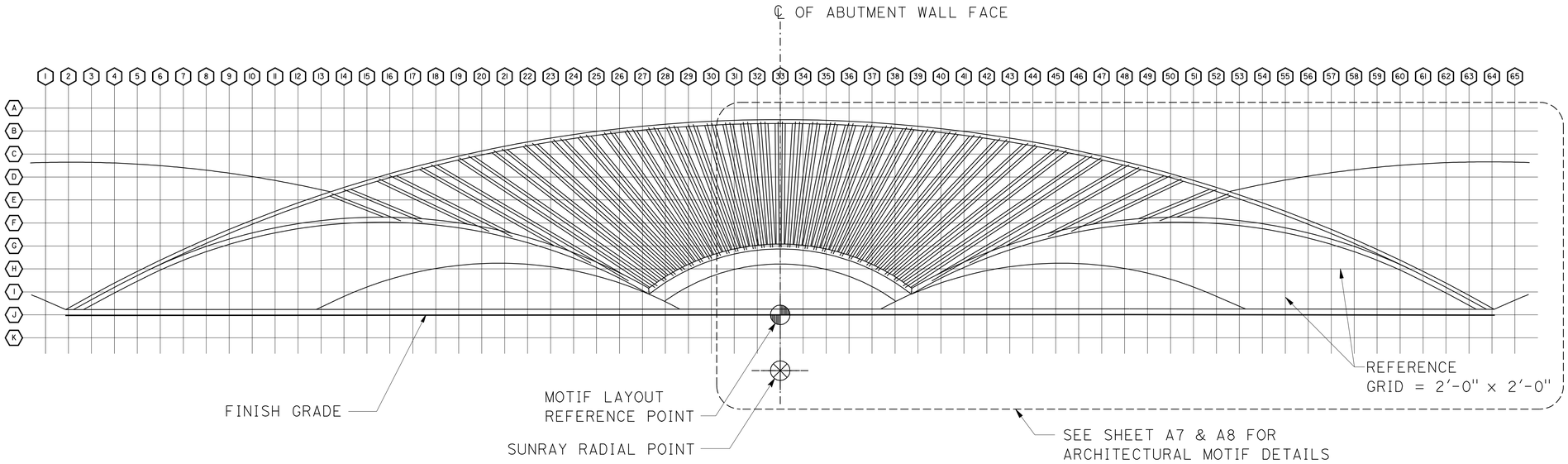

PARTIAL ARCHITECTURAL MOTIF AT NORTH ABUTMENT 3

NO SCALE

LEGEND:

- TILE-SEE SHT A14 FOR PATTERN LAYOUT
- TEXTURED CONCRETE SURFACE = SPLIT SLATE TEXTURE. SEE DETAIL 1/A6
- SMOOTH CONCRETE SURFACE

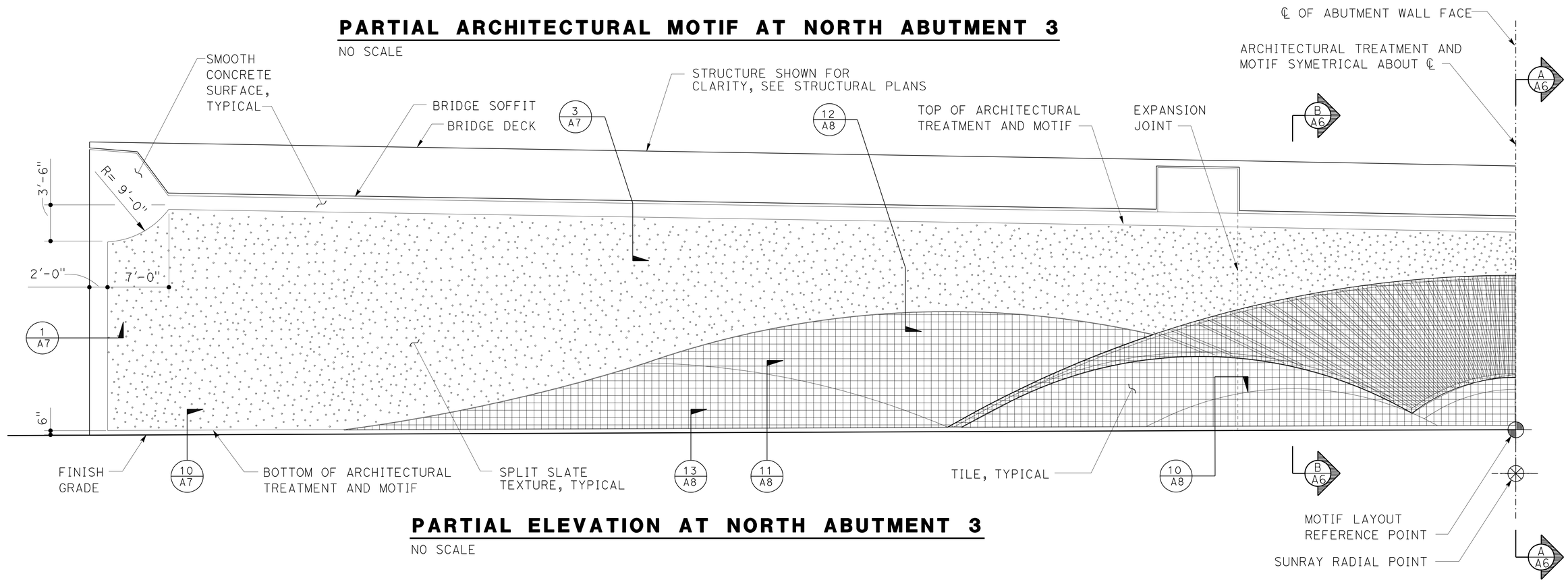

PARTIAL ELEVATION AT NORTH ABUTMENT 3

NO SCALE

DESIGN	BY H. CHAVEZ	CHECKED S. HEATH	
DETAILS	BY S. HEATH	CHECKED H. CHAVEZ	
QUANTITIES	BY S. Moradi	CHECKED T. Menard	

STATE OF CALIFORNIA
DEPARTMENT OF TRANSPORTATION

DIVISION OF ENGINEERING SERVICES
BRIDGE ARCHITECTURE AND AESTHETICS

BRIDGE NO. 53-3040
POST MILE 3.44

ROSECRANS AVENUE UC (REPLACE)
ELEVATION AND ARCHITECTURAL MOTIF ABUTMENT 3

SHEET A4

STRUCTURES DESIGN DETAIL SHEET (ENGLISH) (REV. 09-01-10)

ORIGINAL SCALE IN INCHES FOR REDUCED PLANS 0 1 2 3

CU 07
EA 215931

DISREGARD PRINTS BEARING EARLIER REVISION DATES — REVISION DATES 1-20-12

SHEET 51 OF 81

FILE => 53-3040-p-r-a4.dgn

USERNAME => s123631 DATE PLOTTED => 28-MAR-2012 TIME PLOTTED => 10:51

DIST	COUNTY	ROUTE	POST MILES TOTAL PROJECT	SHEET No	TOTAL SHEETS
07	LA	5	2.4/4.0	765	1288

LICENSED ARCHITECT — DATE 12/12/11

3-26-12
PLANS APPROVAL DATE

LICENSED ARCHITECT H. Javier Chavez 14073 03-31-13 Renewal Date STATE OF CALIFORNIA

The State of California or its officers or agents shall not be responsible for the accuracy or completeness of electronic copies of this plan sheet.

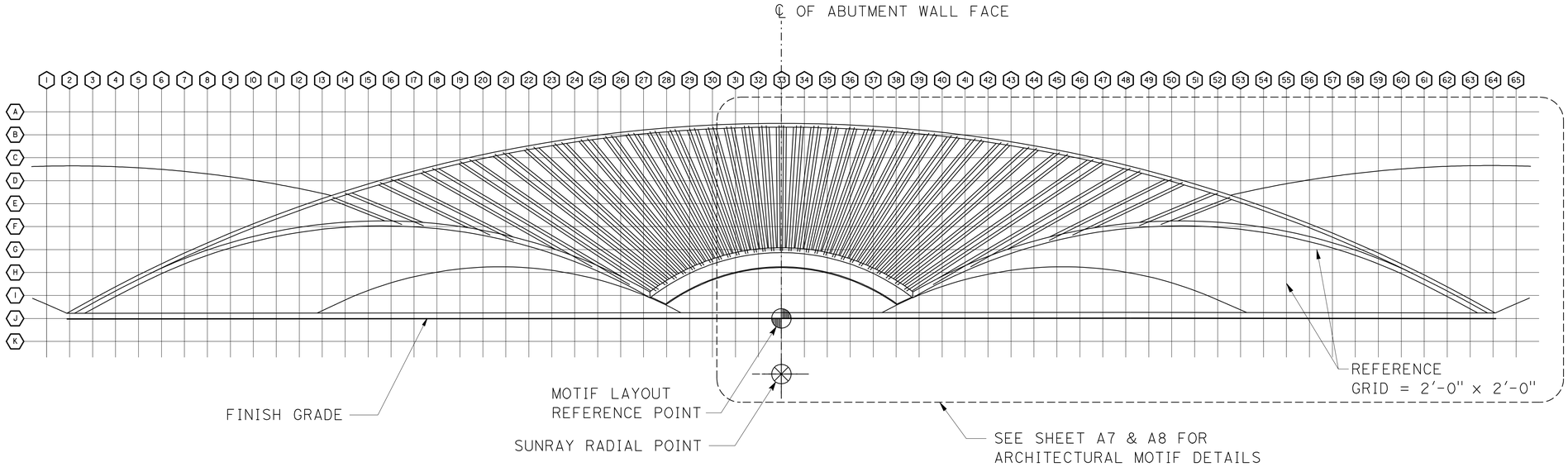

PARTIAL ARCHITECTURAL MOTIF AT NORTH ABUTMENT 3

NO SCALE

LEGEND:

- TILE-SEE SHT A14 FOR PATTERN LAYOUT
- TEXTURED CONCRETE SURFACE = SPLIT SLATE TEXTURE. SEE DETAIL 1/A6
- SMOOTH CONCRETE SURFACE

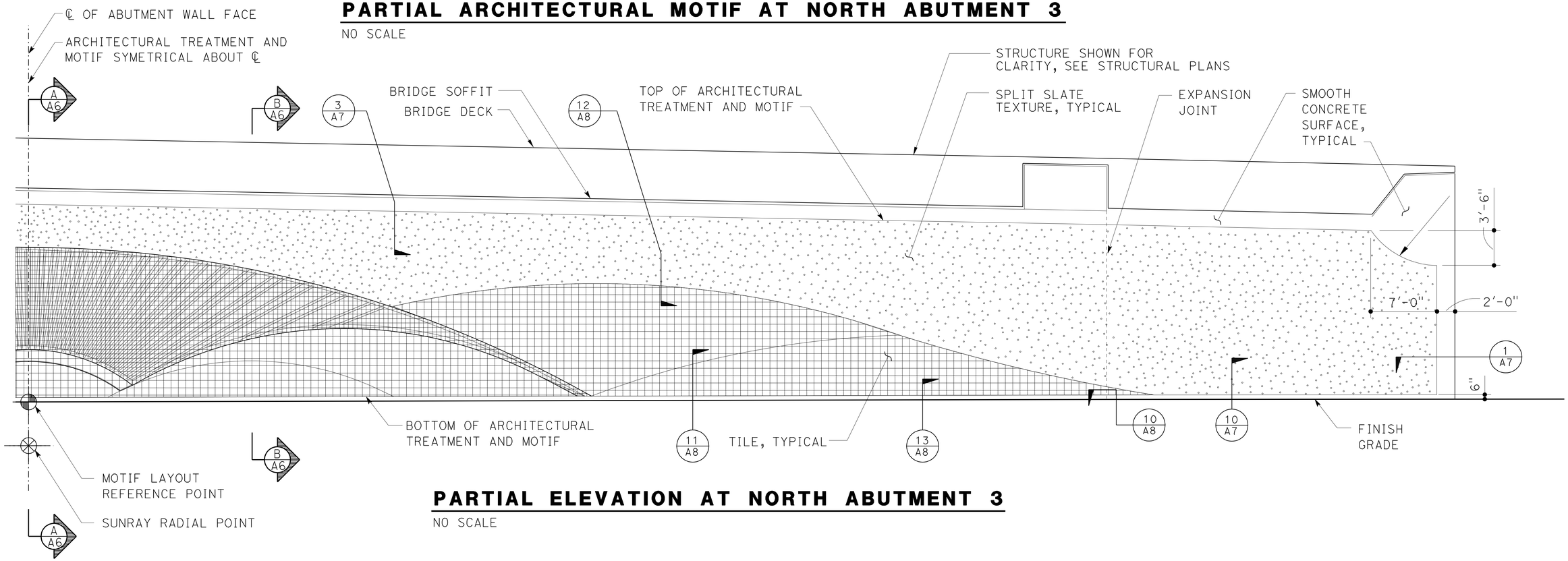

PARTIAL ELEVATION AT NORTH ABUTMENT 3

NO SCALE

DESIGN	BY H. CHAVEZ	CHECKED S. HEATH	
DETAILS	BY S. HEATH	CHECKED H. CHAVEZ	
QUANTITIES	BY S. Moradi	CHECKED T. Menard	

STATE OF CALIFORNIA
DEPARTMENT OF TRANSPORTATION

DIVISION OF ENGINEERING SERVICES
BRIDGE ARCHITECTURE AND AESTHETICS

BRIDGE NO. 53-3040
POST MILE 3.44

ROSECRANS AVENUE UC (REPLACE)
ELEVATION AND ARCHITECTURAL MOTIF ABUTMENT 3

SHEET A5

STRUCTURES DESIGN DETAIL SHEET (ENGLISH) (REV. 09-01-10)

ORIGINAL SCALE IN INCHES FOR REDUCED PLANS 0 1 2 3

CU 07
EA 215931

DISREGARD PRINTS BEARING EARLIER REVISION DATES

REVISION DATES 1-20-12

SHEET 52 OF 81

FILE => 53-3040-p-r-a5.dgn

USERNAME => s123631 DATE PLOTTED => 28-MAR-2012 TIME PLOTTED => 10:52

NOTE: ALL REFERENCE TO SURFACE DIMENSIONS
OF WALL & TILE DETAILS ARE FROM
DATUM 0 = FACE OF ABUTMENT WALL, TYPICAL

DIST	COUNTY	ROUTE	POST MILES TOTAL PROJECT	SHEET No	TOTAL SHEETS
07	LA	5	2.4/4.0	766	1288

LICENSED ARCHITECT — DATE 12/12/11

3-26-12
PLANS APPROVAL DATE

LICENSED ARCHITECT H. Javier Chavez 14073 03-31-13 Renewal Date STATE OF CALIFORNIA

The State of California or its officers or agents shall not be responsible for the accuracy or completeness of electronic copies of this plan sheet.

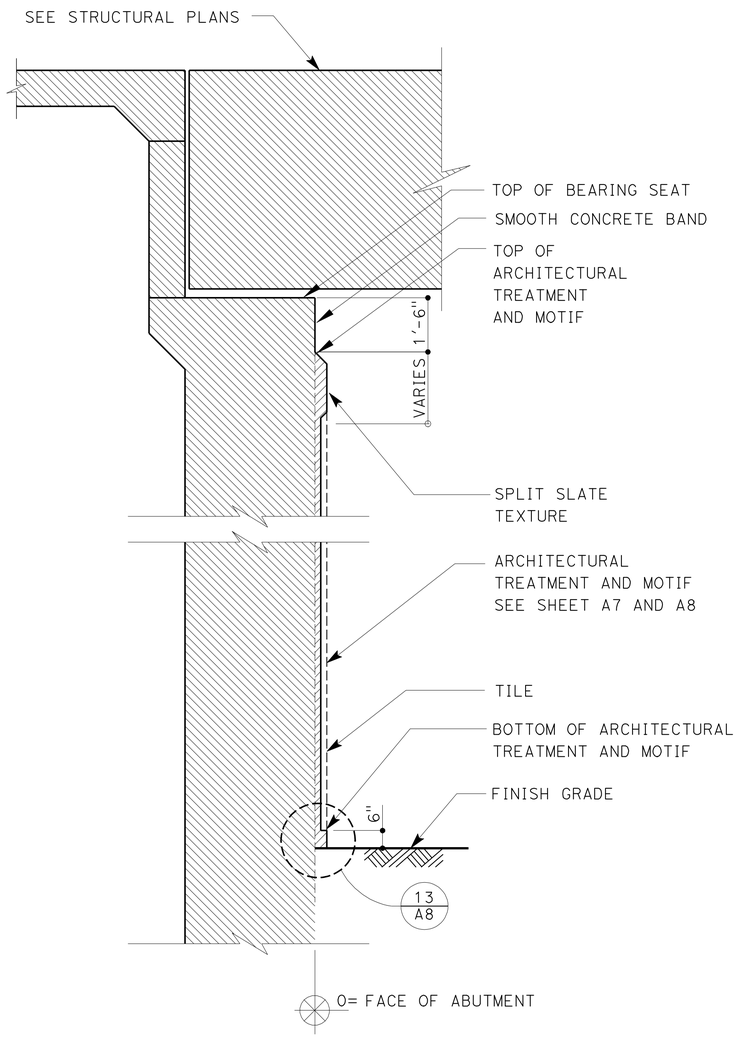

SECTION A-A

NO SCALE

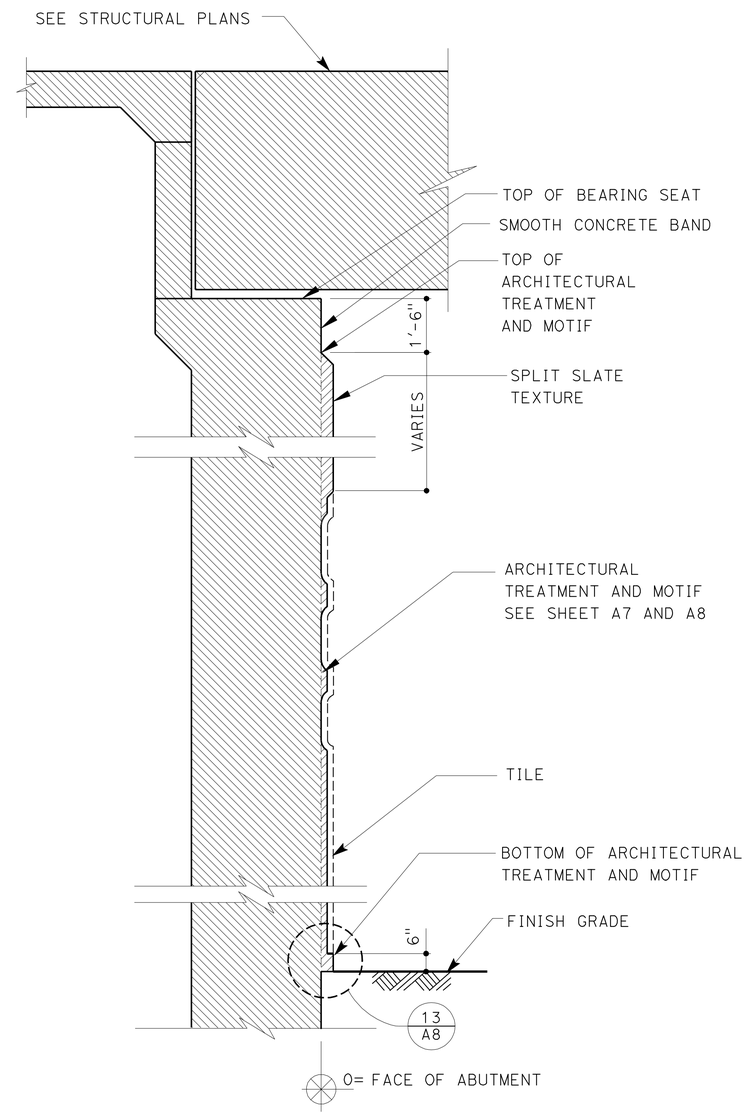

SECTION B-B

NO SCALE

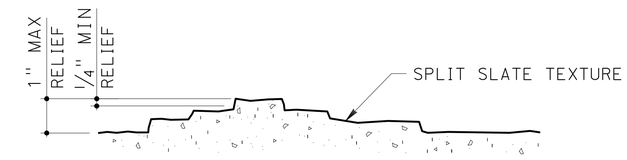

C DETAIL
NO SCALE

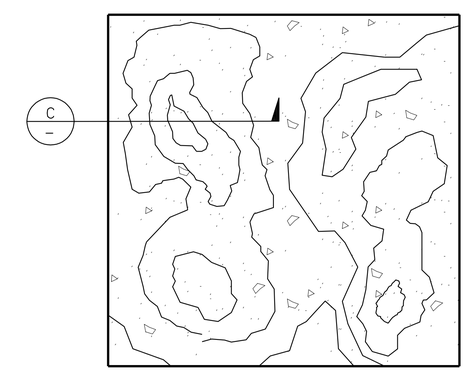

1 **SPLIT SLATE TEXTURE**

NO SCALE

DESIGN	BY H. CHAVEZ	CHECKED S. HEATH	
DETAILS	BY S. HEATH	CHECKED H. CHAVEZ	
QUANTITIES	BY S. Moradi	CHECKED T. Menard	

STATE OF CALIFORNIA
DEPARTMENT OF TRANSPORTATION

DIVISION OF ENGINEERING SERVICES
BRIDGE ARCHITECTURE AND AESTHETICS

BRIDGE NO. 53-3040
POST MILE 3.44

ROSECRANS AVENUE UC (REPLACE)
SECTIONS AT ABUTMENTS 1 AND 3

SHEET A6

STRUCTURES DESIGN DETAIL SHEET (ENGLISH) (REV. 09-01-10)

ORIGINAL SCALE IN INCHES FOR REDUCED PLANS 0 1 2 3

CU 07
EA 215931

DISREGARD PRINTS BEARING EARLIER REVISION DATES

REVISION DATES 1-20-12

SHEET 53 OF 81

FILE => 53-3040-p-r-a6.dgn

USERNAME => s123631 DATE PLOTTED => 28-MAR-2012 TIME PLOTTED => 10:52

DIST	COUNTY	ROUTE	POST MILES TOTAL PROJECT	SHEET No	TOTAL SHEETS
07	LA	5	2.4/4.0	767	1288

LICENSED ARCHITECT — DATE 12/12/11

3-26-12
PLANS APPROVAL DATE

LICENSED ARCHITECT H. Javier Chavez 14073 03-31-13 Renewal Date STATE OF CALIFORNIA

The State of California or its officers or agents shall not be responsible for the accuracy or completeness of electronic copies of this plan sheet.

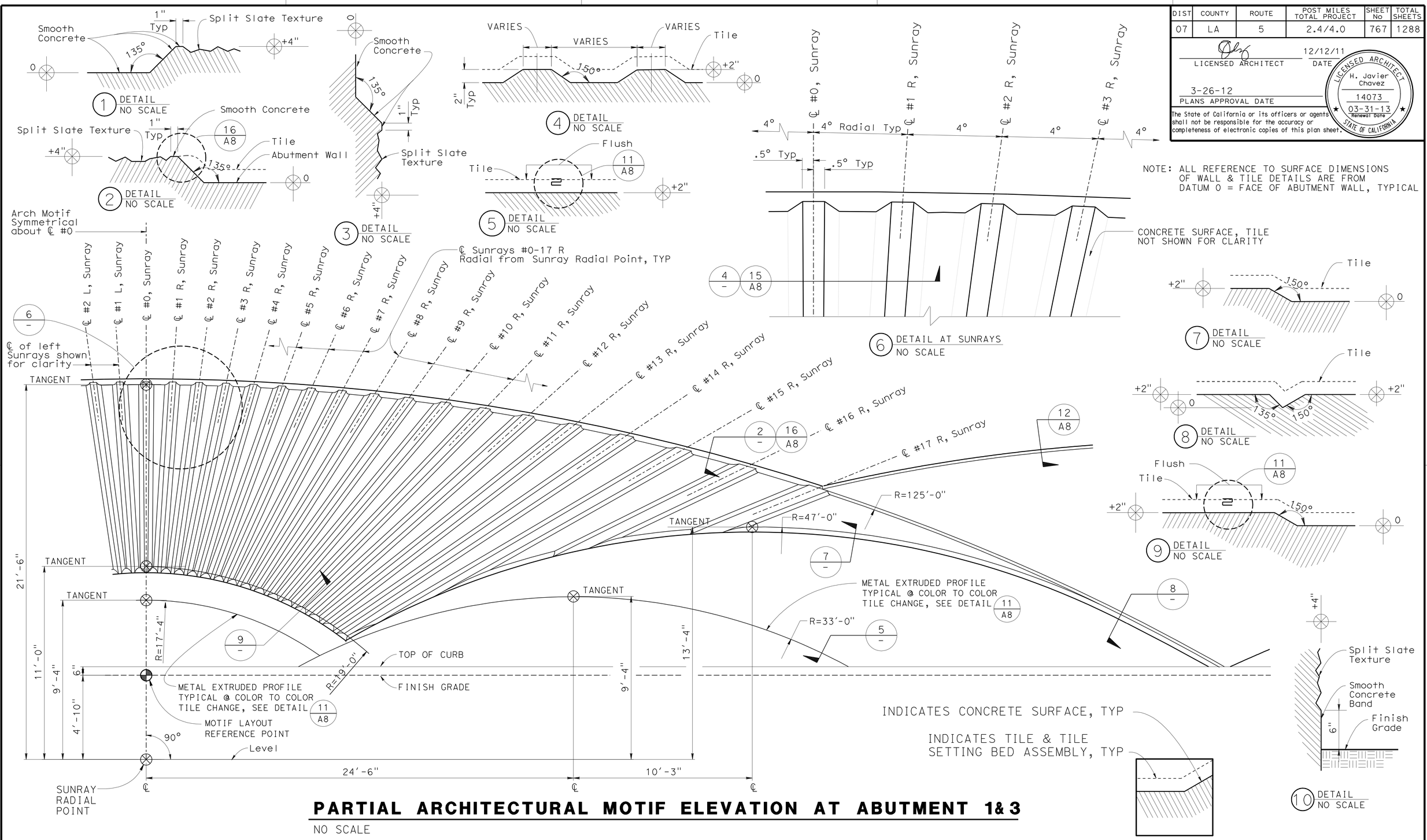

NOTE: ALL REFERENCE TO SURFACE DIMENSIONS OF WALL & TILE DETAILS ARE FROM DATUM 0 = FACE OF ABUTMENT WALL, TYPICAL

PARTIAL ARCHITECTURAL MOTIF ELEVATION AT ABUTMENT 1&3

NO SCALE

DESIGN	BY H. CHAVEZ	CHECKED S. HEATH	
DETAILS	BY S. HEATH	CHECKED H. CHAVEZ	
QUANTITIES	BY S. Moradi	CHECKED T. Menard	

STATE OF CALIFORNIA DEPARTMENT OF TRANSPORTATION

DIVISION OF ENGINEERING SERVICES BRIDGE ARCHITECTURE AND AESTHETICS

BRIDGE NO. 53-3040 POST MILE 3.44

ROSECRANS AVENUE UC (REPLACE)

ARCHITECTURAL MOTIF DETAILS AT ABUTMENTS 1 & 3

SHEET A7

STRUCTURES DESIGN DETAIL SHEET (ENGLISH) (REV. 09-01-10)

ORIGINAL SCALE IN INCHES FOR REDUCED PLANS 0 1 2 3

CU 07
EA 215931

DISREGARD PRINTS BEARING EARLIER REVISION DATES

REVISION DATES 1-20-12

SHEET 54 OF 81

FILE => 53-3040-p-r-a7.dgn

USERNAME => s123631 DATE PLOTTED => 28-MAR-2012 TIME PLOTTED => 10:52

DIST	COUNTY	ROUTE	POST MILES TOTAL PROJECT	SHEET No	TOTAL SHEETS
07	LA	5	2.4/4.0	768	1288

LICENSED ARCHITECT — DATE 12/12/11

PLANS APPROVAL DATE 3-26-12

LICENSED ARCHITECT H. Javier Chavez 14073 03-31-13 Renewal Date STATE OF CALIFORNIA

The State of California or its officers or agents shall not be responsible for the accuracy or completeness of electronic copies of this plan sheet.

NOTE: ALL REFERENCE TO SURFACE DIMENSIONS OF WALL DETAILS ARE FROM DATUM 0 = FACE OF ABUTMENT TYPICAL

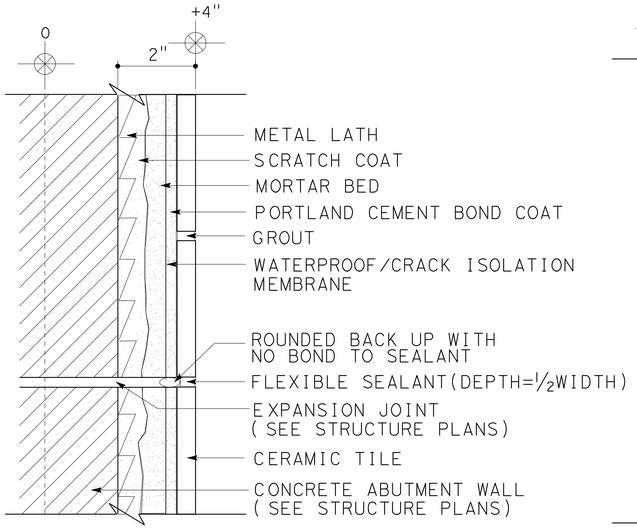

10 EXPANSION JOINT DETAIL
NO SCALE

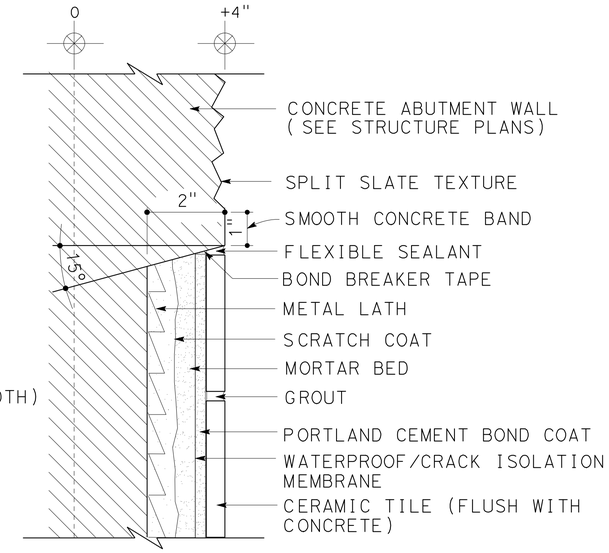

12 TEXTURE/TILE DETAIL
NO SCALE

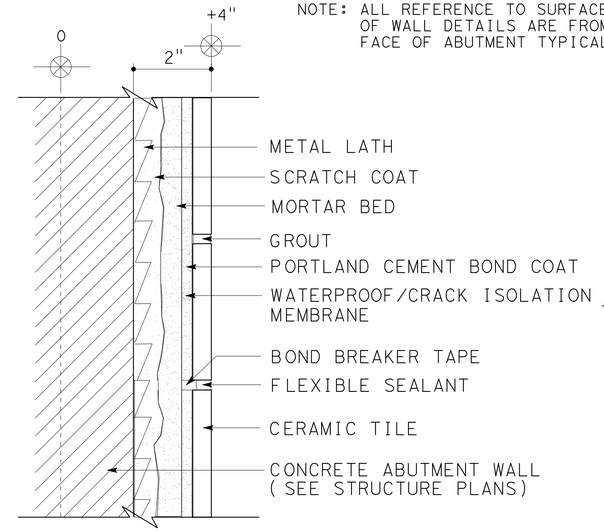

14 MOVEMENT JOINT DETAIL
NO SCALE

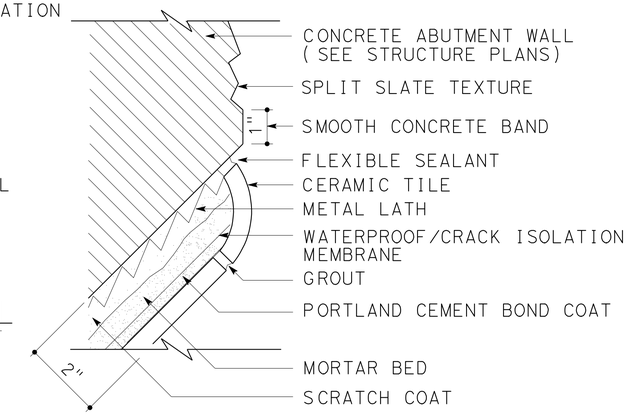

16 TEXTURE/TILE DETAIL
NO SCALE

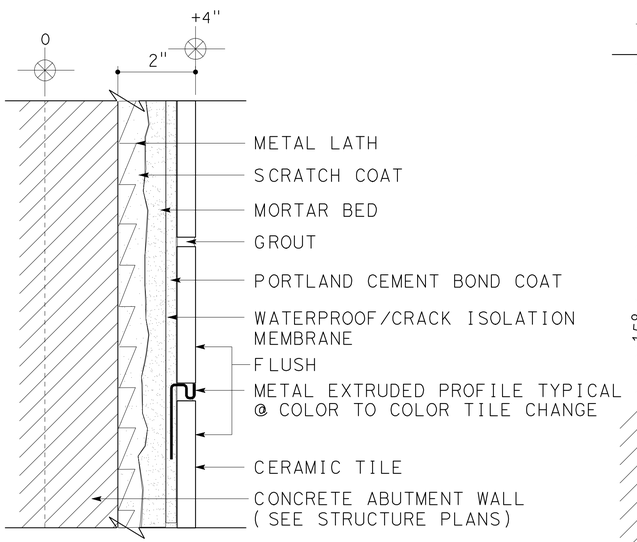

11 COLOR TO COLOR TILE TRIM DETAIL
NO SCALE

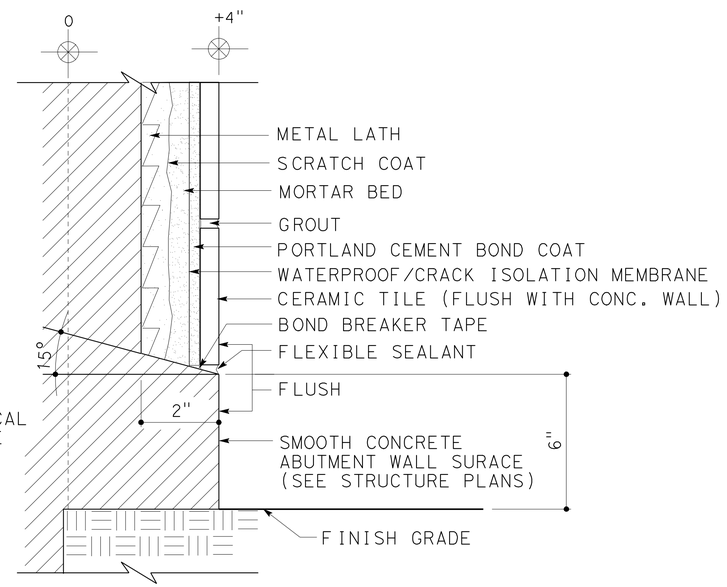

13 SMOOTH CONCRETE/TILE DETAIL
NO SCALE

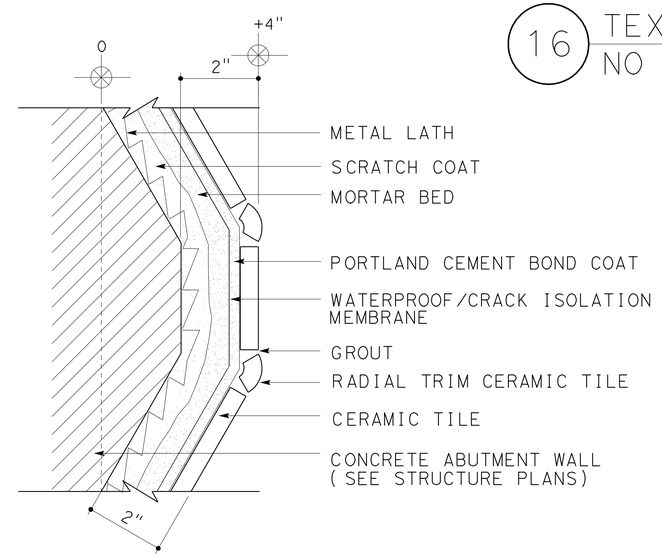

15 TILE DETAIL
NO SCALE

DESIGN	BY H. CHAVEZ	CHECKED S. HEATH	
DETAILS	BY S. HEATH	CHECKED H. CHAVEZ	
QUANTITIES	BY S. Moradi	CHECKED T. Menard	

STATE OF CALIFORNIA DEPARTMENT OF TRANSPORTATION

DIVISION OF ENGINEERING SERVICES BRIDGE ARCHITECTURE AND AESTHETICS

BRIDGE NO. 53-3040 POST MILE 3.44

ROSECRANS AVENUE UC (REPLACE)

ARCHITECTURAL TILE MOTIF DETAILS

SHEET A8

STRUCTURES DESIGN DETAIL SHEET (ENGLISH) (REV. 09-01-10)

ORIGINAL SCALE IN INCHES FOR REDUCED PLANS 0 1 2 3

CU 07
EA 215931

DISREGARD PRINTS BEARING EARLIER REVISION DATES 1-23-12

REVISION DATES

SHEET 55 OF 81

FILE => 53-3040-p-r-a8.dgn

USERNAME => s123631 DATE PLOTTED => 28-MAR-2012 TIME PLOTTED => 10:52

DIST	COUNTY	ROUTE	POST MILES TOTAL PROJECT	SHEET No	TOTAL SHEETS
07	LA	5	2.4/4.0	769	1288

LICENSED ARCHITECT — DATE 12/12/11

PLANS APPROVAL DATE 3-26-12

LICENSED ARCHITECT H. Javier Chavez 14073 03-31-13 Renewal Date STATE OF CALIFORNIA

The State of California or its officers or agents shall not be responsible for the accuracy or completeness of electronic copies of this plan sheet.

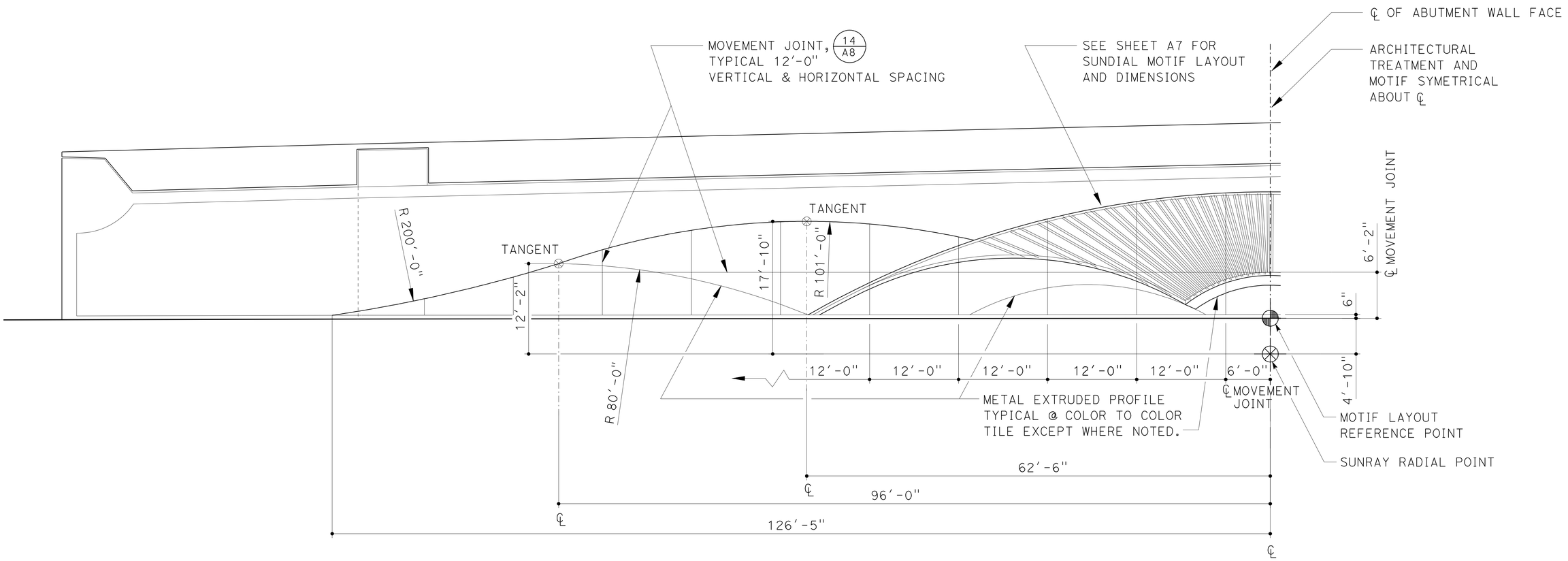

PARTIAL ELEVATION AT SOUTH ABUTMENT 1

NO SCALE

	BY	CHECKED
DESIGN	H. CHAVEZ	S. HEATH
DETAILS	S. HEATH	H. CHAVEZ
QUANTITIES	S. Moradi	T. Menard

STATE OF CALIFORNIA DEPARTMENT OF TRANSPORTATION

DIVISION OF ENGINEERING SERVICES BRIDGE ARCHITECTURE AND AESTHETICS

BRIDGE NO. 53-3040 POST MILE 3.44

ROSECRANS AVENUE UC (REPLACE)

ELEVATION AND ARCHITECTURAL MOTIF ABUTMENT 1

SHEET A9

STRUCTURES DESIGN DETAIL SHEET (ENGLISH) (REV. 09-01-10)

ORIGINAL SCALE IN INCHES FOR REDUCED PLANS 0 1 2 3

CU 07 EA 215931

DISREGARD PRINTS BEARING EARLIER REVISION DATES 1-23-12

REVISION DATES

SHEET 56 OF 81

FILE => 53-3040-p-r-a9.dgn

USERNAME => s123631 DATE PLOTTED => 28-MAR-2012 TIME PLOTTED => 10:52

DIST	COUNTY	ROUTE	POST MILES TOTAL PROJECT	SHEET No	TOTAL SHEETS
07	LA	5	2.4/4.0	770	1288

LICENSED ARCHITECT — DATE 12/12/11

3-26-12
PLANS APPROVAL DATE

LICENSED ARCHITECT H. Javier Chavez 14073 03-31-13 Renewal Date STATE OF CALIFORNIA

The State of California or its officers or agents shall not be responsible for the accuracy or completeness of electronic copies of this plan sheet.

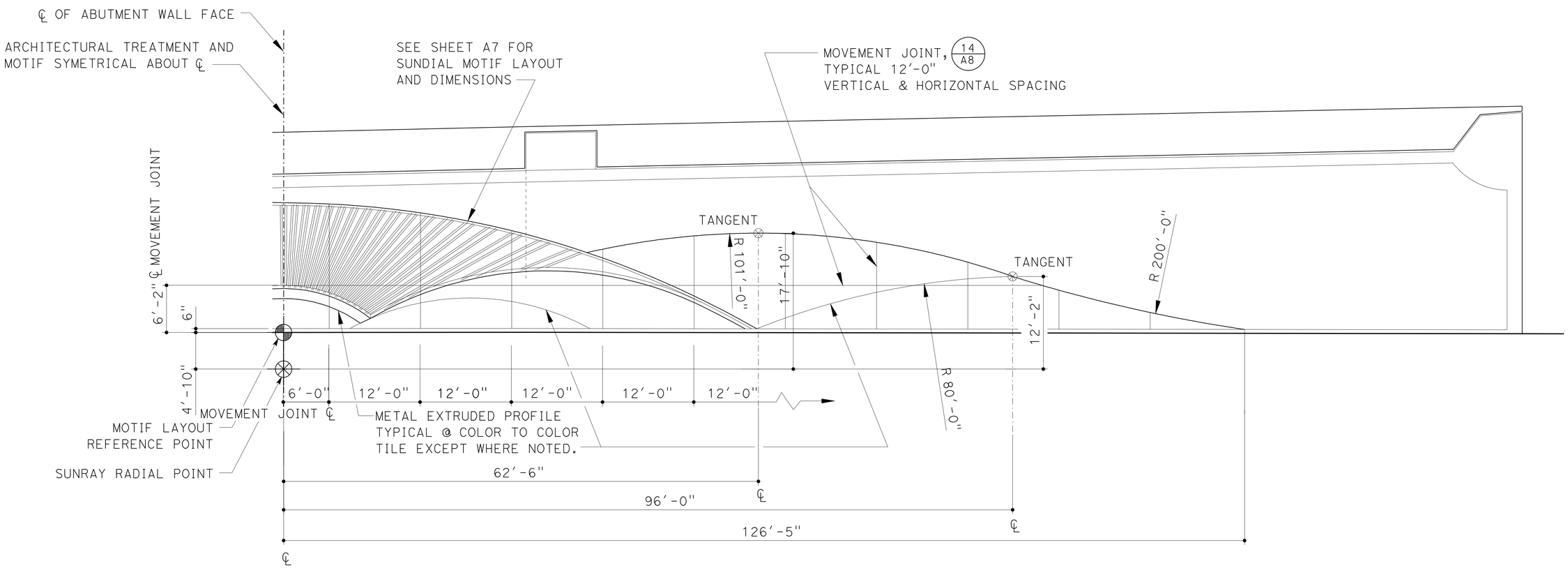

PARTIAL ELEVATION AT SOUTH ABUTMENT 1

NO SCALE

DESIGN	BY H. CHAVEZ	CHECKED S. HEATH	
DETAILS	BY S. HEATH	CHECKED H. CHAVEZ	
QUANTITIES	BY S. Moradi	CHECKED T. Menard	

STATE OF CALIFORNIA
DEPARTMENT OF TRANSPORTATION

DIVISION OF ENGINEERING SERVICES
BRIDGE ARCHITECTURE AND AESTHETICS

BRIDGE NO. 53-3040
POST MILE 3.44

ROSECRANS AVENUE UC (REPLACE)
ELEVATION AND ARCHITECTURAL MOTIF ABUTMENT 1

SHEET A10

STRUCTURES DESIGN DETAIL SHEET (ENGLISH) (REV. 09-01-10)

ORIGINAL SCALE IN INCHES FOR REDUCED PLANS 0 1 2 3

CU 07
EA 215931

DISREGARD PRINTS BEARING EARLIER REVISION DATES

REVISION DATES 1-23-12

SHEET 57 OF 81

FILE => 53-3040-p-r-ab10.dgn

USERNAME => s123631 DATE PLOTTED => 28-MAR-2012 TIME PLOTTED => 10:52

DIST	COUNTY	ROUTE	POST MILES TOTAL PROJECT	SHEET No	TOTAL SHEETS
07	LA	5	2.4/4.0	771	1288

LICENSED ARCHITECT — DATE 12/12/11

PLANS APPROVAL DATE 3-26-12

LICENSED ARCHITECT H. Javier Chavez 14073 03-31-13 Renewal Date STATE OF CALIFORNIA

The State of California or its officers or agents shall not be responsible for the accuracy or completeness of electronic copies of this plan sheet.

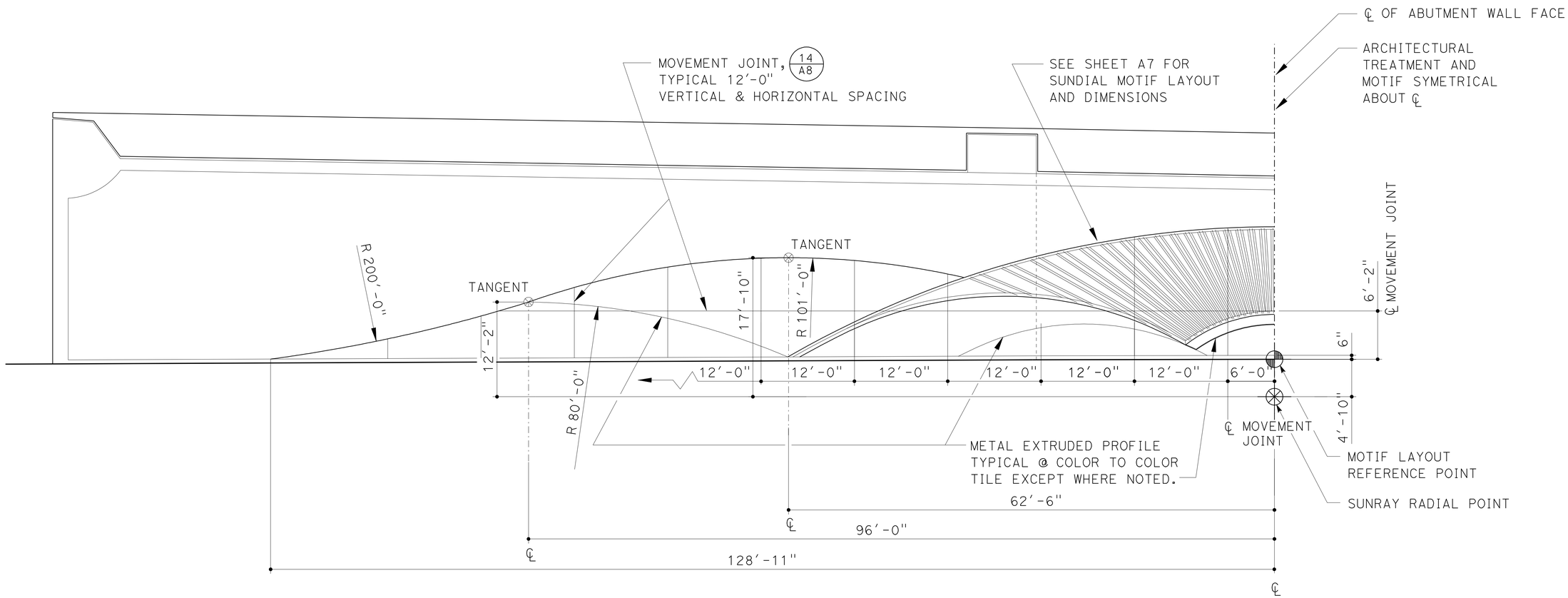

PARTIAL ELEVATION AT NORTH ABUTMENT 3

NO SCALE

DESIGN	BY H. CHAVEZ	CHECKED S. HEATH	
DETAILS	BY S. HEATH	CHECKED H. CHAVEZ	
QUANTITIES	BY S. Moradi	CHECKED T. Menard	

STATE OF CALIFORNIA DEPARTMENT OF TRANSPORTATION

DIVISION OF ENGINEERING SERVICES BRIDGE ARCHITECTURE AND AESTHETICS

BRIDGE NO. 53-3040 POST MILE 3.44

ROSECRANS AVENUE UC (REPLACE)

ELEVATION AND ARCHITECTURAL MOTIF ABUTMENT 3

SHEET A11

STRUCTURES DESIGN DETAIL SHEET (ENGLISH) (REV. 09-01-10)

ORIGINAL SCALE IN INCHES FOR REDUCED PLANS 0 1 2 3

CU 07
EA 215931

DISREGARD PRINTS BEARING EARLIER REVISION DATES 1-23-12

REVISION DATES

SHEET 58 OF 81

FILE => 53-3040-p-r-ab11.dgn

USERNAME => s123631 DATE PLOTTED => 28-MAR-2012 TIME PLOTTED => 10:52

DIST	COUNTY	ROUTE	POST MILES TOTAL PROJECT	SHEET No	TOTAL SHEETS
07	LA	5	2.4/4.0	772	1288

LICENSED ARCHITECT — DATE 12/12/11

3-26-12
PLANS APPROVAL DATE

LICENSED ARCHITECT H. Javier Chavez 14073 03-31-13 Renewal Date STATE OF CALIFORNIA

The State of California or its officers or agents shall not be responsible for the accuracy or completeness of electronic copies of this plan sheet.

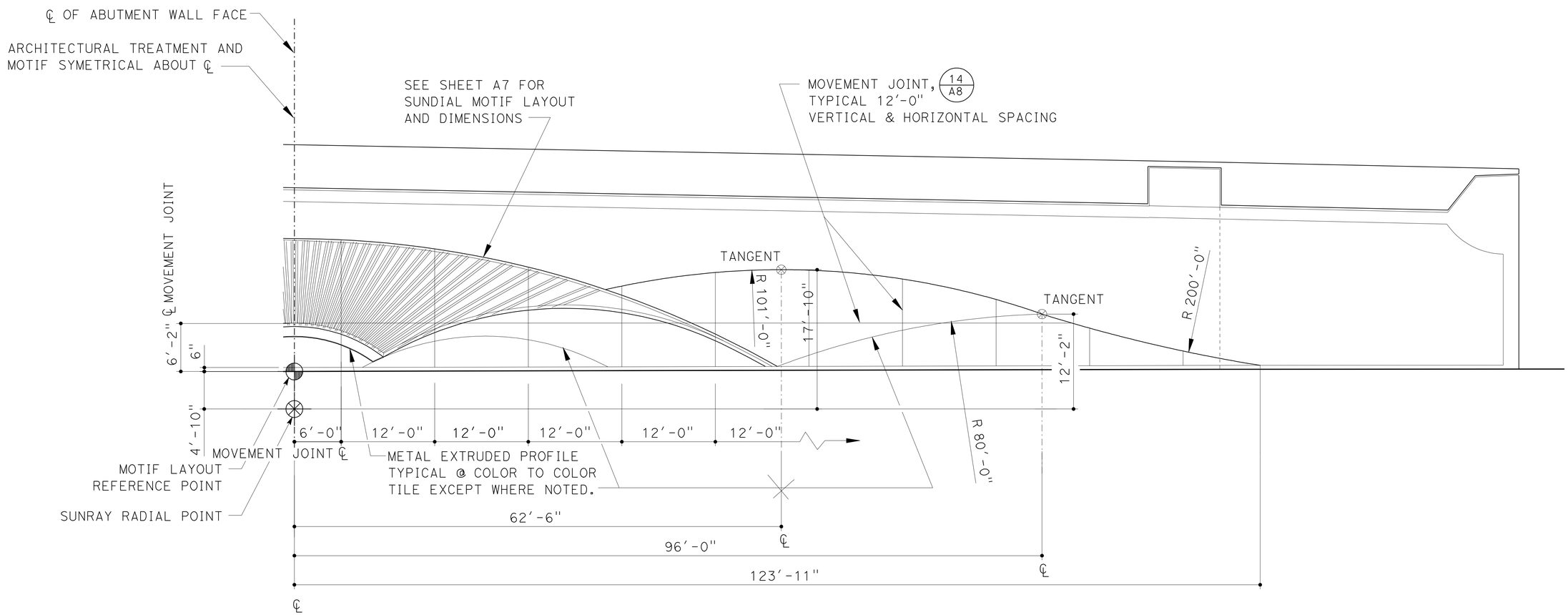

PARTIAL ELEVATION AT NORTH ABUTMENT 3

NO SCALE

DESIGN	BY H. CHAVEZ	CHECKED S. HEATH	
DETAILS	BY S. HEATH	CHECKED H. CHAVEZ	
QUANTITIES	BY S. Moradi	CHECKED T. Menard	

STATE OF CALIFORNIA DEPARTMENT OF TRANSPORTATION

DIVISION OF ENGINEERING SERVICES BRIDGE ARCHITECTURE AND AESTHETICS

BRIDGE NO. 53-3040
POST MILE 3.44

ROSECRANS AVENUE UC (REPLACE)

ELEVATION AND ARCHITECTURAL MOTIF ABUTMENT 3

SHEET A12

STRUCTURES DESIGN DETAIL SHEET (ENGLISH) (REV. 09-01-10)

ORIGINAL SCALE IN INCHES FOR REDUCED PLANS 0 1 2 3

CU 07
EA 215931

DISREGARD PRINTS BEARING EARLIER REVISION DATES

REVISION DATES 1-23-12

SHEET 59 OF 81

FILE => 53-3040-p-r-ab12.dgn

USERNAME => s123631 DATE PLOTTED => 28-MAR-2012 TIME PLOTTED => 10:52

DIST	COUNTY	ROUTE	POST MILES TOTAL PROJECT	SHEET No	TOTAL SHEETS
07	LA	5	2.4/4.0	773	1288

LICENSED ARCHITECT — DATE 12/12/11

3-26-12
PLANS APPROVAL DATE

LICENSED ARCHITECT H. Javier Chavez 14073 03-31-13 Renewal Date STATE OF CALIFORNIA

The State of California or its officers or agents shall not be responsible for the accuracy or completeness of electronic copies of this plan sheet.

COLOR SCHEDULE

ITEM	FINISH	MANUFACTURER	COLOR	SIZE	NOTES
1	MFR	MARAZZI SISTEM A TILE	ARANCIO	12"x12"	MATTE FINISH
2	MFR	MARAZZI SISTEM A TILE	VERDE	12"x12"	MATTE FINISH
3	MFR	MARAZZI SISTEM A TILE	BLU	12"x12"	MATTE FINISH
4	MFR	MARAZZI SISTEM A TILE	ROSSO	12"x12"	MATTE FINISH
5	MFR	MARAZZI SISTEM A TILE	GIALLO	12"x12"	MATTE FINISH
6	MFR	MARAZZI SISTEM A TILE	ARANCIO	12"x12"	MATTE FINISH
7	MFR	AGROB BUCHTAL - CHROMA II TILE	5533-BLUE 3	12"X24"	SILKY MATT FINISH
8	MFR	AGROB BUCHTAL - CHROMA II TILE	5533-BLUE 3	30x1.6 cm	RADIAL CORNER #37111 - SEE DETAIL 16/A8
9	MFR	AGROB BUCHTAL - CHROMA II TILE	5505-YELLOW 5	12"X24"	SILKY MATT FINISH
10	MFR	AGROB BUCHTAL - CHROMA II TILE	5505-YELLOW 5	30x1.6 cm	RADIAL CORNER #37111 - SEE DETAIL 15/A8
A	MFR	SCHLUTER - METAL EXTRUDED PROFILE	EB 80D		SATIN ANODIZED ALUMINUM

COLOR SCHEDULE NOTES

1. THE CONTRACTOR SHALL VERIFY ALL CONTROLLING DIMENSIONS AND FIELD CONDITIONS PRIOR TO ORDERING OR FABRICATING ANY MATERIALS OR ASSEMBLIES FOR CONSTRUCTION
2. MANUFACTURER'S PRODUCTS LISTED HAVE BEEN INCLUDED AS EXAMPLES OF COLOR AND FINISH ONLY. MATCHING PRODUCTS BY OTHER MANUFACTURER'S MAY BE SUBMITTED FOR APPROVAL.
3. SEE THE SPECIAL PROVISIONS FOR THE APPROPRIATE COATING SYSTEM FOR EACH MATERIAL TO BE COATED.
4. ALL MATERIALS SHALL RECEIVE A JOB FINISH, UNLESS NOTED "NJF" = NO JOB FINISH.
5. ITEMS 1-8 ARE COLOR BODY PORCELAIN TILES (THROUGH - BODY COLOR TILE OPTIONAL)
6. THE COLOR AND FINISH OF ANY MATERIAL NOT LISTED WILL BE SELECTED BY THE ENGINEER.
7. TILE JOINTS 1/16" IN TILE AREAS 1 THROUGH 6
8. TILE JOINTS 1/8" IN TILE AREAS 7 THROUGH 10

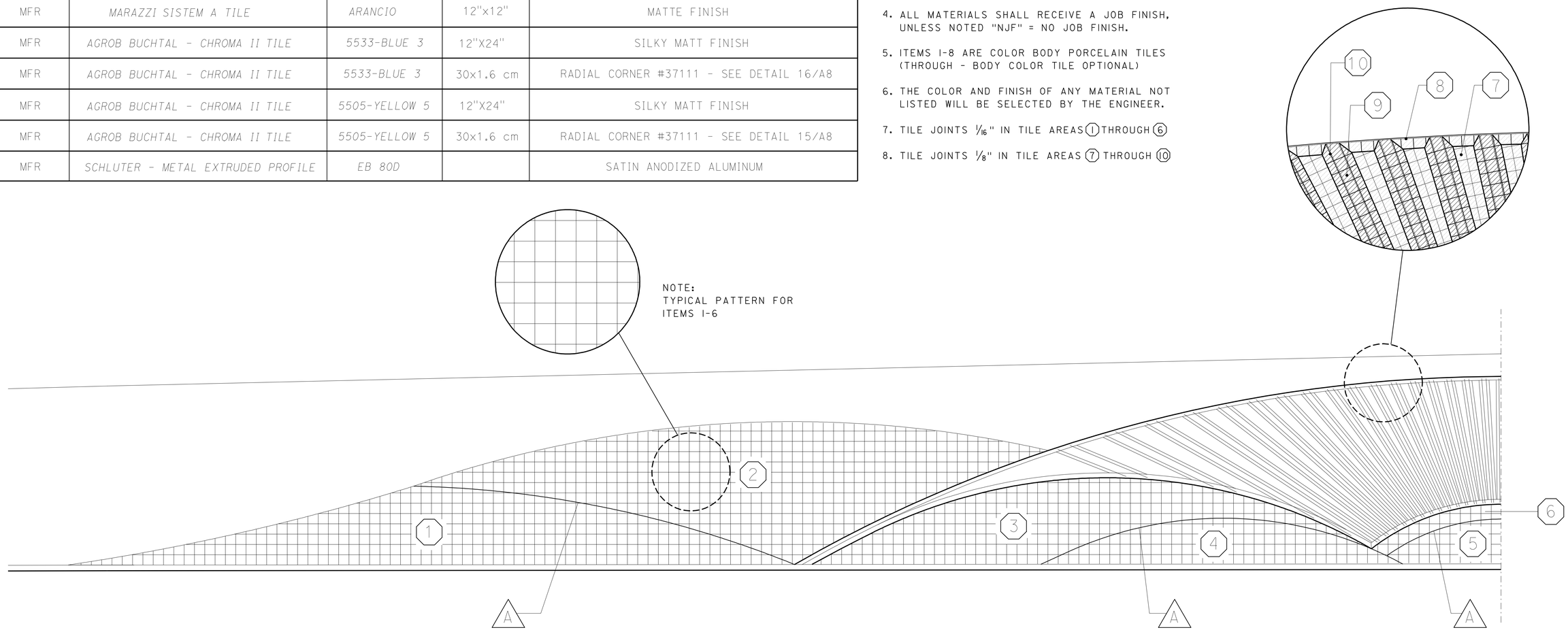

PARTIAL ELEVATION AT SOUTH ABUTMENT 1

NO SCALE

NOTE:
COLORS AND FINISHES TYPICAL FOR MOTIF
SYMETRICAL ABOUT ℄ OF ABUTMENT WALL FACE

	BY	CHECKED
DESIGN	H. CHAVEZ	S. HEATH
DETAILS	S. HEATH	H. CHAVEZ
QUANTITIES	S. Moradi	T. Menard

STATE OF CALIFORNIA
DEPARTMENT OF TRANSPORTATION

DIVISION OF ENGINEERING SERVICES
BRIDGE ARCHITECTURE AND AESTHETICS

BRIDGE NO. 53-3040
POST MILE 3.44

ROSECRANS AVENUE UC (REPLACE)
ARCHITECTURAL TILE FINISH SCHEDULE AT ABUTMENT 1

SHEET A13

STRUCTURES DESIGN DETAIL SHEET (ENGLISH) (REV. 09-01-10)

ORIGINAL SCALE IN INCHES FOR REDUCED PLANS 0 1 2 3

CU 07
EA 215931

DISREGARD PRINTS BEARING EARLIER REVISION DATES → 1-23-12

SHEET 60 OF 81

FILE => 53-3040-p-r-ab13.dgn

USERNAME => s123631 DATE PLOTTED => 28-MAR-2012 TIME PLOTTED => 10:53

DIST	COUNTY	ROUTE	POST MILES TOTAL PROJECT	SHEET No	TOTAL SHEETS
07	LA	5	2.4/4.0	774	1288

LICENSED ARCHITECT — DATE 12/12/11

3-26-12
PLANS APPROVAL DATE

LICENSED ARCHITECT H. Javier Chavez 14073 03-31-13 Renewal Date STATE OF CALIFORNIA

The State of California or its officers or agents shall not be responsible for the accuracy or completeness of electronic copies of this plan sheet.

COLOR SCHEDULE

ITEM	FINISH	MANUFACTURER	COLOR	SIZE	NOTES
1	MFR	MARAZZI SISTEM A TILE	ARANCIO	12"x12"	MATTE FINISH
2	MFR	MARAZZI SISTEM A TILE	VERDE	12"x12"	MATTE FINISH
3	MFR	MARAZZI SISTEM A TILE	BLU	12"x12"	MATTE FINISH
4	MFR	MARAZZI SISTEM A TILE	ROSSO	12"x12"	MATTE FINISH
5	MFR	MARAZZI SISTEM A TILE	GIALLO	12"x12"	MATTE FINISH
6	MFR	MARAZZI SISTEM A TILE	ARANCIO	12"x12"	MATTE FINISH
7	MFR	AGROB BUCHTAL - CHROMA II TILE	5533-BLUE 3	12"X24"	SILKY MATT FINISH
8	MFR	AGROB BUCHTAL - CHROMA II TILE	5533-BLUE 3	30x1.6 cm	RADIAL CORNER #37111 - SEE DETAIL 16/A8
9	MFR	AGROB BUCHTAL - CHROMA II TILE	5505-YELLOW 5	12"X24"	SILKY MATT FINISH
10	MFR	AGROB BUCHTAL - CHROMA II TILE	5505-YELLOW 5	30x1.6 cm	RADIAL CORNER #37111 - SEE DETAIL 15/A8
A	MFR	SCHLUTER - METAL EXTRUDED PROFILE	EB 80D		SATIN ANODIZED ALUMINUM

COLOR SCHEDULE NOTES

1. THE CONTRACTOR SHALL VERIFY ALL CONTROLLING DIMENSIONS AND FIELD CONDITIONS PRIOR TO ORDERING OR FABRICATING ANY MATERIALS OR ASSEMBLIES FOR CONSTRUCTION
2. MANUFACTURER'S PRODUCTS LISTED HAVE BEEN INCLUDED AS EXAMPLES OF COLOR AND FINISH ONLY. MATCHING PRODUCTS BY OTHER MANUFACTURER'S MAY BE SUBMITTED FOR APPROVAL.
3. SEE THE SPECIAL PROVISIONS FOR THE APPROPRIATE COATING SYSTEM FOR EACH MATERIAL TO BE COATED.
4. ALL MATERIALS SHALL RECEIVE A JOB FINISH, UNLESS NOTED "NJF" = NO JOB FINISH.
5. ITEMS 1-8 ARE COLOR BODY PORCELAIN TILES (THROUGH - BODY COLOR TILE OPTIONAL)
6. THE COLOR AND FINISH OF ANY MATERIAL NOT LISTED WILL BE SELECTED BY THE ENGINEER.
7. TILE JOINTS 1/16" IN TILE AREAS 1 THROUGH 6
8. TILE JOINTS 1/8" IN TILE AREAS 7 THROUGH 10

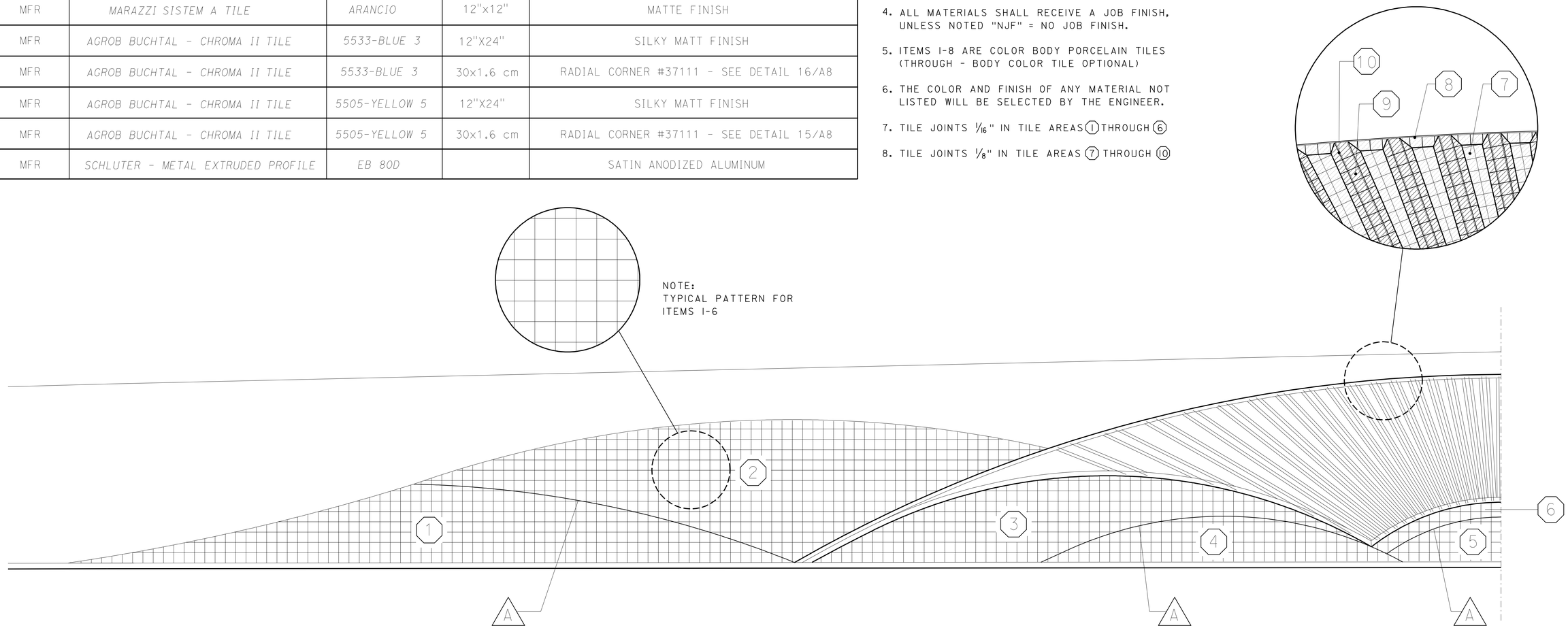

PARTIAL ELEVATION AT SOUTH ABUTMENT 3

NO SCALE

NOTE:
COLORS AND FINISHES TYPICAL FOR MOTIF
SYMETRICAL ABOUT ℄ OF ABUTMENT WALL FACE

	BY	CHECKED
DESIGN	H. CHAVEZ	S. HEATH
DETAILS	S. HEATH	H. CHAVEZ
QUANTITIES	S. Moradi	T. Menard

STATE OF CALIFORNIA
DEPARTMENT OF TRANSPORTATION

DIVISION OF ENGINEERING SERVICES
BRIDGE ARCHITECTURE AND AESTHETICS

BRIDGE NO. 53-3040
POST MILE 3.44

ROSECRANS AVENUE UC (REPLACE)
ARCHITECTURAL TILE FINISH SCHEDULE AT ABUTMENT 3

SHEET A14

STRUCTURES DESIGN DETAIL SHEET (ENGLISH) (REV. 09-01-10)

ORIGINAL SCALE IN INCHES FOR REDUCED PLANS 0 1 2 3

CU 07
EA 215931

DISREGARD PRINTS BEARING EARLIER REVISION DATES 1-23-12

SHEET 61 OF 81

FILE => 53-3040-p-r-ab14.dgn

USERNAME => s123631 DATE PLOTTED => 28-MAR-2012 TIME PLOTTED => 10:53

DIST.	COUNTY	ROUTE	POST MILES TOTAL PROJECT	SHEET NO.	TOTAL SHEETS
07	LA	5	2.4/4.0	775	1288

Andrew Rittenhouse 12-12-11
REGISTERED ENGINEER - CIVIL

3-26-12
PLANS APPROVAL DATE

REGISTERED PROFESSIONAL ENGINEER
Andrew P. Rittenhouse
No. 61006
Exp. 12-31-12
CIVIL
STATE OF CALIFORNIA

The State of California or its officers or agents shall not be responsible for the accuracy or completeness of electronic copies of this plan sheet.

TABLE OF PILE SPACING: CLASS 45 - CONCRETE PILES

DESIGN H	6′	8′	10′	12′	14′	16′	18′	20′	22′	24′	26′	28′	30′	32′
W	6′-9"	7′-0"	7′-6"	8′-3"	9′-3"	10′-3"	11′-0"	12′-0"	13′-0"	14′-3"	16′-3"	16′-9"	18′-0"	20′-6"
C	2′-9"	2′-9"	3′-0"	3′-3"	3′-6"	4′-0"	4′-3"	4′-9"	5′-0"	5′-6"	6′-3"	6′-9"	7′-3"	7′-9"
B	4′-0"	4′-3"	4′-6"	5′-0"	5′-9"	6′-3"	6′-9"	7′-3"	8′-0"	8′-9"	10′-0"	10′-0"	10′-9"	12′-9"
F	1′-6"	1′-6"	1′-6"	1′-9"	1′-9"	2′-0"	2′-6"	2′-9"	3′-0"	3′-0"	3′-3"	3′-6"	3′-9"	4′-0"
M	1′-3"	1′-3"	1′-6"	1′-9"	2′-0"	2′-6"	2′-9"	3′-3"	3′-6"	4′-0"	4′-9"	5′-3"	5′-9"	6′-3"
N	2′-6"	2′-9"	3′-0"	3′-6"	4′-3"	4′-9"	5′-3"	5′-9"	6′-6"	7′-3"	8′-6"	8′-6"	9′-3"	11′-3"
ROW 1	16′-0"	14′-0"	12′-0"	10′-0"	8′-0"	6′-6"	5′-6"	4′-6"	4′-0"	4′-0"	4′-0"	4′-0"	4′-0"	4′-0"
ROW 2	24′-0"	21′-0"	18′-0"	15′-0"	14′-0"	13′-0"	11′-0"	9′-0"	8′-0"	12′-0"	10′-0"	6′-0"	4′-0"	4′-0"
ROW 3										8′-0"	5′-0"	4′-0"	4′-0"	6′-0"
ROW 4														6′-0"
CONFIGURATION	I	I	I	I	I	I	I	I	I	II	II	II	II	III

TABLE 1: TABLE OF REINFORCING STEEL DIMENSIONS AND DATA

	STEM WITH HAUNCH													
DESIGN H	6′	8′	10′	12′	14′	16′	18′	20′	22′	24′	26′	28′	30′	32′
STEM BATTER	0	½:12	½:12	½:12	½:12	½:12	½:12	½:12	½:12	⅝:12	¾:12	⅞:12	1:12	1:12
STEM THICKNESS @ TOP	1′-6"	1′-6"	1′-6"	1′-6"	1′-6"	1′-6"	1′-6"	1′-6"	1′-6"	1′-6"	1′-6" 1′-8"	1′-6" 1′-8"	1′-6"	1′-6"
STEM THICKNESS @ HAUNCH	1′-0"	1′-0"	1′-0"	1′-0"	1′-0"	1′-0"	1′-0"	1′-0"	1′-0"	1′-0"	1′-0"	1′-0"	1′-0"	1′-0"
ⓐ BARS				#6@18**	#7@18**	#8@18**	#9@18**	#10@18**	#8 @ 9*	#8 @ 9*	#7 @ 6*	#10@12**	#9 @ 9*	#11@12**
X				CONT	CONT	CONT	CONT	CONT	CONT	CONT	CONT	CONT	CONT	CONT
Y				8′-0"	6′-6"	7′-6"	8′-6"	9-6"	9′-6"	11′-0"	11′-6"	13′-0"	14′-0"	15′-6"
ⓑ BARS	#5 @ 12	#5 @ 12	#5 @ 9	#6@18**	#7@18**	#8@18**	#9@18**	#10@18**	#8 @ 9*	#8 @ 9*	#7 @ 6*	#10@12**	#9 @ 9*	#11@12**
X	CONT	CONT	CONT	CONT	CONT	CONT	CONT	CONT	CONT	CONT	CONT	CONT	CONT	CONT
Y	CONT	CONT	CONT	CONT	10′-6"	13′-0"	15′-0"	17′-6"	19′-6"	21′-0"	18′-6"	19′-0"	25′-6"	23′-6"
ⓒ BARS					#6 @ 18	#6 @ 18	#6 @ 18	#6 @ 18	#6 @ 18	#6 @ 18	#6 @ 12	#7 @ 12	#7 @ 18	#7 @ 12
ⓓ BARS	#5 @ 12	#5 @ 12	#5 @ 12	#5 @ 12	#5 @ 12	#5 @ 12	#5 @ 9	#5 @ 9	#6 @ 9	#5 @ 6	#7 @ 9	#7 @ 9	#6 @ 6	#7 @ 6
TOTAL ⓔ BARS	6 #5	6 #5	6 #5	6 #5	8 #5	8 #5	10 #5	10 #5	10 #5	10 #5	12 #5	12 #5	12 #5	14 #5
TOTAL ⓕ BARS	6 #5	6 #5	6 #5	6 #5	6 #5	8 #5	8 #5	8 #5	8 #5	10 #5	10 #5	10 #5	12 #5	12 #5

TABLE 2: TABLE OF REINFORCING STEEL DIMENSIONS AND DATA

	STEM WITH HAUNCH							STEM WITHOUT HAUNCH						
DESIGN H	6′	8′	10′	12′	14′	16′	18′	20′	22′	24′	26′	28′	30′	32′
BATTER	0	0	0	0	0	0	0	0	0	0	¼:12	½:12	½:12	½:12
STEM THICKNESS @ TOP	1′-6"	1′-6"	1′-6"	1′-6"	1′-6"	1′-6"	1′-6"	1′-6"	2′-0"	2′-0"	2′-0"	2′-0"	2′-0"	2′-0"
STEM THICKNESS @ HAUNCH	1′-0"	1′-0"	1′-0"	1′-0"	1′-0"	1′-3"	1′-3"							
ⓐ BARS				#6@12**	#5 @ 6*	#9@18**	#9@12**	#9@12**	#9@12**	#7 @ 6*	#7 @ 6*	#7 @ 6*	#9 @ 9*	#11@12**
X				CONT	CONT	CONT	CONT	CONT	CONT	CONT	CONT	CONT	CONT	CONT
Y				5′-6"	5′-6"	8′-6"	8′-6"	8′-6"	8′-6"	9′-6"	11′-0"	12′-6"	13′-6"	14′-6"
ⓑ BARS	#5 @ 12	#5 @ 9	#6 @ 9	#6@12**	#5 @ 6*	#9@18**	#9@12**	#9@12**	#9@12**	#7 @ 6*	#7 @ 6*	#7 @ 6*	#9 @ 9*	#11@12**
X	CONT	CONT	CONT	CONT	CONT	CONT	CONT	CONT	CONT	CONT	CONT	CONT	CONT	CONT
Y	CONT	CONT	CONT	CONT	CONT	11′-6"	11′-6"	12′-0"	12′-0"	17′-6"	20′-0"	21′-6"	24′-0"	24′-0"
ⓒ BARS						#7 @ 18	#7 @ 12	#7 @ 12	#7 @ 12	#6 @ 12	#6 @ 12	#6 @ 12	#7 @ 18	#7 @ 12
ⓓ BARS	#5 @ 12	#5 @ 12	#5 @ 12	#5 @ 12	#5 @ 12	#5 @ 12	#5 @ 9	#5 @ 9	#6 @ 9	#5 @ 6	#7 @ 9	#7 @ 9	#6 @ 6	#7 @ 6
TOTAL ⓔ BARS	6 #5	6 #5	6 #5	6 #5	8 #5	8 #5	10 #5	10 #5	10 #5	10 #5	12 #5	12 #5	12 #5	14 #5
TOTAL ⓕ BARS	6 #5	6 #5	6 #5	6 #5	6 #5	8 #5	8 #5	8 #5	8 #5	10 #5	10 #5	10 #5	12 #5	12 #5

CONT = CONTINUOUS

* = ⓐ AND ⓑ BARS ARE BUNDLED TOGETHER.

** = ALTERNATE ⓐ AND ⓑ BARS AS SHOWN IN DETAIL A.

DESIGN DATA

DESIGN: LOAD FACTOR DESIGN (LFD)

CONCRETE: REINFORCED CONCRETE, f′c = 3600 psi
fy = 60000 psi

LOADING CASE:

LEVEL GROUND WITH 240 psf LIVE LOAD SURCHARGE AND 16′ SOUNDWALL.
SEISMIC LOAD = 0.3 DEAD LOAD
WIND LOAD = 30 psf
DEAD LOAD OF SOUNDWALL = 1414 lb/lf
DEAD LOAD OF BARRIER = 372 lb/lf

SEISMIC LOAD: SOIL

Kh = 0.3g
Kv = 0.0
Kae : MONONOBE-OKABE METHOD

SOIL: Ø = 34° γ = 120 pcf

EQUIVALENT FLUID PRESSURE:
= 36 pcf FOR DETERMINATION OF TOE PRESSURE
= 27 pcf FOR DETERMINATION OF HEEL PRESSURE

LOAD COMBINATIONS:

GROUP A : βD+1.7E+1.7SC
GROUP B : βD+1.7E+1.3W
GROUP C :
STEM : 1.0D+1.0E+1.0EQD+1.0EQE
FOOTING : D+PYM
WHERE : β = 1.0 OR 1.3 WHICHEVER CONTROLS DESIGN
D = DEAD LOAD
E = LATERAL EARTH PRESSURE
SC = SURCHARGE
W = WIND LOAD
EQD = SEISMIC DEAD LOAD
EQE = SEISMIC LATERAL EARTH PRESSURE
PYM = PROBABLE YIELD MOMENT (1.3* NOMINAL YIELD MOMENT OF STEM)

GENERAL NOTES

1. CLASS 90-CONCRETE PILES WERE USED FOR THE DESIGN.
2. PILE BATTER SHOWN ARE 1:3.
3. MINIMUM DISTANCE BETWEEN CENTER PILE AND EDGE OF FOOTING IS 1′-6".
4. REDUCTION FACTORS:
   GROUPS A & B : Ø = 0.75
   GROUP C : Ø = 1.0
5. LATERAL RESISTANCE OF EACH PILE:
   GROUPS A & B : = 30 kip
   GROUP C : = 40 kip
6. MAXIMUM SPACING BETWEEN PILES IS SHOWN IN THE TABLE. REDUCE TO SUIT THE LENGHTH OF FOOTING.
7. MINIMUM DISTANCE BETWEEN ANY TWO PILES IS 3′-0".
8. LIMIT OF NO SPLICING FOR REBARS = 3 TIMES THE BOTTOM THICKNESS OF STEM.

STANDARD DRAWING

FILE NO. xs14-320-1e

APPROVED BY G. WANG
RESPONSIBLE TECHNICAL SPECIALIST
APPROVAL DATE 5-29-09

RELEASED BY ROBERTO LACALLE
RESPONSIBLE OFFICE CHIEF
RELEASE DATE 5-29-09

◊ Dimensions Changed

STATE OF CALIFORNIA
DEPARTMENT OF TRANSPORTATION

DIVISION OF ENGINEERING SERVICES

BRIDGE NO. 53-3040
POST MILE 3.44

ROSECRANS AVENUE UC (REPLACE)
RETAINING WALL TYPE 1SWBP - DETAIL NO. 1

DS OSD 2147A (ENGLISH STANDARD DRAWING "XS" BORDER REV. 01/11/08)

ORIGINAL SCALE IN INCHES FOR REDUCED PLANS 0 1 2 3

CU 07
EA 215931

DISREGARD PRINTS BEARING EARLIER REVISION DATES 02-11-11 12-07-11

REVISION DATES (PRELIMINARY STAGE ONLY)

SHEET 62 OF 81

USERNAME => s123631 DATE PLOTTED => 28-MAR-2012 TIME PLOTTED => 10:53

FILE => 53-3040-p-xs14320-1.dgn

DIST.	COUNTY	ROUTE	POST MILES TOTAL PROJECT	SHEET NO.	TOTAL SHEETS
07	LA	5	2.4/4.0	776	1288

Andrew Rittenhouse 12-12-11
REGISTERED ENGINEER - CIVIL

3-26-12
PLANS APPROVAL DATE

REGISTERED PROFESSIONAL ENGINEER Andrew P. Rittenhouse No. 61006 Exp. 12-31-12 CIVIL STATE OF CALIFORNIA

The State of California or its officers or agents shall not be responsible for the accuracy or completeness of electronic copies of this plan sheet.

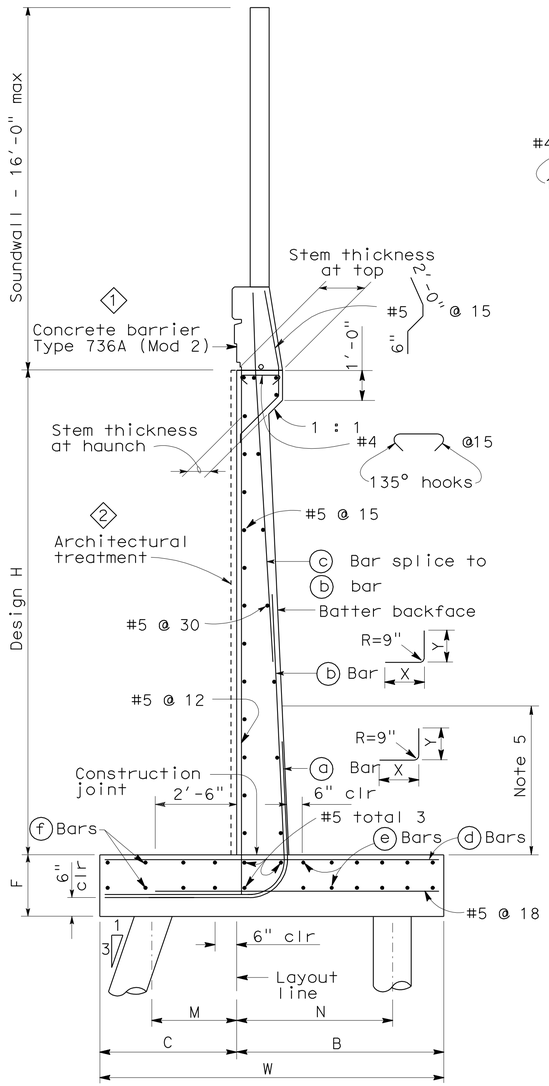

45T PILE FOOTING SECTION

NO SCALE

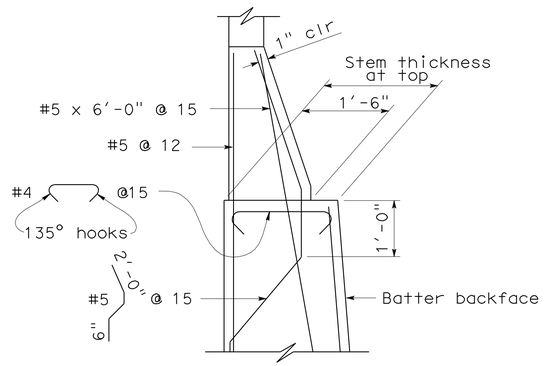

SPREAD FOOTING SECTION WITHOUT HAUNCH

NO SCALE

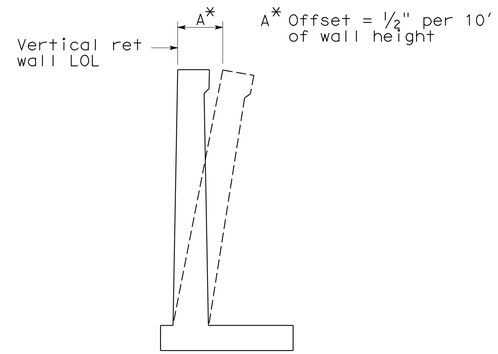

WALL OFFSET

NO SCALE

Values for offsetting forms to be determined by the engineer

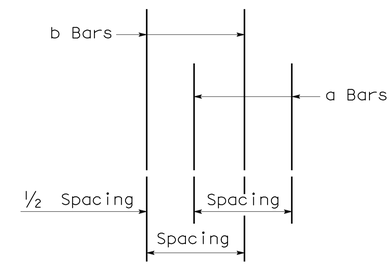

DETAIL A

NO SCALE

NOTES 3

1. For soundwall and retaining wall architectural treatment see details elsewhere in project plans.
2. For details not shown and drainage notes, see B3-8.
3. Footing cover, 1'-6" minimum.
4. For soundwall and barrier reinforcement, see B15-6.
5. Limit of no splicing for rebars = H/3

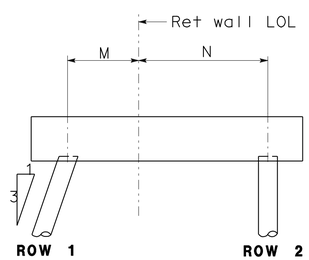

CONFIGURATION I

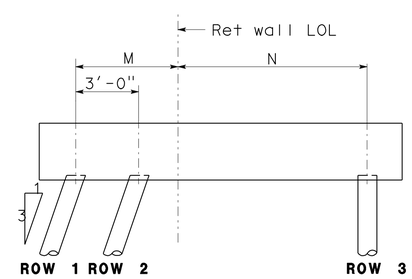

CONFIGURATION II

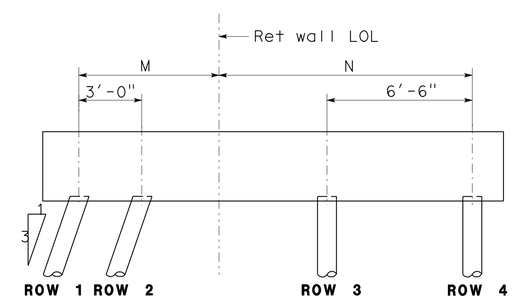

CONFIGURATION III

SPECIAL DETAILS

STANDARD DRAWING			
FILE NO. xs14-320-2e	APPROVED BY G. WANG (RESPONSIBLE TECHNICAL SPECIALIST)	RELEASED BY ROBERTO LACALLE (RESPONSIBLE OFFICE CHIEF)	
	APPROVAL DATE 5-13-08	RELEASE DATE 5-13-08	

1 Modified Barrier
2 Modified Detail
3 Modified Notes

STATE OF CALIFORNIA DEPARTMENT OF TRANSPORTATION

DIVISION OF ENGINEERING SERVICES

BRIDGE NO.	ROSECRANS AVENUE UC (REPLACE)
53-3040	
POST MILE 3.44	RETAINING WALL TYPE 1SWBP - DETAIL NO. 2

CU 07
EA 215931

DS OSD 2147A (ENGLISH STANDARD DRAWING "XS" BORDER REV. 01/11/08)

ORIGINAL SCALE IN INCHES FOR REDUCED PLANS 0 1 2 3

DISREGARD PRINTS BEARING EARLIER REVISION DATES

REVISION DATES (PRELIMINARY STAGE ONLY) 02-11-11 12-02-11 03-10-12

SHEET 63 OF 81

FILE => 53-3040-p-xs14320-2.dgn

USERNAME => s123631 DATE PLOTTED => 28-MAR-2012 TIME PLOTTED => 10:53

DIST	COUNTY	ROUTE	POST MILES TOTAL PROJECT	SHEET No	TOTAL SHEETS
07	LA	5	2.4/4.0	777	1288

Andrew Rittenhouse 12-12-11
REGISTERED CIVIL ENGINEER DATE

3-26-12
PLANS APPROVAL DATE

REGISTERED PROFESSIONAL ENGINEER Andrew P. Rittenhouse No. 61006 Exp. 12-31-12 CIVIL STATE OF CALIFORNIA

The State of California or its officers or agents shall not be responsible for the accuracy or completeness of electronic copies of this plan sheet.

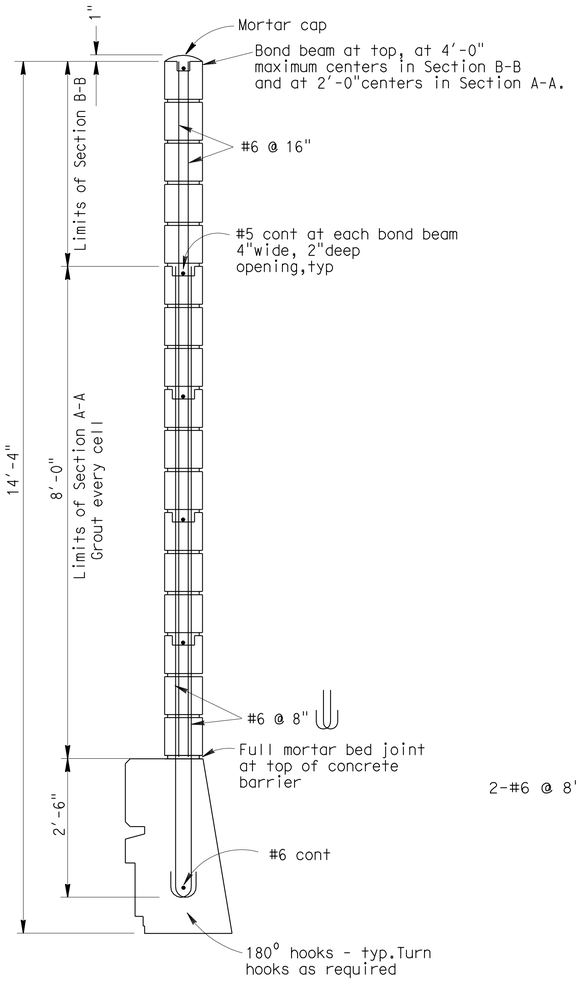

SOUND WALL SECTION
No Scale

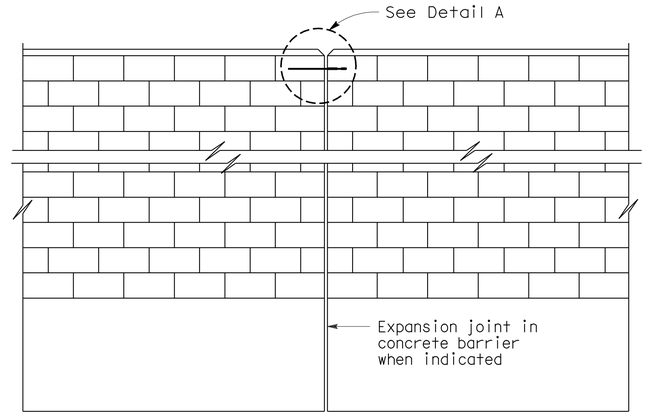

ALIGNMENT KEY DETAIL
No Scale

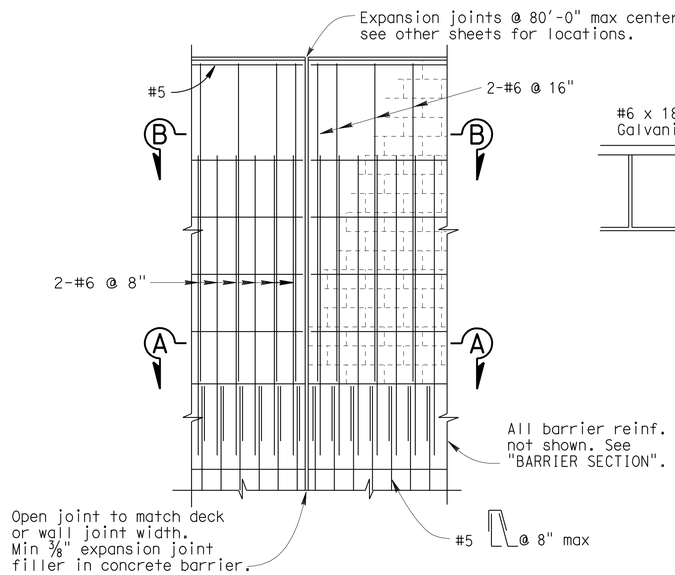

DECK AND WALL JOINT ELEVATION
No Scale

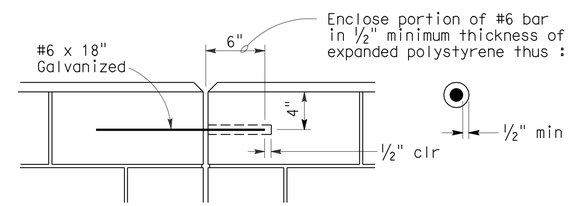

DETAIL A
No Scale

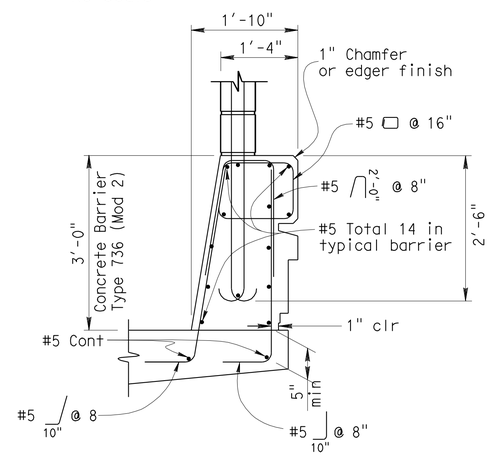

BARRIER SECTION
No Scale

NOTE:

For dimensions and reinforcement not shown, see Standard Plan B11-56 and "BARRIER ARCHITECTURAL DETAILS" sheet.

GENERAL NOTES

Note A: For type of block, type of block bond and joint finish, see "Road Plans".

Note B: When blocks are laid in stacked bond, ladder type, galvanized joint reinforcement shall be provided. A minimum of 2 - 12 gauge wires continuous at 4'-0" maximum to be used. Locate reinforcement in joints that are at the approximate midpoint between bond beams.

Note C: Horizontal joints shall be tooled concave or may be weathered. Vertical joints shall be tooled concave or may be raked.

Note D: All masonry to be high strength unless otherwise noted.

Note E: Class 2 concrete to be used for barrier.

Note F: Expansion joints in concrete barrier and masonry block to match deck joints and at ends of wing walls.

Note G: Expansion joints in Sound Wall (Masonry Block) shall be at each support, center of span, and at ends of each wingwall.

Note H: For dimensions and reinforcement not shown see "Typical Section" sheet.

DESIGN NOTES

DESIGN

Uniform Building Code,1997 Edition and the Bridge Design Specifications.

DESIGN WIND LOAD

37 psf

DESIGN SEISMIC LOAD

2.0 Dead load

REINFORCED CONCRETE

f'c = 3.6 ksi
fy = 60 ksi

CONCRETE MASONRY HIGH STRENGTH

f'm = 2500 psi
fy = 60 ksi

LOAD FACTORS AND LOAD COMBINATIONS

Load Factor Design (LFD)

Group A: βD +1.7 E + 1.7 SC
Group B: βD +1.7 E + 1.3 W
Group C: βD +1.3 E + 1.0 EQE
Group D: βD +1.3 E + 1.0 EQD
Group E: βD +1.1 E + 0.85 (EQE + EQD)

Where : β = 0.9 or 1.2, whichever controls in design
D = Dead load
E = Lateral earth pressure
SC = Live load surcharge
W = Wind load
EQD = Seismic dead load
EQE = Seismic earth load

STRENGTH REDUCTION FACTORS, Ø

Reinforced Concrete :

For flexure ..... Ø = 0.90
For shear ..... Ø = 0.85

Concrete masonry:

For flexure ..... Ø = 0.80
For shear ..... Ø = 0.60

Note 1:

Barrier, Deck and Concrete Masonry are designed by the Strength Design Method.

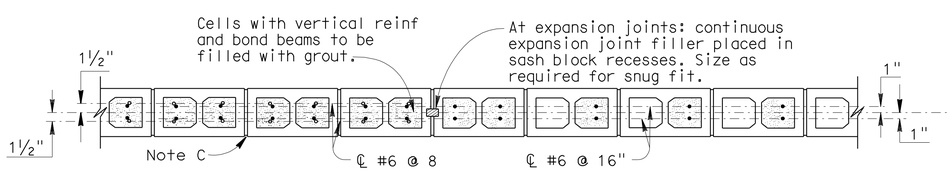

SECTION A-A
No Scale

SECTION B-B
No Scale

DESIGN	BY	CHECKED	
DETAILS	BY	CHECKED	
QUANTITIES	BY Gabriel Galo	CHECKED Traci Menard	

STATE OF CALIFORNIA DEPARTMENT OF TRANSPORTATION

DIVISION OF ENGINEERING SERVICES STRUCTURE DESIGN DESIGN BRANCH 15

BRIDGE NO. 53-3040
POST MILE 3.44

ROSECRANS AVENUE UC (REPLACE)
SOUNDWALL - MASONRY BLOCK ON BRIDGE

STRUCTURES DESIGN DETAIL SHEET (ENGLISH) (REV. 10/25/05)

ORIGINAL SCALE IN INCHES FOR REDUCED PLANS 0 1 2 3

CU 07
EA 215931

DISREGARD PRINTS BEARING EARLIER REVISION DATES 2-13-12

REVISION DATES

SHEET 64 OF 81

FILE => 53-3040-q-swb.dgn

USERNAME => s123631 DATE PLOTTED => 28-MAR-2012 TIME PLOTTED => 10:53

DIST	COUNTY	ROUTE	POST MILES TOTAL PROJECT	SHEET No	TOTAL SHEETS
07	LA	5	2.4/4.0	778	1288

LICENSED ARCHITECT — DATE 1/31/12

LICENSED ARCHITECT H. Javier Chavez 14073 03-31-13 Renewal Date STATE OF CALIFORNIA

3-26-12
PLANS APPROVAL DATE

The State of California or its officers or agents shall not be responsible for the accuracy or completeness of electronic copies of this plan sheet.

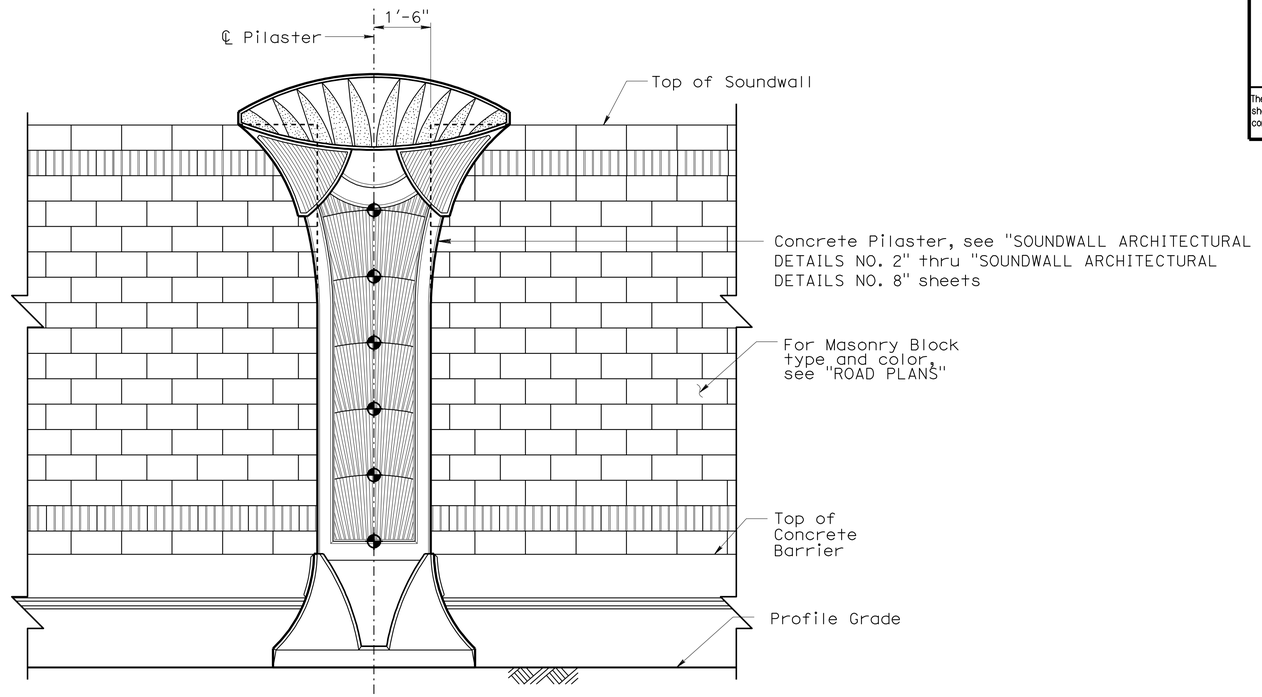

PART SOUNDWALL ELEVATION - FREEWAY SIDE

½" = 1'-0"

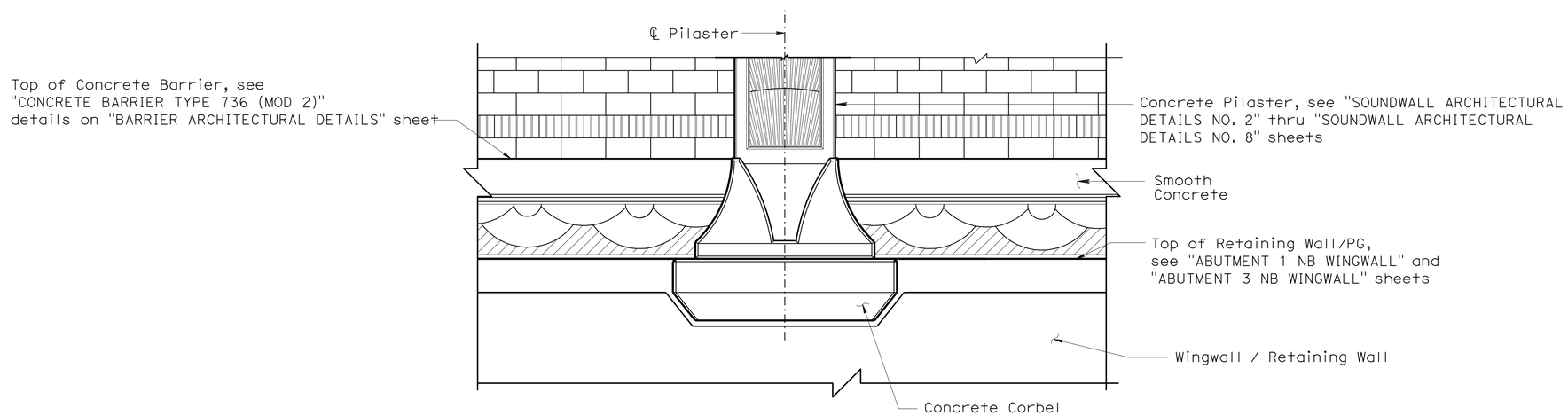

PART SOUNDWALL ELEVATION - BACK SIDE

½" = 1'-0"

DESIGN	BY Isaac Tasabia	CHECKED Javier Chavez
DETAILS	BY Herman Mauroschadt	CHECKED Javier Chavez
QUANTITIES	BY Suzan Moradi	CHECKED Gabriel Galo

STATE OF CALIFORNIA
DEPARTMENT OF TRANSPORTATION

DIVISION OF ENGINEERING SERVICES
BRIDGE ARCHITECTURE AND AESTHETICS

BRIDGE NO. 53-3040
POST MILE 3.44

ROSECRANS AVENUE UC (REPLACE)

SOUNDWALL ARCHITECTURAL DETAILS NO. 1

STRUCTURES DESIGN DETAIL SHEET (ENGLISH) (REV. 10/25/05)

ORIGINAL SCALE IN INCHES FOR REDUCED PLANS 0 1 2 3

CU 07
EA 215931

DISREGARD PRINTS BEARING EARLIER REVISION DATES → 1-23-12

REVISION DATES

SHEET 65 OF 81

FILE => 53-3040-r-swadet01.dgn

USERNAME => s123631 DATE PLOTTED => 28-MAR-2012 TIME PLOTTED => 10:53

DIST	COUNTY	ROUTE	POST MILES TOTAL PROJECT	SHEET No	TOTAL SHEETS
07	LA	5	2.4/4.0	779	1288

LICENSED ARCHITECT — DATE 1/31/12

LICENSED ARCHITECT H. Javier Chavez 14073 03-31-13 Renewal Date STATE OF CALIFORNIA

3-26-12
PLANS APPROVAL DATE

The State of California or its officers or agents shall not be responsible for the accuracy or completeness of electronic copies of this plan sheet.

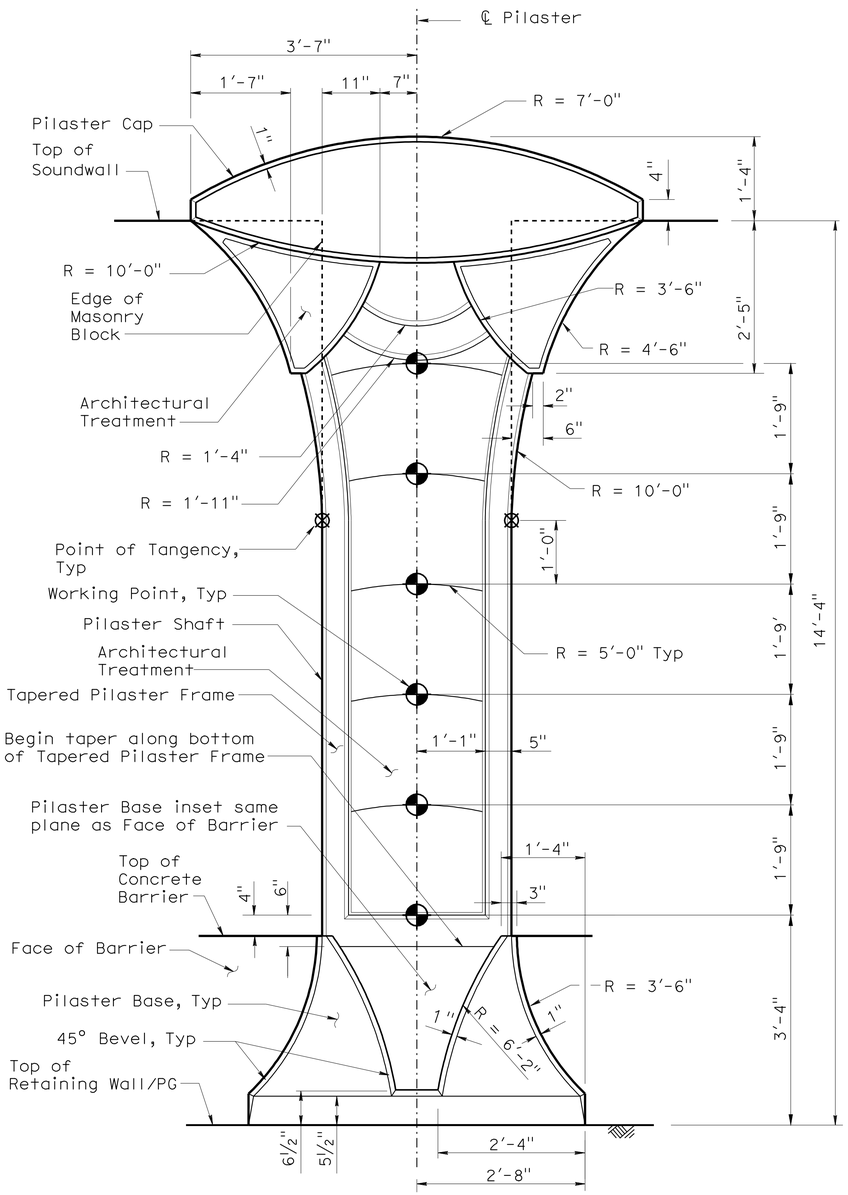

PILASTER ELEVATION - FREEWAY SIDE

NO SCALE

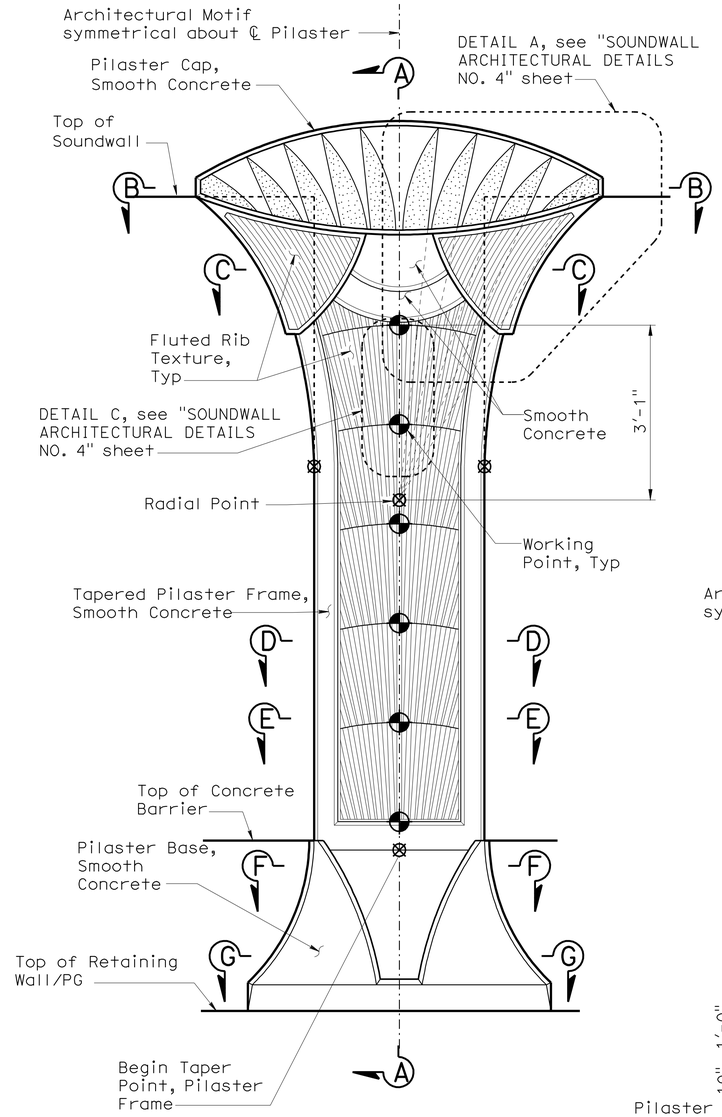

Note: For additional details not shown, see "PILASTER ELEVATION - FREEWAY SIDE"

FREEWAY SIDE

Notes:

1. For SECTION A-A", "SECTION B-B", "SECTION C-C", "SECTION D-D", "SECTION E-E", "SECTION F-F", SECTION G-G" and "SECTION H-H" see "SOUNDWALL ARCHITECTURAL DETAILS NO. 3" sheet.
2. All dimensions symmetrical about ℄ Pilaster.
3. Beveled edges are 45° unless otherwise noted.
4. All vertical dimension are measured along the ℄ Pilaster (Pilaster shall be vertical).

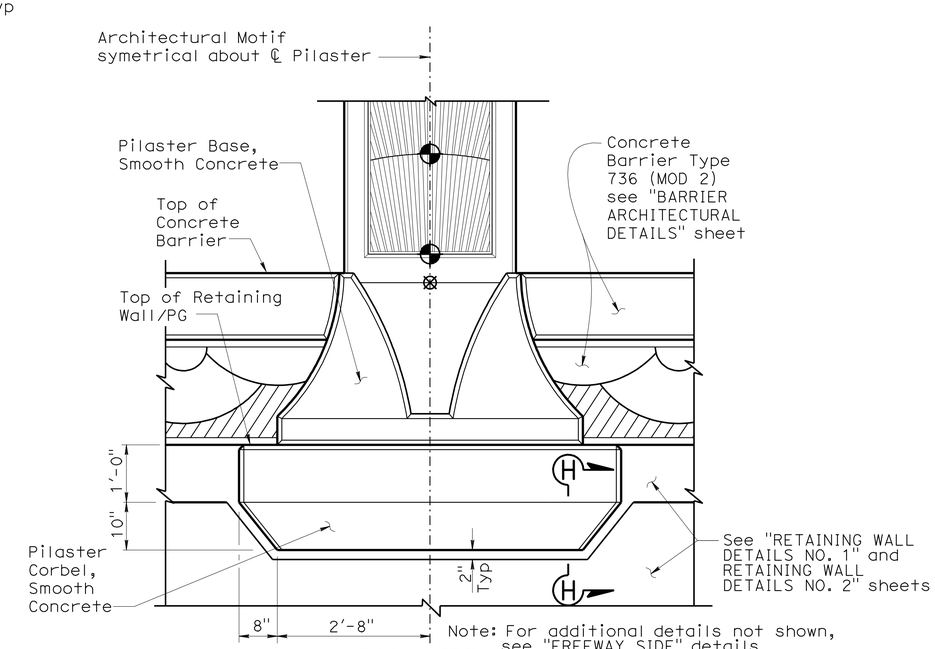

Note: For additional details not shown, see "FREEWAY SIDE" details.

BACK SIDE

PILASTER ARCHITECTURAL MOTIF

¾" = 1'-0"

DESIGN	BY Isaac Tasabia	CHECKED Javier Chavez	
DETAILS	BY Herman Mauroschadt	CHECKED Javier Chavez	
QUANTITIES	BY Suzan Moradi	CHECKED Gabriel Galo	

STATE OF CALIFORNIA
DEPARTMENT OF TRANSPORTATION

DIVISION OF ENGINEERING SERVICES
BRIDGE ARCHITECTURE AND AESTHETICS

BRIDGE NO. 53-3040
POST MILE 3.44

ROSECRANS AVENUE UC (REPLACE)
SOUNDWALL ARCHITECTURAL DETAILS NO. 2

STRUCTURES DESIGN DETAIL SHEET (ENGLISH) (REV. 10/25/05)

ORIGINAL SCALE IN INCHES FOR REDUCED PLANS 0 1 2 3

CU 07
EA 215931

DISREGARD PRINTS BEARING EARLIER REVISION DATES 1-23-12

REVISION DATES

SHEET 66 OF 81

FILE => 53-3040-r-swadet02.dgn

USERNAME => s123631 DATE PLOTTED => 28-MAR-2012 TIME PLOTTED => 10:54

DIST	COUNTY	ROUTE	POST MILES TOTAL PROJECT	SHEET No	TOTAL SHEETS
07	LA	5	2.4/4.0	780	1288

LICENSED ARCHITECT — DATE 1/31/12

LICENSED ARCHITECT H. Javier Chavez 14073 03-31-13 Renewal Date STATE OF CALIFORNIA

3-26-12
PLANS APPROVAL DATE

The State of California or its officers or agents shall not be responsible for the accuracy or completeness of electronic copies of this plan sheet.

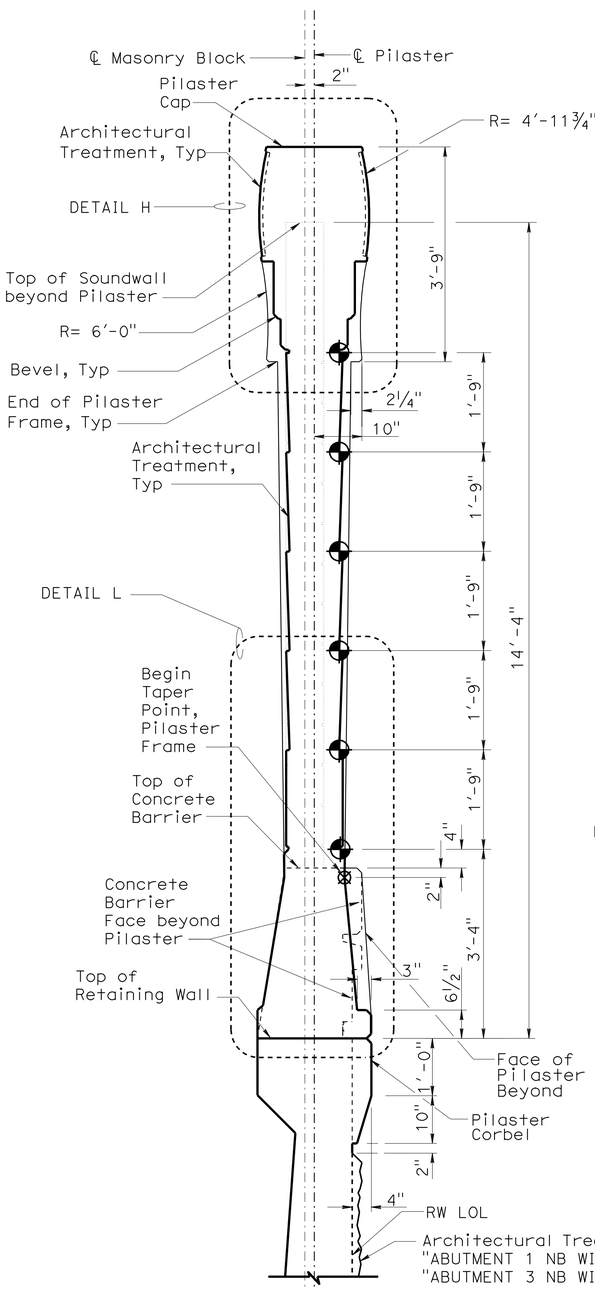

SECTION A-A
¾" = 1'-0"

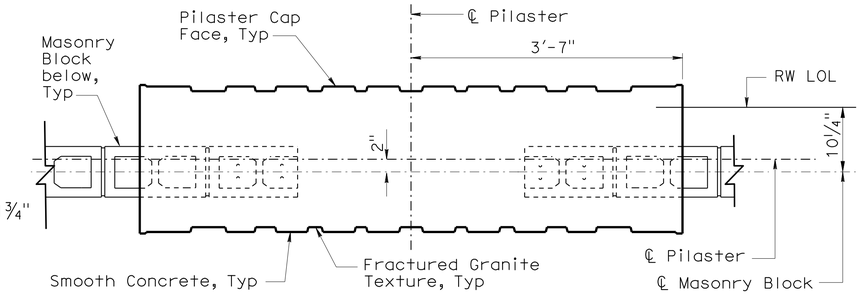

SECTION B-B
1" = 1'-0"

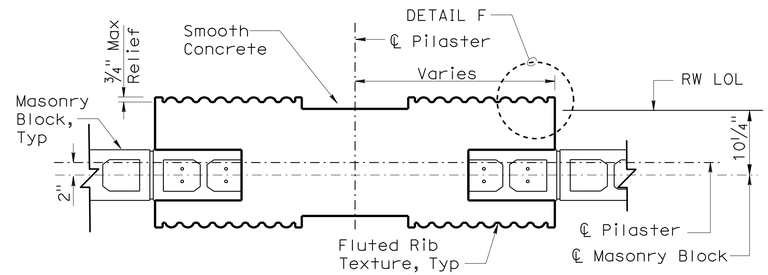

SECTION C-C
1" = 1'-0"

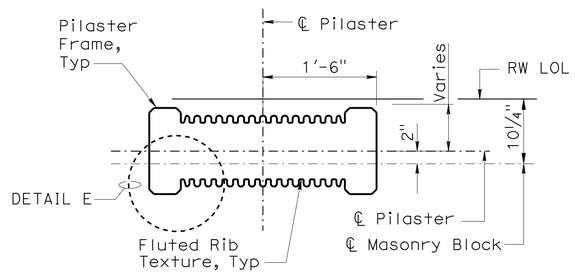

SECTION D-D
1" = 1'-0"

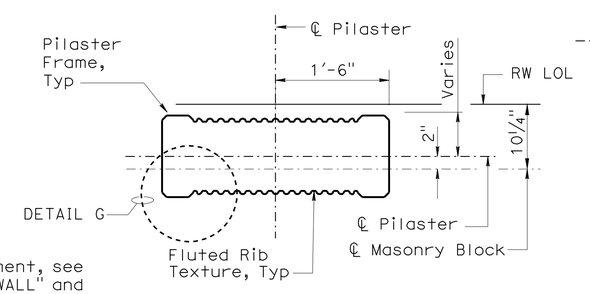

SECTION E-E
1" = 1'-0"

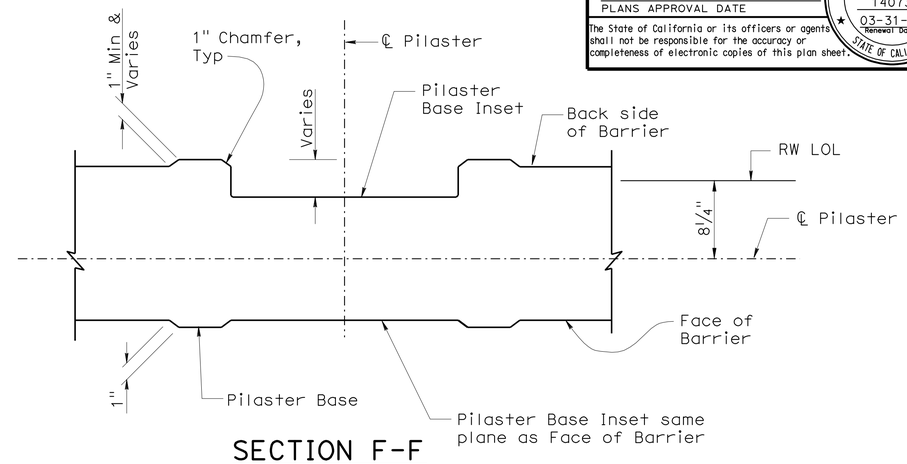

SECTION F-F
1½" = 1'-0"

Notes:

1. All dimensions symmetrical about ℄ Pilaster.
2. All vertical dimension are measured along the ℄ Pilaster (Pilaster shall be vertical).
3. For "DETAIL E", "DETAIL F" and "DETAIL G" see "SOUNDWALL ARCHITECTURAL DETAILS NO. 4" sheet.
4. For "DETAIL H" and "DETAIL L" see "SOUNDWALL ARCHITECTURAL DETAILS NO. 5" sheet.

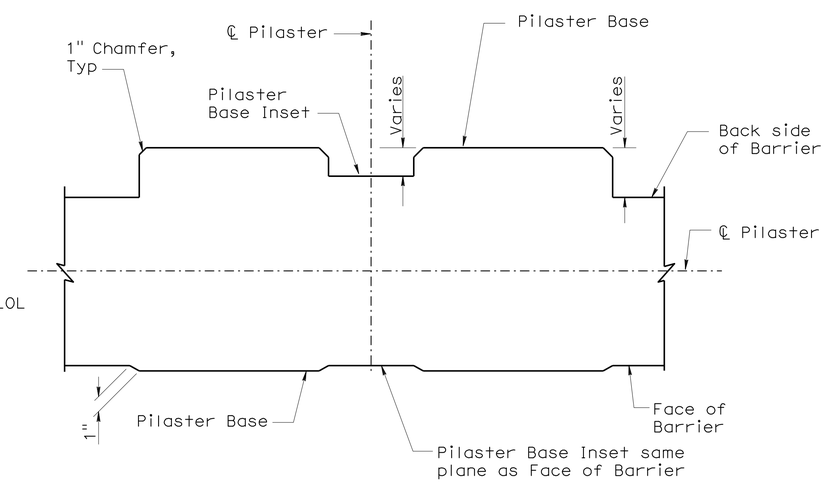

SECTION G-G
1½" = 1'-0"

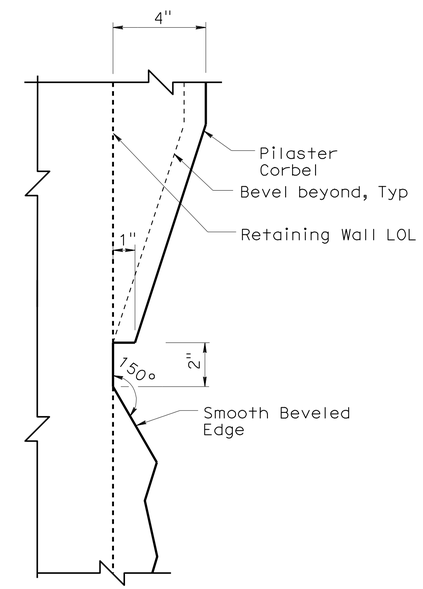

SECTION H-H
NO SCALE

	BY	CHECKED
DESIGN	Isaac Tasabia	Javier Chavez
DETAILS	Herman Mauroschadt	Javier Chavez
QUANTITIES	Suzan Moradi	Gabriel Galo

STATE OF CALIFORNIA
DEPARTMENT OF TRANSPORTATION

DIVISION OF ENGINEERING SERVICES
BRIDGE ARCHITECTURE AND AESTHETICS

BRIDGE NO. 53-3040
POST MILE 3.44

ROSECRANS AVENUE UC (REPLACE)
SOUNDWALL ARCHITECTURAL DETAILS NO. 3

STRUCTURES DESIGN DETAIL SHEET (ENGLISH) (REV. 10/25/05)

ORIGINAL SCALE IN INCHES FOR REDUCED PLANS 0 1 2 3

CU 07
EA 215931

DISREGARD PRINTS BEARING EARLIER REVISION DATES 1-23-12

REVISION DATES

SHEET 67 OF 81

FILE => 53-3040-r-swadet03.dgn

USERNAME => s123631 DATE PLOTTED => 28-MAR-2012 TIME PLOTTED => 10:54

DIST	COUNTY	ROUTE	POST MILES TOTAL PROJECT	SHEET No	TOTAL SHEETS
07	LA	5	2.4/4.0	781	1288

LICENSED ARCHITECT — 1/31/12 DATE

3-26-12
PLANS APPROVAL DATE

LICENSED ARCHITECT H. Javier Chavez 14073 03-31-13 Renewal Date STATE OF CALIFORNIA

The State of California or its officers or agents shall not be responsible for the accuracy or completeness of electronic copies of this plan sheet.

Notes:

1. All notes and dimensions symetrical about ℄ Pilaster.
2. Beveled edges are 45° unless otherwise noted.
3. For Retaining Wall split slate texture, see "RETAINING WALL ARCHITECTURAL DETAILS" sheet.
4. For Type 736SV (MOD) Barrier fractured granite texture, see "CONCRETE BARRIER TYPE 736A (MOD 2) DETAILS" sheet if applicable.

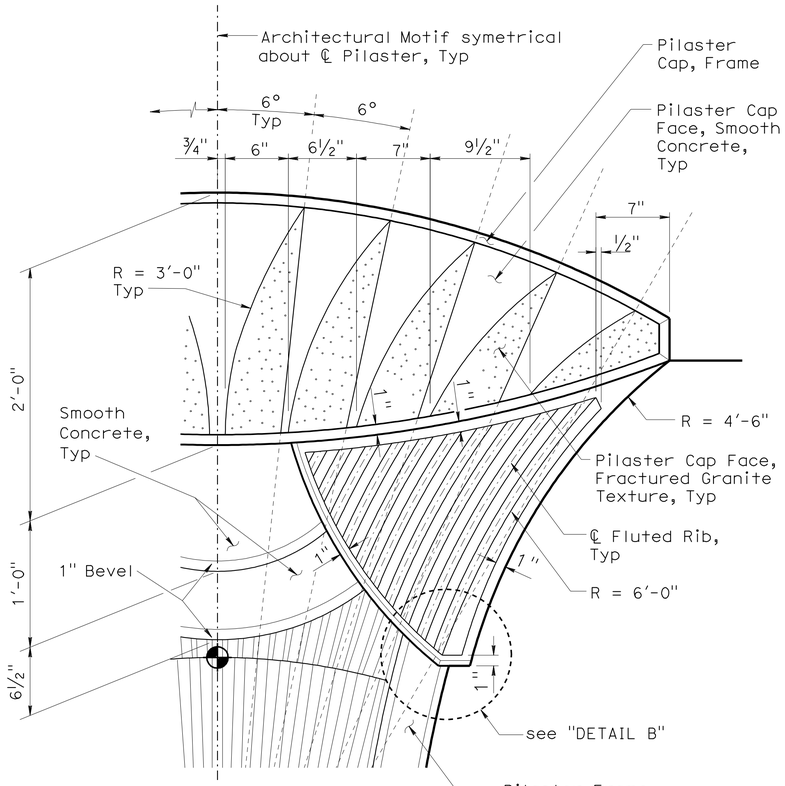

DETAIL A
NO SCALE

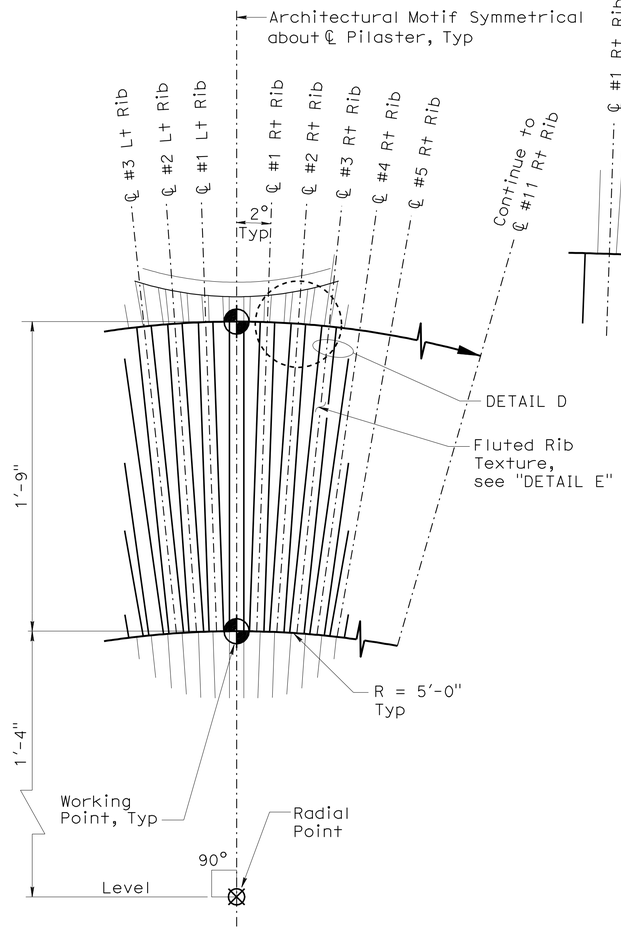

DETAIL C
NO SCALE

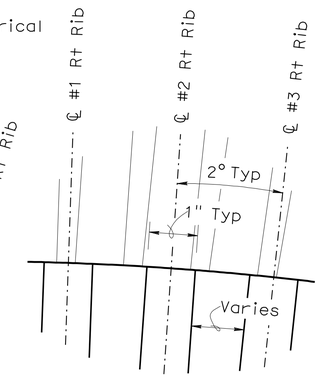

DETAIL D
NO SCALE

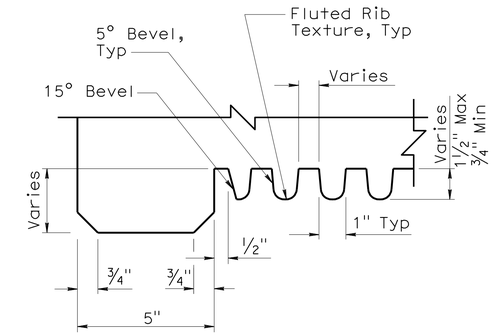

DETAIL E
NO SCALE

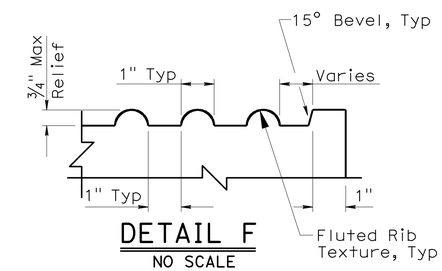

DETAIL F
NO SCALE

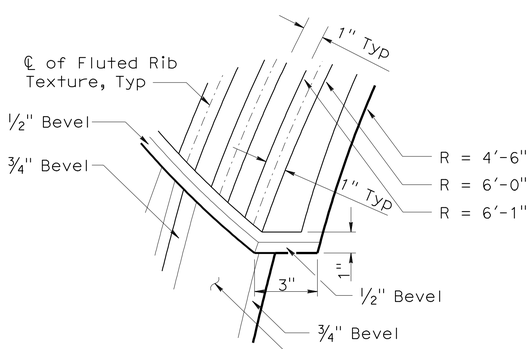

DETAIL B
NO SCALE

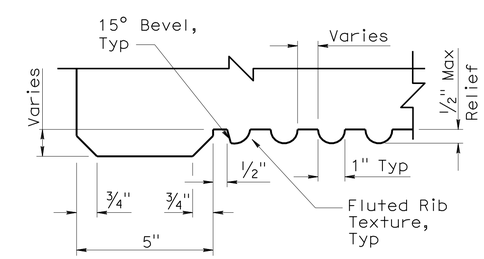

DETAIL G
NO SCALE

DESIGN	BY Isaac Tasabia	CHECKED Javier Chavez	
DETAILS	BY Herman Mauroschadt	CHECKED Javier Chavez	
QUANTITIES	BY Suzan Moradi	CHECKED Gabriel Galo	

STATE OF CALIFORNIA
DEPARTMENT OF TRANSPORTATION

DIVISION OF ENGINEERING SERVICES
BRIDGE ARCHITECTURE AND AESTHETICS

BRIDGE NO. 53-3040
POST MILE 3.44

ROSECRANS AVENUE UC (REPLACE)
SOUNDWALL ARCHITECTURAL DETAILS NO. 4

STRUCTURES DESIGN DETAIL SHEET (ENGLISH) (REV. 10/25/05)

ORIGINAL SCALE IN INCHES FOR REDUCED PLANS 0 1 2 3

CU 07
EA 215931

DISREGARD PRINTS BEARING EARLIER REVISION DATES → 1-23-12

REVISION DATES

SHEET 68 OF 81

FILE => 53-3040-r-swadet04.dgn

USERNAME => s123631 DATE PLOTTED => 28-MAR-2012 TIME PLOTTED => 10:54

DIST	COUNTY	ROUTE	POST MILES TOTAL PROJECT	SHEET No	TOTAL SHEETS
07	LA	5	2.4/4.0	782	1288

LICENSED ARCHITECT — DATE 1/31/12

LICENSED ARCHITECT H. Javier Chavez 14073 03-31-13 Renewal Date STATE OF CALIFORNIA

3-26-12
PLANS APPROVAL DATE

The State of California or its officers or agents shall not be responsible for the accuracy or completeness of electronic copies of this plan sheet.

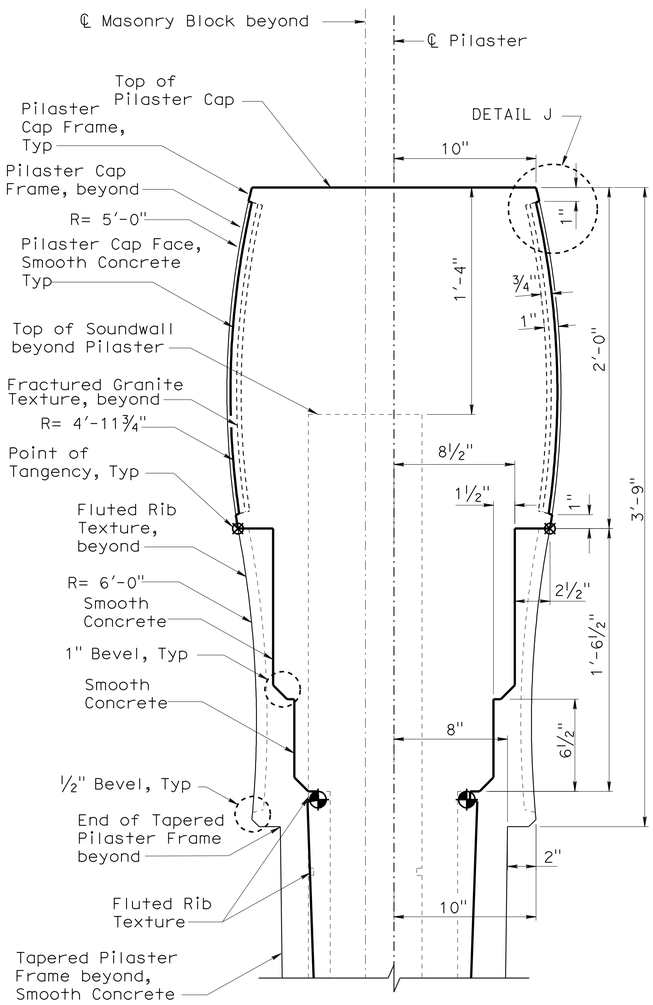

DETAIL H
NO SCALE

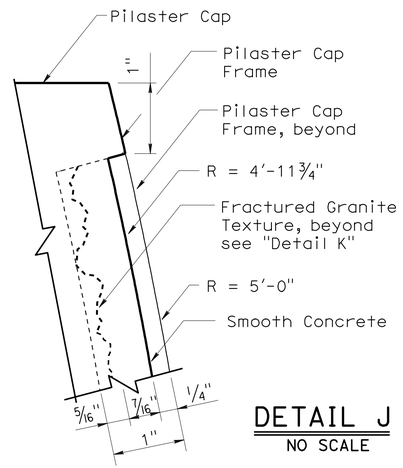

DETAIL J
NO SCALE

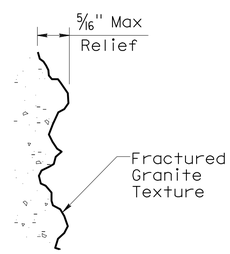

DETAIL K
NO SCALE

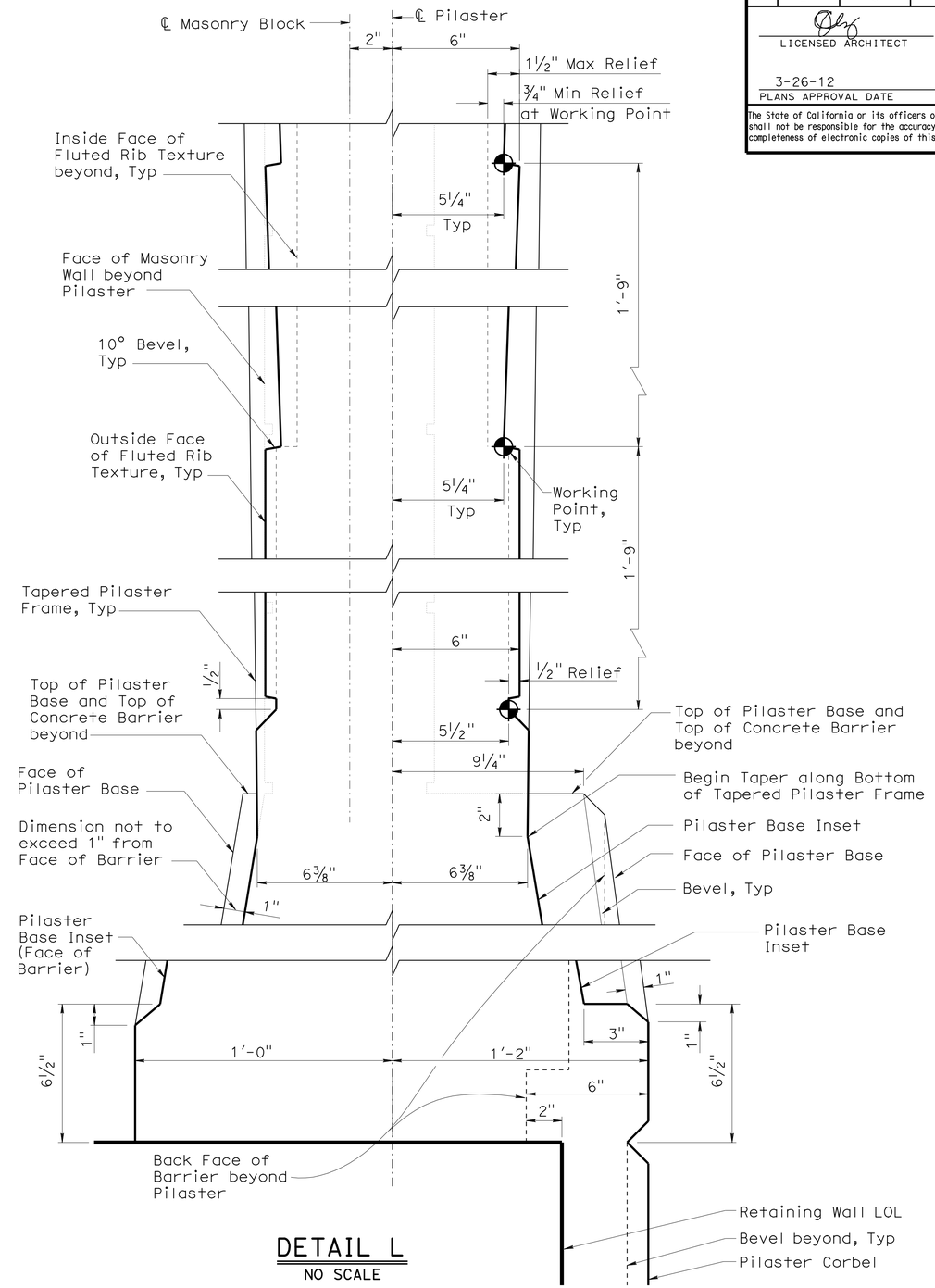

DETAIL L
NO SCALE

DESIGN	BY Isaac Tasabia	CHECKED Javier Chavez	
DETAILS	BY Herman Mauroschadt	CHECKED Javier Chavez	
QUANTITIES	BY Suzan Moradi	CHECKED Gabriel Galo	

STATE OF CALIFORNIA
DEPARTMENT OF TRANSPORTATION

DIVISION OF ENGINEERING SERVICES
BRIDGE ARCHITECTURE AND AESTHETICS

BRIDGE NO. 53-3040
POST MILE 3.44

ROSECRANS AVENUE UC (REPLACE)
SOUNDWALL ARCHITECTURAL DETAILS NO. 5

STRUCTURES DESIGN DETAIL SHEET (ENGLISH) (REV. 10/25/05)

ORIGINAL SCALE IN INCHES FOR REDUCED PLANS 0 1 2 3

CU 07
EA 215931

DISREGARD PRINTS BEARING EARLIER REVISION DATES → 1-23-12

REVISION DATES

SHEET 69 OF 81

FILE => 53-3040-r-swadet05.dgn

USERNAME => s123631 DATE PLOTTED => 28-MAR-2012 TIME PLOTTED => 10:54

DIST	COUNTY	ROUTE	POST MILES TOTAL PROJECT	SHEET No	TOTAL SHEETS
07	LA	5	2.4/4.0	783	1288

Andrew Rittenhouse 12-12-11
REGISTERED CIVIL ENGINEER DATE

3-26-12
PLANS APPROVAL DATE

The State of California or its officers or agents shall not be responsible for the accuracy or completeness of electronic copies of this plan sheet.

REGISTERED PROFESSIONAL ENGINEER
Andrew P. Rittenhouse
No. 61006
Exp. 12-31-12
CIVIL
STATE OF CALIFORNIA

Note:
For "SECTION K-K", "SECTION L-L", "SECTION M-M" and "SECTION N-N", see "SOUNDWALL ARCHITECTURAL DETAILS NO. 7" sheet.

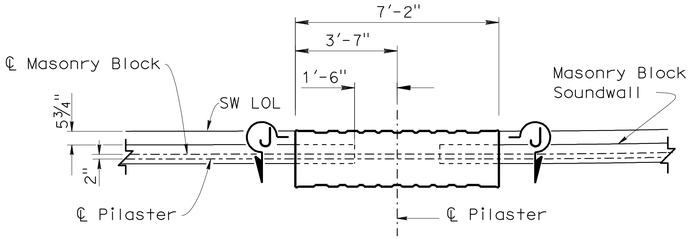

PART SOUND WALL PLAN

⅜" = 1'-0"

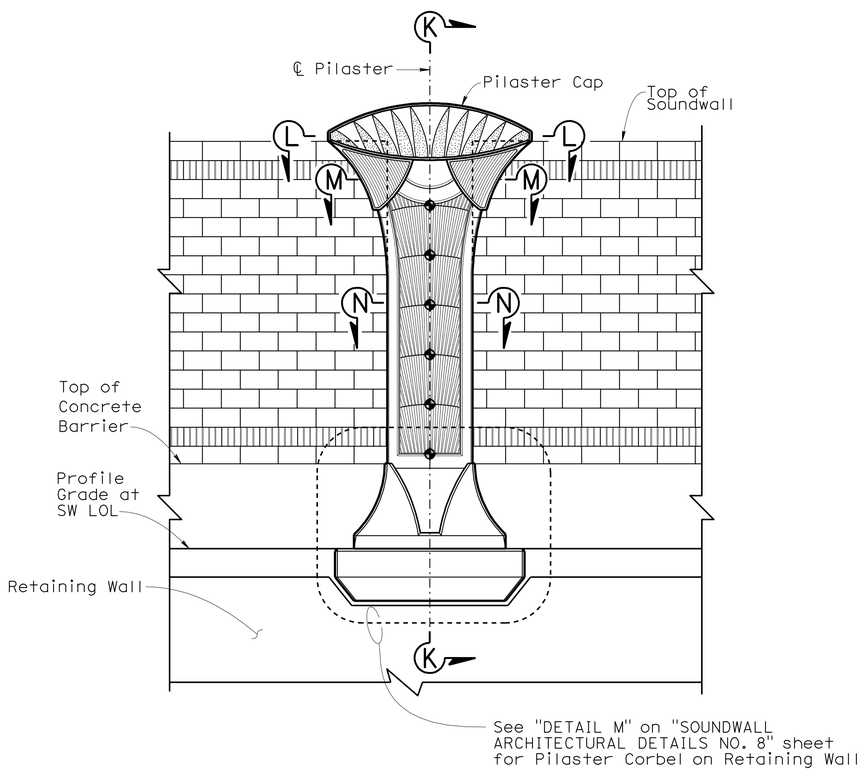

PART SOUNDWALL ELEVATION

⅜" = 1'-0"

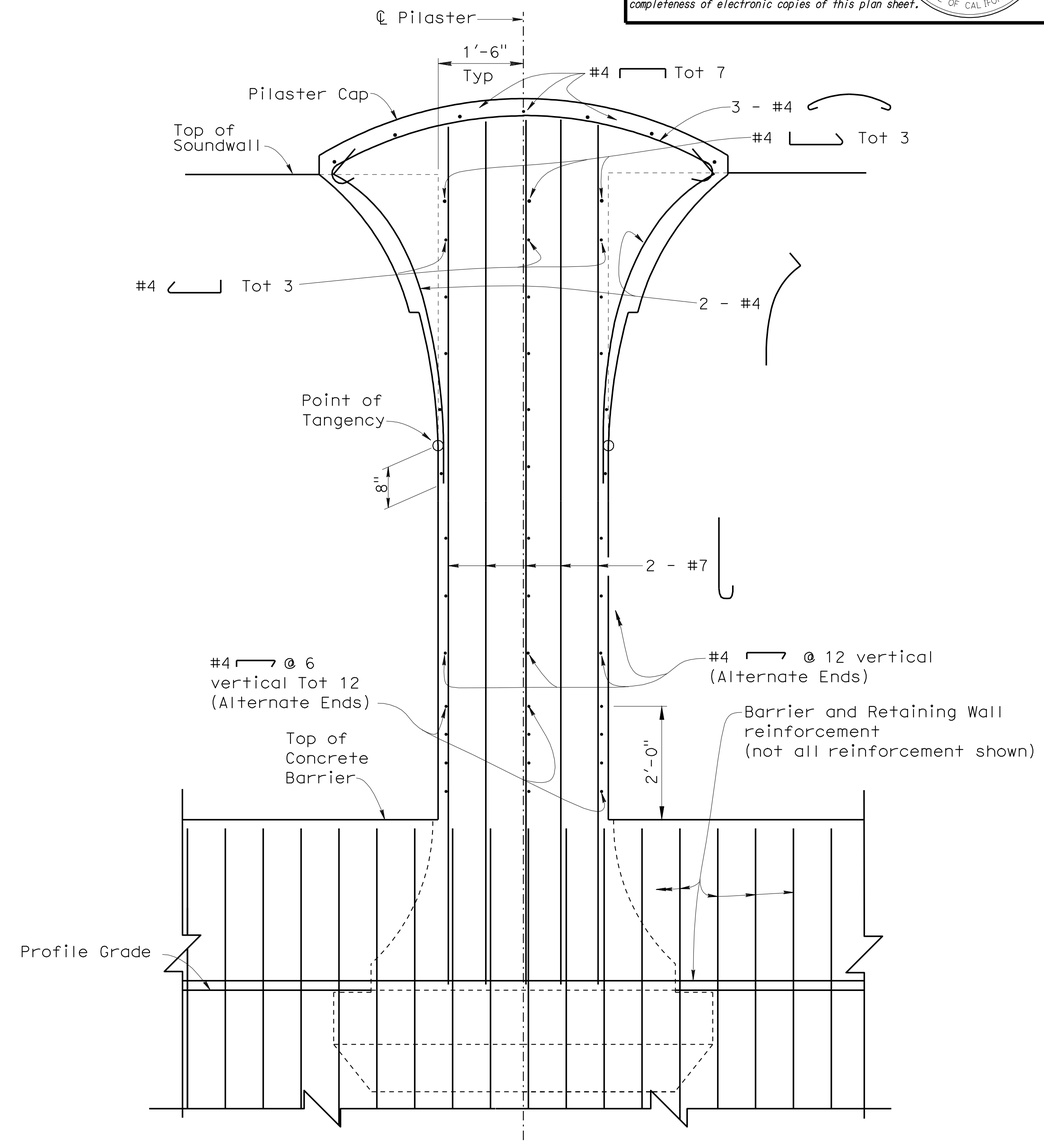

Note: Pilaster Corbel Reinf not shown.

SECTION J-J

¾" = 1'-0"

DESIGN	BY Isaac Tasabia	CHECKED Javier Chavez
DETAILS	BY Herman Mauroschadt	CHECKED Javier Chavez
QUANTITIES	BY Suzan Moradi	CHECKED Gabriel Galo

STATE OF CALIFORNIA
DEPARTMENT OF TRANSPORTATION

DIVISION OF ENGINEERING SERVICES
STRUCTURE DESIGN
DESIGN BRANCH 15

BRIDGE NO. 53-3040
POST MILE 3.44

ROSECRANS AVENUE UC (REPLACE)
SOUNDWALL ARCHITECTURAL DETAILS NO. 6

STRUCTURES DESIGN DETAIL SHEET (ENGLISH) (REV. 10/25/05)

ORIGINAL SCALE IN INCHES FOR REDUCED PLANS 0 1 2 3

CU 07
EA 215931

DISREGARD PRINTS BEARING EARLIER REVISION DATES 1-23-12

REVISION DATES

SHEET 70 OF 81

FILE => 53-3040-r-swadet06.dgn

USERNAME => s123631 DATE PLOTTED => 28-MAR-2012 TIME PLOTTED => 10:54

DIST	COUNTY	ROUTE	POST MILES TOTAL PROJECT	SHEET No	TOTAL SHEETS
07	LA	5	2.4/4.0	784	1288

Andrew Rittenhouse 12-12-11
REGISTERED CIVIL ENGINEER DATE

3-26-12
PLANS APPROVAL DATE

REGISTERED PROFESSIONAL ENGINEER
Andrew P. Rittenhouse
No. 61006
Exp. 12-31-12
CIVIL
STATE OF CALIFORNIA

The State of California or its officers or agents shall not be responsible for the accuracy or completeness of electronic copies of this plan sheet.

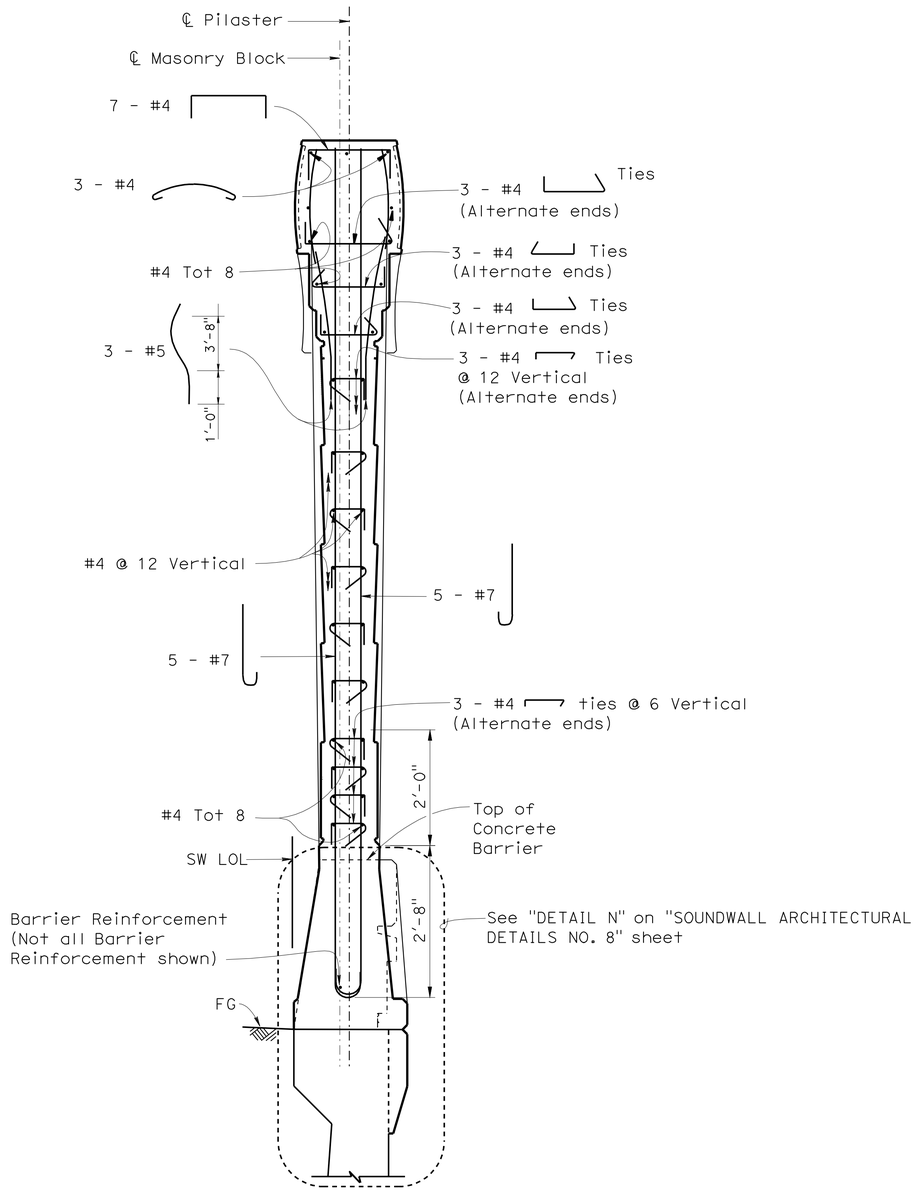

SECTION K-K
¾" = 1'-0"

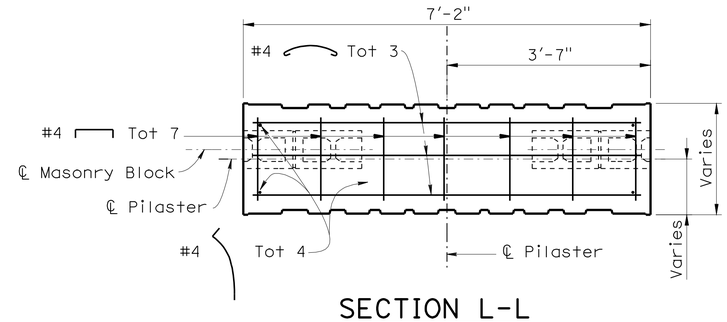

SECTION L-L
¾" = 1'-0"

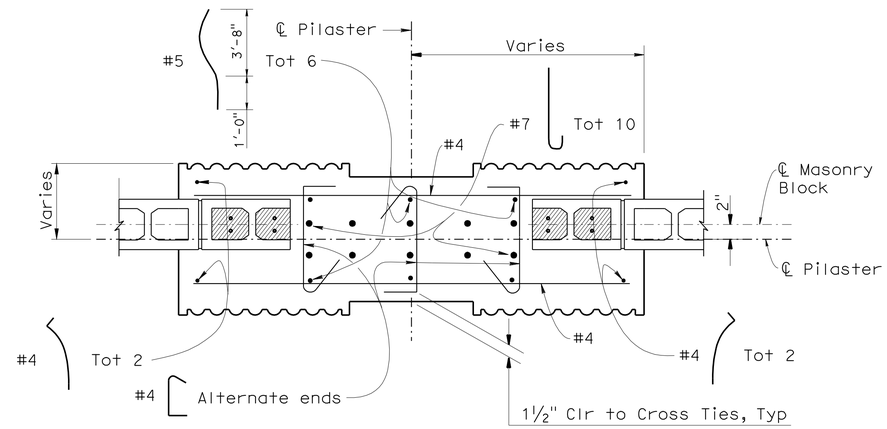

SECTION M-M
1" = 1'-0"

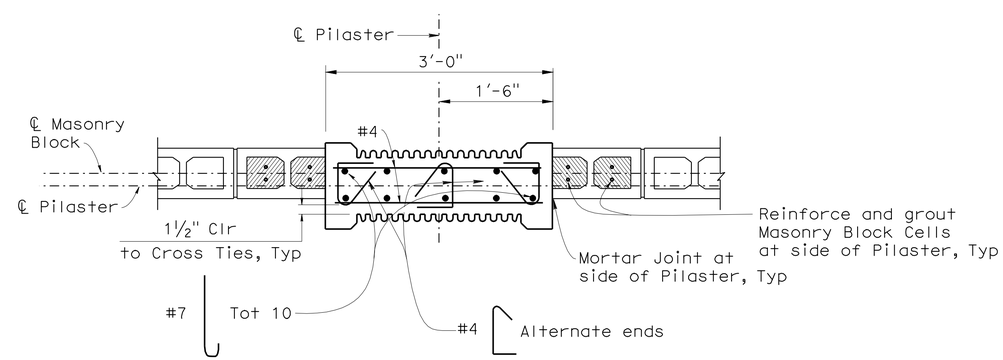

SECTION N-N
1" = 1'-0"

	BY	CHECKED
DESIGN	Isaac Tasabia	Javier Chavez
DETAILS	Herman Mauroschadt	Javier Chavez
QUANTITIES	Suzan Moradi	Gabriel Galo

STATE OF CALIFORNIA
DEPARTMENT OF TRANSPORTATION

DIVISION OF ENGINEERING SERVICES
STRUCTURE DESIGN
DESIGN BRANCH 15

BRIDGE NO. 53-3040
POST MILE 3.44

ROSECRANS AVENUE UC (REPLACE)
SOUNDWALL ARCHITECTURAL DETAILS NO. 7

STRUCTURES DESIGN DETAIL SHEET (ENGLISH) (REV. 10/25/05)

ORIGINAL SCALE IN INCHES FOR REDUCED PLANS 0 1 2 3

CU 07
EA 215931

DISREGARD PRINTS BEARING EARLIER REVISION DATES 2-2-12

REVISION DATES

SHEET 71 OF 81

FILE => 53-3040-r-swadet07.dgn

USERNAME => s123631 DATE PLOTTED => 28-MAR-2012 TIME PLOTTED => 10:54

DIST	COUNTY	ROUTE	POST MILES TOTAL PROJECT	SHEET No	TOTAL SHEETS
07	LA	5	2.4/4.0	785	1288

Andrew Rittenhouse 12-12-11
REGISTERED CIVIL ENGINEER DATE

3-26-12
PLANS APPROVAL DATE

REGISTERED PROFESSIONAL ENGINEER
Andrew P. Rittenhouse
No. 61006
Exp. 12-31-12
CIVIL
STATE OF CALIFORNIA

The State of California or its officers or agents shall not be responsible for the accuracy or completeness of electronic copies of this plan sheet.

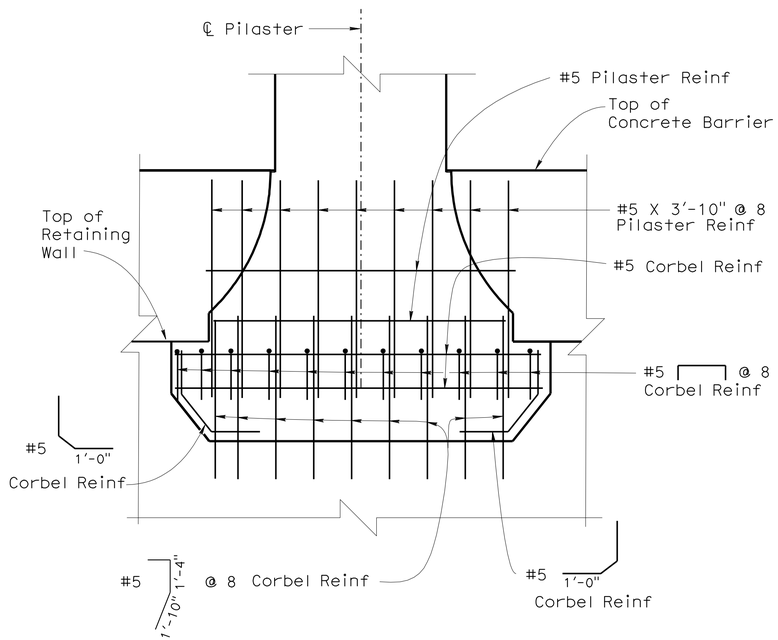

Note: Concrete Barrier/Retaining Wall reinf not shown.

DETAIL M
3/4" = 1'-0"

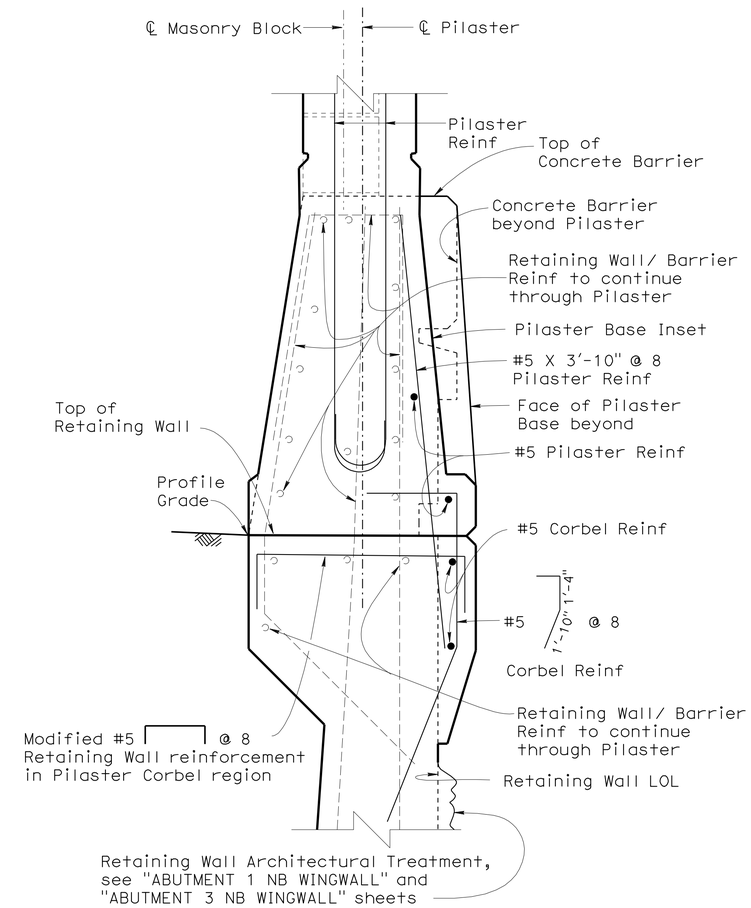

PILASTER CORBEL
ON RETAINING WALL

DETAIL N
1 1/2" = 1'-0"

DESIGN	BY Isaac Tasabia	CHECKED Javier Chavez	
DETAILS	BY Herman Mauroschadt	CHECKED Javier Chavez	
QUANTITIES	BY Suzan Moradi	CHECKED Gabriel Galo	

STATE OF CALIFORNIA
DEPARTMENT OF TRANSPORTATION

DIVISION OF ENGINEERING SERVICES
STRUCTURE DESIGN
DESIGN BRANCH 15

BRIDGE NO. 53-3040
POST MILE 3.44

ROSECRANS AVENUE UC (REPLACE)
SOUNDWALL ARCHITECTURAL DETAILS NO. 8

STRUCTURES DESIGN DETAIL SHEET (ENGLISH) (REV. 10/25/05)

ORIGINAL SCALE IN INCHES FOR REDUCED PLANS 0 1 2 3

CU 07
EA 215931

DISREGARD PRINTS BEARING EARLIER REVISION DATES 1-23-12

REVISION DATES

SHEET 72 OF 81

FILE => 53-3040-r-swadet08.dgn

USERNAME => s123631 DATE PLOTTED => 28-MAR-2012 TIME PLOTTED => 10:54

DIST.	COUNTY	ROUTE	POST MILES TOTAL PROJECT	SHEET NO.	TOTAL SHEETS
07	LA	5	2.4/4.0	786	1288

Andrew Rittenhouse 12-12-11
REGISTERED ENGINEER - CIVIL

3-26-12
PLANS APPROVAL DATE

REGISTERED PROFESSIONAL ENGINEER Andrew P. Rittenhouse No. 61006 Exp. 12-31-12 CIVIL STATE OF CALIFORNIA

The State of California or its officers or agents shall not be responsible for the accuracy or completeness of electronic copies of this plan sheet.

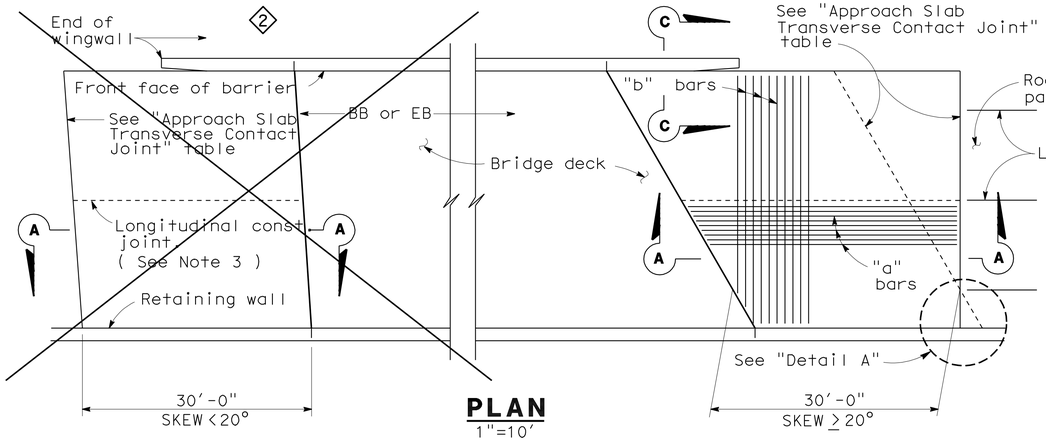

PLAN
1"=10'

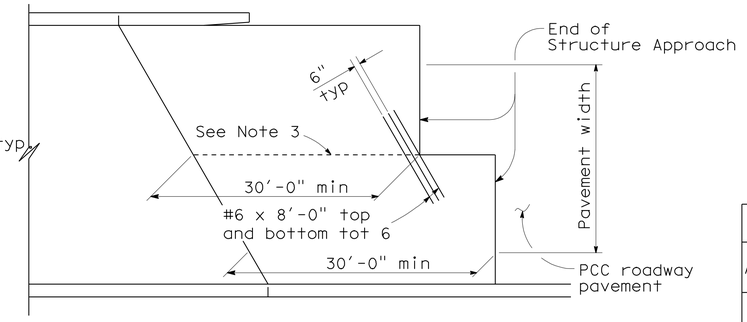

STRUCTURE APPROACH - END STAGGER DETAIL
No Scale

APPROACH SLAB TRANSVERSE CONTACT JOINT		
APPROACH SKEW	WITH AC ROADWAY PAVEMENT	WITH PCC ROADWAY PAVEMENT
< 20°	Parallel to face of paving notch	Parallel to face of paving notch
20° - 45°	Parallel to face of PN use (Detail A)	Stagger lines 24' to 36' apart.
> 45°	Parallel to face of PN use (Detail A)	Stagger at each lane line.

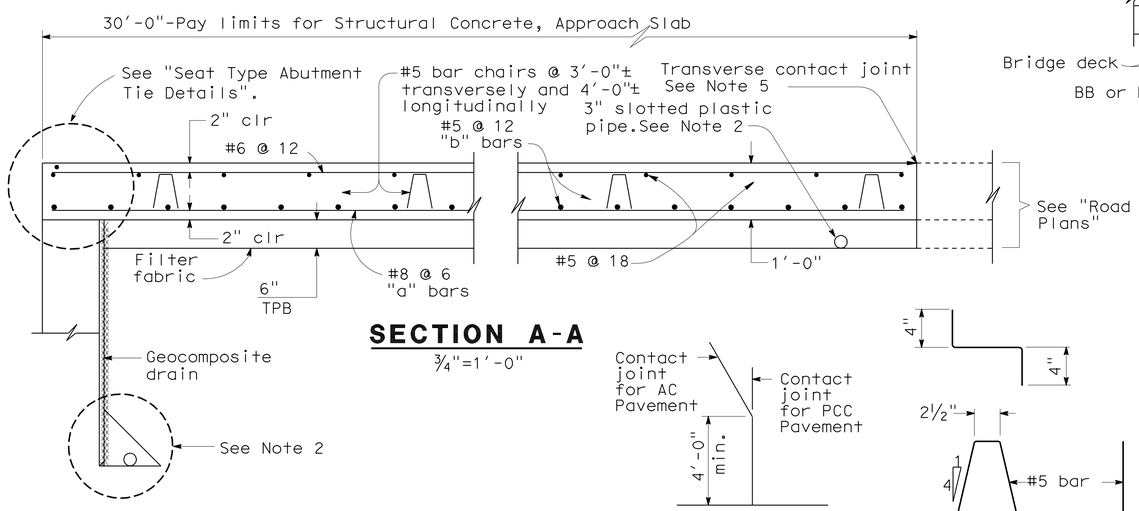

SECTION A-A
¾"=1'-0"

DETAIL A
No Scale

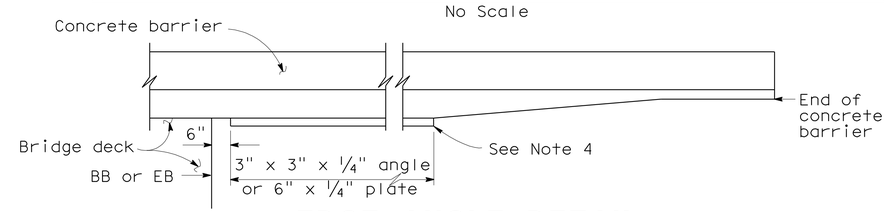

EDGE ANGLE DETAIL
½"=1'-0"

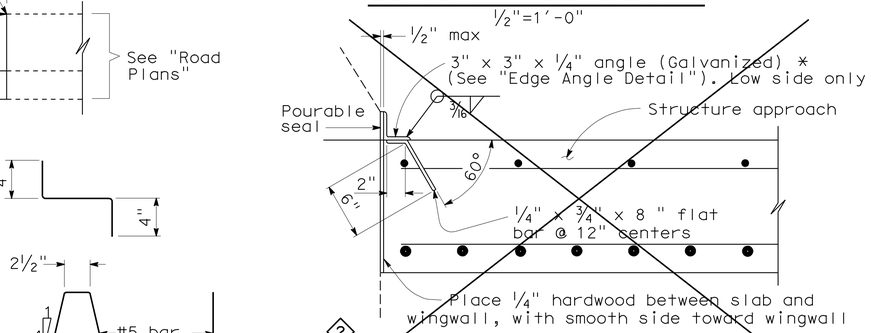

*(TO BE USED WITH TYPE 25 OR TYPE 27 CONCRETE BARRIER)

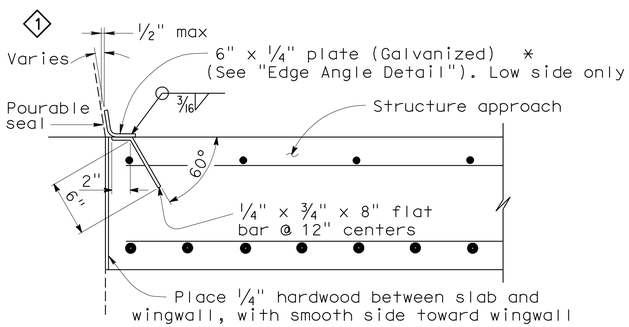

*(TO BE USED WITH TYPE 732 OR TYPE 736 CONCRETE BARRIER)

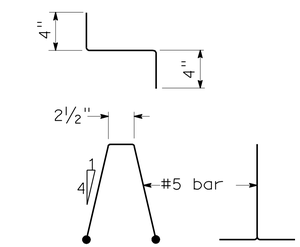

BAR CHAIR DETAIL
1½"=1'-0"

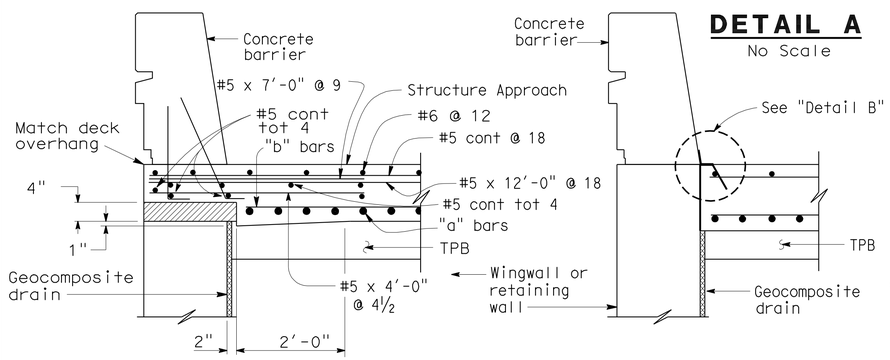

TYPE E-1 | TYPE E-2

SECTION C-C
¾"=1'-0"

(Type E-1 to be used,unless otherwise shown on plans)

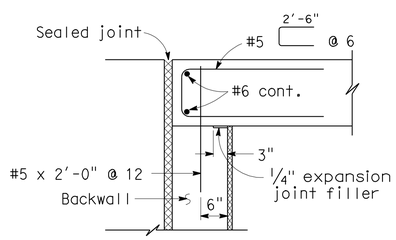

MR ≤ 2"

DETAIL B
1½"=1'-0"

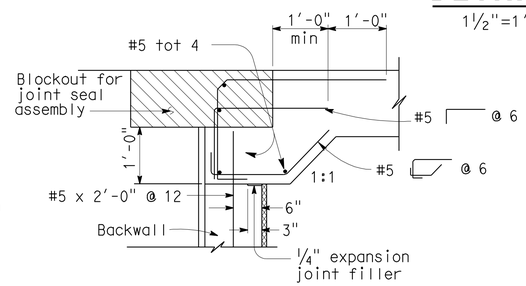

MR > 2"

SEAT TYPE ABUTMENT TIE DETAILS (SEE NOTE 1)
¾"=1'-0"

NOTES:

1. For details not shown, see Structure Plans. For MR ≤ 2", adjust bar reinforcement to clear a sawcut for sealed joint, when required.
2. For drainage details, see "Structure Approach Drainage Details" sheet.
3. Longitudinal construction joints, when permitted by the Engineer, shall be located on lane lines.
4. End angle or plate at beginning of barrier transition, end of wingwall or end of structure approach as applicable.
5. For transverse contact joint with new PCC paving, refer to Standard Plan P10.
6. At the contractor's option, approach slab transverse reinforcement may be placed parallel to paving notch. Spacing of transverse reinforcement is measured along ℄ roadway.

Remove all polystyrene.

SPECIAL DETAILS

REVISED STANDARD DRAWING

RELEASE DATE 3/14/05	DESIGN	BY M.TRAFFALIS	CHECKED E.THORKILDSEN	RELEASED BY
FILE NO. xs3-120e	DETAILS	BY R.YEE	CHECKED E.THORKILDSEN	
	SUBMITTED	BY M.HA	DRAWING DATE 4/98	OFFICE CHIEF

1 Modified Detail
2 Removed Detail

STATE OF CALIFORNIA
DEPARTMENT OF TRANSPORTATION

DIVISION OF ENGINEERING SERVICES

BRIDGE NO. 53-3040
MILE POST 3.44

ROSECRANS AVENUE UC (REPLACE)
STRUCTURE APPROACH TYPE N(30S)

DS OSD 2147A (ENGLISH) (REV. X/XX/XX)

ORIGINAL SCALE IN INCHES FOR REDUCED PLANS 0 1 2 3

CU 07
EA 215931

DISREGARD PRINTS BEARING EARLIER REVISION DATES

REVISION DATES (PRELIMINARY STAGE ONLY) 11-05-0202-05-11 12-05-11 2-21-12

SHEET 73 OF 81

USERNAME => s123631

53-3040-s-sad.dgn

DATE PLOTTED => 28-MAR-2012 TIME PLOTTED => 10:54

DIST	COUNTY	ROUTE	POST MILES TOTAL PROJECT	SHEET No	TOTAL SHEETS
07	LA	5	2.4/4.0	787	1288

Andrew Rittenhouse 12-12-11
REGISTERED CIVIL ENGINEER DATE

3-26-12
PLANS APPROVAL DATE

REGISTERED PROFESSIONAL ENGINEER Andrew P. Rittenhouse No. 61006 Exp. 12-31-12 STATE OF CALIFORNIA

The State of California or its officers or agents shall not be responsible for the accuracy or completeness of electronic copies of this plan sheet.

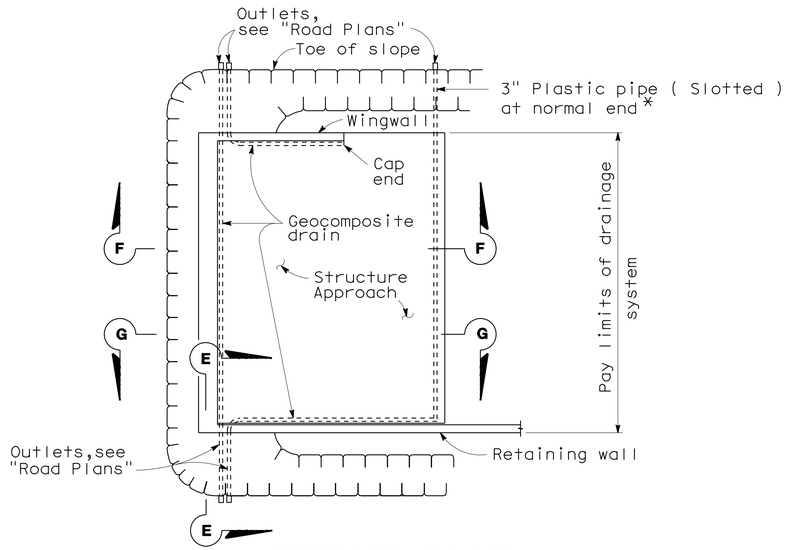

TYPICAL PLAN
1"=10'
*For pipe layout at staggered end, see "Detail B".

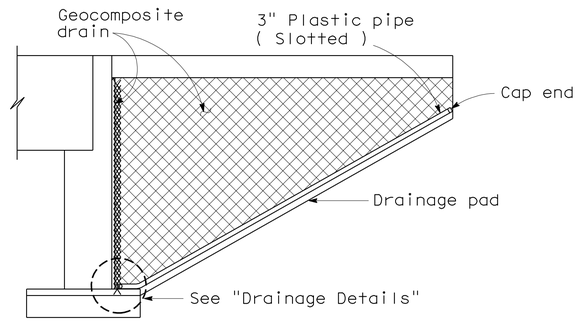

CANTILEVER WINGWALL SECTION F-F
1/4"=1'-0"

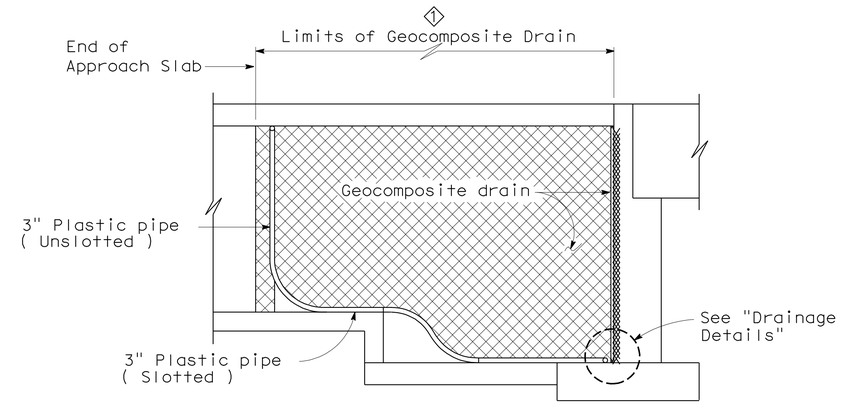

RETAINING WALL WINGWALL SECTION G-G
1/4"=1'-0"

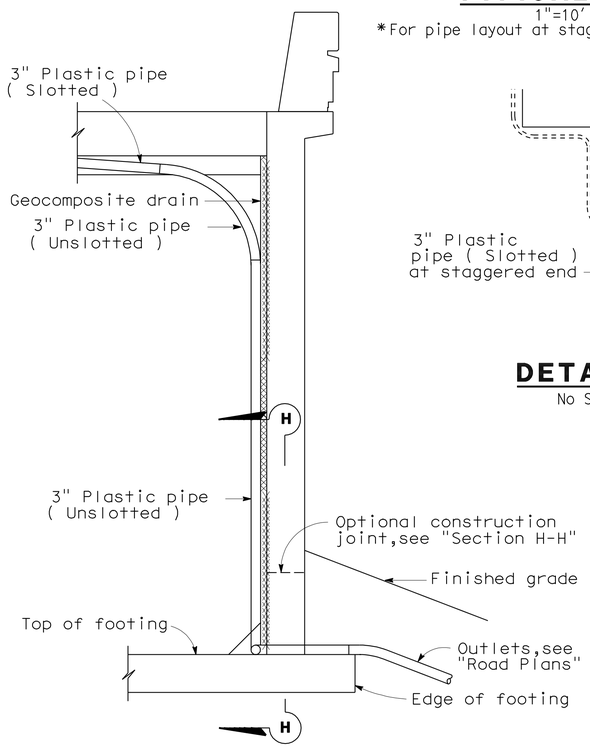

SECTION E-E
1/2"=1'-0"

NOTE: Bends and junctions in 3" plastic pipe are 30" radius min.

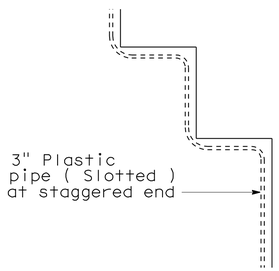

DETAIL B
No Scale

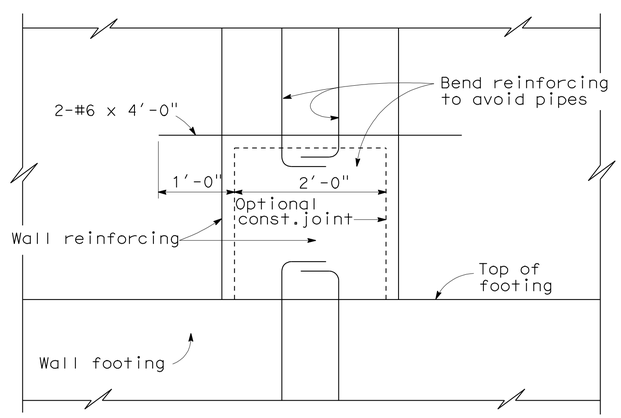

SECTION H-H
1"=1'-0"

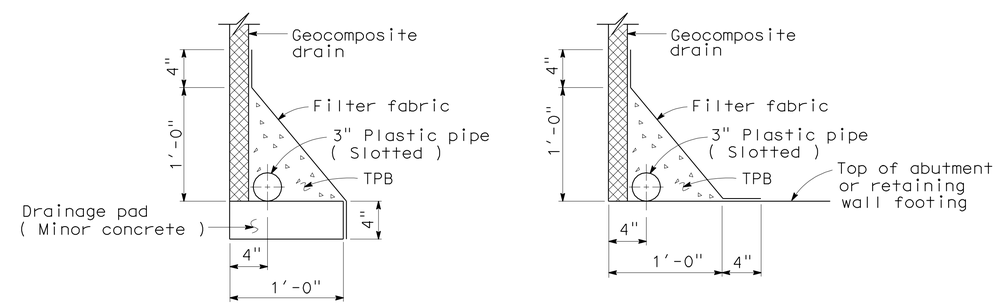

WITHOUT FOOTING **WITH FOOTING**

DRAINAGE DETAILS
1 1/2"=1'-0"

SPECIAL DETAILS

REVISED	STANDARD DRAWING			
RELEASE DATE 4/23/98	DESIGN BY M.TRAFFALIS	CHECKED E.THORKILDSEN	RELEASED BY	
FILE NO. xs3-110e	DETAILS BY R.YEE	CHECKED E.THORKILDSEN		
	SUBMITTED BY M.HA	DRAWING DATE 4/98	OFFICE CHIEF	

1 Removed Dimension

STATE OF CALIFORNIA DEPARTMENT OF TRANSPORTATION

DIVISION OF ENGINEERING SERVICES

BRIDGE NO. 53-3040
MILE POST 3.44

ROSECRANS AVENUE UC (REPLACE)
STRUCTURE APPROACH DRAINAGE DETAILS

DS OSD 2147A (ENGLISH) (REV. X/XX/XX)

ORIGINAL SCALE IN INCHES FOR REDUCED PLANS 0 1 2 3

CU 07
EA 215931

DISREGARD PRINTS BEARING EARLIER REVISION DATES

REVISION DATES (PRELIMINARY STAGE ONLY) 11-05-09 12-12-11 2-14-12

SHEET 74 OF 81

FILE => 53-3040-s-sddd.dgn

USERNAME => s123631 DATE PLOTTED => 28-MAR-2012 TIME PLOTTED => 10:55

DIST	COUNTY	ROUTE	POST MILES TOTAL PROJECT	SHEET No.	TOTAL SHEETS
07	LA	5	2.4/4.0	788	1288

GEOTECHNICAL PROFESSIONAL — DATE 06/2011

3-26-12
PLANS APPROVAL DATE

REGISTERED PROFESSIONAL ENGINEER — MICHAEL G. SMITH — No. 2229 — Exp. 3-31-2012 — GEOTECHNICAL — STATE OF CALIFORNIA

The State of California or its officers or agents shall not be responsible for the accuracy or completeness of electronic copies of this plan sheet.

BENCH MARK

PRHV 102 Elev 86.67′
FOUND PK NAIL & TIN SET BY OTHERS ON ISLAND @ THE BEGINNING OF SB 1-5 ON-RAMP & ROSECRANS AVE
PER SR 09-037-000010
NAVD 88

PRHV 103 Elev 84.50′
FOUND CHISELED "X" ON BACK WALK @ INLET AT SE CORNER OF ROSECRANS AVE AND FIRESTONE BLVD PER SR 09-037-000010
NAVD 88

Notes

1. This LOTB sheet was prepared in accordance with the Caltrans Soil & Rock Logging, Classification, and Presentation Manual (2010) except three digit sequence number in boring identification starting with the segment number per exception request approved on April 08, 2009

2. For protection of underground utility lines, hand-auger was used to remove top 5 to 10 feet of subsurface material for exploratory borings and cone penetration testings.

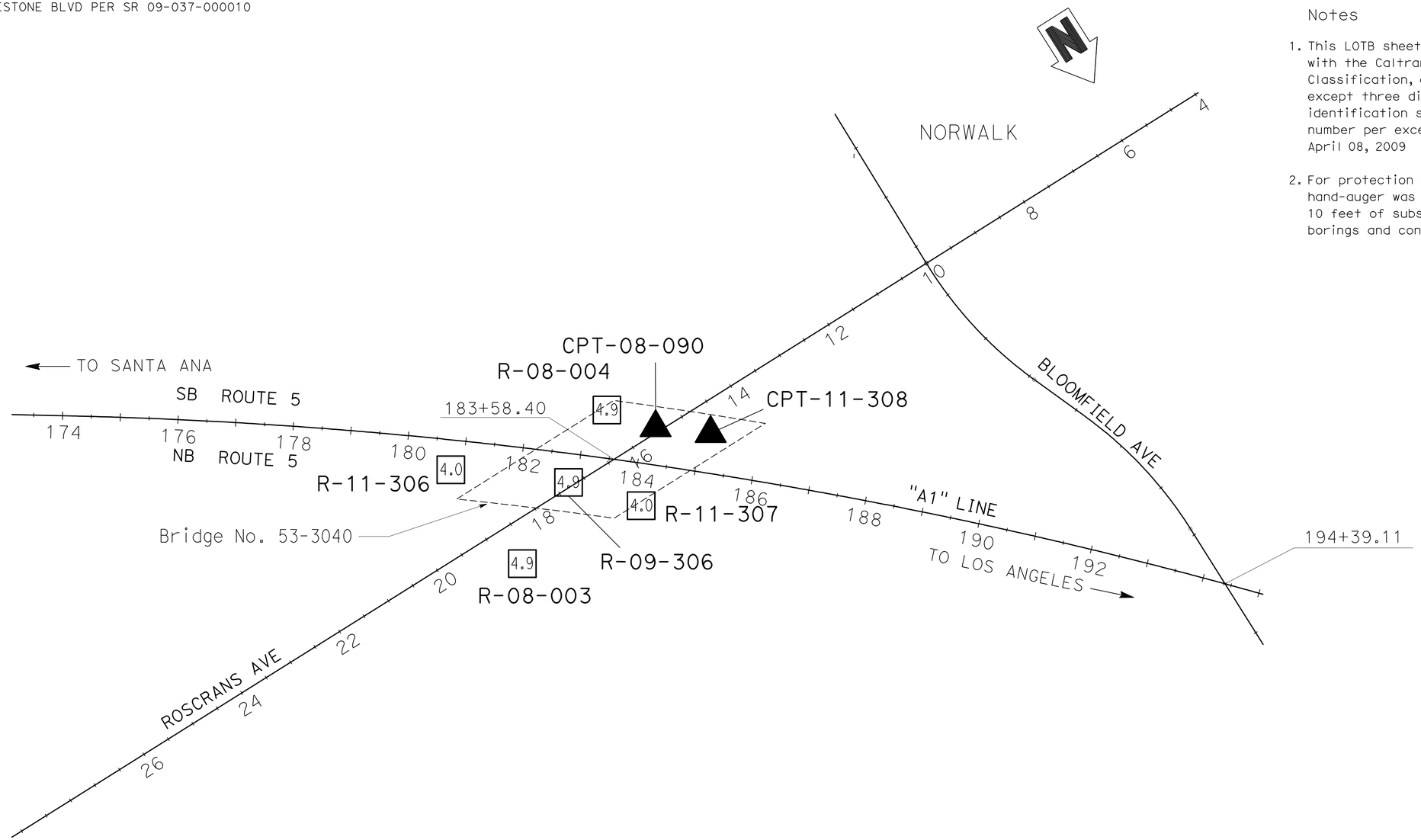

PLAN
SCALE 1"=100′

ENGINEERING SERVICES	MATERIALS AND GEOTECHNICAL SERVICES	STATE OF CALIFORNIA DEPARTMENT OF TRANSPORTATION	DIVISION OF ENGINEERING SERVICES STRUCTURE DESIGN DESIGN BRANCH 15	BRIDGE NO. 53-3040 POST MILE 3.44	ROSECRANS AVENUE UC (REPLACE) LOG OF TEST BORINGS SHEET 1 OF 7
FUNCTIONAL SUPERVISOR NAME: M. SMITH	DRAWN BY: P.QUACH CHECKED BY: D.ORRIS	FIELD INVESTIGATION BY: P.MCDONALD/T.PANAH/C.CARBINO/EJ.JEON/L.ROEBUCK			

OGS CIVIL LOG OF TEST BORINGS SHEET — ORIGINAL SCALE IN INCHES FOR REDUCED PLANS 0 1 2 3 — CU 07 EA 215931 — DISREGARD PRINTS BEARING EARLIER REVISION DATES — REVISION DATES 06-27-11 12-6-11 — SHEET 75 OF 81

FILE => 53-3040-z-lotb01.dgn

USERNAME => s123631 DATE PLOTTED => 28-MAR-2012 TIME PLOTTED => 10:55

DIST	COUNTY	ROUTE	POST MILES TOTAL PROJECT	SHEET No.	TOTAL SHEETS
07	LA	5	2.4/4.0	789	1288

GEOTECHNICAL PROFESSIONAL — DATE 06/2011

3-26-12
PLANS APPROVAL DATE

REGISTERED PROFESSIONAL ENGINEER — MICHAEL G. SMITH No. 2229 Exp. 3-31-2012 GEOTECHNICAL — STATE OF CALIFORNIA

The State of California or its officers or agents shall not be responsible for the accuracy or completeness of electronic copies of this plan sheet.

Notes

1. This LOTB sheet was prepared in accordance with the Caltrans Soil & Rock Logging, Classification, and Presentation Manual (2010) except three digit sequence number in boring identification starting with the segment number per exception request approved on April 08, 2009
2. For protection of underground utility lines, hand-auger was used to remove top 5 to 10 feet of subsurface material for exploratory borings and cone penetration testings.

FOR PLAN VIEW, SEE "LOG OF TEST BORINGS" 1 OF 7

ENGINEERING SERVICES	MATERIALS AND GEOTECHNICAL SERVICES	STATE OF CALIFORNIA DEPARTMENT OF TRANSPORTATION	DIVISION OF ENGINEERING SERVICES STRUCTURE DESIGN DESIGN BRANCH 15	BRIDGE NO. 53-3040 / POST MILE 3.44	ROSECRANS AVENUE UC (REPLACE)
FUNCTIONAL SUPERVISOR	DRAWN BY: P.QUACH	FIELD INVESTIGATION BY:			LOG OF TEST BORINGS SHEET 2 OF 7
NAME: M. SMITH	CHECKED BY: D.ORRIS	P.MCDONALD/T.PANAH/C.CARBINO/EJ.JEON/L.ROEBUCK			

OGS CIVIL LOG OF TEST BORINGS SHEET — ORIGINAL SCALE IN INCHES FOR REDUCED PLANS 0 1 2 3 — CU 07 EA 215931 — DISREGARD PRINTS BEARING EARLIER REVISION DATES — REVISION DATES 06-27-11 12-6-11 — SHEET 76 OF 81

FILE => 53-3040-z-lotb02.dgn

USERNAME => s123631 DATE PLOTTED => 28-MAR-2012 TIME PLOTTED => 10:55

DIST	COUNTY	ROUTE	POST MILES TOTAL PROJECT	SHEET No.	TOTAL SHEETS
07	LA	5	2.4/4.0	790	1288

GEOTECHNICAL PROFESSIONAL — DATE 06/2011

3-26-12
PLANS APPROVAL DATE

REGISTERED PROFESSIONAL ENGINEER — MICHAEL G. SMITH No. 2229 Exp. 3-31-2012 GEOTECHNICAL — STATE OF CALIFORNIA

The State of California or its officers or agents shall not be responsible for the accuracy or completeness of electronic copies of this plan sheet.

FOR PLAN VIEW, SEE
"LOG OF TEST BORINGS" 1 OF 7

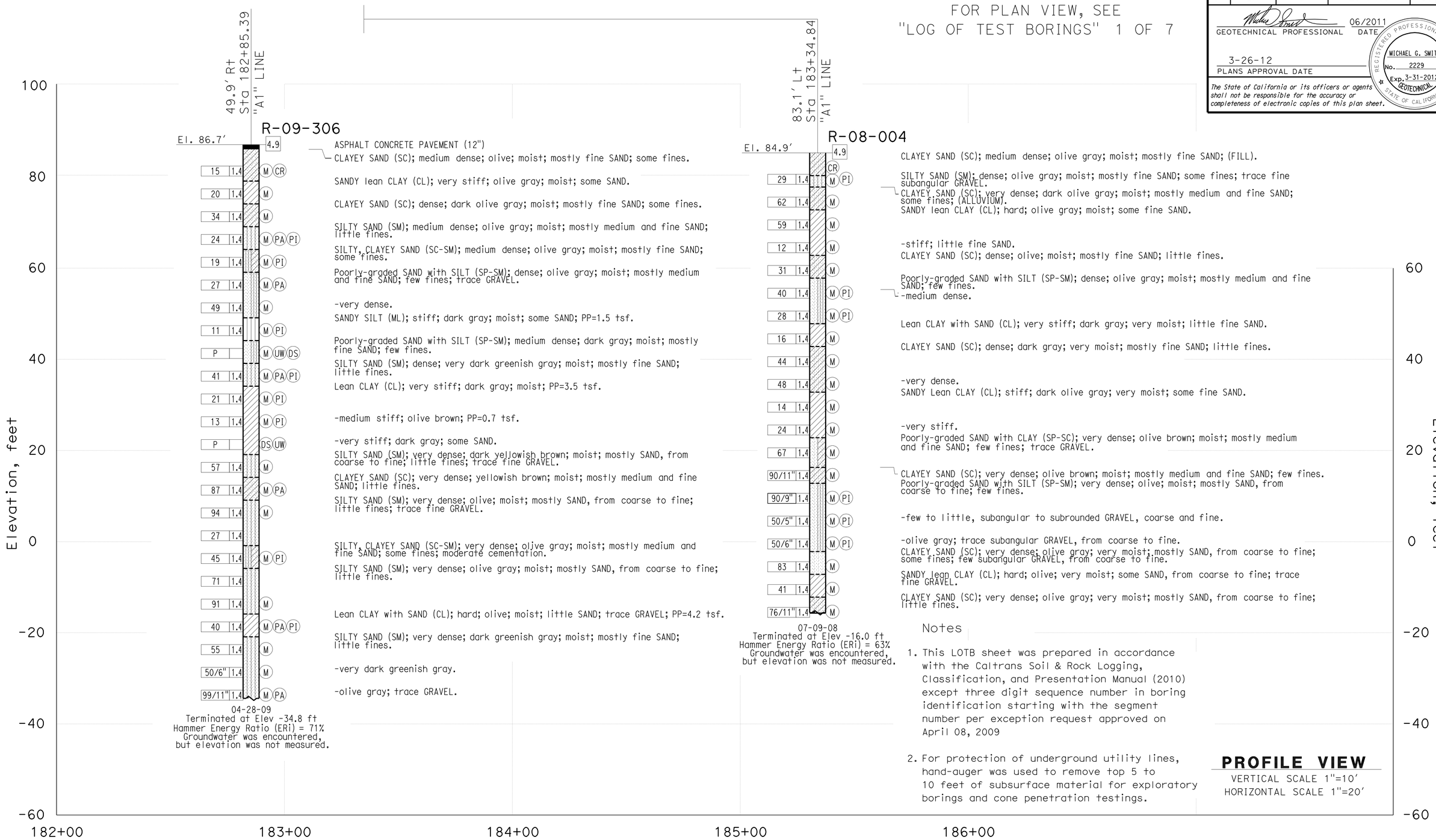

Notes

1. This LOTB sheet was prepared in accordance with the Caltrans Soil & Rock Logging, Classification, and Presentation Manual (2010) except three digit sequence number in boring identification starting with the segment number per exception request approved on April 08, 2009

2. For protection of underground utility lines, hand-auger was used to remove top 5 to 10 feet of subsurface material for exploratory borings and cone penetration testings.

PROFILE VIEW
VERTICAL SCALE 1"=10'
HORIZONTAL SCALE 1"=20'

ENGINEERING SERVICES	MATERIALS AND GEOTECHNICAL SERVICES	STATE OF CALIFORNIA DEPARTMENT OF TRANSPORTATION	DIVISION OF ENGINEERING SERVICES STRUCTURE DESIGN DESIGN BRANCH 15	BRIDGE NO. 53-3040 POST MILE 3.44	ROSECRANS AVENUE UC (REPLACE)
FUNCTIONAL SUPERVISOR	DRAWN BY: P.QUACH	FIELD INVESTIGATION BY:			LOG OF TEST BORINGS SHEET 3 OF 7
NAME: M. SMITH	CHECKED BY: D.ORRIS	P.MCDONALD/T.PANAH/C.CARBINO/EJ.JEON/L.ROEBUCK			

OGS CIVIL LOG OF TEST BORINGS SHEET

ORIGINAL SCALE IN INCHES FOR REDUCED PLANS 0 1 2 3

CU 07
EA 215931

DISREGARD PRINTS BEARING EARLIER REVISION DATES

REVISION DATES: 06/27/11 12-6-11

SHEET 77 OF 81

FILE => 53-3040-z-lotb03.dgn

USERNAME => s123631 DATE PLOTTED => 28-MAR-2012 TIME PLOTTED => 10:55

DIST	COUNTY	ROUTE	POST MILES TOTAL PROJECT	SHEET No.	TOTAL SHEETS
07	LA	5	2.4/4.0	791	1288

GEOTECHNICAL PROFESSIONAL — 06/2011 DATE

3-26-12
PLANS APPROVAL DATE

REGISTERED PROFESSIONAL ENGINEER — MICHAEL G. SMITH No. 2229 Exp. 3-31-2012 GEOTECHNICAL — STATE OF CALIFORNIA

The State of California or its officers or agents shall not be responsible for the accuracy or completeness of electronic copies of this plan sheet.

FOR PLAN VIEW, SEE
"LOG OF TEST BORINGS" 1 OF 7

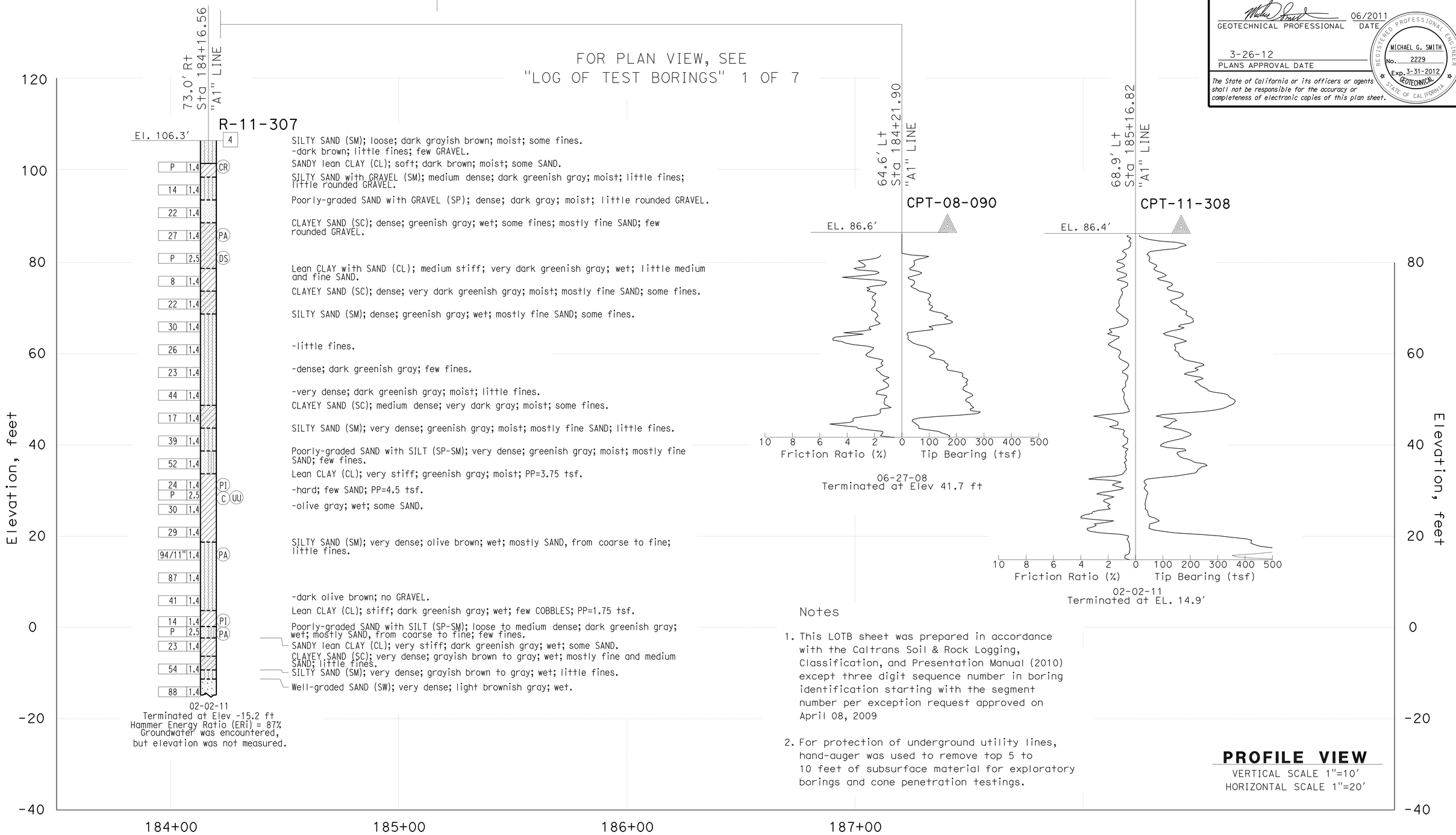

Notes

1. This LOTB sheet was prepared in accordance with the Caltrans Soil & Rock Logging, Classification, and Presentation Manual (2010) except three digit sequence number in boring identification starting with the segment number per exception request approved on April 08, 2009

2. For protection of underground utility lines, hand-auger was used to remove top 5 to 10 feet of subsurface material for exploratory borings and cone penetration testings.

PROFILE VIEW
VERTICAL SCALE 1"=10'
HORIZONTAL SCALE 1"=20'

ENGINEERING SERVICES	MATERIALS AND GEOTECHNICAL SERVICES	STATE OF CALIFORNIA DEPARTMENT OF TRANSPORTATION	DIVISION OF ENGINEERING SERVICES STRUCTURE DESIGN DESIGN BRANCH 15	BRIDGE NO. 53-3040 POST MILE 3.44	ROSECRANS AVENUE UC (REPLACE)
FUNCTIONAL SUPERVISOR	DRAWN BY: P.QUACH	FIELD INVESTIGATION BY:			LOG OF TEST BORINGS SHEET 4 OF 7
NAME: M. SMITH	CHECKED BY: D.ORRIS	P.MCDONALD/T.PANAH/C.CARBINO/EJ.JEON/L.ROEBUCK			

OGS CIVIL LOG OF TEST BORINGS SHEET

ORIGINAL SCALE IN INCHES FOR REDUCED PLANS 0 1 2 3

CU 07
EA 215931

DISREGARD PRINTS BEARING EARLIER REVISION DATES

REVISION DATES 06/11/11 12-6-11

SHEET 78 OF 81

FILE => 53-3040-z-lotb04.dgn

USERNAME => s123631 DATE PLOTTED => 28-MAR-2012 TIME PLOTTED => 10:55

DIST	COUNTY	ROUTE	POST MILES TOTAL PROJECT	SHEET No.	TOTAL SHEETS
07	LA	5	2.4/4.0	792	1288

GEOTECHNICAL PROFESSIONAL — DATE 06/2011

3-26-12
PLANS APPROVAL DATE

REGISTERED PROFESSIONAL ENGINEER — MICHAEL G. SMITH No. 2229 Exp. 3-31-2012 GEOTECHNICAL — STATE OF CALIFORNIA

The State of California or its officers or agents shall not be responsible for the accuracy or completeness of electronic copies of this plan sheet.

REFERENCE: CALTRANS SOIL & ROCK LOGGING, CLASSIFICATION, AND PRESENTATION MANUAL (2010)

CEMENTATION

Description	Criteria
Weak	Crumbles or breaks with handling or little finger pressure.
Moderate	Crumbles or breaks with considerable finger pressure.
Strong	Will not crumble or break with finger pressure.

BOREHOLE IDENTIFICATION

Symbol	Hole Type	Description
Size	A	Auger Boring (hollow or solid stem bucket)
Size	R RW RC P	Rotary drilled boring (conventional) Rotary drilled with self-casing wire-line Rotary core with continuously-sampled, self-casing wire-line Rotary percussion boring (air)
Size	R	Rotary drilled diamond core
Size	HD HA	Hand driven (1-inch soil tube) Hand Auger
●	D	Dynamic Cone Penetration Boring
▲	CPT	Cone Penetration Test (ASTM D 5778)
⬚	O	Other (note on LOTB)

Note: Size in inches.

CONSISTENCY OF COHESIVE SOILS

Description	Shear Strength (tsf)	Pocket Penetrometer Measurement, PP, (tsf)	Torvane Measurement, TV, (tsf)	Vane Shear Measurement, VS, (tsf)
Very Soft	Less than 0.12	Less than 0.25	Less than 0.12	Less than 0.12
Soft	0.12 - 0.25	0.25 - 0.5	0.12 - 0.25	0.12 - 0.25
Medium Stiff	0.25 - 0.5	0.5 - 1	0.25 - 0.5	0.25 - 0.5
Stiff	0.5 - 1	1 - 2	0.5 - 1	0.5 - 1
Very Stiff	1 - 2	2 - 4	1 - 2	1 - 2
Hard	Greater than 2	Greater than 4	Greater than 2	Greater than 2

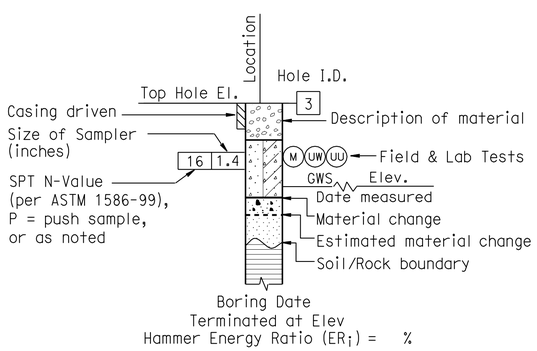

ROTARY BORING

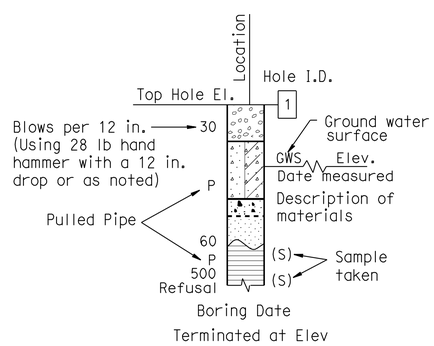

HAND BORING

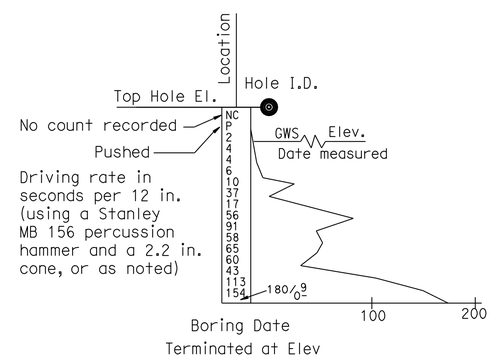

DYNAMIC CONE PENETRATION BORING

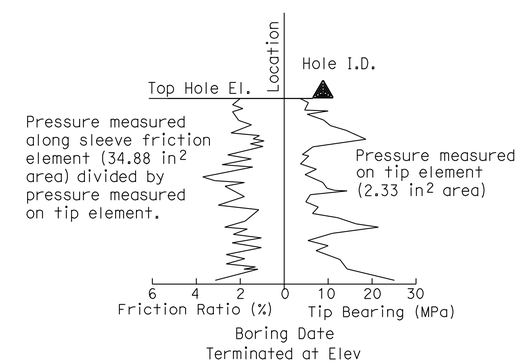

CONE PENETRATION TEST (CPT) BORING

ENGINEERING SERVICES	MATERIALS AND GEOTECHNICAL SERVICES	STATE OF CALIFORNIA DEPARTMENT OF TRANSPORTATION	DIVISION OF ENGINEERING SERVICES STRUCTURE DESIGN DESIGN BRANCH 15	BRIDGE NO. 53-3040 / POST MILE 3.44	ROSECRANS AVENUE UC (REPLACE)
FUNCTIONAL SUPERVISOR	DRAWN BY: P.QUACH	FIELD INVESTIGATION BY:			LOG OF TEST BORINGS SHEET 5 OF 7
NAME: M. SMITH	CHECKED BY: D.ORRIS	P.MCDONALD/T.PANAH/C.CARBINO/EJ.JEON/L.ROEBUCK			

OGS CIVIL LOG OF TEST BORINGS SHEET — ORIGINAL SCALE IN INCHES FOR REDUCED PLANS 0 1 2 3 — CU 07 EA 215931 — DISREGARD PRINTS BEARING EARLIER REVISION DATES — REVISION DATES 06/27/11 12-6-11 — SHEET 79 OF 81

FILE => 53-3040-z-lotb05.dgn

USERNAME => s123631 DATE PLOTTED => 28-MAR-2012 TIME PLOTTED => 10:56

REFERENCE: CALTRANS SOIL & ROCK LOGGING, CLASSIFICATION, AND PRESENTATION MANUAL (2010)

DIST	COUNTY	ROUTE	POST MILES TOTAL PROJECT	SHEET No.	TOTAL SHEETS
07	LA	5	2.4/4.0	793	1288

GEOTECHNICAL PROFESSIONAL — DATE 06/2011

3-26-12
PLANS APPROVAL DATE

REGISTERED PROFESSIONAL ENGINEER — MICHAEL G. SMITH No. 2229 Exp. 3-31-2012 GEOTECHNICAL — STATE OF CALIFORNIA

The State of California or its officers or agents shall not be responsible for the accuracy or completeness of electronic copies of this plan sheet.

GROUP SYMBOLS AND NAMES

Graphic/Symbol	Group Names	Graphic/Symbol	Group Names
GW	Well-graded GRAVEL Well-graded GRAVEL with SAND	CL	Lean CLAY Lean CLAY with SAND Lean CLAY with GRAVEL SANDY lean CLAY SANDY lean CLAY with GRAVEL GRAVELLY lean CLAY GRAVELLY lean CLAY with SAND
GP	Poorly-graded GRAVEL Poorly-graded GRAVEL with SAND		
GW-GM	Well-graded GRAVEL with SILT Well-graded GRAVEL with SILT and SAND	CL-ML	SILTY CLAY SILTY CLAY with SAND SILTY CLAY with GRAVEL SANDY SILTY CLAY SANDY SILTY CLAY with GRAVEL GRAVELLY SILTY CLAY GRAVELLY SILTY CLAY with SAND
GW-GC	Well-graded GRAVEL with CLAY (or SILTY CLAY) Well-graded GRAVEL with CLAY and SAND (or SILTY CLAY and SAND)		
GP-GM	Poorly-graded GRAVEL with SILT Poorly-graded GRAVEL with SILT and SAND	ML	SILT SILT with SAND SILT with GRAVEL SANDY SILT SANDY SILT with GRAVEL GRAVELLY SILT GRAVELLY SILT with SAND
GP-GC	Poorly-graded GRAVEL with CLAY (or SILTY CLAY) Poorly-graded GRAVEL with CLAY and SAND (or SILTY CLAY and SAND)		
GM	SILTY GRAVEL SILTY GRAVEL with SAND	OL	ORGANIC lean CLAY ORGANIC lean CLAY with SAND ORGANIC lean CLAY with GRAVEL SANDY ORGANIC lean CLAY SANDY ORGANIC lean CLAY with GRAVEL GRAVELLY ORGANIC lean CLAY GRAVELLY ORGANIC lean CLAY with SAND
GC	CLAYEY GRAVEL CLAYEY GRAVEL with SAND		
GC-GM	SILTY, CLAYEY GRAVEL SILTY, CLAYEY GRAVEL with SAND	OL	ORGANIC SILT ORGANIC SILT with SAND ORGANIC SILT with GRAVEL SANDY ORGANIC SILT SANDY ORGANIC SILT with GRAVEL GRAVELLY ORGANIC SILT GRAVELLY ORGANIC SILT with SAND
SW	Well-graded SAND Well-graded SAND with GRAVEL		
SP	Poorly-graded SAND Poorly-graded SAND with GRAVEL	CH	Fat CLAY Fat CLAY with SAND Fat CLAY with GRAVEL SANDY fat CLAY SANDY fat CLAY with GRAVEL GRAVELLY fat CLAY GRAVELLY fat CLAY with SAND
SW-SM	Well-graded SAND with SILT Well-graded SAND with SILT and GRAVEL		
SW-SC	Well-graded SAND with CLAY (or SILTY CLAY) Well-graded SAND with CLAY and GRAVEL (or SILTY CLAY and GRAVEL)	MH	Elastic SILT Elastic SILT with SAND Elastic SILT with GRAVEL SANDY elastic SILT SANDY elastic SILT with GRAVEL GRAVELLY elastic SILT GRAVELLY elastic SILT with SAND
SP-SM	Poorly-graded SAND with SILT Poorly-graded SAND with SILT and GRAVEL		
SP-SC	Poorly-graded SAND with CLAY (or SILTY CLAY) Poorly-graded SAND with CLAY and GRAVEL (or SILTY CLAY and GRAVEL)	OH	ORGANIC fat CLAY ORGANIC fat CLAY with SAND ORGANIC fat CLAY with GRAVEL SANDY ORGANIC fat CLAY SANDY ORGANIC fat CLAY with GRAVEL GRAVELLY ORGANIC fat CLAY GRAVELLY ORGANIC fat CLAY with SAND
SM	SILTY SAND SILTY SAND with GRAVEL		
SC	CLAYEY SAND CLAYEY SAND with GRAVEL	OH	ORGANIC elastic SILT ORGANIC elastic SILT with SAND ORGANIC elastic SILT with GRAVEL SANDY ORGANIC elastic SILT SANDY ORGANIC elastic SILT with GRAVEL GRAVELLY ORGANIC elastic SILT GRAVELLY ORGANIC elastic SILT with SAND
SC-SM	SILTY, CLAYEY SAND SILTY, CLAYEY SAND with GRAVEL		
PT	PEAT	OL/OH	ORGANIC SOIL ORGANIC SOIL with SAND ORGANIC SOIL with GRAVEL SANDY ORGANIC SOIL SANDY ORGANIC SOIL with GRAVEL GRAVELLY ORGANIC SOIL GRAVELLY ORGANIC SOIL with SAND
	COBBLES COBBLES and BOULDERS BOULDERS		

FIELD AND LABORATORY TESTING

- (C) Consolidation (ASTM D 2435)
- (CL) Collapse Potential (ASTM D 5333)
- (CP) Compaction Curve (CTM 216)
- (CR) Corrosivity Testing (CTM 643, CTM 422, CTM 417)
- (CU) Consolidated Undrained Triaxial (ASTM D 4767)
- (DS) Direct Shear (ASTM D 3080)
- (EI) Expansion Index (ASTM D 4829)
- (M) Moisture Content (ASTM D 2216)
- (OC) Organic Content-% (ASTM D 2974)
- (P) Permeability (CTM 220)
- (PA) Particle Size Analysis (ASTM D 422)
- (PI) Plasticity Index (AASHTO T 90) Liquid Limit (AASHTO T 89)
- (PL) Point Load Index (ASTM D 5731)
- (PM) Pressure Meter
- (R) R-Value (CTM 301)
- (SE) Sand Equivalent (CTM 217)
- (SG) Specific Gravity (AASHTO T 100)
- (SL) Shrinkage Limit (ASTM D 427)
- (SW) Swell Potential (ASTM D 4546)
- (UC) Unconfined Compression-Soil (ASTM D 2166) Unconfined Compression-Rock (ASTM D 2938)
- (UU) Unconsolidated Undrained Triaxial (ASTM D 2850)
- (UW) Unit Weight (ASTM D 4767)

APPARENT DENSITY OF COHESIONLESS SOILS

Description	SPT N_{60} (Blows / 12 in.)
Very Loose	0 - 5
Loose	5 - 10
Medium Dense	10 - 30
Dense	30 - 50
Very Dense	Greater than 50

MOISTURE

Description	Criteria
Dry	No discernable moisture
Moist	Moisture present, but no free water
Wet	Visible free water

PERCENT OR PROPORTION OF SOILS

Description	Criteria
Trace	Particles are present but estimated to be less than 5%
Few	5% - 10%
Little	15% - 25%
Some	30% - 45%
Mostly	50% - 100%

PARTICLE SIZE

Description		Size (in.)
Boulder		Greater than 12
Cobble		3 - 12
Gravel	Coarse	3/4 - 3
	Fine	1/5 - 3/4
Sand	Coarse	1/16 - 1/5
	Medium	1/64 - 1/16
	Fine	1/300 - 1/64
Silt and Clay		Less than 1/300

ENGINEERING SERVICES — MATERIALS AND GEOTECHNICAL SERVICES

FUNCTIONAL SUPERVISOR
NAME: M. SMITH

DRAWN BY: P.QUACH
CHECKED BY: D.ORRIS

FIELD INVESTIGATION BY:
P.MCDONALD/T.PANAH/C.CARBINO/EJ.JEON/L.ROEBUCK

STATE OF CALIFORNIA
DEPARTMENT OF TRANSPORTATION

DIVISION OF ENGINEERING SERVICES
STRUCTURE DESIGN
DESIGN BRANCH 15

BRIDGE NO. 53-3040
POST MILE 3.44

ROSECRANS AVENUE UC (REPLACE)

LOG OF TEST BORINGS SHEET 6 OF 7

OGS CIVIL LOG OF TEST BORINGS SHEET

ORIGINAL SCALE IN INCHES FOR REDUCED PLANS 0 1 2 3

CU 07
EA 215931

DISREGARD PRINTS BEARING EARLIER REVISION DATES

REVISION DATES: 06/27/11 12-6-11

SHEET 80 OF 81

FILE => 53-3040-z-lotb06.dgn

USERNAME => s123631 DATE PLOTTED => 28-MAR-2012 TIME PLOTTED => 10:56

FED. ROAD DIST. NO.	STATE	PROJ. NO.	FISCAL YEAR	SHEET NO.	TOTAL SHEETS
2	CAL.			123	125

F1-405(8)

DIST.	COUNTY	ROUTE	SECTION	SHEET NO.	TOTAL SHEETS
VII	L.A.	~~I-405~~	A	11	13

Stuart Mitchell
BRIDGE ENGINEER — CIVIL ENGINEER-SUPERVISOR
APPROVED OCTOBER 27 1952

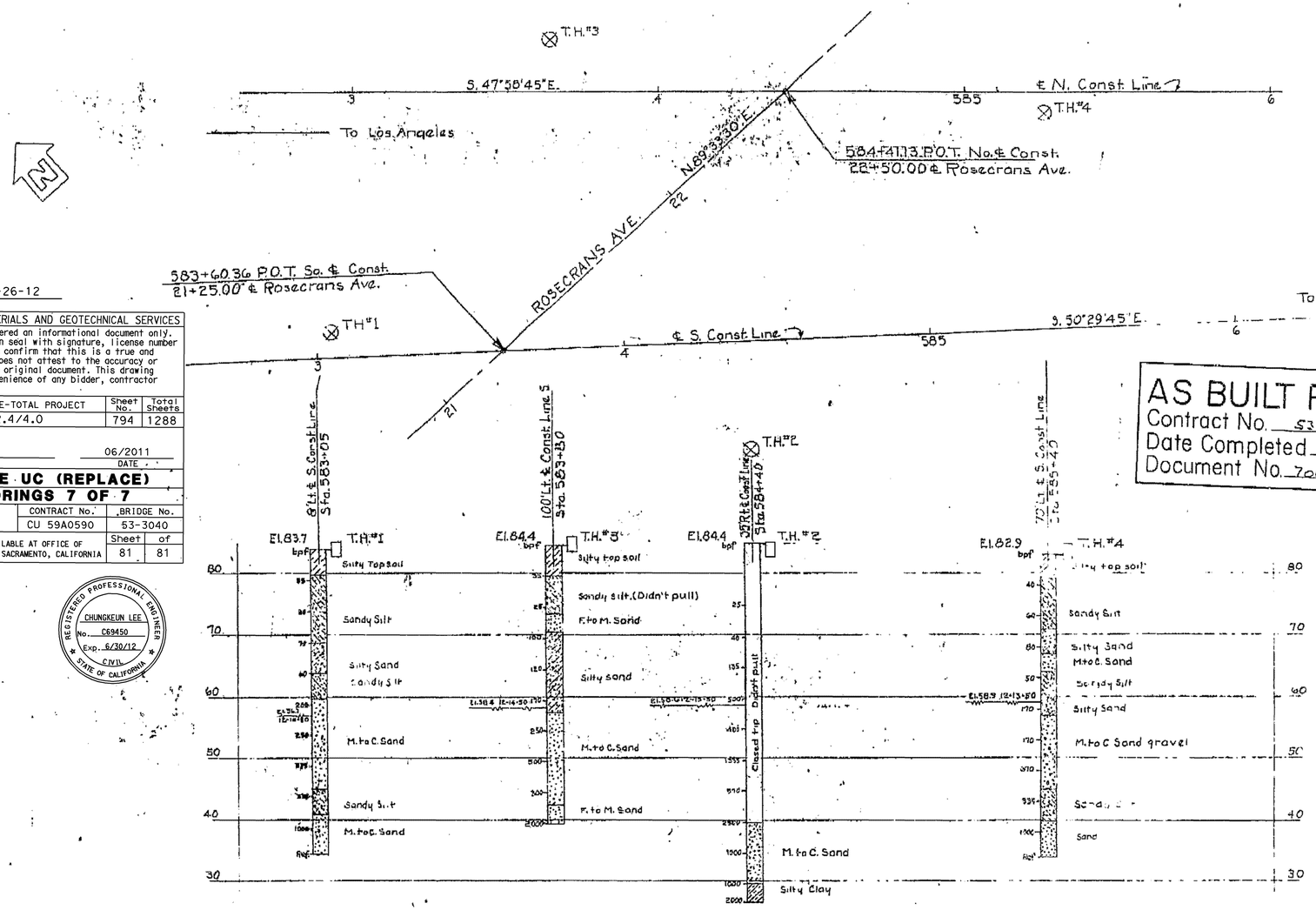

TO ACCOMPANY PLANS DATED 3-26-12

DIVISION OF ENGINEERING SERVICES - MATERIALS AND GEOTECHNICAL SERVICES

As-Built Log of Test Borings sheet is considered an informational document only. As such, the State of California registration seal with signature, license number and registration certificate expiration date confirm that this is a true and accurate copy of the original document. It does not attest to the accuracy or validity of the information contained in the original document. This drawing is available and presented only for the convenience of any bidder, contractor or other interested party.

DIST.	COUNTY	ROUTE	POST MILE-TOTAL PROJECT	Sheet No.	Total Sheets
07	LA	5	2.4/4.0	794	1288

REGISTERED CIVIL ENGINEER — DATE 06/2011

ROSECRANS AVENUE UC (REPLACE)
LOG OF TEST BORINGS 7 OF 7

UNIT: ENGLISH	CONTRACT No.	BRIDGE No.
PROJECT NUMBER & PHASE: EA 215931	CU 59A0590	53-3040

NOTE: A COPY OF THIS LOG OF TEST BORINGS IS AVAILABLE AT OFFICE OF STRUCTURE MAINTENANCE AND INVESTIGATIONS, SACRAMENTO, CALIFORNIA — Sheet 81 of 81

REGISTERED PROFESSIONAL ENGINEER — CHUNGKEUN LEE — No. C69450 — Exp. 6/30/12 — CIVIL — STATE OF CALIFORNIA

AS BUILT PLANS
Contract No. 53-7VC38
Date Completed
Document No. 7000 2190

Test Boring By Bridge Dept. 12-15-50

NOTE: Blows per foot are given for a 140 lb hammer dropped a distance of 32 inches, falling free one foot.

Notes

1. As-Built Vertical Datum = NGVD29
2. Datum Conversion
   NAVD88 = NGVD29+2.408 ft

BM # 25
Bronze tablet in concrete monument stamped "State BM 25-B-41", 1.5' below surface 120' N of 1+90 on Rosecrans Ave., East of Firestone. Elev. 82.941

AS BUILT
CORRECTIONS BY
DATE

CLASSIFICATION OF MATERIAL BASED ON STANDARD GRADE SIZE LIMITS

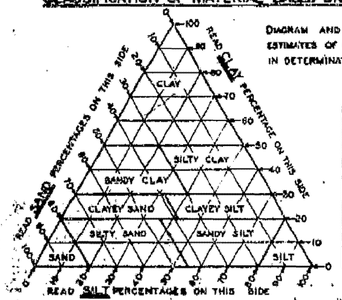

DIAGRAM AND TABLE SHOWING THE BASIS FOR ESTIMATES OF GRADE SIZE DISTRIBUTION USED IN DETERMINATION OF CLASS NAMES.

GROUPING USED IN TRIANGULAR CLASSIFICATION			
CLASS NAME	PERCENTAGE OF SIZES PRESENT		
	SAND	SILT	CLAY
SAND	80-100	0-20	0-20
SILTY SAND	45-80	0-55	0-20
SANDY SILT	0-45	35-80	0-20
SILT	0-20	80-100	0-20
CLAYEY SAND	45-80	0-45	20-30
CLAYEY SILT	0-35	35-80	20-30
SANDY CLAY	30-70	0-40	30-50
SILTY CLAY	0-30	20-70	30-50
CLAY	0-30	0-50	50-100

IF GRAVEL IS PRESENT IN APPRECIABLE AMOUNTS THE TERM "GRAVELLY" MAY BE ADDED TO THE CLASS NAME, viz. "GRAVELLY SAND." THE TERMS "COARSE," "MEDIUM" AND "FINE" WHEN USED TO DESCRIBE GRAVEL, SAND AND SILT REFER TO STANDARD GRADE SIZE LIMITS.

LEGEND OF BORING OPERATIONS

- PLAN OF ANY BORING
- 1" SAMPLER BORING
- ROTARY WASH BORING
- 1" CLOSED SAMPLER DRIVEN
- CORE BORING
- 2½" PENETROMETER DRIVEN
- 2" SAMPLER BORING
- 2" TO 5" AUGER BORING
- 8" TO 20" AUGER BORING
- CASING DRIVEN
- JET BORING
- (S) SAMPLE TAKEN

THE APPROPRIATE BORING SYMBOLS DESIGNATING THE METHOD OF OPERATION ARE SHOWN AT THE UPPER RIGHT-HAND CORNER OF THE RESPECTIVE BORING. WHERE TOOL CHANGES WERE MADE DURING THE BORING OPERATION, SYMBOLS ARE SHOWN AT THE POINT OF CHANGE.

LEGEND OF EARTH MATERIALS

- GRAVEL — G
- SAND — S
- SILT — SI
- CLAY — C
- SILTY SAND — SI S
- CLAYEY SAND — C S
- SANDY SILT — S SI
- CLAYEY SILT — C SI
- SANDY CLAY — SC
- SILTY CLAY — SI C
- PEAT and/or ORGANIC CLAY — O
- SANDSTONE — SS
- SHALE — SH
- BROKEN ROCK (FRAGMENTS) — BR
- ROCK — R

ABBREVIATIONS

EL 69.4	ELEVATION OF GROUND AT TEST HOLE
bpf	BLOWS PER FOOT — (SEE NOTE ABOVE)
P	PULLED PIPE
M	MOISTURE AS % DRY WEIGHT
EL 64.3 8-12-49	ELEVATION OF GROUND WATER AND DATE

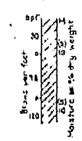

NOTES

THE CONTRACTOR'S ATTENTION IS DIRECTED TO SECTION 2, ARTICLE (c) OF THE STANDARD SPECIFICATIONS AND TO THE SPECIAL PROVISIONS ACCOMPANYING THIS SET OF PLANS.

CLASSIFICATION OF EARTH MATERIAL AS SHOWN ON THIS SHEET IS BASED UPON FIELD INSPECTION AND IS NOT TO BE CONSTRUED TO IMPLY MECHANICAL ANALYSIS.

ROSECRANS AVENUE UNDERCROSSING
LOG OF TEST BORINGS
SCALE Horiz: 1"=20' Vert: 1" — FILE NO. E-53
B-Index No. 53-634 — DRAWING NO. E-2607

I HEREBY CERTIFY THAT THIS IS A TRUE AND ACCURATE COPY OF THE ABOVE DOCUMENT TAKEN UNDER MY DIRECTION AND CONTROL ON THIS DATE IN SACRAMENTO, CALIFORNIA PURSUANT TO AUTHORIZATION BY THE DIRECTOR OF PUBLIC WORKS.

DATE 9/27/11 SIGNATURE TITLE

PHLL. DRAWING NO. P-2607 6a

FILENAME => 53-3040-z-1otb07.tif

DIST	COUNTY	ROUTE	POST MILES TOTAL PROJECT	SHEET No	TOTAL SHEETS
07	LA	5	2.4/4.0	795	1288

REGISTERED CIVIL ENGINEER — DATE 12-12-11

3-26-12
PLANS APPROVAL DATE

The State of California or its officers or agents shall not be responsible for the accuracy or completeness of electronic copies of this plan sheet.

REGISTERED PROFESSIONAL ENGINEER — Andrew P. Rittenhouse — No. 61006 — Exp. 12-31-12 — CIVIL — STATE OF CALIFORNIA

Legend:

- Indicates Bridge Removal
- Indicates Closure Pour
- Denotes location of minimum vertical clearance
- Indicates Deck Drain

Notes:

1. Paint "Bloomfield Ave UC"
2. Paint "Bridge No 53-3041"
3. Structure Approach Type N (30S)
4. Temporary Railing (Type K), see "Road Plans"

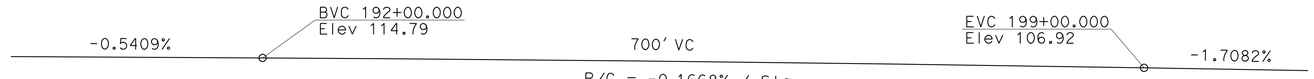

PROFILE GRADE

No Scale

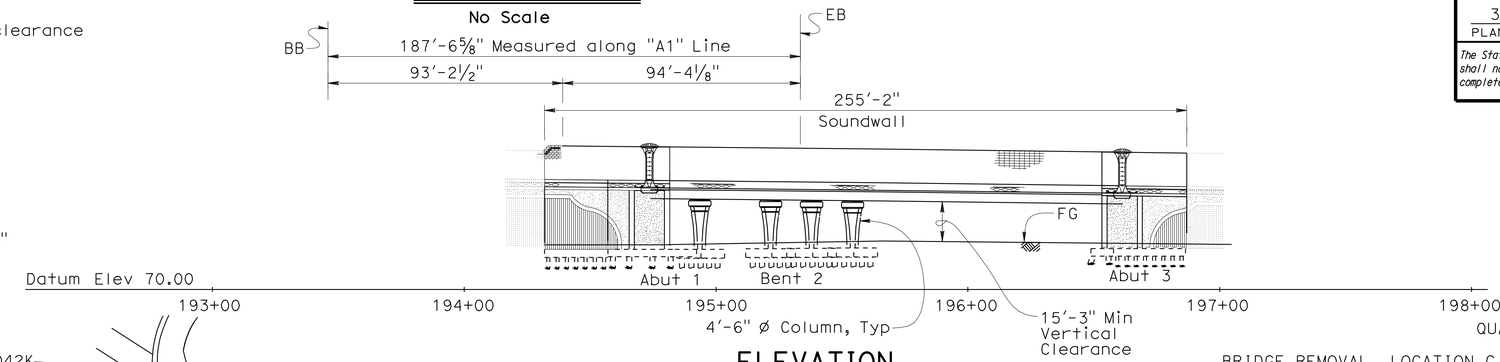

ELEVATION

1" = 30'

Curve (A)
R = 8357.25'
Δ = 17°36'01"
T = 1293.800'
L = 2567.220'

Curve (B)
R = 700.000'
Δ = 21°59'05"
T = 135.971'
L = 268.597'

Curve (C)
R = 3280.00'
Δ = 2°55'09"
T = 83.575'
L = 167.115'

Curve (D)
R = 4890.602'
Δ = 3°30'51"
T = 150.038'
L = 299.982'

Curve (E)
R = 2376.844'
Δ = 12°23'26"
T = 258.012'
L = 514.012'

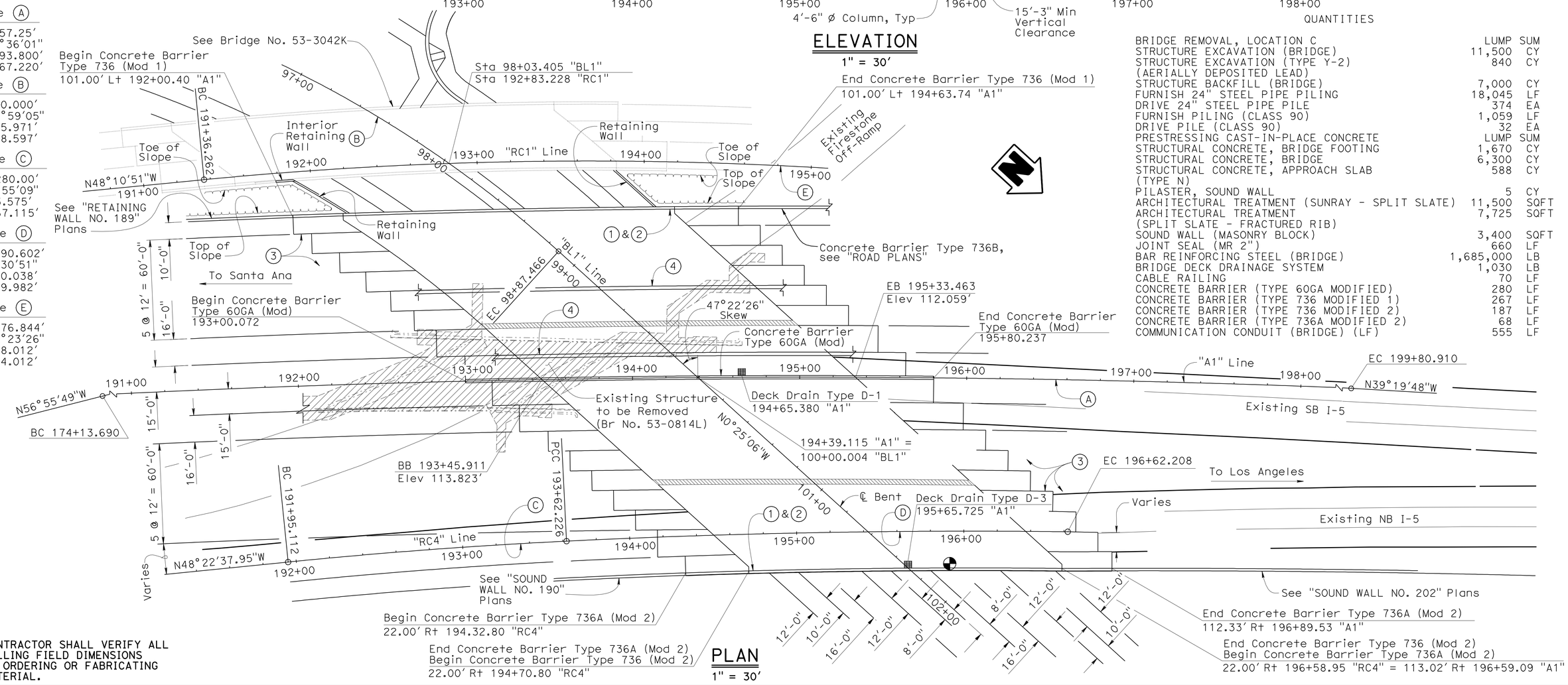

PLAN

1" = 30'

QUANTITIES

BRIDGE REMOVAL, LOCATION C	LUMP	SUM
STRUCTURE EXCAVATION (BRIDGE)	11,500	CY
STRUCTURE EXCAVATION (TYPE Y-2) (AERIALLY DEPOSITED LEAD)	840	CY
STRUCTURE BACKFILL (BRIDGE)	7,000	CY
FURNISH 24" STEEL PIPE PILING	18,045	LF
DRIVE 24" STEEL PIPE PILE	374	EA
FURNISH PILING (CLASS 90)	1,059	LF
DRIVE PILE (CLASS 90)	32	EA
PRESTRESSING CAST-IN-PLACE CONCRETE	LUMP	SUM
STRUCTURAL CONCRETE, BRIDGE FOOTING	1,670	CY
STRUCTURAL CONCRETE, BRIDGE	6,300	CY
STRUCTURAL CONCRETE, APPROACH SLAB (TYPE N)	588	CY
PILASTER, SOUND WALL	5	CY
ARCHITECTURAL TREATMENT (SUNRAY - SPLIT SLATE)	11,500	SQFT
ARCHITECTURAL TREATMENT (SPLIT SLATE - FRACTURED RIB)	7,725	SQFT
SOUND WALL (MASONRY BLOCK)	3,400	SQFT
JOINT SEAL (MR 2")	660	LF
BAR REINFORCING STEEL (BRIDGE)	1,685,000	LB
BRIDGE DECK DRAINAGE SYSTEM	1,030	LB
CABLE RAILING	70	LF
CONCRETE BARRIER (TYPE 60GA MODIFIED)	280	LF
CONCRETE BARRIER (TYPE 736 MODIFIED 1)	267	LF
CONCRETE BARRIER (TYPE 736 MODIFIED 2)	187	LF
CONCRETE BARRIER (TYPE 736A MODIFIED 2)	68	LF
COMMUNICATION CONDUIT (BRIDGE) (LF)	555	LF

NOTE:
THE CONTRACTOR SHALL VERIFY ALL CONTROLLING FIELD DIMENSIONS BEFORE ORDERING OR FABRICATING ANY MATERIAL.

Traci Menard
DESIGN ENGINEER

	BY	CHECKED
DESIGN	Fred Feng	Sara Yip
DETAILS	Herman Mauroschadt	Sara Yip
QUANTITIES	Gabriel Galo	Ruslan Novik

LOAD & RESISTANCE FACTOR DESIGN — LIVE LOADING: HL93 W/"LOW-BOY"; PERMIT DESIGN VEHICLE
LAYOUT: F. Feng — CHECKED: S. Yip
SPECIFICATIONS: T. Nedwick — PLANS AND SPECS COMPARED: T. Nedwick

ORIGINAL SCALE IN INCHES FOR REDUCED PLANS 0 1 2 3

STATE OF CALIFORNIA
DEPARTMENT OF TRANSPORTATION

DIVISION OF ENGINEERING SERVICES
STRUCTURE DESIGN
DESIGN BRANCH 15

CU 07
EA 215931

BRIDGE NO. 53-3041
POST MILE 3.66

BLOOMFIELD AVENUE UC
GENERAL PLAN NO. 1

DISREGARD PRINTS BEARING EARLIER REVISION DATES — REVISION DATES: 10-5-11 12-1-11 12-15-11 1-4-12 2-1-12 3-10-12 5-25-11 7-1-11 3-5-11

SHEET 1 OF 80

USERNAME => s135318 DATE PLOTTED => 28-MAR-2012 TIME PLOTTED => 09:42

DIST	COUNTY	ROUTE	POST MILES TOTAL PROJECT	SHEET No	TOTAL SHEETS
07	LA	5	2.4/4.0	796	1288

Andrew Rittenhouse 12-12-11
REGISTERED CIVIL ENGINEER DATE

3-26-12
PLANS APPROVAL DATE

REGISTERED PROFESSIONAL ENGINEER
Andrew P. Rittenhouse
No. 61006
Exp. 12-31-12
CIVIL
STATE OF CALIFORNIA

The State of California or its officers or agents shall not be responsible for the accuracy or completeness of electronic copies of this plan sheet.

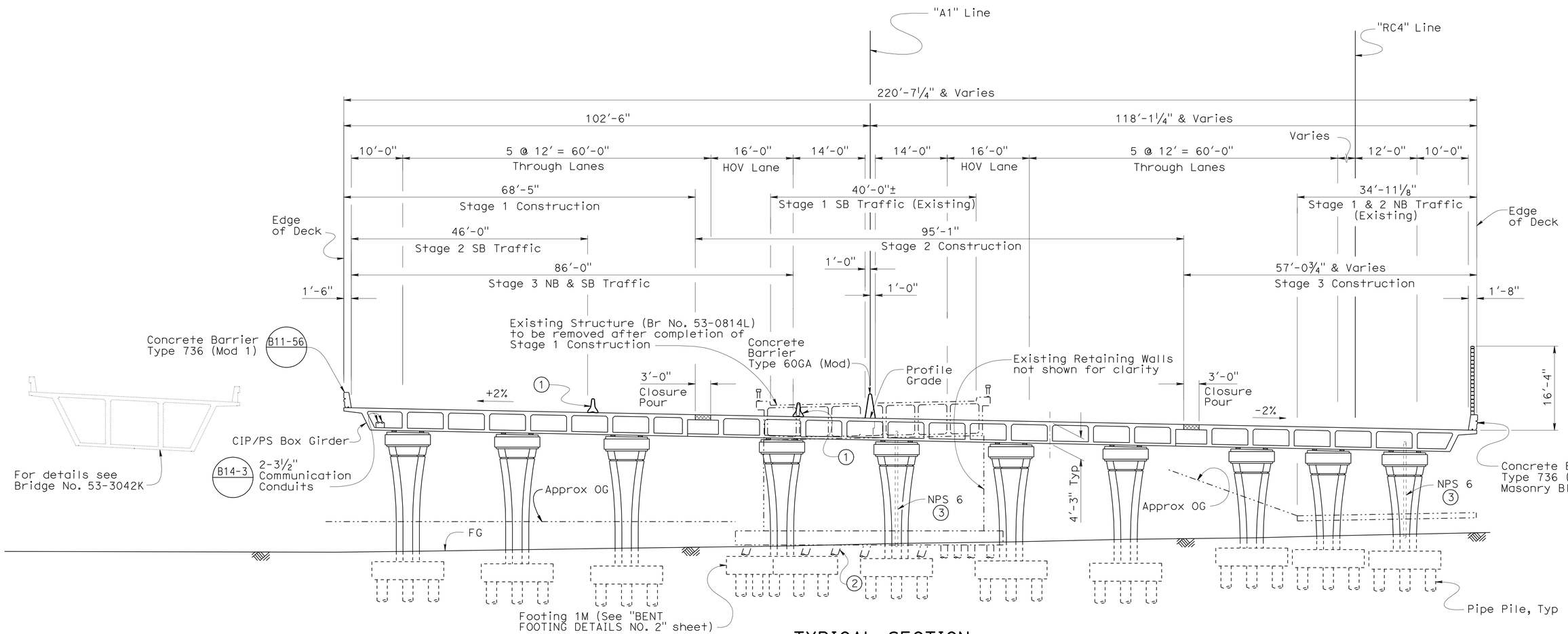

TYPICAL SECTION

1" = 10'

NOTE:
THE CONTRACTOR SHALL VERIFY ALL CONTROLLING FIELD DIMENSIONS BEFORE ORDERING OR FABRICATING ANY MATERIAL.

Notes:

1. Temporary Railing (Type K), see "Road Plans"
2. Not all Existing piles shown for clarity
3. For Drainage details see "DECK DRAIN DETAILS" sheet

Legend:

-·-·- Indicates Existing Structure

Indicates Closure Pour

Traci Menard
DESIGN ENGINEER

	BY	CHECKED
DESIGN	Fred Feng	Sara Yip
DETAILS	Herman Mauroschadt	Sara Yip
QUANTITIES	Gabriel Galo	Ruslan Novik

LOAD & RESISTANCE FACTOR DESIGN — LIVE LOADING: HL93 W/"LOW-BOY"; PERMIT DESIGN VEHICLE

	BY	CHECKED
LAYOUT	F. Feng	S. Yip
SPECIFICATIONS	T. Nedwick	PLANS AND SPECS COMPARED T. Nedwick

ORIGINAL SCALE IN INCHES FOR REDUCED PLANS 0 1 2 3

STATE OF CALIFORNIA
DEPARTMENT OF TRANSPORTATION

DIVISION OF ENGINEERING SERVICES
STRUCTURE DESIGN
DESIGN BRANCH 15

CU 07
EA 215931

BRIDGE NO. 53-3041
POST MILE 3.66

BLOOMFIELD AVENUE UC
GENERAL PLAN NO. 2

DISREGARD PRINTS BEARING EARLIER REVISION DATES

REVISION DATES: 4-15-11 5-5-11 7-14-11 10-24-11 12-9-11 12-12-11 1-5-12 1-15-10 1-5-11

SHEET 2 OF 80

STRUCTURES DESIGN GENERAL PLAN SHEET (ENGLISH) (REV.07-24-06)

FILE => 53-3041-a-gp02.dgn

USERNAME => s135318 DATE PLOTTED => 28-MAR-2012 TIME PLOTTED => 09:42

DIST	COUNTY	ROUTE	POST MILES TOTAL PROJECT	SHEET No	TOTAL SHEETS
07	LA	5	2.4/4.0	797	1288

Andrew Rittenhouse 12-12-11
REGISTERED CIVIL ENGINEER DATE

3-26-12
PLANS APPROVAL DATE

REGISTERED PROFESSIONAL ENGINEER
Andrew P. Rittenhouse
No. 61006
Exp. 12-31-12
CIVIL
STATE OF CALIFORNIA

The State of California or its officers or agents shall not be responsible for the accuracy or completeness of electronic copies of this plan sheet.

INDEX TO PLANS

SHEET NO.	TITLE
1	GENERAL PLAN NO. 1
2	GENERAL PLAN NO. 2
3	INDEX TO PLANS
4	DECK CONTOURS
5	FOUNDATION PLAN
6	ABUTMENT LAYOUT
7	ABUTMENT DETAILS NO. 1
8	ABUTMENT DETAILS NO. 2
9	ABUTMENT DETAILS NO. 3
10	ABUTMENT DETAILS NO. 4
11	ABUTMENT DETAILS NO. 5
12	ABUTMENT DETAILS NO. 6
13	ABUTMENT DETAILS NO. 7
14	ABUTMENT DETAILS NO. 8
15	ABUTMENT DETAILS NO. 9
16	ABUTMENT DETAILS NO. 10
17	ABUTMENT DETAILS NO. 11
18	ABUTMENT DETAILS NO. 12
19	ABUTMENT DETAILS NO. 13
20	RETAINING WALL DETAILS NO. 1
21	RETAINING WALL DETAILS NO. 2
22	RETAINING WALL DETAILS NO. 3
23	BENT LAYOUT NO. 1
24	BENT LAYOUT NO. 2
25	BENT LAYOUT NO. 3
26	BENT DETAILS NO. 1
27	BENT DETAILS NO. 2
28	BENT DETAILS NO. 3
29	BENT FOOTING DETAILS NO. 1
30	BENT FOOTING DETAILS NO. 2
31	TYPICAL SECTION
32	GIRDER LAYOUT NO. 1
33	GIRDER LAYOUT NO. 2
34	GIRDER LAYOUT NO. 3
35	GIRDER REINFORCEMENT NO. 1
36	GIRDER REINFORCEMENT NO. 2
37	GIRDER REINFORCEMENT NO. 3
38	MISCELLANEOUS DETAILS
39	DECK DRAIN DETAILS
40	BARRIER ARCHITECTURAL DETAILS NO. 1
41	BARRIER ARCHITECTURAL DETAILS NO. 2
42	ARCHITECTURAL SHEET A0
43	ARCHITECTURAL SHEET A1
44	ARCHITECTURAL SHEET A2
45	ARCHITECTURAL SHEET A3
46	ARCHITECTURAL SHEET A4
47	ARCHITECTURAL SHEET A5
48	ARCHITECTURAL SHEET A6
49	ARCHITECTURAL SHEET A7
50	ARCHITECTURAL SHEET A8
51	ARCHITECTURAL SHEET A9
52	ARCHITECTURAL SHEET A10
53	ARCHITECTURAL SHEET A11
54	ARCHITECTURAL SHEET A12
55	ARCHITECTURAL SHEET A13
56	ARCHITECTURAL SHEET A14
57	ARCHITECTURAL SHEET A15
58	ARCHITECTURAL SHEET A16
59	ARCHITECTURAL SHEET A17
60	STRUCTURE APPROACH TYPE N(30S)
61	STRUCTURE APPROACH DRAINAGE DETAILS
62	SOUNDWALL - MASONRY BLOCK ON BRIDGE
63	RETAINING WALL TYPE 1SWBP - DETAILS NO. 1
64	RETAINING WALL TYPE 1SWBP - DETAILS NO. 2
65	SOUNDWALL ARCHITECTURAL DETAILS NO. 1
66	SOUNDWALL ARCHITECTURAL DETAILS NO. 2
67	SOUNDWALL ARCHITECTURAL DETAILS NO. 3
68	SOUNDWALL ARCHITECTURAL DETAILS NO. 4
69	SOUNDWALL ARCHITECTURAL DETAILS NO. 5
70	SOUNDWALL ARCHITECTURAL DETAILS NO. 6
71	SOUNDWALL ARCHITECTURAL DETAILS NO. 7
72	SOUNDWALL ARCHITECTURAL DETAILS NO. 8
73	LOG OF TEST BORINGS SHEET 1 OF 8
74	LOG OF TEST BORINGS SHEET 2 OF 8
75	LOG OF TEST BORINGS SHEET 3 OF 8
76	LOG OF TEST BORINGS SHEET 4 OF 8
77	LOG OF TEST BORINGS SHEET 5 OF 8
78	LOG OF TEST BORINGS SHEET 6 OF 8
79	LOG OF TEST BORINGS SHEET 7 OF 8
80	LOG OF TEST BORINGS SHEET 8 OF 8

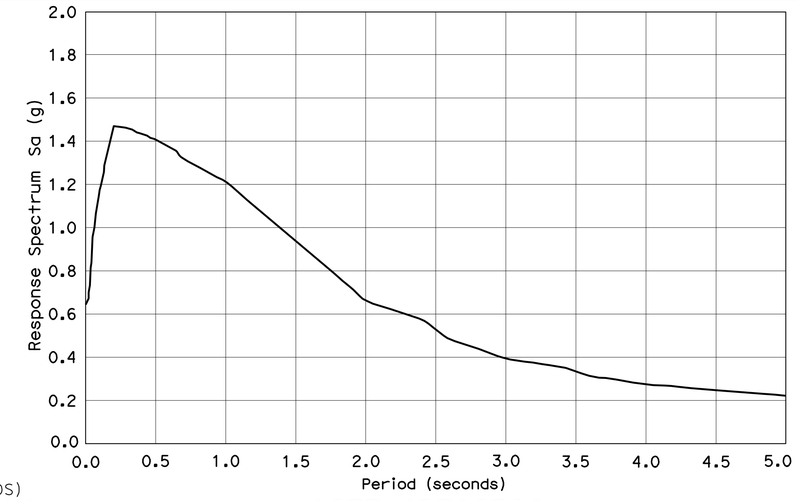

SITE SPECIFIC ACCELERATION RESPONSE SPECTRA

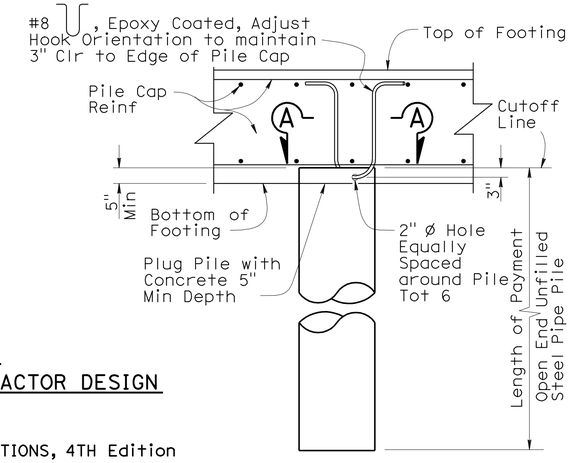

24" STEEL PIPE PILE

½" = 1'-0"

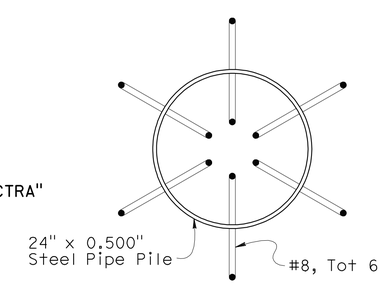

SECTION A-A

½" = 1'-0"

PILE DATA TABLE

LOCATION	PILE TYPE	NOMINAL RESISTANCE(kips)		DESIGN TIP ELEVATIONS (ft)	SPECIFIED TIP ELEVATIONS (ft)	NOMINAL DRIVING RESISTANCE (kips)
		Compression	Tension			
Abut 1 (Stage 1)	24"ø Pipe Pile	400	0	34.4 (a) 41.5 (c) 61.1 (d)	34.4	530
Abut 1 (Stage 2)	24"ø Pipe Pile	370	0	34.8 (a) 39.5 (c) 61.1 (d)	34.8	520
Abut 1 (Stage 3)	24"ø Pipe Pile	400	0	34.4 (a) 39.5 (c) 61.1 (d)	34.4	530
Abut 1 Rt (NB) WW	Class 90	180	0	50.0 (a)	50.0	180
Bent 2 (Stage 1)	24"ø Pipe Pile	390	120	36.5 (a) 43.5 (c) 60.5 (d)	36.5	440
Bent 2 (Stage 2)	24"ø Pipe Pile	390	120	34.4 (a) 41.5 (c) 60.0 (d)	34.4	480
Bent 2 (Stage 3)	24"ø Pipe Pile	380	100	37.5 (a) 47.5 (c) 61.7 (d)	37.5	420
Abut 3 (Stage 1)	24"ø Pipe Pile	350	0	34.1 (a) 45.5 (c) 61.1 (d)	34.1	460
Abut 3 (Stage 2)	24"ø Pipe Pile	350	0	34.1 (a) 43.5 (c) 61.1 (d)	34.1	460
Abut 3 (Stage 3)	24"ø Pipe Pile	350	0	34.1 (a) 43.5 (c) 61.1 (d)	34.1	460
Abut 3 Rt (NB) WW	Class 90	180	0	50.0 (a)	50.0	180

Note: Design tip elevations are controlled by: (a) Compression, (b) Tension, (c) Settlement, (d) Lateral Load, respectively.

STANDARD PLAN SHEET NO.

DETAIL NO.

STANDARD PLANS DATED MAY 2006

A10A	ACRONYMS AND ABBREVIATIONS (SHEET 1 OF 2)
A10B	ACRONYMS AND ABBREVIATIONS (SHEET 2 OF 2)
A10C	SYMBOLS (SHEET 1 OF 2)
A10D	SYMBOLS (SHEET 2 OF 2)
A62B	LIMITS OF PAYMENT FOR EXCAVATION AND BACKFILL BRIDGE SURCHARGE AND WALL
A62C	LIMITS OF PAYMENT FOR EXCAVATION AND BACKFILL BRIDGE
A76D	CONCRETE BARRIER TYPE 60G
B0-1	BRIDGE DETAILS
B0-3	BRIDGE DETAILS
B0-5	BRIDGE DETAILS
B2-5	PILE DETAILS CLASS 90 AND CLASS 140
B3-8	RETAINING WALL DETAILS NO. 1
RSP B6-21	JOINT SEALS (MAXIMUM MOVEMENT RATING = 2")
B7-1	BOX GIRDER DETAILS
B7-6	DECK DRAINS TYPES D-1 AND D-2
B7-7	DECK DRAIN TYPE D-3
B7-10	UTILITY OPENING-BOX GIRDER
B8-5	CAST-IN-PLACE PRESTRESSED GIRDER DETAILS
B11-56	CONCRETE BARRIER TYPE 736
B14-3	COMMUNICATION AND SPRINKLER CONTROL CONDUITS (CONDUIT LESS THAN 4")

GENERAL NOTES
LOAD AND RESISTANCE FACTOR DESIGN

DESIGN:

AASHTO LRFD BRIDGE DESIGN SPECIFICATIONS, 4TH Edition and California Amendments, dated December 2008

SEISMIC DESIGN:

CALTRANS SEISMIC DESIGN CRITERIA (SDC), Version 1.5 September 2009

DEAD LOAD:

Includes 35 psf for future wearing surface.

LIVE LOADING:

HL93 and permit design load.

SEISMIC LOADING:

See "SITE SPECIFIC ACCELERATION RESPONSE SPECTRA"

CONCRETE:

fy = 60 ksi
f'c = 4.0 ksi
n = 8
See prestressing notes.

	BY	CHECKED
DESIGN	Fred Feng	Sara Yip
DETAILS	Herman Mauroschadt	Sara Yip
QUANTITIES	Gabriel Galo	Rustan Novik

STATE OF CALIFORNIA
DEPARTMENT OF TRANSPORTATION

DIVISION OF ENGINEERING SERVICES
STRUCTURE DESIGN
DESIGN BRANCH 15

BRIDGE NO. 53-3041
POST MILE 3.66

BLOOMFIELD AVENUE UC
INDEX TO PLANS

STRUCTURES DESIGN DETAIL SHEET (ENGLISH) (REV. 10/25/05)

ORIGINAL SCALE IN INCHES FOR REDUCED PLANS 0 1 2 3

CU 07
EA 215931

DISREGARD PRINTS BEARING EARLIER REVISION DATES

REVISION DATES: 12-2-11 12-12-11 1-23-12 2-14-11 5-3-11 7-1-11 7-14-11 10-24-11 11-25-11

SHEET 3 OF 80

FILE => 53-3041-a-itp.dgn

USERNAME => s135318 DATE PLOTTED => 28-MAR-2012 TIME PLOTTED => 09:42

DIST	COUNTY	ROUTE	POST MILES TOTAL PROJECT	SHEET No	TOTAL SHEETS
07	LA	5	2.4/4.0	798	1288

Andrew Rittenhouse 12-12-11
REGISTERED CIVIL ENGINEER DATE

3-26-12
PLANS APPROVAL DATE

REGISTERED PROFESSIONAL ENGINEER
Andrew P. Rittenhouse
No. 61006
Exp. 12-31-12
CIVIL
STATE OF CALIFORNIA

The State of California or its officers or agents shall not be responsible for the accuracy or completeness of electronic copies of this plan sheet.

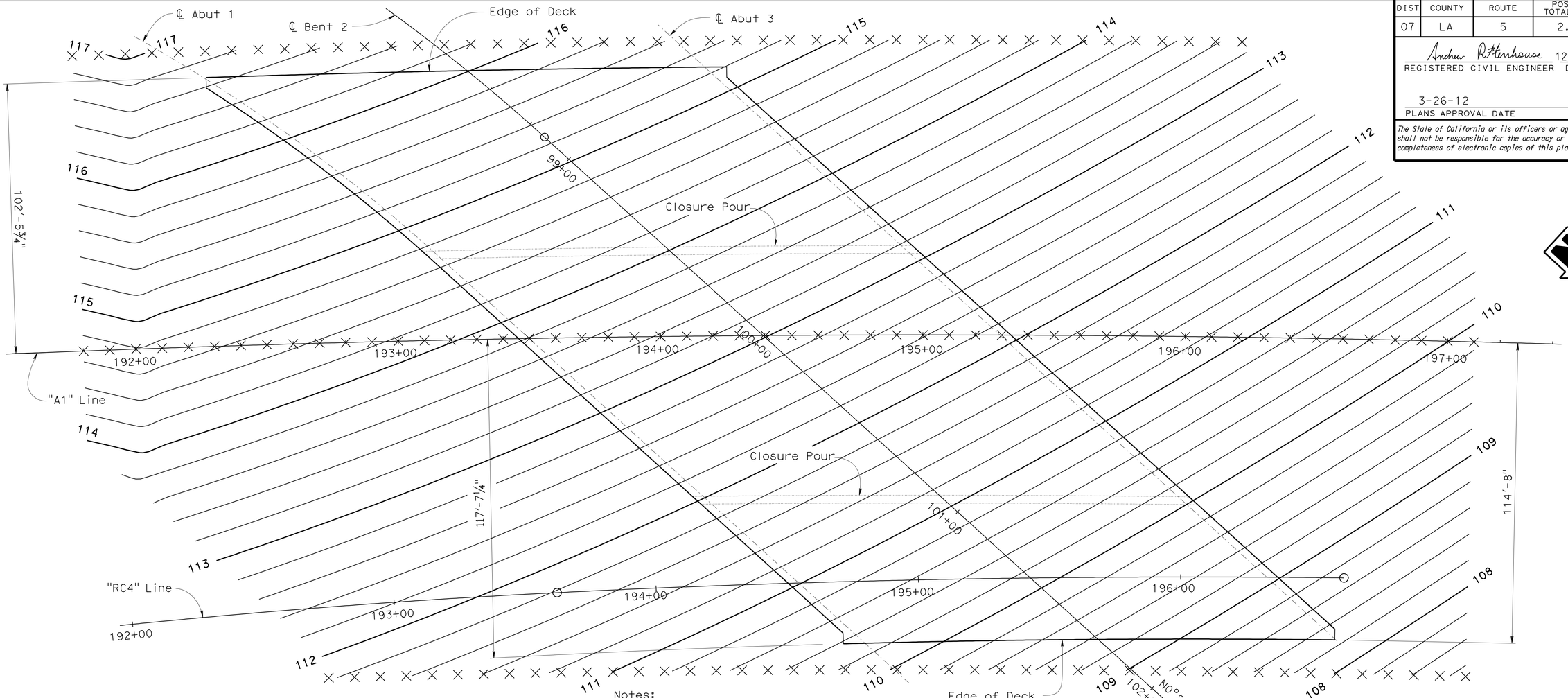

Notes:
0.20' Contour Interval

PLAN
1" = 20'

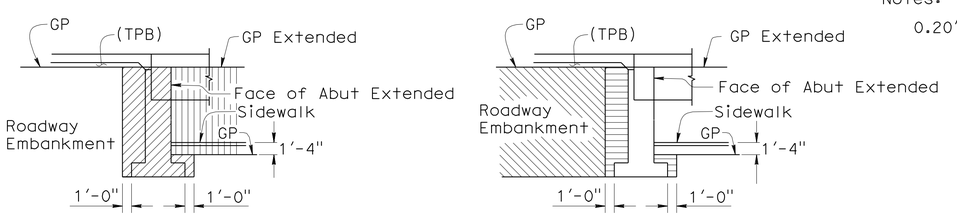

EXCAVATION & BACKFILL
No Scale

For additional details see A62-B and A62-C

Legend:

- Structure Excavation *
- Structure Backfill
- Roadway Excavation (See "Road Plans")
- Roadway Embankment (See "Road Plans")
- Structural Concrete, Bridge
- Structural Concrete, Footing
- Structural Concrete, Bridge (4.5 ksi at 28 days)
- X 10' Station Interval. Contours do not include camber.

* Upper 3 feet of Structure Excavation in unpaved areas is to be considered as Structure Excavation (Type Y-2) (Aerially Deposited Lead)

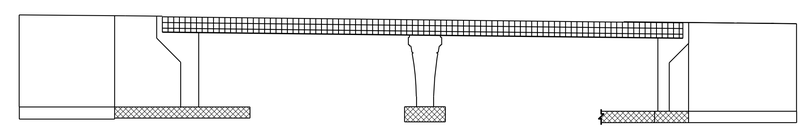

CONCRETE STRENGTH AND TYPE LIMITS
No Scale

	BY	CHECKED
DESIGN	Fred Feng	Sara Yip
DETAILS	Herman Mauroschadt	Sara Yip
QUANTITIES	Gabriel Galo	Rustan Novik

STATE OF CALIFORNIA
DEPARTMENT OF TRANSPORTATION

DIVISION OF ENGINEERING SERVICES
STRUCTURE DESIGN
DESIGN BRANCH 15

BRIDGE NO. 53-3041
POST MILE 3.66

BLOOMFIELD AVENUE UC
DECK CONTOURS

STRUCTURES DESIGN DETAIL SHEET (ENGLISH) (REV. 10/25/05)

ORIGINAL SCALE IN INCHES FOR REDUCED PLANS 0 1 2 3

CU 07
EA 215931

DISREGARD PRINTS BEARING EARLIER REVISION DATES

REVISION DATES: 11-25-09 2-8-11 3-4-11 3-11-11 3-18-11 10-28-11 12-2-11 12-12-11 1-5-12

SHEET 4 OF 80

FILE => 53-3041-d-dc01.dgn

USERNAME => s135318 DATE PLOTTED => 28-MAR-2012 TIME PLOTTED => 09:43

DIST	COUNTY	ROUTE	POST MILES TOTAL PROJECT	SHEET No	TOTAL SHEETS
07	LA	5	2.4/4.0	799	1288

Andrew Rittenhouse 12-12-11
REGISTERED CIVIL ENGINEER DATE

3-26-12
PLANS APPROVAL DATE

The State of California or its officers or agents shall not be responsible for the accuracy or completeness of electronic copies of this plan sheet.

REGISTERED PROFESSIONAL ENGINEER — Andrew P. Rittenhouse No. 61006 Exp. 12-31-12 CIVIL — STATE OF CALIFORNIA

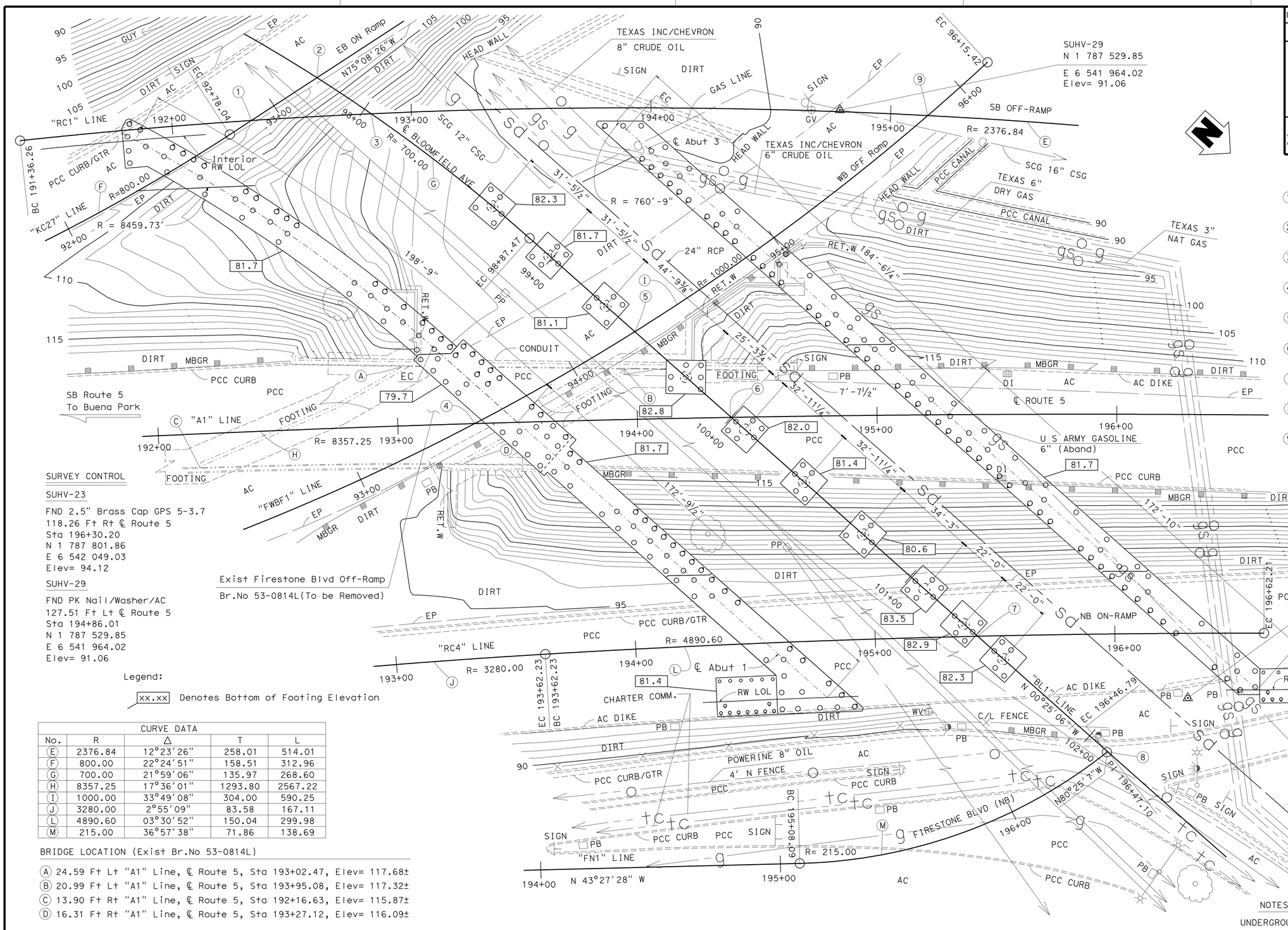

1. Sta 92+88.74, "KC27" LINE, EB ON-RAMP = Sta 192+33.15, "RC1" LINE, SB OFF-RAMP
2. Sta 97+76.23,"BL1" LINE, ℄ BLOOMFIELD AVE = Sta 93+21.42, "KC27" LINE, EB ON-RAMP
3. Sta 98+03.40,"BL1" LINE, ℄ BLOOMFIELD AVE = Sta 192+83.23, "RC1" LINE, SB OFF-RAMP
4. Sta 193+32.07, "A1" LINE, ℄ ROUTE 5 = Sta 93+52.98, "FWBF1" LINE, WB OFF-RAMP
5. Sta 99+46.19,"BL1" LINE, ℄ BLOOMFIELD AVE = Sta 94+29.99, "FWBF1" LINE, WB OFF-RAMP
6. Sta 100+00.00,"BL1" LINE,℄ BLOOMFIELD AVE = Sta 194+39.11, "A1" LINE, ℄ ROUTE 5
7. Sta 101+37.49,"BL1" LINE,℄ BLOOMFIELD AVE = Sta 195+42.73, "RC4" LINE, NB ON-RAMP
8. Sta 102+10.00,"BL1" LINE,℄ BLOOMFIELD AVE = Sta 196+47.10,"FN1" LINE,FIRESTONE BLVD(NB)
9. Sta 195+15.50, "RC1" LINE, SB OFF-RAMP = Sta 95+82.01, "FWBF1" LINE, WB OFF-RAMP

SURVEY CONTROL

SUHV-23

FND 2.5" Brass Cap GPS 5-3.7
118.26 Ft Rt ℄ Route 5
Sta 196+30.20
N 1 787 801.86
E 6 542 049.03
Elev= 94.12

SUHV-29

FND PK Nail/Washer/AC
127.51 Ft Lt ℄ Route 5
Sta 194+86.01
N 1 787 529.85
E 6 541 964.02
Elev= 91.06

Legend:

[xx.xx] Denotes Bottom of Footing Elevation

CURVE DATA				
No.	R	Δ	T	L
(E)	2376.84	12°23′26"	258.01	514.01
(F)	800.00	22°24′51"	158.51	312.96
(G)	700.00	21°59′06"	135.97	268.60
(H)	8357.25	17°36′01"	1293.80	2567.22
(I)	1000.00	33°49′08"	304.00	590.25
(J)	3280.00	2°55′09"	83.58	167.11
(L)	4890.60	03°30′52"	150.04	299.98
(M)	215.00	36°57′38"	71.86	138.69

BRIDGE LOCATION (Exist Br.No 53-0814L)

(A) 24.59 Ft Lt "A1" Line, ℄ Route 5, Sta 193+02.47, Elev= 117.68±
(B) 20.99 Ft Lt "A1" Line, ℄ Route 5, Sta 193+95.08, Elev= 117.32±
(C) 13.90 Ft Rt "A1" Line, ℄ Route 5, Sta 192+16.63, Elev= 115.87±
(D) 16.31 Ft Rt "A1" Line, ℄ Route 5, Sta 193+27.12, Elev= 116.09±

NOTES:

UNDERGROUND UTILITIES AS SHOWN ARE APPROXIMATE

PRELIMINARY INVESTIGATION SECTION

SCALE	VERT.DATUM NAVD88	PHOTOGRAMMETRY AS OF: X			
1"=20′	HORZ.DATUM NAD83 (1991.35)	SURVEYED	BY DISTRICT 07	CHECKED	BY T.PHUNG 12/2009
ALIGNMENT TIES	DIST.TRAVERSE SHEETS	DRAFTED	BY V.PHAM 12/2009	CHECKED	BY S.ALIVIO 12/2009

STRUCTURES FOUNDATION PLAN SHEET (ENGLISH) (REV. 10/25/05)

	BY	CHECKED
DESIGN	Fred Feng	Sara Yip
DETAILS	Herman Mauroschadt	Sara Yip
QUANTITIES	Gabriel Galo	Ruslan Novik

STATE OF CALIFORNIA
DEPARTMENT OF TRANSPORTATION

DIVISION OF ENGINEERING SERVICES
STRUCTURE DESIGN
DESIGN BRANCH 15

ORIGINAL SCALE IN INCHES FOR REDUCED PLANS 0 1 2 3

CU 07
EA 215931

BRIDGE NO. 53-3041
POST MILE 3.66

BLOOMFIELD AVENUE UC
FOUNDATION PLAN

DISREGARD PRINTS BEARING EARLIER REVISION DATES → REVISION DATES 12-14-11 12-15-11 1-5-12 7-12-10 3-10-11 7-5-11 7-14-11 10-14-11 10-26-11

SHEET 5 OF 80

FILE => 53-3041-e-fp01.dgn

USERNAME => s135318 DATE PLOTTED => 28-MAR-2012 TIME PLOTTED => 09:43

DIST	COUNTY	ROUTE	POST MILES TOTAL PROJECT	SHEET No	TOTAL SHEETS
07	LA	5	2.4/4.0	800	1288

Andrew Rittenhouse 12-12-11
REGISTERED CIVIL ENGINEER DATE

3-26-12
PLANS APPROVAL DATE

REGISTERED PROFESSIONAL ENGINEER Andrew P. Rittenhouse No. 61006 Exp. 12-31-12 CIVIL STATE OF CALIFORNIA

The State of California or its officers or agents shall not be responsible for the accuracy or completeness of electronic copies of this plan sheet.

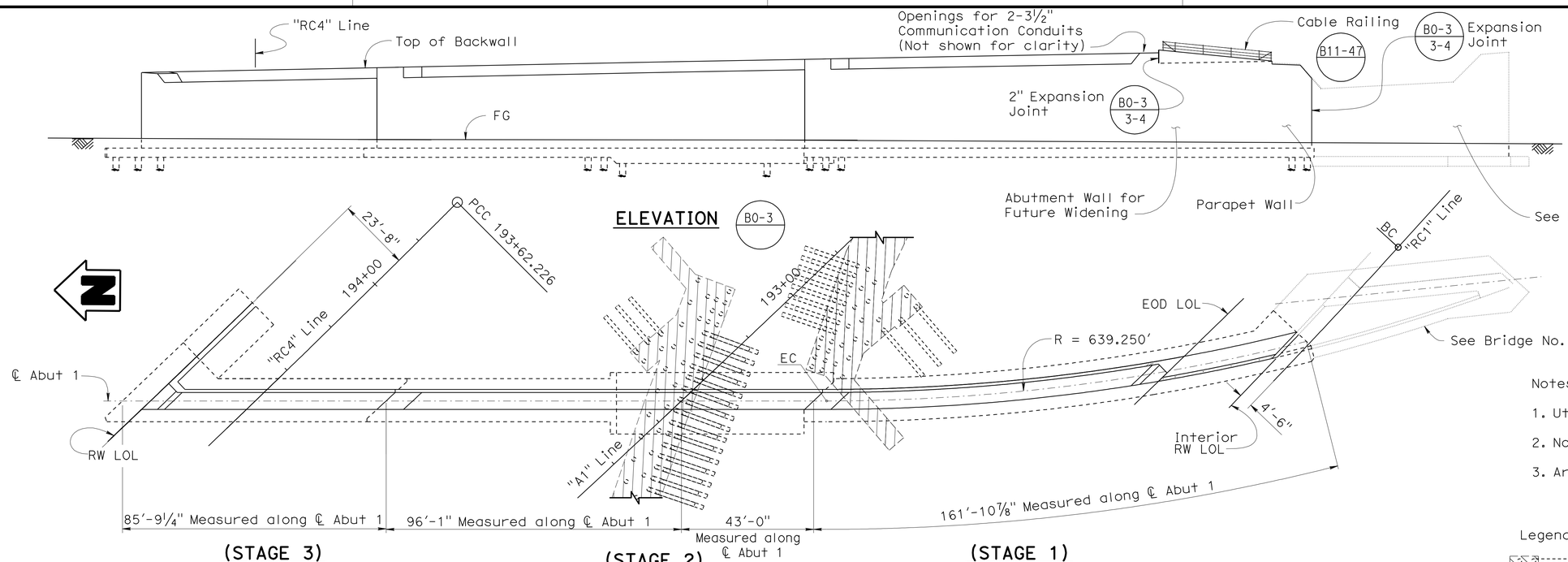

Notes:

1. Utilities to be Abandoned.
2. Not all Piles shown for clarity.
3. Architectural Treatment not shown for clarity.

Legend:

Indicates Existing Bridge Foundation

PLAN

ABUTMENT 1

1" = 20'

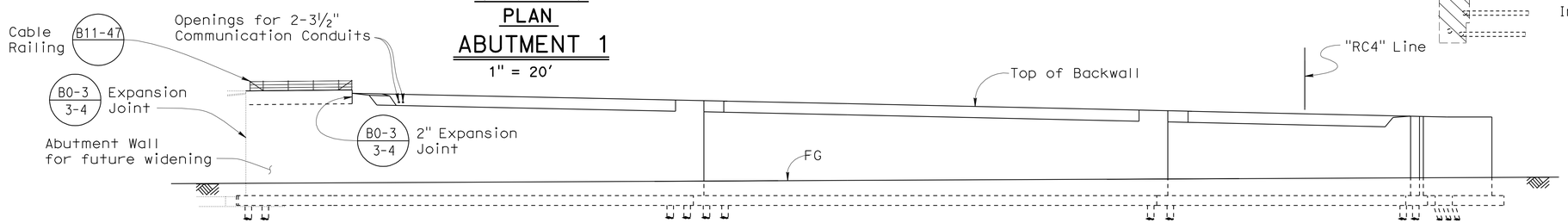

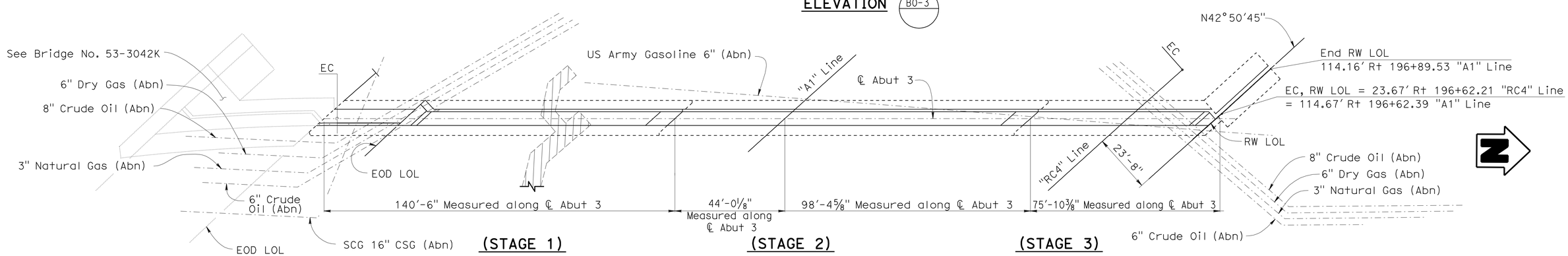

NOTE:
THE CONTRACTOR SHALL VERIFY ALL CONTROLLING FIELD DIMENSIONS BEFORE ORDERING OR FABRICATING ANY MATERIAL.

PLAN

ABUTMENT 3

1" = 20'

	BY	CHECKED
DESIGN	Fred Feng	Sara Yip
DETAILS	Herman Mauroschadt	Sara Yip
QUANTITIES	Gabriel Galo	Ruslan Novik

STATE OF CALIFORNIA
DEPARTMENT OF TRANSPORTATION

DIVISION OF ENGINEERING SERVICES
STRUCTURE DESIGN
DESIGN BRANCH 15

BRIDGE NO. 53-3041
POST MILE 3.66

BLOOMFIELD AVENUE UC
ABUTMENT LAYOUT

STRUCTURES DESIGN DETAIL SHEET (ENGLISH) (REV. 10/25/05)

ORIGINAL SCALE IN INCHES FOR REDUCED PLANS 0 1 2 3

CU 07
EA 215931

DISREGARD PRINTS BEARING EARLIER REVISION DATES

REVISION DATES: 12-14-11 1-4-12 3-26-10 3-16-11 4-28-11 7-5-11 7-15-11 10-21-11 12-8-11

SHEET 6 OF 80

FILE => 53-3041-h-a1-lo01.dgn

USERNAME => s135318 DATE PLOTTED => 28-MAR-2012 TIME PLOTTED => 09:43