Dist	COUNTY	ROUTE	POST MILES TOTAL PROJECT	SHEET No.	TOTAL SHEETS
07	LA	5	1.2/2.1	1	602

STATE OF CALIFORNIA

DEPARTMENT OF TRANSPORTATION

PROJECT PLANS FOR CONSTRUCTION ON

STATE HIGHWAY

IN LOS ANGELES COUNTY
IN SANTA FE SPRINGS
FROM 0.3 MILE SOUTH OF NORTH FORK COYOTE CREEK BRIDGE TO 0.3 MILE NORTH OF MARQUARDT AVENUE AND AT NORWALK HUB AND LOS ANGELES REGIONAL TRANSPORTATION MANAGEMENT CENTER

TO BE SUPPLEMENTED BY STANDARD PLANS DATED MAY 2006

INDEX OF PLANS

SHEET No.	DESCRIPTION
1	TITLE AND LOCATION MAP
2-7	TYPICAL CROSS SECTIONS
8	KEY MAP AND LINE INDEX
9-14	LAYOUTS
15-22	PROFILES, AND PROFILE AND SUPERELEVATION
23-69	CONSTRUCTION DETAILS
70-82	CONTOUR GRADING
83-162	DRAINAGE PLANS, PROFILES, DETAILS AND QUANTITIES
163-173	SANITARY SEWER PLANS AND DETAILS
174-179	UTILITY PLANS
180-181	CONSTRUCTION AREA SIGNS
182-227	STAGE CONSTRUCTION PLANS, DETAILS AND QUANTITIES
228-235	TRAFFIC HANDLING PLANS, DETAILS AND DETOUR PLANS
236-244	PAVEMENT DELINEATION PLANS AND QUANTITIES
245-263	SIGN PLANS, DETAILS AND QUANTITIES
264-270	SUMMARY OF QUANTITIES
271-284	PLANT LIST, PLANTING AND LANDSCAPE DETAILS
285-320	ELECTRICAL PLANS
321-326	DECORATIVE LIGHTING STANDARD
327-328	MOTORIST INFORMATION PLAN
329	RIGHT OF WAY INFORMATION
330-386	REVISED AND NEW STANDARD PLANS

STRUCTURE PLANS

387-417	NORTH FORK COYOTE CREEK Br (REPLACEMENT), Br No. 53-3037
418-466	ALONDRA Blvd OC (REPLACEMENT), Br No. 53-3038
467-496	NORTH FORK COYOTE CREEK Br (REPLACEMENT), Br No. 53C2185
497-511	RETAINING WALL No. 1, Br No. 53E0151
512-528	RETAINING WALL No. 2, Br No. 53E0152
529-540	RETAINING WALL No. 3, Br No. 53E0153
541-552	RETAINING WALL No. 4, Br No. 53E0154
553-556	RETAINING WALL No. 5, Br No. 53E0155
557-560	RETAINING WALL No. 6, Br No. 53E0156
561-564	RETAINING WALL No. 7, Br No. RW7
565-568	RETAINING WALL No. 8, Br No. RW8
569-572	RETAINING WALL No. 10, Br No. RW10
573-576	RETAINING WALL No. 11, Br No. RW11
577-580	RETAINING WALL No. 12, Br No. RW12
581-589	RETAINING WALL No. 13, Br No. 53E0159
590-602	RETAINING WALL NO. 14, Br No. RW14

THE STANDARD PLANS LIST APPLICABLE TO THIS CONTRACT IS INCLUDED IN THE NOTICE TO BIDDERS AND SPECIAL PROVISIONS BOOK.

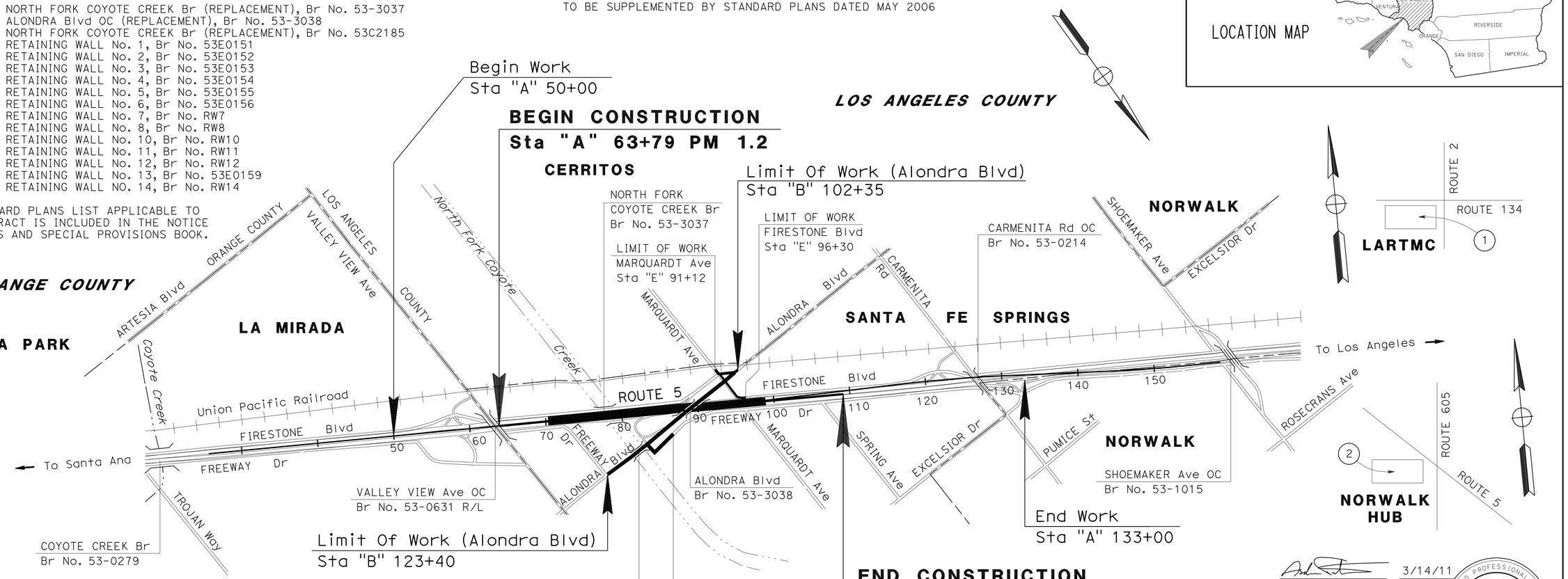

WORK AT HUB AND TMC BUILDING

No.	LOCATION	DESCRIPTION
1	Rte 2/134 SEPARATION	LOS ANGELES REGIONAL TRANSPORTATION MANAGEMENT CENTER (LARTMC)
2	Rte 5/605 SEPARATION	NORWALK HUB

THE CONTRACTOR SHALL POSSESS THE CLASS (OR CLASSES) OF LICENSE AS SPECIFIED IN THE "NOTICE TO BIDDERS."

PROJECT MANAGER DIAA YASSIN

DESIGN ENGINEER MEDARDO DE LA CRUZ

PROJECT ENGINEER REGISTERED CIVIL ENGINEER — DATE 3/14/11

REGISTERED PROFESSIONAL ENGINEER ASADOUR TERTERIAN No. C56966 Exp. 6-30-11 CIVIL STATE OF CALIFORNIA

June 27, 2011
PLANS APPROVAL DATE

THE STATE OF CALIFORNIA OR ITS OFFICERS OR AGENTS SHALL NOT BE RESPONSIBLE FOR THE ACCURACY OR COMPLETENESS OF SCANNED COPIES OF THIS PLAN SHEET.

CONTRACT No.	07-215914
PROJECT ID	0700001831

LAST REVISION 00-00-00 DATE PLOTTED => 08-JUL-2011 TIME PLOTTED => 08:07

Dist	COUNTY	ROUTE	POST MILES TOTAL PROJECT	SHEET No.	TOTAL SHEETS
07	LA	5	1.2/2.1	2	602

Medardo de la Cruz 3/14/11
REGISTERED CIVIL ENGINEER DATE

6-27-11
PLANS APPROVAL DATE

REGISTERED PROFESSIONAL ENGINEER MEDARDO DE LA CRUZ No. C61848 Exp. 6-30-11 CIVIL STATE OF CALIFORNIA

THE STATE OF CALIFORNIA OR ITS OFFICERS OR AGENTS SHALL NOT BE RESPONSIBLE FOR THE ACCURACY OR COMPLETENESS OF SCANNED COPIES OF THIS PLAN SHEET.

NOTES:

1. DIMENSIONS OF THE PAVEMENT STRUCTURES ARE SUBJECT TO TOLERANCES SPECIFIED IN THE STANDARD SPECIFICATIONS.
2. SUPERELEVATION AS SHOWN OR AS DIRECTED BY THE ENGINEER.
3. EXACT LOCATIONS AND TYPES OF DIKE, CONCRETE BARRIER, AND CURB ARE SHOWN ON THE LAYOUTS AND IN THE SUMMARY OF QUANTITIES SHEETS.
4. FOR LOCATIONS OF RETAINING WALLS, SEE RETAINING WALL PLANS.
5. EXISTING UTILITY FACILITIES HAVE NOT BEEN PLOTTED ON THESE PLANS.

PROPOSED:

[1] 1.05′ JPCP
0.50′ LCB
0.70′ CLASS 3 AB

[2] 0.60′ HMA (TYPE A)
0.60′ LCB
1.15′ CLASS 3 AB

[3] 0.70′ HMA (TYPE B)
1.40′ LCB
0.35′ CLASS 3 AB

[4] 0.70′ HMA (TYPE A)
0.70′ LCB
1.30′ CLASS 3 AB

[5] 0.70′ JPCP
0.35′ LCB
0.60′ CLASS 3 AB

[6] 0.40′ HMA (TYPE B)
0.40′ LCB
0.65′ CLASS 3 AB

[7] 0.25′ COLD PLANE AC
0.25′ Min HMA (TYPE B)

[8] 0.60′ HMA (TYPE B)
0.60′ LCBRS
1.15′ CLASS 3 AB

EXISTING:

[9] 0.15′ RAC (TYPE G)
0.20′ AC
0.40′ AC
0.60′ LCB

[10] 0.67′ PCC
0.33′ CTB
0.67′ IB

[11] 0.25′ AC
0.67′ UNTREATED BASE
0.50′ IMPORTED SUBBASE

[12] 0.15′ RAC (TYPE G)
0.02 TO 0.18′ AC
0.50′ UNTREATED BASE
0.66′ AND Var IMPORTED SUBBASE

[13] 0.15′ RAC (TYPE G)
0.67′ PCC
0.33′ CTB
0.67′ IB

CONSTRUCTION STAGING
STAGE 2 PHASE 3 & STAGE 3 PHASE 2:

[14] 0.17′ TO 0.33′ HMA (TYPE A)

[15] 0.33′ HMA (TYPE A)
0.0′ TO 4.0′ LCBRS

ABBREVIATIONS:

LCBRS: LEAN CONCRETE BASE RAPID SETTING
RAC: RUBBERIZED ASPHALT CONCRETE

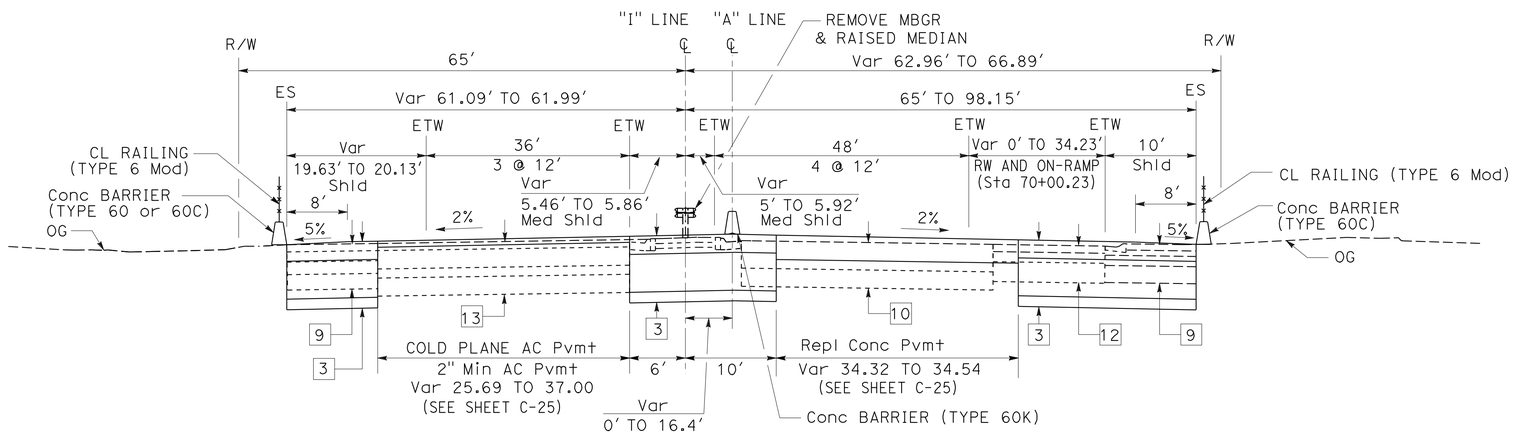

SOUTHBOUND
"A" Sta 70+30 TO Sta 72+00

NORTHBOUND
"A" Sta 70+30 TO Sta 70+60

ROUTE 5

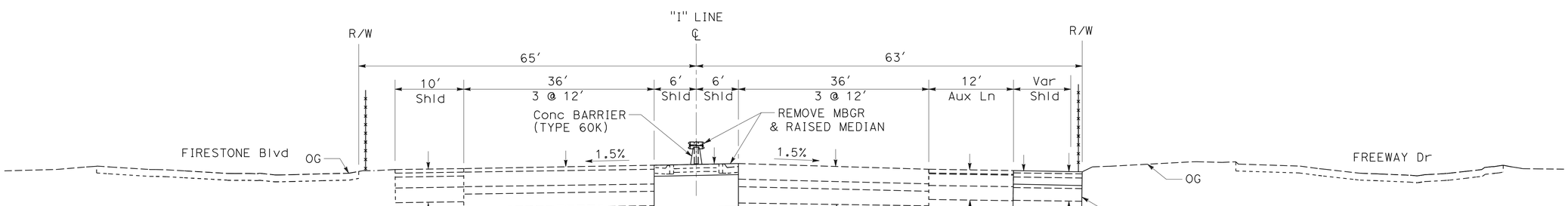

SOUTHBOUND NORTHBOUND

ROUTE 5

TYPICAL CROSS SECTIONS

NO SCALE

X-1

STATE OF CALIFORNIA - DEPARTMENT OF TRANSPORTATION
Caltrans® OFFICE OF DESIGN A

FUNCTIONAL SUPERVISOR: ASADOUR TERTERIAN
CALCULATED-DESIGNED BY: MEDARDO DE LA CRUZ
CHECKED BY: ASADOUR TERTERIAN
REVISED BY
DATE REVISED

LAST REVISION 00-00-00
DATE PLOTTED => 30-JUN-2011
TIME PLOTTED => 15:55

Dist	COUNTY	ROUTE	POST MILES TOTAL PROJECT	SHEET No.	TOTAL SHEETS
07	LA	5	1.2/2.1	3	602

Medardo de la Cruz 3/14/11
REGISTERED CIVIL ENGINEER DATE

6-27-11
PLANS APPROVAL DATE

REGISTERED PROFESSIONAL ENGINEER
MEDARDO DE LA CRUZ
No. C61848
Exp. 6-30-11
CIVIL
STATE OF CALIFORNIA

THE STATE OF CALIFORNIA OR ITS OFFICERS OR AGENTS SHALL NOT BE RESPONSIBLE FOR THE ACCURACY OR COMPLETENESS OF SCANNED COPIES OF THIS PLAN SHEET.

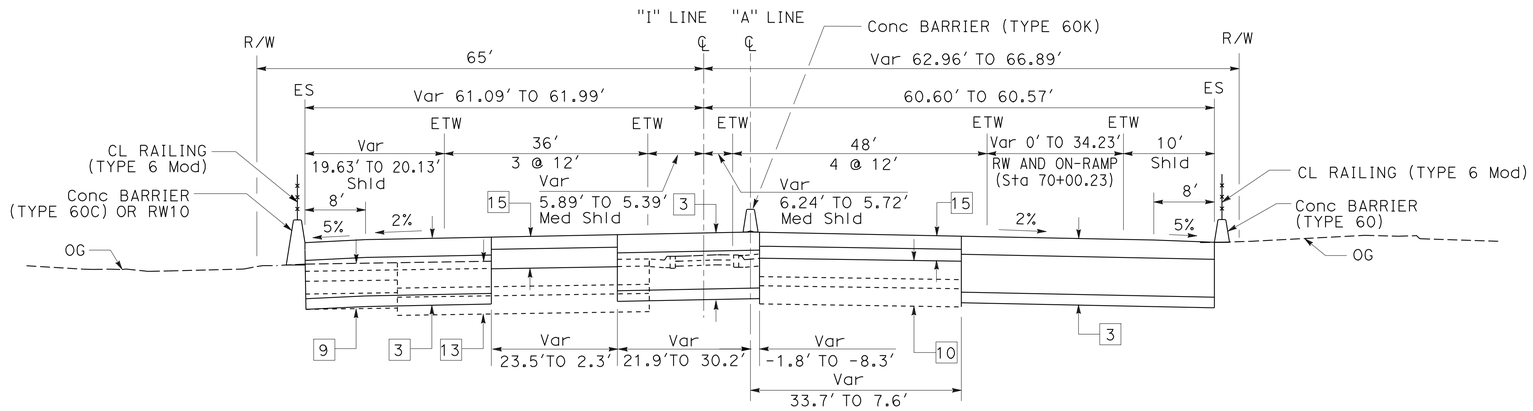

SOUTHBOUND
"A" Sta 72+20 TO Sta 74+20

NORTHBOUND
"A" Sta 71+35 TO Sta 74+50

ROUTE 5

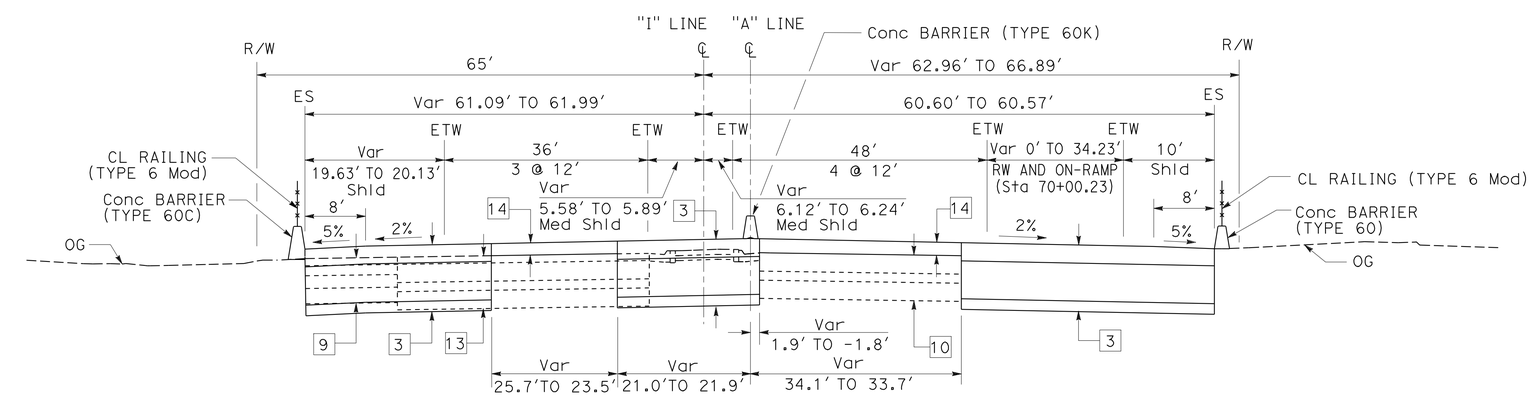

SOUTHBOUND
"A" Sta 72+00 TO Sta 72+20

NORTHBOUND
"A" Sta 70+60 TO Sta 71+35

ROUTE 5

TYPICAL CROSS SECTIONS

NO SCALE

X-2

STATE OF CALIFORNIA - DEPARTMENT OF TRANSPORTATION
Caltrans® OFFICE OF DESIGN A

FUNCTIONAL SUPERVISOR: ASADOUR TERTERIAN

CALCULATED-DESIGNED BY: MEDARDO DE LA CRUZ
CHECKED BY: ASADOUR TERTERIAN

REVISED BY
DATE REVISED

LAST REVISION 00-00-00
DATE PLOTTED => 30-JUN-2011
TIME PLOTTED => 15:55

Dist	COUNTY	ROUTE	POST MILES TOTAL PROJECT	SHEET No.	TOTAL SHEETS
07	LA	5	1.2/2.1	4	602

Medardo de la Cruz 3/14/11
REGISTERED CIVIL ENGINEER DATE

6-27-11
PLANS APPROVAL DATE

REGISTERED PROFESSIONAL ENGINEER
MEDARDO DE LA CRUZ
No. C61848
Exp. 6-30-11
CIVIL
STATE OF CALIFORNIA

THE STATE OF CALIFORNIA OR ITS OFFICERS OR AGENTS SHALL NOT BE RESPONSIBLE FOR THE ACCURACY OR COMPLETENESS OF SCANNED COPIES OF THIS PLAN SHEET.

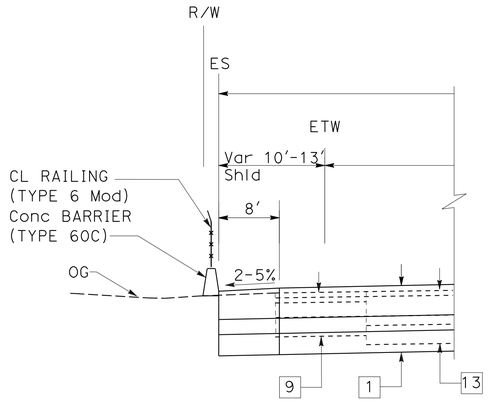

"A" Sta 87+00.00 TO 89+00.00
"A" Sta 91+49.25 TO 98+70.14

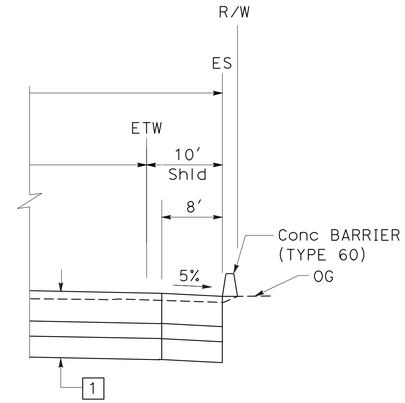

"A" Sta 81+99.15 TO 85+66.70

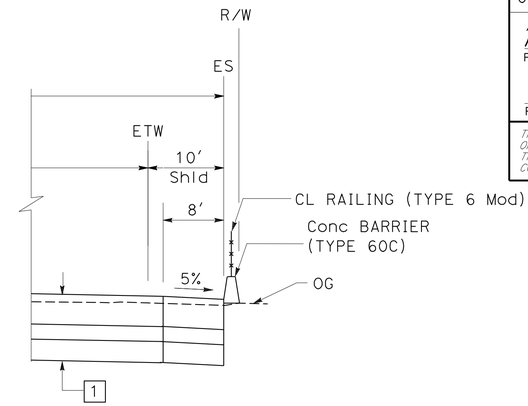

"A" Sta 88+02.77 TO 98+70.14

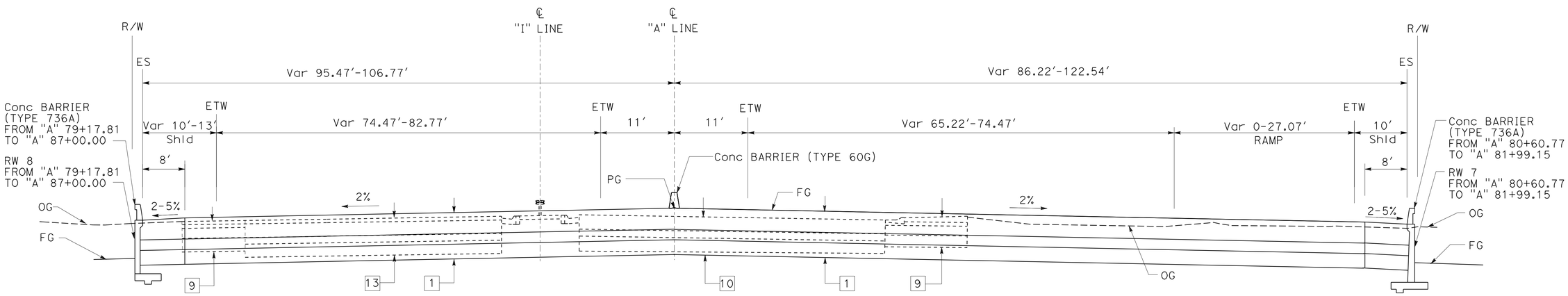

SOUTHBOUND
"A" Sta 80+15.16 TO 98+70.14

ROUTE 5

NORTHBOUND
"A" Sta 80+15.16 TO Sta 98+70.14

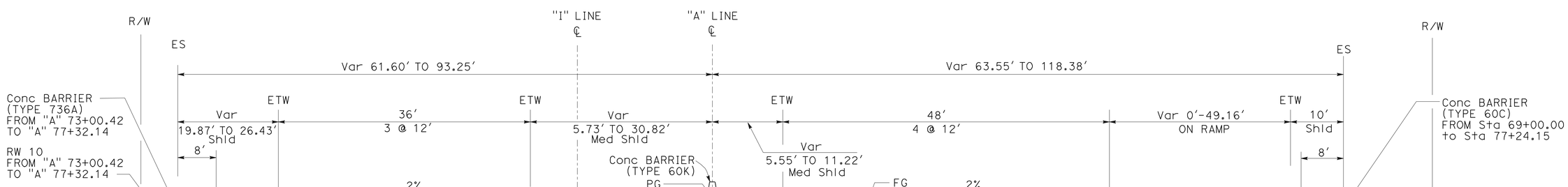

SOUTHBOUND
"A" Sta 74+20.00 TO 77+79.38

ROUTE 5

NORTHBOUND
"A" Sta 74+50.00 TO 77+79.38

TYPICAL CROSS SECTIONS

NO SCALE

X-3

STATE OF CALIFORNIA - DEPARTMENT OF TRANSPORTATION
Caltrans® OFFICE OF DESIGN A

FUNCTIONAL SUPERVISOR: ASADOUR TERTERIAN
CALCULATED-DESIGNED BY: MEDARDO DE LA CRUZ
CHECKED BY: ASADOUR TERTERIAN
REVISED BY
DATE REVISED

LAST REVISION 00-00-00
DATE PLOTTED => 30-JUN-2011
TIME PLOTTED => 15:55

Dist	COUNTY	ROUTE	POST MILES TOTAL PROJECT	SHEET No.	TOTAL SHEETS
07	LA	5	1.2/2.1	5	602

Medardo de la Cruz 3/14/11
REGISTERED CIVIL ENGINEER DATE

6-27-11
PLANS APPROVAL DATE

REGISTERED PROFESSIONAL ENGINEER
MEDARDO DE LA CRUZ
No. C61848
Exp. 6-30-11
CIVIL
STATE OF CALIFORNIA

THE STATE OF CALIFORNIA OR ITS OFFICERS OR AGENTS SHALL NOT BE RESPONSIBLE FOR THE ACCURACY OR COMPLETENESS OF SCANNED COPIES OF THIS PLAN SHEET.

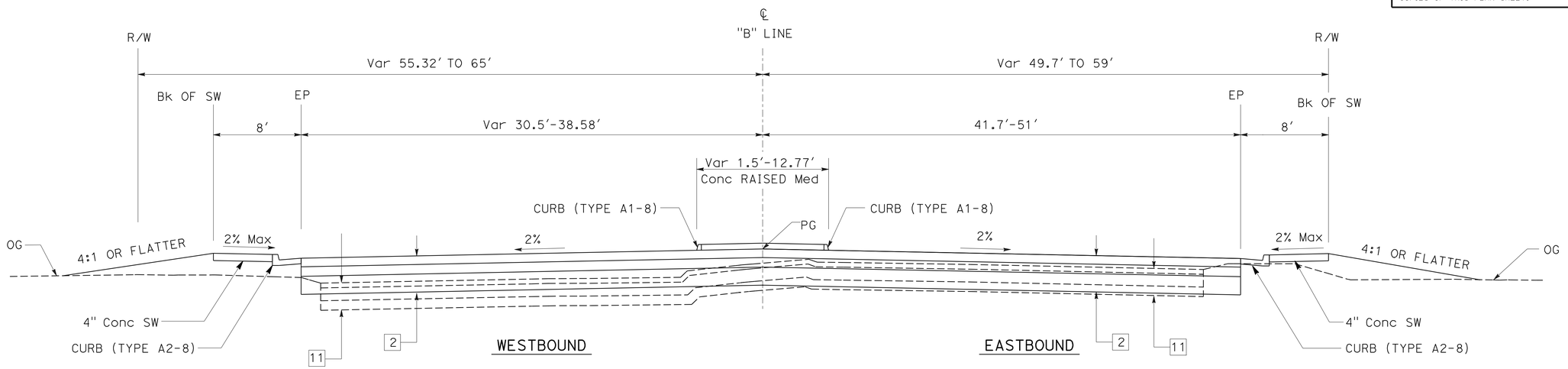

ALONDRA Blvd

"B" Sta 119+34.59 TO Sta 123+00.00

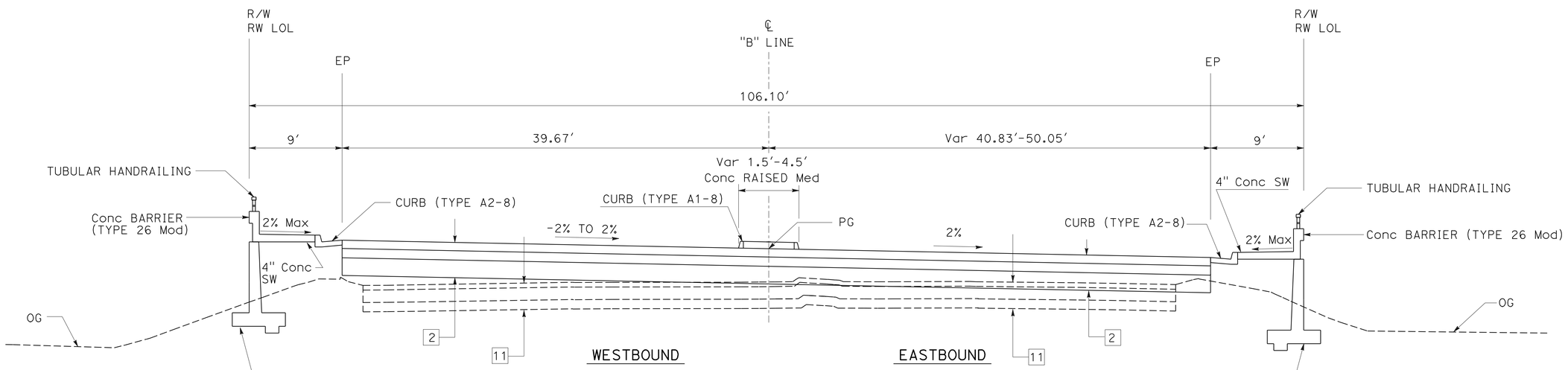

ALONDRA Blvd

"B" Sta 104+75.00 TO Sta 107+88.36
"B" Sta 112+60.36 TO Sta 117.58.58

TYPICAL CROSS SECTIONS

NO SCALE

X-4

REVISED BY | DATE REVISED
MEDARDO DE LA CRUZ | ASADOUR TERTERIAN
CALCULATED-DESIGNED BY | CHECKED BY
FUNCTIONAL SUPERVISOR | ASADOUR TERTERIAN
STATE OF CALIFORNIA - DEPARTMENT OF TRANSPORTATION
Caltrans® OFFICE OF DESIGN A

LAST REVISION 00-00-00 | DATE PLOTTED => 30-JUN-2011 | TIME PLOTTED => 15:55

Dist	COUNTY	ROUTE	POST MILES TOTAL PROJECT	SHEET No.	TOTAL SHEETS
07	LA	5	1.2/2.1	6	602

Medardo de la Cruz 3/14/11
REGISTERED CIVIL ENGINEER DATE

6-27-11
PLANS APPROVAL DATE

REGISTERED PROFESSIONAL ENGINEER
MEDARDO DE LA CRUZ
No. C61848
Exp. 6-30-11
CIVIL
STATE OF CALIFORNIA

THE STATE OF CALIFORNIA OR ITS OFFICERS OR AGENTS SHALL NOT BE RESPONSIBLE FOR THE ACCURACY OR COMPLETENESS OF SCANNED COPIES OF THIS PLAN SHEET.

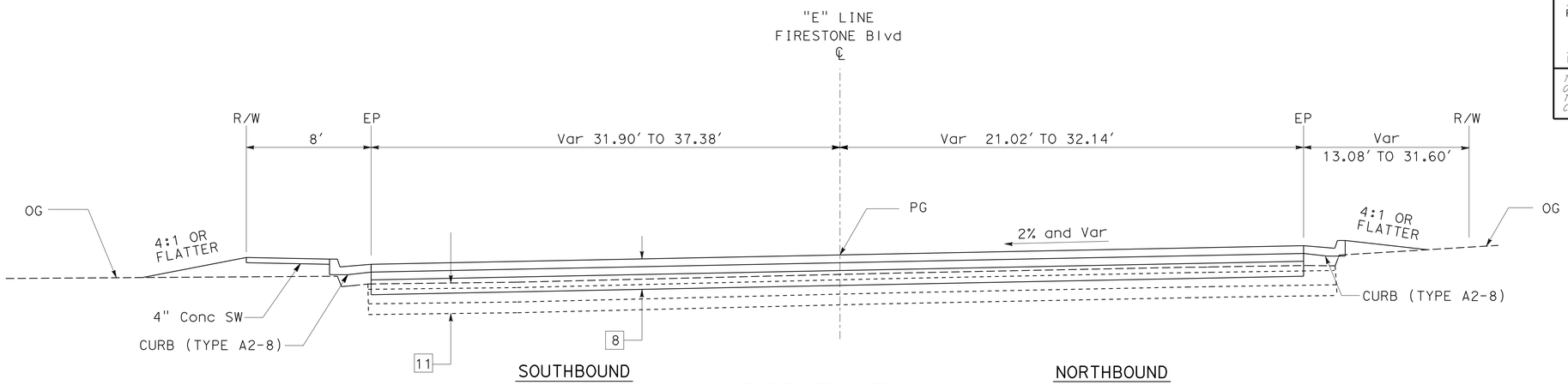

FIRESTONE Blvd

"E" Sta 91+80.00 TO Sta 96+00.00

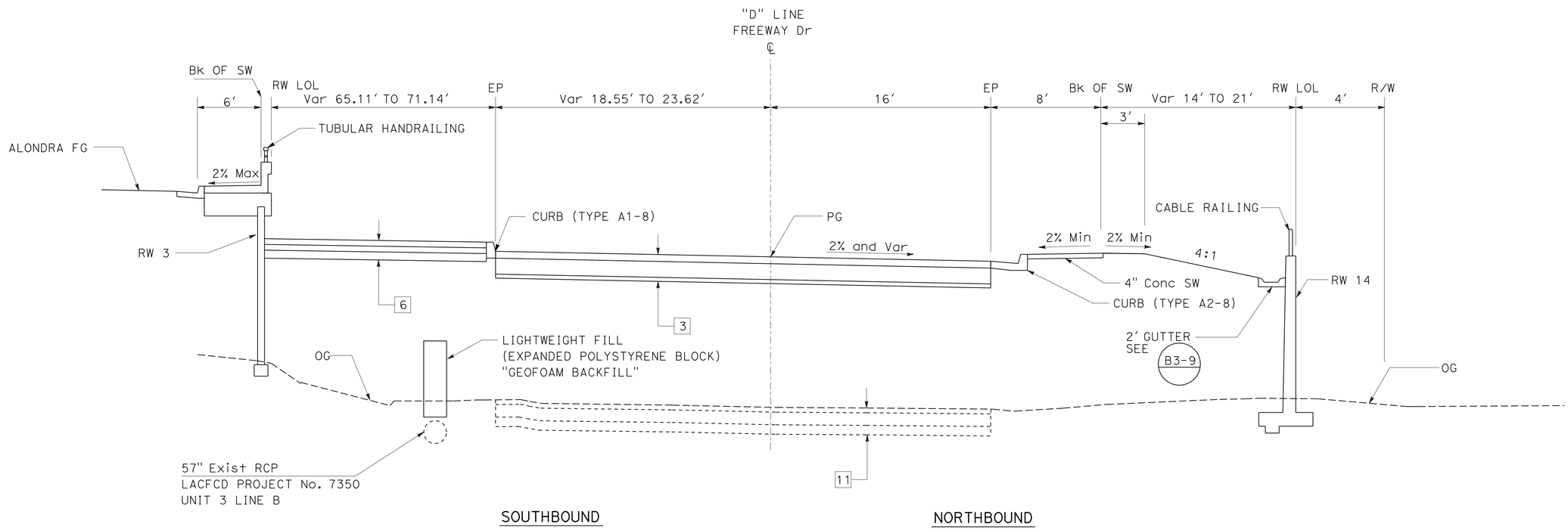

FREEWAY DRIVE

"D" Sta 84+00.00 TO Sta 88+00.00

TYPICAL CROSS SECTIONS

NO SCALE

X-5

STATE OF CALIFORNIA - DEPARTMENT OF TRANSPORTATION
Caltrans® OFFICE OF DESIGN A

FUNCTIONAL SUPERVISOR: ASADOUR TERTERIAN
CALCULATED-DESIGNED BY: MEDARDO DE LA CRUZ
CHECKED BY: ASADOUR TERTERIAN
REVISED BY
DATE REVISED

LAST REVISION 00-00-00
DATE PLOTTED => 30-JUN-2011
TIME PLOTTED => 15:55

Dist	COUNTY	ROUTE	POST MILES TOTAL PROJECT	SHEET No.	TOTAL SHEETS
07	LA	5	1.2/2.1	7	602

Medardo de la Cruz 3/14/11
REGISTERED CIVIL ENGINEER DATE

6-27-11
PLANS APPROVAL DATE

REGISTERED PROFESSIONAL ENGINEER MEDARDO DE LA CRUZ No. C61848 Exp. 6-30-11 CIVIL STATE OF CALIFORNIA

THE STATE OF CALIFORNIA OR ITS OFFICERS OR AGENTS SHALL NOT BE RESPONSIBLE FOR THE ACCURACY OR COMPLETENESS OF SCANNED COPIES OF THIS PLAN SHEET.

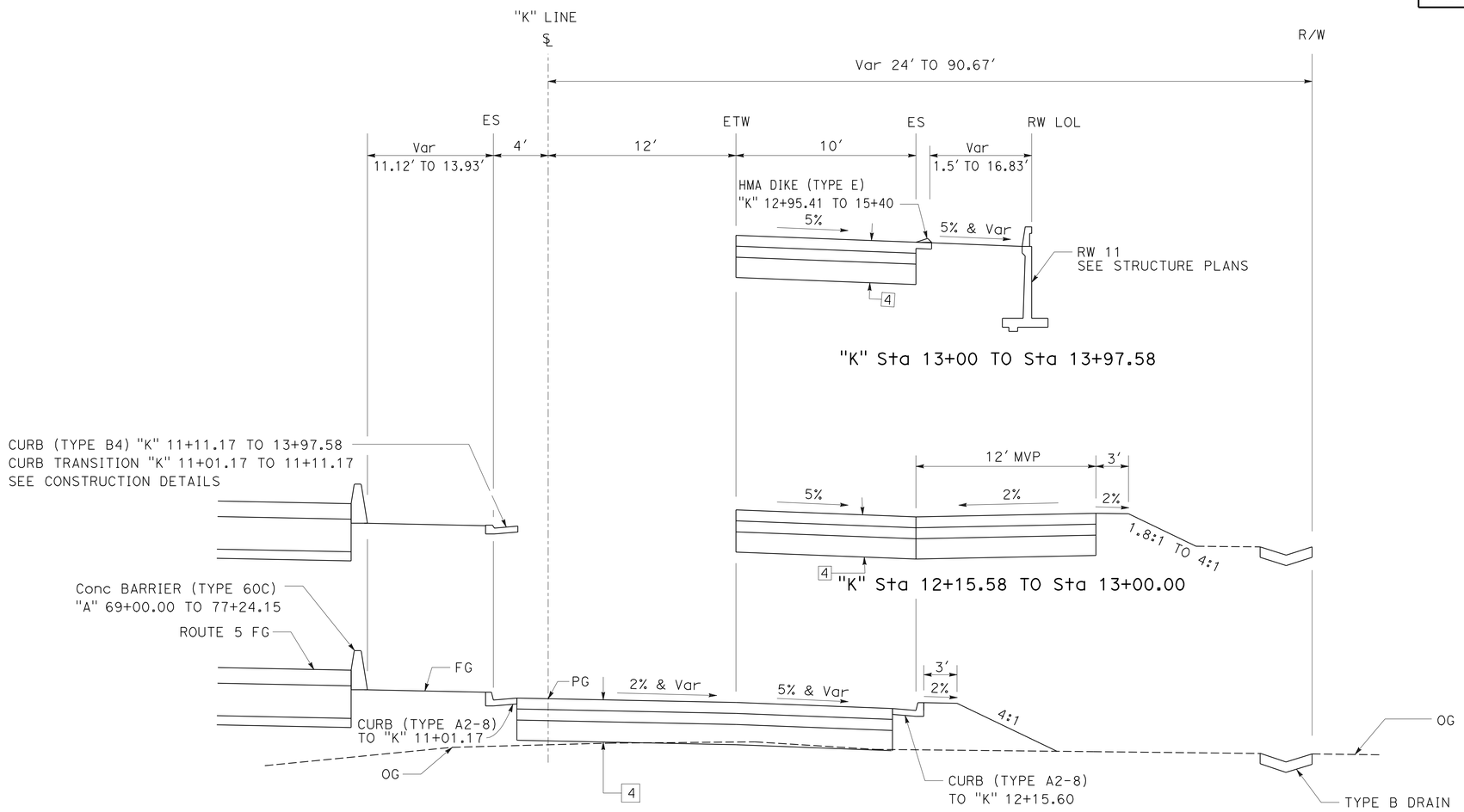

FREEWAY DRIVE NB INTERIM ON RAMP

"K" Sta 10+24.13 TO Sta 13+97.58

TYPICAL CROSS SECTIONS

NO SCALE

X-6

REVISED BY	DATE REVISED

CALCULATED-DESIGNED BY	CHECKED BY
SUSANNA YANG	MEDARDO DE LA CRUZ

FUNCTIONAL SUPERVISOR: ASADOUR TERTERIAN

STATE OF CALIFORNIA - DEPARTMENT OF TRANSPORTATION
Caltrans® OFFICE OF DESIGN A

LAST REVISION 00-00-00 | DATE PLOTTED => 30-JUN-2011 | TIME PLOTTED => 15:55

Dist	COUNTY	ROUTE	POST MILES TOTAL PROJECT	SHEET No.	TOTAL SHEETS
07	LA	5	1.2/2.1	8	602

Medardo de la Cruz 3/14/11
REGISTERED CIVIL ENGINEER DATE

6-27-11
PLANS APPROVAL DATE

REGISTERED PROFESSIONAL ENGINEER
MEDARDO DE LA CRUZ
No. C61848
Exp. 6-30-11
CIVIL
STATE OF CALIFORNIA

THE STATE OF CALIFORNIA OR ITS OFFICERS OR AGENTS SHALL NOT BE RESPONSIBLE FOR THE ACCURACY OR COMPLETENESS OF SCANNED COPIES OF THIS PLAN SHEET.

LINE INDEX

LINE	DESCRIPTION
"A"	ROUTE 5 ℄
"B"	ALONDRA Blvd
"C"	FIRESTONE Blvd
"D"	FREEWAY Dr
"E"	MARQUARDT Ave - FIRESTONE Blvd
"F"	NORTH FORK COYOTE CREEK
"G"	VALLEY VIEW Ave PROJECT (215921) NB ON RAMP ℄
"H"	RAILROAD ℄
"I"	Exist ROUTE 5 ℄
"J"	FREEWAY Dr

LINE INDEX

LINE	DESCRIPTION
"K"	Temp NB ON RAMP
"DR1"	SWAP MEET DRIVEWAY
"DR2"	BIKE PATH ENTRANCE

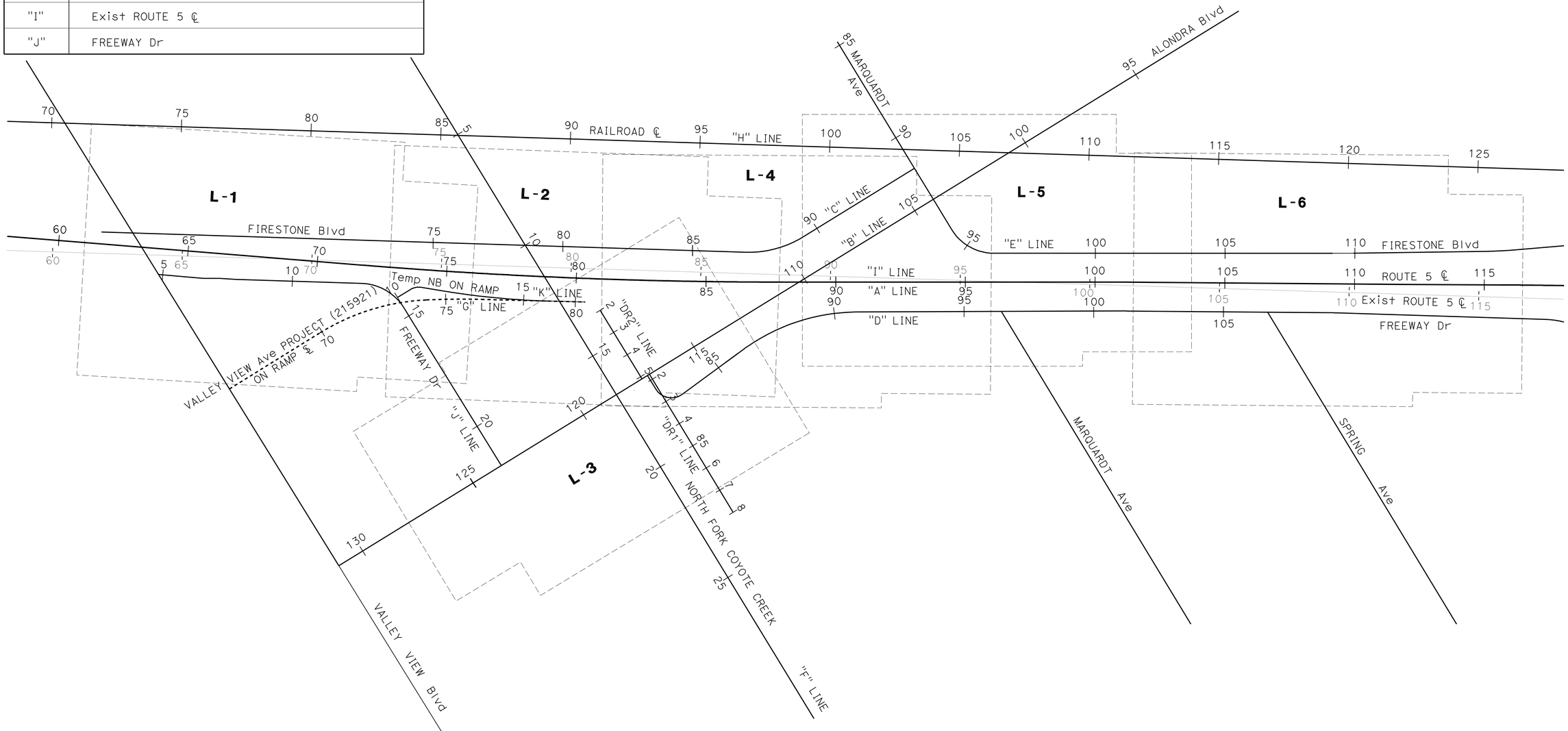

KEY MAP AND LINE INDEX

NO SCALE

K-1

ALL DIMENSIONS ARE IN FEET UNLESS OTHERWISE SHOWN

STATE OF CALIFORNIA - DEPARTMENT OF TRANSPORTATION
Caltrans® OFFICE OF DESIGN A

FUNCTIONAL SUPERVISOR: ASADOUR TERTERIAN
CALCULATED-DESIGNED BY: MEDARDO DE LA CRUZ
CHECKED BY: ASADOUR TERTERIAN
REVISED BY
DATE REVISED

LAST REVISION 00-00-00
DATE PLOTTED => 30-JUN-2011
TIME PLOTTED => 15:55

Dist	COUNTY	ROUTE	POST MILES TOTAL PROJECT	SHEET No.	TOTAL SHEETS
07	LA	5	1.2/2.1	9	602

Medardo de la Cruz 3/14/11
REGISTERED CIVIL ENGINEER DATE

6-27-11
PLANS APPROVAL DATE

REGISTERED PROFESSIONAL ENGINEER MEDARDO DE LA CRUZ No. C61848 Exp. 6-30-11 CIVIL STATE OF CALIFORNIA

THE STATE OF CALIFORNIA OR ITS OFFICERS OR AGENTS SHALL NOT BE RESPONSIBLE FOR THE ACCURACY OR COMPLETENESS OF SCANNED COPIES OF THIS PLAN SHEET.

NOTES:

1. FOR ACCURATE RIGHT OF WAY DATA, CONTACT RIGHT OF WAY ENGINEERING AT DISTRICT OFFICE.
2. SEE CONSTRUCTION DETAILS FOR REMOVAL DETAILS, DRIVEWAYS PAVEMENT AND CONCRETE BARRIER TRANSITIONS, INFILTRATION TRENCH, AUSTIN VAULT SAND FILTER.
3. FOR DITCH EXCAVATION (BIOSWALE), SEE CONSTRUCTION DETAIL PLANS.

ABBREVIATIONS:

MVP MAINTENANCE VEHICLE PULLOUT
AVSF AUSTIN VAULT SAND FILTER

CURVE DATA

No. (X)	R	Δ	T	L	ALIGNMENT
1	5000.00′	2°48′39"	122.68′	245.30′	"A" LINE
2	20000.00′	4°38′46"	811.34′	1621.79′	"A" LINE
71	200.00′	56°30′27"	107.50′	197.25′	"J" LINE
81	60.00′	40°55′07"	22.38′	42.85′	"K" LINE
82	3000.00′	7°46′43"	203.96′	407.30′	"K" LINE
101	850.00′	29°8′39"	220.97′	432.36′	"G" LINE
102	3000.00′	4°4′06"	106.56′	213.03′	"G" LINE

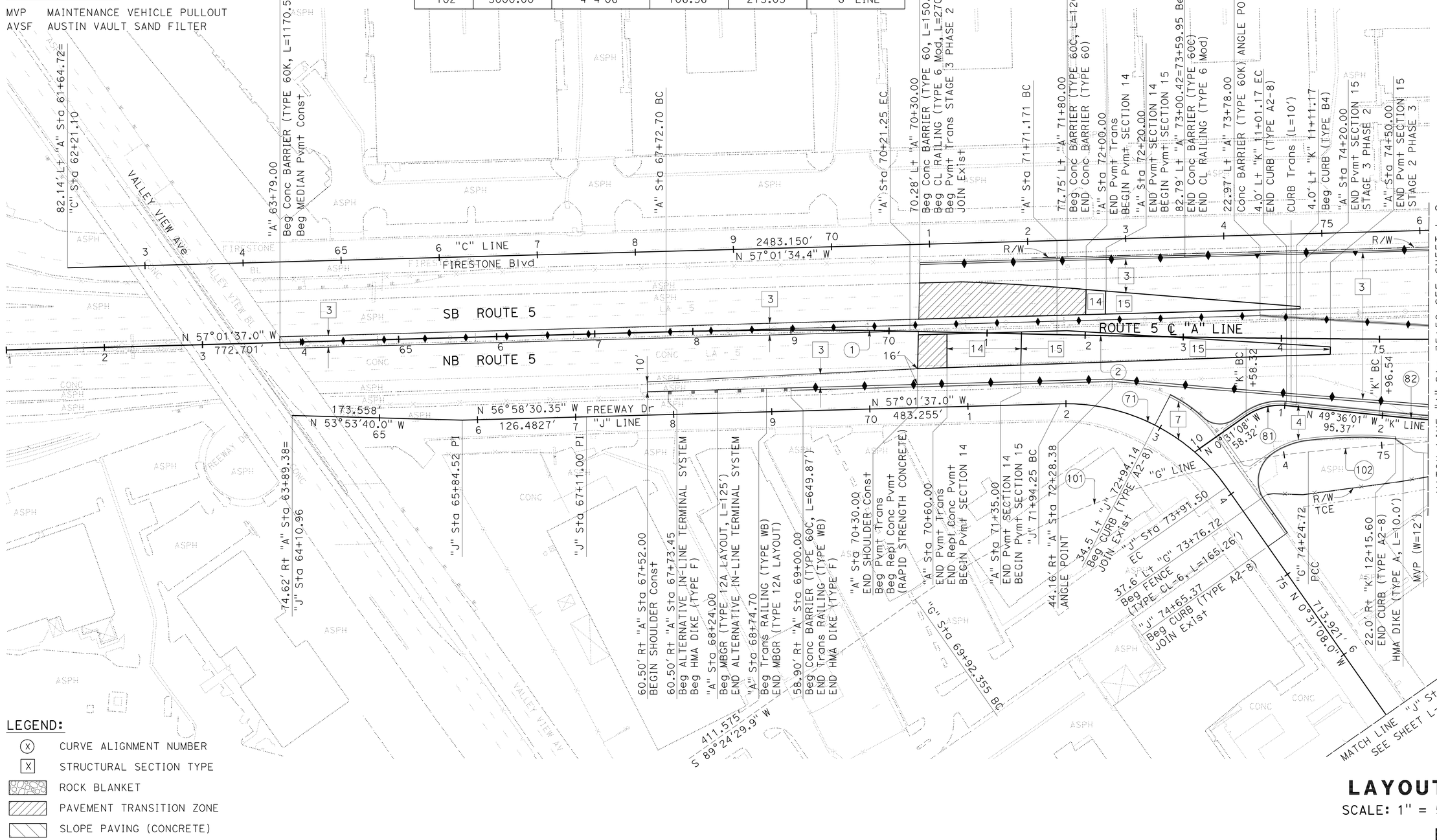

LEGEND:

- (X) CURVE ALIGNMENT NUMBER
- [X] STRUCTURAL SECTION TYPE
- ROCK BLANKET
- PAVEMENT TRANSITION ZONE
- SLOPE PAVING (CONCRETE)

LAYOUT

SCALE: 1" = 50′

L-1

REVISED BY	DATE REVISED
MEDARDO DE LA CRUZ	ASADOUR TERTERIAN

CALCULATED-DESIGNED BY / CHECKED BY

FUNCTIONAL SUPERVISOR: ASADOUR TERTERIAN

STATE OF CALIFORNIA - DEPARTMENT OF TRANSPORTATION
Caltrans® OFFICE OF DESIGN A

LAST REVISION 00-00-00 | DATE PLOTTED => 08-JUL-2011 | TIME PLOTTED => 08:01

Dist	COUNTY	ROUTE	POST MILES TOTAL PROJECT	SHEET No.	TOTAL SHEETS
07	LA	5	1.2/2.1	10	602

Medardo de la Cruz 3/14/11
REGISTERED CIVIL ENGINEER DATE

6-27-11
PLANS APPROVAL DATE

REGISTERED PROFESSIONAL ENGINEER MEDARDO DE LA CRUZ No. C61848 Exp. 6-30-11 CIVIL STATE OF CALIFORNIA

THE STATE OF CALIFORNIA OR ITS OFFICERS OR AGENTS SHALL NOT BE RESPONSIBLE FOR THE ACCURACY OR COMPLETENESS OF SCANNED COPIES OF THIS PLAN SHEET.

NOTE:

FOR ACCURATE RIGHT OF WAY DATA, CONTACT RIGHT OF WAY ENGINEERING AT DISTRICT OFFICE.

CURVE DATA

No. (X)	R	Δ	T	L	ALIGNMENT
2	20000.00′	4°38′46"	811.34′	1621.79′	"A" LINE
82	3000.00′	7°46′43"	203.96′	407.30′	"K" LINE
102	3000.00′	4°4′06"	106.56′	213.03′	"G" LINE

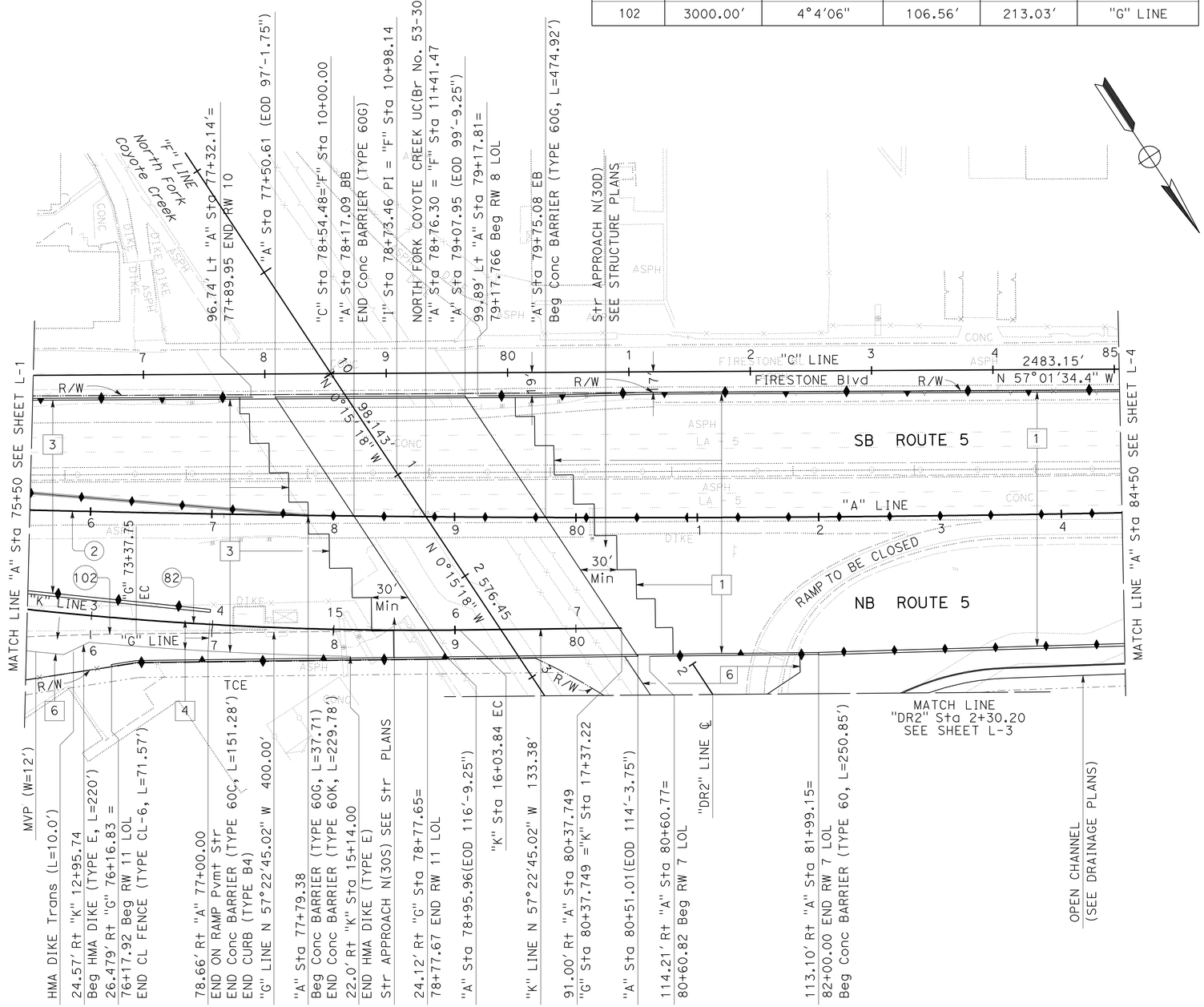

LAYOUT

SCALE: 1" = 50′

L-2

STATE OF CALIFORNIA - DEPARTMENT OF TRANSPORTATION
Caltrans® OFFICE OF DESIGN A

FUNCTIONAL SUPERVISOR: ASADOUR TERTERIAN
CALCULATED-DESIGNED BY: MEDARDO DE LA CRUZ
CHECKED BY: ASADOUR TERTERIAN
REVISED BY
DATE REVISED

LAST REVISION 00-00-00
DATE PLOTTED => 08-JUL-2011
TIME PLOTTED => 08:01

Dist	COUNTY	ROUTE	POST MILES TOTAL PROJECT	SHEET No.	TOTAL SHEETS
07	LA	5	1.2/2.1	11	602

Medardo de la Cruz 3/14/11
REGISTERED CIVIL ENGINEER DATE

6-27-11
PLANS APPROVAL DATE

REGISTERED PROFESSIONAL ENGINEER MEDARDO DE LA CRUZ No. C61848 Exp. 6-30-11 CIVIL STATE OF CALIFORNIA

THE STATE OF CALIFORNIA OR ITS OFFICERS OR AGENTS SHALL NOT BE RESPONSIBLE FOR THE ACCURACY OR COMPLETENESS OF SCANNED COPIES OF THIS PLAN SHEET.

NOTE:

FOR ACCURATE RIGHT OF WAY DATA, CONTACT RIGHT OF WAY ENGINEERING AT DISTRICT OFFICE.

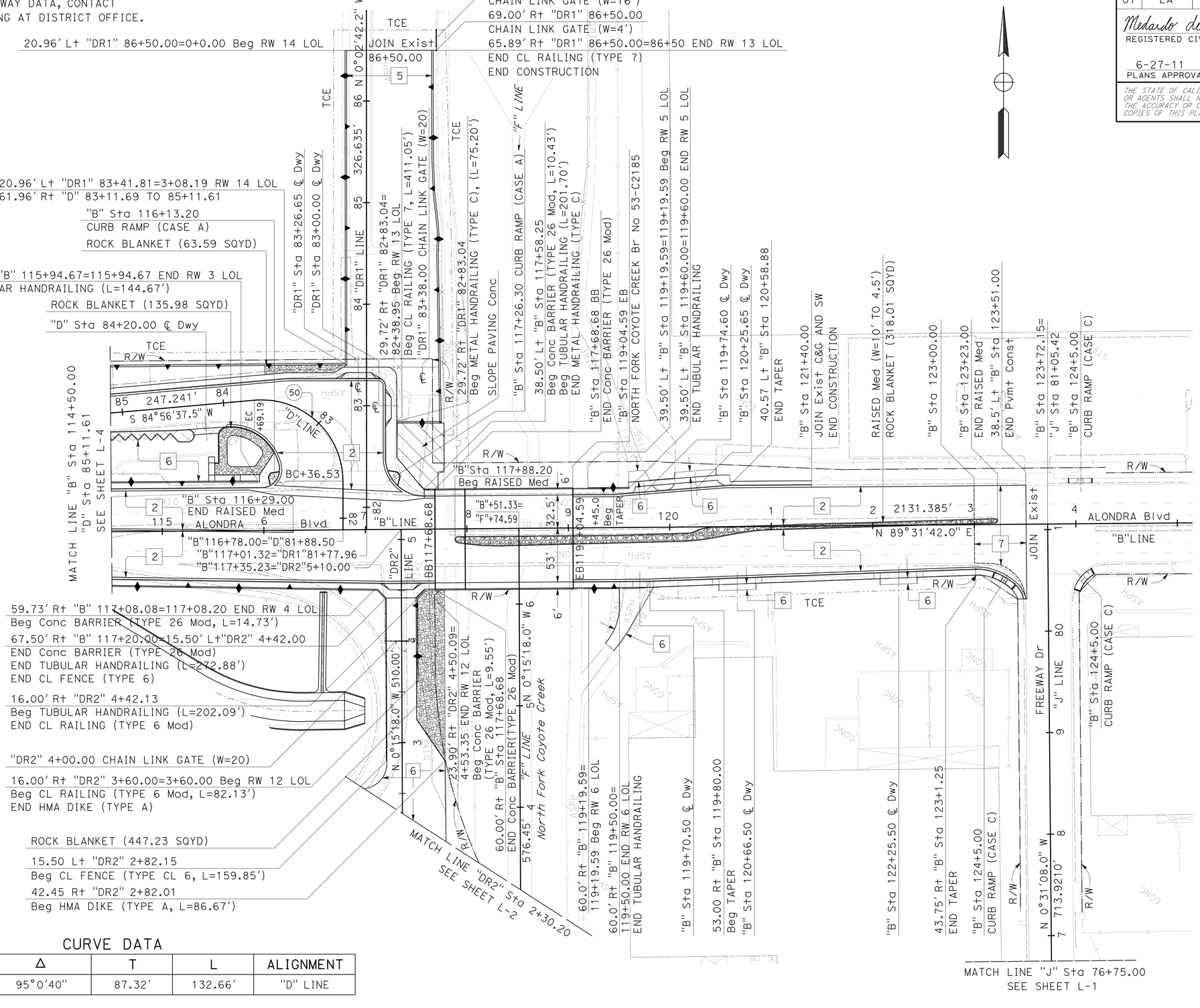

CURVE DATA

No. (X)	R	Δ	T	L	ALIGNMENT
50	80.00'	95°0'40"	87.32'	132.66'	"D" LINE

LAYOUT

SCALE: 1" = 50'

L-3

STATE OF CALIFORNIA - DEPARTMENT OF TRANSPORTATION
Caltrans® OFFICE OF DESIGN A

FUNCTIONAL SUPERVISOR: ASADOUR TERTERIAN
CALCULATED-DESIGNED BY: MEDARDO DE LA CRUZ
CHECKED BY: ASADOUR TERTERIAN
REVISED BY
DATE REVISED

LAST REVISION 00-00-00
DATE PLOTTED => 08-JUL-2011
TIME PLOTTED => 08:02

Dist	COUNTY	ROUTE	POST MILES TOTAL PROJECT	SHEET No.	TOTAL SHEETS
07	LA	5	1.2/2.1	12	602

Medardo de la Cruz 3/14/11
REGISTERED CIVIL ENGINEER DATE

6-27-11
PLANS APPROVAL DATE

REGISTERED PROFESSIONAL ENGINEER MEDARDO DE LA CRUZ No. C61848 Exp. 6-30-11 CIVIL STATE OF CALIFORNIA

THE STATE OF CALIFORNIA OR ITS OFFICERS OR AGENTS SHALL NOT BE RESPONSIBLE FOR THE ACCURACY OR COMPLETENESS OF SCANNED COPIES OF THIS PLAN SHEET.

CURVE DATA

No. (X)	R	Δ	T	L	ALIGNMENT
2	20000.00′	4°38′46"	811.34′	1621.79′	"A" LINE
50	400.11′	33°25′15"	120.12′	233.39′	"C" LINE
40	754.59′	36°01′03"	245.31′	474.35′	"D" LINE

NOTE:

FOR ACCURATE RIGHT OF WAY DATA, CONTACT RIGHT OF WAY ENGINEERING AT DISTRICT OFFICE.

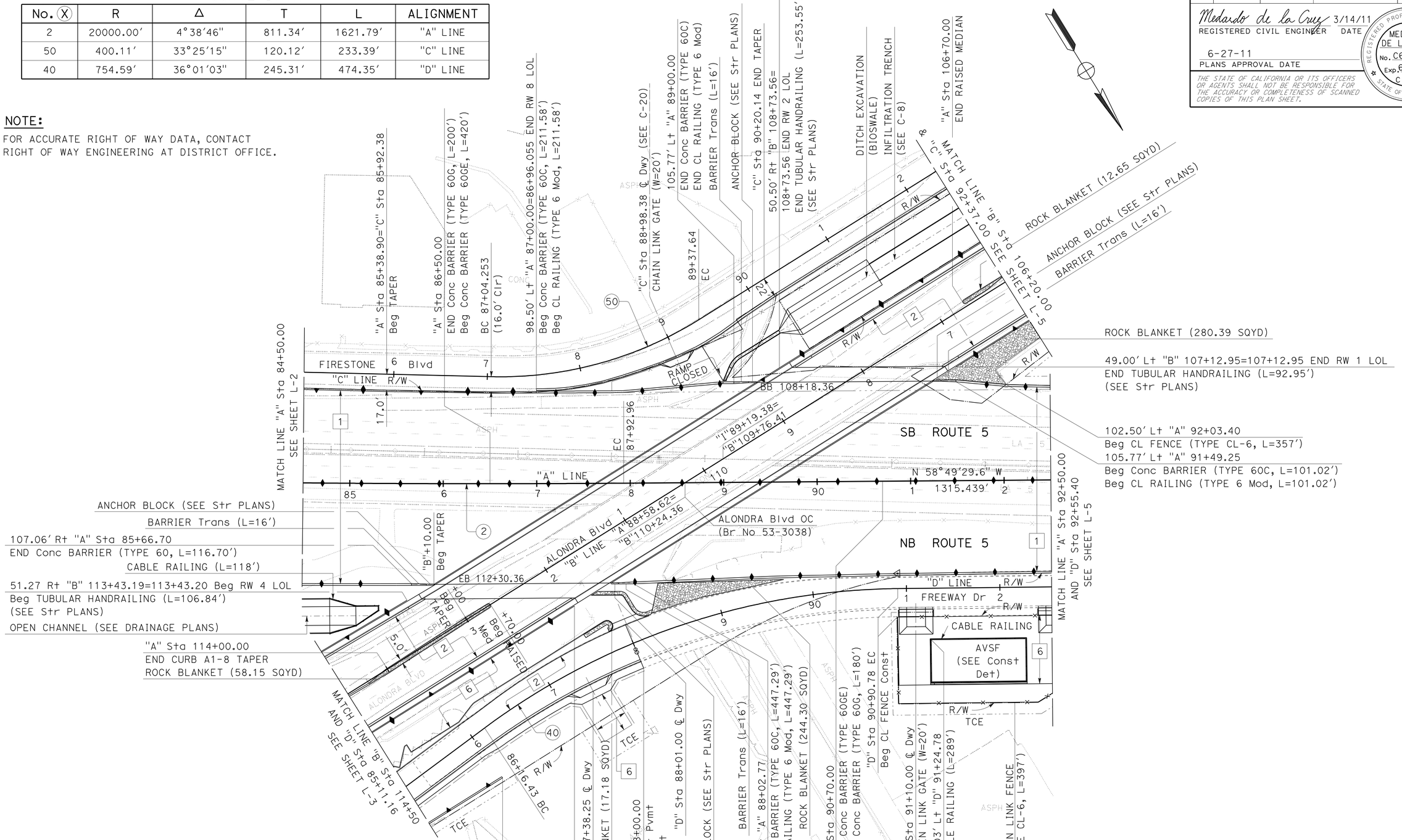

LAYOUT
SCALE: 1" = 50′

L-4

STATE OF CALIFORNIA - DEPARTMENT OF TRANSPORTATION
Caltrans® OFFICE OF DESIGN A

FUNCTIONAL SUPERVISOR: ASADOUR TERTERIAN
CALCULATED-DESIGNED BY: MEDARDO DE LA CRUZ
CHECKED BY: ASADOUR TERTERIAN
REVISED BY / DATE REVISED

LAST REVISION 00-00-00 | DATE PLOTTED => 26-JUL-2011 | TIME PLOTTED => 14:42

Dist	COUNTY	ROUTE	POST MILES TOTAL PROJECT	SHEET No.	TOTAL SHEETS
07	LA	5	1.2/2.1	13	602

Medardo de la Cruz 3/14/11
REGISTERED CIVIL ENGINEER DATE

6-27-11
PLANS APPROVAL DATE

REGISTERED PROFESSIONAL ENGINEER MEDARDO DE LA CRUZ No. C61848 Exp. 6-30-11 CIVIL STATE OF CALIFORNIA

THE STATE OF CALIFORNIA OR ITS OFFICERS OR AGENTS SHALL NOT BE RESPONSIBLE FOR THE ACCURACY OR COMPLETENESS OF SCANNED COPIES OF THIS PLAN SHEET.

NOTE:
FOR ACCURATE RIGHT OF WAY DATA, CONTACT RIGHT OF WAY ENGINEERING AT DISTRICT OFFICE.

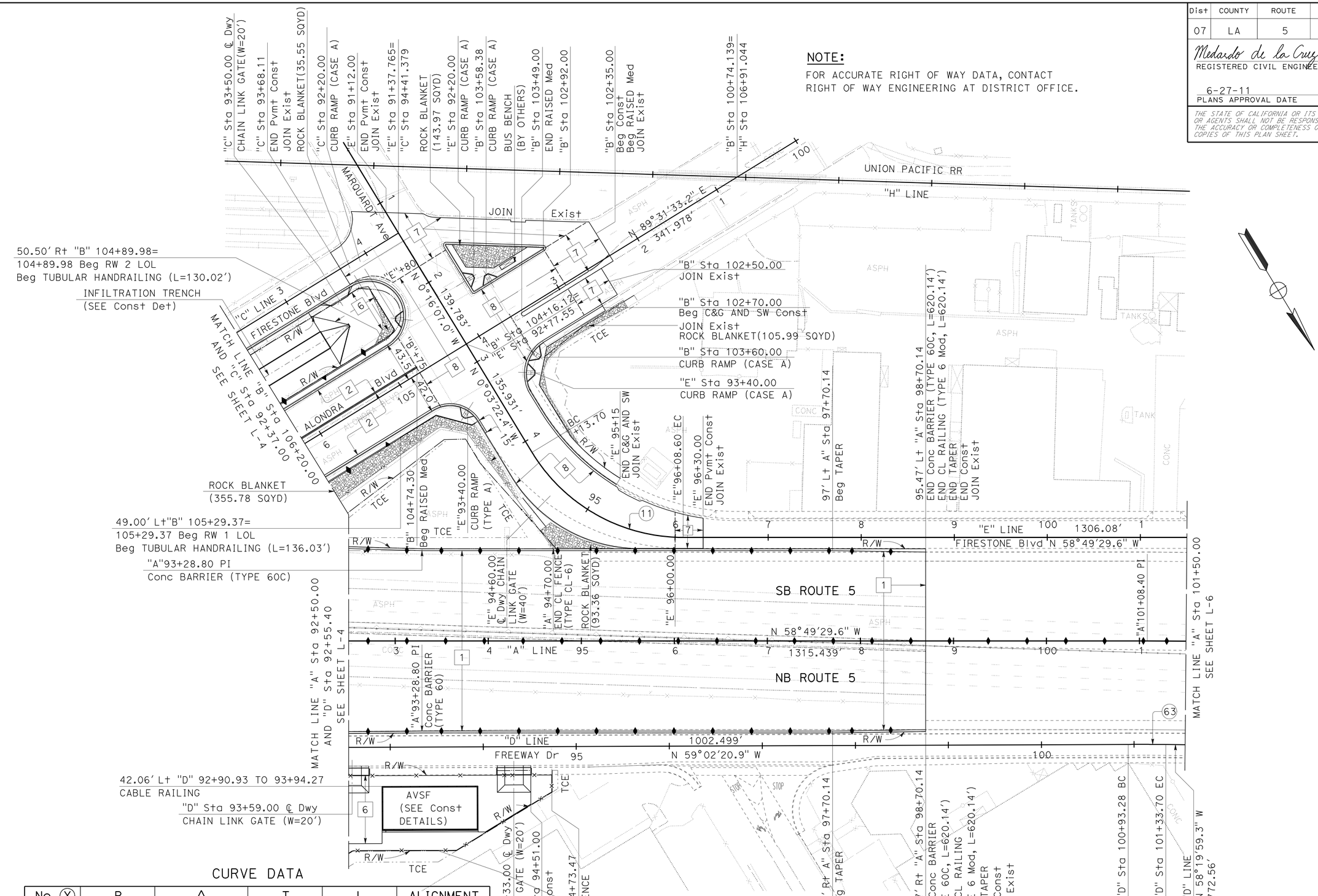

CURVE DATA

No. (X)	R	Δ	T	L	ALIGNMENT
63	3280.83'	0°42'22"	20.21'	40.43'	"D" LINE
11	190.00'	58°46'08"	106.99'	194.88'	"E" LINE

LAYOUT
SCALE: 1" = 50'

L-5

STATE OF CALIFORNIA - DEPARTMENT OF TRANSPORTATION
Caltrans OFFICE OF DESIGN A

FUNCTIONAL SUPERVISOR: ASADOUR TERTERIAN
CALCULATED-DESIGNED BY: MEDARDO DE LA CRUZ
CHECKED BY: ASADOUR TERTERIAN
REVISED BY / DATE REVISED

LAST REVISION 00-00-00 | DATE PLOTTED => 26-JUL-2011 | TIME PLOTTED => 14:42

Dist	COUNTY	ROUTE	POST MILES TOTAL PROJECT	SHEET No.	TOTAL SHEETS
07	LA	5	1.2/2.1	14	602

Medardo de la Cruz 3/14/11
REGISTERED CIVIL ENGINEER DATE

6-27-11
PLANS APPROVAL DATE

REGISTERED PROFESSIONAL ENGINEER
MEDARDO DE LA CRUZ
No. C61848
Exp. 6-30-11
CIVIL
STATE OF CALIFORNIA

THE STATE OF CALIFORNIA OR ITS OFFICERS OR AGENTS SHALL NOT BE RESPONSIBLE FOR THE ACCURACY OR COMPLETENESS OF SCANNED COPIES OF THIS PLAN SHEET.

NOTE:

FOR ACCURATE RIGHT OF WAY DATA, CONTACT RIGHT OF WAY ENGINEERING AT DISTRICT OFFICE.

CURVE DATA

No. (X)	R	Δ	T	L	ALIGNMENT
3	19685.25	4°28′35"	769.35′	1537.92′	"A" LINE

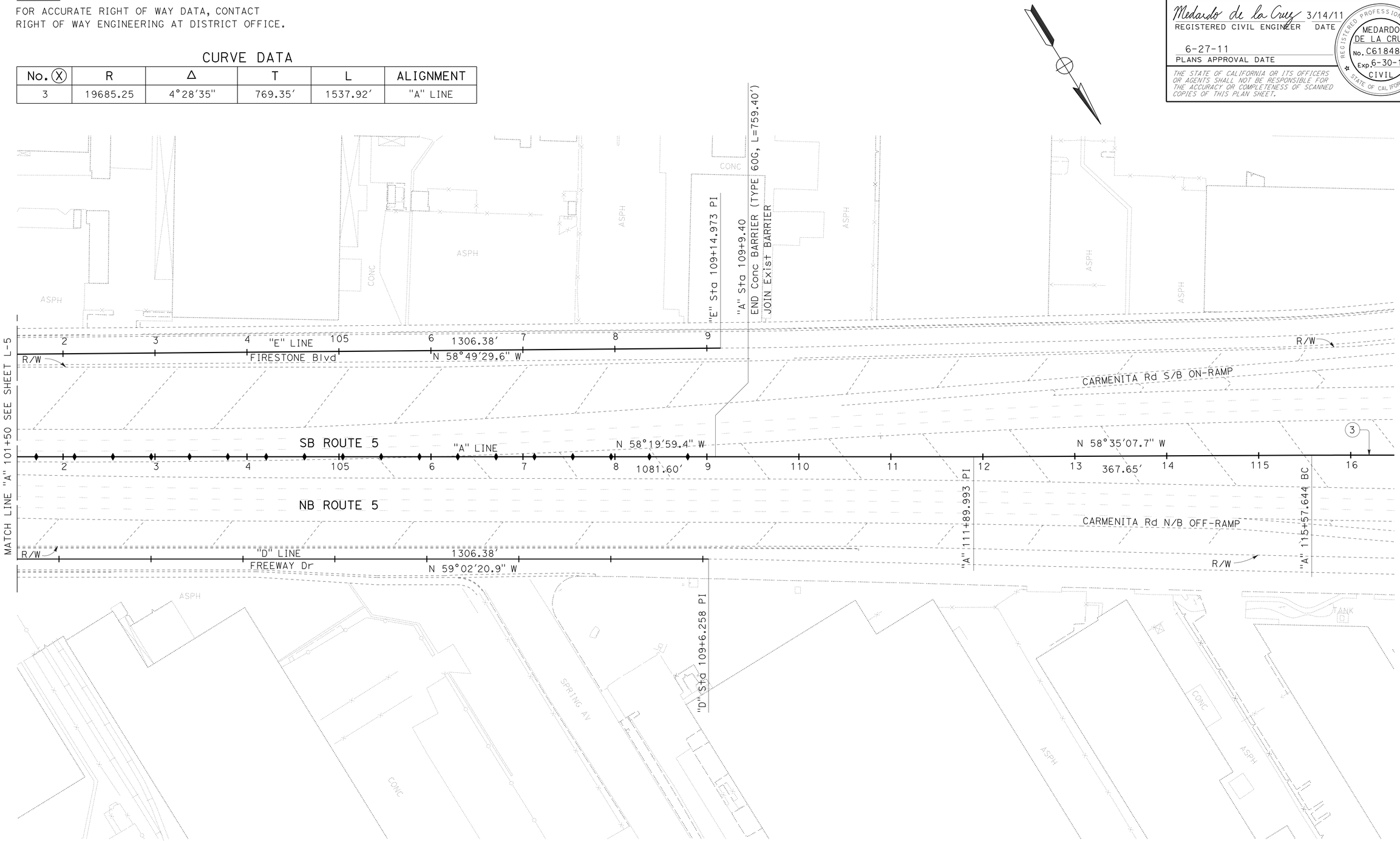

LAYOUT

SCALE: 1" = 50′

L-6

REVISED BY	DATE REVISED
MEDARDO DE LA CRUZ	ASADOUR TERTERIAN
CALCULATED-DESIGNED BY	CHECKED BY
FUNCTIONAL SUPERVISOR	ASADOUR TERTERIAN

STATE OF CALIFORNIA - DEPARTMENT OF TRANSPORTATION
Caltrans® OFFICE OF DESIGN A

LAST REVISION 00-00-00 | DATE PLOTTED => 08-JUL-2011 | TIME PLOTTED => 08:02

Dist	COUNTY	ROUTE	POST MILES TOTAL PROJECT	SHEET No.	TOTAL SHEETS
07	LA	5	1.2/2.1	15	602

Medardo de la Cruz 3/14/11
REGISTERED CIVIL ENGINEER DATE

6-27-11
PLANS APPROVAL DATE

REGISTERED PROFESSIONAL ENGINEER
MEDARDO DE LA CRUZ
No. C61848
Exp. 6-30-11
CIVIL
STATE OF CALIFORNIA

THE STATE OF CALIFORNIA OR ITS OFFICERS OR AGENTS SHALL NOT BE RESPONSIBLE FOR THE ACCURACY OR COMPLETENESS OF SCANNED COPIES OF THIS PLAN SHEET.

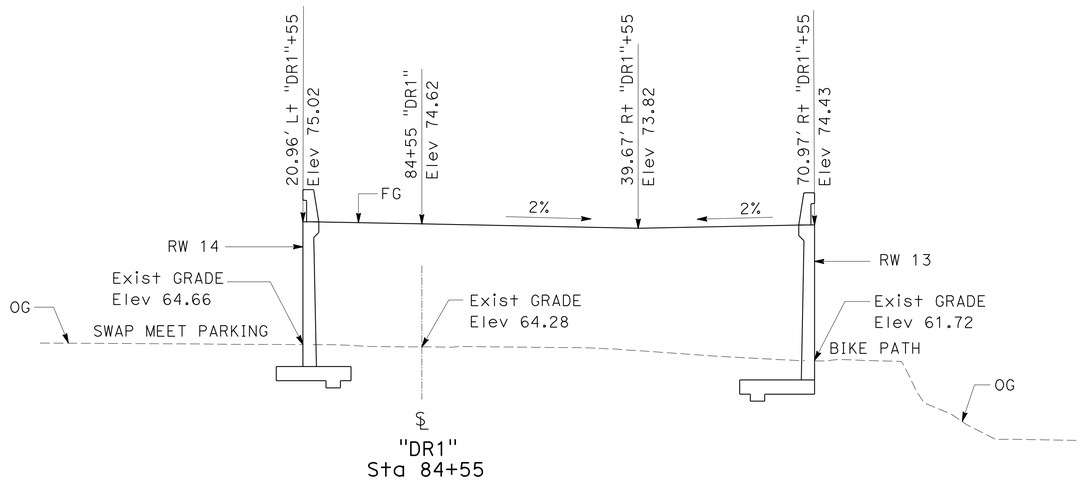

SECTION AT BOX CULVERT UNDER SWAP MEET DRIVEWAY

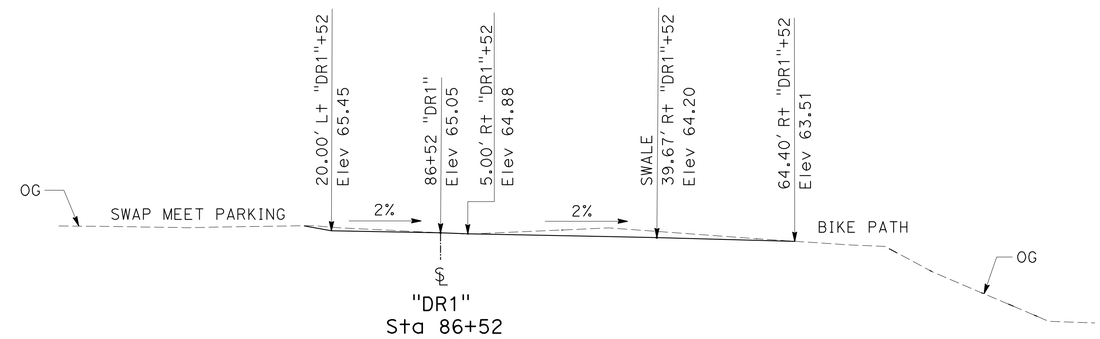

SECTION AT CROSS GUTTER AT END OF SWAP MEET DRIVEWAY

SWAP MEET DRIVEWAY "DR1"

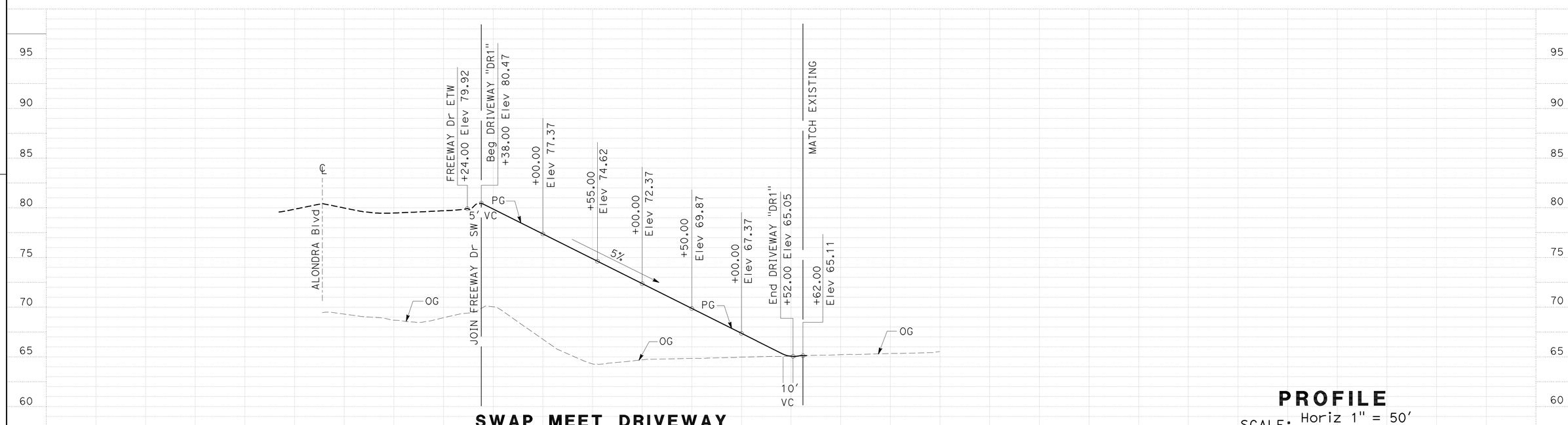

SWAP MEET DRIVEWAY

PROFILE
SCALE: Horiz 1" = 50'
Vert 1" = 5'

P-1

STATE OF CALIFORNIA - DEPARTMENT OF TRANSPORTATION
Caltrans® OFFICE OF DESIGN A

FUNCTIONAL SUPERVISOR: ASADOUR TERTERIAN
CALCULATED-DESIGNED BY: KEDAR SAWANT
CHECKED BY: MEDARDO DE LA CRUZ
REVISED BY
DATE REVISED

LAST REVISION 00-00-00
DATE PLOTTED => 30-JUN-2011
TIME PLOTTED => 15:56

Dist	COUNTY	ROUTE	POST MILES TOTAL PROJECT	SHEET No.	TOTAL SHEETS
07	LA	5	1.2/2.1	16	602

Medardo de la Cruz 3/14/11
REGISTERED CIVIL ENGINEER DATE

6-27-11
PLANS APPROVAL DATE

REGISTERED PROFESSIONAL ENGINEER
MEDARDO DE LA CRUZ
No. C61848
Exp. 6-30-11
CIVIL
STATE OF CALIFORNIA

THE STATE OF CALIFORNIA OR ITS OFFICERS OR AGENTS SHALL NOT BE RESPONSIBLE FOR THE ACCURACY OR COMPLETENESS OF SCANNED COPIES OF THIS PLAN SHEET.

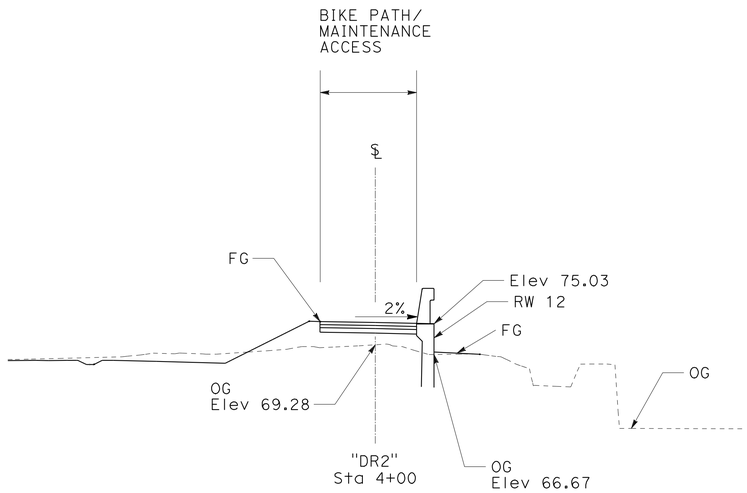

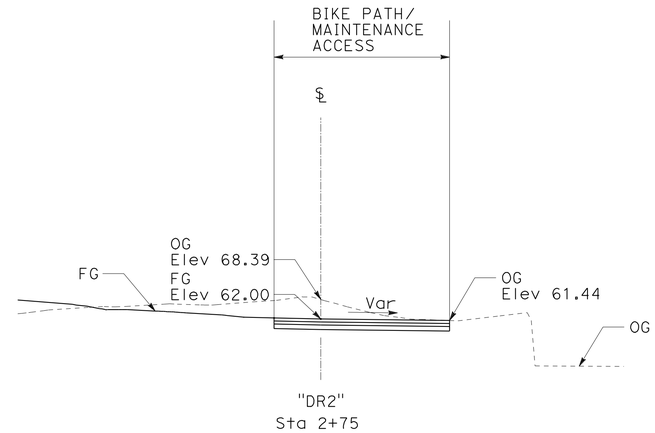

MAINTENANCE ACCESS DRIVEWAY"DR2" / BIKE PATH

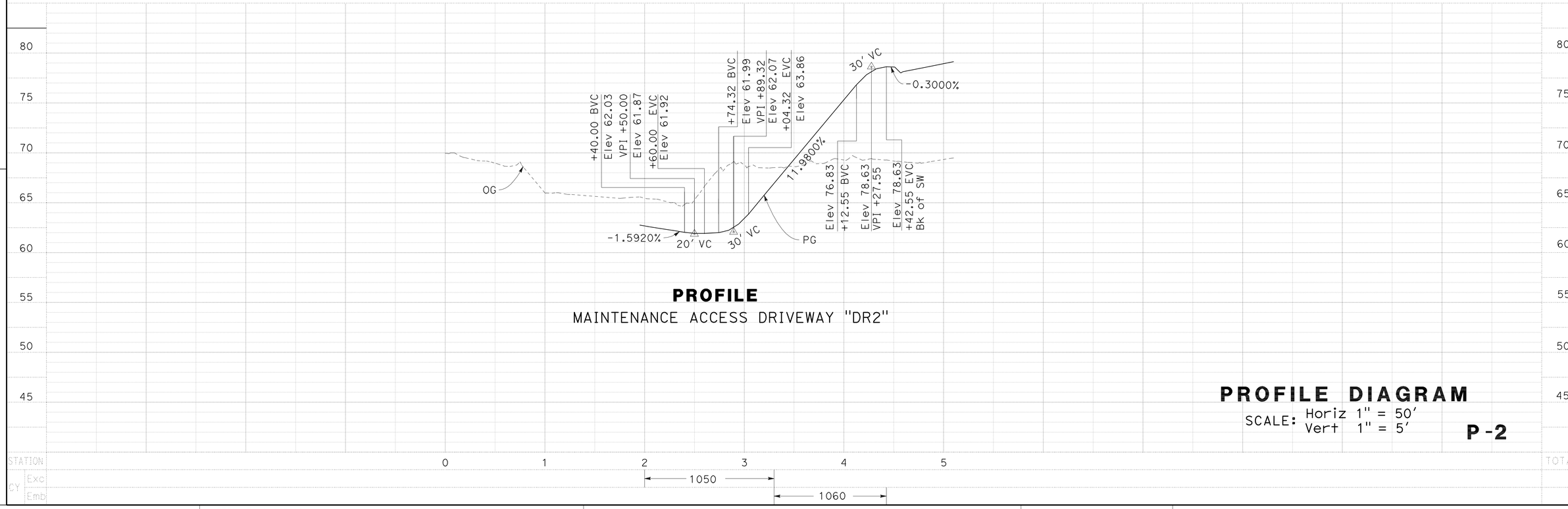

PROFILE

MAINTENANCE ACCESS DRIVEWAY "DR2"

PROFILE DIAGRAM

SCALE: Horiz 1" = 50'
Vert 1" = 5'

P-2

STATE OF CALIFORNIA - DEPARTMENT OF TRANSPORTATION
Caltrans® OFFICE OF DESIGN A

FUNCTIONAL SUPERVISOR: ASADOUR TERTERIAN
CALCULATED-DESIGNED BY: SUSANNA YANG
CHECKED BY: MEDARDO DE LA CRUZ
REVISED BY
DATE REVISED

LAST REVISION 00-00-00
DATE PLOTTED => 30-JUN-2011
TIME PLOTTED => 15:56

Dist	COUNTY	ROUTE	POST MILES TOTAL PROJECT	SHEET No.	TOTAL SHEETS
07	LA	5	1.2/2.1	17	602

Medardo de la Cruz 3/14/11
REGISTERED CIVIL ENGINEER DATE

6-27-11
PLANS APPROVAL DATE

REGISTERED PROFESSIONAL ENGINEER
MEDARDO DE LA CRUZ
No. C61848
Exp. 6-30-11
CIVIL
STATE OF CALIFORNIA

THE STATE OF CALIFORNIA OR ITS OFFICERS OR AGENTS SHALL NOT BE RESPONSIBLE FOR THE ACCURACY OR COMPLETENESS OF SCANNED COPIES OF THIS PLAN SHEET.

NOTE:
ALL ELEVATIONS ARE BASED ON NAVD 1988

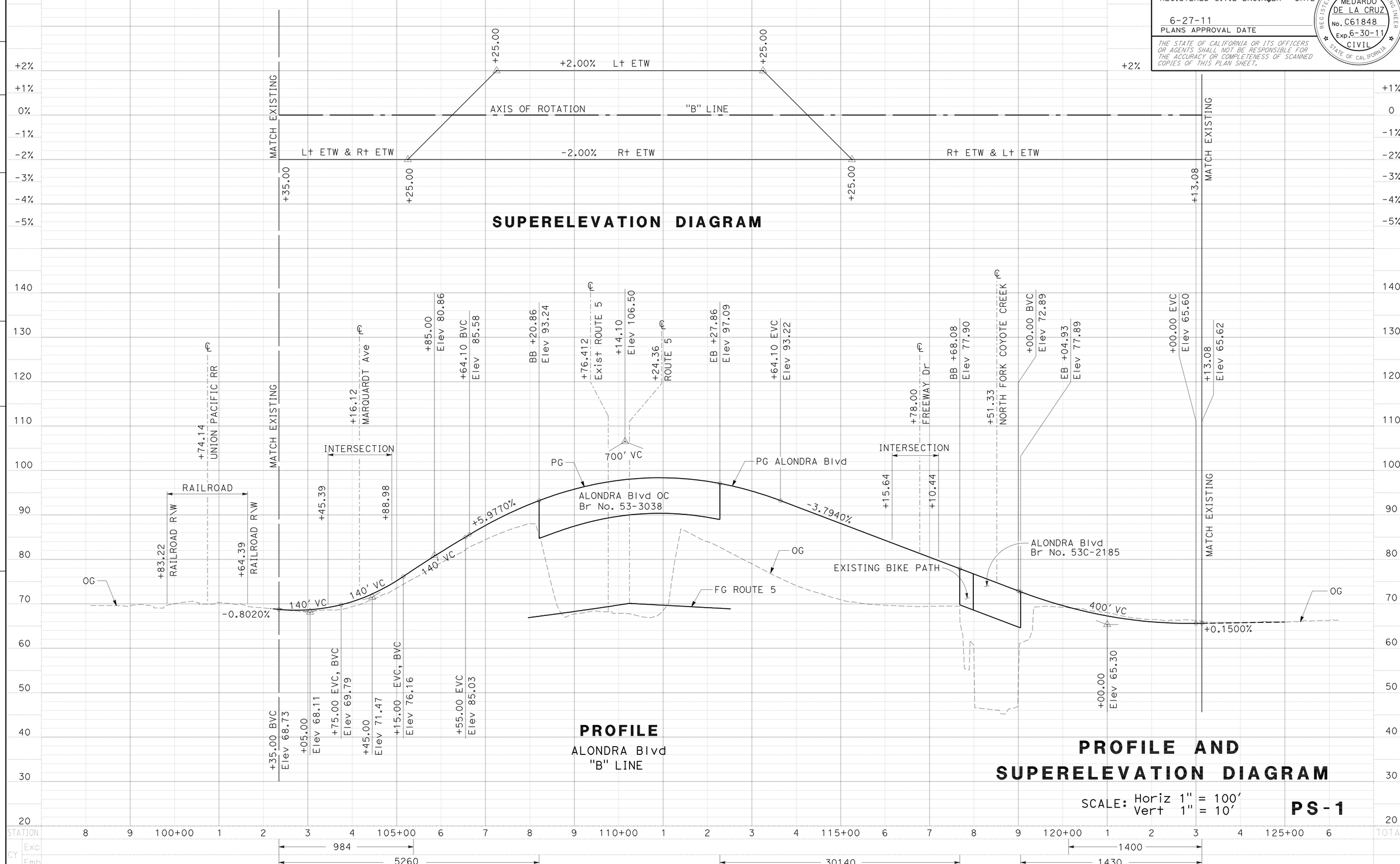

PROFILE AND SUPERELEVATION DIAGRAM

SCALE: Horiz 1" = 100'
Vert 1" = 10'

PS-1

STATE OF CALIFORNIA - DEPARTMENT OF TRANSPORTATION
Caltrans® OFFICE OF DESIGN A

FUNCTIONAL SUPERVISOR: ASADOUR TERTERIAN
CALCULATED-DESIGNED BY: SUSANNA YANG
CHECKED BY: MEDARDO DE LA CRUZ
REVISED BY
DATE REVISED

LAST REVISION 00-00-00
DATE PLOTTED => 30-JUN-2011
TIME PLOTTED => 15:56

Dist	COUNTY	ROUTE	POST MILES TOTAL PROJECT	SHEET No.	TOTAL SHEETS
07	LA	5	1.2/2.1	18	602

Medardo de la Cruz 3/14/11
REGISTERED CIVIL ENGINEER DATE

6-27-11
PLANS APPROVAL DATE

REGISTERED PROFESSIONAL ENGINEER
MEDARDO DE LA CRUZ
No. C61848
Exp. 6-30-11
CIVIL
STATE OF CALIFORNIA

THE STATE OF CALIFORNIA OR ITS OFFICERS OR AGENTS SHALL NOT BE RESPONSIBLE FOR THE ACCURACY OR COMPLETENESS OF SCANNED COPIES OF THIS PLAN SHEET.

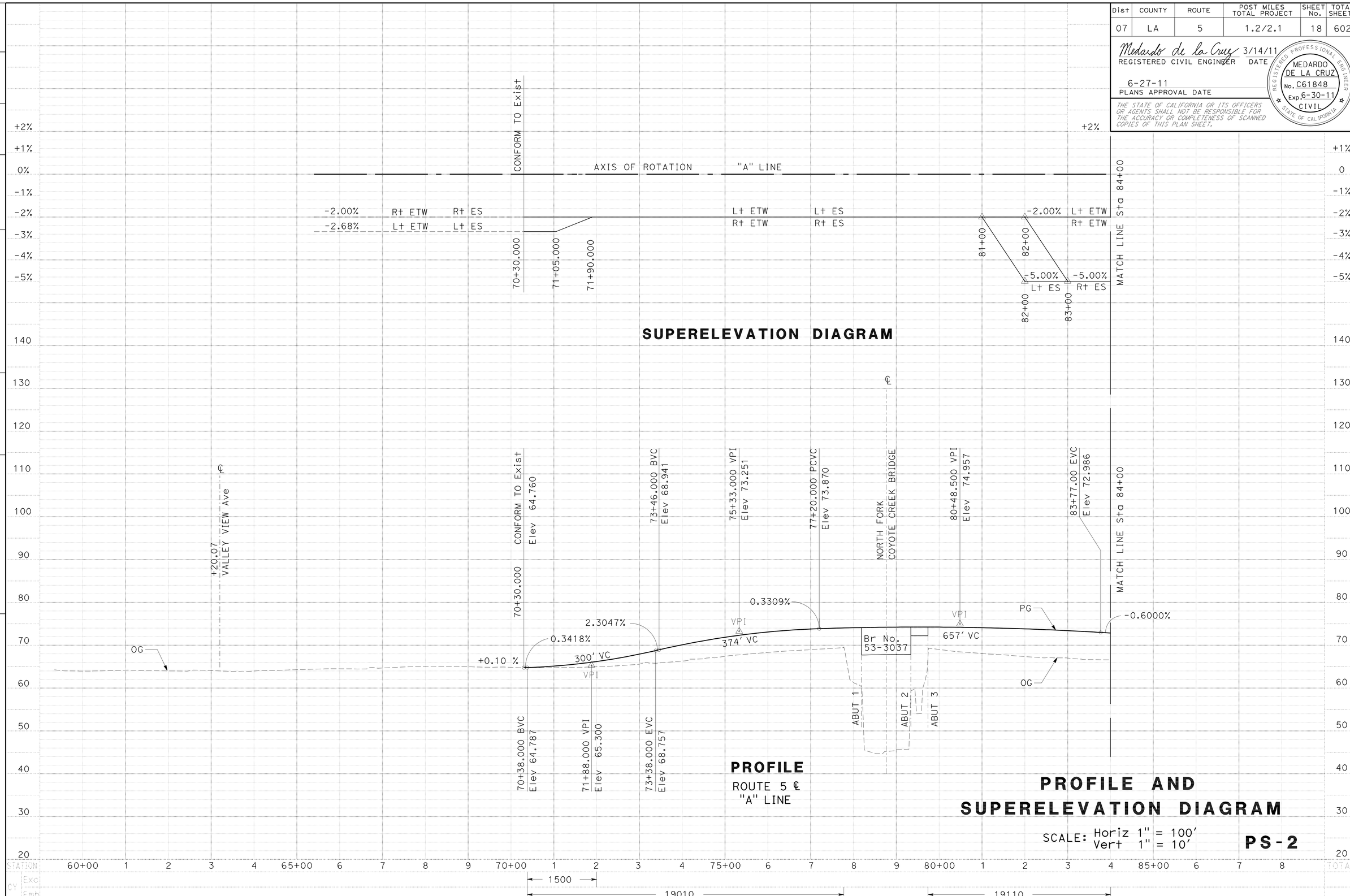

PROFILE AND SUPERELEVATION DIAGRAM

SCALE: Horiz 1" = 100'
Vert 1" = 10'

PS-2

STATE OF CALIFORNIA - DEPARTMENT OF TRANSPORTATION
Caltrans® OFFICE OF DESIGN A

FUNCTIONAL SUPERVISOR: ASADOUR TERTERIAN
CALCULATED-DESIGNED BY: SUSANNA YANG
CHECKED BY: MEDARDO DE LA CRUZ
REVISED BY
DATE REVISED

LAST REVISION 00-00-00
DATE PLOTTED => 30-JUN-2011
TIME PLOTTED => 15:56

Dist	COUNTY	ROUTE	POST MILES TOTAL PROJECT	SHEET No.	TOTAL SHEETS
07	LA	5	1.2/2.1	19	602

Medardo de la Cruz 3/14/11
REGISTERED CIVIL ENGINEER DATE

6-27-11
PLANS APPROVAL DATE

REGISTERED PROFESSIONAL ENGINEER
MEDARDO DE LA CRUZ
No. C61848
Exp. 6-30-11
CIVIL
STATE OF CALIFORNIA

THE STATE OF CALIFORNIA OR ITS OFFICERS OR AGENTS SHALL NOT BE RESPONSIBLE FOR THE ACCURACY OR COMPLETENESS OF SCANNED COPIES OF THIS PLAN SHEET.

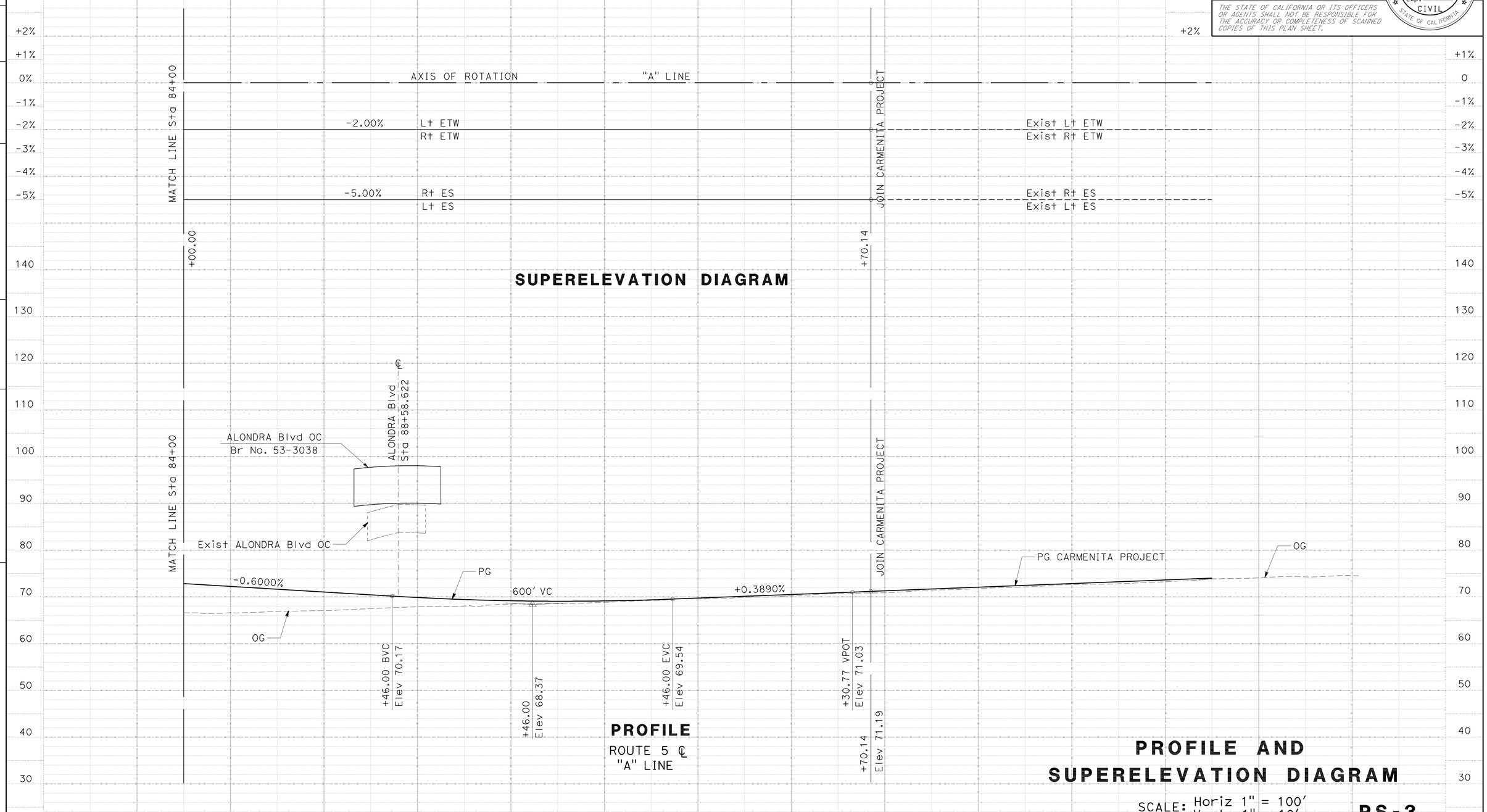

STATE OF CALIFORNIA - DEPARTMENT OF TRANSPORTATION
Caltrans® OFFICE OF DESIGN A

FUNCTIONAL SUPERVISOR: ASADOUR TERTERIAN

CALCULATED-DESIGNED BY: SUSANNA YANG
CHECKED BY: MEDARDO DE LA CRUZ

REVISED BY
DATE REVISED

LAST REVISION 00-00-00
DATE PLOTTED => 30-JUN-2011
TIME PLOTTED => 15:56

Dist	COUNTY	ROUTE	POST MILES TOTAL PROJECT	SHEET No.	TOTAL SHEETS
07	LA	5	1.2/2.1	20	602

Medardo de la Cruz 3/14/11
REGISTERED CIVIL ENGINEER DATE

6-27-11
PLANS APPROVAL DATE

REGISTERED PROFESSIONAL ENGINEER
MEDARDO DE LA CRUZ
No. C61848
Exp. 6-30-11
CIVIL
STATE OF CALIFORNIA

THE STATE OF CALIFORNIA OR ITS OFFICERS OR AGENTS SHALL NOT BE RESPONSIBLE FOR THE ACCURACY OR COMPLETENESS OF SCANNED COPIES OF THIS PLAN SHEET.

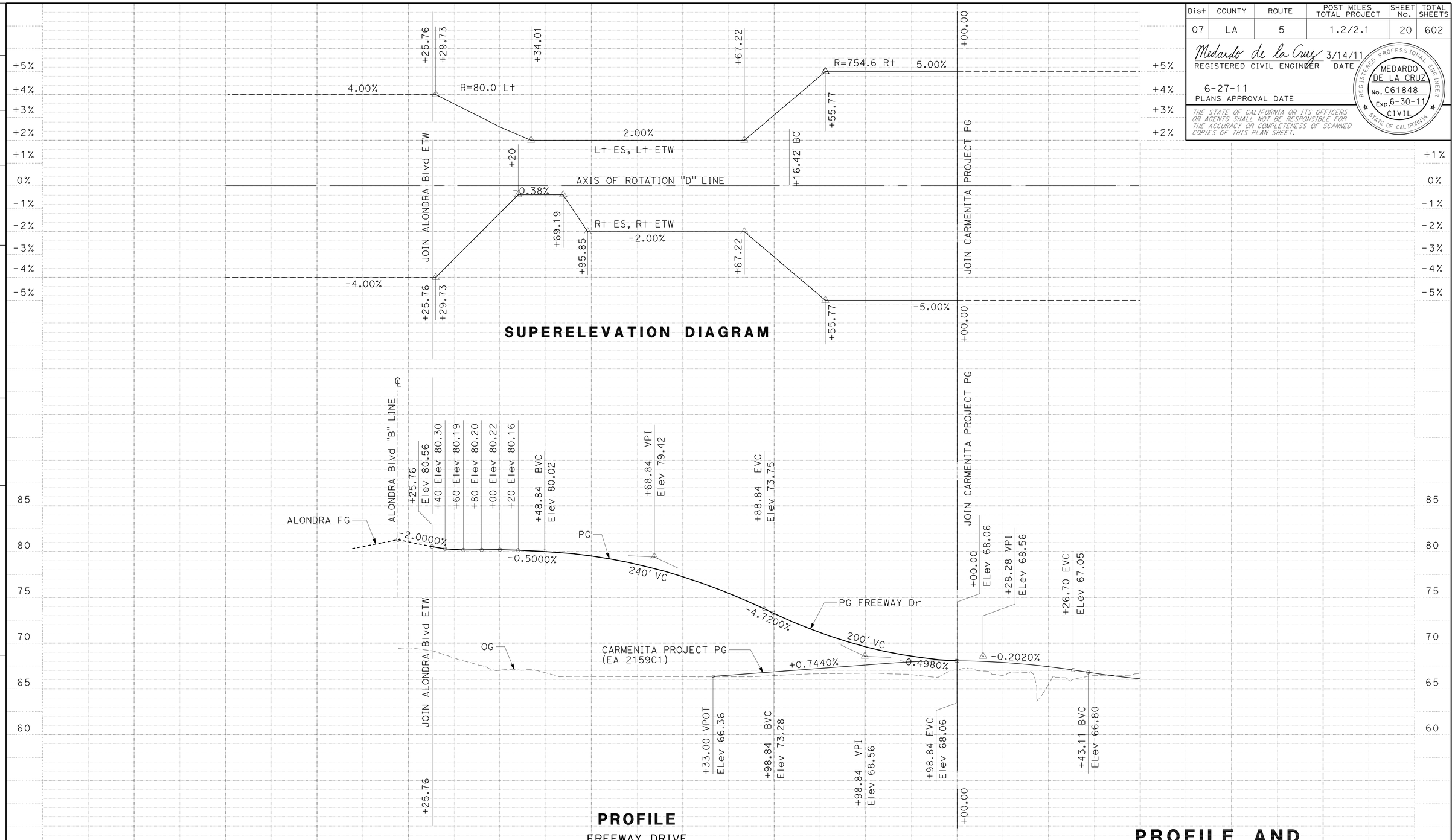

PROFILE AND SUPERELEVATION DIAGRAM

SCALE: Horiz 1" = 50'
Vert 1" = 5'

PS-4

STATE OF CALIFORNIA - DEPARTMENT OF TRANSPORTATION
Caltrans® OFFICE OF DESIGN A

FUNCTIONAL SUPERVISOR: ASADOUR TERTERIAN
CALCULATED-DESIGNED BY: SUSANNA YANG
CHECKED BY: MEDARDO DE LA CRUZ
REVISED BY
DATE REVISED

LAST REVISION 00-00-00
DATE PLOTTED => 30-JUN-2011
TIME PLOTTED => 15:56

Dist	COUNTY	ROUTE	POST MILES TOTAL PROJECT	SHEET No.	TOTAL SHEETS
07	LA	5	1.2/2.1	21	602

Medardo de la Cruz 3/14/11
REGISTERED CIVIL ENGINEER DATE

6-27-11
PLANS APPROVAL DATE

REGISTERED PROFESSIONAL ENGINEER
MEDARDO DE LA CRUZ
No. C61848
Exp. 6-30-11
CIVIL
STATE OF CALIFORNIA

THE STATE OF CALIFORNIA OR ITS OFFICERS OR AGENTS SHALL NOT BE RESPONSIBLE FOR THE ACCURACY OR COMPLETENESS OF SCANNED COPIES OF THIS PLAN SHEET.

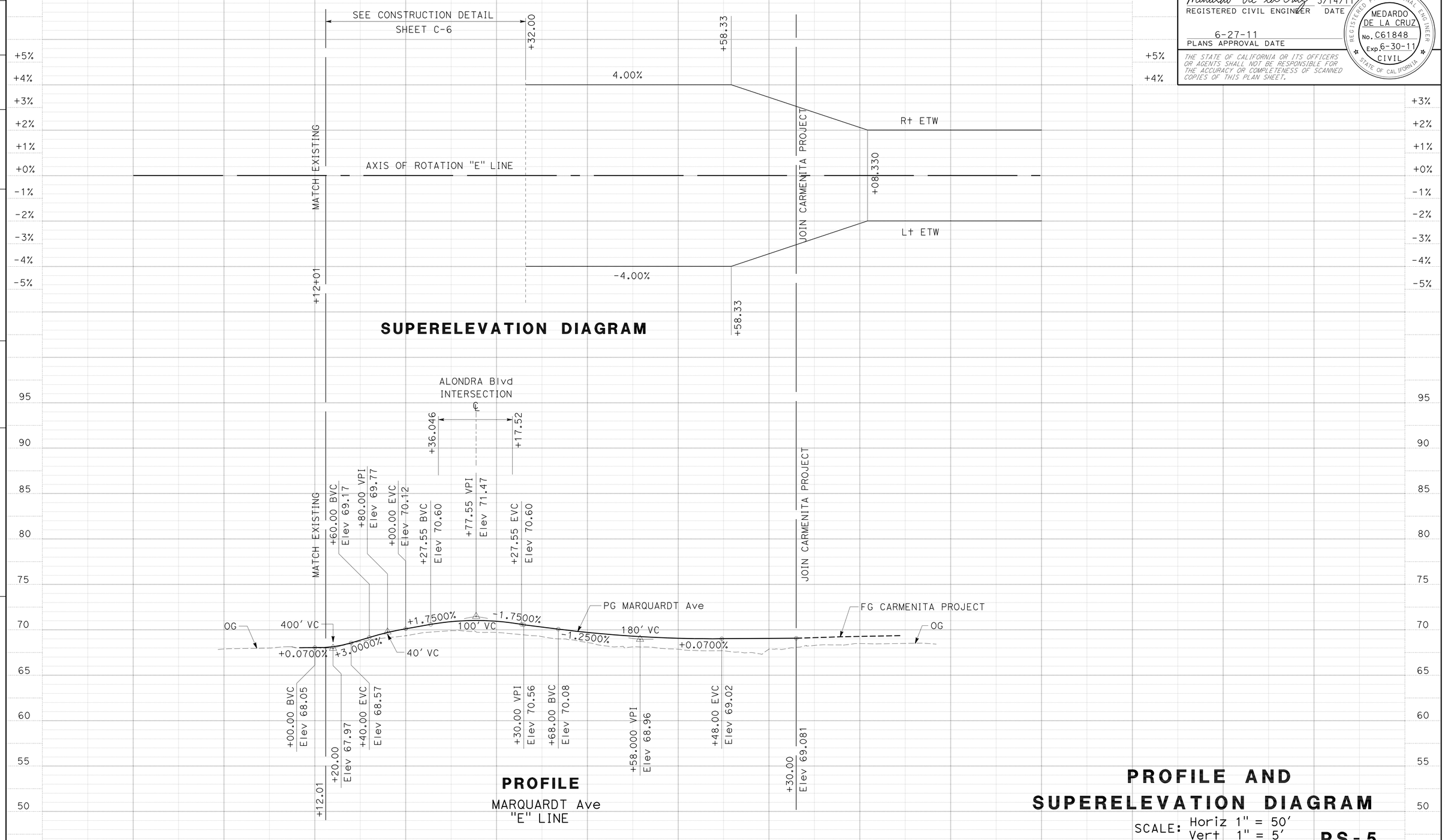

PROFILE AND SUPERELEVATION DIAGRAM

SCALE: Horiz 1" = 50'
Vert 1" = 5'

PS-5

STATE OF CALIFORNIA - DEPARTMENT OF TRANSPORTATION
Caltrans® OFFICE OF DESIGN A

FUNCTIONAL SUPERVISOR: ASADOUR TERTERIAN

CALCULATED-DESIGNED BY: MEDARDO DE LA CRUZ
CHECKED BY: SUSANNA YANG

REVISED BY
DATE REVISED

LAST REVISION 00-00-00
DATE PLOTTED => 30-JUN-2011
TIME PLOTTED => 18:24

Dist	COUNTY	ROUTE	POST MILES TOTAL PROJECT	SHEET No.	TOTAL SHEETS
07	LA	5	1.2/2.1	22	602

Medardo de la Cruz 3/14/11
REGISTERED CIVIL ENGINEER DATE

6-27-11
PLANS APPROVAL DATE

REGISTERED PROFESSIONAL ENGINEER
MEDARDO DE LA CRUZ
No. C61848
Exp. 6-30-11
CIVIL
STATE OF CALIFORNIA

THE STATE OF CALIFORNIA OR ITS OFFICERS OR AGENTS SHALL NOT BE RESPONSIBLE FOR THE ACCURACY OR COMPLETENESS OF SCANNED COPIES OF THIS PLAN SHEET.

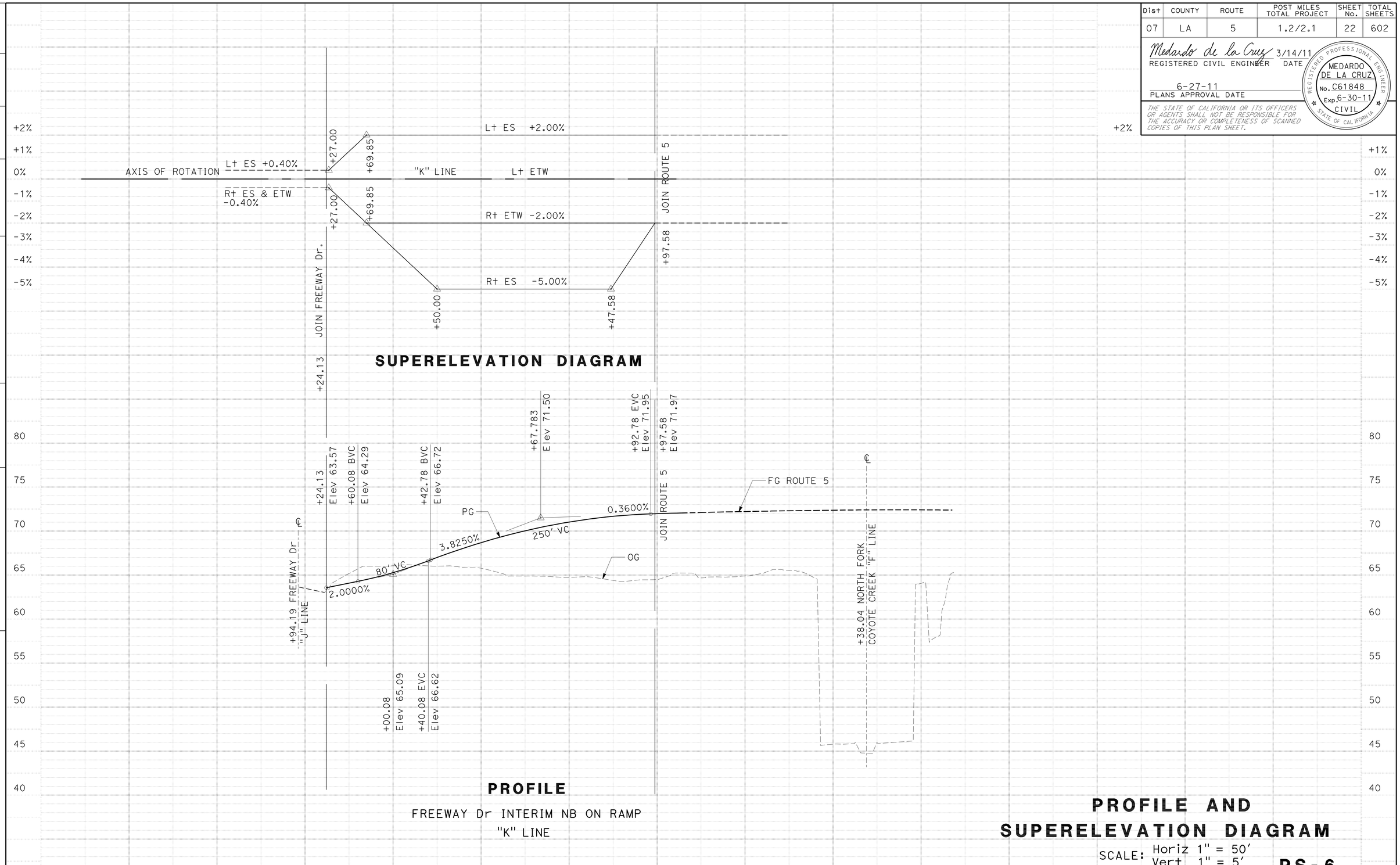

PROFILE AND SUPERELEVATION DIAGRAM

SCALE: Horiz 1" = 50'
Vert 1" = 5'

PS-6

STATE OF CALIFORNIA - DEPARTMENT OF TRANSPORTATION
Caltrans® OFFICE OF DESIGN A

FUNCTIONAL SUPERVISOR: ASADOUR TERTERIAN
CALCULATED-DESIGNED BY: SUSANNA YANG
CHECKED BY: MEDARDO DE LA CRUZ
REVISED BY
DATE REVISED

LAST REVISION 00-00-00
DATE PLOTTED => 30-JUN-2011
TIME PLOTTED => 18:24

BORDER LAST REVISED 7/2/2010
USERNAME => trlim
DGN FILE => 721591fb006.dgn
RELATIVE BORDER SCALE IS IN INCHES 0 1 2 3
UNIT 1799
PROJECT NUMBER & PHASE 07000018311

Dist	COUNTY	ROUTE	POST MILES TOTAL PROJECT	SHEET No.	TOTAL SHEETS
07	LA	5	1.2/2.1	23	602

Medardo de la Cruz 3/14/11
REGISTERED CIVIL ENGINEER DATE

6-27-11
PLANS APPROVAL DATE

REGISTERED PROFESSIONAL ENGINEER
MEDARDO DE LA CRUZ
No. C61848
Exp. 6-30-11
CIVIL
STATE OF CALIFORNIA

THE STATE OF CALIFORNIA OR ITS OFFICERS OR AGENTS SHALL NOT BE RESPONSIBLE FOR THE ACCURACY OR COMPLETENESS OF SCANNED COPIES OF THIS PLAN SHEET.

No.	REMOVAL ITEMS	UNITS
1	REMOVE METAL BEAM GUARD RAILING	LF
2	REMOVE CHAIN LINK FENCE	LF
3	REMOVE ASPHALT CONCRETE SURFACING	SQYD
4	REMOVE MASONRY BLOCK WALL	SQFT
5	REMOVE CONCRETE CURB	LF
6	REMOVE CONCRETE PAVEMENT	SQFT
7	REMOVE DOUBLE METAL BEAM BARRIER	LF

LEGEND SHEETS C-1 TO C-4:

REMOVE CONCRETE PAVEMENT
REMOVE ASPHALT CONCRETE SURFACING

(X) REMOVE ITEM CODE

NOTE:

UPRR = UNION PACIFIC RAILROAD

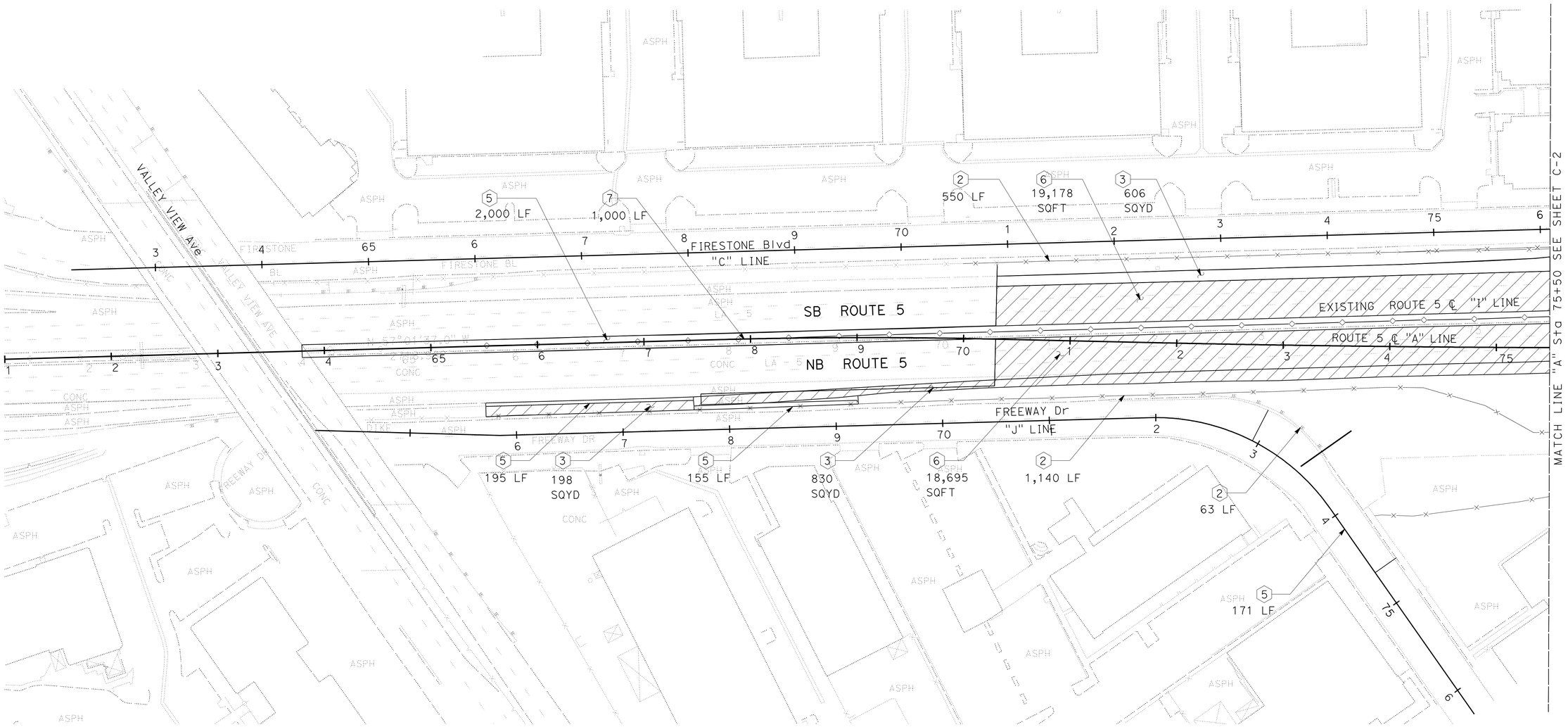

CONSTRUCTION DETAILS
REMOVAL PLAN

SCALE: 1" = 50'

C-1

STATE OF CALIFORNIA - DEPARTMENT OF TRANSPORTATION
Caltrans OFFICE OF DESIGN A

FUNCTIONAL SUPERVISOR: ASADOUR TERTERIAN

CALCULATED-DESIGNED BY: ELIZABETH WARE
CHECKED BY: MEDARDO DE LA CRUZ

REVISED BY
DATE REVISED

LAST REVISION 00-00-00
DATE PLOTTED => 30-JUN-2011
TIME PLOTTED => 18:24

Dist	COUNTY	ROUTE	POST MILES TOTAL PROJECT	SHEET No.	TOTAL SHEETS
07	LA	5	1.2/2.1	24	602

Medardo de la Cruz 3/14/11
REGISTERED CIVIL ENGINEER DATE

6-27-11
PLANS APPROVAL DATE

REGISTERED PROFESSIONAL ENGINEER MEDARDO DE LA CRUZ No. C61848 Exp. 6-30-11 CIVIL STATE OF CALIFORNIA

THE STATE OF CALIFORNIA OR ITS OFFICERS OR AGENTS SHALL NOT BE RESPONSIBLE FOR THE ACCURACY OR COMPLETENESS OF SCANNED COPIES OF THIS PLAN SHEET.

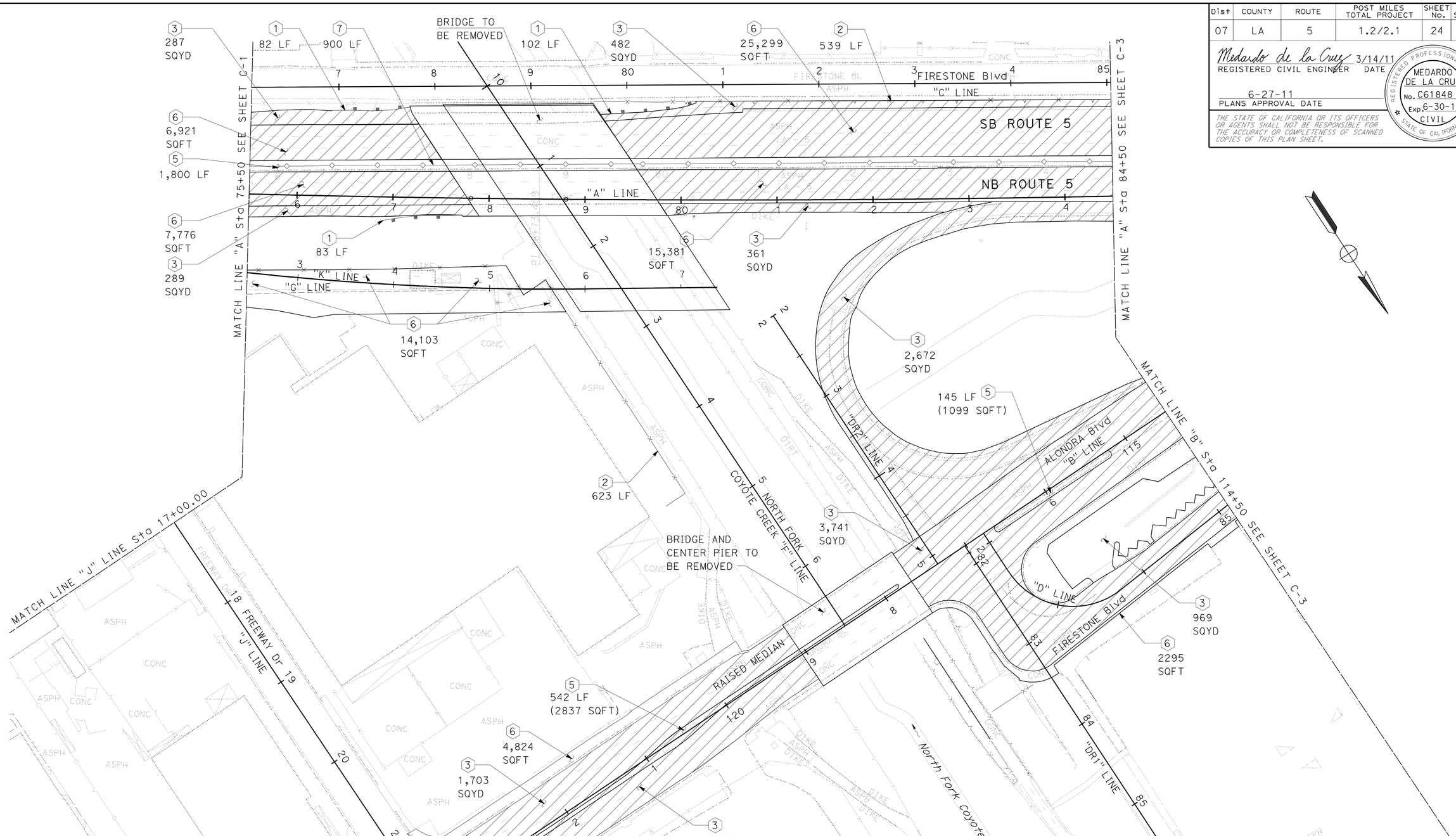

CONSTRUCTION DETAILS
REMOVAL PLAN

SCALE: 1" = 50'

C-2

STATE OF CALIFORNIA - DEPARTMENT OF TRANSPORTATION
Caltrans® OFFICE OF DESIGN A

FUNCTIONAL SUPERVISOR: ASADOUR TERTERIAN
CALCULATED-DESIGNED BY: ELIZABETH WARE
CHECKED BY: MEDARDO DE LA CRUZ
REVISED BY
DATE REVISED

LAST REVISION 00-00-00 | DATE PLOTTED => 30-JUN-2011 | TIME PLOTTED => 18:24

BORDER LAST REVISED 7/2/2010 | USERNAME => trlim | DGN FILE => 721591ga002.dgn | RELATIVE BORDER SCALE IS IN INCHES 0 1 2 3 | UNIT 1799 | PROJECT NUMBER & PHASE 07000018311

Dist	COUNTY	ROUTE	POST MILES TOTAL PROJECT	SHEET No.	TOTAL SHEETS
07	LA	5	1.2/2.1	25	602

Medardo de la Cruz 3/14/11
REGISTERED CIVIL ENGINEER DATE

6-27-11
PLANS APPROVAL DATE

REGISTERED PROFESSIONAL ENGINEER
MEDARDO DE LA CRUZ
No. C61848
Exp. 6-30-11
CIVIL
STATE OF CALIFORNIA

THE STATE OF CALIFORNIA OR ITS OFFICERS OR AGENTS SHALL NOT BE RESPONSIBLE FOR THE ACCURACY OR COMPLETENESS OF SCANNED COPIES OF THIS PLAN SHEET.

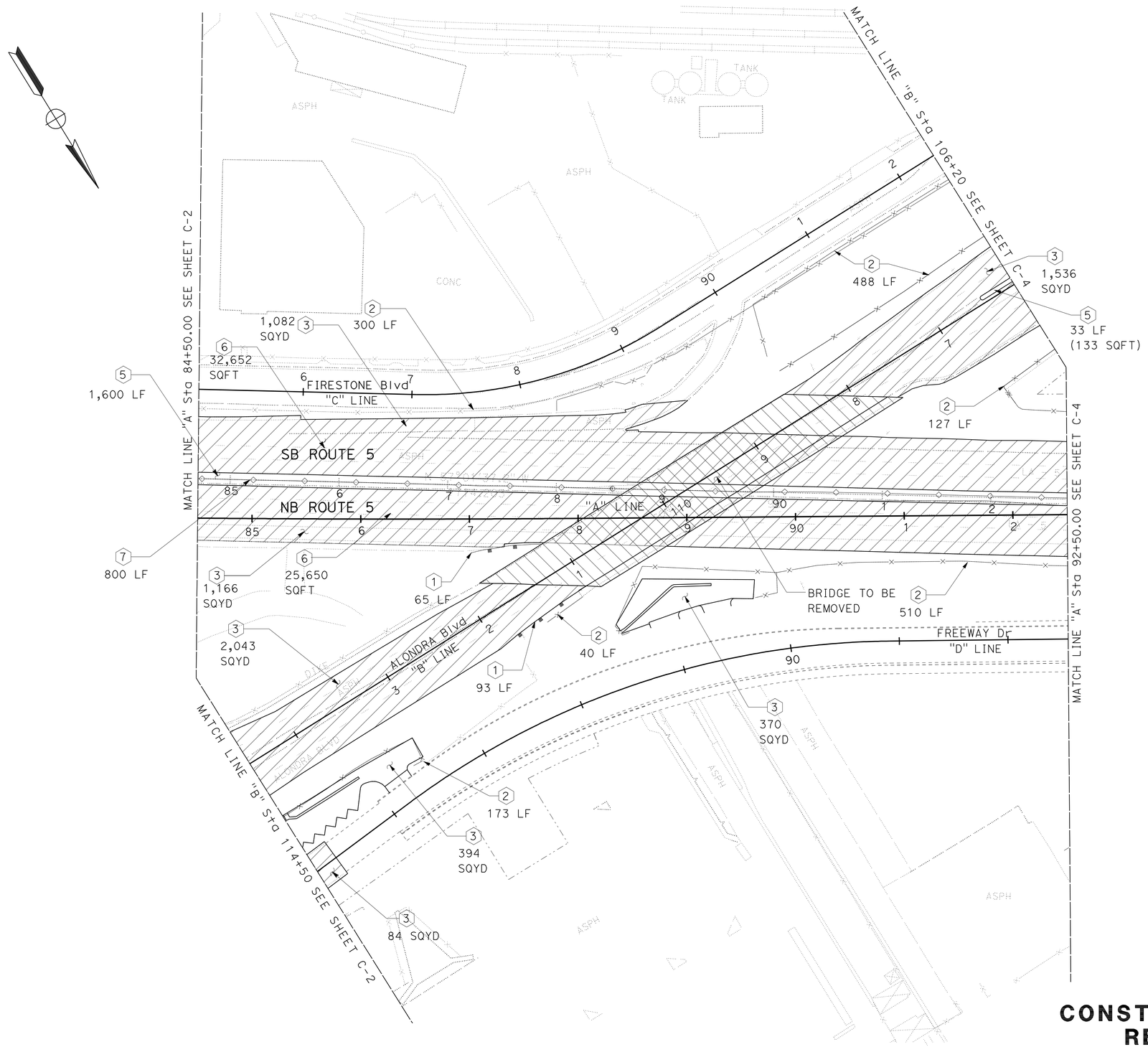

CONSTRUCTION DETAILS
REMOVAL PLAN

SCALE: 1" = 50'

C-3

REVISED BY	DATE REVISED

CALCULATED-DESIGNED BY	CHECKED BY
ELIZABETH WARE	MEDARDO DE LA CRUZ

FUNCTIONAL SUPERVISOR
ASADOUR TERTERIAN

STATE OF CALIFORNIA - DEPARTMENT OF TRANSPORTATION
Caltrans® OFFICE OF DESIGN A

LAST REVISION 00-00-00 | DATE PLOTTED => 30-JUN-2011 | TIME PLOTTED => 18:24

Dist	COUNTY	ROUTE	POST MILES TOTAL PROJECT	SHEET No.	TOTAL SHEETS
07	LA	5	1.2/2.1	26	602

Medardo de la Cruz 3/14/11
REGISTERED CIVIL ENGINEER DATE

6-27-11
PLANS APPROVAL DATE

REGISTERED PROFESSIONAL ENGINEER
MEDARDO DE LA CRUZ
No. C61848
Exp. 6-30-11
CIVIL
STATE OF CALIFORNIA

THE STATE OF CALIFORNIA OR ITS OFFICERS OR AGENTS SHALL NOT BE RESPONSIBLE FOR THE ACCURACY OR COMPLETENESS OF SCANNED COPIES OF THIS PLAN SHEET.

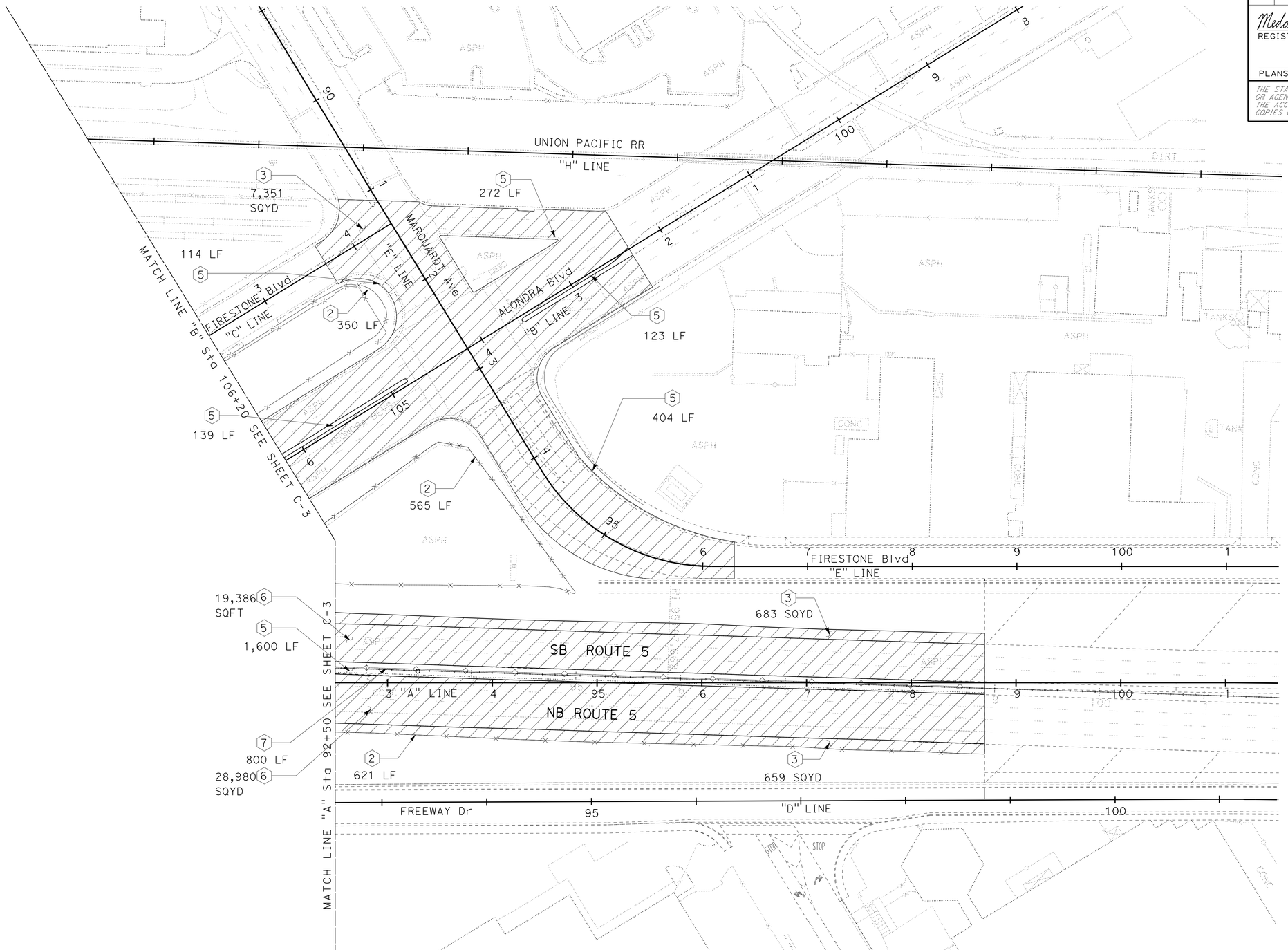

CONSTRUCTION DETAILS
REMOVAL PLAN

SCALE: 1" = 50'

C-4

STATE OF CALIFORNIA - DEPARTMENT OF TRANSPORTATION
Caltrans® OFFICE OF DESIGN A

FUNCTIONAL SUPERVISOR: ASADOUR TERTERIAN
CALCULATED-DESIGNED BY: ELIZABETH WARE
CHECKED BY: MEDARDO DE LA CRUZ
REVISED BY
DATE REVISED

LAST REVISION 00-00-00 | DATE PLOTTED => 30-JUN-2011 | TIME PLOTTED => 18:25

Dist	COUNTY	ROUTE	POST MILES TOTAL PROJECT	SHEET No.	TOTAL SHEETS
07	LA	5	1.2/2.1	27	602

Medardo de la Cruz 3/14/11
REGISTERED CIVIL ENGINEER DATE

6-27-11
PLANS APPROVAL DATE

REGISTERED PROFESSIONAL ENGINEER MEDARDO DE LA CRUZ No. C61848 Exp. 6-30-11 CIVIL STATE OF CALIFORNIA

THE STATE OF CALIFORNIA OR ITS OFFICERS OR AGENTS SHALL NOT BE RESPONSIBLE FOR THE ACCURACY OR COMPLETENESS OF SCANNED COPIES OF THIS PLAN SHEET.

CURVE DATA

No. ⊕	R	Δ	T	L
11	190′	58°45′37"	106.97′	194.86′
12	1′	146°31′39"	3.33′	2.56′
13	2.25′	180°00′00"	—	7.07′
14	1′	123°16′12"	1.85′	2.15′
15	1′	90°12′10"	1.00′	1.57′
16	35′	89°47′50"	34.88′	54.85′
17	246′	16°59′48"	36.76′	72.98′
18	37′	175°54′46"	1041.17′	114.06′
19	35′	90°18′42"	35.19′	55.17′
20	160′	55°25′32"	84.05′	154.78′
21	0.75′	180°00′00"	—	2.36′

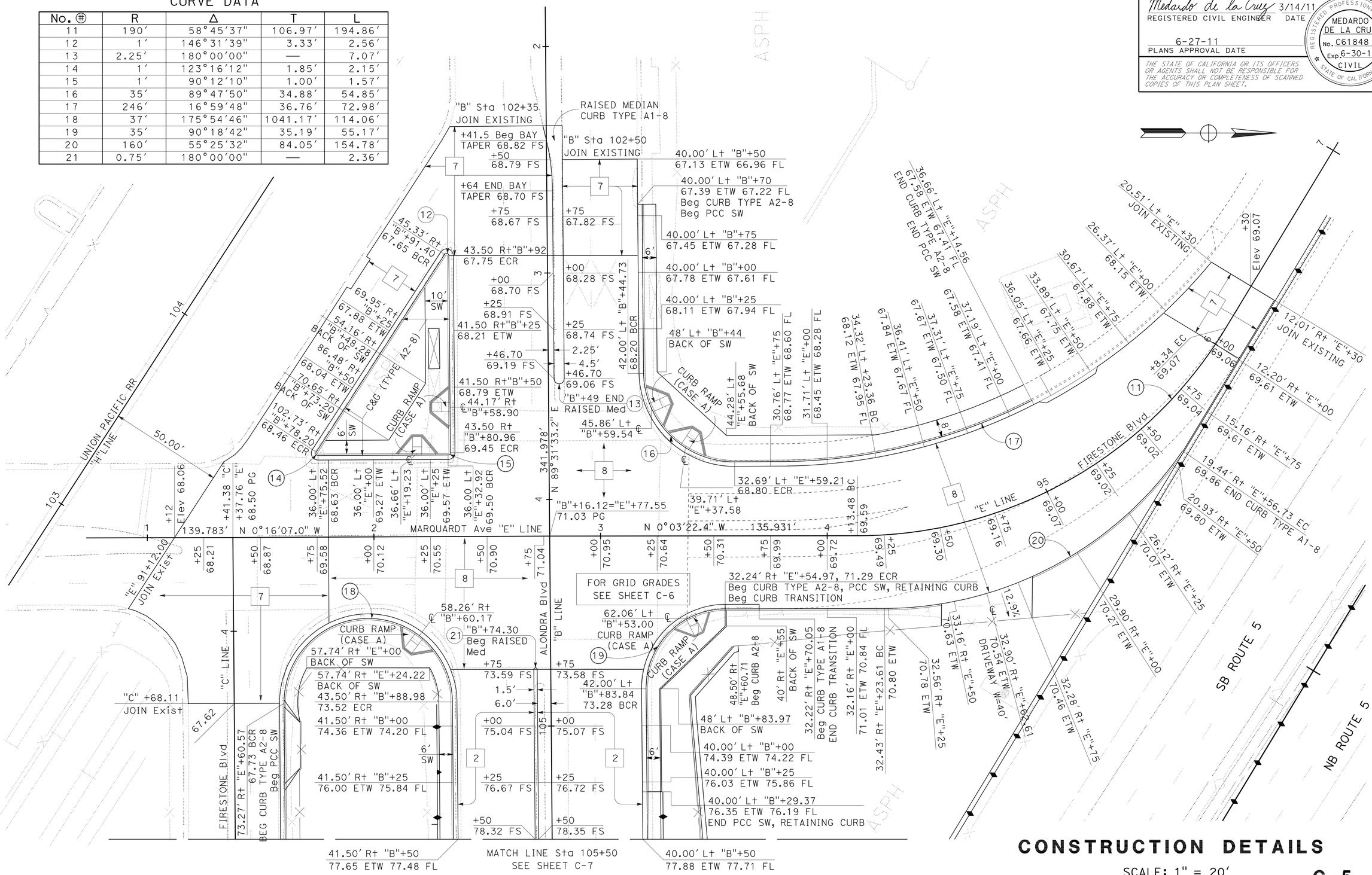

CONSTRUCTION DETAILS

SCALE: 1" = 20′

C-5

STATE OF CALIFORNIA - DEPARTMENT OF TRANSPORTATION
Caltrans OFFICE OF DESIGN A

FUNCTIONAL SUPERVISOR: ASADOUR TERTERIAN
CALCULATED-DESIGNED BY: KEDAR SAWANT
CHECKED BY: MEDARDO DE LA CRUZ
REVISED BY: MDLF
DATE REVISED: 5-24-11

LAST REVISION 00-00-00
DATE PLOTTED => 30-JUN-2011
TIME PLOTTED => 18:25

Dist	COUNTY	ROUTE	POST MILES TOTAL PROJECT	SHEET No.	TOTAL SHEETS
07	LA	5	1.2/2.1	28	602

Medardo de la Cruz 3/14/11
REGISTERED CIVIL ENGINEER DATE

6-27-11
PLANS APPROVAL DATE

REGISTERED PROFESSIONAL ENGINEER MEDARDO DE LA CRUZ No. C61848 Exp. 6-30-11 CIVIL STATE OF CALIFORNIA

THE STATE OF CALIFORNIA OR ITS OFFICERS OR AGENTS SHALL NOT BE RESPONSIBLE FOR THE ACCURACY OR COMPLETENESS OF SCANNED COPIES OF THIS PLAN SHEET.

CURVE DATA

No. ⊕	R	Δ	T	L
16	35′	89°47′50"	34.88′	54.85′
18	37′	175°54′46"	1041.17′	114.06′
19	35′	90°18′42"	35.19′	55.17′

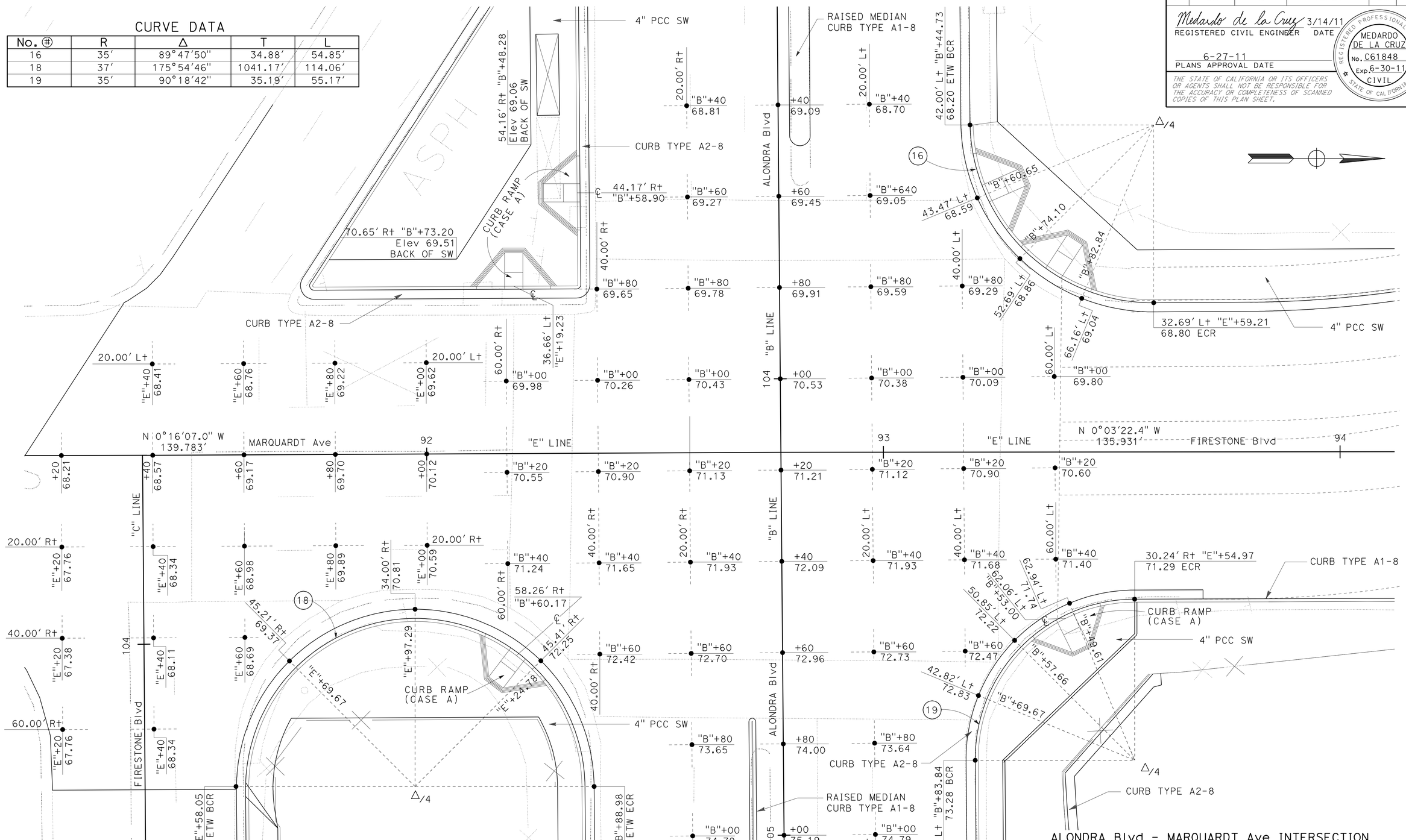

CONSTRUCTION DETAILS

SCALE: 1" = 10′

C-6

STATE OF CALIFORNIA - DEPARTMENT OF TRANSPORTATION
Caltrans® OFFICE OF DESIGN A

FUNCTIONAL SUPERVISOR: ASADOUR TERTERIAN
CALCULATED-DESIGNED BY: KEDAR SAWANT
CHECKED BY: MEDARDO DE LA CRUZ
REVISED BY
DATE REVISED

LAST REVISION 00-00-00 | DATE PLOTTED => 30-JUN-2011 | TIME PLOTTED => 18:25

Dist	COUNTY	ROUTE	POST MILES TOTAL PROJECT	SHEET No.	TOTAL SHEETS
07	LA	5	1.2/2.1	29	602

Medardo de la Cruz 3/14/11
REGISTERED CIVIL ENGINEER DATE

6-27-11
PLANS APPROVAL DATE

REGISTERED PROFESSIONAL ENGINEER
MEDARDO DE LA CRUZ
No. C61848
Exp. 6-30-11
CIVIL
STATE OF CALIFORNIA

THE STATE OF CALIFORNIA OR ITS OFFICERS OR AGENTS SHALL NOT BE RESPONSIBLE FOR THE ACCURACY OR COMPLETENESS OF SCANNED COPIES OF THIS PLAN SHEET.

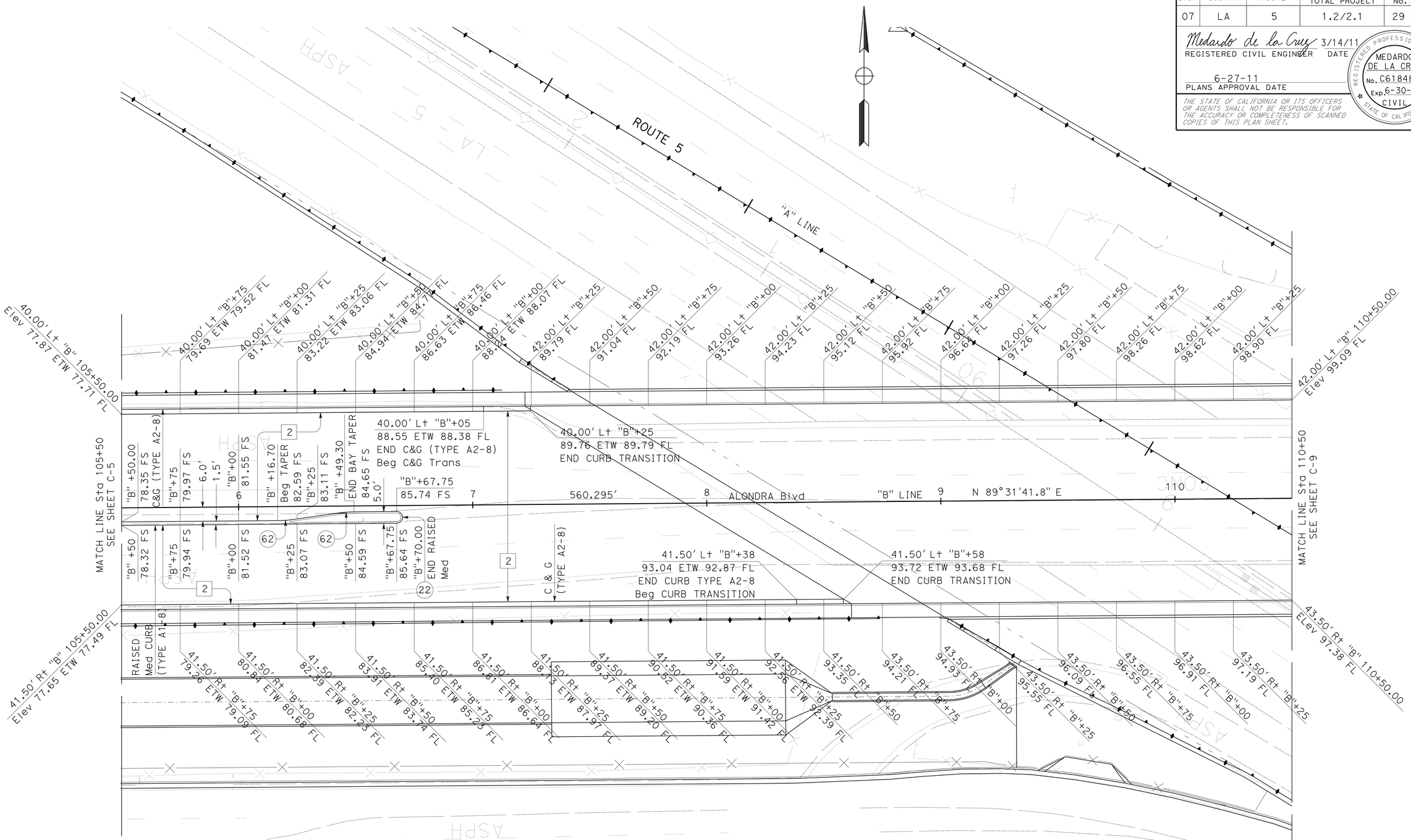

CURVE DATA

No. (#)	R	Δ	T	L
22	2.5'	180°00'00"	——	7.85'
62	50'	7°41'16"	3.36'	6.71'

CONSTRUCTION DETAILS

SCALE: 1" = 20'

C-7

CALCULATED-DESIGNED BY	KEDAR SAWANT
CHECKED BY	MEDARDO DE LA CRUZ
REVISED BY	MDLF
DATE REVISED	5/24/11
FUNCTIONAL SUPERVISOR	ASADOUR TERTERIAN

STATE OF CALIFORNIA - DEPARTMENT OF TRANSPORTATION
Caltrans® OFFICE OF DESIGN A

LAST REVISION 00-00-00 | DATE PLOTTED => 30-JUN-2011 | TIME PLOTTED => 18:25

Dist	COUNTY	ROUTE	POST MILES TOTAL PROJECT	SHEET No.	TOTAL SHEETS
07	LA	5	1.2/2.1	30	602

Medardo de la Cruz 3/14/11
REGISTERED CIVIL ENGINEER DATE

6-27-11
PLANS APPROVAL DATE

REGISTERED PROFESSIONAL ENGINEER
MEDARDO DE LA CRUZ
No. C61848
Exp. 6-30-11
CIVIL
STATE OF CALIFORNIA

THE STATE OF CALIFORNIA OR ITS OFFICERS OR AGENTS SHALL NOT BE RESPONSIBLE FOR THE ACCURACY OR COMPLETENESS OF SCANNED COPIES OF THIS PLAN SHEET.

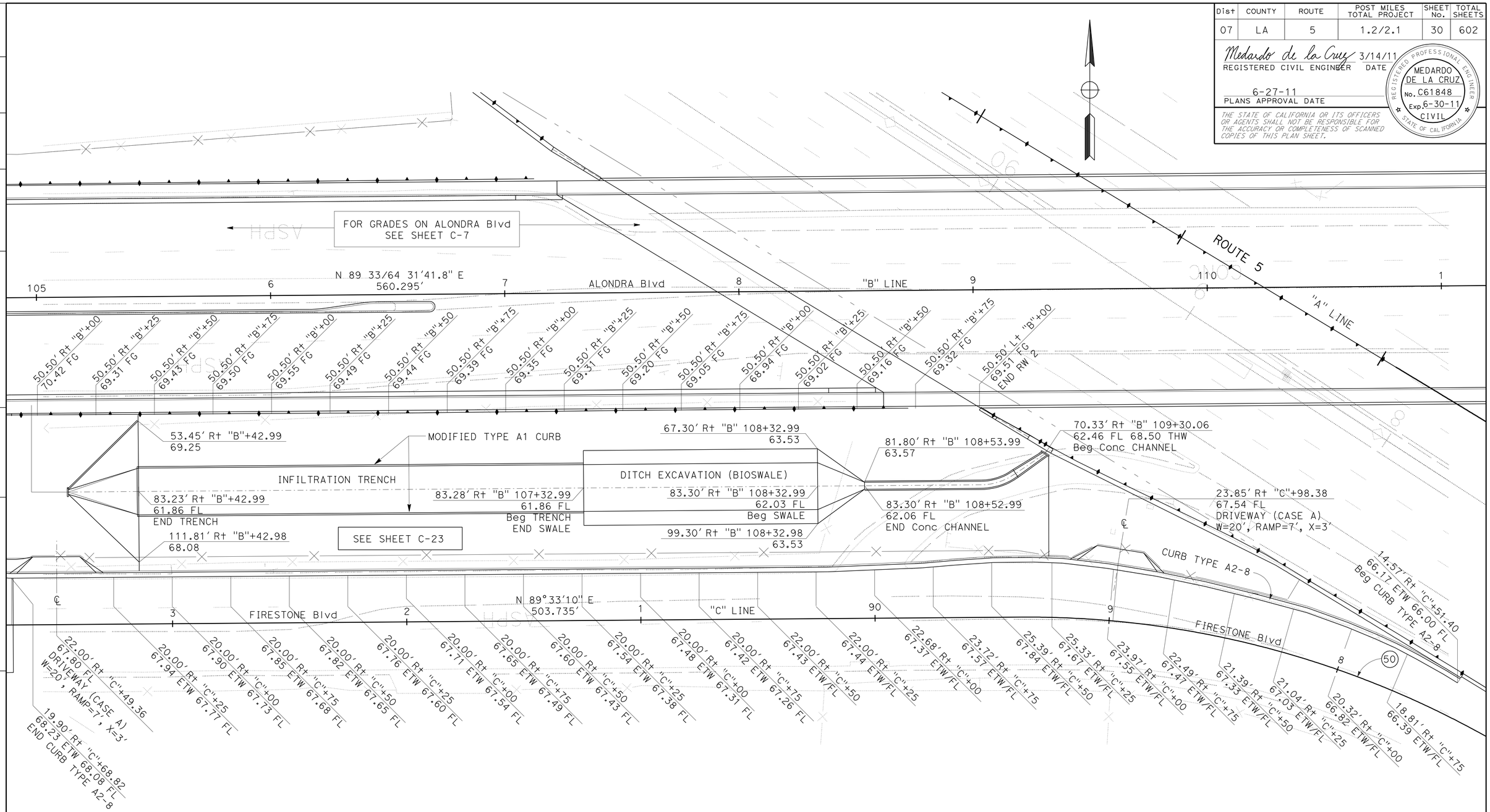

CURVE DATA

No. ⊕	R	Δ	T	L
50	400'	33°25'15"	120.12'	233.39'

DRAINAGE SYSTEM No. 3-4
INFILTRATION TRENCH AND DITCH EXCAVATION (BIOSWALE)

CONSTRUCTION DETAILS

SCALE: 1" = 20'

C-8

REVISED BY | DATE REVISED
KEDAR SAWANT | MEDARDO DE LA CRUZ
CALCULATED-DESIGNED BY | CHECKED BY
FUNCTIONAL SUPERVISOR | ASADOUR TERTERIAN

STATE OF CALIFORNIA - DEPARTMENT OF TRANSPORTATION
Caltrans® OFFICE OF DESIGN A

LAST REVISION 00-00-00 | DATE PLOTTED => 30-JUN-2011 | TIME PLOTTED => 18:25

Dist	COUNTY	ROUTE	POST MILES TOTAL PROJECT	SHEET No.	TOTAL SHEETS
07	LA	5	1.2/2.1	31	602

Medardo de la Cruz 3/14/11
REGISTERED CIVIL ENGINEER DATE

6-27-11
PLANS APPROVAL DATE

REGISTERED PROFESSIONAL ENGINEER MEDARDO DE LA CRUZ No. C61848 Exp. 6-30-11 CIVIL STATE OF CALIFORNIA

THE STATE OF CALIFORNIA OR ITS OFFICERS OR AGENTS SHALL NOT BE RESPONSIBLE FOR THE ACCURACY OR COMPLETENESS OF SCANNED COPIES OF THIS PLAN SHEET.

PAVEMENT ELEVATIONS

No.	LOCATION TO ETW	ETW/FL Elev	No.	LOCATION TO ETW	ETW/FL Elev	No.	LOCATION TO ETW	ETW/FL Elev
1	21.13′ Lt "D"88+25	69.31	9	18.22′ Lt "D"86+25	72.84	14	18.54′ Lt "D"85+18.10	77.02
2	21.28′ Lt "D"88+00	69.31	10	18.01′ Lt "D"86+16.42	73.15	15	18.54′ Lt "D"85+00	77.64
3	21.27′ Lt "D"87+75	69.31	11	18.94′ Lt "D"86+00	73.80	16	19.30′ Lt "D"84+75	78.41
4	21.11′ Lt "D"87+50	69.61	12	18.56′ Lt "D"85+75	74.81	17	20.99′ Lt "D"84+50	79.15
5	20.80′ Lt "D"87+25	70.04	13	18.56′ Lt "D"85+50	75.82	18	22.62′ Lt "D"84+25	79.59
6	20.33′ Lt "D"87+00	70.60						
7	19.70′ Lt "D"86+75	71.28						
8	18.63′ Lt "D"86+41.68	72.29						

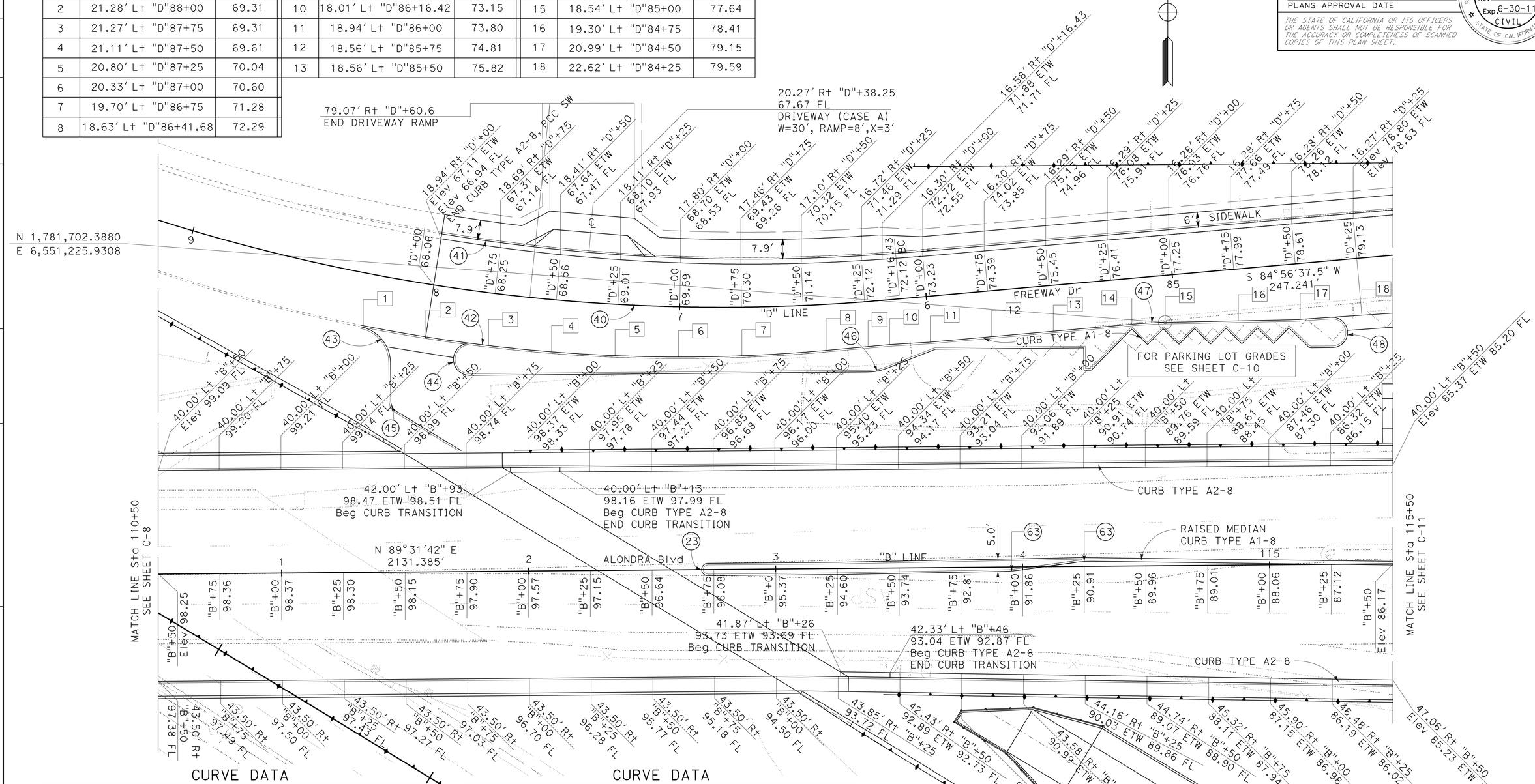

CURVE DATA

No. (#)	R	Δ	T	L
23	2.50′	180°0′00″	—	7.85′
40	755′	22°39′05″	151.13′	298.32′
41	755′	13°34′26″	89.80′	178.77′
42	656′	14°12′04″	81.74′	162.64′
43	15′	78°9′43″	12.18′	20.46′
44	6′	190°20′27″	71.61′	21.53′

CURVE DATA

No. (#)	R	Δ	T	L
45	5′	58°21′11″	2.79′	5.09′
46	20′	20°57′39″	3.70′	7.32′
47	200′	3°52′56″	6.78′	13.55′
48	6′	182°44′14″	256.91′	19.58′
63	50′	8°35′15″	3.75′	7.50′

CONSTRUCTION DETAILS

SCALE: 1″ = 20′

C-9

STATE OF CALIFORNIA - DEPARTMENT OF TRANSPORTATION
Caltrans OFFICE OF DESIGN A

FUNCTIONAL SUPERVISOR: ASADOUR TERTERIAN
CALCULATED-DESIGNED BY: KEDAR SAWANT
CHECKED BY: MEDARDO DE LA CRUZ
REVISED BY: MDLF
DATE REVISED: 5/24/11

LAST REVISION 00-00-00
DATE PLOTTED => 30-JUN-2011
TIME PLOTTED => 18:25

Dist	COUNTY	ROUTE	POST MILES TOTAL PROJECT	SHEET No.	TOTAL SHEETS
07	LA	5	1.2/2.1	32	602

Medardo de la Cruz 3/14/11
REGISTERED CIVIL ENGINEER DATE

6-27-11
PLANS APPROVAL DATE

REGISTERED PROFESSIONAL ENGINEER
MEDARDO DE LA CRUZ
No. C61848
Exp. 6-30-11
CIVIL
STATE OF CALIFORNIA

THE STATE OF CALIFORNIA OR ITS OFFICERS OR AGENTS SHALL NOT BE RESPONSIBLE FOR THE ACCURACY OR COMPLETENESS OF SCANNED COPIES OF THIS PLAN SHEET.

PAVEMENT ELEVATIONS

No.	LOCATION TO EP	EP Elev	No.	LOCATION TO ETW	EP Elev
1	26.42′ Lt "D" 85+38.13	76.82	8	35.39′ Lt "D" 85+39.03	76.65
2	20.50′ Lt "D" 85+18.28	77.66	9	27.36′ Lt "D" 85+12.44	77.45
3	21.52′ Lt "D" 85+05.59	78.02	10	28.37′ Lt "D" 84+99.75	78.17
4	22.54′ Lt "D" 84+92.90	78.49	11	29.39′ Lt "D" 84+87.07	78.57
5	23.56′ Lt "D" 84+80.21	78.88	12	30.41′ Lt "D" 84+74.38	78.94
6	24.57′ Lt "D" 84+67.53	79.24	13	31.43′ Lt "D" 84+61.69	79.28
7	25.59′ Lt "D" 84+54.84	79.57	14	34.38′ Lt "D" 84+47.36	79.59

CURVE DATA

No. ⊕	R	Δ	T	L
41	755′	13°34′26"	89.80′	178.77′
42	656′	14°12′04"	81.74′	162.64′
43	15′	78°9′43"	12.18′	20.46′
44	6′	190°20′27"	71.61′	21.53′
45	5′	58°21′11"	2.79′	5.09′
46	20′	20°57′39"	3.70′	7.32′
47	200′	3°52′56"	6.78′	13.55′
48	6′	182°44′14"	256.91′	19.58′
49	9′	88°35′17"	8.46′	13.40′
51	49′	83°57′54"	43.80′	71.34′
52	18′	98°51′07"	21.02′	31.06′

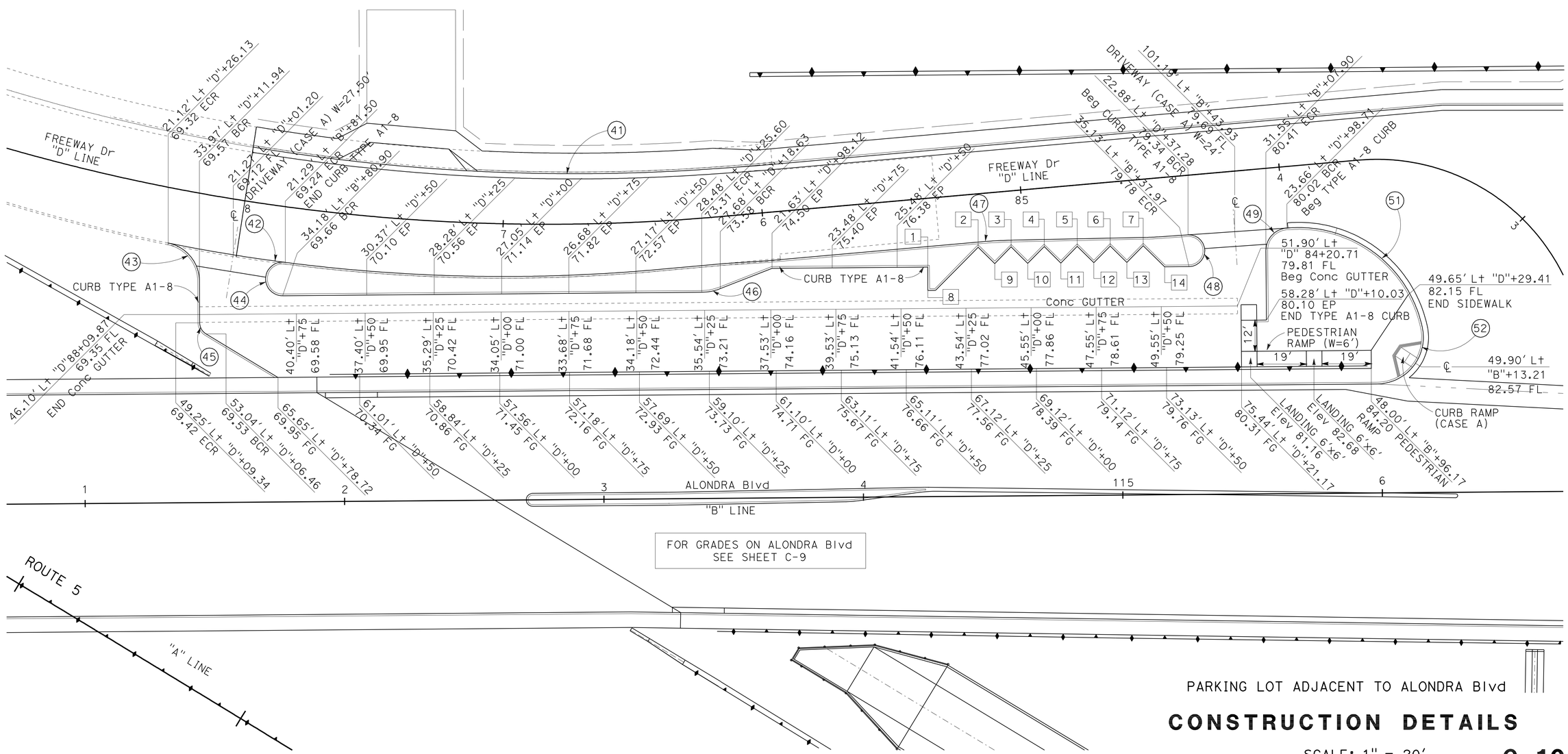

FOR GRADES ON ALONDRA Blvd
SEE SHEET C-9

PARKING LOT ADJACENT TO ALONDRA Blvd

CONSTRUCTION DETAILS

SCALE: 1" = 20′

C-10

REVISED BY	DATE REVISED
MDLF	5/24/11

CALCULATED-DESIGNED BY: KEDAR SAWANT
CHECKED BY: MEDARDO DE LA CRUZ
FUNCTIONAL SUPERVISOR: ASADOUR TERTERIAN

STATE OF CALIFORNIA - DEPARTMENT OF TRANSPORTATION
Caltrans® OFFICE OF DESIGN A

LAST REVISION 00-00-00
DATE PLOTTED => 30-JUN-2011
TIME PLOTTED => 18:25

Dist	COUNTY	ROUTE	POST MILES TOTAL PROJECT	SHEET No.	TOTAL SHEETS
07	LA	5	1.2/2.1	33	602

Medardo de la Cruz 3/14/11
REGISTERED CIVIL ENGINEER DATE

6-27-11
PLANS APPROVAL DATE

REGISTERED PROFESSIONAL ENGINEER MEDARDO DE LA CRUZ No. C61848 Exp. 6-30-11 CIVIL STATE OF CALIFORNIA

THE STATE OF CALIFORNIA OR ITS OFFICERS OR AGENTS SHALL NOT BE RESPONSIBLE FOR THE ACCURACY OR COMPLETENESS OF SCANNED COPIES OF THIS PLAN SHEET.

PAVEMENT ELEVATIONS

No.	LOCATION TO EP	EP Elev	No.	LOCATION TO ETW	EP Elev
17	16.90′ Lt "DR2" 2+70.05	62.31	30	14.52′ Rt "DR2" 3+50	69.05
18	22.32′ Lt "DR2" 2+61.94	62.38	31	14.52′ Rt "DR2" 4+00	75.04
19	30.43′ Lt "DR2" 2+56.52	62.52	32	14.52′ Rt "DR2" 4+42.14	78.08
23	48.81′ Lt "DR2" 2+23.38	63.27	33	23.49′ Rt "DR2" 4+51.09	77.84
24	17.09′ Lt "DR2" 2+03.27	62.97	34	26.57′ Lt "DR2" 4+50.16	79.73
25	13.43′ Rt "DR2" 1+83.16	61.96			
29	14.52′ Rt "DR2" 3+23.19	65.83			

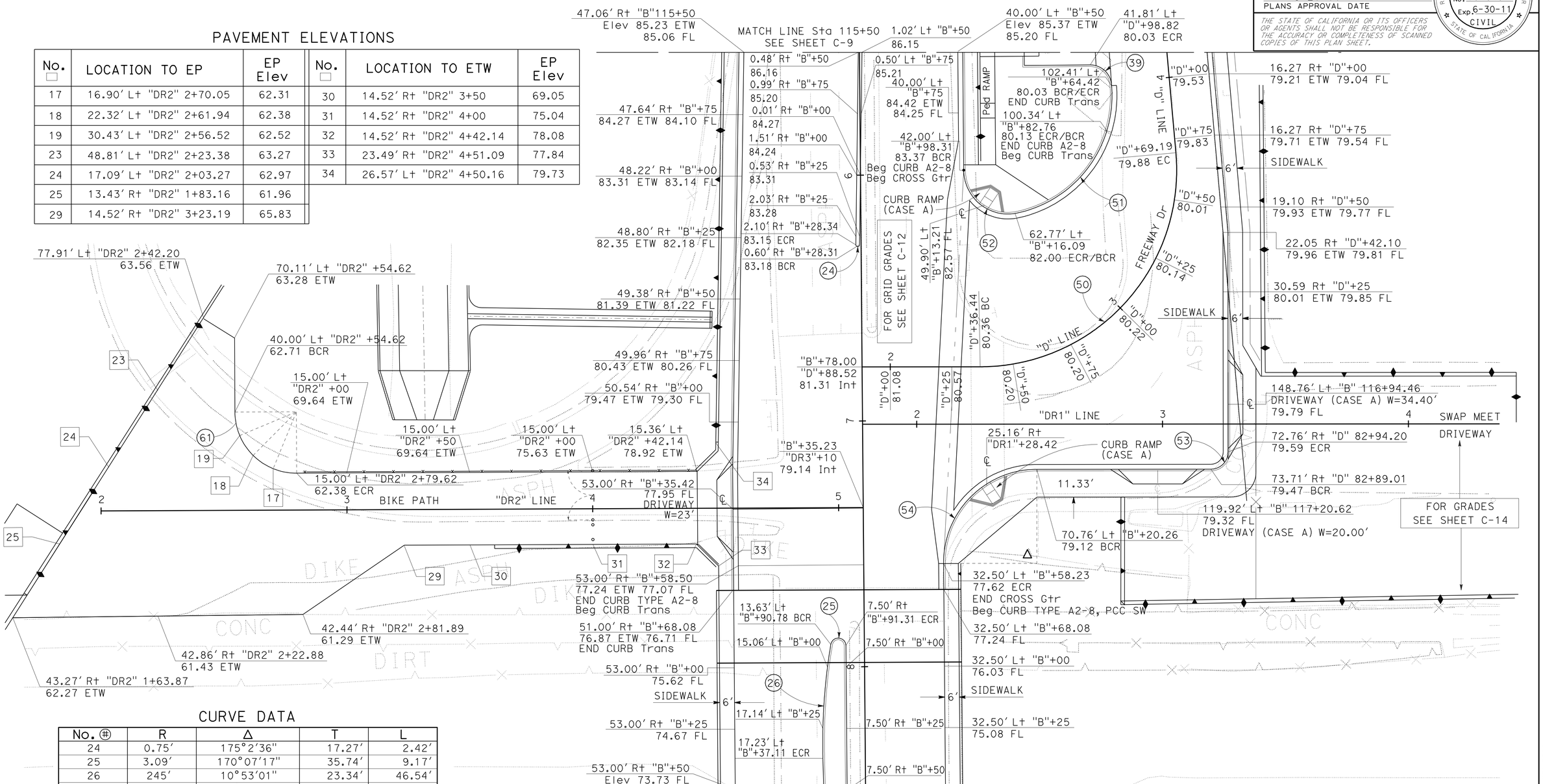

CURVE DATA

No.	R	Δ	T	L
24	0.75′	175°2′36"	17.27′	2.42′
25	3.09′	170°07′17"	35.74′	9.17′
26	245′	10°53′01"	23.34′	46.54′
49	9′	88°35′17"	8.46′	13.40′
50	80′	95°0′40"	87.32′	132.66′
51	49′	83°57′54"	43.80′	71.34′
52	18′	98°51′07"	21.02′	31.06′
53	7′	89°59′59"	7.00′	11.00′
54	38′	90°25′36"	38.26′	59.93′
61	25′	90°0′00"	25.00′	39.27′

CONSTRUCTION DETAILS

SCALE: 1" = 20′

C-11

STATE OF CALIFORNIA - DEPARTMENT OF TRANSPORTATION
Caltrans® OFFICE OF DESIGN A

FUNCTIONAL SUPERVISOR: ASADOUR TERTERIAN
CALCULATED-DESIGNED BY: KEDAR SAWANT
CHECKED BY: MEDARDO DE LA CRUZ
REVISED BY / DATE REVISED

LAST REVISION 00-00-00 | DATE PLOTTED => 30-JUN-2011 | TIME PLOTTED => 18:26

Dist	COUNTY	ROUTE	POST MILES TOTAL PROJECT	SHEET No.	TOTAL SHEETS
07	LA	5	1.2/2.1	34	602

Medardo de la Cruz 3/14/11
REGISTERED CIVIL ENGINEER DATE

6-27-11
PLANS APPROVAL DATE

REGISTERED PROFESSIONAL ENGINEER MEDARDO DE LA CRUZ No. C61848 Exp. 6-30-11 CIVIL STATE OF CALIFORNIA

THE STATE OF CALIFORNIA OR ITS OFFICERS OR AGENTS SHALL NOT BE RESPONSIBLE FOR THE ACCURACY OR COMPLETENESS OF SCANNED COPIES OF THIS PLAN SHEET.

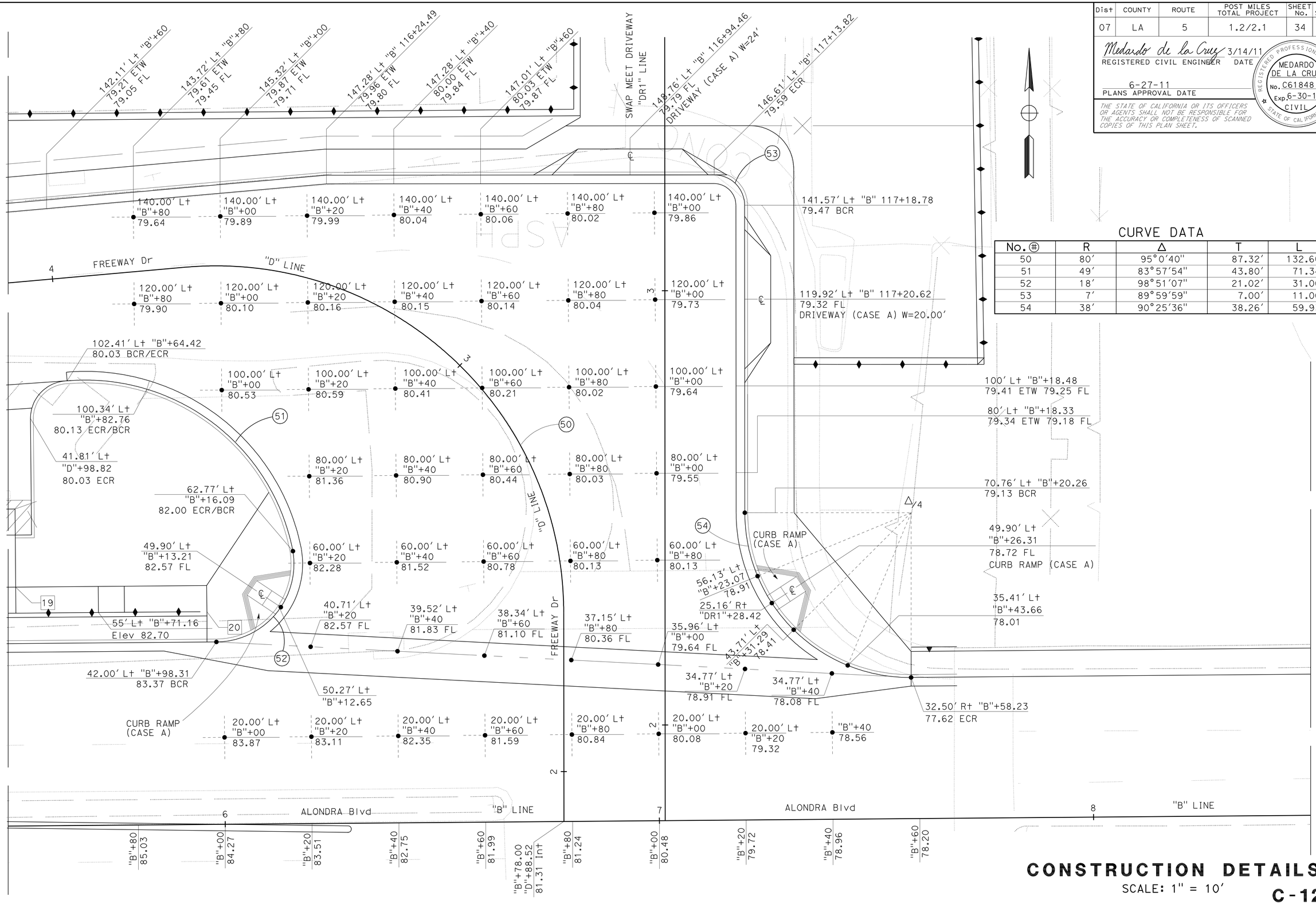

CURVE DATA

No. ⊕	R	Δ	T	L
50	80'	95°0'40"	87.32'	132.66'
51	49'	83°57'54"	43.80'	71.34'
52	18'	98°51'07"	21.02'	31.06'
53	7'	89°59'59"	7.00'	11.00'
54	38'	90°25'36"	38.26'	59.93'

CONSTRUCTION DETAILS

SCALE: 1" = 10'

C-12

STATE OF CALIFORNIA - DEPARTMENT OF TRANSPORTATION
Caltrans® OFFICE OF DESIGN A

FUNCTIONAL SUPERVISOR: ASADOUR TERTERIAN
CALCULATED-DESIGNED BY: KEDAR SAWANT
CHECKED BY: MEDARDO DE LA CRUZ
REVISED BY
DATE REVISED

LAST REVISION 00-00-00
DATE PLOTTED => 30-JUN-2011
TIME PLOTTED => 18:26

Dist	COUNTY	ROUTE	POST MILES TOTAL PROJECT	SHEET No.	TOTAL SHEETS
07	LA	5	1.2/2.1	35	602

Medardo de la Cruz 3/14/11
REGISTERED CIVIL ENGINEER DATE

6-27-11
PLANS APPROVAL DATE

REGISTERED PROFESSIONAL ENGINEER
MEDARDO DE LA CRUZ
No. C61848
Exp. 6-30-11
CIVIL
STATE OF CALIFORNIA

THE STATE OF CALIFORNIA OR ITS OFFICERS OR AGENTS SHALL NOT BE RESPONSIBLE FOR THE ACCURACY OR COMPLETENESS OF SCANNED COPIES OF THIS PLAN SHEET.

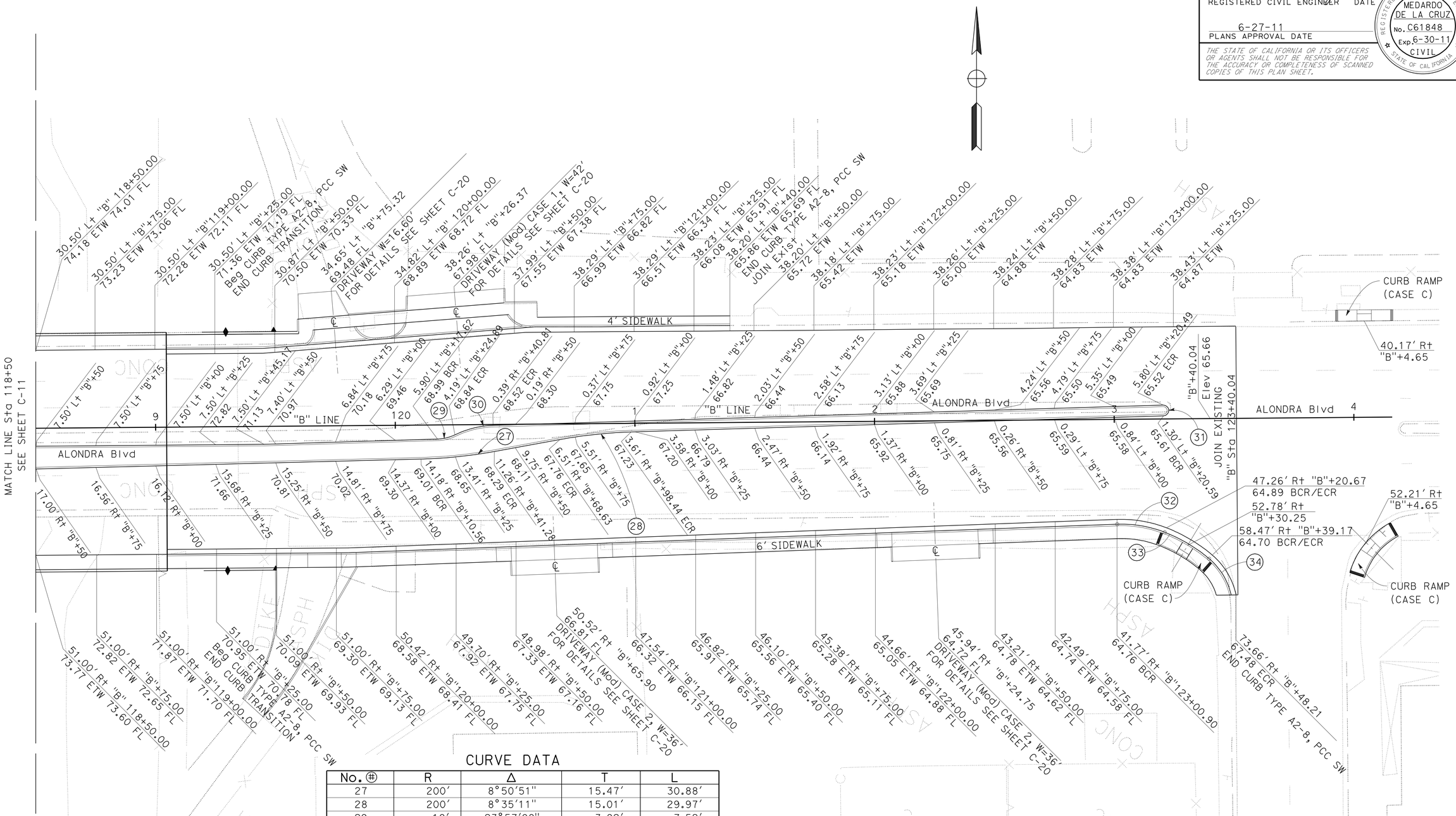

CURVE DATA

No. ⊕	R	Δ	T	L
27	200′	8°50′51"	15.47′	30.88′
28	200′	8°35′11"	15.01′	29.97′
29	18′	23°57′08"	3.82′	7.52′
30	38.80′	24°20′46"	8.37′	16.49′
31	2′	180°0′00"		7.07′
32	50′	23°10′27"	10.25′	20.22′
33	65′	19°9′15"	10.97′	21.73′
34	28′	37°8′35"	9.32′	17.99′

CONSTRUCTION DETAILS

SCALE: 1" = 20′

C-13

STATE OF CALIFORNIA - DEPARTMENT OF TRANSPORTATION
Caltrans® OFFICE OF DESIGN A

FUNCTIONAL SUPERVISOR: ASADOUR TERTERIAN
CALCULATED-DESIGNED BY: ELIZABETH WARE
CHECKED BY: MEDARDO DE LA CRUZ
REVISED BY
DATE REVISED

LAST REVISION 00-00-00 | DATE PLOTTED => 30-JUN-2011 | TIME PLOTTED => 18:26

Dist	COUNTY	ROUTE	POST MILES TOTAL PROJECT	SHEET No.	TOTAL SHEETS
07	LA	5	1.2/2.1	36	602

Medardo de la Cruz 3/14/11
REGISTERED CIVIL ENGINEER DATE

6-27-11
PLANS APPROVAL DATE

REGISTERED PROFESSIONAL ENGINEER MEDARDO DE LA CRUZ No. C61848 Exp. 6-30-11 CIVIL STATE OF CALIFORNIA

THE STATE OF CALIFORNIA OR ITS OFFICERS OR AGENTS SHALL NOT BE RESPONSIBLE FOR THE ACCURACY OR COMPLETENESS OF SCANNED COPIES OF THIS PLAN SHEET.

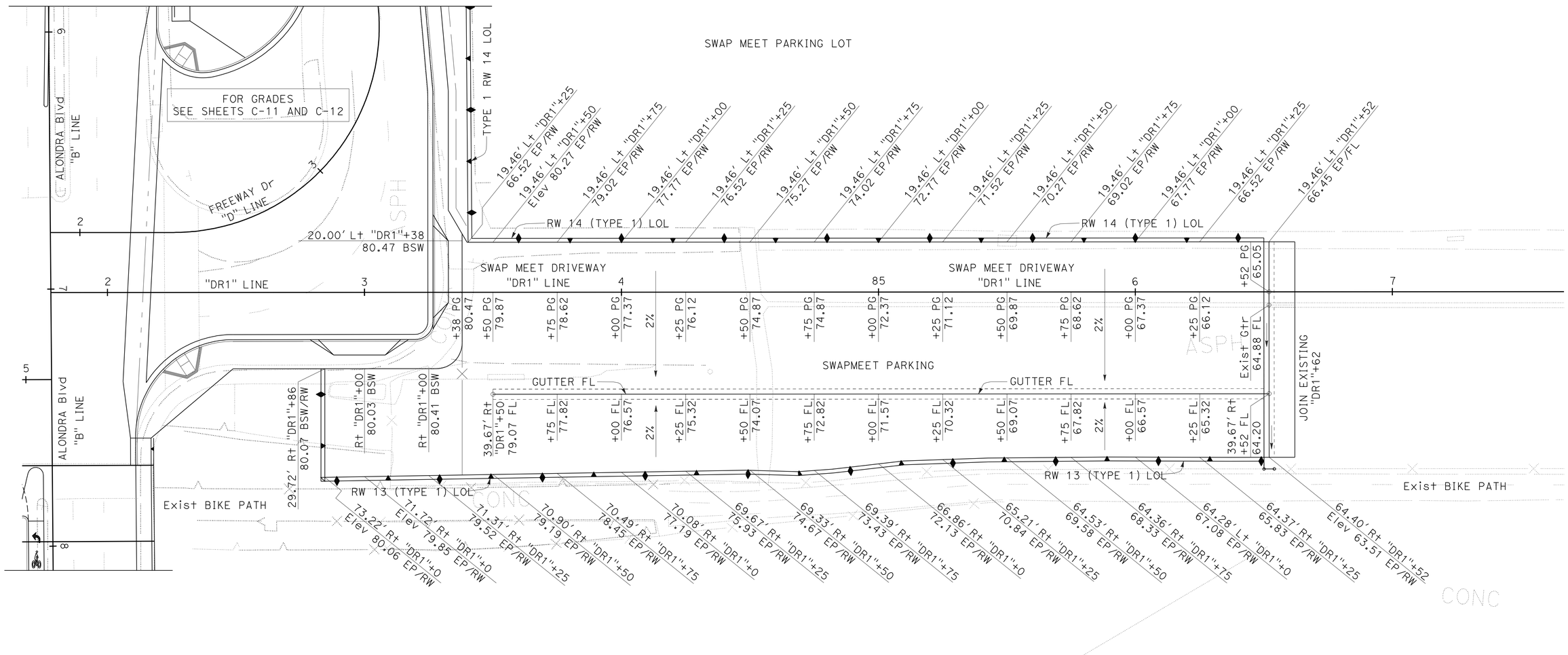

CONSTRUCTION DETAILS

SCALE: 1" = 20'

C-14

REVISED BY	DATE REVISED

CALCULATED-DESIGNED BY	KEDAR SAWANT
CHECKED BY	MEDARDO DE LA CRUZ
FUNCTIONAL SUPERVISOR	ASADOUR TERTERIAN

STATE OF CALIFORNIA - DEPARTMENT OF TRANSPORTATION
Caltrans® OFFICE OF DESIGN A

LAST REVISION 00-00-00 | DATE PLOTTED => 30-JUN-2011 | TIME PLOTTED => 18:26

Dist	COUNTY	ROUTE	POST MILES TOTAL PROJECT	SHEET No.	TOTAL SHEETS
07	LA	5	1.2/2.1	37	602

Medardo de la Cruz 3/14/11
REGISTERED CIVIL ENGINEER DATE

6-27-11
PLANS APPROVAL DATE

REGISTERED PROFESSIONAL ENGINEER
MEDARDO DE LA CRUZ
No. C61848
Exp. 6-30-11
CIVIL
STATE OF CALIFORNIA

THE STATE OF CALIFORNIA OR ITS OFFICERS OR AGENTS SHALL NOT BE RESPONSIBLE FOR THE ACCURACY OR COMPLETENESS OF SCANNED COPIES OF THIS PLAN SHEET.

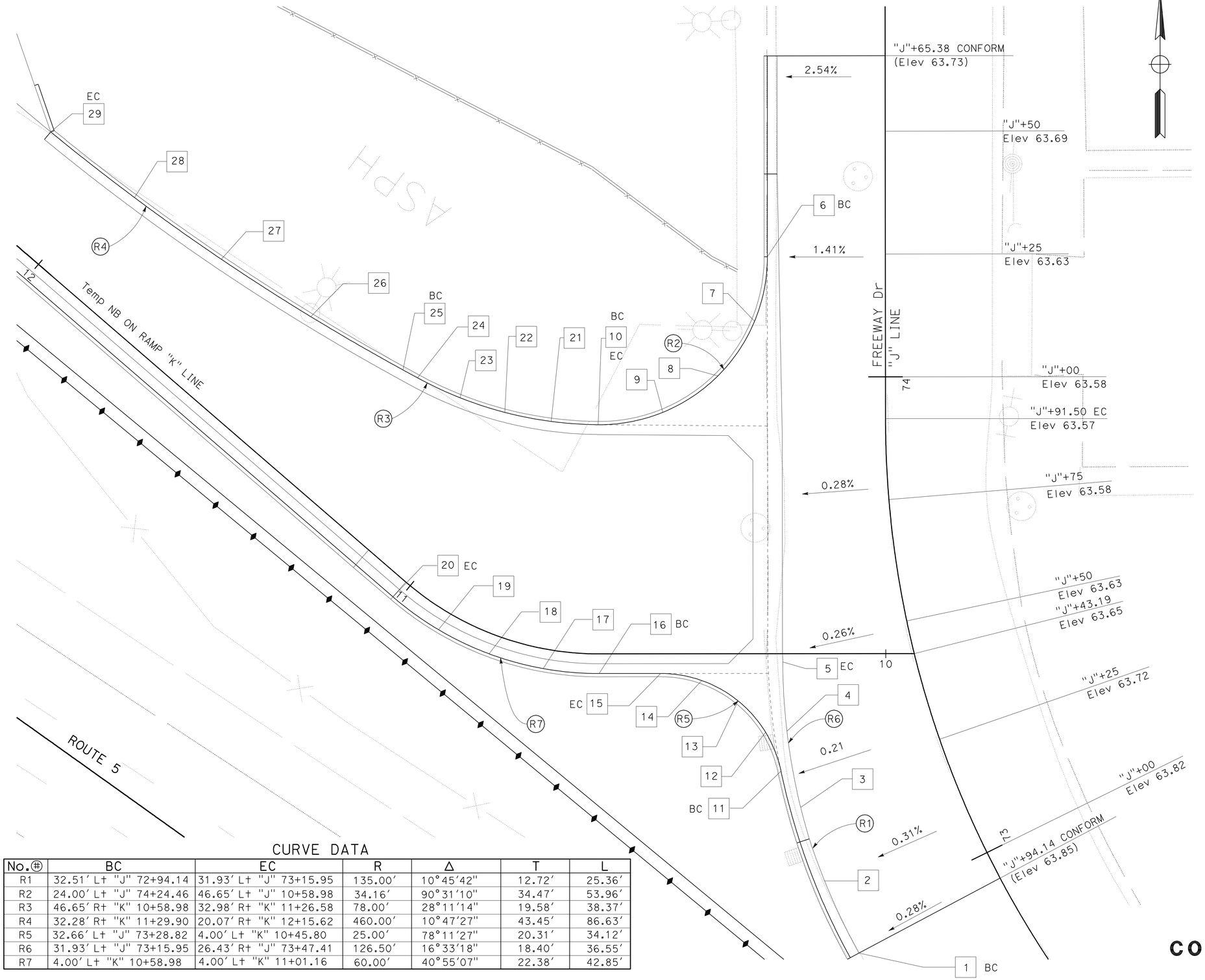

PAVEMENT ELEVATIONS

No.	LOCATION	Elev
1	32.51′ Lt "J" 72+94.14	63.77
2	32.37′ Lt "J" 73+07.24	63.71
3	31.28′ Lt "J" 73+21.68	63.66
4	29.11′ Lt "J" 73+35.24	63.61
5	26.43′ Rt "J" 73+47.41	63.57
6	24.00′ Lt "J" 74+24.46	63.15
7	26.57′ Lt "J" 74+11.28	63.20
8	56.55′ Rt "K" 10+34.12	63.25
9	49.16′ Rt "K" 10+45.30	63.29
10	46.65′ Rt "K" 10+58.98	63.39
11	32.66′ Lt "J" 73+28.82	63.47
12	15.99′ Lt "K" 10+24.45	63.57
13	9.60′ Lt "K" 10+30.03	63.67
14	5.44′ Lt "K" 10+37.43	63.77
15	4.00′ Lt "K" 10+45.80	63.86
16	4.00′ Lt "K" 10+58.98	64.16
17	4.00′ Lt "K" 10+69.03	64.39
18	4.00′ Lt "K" 10+39.75	64.62
19	4.00′ Lt "K" 10+90.46	64.90
20	4.00′ Lt "K" 11+01.16	65.18
21	44.04′ Lt "K" 10+97.55	64.77
22	39.30′ Rt "K" 11+08.52	65.16
23	35.58′ Rt "K" 11+17.36	65.08
24	32.98′ Rt "K" 11+26.58	65.30
25	32.28′ Rt "K" 11+29.90	65.52
26	28.19′ Rt "K" 11+51.17	66.21
27	25.12′ Rt "K" 11+72.60	66.99
28	23.05′ Rt "K" 11+94.16	67.68
29	22.07′ Rt "K" 12+15.62	68.34

CURVE DATA

No.	BC	EC	R	Δ	T	L
R1	32.51′ Lt "J" 72+94.14	31.93′ Lt "J" 73+15.95	135.00′	10°45′42"	12.72′	25.36′
R2	24.00′ Lt "J" 74+24.46	46.65′ Lt "J" 10+58.98	34.16′	90°31′10"	34.47′	53.96′
R3	46.65′ Rt "K" 10+58.98	32.98′ Rt "K" 11+26.58	78.00′	28°11′14"	19.58′	38.37′
R4	32.28′ Rt "K" 11+29.90	20.07′ Rt "K" 12+15.62	460.00′	10°47′27"	43.45′	86.63′
R5	32.66′ Lt "J" 73+28.82	4.00′ Lt "K" 10+45.80	25.00′	78°11′27"	20.31′	34.12′
R6	31.93′ Lt "J" 73+15.95	26.43′ Rt "J" 73+47.41	126.50′	16°33′18"	18.40′	36.55′
R7	4.00′ Lt "K" 10+58.98	4.00′ Lt "K" 11+01.16	60.00′	40°55′07"	22.38′	42.85′

INTERIM NB ON RAMP
CONSTRUCTION DETAILS

SCALE: 1" = 10′

C-15

STATE OF CALIFORNIA - DEPARTMENT OF TRANSPORTATION
Caltrans® OFFICE OF DESIGN A

FUNCTIONAL SUPERVISOR: ASADOUR TERTERIAN
CALCULATED-DESIGNED BY: SUSANNA YANG
CHECKED BY: MEDARDO DE LA CRUZ
REVISED BY
DATE REVISED

LAST REVISION 00-00-00
DATE PLOTTED => 30-JUN-2011
TIME PLOTTED => 18:26

Dist	COUNTY	ROUTE	POST MILES TOTAL PROJECT	SHEET No.	TOTAL SHEETS
07	LA	5	1.2/2.1	38	602

Medardo de la Cruz 3/14/11
REGISTERED CIVIL ENGINEER DATE

6-27-11
PLANS APPROVAL DATE

REGISTERED PROFESSIONAL ENGINEER MEDARDO DE LA CRUZ No. C61848 Exp. 6-30-11 CIVIL STATE OF CALIFORNIA

THE STATE OF CALIFORNIA OR ITS OFFICERS OR AGENTS SHALL NOT BE RESPONSIBLE FOR THE ACCURACY OR COMPLETENESS OF SCANNED COPIES OF THIS PLAN SHEET.

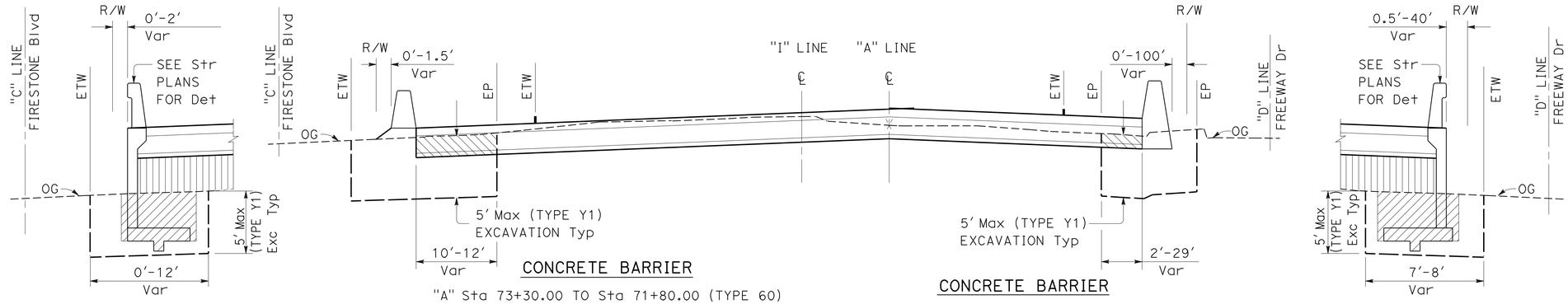

CONCRETE BARRIER

"A" Sta 73+00.42 TO Sta 77+32.14 (RW 10)
"A" Sta 79+19.05 TO Sta 87+00.00 (RW 8)

"A" Sta 73+30.00 TO Sta 71+80.00 (TYPE 60)
"A" Sta 71+80.00 TO Sta 73+00.42 (TYPE 60C)
"A" Sta 87+00.00 TO Sta 89+00.00 (TYPE 60C)

CONCRETE BARRIER

"A" Sta 69+00.00 TO Sta 77+24.15 (TYPE 60C)
"A" Sta 81+99.15 TO Sta 85+66.70 (TYPE 60)

"G" Sta 10+36.06 TO Sta 12+95.54 (RW 11)
"A" Sta 80+60.77 TO Sta 81+99.15 (RW 7)

SOUTHBOUND NORTHBOUND

SECTION A-A
NO SCALE

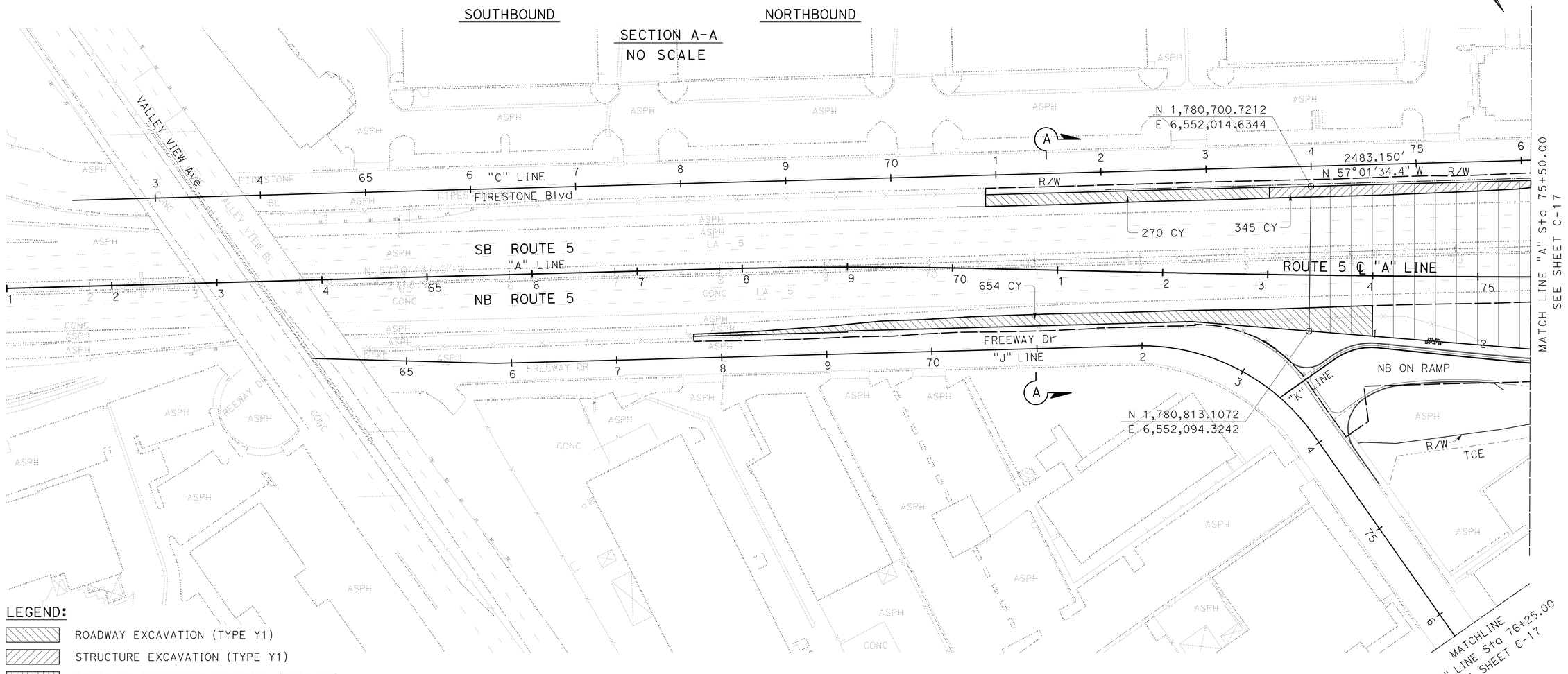

LEGEND:

- ROADWAY EXCAVATION (TYPE Y1)
- STRUCTURE EXCAVATION (TYPE Y1)
- REUSE OF EXCAVATED MATERIAL (TYPE Y1)
- REUSE OF EXCAVATED MATERIAL (TYPE Y1)
- STRUCTURE EXCAVATION
- LIMITS OF AERIALLY DEPOSITED LEAD

CONSTRUCTION DETAILS (AERIALLY DEPOSITED LEAD)

SCALE: 1" = 50'

C-16

THIS PLAN IS ACCURATE FOR AERIALLY DEPOSITED LEAD EXCAVATION WORK ONLY.

STATE OF CALIFORNIA - DEPARTMENT OF TRANSPORTATION
Caltrans® OFFICE OF DESIGN A

FUNCTIONAL SUPERVISOR: ASADOUR TERTERIAN
CALCULATED-DESIGNED BY: MARCELO DE LA FUENTE
CHECKED BY: MEDARDO DE LA CRUZ
REVISED BY
DATE REVISED

LAST REVISION 00-00-00
DATE PLOTTED => 30-JUN-2011
TIME PLOTTED => 18:26

Dist	COUNTY	ROUTE	POST MILES TOTAL PROJECT	SHEET No.	TOTAL SHEETS
07	LA	5	1.2/2.1	39	602

Medardo de la Cruz 3/14/11
REGISTERED CIVIL ENGINEER DATE

6-27-11
PLANS APPROVAL DATE

REGISTERED PROFESSIONAL ENGINEER MEDARDO DE LA CRUZ No. C61848 Exp. 6-30-11 CIVIL STATE OF CALIFORNIA

THE STATE OF CALIFORNIA OR ITS OFFICERS OR AGENTS SHALL NOT BE RESPONSIBLE FOR THE ACCURACY OR COMPLETENESS OF SCANNED COPIES OF THIS PLAN SHEET.

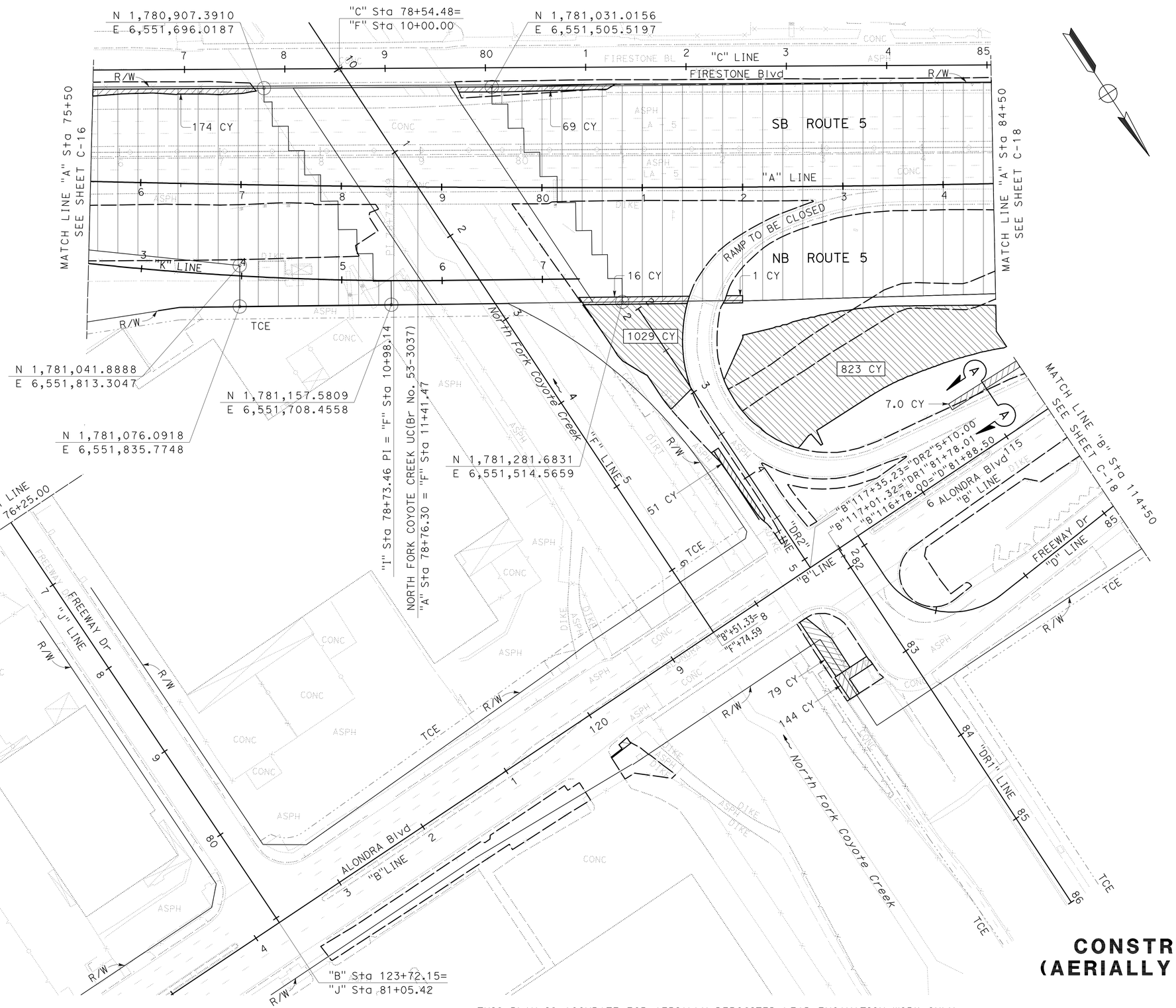

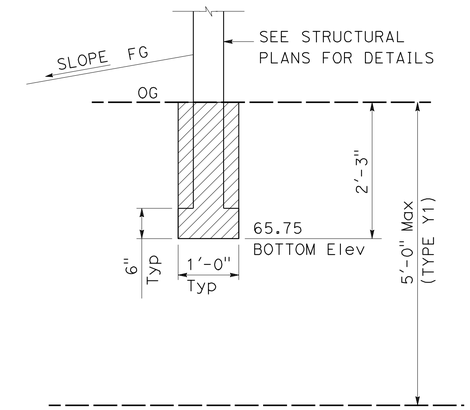

SECTION A-A
(STRUCTURAL EXCAVATION TYPE Y-1)
NO SCALE

THIS PLAN IS ACCURATE FOR AERIALLY DEPOSITED LEAD EXCAVATION WORK ONLY.

CONSTRUCTION DETAILS (AERIALLY DEPOSITED LEAD)

SCALE: 1" = 50'

C-17

STATE OF CALIFORNIA - DEPARTMENT OF TRANSPORTATION
Caltrans OFFICE OF DESIGN A

FUNCTIONAL SUPERVISOR: ASADOUR TERTERIAN
CALCULATED-DESIGNED BY: MARCELO DE LA FUENTE
CHECKED BY: MEDARDO DE LA CRUZ
REVISED BY
DATE REVISED

LAST REVISION 00-00-00 | DATE PLOTTED => 30-JUN-2011 | TIME PLOTTED => 18:26

Dist	COUNTY	ROUTE	POST MILES TOTAL PROJECT	SHEET No.	TOTAL SHEETS
07	LA	5	1.2/2.1	40	602

Medardo de la Cruz 3/14/11
REGISTERED CIVIL ENGINEER DATE

6-27-11
PLANS APPROVAL DATE

REGISTERED PROFESSIONAL ENGINEER
MEDARDO DE LA CRUZ
No. C61848
Exp. 6-30-11
CIVIL
STATE OF CALIFORNIA

THE STATE OF CALIFORNIA OR ITS OFFICERS OR AGENTS SHALL NOT BE RESPONSIBLE FOR THE ACCURACY OR COMPLETENESS OF SCANNED COPIES OF THIS PLAN SHEET.

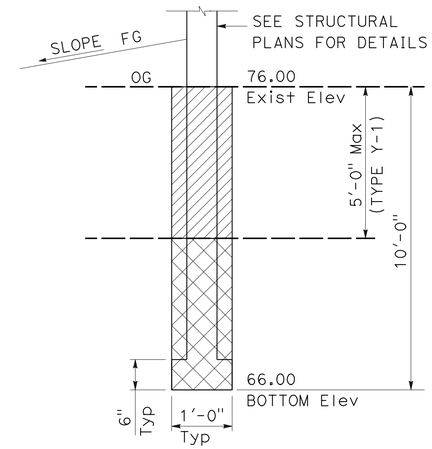

SECTION A-A
STRUCTURE EXCAVATION (TYPE Y-1)(ADL)
NO SCALE

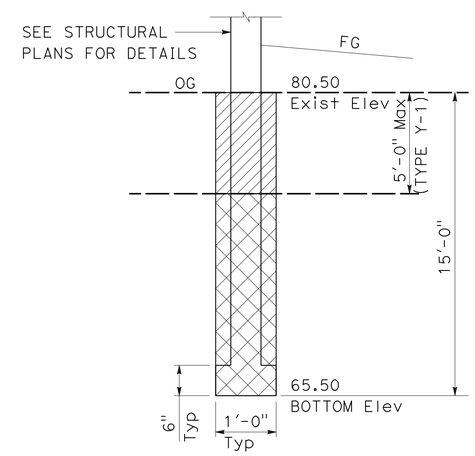

SECTION B-B
STRUCTURE EXCAVATION (TYPE Y-1)(ADL)
NO SCALE

CONSTRUCTION DETAILS (AERIALLY DEPOSITED LEAD)

SCALE: 1" = 50'

THIS PLAN IS ACCURATE FOR AERIALLY DEPOSITED LEAD EXCAVATION WORK ONLY.

C-18

STATE OF CALIFORNIA - DEPARTMENT OF TRANSPORTATION
Caltrans® OFFICE OF DESIGN A

FUNCTIONAL SUPERVISOR: ASADOUR TERTERIAN
CALCULATED-DESIGNED BY: MARCELO DE LA FUENTE
CHECKED BY: MEDARDO DE LA CRUZ
REVISED BY
DATE REVISED

LAST REVISION 00-00-00
DATE PLOTTED => 30-JUN-2011
TIME PLOTTED => 18:27

Dist	COUNTY	ROUTE	POST MILES TOTAL PROJECT	SHEET No.	TOTAL SHEETS
07	LA	5	1.2/2.1	41	602

Medardo de la Cruz 3/14/11
REGISTERED CIVIL ENGINEER DATE

6-27-11
PLANS APPROVAL DATE

REGISTERED PROFESSIONAL ENGINEER MEDARDO DE LA CRUZ No. C61848 Exp. 6-30-11 CIVIL STATE OF CALIFORNIA

THE STATE OF CALIFORNIA OR ITS OFFICERS OR AGENTS SHALL NOT BE RESPONSIBLE FOR THE ACCURACY OR COMPLETENESS OF SCANNED COPIES OF THIS PLAN SHEET.

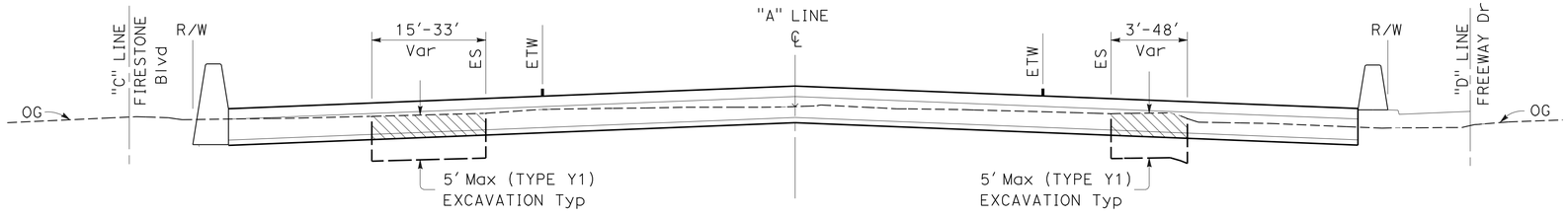

"A" Sta 91+49.25 TO Sta 98+70.14 — SOUTHBOUND

"A" Sta 88+02.77 TO Sta 98+70.14 — NORTHBOUND

SECTION C-C
NO SCALE

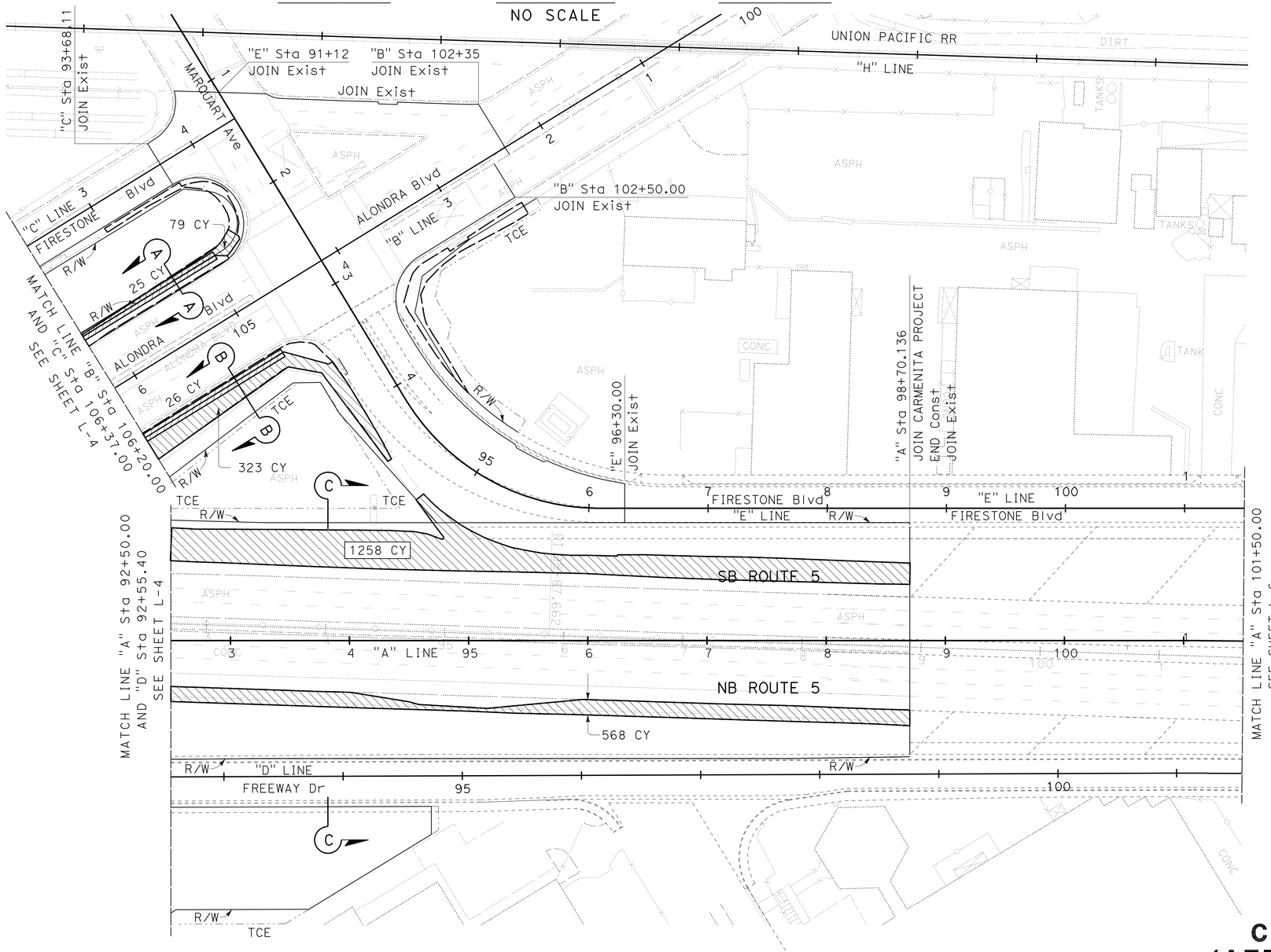

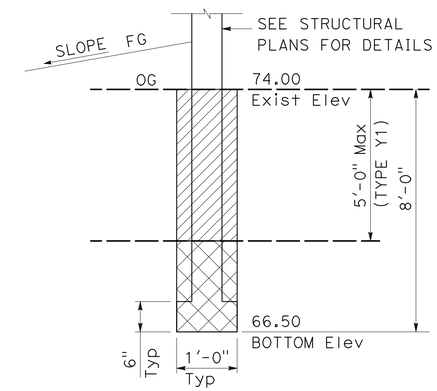

SECTION A-A
(STRUCTURAL EXCAVATION TYPE Y-1)
NO SCALE

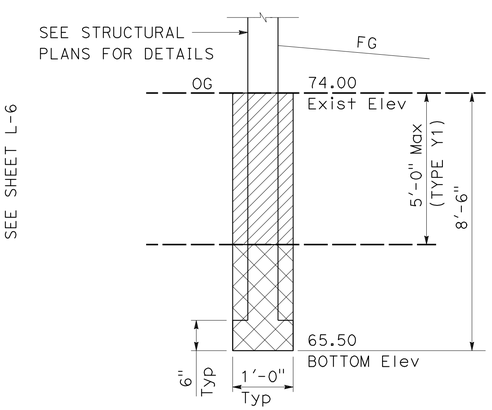

SECTION B-B
(STRUCTURAL EXCAVATION TYPE Y-1)
NO SCALE

CONSTRUCTION DETAILS (AERIALLY DEPOSITED LEAD)

SCALE: 1" = 50'

C-19

THIS PLAN IS ACCURATE FOR AERIALLY DEPOSITED LEAD EXCAVATION WORK ONLY.

STATE OF CALIFORNIA - DEPARTMENT OF TRANSPORTATION
Caltrans® OFFICE OF DESIGN A

FUNCTIONAL SUPERVISOR: ASADOUR TERTERIAN
CALCULATED-DESIGNED BY: MARCELO DE LA FUENTE
CHECKED BY: MEDARDO DE LA CRUZ
REVISED BY
DATE REVISED

LAST REVISION 00-00-00
DATE PLOTTED => 30-JUN-2011
TIME PLOTTED => 18:27

Dist	COUNTY	ROUTE	POST MILES TOTAL PROJECT	SHEET No.	TOTAL SHEETS
07	LA	5	1.2/2.1	42	602

Medardo de la Cruz 3/14/11
REGISTERED CIVIL ENGINEER DATE

6-27-11
PLANS APPROVAL DATE

REGISTERED PROFESSIONAL ENGINEER MEDARDO DE LA CRUZ No. C61848 Exp. 6-30-11 CIVIL STATE OF CALIFORNIA

THE STATE OF CALIFORNIA OR ITS OFFICERS OR AGENTS SHALL NOT BE RESPONSIBLE FOR THE ACCURACY OR COMPLETENESS OF SCANNED COPIES OF THIS PLAN SHEET.

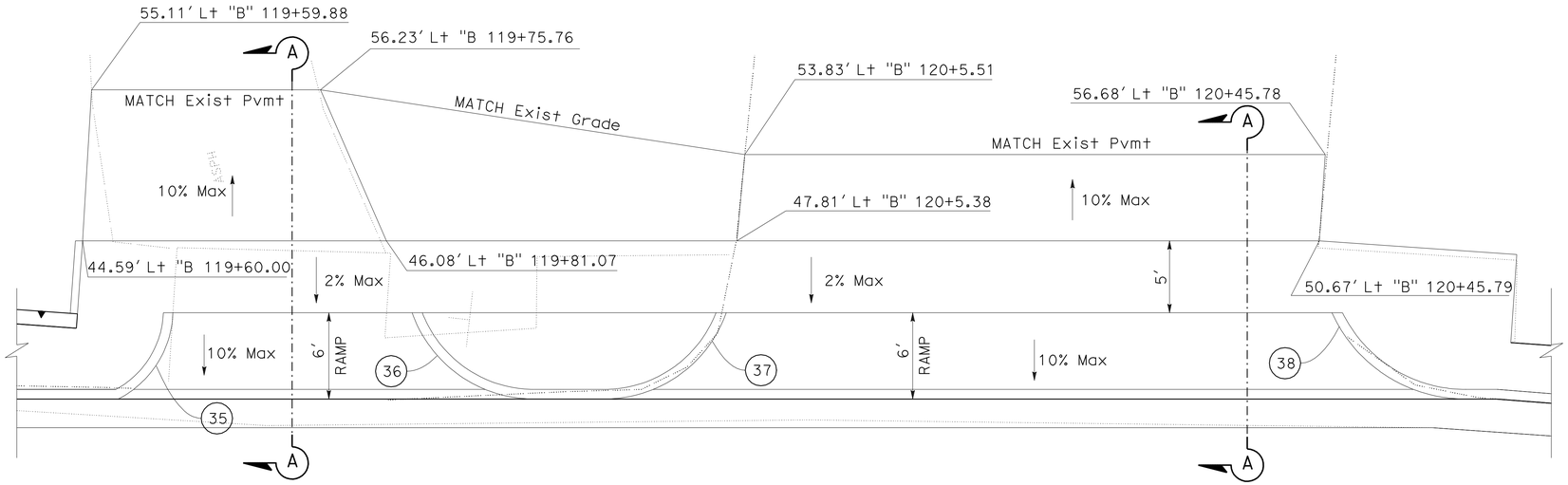

PLAN

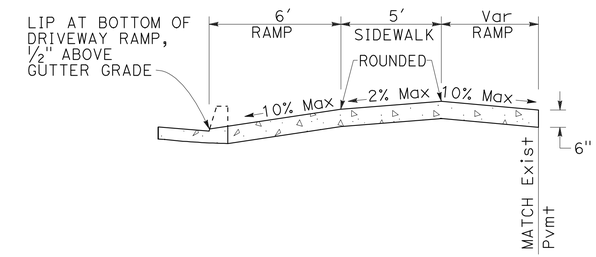

SECTION A-A

FLOOD CONTROL DRIVEWAY - NORTH OF ALONDRA Blvd

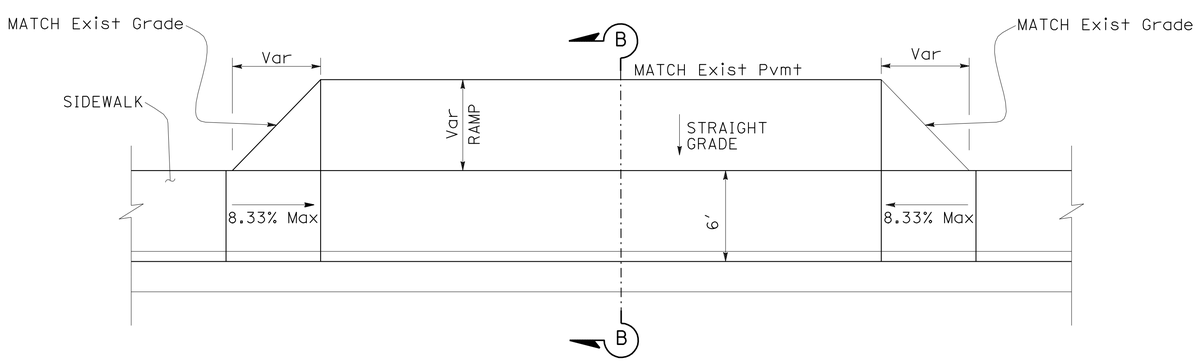

PLAN

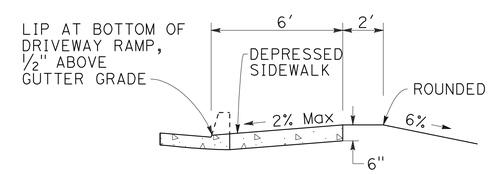

SECTION B-B
CASE 1

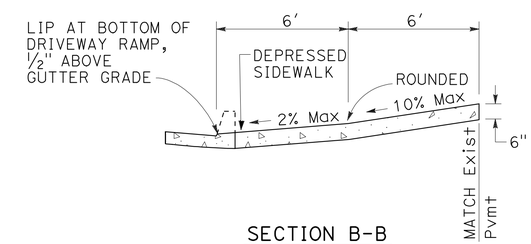

SECTION B-B
CASE 2

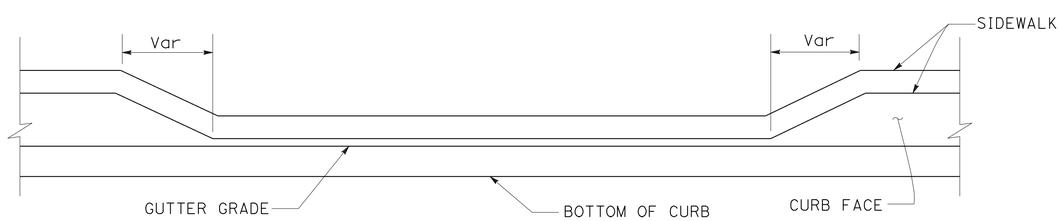

ELEVATION

CURVE DATA

No. (#)	R	Δ	T	L
35	7.00'	60°47'01"	4.11'	7.43'
36	9.00'	70°31'44"	6.36'	11.08'
37	9.00'	70°31'44"	6.36'	11.08'
38	10.20'	65°40'30"	6.58'	11.69'

FLOOD CONTROL DRIVEWAY AND PARKING LOT -SOUTH OF ALONDRA Blvd

CONSTRUCTION DETAILS

NO SCALE

C-20

REVISED BY | DATE REVISED
SUSANNA YANG | MEDARDO DE LA CRUZ
CALCULATED-DESIGNED BY | CHECKED BY
FUNCTIONAL SUPERVISOR
ASADOUR TERTERIAN

STATE OF CALIFORNIA - DEPARTMENT OF TRANSPORTATION
Caltrans® OFFICE OF DESIGN A

LAST REVISION 00-00-00 | DATE PLOTTED => 30-JUN-2011 | TIME PLOTTED => 18:27

Dist	COUNTY	ROUTE	POST MILES TOTAL PROJECT	SHEET No.	TOTAL SHEETS
07	LA	5	1.2/2.1	43	602

Medardo de la Cruz 3/14/11
REGISTERED CIVIL ENGINEER DATE

6-27-11
PLANS APPROVAL DATE

REGISTERED PROFESSIONAL ENGINEER
MEDARDO DE LA CRUZ
No. C61848
Exp. 6-30-11
CIVIL
STATE OF CALIFORNIA

THE STATE OF CALIFORNIA OR ITS OFFICERS OR AGENTS SHALL NOT BE RESPONSIBLE FOR THE ACCURACY OR COMPLETENESS OF SCANNED COPIES OF THIS PLAN SHEET.

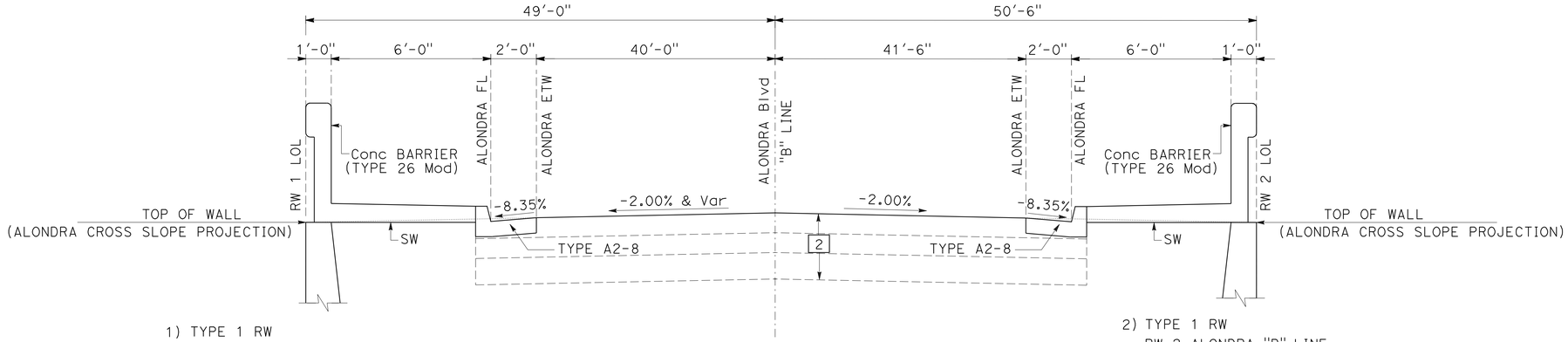

1) TYPE 1 RW
RW 1 ALONDRA "B" LINE
Sta 106+40.00 TO Sta 107+12.95

2) TYPE 1 RW
RW 2 ALONDRA "B" LINE
Sta 108+04.98 TO Sta 108+73.56

ALONDRA Blvd CROSS SECTION
TYPE 1 RW

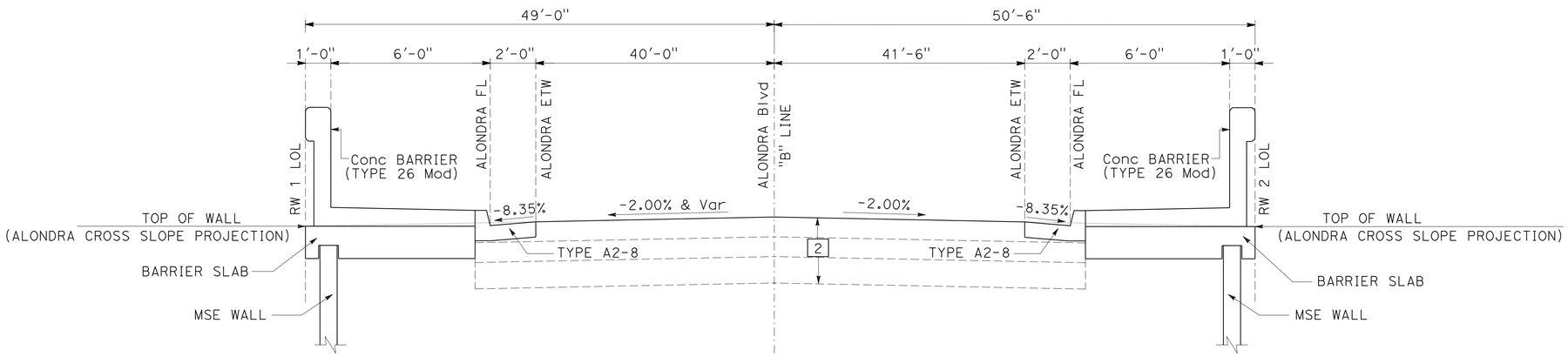

1) RW 1
ALONDRA "B" LINE
Sta 104+84.37 TO Sta 106+40.00

2) RW 3
ALONDRA "B" LINE
Sta 111+94.67 TO Sta 115+94.67

3) RW 2
ALONDRA "B" LINE
Sta 104+89.98 TO Sta 108+04.98

4) RW 4
ALONDRA "B" LINE
Sta 113+43.20 TO Sta 117+08.19

ALONDRA Blvd CROSS SECTION
TYPE MSE RW

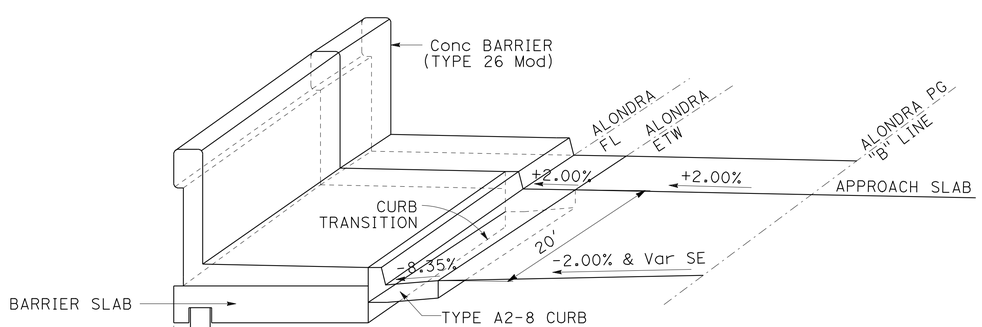

1) RW 1
ALONDRA "B" LINE
Sta 107+05.00 TO Sta 107+25.00

2) RW 3
ALONDRA "B" LINE
Sta 111+93.00 TO Sta 112+13.00

ISOMETRIC VIEWS OF
CURB TRANSITIONS

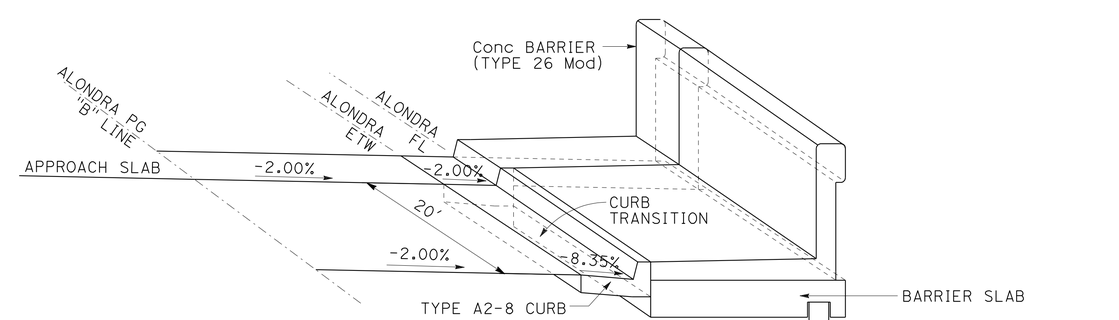

3) RW 2
ALONDRA "B" LINE
Sta 108+38.00 TO Sta 108+58.00

4) RW 4
ALONDRA "B" LINE
Sta 113+26.00.00 TO Sta 113+46.00

CONSTRUCTION DETAILS

NO SCALE

C-21

REVISED BY | DATE REVISED
KEDAR SAWANT | MEDARDO DE LA CRUZ
CALCULATED-DESIGNED BY | CHECKED BY
FUNCTIONAL SUPERVISOR | ASADOUR TERTERIAN

STATE OF CALIFORNIA - DEPARTMENT OF TRANSPORTATION
Caltrans® OFFICE OF DESIGN A

LAST REVISION 00-00-00 | DATE PLOTTED => 30-JUN-2011 | TIME PLOTTED => 18:27

Dist	COUNTY	ROUTE	POST MILES TOTAL PROJECT	SHEET No.	TOTAL SHEETS
07	LA	5	1.2/2.1	44	602

Medardo de la Cruz 3/14/11
REGISTERED CIVIL ENGINEER DATE

6-27-11
PLANS APPROVAL DATE

REGISTERED PROFESSIONAL ENGINEER
MEDARDO DE LA CRUZ
No. C61848
Exp. 6-30-11
CIVIL
STATE OF CALIFORNIA

THE STATE OF CALIFORNIA OR ITS OFFICERS OR AGENTS SHALL NOT BE RESPONSIBLE FOR THE ACCURACY OR COMPLETENESS OF SCANNED COPIES OF THIS PLAN SHEET.

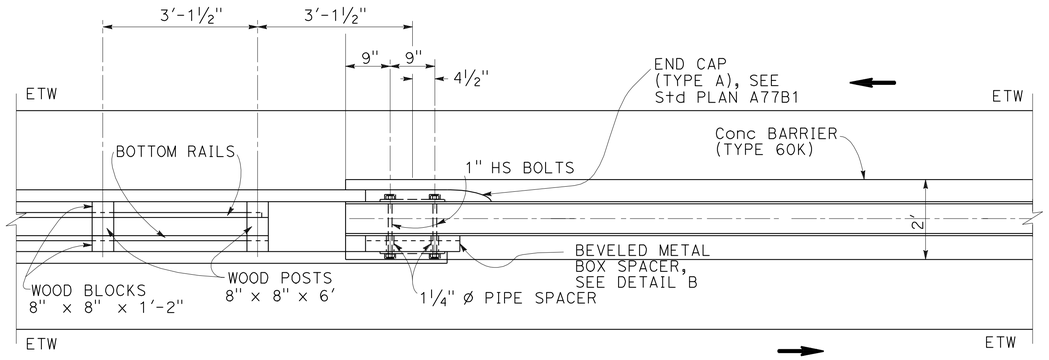

PLAN

NOTES:

1. 1¼" ø x 2 1/32" PIPE SPACERS ON 1" HS BOLTS PASSING THROUGH INTERIOR OF BOX.
2. DIRECTION OF TRAFFIC →

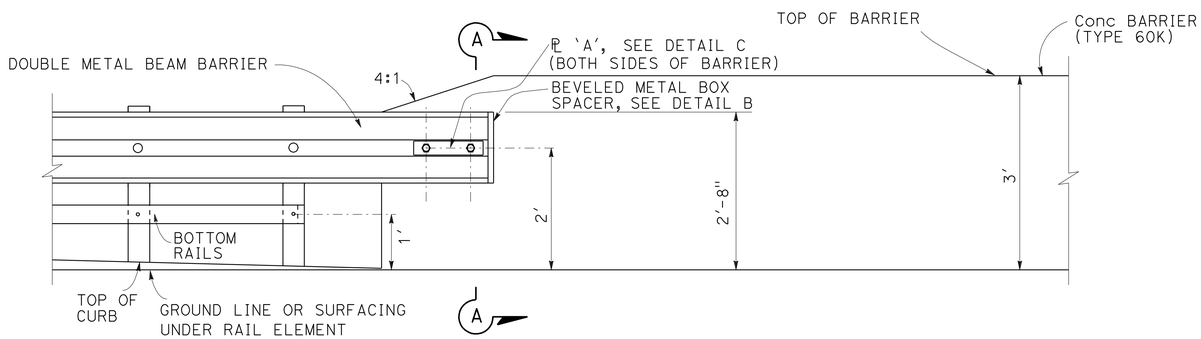

ELEVATION

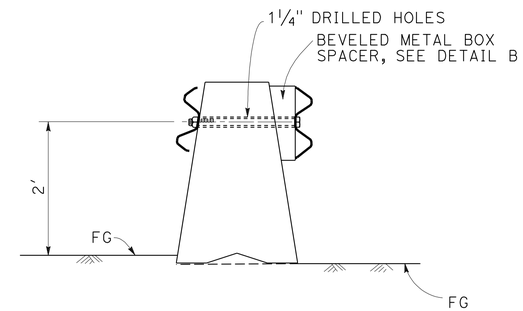

SECTION A-A

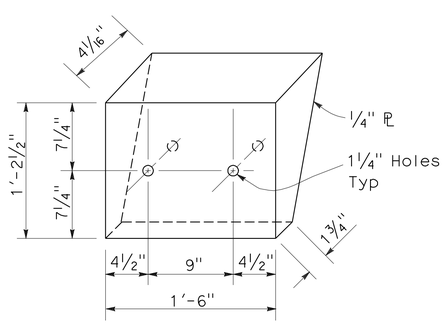

DETAIL B

Beveled metal box spacer
See Note 1

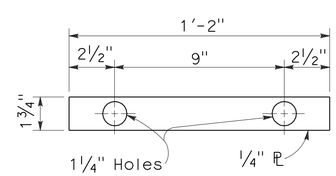

DETAIL C

PLATE 'A'

CONCRETE BARRIER (TYPE 60K) CONNECTION TO DOUBLE METAL BEAM BARRIER

CONSTRUCTION DETAILS

NO SCALE

C-22

STATE OF CALIFORNIA - DEPARTMENT OF TRANSPORTATION
Caltrans® OFFICE OF DESIGN A

FUNCTIONAL SUPERVISOR: ASADOUR TERTERIAN
CALCULATED-DESIGNED BY: SUSANNA YANG
CHECKED BY: MEDARDO DE LA CRUZ
REVISED BY
DATE REVISED

LAST REVISION 00-00-00
DATE PLOTTED => 30-JUN-2011
TIME PLOTTED => 18:27

Dist	COUNTY	ROUTE	POST MILES TOTAL PROJECT	SHEET No.	TOTAL SHEETS
07	LA	5	1.2/2.1	45	602

Medardo de la Cruz 3/14/11
REGISTERED CIVIL ENGINEER DATE

6-27-11
PLANS APPROVAL DATE

REGISTERED PROFESSIONAL ENGINEER MEDARDO DE LA CRUZ No. C61848 Exp. 6-30-11 CIVIL STATE OF CALIFORNIA

THE STATE OF CALIFORNIA OR ITS OFFICERS OR AGENTS SHALL NOT BE RESPONSIBLE FOR THE ACCURACY OR COMPLETENESS OF SCANNED COPIES OF THIS PLAN SHEET.

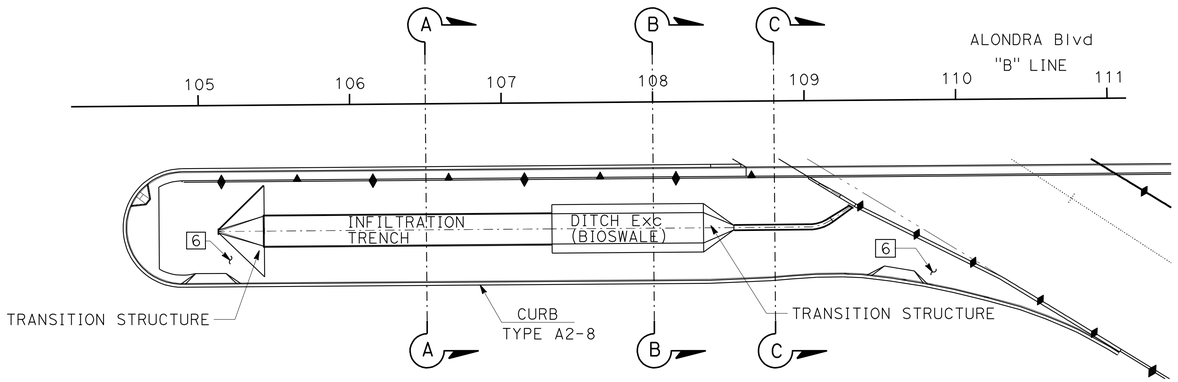

DRAINAGE SYSTEM No. 3-4

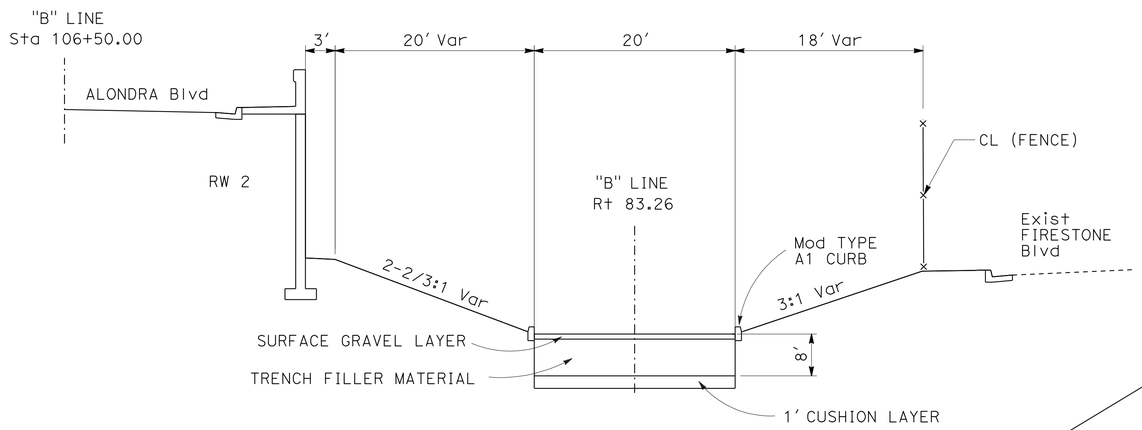

INFILTRATION TRENCH
"B" LINE Sta 105+42.985 TO 107+32.985

SECTION A-A

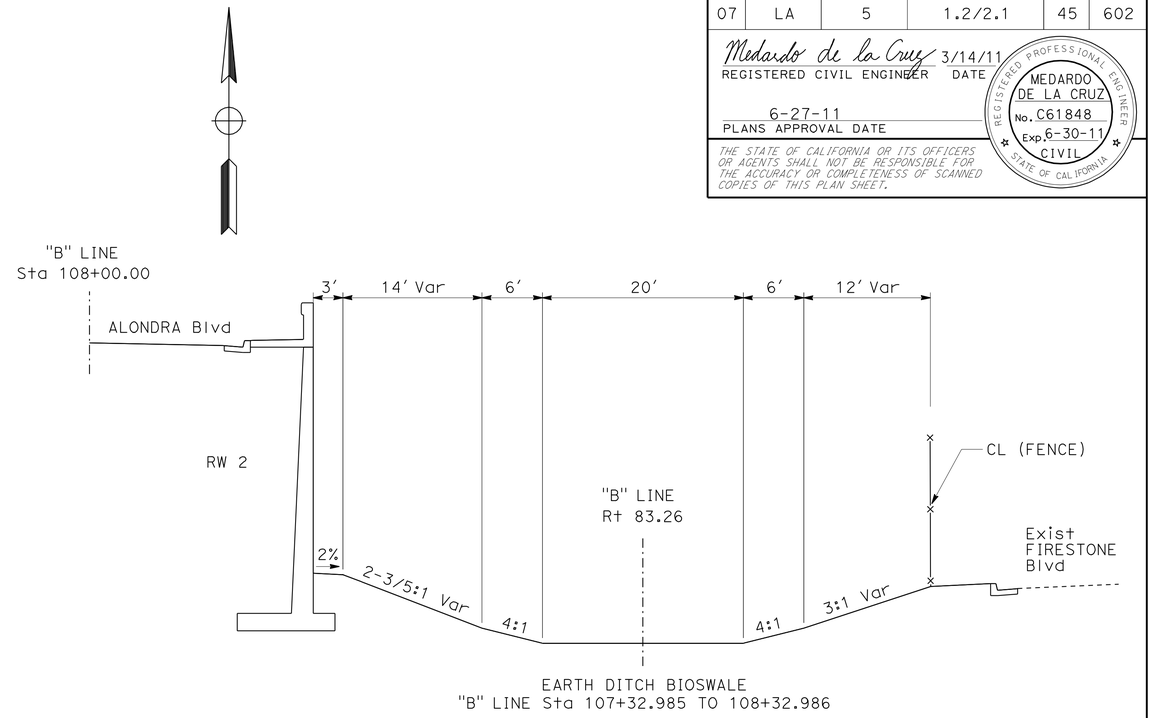

EARTH DITCH BIOSWALE
"B" LINE Sta 107+32.985 TO 108+32.986

SECTION B-B

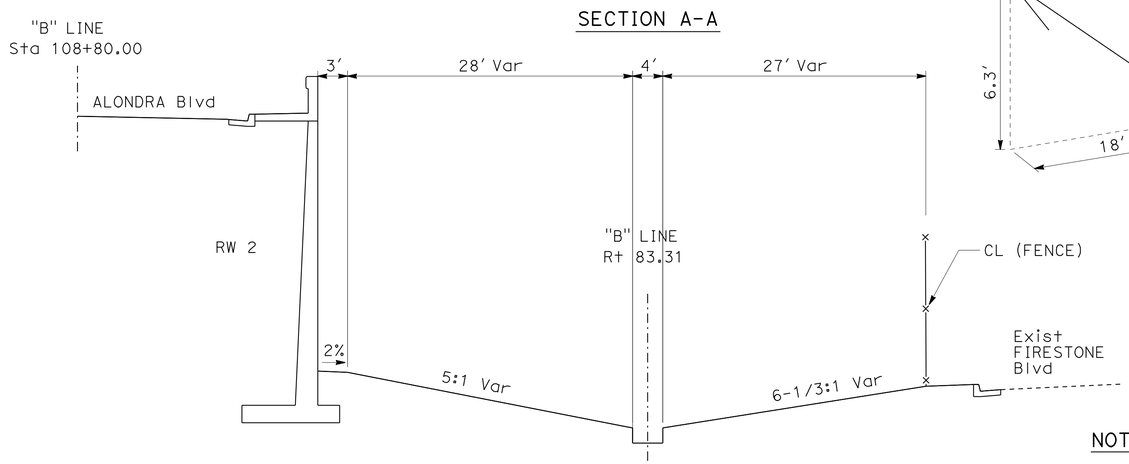

RECTANGULAR Conc CHANNEL
"B" LINE Sta 108+52.986 TO 109+2.835

SECTION C-C

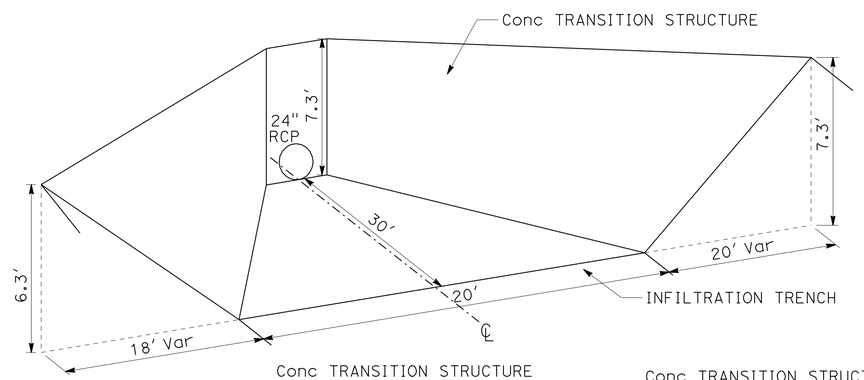

Conc TRANSITION STRUCTURE
"B" LINE
Sta 105+12.485 TO 105+42.985

ISOMETRIC VIEW

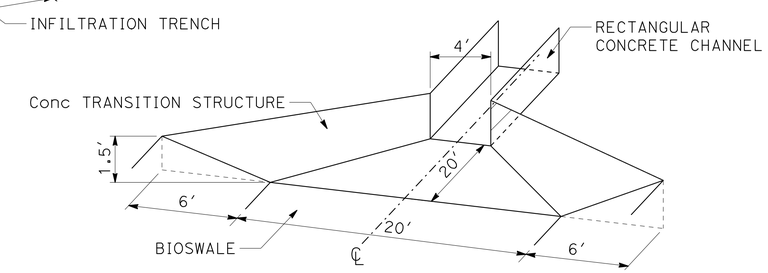

Conc TRANSITION STRUCTURE
"B" LINE
Sta 108+32.986 TO 108+52.986

ISOMETRIC VIEW

NOTES:

1. FOR ELEVATIONS SEE CONSTRUCTION DETAILS SHEET C-8.
2. SEE DRAINAGE PROFILES SHEET DP-17 FOR REFERENCE.

CONSTRUCTION DETAILS

NO SCALE

C-23

STATE OF CALIFORNIA - DEPARTMENT OF TRANSPORTATION
Caltrans OFFICE OF DESIGN A

FUNCTIONAL SUPERVISOR: ASADOUR TERTERIAN
CALCULATED-DESIGNED BY: KEDAR SAWANT
CHECKED BY: MEDARDO DE LA CRUZ
REVISED BY
DATE REVISED

LAST REVISION 00-00-00
DATE PLOTTED => 26-JUL-2011
TIME PLOTTED => 14:42

Dist	COUNTY	ROUTE	POST MILES TOTAL PROJECT	SHEET No.	TOTAL SHEETS
07	LA	5	1.2/2.1	46	602

George Olguin
LICENSED LANDSCAPE ARCHITECT

6-27-11
PLANS APPROVAL DATE

LICENSED LANDSCAPE ARCHITECT
GEORGE OLGUIN
NO. 4332
George Olguin
Signature
08-31-12
Renewal Date
03-14-11
Date
STATE OF CALIFORNIA

THE STATE OF CALIFORNIA OR ITS OFFICERS OR AGENTS SHALL NOT BE RESPONSIBLE FOR THE ACCURACY OR COMPLETENESS OF SCANNED COPIES OF THIS PLAN SHEET.

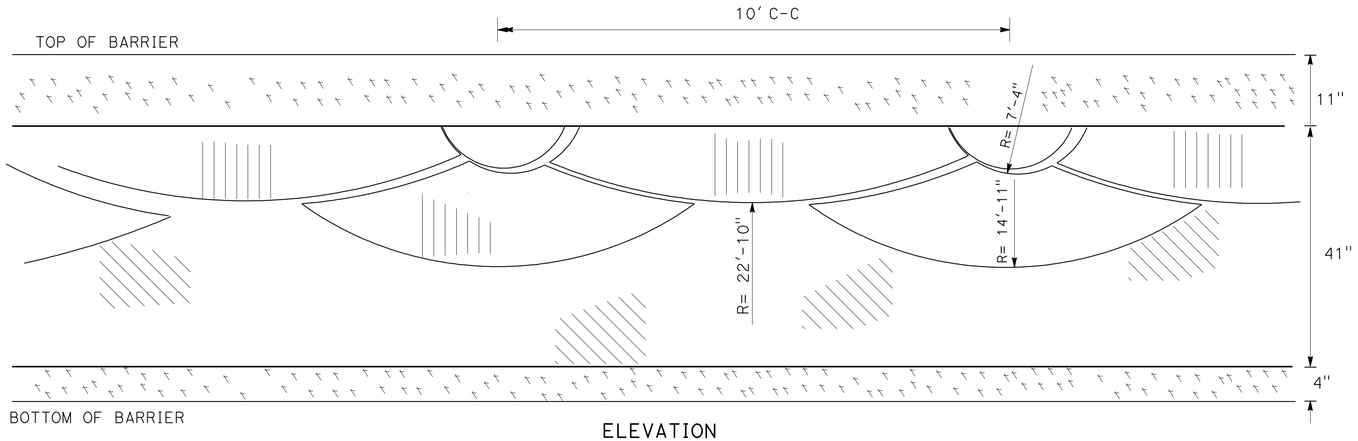

ELEVATION

CONCRETE BARRIER

ARCHITECTURAL SURFACE TREATMENT
(SCALLOP WALL PATTERN)

SURFACE TEXTURES AND FINISHES:

SMOOTH FINISH

LIGHT FRACTURED GRANITE FINISH

HEAVY FRACTURED GRANITE FINISH

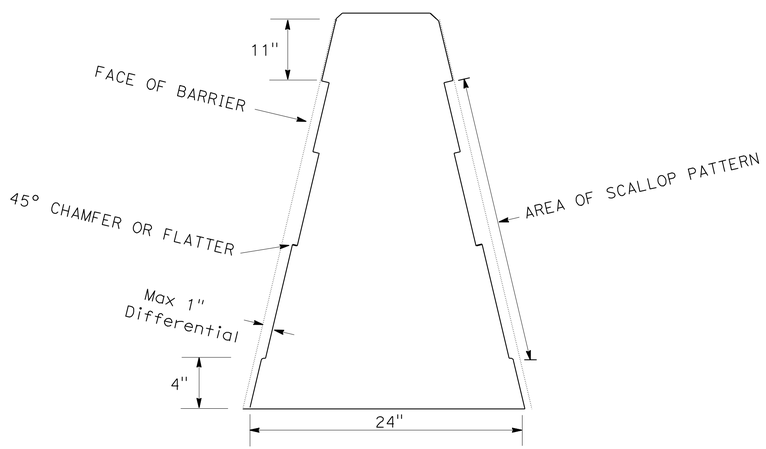

SECTION

CONCRETE BARRIER (TYPE 60G)

(SCALLOP PATTERN DIFFERENTIAL)

ARCHITECTURAL SURFACE TREATMENT
CONSTRUCTION BARRIER TYPE 60G

CONSTRUCTION DETAILS

NO SCALE

C-24

REVISED BY | DATE REVISED
C ZEPEDA | G OLGUIN
CALCULATED-DESIGNED BY | CHECKED BY
SENIOR LANDSCAPE ARCHITECT
JENNIFER TAIRA
STATE OF CALIFORNIA - DEPARTMENT OF TRANSPORTATION
Caltrans® LANDSCAPE ARCHITECTURE

LAST REVISION 00-00-00 | DATE PLOTTED => 30-JUN-2011 TIME PLOTTED => 18:27

Dist	COUNTY	ROUTE	POST MILES TOTAL PROJECT	SHEET No.	TOTAL SHEETS
07	LA	5	1.2/2.1	47	602

Medardo de la Cruz 3/14/11
REGISTERED CIVIL ENGINEER DATE

6-27-11
PLANS APPROVAL DATE

REGISTERED PROFESSIONAL ENGINEER
MEDARDO DE LA CRUZ
No. C61848
Exp. 6-30-11
CIVIL
STATE OF CALIFORNIA

THE STATE OF CALIFORNIA OR ITS OFFICERS OR AGENTS SHALL NOT BE RESPONSIBLE FOR THE ACCURACY OR COMPLETENESS OF SCANNED COPIES OF THIS PLAN SHEET.

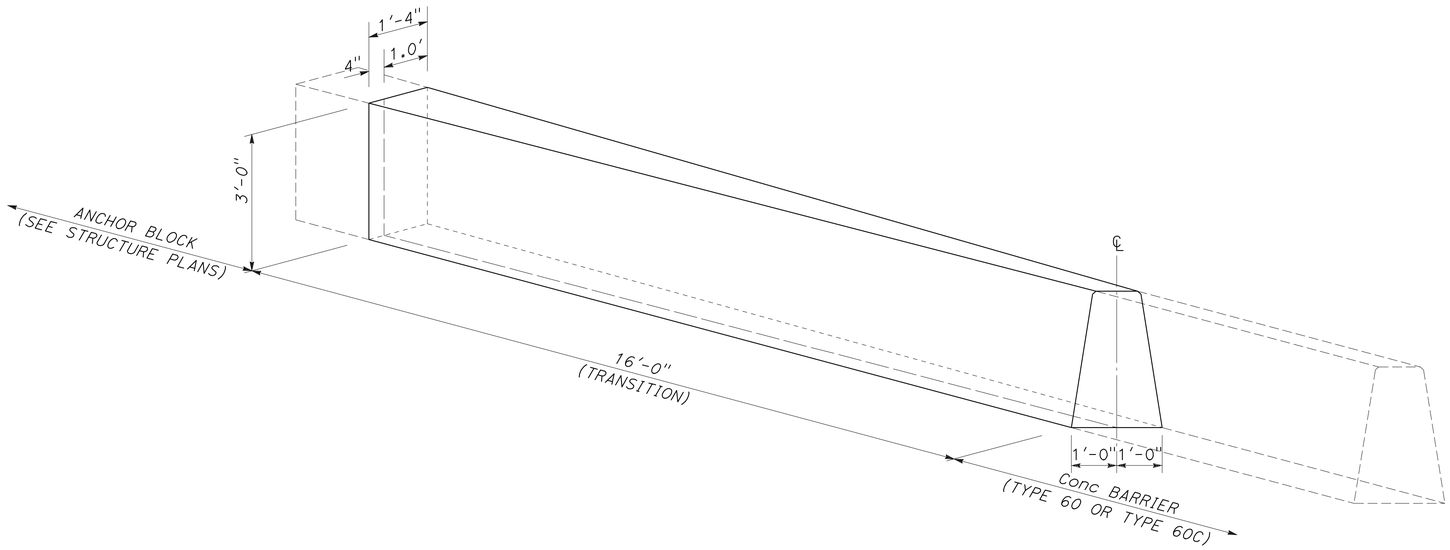

ANCHOR BLOCK TO CONCRETE BARRIER TRANSITION

LEGEND:

COLD PLANE AC Pvmt

REPLACE CONCRETE PAVEMENT (RAPID STRENGTH CONCRETE)

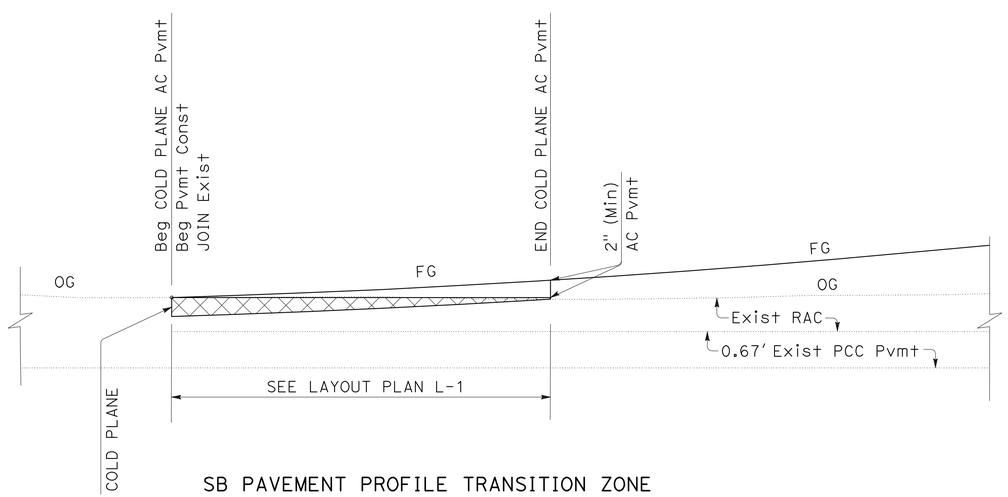

SB PAVEMENT PROFILE TRANSITION ZONE

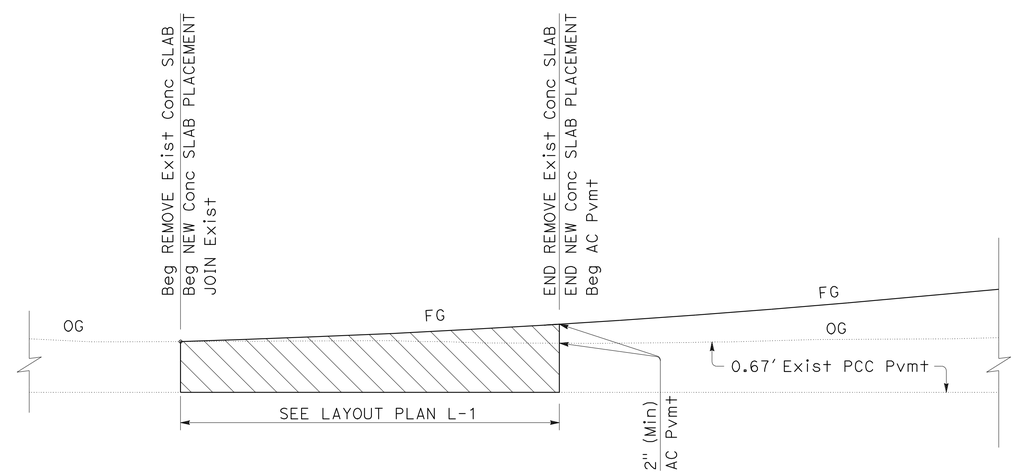

NB PAVEMENT PROFILE TRANSITION ZONE

CONSTRUCTION DETAILS

NO SCALE

C-25

STATE OF CALIFORNIA - DEPARTMENT OF TRANSPORTATION
Caltrans OFFICE OF DESIGN A

FUNCTIONAL SUPERVISOR: ASADOUR TERTERIAN

CALCULATED-DESIGNED BY: MARCELO DE LA FUENTE
CHECKED BY: MEDARDO DE LA CRUZ

REVISED BY | DATE REVISED

LAST REVISION 00-00-00 | DATE PLOTTED => 30-JUN-2011 | TIME PLOTTED => 18:27

Dist	COUNTY	ROUTE	POST MILES TOTAL PROJECT	SHEET No.	TOTAL SHEETS
07	LA	5	1.2/2.1	48	602

REGISTERED CIVIL ENGINEER 3/14/11 DATE

6-27-11
PLANS APPROVAL DATE

REGISTERED PROFESSIONAL ENGINEER TIMOTHY B. SOBELMAN No. 59249 Exp. 6-30-11 CIVIL STATE OF CALIFORNIA

THE STATE OF CALIFORNIA OR ITS OFFICERS OR AGENTS SHALL NOT BE RESPONSIBLE FOR THE ACCURACY OR COMPLETENESS OF SCANNED COPIES OF THIS PLAN SHEET.

GENERAL NOTES

Designation:
Partial Austin Vault Sand Filters (AVSFs) are open air reinforced concrete vaults utilizing both sedimentation and sand filtration basins. Type designation is based on length configuration, water quality volume to be drained in a 24 hour period, and average depth of water.

Standard configurations are noted for the following design water quality volumes (WQV): 5,000, 10,000, and 15,000 cubic feet. Length configurations are either short (S) or long (L). The average water depth can be either 3 ft, 4.5 ft, or 6 ft as designed in Design Water Quality Volumes (WQV) table.

Special Reinforcement Coverage:
AVSF Standard Details are not to be used in a corrosive environment or where there is a severe abrasive flow condition or in freeze-thaw locations.

Special Design:
Required for the following conditions:
ground water conditions above bottom of AVSF, surcharge loads exceeding HS20 truck load, design bearing pressures or sizes greater than those on this plan, inlet velocities which exceed 8.0 ft/sec at gabion wall, and settlement due to liquefaction.

DESIGN WATER QUALITY VOLUMES (WQV)

AVSF Type*	WQV (ft^3)	W(ft)	Ls(ft)	Lf(ft)	Hw(ft)
S-3500-3	3,500	21	14	38	3
L-3500-3	3,500	15	18	53	3
S-3500-4.5	4,380	21	14	38	4.5
L-3500-4.5	4,380	15	18	53	4.5
S-3500-6	5,260	21	14	38	6
L-3500-6	5,260	15	18	53	6
S-5000-3	5,000	27	15	42	3
L-5000-3	5,000	18	21	63	3
S-5000-4.5	6,250	27	15	42	4.5
L-5000-4.5	6,250	18	21	63	4.5
S-5000-6	7,500	27	15	42	6
L-5000-6	7,500	18	21	63	6
S-10000-3	10,000	36	21	63	3
L-10000-3	10,000	24	30	94	3
S-10000-4.5	12,500	36	21	63	4.5
L-10000-4.5	12,500	24	30	94	4.5
S-10000-6	15,000	36	21	63	6
L-10000-6	15,000	24	30	94	6
S-15000-3	15,000	45	25	76	3
L-15000-3	15,000	30	37	115	3
S-15000-4.5	18,750	45	25	76	4.5
L-15000-4.5	18,750	30	37	115	4.5
S-15000-6	22,500	45	25	76	6
L-15000-6	22,500	30	37	115	6

* AVSF Type = Length configuration (S or L) - water quality volume (CF) - design water depth (Hw elevation)

DESIGN NOTES

Specifications:
Design:
Bridge Design Specification April 2000 (LFD)
(1996 AASHTO) with interims and revisions by Caltrans

Wall & Footing (LFD): 1.5 D + 1.5 E + 1.5 W + 1.5 SC
Where D = Dead Load
E = Earth Load
W = Water Load
SC = Surcharge

Capacity reduction factor is included.

Earth Load:
125 lb/ft^3 vertical,

Water Load:
62.4 lb/ft^3 horizontal/vertical,

Earth pressure for 2:1 unlimited slope determined from Rankine's formula with $\phi = 33°42'$ (Case II).

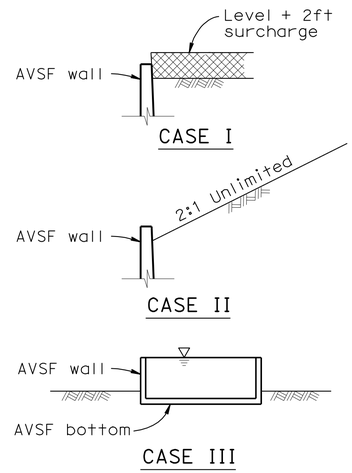

DETAIL OF DESIGN LOADING CASES

CASE I Level + 2ft surcharge, AVSF empty
CASE II 2:1 Unlimited slope, AVSF empty
CASE III AVSF full of water, no soil pressure

Unit Stresses:
f'_c = 4,000 psi
f_y = 60,000 psi

1NDEX TO PLAN

SHEET No.	TITLE
1	GENERAL NOTES
2	LAYOUT No. 1
3	LAYOUT No. 2
4	WALL DETAILS
5	DETAILS No. 1
6	DETAILS No. 2
7	DETAILS No. 3
8	DETAILS No. 4
9	MISCELLANEOUS DETAILS No. 1

CONSTRUCTION NOTES

Expansion joints:
Inverts and sidewalls - Place ½" expansion joint filler and waterstop where indicated. see "Details No. 2" sheet for specific wall & invert details.

Construction Joints:
Shall be placed where indicated on plans.

Backfill:
See Standard Specifications, except the difference in backfill shall not exceed 8'-0" between side walls and inlet and outlet walls.

Earthwork:
Limits of payment for excavation and backfill.

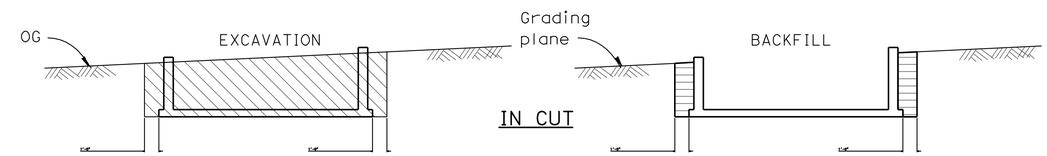

LEGEND
Structure excavation (AVSF)
Structure backfill (AVSF)
Original ground, OG

NOTES
1. Slope or shore excavation sides as necessary.
2. Dimensions shown are minimum.
3. 95% compaction 1'-0" below floor slabs.

STANDARD PLANS DATED JULY 2006

BO-3	BRIDGE DETAILS
B3-9	RETAINING WALL DETAILS No. 2
RSP B6-21	JOINT SEALS (MAXIMUM MOVEMENT RATING = 2")
B11-47	CABLE RAILING
D100A	GABION BASKET DETAILS No. 1
D100B	GABION BASKET DETAILS No. 2

STANDARD PLAN SHEET No.
DETAIL No.

AUSTIN VAULT SAND FILTER GENERAL NOTES

CONSTRUCTION DETAILS
NO SCALE

C-26

REVISED BY | DATE REVISED
KEDAR SAWANT | MEDARDO DE LA CRUZ
CALCULATED-DESIGNED BY | CHECKED BY
FUNCTIONAL SUPERVISOR
ASADOUR TERTERIAN
STATE OF CALIFORNIA - DEPARTMENT OF TRANSPORTATION
Caltrans OFFICE OF DESIGN A

LAST REVISION 00-00-00 | DATE PLOTTED => 30-JUN-2011 | TIME PLOTTED => 18:27

Dist	COUNTY	ROUTE	POST MILES TOTAL PROJECT	SHEET No.	TOTAL SHEETS
07	LA	5	1.2/2.1	49	602

REGISTERED CIVIL ENGINEER 3/14/11 DATE

6-27-11
PLANS APPROVAL DATE

REGISTERED PROFESSIONAL ENGINEER TIMOTHY B. SOBELMAN No. 59249 Exp. 6-30-11 CIVIL STATE OF CALIFORNIA

THE STATE OF CALIFORNIA OR ITS OFFICERS OR AGENTS SHALL NOT BE RESPONSIBLE FOR THE ACCURACY OR COMPLETENESS OF SCANNED COPIES OF THIS PLAN SHEET.

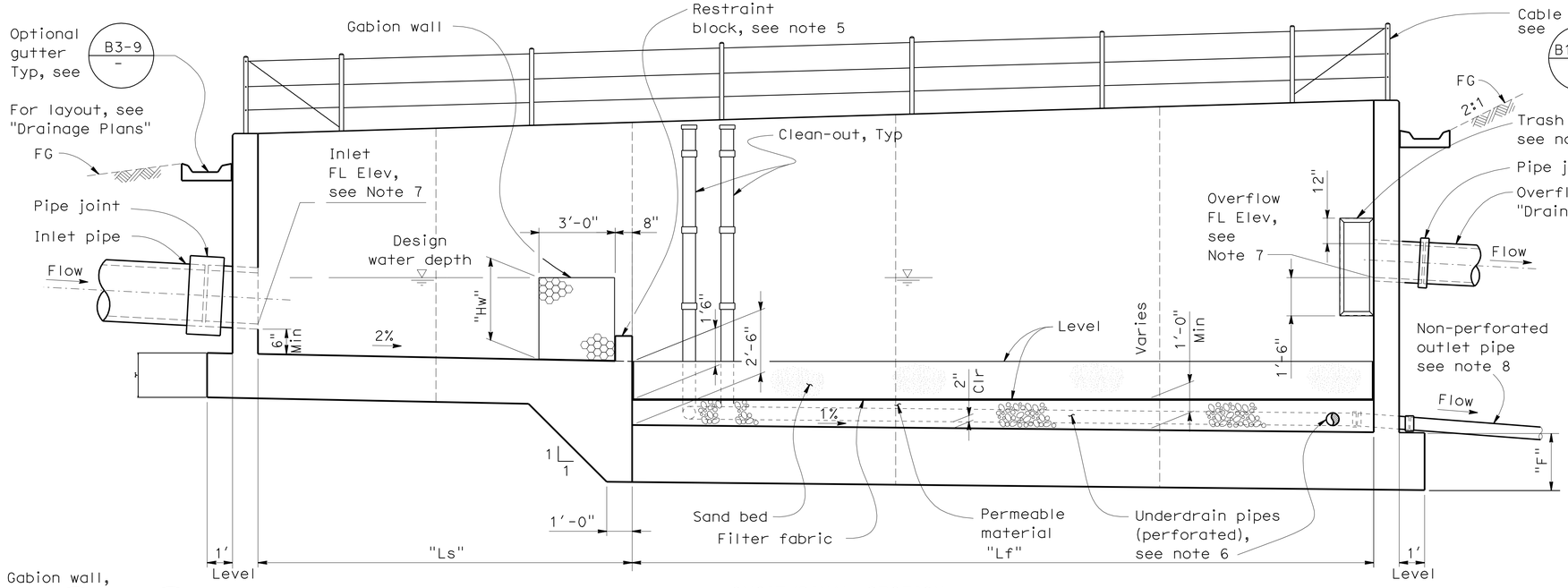

LONGITUDINAL SECTION

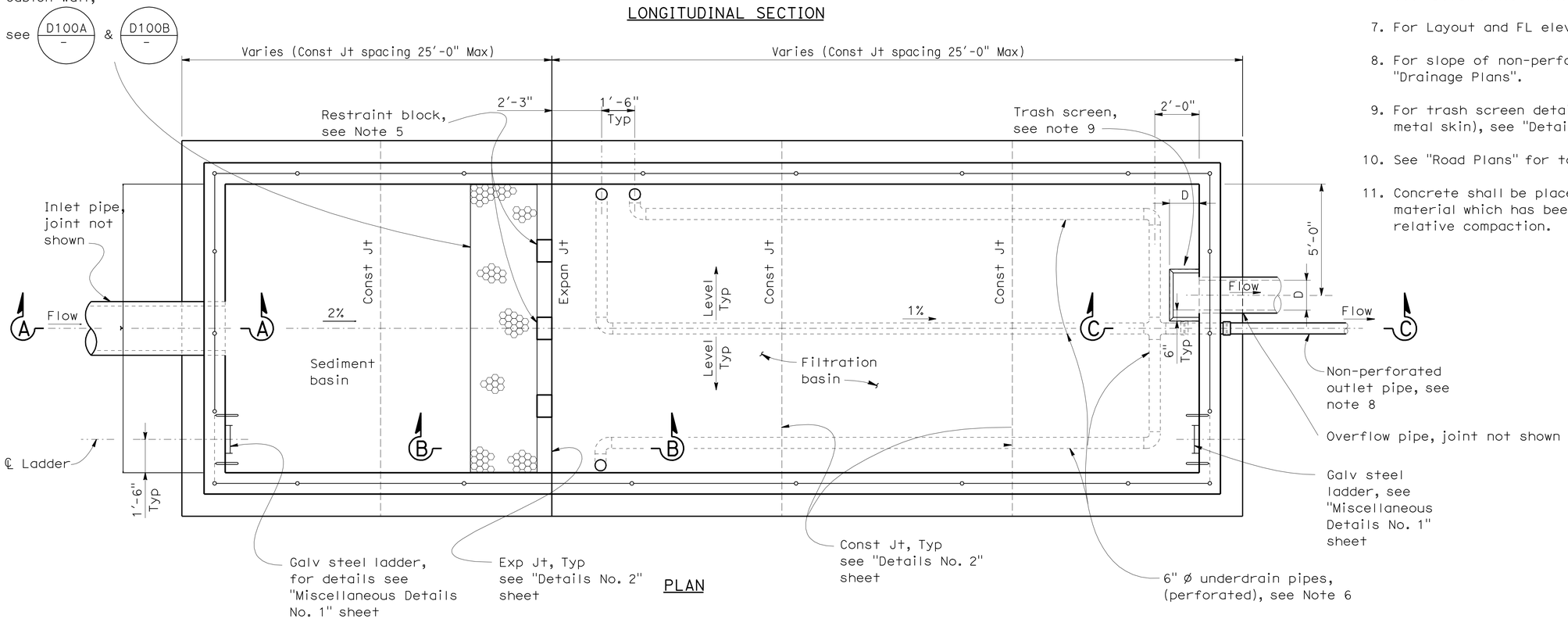

PLAN

Note: Gutter not shown for clarity.

NOTES:

1. For dimensions "W", "Ls", "Lf" and "Hw", see Design WQV table on "General Notes" sheet.
2. For dimensions "C" and "F", see "Wall Details" sheet.
3. For Typical Section, see "Wall Details" sheet.
4. For Section A - A, B - B and C - C, see "Details No. 1" sheet.
5. For restraint block details, see "Details No. 1" and "Details No. 2" sheets.
6. For details of underdrain (sand filter), see "Details No. 4" sheet.
7. For Layout and FL elevation, see "Drainage Plans".
8. For slope of non-perforated outlet pipe, see "Drainage Plans".
9. For trash screen details (frame and perforated metal skin), see "Details No 3" sheet.
10. See "Road Plans" for top of wall elevations.
11. Concrete shall be placed on base or native material which has been compacted to 95% relative compaction.

AUSTIN VAULT SAND FILTER S-15000-6
LAYOUT No. 1

CONSTRUCTION DETAILS
NO SCALE

C-27

STATE OF CALIFORNIA - DEPARTMENT OF TRANSPORTATION
Caltrans OFFICE OF DESIGN A

FUNCTIONAL SUPERVISOR: ASADOUR TERTERIAN
CALCULATED-DESIGNED BY: KEDAR SAWANT
CHECKED BY: MEDARDO DE LA CRUZ
REVISED BY / DATE REVISED

LAST REVISION 00-00-00 | DATE PLOTTED => 30-JUN-2011 | TIME PLOTTED => 18:27

Dist	COUNTY	ROUTE	POST MILES TOTAL PROJECT	SHEET No.	TOTAL SHEETS
07	LA	5	1.2/2.1	50	602

Timothy B Sobelman 3/14/11
REGISTERED CIVIL ENGINEER DATE

6-27-11
PLANS APPROVAL DATE

REGISTERED PROFESSIONAL ENGINEER TIMOTHY B. SOBELMAN No. 59249 Exp. 6-30-11 CIVIL STATE OF CALIFORNIA

THE STATE OF CALIFORNIA OR ITS OFFICERS OR AGENTS SHALL NOT BE RESPONSIBLE FOR THE ACCURACY OR COMPLETENESS OF SCANNED COPIES OF THIS PLAN SHEET.

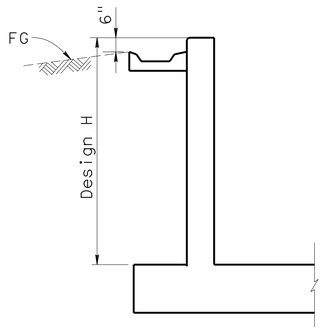

TYPICAL WALL SECTION
(INLET, OUTLET, AND SIDEWALL)

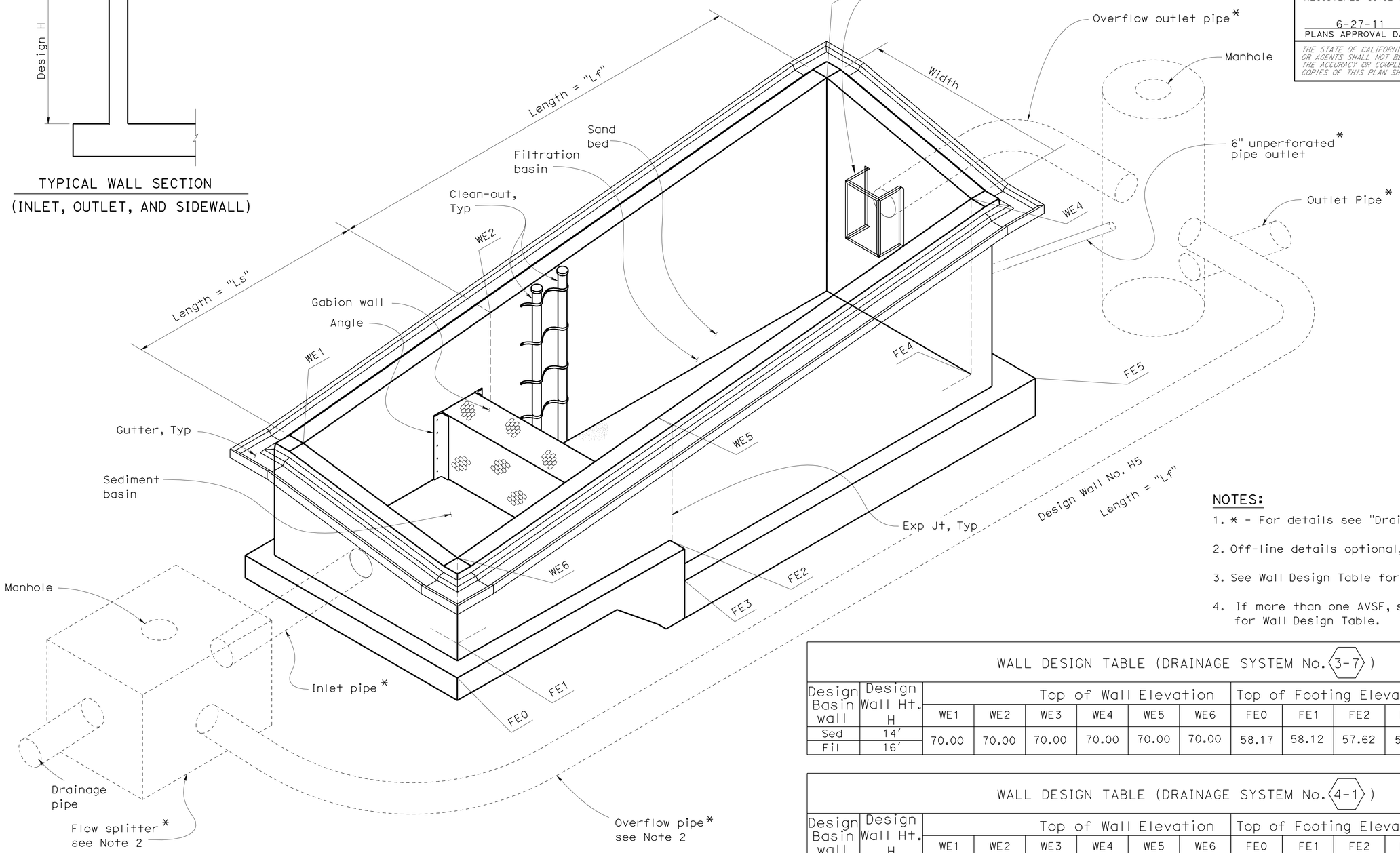

ISOMETRIC VIEW - AUSTIN VAULT SAND FILTER DRAINAGE SYSTEM

NOTE: Steel ladders and cable railings not shown for clarity.

NOTES:

1. * - For details see "Drainage Plans".
2. Off-line details optional, see "Drainage Plans".
3. See Wall Design Table for Height.
4. If more than one AVSF, see Drainage/Layout Plans for Wall Design Table.

WALL DESIGN TABLE (DRAINAGE SYSTEM No. 3-7)

Design Basin wall	Design Wall Ht. H	Top of Wall Elevation						Top of Footing Elevation					
		WE1	WE2	WE3	WE4	WE5	WE6	FE0	FE1	FE2	FE3	FE4	FE5
Sed	14'	70.00	70.00	70.00	70.00	70.00	70.00	58.17	58.12	57.62	55.12	54.36	54.34
Fil	16'												

WALL DESIGN TABLE (DRAINAGE SYSTEM No. 4-1)

Design Basin wall	Design Wall Ht. H	Top of Wall Elevation						Top of Footing Elevation					
		WE1	WE2	WE3	WE4	WE5	WE6	FE0	FE1	FE2	FE3	FE4	FE5
Sed	14'	69.50	69.50	69.50	69.50	69.50	69.50	57.32	57.27	56.77	54.27	53.51	53.49
Fil	16'												

AUSTIN VAULT SAND FILTER S-15000-6
LAYOUT No. 2

CONSTRUCTION DETAILS

NO SCALE

C-28

STATE OF CALIFORNIA - DEPARTMENT OF TRANSPORTATION
Caltrans® OFFICE OF DESIGN A

FUNCTIONAL SUPERVISOR: ASADOUR TERTERIAN
CALCULATED-DESIGNED BY: KEDAR SAWANT
CHECKED BY: MEDARDO DE LA CRUZ
REVISED BY
DATE REVISED

LAST REVISION 00-00-00 | DATE PLOTTED => 30-JUN-2011 | TIME PLOTTED => 18:27

Dist	COUNTY	ROUTE	POST MILES TOTAL PROJECT	SHEET No.	TOTAL SHEETS
07	LA	5	1.2/2.1	51	602

REGISTERED CIVIL ENGINEER 3/14/11 DATE

6-27-11
PLANS APPROVAL DATE

REGISTERED PROFESSIONAL ENGINEER TIMOTHY B. SOBELMAN No. 59249 Exp. 6-30-11 CIVIL STATE OF CALIFORNIA

THE STATE OF CALIFORNIA OR ITS OFFICERS OR AGENTS SHALL NOT BE RESPONSIBLE FOR THE ACCURACY OR COMPLETENESS OF SCANNED COPIES OF THIS PLAN SHEET.

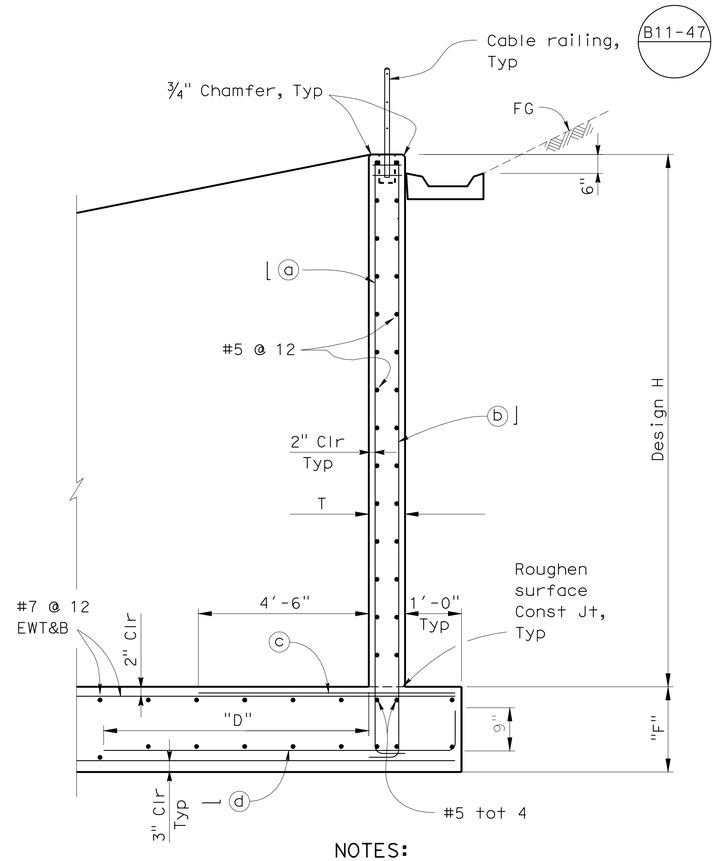

NOTES:

"D" = 8'-0" when "W" ≤ 30'-0"
"D" = 12'-0" when "W" > 30'-0"

TYPICAL SECTION

NOTES:

1. For width dimension "W", see "General Notes" sheet.
2. For footing details not shown, see "Footing Details" sheet.
3. The contractor shall have the option of matching the Sedimentation Basin wall thickness with the Filtration Basin wall thickness. This shall be at no additional cost to the State.
4. Reinforcement notation "EWT&B" is acronym for "Each Way Top & Bottom".
5. Width "W" is the inside width between walls, see "Layout No. 1" sheet and the Design WQV table on "General Notes" sheet.
6. For additional corner reinforcement not indicated see "Typical Corner Detail" on "Details No. 1" sheet.

TABLE OF REINFORCING STEEL DIMENSIONS AND DATA FOR WALL

Design H	6'	8'	10'	12'	14'	16'
T	12"	12"	12"	12"	14"	14"
F	1'-3"	1'-3"	1'-3"	1'-6"	1'-9"	1'-9"
⌋ ⓐ bars # @ "	6 @ 12	6 @ 12	6 @ 8	7 @ 8	8 @ 8	9 @ 6
⌊ ⓑ bars # @ "	6 @ 12	6 @ 12	6 @ 8	7 @ 8	8 @ 8	8 @ 6
ⓒ bars # @ "	6 @ 12	6 @ 12	6 @ 8	6 @ 8	7 @ 8	7 @ 6
— ⓓ bars # @ "	6 @ 12	6 @ 12	6 @ 8	6 @ 8	7 @ 8	7 @ 6

AUSTIN VAULT SAND FILTER
WALL DETAILS

CONSTRUCTION DETAILS
NO SCALE

C-29

STATE OF CALIFORNIA - DEPARTMENT OF TRANSPORTATION
Caltrans® **OFFICE OF DESIGN A**

FUNCTIONAL SUPERVISOR: ASADOUR TERTERIAN
CALCULATED-DESIGNED BY: KEDAR SAWANT
CHECKED BY: MEDARDO DE LA CRUZ
REVISED BY
DATE REVISED

LAST REVISION 00-00-00
DATE PLOTTED => 30-JUN-2011
TIME PLOTTED => 15:08

Dist	COUNTY	ROUTE	POST MILES TOTAL PROJECT	SHEET No.	TOTAL SHEETS
07	LA	5	1.2/2.1	52	602

Timothy G Sobelman 3/14/11
REGISTERED CIVIL ENGINEER DATE

6-27-11
PLANS APPROVAL DATE

REGISTERED PROFESSIONAL ENGINEER TIMOTHY B. SOBELMAN No. 59249 Exp. 6-30-11 CIVIL STATE OF CALIFORNIA

THE STATE OF CALIFORNIA OR ITS OFFICERS OR AGENTS SHALL NOT BE RESPONSIBLE FOR THE ACCURACY OR COMPLETENESS OF SCANNED COPIES OF THIS PLAN SHEET.

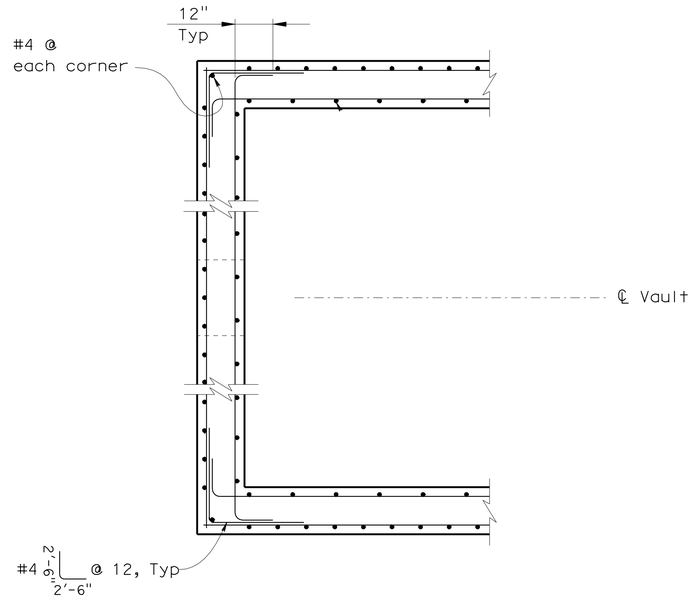

TYPICAL CORNER DETAIL

NOTE: Inlet wall shown, outlet wall similar.

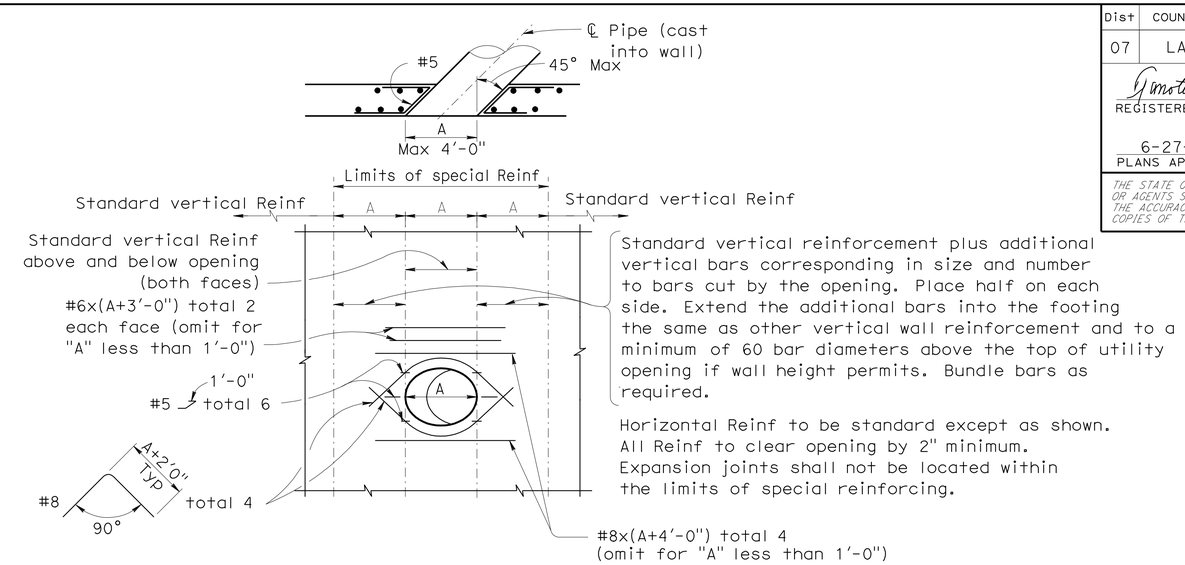

WALL OPENING DETAIL

To be used at inlet, outlet and overflow pipe locations

NOTE: The rebar lengths shown are maximum and shall be adjusted due to the limitations of space.

NOTES:

1. For section locations, see "Layout No. 1 " sheet.
2. For wall and footing reinforcement details, see Typical Section on "Wall Details" sheet.

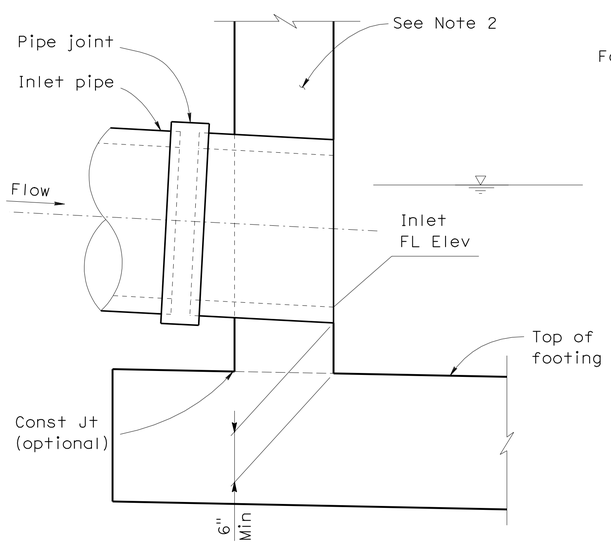

SECTION A - A

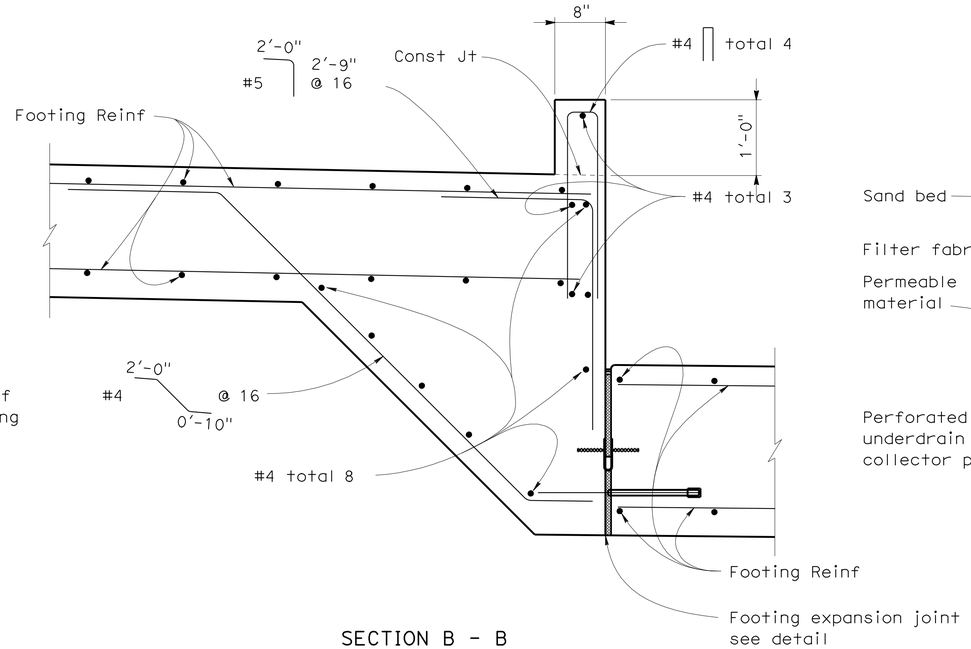

SECTION B - B

(Gabion wall and other details not shown for clarity)

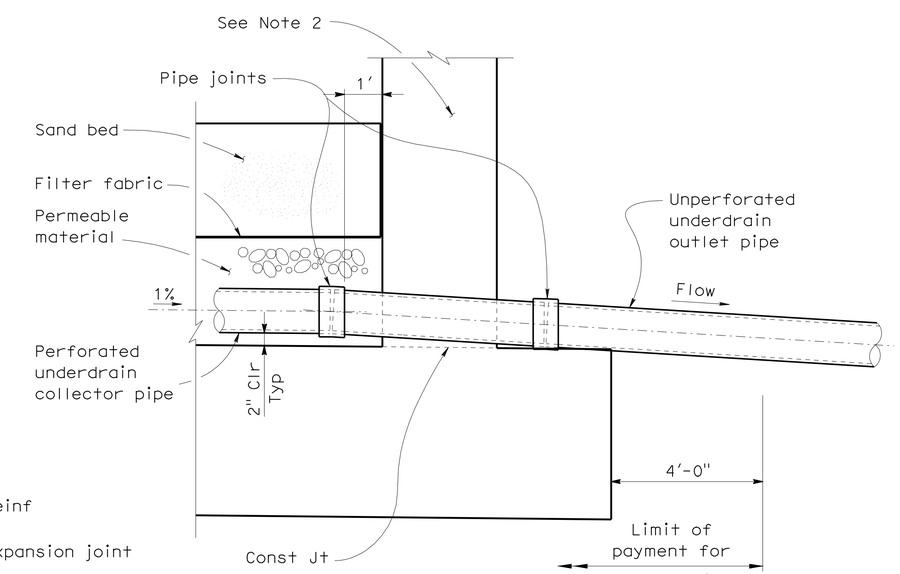

SECTION C - C

CONSTRUCTION DETAILS

NO SCALE

C-30

STATE OF CALIFORNIA - DEPARTMENT OF TRANSPORTATION
Caltrans® OFFICE OF DESIGN A

FUNCTIONAL SUPERVISOR: ASADOUR TERTERIAN
CALCULATED-DESIGNED BY: KEDAR SAWANT
CHECKED BY: MEDARDO DE LA CRUZ
REVISED BY
DATE REVISED

LAST REVISION 00-00-00
DATE PLOTTED => 30-JUN-2011
TIME PLOTTED => 15:08

Dist	COUNTY	ROUTE	POST MILES TOTAL PROJECT	SHEET No.	TOTAL SHEETS
07	LA	5	1.2/2.1	53	602

Timothy G Sobelman 3/14/11
REGISTERED CIVIL ENGINEER DATE

6-27-11
PLANS APPROVAL DATE

REGISTERED PROFESSIONAL ENGINEER TIMOTHY B. SOBELMAN No. 59249 Exp. 6-30-11 CIVIL STATE OF CALIFORNIA

THE STATE OF CALIFORNIA OR ITS OFFICERS OR AGENTS SHALL NOT BE RESPONSIBLE FOR THE ACCURACY OR COMPLETENESS OF SCANNED COPIES OF THIS PLAN SHEET.

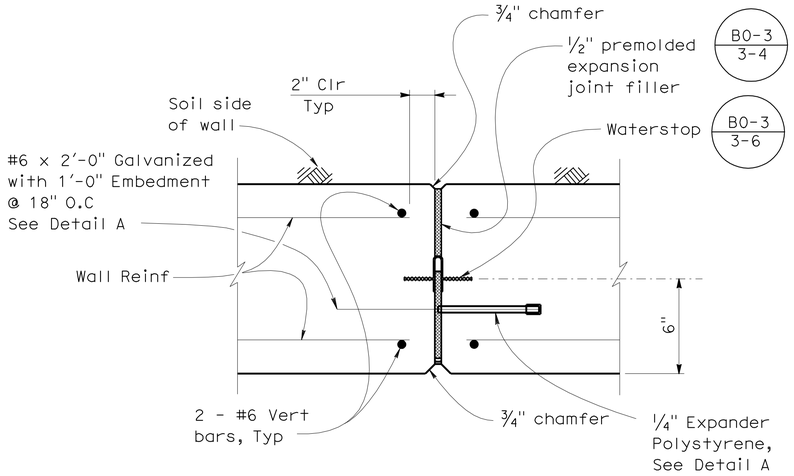

WALL EXPANSION JOINT DETAIL - PLAN SECTION

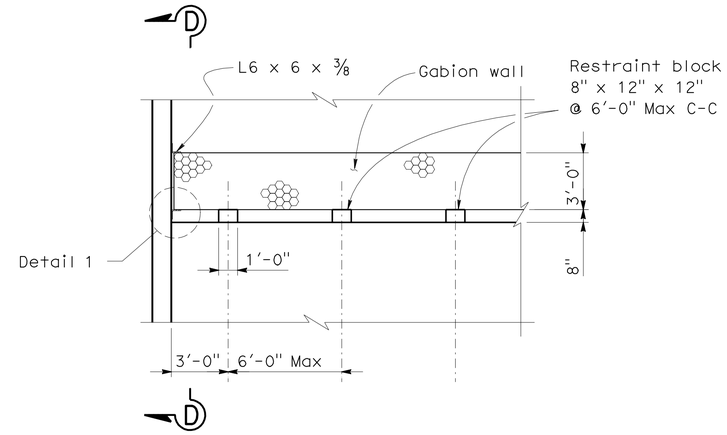

RESTRAINT BLOCK DETAIL

NOTE:

1. Stagger splices unless noted otherwise.

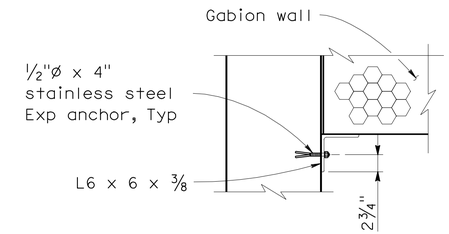

DETAIL 1

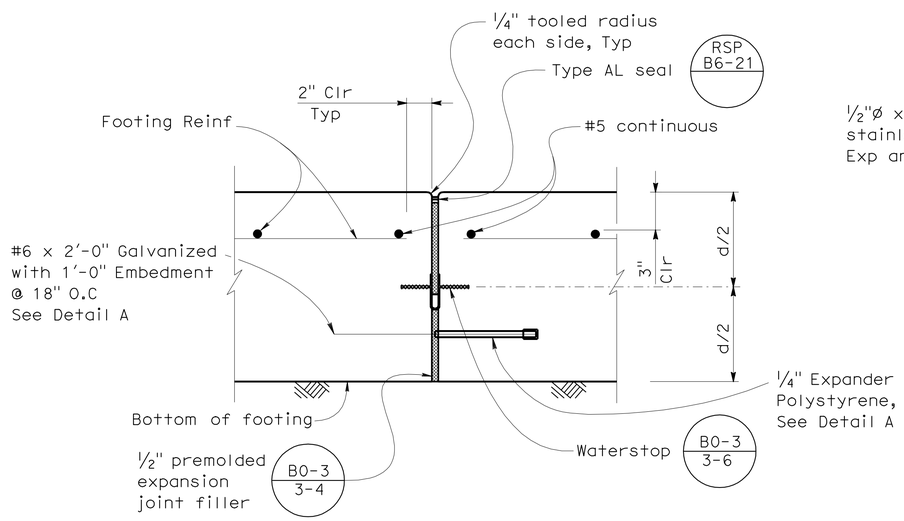

FOOTING EXPANSION JOINT DETAIL

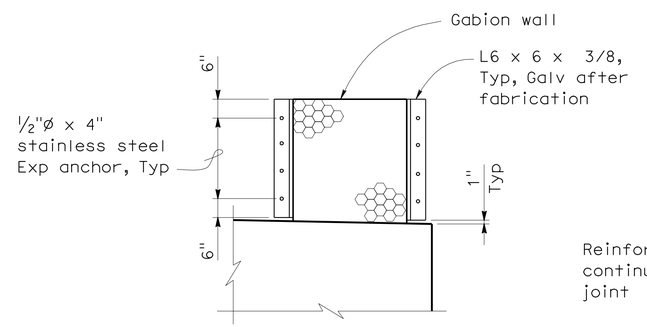

SECTION D - D

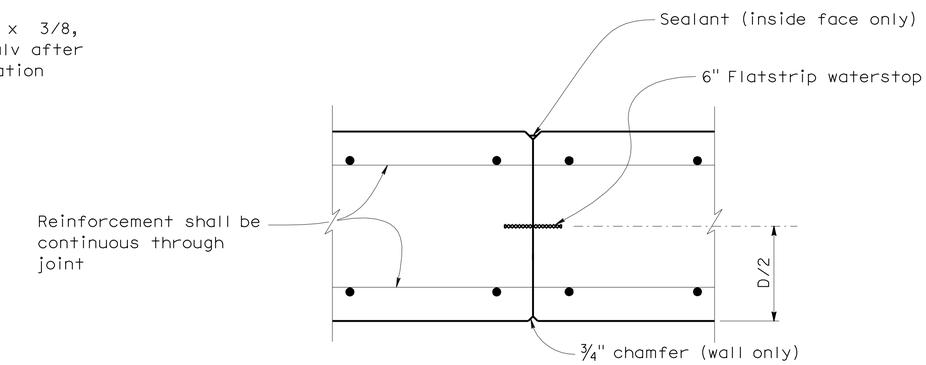

WALL CONSTRUCTION JOINT DETAIL

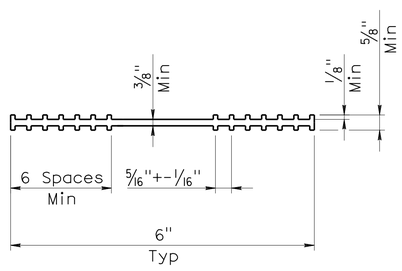

6" FLATSTRIP WATER STOP DETAIL

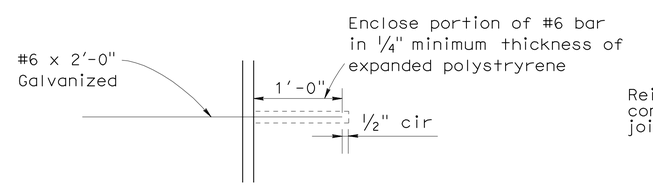

DETAIL A

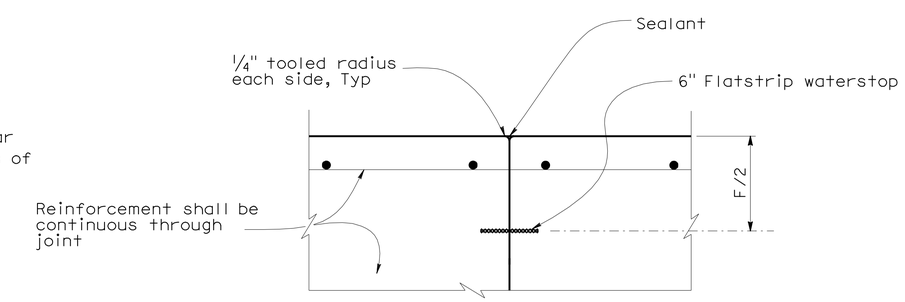

FOOTING CONSTRUCTION JOINT DETAIL

AUSTIN VAULT SAND FILTER DETAILS No. 2

CONSTRUCTION DETAILS

NO SCALE

C-31

STATE OF CALIFORNIA - DEPARTMENT OF TRANSPORTATION
Caltrans® OFFICE OF DESIGN A

FUNCTIONAL SUPERVISOR: ASADOUR TERTERIAN
CALCULATED-DESIGNED BY: KEDAR SAWANT
CHECKED BY: MEDARDO DE LA CRUZ
REVISED BY
DATE REVISED

LAST REVISION 00-00-00
DATE PLOTTED => 30-JUN-2011
TIME PLOTTED => 15:09

Dist	COUNTY	ROUTE	POST MILES TOTAL PROJECT	SHEET No.	TOTAL SHEETS
07	LA	5	1.2/2.1	54	602

Timothy B Sobelman 3/14/11
REGISTERED CIVIL ENGINEER DATE

6-27-11
PLANS APPROVAL DATE

REGISTERED PROFESSIONAL ENGINEER TIMOTHY B. SOBELMAN No. 59249 Exp. 6-30-11 CIVIL STATE OF CALIFORNIA

THE STATE OF CALIFORNIA OR ITS OFFICERS OR AGENTS SHALL NOT BE RESPONSIBLE FOR THE ACCURACY OR COMPLETENESS OF SCANNED COPIES OF THIS PLAN SHEET.

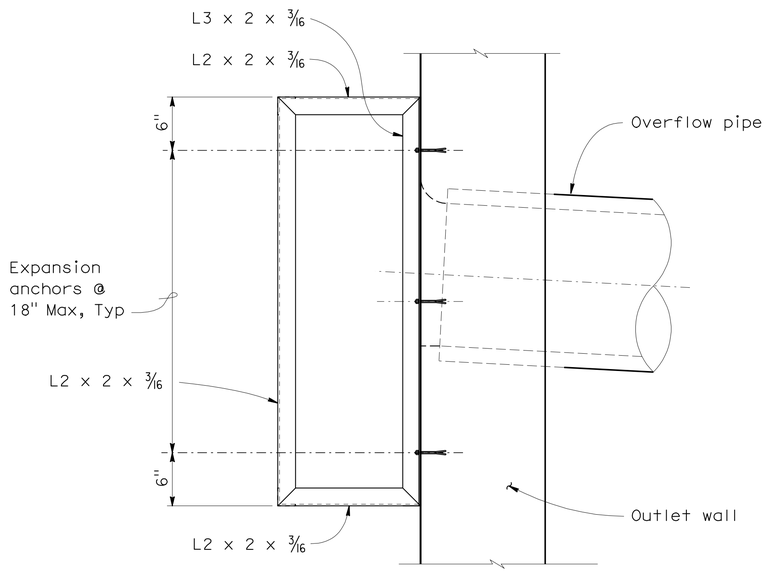

TRASH SCREEN - SIDE ELEVATION

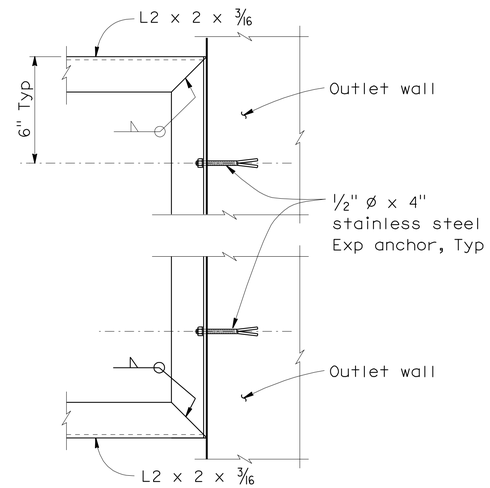

SECTION F - F

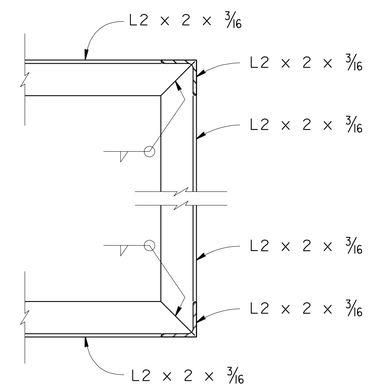

SECTION E - E

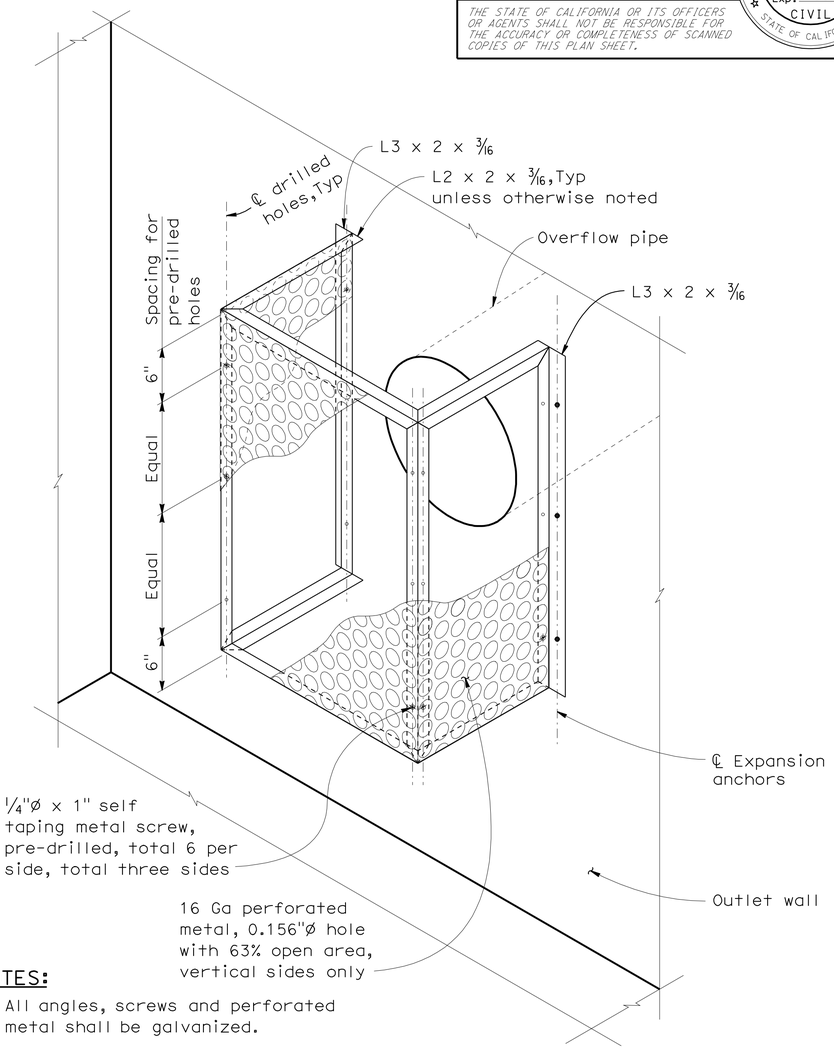

ISOMETRIC VIEW - TRASH SCREEN

NOTE: Metal hole ø exaggerated for emphasis.

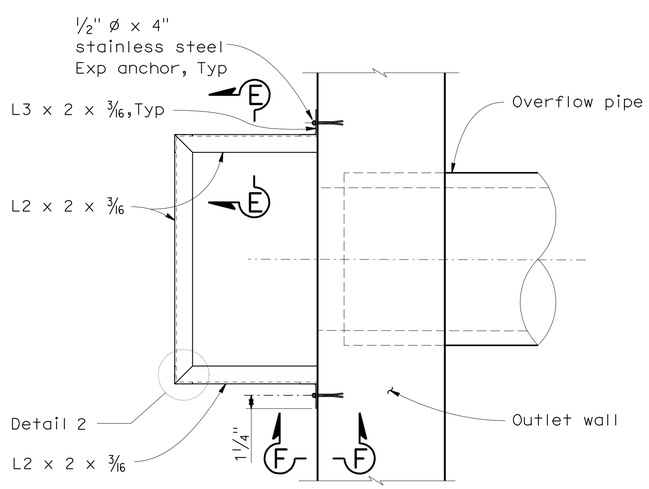

TRASH SCREEN - PLAN

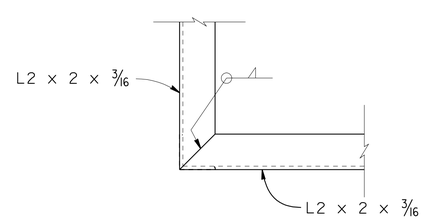

DETAIL 2

NOTES:

1. All angles, screws and perforated metal shall be galvanized.
2. Paint all weld joints with zinc rich paint or galvanize after welding.

AUSTIN VAULT SAND FILTER
DETAILS No. 3

CONSTRUCTION DETAILS

NO SCALE

C-32

STATE OF CALIFORNIA - DEPARTMENT OF TRANSPORTATION
Caltrans® OFFICE OF DESIGN A

FUNCTIONAL SUPERVISOR: ASADOUR TERTERIAN
CALCULATED-DESIGNED BY: KEDAR SAWANT
CHECKED BY: MEDARDO DE LA CRUZ
REVISED BY
DATE REVISED

LAST REVISION 00-00-00
DATE PLOTTED => 30-JUN-2011
TIME PLOTTED => 15:09

Dist	COUNTY	ROUTE	POST MILES TOTAL PROJECT	SHEET No.	TOTAL SHEETS
07	LA	5	1.2/2.1	55	602

Timothy G Sobelman 3/14/11
REGISTERED CIVIL ENGINEER DATE

6-27-11
PLANS APPROVAL DATE

REGISTERED PROFESSIONAL ENGINEER TIMOTHY B. SOBELMAN No. 59249 Exp. 6-30-11 CIVIL STATE OF CALIFORNIA

THE STATE OF CALIFORNIA OR ITS OFFICERS OR AGENTS SHALL NOT BE RESPONSIBLE FOR THE ACCURACY OR COMPLETENESS OF SCANNED COPIES OF THIS PLAN SHEET.

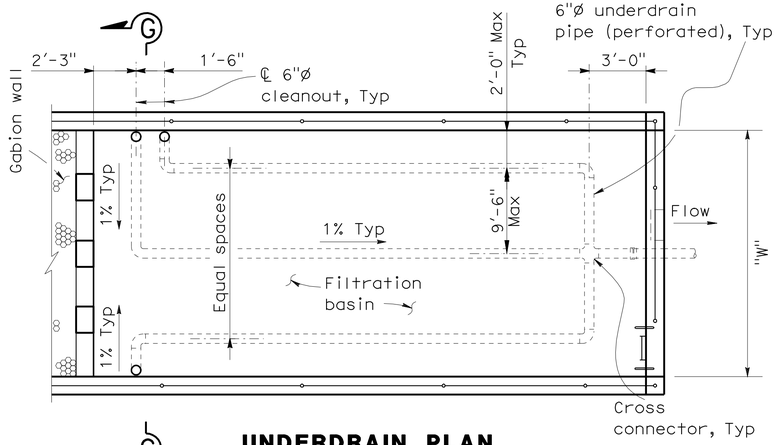

UNDERDRAIN PLAN (FILTRATION BASIN)

"W" = 15' - 21'
AVSF Type = (S or L 3500)

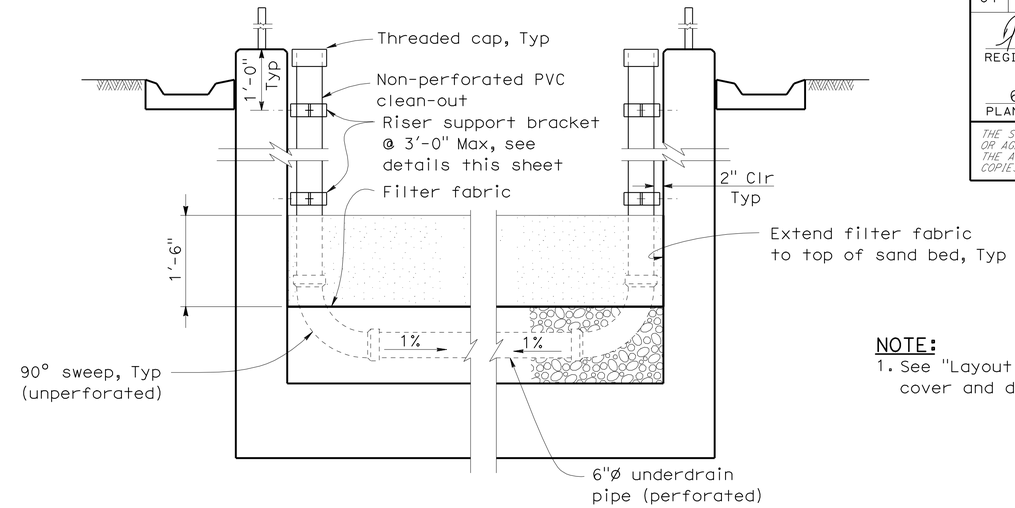

SECTION G - G

NOTE:
1. See "Layout No. 1" sheet for Typical cover and depth of sand bed.

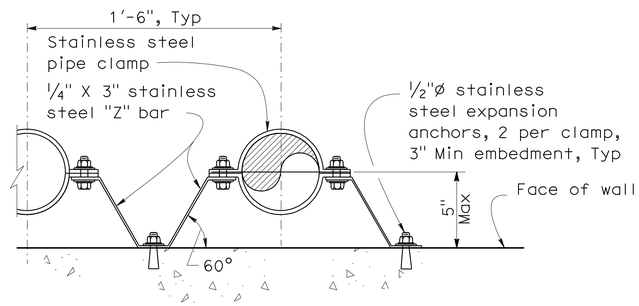

RISER SUPPORT BRACKET DETAIL

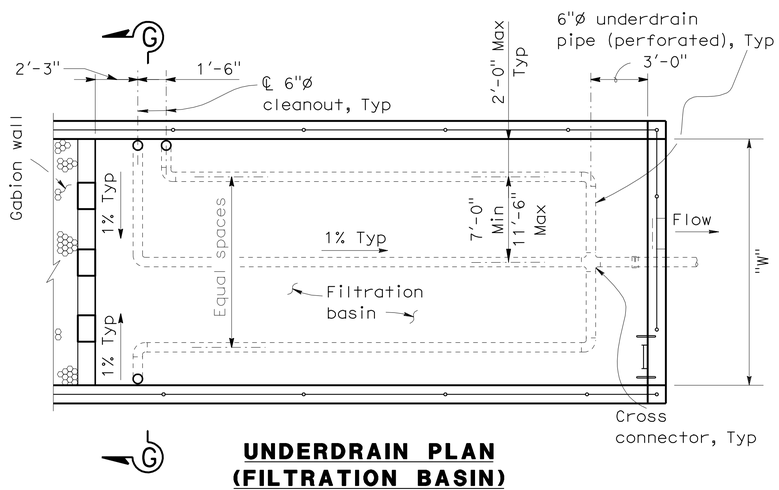

UNDERDRAIN PLAN (FILTRATION BASIN)

"W" = 18' - 24' - 27'
AVSF Type = (S or L 5000) L 10000)

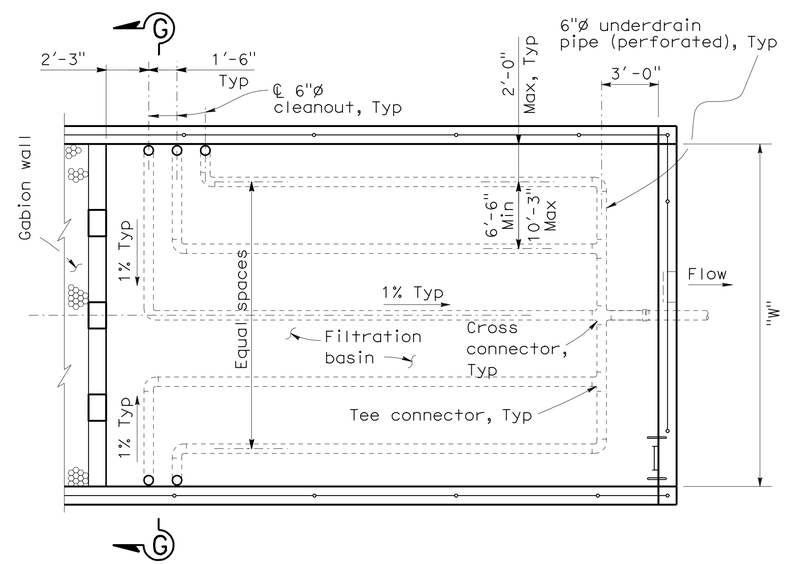

UNDERDRAIN PLAN (FILTRATION BASIN)

"W" = 30' - 36' - 45'
AVSF Type = (S 10000, S or L 15000)

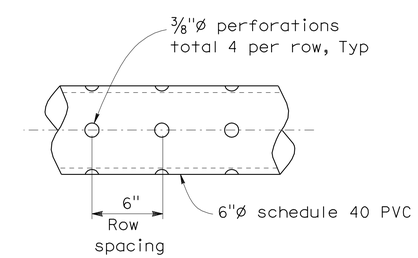

PERFORATED UNDERDRAIN PIPE

AUSTIN VAULT SAND FILTER
DETAILS No. 4

CONSTRUCTION DETAILS
NO SCALE

C-33

STATE OF CALIFORNIA - DEPARTMENT OF TRANSPORTATION
Caltrans® OFFICE OF DESIGN A
FUNCTIONAL SUPERVISOR: ASADOUR TERTERIAN
CALCULATED-DESIGNED BY: KEDAR SAWANT
CHECKED BY: MEDARDO DE LA CRUZ
REVISED BY / DATE REVISED

LAST REVISION 00-00-00 | DATE PLOTTED => 30-JUN-2011 | TIME PLOTTED => 15:09

Dist	COUNTY	ROUTE	POST MILES TOTAL PROJECT	SHEET No.	TOTAL SHEETS
07	LA	5	1.2/2.1	56	602

Timothy G Sobelman 3/14/11
REGISTERED CIVIL ENGINEER DATE

6-27-11
PLANS APPROVAL DATE

REGISTERED PROFESSIONAL ENGINEER TIMOTHY B. SOBELMAN No. 59249 Exp. 6-30-11 CIVIL STATE OF CALIFORNIA

THE STATE OF CALIFORNIA OR ITS OFFICERS OR AGENTS SHALL NOT BE RESPONSIBLE FOR THE ACCURACY OR COMPLETENESS OF SCANNED COPIES OF THIS PLAN SHEET.

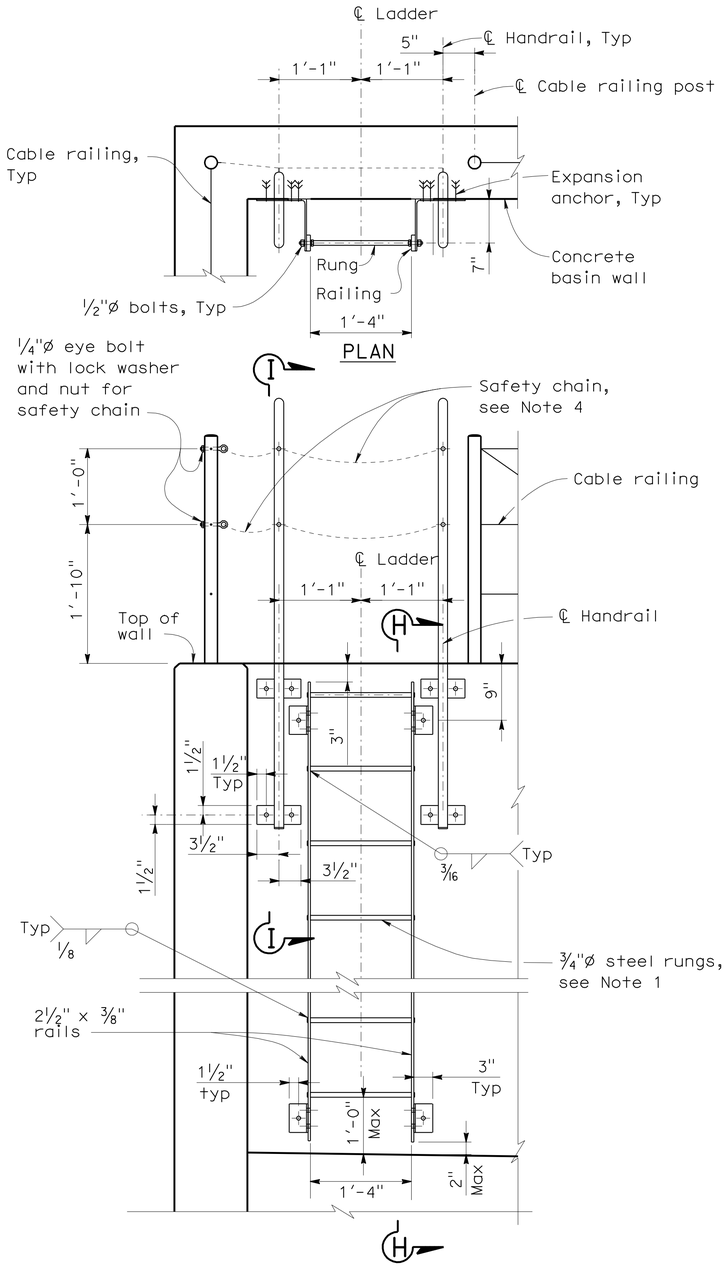

ELEVATION

LADDER

NOTE: Cable railing not shown for clarity.

NOTES:

1. The distance between rungs shall not exceed 1'-0" and shall be uniform throughout the length of wall.
2. Hardware shall be galvanized after fabrication.
3. Grind exposed corners to 3/16" radius.
4. Safety chain shall be ¼" galvanized steel coil chain, approximately 12 links per foot. Length shall be minimum which allows lock-up of safety railing. Minimum of two safety chains per safety railing. Material shall be grade 43 high test chain ASTM A413.

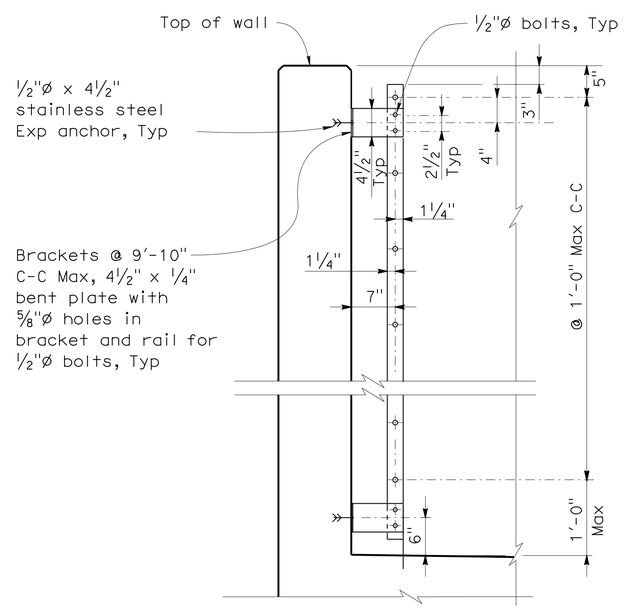

SECTION H - H

NOTE: Handrail and cable railing not shown for clarity.

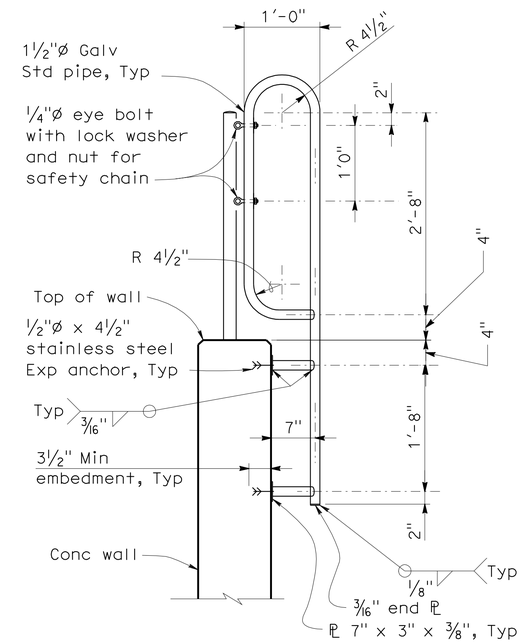

SECTION I - I

AUSTIN VAULT SAND FILTER
MISCELLANEOUS DETAILS No. 1

CONSTRUCTION DETAILS

NO SCALE

C-34

STATE OF CALIFORNIA - DEPARTMENT OF TRANSPORTATION
Caltrans® OFFICE OF DESIGN A

FUNCTIONAL SUPERVISOR: ASADOUR TERTERIAN
CALCULATED-DESIGNED BY: KEDAR SAWANT
CHECKED BY: MEDARDO DE LA CRUZ
REVISED BY
DATE REVISED

LAST REVISION 00-00-00
DATE PLOTTED => 30-JUN-2011
TIME PLOTTED => 15:09

Dist	COUNTY	ROUTE	POST MILES TOTAL PROJECT	SHEET No.	TOTAL SHEETS
07	LA	5	1.2/2.1	57	602

Timothy G Sobelman 3/18/11
REGISTERED CIVIL ENGINEER DATE

6-27-11
PLANS APPROVAL DATE

REGISTERED PROFESSIONAL ENGINEER
TIMOTHY B. SOBELMAN
No. 59249
Exp. 6-30-11
CIVIL
STATE OF CALIFORNIA

THE STATE OF CALIFORNIA OR ITS OFFICERS OR AGENTS SHALL NOT BE RESPONSIBLE FOR THE ACCURACY OR COMPLETENESS OF SCANNED COPIES OF THIS PLAN SHEET.

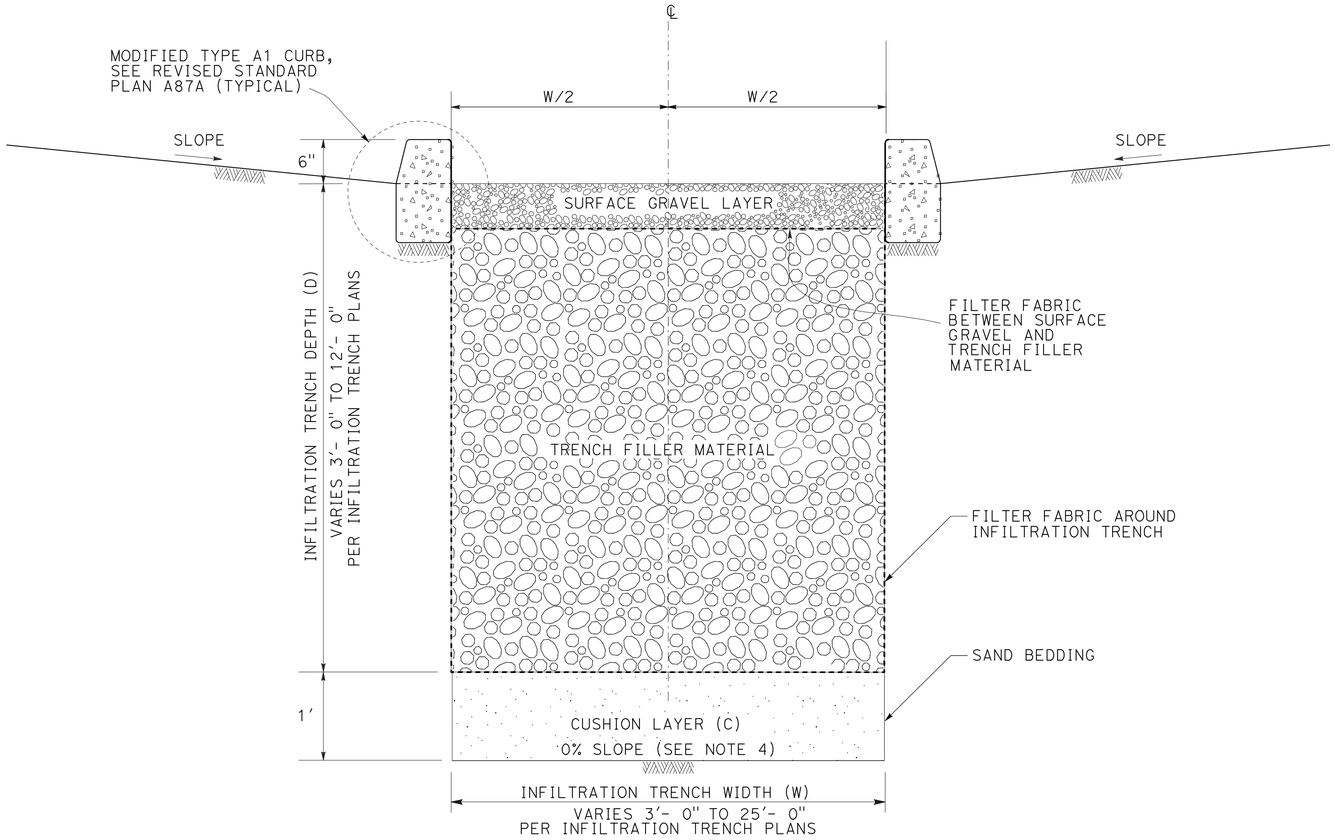

SECTION VIEW
INFILTRATION TRENCH

PARAMETER	Min VALUE	Max VALUE
D	3'- 0"	12'- 0"
W	3'- 0"	25'- 0"

NOTES:

1. FILTER FABRIC SHALL BE PLACED IN TWO PHASES:
   1) AROUND THE PERIMETER OF INFILTRATION TRENCH
   2) BETWEEN TRENCH FILLER MATERIAL AND SURFACE GRAVEL LAYER
2. CONCRETE CURB TO BE PLACED ALONG THE PERIMETER OF THE TRENCH.
3. PLACE CURB OPENINGS AT 10' CENTER TO CENTER.
4. THE BOTTOM OF THE TRENCH SHALL HAVE A 0% SLOPE IN LONGITUDINAL AND TRANSVERSE DIRECTIONS.

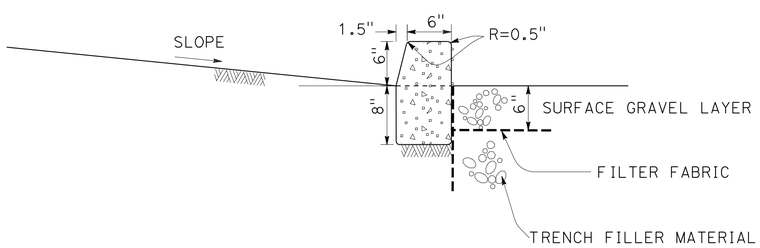

DETAIL A
MODIFIED TYPE A1 CURB
SECTION VIEW
MODIFIED TYPE A1 CURB

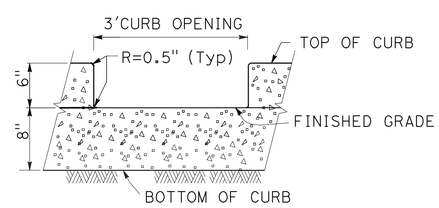

DETAIL B
CURB OPENING
ELEVATION VIEW
CURB OPENING
MODIFIED TYPE A2 CURB

INFILTRATION TRENCH
CONSTRUCTION DETAILS
NO SCALE

C-35

STATE OF CALIFORNIA - DEPARTMENT OF TRANSPORTATION
Caltrans® OFFICE OF DESIGN A
FUNCTIONAL SUPERVISOR: ASADOUR TERTERIAN
CALCULATED-DESIGNED BY: SUSANNA YANG
CHECKED BY: MEDARDO DE LA CRUZ
REVISED BY
DATE REVISED

LAST REVISION 00-00-00
DATE PLOTTED => 30-JUN-2011
TIME PLOTTED => 15:09

Dist	COUNTY	ROUTE	POST MILES TOTAL PROJECT	SHEET No.	TOTAL SHEETS
07	LA	5	1.2/2.1	58	602

Timothy G Sobelman 3/18/11
REGISTERED CIVIL ENGINEER DATE

6-27-11
PLANS APPROVAL DATE

REGISTERED PROFESSIONAL ENGINEER
TIMOTHY B. SOBELMAN
No. 59249
Exp. 6-30-11
CIVIL
STATE OF CALIFORNIA

THE STATE OF CALIFORNIA OR ITS OFFICERS OR AGENTS SHALL NOT BE RESPONSIBLE FOR THE ACCURACY OR COMPLETENESS OF SCANNED COPIES OF THIS PLAN SHEET.

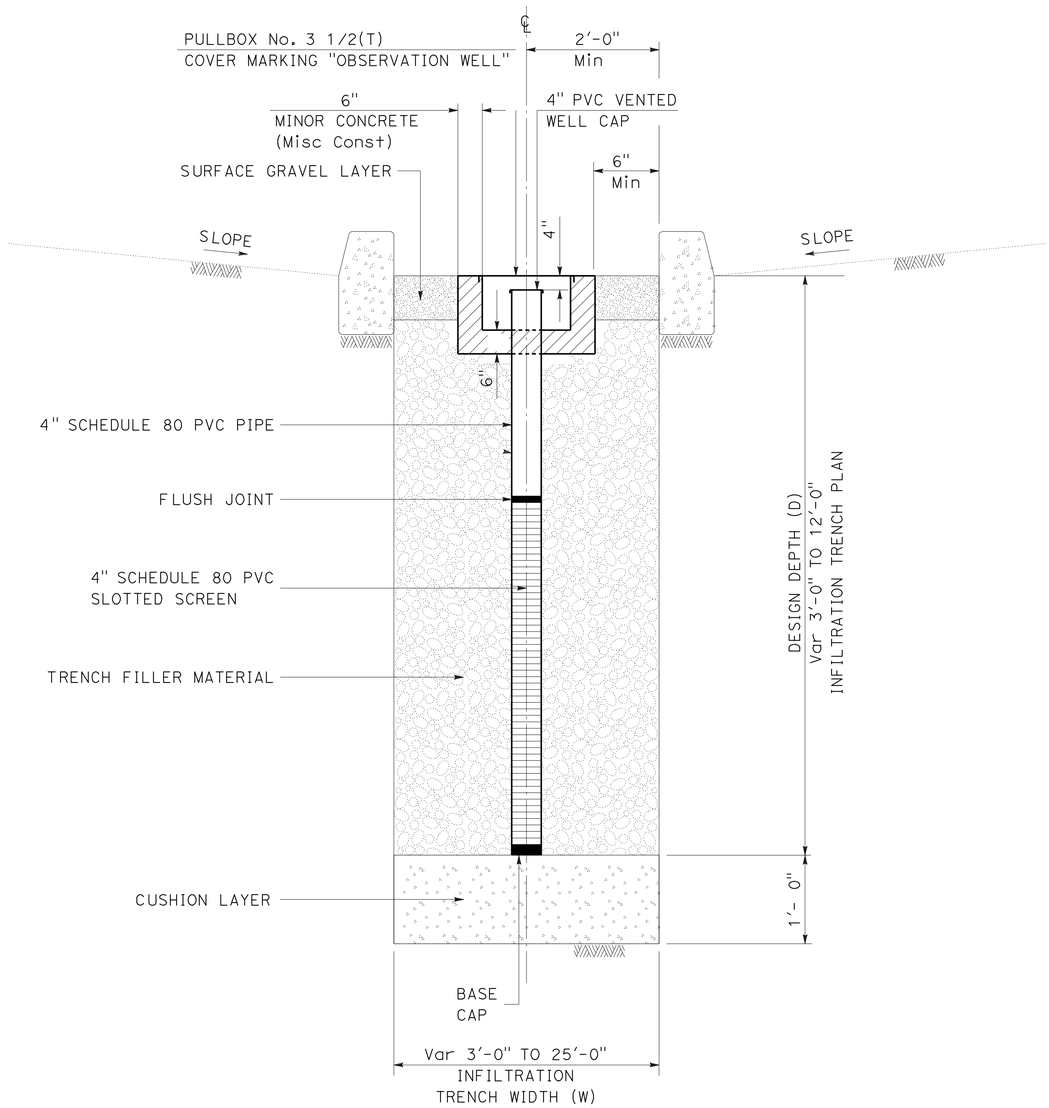

SECTION VIEW
OBSERVATION WELL

NOTES:

1. CENTERLINE OF OBSERVATION WELL TO BE PLACED A MINIMUM DISTANCE OF 1'-6" FROM EDGE OF TRENCH.
2. THE PLASTIC PROTECTIVE WELL COVER SHALL BE FLUSH WITH TOP OF THE SURFACE GRAVEL LAYER

OBSERVATION WELL CONSTRUCTION DETAILS

NO SCALE

C-36

STATE OF CALIFORNIA - DEPARTMENT OF TRANSPORTATION
Caltrans® OFFICE OF DESIGN A

FUNCTIONAL SUPERVISOR: ASADOUR TERTERIAN
CALCULATED-DESIGNED BY: SUSANNA YANG
CHECKED BY: MEDARDO DE LA CRUZ
REVISED BY
DATE REVISED

LAST REVISION 00-00-00
DATE PLOTTED => 30-JUN-2011
TIME PLOTTED => 15:09

Dist	COUNTY	ROUTE	POST MILES TOTAL PROJECT	SHEET No.	TOTAL SHEETS
07	LA	5	1.2/2.1	59	602

REGISTERED CIVIL ENGINEER 3/14/11 DATE

6-27-11
PLANS APPROVAL DATE

REGISTERED PROFESSIONAL ENGINEER
ASADOUR TERTERIAN
No. C56966
Exp. 6-30-11
CIVIL
STATE OF CALIFORNIA

THE STATE OF CALIFORNIA OR ITS OFFICERS OR AGENTS SHALL NOT BE RESPONSIBLE FOR THE ACCURACY OR COMPLETENESS OF SCANNED COPIES OF THIS PLAN SHEET.

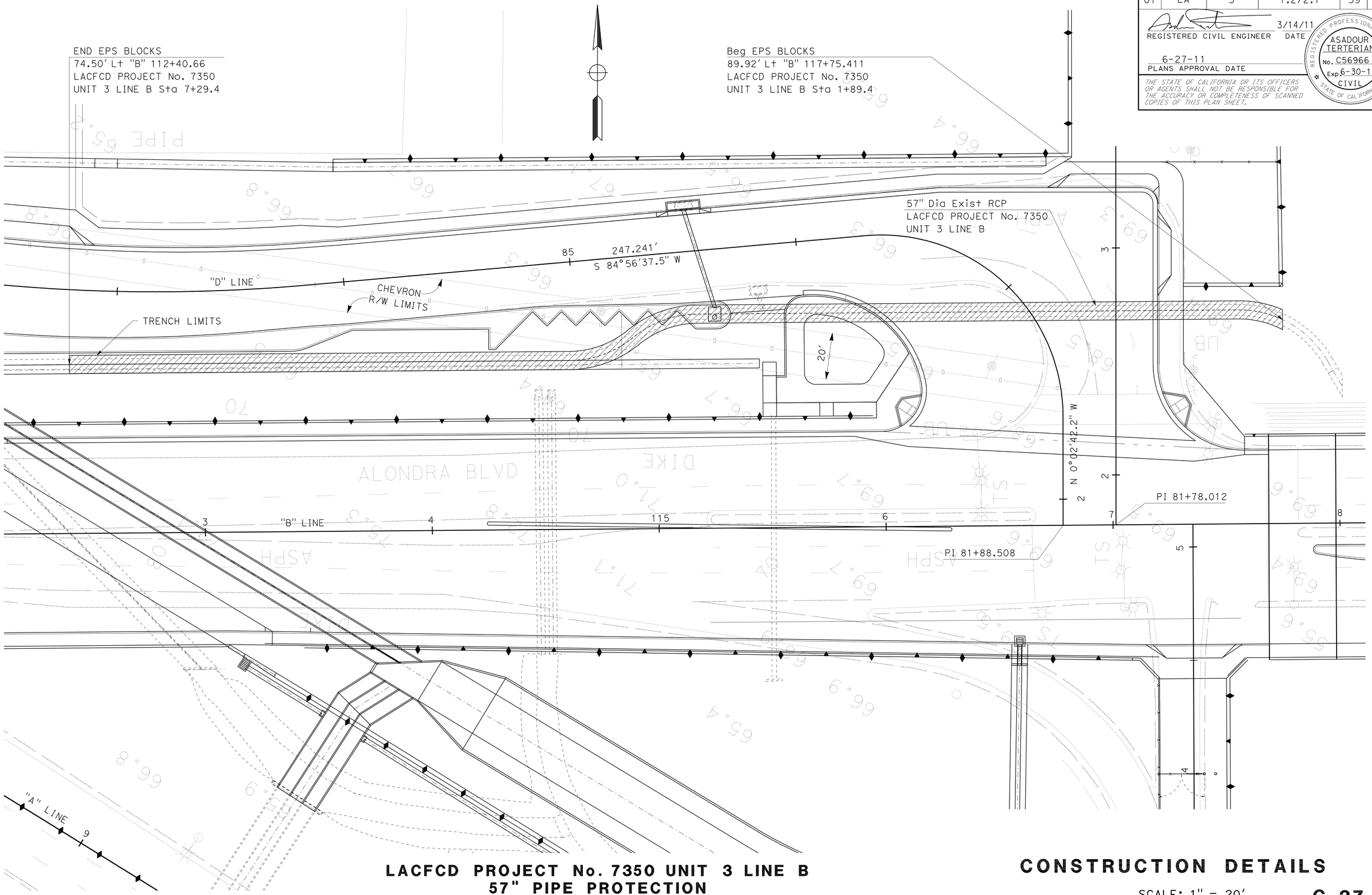

LACFCD PROJECT No. 7350 UNIT 3 LINE B
57" PIPE PROTECTION

CONSTRUCTION DETAILS

SCALE: 1" = 20'

C-37

STATE OF CALIFORNIA - DEPARTMENT OF TRANSPORTATION
Caltrans® OFFICE OF DESIGN A

FUNCTIONAL SUPERVISOR: ASADOUR TERTERIAN
CALCULATED-DESIGNED BY: SUSANNA YANG
CHECKED BY: ASADOUR TERTERIAN
REVISED BY
DATE REVISED

LAST REVISION 00-00-00
DATE PLOTTED => 30-JUN-2011
TIME PLOTTED => 15:09

Dist	COUNTY	ROUTE	POST MILES TOTAL PROJECT	SHEET No.	TOTAL SHEETS
07	LA	5	1.2/2.1	60	602

REGISTERED CIVIL ENGINEER 3/14/11 DATE

6-27-11
PLANS APPROVAL DATE

REGISTERED PROFESSIONAL ENGINEER ASADOUR TERTERIAN No. C56966 Exp. 6-30-11 CIVIL STATE OF CALIFORNIA

THE STATE OF CALIFORNIA OR ITS OFFICERS OR AGENTS SHALL NOT BE RESPONSIBLE FOR THE ACCURACY OR COMPLETENESS OF SCANNED COPIES OF THIS PLAN SHEET.

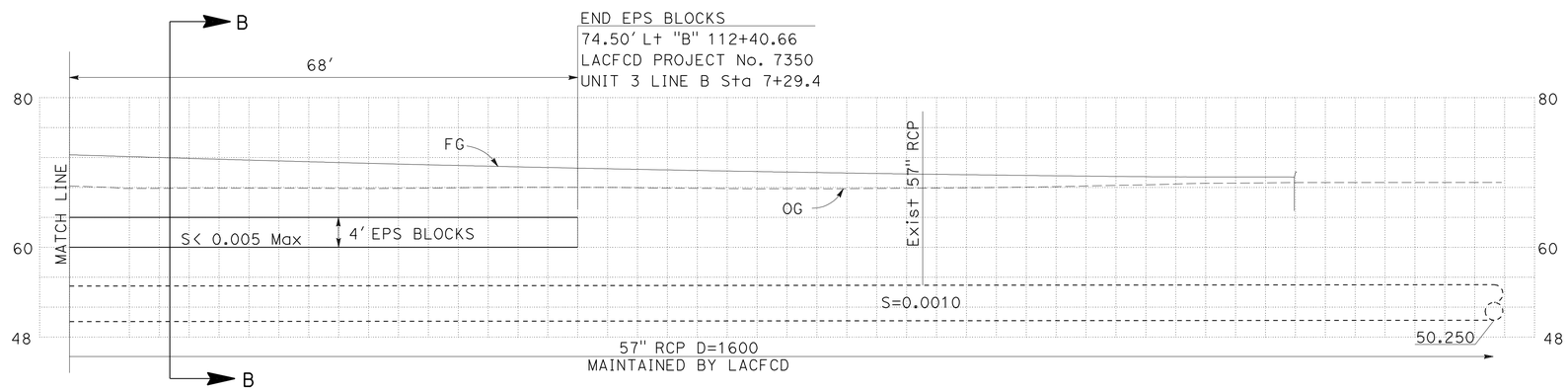

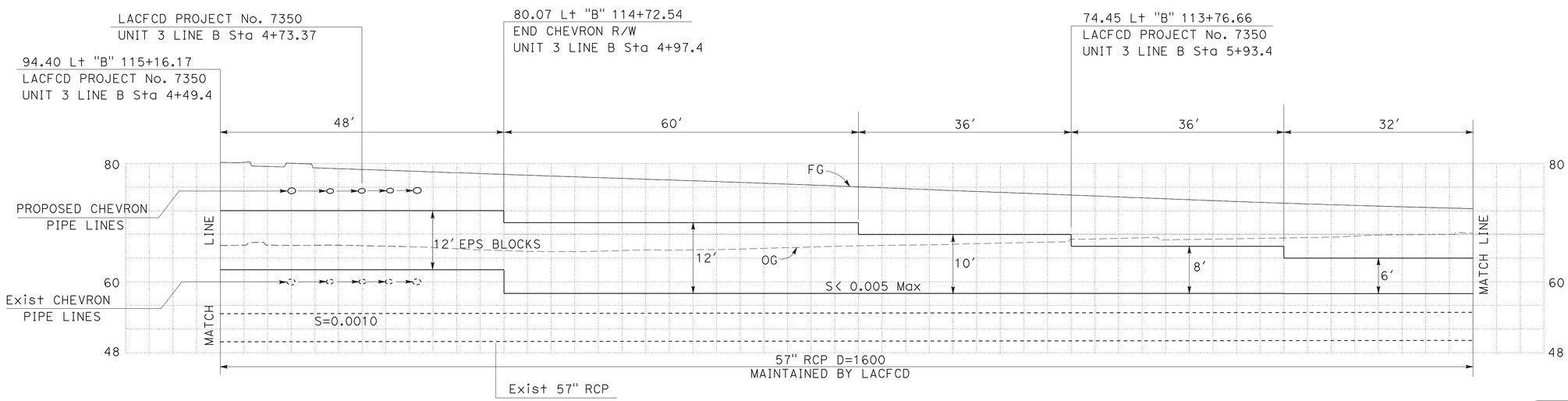

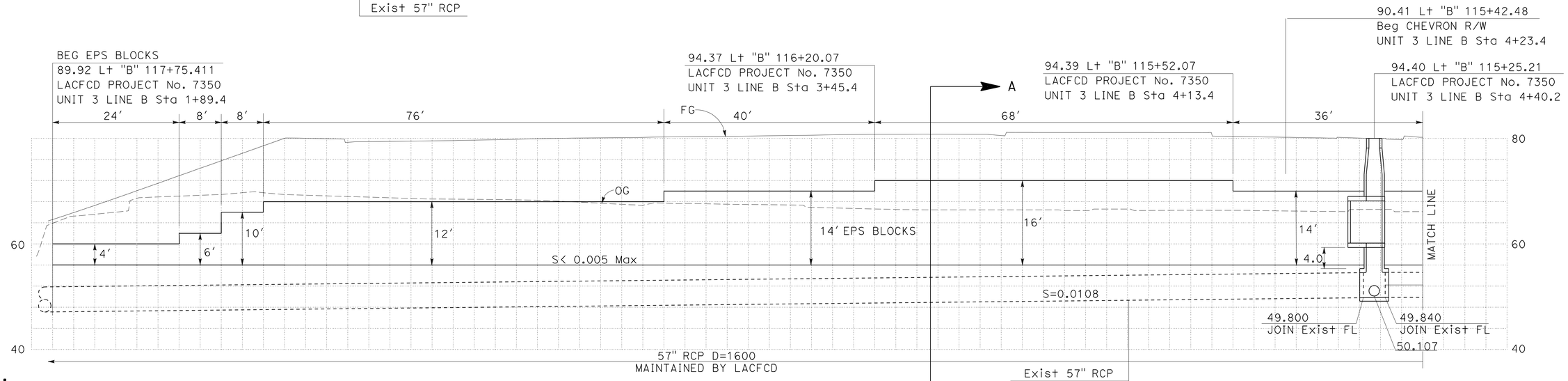

NOTE:

1. ALL CHEVRON PIPE LINES LOCATIONS AND ELEVATIONS ARE APPROXIMATE. SEE UTILITY PLANS FOR LOCATIOS AND ELEVATIONS.

LACFCD PROJECT No. 7350 UNIT 3 LINE B 57" PIPE PROTECTION

CONSTRUCTION DETAILS

SCALE: 1" = 5' Horiz
1" = 5' Vert

C-38

STATE OF CALIFORNIA - DEPARTMENT OF TRANSPORTATION
Caltrans OFFICE OF DESIGN A

FUNCTIONAL SUPERVISOR: ASADOUR TERTERIAN
CALCULATED-DESIGNED BY: MANJINDER BRAR
CHECKED BY: ASADOUR TERTERIAN
REVISED BY
DATE REVISED

LAST REVISION 00-00-00 | DATE PLOTTED => 30-JUN-2011 | TIME PLOTTED => 15:10

Dist	COUNTY	ROUTE	POST MILES TOTAL PROJECT	SHEET No.	TOTAL SHEETS
07	LA	5	1.2/2.1	61	602

REGISTERED CIVIL ENGINEER 3/14/11 DATE

6-27-11
PLANS APPROVAL DATE

REGISTERED PROFESSIONAL ENGINEER ASADOUR TERTERIAN No. C56966 Exp. 6-30-11 CIVIL STATE OF CALIFORNIA

THE STATE OF CALIFORNIA OR ITS OFFICERS OR AGENTS SHALL NOT BE RESPONSIBLE FOR THE ACCURACY OR COMPLETENESS OF SCANNED COPIES OF THIS PLAN SHEET.

NOTES:

1. For partial EPS block placement, min. width of 2 feet is required. If 2 feet width is not achievable cut portion of the adjacent block to allow 2 feet min. width; it may be necessary to use custom manufactured block, cut to fit widths more than standard EPS block.
2. Pre-gluing partial blocks to achieve custom manufactured block size will be acceptable.
3. Shoring is required for any vertical excavation height, h ≥ 5′
4. For EPS Blocks placed in confined area, minimum width of 24" is required. To acheive this width the adjacent block will have to be a custom manufactured block, cut to fit width more than the standard EPS Block. See construction details for limits of EPS blocks & for additional details regarding EPS blocks.
5. Pre-gluing custom manufactured EPS Blocks to acheive desired dimensions is acceptable.
6. For pavement structural section, see Road Plans.
7. Place EPS blocks over 57" LACFCD RCP pipe where H′ (Proposed Fill Height) exceeds 3′ height
8. The plane grades on which EPS blocks are placed shall be less than 0.5%.

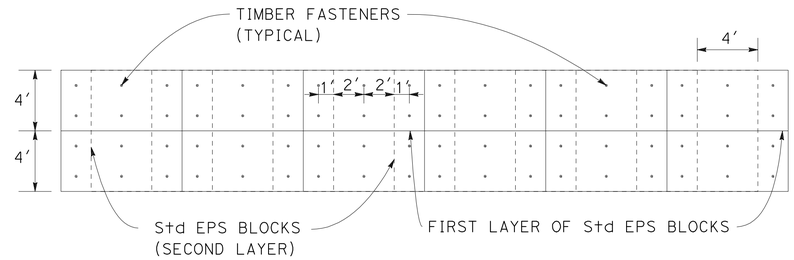

PLAN VIEW

EPS BLOCK FILL CONSTRUCTION

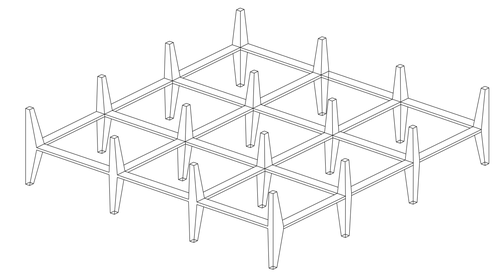

TYPICAL TIMBER FASTENER: SIZE 4" x 4" x 1" DEEP
BOLT HOLE SIZE TO 1"

TIMBER FASTENER DETAIL

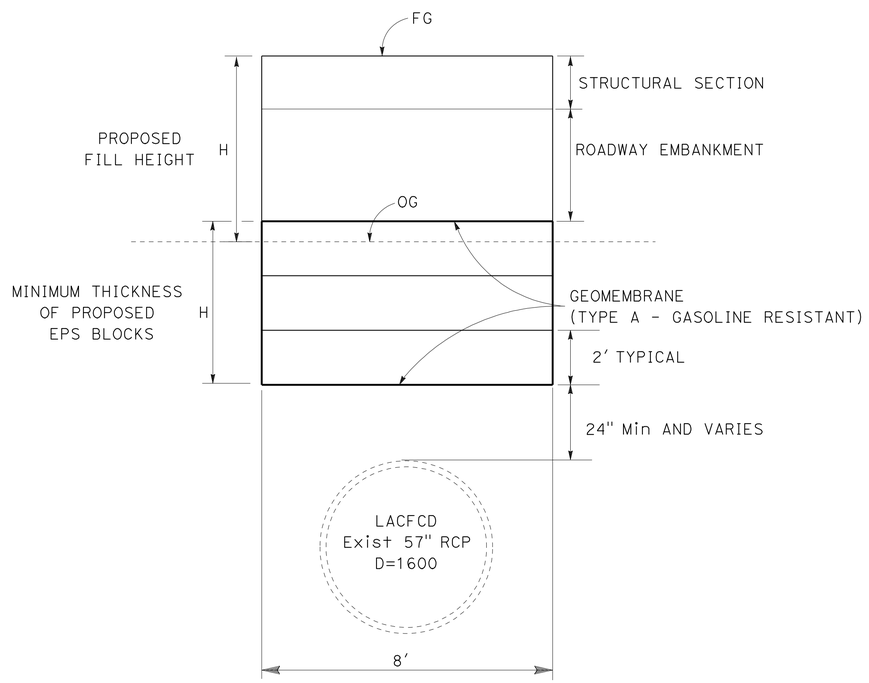

SECTION A-A

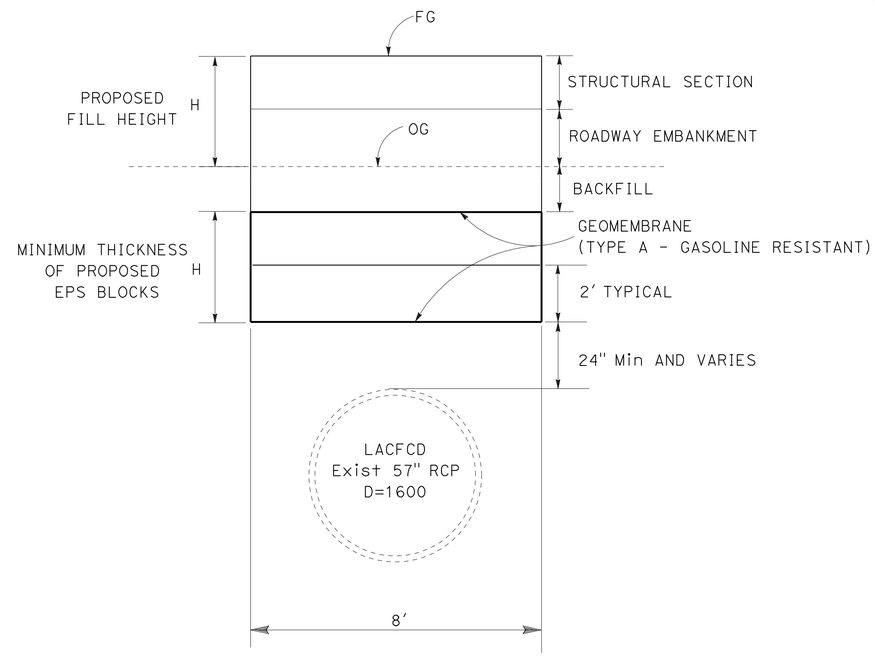

SECTION B-B

LACFCD PROJECT No. 7350 UNIT 3 LINE B
57" PIPE PROTECTION

CONSTRUCTION DETAILS

NO SCALE

C-39

STATE OF CALIFORNIA - DEPARTMENT OF TRANSPORTATION
Caltrans® OFFICE OF DESIGN A

FUNCTIONAL SUPERVISOR: ASADOUR TERTERIAN
CALCULATED-DESIGNED BY: MANJINDER BRAR
CHECKED BY: ASADOUR TERTERIAN
REVISED BY
DATE REVISED

LAST REVISION 00-00-00
DATE PLOTTED => 30-JUN-2011
TIME PLOTTED => 15:10

Dist	COUNTY	ROUTE	POST MILES TOTAL PROJECT	SHEET No.	TOTAL SHEETS
07	LA	5	1.2/2.1	62	602

Medardo de la Cruz 3/14/11
REGISTERED CIVIL ENGINEER DATE

6-27-11
PLANS APPROVAL DATE

REGISTERED PROFESSIONAL ENGINEER
MEDARDO DE LA CRUZ
No. C61848
Exp. 6-30-11
CIVIL
STATE OF CALIFORNIA

THE STATE OF CALIFORNIA OR ITS OFFICERS OR AGENTS SHALL NOT BE RESPONSIBLE FOR THE ACCURACY OR COMPLETENESS OF SCANNED COPIES OF THIS PLAN SHEET.

NOTES:

1. COBBLES SHALL BE PLACED TO MINIMIZE MORTAR EXPOSURE TO THE TOP SURFACE.
2. REINFORCING BARS SHALL HAVE A MINIMUM 2" CLEARANCE FROM ALL CONCRETE EDGES.
3. CONCRETE HEADERS LOCATED AS SHOWN ON THE PLANS.
4. NO ROCK BLANKET SHALL BE INSTALLED AROUND THE GUARD RAIL POSTS OR SIGN POSTS.
5. CONSTRUCTION JOINTS SHALL BE AT 6' C-C MINIMUM.
6. WELDED WIRE MESH OPTIONAL.
7. FOR LOCATIONS AND AREA REQUIREMENTS, SEE LAYOUT SHEETS.
8. DEPTH VARIES WITH LENGTH AND STEEPNESS OF SLOPE; TO BE DETERMINED BY ENGINEER.

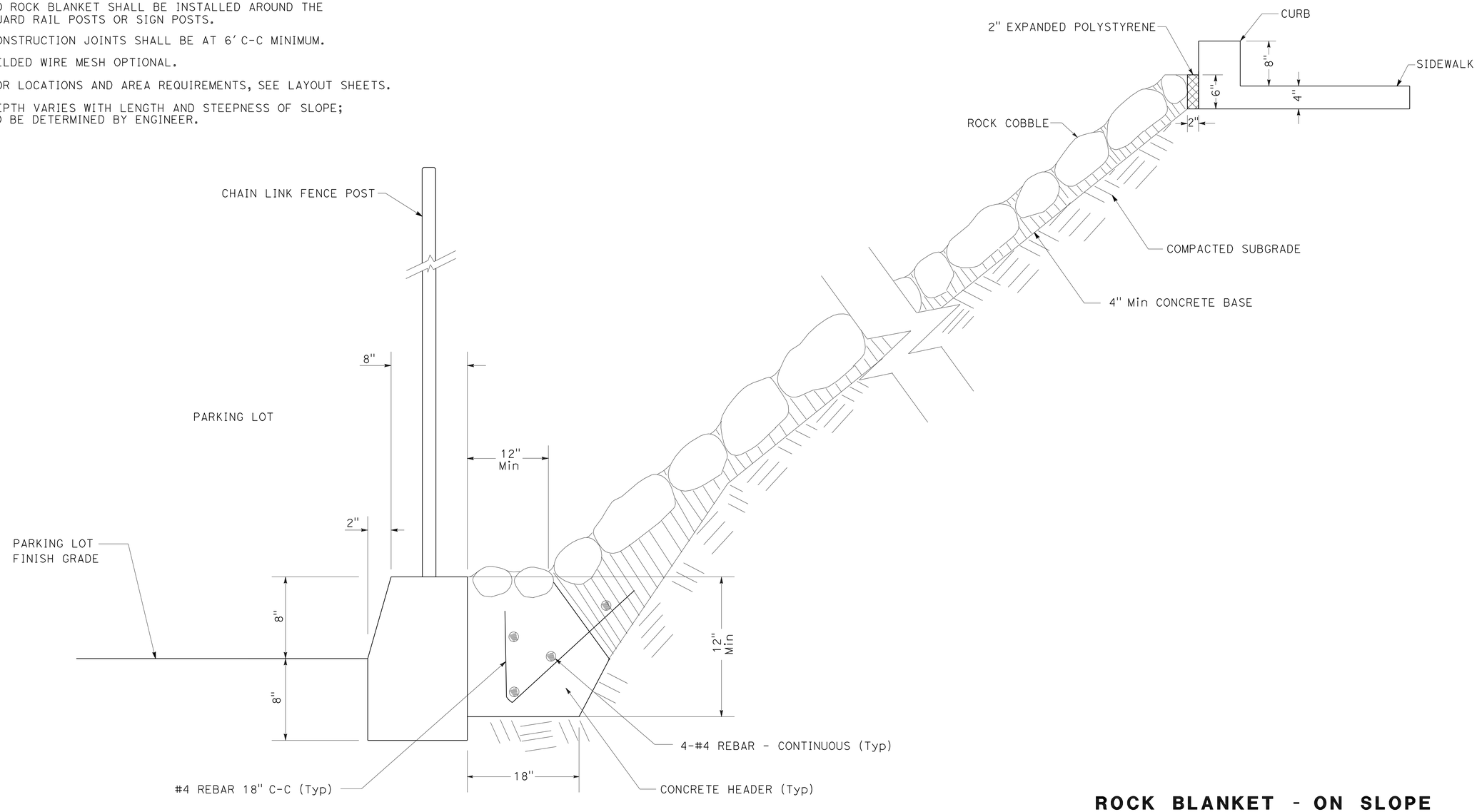

SECTION

ROCK BLANKET - ON SLOPE
CONSTRUCTION DETAILS

NO SCALE

C-40

REVISED BY	DATE REVISED

HUNG TIEU
MEDARDO DE LA CRUZ
CALCULATED-DESIGNED BY
CHECKED BY
FUNCTIONAL SUPERVISOR
ASADOUR TERTERIAN

STATE OF CALIFORNIA - DEPARTMENT OF TRANSPORTATION
Caltrans® OFFICE OF DESIGN A

LAST REVISION 00-00-00
DATE PLOTTED => 30-JUN-2011
TIME PLOTTED => 15:10

Dist	COUNTY	ROUTE	POST MILES TOTAL PROJECT	SHEET No.	TOTAL SHEETS
07	LA	5	1.2/2.1	63	602

Medardo de la Cruz 3/14/11
REGISTERED CIVIL ENGINEER DATE

6-27-11
PLANS APPROVAL DATE

REGISTERED PROFESSIONAL ENGINEER
MEDARDO DE LA CRUZ
No. C61848
Exp. 6-30-11
CIVIL
STATE OF CALIFORNIA

THE STATE OF CALIFORNIA OR ITS OFFICERS OR AGENTS SHALL NOT BE RESPONSIBLE FOR THE ACCURACY OR COMPLETENESS OF SCANNED COPIES OF THIS PLAN SHEET.

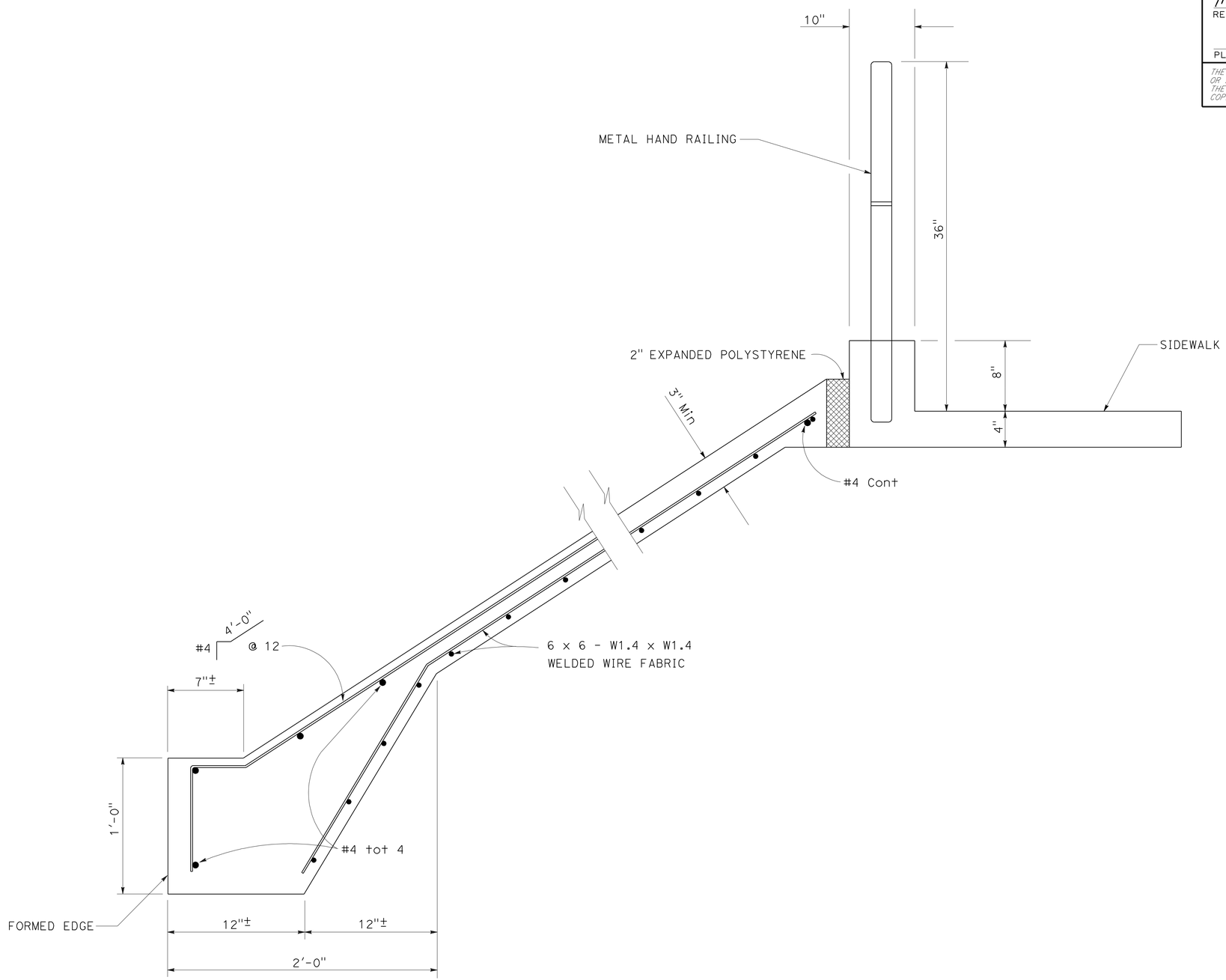

TYPICAL SECTION - SLOPE PAVING (CONCRETE)

CONSTRUCTION DETAILS

NO SCALE

C-41

STATE OF CALIFORNIA - DEPARTMENT OF TRANSPORTATION
Caltrans® OFFICE OF DESIGN A

FUNCTIONAL SUPERVISOR: ASADOUR TERTERIAN

CALCULATED-DESIGNED BY: HUNG TIEU
CHECKED BY: MEDARDO DE LA CRUZ

REVISED BY
DATE REVISED

LAST REVISION 00-00-00 | DATE PLOTTED => 30-JUN-2011 | TIME PLOTTED => 15:10

Dist	COUNTY	ROUTE	POST MILES TOTAL PROJECT	SHEET No.	TOTAL SHEETS
07	LA	5	1.2/2.1	64	602

Medardo de la Cruz 3/14/11
REGISTERED CIVIL ENGINEER DATE

6-27-11
PLANS APPROVAL DATE

REGISTERED PROFESSIONAL ENGINEER MEDARDO DE LA CRUZ No. C61848 Exp. 6-30-11 CIVIL STATE OF CALIFORNIA

THE STATE OF CALIFORNIA OR ITS OFFICERS OR AGENTS SHALL NOT BE RESPONSIBLE FOR THE ACCURACY OR COMPLETENESS OF SCANNED COPIES OF THIS PLAN SHEET.

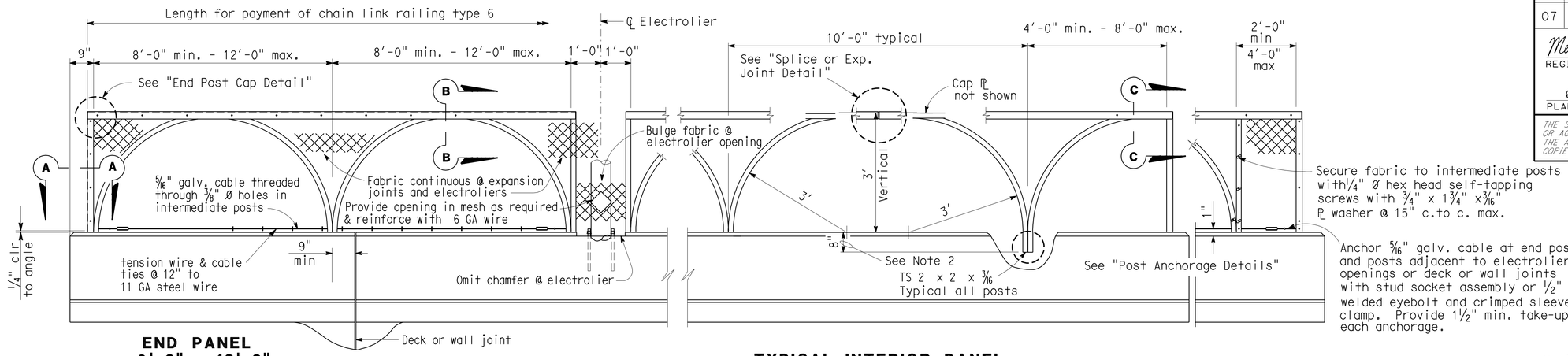

END PANEL 8'-0" - 12'-0" | **EXPANSION PANEL AT ELECTROLIER** | **TYPICAL INTERIOR PANEL** | **END PANEL 4'-0" - 8'-0"** | **END PANEL 2'-0" - 4'-0"**

ELEVATION

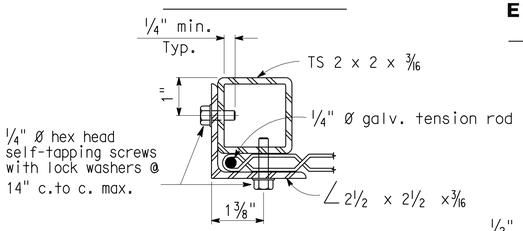

SECTION A-A

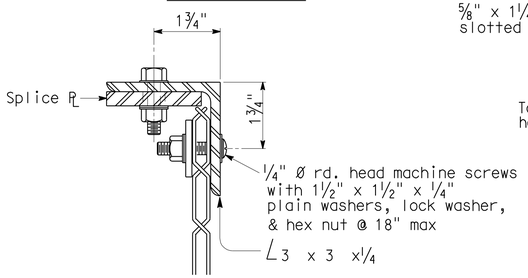

SECTION B-B

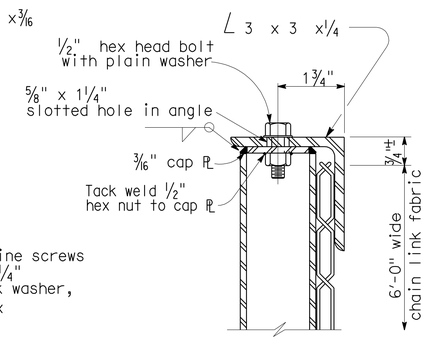

SECTION C-C

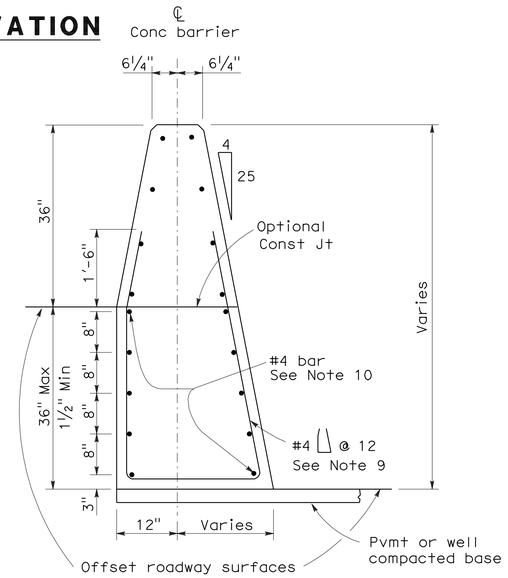

CONCRETE BARRIER TYPE 60 OR 60C

TYPICAL SECTION

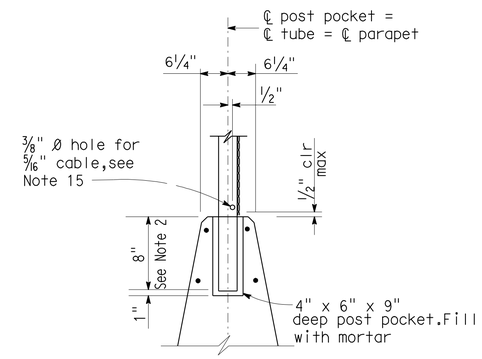

POST ANCHORAGE DETAIL (TYPE 60 OR 60C)

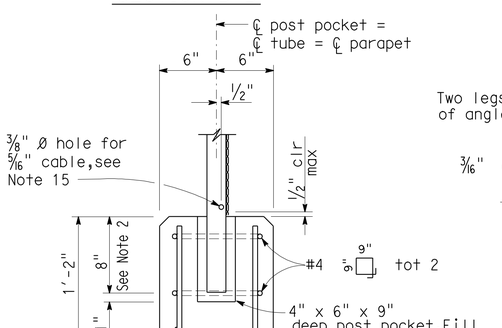

POST ANCHORAGE DETAIL (TYPE 736A)

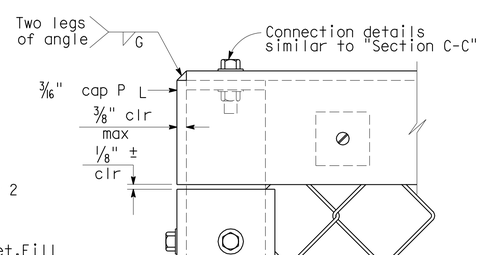

END POST CAP DETAIL

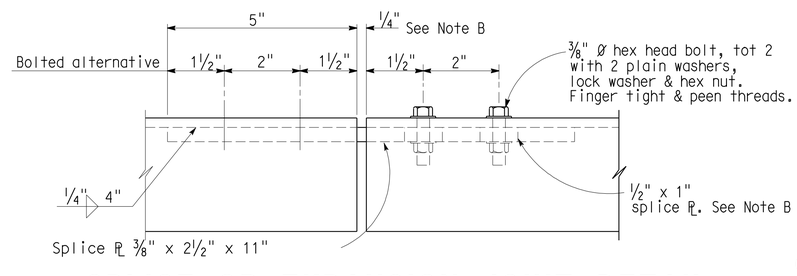

SPLICE OR EXPANSION JOINT DETAIL

Note B: Expansion joint same dimension as expansion joint in deck or wall. Increase slotted hole length and splice PL length correspondingly.

NOTES:

1. Horizontal angle shall be continuous over not less than two intermediate posts except that a shorter length is permitted at expansion joints, lectroliers and other rail discontinuities.
2. One post may be embedded 6" minimum to accomodate grade changes, otherwise fabricate post lengths as required.
3. Curved posts may be rotated in plan within its post pocket to accomodate curved horizontal alignment.
4. Straight posts and straight portions of curved posts shall be installed normal to bridge profile grade.
5. Top horizontal angle shall be parallel to bridge profile grade and shall be shop bent to fit horizontal curves.
6. When railing is on slope, fabric shall be placed parallel to slope.
7. Alternative details may be submitted by Contractor for Engineer's approval.
8. Railing assembly except chain link fabric shall be galvanized after fabrication.
9. For details and reinforcement not shown, see "Concrete Barrier Type 26" sheet.
10. See Bridge Plans for limits of Chain Link Railing Type 6.
11. Provide thimbles at all cable loops.
12. Chain link fabric to be 6'-0" wide with 1" mesh and with knuckled selvage top and bottom.
13. When railing is placed on a horizontal alignment with a radius of 150'-0" or less, thread 5/16" cable through 3/8" Ø welded eye rods embedded 4" into the top of the concrete parapet and equally spaced to limit the middle ordinate distance between the 5/16" cable and the curve to 1" max.
14. Splices and expansion joints shall be located at ℄ panel.
15. Holes in posts for 5/16" cable and its anchorage may be field drilled and painted with zinc rich paint.

CHAIN LINK RAILING TYPE 6 MODIFIED

CONSTRUCTION DETAILS

NO SCALE

C-42

STATE OF CALIFORNIA - DEPARTMENT OF TRANSPORTATION
Caltrans® OFFICE OF DESIGN A

FUNCTIONAL SUPERVISOR: ASADOUR TERTERIAN
CALCULATED-DESIGNED BY: SUSANNA YANG
CHECKED BY: MEDARDO DE LA CRUZ
REVISED BY | DATE REVISED

LAST REVISION 00-00-00 | DATE PLOTTED => 30-JUN-2011 | TIME PLOTTED => 15:10

Dist	COUNTY	ROUTE	POST MILES TOTAL PROJECT	SHEET No.	TOTAL SHEETS
07	LA	5	1.2/2.1	65	602

Medardo de la Cruz 3/14/11
REGISTERED CIVIL ENGINEER DATE

6-27-11
PLANS APPROVAL DATE

REGISTERED PROFESSIONAL ENGINEER MEDARDO DE LA CRUZ No. C61848 Exp. 6-30-11 CIVIL STATE OF CALIFORNIA

THE STATE OF CALIFORNIA OR ITS OFFICERS OR AGENTS SHALL NOT BE RESPONSIBLE FOR THE ACCURACY OR COMPLETENESS OF SCANNED COPIES OF THIS PLAN SHEET.

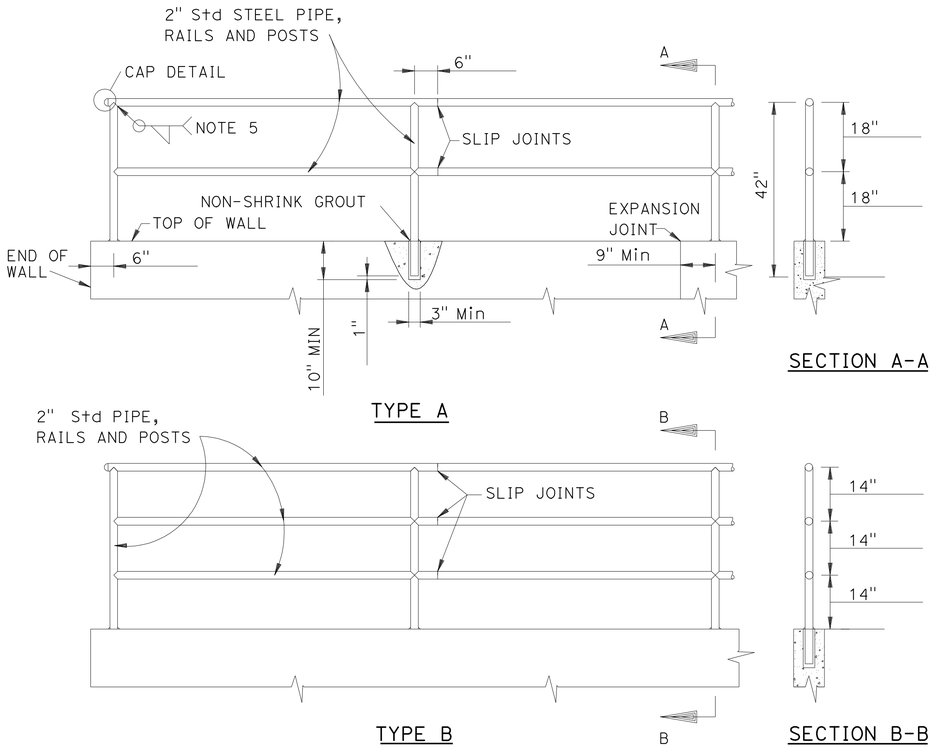

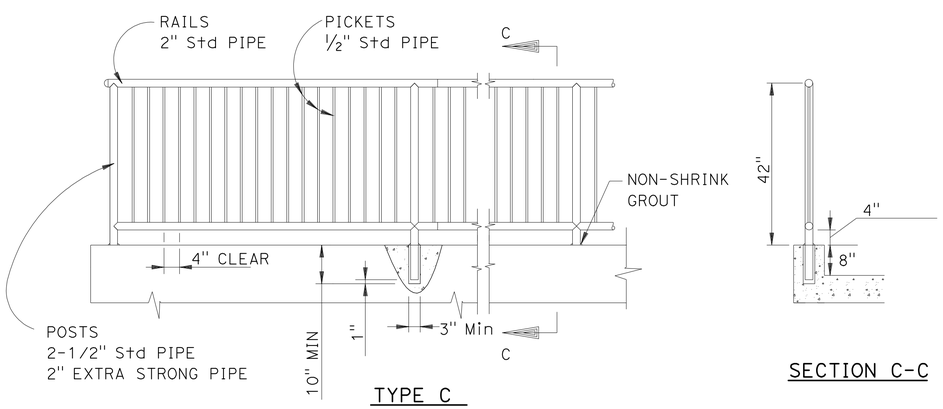

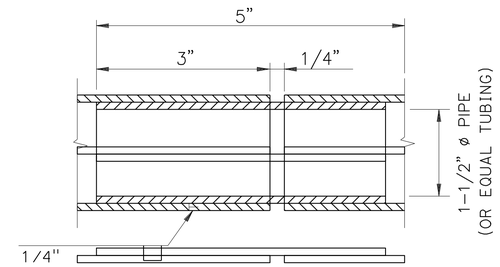

SLIP JOINT DETAIL

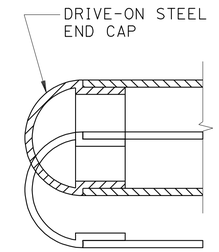

CAP DETAIL FOR RAIL END

NOTES:

1. USE TYPE C WHERE ADJACENT GRADE IS MORE THAN 2'-6" BELOW LANDING OR SIDEWALK FINISHED SURFACE.
2. RAILS, POSTS, AND PICKETS SHALL BE GALVANIZED STEEL PIPE.
3. PROVIDE SLIP JOINTS AT STAIRWAY EXPANSION JOINTS, 24' (7.3 m) MAXIMUM.
4. MAXIMUM SPACING OF POSTS SHALL BE 8'-0" ON STRAIGHT ALIGNMENTS, AND 6'-0" ON CURVED ALIGNMENTS WITH LESS THAN 30' RADIUS. MAKE SPACING UNIFORM BETWEEN CHANGES IN ALIGNMENT.
5. WELDS SHALL BE SLOT OR FILLET WELDS EQUAL TO THICKNESS OF PIPE. WELD ALL JOINTS ALL AROUND.

METAL HAND RAILINGS
606-3

CONSTRUCTION DETAILS
NO SCALE

C-43

STATE OF CALIFORNIA - DEPARTMENT OF TRANSPORTATION
Caltrans® OFFICE OF DESIGN A
FUNCTIONAL SUPERVISOR: ASADOUR TERTERIAN
CALCULATED-DESIGNED BY: KEDAR SAWANT
CHECKED BY: MEDARDO DE LA CRUZ
REVISED BY
DATE REVISED

LAST REVISION 00-00-00
DATE PLOTTED => 30-JUN-2011
TIME PLOTTED => 15:10

Dist	COUNTY	ROUTE	POST MILES TOTAL PROJECT	SHEET No.	TOTAL SHEETS
07	LA	5	1.2/2.1	66	602

Medardo de la Cruz 3/14/11
REGISTERED CIVIL ENGINEER DATE

6-27-11
PLANS APPROVAL DATE

REGISTERED PROFESSIONAL ENGINEER MEDARDO DE LA CRUZ No. C61848 Exp. 6-30-11 CIVIL STATE OF CALIFORNIA

THE STATE OF CALIFORNIA OR ITS OFFICERS OR AGENTS SHALL NOT BE RESPONSIBLE FOR THE ACCURACY OR COMPLETENESS OF SCANNED COPIES OF THIS PLAN SHEET.

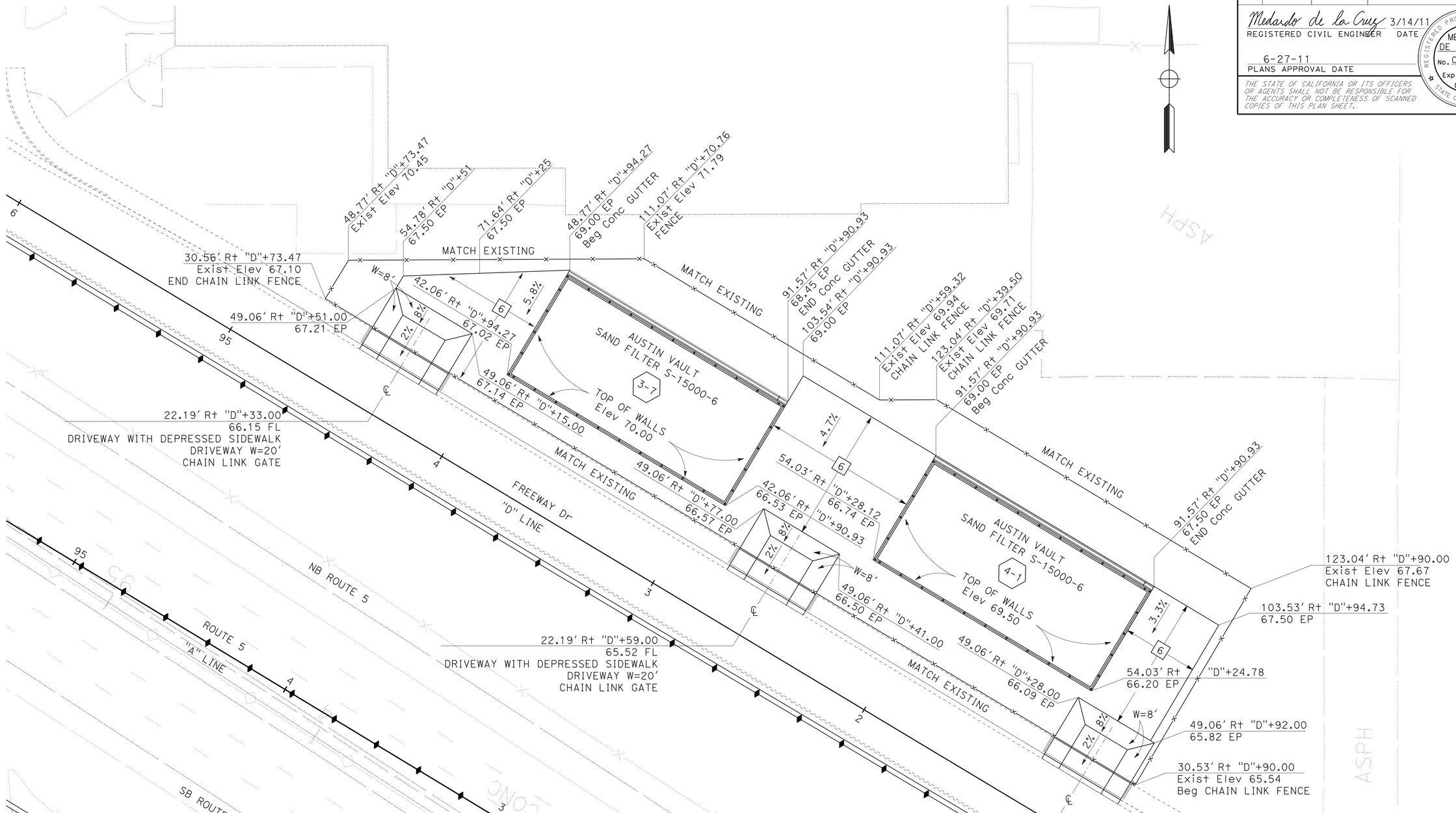

CONSTRUCTION DETAILS

SCALE: 1" = 20'

C-44

STATE OF CALIFORNIA - DEPARTMENT OF TRANSPORTATION
Caltrans OFFICE OF DESIGN A

FUNCTIONAL SUPERVISOR: ASADOUR TERTERIAN
CALCULATED-DESIGNED BY: KEDAR SAWANT
CHECKED BY: MEDARDO DE LA CRUZ
REVISED BY
DATE REVISED

LAST REVISION 00-00-00
DATE PLOTTED => 30-JUN-2011
TIME PLOTTED => 15:10

Dist	COUNTY	ROUTE	POST MILES TOTAL PROJECT	SHEET No.	TOTAL SHEETS
07	LA	5	1.2/2.1	67	602

Medardo de la Cruz 3/14/11
REGISTERED CIVIL ENGINEER DATE

6-27-11
PLANS APPROVAL DATE

REGISTERED PROFESSIONAL ENGINEER MEDARDO DE LA CRUZ No. C61848 Exp. 6-30-11 CIVIL STATE OF CALIFORNIA

THE STATE OF CALIFORNIA OR ITS OFFICERS OR AGENTS SHALL NOT BE RESPONSIBLE FOR THE ACCURACY OR COMPLETENESS OF SCANNED COPIES OF THIS PLAN SHEET.

CURVE DATA

No. ⑬	R	Δ	T	L
11	190′	58°45′37"	106.97′	194.86′
12	1′	146°31′39"	3.33′	2.56′
13	2′	180°00′00"	N/A	7.07′
14	1′	123°16′12"	1.85′	2.15′
15	1′	90°12′10"	1.00′	1.57′
16	35′	89°47′50"	34.88′	54.85′
17	246′	16°59′48"	36.76′	72.98′
18	37′	175°54′46"	1041.17′	114.06′
19	35′	90°18′42"	35.19′	55.17′
20	160′	55°25′32"	84.05′	154.78′
21	1′	180°00′00"	N/A	2.36′

NOTE:

FOR AERIALLY DEPOSITED LEAD (ADL) AREAS SEE SHEET C-16 TO C-19.

LEGEND:

- AREA OF CONTAMINATED SOIL
- AREA OF CONTAMINATED GROUNDWATER
- AREA OF CONTAMINATED SOIL AND GROUNDWATER

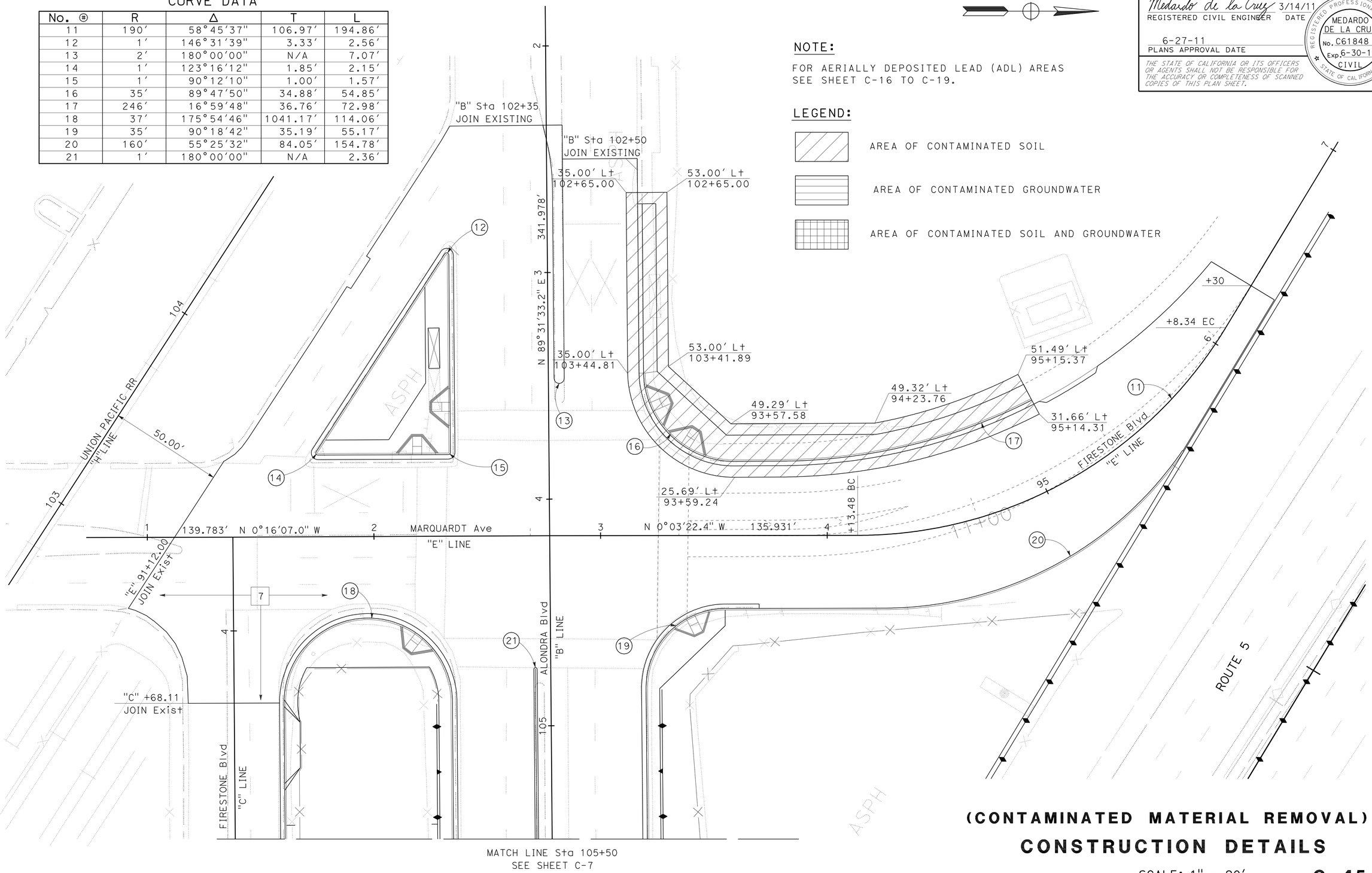

(CONTAMINATED MATERIAL REMOVAL)
CONSTRUCTION DETAILS

SCALE: 1" = 20′

C-45

STATE OF CALIFORNIA - DEPARTMENT OF TRANSPORTATION
Caltrans OFFICE OF DESIGN A

FUNCTIONAL SUPERVISOR: ASADOUR TERTERIAN
CALCULATED-DESIGNED BY: KEDAR SAWANT
CHECKED BY: MEDARDO DE LA CRUZ
REVISED BY
DATE REVISED

LAST REVISION 00-00-00
DATE PLOTTED => 30-JUN-2011
TIME PLOTTED => 15:11

Dist	COUNTY	ROUTE	POST MILES TOTAL PROJECT	SHEET No.	TOTAL SHEETS
07	LA	5	1.2/2.1	68	602

Medardo de la Cruz 3/14/11
REGISTERED CIVIL ENGINEER DATE

6-27-11
PLANS APPROVAL DATE

REGISTERED PROFESSIONAL ENGINEER MEDARDO DE LA CRUZ No. C61848 Exp. 6-30-11 CIVIL STATE OF CALIFORNIA

THE STATE OF CALIFORNIA OR ITS OFFICERS OR AGENTS SHALL NOT BE RESPONSIBLE FOR THE ACCURACY OR COMPLETENESS OF SCANNED COPIES OF THIS PLAN SHEET.

NOTE:

FOR AERIALLY DEPOSITED LEAD (ADL) AREAS SEE SHEET C-16 TO C-19.

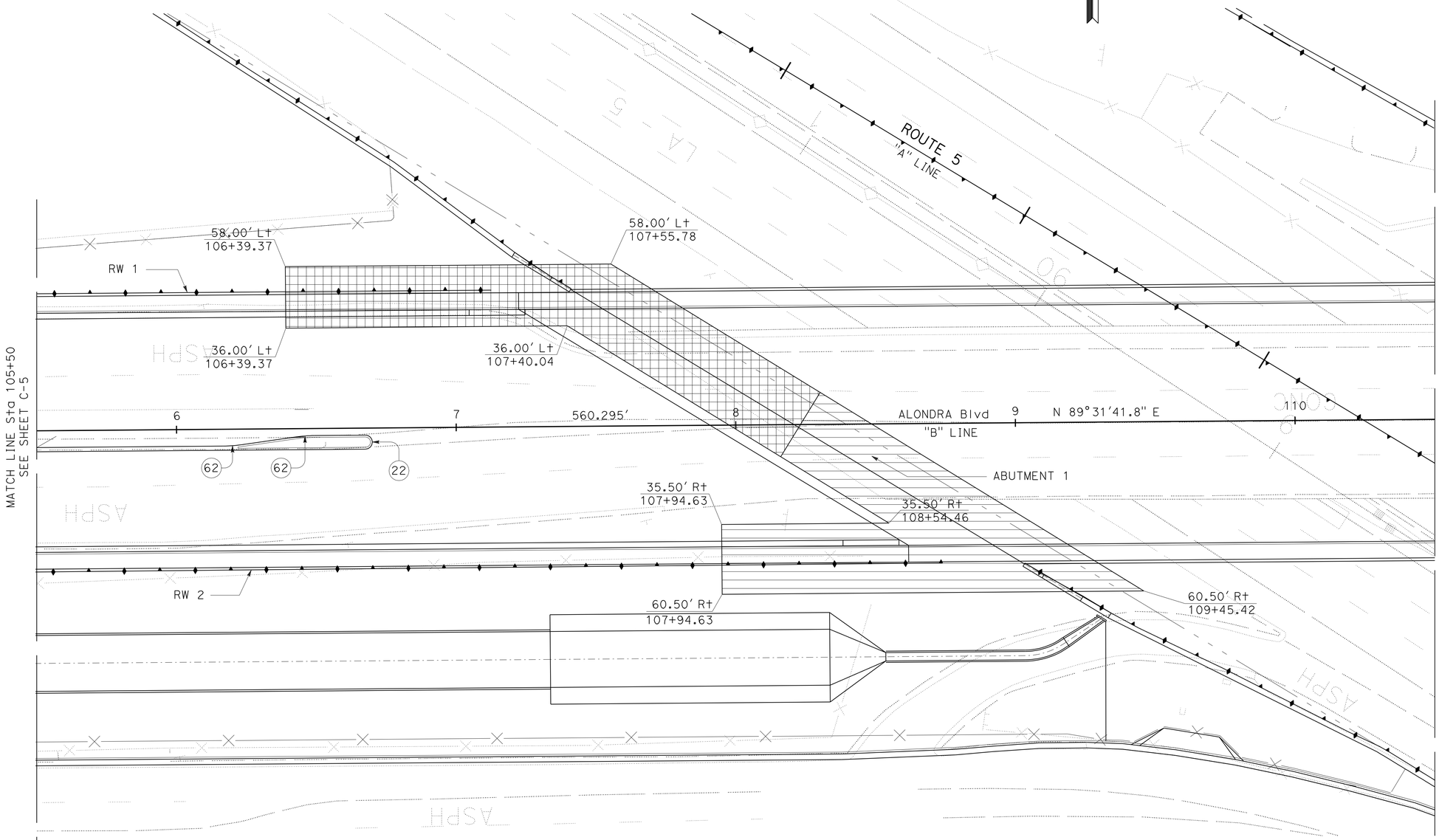

CURVE DATA

No. (#)	R	Δ	T	L
22	2.5'	180°00'00"	——	7.85'
62	50'	7°41'16"	3.36'	6.71'

(CONTAMINATED MATERIAL REMOVAL)
CONSTRUCTION DETAILS

SCALE: 1" = 20'

C-46

STATE OF CALIFORNIA - DEPARTMENT OF TRANSPORTATION
Caltrans® OFFICE OF DESIGN A

FUNCTIONAL SUPERVISOR: ASADOUR TERTERIAN
CALCULATED-DESIGNED BY: KEDAR SAWANT
CHECKED BY: MEDARDO DE LA CRUZ
REVISED BY
DATE REVISED

LAST REVISION 00-00-00
DATE PLOTTED => 30-JUN-2011
TIME PLOTTED => 16:04

Dist	COUNTY	ROUTE	POST MILES TOTAL PROJECT	SHEET No.	TOTAL SHEETS
07	LA	5	1.2/2.1	69	602

Medardo de la Cruz 3/14/11
REGISTERED CIVIL ENGINEER DATE

6-27-11
PLANS APPROVAL DATE

REGISTERED PROFESSIONAL ENGINEER
MEDARDO DE LA CRUZ
No. C61848
Exp. 6-30-11
CIVIL
STATE OF CALIFORNIA

THE STATE OF CALIFORNIA OR ITS OFFICERS OR AGENTS SHALL NOT BE RESPONSIBLE FOR THE ACCURACY OR COMPLETENESS OF SCANNED COPIES OF THIS PLAN SHEET.

NOTE:

FOR AERIALLY DEPOSITED LEAD (ADL) AREAS SEE SHEET C-16 TO C-19.

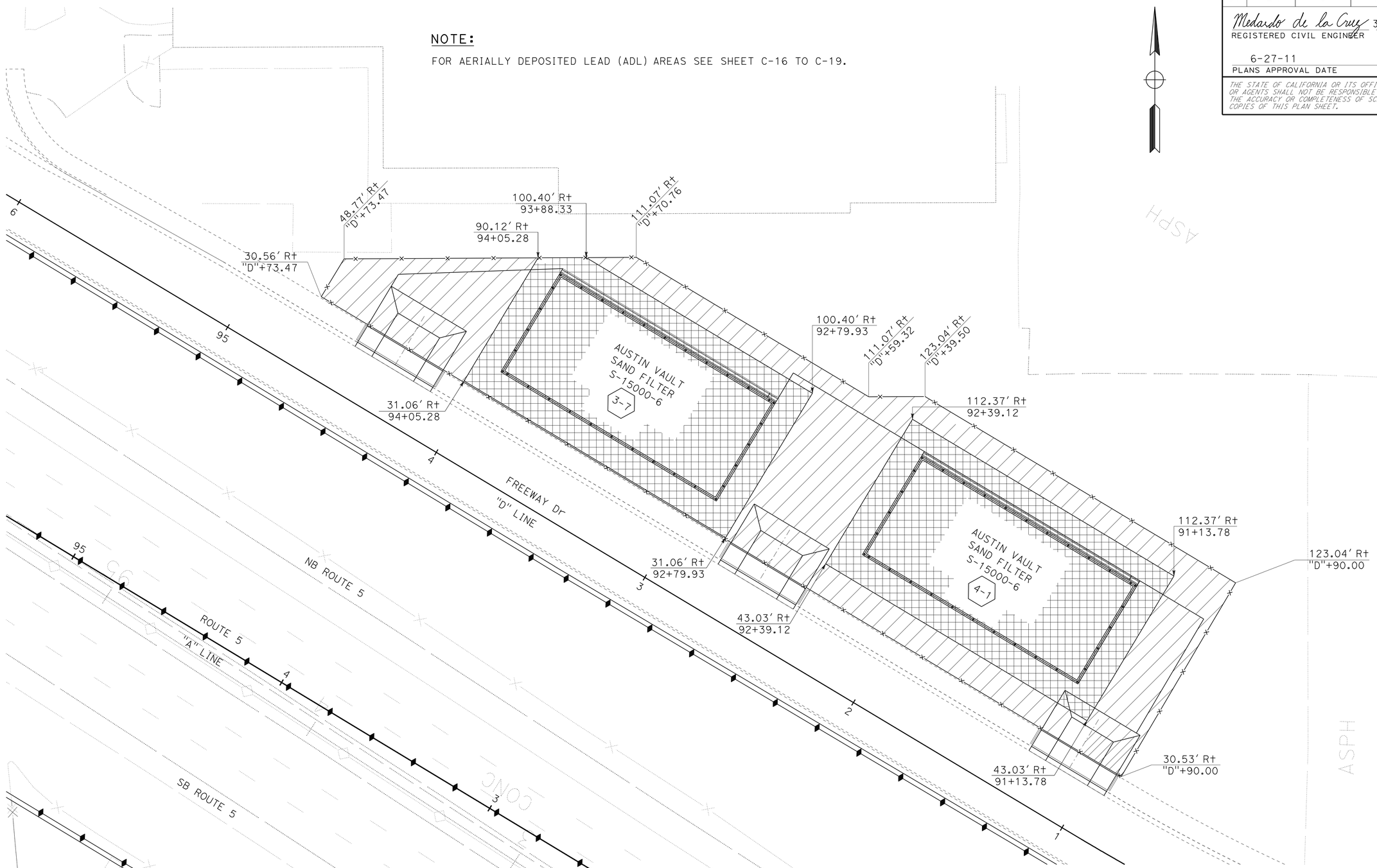

(CONTAMINATED MATERIAL REMOVAL)

CONSTRUCTION DETAILS

SCALE: 1" = 20'

C-47

STATE OF CALIFORNIA - DEPARTMENT OF TRANSPORTATION
Caltrans® OFFICE OF DESIGN A

FUNCTIONAL SUPERVISOR: ASADOUR TERTERIAN
CALCULATED-DESIGNED BY: KEDAR SAWANT
CHECKED BY: MEDARDO DE LA CRUZ
REVISED BY
DATE REVISED

LAST REVISION 00-00-00
DATE PLOTTED => 30-JUN-2011
TIME PLOTTED => 16:04

Dist	COUNTY	ROUTE	POST MILES TOTAL PROJECT	SHEET No.	TOTAL SHEETS
07	LA	5	1.2/2.1	70	602

Medardo de la Cruz 3/14/11
REGISTERED CIVIL ENGINEER DATE

6-27-11
PLANS APPROVAL DATE

REGISTERED PROFESSIONAL ENGINEER
MEDARDO DE LA CRUZ
No. C61848
Exp. 6-30-11
CIVIL
STATE OF CALIFORNIA

THE STATE OF CALIFORNIA OR ITS OFFICERS OR AGENTS SHALL NOT BE RESPONSIBLE FOR THE ACCURACY OR COMPLETENESS OF SCANNED COPIES OF THIS PLAN SHEET.

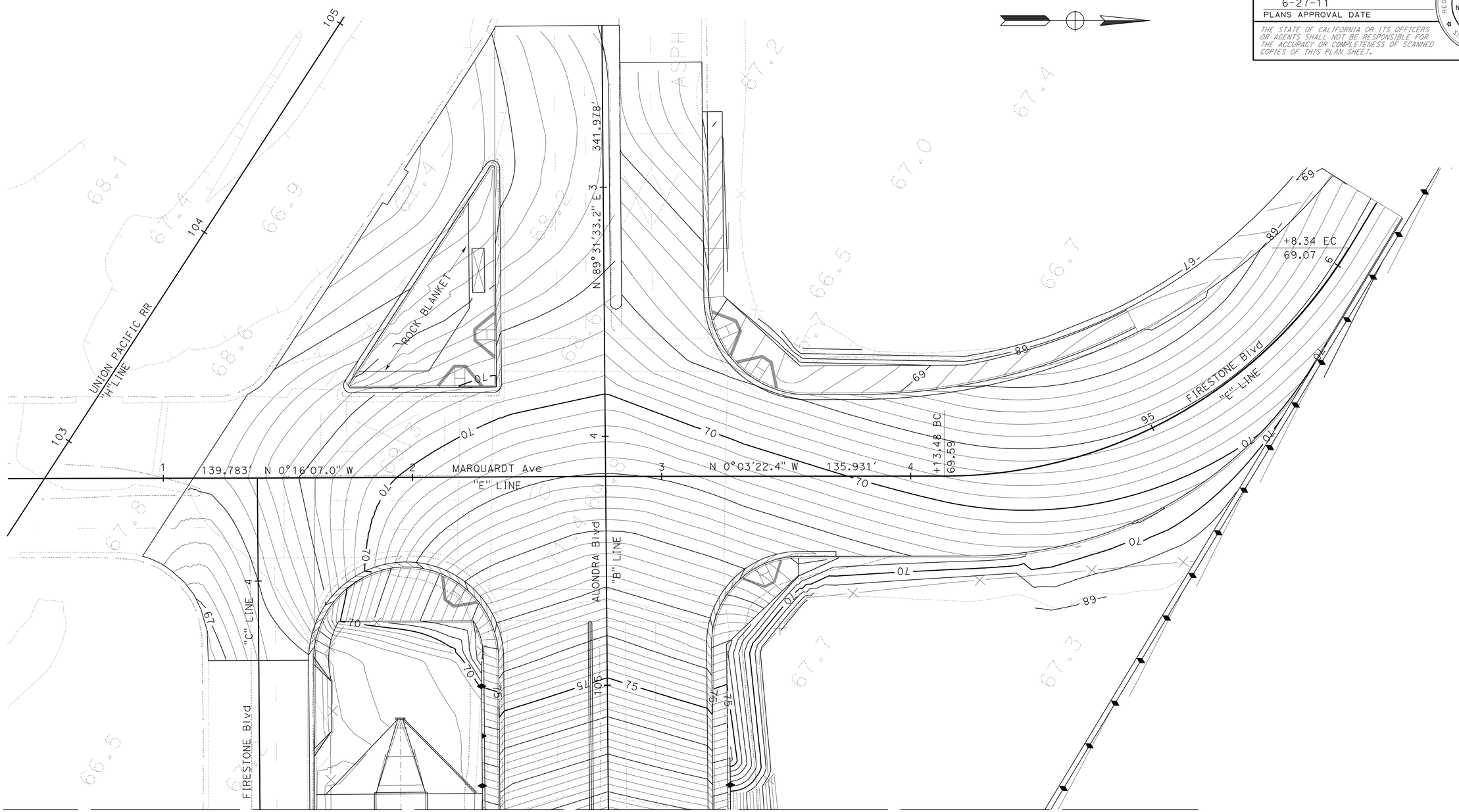

MATCH LINE Sta 105+50
SEE SHEET G-2

THIS PLAN ACCURATE FOR CONTOUR GRADING WORK ONLY.

CONTOUR GRADING

SCALE: 1" = 20'

G-1

STATE OF CALIFORNIA - DEPARTMENT OF TRANSPORTATION
Caltrans® OFFICE OF DESIGN A

FUNCTIONAL SUPERVISOR: ASADOUR TERTERIAN
CALCULATED-DESIGNED BY: KEDAR SAWANT
CHECKED BY: MEDARDO DE LA CRUZ
REVISED BY
DATE REVISED

LAST REVISION 00-00-00
DATE PLOTTED => 30-JUN-2011
TIME PLOTTED => 16:04

Dist	COUNTY	ROUTE	POST MILES TOTAL PROJECT	SHEET No.	TOTAL SHEETS
07	LA	5	1.2/2.1	71	602

Medardo de la Cruz 3/14/11
REGISTERED CIVIL ENGINEER DATE

6-27-11
PLANS APPROVAL DATE

REGISTERED PROFESSIONAL ENGINEER
MEDARDO DE LA CRUZ
No. C61848
Exp. 6-30-11
CIVIL
STATE OF CALIFORNIA

THE STATE OF CALIFORNIA OR ITS OFFICERS OR AGENTS SHALL NOT BE RESPONSIBLE FOR THE ACCURACY OR COMPLETENESS OF SCANNED COPIES OF THIS PLAN SHEET.

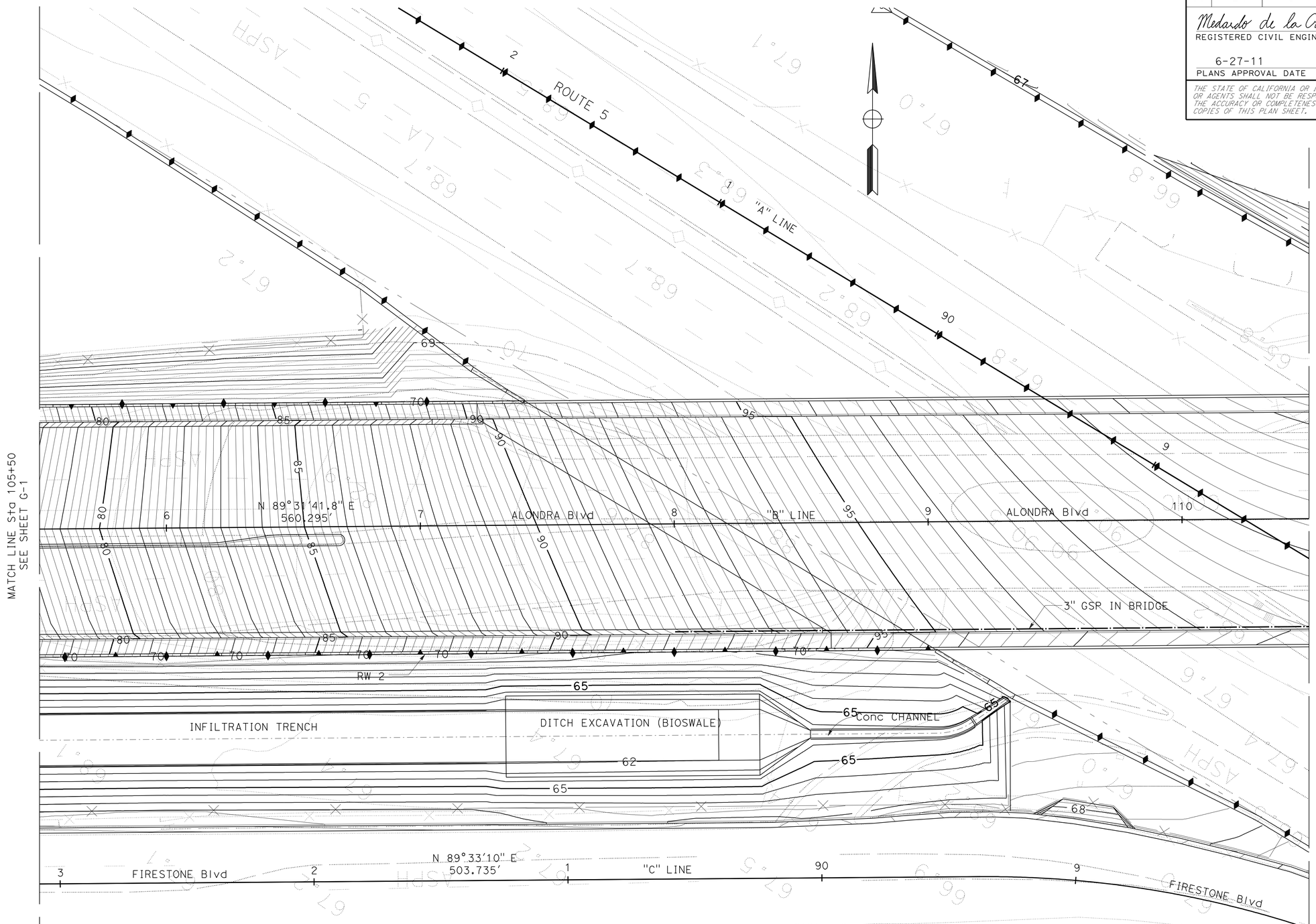

CONTOUR GRADING

SCALE: 1" = 20'

G-2

THIS PLAN ACCURATE FOR CONTOUR GRADING WORK ONLY.

STATE OF CALIFORNIA - DEPARTMENT OF TRANSPORTATION
Caltrans OFFICE OF DESIGN A

FUNCTIONAL SUPERVISOR: ASADOUR TERTERIAN
CALCULATED-DESIGNED BY: KEDAR SAWANT
CHECKED BY: MEDARDO DE LA CRUZ
REVISED BY
DATE REVISED

LAST REVISION 00-00-00
DATE PLOTTED => 30-JUN-2011
TIME PLOTTED => 16:04

Dist	COUNTY	ROUTE	POST MILES TOTAL PROJECT	SHEET No.	TOTAL SHEETS
07	LA	5	1.2/2.1	72	602

Medardo de la Cruz 3/14/11
REGISTERED CIVIL ENGINEER DATE

6-27-11
PLANS APPROVAL DATE

REGISTERED PROFESSIONAL ENGINEER MEDARDO DE LA CRUZ No. C61848 Exp. 6-30-11 CIVIL STATE OF CALIFORNIA

THE STATE OF CALIFORNIA OR ITS OFFICERS OR AGENTS SHALL NOT BE RESPONSIBLE FOR THE ACCURACY OR COMPLETENESS OF SCANNED COPIES OF THIS PLAN SHEET.

IRRIGATION CROSSOVERS

LOCATION		SIDE		CONDUIT TYPE (3)	(N) WATER LINE CROSSOVER SIZE	(N) SPRINKLER CONTROL CROSSOVER SIZE
LINE	STATION	R†	L†	SIZE / LENGTH		
"D" LINE	86+30	-	-	8 INCH / 48 LF	2 INCH	2 INCH
	TOTAL			8 INCH / 48 LF		

(N) - NOT A SEPARATE PAY ITEM FOR INFORMATION ONLY

X - DENOTES REQUIREMENT

CONDUIT TYPE (Applicable when circled below and shown under the 'CONDUIT TYPE' column heading)

1 BITUMINOUS COATED CORRUGATED STEEL PIPE (0.064 INCH THICK)
2 CORRUGATED STEEL PIPE (0.064 INCH THICK)
(3) CORRUGATED HIGH DENSITY POLYETHYLENE PIPE
4 ALTERNATIVE CONDUIT

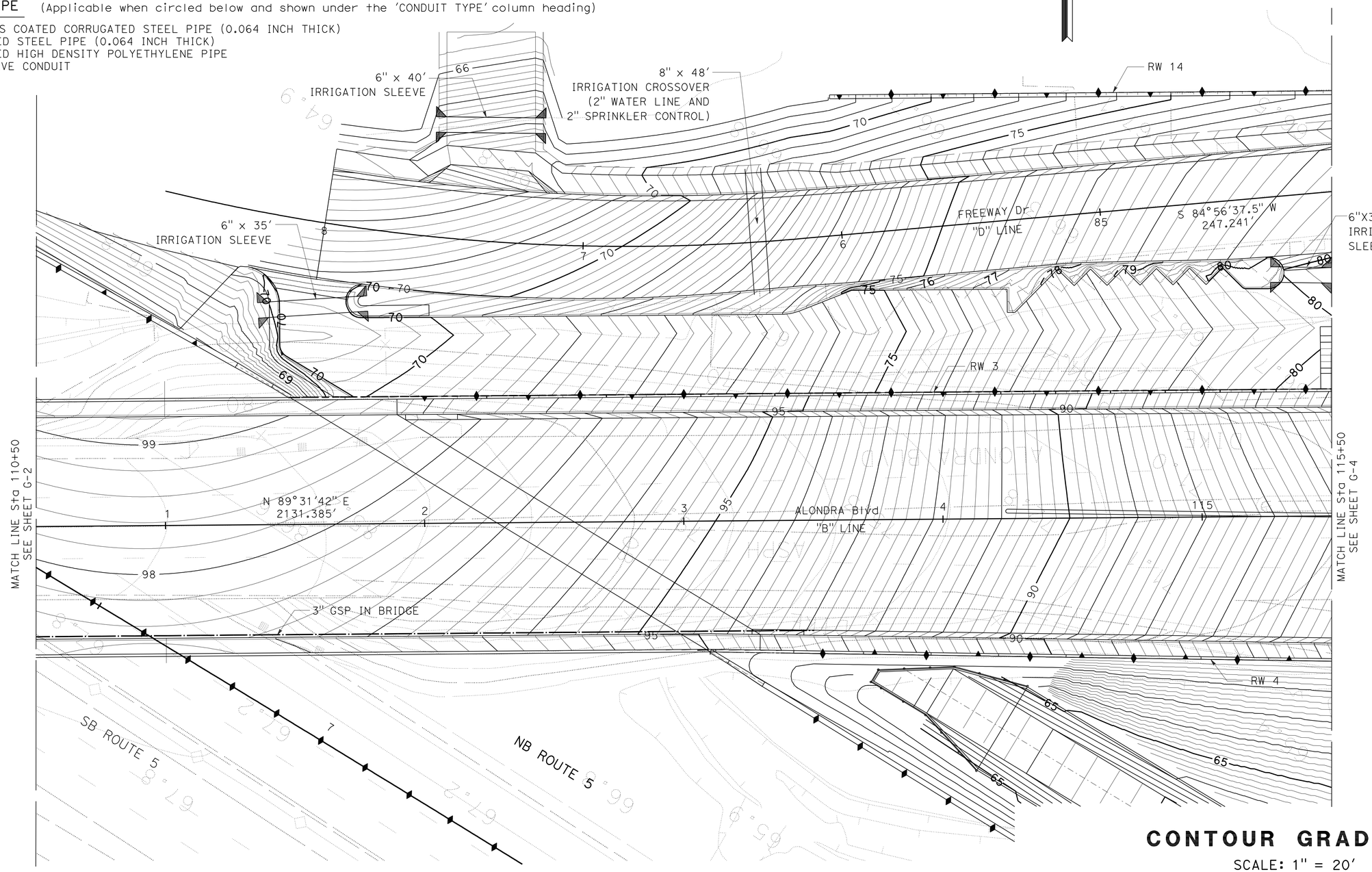

CONTOUR GRADING

SCALE: 1" = 20'

G-3

THIS PLAN ACCURATE FOR CONTOUR GRADING WORK ONLY

STATE OF CALIFORNIA - DEPARTMENT OF TRANSPORTATION
Caltrans OFFICE OF DESIGN A

FUNCTIONAL SUPERVISOR: ASADOUR TERTERIAN
CALCULATED-DESIGNED BY: KEDAR SAWANT
CHECKED BY: MEDARDO DE LA CRUZ
REVISED BY
DATE REVISED

LAST REVISION 00-00-00
DATE PLOTTED => 30-JUN-2011
TIME PLOTTED => 16:04

Dist	COUNTY	ROUTE	POST MILES TOTAL PROJECT	SHEET No.	TOTAL SHEETS
07	LA	5	1.2/2.1	73	602

Medardo de la Cruz 3/14/11
REGISTERED CIVIL ENGINEER DATE

6-27-11
PLANS APPROVAL DATE

REGISTERED PROFESSIONAL ENGINEER
MEDARDO DE LA CRUZ
No. C61848
Exp. 6-30-11
CIVIL
STATE OF CALIFORNIA

THE STATE OF CALIFORNIA OR ITS OFFICERS OR AGENTS SHALL NOT BE RESPONSIBLE FOR THE ACCURACY OR COMPLETENESS OF SCANNED COPIES OF THIS PLAN SHEET.

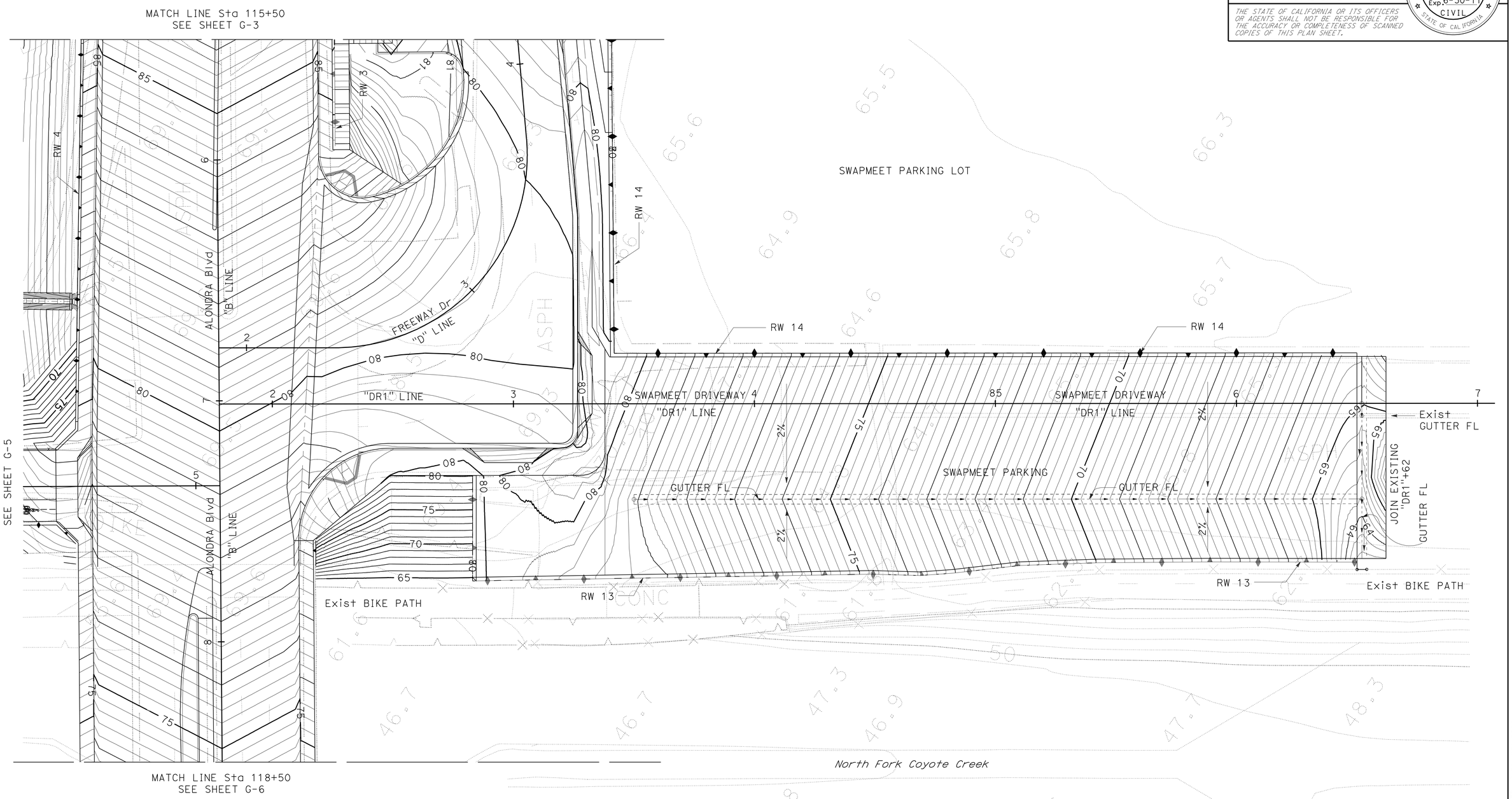

CONTOUR GRADING

SCALE: 1" = 20'

G-4

THIS PLAN ACCURATE FOR CONTOUR GRADING WORK ONLY

STATE OF CALIFORNIA - DEPARTMENT OF TRANSPORTATION
Caltrans OFFICE OF DESIGN A

FUNCTIONAL SUPERVISOR: ASADOUR TERTERIAN
CALCULATED-DESIGNED BY: KEDAR SAWANT
CHECKED BY: MEDARDO DE LA CRUZ
REVISED BY
DATE REVISED

LAST REVISION 00-00-00
DATE PLOTTED => 30-JUN-2011
TIME PLOTTED => 16:05

Dist	COUNTY	ROUTE	POST MILES TOTAL PROJECT	SHEET No.	TOTAL SHEETS
07	LA	5	1.2/2.1	74	602

Medardo de la Cruz 3/14/11
REGISTERED CIVIL ENGINEER DATE

6-27-11
PLANS APPROVAL DATE

REGISTERED PROFESSIONAL ENGINEER
MEDARDO DE LA CRUZ
No. C61848
Exp. 6-30-11
CIVIL
STATE OF CALIFORNIA

THE STATE OF CALIFORNIA OR ITS OFFICERS OR AGENTS SHALL NOT BE RESPONSIBLE FOR THE ACCURACY OR COMPLETENESS OF SCANNED COPIES OF THIS PLAN SHEET.

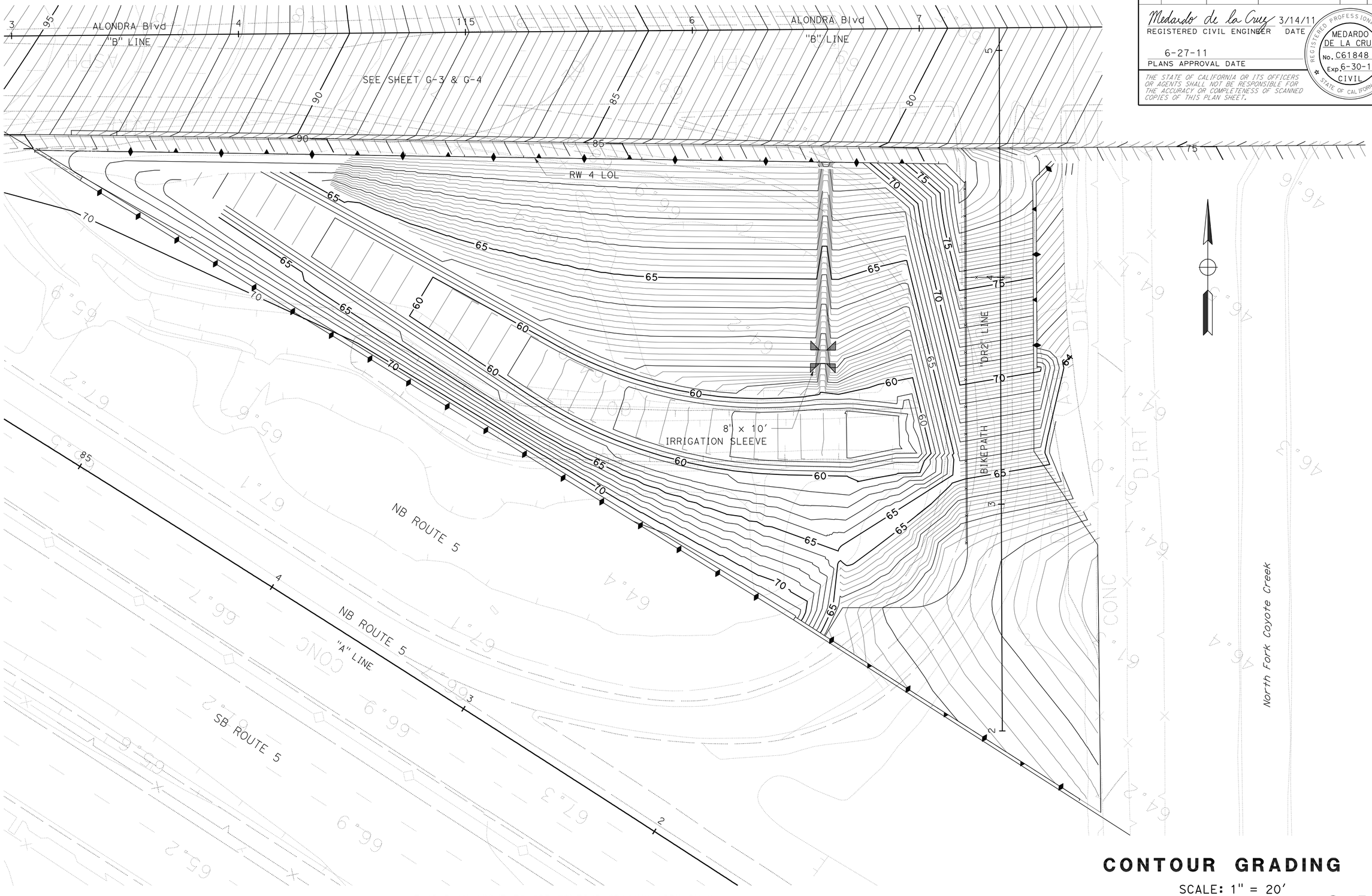

THIS PLAN ACCURATE FOR CONTOUR GRADING WORK ONLY

CONTOUR GRADING

SCALE: 1" = 20'

G-5

STATE OF CALIFORNIA - DEPARTMENT OF TRANSPORTATION
Caltrans OFFICE OF DESIGN A

FUNCTIONAL SUPERVISOR: ASADOUR TERTERIAN
CALCULATED-DESIGNED BY: KEDAR SAWANT
CHECKED BY: MEDARDO DE LA CRUZ
REVISED BY
DATE REVISED

LAST REVISION 00-00-00
DATE PLOTTED => 30-JUN-2011
TIME PLOTTED => 16:05

Dist	COUNTY	ROUTE	POST MILES TOTAL PROJECT	SHEET No.	TOTAL SHEETS
07	LA	5	1.2/2.1	75	602

Medardo de la Cruz 3/14/11
REGISTERED CIVIL ENGINEER DATE

6-27-11
PLANS APPROVAL DATE

REGISTERED PROFESSIONAL ENGINEER
MEDARDO DE LA CRUZ
No. C61848
Exp. 6-30-11
CIVIL
STATE OF CALIFORNIA

THE STATE OF CALIFORNIA OR ITS OFFICERS OR AGENTS SHALL NOT BE RESPONSIBLE FOR THE ACCURACY OR COMPLETENESS OF SCANNED COPIES OF THIS PLAN SHEET.

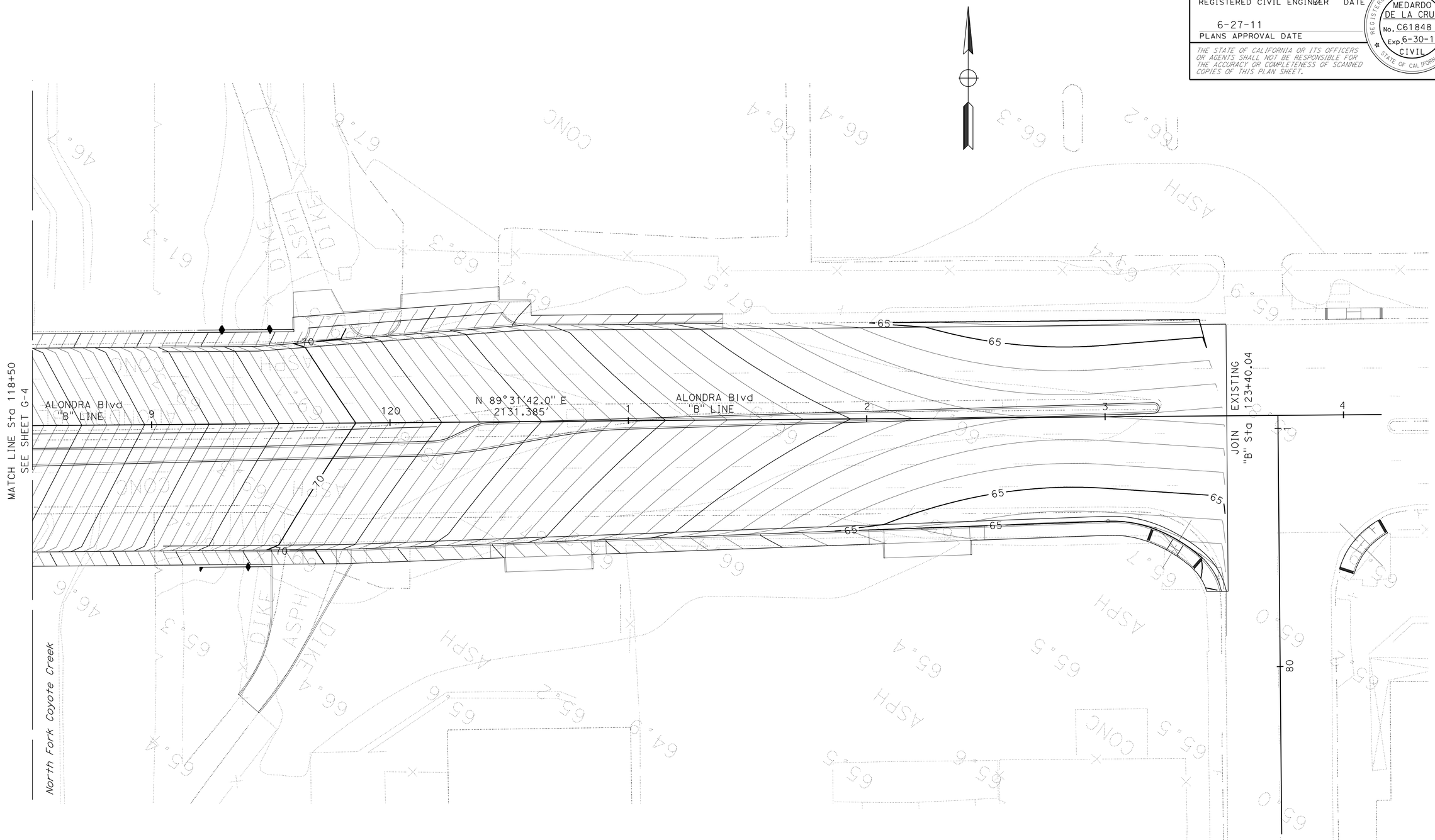

CONTOUR GRADING

SCALE: 1" = 20'

G-6

THIS PLAN ACCURATE FOR CONTOUR GRADING WORK ONLY

STATE OF CALIFORNIA - DEPARTMENT OF TRANSPORTATION
Caltrans OFFICE OF DESIGN A

FUNCTIONAL SUPERVISOR: ASADOUR TERTERIAN
CALCULATED-DESIGNED BY: KEDAR SAWANT
CHECKED BY: MEDARDO DE LA CRUZ
REVISED BY
DATE REVISED

LAST REVISION 00-00-00
DATE PLOTTED => 30-JUN-2011
TIME PLOTTED => 16:05

Dist	COUNTY	ROUTE	POST MILES TOTAL PROJECT	SHEET No.	TOTAL SHEETS
07	LA	5	1.2/2.1	76	602

Medardo de la Cruz 3/14/11
REGISTERED CIVIL ENGINEER DATE

6-27-11
PLANS APPROVAL DATE

REGISTERED PROFESSIONAL ENGINEER
MEDARDO DE LA CRUZ
No. C61848
Exp. 6-30-11
CIVIL
STATE OF CALIFORNIA

THE STATE OF CALIFORNIA OR ITS OFFICERS OR AGENTS SHALL NOT BE RESPONSIBLE FOR THE ACCURACY OR COMPLETENESS OF SCANNED COPIES OF THIS PLAN SHEET.

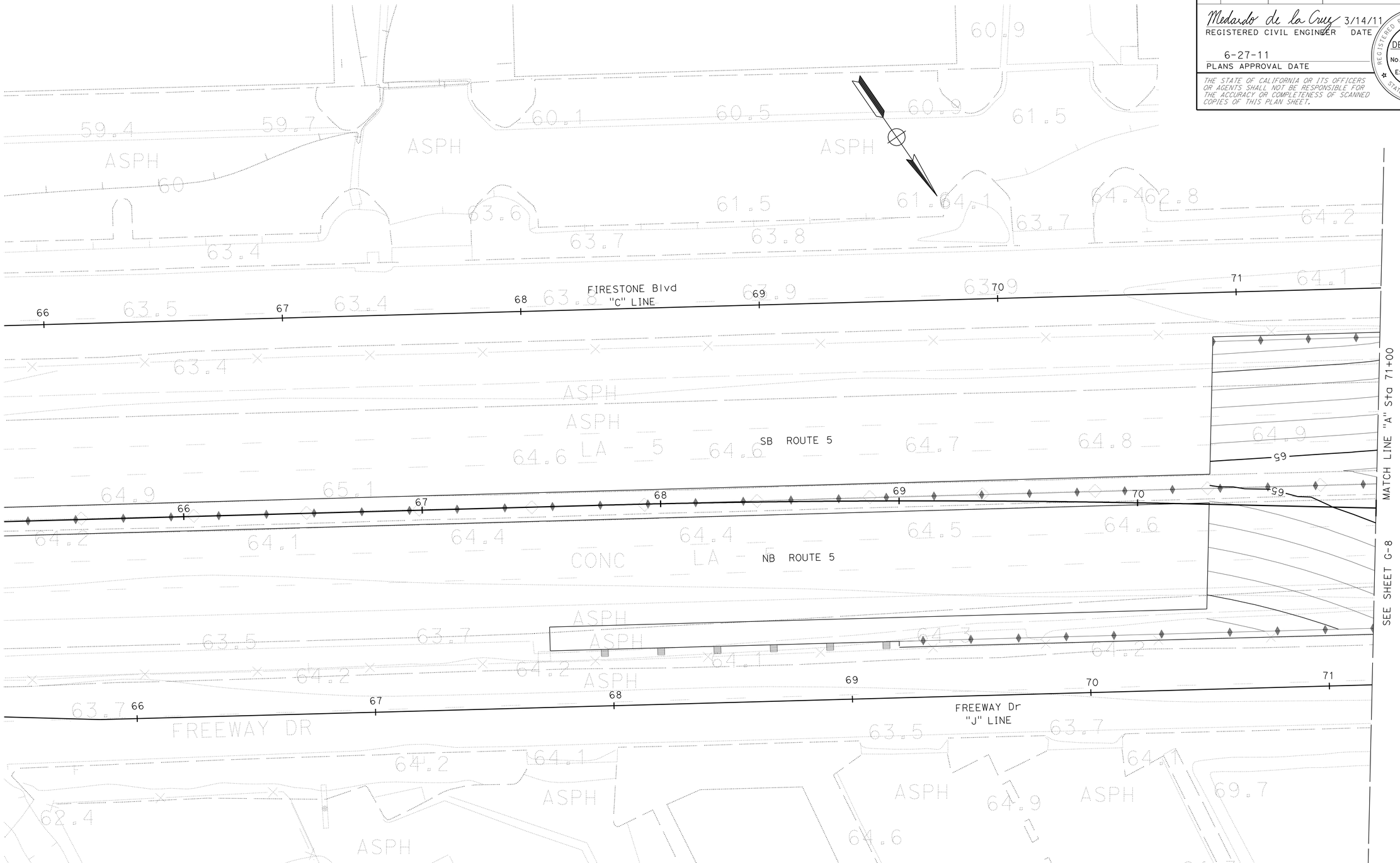

THIS PLAN ACCURATE FOR CONTOUR GRADING WORK ONLY

CONTOUR GRADING

SCALE: 1" = 20'

G-7

STATE OF CALIFORNIA - DEPARTMENT OF TRANSPORTATION
Caltrans® OFFICE OF DESIGN A

FUNCTIONAL SUPERVISOR: ASADOUR TERTERIAN

CALCULATED-DESIGNED BY: KEDAR SAWANT
CHECKED BY: MEDARDO DE LA CRUZ

REVISED BY
DATE REVISED

LAST REVISION 00-00-00
DATE PLOTTED => 30-JUN-2011
TIME PLOTTED => 16:05

Dist	COUNTY	ROUTE	POST MILES TOTAL PROJECT	SHEET No.	TOTAL SHEETS
07	LA	5	1.2/2.1	77	602

Medardo de la Cruz 3/14/11
REGISTERED CIVIL ENGINEER DATE

6-27-11
PLANS APPROVAL DATE

REGISTERED PROFESSIONAL ENGINEER
MEDARDO DE LA CRUZ
No. C61848
Exp. 6-30-11
CIVIL
STATE OF CALIFORNIA

THE STATE OF CALIFORNIA OR ITS OFFICERS OR AGENTS SHALL NOT BE RESPONSIBLE FOR THE ACCURACY OR COMPLETENESS OF SCANNED COPIES OF THIS PLAN SHEET.

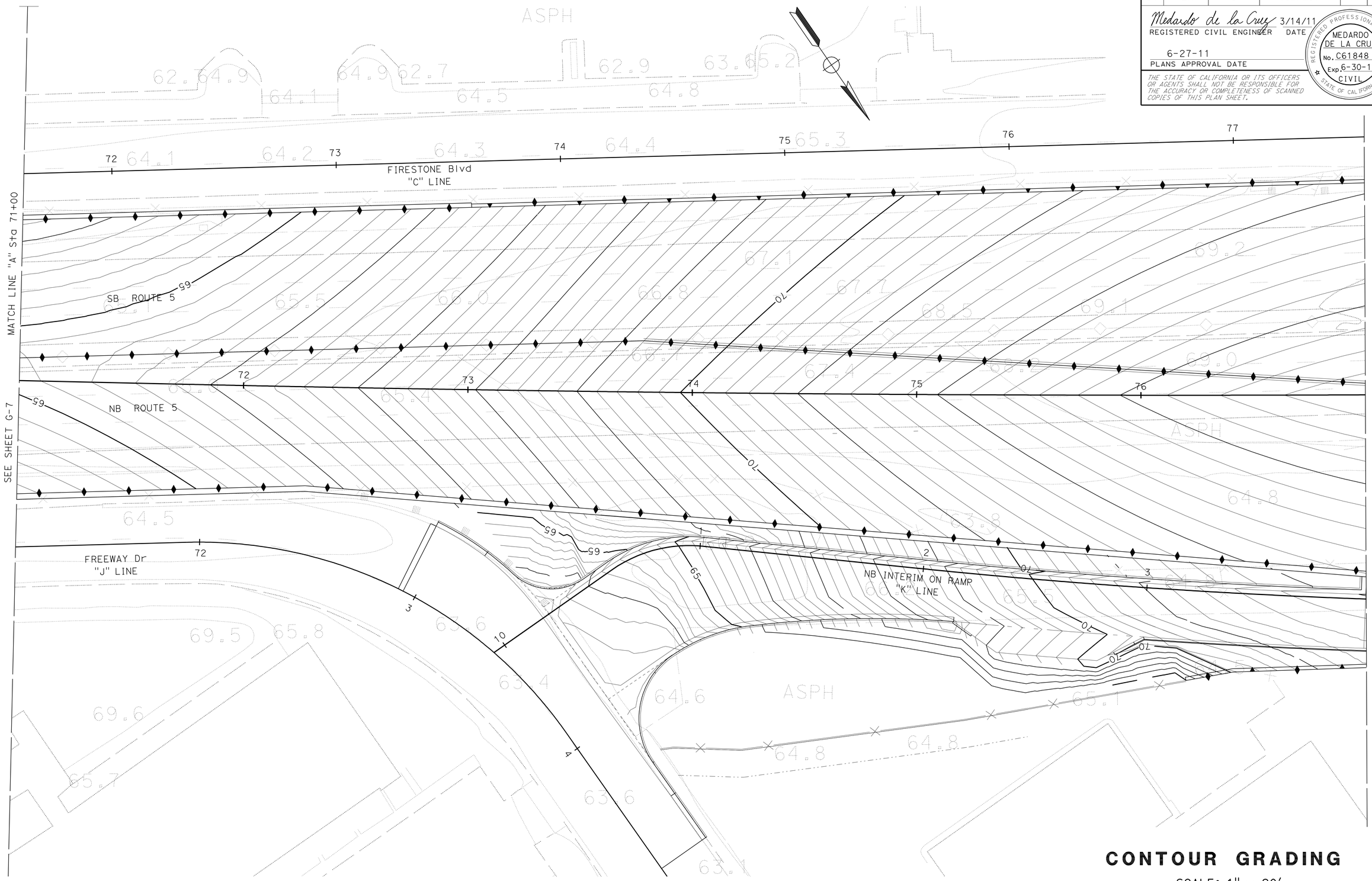

THIS PLAN ACCURATE FOR CONTOUR GRADING WORK ONLY

CONTOUR GRADING

SCALE: 1" = 20'

G-8

STATE OF CALIFORNIA - DEPARTMENT OF TRANSPORTATION
Caltrans® OFFICE OF DESIGN A

FUNCTIONAL SUPERVISOR: ASADOUR TERTERIAN
CALCULATED-DESIGNED BY: KEDAR SAWANT
CHECKED BY: MEDARDO DE LA CRUZ
REVISED BY
DATE REVISED

LAST REVISION 00-00-00
DATE PLOTTED => 30-JUN-2011
TIME PLOTTED => 16:05

Dist	COUNTY	ROUTE	POST MILES TOTAL PROJECT	SHEET No.	TOTAL SHEETS
07	LA	5	1.2/2.1	78	602

Medardo de la Cruz 3/14/11
REGISTERED CIVIL ENGINEER DATE

6-27-11
PLANS APPROVAL DATE

REGISTERED PROFESSIONAL ENGINEER
MEDARDO DE LA CRUZ
No. C61848
Exp. 6-30-11
CIVIL
STATE OF CALIFORNIA

THE STATE OF CALIFORNIA OR ITS OFFICERS OR AGENTS SHALL NOT BE RESPONSIBLE FOR THE ACCURACY OR COMPLETENESS OF SCANNED COPIES OF THIS PLAN SHEET.

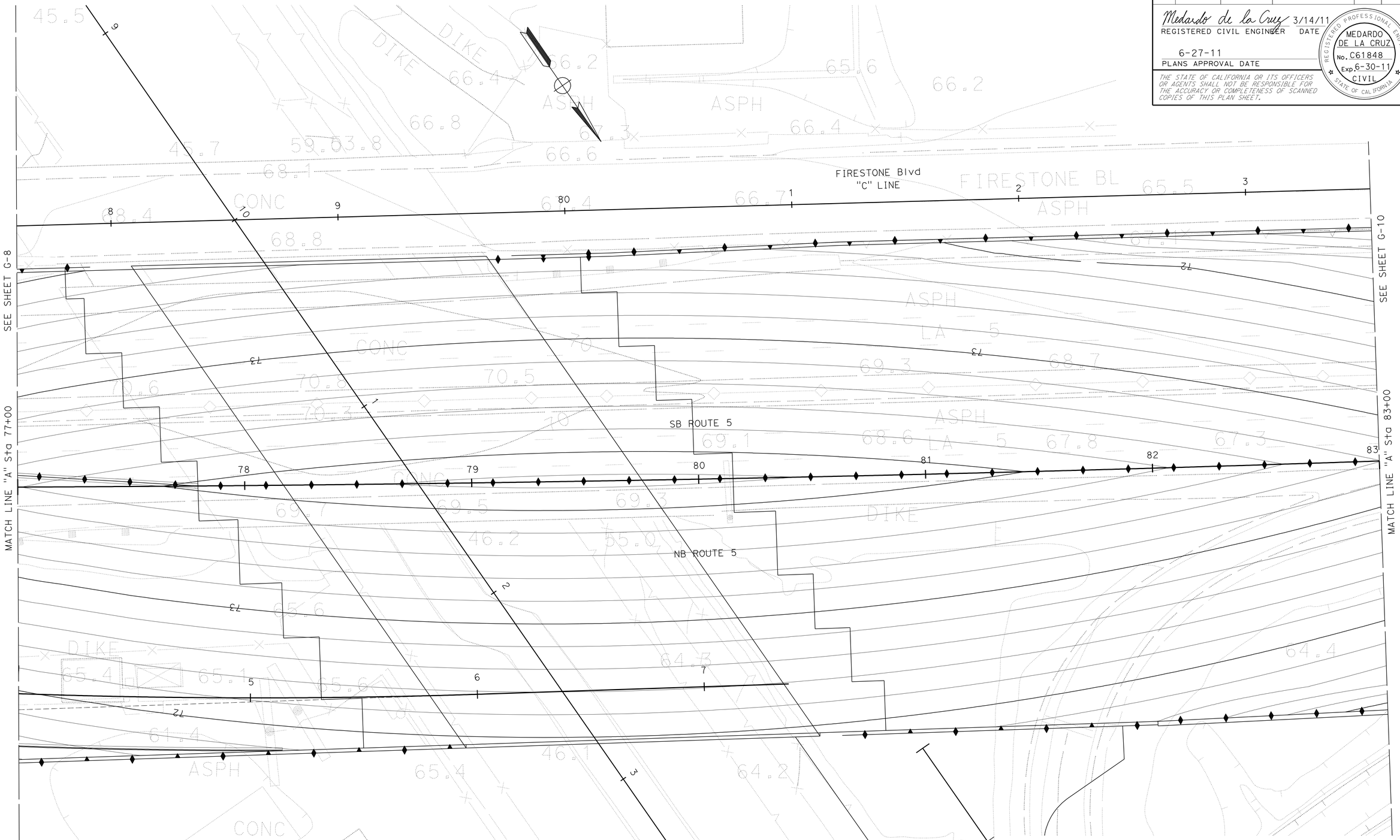

THIS PLAN ACCURATE FOR CONTOUR GRADING WORK ONLY

CONTOUR GRADING

SCALE: 1" = 20'

G-9

STATE OF CALIFORNIA - DEPARTMENT OF TRANSPORTATION
Caltrans OFFICE OF DESIGN A

FUNCTIONAL SUPERVISOR: ASADOUR TERTERIAN

CALCULATED-DESIGNED BY: KEDAR SAWANT
CHECKED BY: MEDARDO DE LA CRUZ

REVISED BY
DATE REVISED

LAST REVISION
DATE PLOTTED => 30-JUN-2011
TIME PLOTTED => 16:06
00-00-00

Dist	COUNTY	ROUTE	POST MILES TOTAL PROJECT	SHEET No.	TOTAL SHEETS
07	LA	5	1.2/2.1	79	602

Medardo de la Cruz 3/14/11
REGISTERED CIVIL ENGINEER DATE

6-27-11
PLANS APPROVAL DATE

REGISTERED PROFESSIONAL ENGINEER
MEDARDO DE LA CRUZ
No. C61848
Exp. 6-30-11
CIVIL
STATE OF CALIFORNIA

THE STATE OF CALIFORNIA OR ITS OFFICERS OR AGENTS SHALL NOT BE RESPONSIBLE FOR THE ACCURACY OR COMPLETENESS OF SCANNED COPIES OF THIS PLAN SHEET.

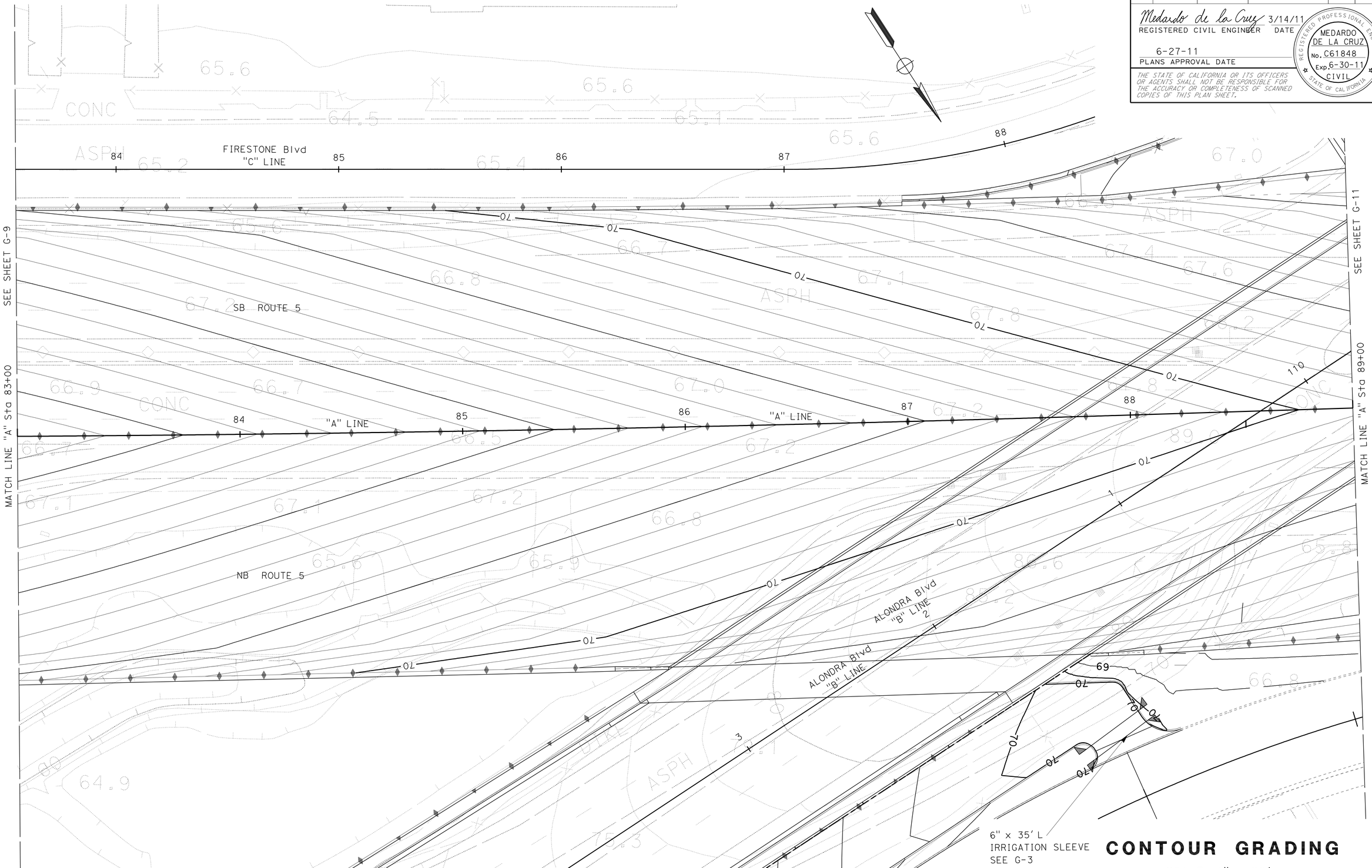

THIS PLAN ACCURATE FOR CONTOUR GRADING WORK ONLY

CONTOUR GRADING

SCALE: 1" = 20'

G-10

STATE OF CALIFORNIA - DEPARTMENT OF TRANSPORTATION
Caltrans OFFICE OF DESIGN A

FUNCTIONAL SUPERVISOR: ASADOUR TERTERIAN

CALCULATED-DESIGNED BY: KEDAR SAWANT
CHECKED BY: MEDARDO DE LA CRUZ

REVISED BY
DATE REVISED

LAST REVISION | DATE PLOTTED => 30-JUN-2011
00-00-00 | TIME PLOTTED => 16:06

Dist	COUNTY	ROUTE	POST MILES TOTAL PROJECT	SHEET No.	TOTAL SHEETS
07	LA	5	1.2/2.1	80	602

Medardo de la Cruz 3/14/11
REGISTERED CIVIL ENGINEER DATE

6-27-11
PLANS APPROVAL DATE

REGISTERED PROFESSIONAL ENGINEER
MEDARDO DE LA CRUZ
No. C61848
Exp. 6-30-11
CIVIL
STATE OF CALIFORNIA

THE STATE OF CALIFORNIA OR ITS OFFICERS OR AGENTS SHALL NOT BE RESPONSIBLE FOR THE ACCURACY OR COMPLETENESS OF SCANNED COPIES OF THIS PLAN SHEET.

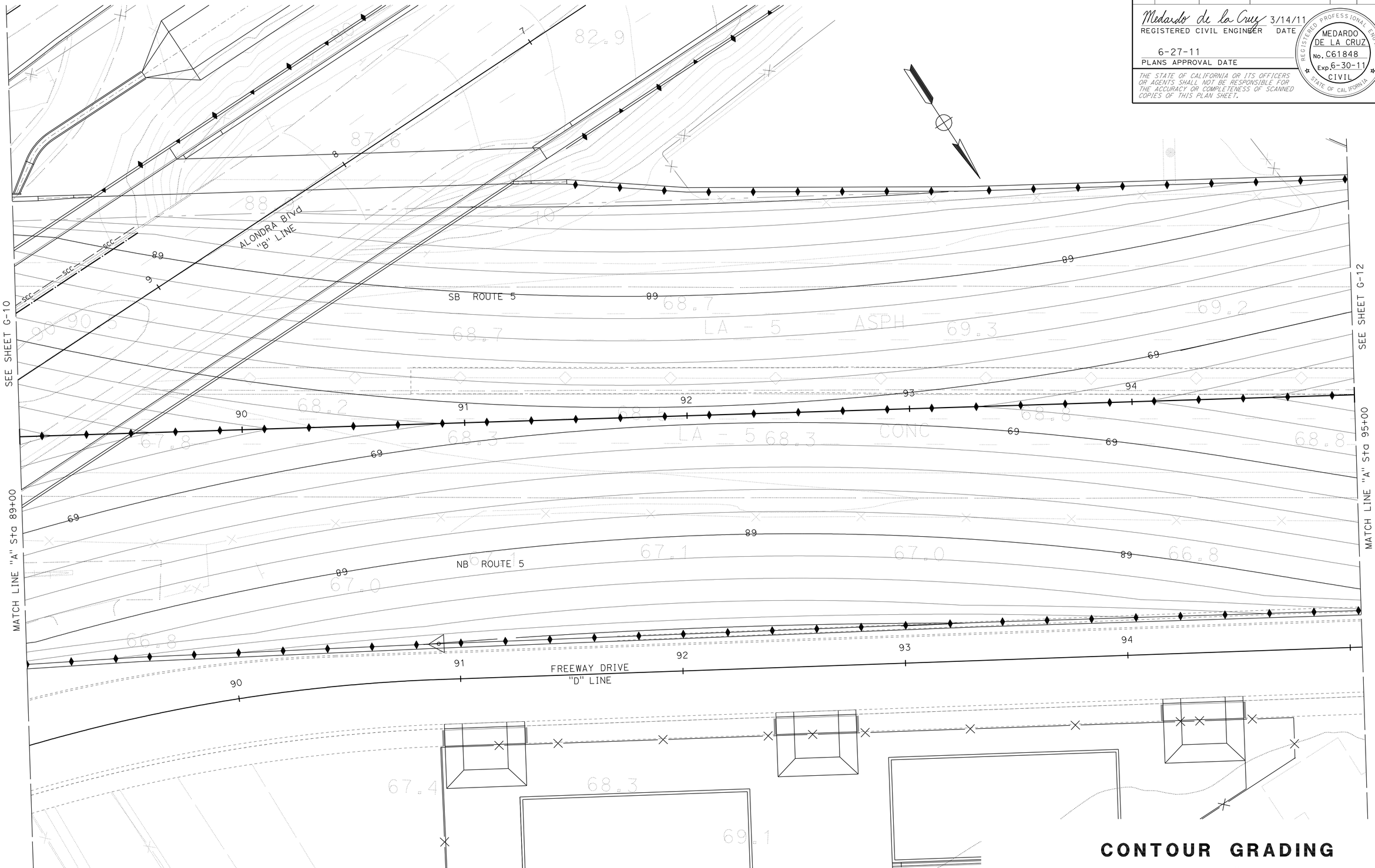

CONTOUR GRADING

SCALE: 1" = 20'

THIS PLAN ACCURATE FOR CONTOUR GRADING WORK ONLY

G-11

STATE OF CALIFORNIA - DEPARTMENT OF TRANSPORTATION
Caltrans® OFFICE OF DESIGN A

FUNCTIONAL SUPERVISOR: ASADOUR TERTERIAN
CALCULATED-DESIGNED BY: KEDAR SAWANT
CHECKED BY: MEDARDO DE LA CRUZ
REVISED BY
DATE REVISED

LAST REVISION 00-00-00
DATE PLOTTED => 30-JUN-2011
TIME PLOTTED => 16:06

Dist	COUNTY	ROUTE	POST MILES TOTAL PROJECT	SHEET No.	TOTAL SHEETS
07	LA	5	1.2/2.1	81	602

Medardo de la Cruz 3/14/11
REGISTERED CIVIL ENGINEER DATE

6-27-11
PLANS APPROVAL DATE

REGISTERED PROFESSIONAL ENGINEER
MEDARDO DE LA CRUZ
No. C61848
Exp. 6-30-11
CIVIL
STATE OF CALIFORNIA

THE STATE OF CALIFORNIA OR ITS OFFICERS OR AGENTS SHALL NOT BE RESPONSIBLE FOR THE ACCURACY OR COMPLETENESS OF SCANNED COPIES OF THIS PLAN SHEET.

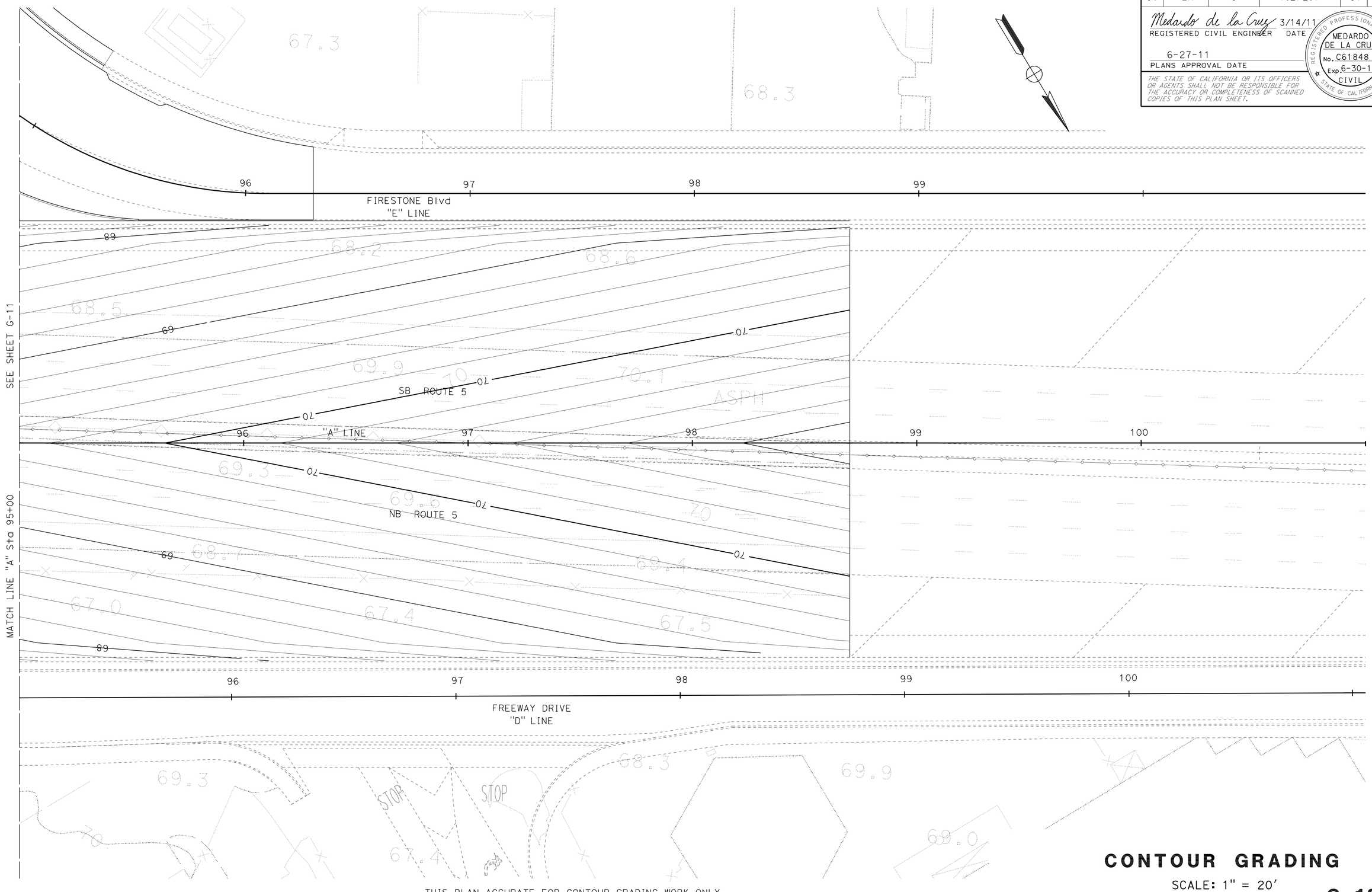

THIS PLAN ACCURATE FOR CONTOUR GRADING WORK ONLY

CONTOUR GRADING

SCALE: 1" = 20'

G-12

STATE OF CALIFORNIA - DEPARTMENT OF TRANSPORTATION
Caltrans® OFFICE OF DESIGN A

FUNCTIONAL SUPERVISOR: ASADOUR TERTERIAN
CALCULATED-DESIGNED BY: KEDAR SAWANT
CHECKED BY: MEDARDO DE LA CRUZ
REVISED BY
DATE REVISED

LAST REVISION DATE PLOTTED => 30-JUN-2011
00-00-00 TIME PLOTTED => 16:06

Dist	COUNTY	ROUTE	POST MILES TOTAL PROJECT	SHEET No.	TOTAL SHEETS
07	LA	5	1.2/2.1	82	602

Medardo de la Cruz 3/14/11
REGISTERED CIVIL ENGINEER DATE

6-27-11
PLANS APPROVAL DATE

REGISTERED PROFESSIONAL ENGINEER
MEDARDO DE LA CRUZ
No. C61848
Exp. 6-30-11
CIVIL
STATE OF CALIFORNIA

THE STATE OF CALIFORNIA OR ITS OFFICERS OR AGENTS SHALL NOT BE RESPONSIBLE FOR THE ACCURACY OR COMPLETENESS OF SCANNED COPIES OF THIS PLAN SHEET.

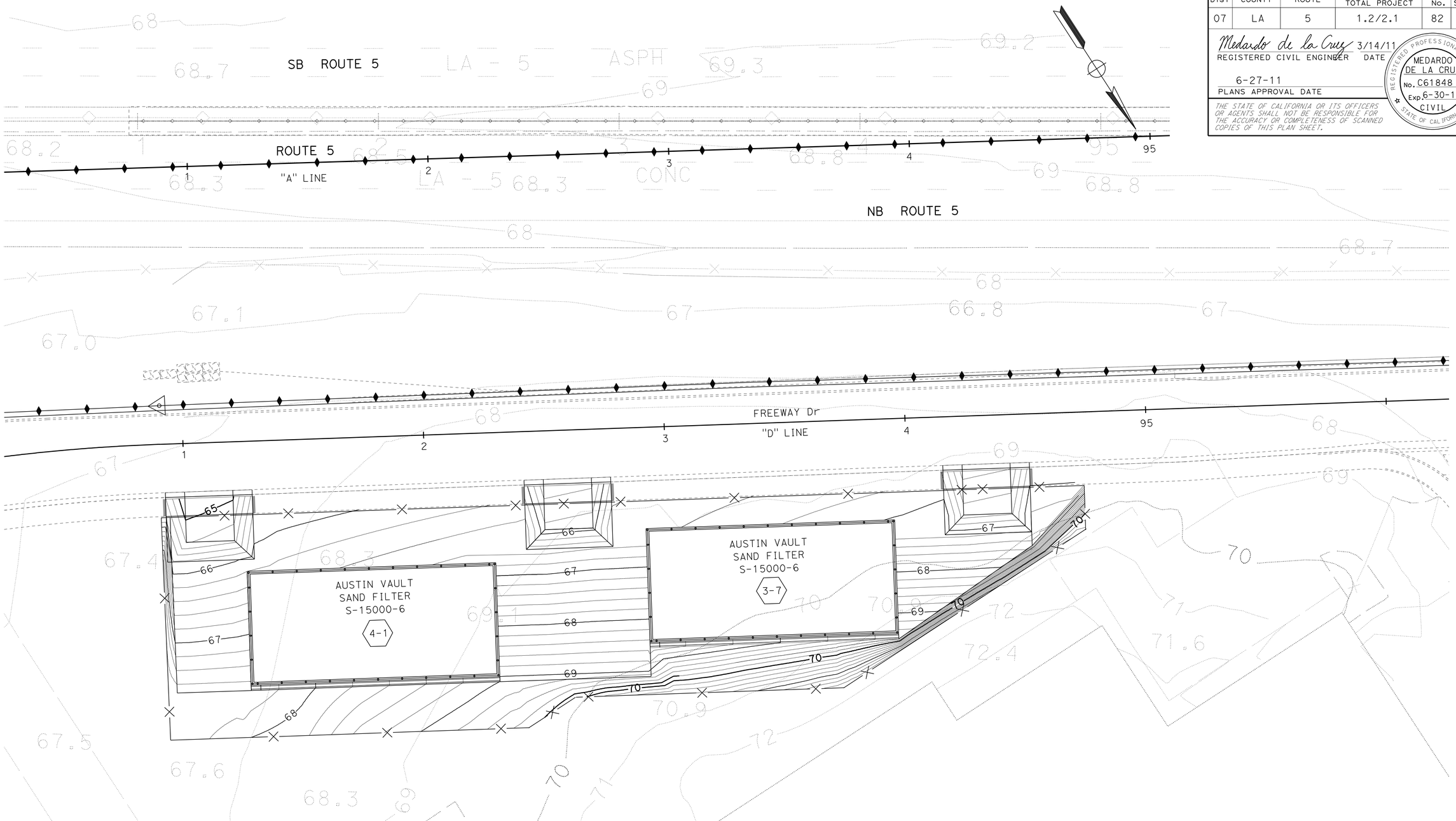

CONTOUR GRADING

SCALE: 1" = 20'

G-13

STATE OF CALIFORNIA - DEPARTMENT OF TRANSPORTATION
Caltrans OFFICE OF DESIGN A

FUNCTIONAL SUPERVISOR: ASADOUR TERTERIAN

CALCULATED-DESIGNED BY: KEDAR SAWANT
CHECKED BY: MEDARDO DE LA CRUZ

REVISED BY | DATE REVISED

LAST REVISION 00-00-00 | DATE PLOTTED => 30-JUN-2011 | TIME PLOTTED => 16:06

Dist	COUNTY	ROUTE	POST MILES TOTAL PROJECT	SHEET No.	TOTAL SHEETS
07	LA	5	1.2/2.1	83	602

REGISTERED CIVIL ENGINEER 3/14/11 DATE

6-27-11
PLANS APPROVAL DATE

REGISTERED PROFESSIONAL ENGINEER RALPH M. SASAKI No. 30849 Exp. 3/31/12 CIVIL STATE OF CALIFORNIA

THE STATE OF CALIFORNIA OR ITS OFFICERS OR AGENTS SHALL NOT BE RESPONSIBLE FOR THE ACCURACY OR COMPLETENESS OF SCANNED COPIES OF THIS PLAN SHEET.

ABBREVIATIONS:

COCB	CURB OPENING CATCH BASIN
SPPWC	STANDARD PLANS FOR PUBLIC WORKS CONSTRUCTION
LD	LOCAL DEPRESSIONS
JC	JUNCTION CHAMBER
JC 3	JUNCTION CHAMBER No. 3
JC 3-C	JUNCTION CHAMBER No. 3-C
CMPA	CORRUGATED METAL PIPE ARCH
LACFCD	LOS ANGELES COUNTY FLOOD CONTROL DISTRICT

LEGEND:

DRAINAGE SYSTEM No.

DRAINAGE UNIT

NOTE: THE CONTRACTOR SHALL VERIFY LOCATIONS AND ELEVATIONS OF EXISTING DRAINAGE SYSTEM BEFORE COMMENCEMENT OF WORK.

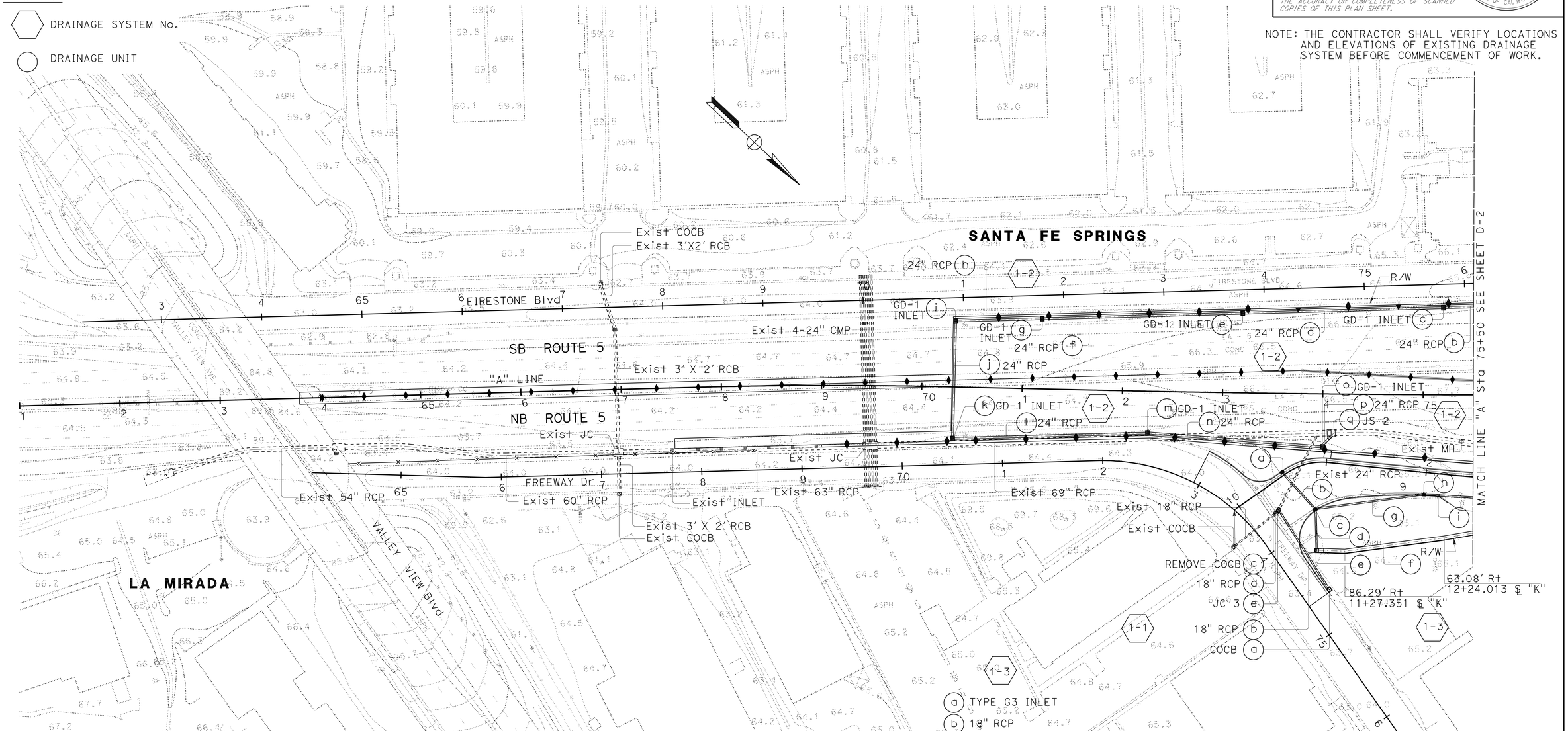

DRAINAGE PLAN

SCALE: 1" = 50'

THIS PLAN ACCURATE FOR DRAINAGE WORK ONLY.

D-1

STATE OF CALIFORNIA - DEPARTMENT OF TRANSPORTATION
Caltrans® HYDRAULICS

FUNCTIONAL SUPERVISOR: RALPH M. SASAKI

CALCULATED-DESIGNED BY: SIEW MEI TAN
CHECKED BY: RALPH M. SASAKI

REVISED BY | DATE REVISED

LAST REVISION | DATE PLOTTED => 30-JUN-2011 | TIME PLOTTED => 16:06
00-00-00

Dist	COUNTY	ROUTE	POST MILES TOTAL PROJECT	SHEET No.	TOTAL SHEETS
07	LA	5	1.2/2.1	84	602

REGISTERED CIVIL ENGINEER 3/14/11 DATE

6-27-11
PLANS APPROVAL DATE

REGISTERED PROFESSIONAL ENGINEER RALPH M. SASAKI No. 30849 Exp. 3/31/12 CIVIL STATE OF CALIFORNIA

THE STATE OF CALIFORNIA OR ITS OFFICERS OR AGENTS SHALL NOT BE RESPONSIBLE FOR THE ACCURACY OR COMPLETENESS OF SCANNED COPIES OF THIS PLAN SHEET.

NOTE:
THE CONTRACTOR SHALL VERIFY LOCATIONS AND ELEVATIONS OF EXISTING DRAINAGE SYSTEM BEFORE COMMENCEMENT OF WORK.

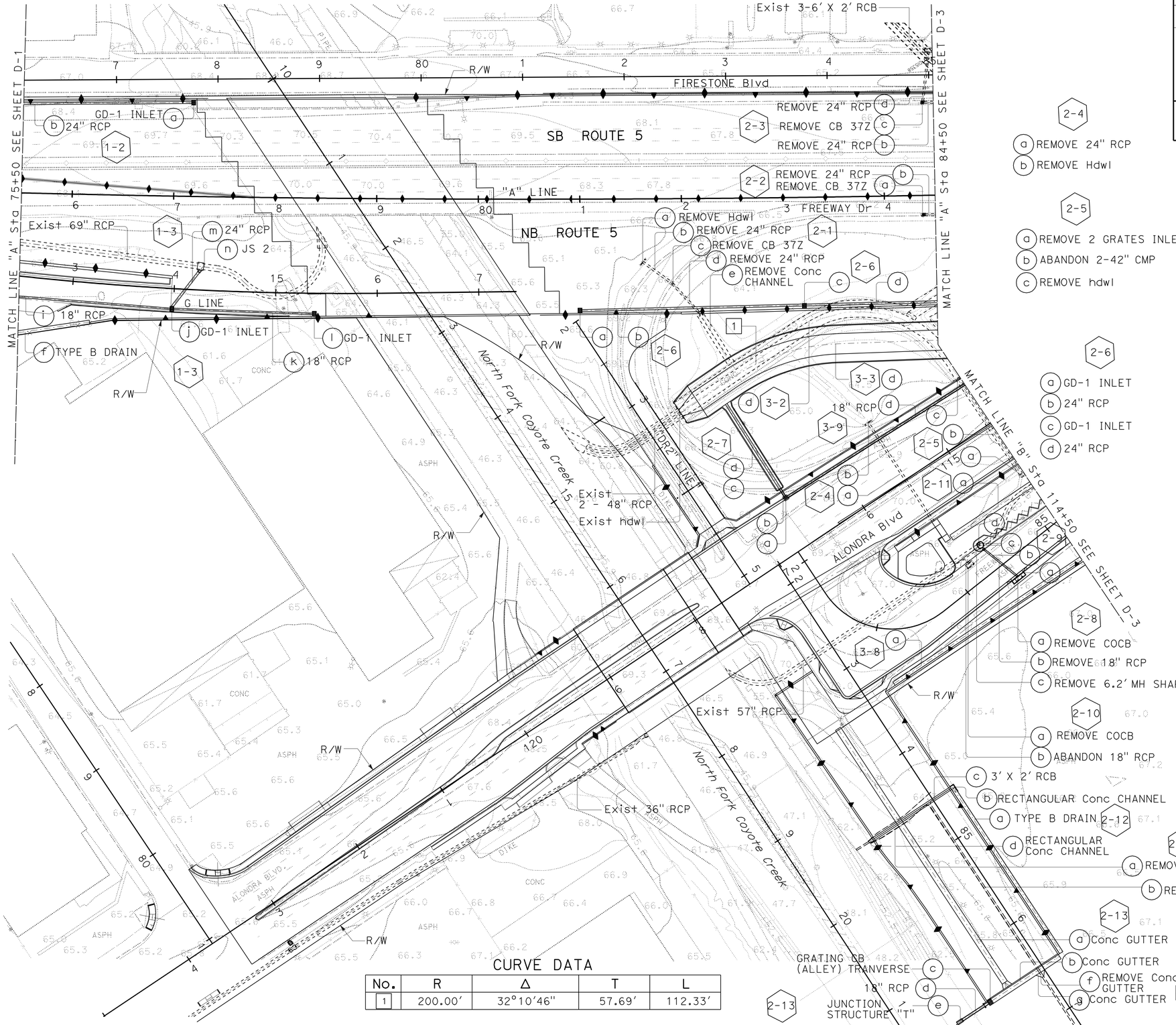

2-4
- (a) REMOVE 24" RCP
- (b) REMOVE Hdwl

2-5
- (a) REMOVE 2 GRATES INLET
- (b) ABANDON 2-42" CMP
- (c) REMOVE hdwl

2-6
- (a) GD-1 INLET
- (b) 24" RCP
- (c) GD-1 INLET
- (d) 24" RCP

2-7
- (a) COCB WITH GRATING
- (b) 18" RCP
- (c) PIPE CULVERT STRAIGHT hdwl
- (d) TRAPEZOIDAL Conc CHANNEL b = 2', h = 1.15', z =2

2-9
- (a) COCB WITH LD
- (b) 18" RCP
- (c) MH SHAFT SAFETY LEDGE
- (d) MH SHAFT

2-11
- (a) Conc GUTTER

3-2
- (d) REMOVE TRAPEZOIDAL Conc CHANNEL

3-3
- (d) TRAPEZOIDAL Conc CHANNEL b = 20', h = 4', z =2

3-8
- (a) TYPE B DRAIN

2-8
- (a) REMOVE COCB
- (b) REMOVE 18" RCP
- (c) REMOVE 6.2' MH SHAFT

2-10
- (a) REMOVE COCB
- (b) ABANDON 18" RCP

2-12
- (c) 3' X 2' RCB
- (b) RECTANGULAR Conc CHANNEL
- (a) TYPE B DRAIN
- (d) RECTANGULAR Conc CHANNEL

2-14
- (a) REMOVE Conc GUTTER
- (b) REMOVE Conc GUTTER

2-13
- (a) Conc GUTTER
- (b) Conc GUTTER
- (f) REMOVE Conc GUTTER
- (g) Conc GUTTER

CURVE DATA

No.	R	Δ	T	L
1	200.00'	32°10'46"	57.69'	112.33'

THIS PLAN ACCURATE FOR DRAINAGE WORK ONLY.

DRAINAGE PLAN

SCALE: 1" = 50'

D-2

STATE OF CALIFORNIA - DEPARTMENT OF TRANSPORTATION
Caltrans HYDRAULICS

FUNCTIONAL SUPERVISOR: RALPH M. SASAKI
CALCULATED-DESIGNED BY: SIEW MEI TAN
CHECKED BY: RALPH M. SASAKI
REVISED BY / DATE REVISED

LAST REVISION 00-00-00
DATE PLOTTED => 30-JUN-2011
TIME PLOTTED => 16:06

Dist	COUNTY	ROUTE	POST MILES TOTAL PROJECT	SHEET No.	TOTAL SHEETS
07	LA	5	1.2/2.1	85	602

REGISTERED CIVIL ENGINEER 3/14/11 DATE

6-27-11
PLANS APPROVAL DATE

REGISTERED PROFESSIONAL ENGINEER RALPH M. SASAKI No. 30849 Exp. 3/31/12 CIVIL STATE OF CALIFORNIA

THE STATE OF CALIFORNIA OR ITS OFFICERS OR AGENTS SHALL NOT BE RESPONSIBLE FOR THE ACCURACY OR COMPLETENESS OF SCANNED COPIES OF THIS PLAN SHEET.

NOTE:
THE CONTRACTOR SHALL VERIFY LOCATIONS AND ELEVATIONS OF EXISTING DRAINAGE SYSTEM BEFORE COMMENCEMENT OF WORK.

2-2
- (b) REMOVE 24" RCP
- (c) REMOVE CB 37Z
- (d) REMOVE 24" RCP
- (e) REMOVE Conc CHANNEL

2-6
- (d) 24" RCP
- (e) JS 3
- (f) JS 3
- (g) 24" RCP
- (h) GD-1 INLET

2-11
- (a) Conc GUTTER
- (b) GD-3 INLET
- (c) 24" RCP
- (d) JS - PIPE TO RCB

3-2
- (a) REMOVE 2- 5' X 3' RCB
- (b) REMOVE hdwl
- (c) REMOVE TRAPEZOIDAL Conc CHANNEL

3-3
- (a) 2- 5' X 3' RCB
- (b) RECTANGULAR Conc CHANNEL b = VAR, h = 5.5'
- (c) TRANSITION STRUCTURE No. 3
- (d) TRAPEZOIDAL Conc CHANNEL b = 20.0', h = 4.0', z = 2

3-9
- (a) TYPE GDO INLET
- (b) 18" RCP
- (c) TYPE G1 INLET
- (d) 18" RCP

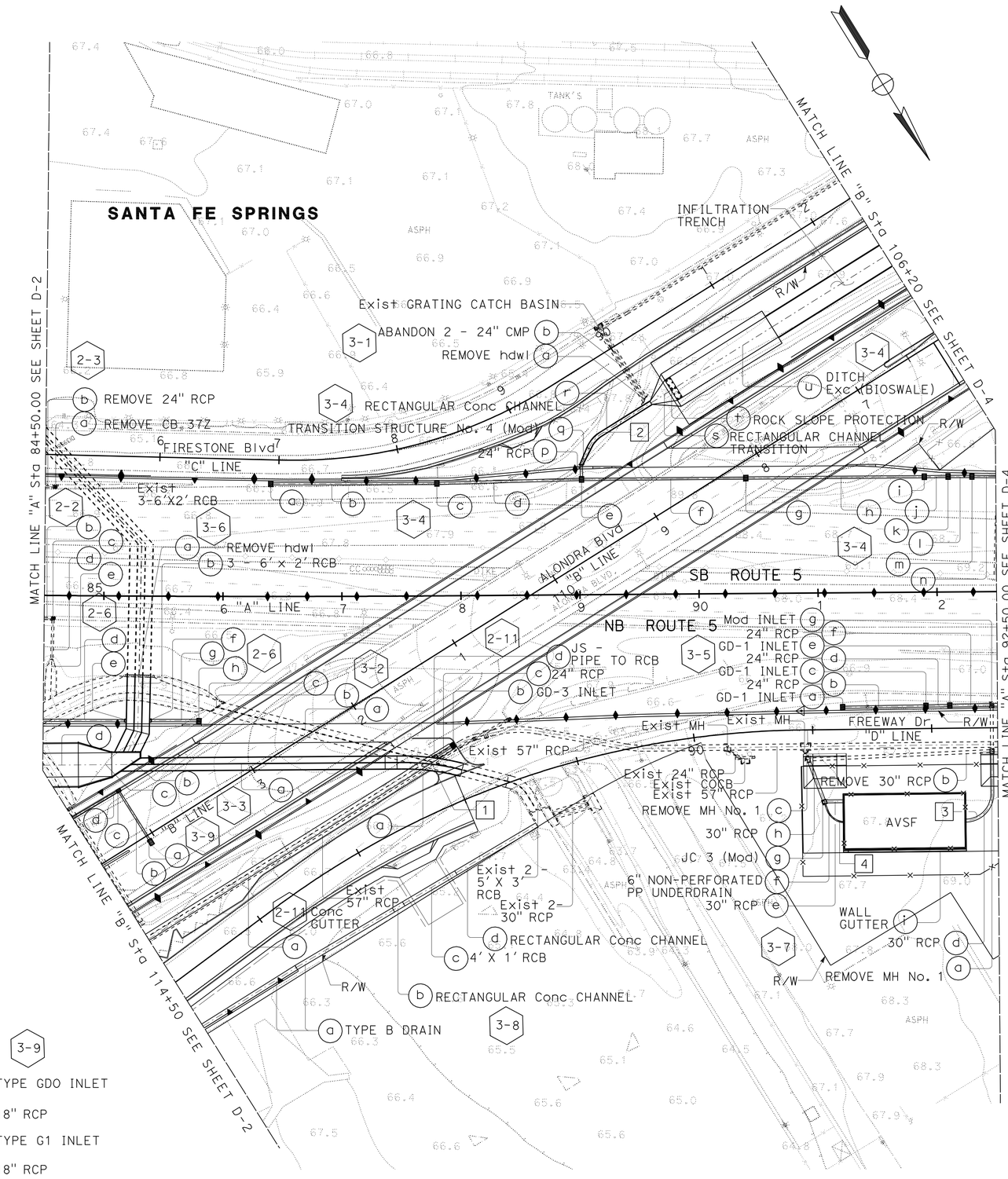

3-4
- (a) GD-1 INLET
- (b) 24" RCP
- (c) GD-1 INLET
- (d) 24" RCP
- (e) GD-3 INLET
- (f) 24" RCP
- (g) GD-3 INLET
- (h) 24" RCP
- (i) GD-3 INLET
- (j) 24" RCP
- (k) GD-3 INLET
- (l) 24" RCP
- (m) GD-3 INLET
- (n) 24" RCP W/ Conc BACKFILL

CURVE DATA

No.	R	Δ	T	L
1	200.00'	14°44'14"	25.86'	51.44'
2	40.00'	38°12'03"	13.85'	26.67'
3	22.50'	92 1'23"	23.31'	36.14'
4	15.00'	70°14'57"	10.55'	18.39'

DRAINAGE PLAN

SCALE: 1" = 50'

THIS PLAN ACCURATE FOR DRAINAGE WORK ONLY.

D-3

STATE OF CALIFORNIA - DEPARTMENT OF TRANSPORTATION
Caltrans
HYDRAULICS

FUNCTIONAL SUPERVISOR: RALPH M. SASAKI
CALCULATED-DESIGNED BY: SIEW MEI TAN
CHECKED BY: RALPH M. SASAKI
REVISED BY
DATE REVISED

LAST REVISION 00-00-00
DATE PLOTTED => 30-JUN-2011
TIME PLOTTED => 16:07

Dist	COUNTY	ROUTE	POST MILES TOTAL PROJECT	SHEET No.	TOTAL SHEETS
07	LA	5	1.2/2.1	86	602

REGISTERED CIVIL ENGINEER 3/14/11 DATE

6-27-11
PLANS APPROVAL DATE

REGISTERED PROFESSIONAL ENGINEER RALPH M. SASAKI No. 30849 Exp. 3/31/12 CIVIL STATE OF CALIFORNIA

THE STATE OF CALIFORNIA OR ITS OFFICERS OR AGENTS SHALL NOT BE RESPONSIBLE FOR THE ACCURACY OR COMPLETENESS OF SCANNED COPIES OF THIS PLAN SHEET.

NOTE: THE CONTRACTOR SHALL VERIFY LOCATIONS AND ELEVATIONS OF EXISTING DRAINAGE SYSTEM BEFORE COMMENCEMENT OF WORK.

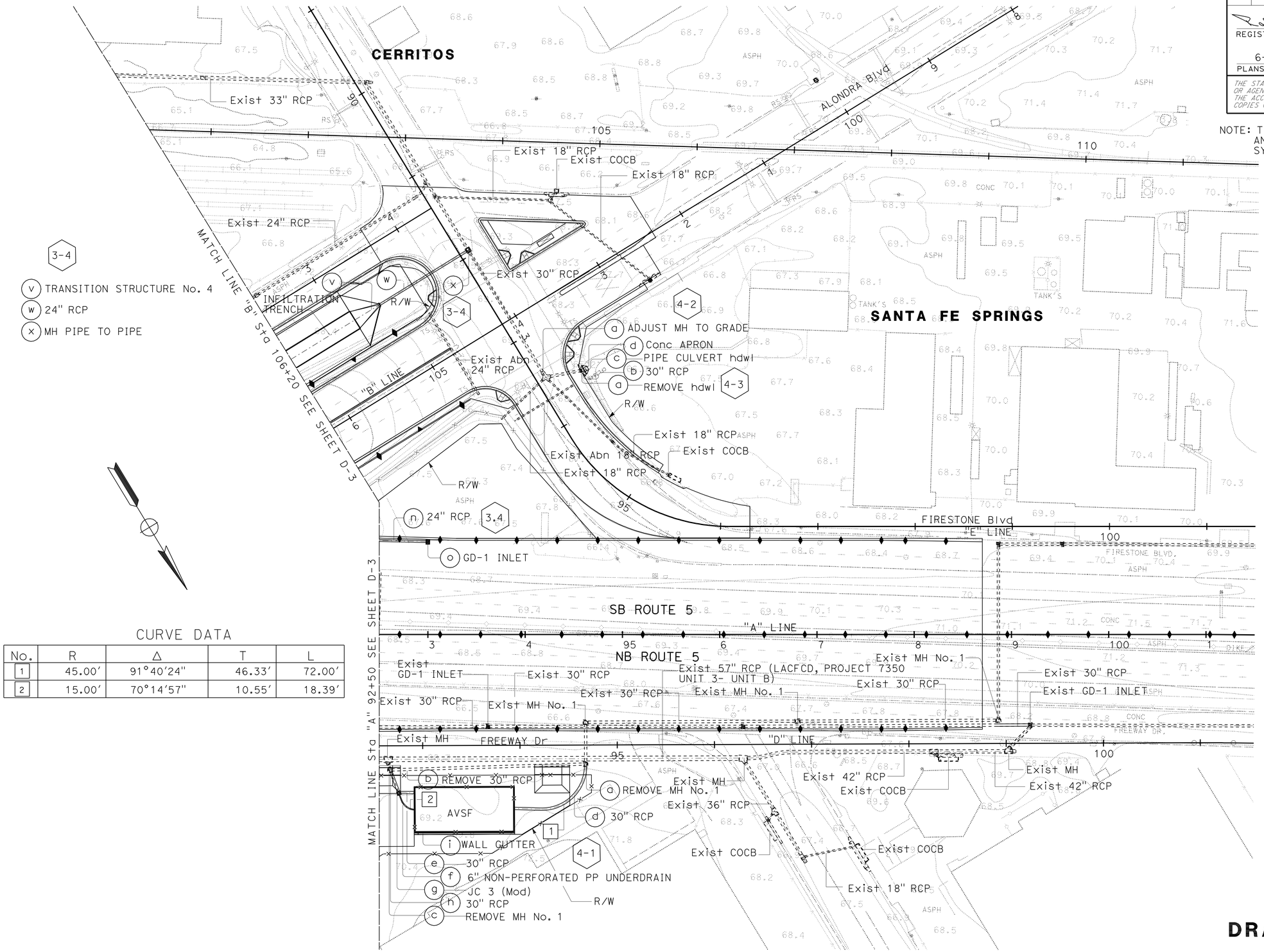

V TRANSITION STRUCTURE No. 4
W 24" RCP
X MH PIPE TO PIPE

CURVE DATA

No.	R	Δ	T	L
1	45.00′	91°40′24"	46.33′	72.00′
2	15.00′	70°14′57"	10.55′	18.39′

DRAINAGE PLAN

SCALE: 1" = 50′

THIS PLAN ACCURATE FOR DRAINAGE WORK ONLY.

D-4

STATE OF CALIFORNIA - DEPARTMENT OF TRANSPORTATION
Caltrans HYDRAULICS

FUNCTIONAL SUPERVISOR: RALPH M. SASAKI
CALCULATED-DESIGNED BY: SIEW MEI TAN
CHECKED BY: RALPH M. SASAKI
REVISED BY
DATE REVISED

LAST REVISION 00-00-00 | DATE PLOTTED => 30-JUN-2011 | TIME PLOTTED => 16:07

Dist	COUNTY	ROUTE	POST MILES TOTAL PROJECT	SHEET No.	TOTAL SHEETS
07	LA	5	1.2/2.1	87	602

REGISTERED CIVIL ENGINEER 3/14/11 DATE

6-27-11
PLANS APPROVAL DATE

REGISTERED PROFESSIONAL ENGINEER RALPH M. SASAKI No. 30849 Exp. 3/31/12 CIVIL STATE OF CALIFORNIA

THE STATE OF CALIFORNIA OR ITS OFFICERS OR AGENTS SHALL NOT BE RESPONSIBLE FOR THE ACCURACY OR COMPLETENESS OF SCANNED COPIES OF THIS PLAN SHEET.

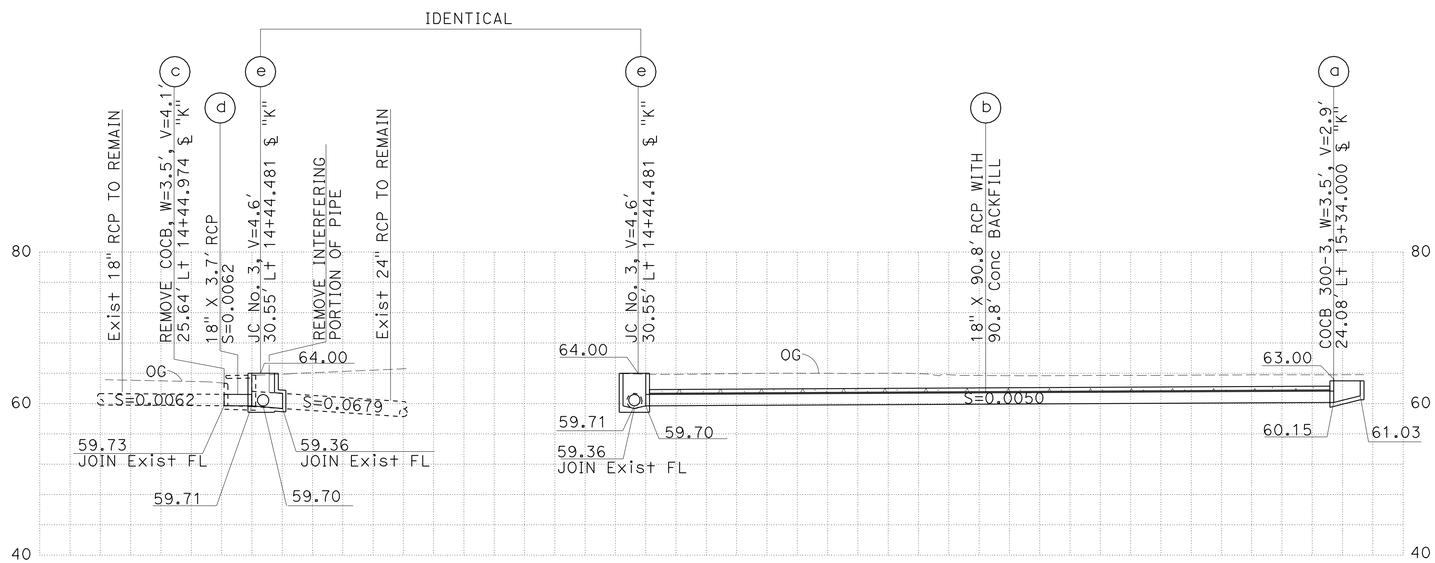

DRAINAGE SYSTEM No. 1-1

DRAINAGE PROFILES

SCALE: 1" = 10' Horiz
1" = 10' Vert

DP-1

STATE OF CALIFORNIA - DEPARTMENT OF TRANSPORTATION
Caltrans® HYDRAULICS

FUNCTIONAL SUPERVISOR: RALPH M. SASAKI

CALCULATED-DESIGNED BY: SIEW MEI TAN
CHECKED BY: RALPH M. SASAKI

REVISED BY
DATE REVISED

LAST REVISION 00-00-00
DATE PLOTTED => 30-JUN-2011
TIME PLOTTED => 16:07

Dist	COUNTY	ROUTE	POST MILES TOTAL PROJECT	SHEET No.	TOTAL SHEETS
07	LA	5	1.2/2.1	88	602

REGISTERED CIVIL ENGINEER 3/14/11 DATE

6-27-11
PLANS APPROVAL DATE

REGISTERED PROFESSIONAL ENGINEER RALPH M. SASAKI No. 30849 Exp. 3/31/12 CIVIL STATE OF CALIFORNIA

THE STATE OF CALIFORNIA OR ITS OFFICERS OR AGENTS SHALL NOT BE RESPONSIBLE FOR THE ACCURACY OR COMPLETENESS OF SCANNED COPIES OF THIS PLAN SHEET.

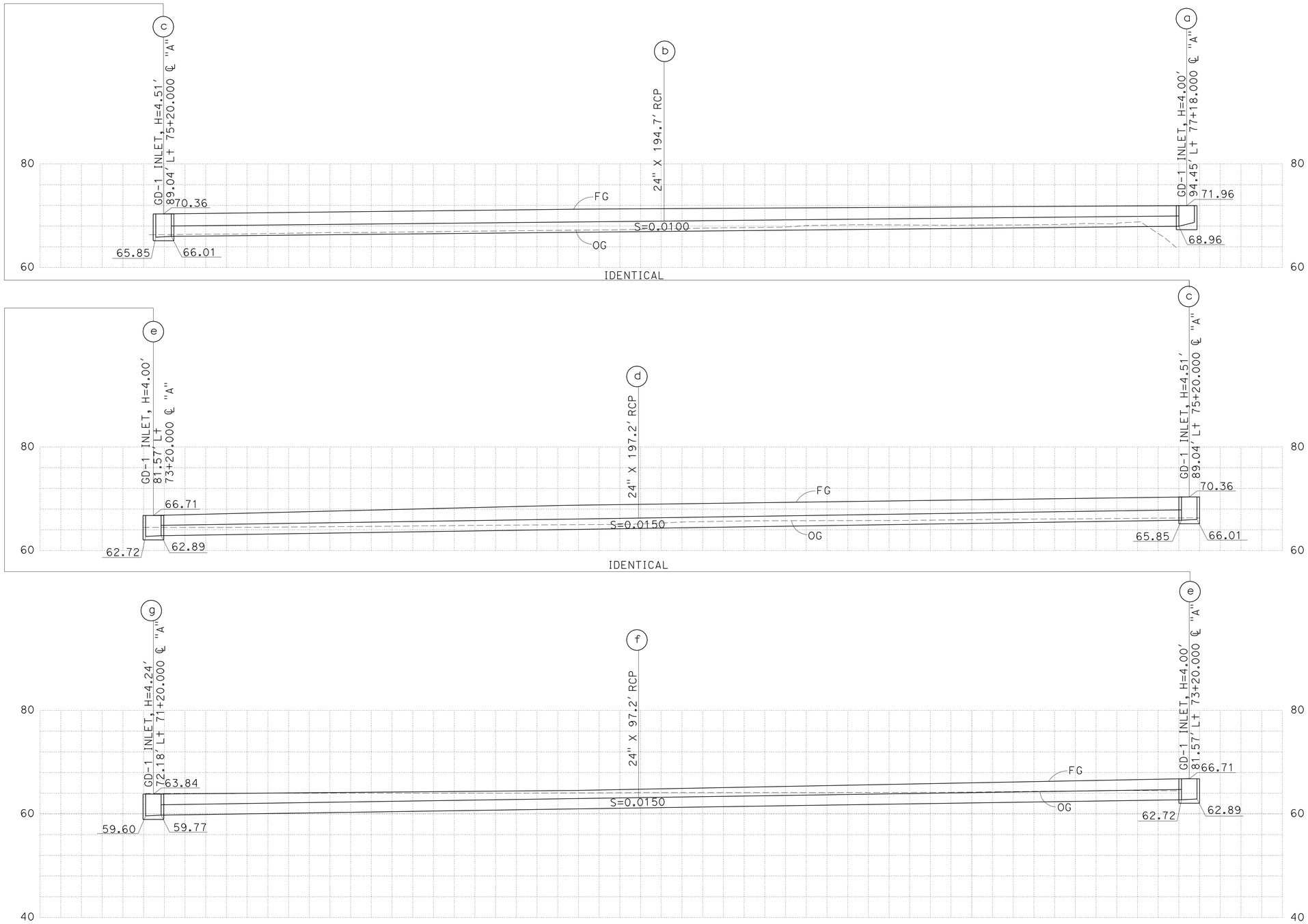

DRAINAGE SYSTEM No. 1-2

DRAINAGE PROFILES

SCALE: 1" = 10' Horiz
1" = 10' Vert

DP-2

STATE OF CALIFORNIA - DEPARTMENT OF TRANSPORTATION
Caltrans® HYDRAULICS

FUNCTIONAL SUPERVISOR: RALPH M. SASAKI
CALCULATED-DESIGNED BY: SIEW MEI TAN
CHECKED BY: RALPH M. SASAKI
REVISED BY / DATE REVISED

LAST REVISION 00-00-00 | DATE PLOTTED => 30-JUN-2011 | TIME PLOTTED => 16:07

Dist	COUNTY	ROUTE	POST MILES TOTAL PROJECT	SHEET No.	TOTAL SHEETS
07	LA	5	1.2/2.1	89	602

REGISTERED CIVIL ENGINEER 3/14/11 DATE

6-27-11
PLANS APPROVAL DATE

REGISTERED PROFESSIONAL ENGINEER RALPH M. SASAKI No. 30849 Exp. 3/31/12 CIVIL STATE OF CALIFORNIA

THE STATE OF CALIFORNIA OR ITS OFFICERS OR AGENTS SHALL NOT BE RESPONSIBLE FOR THE ACCURACY OR COMPLETENESS OF SCANNED COPIES OF THIS PLAN SHEET.

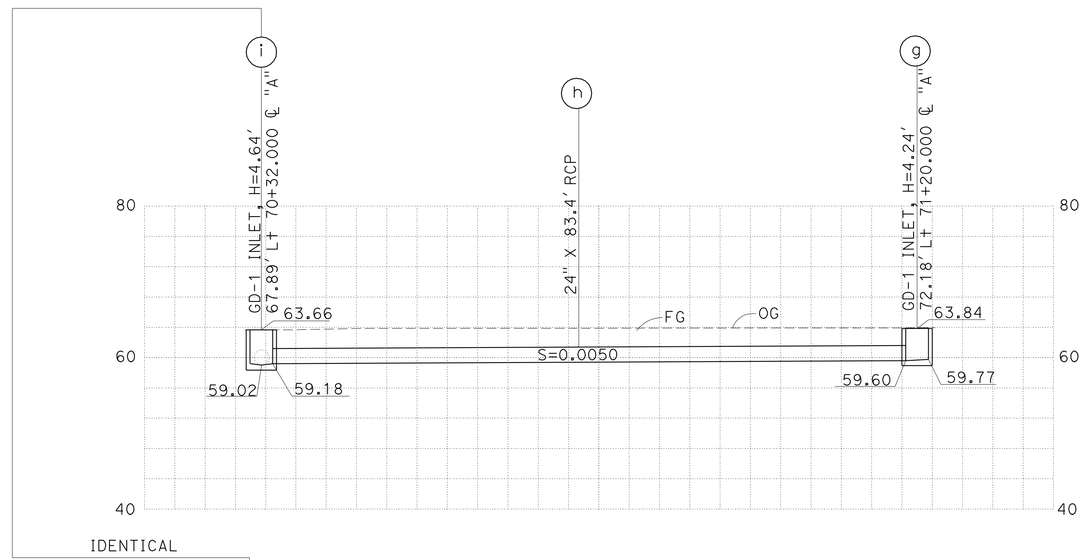

IDENTICAL

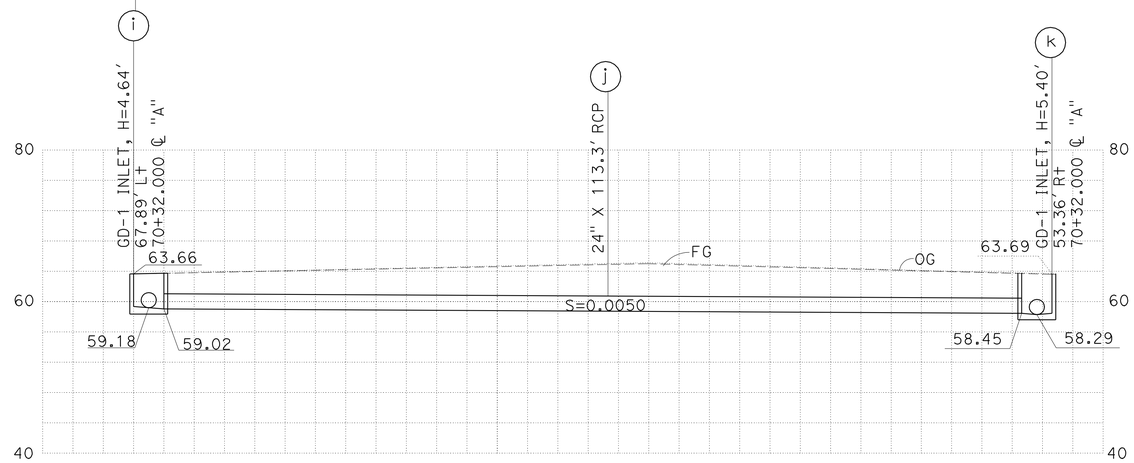

DRAINAGE SYSTEM No. 1-2

DRAINAGE PROFILES

SCALE: 1" = 10' Horiz
1" = 10' Vert

DP-3

STATE OF CALIFORNIA - DEPARTMENT OF TRANSPORTATION
Caltrans HYDRAULICS

FUNCTIONAL SUPERVISOR: RALPH M. SASAKI
CALCULATED-DESIGNED BY: SIEW MEI TAN
CHECKED BY: RALPH M. SASAKI
REVISED BY
DATE REVISED

LAST REVISION 00-00-00
DATE PLOTTED => 30-JUN-2011
TIME PLOTTED => 16:07

Dist	COUNTY	ROUTE	POST MILES TOTAL PROJECT	SHEET No.	TOTAL SHEETS
07	LA	5	1.2/2.1	90	602

REGISTERED CIVIL ENGINEER 3/14/11 DATE

6-27-11
PLANS APPROVAL DATE

REGISTERED PROFESSIONAL ENGINEER RALPH M. SASAKI No. 30849 Exp. 3/31/12 CIVIL STATE OF CALIFORNIA

THE STATE OF CALIFORNIA OR ITS OFFICERS OR AGENTS SHALL NOT BE RESPONSIBLE FOR THE ACCURACY OR COMPLETENESS OF SCANNED COPIES OF THIS PLAN SHEET.

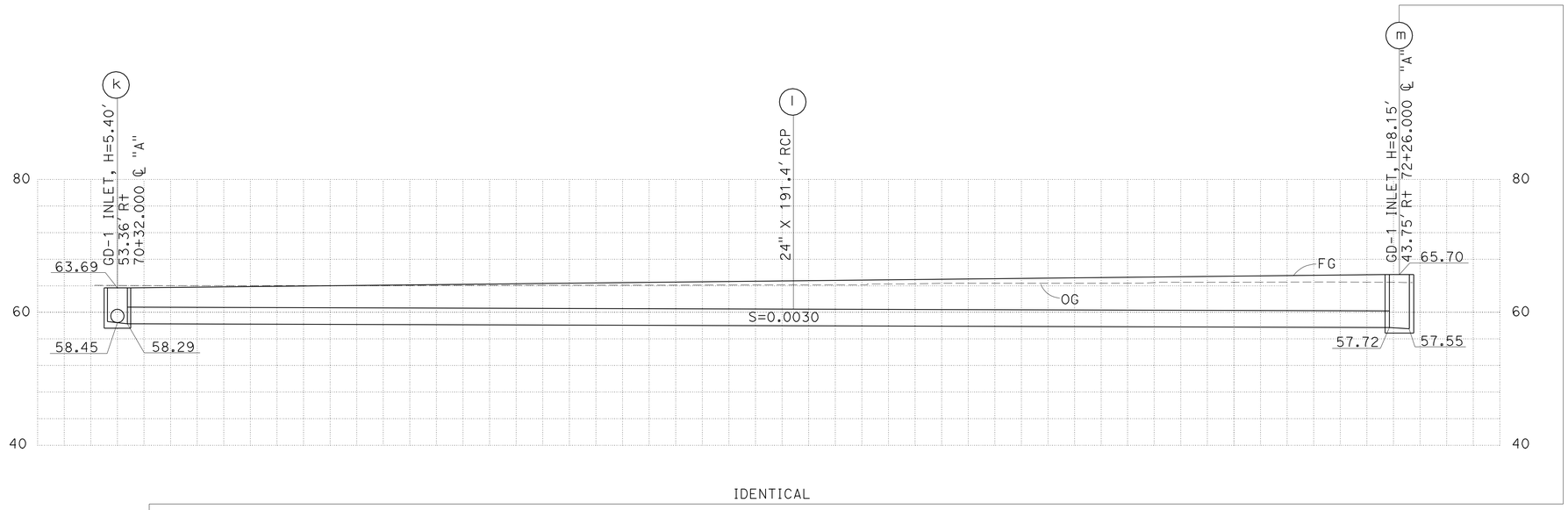

IDENTICAL

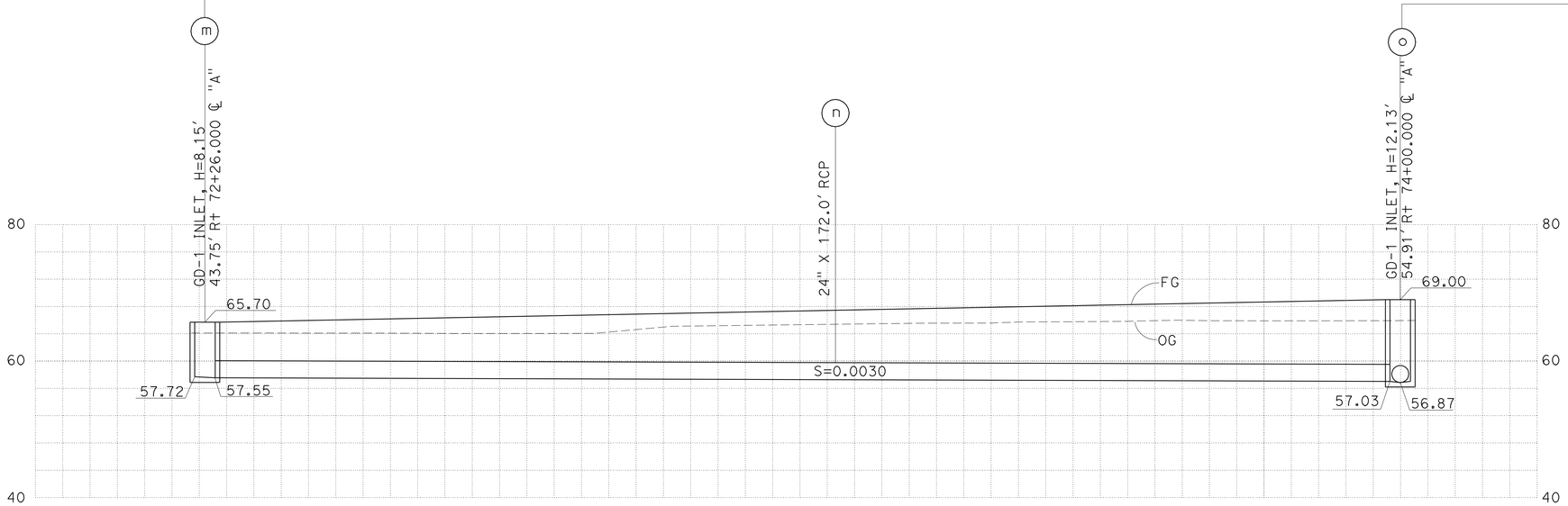

IDENTICAL

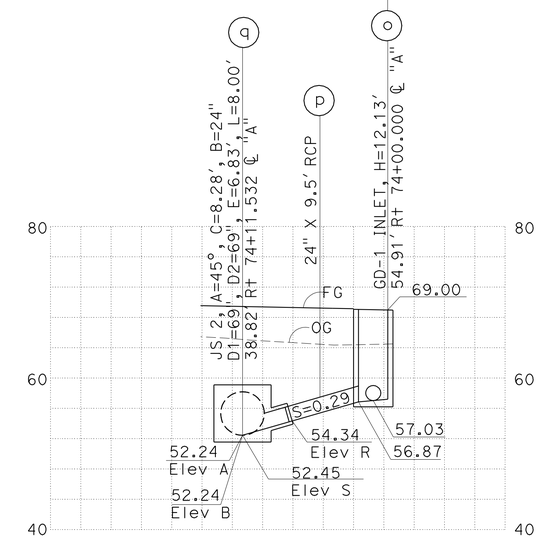

DRAINAGE SYSTEM No. 1-2

DRAINAGE PROFILES

SCALE: 1" = 10' Horiz
1" = 10' Vert

DP-4

REVISED BY	DATE REVISED

SIEW MEI TAN — CALCULATED-DESIGNED BY
RALPH M. SASAKI — CHECKED BY
RALPH M. SASAKI — FUNCTIONAL SUPERVISOR

STATE OF CALIFORNIA - DEPARTMENT OF TRANSPORTATION
Caltrans® HYDRAULICS

LAST REVISION 00-00-00
DATE PLOTTED => 30-JUN-2011
TIME PLOTTED => 16:07

Dist	COUNTY	ROUTE	POST MILES TOTAL PROJECT	SHEET No.	TOTAL SHEETS
07	LA	5	1.2/2.1	91	602

REGISTERED CIVIL ENGINEER 3/14/11 DATE

6-27-11
PLANS APPROVAL DATE

REGISTERED PROFESSIONAL ENGINEER RALPH M. SASAKI No. 30849 Exp. 3/31/12 CIVIL STATE OF CALIFORNIA

THE STATE OF CALIFORNIA OR ITS OFFICERS OR AGENTS SHALL NOT BE RESPONSIBLE FOR THE ACCURACY OR COMPLETENESS OF SCANNED COPIES OF THIS PLAN SHEET.

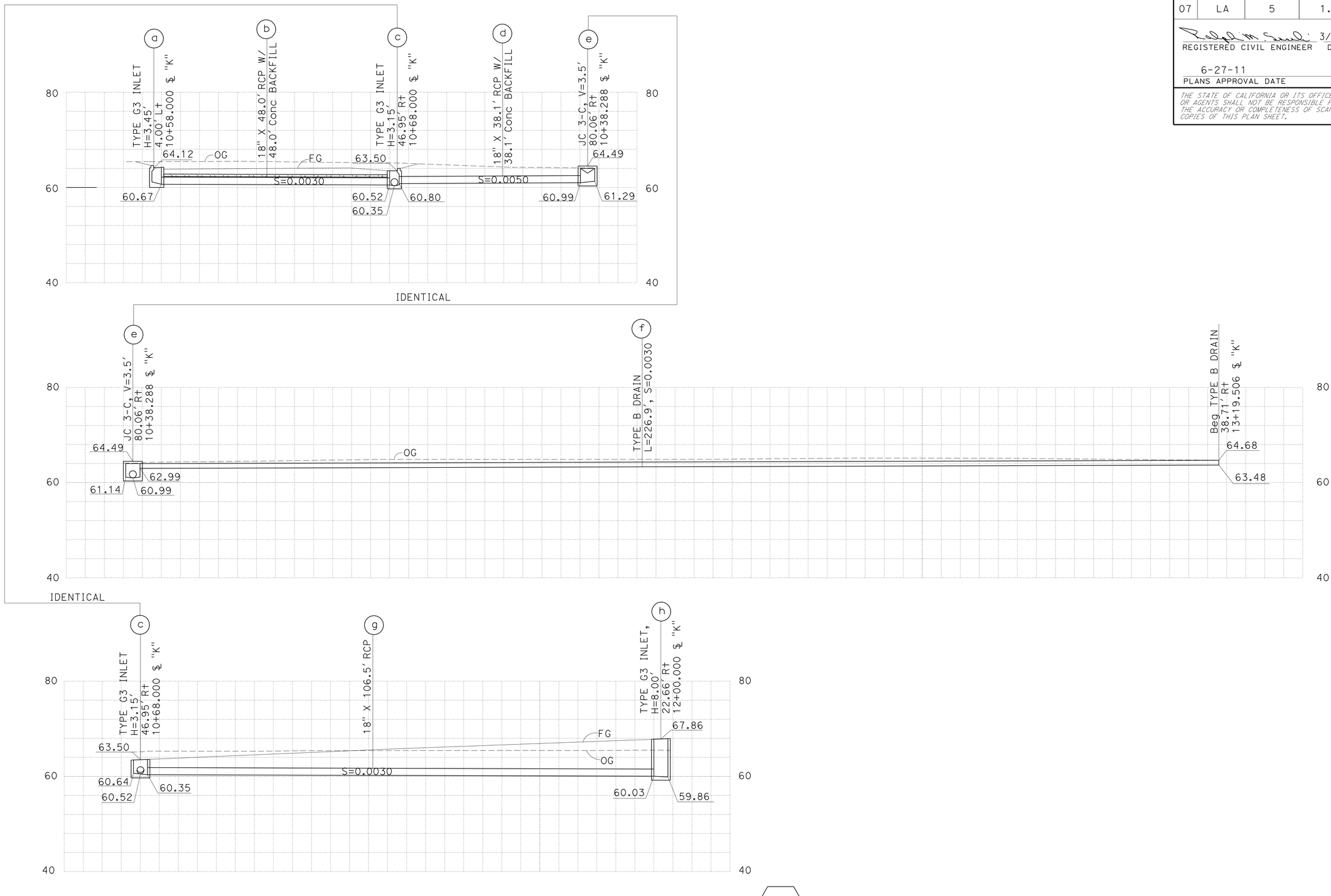

DRAINAGE SYSTEM No. 1-3

DRAINAGE PROFILES

SCALE: 1" = 10' Horiz
1" = 10' Vert

DP-5

STATE OF CALIFORNIA - DEPARTMENT OF TRANSPORTATION
Caltrans® **HYDRAULICS**

FUNCTIONAL SUPERVISOR: RALPH M. SASAKI
CALCULATED-DESIGNED BY: SIEW MEI TAN
CHECKED BY: RALPH M. SASAKI
REVISED BY / DATE REVISED

LAST REVISION 00-00-00 | DATE PLOTTED => 30-JUN-2011 | TIME PLOTTED => 16:07

Dist	COUNTY	ROUTE	POST MILES TOTAL PROJECT	SHEET No.	TOTAL SHEETS
07	LA	5	1.2/2.1	92	602

REGISTERED CIVIL ENGINEER 3/14/11 DATE

6-27-11
PLANS APPROVAL DATE

REGISTERED PROFESSIONAL ENGINEER RALPH M. SASAKI No. 30849 Exp. 3/31/12 CIVIL STATE OF CALIFORNIA

THE STATE OF CALIFORNIA OR ITS OFFICERS OR AGENTS SHALL NOT BE RESPONSIBLE FOR THE ACCURACY OR COMPLETENESS OF SCANNED COPIES OF THIS PLAN SHEET.

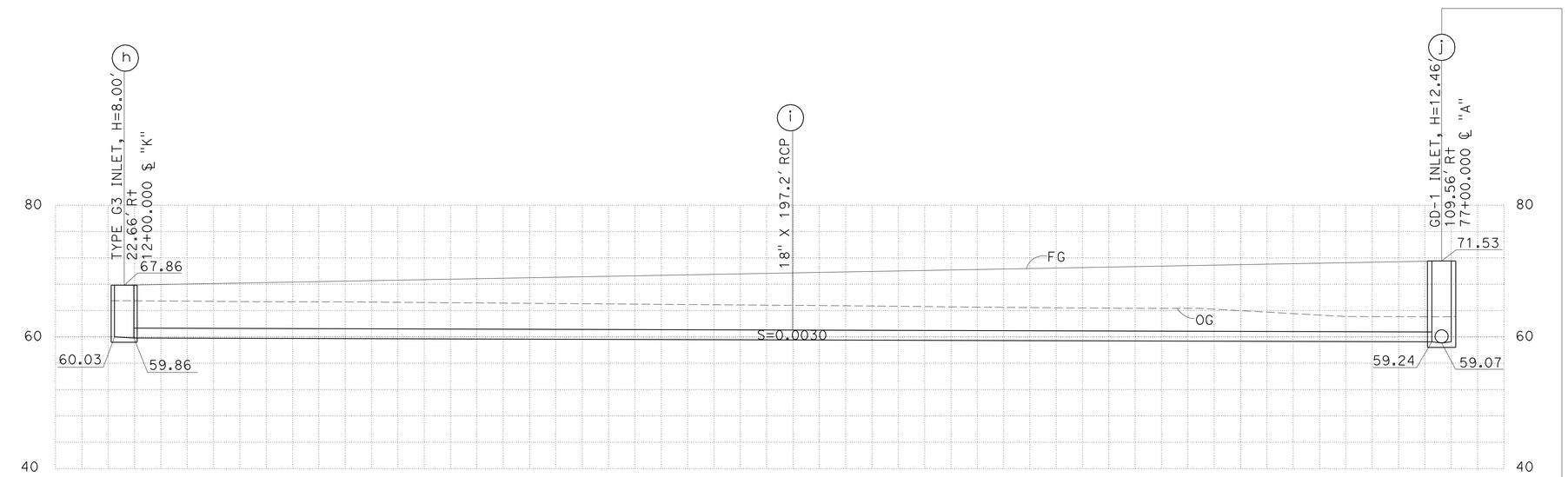

IDENTICAL

IDENTICAL

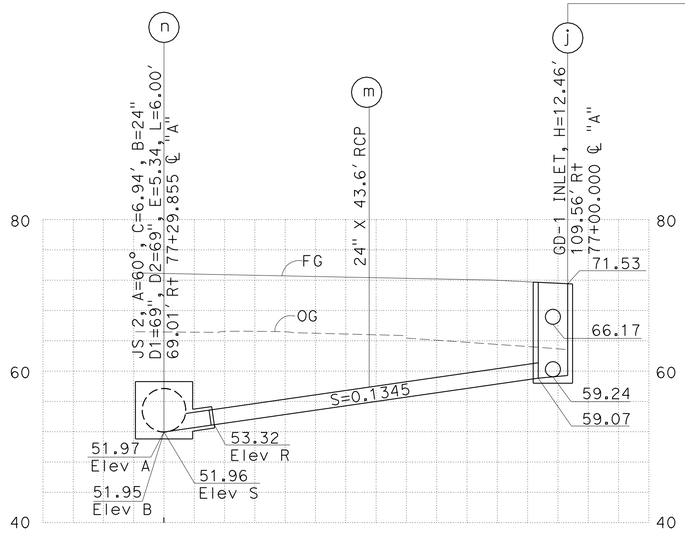

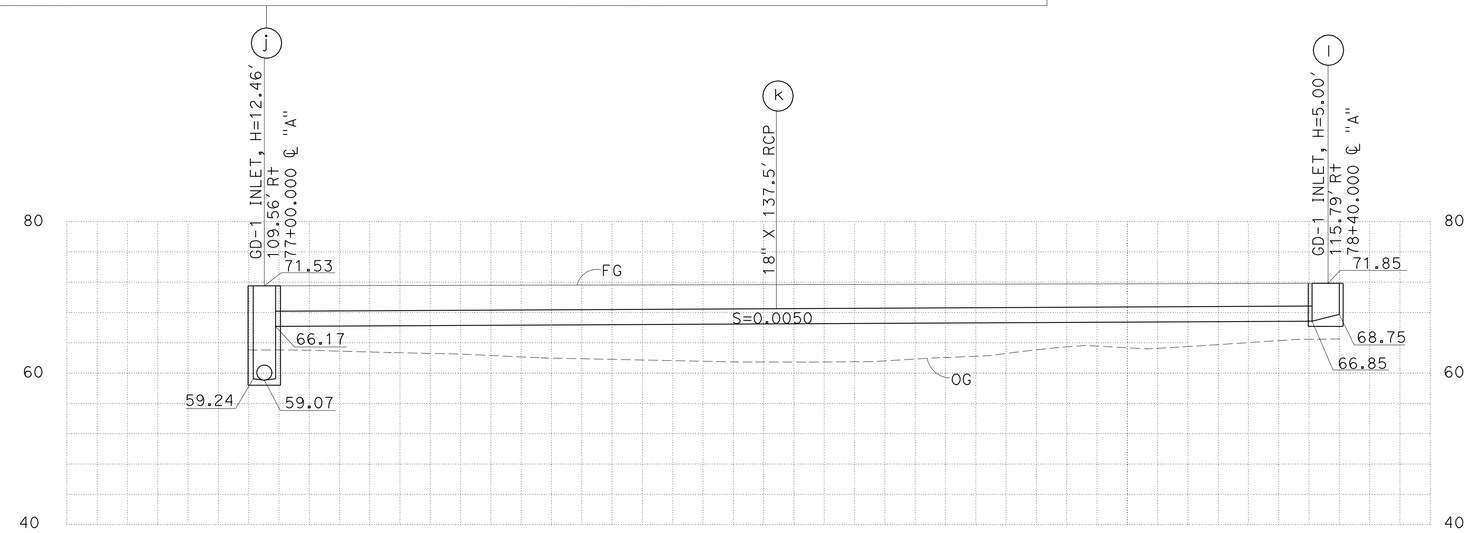

DRAINAGE SYSTEM No. 1-3

DRAINAGE PROFILES

SCALE: 1" = 10' Horiz
1" = 10' Vert

DP-6

STATE OF CALIFORNIA - DEPARTMENT OF TRANSPORTATION
Caltrans HYDRAULICS

FUNCTIONAL SUPERVISOR: RALPH M. SASAKI
CALCULATED-DESIGNED BY: SIEW MEI TAN
CHECKED BY: RALPH M. SASAKI
REVISED BY
DATE REVISED

LAST REVISION 00-00-00 | DATE PLOTTED => 30-JUN-2011 | TIME PLOTTED => 16:08

Dist	COUNTY	ROUTE	POST MILES TOTAL PROJECT	SHEET No.	TOTAL SHEETS
07	LA	5	1.2/2.1	93	602

REGISTERED CIVIL ENGINEER 3/14/11 DATE

6-27-11
PLANS APPROVAL DATE

REGISTERED PROFESSIONAL ENGINEER RALPH M. SASAKI No. 30849 Exp. 3/31/12 CIVIL STATE OF CALIFORNIA

THE STATE OF CALIFORNIA OR ITS OFFICERS OR AGENTS SHALL NOT BE RESPONSIBLE FOR THE ACCURACY OR COMPLETENESS OF SCANNED COPIES OF THIS PLAN SHEET.

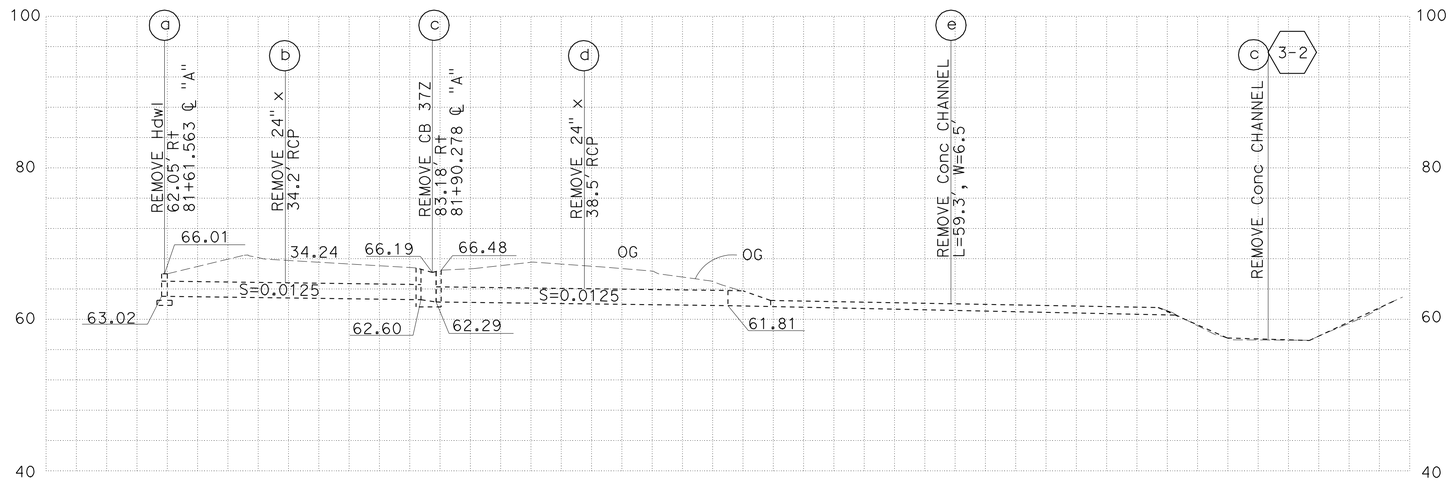

DRAINAGE SYSTEM No. 2-1

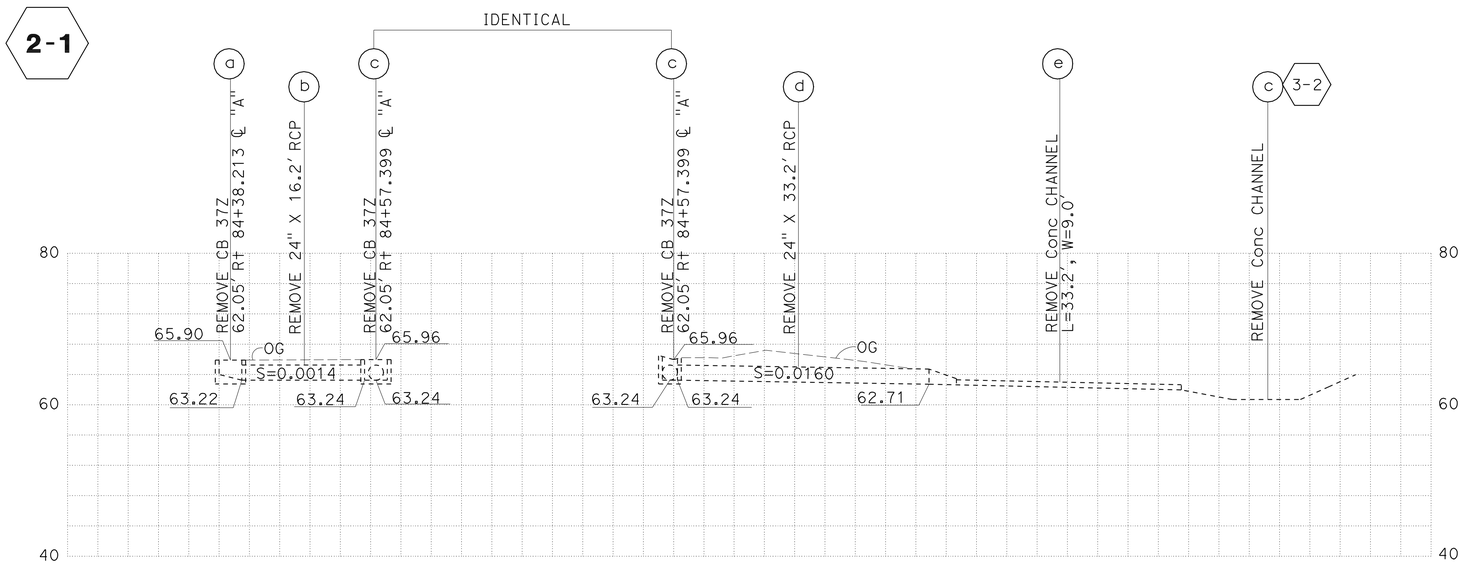

DRAINAGE SYSTEM No. 2-2

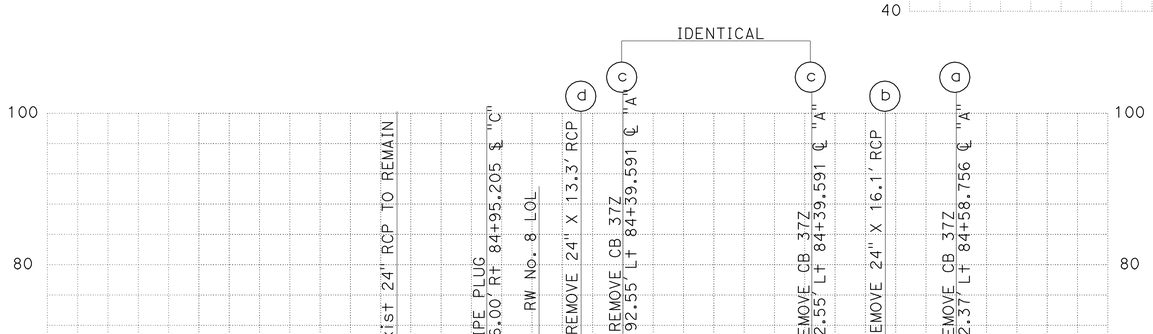

DRAINAGE SYSTEM No. 2-3

DRAINAGE PROFILES

SCALE: 1" = 10' Horiz
1" = 10' Vert

DP-7

STATE OF CALIFORNIA - DEPARTMENT OF TRANSPORTATION
Caltrans® HYDRAULICS

FUNCTIONAL SUPERVISOR: RALPH M. SASAKI
CALCULATED-DESIGNED BY: SIEW MEI TAN
CHECKED BY: RALPH M. SASAKI
REVISED BY
DATE REVISED

LAST REVISION 00-00-00
DATE PLOTTED => 30-JUN-2011
TIME PLOTTED => 16:08

Dist	COUNTY	ROUTE	POST MILES TOTAL PROJECT	SHEET No.	TOTAL SHEETS
07	LA	5	1.2/2.1	94	602

REGISTERED CIVIL ENGINEER 3/14/11 DATE

6-27-11
PLANS APPROVAL DATE

REGISTERED PROFESSIONAL ENGINEER RALPH M. SASAKI No. 30849 Exp. 3/31/12 CIVIL STATE OF CALIFORNIA

THE STATE OF CALIFORNIA OR ITS OFFICERS OR AGENTS SHALL NOT BE RESPONSIBLE FOR THE ACCURACY OR COMPLETENESS OF SCANNED COPIES OF THIS PLAN SHEET.

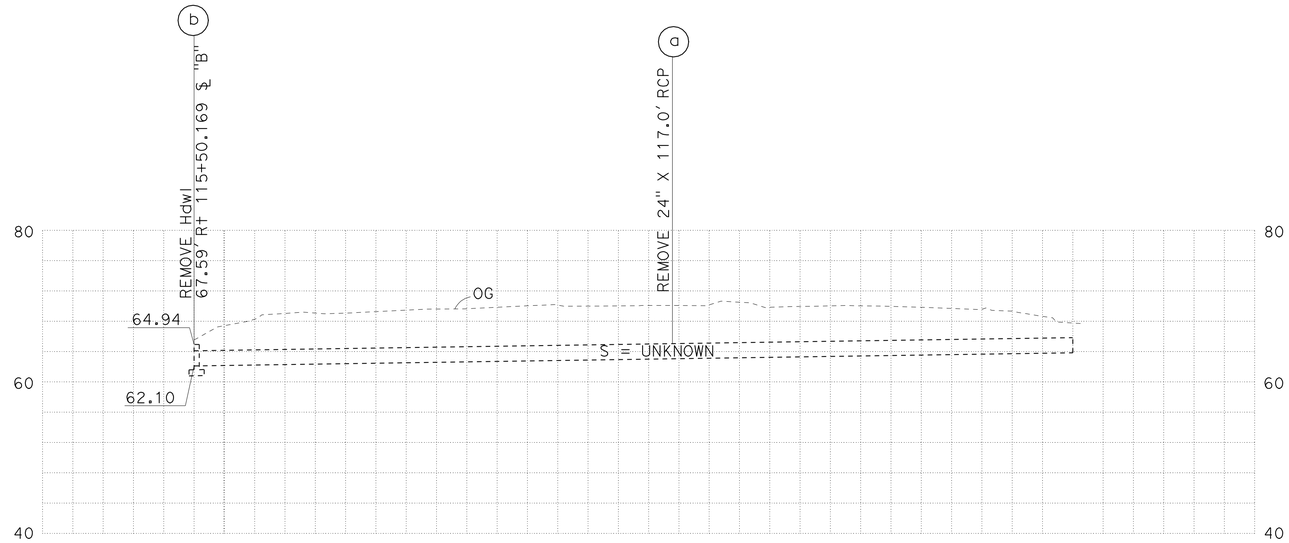

DRAINAGE SYSTEM No. 2-4

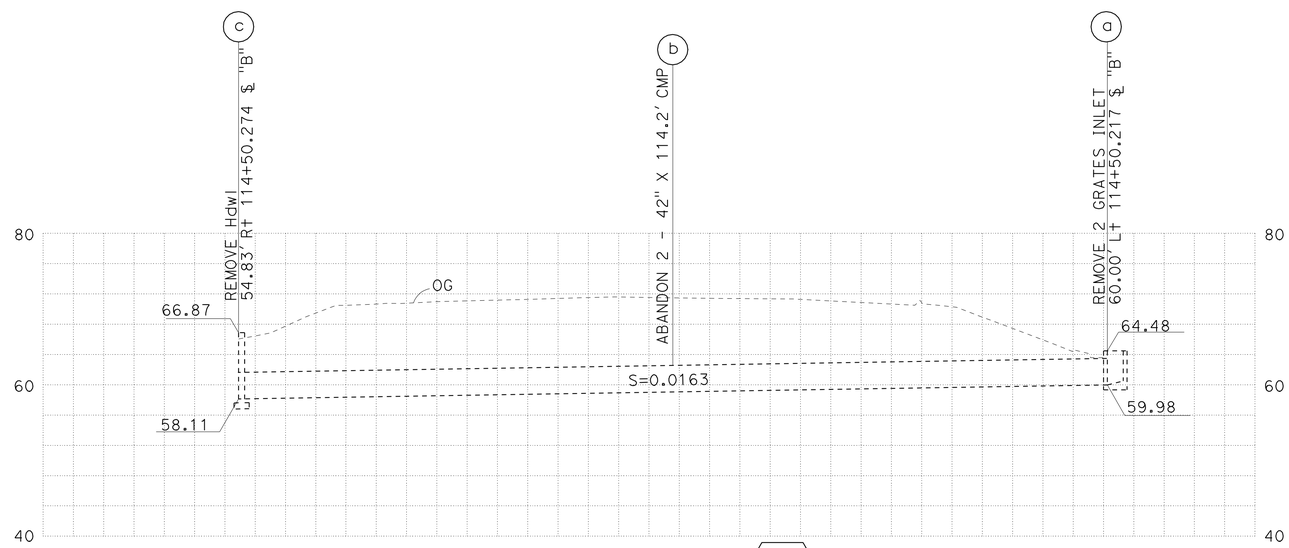

DRAINAGE SYSTEM No. 2-5

DRAINAGE PROFILES

SCALE: 1" = 10' Horiz
1" = 10' Vert

DP-8

STATE OF CALIFORNIA - DEPARTMENT OF TRANSPORTATION
Caltrans® HYDRAULICS

FUNCTIONAL SUPERVISOR: RALPH M. SASAKI
CALCULATED-DESIGNED BY: SIEW MEI TAN
CHECKED BY: RALPH M. SASAKI
REVISED BY / DATE REVISED

LAST REVISION 00-00-00
DATE PLOTTED => 30-JUN-2011
TIME PLOTTED => 16:08

Dist	COUNTY	ROUTE	POST MILES TOTAL PROJECT	SHEET No.	TOTAL SHEETS
07	LA	5	1.2/2.1	95	602

REGISTERED CIVIL ENGINEER 3/14/11 DATE

6-27-11
PLANS APPROVAL DATE

REGISTERED PROFESSIONAL ENGINEER RALPH M. SASAKI No. 30849 Exp. 3/31/12 CIVIL STATE OF CALIFORNIA

THE STATE OF CALIFORNIA OR ITS OFFICERS OR AGENTS SHALL NOT BE RESPONSIBLE FOR THE ACCURACY OR COMPLETENESS OF SCANNED COPIES OF THIS PLAN SHEET.

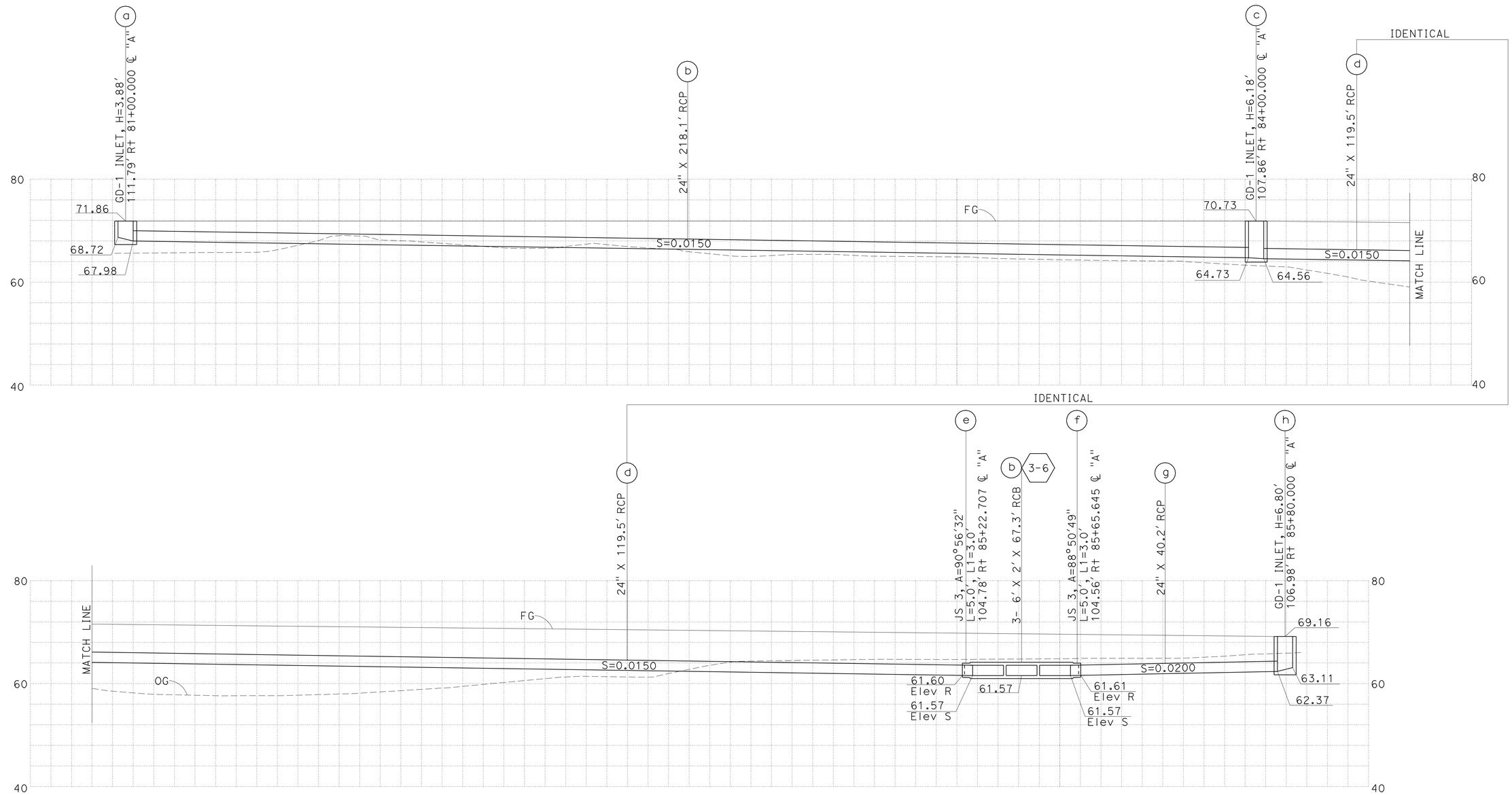

DRAINAGE SYSTEM No. 2-6

DRAINAGE PROFILES

SCALE: 1" = 10' Horiz
1" = 10' Vert

DP-9

STATE OF CALIFORNIA - DEPARTMENT OF TRANSPORTATION
Caltrans® HYDRAULICS

FUNCTIONAL SUPERVISOR: RALPH M. SASAKI
CALCULATED-DESIGNED BY: SIEW MEI TAN
CHECKED BY: RALPH M. SASAKI
REVISED BY
DATE REVISED

LAST REVISION 00-00-00
DATE PLOTTED => 30-JUN-2011
TIME PLOTTED => 16:08

Dist	COUNTY	ROUTE	POST MILES TOTAL PROJECT	SHEET No.	TOTAL SHEETS
07	LA	5	1.2/2.1	96	602

REGISTERED CIVIL ENGINEER 3/14/11 DATE

6-27-11
PLANS APPROVAL DATE

REGISTERED PROFESSIONAL ENGINEER RALPH M. SASAKI No. 30849 Exp. 3/31/12 CIVIL STATE OF CALIFORNIA

THE STATE OF CALIFORNIA OR ITS OFFICERS OR AGENTS SHALL NOT BE RESPONSIBLE FOR THE ACCURACY OR COMPLETENESS OF SCANNED COPIES OF THIS PLAN SHEET.

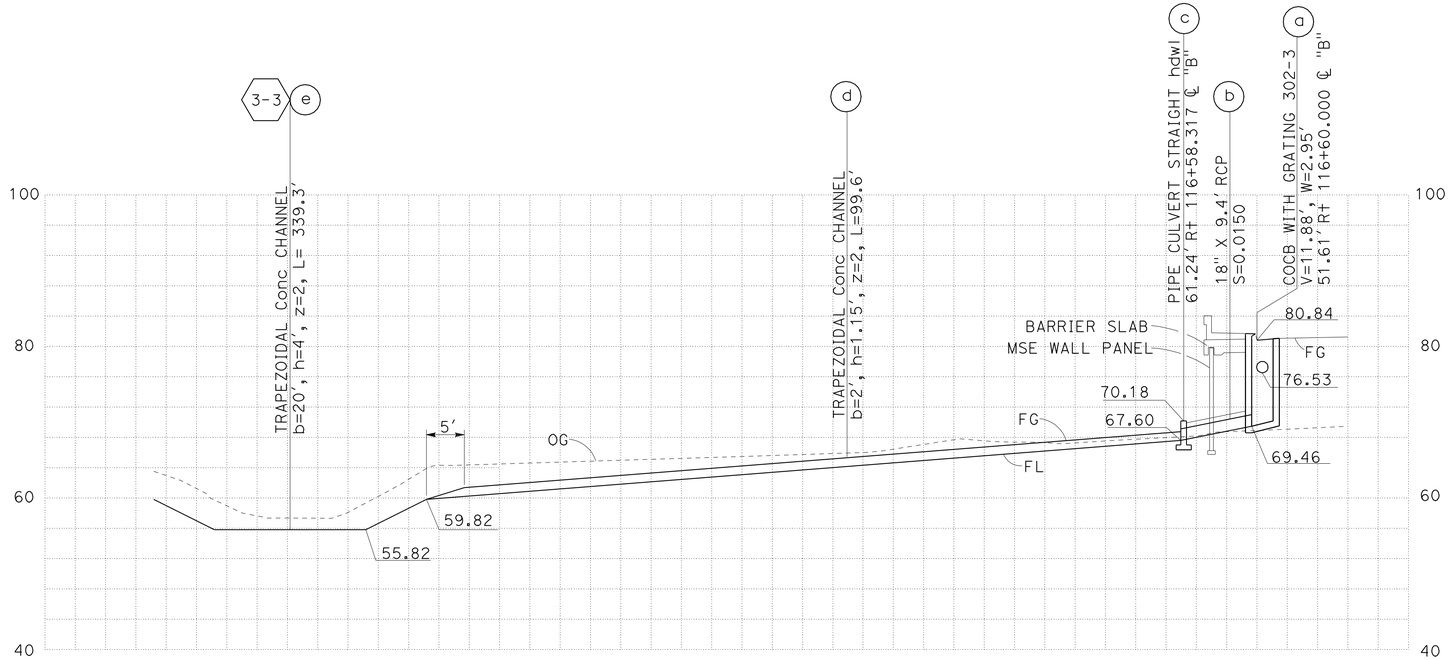

DRAINAGE SYSTEM No. 2-7

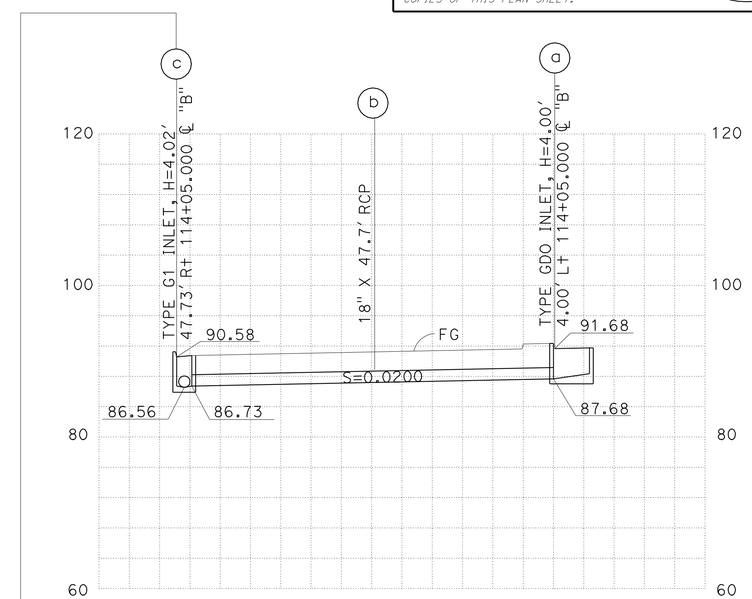

DRAINAGE SYSTEM No. 3-9

IDENTICAL

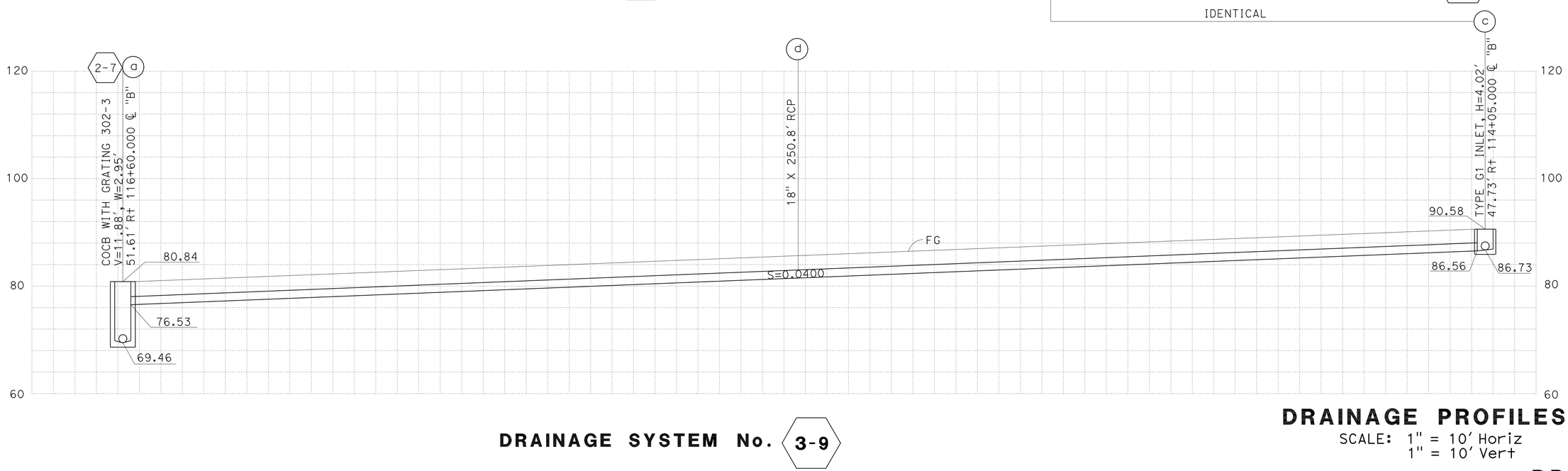

DRAINAGE SYSTEM No. 3-9

DRAINAGE PROFILES

SCALE: 1" = 10' Horiz
1" = 10' Vert

DP-10

STATE OF CALIFORNIA - DEPARTMENT OF TRANSPORTATION
Caltrans® HYDRAULICS

FUNCTIONAL SUPERVISOR: RALPH M. SASAKI
CALCULATED-DESIGNED BY: SIEW MEI TAN
CHECKED BY: RALPH M. SASAKI
REVISED BY
DATE REVISED

LAST REVISION 00-00-00
DATE PLOTTED => 30-JUN-2011
TIME PLOTTED => 16:08

Dist	COUNTY	ROUTE	POST MILES TOTAL PROJECT	SHEET No.	TOTAL SHEETS
07	LA	5	1.2/2.1	97	602

REGISTERED CIVIL ENGINEER 3/14/11 DATE

6-27-11
PLANS APPROVAL DATE

REGISTERED PROFESSIONAL ENGINEER RALPH M. SASAKI No. 30849 Exp. 3/31/12 CIVIL STATE OF CALIFORNIA

THE STATE OF CALIFORNIA OR ITS OFFICERS OR AGENTS SHALL NOT BE RESPONSIBLE FOR THE ACCURACY OR COMPLETENESS OF SCANNED COPIES OF THIS PLAN SHEET.

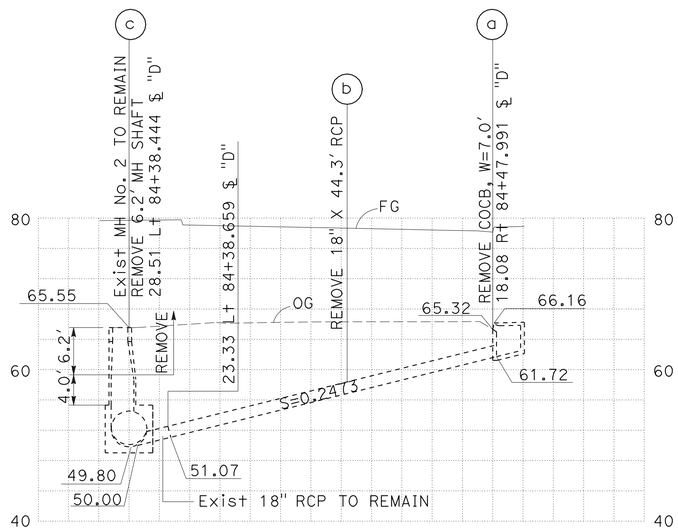

DRAINAGE SYSTEM No. 2-8

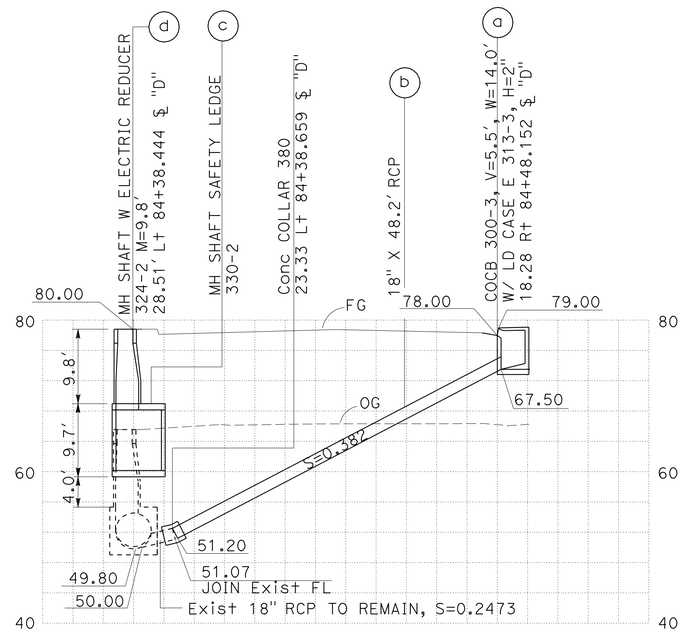

DRAINAGE SYSTEM No. 2-9

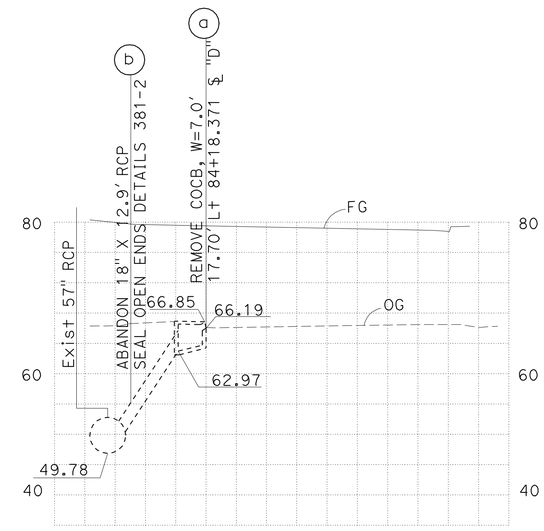

DRAINAGE SYSTEM No. 2-10

DRAINAGE PROFILES

SCALE: 1" = 10' Horiz
1" = 10' Vert

DP-11

STATE OF CALIFORNIA - DEPARTMENT OF TRANSPORTATION
Caltrans HYDRAULICS

FUNCTIONAL SUPERVISOR: RALPH M. SASAKI
CALCULATED-DESIGNED BY: SIEW MEI TAN
CHECKED BY: RALPH M. SASAKI
REVISED BY
DATE REVISED

LAST REVISION 00-00-00
DATE PLOTTED => 30-JUN-2011
TIME PLOTTED => 16:08

Dist	COUNTY	ROUTE	POST MILES TOTAL PROJECT	SHEET No.	TOTAL SHEETS
07	LA	5	1.2/2.1	98	602

REGISTERED CIVIL ENGINEER 3/14/11 DATE

6-27-11
PLANS APPROVAL DATE

REGISTERED PROFESSIONAL ENGINEER
RALPH M. SASAKI
No. 30849
Exp. 3/31/12
CIVIL
STATE OF CALIFORNIA

THE STATE OF CALIFORNIA OR ITS OFFICERS OR AGENTS SHALL NOT BE RESPONSIBLE FOR THE ACCURACY OR COMPLETENESS OF SCANNED COPIES OF THIS PLAN SHEET.

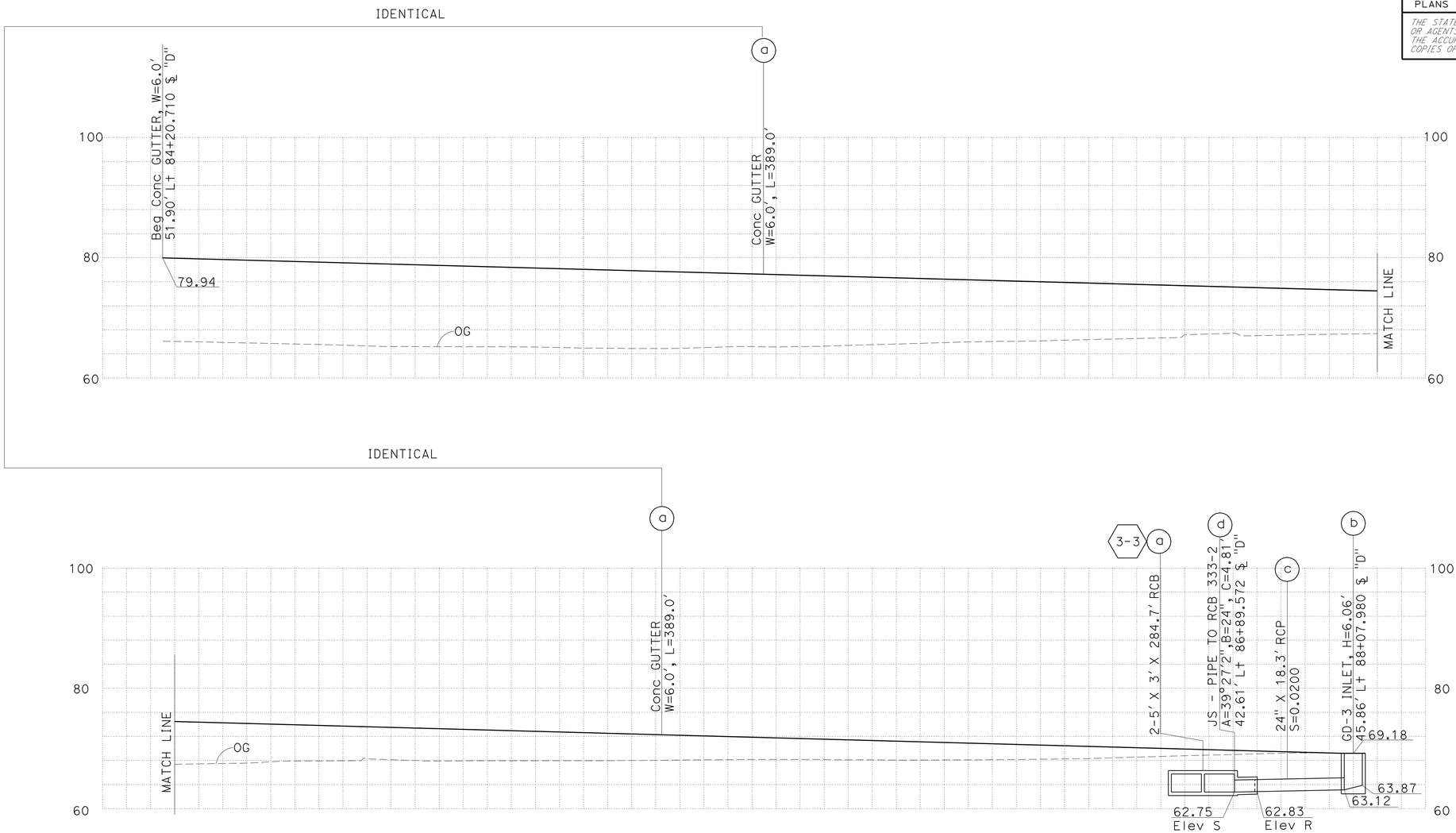

DRAINAGE SYSTEM No. 2-11

DRAINAGE PROFILES

SCALE: 1" = 10' Horiz
1" = 10' Vert

DP-12

STATE OF CALIFORNIA - DEPARTMENT OF TRANSPORTATION
Caltrans
HYDRAULICS

FUNCTIONAL SUPERVISOR: RALPH M. SASAKI
CALCULATED-DESIGNED BY: SIEW MEI TAN
CHECKED BY: RALPH M. SASAKI
REVISED BY
DATE REVISED

LAST REVISION 00-00-00
DATE PLOTTED => 30-JUN-2011
TIME PLOTTED => 16:08

Dist	COUNTY	ROUTE	POST MILES TOTAL PROJECT	SHEET No.	TOTAL SHEETS
07	LA	5	1.2/2.1	99	602

REGISTERED CIVIL ENGINEER DATE 3/14/11

6-27-11
PLANS APPROVAL DATE

REGISTERED PROFESSIONAL ENGINEER RALPH M. SASAKI No. 30849 Exp. 3/31/12 CIVIL STATE OF CALIFORNIA

THE STATE OF CALIFORNIA OR ITS OFFICERS OR AGENTS SHALL NOT BE RESPONSIBLE FOR THE ACCURACY OR COMPLETENESS OF SCANNED COPIES OF THIS PLAN SHEET.

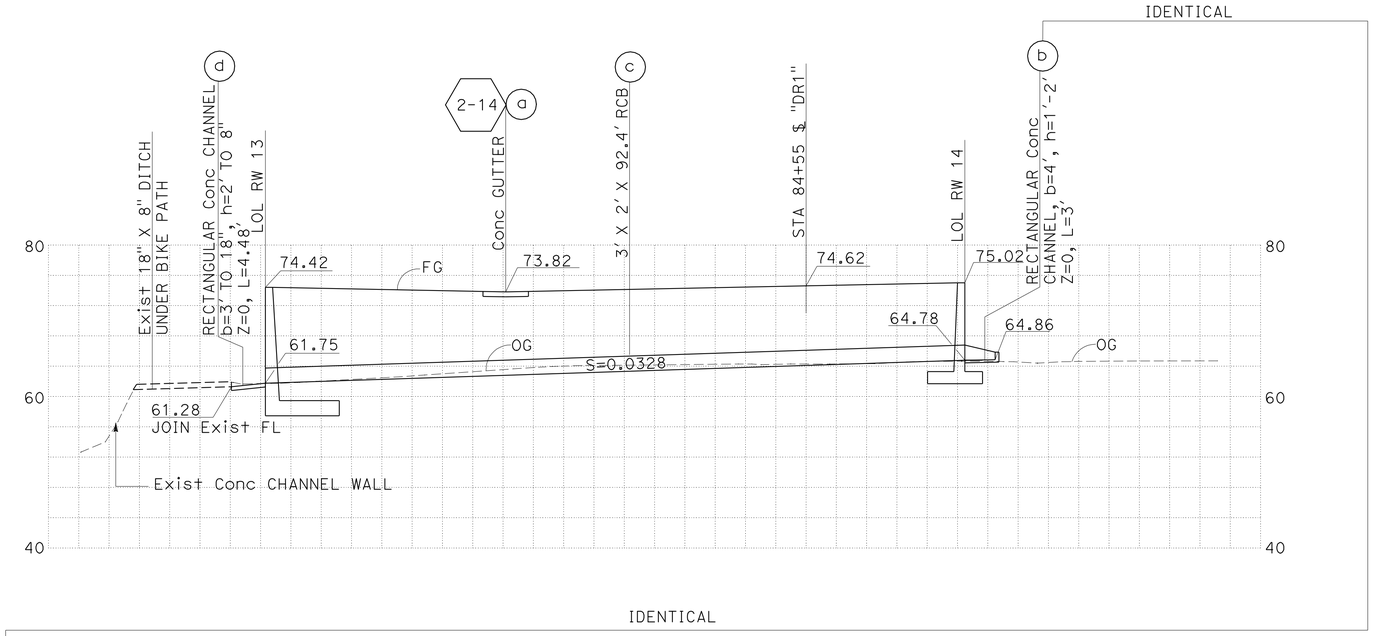

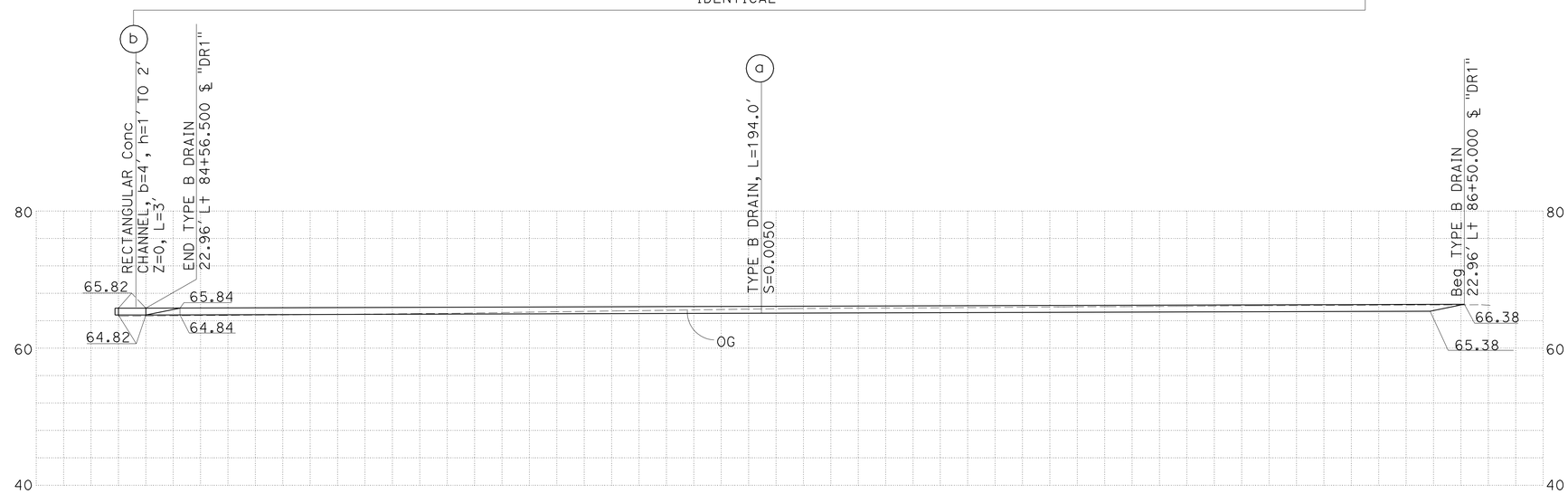

DRAINAGE SYSTEM No. 2-12

DRAINAGE PROFILES

SCALE: 1" = 10' Horiz
1" = 10' Vert

DP-13

STATE OF CALIFORNIA - DEPARTMENT OF TRANSPORTATION
Caltrans HYDRAULICS

FUNCTIONAL SUPERVISOR: RALPH M. SASAKI
CALCULATED-DESIGNED BY: SIEW MEI TAN
CHECKED BY: RALPH M. SASAKI
REVISED BY
DATE REVISED

LAST REVISION 00-00-00
DATE PLOTTED => 30-JUN-2011
TIME PLOTTED => 16:08

Dist	COUNTY	ROUTE	POST MILES TOTAL PROJECT	SHEET No.	TOTAL SHEETS
07	LA	5	1.2/2.1	100	602

REGISTERED CIVIL ENGINEER 3/14/11 DATE

6-27-11
PLANS APPROVAL DATE

REGISTERED PROFESSIONAL ENGINEER RALPH M. SASAKI No. 30849 Exp. 3/31/12 CIVIL STATE OF CALIFORNIA

THE STATE OF CALIFORNIA OR ITS OFFICERS OR AGENTS SHALL NOT BE RESPONSIBLE FOR THE ACCURACY OR COMPLETENESS OF SCANNED COPIES OF THIS PLAN SHEET.

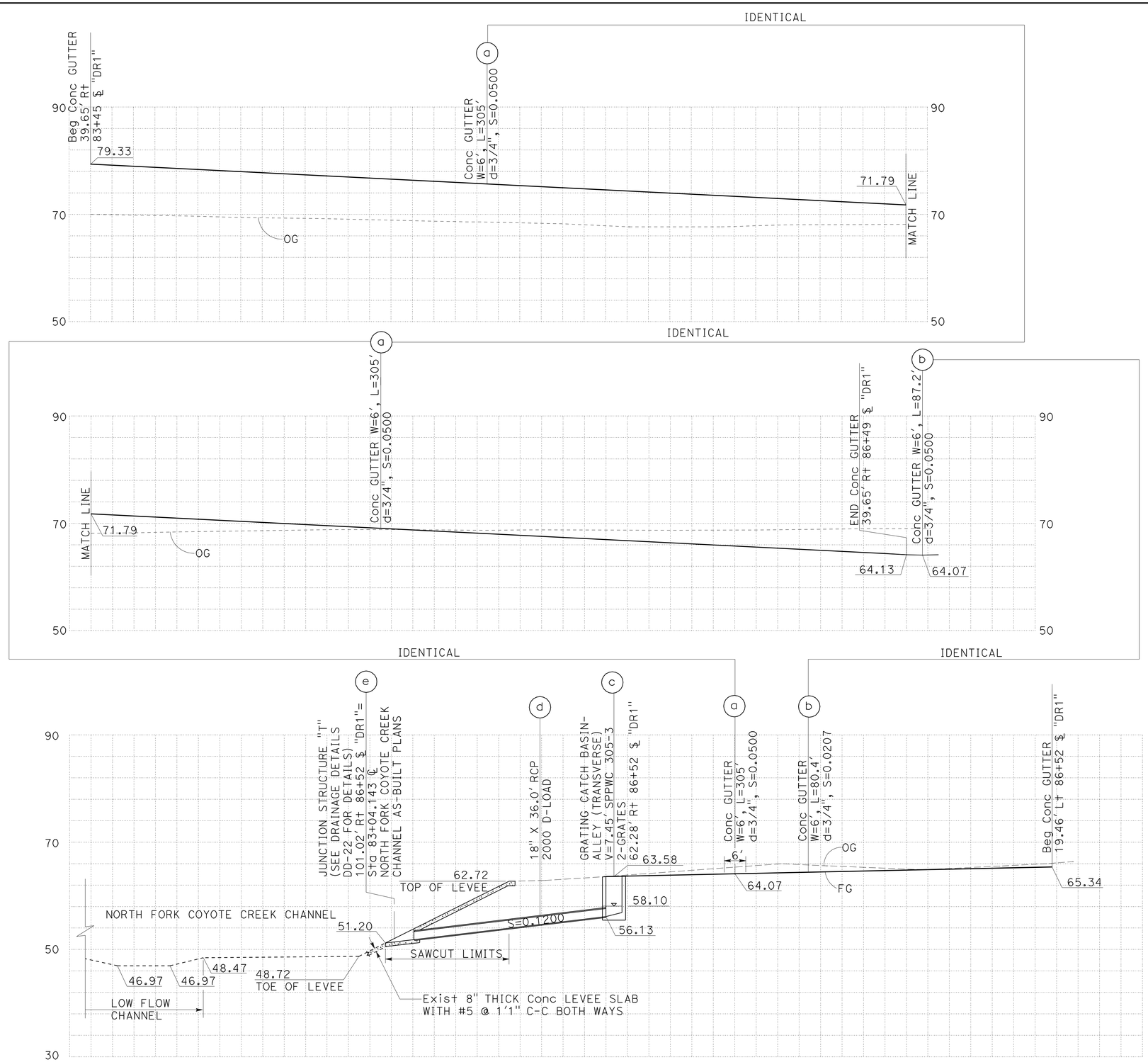

DRAINAGE SYSTEM No. 2-13

DRAINAGE PROFILES

SCALE: 1" = 10' Horiz
1" = 10' Vert

DP-14

STATE OF CALIFORNIA - DEPARTMENT OF TRANSPORTATION
Caltrans® HYDRAULICS

FUNCTIONAL SUPERVISOR: RALPH M. SASAKI
CALCULATED-DESIGNED BY: SIEW MEI TAN
CHECKED BY: RALPH M. SASAKI
REVISED BY / DATE REVISED

LAST REVISION 00-00-00
DATE PLOTTED => 30-JUN-2011
TIME PLOTTED => 16:08