DIST	COUNTY	ROUTE	POST MILES TOTAL PROJECT	SHEET No.	TOTAL SHEETS
07	LA	710	17.2/26.4	1301	1507

REGISTERED CIVIL ENGINEER 03/01/11 DATE

6-27-11
PLANS APPROVAL DATE

REGISTERED PROFESSIONAL ENGINEER FRANK HSIAOSHIH WEI No. C 52918 Exp. 12-31-12 CIVIL STATE OF CALIFORNIA

The State of California or its officers or agents shall not be responsible for the accuracy or completeness of electronic copies of this plan sheet.

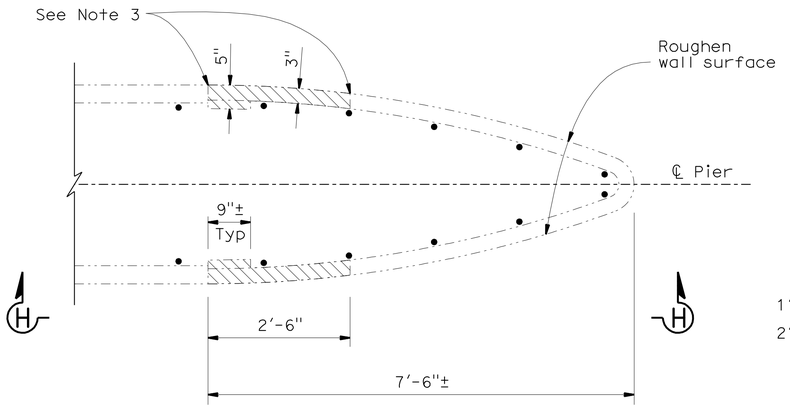

EXISTING PIER WALL REMOVAL
¾" = 1'-0"

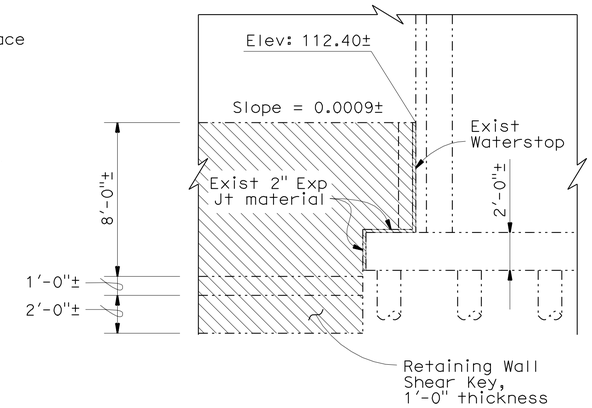

VIEW G-G
¼" = 1'-0"

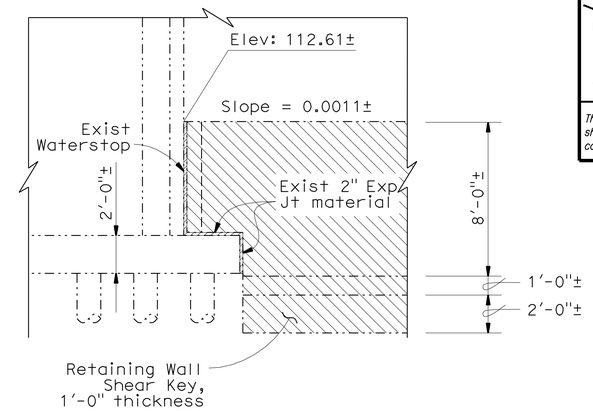

VIEW F-F
¼" = 1'-0"

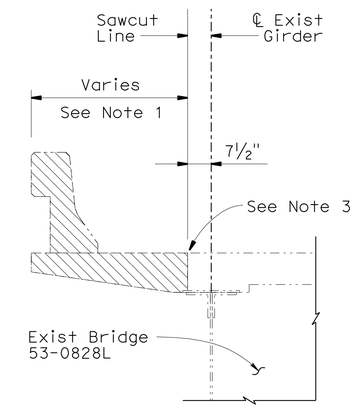

DETAIL A
½" = 1'-0"

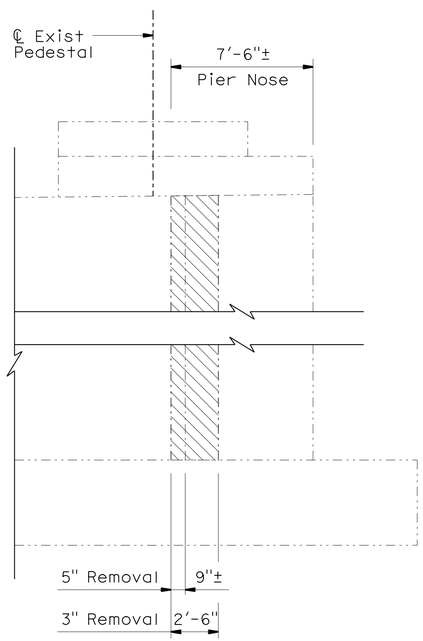

VIEW H-H
¼" = 1'-0"

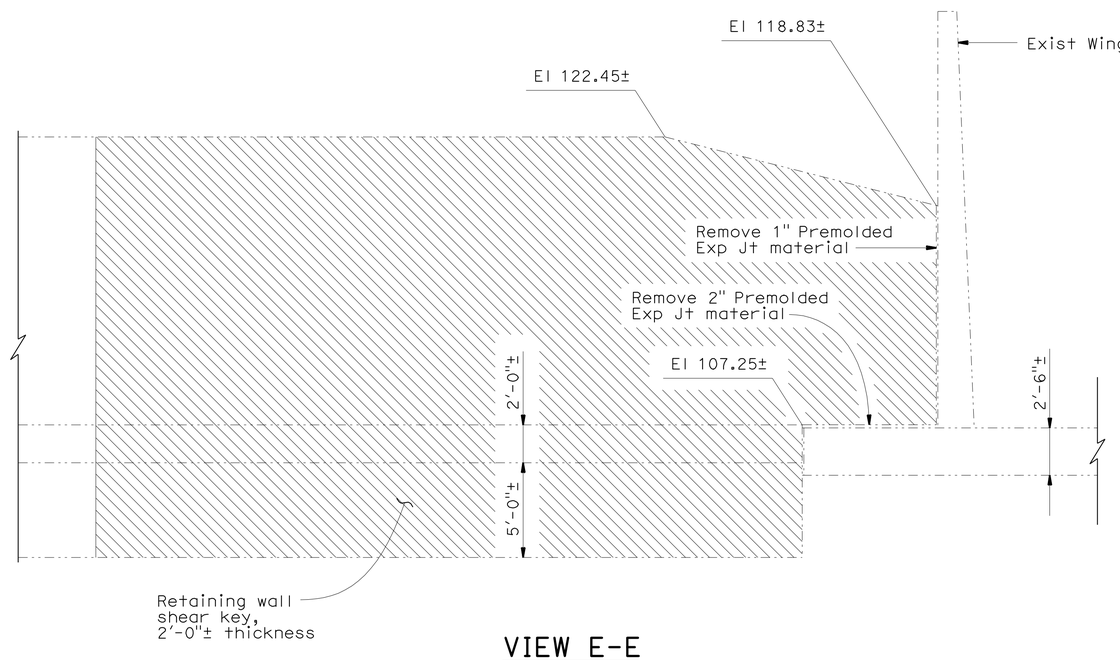

VIEW E-E
¼" = 1'-0"

NOTES:

1. See "TYPICAL SECTION" sheet.
2. See "REMOVAL PLAN NO. 1" sheet for locations of View E-E, View F-F, and View G-G.
3. The existing wall reinforcement and slab reinforcement shall not be damaged or removed during the concrete removal.

LEGEND:

—·—·— Existing Structure

▨ Bridge Removal (Portion)

NOTE:
THE CONTRACTOR SHALL VERIFY ALL CONTROLLING FIELD DIMENSIONS BEFORE ORDERING OR FABRICATING ANY MATERIAL.

	BY	CHECKED
DESIGN	F. Wei	S. Barajas / J. Railey
DETAILS	P. Perez	F. Wei
QUANTITIES	F. Wei	L. Sanchez-Manzo

STATE OF CALIFORNIA
DEPARTMENT OF TRANSPORTATION

DIVISION OF ENGINEERING SERVICES
STRUCTURE DESIGN
DESIGN BRANCH 21

BRIDGE NO. 53-0828
POST MILE 17.30

LOS ANGELES RIVER BRIDGE (WIDEN)
REMOVAL PLAN NO. 3

STRUCTURES DESIGN DETAIL SHEET (ENGLISH) (REV. 09-01-10)

ORIGINAL SCALE IN INCHES FOR REDUCED PLANS 0 1 2 3

UNIT: 3623
PROJECT NUMBER & PHASE: 0700020869 & 1 CONTRACT NO.: 202111

DISREGARD PRINTS BEARING EARLIER REVISION DATES

REVISION DATES: 01/27/10 10/01/10 11/24/10 03/01/11

SHEET 5 OF 74

FILE => 53-0828-c-rmvl_03.dgn

USERNAME => s124496 DATE PLOTTED => 28-JUN-2011 TIME PLOTTED => 19:35

DIST	COUNTY	ROUTE	POST MILES TOTAL PROJECT	SHEET No.	TOTAL SHEETS
07	LA	710	17.2/26.4	1302	1507

REGISTERED CIVIL ENGINEER — DATE 03/01/11

6-27-11
PLANS APPROVAL DATE

REGISTERED PROFESSIONAL ENGINEER — FRANK HSIAOSHIH WEI — No. C 52918 — Exp. 12-31-12 — CIVIL — STATE OF CALIFORNIA

The State of California or its officers or agents shall not be responsible for the accuracy or completeness of electronic copies of this plan sheet.

NOTES:

1. [ ] Indicates bottom of footing elevation.

   Contractor shall stop construction and notify engineer if:

   (a) the proposed top of widening footing is higher than the existing top of footing elevation.

   (b) The elevation difference between the top of the proposed widening footing and the top of the existing footing is greater than 18".

2. Existing contours are shown, for final contours see "ROAD PLANS."
3. For footing dimensions, see Abutment layout and Pier wall layout sheets.
4. Underground utilities as shown are approximate, see "ROAD PLANS" for details.
5. See "INDEX TO PLANS" sheet for Pile Data Table.
6. Existing Retaining Wall Footing not shown for clarity. See "ABUTMENT 1 LAYOUT" sheet for new Retaining Wall details.
7. See "RETAINING WALL DETAILS NO. 1" sheet for Retaining Wall details.
8. See "RETAINING WALL DETAILS NO. 2" sheet for Retaining Wall details.

CURVE DATA				
No.	R	Δ	T	L
1	2500.000	66°55′54"	1652.567	2920.440

Ⓐ STA.918+37.57 "R710A" LINE=
STA.14+92.13 "LARIV1" LINE

Bridge #53-0828 Location
③ -58.199 Lt. "R710A" Line, 916+09.35Sta., Elev.=123.786±
④ -57.696 Rt. "R710A" Line, 914+81.74Sta., Elev.=118.831±

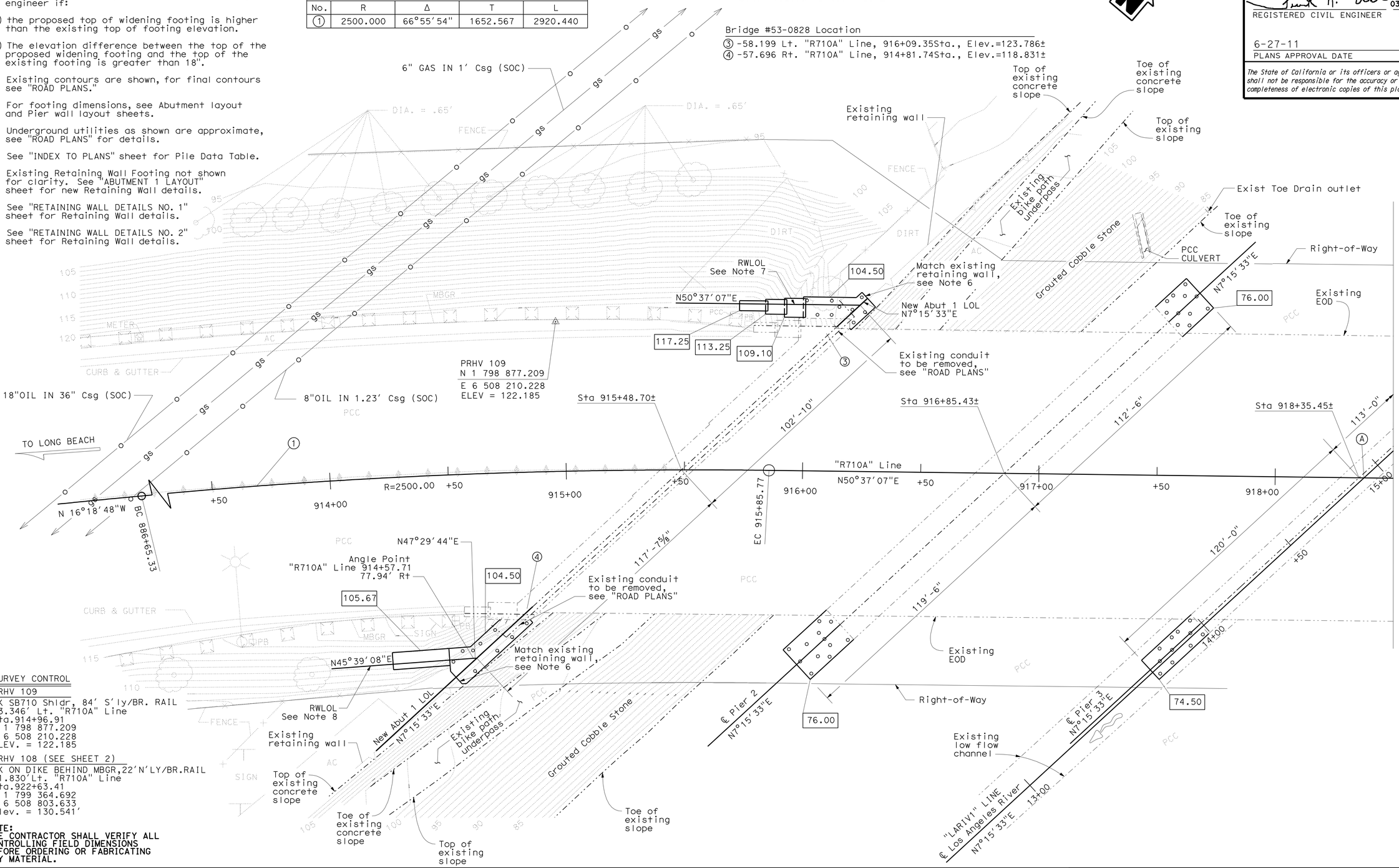

SURVEY CONTROL

PRHV 109
PK SB710 Shldr, 84′ S′ly/BR. RAIL
63.346′ Lt. "R710A" Line
Sta.914+96.91
N 1 798 877.209
E 6 508 210.228
ELEV. = 122.185

PRHV 108 (SEE SHEET 2)
PK ON DIKE BEHIND MBGR,22′N′LY/BR.RAIL
61.830′Lt. "R710A" Line
Sta.922+63.41
N 1 799 364.692
E 6 508 803.633
Elev. = 130.541′

NOTE:
THE CONTRACTOR SHALL VERIFY ALL CONTROLLING FIELD DIMENSIONS BEFORE ORDERING OR FABRICATING ANY MATERIAL.

PRELIMINARY INVESTIGATION SECTION

SCALE	VERT.DATUM NAVD 88	PHOTOGRAMMETRY AS OF: X			
1:20	HORZ.DATUM NAD 83 (1991.35)	SURVEYED	BY C.STEWART/ T.PUNG	CHECKED	BY C. STEWART
ALIGNMENT TIES DISTRICT SURVEY		DRAFTED	BY S. ABASSY 06/2009	CHECKED	BY S. ALIVIO

DESIGN	BY F. Wei	CHECKED	S. Barajas / J. Railey
DETAILS	BY P. Perez	CHECKED	F. Wei
QUANTITIES	BY F. Wei	CHECKED	L. Sanchez-Manzo

STATE OF CALIFORNIA
DEPARTMENT OF TRANSPORTATION

DIVISION OF ENGINEERING SERVICES
STRUCTURE DESIGN
DESIGN BRANCH 21

BRIDGE NO. 53-0828
POST MILE 17.30

LOS ANGELES RIVER BRIDGE (WIDEN)
FOUNDATION PLAN NO. 1

STRUCTURES FOUNDATION PLAN SHEET (ENGLISH) (REV. 09-01-10)

ORIGINAL SCALE IN INCHES FOR REDUCED PLANS 0 1 2 3

UNIT: 3623
PROJECT NUMBER & PHASE: 0700020869 & 1 CONTRACT NO.: 202111

DISREGARD PRINTS BEARING EARLIER REVISION DATES

REVISION DATES: 01/24/10 10/04/10 11/24/10 03/01/11

SHEET 6 OF 74

FILE => 53-0828-e-fdp101.dgn

DIST	COUNTY	ROUTE	POST MILES TOTAL PROJECT	SHEET No.	TOTAL SHEETS
07	LA	710	17.2/26.4	1303	1507

REGISTERED CIVIL ENGINEER 03/01/11 DATE

6-27-11
PLANS APPROVAL DATE

REGISTERED PROFESSIONAL ENGINEER FRANK HSIAOSHIH WEI No. C 52918 Exp. 12-31-12 CIVIL STATE OF CALIFORNIA

The State of California or its officers or agents shall not be responsible for the accuracy or completeness of electronic copies of this plan sheet.

NOTES:

1. ▭ Indicates bottom of footing elevation.

   Contractor shall stop construction and notify engineer if:

(a) the proposed top of widening footing is higher than the existing top of footing elevation.

(b) The elevation difference between the top of the proposed widening footing and the top of the existing footing is greater than 18".

2. Existing contours are shown, for final contours see "ROAD PLANS."
3. For footing dimensions, see Abutment layout and Pier wall layout sheets.
4. Underground utilities as shown are approximate, see "ROAD PLANS" for details.
5. See "INDEX TO PLANS" sheet for Pile Data Table.
6. Existing Retaining Wall Footing not shown for clarity. See "RETAINING WALL DETAILS NO. 3" sheet for Retaining Wall details. In addition, see REMOVAL PLANS for limits of existing wall removal.
7. See "RETAINING WALL DETAILS NO. 4" sheet for Retaining Wall details.

CURVE DATA				
No.	R	Δ	T	L
②	2500.000	44°14′16"	1016.105	1930.237

Bridge #53-0828 Location
⑤ -57.714 Lt. "R710A" Line, Sta.921+84.52, Elev.=129.420±
⑥ -58.285 Rt. "R710A" Line, Sta.920+61.60, Elev.=129.430±

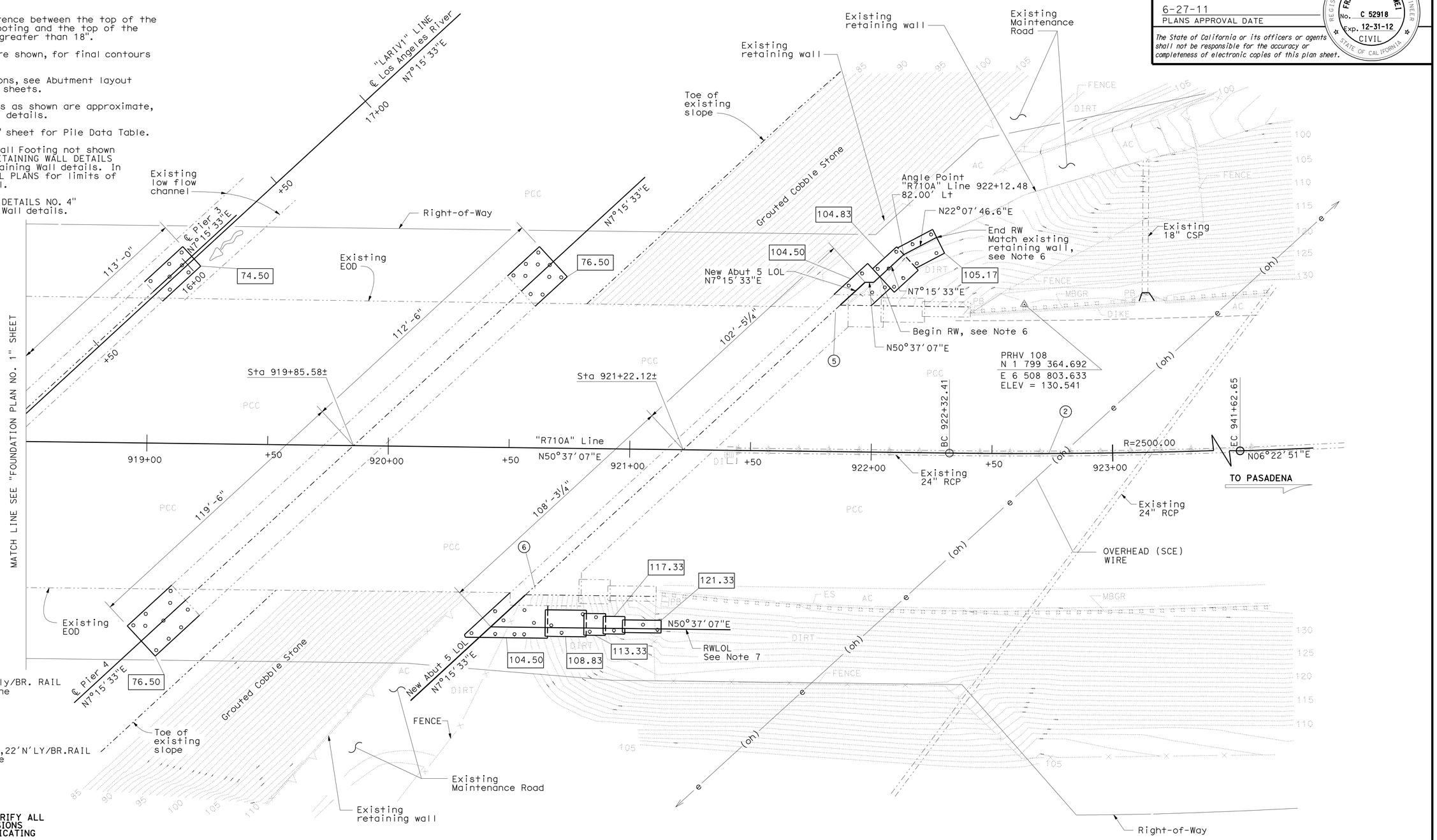

SURVEY CONTROL

PRHV 109 (SEE SHEET1)
PK SB710 Shldr, 84′ S'ly/BR. RAIL
63.346′ Lt. "R710A" Line
Sta.914+96.91
N 1 798 877.209
E 6 508 210.228
ELEV. = 122.185

PRHV 108
PK ON DIKE BEHIND MBGR,22′N'LY/BR.RAIL
61.830′Lt. "R710A" Line
Sta.922+63.41
N 1 799 364.692
E 6 508 803.633
Elev. = 130.541′

NOTE:
THE CONTRACTOR SHALL VERIFY ALL CONTROLLING FIELD DIMENSIONS BEFORE ORDERING OR FABRICATING ANY MATERIAL.

PRELIMINARY INVESTIGATION SECTION

SCALE	VERT.DATUM NAVD 88	PHOTOGRAMMETRY AS OF: X			
1:20	HORZ.DATUM NAD 83 (1991.35)	SURVEYED	BY C.STEWART/ T.PUNG	CHECKED	BY C. STEWART
ALIGNMENT TIES	DISTRICT SURVEY	DRAFTED	BY S. ABASSY 06/2009	CHECKED	BY S. ALIVIO

DESIGN	BY F. Wei	CHECKED S. Barajas / J. Railey
DETAILS	BY P. Perez	CHECKED F. Wei
QUANTITIES	BY F. Wei	CHECKED L. Sanchez-Manzo

STATE OF CALIFORNIA
DEPARTMENT OF TRANSPORTATION

DIVISION OF ENGINEERING SERVICES
STRUCTURE DESIGN
DESIGN BRANCH 21

BRIDGE NO. 53-0828
POST MILE 17.30

LOS ANGELES RIVER BRIDGE (WIDEN)
FOUNDATION PLAN NO. 2

STRUCTURES FOUNDATION PLAN SHEET (ENGLISH) (REV. 09-01-10)

ORIGINAL SCALE IN INCHES FOR REDUCED PLANS 0 1 2 3

UNIT: 3623
PROJECT NUMBER & PHASE: 0700020869 & 1 CONTRACT NO.: 202111

DISREGARD PRINTS BEARING EARLIER REVISION DATES → REVISION DATES 01/24/10 10/04/10 11/24/10 03/01/11

SHEET 7 OF 74

FILE => 53-0828-e-fdp102.dgn

DIST	COUNTY	ROUTE	POST MILES TOTAL PROJECT	SHEET No.	TOTAL SHEETS
07	LA	710	17.2/26.4	1304	1507

REGISTERED CIVIL ENGINEER — DATE 03/01/11

6-27-11
PLANS APPROVAL DATE

REGISTERED PROFESSIONAL ENGINEER — FRANK HSIAOSHIH WEI — No. C 52918 — Exp. 12-31-12 — CIVIL — STATE OF CALIFORNIA

The State of California or its officers or agents shall not be responsible for the accuracy or completeness of electronic copies of this plan sheet.

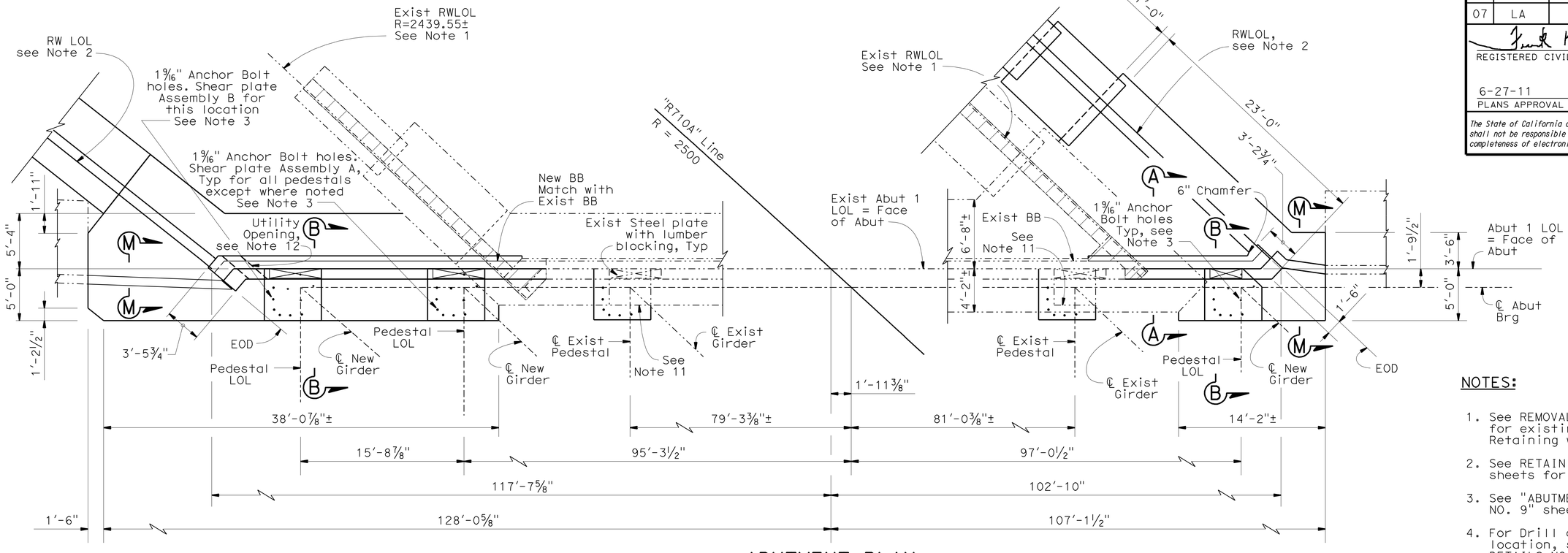

ABUTMENT PLAN

3/16" = 1'-0"

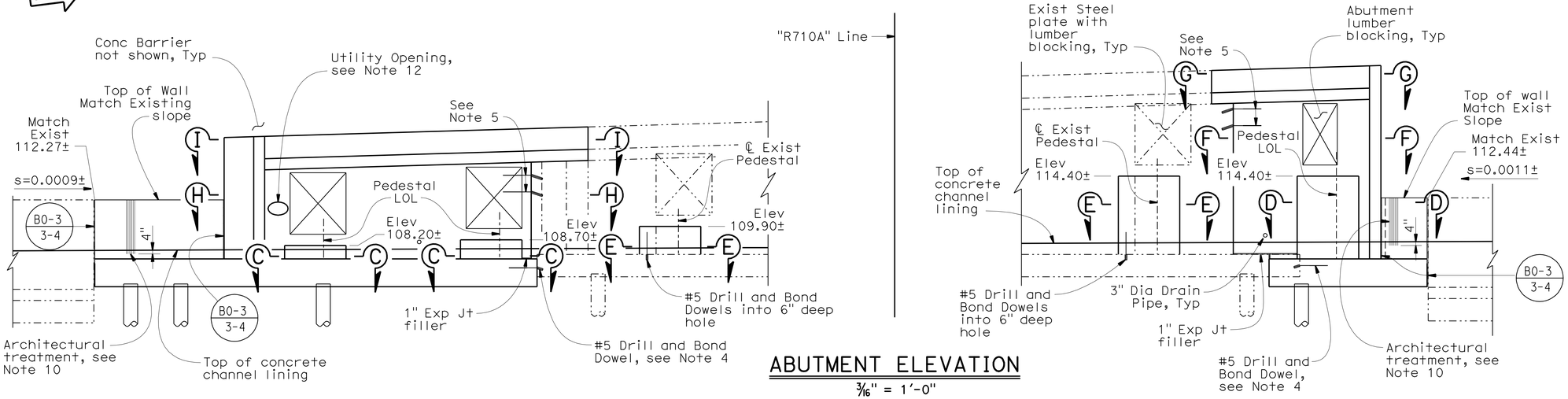

ABUTMENT ELEVATION

3/16" = 1'-0"

* All piles not shown

NOTES:

1. See REMOVAL PLAN sheets for existing Abutment and Retaining wall removal.
2. See RETAINING WALL DETAILS sheets for details.
3. See "ABUTMENT DETAILS NO. 9" sheet for details.
4. For Drill and Bond Dowel location, see "ABUTMENT DETAILS NO. 7" sheet.
5. For Drill and Bond Dowel Pattern at Abutment Interface, see "ABUTMENT DETAILS NO. 4" sheet.
6. For Sections A-A, B-B, and M-M, see "ABUTMENT DETAILS NO. 1" sheet.
7. For Sections C-C, D-D, and E-E, see "ABUTMENT DETAILS NO. 2" sheet.
8. For Sections F-F and G-G, see "ABUTMENT DETAILS NO. 4" sheet.
9. For Section H-H and I-I, see "ABUTMENT DETAILS NO. 5" sheet.
10. For Form Liner details, see "RETAINING WALL DETAILS NO. 6" sheet.
11. The Contractor shall remove cracked, separated, unsound concrete on the existing pedestal face before installing Drill and Bond dowels and constructing new concrete.
12. For utility opening details, see "DECK DRAIN LAYOUT" sheet.
13. Contractor shall field verify abutment pedestal elevations to avoid conflicts with the bridge deck construction.

NOTE:
THE CONTRACTOR SHALL VERIFY ALL CONTROLLING FIELD DIMENSIONS BEFORE ORDERING OR FABRICATING ANY MATERIAL.

	BY	CHECKED
DESIGN	F. Wei	S. Barajas / J. Railey
DETAILS	P. Perez	F. Wei
QUANTITIES	F. Wei	L. Sanchez-Manzo

STATE OF CALIFORNIA DEPARTMENT OF TRANSPORTATION

DIVISION OF ENGINEERING SERVICES STRUCTURE DESIGN — DESIGN BRANCH 21

BRIDGE NO. 53-0828 — POST MILE 17.30

LOS ANGELES RIVER BRIDGE (WIDEN)

ABUTMENT 1 LAYOUT

STRUCTURES DESIGN DETAIL SHEET (ENGLISH) (REV. 09-01-10)

ORIGINAL SCALE IN INCHES FOR REDUCED PLANS 0 1 2 3

UNIT: 3623
PROJECT NUMBER & PHASE: 0700020869 & 1 CONTRACT NO.: 202111

DISREGARD PRINTS BEARING EARLIER REVISION DATES — REVISION DATES 01/27/10 10/08/10 11/24/10 03/01/11

SHEET 8 OF 74

FILE => 53-0828-f-a_01_lo.dgn

USERNAME => s124496 DATE PLOTTED => 28-JUN-2011 TIME PLOTTED => 19:35

DIST	COUNTY	ROUTE	POST MILES TOTAL PROJECT	SHEET No.	TOTAL SHEETS
07	LA	710	17.2/26.4	1305	1507

REGISTERED CIVIL ENGINEER — DATE 03/01/11

6-27-11
PLANS APPROVAL DATE

REGISTERED PROFESSIONAL ENGINEER — FRANK HSIAOSHIH WEI — No. C 52918 — Exp. 12-31-12 — CIVIL — STATE OF CALIFORNIA

The State of California or its officers or agents shall not be responsible for the accuracy or completeness of electronic copies of this plan sheet.

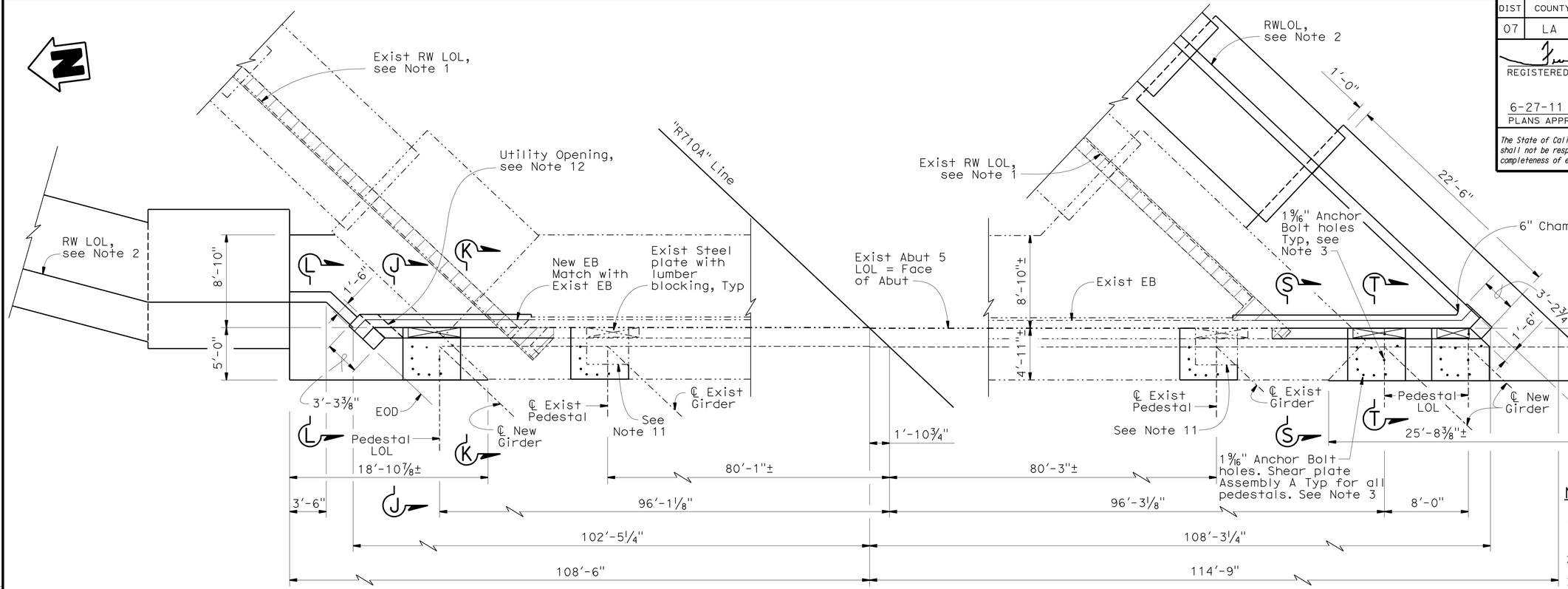

ABUTMENT PLAN

3/16" = 1'-0"

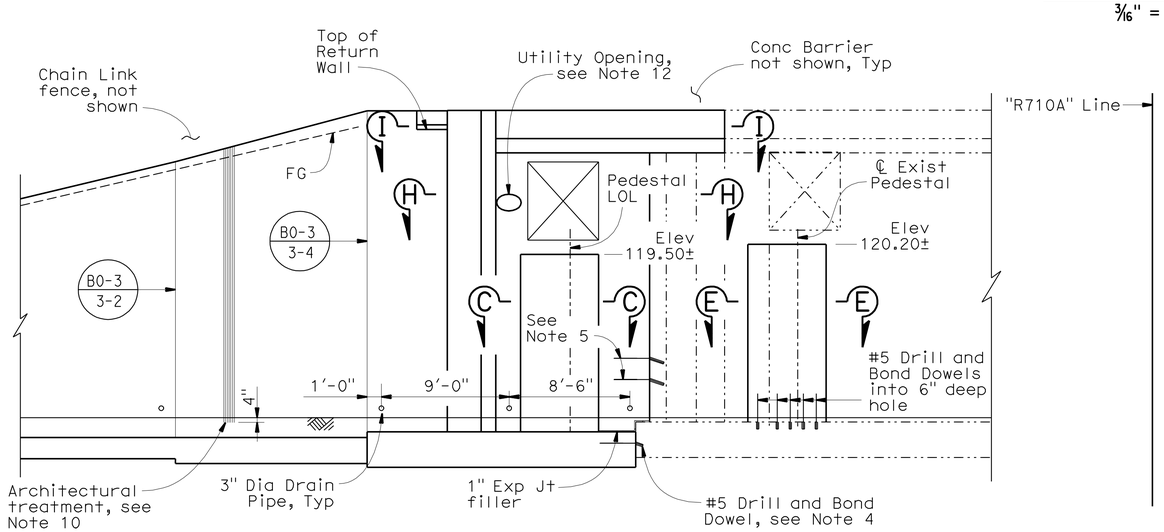

NOTE:
THE CONTRACTOR SHALL VERIFY ALL CONTROLLING FIELD DIMENSIONS BEFORE ORDERING OR FABRICATING ANY MATERIAL.

ABUTMENT ELEVATION

3/16" = 1'-0"

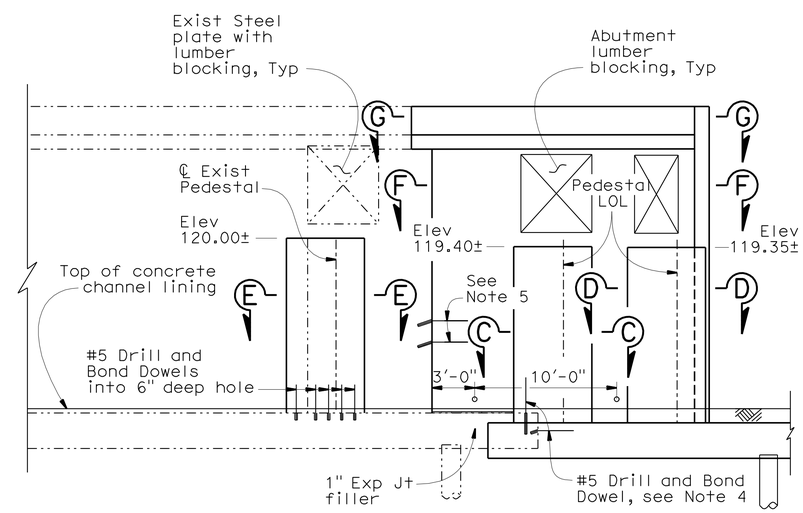

* All piles not shown

NOTES:

1. See REMOVAL PLAN sheets for existing Abutment and Retaining wall removal.
2. See RETAINING WALL DETAILS sheets for details.
3. See "ABUTMENT DETAILS NO. 9" sheet for details.
4. For Drill and Bond Dowel location, see "ABUTMENT DETAILS NO. 8" sheet.
5. For Drill and Bond Dowel Pattern at Abutment Interface, see "ABUTMENT DETAILS NO. 4" sheet.
6. For Sections C-C, D-D, E-E, S-S and T-T, see "ABUTMENT DETAILS NO. 2" sheet.
7. For Sections F-F and G-G, see "ABUTMENT DETAILS NO. 4" sheet.
8. For Sections H-H and I-I, see "ABUTMENT DETAILS NO. 5" sheet.
9. For Sections J-J, K-K, and L-L, see "ABUTMENT DETAILS NO. 3" sheet.
10. For Form Liner details, see "RETAINING WALL DETAILS NO. 6" sheet.
11. The contractor shall remove cracked, separated, unsound concrete on the existing pedestal face before installing Drill and Bond dowels and constructing new concrete.
12. For utility opening details, see "DECK DRAIN LAYOUT" sheet.
13. Contractor shall field verify abutment pedestal elevations to avoid conflicts with the bridge deck construction.

	BY	CHECKED
DESIGN	F. Wei	S. Barajas / J. Railey
DETAILS	P. Perez	F. Wei
QUANTITIES	F. Wei	L. Sanchez-Manzo

STATE OF CALIFORNIA
DEPARTMENT OF TRANSPORTATION

DIVISION OF ENGINEERING SERVICES
STRUCTURE DESIGN
DESIGN BRANCH 21

BRIDGE NO. 53-0828
POST MILE 17.30

LOS ANGELES RIVER BRIDGE (WIDEN)
ABUTMENT 5 LAYOUT

STRUCTURES DESIGN DETAIL SHEET (ENGLISH) (REV. 09-01-10)

ORIGINAL SCALE IN INCHES FOR REDUCED PLANS 0 1 2 3

UNIT: 3623
PROJECT NUMBER & PHASE: 0700020869 & 1 CONTRACT NO.: 202111

DISREGARD PRINTS BEARING EARLIER REVISION DATES — REVISION DATES 01/20/10 10/01/10 11/24/10 03/01/11

SHEET 9 OF 74

FILE => 53-0828-f-a_05_lo.dgn

USERNAME => s124496 DATE PLOTTED => 28-JUN-2011 TIME PLOTTED => 19:36

DIST	COUNTY	ROUTE	POST MILES TOTAL PROJECT	SHEET No.	TOTAL SHEETS
07	LA	710	17.2/26.4	1306	1507

REGISTERED CIVIL ENGINEER 03/01/11 DATE

6-27-11
PLANS APPROVAL DATE

The State of California or its officers or agents shall not be responsible for the accuracy or completeness of electronic copies of this plan sheet.

REGISTERED PROFESSIONAL ENGINEER FRANK HSIAOSHIH WEI No. C 52918 Exp. 12-31-12 CIVIL STATE OF CALIFORNIA

NOTES:

1. Contractor may adjust battered factor to 1:4 if the existing wall interferes with pile driving operation.
2. Contractor shall verify existing pile location, existing pile direction of batter, and the clearance between the existing piles and new driven piles. Pile spacing shown is subject to adjustment to avoid existing piles. Notify Engineer should the new driven piles not have adequate clearance and cause conflicts to the existing piles.

LEGEND:

- Indicates Exist vertical piles
- Indicates Exist 1:3 battered piles
- Indicates New vertical piles
- Indicates New 1:3 battered piles

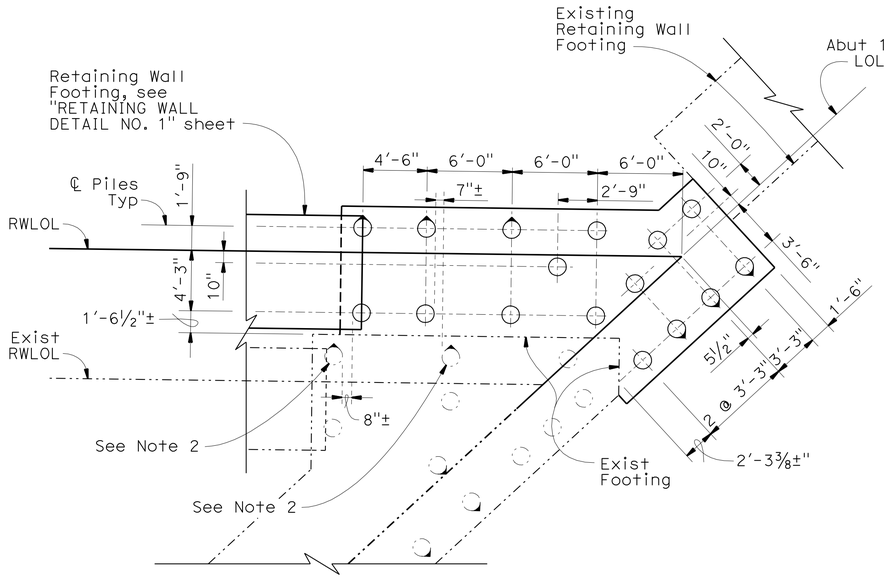

ABUTMENT 1 NORTH PILE LAYOUT

3/16" = 1'-0"

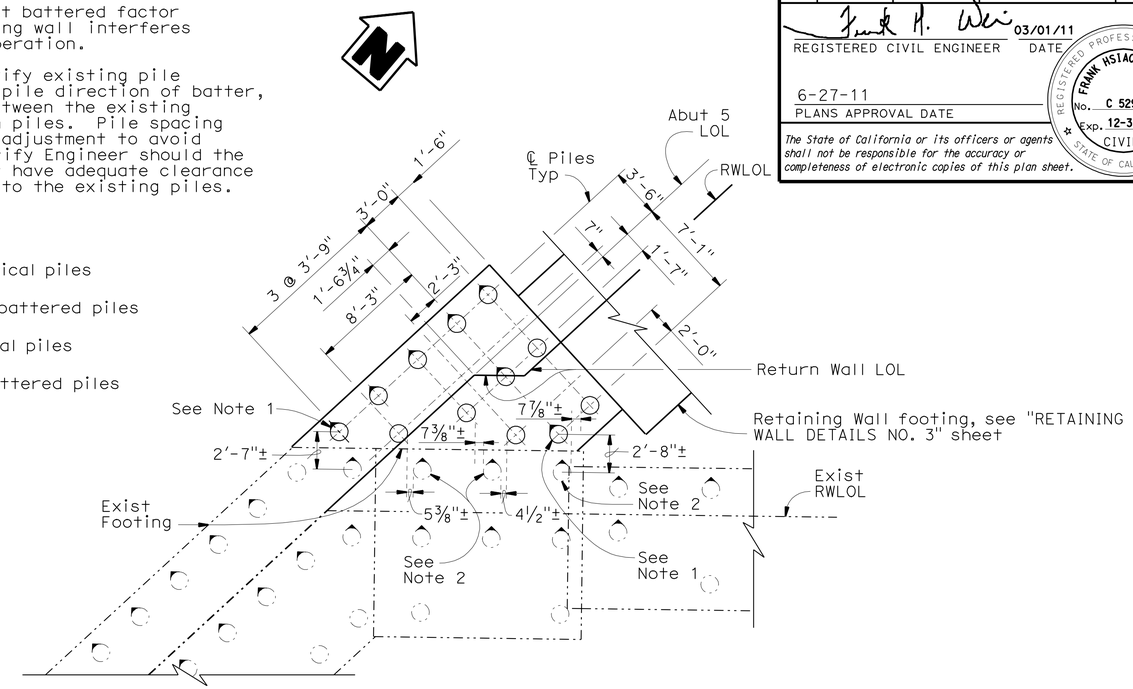

ABUTMENT 5 NORTH PILE LAYOUT

3/16" = 1'-0"

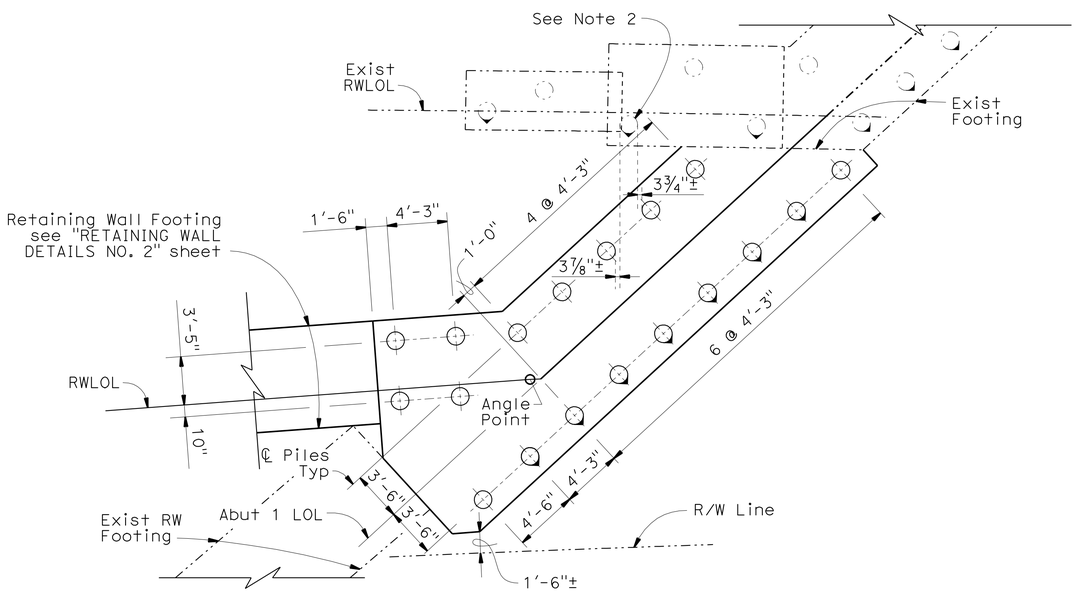

ABUTMENT 1 SOUTH PILE LAYOUT

3/16" = 1'-0"

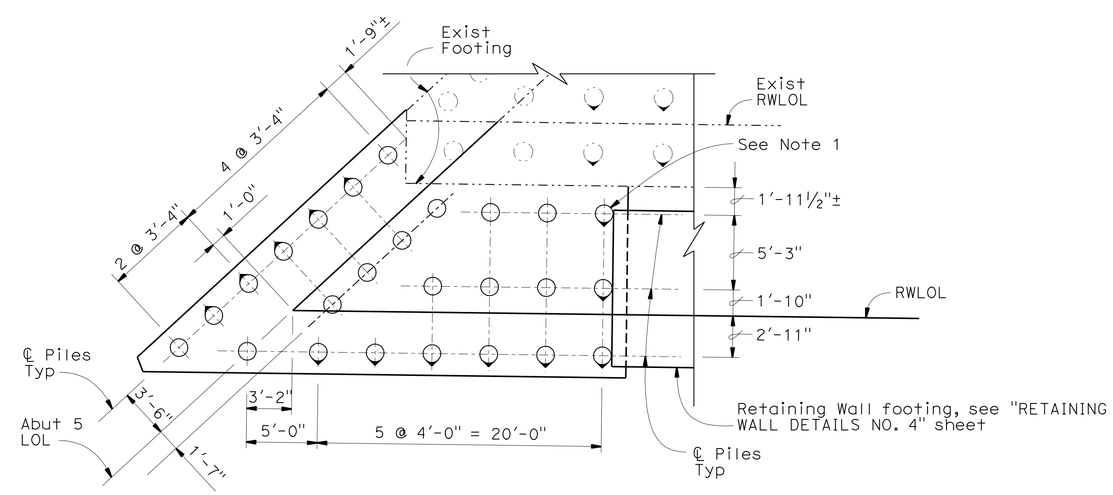

ABUTMENT 5 SOUTH PILE LAYOUT

3/16" = 1'-0"

NOTE:
THE CONTRACTOR SHALL VERIFY ALL CONTROLLING FIELD DIMENSIONS BEFORE ORDERING OR FABRICATING ANY MATERIAL.

	BY	CHECKED
DESIGN	F. Wei	S. Barajas / J. Railey
DETAILS	P. Perez	F. Wei
QUANTITIES	F. Wei	L. Sanchez-Manzo

STATE OF CALIFORNIA
DEPARTMENT OF TRANSPORTATION

DIVISION OF ENGINEERING SERVICES
STRUCTURE DESIGN
DESIGN BRANCH 21

BRIDGE NO. 53-0828
POST MILE 17.30

LOS ANGELES RIVER BRIDGE (WIDEN)
ABUTMENT PILE LAYOUT

STRUCTURES DESIGN DETAIL SHEET (ENGLISH) (REV. 09-01-10)

ORIGINAL SCALE IN INCHES FOR REDUCED PLANS 0 1 2 3

UNIT: 3623
PROJECT NUMBER & PHASE: 0700020869 & 1 CONTRACT NO.: 202111

DISREGARD PRINTS BEARING EARLIER REVISION DATES

REVISION DATES 01/14/10 10/01/10 11/24/10 03/01/11

SHEET 10 OF 74

FILE => 53-0828-f-a_p_10.dgn

USERNAME => s124496 DATE PLOTTED => 28-JUN-2011 TIME PLOTTED => 19:36

DIST	COUNTY	ROUTE	POST MILES TOTAL PROJECT	SHEET No.	TOTAL SHEETS
07	LA	710	17.2/26.4	1307	1507

REGISTERED CIVIL ENGINEER 03/01/11 DATE

6-27-11
PLANS APPROVAL DATE

REGISTERED PROFESSIONAL ENGINEER FRANK HSIAOSHIH WEI No. C 52918 Exp. 12-31-12 CIVIL STATE OF CALIFORNIA

The State of California or its officers or agents shall not be responsible for the accuracy or completeness of electronic copies of this plan sheet.

NOTES:

1. For abutment lumber blocking details, see "ABUTMENT DETAILS NO. 6" sheet.
2. For Abutment footing reinforcement, see "ABUTMENT DETAILS NO. 7" sheet.
3. For Shear Plate Assembly details, see "ABUTMENT DETAILS NO. 9" sheet.
4. For locations of A-A, B-B and M-M, see "ABUTMENT 1 LAYOUT" sheet.
5. For Wall Architectural Treatment, see "RETAINING WALL DETAILS NO. 6" sheet.
6. See "LIMITS OF PAYMENT FOR EXCAVATION AND BACKFILL" sheet for new concrete channel lining payment limits.

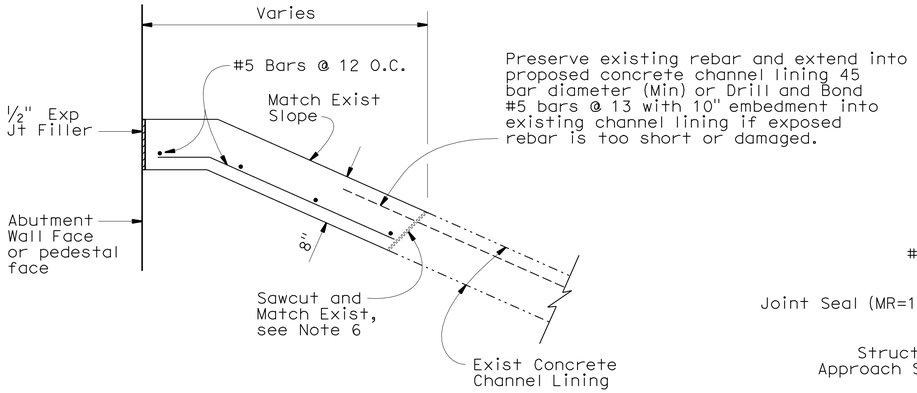

CONCRETE CHANNEL LINING RECONSTRUCTION DETAIL

1" = 1'-0"

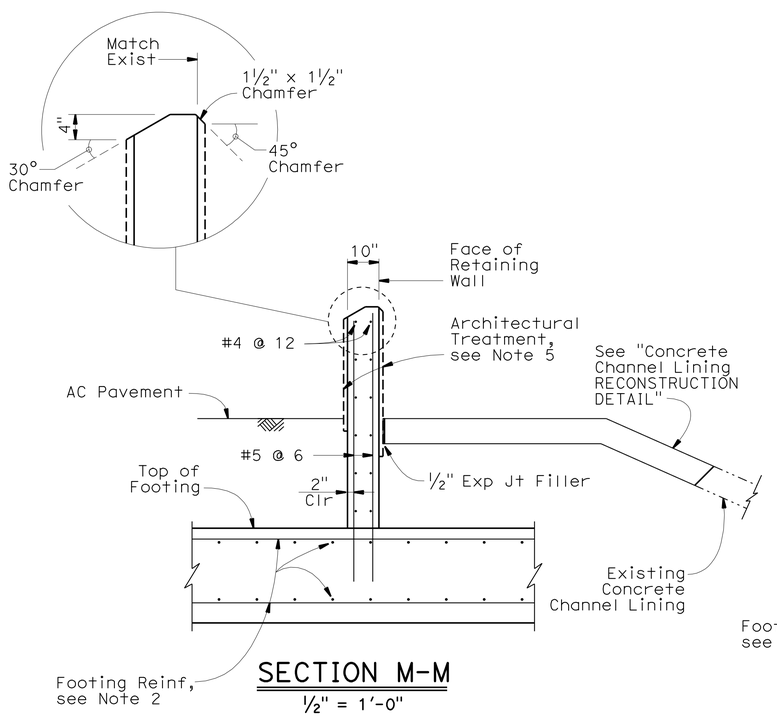

SECTION M-M

½" = 1'-0"

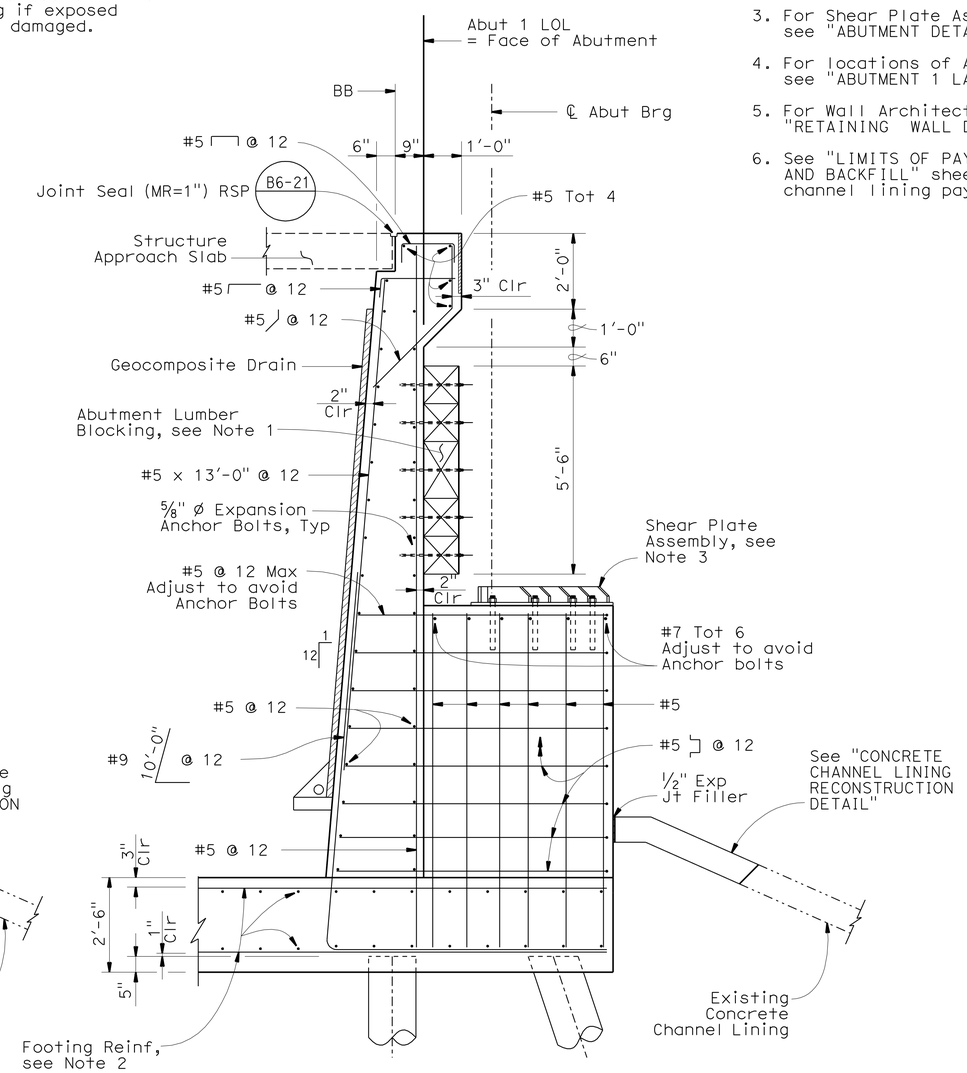

SECTION B-B

½" = 1'-0"

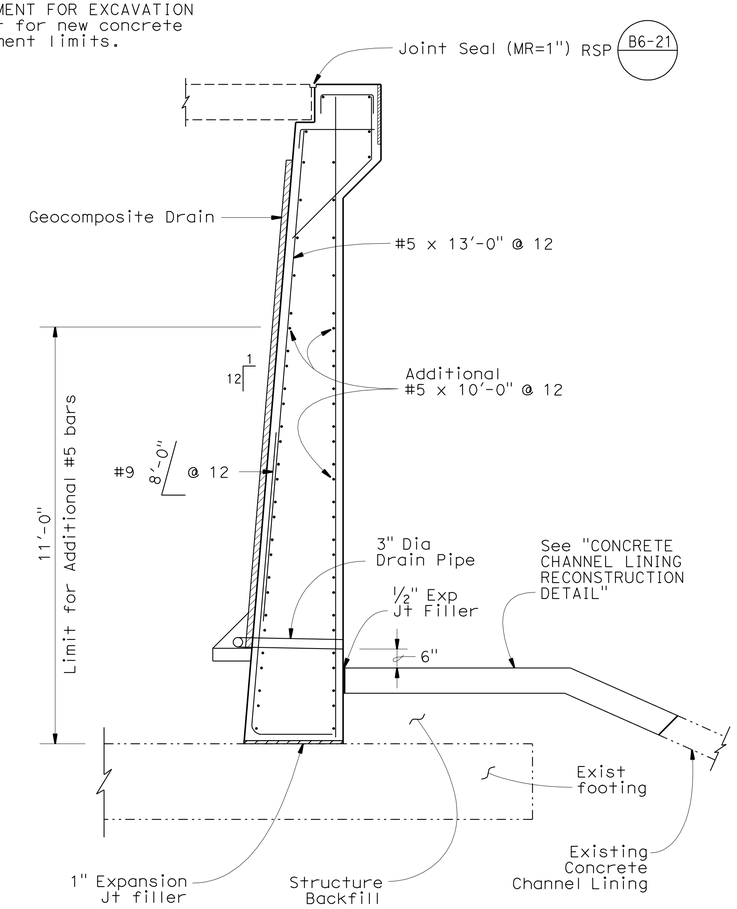

SECTION A-A

½" = 1'-0"

(Abutment 1 North shown
Abutment 1 South similar)

* See Section B-B for reinforcement information not shown

NOTE:
THE CONTRACTOR SHALL VERIFY ALL CONTROLLING FIELD DIMENSIONS BEFORE ORDERING OR FABRICATING ANY MATERIAL.

	BY	CHECKED
DESIGN	F. Wei	S. Barajas / J. Railey
DETAILS	P. Perez	F. Wei
QUANTITIES	F. Wei	L. Sanchez-Manzo

STATE OF CALIFORNIA
DEPARTMENT OF TRANSPORTATION

DIVISION OF ENGINEERING SERVICES
STRUCTURE DESIGN
DESIGN BRANCH 21

BRIDGE NO. 53-0828
POST MILE 17.30

LOS ANGELES RIVER BRIDGE (WIDEN)
ABUTMENT DETAILS NO. 1

STRUCTURES DESIGN DETAIL SHEET (ENGLISH) (REV. 09-01-10)

ORIGINAL SCALE IN INCHES FOR REDUCED PLANS 0 1 2 3

UNIT: 3623
PROJECT NUMBER & PHASE: 0700020869 & 1 CONTRACT NO.: 202111

DISREGARD PRINTS BEARING EARLIER REVISION DATES

REVISION DATES: 01/28/10 10/01/10 11/24/10 03/01/11

SHEET 11 OF 74

FILE => 53-0828-f-adt01.dgn

USERNAME => s124496 DATE PLOTTED => 28-JUN-2011 TIME PLOTTED => 19:36

DIST	COUNTY	ROUTE	POST MILES TOTAL PROJECT	SHEET No.	TOTAL SHEETS
07	LA	710	17.2/26.4	1308	1507

REGISTERED CIVIL ENGINEER 03/01/11 DATE

6-27-11
PLANS APPROVAL DATE

REGISTERED PROFESSIONAL ENGINEER FRANK HSIAOSHIH WEI No. C 52918 Exp. 12-31-12 CIVIL STATE OF CALIFORNIA

The State of California or its officers or agents shall not be responsible for the accuracy or completeness of electronic copies of this plan sheet.

NOTES:

1. For abutment lumber blocking details, see "ABUTMENT DETAILS NO. 6" sheet
2. For Abutment footing reinforcement, see "ABUTMENT DETAILS NO. 8" sheet.
3. For Shear Plate Assembly details, see "ABUTMENT DETAILS NO. 9" sheet
4. For locations of Sections C-C, D-D, E-E, S-S, and T-T, see "ABUTMENT 1 LAYOUT" and "ABUTMENT 5 LAYOUT" sheets.

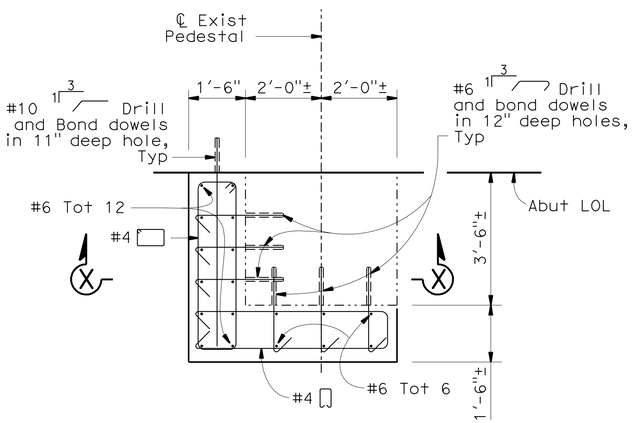

SECTION E-E
½" = 1'-0"

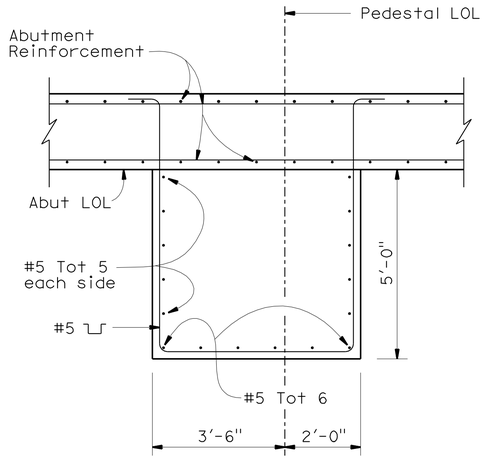

SECTION C-C
½" = 1'-0"

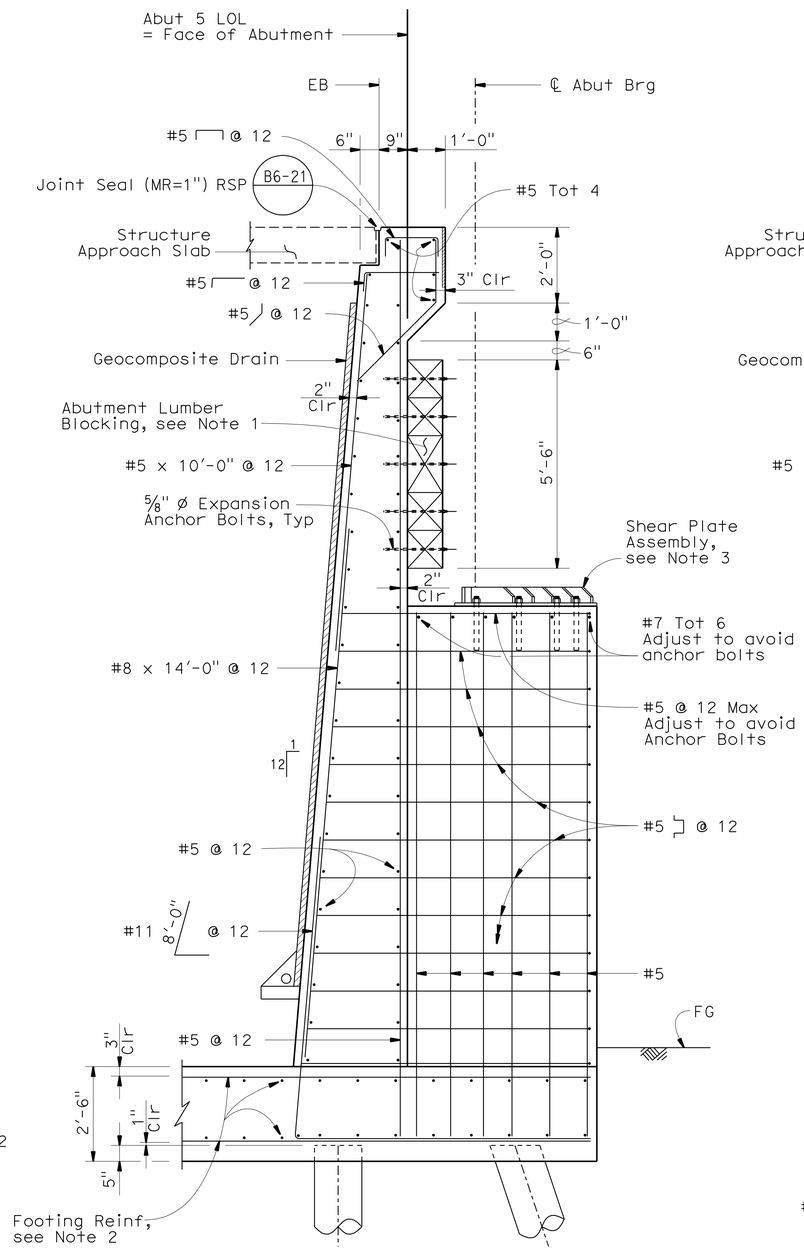

SECTION T-T
½" = 1'-0"

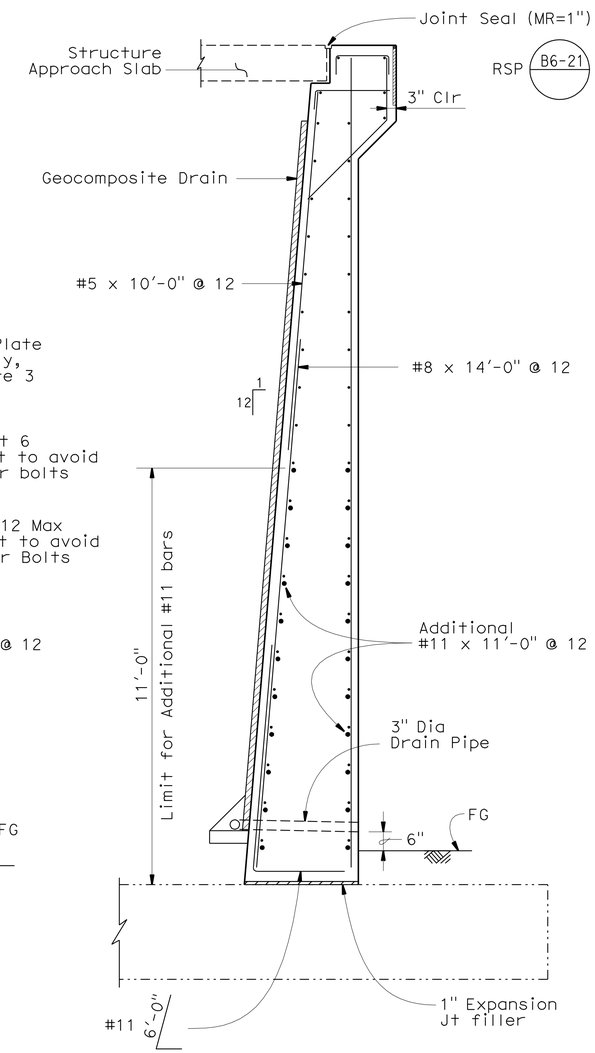

SECTION S-S
½" = 1'-0"

(See SECTION T-T for reinforcement information)

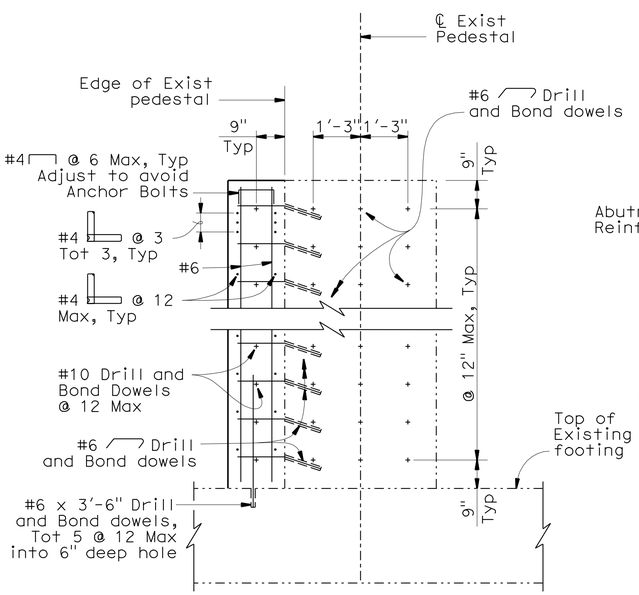

SECTION X-X
½" = 1'-0"

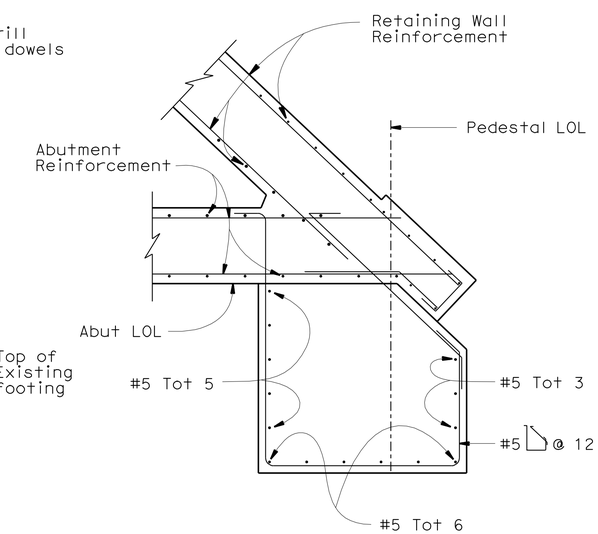

SECTION D-D
½" = 1'-0"

NOTE:
THE CONTRACTOR SHALL VERIFY ALL CONTROLLING FIELD DIMENSIONS BEFORE ORDERING OR FABRICATING ANY MATERIAL.

	BY	CHECKED
DESIGN	F. Wei	S. Barajas / J. Railey
DETAILS	P. Perez	F. Wei
QUANTITIES	F. Wei	L. Sanchez-Manzo

STATE OF CALIFORNIA
DEPARTMENT OF TRANSPORTATION

DIVISION OF ENGINEERING SERVICES
STRUCTURE DESIGN
DESIGN BRANCH 21

BRIDGE NO. 53-0828
POST MILE 17.30

LOS ANGELES RIVER BRIDGE (WIDEN)
ABUTMENT DETAILS NO. 2

STRUCTURES DESIGN DETAIL SHEET (ENGLISH) (REV. 09-01-10)

ORIGINAL SCALE IN INCHES FOR REDUCED PLANS 0 1 2 3

UNIT: 3623
PROJECT NUMBER & PHASE: 0700020869 & 1 CONTRACT NO.: 202111

DISREGARD PRINTS BEARING EARLIER REVISION DATES

REVISION DATES 12/04/09 10/01/10 11/24/10 03/01/11

SHEET 12 OF 74

FILE => 53-0828-f-adt02.dgn

USERNAME => s124496 DATE PLOTTED => 28-JUN-2011 TIME PLOTTED => 19:36

DIST	COUNTY	ROUTE	POST MILES TOTAL PROJECT	SHEET No.	TOTAL SHEETS
07	LA	710	17.2/26.4	1309	1507

REGISTERED CIVIL ENGINEER 03/01/11 DATE

6-27-11
PLANS APPROVAL DATE

REGISTERED PROFESSIONAL ENGINEER FRANK HSIAOSHIH WEI No. C 52918 Exp. 12-31-12 CIVIL STATE OF CALIFORNIA

The State of California or its officers or agents shall not be responsible for the accuracy or completeness of electronic copies of this plan sheet.

NOTES:

1. For footing reinforcement and Drill and bond Dowel Pattern at Abutment Interface, see "ABUTMENT DETAILS NO. 8" sheet.
2. For Abutment wall reinforcement information, see Section T-T on "ABUTMENT DETAILS NO. 2" sheet.
3. Adjust Drill and bond dowels location to avoid conflicts with existing rebars.
4. For locations of Section J-J, K-K, and L-L, see "ABUTMENT 5 LAYOUT" sheet.
5. For Shear Plate Assembly details, see "ABUTMENT DETAILS NO. 9" sheet.
6. For Abutment Lumber Blocking details, see "ABUTMENT DETAILS NO. 6" sheet.

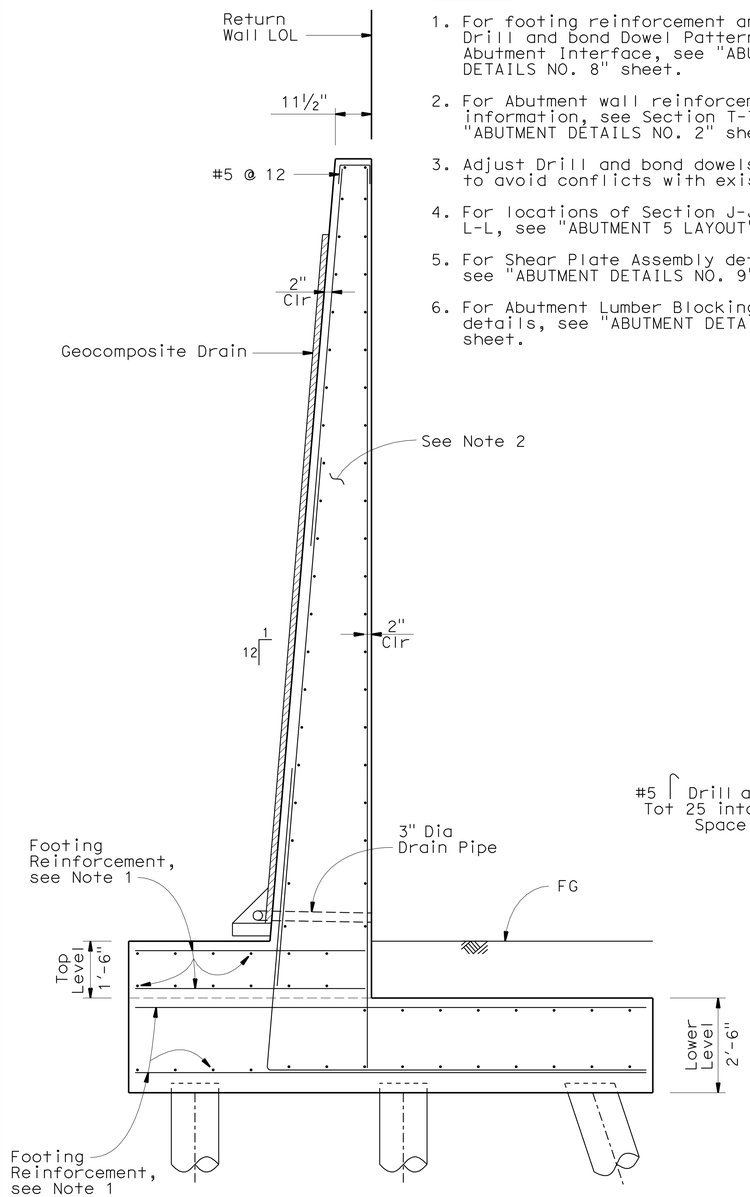

SECTION L-L
½" = 1'-0"

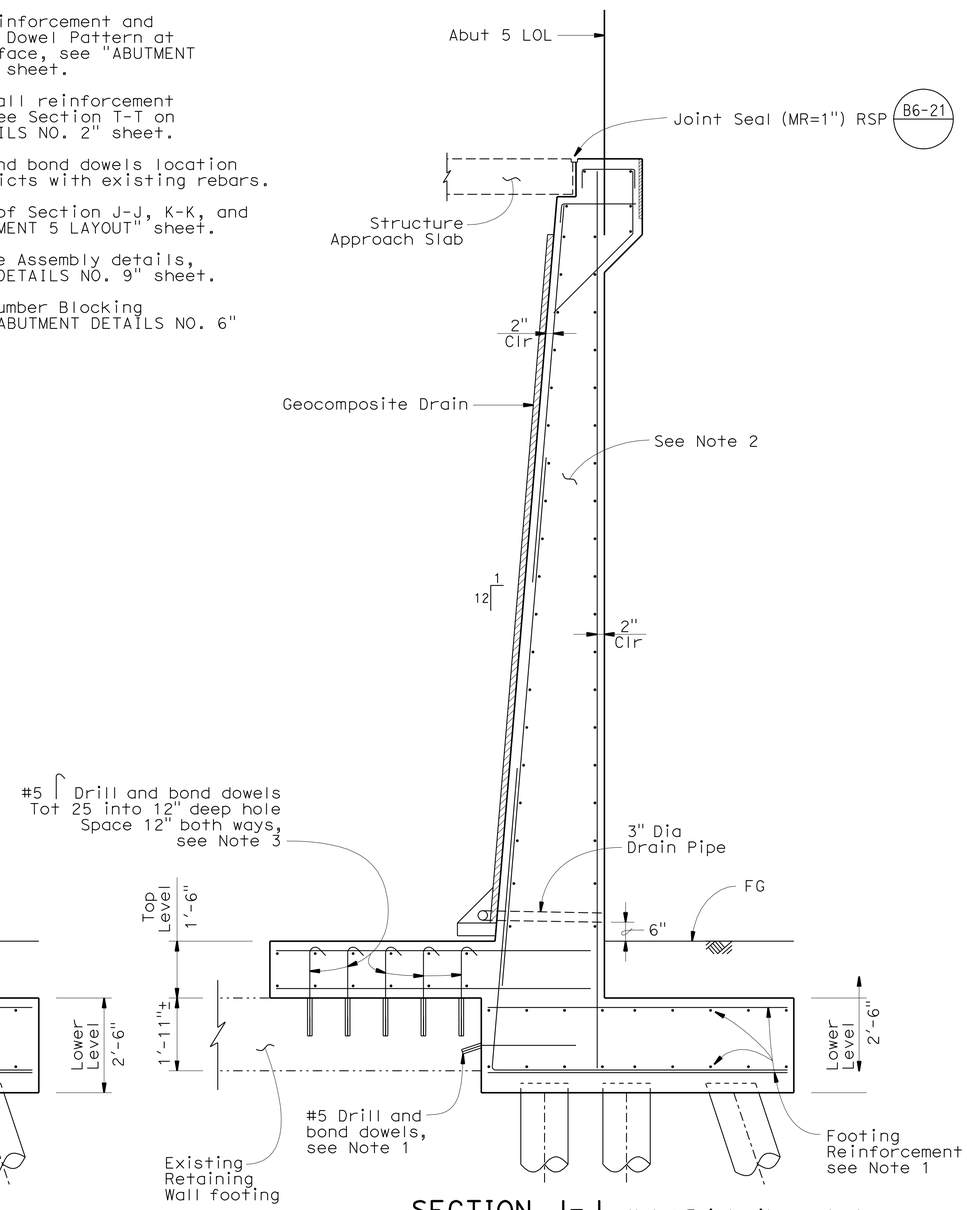

SECTION J-J
½" = 1'-0"

Note: Exist piles not shown

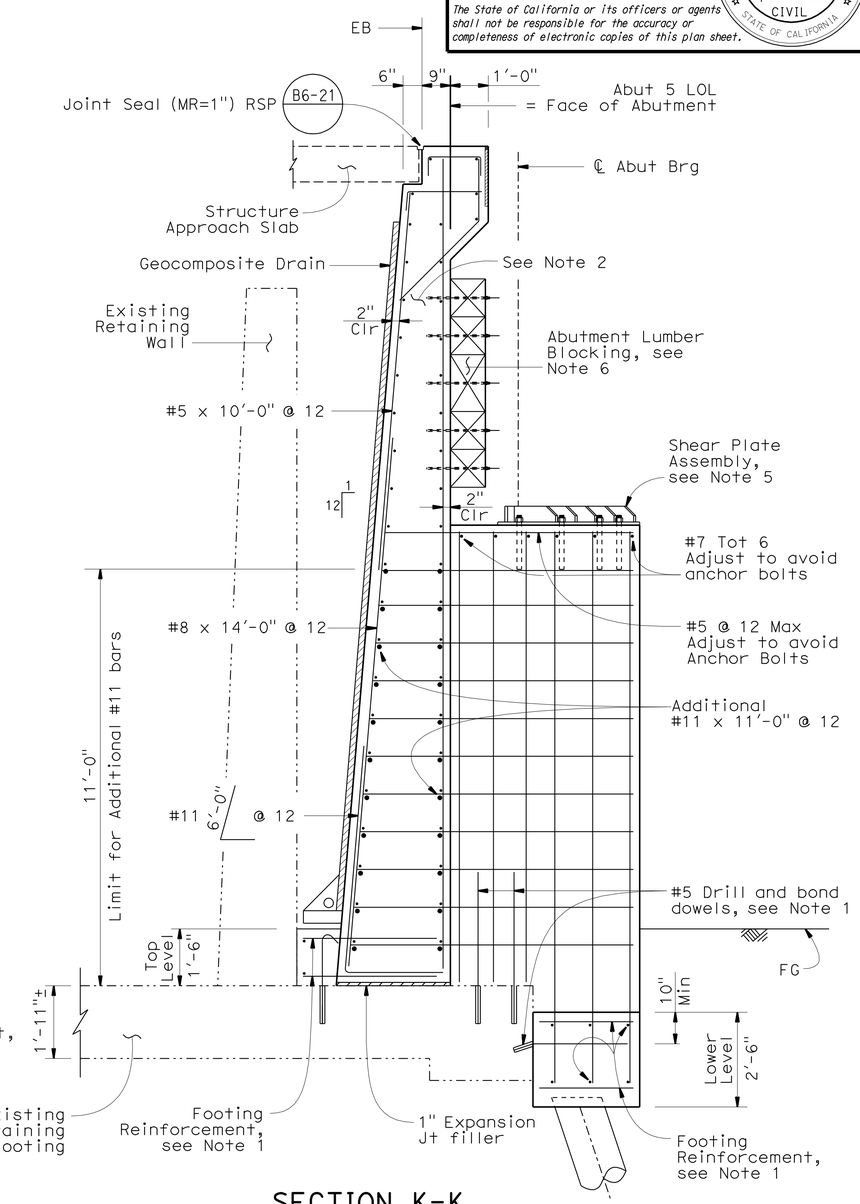

SECTION K-K
½" = 1'-0"

Note: Exist piles not shown

NOTE:
THE CONTRACTOR SHALL VERIFY ALL CONTROLLING FIELD DIMENSIONS BEFORE ORDERING OR FABRICATING ANY MATERIAL.

	BY	CHECKED
DESIGN	F. Wei	S. Barajas / J. Railey
DETAILS	P. Perez	F. Wei
QUANTITIES	F. Wei	L. Sanchez-Manzo

STATE OF CALIFORNIA
DEPARTMENT OF TRANSPORTATION

DIVISION OF ENGINEERING SERVICES
STRUCTURE DESIGN
DESIGN BRANCH 21

BRIDGE NO. 53-0828
POST MILE 17.30

LOS ANGELES RIVER BRIDGE (WIDEN)
ABUTMENT DETAILS NO. 3

STRUCTURES DESIGN DETAIL SHEET (ENGLISH) (REV. 09-01-10)

ORIGINAL SCALE IN INCHES FOR REDUCED PLANS 0 1 2 3

UNIT: 3623
PROJECT NUMBER & PHASE: 0700020869 & 1 CONTRACT NO.: 202111

DISREGARD PRINTS BEARING EARLIER REVISION DATES

REVISION DATES: 01/14/10 10/01/10 11/24/10 03/01/11

SHEET 13 OF 74

FILE => 53-0828-f-adt03.dgn

USERNAME => s124496 DATE PLOTTED => 28-JUN-2011 TIME PLOTTED => 19:36

DIST	COUNTY	ROUTE	POST MILES TOTAL PROJECT	SHEET No.	TOTAL SHEETS
07	LA	710	17.2/26.4	1310	1507

REGISTERED CIVIL ENGINEER 03/01/11 DATE

6-27-11
PLANS APPROVAL DATE

REGISTERED PROFESSIONAL ENGINEER FRANK HSIAOSHIH WEI No. C 52918 Exp. 12-31-12 CIVIL STATE OF CALIFORNIA

The State of California or its officers or agents shall not be responsible for the accuracy or completeness of electronic copies of this plan sheet.

NOTES:

1. See Retaining Wall Detail sheets for wall reinforcement information.
2. Adjust Drill and Bond dowels location to avoid conflicts with existing rebar.
3. For locations of Sections F-F and G-G, see ABUTMENT LAYOUT sheets.

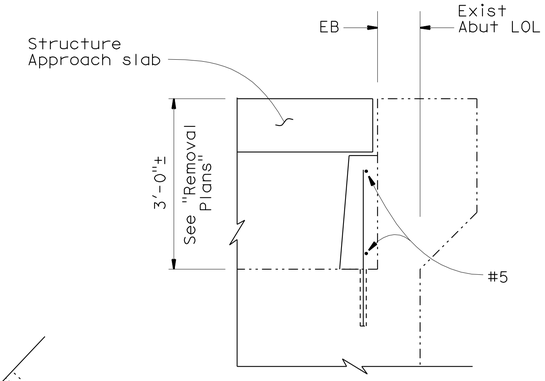

SECTION X-X
3/4" = 1'-0"

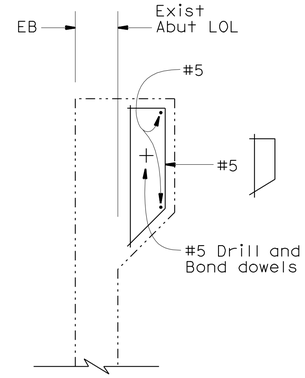

SECTION Y-Y
3/4" = 1'-0"

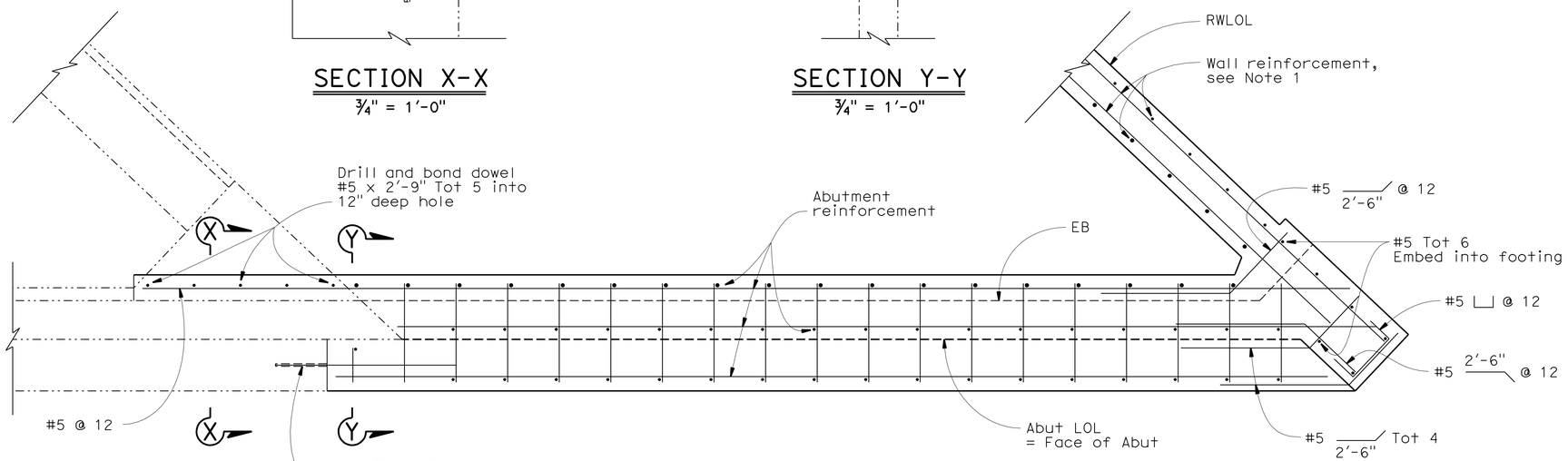

SECTION G-G
3/4" = 1'-0"

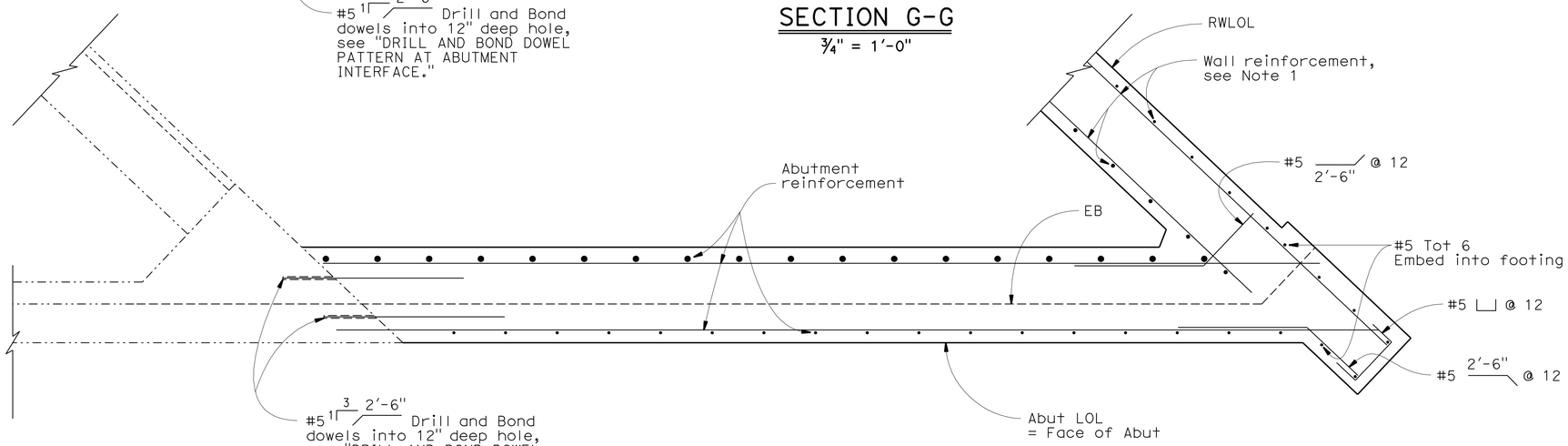

SECTION F-F
3/4" = 1'-0"

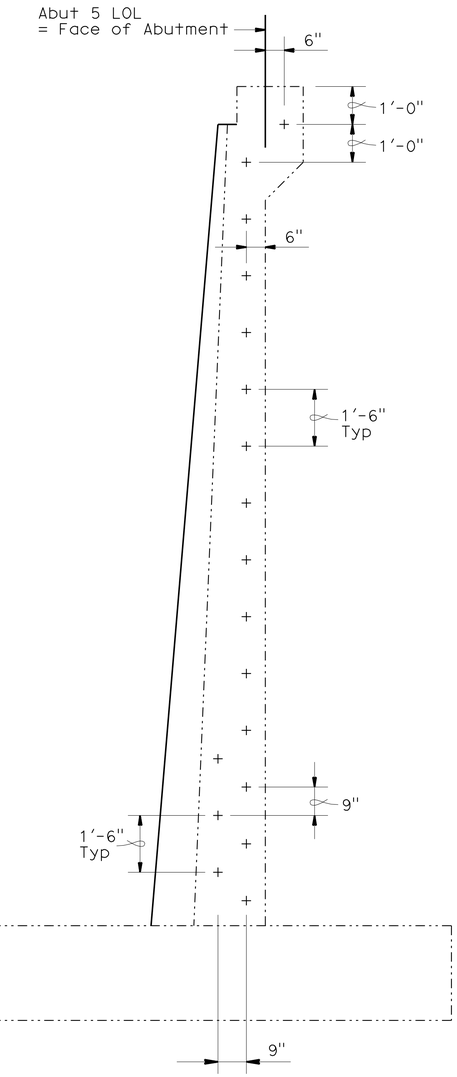

DRILL AND BOND DOWEL PATTERN AT ABUTMENT INTERFACE
1/2" = 1'-0"

NOTE:
THE CONTRACTOR SHALL VERIFY ALL CONTROLLING FIELD DIMENSIONS BEFORE ORDERING OR FABRICATING ANY MATERIAL.

	BY	CHECKED
DESIGN	F. Wei	S. Barajas / J. Railey
DETAILS	P. Perez	F. Wei
QUANTITIES	F. Wei	L. Sanchez-Manzo

STATE OF CALIFORNIA
DEPARTMENT OF TRANSPORTATION

DIVISION OF ENGINEERING SERVICES
STRUCTURE DESIGN
DESIGN BRANCH 21

BRIDGE NO. 53-0828
POST MILE 17.30

LOS ANGELES RIVER BRIDGE (WIDEN)
ABUTMENT DETAILS NO. 4

STRUCTURES DESIGN DETAIL SHEET (ENGLISH) (REV. 09-01-10)

ORIGINAL SCALE IN INCHES FOR REDUCED PLANS 0 1 2 3

UNIT: 3623
PROJECT NUMBER & PHASE: 0700020869 & 1 CONTRACT NO.: 202111

DISREGARD PRINTS BEARING EARLIER REVISION DATES

REVISION DATES 12/07/09 10/01/10 11/24/10 03/01/11

SHEET 14 OF 74

FILE => 53-0828-f-adt04.dgn

USERNAME => s124496 DATE PLOTTED => 28-JUN-2011 TIME PLOTTED => 19:36

DIST	COUNTY	ROUTE	POST MILES TOTAL PROJECT	SHEET No.	TOTAL SHEETS
07	LA	710	17.2/26.4	1311	1507

REGISTERED CIVIL ENGINEER 03/01/11 DATE

6-27-11
PLANS APPROVAL DATE

REGISTERED PROFESSIONAL ENGINEER FRANK HSIAOSHIH WEI No. C 52918 Exp. 12-31-12 CIVIL STATE OF CALIFORNIA

The State of California or its officers or agents shall not be responsible for the accuracy or completeness of electronic copies of this plan sheet.

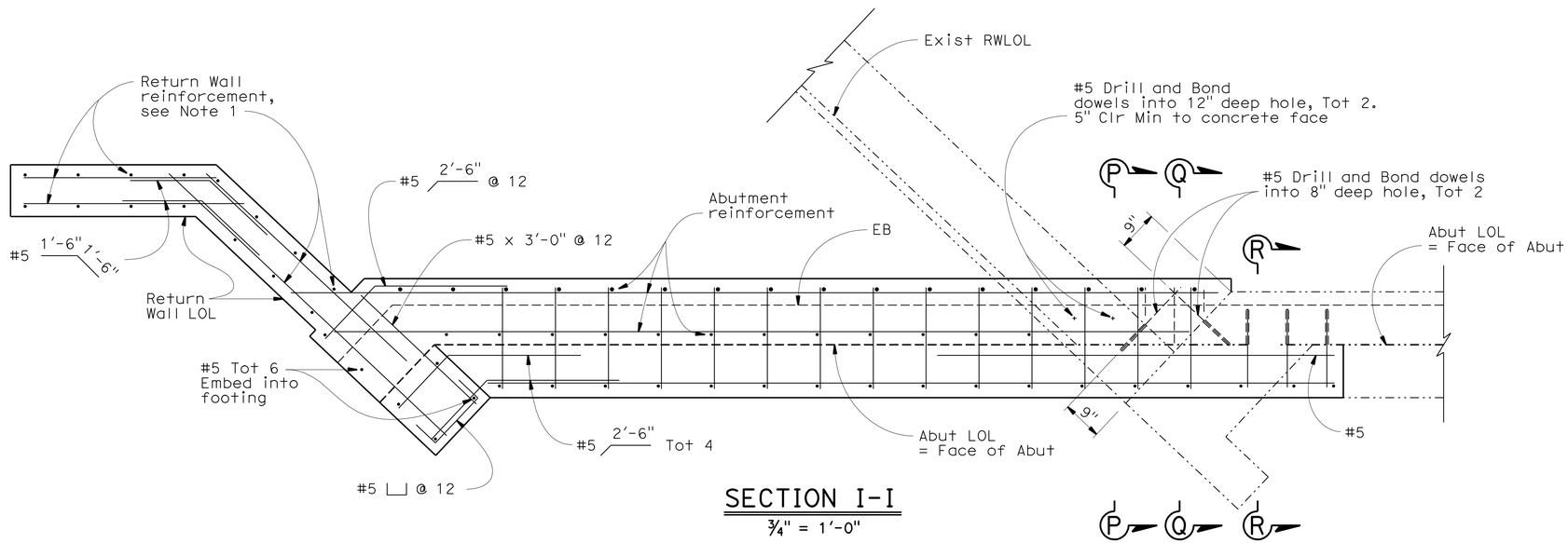

SECTION I-I

3/4" = 1'-0"

(Abutment 5 South shown, Abutment 1 South similar)

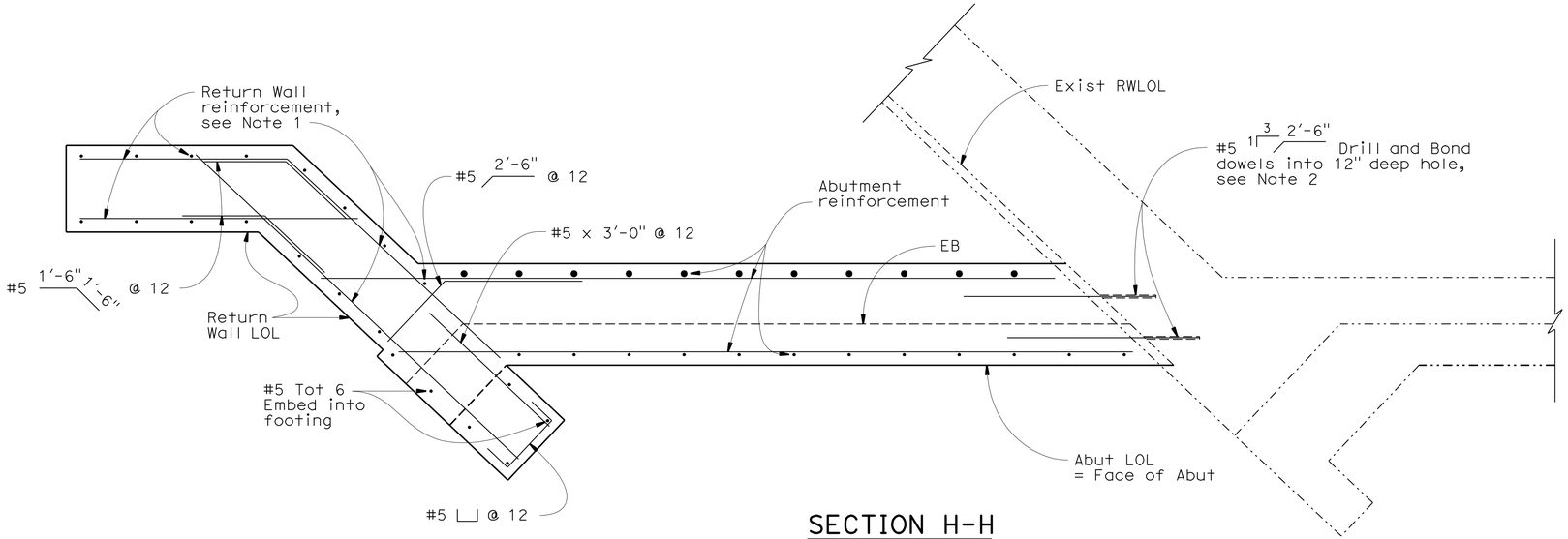

SECTION H-H

3/4" = 1'-0"

(Abutment 5 South shown, Abutment 1 South similar)

NOTES:

1. For Return Wall reinforcement, see Section L-L on "ABUTMENT DETAILS NO. 3" sheet.
2. See "ABUTMENT DETAILS NO. 4" sheet, "DRILL AND BOND DOWEL PATTERN AT ABUTMENT INTERFACE" for details.
3. Adjust Drill and Bond dowels location to avoid conflicts with existing rebar.
4. For Sections P-P, Q-Q, and R-R, see "ABUTMENT DETAILS NO. 6" sheet.
5. For locations of Sections H-H and I-I, see ABUTMENT LAYOUT sheets.

NOTE:
THE CONTRACTOR SHALL VERIFY ALL CONTROLLING FIELD DIMENSIONS BEFORE ORDERING OR FABRICATING ANY MATERIAL.

	BY	CHECKED
DESIGN	F. Wei	S. Barajas / J. Railey
DETAILS	P. Perez	F. Wei
QUANTITIES	F. Wei	L. Sanchez-Manzo

STATE OF CALIFORNIA
DEPARTMENT OF TRANSPORTATION

DIVISION OF ENGINEERING SERVICES
STRUCTURE DESIGN
DESIGN BRANCH 21

BRIDGE NO. 53-0828
POST MILE 17.30

LOS ANGELES RIVER BRIDGE (WIDEN)
ABUTMENT DETAILS NO. 5

STRUCTURES DESIGN DETAIL SHEET (ENGLISH) (REV. 09-01-10)

ORIGINAL SCALE IN INCHES FOR REDUCED PLANS 0 1 2 3

UNIT: 3623
PROJECT NUMBER & PHASE: 0700020869 & 1 CONTRACT NO.: 202111

DISREGARD PRINTS BEARING EARLIER REVISION DATES

REVISION DATES: 12/24/09 10/01/10 11/24/10 03/01/11

SHEET 15 OF 74

FILE => 53-0828-f-adt05.dgn

USERNAME => 8124496 DATE PLOTTED => 28-JUN-2011 TIME PLOTTED => 19:36

DIST	COUNTY	ROUTE	POST MILES TOTAL PROJECT	SHEET No.	TOTAL SHEETS
07	LA	710	17.2/26.4	1312	1507

REGISTERED CIVIL ENGINEER 03/01/11 DATE

6-27-11
PLANS APPROVAL DATE

REGISTERED PROFESSIONAL ENGINEER FRANK HSIAOSHIH WEI No. C 52918 Exp. 12-31-12 CIVIL STATE OF CALIFORNIA

The State of California or its officers or agents shall not be responsible for the accuracy or completeness of electronic copies of this plan sheet.

NOTES:

1. For locations of Sections P-P, Q-Q, and R-R, see "ABUTMENT DETAILS NO. 5" sheet.
2. See Removal Plan sheets for existing Abutment and Retaining Wall removal.
3. Adjust Drill and Bond dowels location to avoid conflicts with existing rebar.

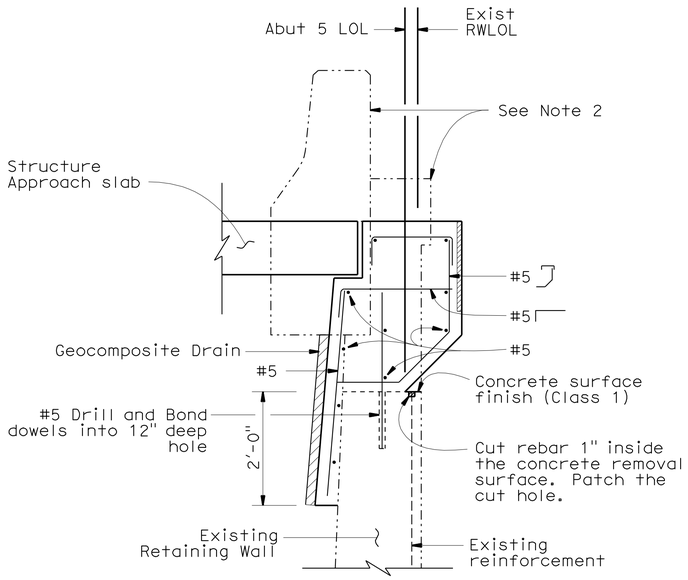

SECTION P-P

¾" = 1'-0"

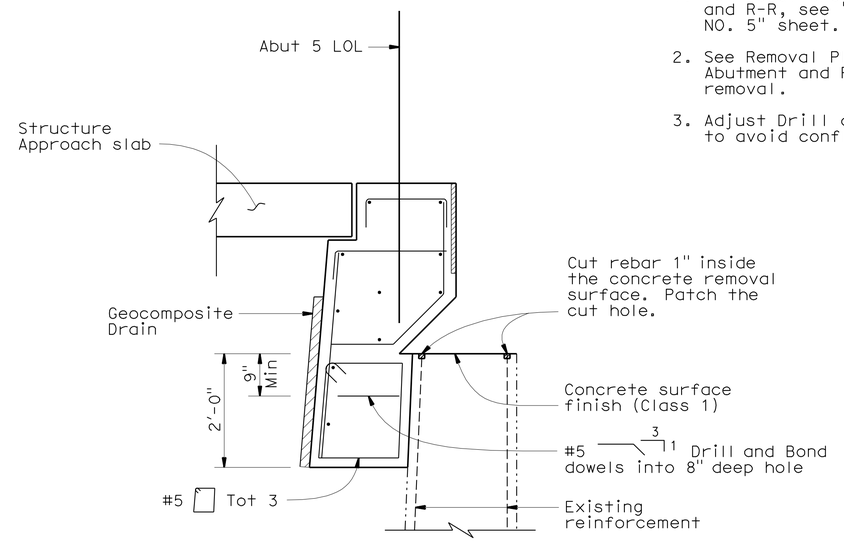

SECTION Q-Q

¾" = 1'-0"

(See SECTION P-P for reinforcement information)

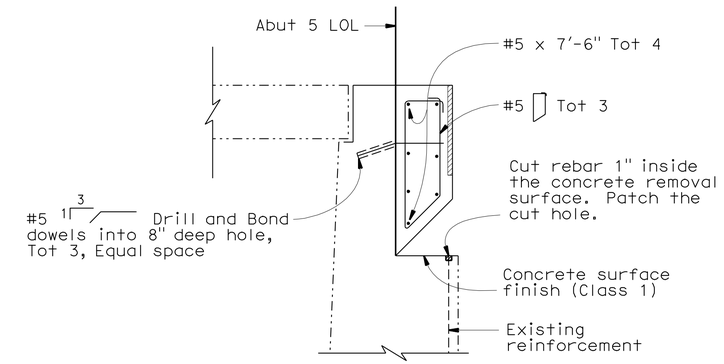

SECTION R-R

¾" = 1'-0"

(See SECTION P-P for reinforcement information)

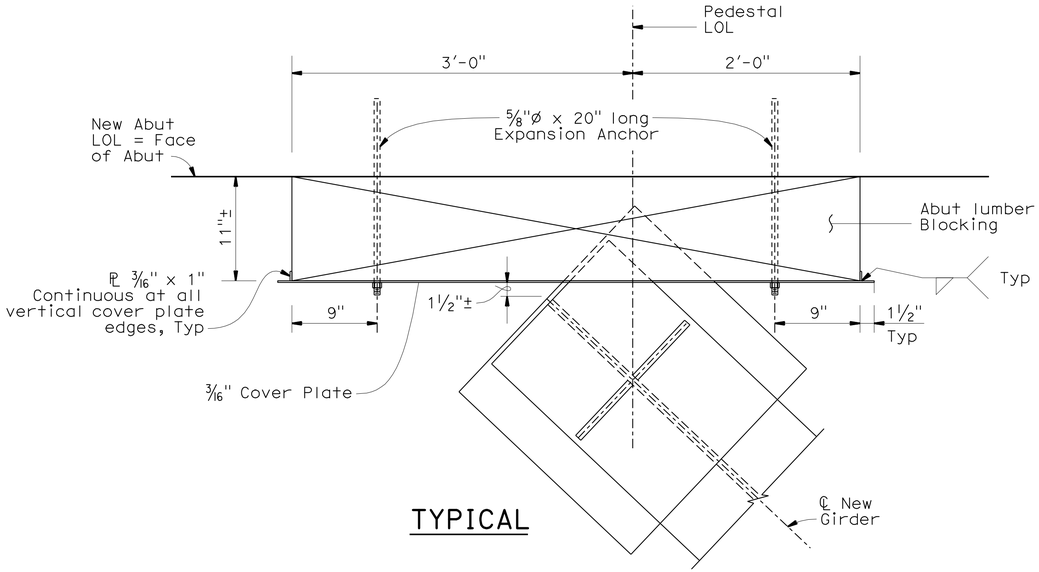

TYPICAL

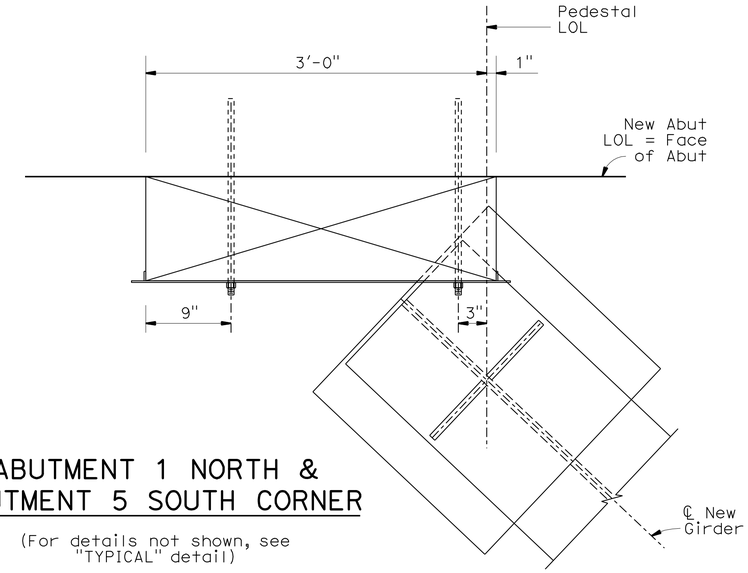

ABUTMENT 1 NORTH & ABUTMENT 5 SOUTH CORNER

(For details not shown, see "TYPICAL" detail)

NOTE:
THE CONTRACTOR SHALL VERIFY ALL CONTROLLING FIELD DIMENSIONS BEFORE ORDERING OR FABRICATING ANY MATERIAL.

ABUTMENT LUMBER BLOCK DETAIL

1½" = 1'-0"

	BY	CHECKED
DESIGN	F. Wei	S. Barajas / J. Railey
DETAILS	P. Perez	F. Wei
QUANTITIES	F. Wei	L. Sanchez-Manzo

STATE OF CALIFORNIA DEPARTMENT OF TRANSPORTATION

DIVISION OF ENGINEERING SERVICES STRUCTURE DESIGN DESIGN BRANCH 21

BRIDGE NO. 53-0828
POST MILE 17.30

LOS ANGELES RIVER BRIDGE (WIDEN)
ABUTMENT DETAILS NO. 6

STRUCTURES DESIGN DETAIL SHEET (ENGLISH) (REV. 09-01-10)

ORIGINAL SCALE IN INCHES FOR REDUCED PLANS 0 1 2 3

UNIT: 3623
PROJECT NUMBER & PHASE: 0700020869 & 1 CONTRACT NO.: 202111

DISREGARD PRINTS BEARING EARLIER REVISION DATES

REVISION DATES 12/28/09 10/04/10 11/24/10 03/01/11

SHEET 16 OF 74

FILE => 53-0828-f-adt06.dgn

USERNAME => s124496 DATE PLOTTED => 28-JUN-2011 TIME PLOTTED => 19:36

DIST	COUNTY	ROUTE	POST MILES TOTAL PROJECT	SHEET No.	TOTAL SHEETS
07	LA	710	17.2/26.4	1313	1507

REGISTERED CIVIL ENGINEER 03/01/11 DATE

6-27-11
PLANS APPROVAL DATE

REGISTERED PROFESSIONAL ENGINEER FRANK HSIAOSHIH WEI No. C 52918 Exp. 12-31-12 CIVIL STATE OF CALIFORNIA

The State of California or its officers or agents shall not be responsible for the accuracy or completeness of electronic copies of this plan sheet.

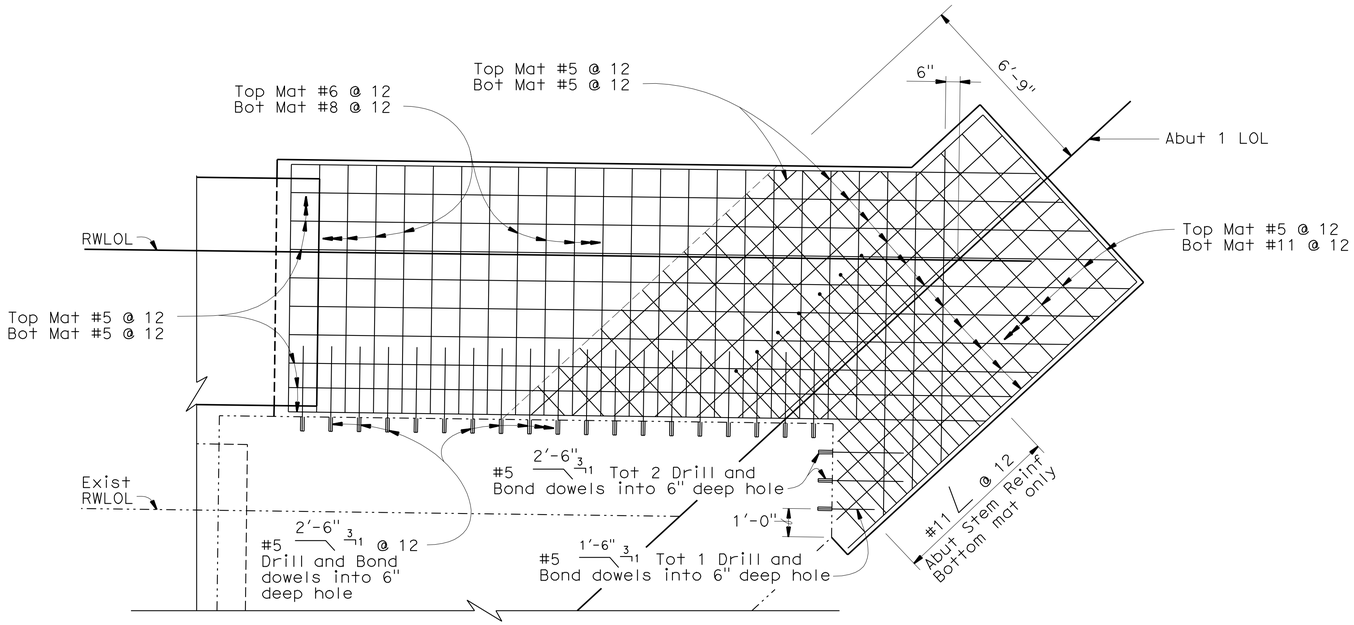

ABUTMENT 1 NORTH FOOTING REINFORCMENT

3/8" = 1'-0"

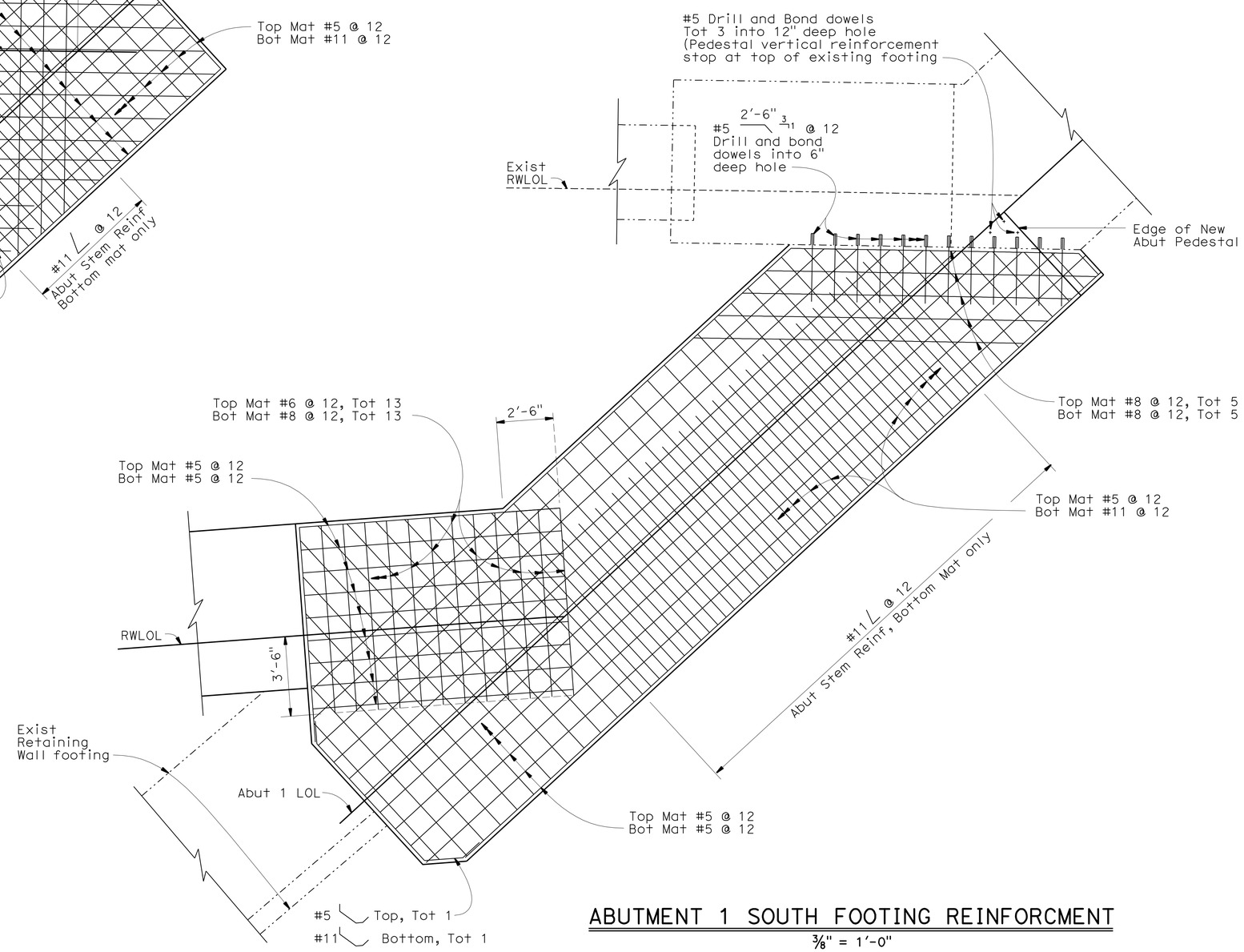

ABUTMENT 1 SOUTH FOOTING REINFORCMENT

3/8" = 1'-0"

NOTE:
THE CONTRACTOR SHALL VERIFY ALL CONTROLLING FIELD DIMENSIONS BEFORE ORDERING OR FABRICATING ANY MATERIAL.

	BY	CHECKED
DESIGN	F. Wei	S. Barajas / J. Railey
DETAILS	P. Perez	F. Wei
QUANTITIES	F. Wei	L. Sanchez-Manzo

STATE OF CALIFORNIA
DEPARTMENT OF TRANSPORTATION

DIVISION OF ENGINEERING SERVICES
STRUCTURE DESIGN
DESIGN BRANCH 21

BRIDGE NO. 53-0828
POST MILE 17.30

LOS ANGELES RIVER BRIDGE (WIDEN)
ABUTMENT DETAILS NO. 7

STRUCTURES DESIGN DETAIL SHEET (ENGLISH) (REV. 09-01-10)

ORIGINAL SCALE IN INCHES FOR REDUCED PLANS 0 1 2 3

UNIT: 3623
PROJECT NUMBER & PHASE: 0700020869 & 1 CONTRACT NO.: 202111

DISREGARD PRINTS BEARING EARLIER REVISION DATES

REVISION DATES 01/21/09 10/01/10 11/24/10 03/01/11

SHEET 17 OF 74

FILE => 53-0828-f-adt07.dgn

USERNAME => s124496 DATE PLOTTED => 28-JUN-2011 TIME PLOTTED => 19:36

DIST	COUNTY	ROUTE	POST MILES TOTAL PROJECT	SHEET No.	TOTAL SHEETS
07	LA	710	17.2/26.4	1314	1507

REGISTERED CIVIL ENGINEER 03/01/11 DATE

6-27-11
PLANS APPROVAL DATE

REGISTERED PROFESSIONAL ENGINEER FRANK HSIAOSHIH WEI No. C 52918 Exp. 12-31-12 CIVIL STATE OF CALIFORNIA

The State of California or its officers or agents shall not be responsible for the accuracy or completeness of electronic copies of this plan sheet.

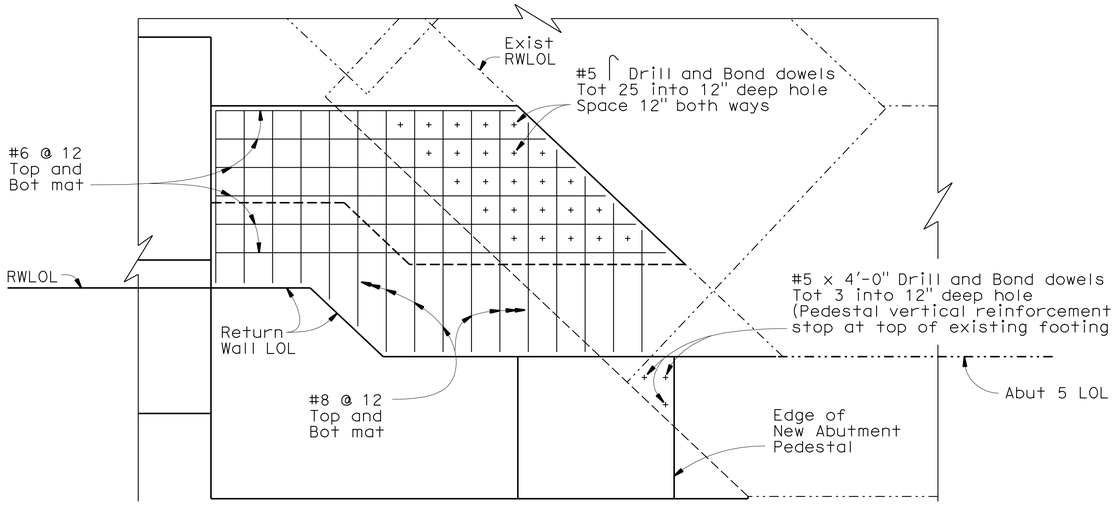

ABUTMENT 5 NORTH FOOTING REINFORCMENT - TOP LEVEL

3/8" = 1'-0"

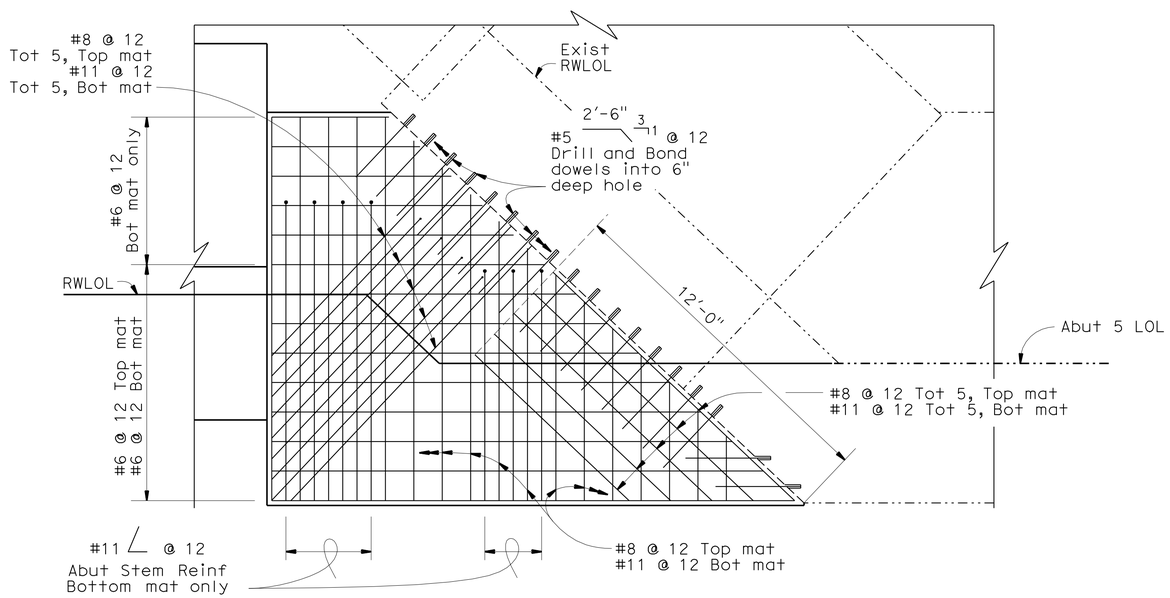

ABUTMENT 5 NORTH FOOTING REINFORCMENT - LOWER LEVEL

3/8" = 1'-0"

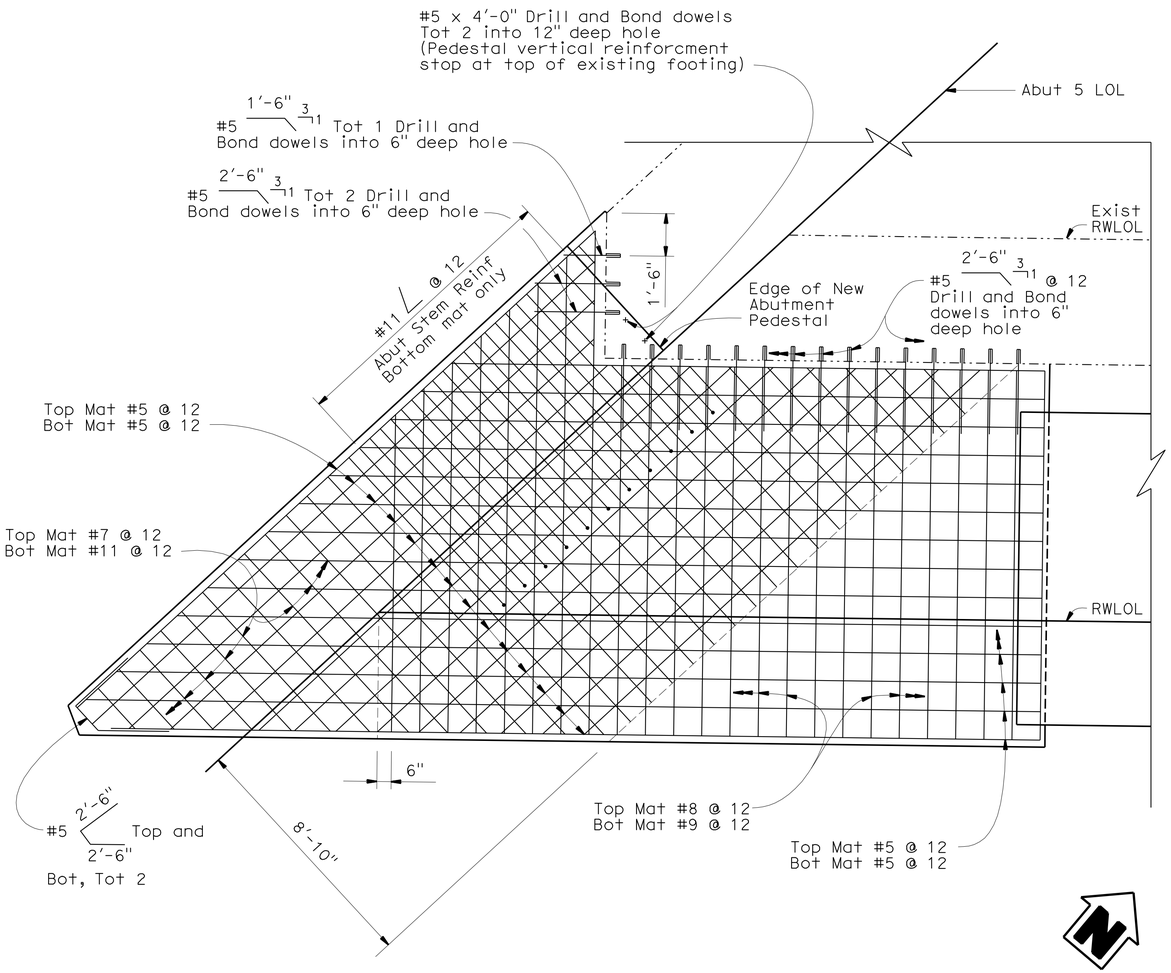

ABUTMENT 5 SOUTH FOOTING REINFORCMENT

3/8" = 1'-0"

NOTE:
THE CONTRACTOR SHALL VERIFY ALL CONTROLLING FIELD DIMENSIONS BEFORE ORDERING OR FABRICATING ANY MATERIAL.

	BY	CHECKED
DESIGN	F. Wei	S. Barajas / J. Railey
DETAILS	P. Perez	F. Wei
QUANTITIES	F. Wei	L. Sanchez-Manzo

STATE OF CALIFORNIA
DEPARTMENT OF TRANSPORTATION

DIVISION OF ENGINEERING SERVICES
STRUCTURE DESIGN
DESIGN BRANCH 21

BRIDGE NO. 53-0828
POST MILE 17.30

LOS ANGELES RIVER BRIDGE (WIDEN)
ABUTMENT DETAILS NO. 8

STRUCTURES DESIGN DETAIL SHEET (ENGLISH) (REV. 09-01-10)

ORIGINAL SCALE IN INCHES FOR REDUCED PLANS 0 1 2 3

UNIT: 3623
PROJECT NUMBER & PHASE: 0700020869 & 1 CONTRACT NO.: 202111

DISREGARD PRINTS BEARING EARLIER REVISION DATES

REVISION DATES: ~~01/14/09~~ ~~10/01/10~~ ~~11/24/10~~ 03/01/11

SHEET 18 OF 74

FILE => 53-0828-f-adt08.dgn

USERNAME => s124496 DATE PLOTTED => 28-JUN-2011 TIME PLOTTED => 19:36

DIST	COUNTY	ROUTE	POST MILES TOTAL PROJECT	SHEET No.	TOTAL SHEETS
07	LA	710	17.2/26.4	1315	1507

REGISTERED CIVIL ENGINEER — DATE 03/01/11

6-27-11
PLANS APPROVAL DATE

The State of California or its officers or agents shall not be responsible for the accuracy or completeness of electronic copies of this plan sheet.

REGISTERED PROFESSIONAL ENGINEER — FRANK HSIAOSHIH WEI — No. C 52918 — Exp. 12-31-12 — CIVIL — STATE OF CALIFORNIA

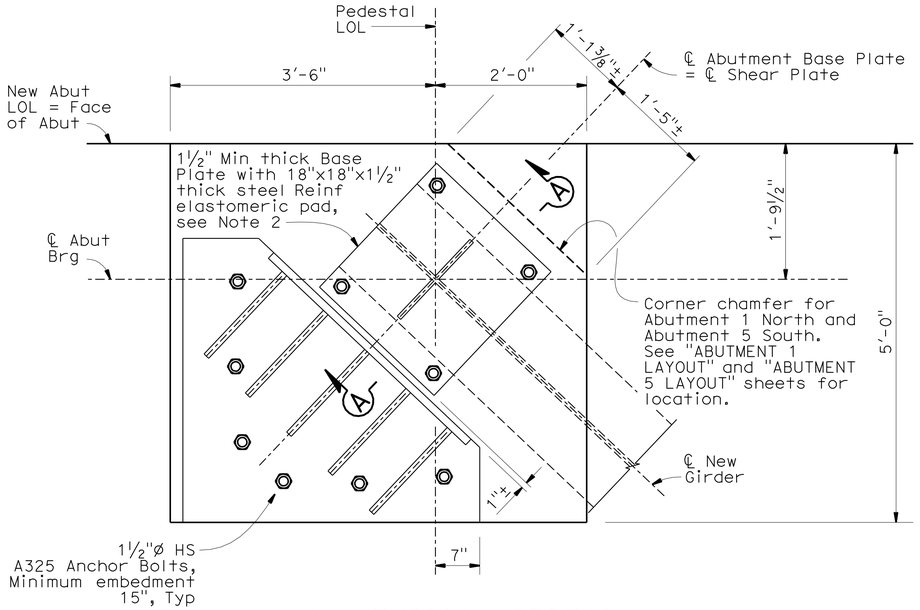

PLAN - TYPICAL PEDESTAL

1" = 1'-0"

(Shear Plate Assembly A shown, Shear Plate Assembly B similar.)

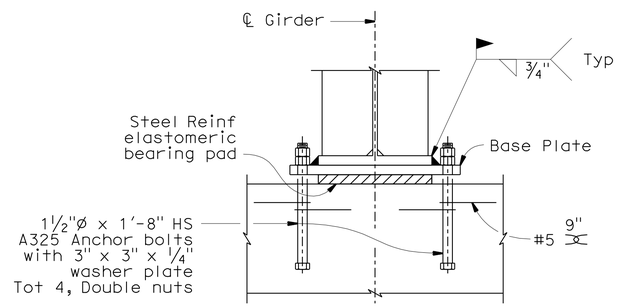

SECTION A-A

1" = 1'-0"

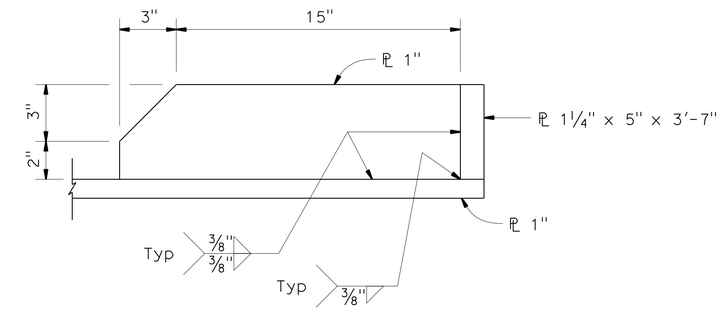

SECTION B-B

3" = 1'-0"

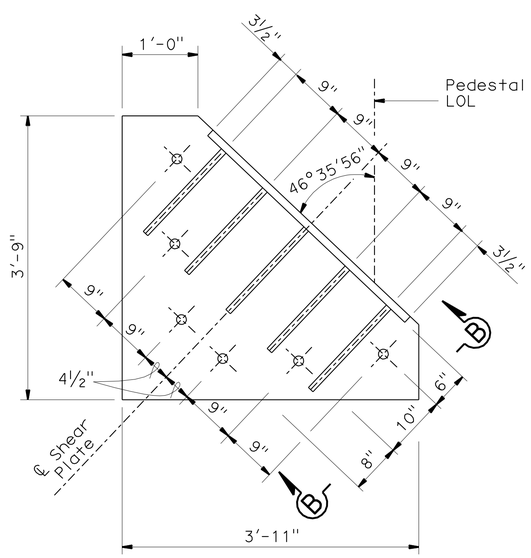

SHEAR PLATE ASSEMBLY A

1" = 1'-0"

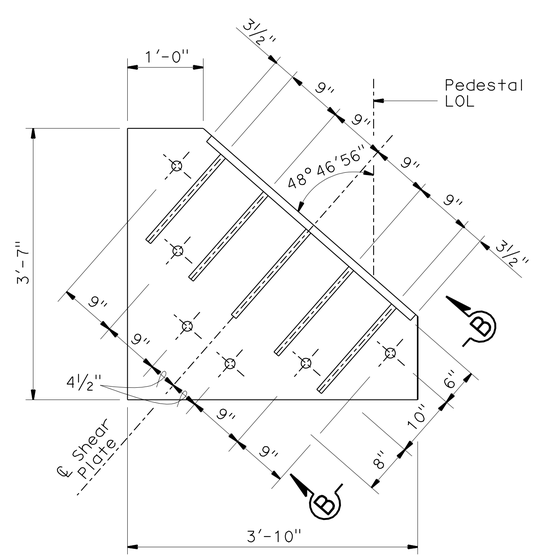

SHEAR PLATE ASSEMBLY B

1" = 1'-0"

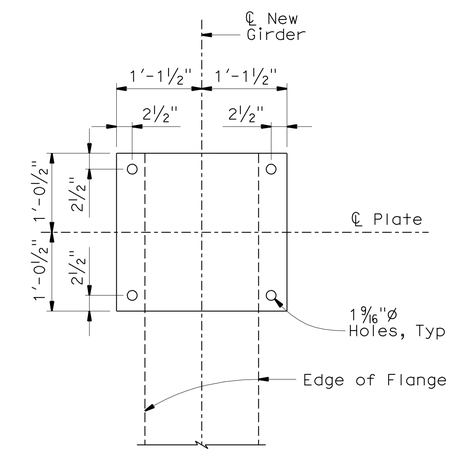

ABUTMENT BASE PLATE DETAIL

1" = 1'-0"

NOTES:

1. Shear plate assembly, anchor bolts, nuts, and washer plate shall be galvanized.
2. Thickness of bearing base plate shall be beveled to match bridge vertical profile.

NOTE:
THE CONTRACTOR SHALL VERIFY ALL CONTROLLING FIELD DIMENSIONS BEFORE ORDERING OR FABRICATING ANY MATERIAL.

	BY	CHECKED
DESIGN	F. Wei	S. Barajas / J. Railey
DETAILS	P. Perez	F. Wei
QUANTITIES	F. Wei	L. Sanchez-Manzo

STATE OF CALIFORNIA
DEPARTMENT OF TRANSPORTATION

DIVISION OF ENGINEERING SERVICES
STRUCTURE DESIGN
DESIGN BRANCH 21

BRIDGE NO. 53-0828
POST MILE 17.30

LOS ANGELES RIVER BRIDGE (WIDEN)
ABUTMENT DETAILS NO. 9

STRUCTURES DESIGN DETAIL SHEET (ENGLISH) (REV. 09-01-10)

ORIGINAL SCALE IN INCHES FOR REDUCED PLANS 0 1 2 3

UNIT: 3623
PROJECT NUMBER & PHASE: 0700020869 & 1 CONTRACT NO.: 202111

DISREGARD PRINTS BEARING EARLIER REVISION DATES

REVISION DATES: 11/18/09 10/01/10 11/24/10 03/01/11

SHEET 19 OF 74

FILE => 53-0828-f-ad+09.dgn

USERNAME => 5124496 DATE PLOTTED => 28-JUN-2011 TIME PLOTTED => 19:36

DIST	COUNTY	ROUTE	POST MILES TOTAL PROJECT	SHEET No.	TOTAL SHEETS
07	LA	710	17.2/26.4	1316	1507

REGISTERED CIVIL ENGINEER 03/01/11 DATE

6-27-11
PLANS APPROVAL DATE

REGISTERED PROFESSIONAL ENGINEER FRANK HSIAOSHIH WEI No. C 52918 Exp. 12-31-12 CIVIL STATE OF CALIFORNIA

The State of California or its officers or agents shall not be responsible for the accuracy or completeness of electronic copies of this plan sheet.

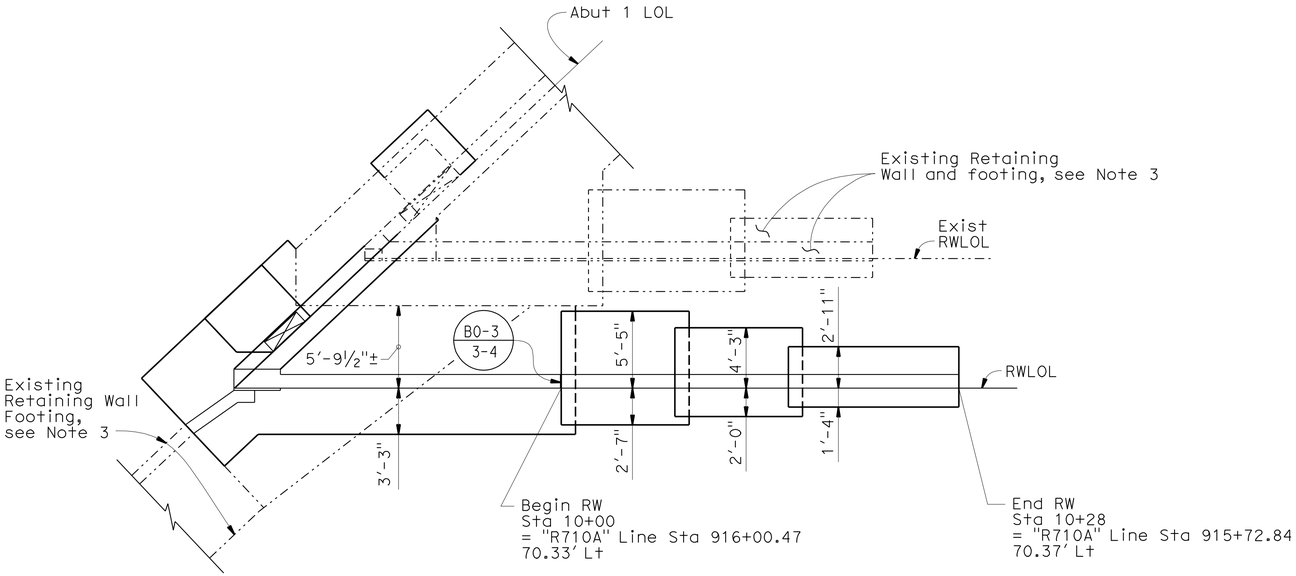

ABUTMENT 1 NORTH RETAINING WALL PLAN

3/16" = 1'-0"

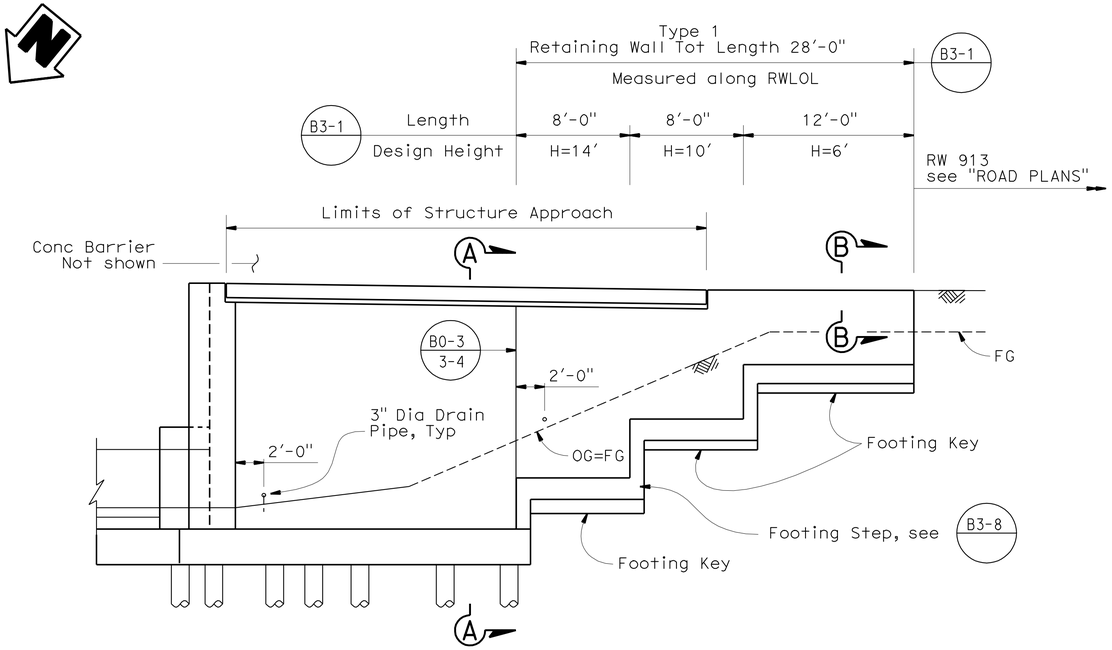

ABUTMENT 1 NORTH RETAINING WALL ELEVATION

3/16" = 1'-0"

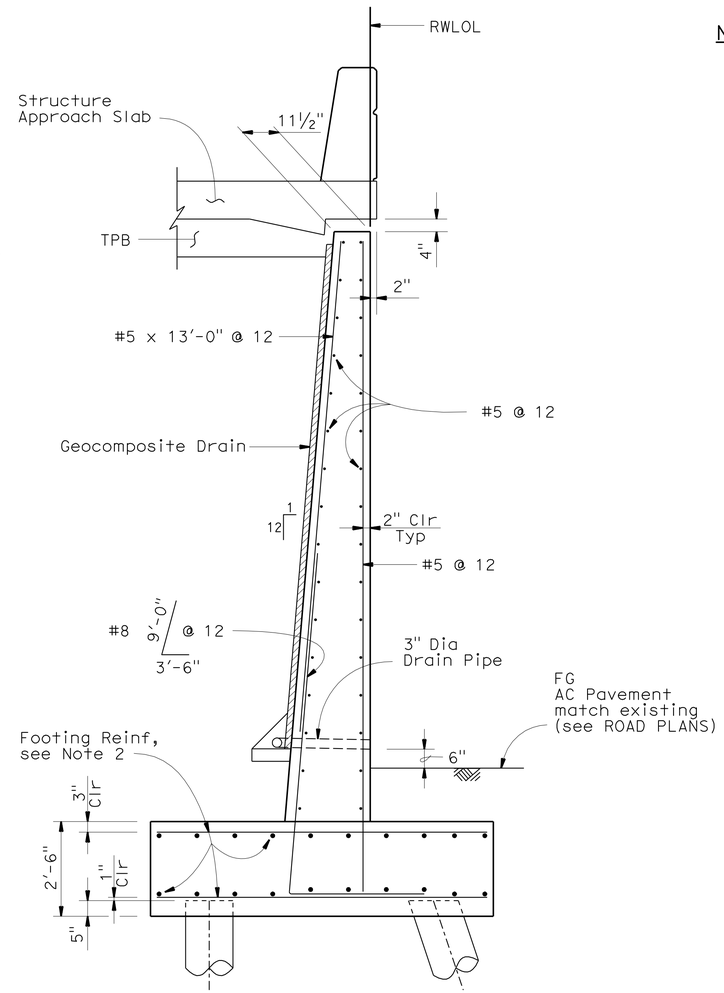

SECTION A-A

½" = 1'-0"

NOTES:

1. For Section B-B, see "RETAINING WALL DETAILS NO. 4 sheet.
2. For Footing Reinforcement, see "ABUTMENT DETAILS NO. 7" sheet.
3. See REMOVAL PLAN sheets for limits of existing wall removal.

NOTE:
THE CONTRACTOR SHALL VERIFY ALL CONTROLLING FIELD DIMENSIONS BEFORE ORDERING OR FABRICATING ANY MATERIAL.

	BY	CHECKED
DESIGN	F. Wei	S. Barajas / J. Railey
DETAILS	P. Perez	F. Wei
QUANTITIES	F. Wei	L. Sanchez-Manzo

STATE OF CALIFORNIA
DEPARTMENT OF TRANSPORTATION

DIVISION OF ENGINEERING SERVICES
STRUCTURE DESIGN
DESIGN BRANCH 21

BRIDGE NO. 53-0828
POST MILE 17.30

LOS ANGELES RIVER BRIDGE (WIDEN)
RETAINING WALL DETAILS NO. 1

STRUCTURES DESIGN DETAIL SHEET (ENGLISH) (REV. 09-01-10)

ORIGINAL SCALE IN INCHES FOR REDUCED PLANS 0 1 2 3

UNIT: 3623
PROJECT NUMBER & PHASE: 0700020869 & 1 CONTRACT NO.: 202111

DISREGARD PRINTS BEARING EARLIER REVISION DATES

REVISION DATES 01/04/10 10/04/10 11/24/10 03/01/11

SHEET 20 OF 74

FILE => 53-0828-g-rw_dt01.dgn

USERNAME => s124496 DATE PLOTTED => 28-JUN-2011 TIME PLOTTED => 19:37

DIST	COUNTY	ROUTE	POST MILES TOTAL PROJECT	SHEET No.	TOTAL SHEETS
07	LA	710	17.2/26.4	1317	1507

REGISTERED CIVIL ENGINEER 03/01/11 DATE

6-27-11
PLANS APPROVAL DATE

REGISTERED PROFESSIONAL ENGINEER FRANK HSIAOSHIH WEI No. C 52918 Exp. 12-31-12 CIVIL STATE OF CALIFORNIA

The State of California or its officers or agents shall not be responsible for the accuracy or completeness of electronic copies of this plan sheet.

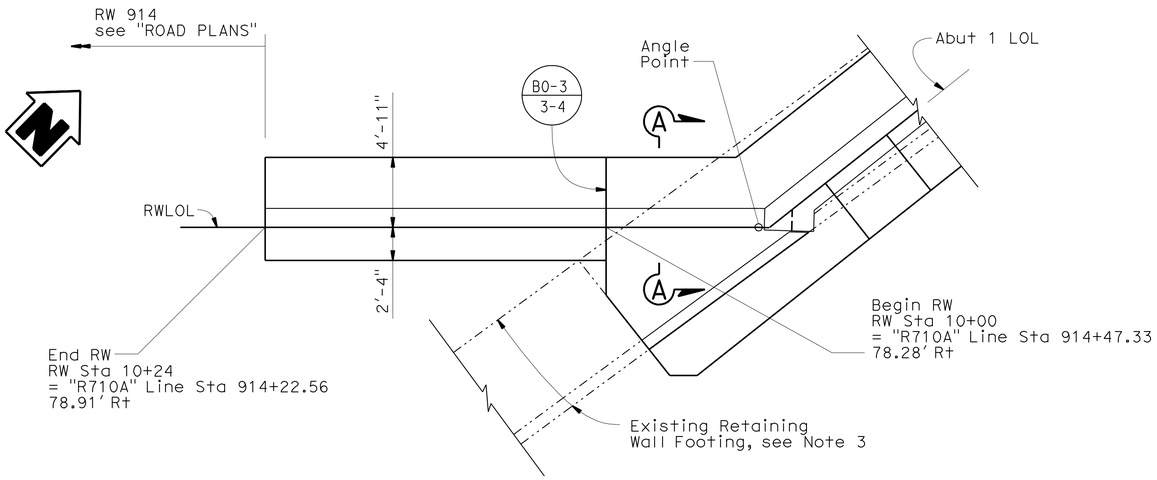

ABUTMENT 1 SOUTH RETAINING WALL PLAN

3/16" = 1'-0"

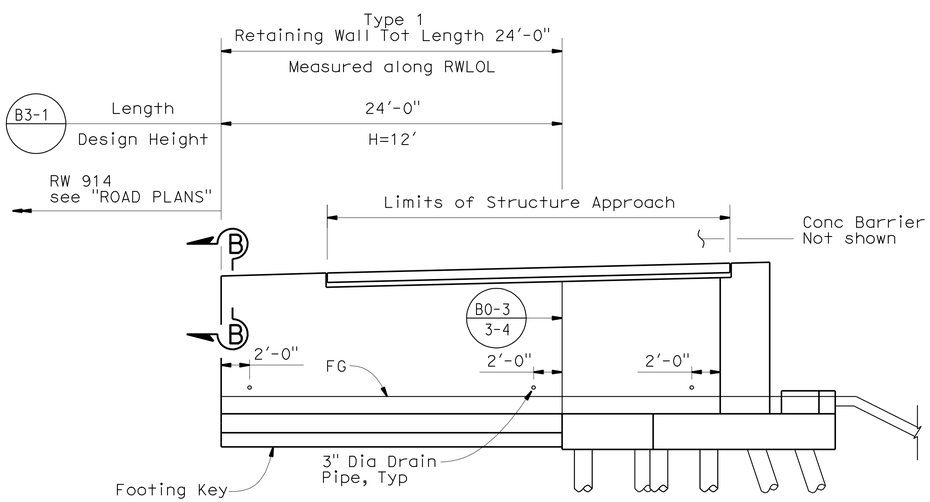

ABUTMENT 1 SOUTH RETAINING WALL ELEVATION

3/16" = 1'-0"

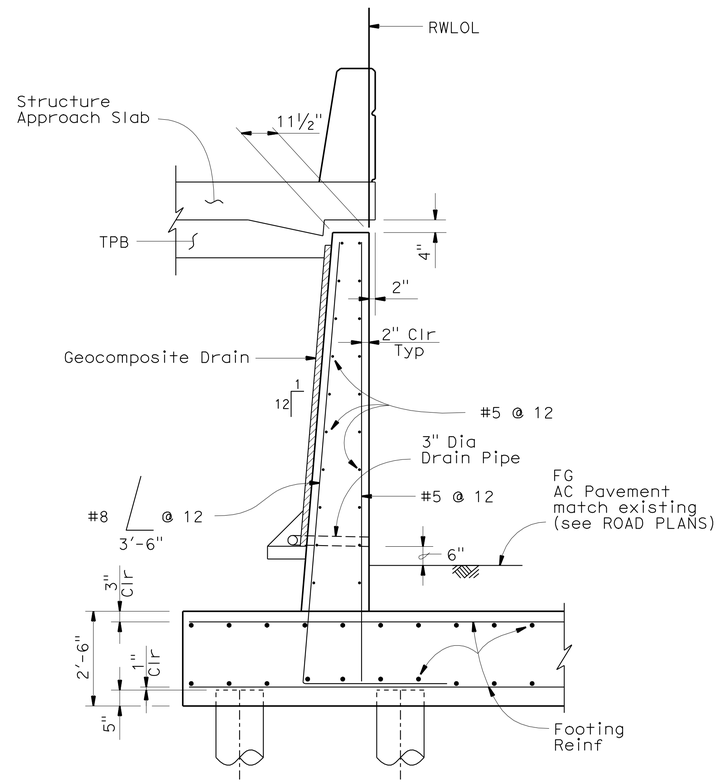

SECTION A-A

½" = 1'-0"

NOTES:

1. For Section B-B, see "RETAINING WALL DETAILS NO. 4 sheet.
2. For Footing Reinforcement, see "ABUTMENT DETAILS NO. 7" sheet.
3. See REMOVAL PLAN sheets for limits existing wall removal.

NOTE:
THE CONTRACTOR SHALL VERIFY ALL CONTROLLING FIELD DIMENSIONS BEFORE ORDERING OR FABRICATING ANY MATERIAL.

	BY	CHECKED
DESIGN	F. Wei	S. Barajas / J. Railey
DETAILS	P. Perez	F. Wei
QUANTITIES	F. Wei	L. Sanchez-Manzo

STATE OF CALIFORNIA
DEPARTMENT OF TRANSPORTATION

DIVISION OF ENGINEERING SERVICES
STRUCTURE DESIGN
DESIGN BRANCH 21

BRIDGE NO. 53-0828
POST MILE 17.30

LOS ANGELES RIVER BRIDGE (WIDEN)
RETAINING WALL DETAILS NO. 2

STRUCTURES DESIGN DETAIL SHEET (ENGLISH) (REV. 09-01-10)

ORIGINAL SCALE IN INCHES FOR REDUCED PLANS 0 1 2 3

UNIT: 3623
PROJECT NUMBER & PHASE: 0700020869 & 1 CONTRACT NO.: 202111

DISREGARD PRINTS BEARING EARLIER REVISION DATES

REVISION DATES: 01/27/10 10/01/10 11/24/10 03/01/11

SHEET 21 OF 74

FILE => 53-0828-g-rw_dt02.dgn

USERNAME => s124496 DATE PLOTTED => 28-JUN-2011 TIME PLOTTED => 19:37

DIST	COUNTY	ROUTE	POST MILES TOTAL PROJECT	SHEET No.	TOTAL SHEETS
07	LA	710	17.2/26.4	1318	1507

REGISTERED CIVIL ENGINEER 03/01/11 DATE

6-27-11
PLANS APPROVAL DATE

REGISTERED PROFESSIONAL ENGINEER FRANK HSIAOSHIH WEI No. C 52918 Exp. 12-31-12 CIVIL STATE OF CALIFORNIA

The State of California or its officers or agents shall not be responsible for the accuracy or completeness of electronic copies of this plan sheet.

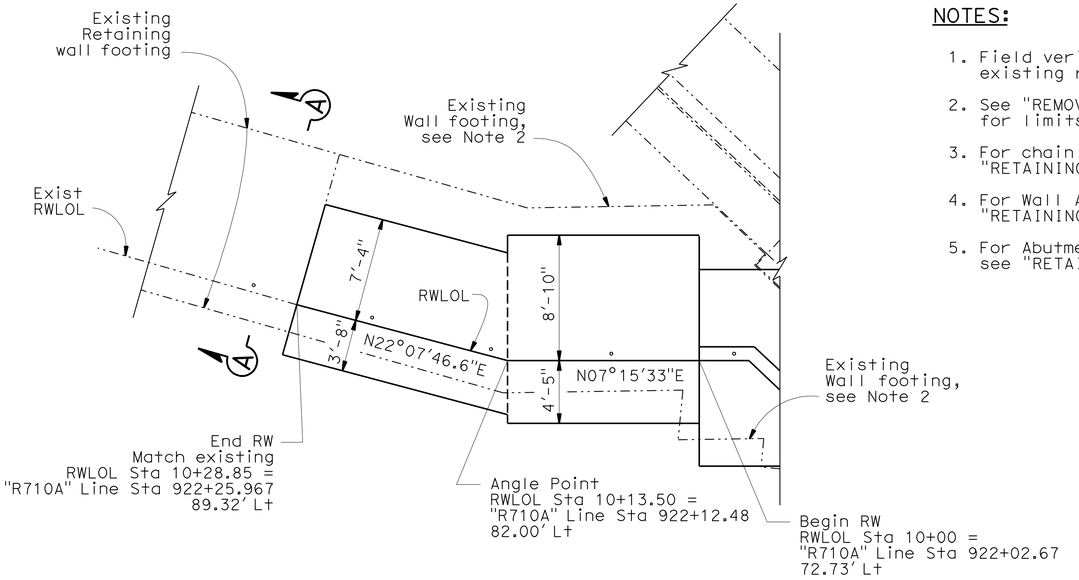

ABUTMENT 5 NORTH RETAINING WALL PLAN

3/16" = 1'-0"

NOTES:

1. Field verify the location of the existing railing post.
2. See "REMOVAL PLAN" sheets for limits of existing wall removal.
3. For chain link railing detail, see "RETAINING WALL DETAILS NO. 6" sheet.
4. For Wall Architectural Treatment, see "RETAINING WALL DETAILS NO. 6" sheet.
5. For Abutment 5 Retaining Wall Pile Layout, see "RETAINING WALL DETAILS NO. 5" sheet.

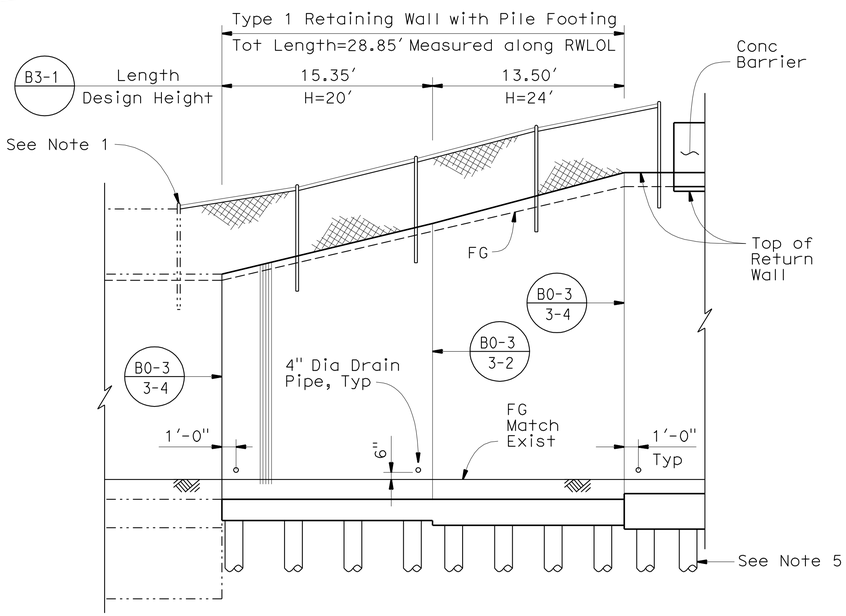

ABUTMENT 5 NORTH RETAINING WALL ELEVATION

3/16" = 1'-0"

NOTE:
THE CONTRACTOR SHALL VERIFY ALL CONTROLLING FIELD DIMENSIONS BEFORE ORDERING OR FABRICATING ANY MATERIAL.

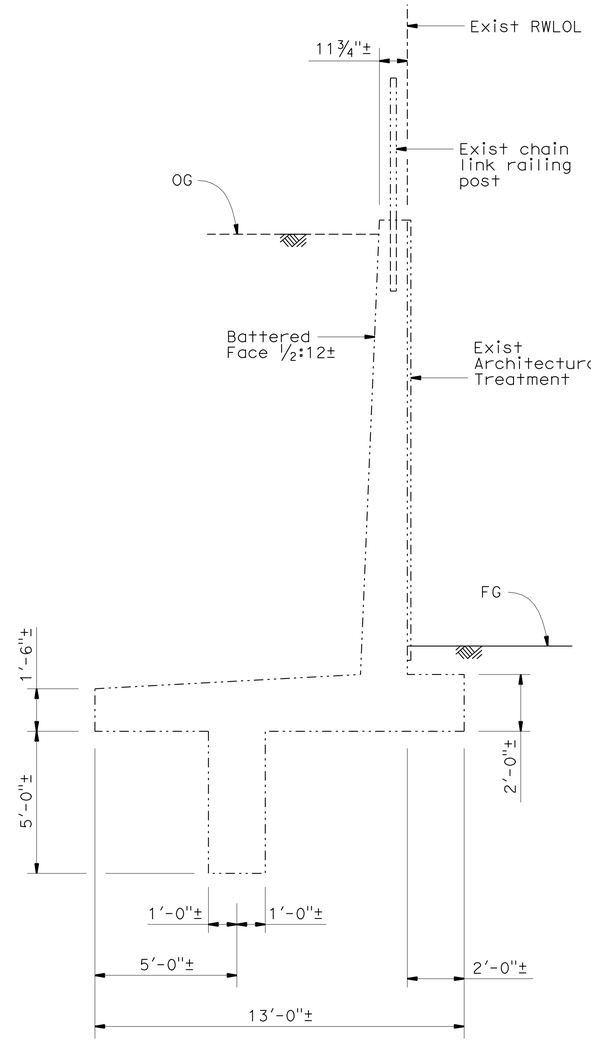

SECTION A-A

3/8" = 1'-0"

Design H	F
24'	2'-2"
20'	1'-10"
16'	1'-8"
12'	1'-8"
8'	1'-8"

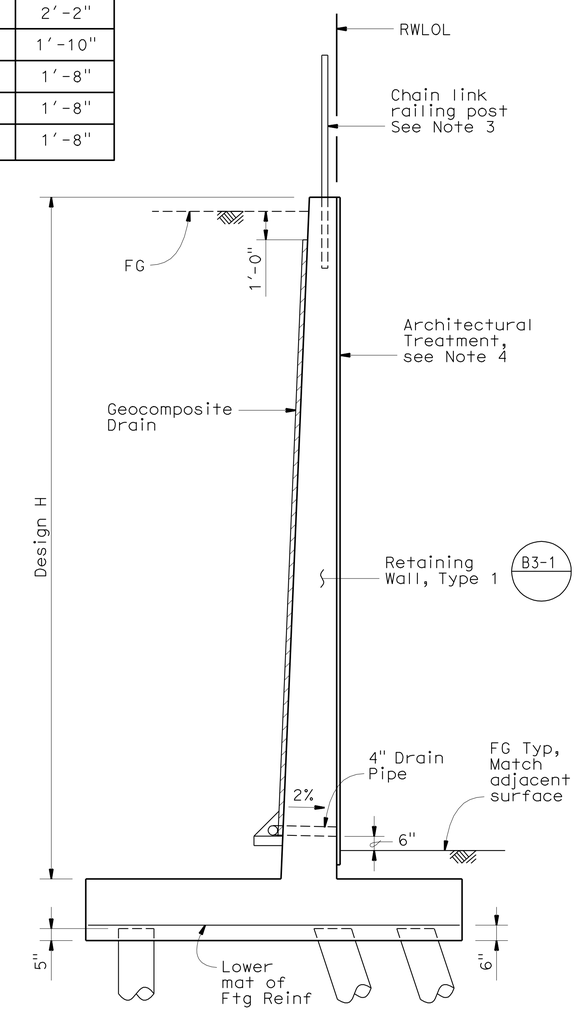

TYPICAL SECTION TYPE 1 RETAINING WALL

3/8" = 1'-0"

(Design H = 24'-0" shown other Design H similar)

DESIGN	BY F. Wei	CHECKED S. Barajas / J. Railey	
DETAILS	BY P. Perez	CHECKED F. Wei	
QUANTITIES	BY F. Wei	CHECKED L. Sanchez-Manzo	

STATE OF CALIFORNIA
DEPARTMENT OF TRANSPORTATION

DIVISION OF ENGINEERING SERVICES
STRUCTURE DESIGN
DESIGN BRANCH 21

BRIDGE NO. 53-0828
POST MILE 17.30

LOS ANGELES RIVER BRIDGE (WIDEN)
RETAINING WALL DETAILS NO. 3

STRUCTURES DESIGN DETAIL SHEET (ENGLISH) (REV. 09-01-10)

ORIGINAL SCALE IN INCHES FOR REDUCED PLANS 0 1 2 3

UNIT: 3623
PROJECT NUMBER & PHASE: 0700020869 & 1 CONTRACT NO.: 202111

DISREGARD PRINTS BEARING EARLIER REVISION DATES

REVISION DATES 12/14/09 10/04/10 11/24/10 03/01/11

SHEET 22 OF 74

FILE => 53-0828-g-rw_d+03.dgn

USERNAME => s124496 DATE PLOTTED => 28-JUN-2011 TIME PLOTTED => 19:37

DIST	COUNTY	ROUTE	POST MILES TOTAL PROJECT	SHEET No.	TOTAL SHEETS
07	LA	710	17.2/26.4	1319	1507

REGISTERED CIVIL ENGINEER 03/01/11 DATE

6-27-11
PLANS APPROVAL DATE

REGISTERED PROFESSIONAL ENGINEER FRANK HSIAOSHIH WEI No. C 52918 Exp. 12-31-12 CIVIL STATE OF CALIFORNIA

The State of California or its officers or agents shall not be responsible for the accuracy or completeness of electronic copies of this plan sheet.

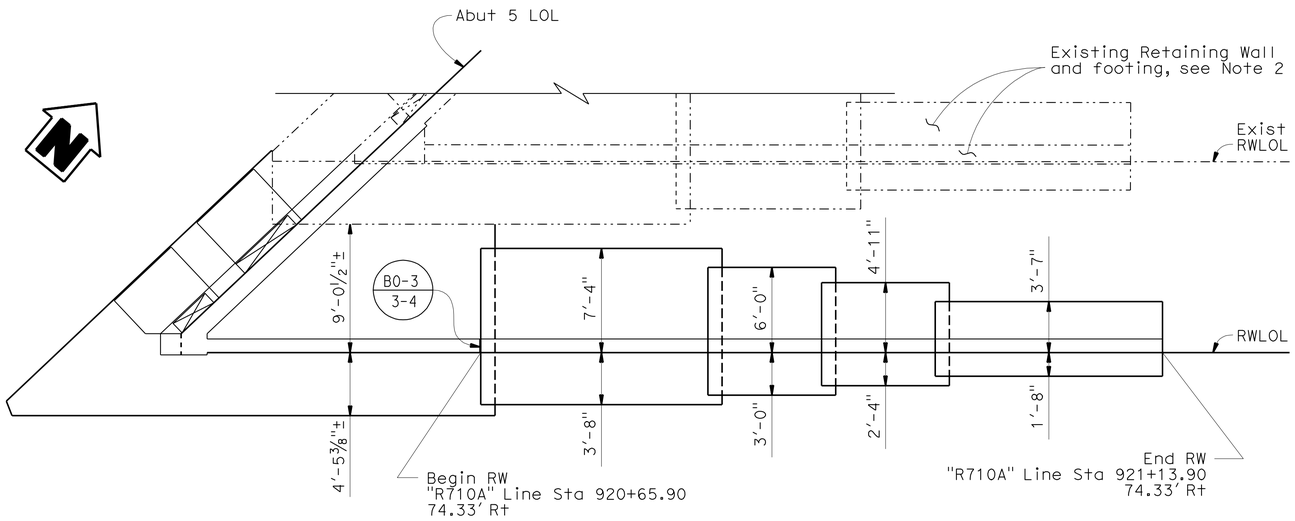

ABUTMENT 5 SOUTH RETAINING WALL PLAN

3/16" = 1'-0"

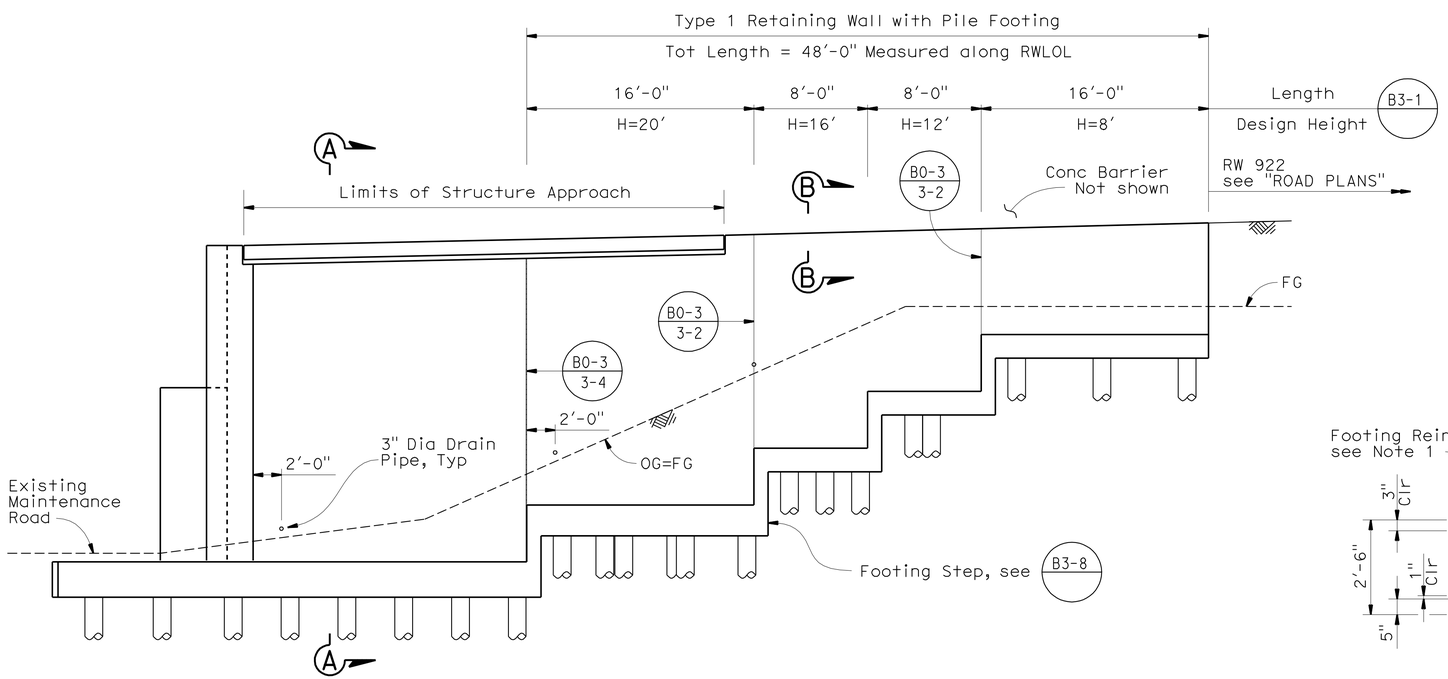

ABUTMENT 5 SOUTH RETAINING WALL ELEVATION

3/16" = 1'-0"

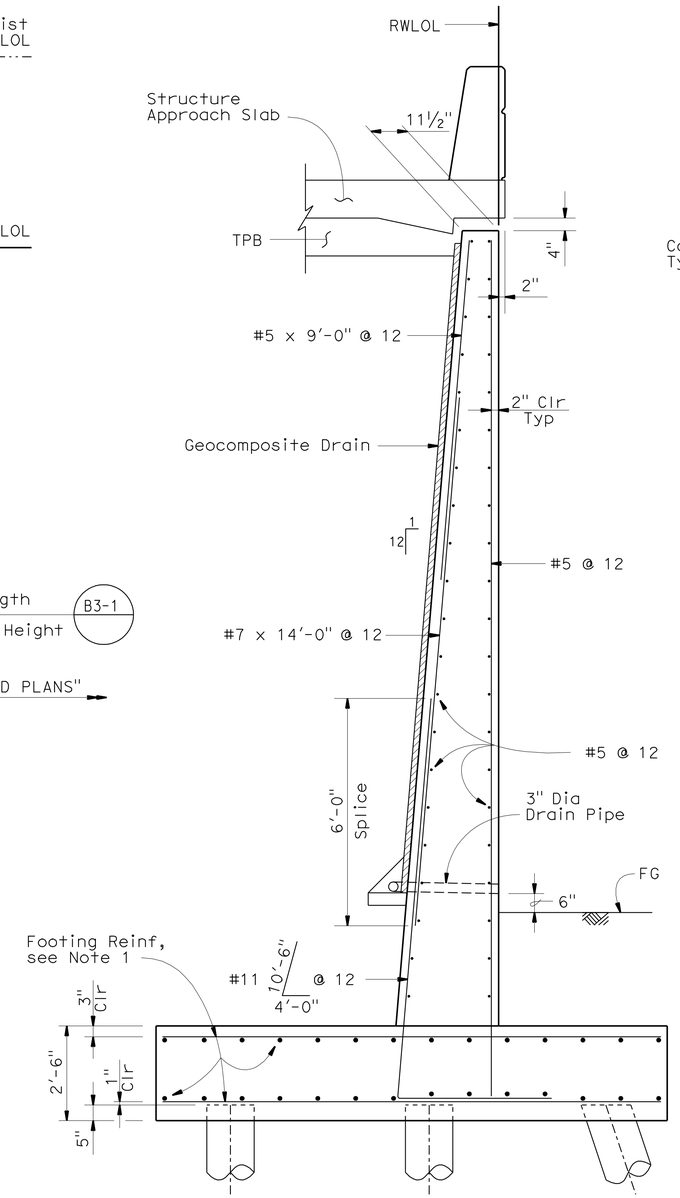

SECTION A-A

½" = 1'-0"

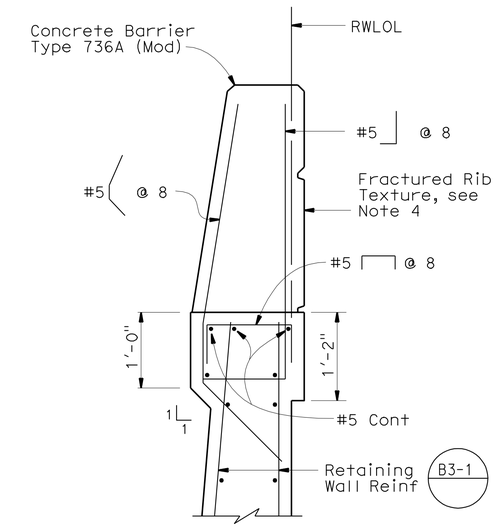

SECTION B-B

1" = 1'-0"

NOTES:

1. For Footing Reinforcement, see "ABUTMENT DETAILS NO. 8" sheet.
2. See REMOVAL PLAN sheets for limits of existing wall removal.
3. See "RETAINING WALL DETAILS NO. 3" sheet for Typical section of Type 1 Retaining Wall with pile footing.
4. See "BARRIER DETAILS" sheet for Barrier Architechural Treatment details.

NOTE:
THE CONTRACTOR SHALL VERIFY ALL CONTROLLING FIELD DIMENSIONS BEFORE ORDERING OR FABRICATING ANY MATERIAL.

	BY	CHECKED
DESIGN	F. Wei	S. Barajas / J. Railey
DETAILS	P. Perez	F. Wei
QUANTITIES	F. Wei	L. Sanchez-Manzo

STATE OF CALIFORNIA
DEPARTMENT OF TRANSPORTATION

DIVISION OF ENGINEERING SERVICES
STRUCTURE DESIGN
DESIGN BRANCH 21

BRIDGE NO. 53-0828
POST MILE 17.30

LOS ANGELES RIVER BRIDGE (WIDEN)
RETAINING WALL DETAILS NO. 4

STRUCTURES DESIGN DETAIL SHEET (ENGLISH) (REV. 09-01-10)

ORIGINAL SCALE IN INCHES FOR REDUCED PLANS 0 1 2 3

UNIT: 3623
PROJECT NUMBER & PHASE: 0700020869 & 1 CONTRACT NO.: 202111

DISREGARD PRINTS BEARING EARLIER REVISION DATES

REVISION DATES 12/03/09 10/01/10 11/24/10 03/01/11

SHEET 23 OF 74

FILE => 53-0828-g-rw_dt04.dgn

USERNAME => s124496 DATE PLOTTED => 28-JUN-2011 TIME PLOTTED => 19:37

DIST	COUNTY	ROUTE	POST MILES TOTAL PROJECT	SHEET No.	TOTAL SHEETS
07	LA	710	17.2/26.4	1320	1507

REGISTERED CIVIL ENGINEER 03/01/11 DATE

6-27-11
PLANS APPROVAL DATE

REGISTERED PROFESSIONAL ENGINEER FRANK HSIAOSHIH WEI No. C 52918 Exp. 12-31-12 CIVIL STATE OF CALIFORNIA

The State of California or its officers or agents shall not be responsible for the accuracy or completeness of electronic copies of this plan sheet.

NOTES:

1. Contractor may adjust battered factor to 1:4 if the existing wall interferes with pile driving operation.
2. Contractor shall verify existing pile location, existing pile direction of batter, and the clearance between the existing piles and new driven piles. Pile spacing shown is subject to adjustment to avoid existing piles. Notify Engineer should the new driven piles not have adequate clearance and cause conflicts to the existing piles.

LEGEND:

- Indicates Exist vertical piles
- Indicates Exist 1:3 battered piles
- Indicates New vertical piles
- Indicates New 1:3 battered piles

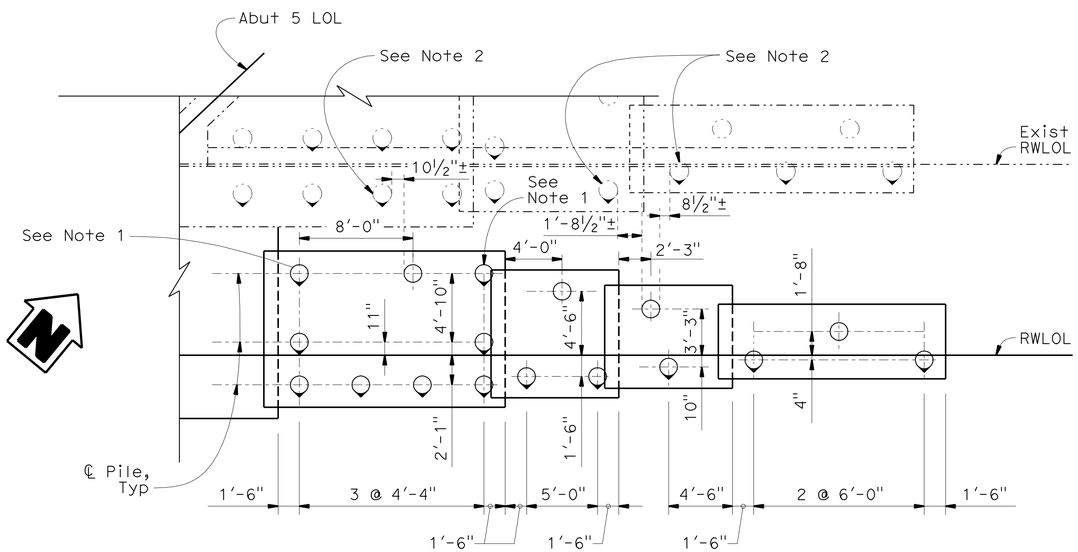

ABUTMENT 5 SOUTH RETAINING WALL PILE LAYOUT

3/16" = 1'-0"

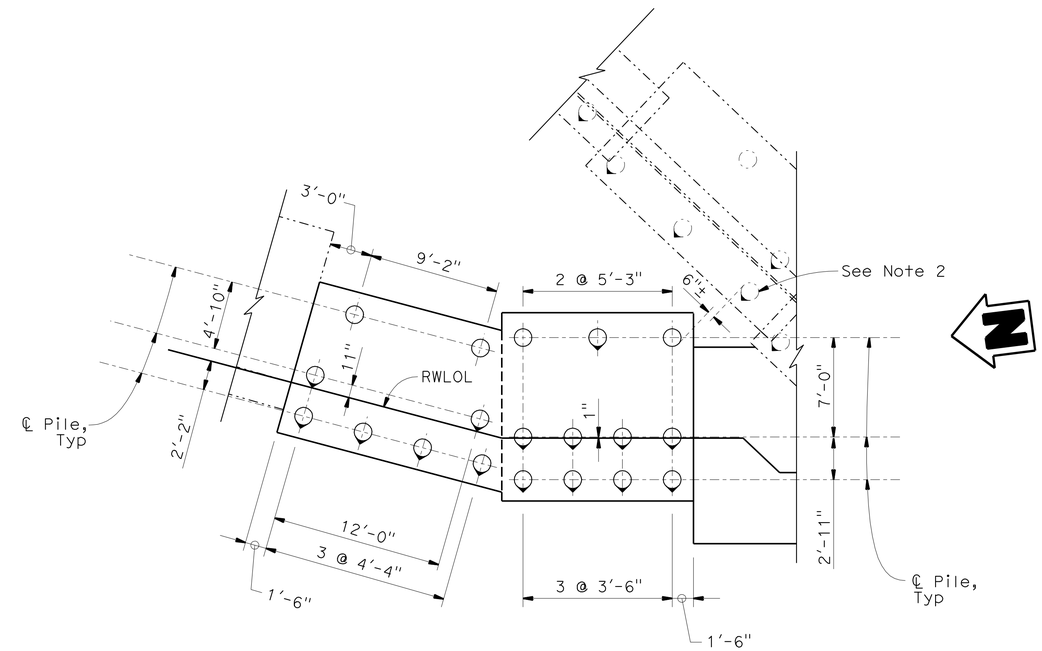

ABUTMENT 5 NORTH RETAINING WALL PILE LAYOUT

3/16" = 1'-0"

NOTE:
THE CONTRACTOR SHALL VERIFY ALL CONTROLLING FIELD DIMENSIONS BEFORE ORDERING OR FABRICATING ANY MATERIAL.

	BY	CHECKED
DESIGN	F. Wei	S. Barajas / J. Railey
DETAILS	P. Perez	F. Wei
QUANTITIES	F. Wei	L. Sanchez-Manzo

STATE OF CALIFORNIA
DEPARTMENT OF TRANSPORTATION

DIVISION OF ENGINEERING SERVICES
STRUCTURE DESIGN
DESIGN BRANCH 21

BRIDGE NO. 53-0828
POST MILE 17.30

LOS ANGELES RIVER BRIDGE (WIDEN)
RETAINING WALL DETAILS NO. 5

STRUCTURES DESIGN DETAIL SHEET (ENGLISH) (REV. 09-01-10)

ORIGINAL SCALE IN INCHES FOR REDUCED PLANS 0 1 2 3

UNIT: 3623
PROJECT NUMBER & PHASE: 0700020869 & 1 CONTRACT NO.: 202111

DISREGARD PRINTS BEARING EARLIER REVISION DATES → 09/17/10 10/08/10 11/24/10 03/01/11

SHEET 24 OF 74

FILE => 53-0828-g-rw_dt05.dgn

USERNAME => s124496 DATE PLOTTED => 28-JUN-2011 TIME PLOTTED => 19:37

DIST	COUNTY	ROUTE	POST MILES TOTAL PROJECT	SHEET No.	TOTAL SHEETS
07	LA	710	17.2/26.4	1321	1507

REGISTERED CIVIL ENGINEER 03/01/11 DATE

6-27-11
PLANS APPROVAL DATE

REGISTERED PROFESSIONAL ENGINEER FRANK HSIAOSHIH WEI No. C 52918 Exp. 12-31-12 CIVIL STATE OF CALIFORNIA

The State of California or its officers or agents shall not be responsible for the accuracy or completeness of electronic copies of this plan sheet.

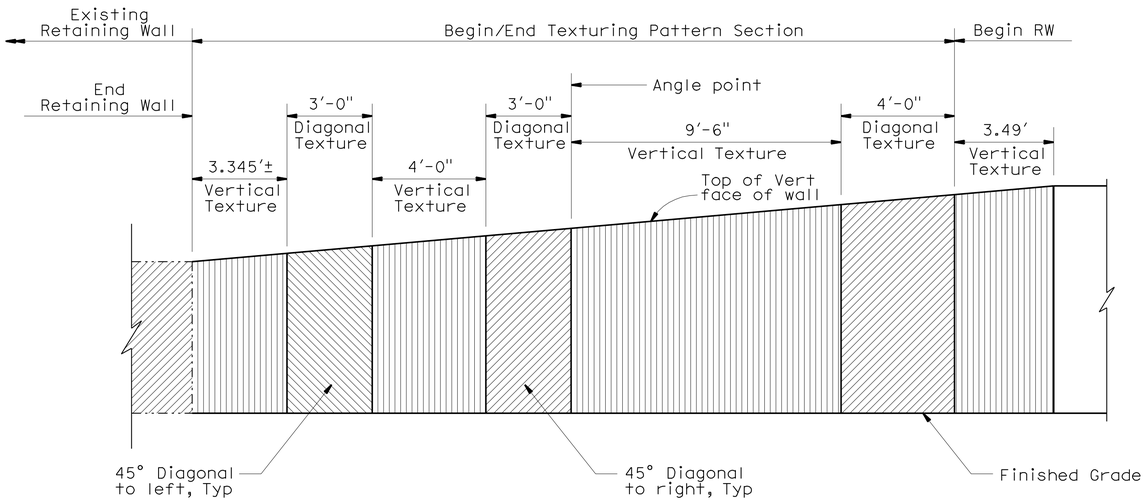

ABUTMENT 5 NORTH RETAINING WALL ARCHITECTURAL TREATMENT

No Scale

Notes:

1. Extend texture patterns 4" Min below finished grade.
2. Texture exposed vertical face of wall.

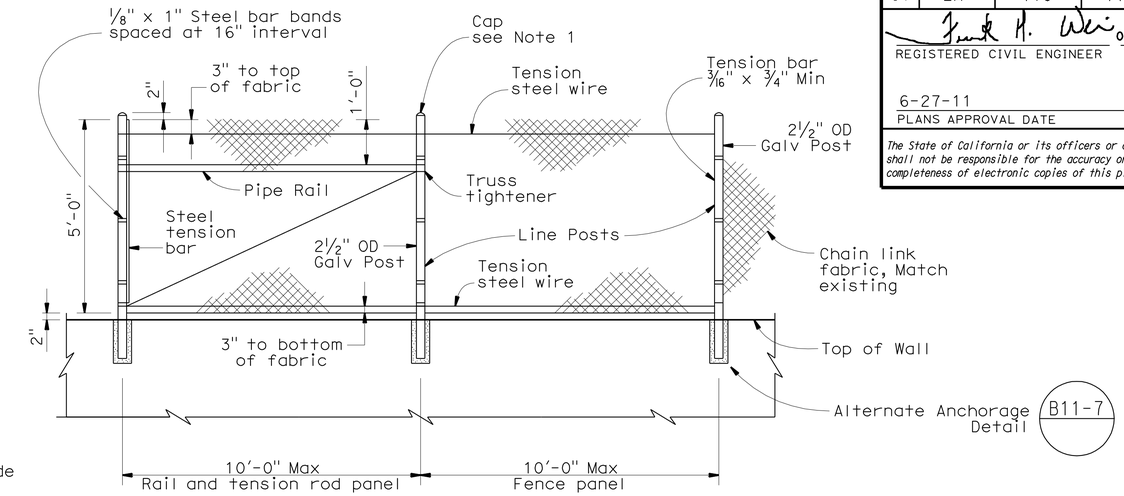

CHAIN LINK RAILING ELEVATION

No Scale

Note:

1. Secure drive fit galvanized cap to post with 1/4" round head rivet.

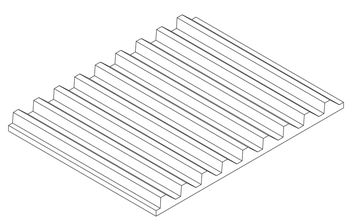

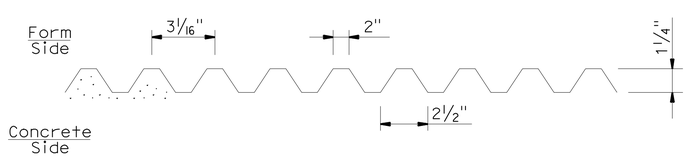

RIB TEXTURE (VERTICAL AND DIAGONAL) DETAIL

No Scale

Note:

Liner shall be a vertical ribbed trapezoid pattern with the rib faces having a fractured or aggregate textured face or as otherwise approved.

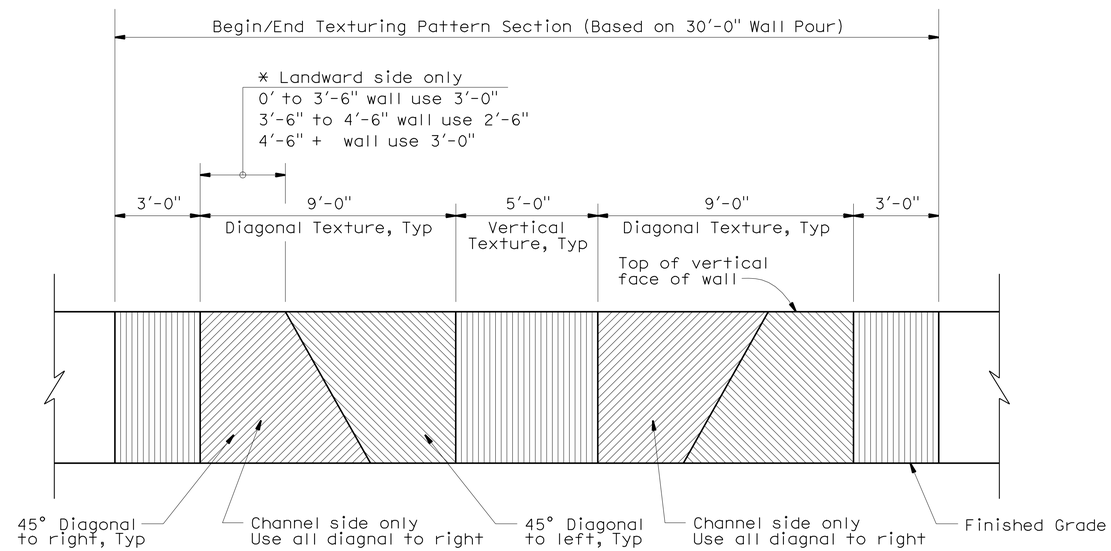

ABUTMENT 1 RETAINING WALL ARCHITECTURAL TREATMENT

No Scale

Notes:

1. Extend texture patterns 4" Min below finished grade.
2. Texture all exposed vertical faces of wall (both sides).
3. Texture patterns on either side of wall need not match.

NOTE:
THE CONTRACTOR SHALL VERIFY ALL CONTROLLING FIELD DIMENSIONS BEFORE ORDERING OR FABRICATING ANY MATERIAL.

	BY	CHECKED
DESIGN	F. Wei	S. Barajas / J. Railey
DETAILS	P. Perez	F. Wei
QUANTITIES	F. Wei	L. Sanchez-Manzo

STATE OF CALIFORNIA
DEPARTMENT OF TRANSPORTATION

DIVISION OF ENGINEERING SERVICES
STRUCTURE DESIGN
DESIGN BRANCH 21

BRIDGE NO. 53-0828
POST MILE 17.30

LOS ANGELES RIVER BRIDGE (WIDEN)
RETAINING WALL DETAILS NO. 6

STRUCTURES DESIGN DETAIL SHEET (ENGLISH) (REV. 09-01-10)

ORIGINAL SCALE IN INCHES FOR REDUCED PLANS 0 1 2 3

UNIT: 3623
PROJECT NUMBER & PHASE: 0700020869 & 1 CONTRACT NO.: 202111

DISREGARD PRINTS BEARING EARLIER REVISION DATES

REVISION DATES 12/28/09 10/04/10 11/24/10 03/01/11

SHEET 25 OF 74

FILE => 53-0828-g-rw_dt06.dgn

USERNAME => s124496 DATE PLOTTED => 28-JUN-2011 TIME PLOTTED => 19:37

DIST	COUNTY	ROUTE	POST MILES TOTAL PROJECT	SHEET No.	TOTAL SHEETS
07	LA	710	17.2/26.4	1322	1507

REGISTERED CIVIL ENGINEER 03/01/11 DATE

6-27-11
PLANS APPROVAL DATE

REGISTERED PROFESSIONAL ENGINEER FRANK HSIAOSHIH WEI No. C 52918 Exp. 12-31-12 CIVIL STATE OF CALIFORNIA

The State of California or its officers or agents shall not be responsible for the accuracy or completeness of electronic copies of this plan sheet.

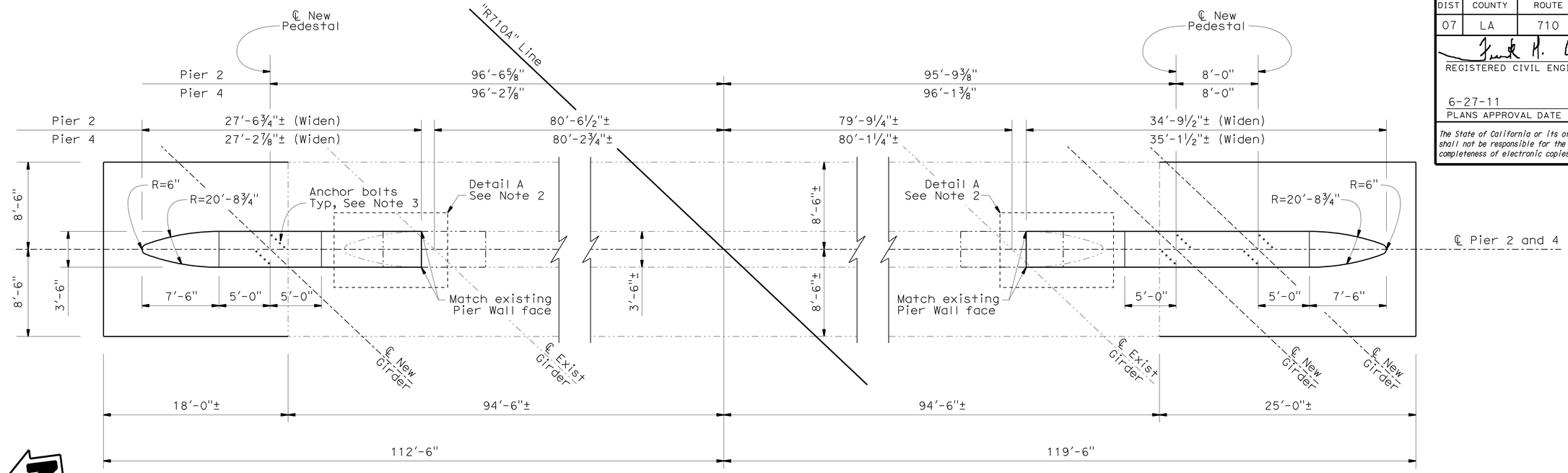

PLAN

3/16" = 1'-0"

(Pier 2 shown, Pier 4 similar)

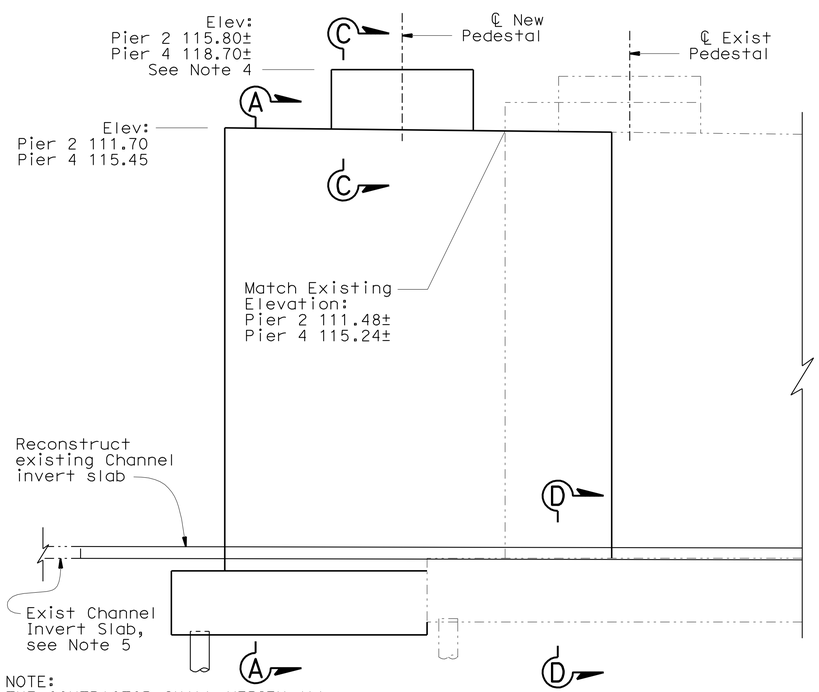

NOTE:
THE CONTRACTOR SHALL VERIFY ALL CONTROLLING FIELD DIMENSIONS BEFORE ORDERING OR FABRICATING ANY MATERIAL.

ELEVATION

3/16" = 1'-0"

(Pier 2 shown, Pier 4 similar)

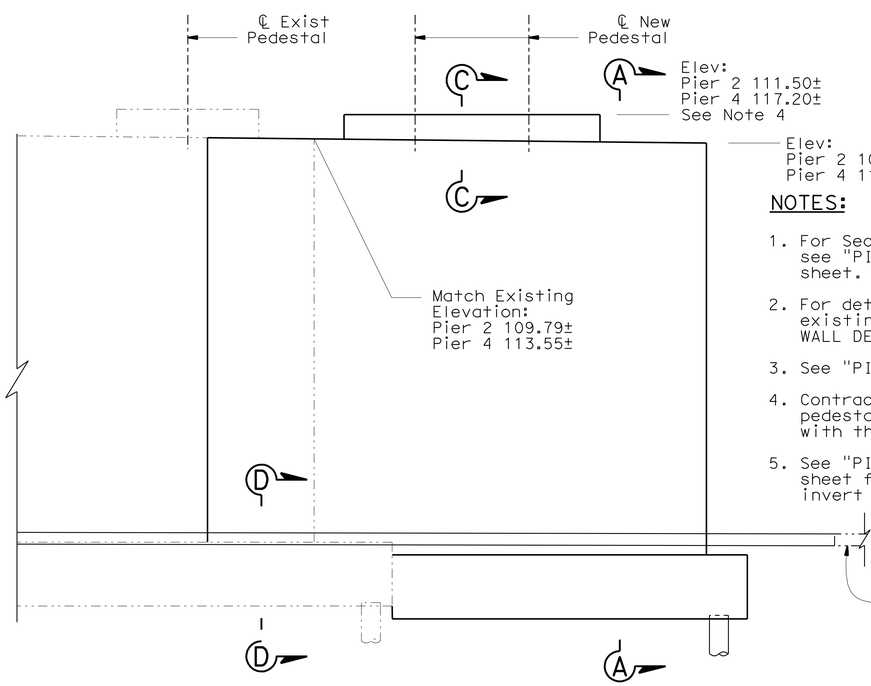

Note: All piles not shown

NOTES:

1. For Section A-A, C-C, and D-D, see "PIER WALL DETAILS NO. 1" sheet.
2. For details connecting to the existing pier wall nose, see "PIER WALL DETAILS NO. 3" sheet.
3. See "PIER WALL DETAILS NO. 2 sheet.
4. Contractor shall field verify pier wall pedestal elevations to avoid conflicts with the bridge deck construction.
5. See "PIER WALL DETAILS NO. 1" sheet for existing and new channel invert slab connection detail.

	BY	CHECKED
DESIGN	F. Wei	S. Barajas / J. Railey
DETAILS	P. Perez	F. Wei
QUANTITIES	F. Wei	L. Sanchez-Manzo

STATE OF CALIFORNIA
DEPARTMENT OF TRANSPORTATION

DIVISION OF ENGINEERING SERVICES
STRUCTURE DESIGN
DESIGN BRANCH 21

BRIDGE NO. 53-0828
POST MILE 17.30

LOS ANGELES RIVER BRIDGE (WIDEN)

PIER 2 AND 4 LAYOUT

STRUCTURES DESIGN DETAIL SHEET (ENGLISH) (REV. 09-01-10)

ORIGINAL SCALE IN INCHES FOR REDUCED PLANS 0 1 2 3

UNIT: 3623
PROJECT NUMBER & PHASE: 0700020869 & 1 CONTRACT NO.: 202111

DISREGARD PRINTS BEARING EARLIER REVISION DATES

REVISION DATES: 02/04/10 10/04/10 11/24/10 03/01/11

SHEET 26 OF 74

FILE => 53-0828-1-pw_2&4_lo.dgn

USERNAME => S124496 DATE PLOTTED => 28-JUN-2011 TIME PLOTTED => 19:37

DIST	COUNTY	ROUTE	POST MILES TOTAL PROJECT	SHEET No.	TOTAL SHEETS
07	LA	710	17.2/26.4	1323	1507

REGISTERED CIVIL ENGINEER 03/01/11 DATE

6-27-11
PLANS APPROVAL DATE

REGISTERED PROFESSIONAL ENGINEER FRANK HSIAOSHIH WEI No. C 52918 Exp. 12-31-12 CIVIL STATE OF CALIFORNIA

The State of California or its officers or agents shall not be responsible for the accuracy or completeness of electronic copies of this plan sheet.

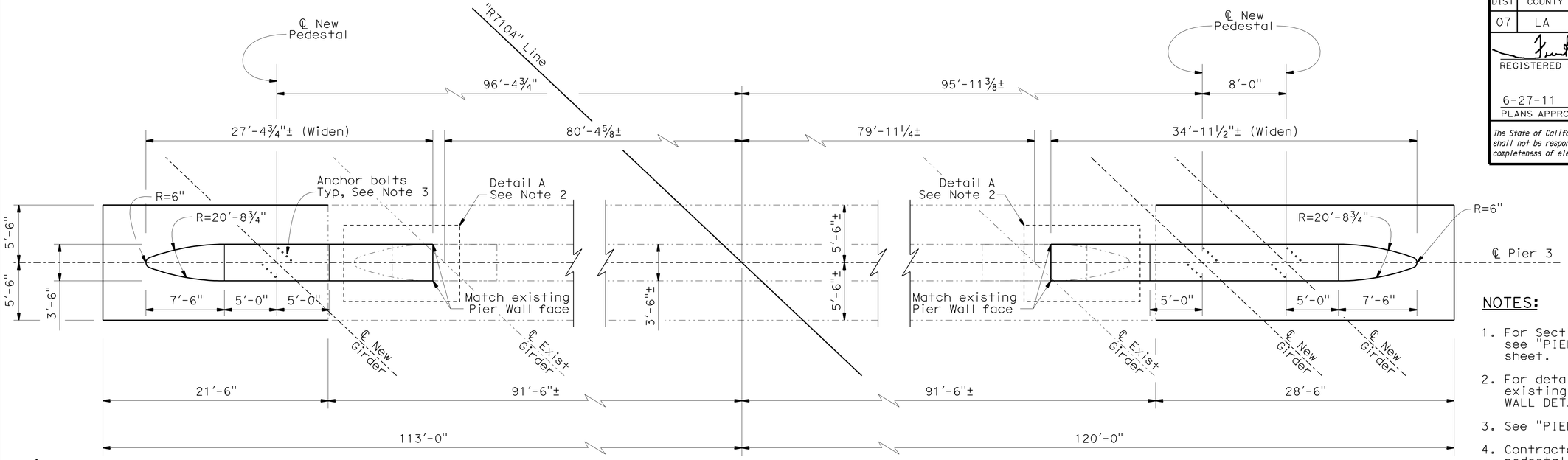

PLAN

3/16" = 1'-0"

NOTES:

1. For Section B-B, C-C, and E-E, see "PIER WALL DETAILS NO. 1" sheet.
2. For details connecting to the existing pier wall nose, see "PIER WALL DETAILS NO. 3" sheet.
3. See "PIER WALL DETAILS NO. 2 sheet.
4. Contractor shall field verify pier wall pedestal elevations to avoid conflicts with the bridge deck construction.
5. See "PIER WALL DETAILS NO. 1" sheet for existing and new channel invert slab connection detail.

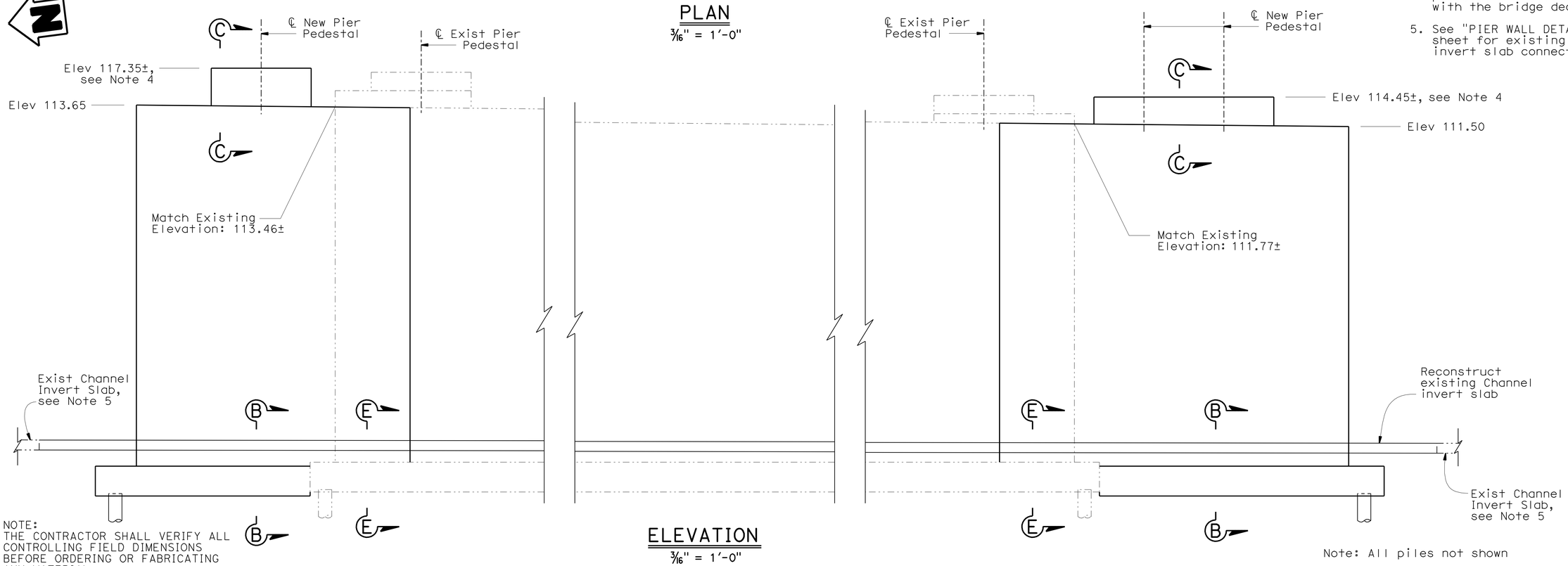

NOTE:
THE CONTRACTOR SHALL VERIFY ALL CONTROLLING FIELD DIMENSIONS BEFORE ORDERING OR FABRICATING ANY MATERIAL.

ELEVATION

3/16" = 1'-0"

	BY	CHECKED
DESIGN	F. Wei	S. Barajas / J. Railey
DETAILS	P. Perez	F. Wei
QUANTITIES	F. Wei	L. Sanchez-Manzo

STATE OF CALIFORNIA
DEPARTMENT OF TRANSPORTATION

DIVISION OF ENGINEERING SERVICES
STRUCTURE DESIGN
DESIGN BRANCH 21

BRIDGE NO. 53-0828
POST MILE 17.30

LOS ANGELES RIVER BRIDGE (WIDEN)

PIER 3 LAYOUT

STRUCTURES DESIGN DETAIL SHEET (ENGLISH) (REV. 09-01-10)

ORIGINAL SCALE IN INCHES FOR REDUCED PLANS 0 1 2 3

UNIT: 3623
PROJECT NUMBER & PHASE: 0700020869 & 1 CONTRACT NO.: 202111

DISREGARD PRINTS BEARING EARLIER REVISION DATES

REVISION DATES: 02/24/10 10/01/10 11/24/10 03/01/11

SHEET 27 OF 74

FILE => 53-0828-1-pw_3_lo.dgn

USERNAME => s124496 DATE PLOTTED => 28-JUN-2011 TIME PLOTTED => 19:37

DIST	COUNTY	ROUTE	POST MILES TOTAL PROJECT	SHEET No.	TOTAL SHEETS
07	LA	710	17.2/26.4	1324	1507

REGISTERED CIVIL ENGINEER 03/01/11 DATE

6-27-11
PLANS APPROVAL DATE

REGISTERED PROFESSIONAL ENGINEER FRANK HSIAOSHIH WEI No. C 52918 Exp. 12-31-12 CIVIL STATE OF CALIFORNIA

The State of California or its officers or agents shall not be responsible for the accuracy or completeness of electronic copies of this plan sheet.

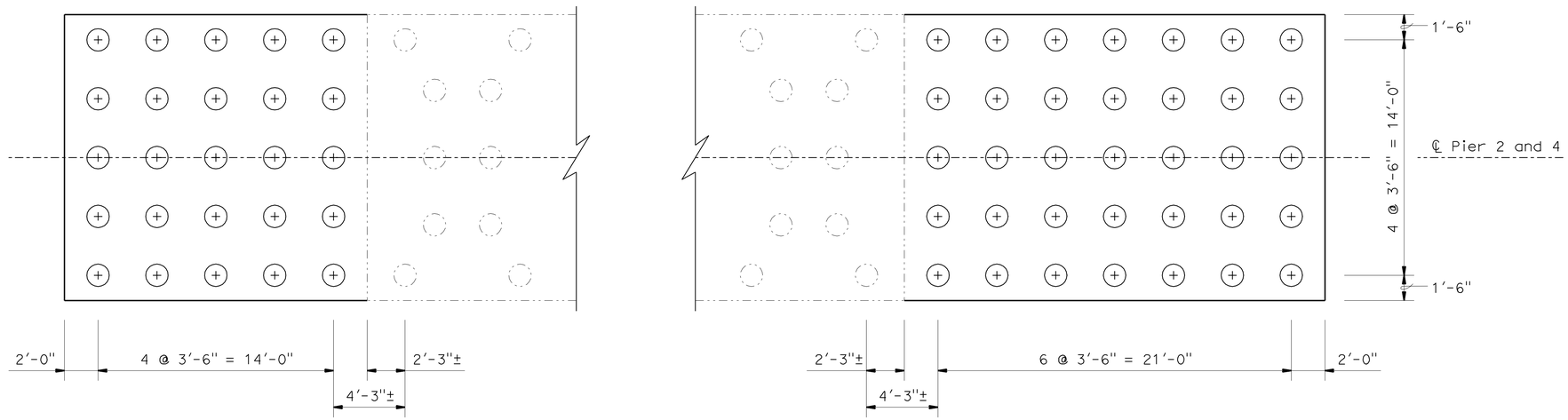

PIER 2 AND 4 PILE LAYOUT

1/4" = 1'-0"

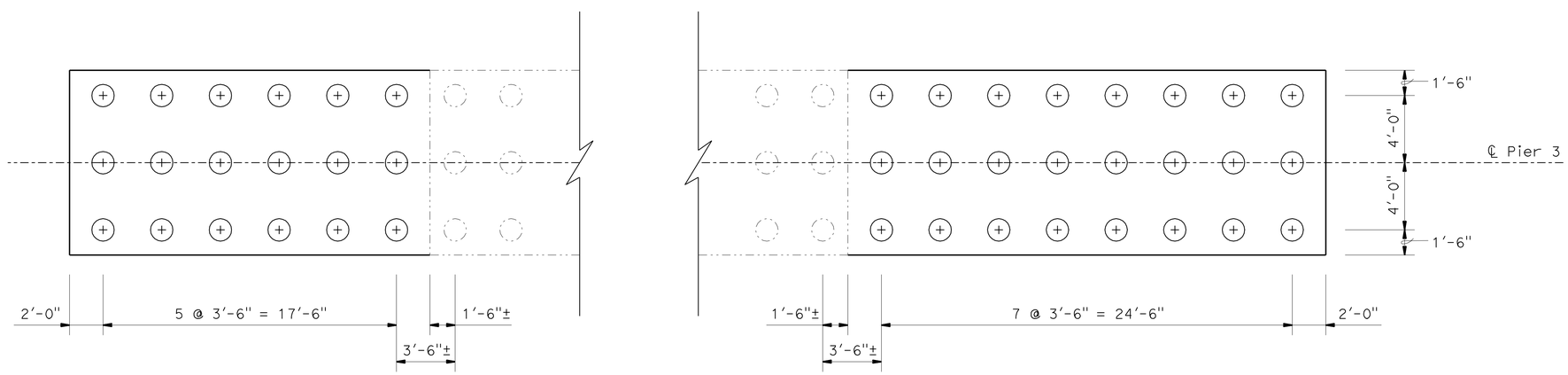

PIER 3 PILE LAYOUT

1/4" = 1'-0"

LEGEND:

(+) Indicates new vertical pile

Indicates Exist vertical pile

NOTE:
THE CONTRACTOR SHALL VERIFY ALL CONTROLLING FIELD DIMENSIONS BEFORE ORDERING OR FABRICATING ANY MATERIAL.

	BY	CHECKED
DESIGN	F. Wei	S. Barajas / J. Railey
DETAILS	P. Perez	F. Wei
QUANTITIES	F. Wei	L. Sanchez-Manzo

STATE OF CALIFORNIA
DEPARTMENT OF TRANSPORTATION

DIVISION OF ENGINEERING SERVICES
STRUCTURE DESIGN
DESIGN BRANCH 21

BRIDGE NO. 53-0828
POST MILE 17.30

LOS ANGELES RIVER BRIDGE (WIDEN)
PIER WALL PILE LAYOUT

STRUCTURES DESIGN DETAIL SHEET (ENGLISH) (REV. 09-01-10)

ORIGINAL SCALE IN INCHES FOR REDUCED PLANS 0 1 2 3

UNIT: 3623
PROJECT NUMBER & PHASE: 0700020869 & 1 CONTRACT NO.: 202111

DISREGARD PRINTS BEARING EARLIER REVISION DATES

REVISION DATES 10/23/09 10/01/10 11/24/10 03/01/11

SHEET 28 OF 74

FILE => 53-0828-1-pw_p_to.dgn

USERNAME => s124496 DATE PLOTTED => 28-JUN-2011 TIME PLOTTED => 19:37

DIST	COUNTY	ROUTE	POST MILES TOTAL PROJECT	SHEET No.	TOTAL SHEETS
07	LA	710	17.2/26.4	1325	1507

REGISTERED CIVIL ENGINEER 03/01/11 DATE

6-27-11
PLANS APPROVAL DATE

REGISTERED PROFESSIONAL ENGINEER FRANK HSIAOSHIH WEI No. C 52918 Exp. 12-31-12 CIVIL STATE OF CALIFORNIA

The State of California or its officers or agents shall not be responsible for the accuracy or completeness of electronic copies of this plan sheet.

NOTES:

1. No splice is allowed on pier wall main vertical rebar.
2. See "LIMITS OF PAYMENT FOR EXCAVATION AND BACKFILL" sheet for new channel invert slab payment limits.
3. For locations of Section A-A, Section B-B, Section C-C, Section D-D, and Section E-E. see "PIER 2 AND 4 LAYOUT" and "PIER 3 LAYOUT" sheets.

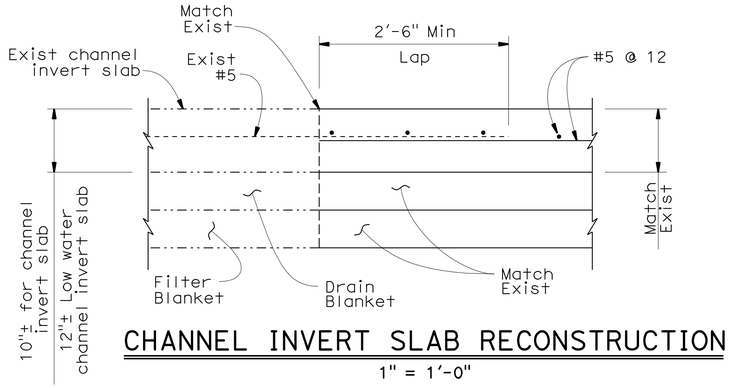

CHANNEL INVERT SLAB RECONSTRUCTION

1" = 1'-0"

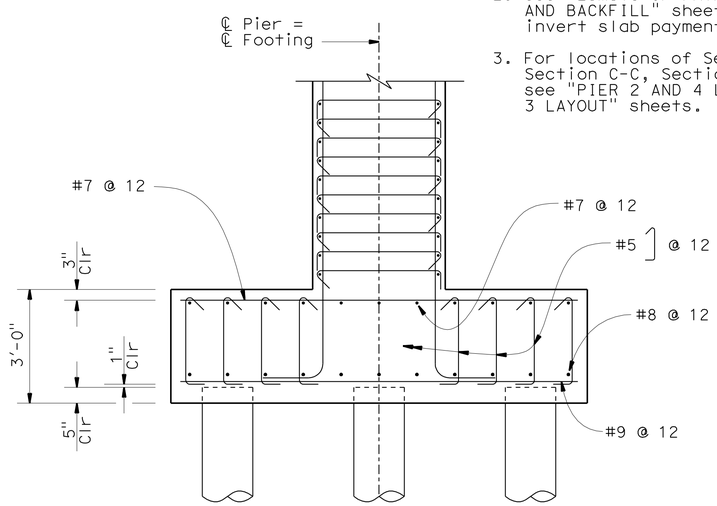

SECTION B-B

½" = 1'-0"

(For information not shown, see "SECTION A-A")

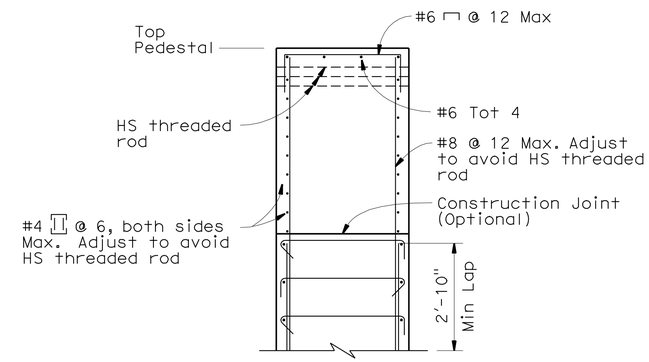

SECTION C-C

½" = 1'-0"

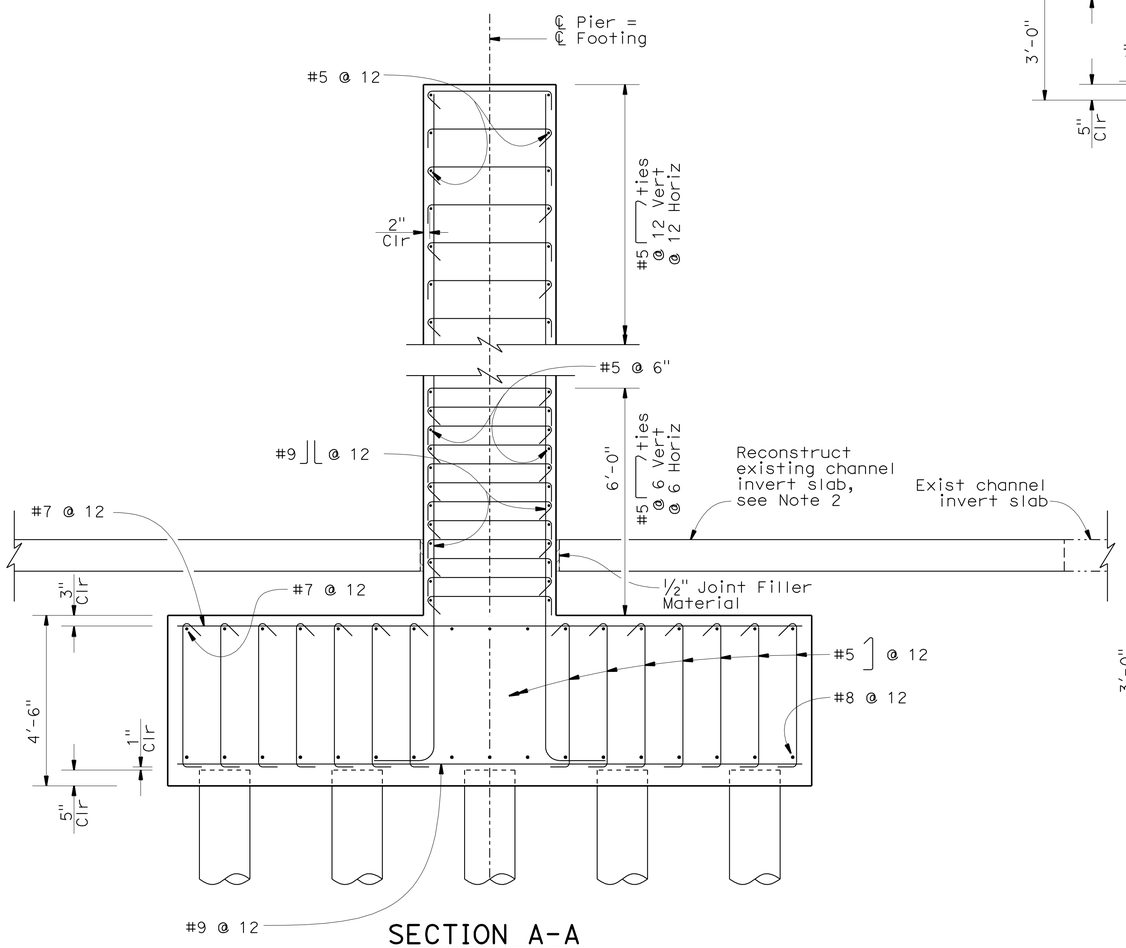

SECTION A-A

½" = 1'-0"

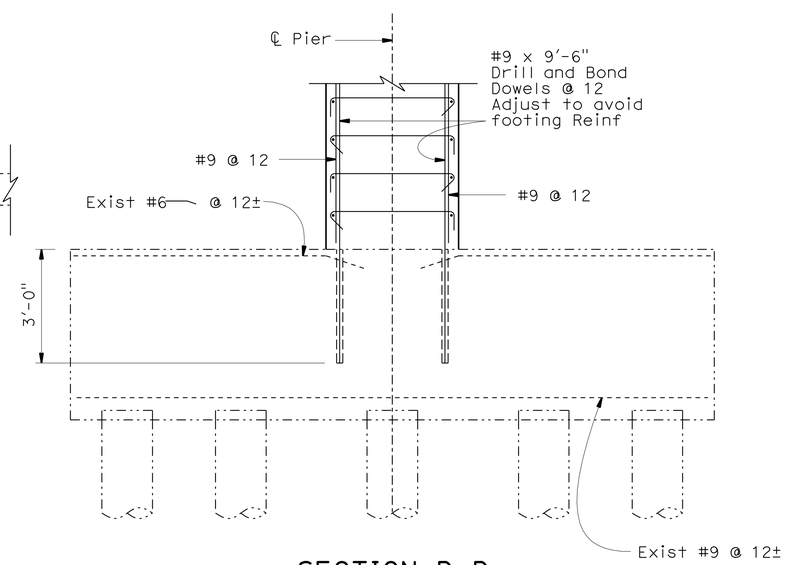

SECTION D-D

½" = 1'-0"

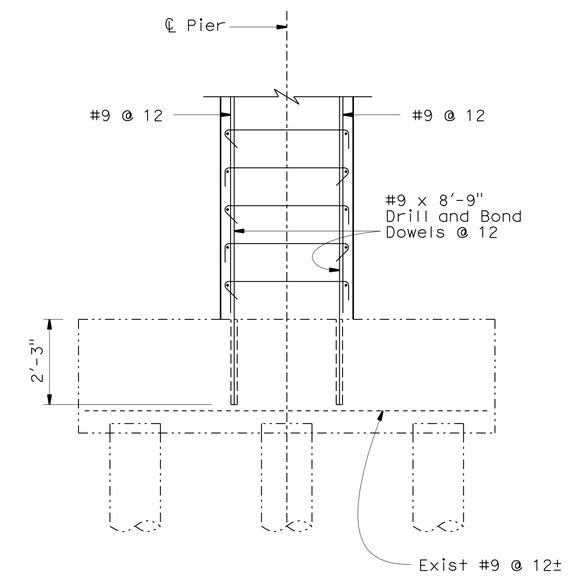

SECTION E-E

½" = 1'-0"

NOTE:
THE CONTRACTOR SHALL VERIFY ALL CONTROLLING FIELD DIMENSIONS BEFORE ORDERING OR FABRICATING ANY MATERIAL.

	BY	CHECKED
DESIGN	F. Wei	S. Barajas / J. Railey
DETAILS	P. Perez	F. Wei
QUANTITIES	F. Wei	L. Sanchez-Manzo

STATE OF CALIFORNIA
DEPARTMENT OF TRANSPORTATION

DIVISION OF ENGINEERING SERVICES
STRUCTURE DESIGN
DESIGN BRANCH 21

BRIDGE NO. 53-0828
POST MILE 17.30

LOS ANGELES RIVER BRIDGE (WIDEN)
PIER WALL DETAILS NO. 1

STRUCTURES DESIGN DETAIL SHEET (ENGLISH) (REV. 09-01-10)

ORIGINAL SCALE IN INCHES FOR REDUCED PLANS 0 1 2 3

UNIT: 3623
PROJECT NUMBER & PHASE: 0700020869 & 1 CONTRACT NO.: 202111

DISREGARD PRINTS BEARING EARLIER REVISION DATES

REVISION DATES: ~~08/20/09~~ ~~10/08/10~~ ~~11/24/10~~ 03/01/11

SHEET 29 OF 74

FILE => 53-0828-j-pw_dt01.dgn

USERNAME => s124496 DATE PLOTTED => 28-JUN-2011 TIME PLOTTED => 19:37

DIST	COUNTY	ROUTE	POST MILES TOTAL PROJECT	SHEET No.	TOTAL SHEETS
07	LA	710	17.2/26.4	1326	1507

REGISTERED CIVIL ENGINEER 03/01/11 DATE

6-27-11
PLANS APPROVAL DATE

REGISTERED PROFESSIONAL ENGINEER FRANK HSIAOSHIH WEI No. C 52918 Exp. 12-31-12 CIVIL STATE OF CALIFORNIA

The State of California or its officers or agents shall not be responsible for the accuracy or completeness of electronic copies of this plan sheet.

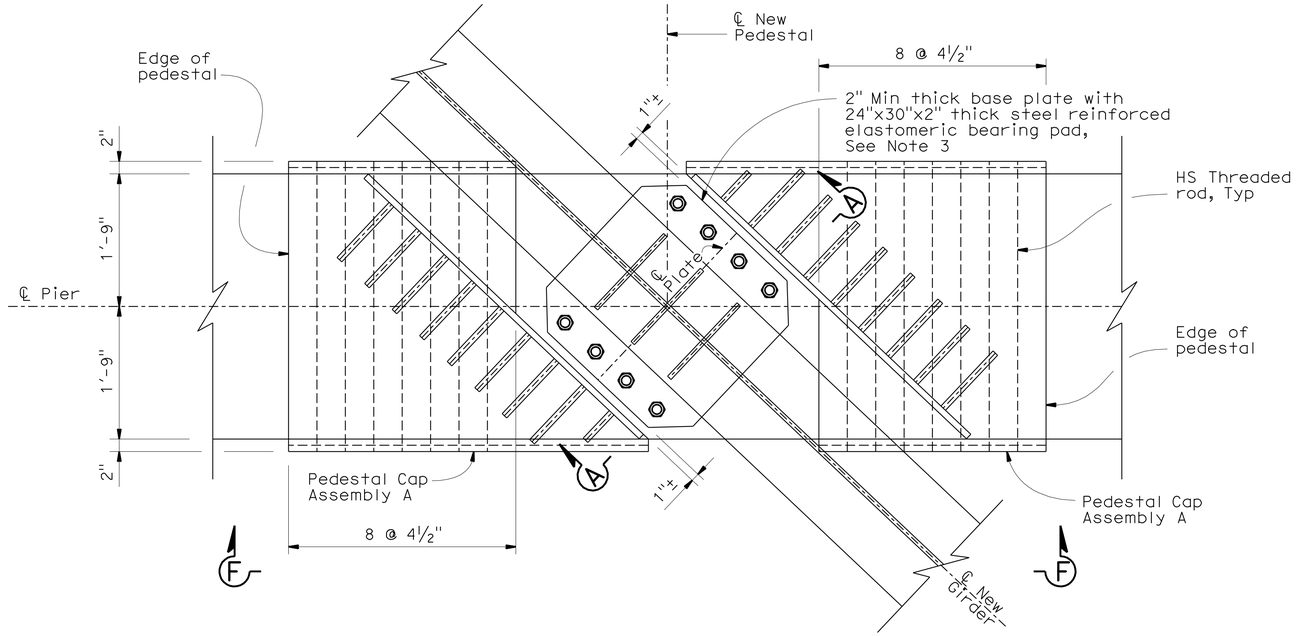

NOTES:

1. For View F-F, see "PIER WALL DETAILS NO. 3" sheet.
2. Pedestal cap assembly, anchor bolts, nuts, and washer plate, shall be galvanzied.
3. Thickness of bearing base plate shall be beveled to match bridge vertical profile.

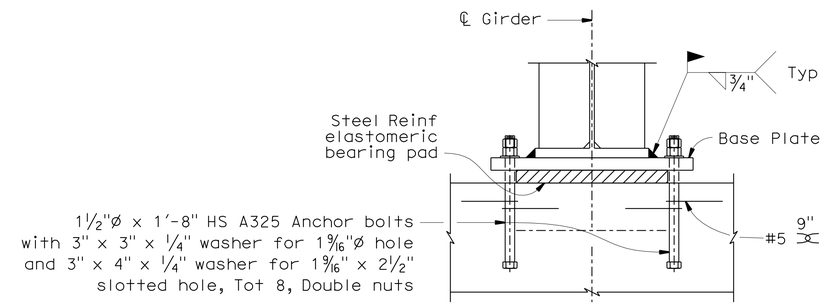

SECTION A-A

1" = 1'-0"

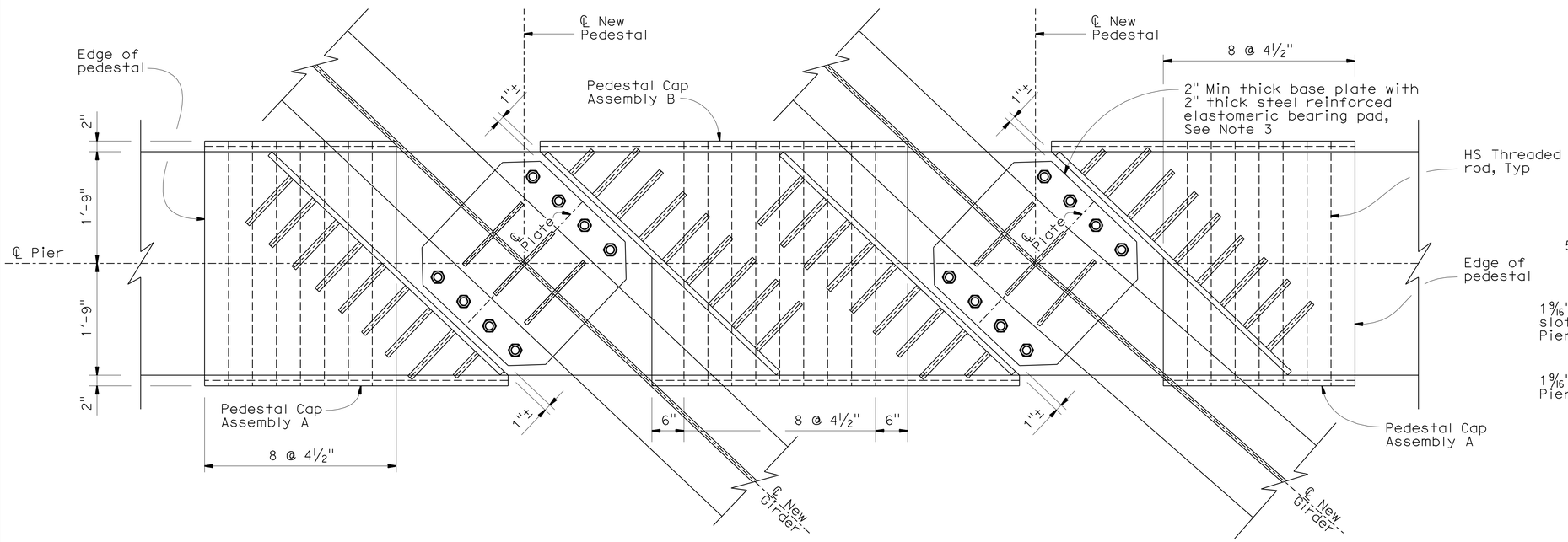

PLAN - TYPICAL PEDESTAL

1" = 1'-0"

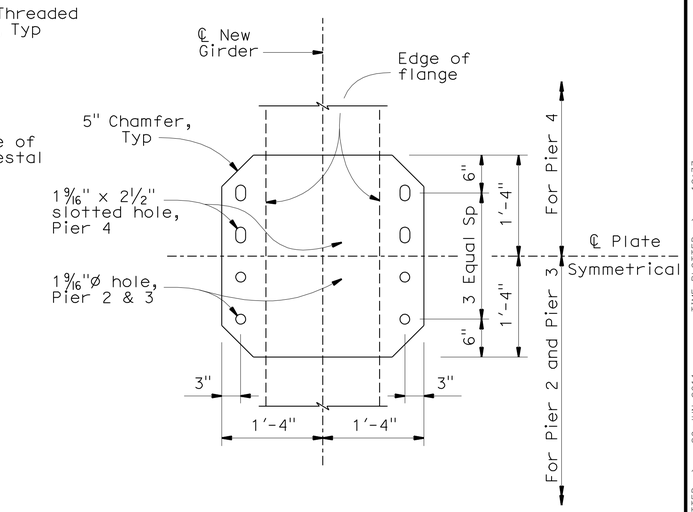

PIER BASEPLATE DETAIL

1" = 1'-0"

NOTE:
THE CONTRACTOR SHALL VERIFY ALL CONTROLLING FIELD DIMENSIONS BEFORE ORDERING OR FABRICATING ANY MATERIAL.

	BY	CHECKED
DESIGN	F. Wei	S. Barajas / J. Railey
DETAILS	P. Perez	F. Wei
QUANTITIES	F. Wei	L. Sanchez-Manzo

STATE OF CALIFORNIA
DEPARTMENT OF TRANSPORTATION

DIVISION OF ENGINEERING SERVICES
STRUCTURE DESIGN
DESIGN BRANCH 21

BRIDGE NO. 53-0828
POST MILE 17.30

LOS ANGELES RIVER BRIDGE (WIDEN)
PIER WALL DETAILS NO. 2

STRUCTURES DESIGN DETAIL SHEET (ENGLISH) (REV. 09-01-10)

ORIGINAL SCALE IN INCHES FOR REDUCED PLANS 0 1 2 3

UNIT: 3623
PROJECT NUMBER & PHASE: 0700020869 & 1 CONTRACT NO.: 202111

DISREGARD PRINTS BEARING EARLIER REVISION DATES

REVISION DATES 10/26/09 10/01/10 11/24/10 03/01/11

SHEET 30 OF 74

FILE => 53-0828-J-pw_dt02.dgn

USERNAME => s124496 DATE PLOTTED => 28-JUN-2011 TIME PLOTTED => 19:37

DIST	COUNTY	ROUTE	POST MILES TOTAL PROJECT	SHEET No.	TOTAL SHEETS
07	LA	710	17.2/26.4	1327	1507

REGISTERED CIVIL ENGINEER 03/01/11 DATE

6-27-11
PLANS APPROVAL DATE

REGISTERED PROFESSIONAL ENGINEER FRANK HSIAOSHIH WEI No. C 52918 Exp. 12-31-12 CIVIL STATE OF CALIFORNIA

The State of California or its officers or agents shall not be responsible for the accuracy or completeness of electronic copies of this plan sheet.

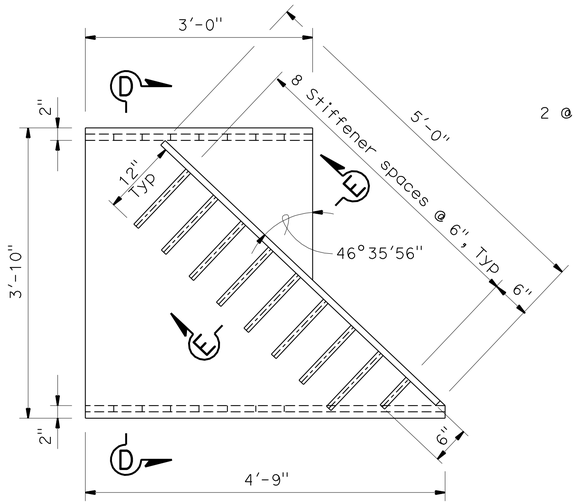

PLAN
PEDESTAL CAP ASSEMBLY A
1" = 1'-0"

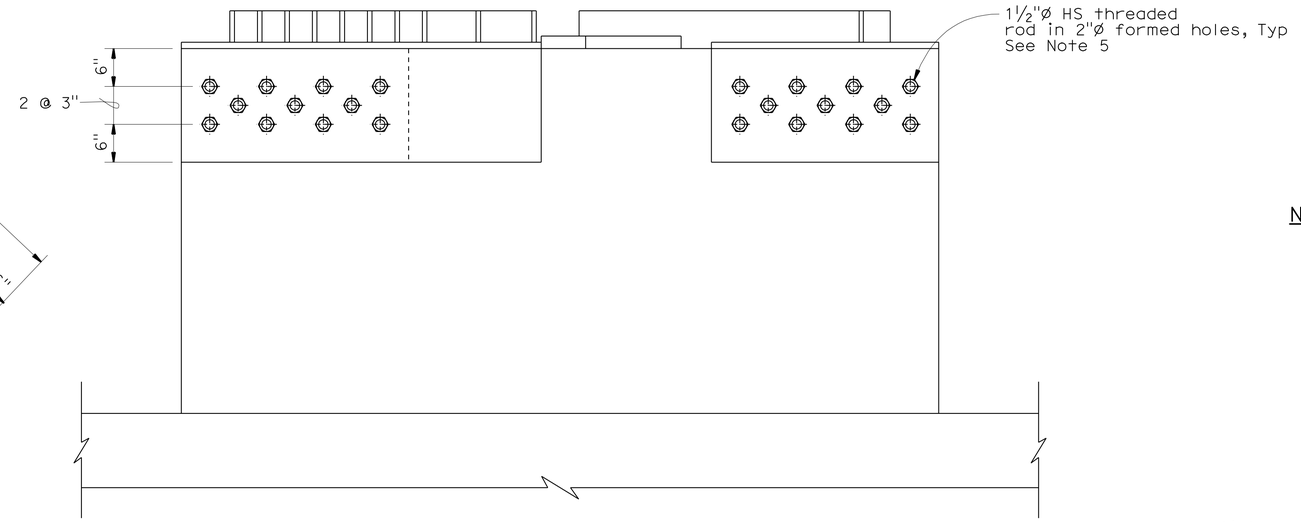

VIEW F-F
1" = 1'-0"

NOTES:

1. Core and Pressure Grout dowels approximately 18" both horizontally and vertically. The contractor shall adjust core hole locations to avoid cutting through the existing pier nose main vertical and horizontal reinforcement.
2. See "REMOVAL PLAN" sheet for pier nose removal detail.
3. For location of Detail A, see Pier Layout Sheets.
4. For location of "VIEW F-F", see "PIER WALL DETAILS NO. 2" sheet.
5. HS rods to be pressure grouted in 2"Ø formed holes prior to tightening nuts.

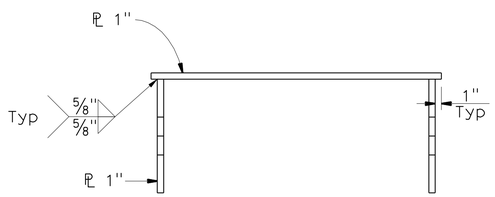

SECTION D-D
1" = 1'-0"

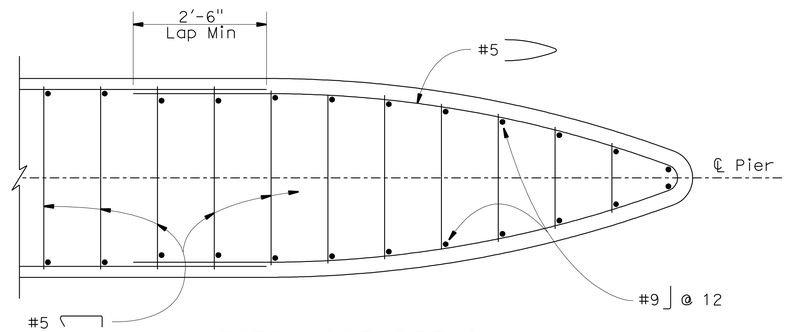

PIER NOSE DETAIL
¾" = 1'-0"

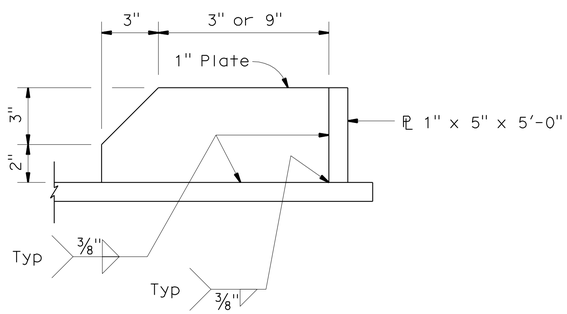

SECTION E-E
3" = 1'-0"

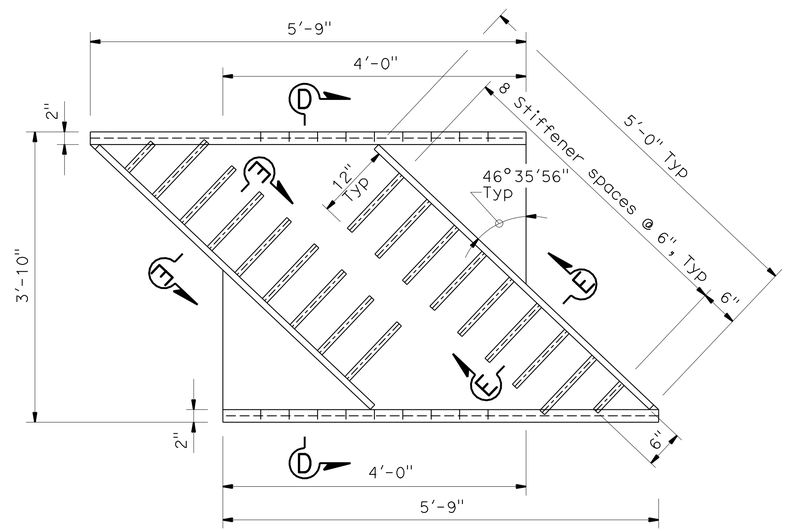

PLAN
PEDESTAL CAP ASSEMBLY B
1" = 1'-0"

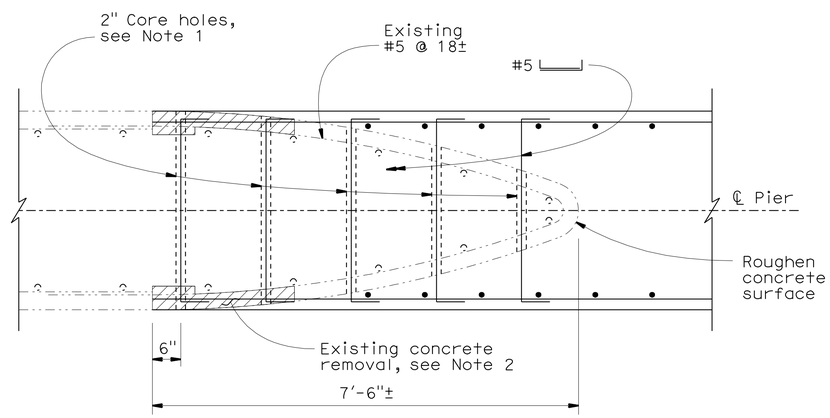

DETAIL A
¾" = 1'-0"

NOTE:
THE CONTRACTOR SHALL VERIFY ALL CONTROLLING FIELD DIMENSIONS BEFORE ORDERING OR FABRICATING ANY MATERIAL.

	BY	CHECKED
DESIGN	F. Wei	S. Barajas / J. Railey
DETAILS	P. Perez	F. Wei
QUANTITIES	F. Wei	L. Sanchez-Manzo

STATE OF CALIFORNIA
DEPARTMENT OF TRANSPORTATION

DIVISION OF ENGINEERING SERVICES
STRUCTURE DESIGN
DESIGN BRANCH 21

BRIDGE NO. 53-0828
POST MILE 17.30

LOS ANGELES RIVER BRIDGE (WIDEN)
PIER WALL DETAILS NO. 3

STRUCTURES DESIGN DETAIL SHEET (ENGLISH) (REV. 09-01-10)

ORIGINAL SCALE IN INCHES FOR REDUCED PLANS 0 1 2 3

UNIT: 3623
PROJECT NUMBER & PHASE: 0700020869 & 1 CONTRACT NO.: 202111

DISREGARD PRINTS BEARING EARLIER REVISION DATES

REVISION DATES: 10/29/09 10/01/10 11/24/10 03/01/11

SHEET 31 OF 74

FILE => 53-0828-j-pw_dt03.dgn

USERNAME => s134496 DATE PLOTTED => 28-JUN-2011 TIME PLOTTED => 19:37

DIST	COUNTY	ROUTE	POST MILES TOTAL PROJECT	SHEET No.	TOTAL SHEETS
07	LA	710	17.2/26.4	1328	1507

REGISTERED CIVIL ENGINEER 03/01/11 DATE

6-27-11
PLANS APPROVAL DATE

REGISTERED PROFESSIONAL ENGINEER FRANK HSIAOSHIH WEI No. C 52918 Exp. 12-31-12 CIVIL STATE OF CALIFORNIA

The State of California or its officers or agents shall not be responsible for the accuracy or completeness of electronic copies of this plan sheet.

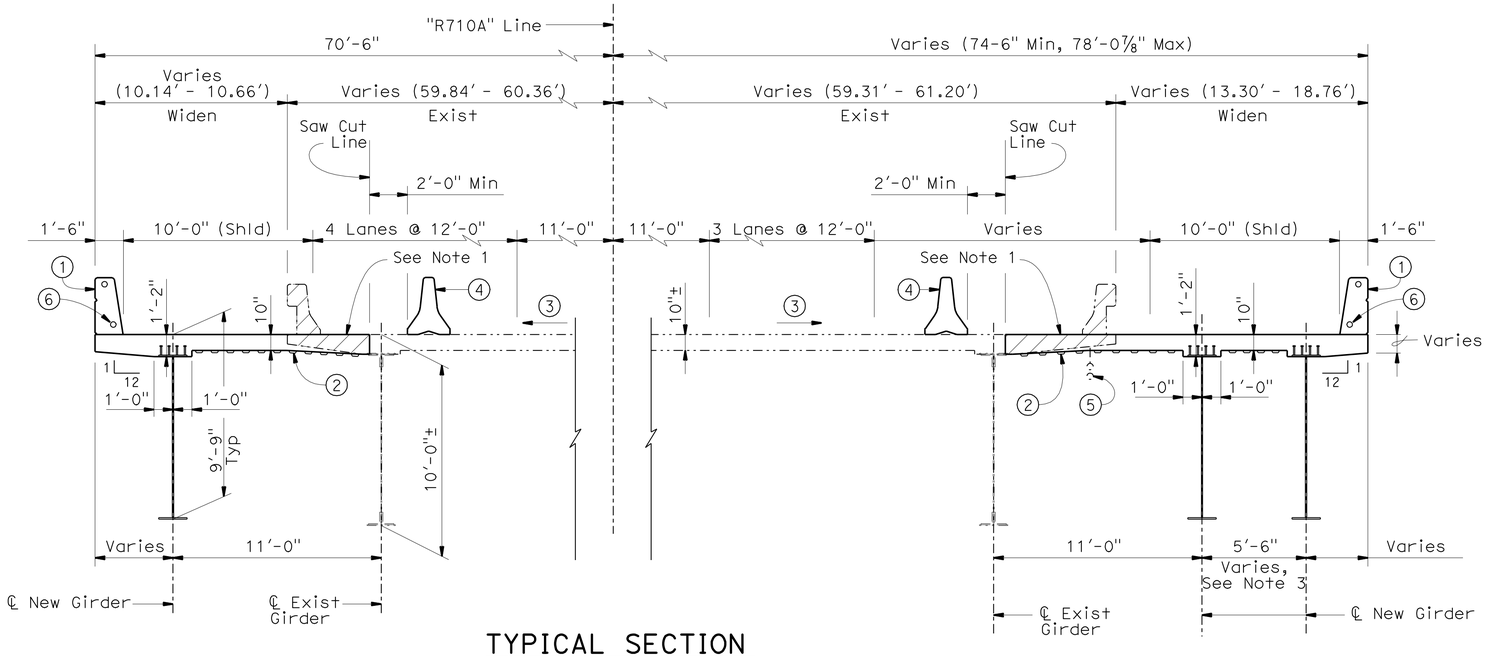

TYPICAL SECTION

¼" = 1'-0"

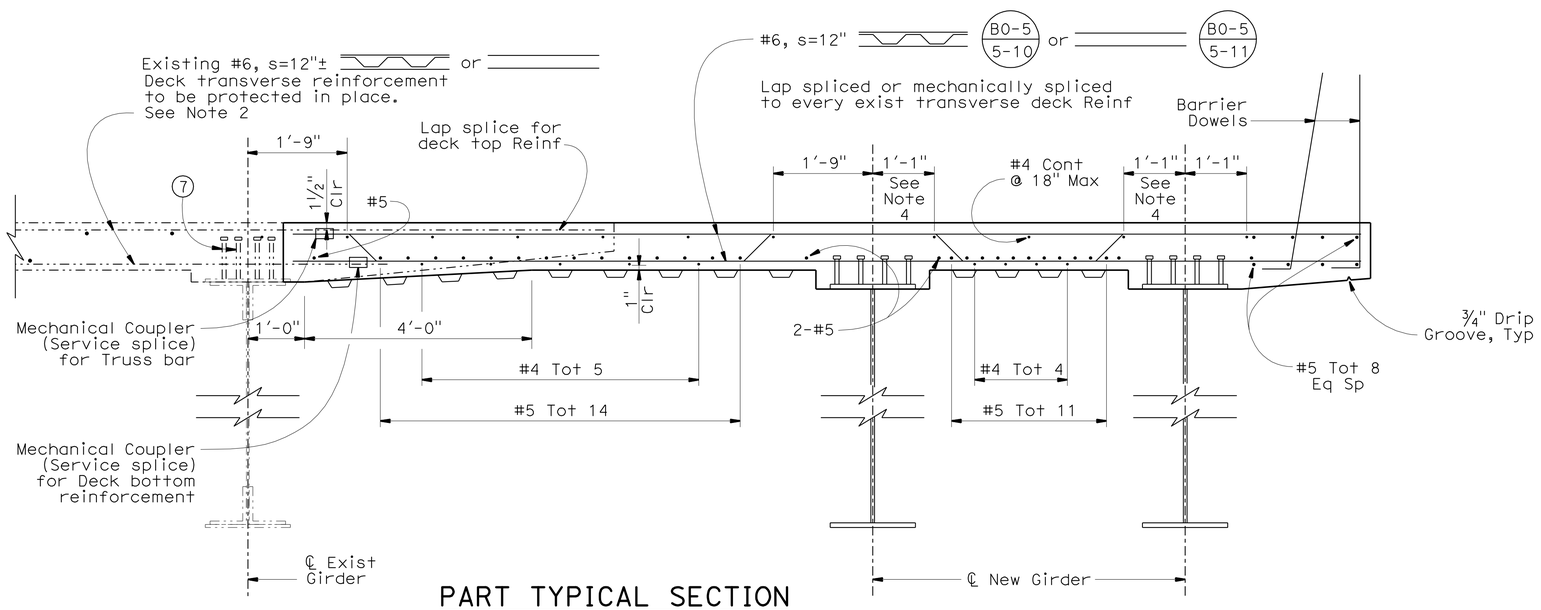

PART TYPICAL SECTION

¾" = 1'-0"

* Existing deck overlay removal not shown

NOTE:
THE CONTRACTOR SHALL VERIFY ALL CONTROLLING FIELD DIMENSIONS BEFORE ORDERING OR FABRICATING ANY MATERIAL.

NOTES:

1. See "DETAIL A" on "REMOVAL PLAN NO.3" sheet for limits of existing barrier and deck overhang removal.
2. Field bend the existing deck top reinforcement as necessary to provide 1½" deck cover as required.
3. For Girder spacing, see Girder Layout sheets.
4. 1'-1" for 5'-6" Girder spacing
   1'-9" for 10'-6" girder spacing
5. Final Deck Finish shall not be made until deck concrete for the entire span is placed.

LEGEND:

1. Concrete Barrier Type 736 (Mod)
2. Permanent Steel Deck Forms, optional
3. Match Existing Slope
4. Temporary Railing, Type K. See "ROAD PLANS"
5. Existing communication conduits to be relocated, see "ROAD PLANS"
6. Utility conduits (2-3½") see "ROAD PLANS"
7. Existing shear connectors shall not be damaged

Remove existing Barrier Type 25 and deck overhang

	BY	CHECKED
DESIGN	F. Wei	S. Barajas / J. Railey
DETAILS	P. Perez	F. Wei
QUANTITIES	F. Wei	L. Sanchez-Manzo

STATE OF CALIFORNIA
DEPARTMENT OF TRANSPORTATION

DIVISION OF ENGINEERING SERVICES
STRUCTURE DESIGN
DESIGN BRANCH 21

BRIDGE NO. 53-0828
POST MILE 17.30

LOS ANGELES RIVER BRIDGE (WIDEN)

TYPICAL SECTION

STRUCTURES DESIGN DETAIL SHEET (ENGLISH) (REV. 09-01-10)

ORIGINAL SCALE IN INCHES FOR REDUCED PLANS 0 1 2 3

UNIT: 3623
PROJECT NUMBER & PHASE: 0700020869 & 1 CONTRACT NO.: 202111

DISREGARD PRINTS BEARING EARLIER REVISION DATES

REVISION DATES 01/28/10 10/01/10 11/24/10 03/01/11

SHEET 32 OF 74

FILE => 53-0828-k-ts01.dgn

USERNAME => s124496 DATE PLOTTED => 28-JUN-2011 TIME PLOTTED => 19:37

DIST	COUNTY	ROUTE	POST MILES TOTAL PROJECT	SHEET No.	TOTAL SHEETS
07	LA	710	17.2/26.4	1329	1507

REGISTERED CIVIL ENGINEER — DATE 03/01/11

6-27-11
PLANS APPROVAL DATE

REGISTERED PROFESSIONAL ENGINEER FRANK HSIAOSHIH WEI No. C 52918 Exp. 12-31-12 CIVIL STATE OF CALIFORNIA

The State of California or its officers or agents shall not be responsible for the accuracy or completeness of electronic copies of this plan sheet.

NOTES:

1. For splice locations (optional), see "GIRDER DETAILS NO. 1" sheet.
2. Field verify and match with the existing girder stiffener plate location.
3. Field verify Cross Frame Type B location to avoid conflicts to the existing girder stiffener.

LEGEND:

- (3) Number of Intermediate Transverse Stiffener spacings, Equal spaces
- (A) Cross Frame Type Designation
- Shear Lug
- Bottom lateral at hinge and Restrainer across hinge

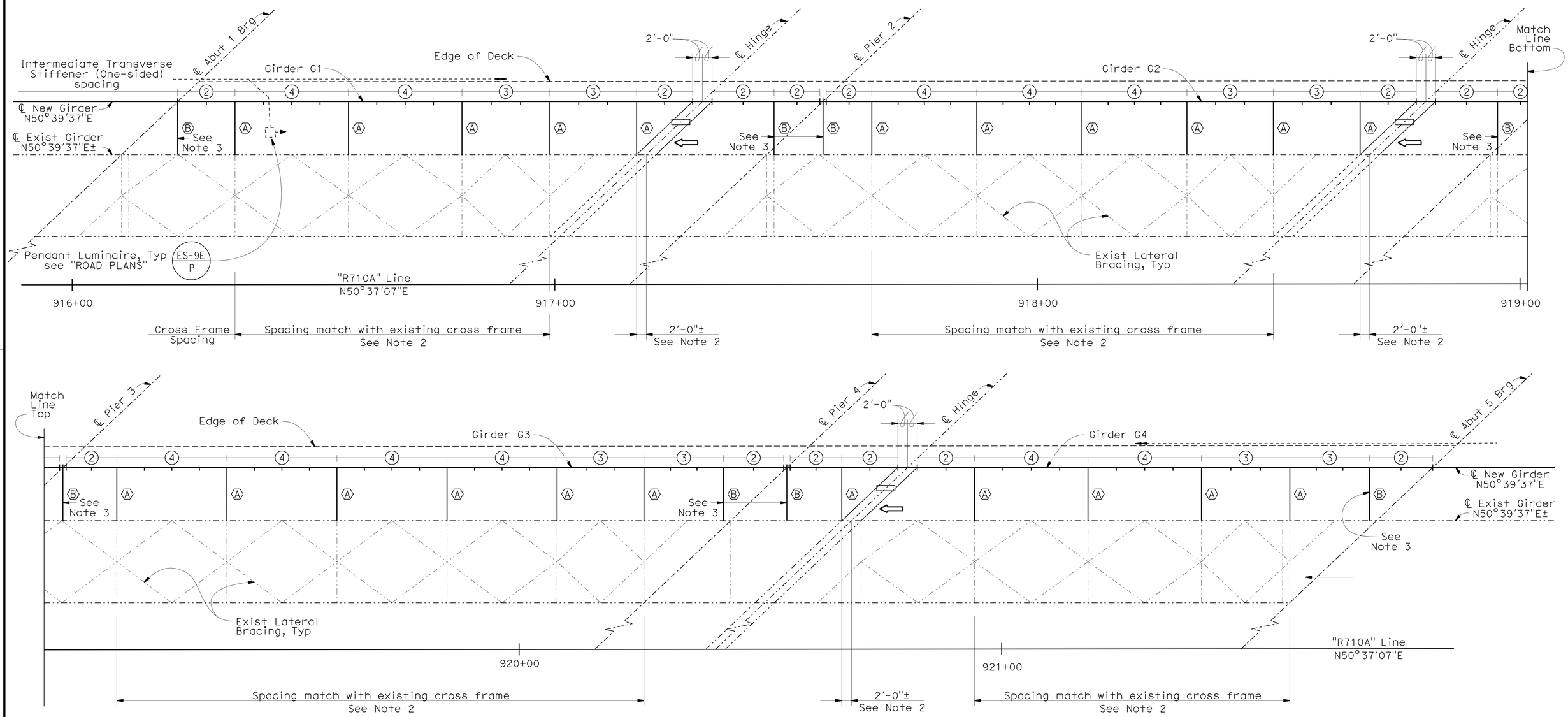

NOTE:
THE CONTRACTOR SHALL VERIFY ALL CONTROLLING FIELD DIMENSIONS BEFORE ORDERING OR FABRICATING ANY MATERIAL.

GIRDER LAYOUT - LEFT WIDENING

1" = 10'-0"

	BY	CHECKED
DESIGN	F. Wei	S. Barajas / J. Railey
DETAILS	P. Perez	F. Wei
QUANTITIES	F. Wei	L. Sanchez-Manzo

STATE OF CALIFORNIA DEPARTMENT OF TRANSPORTATION

DIVISION OF ENGINEERING SERVICES STRUCTURE DESIGN DESIGN BRANCH 21

BRIDGE NO. 53-0828
POST MILE 17.30

LOS ANGELES RIVER BRIDGE (WIDEN)

GIRDER LAYOUT NO. 1

STRUCTURES DESIGN DETAIL SHEET (ENGLISH) (REV. 09-01-10)

ORIGINAL SCALE IN INCHES FOR REDUCED PLANS 0 1 2 3

UNIT: 3623
PROJECT NUMBER & PHASE: 0700020869 & 1 CONTRACT NO.: 202111

DISREGARD PRINTS BEARING EARLIER REVISION DATES

REVISION DATES 08/23/10 10/01/10 11/24/10 03/01/11

SHEET 33 OF 74

FILE => 53-0828-1-g_1001.dgn

USERNAME => s124496 DATE PLOTTED => 28-JUN-2011 TIME PLOTTED => 19:38

DIST	COUNTY	ROUTE	POST MILES TOTAL PROJECT	SHEET No.	TOTAL SHEETS
07	LA	710	17.2/26.4	1330	1507

REGISTERED CIVIL ENGINEER — DATE 03/01/11

6-27-11
PLANS APPROVAL DATE

REGISTERED PROFESSIONAL ENGINEER FRANK HSIAOSHIH WEI No. C 52918 Exp. 12-31-12 CIVIL STATE OF CALIFORNIA

The State of California or its officers or agents shall not be responsible for the accuracy or completeness of electronic copies of this plan sheet.

NOTES:

1. For splice locations (optional), see "GIRDER DETAILS NO. 1" sheet.
2. Field verify and match with the existing girder stiffener plate location.
3. Field verify Cross Frame Type B location to avoid conflicts to the existing girder stiffener.

LEGEND:

- (3) Number of Intermediate Transverse Stiffener spacings, Equal spaces
- (A) Cross Frame Type Designation
- Shear Lug
- Bottom lateral at hinge and Restrainer across hinge

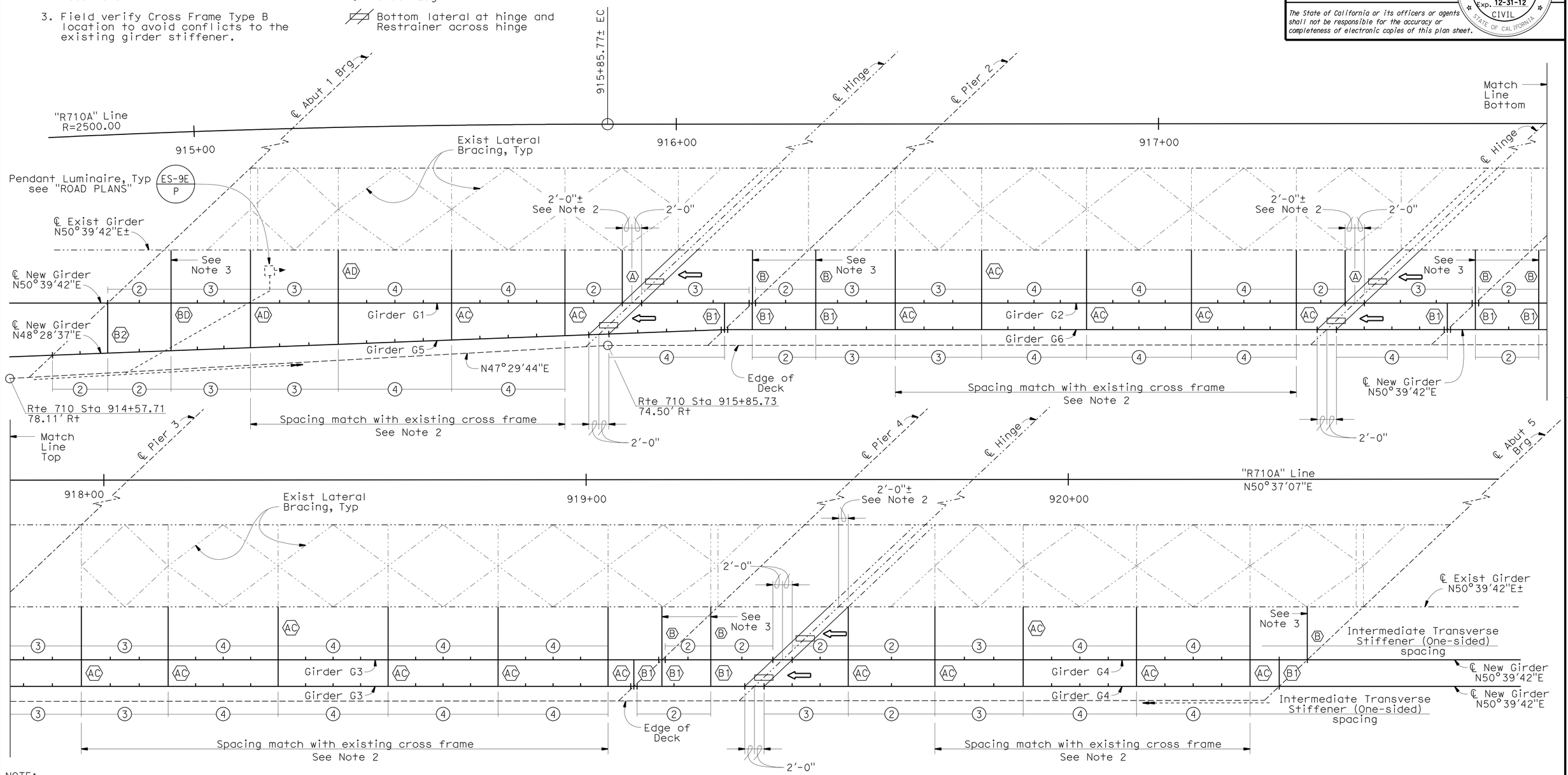

NOTE:
THE CONTRACTOR SHALL VERIFY ALL CONTROLLING FIELD DIMENSIONS BEFORE ORDERING OR FABRICATING ANY MATERIAL.

GIRDER LAYOUT - RIGHT WIDENING

1" = 10'-0"

	BY	CHECKED
DESIGN	F. Wei	S. Barajas / J. Railey
DETAILS	P. Perez	F. Wei
QUANTITIES	F. Wei	L. Sanchez-Manzo

STATE OF CALIFORNIA DEPARTMENT OF TRANSPORTATION

DIVISION OF ENGINEERING SERVICES STRUCTURE DESIGN DESIGN BRANCH 21

BRIDGE NO. 53-0828
POST MILE 17.30

LOS ANGELES RIVER BRIDGE (WIDEN)

GIRDER LAYOUT NO. 2

STRUCTURES DESIGN DETAIL SHEET (ENGLISH) (REV. 09-01-10)

ORIGINAL SCALE IN INCHES FOR REDUCED PLANS 0 1 2 3

UNIT: 3623
PROJECT NUMBER & PHASE: 0700020869 & 1 CONTRACT NO.: 202111

DISREGARD PRINTS BEARING EARLIER REVISION DATES — REVISION DATES 08/25/10 10/01/10 11/24/10 03/01/11

SHEET 34 OF 74

FILE => 53-0828-1-g_1002.dgn

USERNAME => s124496 DATE PLOTTED => 28-JUN-2011 TIME PLOTTED => 19:38

DIST	COUNTY	ROUTE	POST MILES TOTAL PROJECT	SHEET No.	TOTAL SHEETS
07	LA	710	17.2/26.4	1331	1507

REGISTERED CIVIL ENGINEER 03/01/11 DATE

6-27-11
PLANS APPROVAL DATE

REGISTERED PROFESSIONAL ENGINEER FRANK HSIAOSHIH WEI No. C 52918 Exp. 12-31-12 CIVIL STATE OF CALIFORNIA

The State of California or its officers or agents shall not be responsible for the accuracy or completeness of electronic copies of this plan sheet.

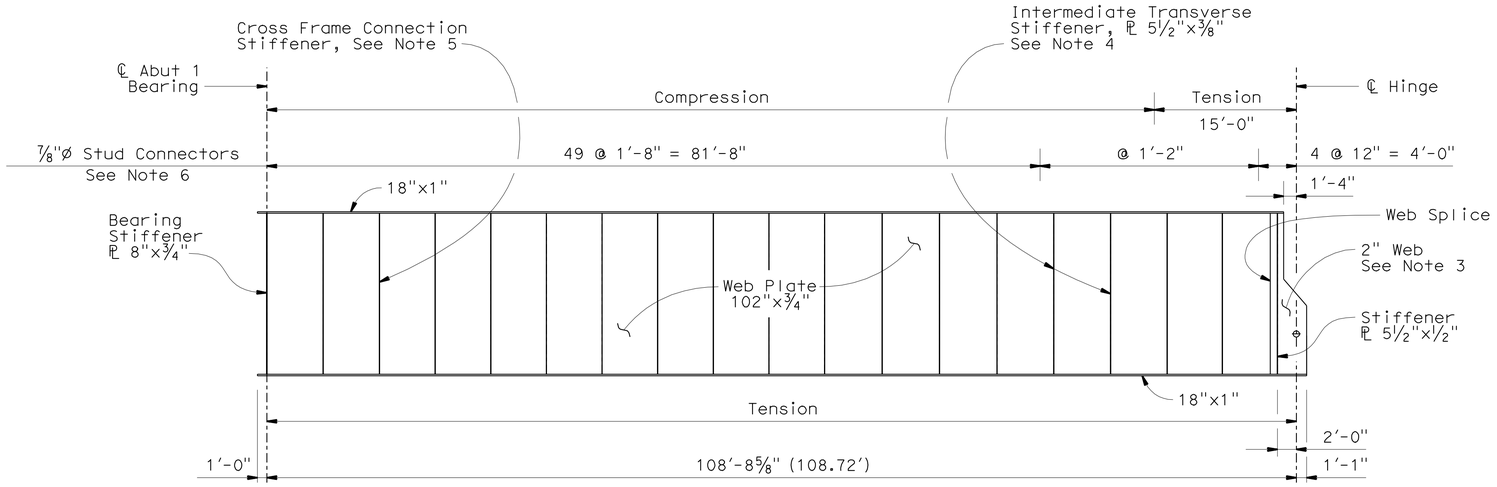

GIRDER G1

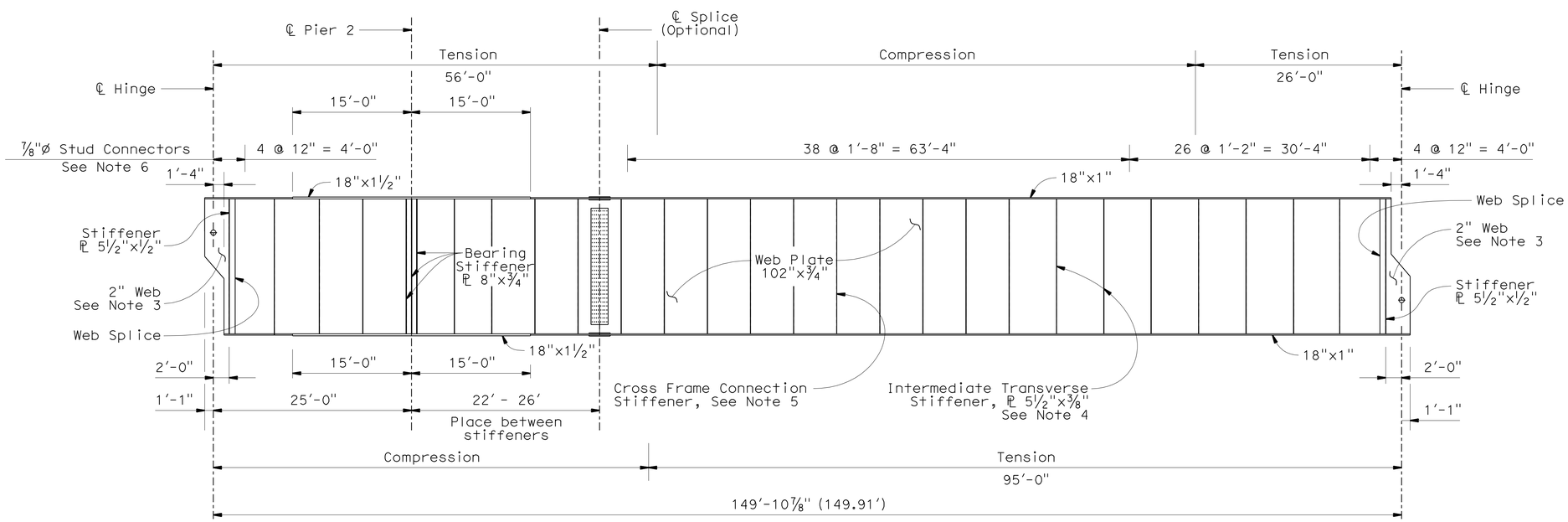

GIRDER G2

GIRDER ELEVATION

Horiz: ⅛" = 1'-0"
Vert: ¼" = 1'-0"

NOTES:

1. Primary components of Main Members are flanges, webs, splice plates and cover plates, transverse and longitudinal stiffeners, and bearing stiffeners.
2. All members not designated as either FCMs, or Main Members, are secondary members.
3. For web transition details, see "STEEL GIRDER SHOP SPLICE AND STUD CONNECTOR DETAILS" sheet.
4. Intermediate transverse stiffener spacing varies. See GIRDER LAYOUT sheets for details.
5. For Cross Frame connection stiffener spacing, see GIRDER LAYOUT sheets.
6. For Shear Stud Connector details, see "STEEL GIRDER SHOP SPLICE AND STUD CONNECTOR DETAILS" sheet.
7. Clean and Paint structural steel.

NOTE:
THE CONTRACTOR SHALL VERIFY ALL CONTROLLING FIELD DIMENSIONS BEFORE ORDERING OR FABRICATING ANY MATERIAL.

	BY	CHECKED
DESIGN	F. Wei	S. Barajas / J. Railey
DETAILS	P. Perez	F. Wei
QUANTITIES	F. Wei	L. Sanchez-Manzo

STATE OF CALIFORNIA
DEPARTMENT OF TRANSPORTATION

DIVISION OF ENGINEERING SERVICES
STRUCTURE DESIGN
DESIGN BRANCH 21

BRIDGE NO. 53-0828
POST MILE 17.30

LOS ANGELES RIVER BRIDGE (WIDEN)
GIRDER DETAILS NO. 1

STRUCTURES DESIGN DETAIL SHEET (ENGLISH) (REV. 09-01-10)

ORIGINAL SCALE IN INCHES FOR REDUCED PLANS 0 1 2 3

UNIT: 3623
PROJECT NUMBER & PHASE: 0700020869 & 1 CONTRACT NO.: 202111

DISREGARD PRINTS BEARING EARLIER REVISION DATES

REVISION DATES: 02/23/10 10/08/10 11/24/10 03/01/11

SHEET 35 OF 74

FILE => 53-0828-I-gdt01.dgn

USERNAME => s124496 DATE PLOTTED => 28-JUN-2011 TIME PLOTTED => 19:38

DIST	COUNTY	ROUTE	POST MILES TOTAL PROJECT	SHEET No.	TOTAL SHEETS
07	LA	710	17.2/26.4	1332	1507

REGISTERED CIVIL ENGINEER — DATE 03/01/11

6-27-11
PLANS APPROVAL DATE

REGISTERED PROFESSIONAL ENGINEER — FRANK HSIAOSHIH WEI — No. C 52918 — Exp. 12-31-12 — CIVIL — STATE OF CALIFORNIA

The State of California or its officers or agents shall not be responsible for the accuracy or completeness of electronic copies of this plan sheet.

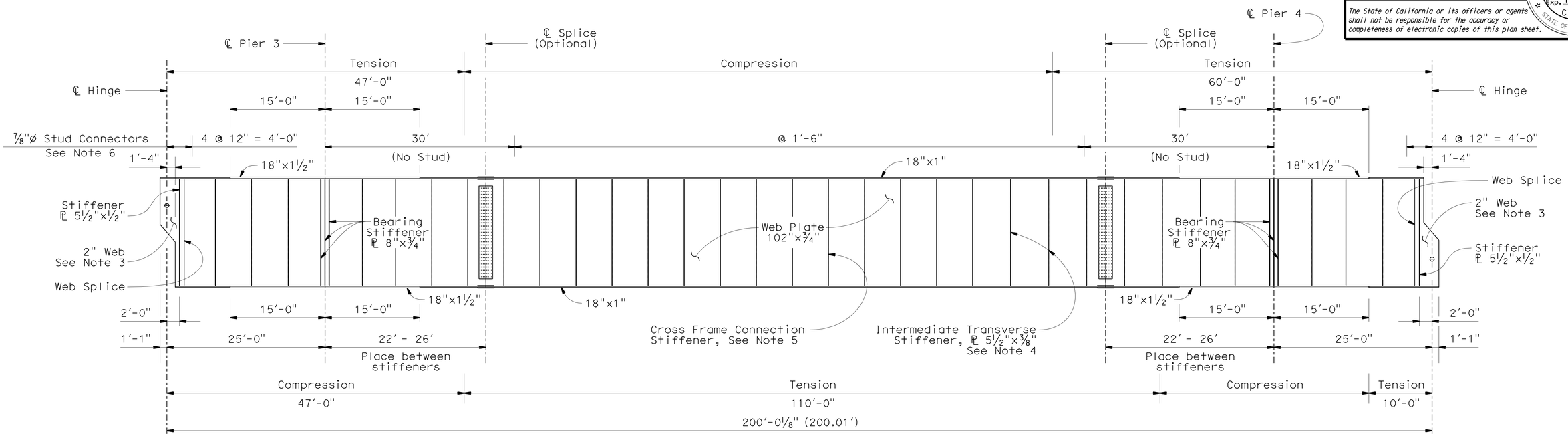

GIRDER G3

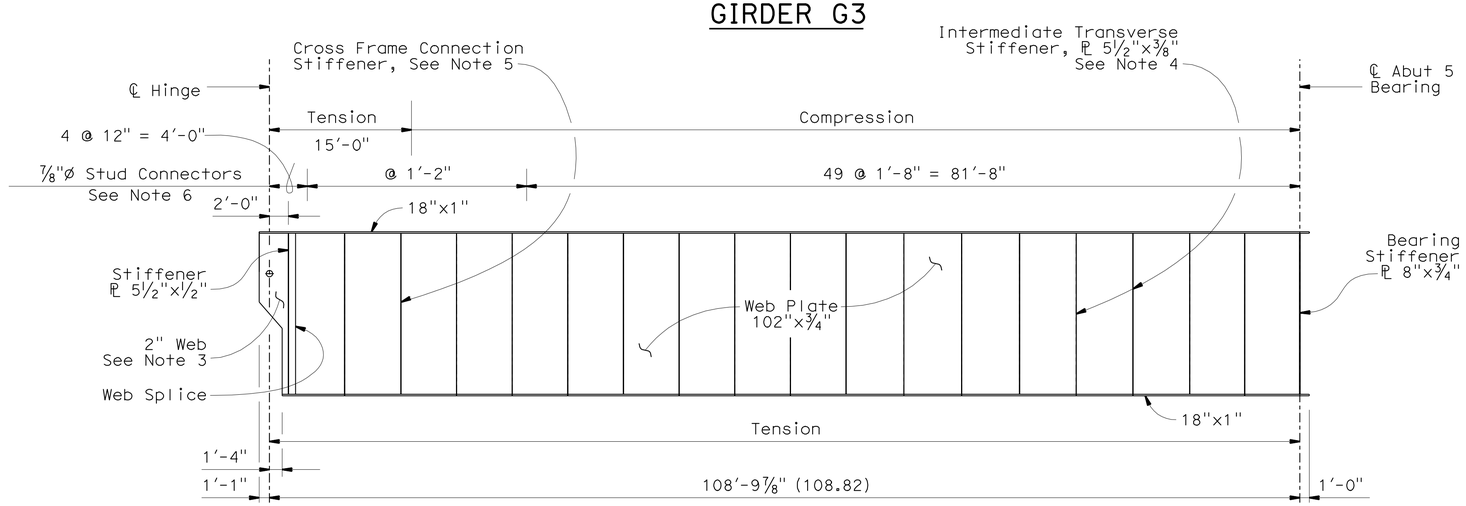

GIRDER G4

GIRDER ELEVATION

Horiz: 1/8" = 1'-0"
Vert: 1/4" = 1'-0"

NOTES:

1. Primary components of Main Members are flanges, webs, splice plates and cover plates, transverse and longitudinal stiffeners, and bearing stiffeners.
2. All members not designated as either FCMs, or Main Members, are secondary members.
3. For web transition details, see "STEEL GIRDER SHOP SPLICE AND STUD CONNECTOR DETAILS" sheet.
4. Intermediate transverse stiffener spacing varies. See GIRDER LAYOUT sheets for details.
5. For Cross Frame connection stiffener spacing, see GIRDER LAYOUT sheets.
6. For Shear Stud Connector details, see "STEEL GIRDER SHOP SPLICE AND STUD CONNECTOR DETAILS" sheet.
7. Clean and Paint structural steel.

NOTE:
THE CONTRACTOR SHALL VERIFY ALL CONTROLLING FIELD DIMENSIONS BEFORE ORDERING OR FABRICATING ANY MATERIAL.

	BY	CHECKED
DESIGN	F. Wei	S. Barajas / J. Railey
DETAILS	P. Perez	F. Wei
QUANTITIES	F. Wei	L. Sanchez-Manzo

STATE OF CALIFORNIA
DEPARTMENT OF TRANSPORTATION

DIVISION OF ENGINEERING SERVICES
STRUCTURE DESIGN
DESIGN BRANCH 21

BRIDGE NO. 53-0828
POST MILE 17.30

LOS ANGELES RIVER BRIDGE (WIDEN)
GIRDER DETAILS NO. 2

STRUCTURES DESIGN DETAIL SHEET (ENGLISH) (REV. 09-01-10)

ORIGINAL SCALE IN INCHES FOR REDUCED PLANS 0 1 2 3

UNIT: 3623
PROJECT NUMBER & PHASE: 0700020869 & 1 CONTRACT NO.: 202111

DISREGARD PRINTS BEARING EARLIER REVISION DATES

REVISION DATES: 02/24/10 10/08/10 11/24/10 03/01/11

SHEET 36 OF 74

FILE => 53-0828-1-gdt02.dgn

USERNAME => s124496 DATE PLOTTED => 28-JUN-2011 TIME PLOTTED => 19:38

DIST	COUNTY	ROUTE	POST MILES TOTAL PROJECT	SHEET No.	TOTAL SHEETS
07	LA	710	17.2/26.4	1333	1507

REGISTERED CIVIL ENGINEER 03/01/11 DATE

6-27-11
PLANS APPROVAL DATE

REGISTERED PROFESSIONAL ENGINEER FRANK HSIAOSHIH WEI No. C 52918 Exp. 12-31-12 CIVIL STATE OF CALIFORNIA

The State of California or its officers or agents shall not be responsible for the accuracy or completeness of electronic copies of this plan sheet.

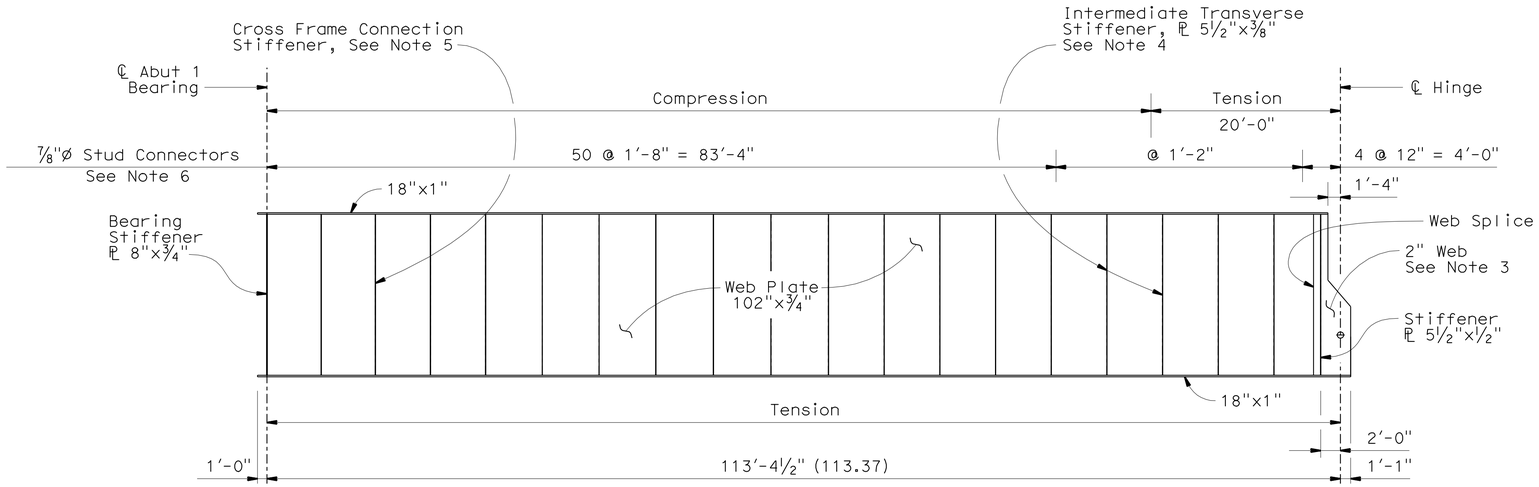

GIRDER G5

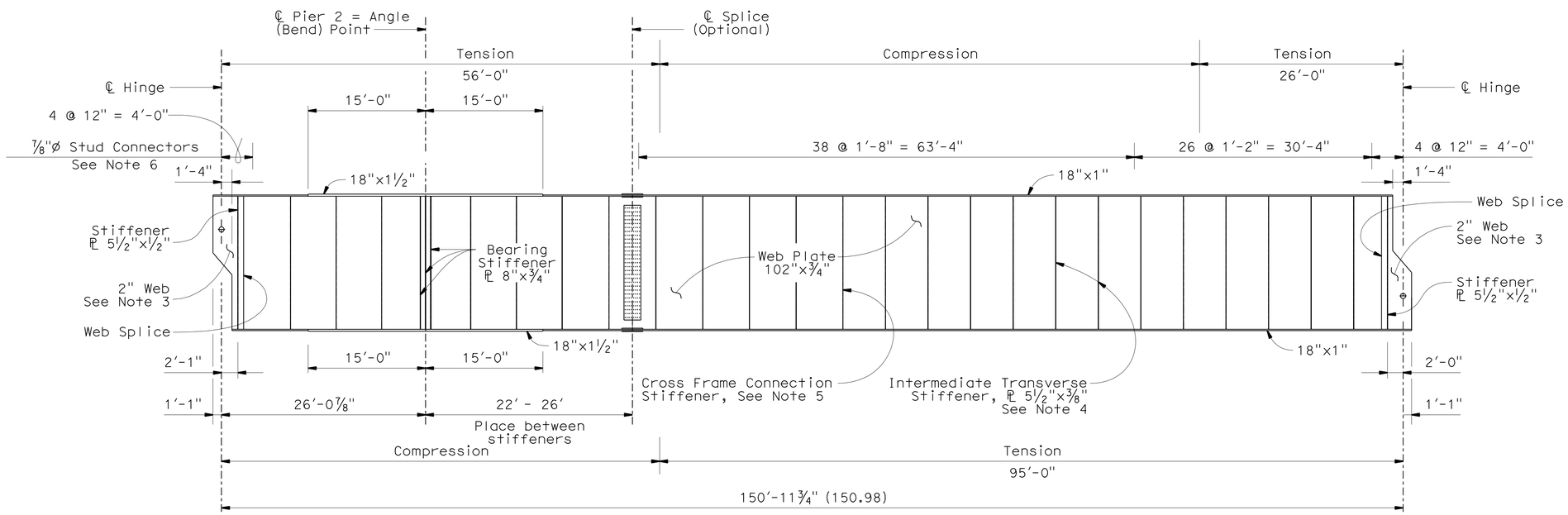

GIRDER G6

GIRDER ELEVATION

Horiz: ⅛" = 1'-0"
Vert: ¼" = 1'-0"

NOTES:

1. Primary components of Main Members are flanges, webs, splice plates and cover plates, transverse and longitudinal stiffeners, and bearing stiffeners.
2. All members not designated as either FCMs, or Main Members, are secondary members.
3. For web transition details, see "STEEL GIRDER SHOP SPLICE AND STUD CONNECTOR DETAILS" sheet.
4. Intermediate transverse stiffener spacing varies. See GIRDER LAYOUT sheets for details.
5. For Cross Frame connection stiffener spacing, see GIRDERLAYOUT sheets.
6. For Shear Stud Connector details, see "STEEL GIRDER SHOP SPLICE AND STUD CONNECTOR DETAILS" sheet.
7. Clean and Paint structural steel.

NOTE:
THE CONTRACTOR SHALL VERIFY ALL CONTROLLING FIELD DIMENSIONS BEFORE ORDERING OR FABRICATING ANY MATERIAL.

	BY	CHECKED
DESIGN	F. Wei	S. Barajas / J. Railey
DETAILS	P. Perez	F. Wei
QUANTITIES	F. Wei	L. Sanchez-Manzo

STATE OF CALIFORNIA
DEPARTMENT OF TRANSPORTATION

DIVISION OF ENGINEERING SERVICES
STRUCTURE DESIGN
DESIGN BRANCH 21

BRIDGE NO. 53-0828
POST MILE 17.30

LOS ANGELES RIVER BRIDGE (WIDEN)
GIRDER DETAILS NO. 3

STRUCTURES DESIGN DETAIL SHEET (ENGLISH) (REV. 09-01-10)

ORIGINAL SCALE IN INCHES FOR REDUCED PLANS 0 1 2 3

UNIT: 3623
PROJECT NUMBER & PHASE: 0700020869 & 1 CONTRACT NO.: 202111

DISREGARD PRINTS BEARING EARLIER REVISION DATES
REVISION DATES 02/24/10 10/04/10 11/24/10 03/01/11
SHEET 37 OF 74

FILE => 53-0828-I-gdt03.dgn

USERNAME => s124496 DATE PLOTTED => 28-JUN-2011 TIME PLOTTED => 19:38

DIST	COUNTY	ROUTE	POST MILES TOTAL PROJECT	SHEET No.	TOTAL SHEETS
07	LA	710	17.2/26.4	1334	1507

REGISTERED CIVIL ENGINEER 03/01/11 DATE

6-27-11
PLANS APPROVAL DATE

REGISTERED PROFESSIONAL ENGINEER FRANK HSIAOSHIH WEI No. C 52918 Exp. 12-31-12 CIVIL STATE OF CALIFORNIA

The State of California or its officers or agents shall not be responsible for the accuracy or completeness of electronic copies of this plan sheet.

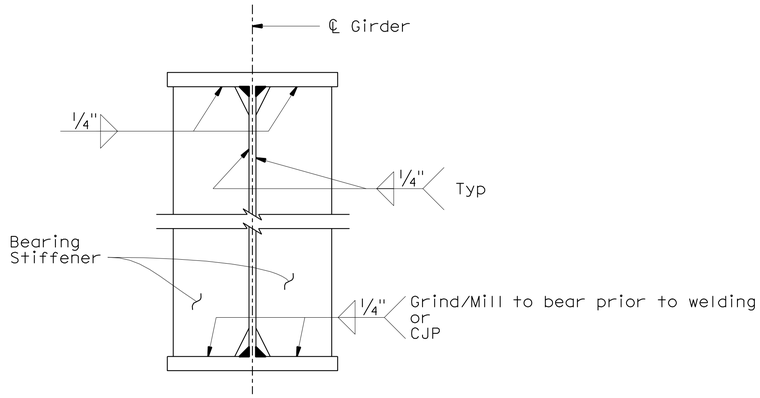

BEARING STIFFENER AT ABUTMENTS AND PIERS

1½" = 1'-0"

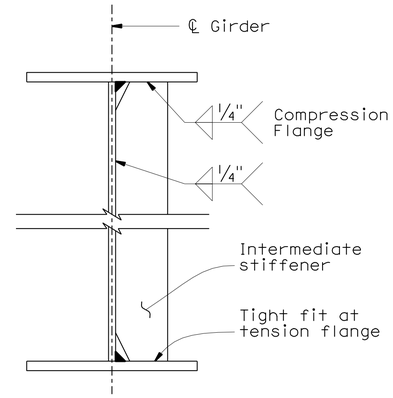

INTERMEDIATE STIFFENER

1½" = 1'-0"

(Without Cross Frame Attached)
(One-sided stiffener shown, other side similar)

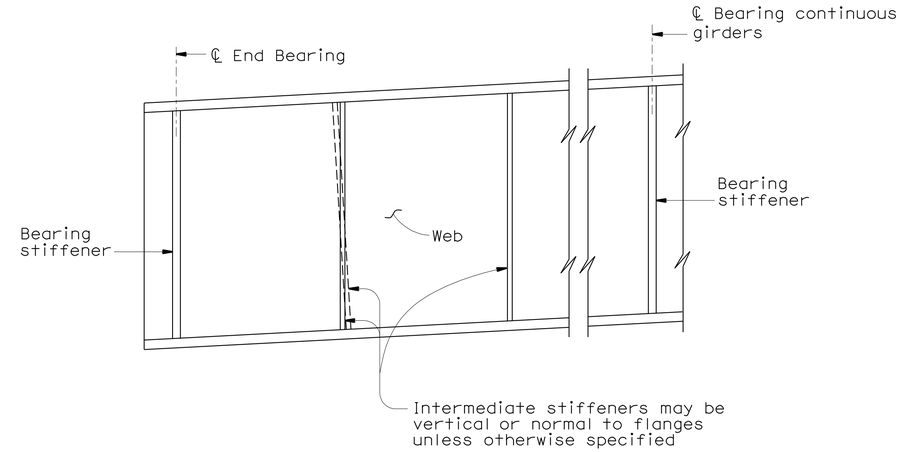

TRANSVERSE STIFFENERS

No Scale

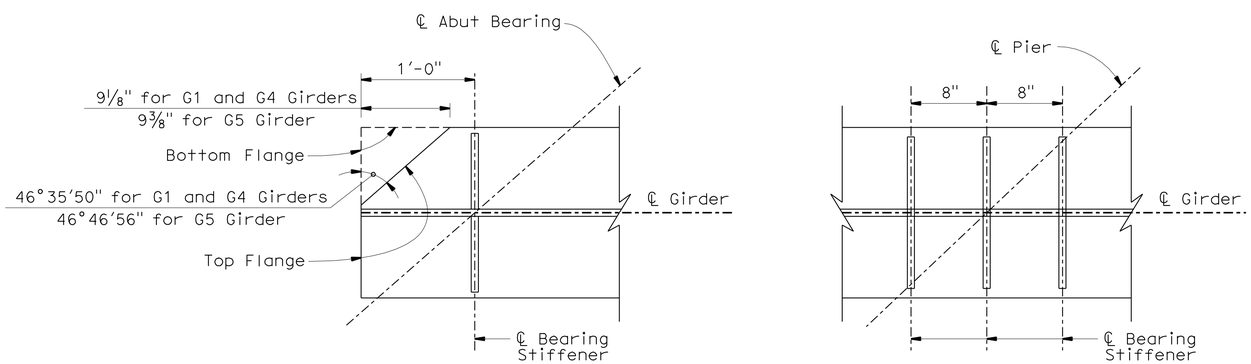

AT ABUTMENT

AT PIER

BEARING STIFFENER PLAN

1½" = 1'-0"

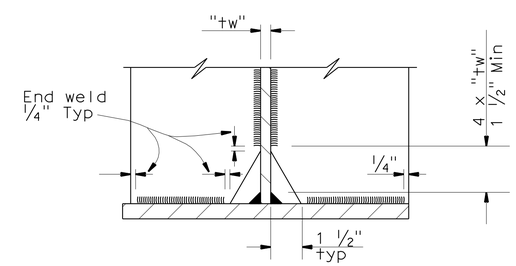

COPE AND WELDING DETAIL

No Scale

NOTE:

1. Under full dead load as shown on the camber diagram, girder ends and bearing stiffeners shall be vertical except they may be normal to grade for grades less than 2 percent.

NOTE:
THE CONTRACTOR SHALL VERIFY ALL CONTROLLING FIELD DIMENSIONS BEFORE ORDERING OR FABRICATING ANY MATERIAL.

	BY	CHECKED
DESIGN	F. Wei	S. Barajas / J. Railey
DETAILS	P. Perez	F. Wei
QUANTITIES	F. Wei	L. Sanchez-Manzo

STATE OF CALIFORNIA
DEPARTMENT OF TRANSPORTATION

DIVISION OF ENGINEERING SERVICES
STRUCTURE DESIGN
DESIGN BRANCH 21

BRIDGE NO. 53-0828
POST MILE 17.30

LOS ANGELES RIVER BRIDGE (WIDEN)
GIRDER DETAILS NO. 4

STRUCTURES DESIGN DETAIL SHEET (ENGLISH) (REV. 09-01-10)

ORIGINAL SCALE IN INCHES FOR REDUCED PLANS 0 1 2 3

UNIT: 3623
PROJECT NUMBER & PHASE: 0700020869 & 1 CONTRACT NO.: 202111

DISREGARD PRINTS BEARING EARLIER REVISION DATES

REVISION DATES 01/24/10 10/01/10 11/24/10 03/01/11

SHEET 38 OF 74

FILE => 53-0828-I-gdt04.dgn

USERNAME => s124496 DATE PLOTTED => 28-JUN-2011 TIME PLOTTED => 19:38

DIST	COUNTY	ROUTE	POST MILES TOTAL PROJECT	SHEET No.	TOTAL SHEETS
07	LA	710	17.2/26.4	1335	1507

REGISTERED CIVIL ENGINEER 03/01/11 DATE

6-27-11
PLANS APPROVAL DATE

REGISTERED PROFESSIONAL ENGINEER FRANK HSIAOSHIH WEI No. C 52918 Exp. 12-31-12 CIVIL STATE OF CALIFORNIA

The State of California or its officers or agents shall not be responsible for the accuracy or completeness of electronic copies of this plan sheet.

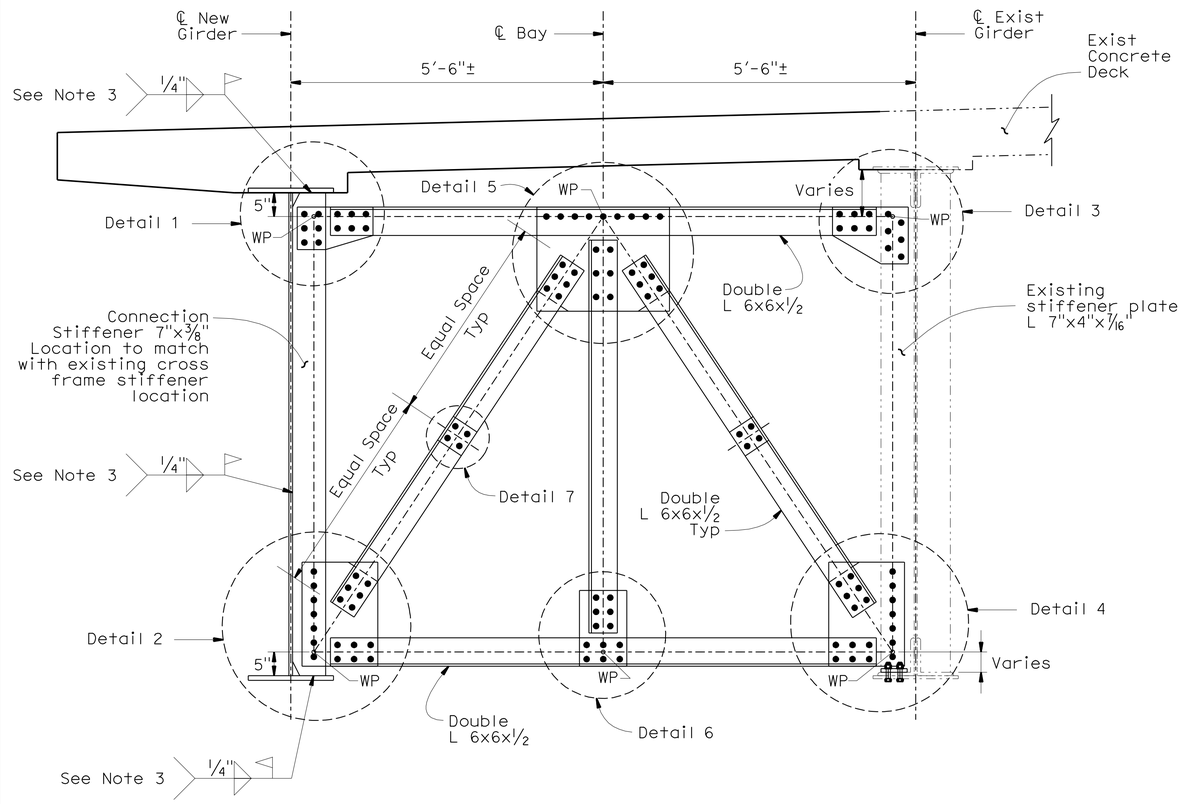

CROSS FRAME TYPE A

3/4" = 1'-0"

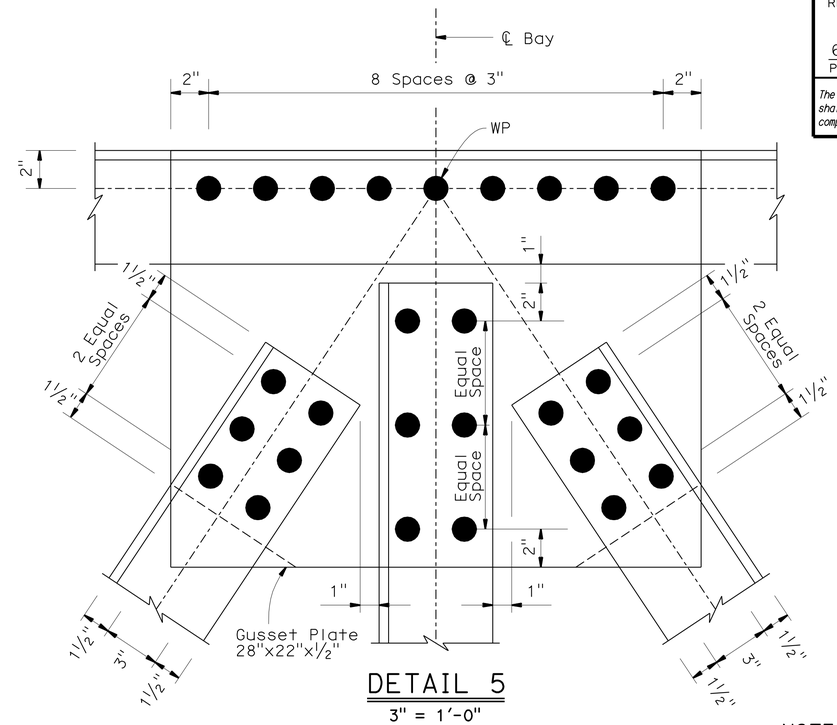

DETAIL 5

3" = 1'-0"

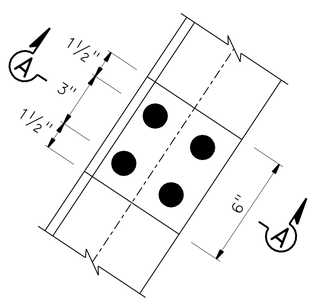

DETAIL 7

3" = 1'-0"

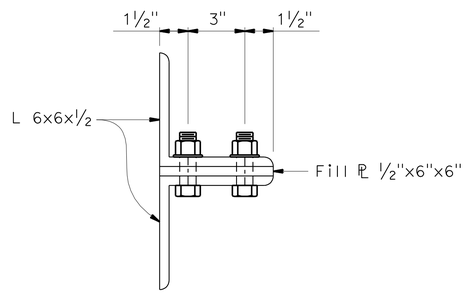

SECTION A-A

3" = 1'-0"

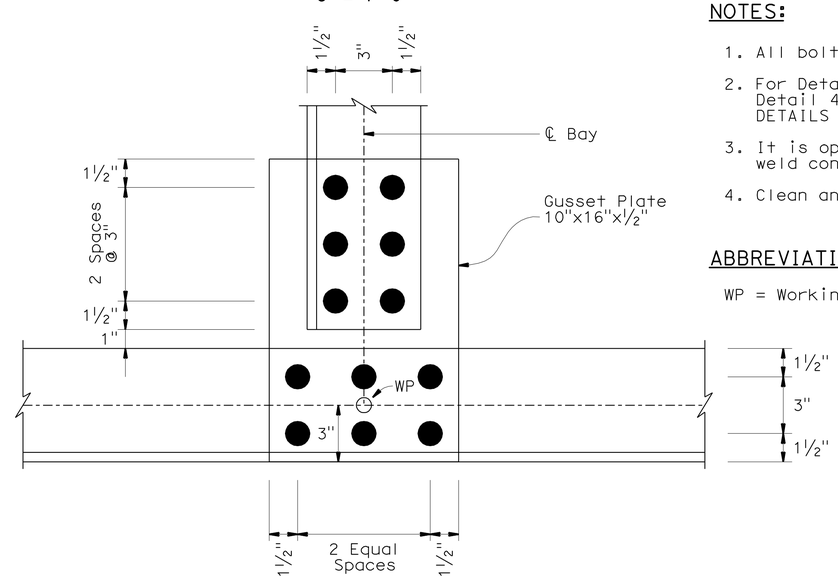

DETAIL 6

3" = 1'-0"

NOTES:

1. All bolts are A325, 7/8" Dia HS bolts.
2. For Detail 1, Detail 2, Detail 3, and Detail 4, see "GIRDER FRAMING DETAILS NO. 2" sheet.
3. It is optional for contractor to field weld connection stiffener to girder.
4. Clean and Paint structural steel.

ABBREVIATIONS:

WP = Working Point

NOTE:
THE CONTRACTOR SHALL VERIFY ALL CONTROLLING FIELD DIMENSIONS BEFORE ORDERING OR FABRICATING ANY MATERIAL.

	BY	CHECKED
DESIGN	F. Wei	S. Barajas / J. Railey
DETAILS	P. Perez	F. Wei
QUANTITIES	F. Wei	L. Sanchez-Manzo

STATE OF CALIFORNIA
DEPARTMENT OF TRANSPORTATION

DIVISION OF ENGINEERING SERVICES
STRUCTURE DESIGN
DESIGN BRANCH 21

BRIDGE NO. 53-0828
POST MILE 17.30

LOS ANGELES RIVER BRIDGE (WIDEN)
GIRDER FRAMING DETAILS NO. 1

STRUCTURES DESIGN DETAIL SHEET (ENGLISH) (REV. 09-01-10)

ORIGINAL SCALE IN INCHES FOR REDUCED PLANS 0 1 2 3

UNIT: 3623
PROJECT NUMBER & PHASE: 0700020869 & 1 CONTRACT NO.: 202111

DISREGARD PRINTS BEARING EARLIER REVISION DATES

REVISION DATES: 08/27/10 10/07/10 11/24/10 03/01/11

SHEET 39 OF 74

FILE => 53-0828-1-gfr_dt01.dgn

USERNAME => S124496 DATE PLOTTED => 28-JUN-2011 TIME PLOTTED => 19:38

DIST	COUNTY	ROUTE	POST MILES TOTAL PROJECT	SHEET No.	TOTAL SHEETS
07	LA	710	17.2/26.4	1336	1507

REGISTERED CIVIL ENGINEER — DATE 03/01/11

6-27-11
PLANS APPROVAL DATE

REGISTERED PROFESSIONAL ENGINEER — FRANK HSIAOSHIH WEI — No. C 52918 — Exp. 12-31-12 — CIVIL — STATE OF CALIFORNIA

The State of California or its officers or agents shall not be responsible for the accuracy or completeness of electronic copies of this plan sheet.

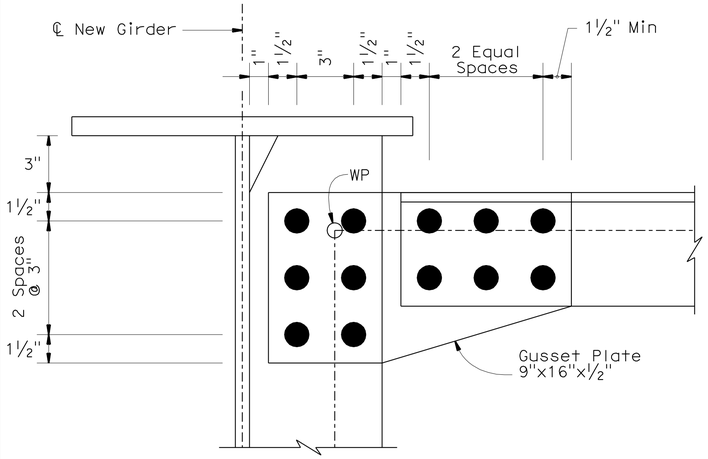

DETAIL 1
3" = 1'-0"

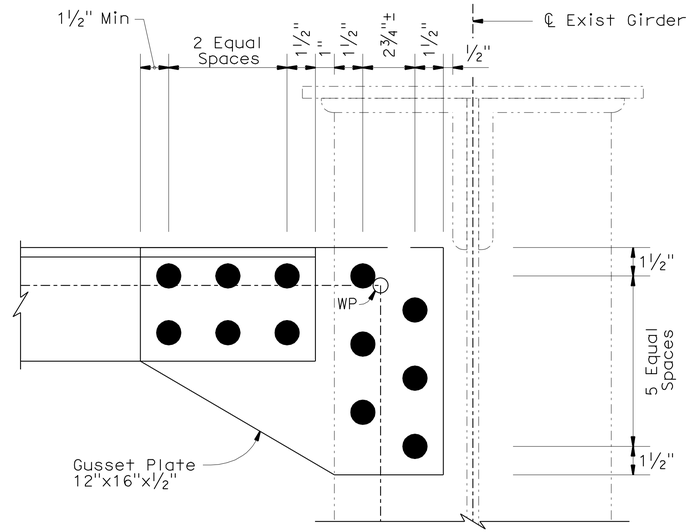

DETAIL 3
3" = 1'-0"

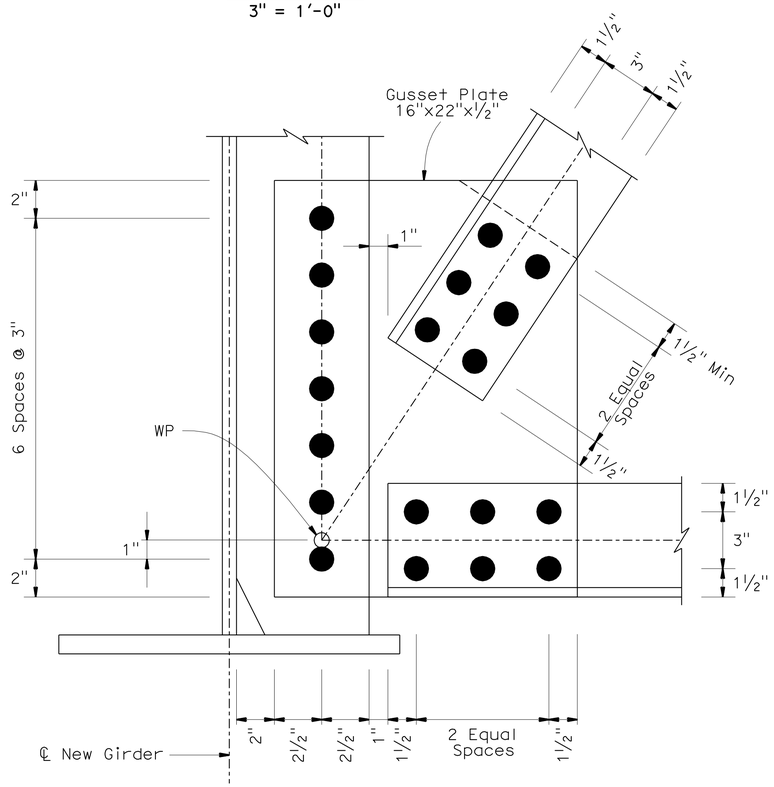

DETAIL 2
3" = 1'-0"

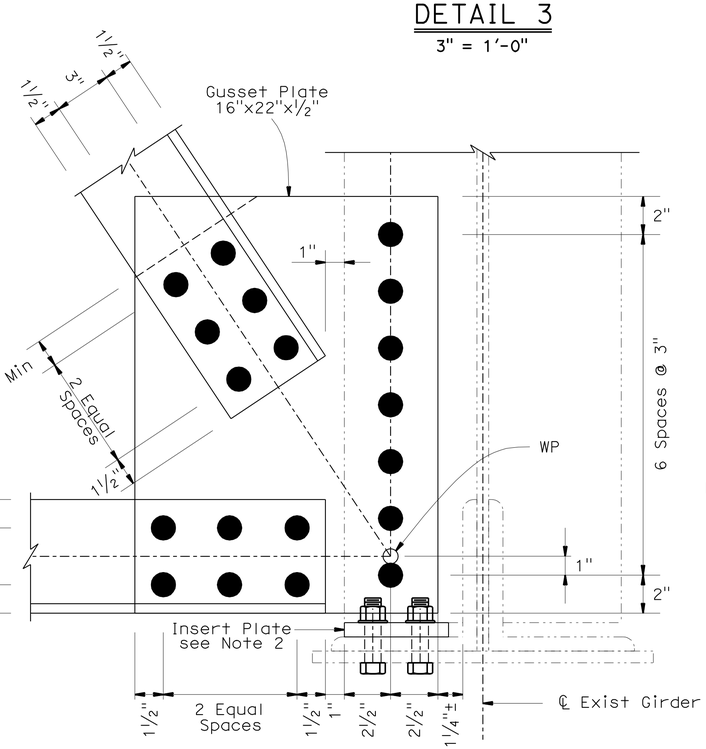

DETAIL 4
3" = 1'-0"

NOTE:
THE CONTRACTOR SHALL VERIFY ALL CONTROLLING FIELD DIMENSIONS BEFORE ORDERING OR FABRICATING ANY MATERIAL.

NOTES:

1. All bolts are A325, ⅞" Dia HS bolts.
2. Field verifiy the plate size required.
3. Clean and Paint structural steel.

ABBREVIATIONS:

WP = Working Point

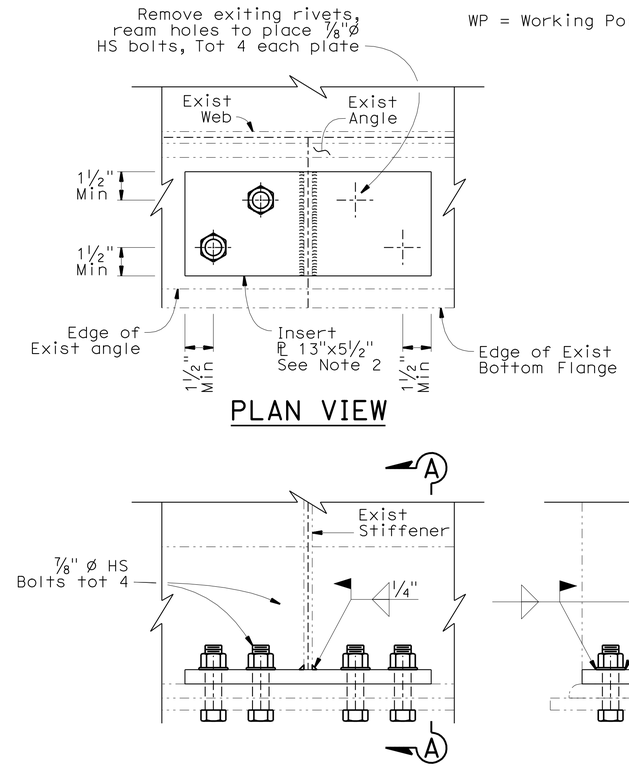

BOLTED CONNECTION DETAIL
3" = 1'-0"

	BY	CHECKED
DESIGN	F. Wei	S. Barajas / J. Railey
DETAILS	P. Perez	F. Wei
QUANTITIES	F. Wei	L. Sanchez-Manzo

STATE OF CALIFORNIA
DEPARTMENT OF TRANSPORTATION

DIVISION OF ENGINEERING SERVICES
STRUCTURE DESIGN
DESIGN BRANCH 21

BRIDGE NO. 53-0828
POST MILE 17.30

LOS ANGELES RIVER BRIDGE (WIDEN)
GIRDER FRAMING DETAILS NO. 2

STRUCTURES DESIGN DETAIL SHEET (ENGLISH) (REV. 09-01-10)

ORIGINAL SCALE IN INCHES FOR REDUCED PLANS 0 1 2 3

UNIT: 3623
PROJECT NUMBER & PHASE: 0700020869 & 1 CONTRACT NO.: 202111

DISREGARD PRINTS BEARING EARLIER REVISION DATES → 08/17/10 10/01/10 11/24/10 03/01/11

SHEET 40 OF 74

FILE => 53-0828-I-gfr_dt02.dgn

USERNAME => s124496 DATE PLOTTED => 28-JUN-2011 TIME PLOTTED => 19:38

DIST	COUNTY	ROUTE	POST MILES TOTAL PROJECT	SHEET No.	TOTAL SHEETS
07	LA	710	17.2/26.4	1337	1507

REGISTERED CIVIL ENGINEER 03/01/11 DATE

6-27-11
PLANS APPROVAL DATE

REGISTERED PROFESSIONAL ENGINEER FRANK HSIAOSHIH WEI No. C 52918 Exp. 12-31-12 CIVIL STATE OF CALIFORNIA

The State of California or its officers or agents shall not be responsible for the accuracy or completeness of electronic copies of this plan sheet.

NOTES:

1. All bolts are A325, 7/8" Dia HS bolts.
2. Remove Exist stiffener bolts which interfere with the placement of new connections.
3. For Detail 10 and Detail 11, see "GIRDER FRAMING DETAILS NO. 4" sheet.
4. It is optional for Contractor to field weld connection stiffener to girder.
5. Clean and Paint structural steel.

ABBREVIATIONS:

WP = Working Point

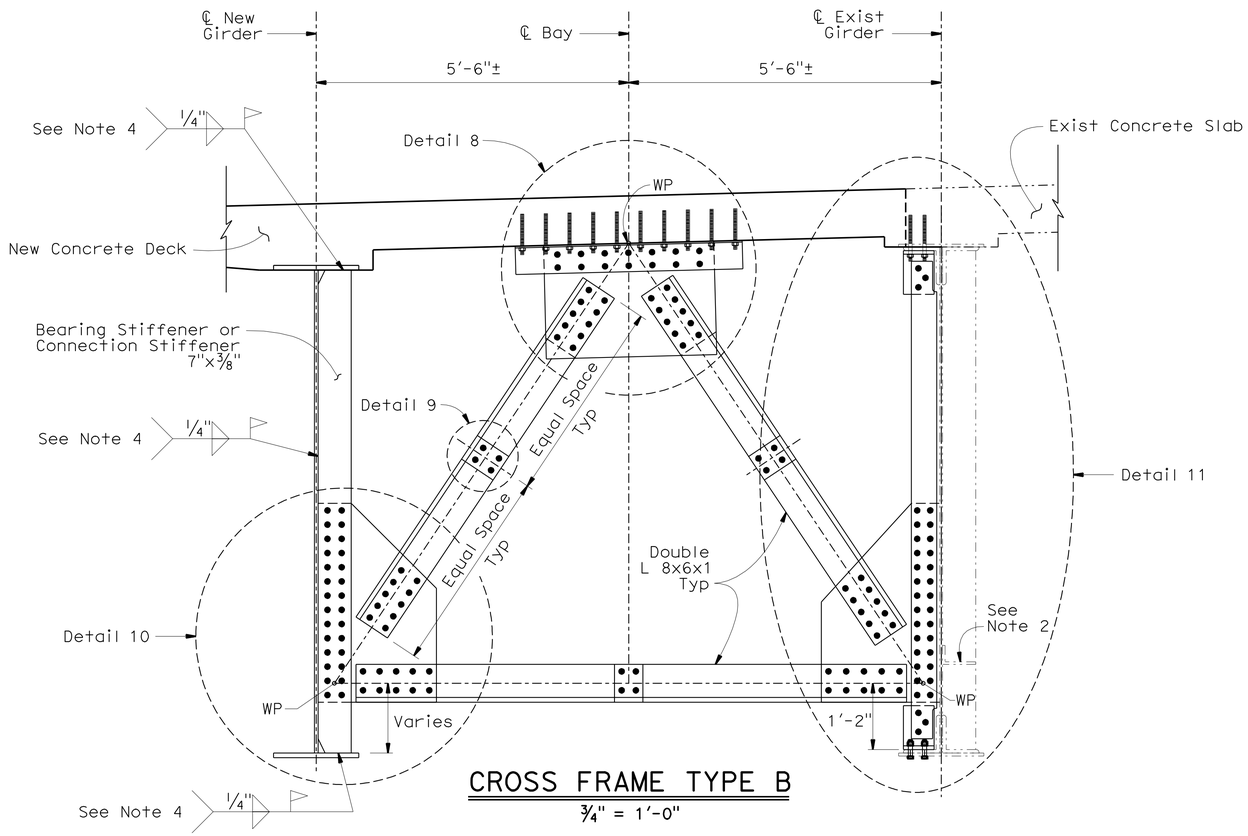

CROSS FRAME TYPE B
3/4" = 1'-0"

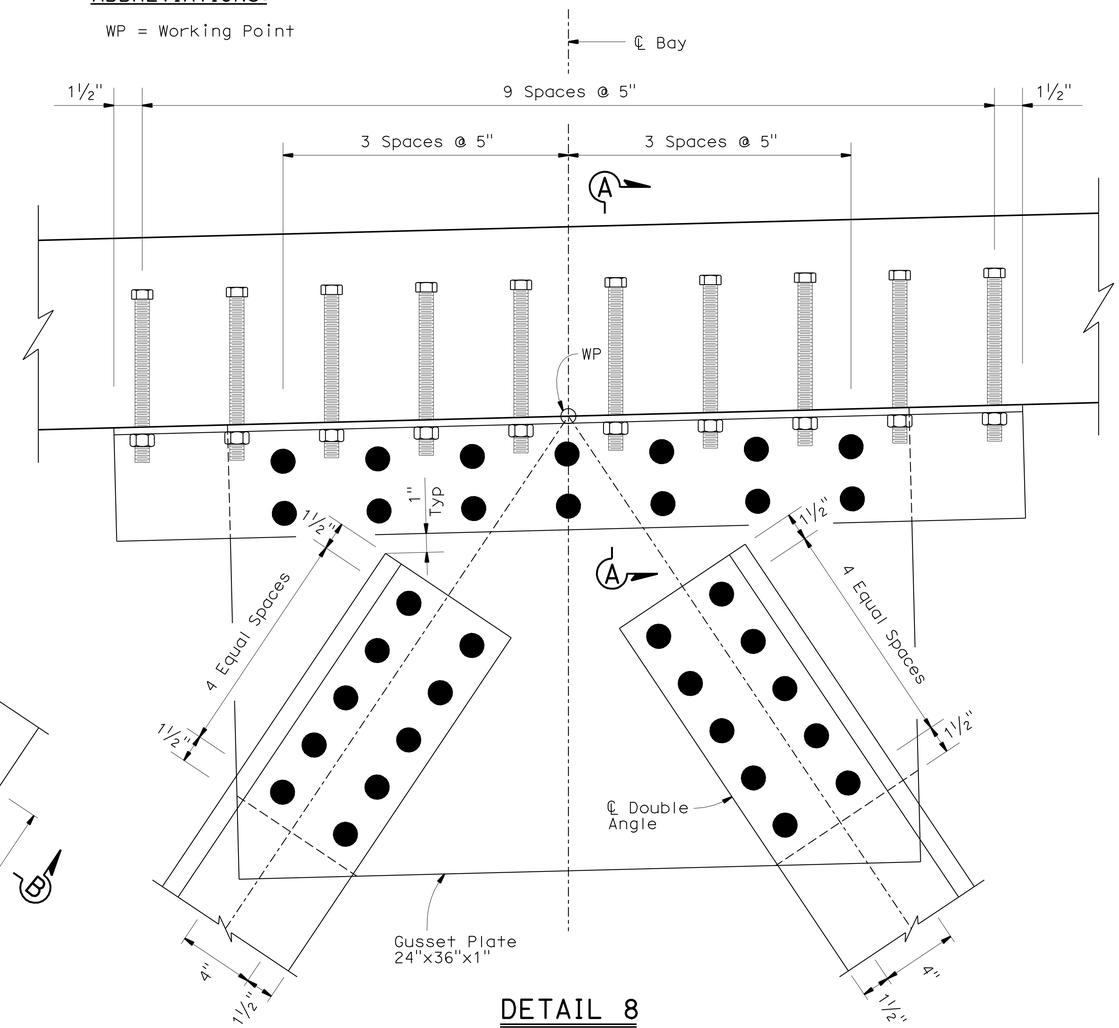

DETAIL 8
3" = 1'-0"

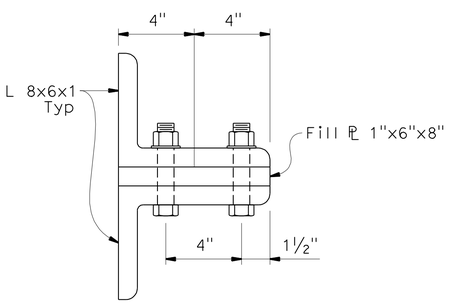

SECTION B-B
3" = 1'-0"

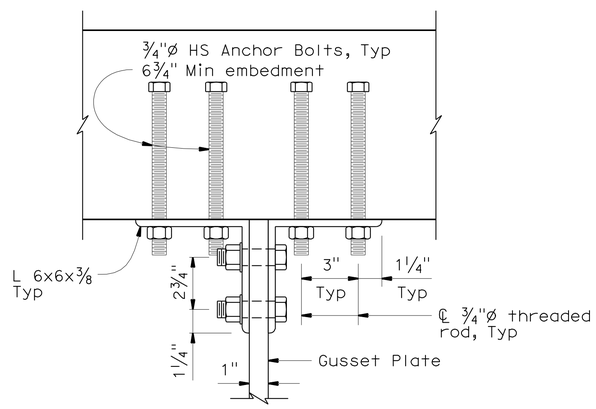

SECTION A-A
3" = 1'-0"

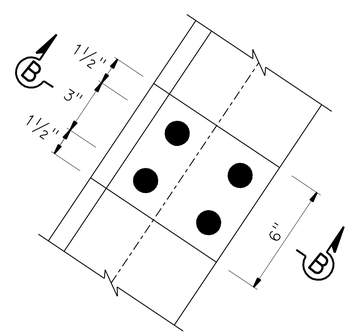

DETAIL 9
3" = 1'-0"

NOTE:
THE CONTRACTOR SHALL VERIFY ALL CONTROLLING FIELD DIMENSIONS BEFORE ORDERING OR FABRICATING ANY MATERIAL.

DESIGN	BY F. Wei	CHECKED S. Barajas / J. Railey	
DETAILS	BY P. Perez	CHECKED F. Wei	
QUANTITIES	BY F. Wei	CHECKED L. Sanchez-Manzo	

STATE OF CALIFORNIA
DEPARTMENT OF TRANSPORTATION

DIVISION OF ENGINEERING SERVICES
STRUCTURE DESIGN
DESIGN BRANCH 21

BRIDGE NO. 53-0828
POST MILE 17.30

LOS ANGELES RIVER BRIDGE (WIDEN)
GIRDER FRAMING DETAILS NO. 3

STRUCTURES DESIGN DETAIL SHEET (ENGLISH) (REV. 09-01-10)

ORIGINAL SCALE IN INCHES FOR REDUCED PLANS 0 1 2 3

UNIT: 3623
PROJECT NUMBER & PHASE: 0700020869 & 1 CONTRACT NO.: 202111

DISREGARD PRINTS BEARING EARLIER REVISION DATES

REVISION DATES: 08/27/10 10/04/10 11/24/10 03/01/11

SHEET 41 OF 74

FILE => 53-0828-I-gfr_dt03.dgn

USERNAME => s124496 DATE PLOTTED => 28-JUN-2011 TIME PLOTTED => 19:38

DIST	COUNTY	ROUTE	POST MILES TOTAL PROJECT	SHEET No.	TOTAL SHEETS
07	LA	710	17.2/26.4	1338	1507

REGISTERED CIVIL ENGINEER 03/01/11 DATE

6-27-11
PLANS APPROVAL DATE

REGISTERED PROFESSIONAL ENGINEER FRANK HSIAOSHIH WEI No. C 52918 Exp. 12-31-12 CIVIL STATE OF CALIFORNIA

The State of California or its officers or agents shall not be responsible for the accuracy or completeness of electronic copies of this plan sheet.

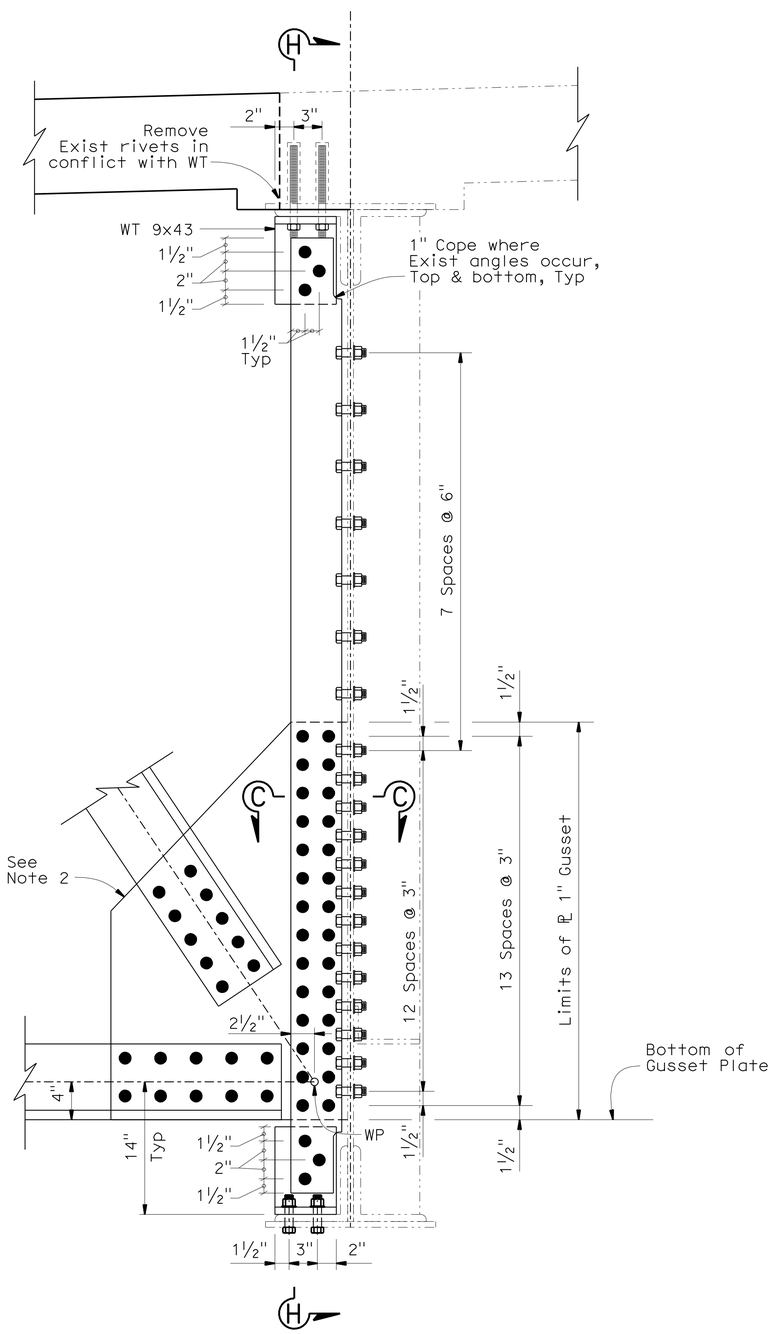

DETAIL 11

1½" = 1'-0"

NOTE:
THE CONTRACTOR SHALL VERIFY ALL CONTROLLING FIELD DIMENSIONS BEFORE ORDERING OR FABRICATING ANY MATERIAL.

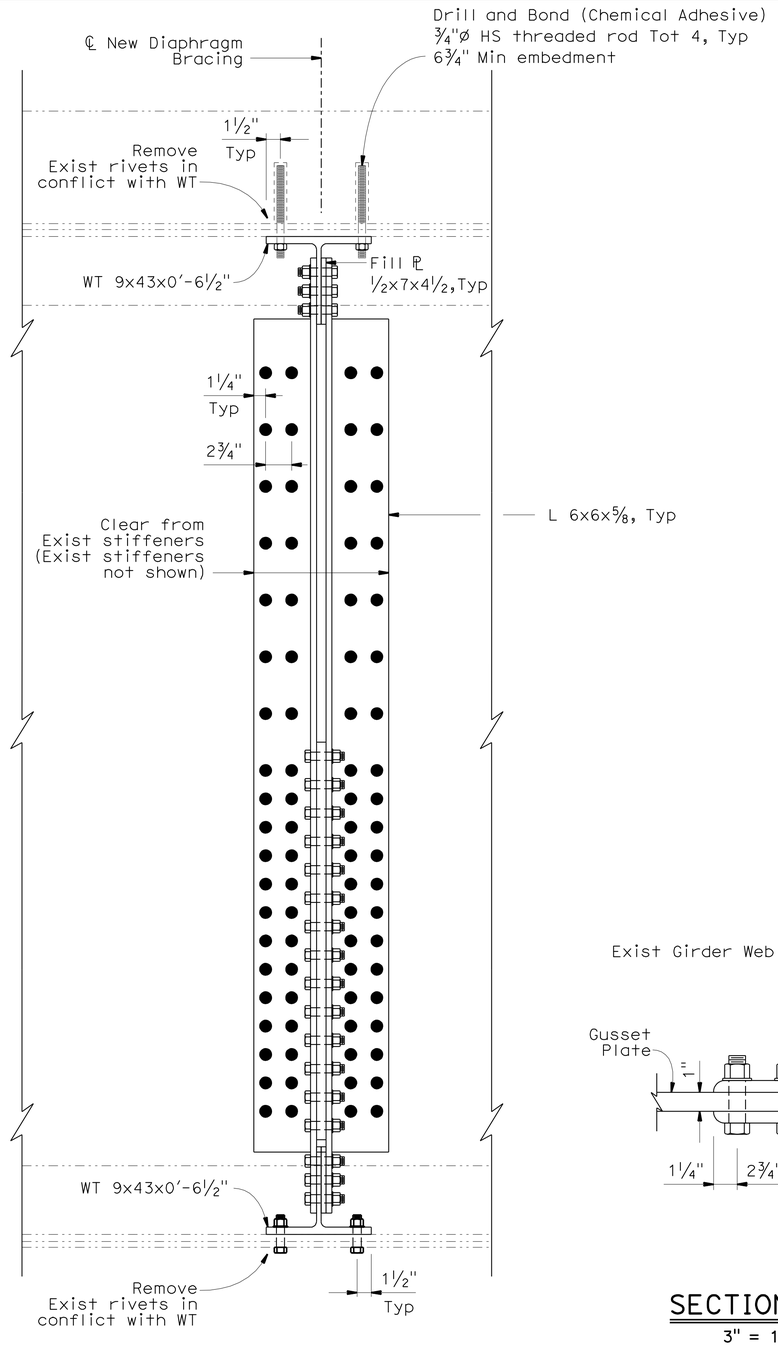

SECTION H-H

1½" = 1'-0"

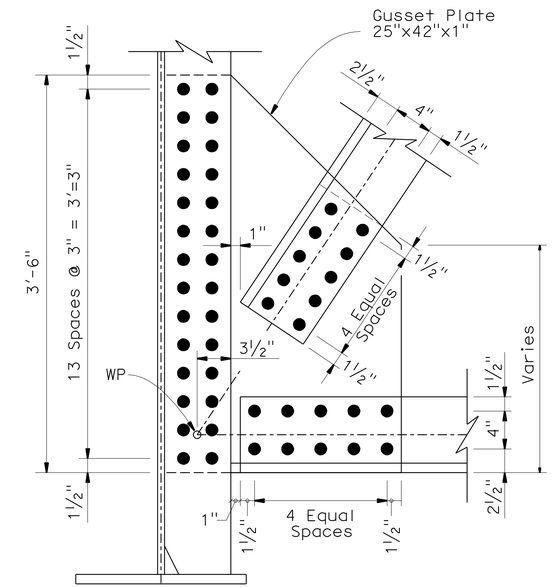

DETAIL 10

1½" = 1'-0"

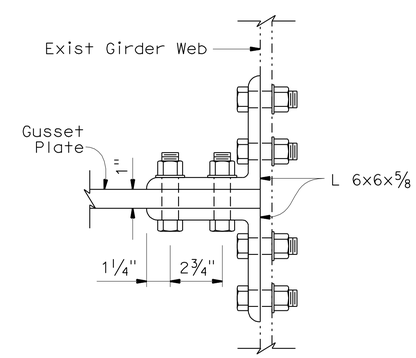

SECTION C-C

3" = 1'-0"

NOTES:

1. All bolts are A325, ⅞" Dia HS bolts.
2. For connection details information, see Detail 10.
3. Clean and Paint structural steel.

ABBREVIATIONS:

WP = Working Point

	BY	CHECKED
DESIGN	F. Wei	S. Barajas / J. Railey
DETAILS	P. Perez	F. Wei
QUANTITIES	F. Wei	L. Sanchez-Manzo

STATE OF CALIFORNIA
DEPARTMENT OF TRANSPORTATION

DIVISION OF ENGINEERING SERVICES
STRUCTURE DESIGN
DESIGN BRANCH 21

BRIDGE NO. 53-0828
POST MILE 17.30

LOS ANGELES RIVER BRIDGE (WIDEN)
GIRDER FRAMING DETAILS NO. 4

STRUCTURES DESIGN DETAIL SHEET (ENGLISH) (REV. 09-01-10)

ORIGINAL SCALE IN INCHES FOR REDUCED PLANS 0 1 2 3

UNIT: 3623
PROJECT NUMBER & PHASE: 0700020869 & 1 CONTRACT NO.: 202111

DISREGARD PRINTS BEARING EARLIER REVISION DATES

REVISION DATES 08/18/10 10/01/10 11/24/10 03/01/11

SHEET 42 OF 74

FILE => 53-0828-I-gfr_dt04.dgn

USERNAME => s124496 DATE PLOTTED => 28-JUN-2011 TIME PLOTTED => 19:38

DIST	COUNTY	ROUTE	POST MILES TOTAL PROJECT	SHEET No.	TOTAL SHEETS
07	LA	710	17.2/26.4	1339	1507

REGISTERED CIVIL ENGINEER 03/01/11 DATE

6-27-11
PLANS APPROVAL DATE

REGISTERED PROFESSIONAL ENGINEER FRANK HSIAOSHIH WEI No. C 52918 Exp. 12-31-12 CIVIL STATE OF CALIFORNIA

The State of California or its officers or agents shall not be responsible for the accuracy or completeness of electronic copies of this plan sheet.

NOTES:

1. All bolts are A325, 7/8" Dia HS bolts.
2. For Detail 1, Detail 2, Detail 3, and Detail 4, see "GIRDER FRAMING DETAILS NO. 2" sheet.
3. For Detail 5, Detail 6, and Detail 7, see "GIRDER FRAMING DETAILS NO. 1" sheet.
4. For location of Detail 13, see "GIRDER FRAMING DETAILS NO. 6" sheet.
5. It is optional for Contractor to field weld connection stiffener to girder.
6. Clean and Paint structural steel.

ABBREVIATIONS:

WP = Working Point

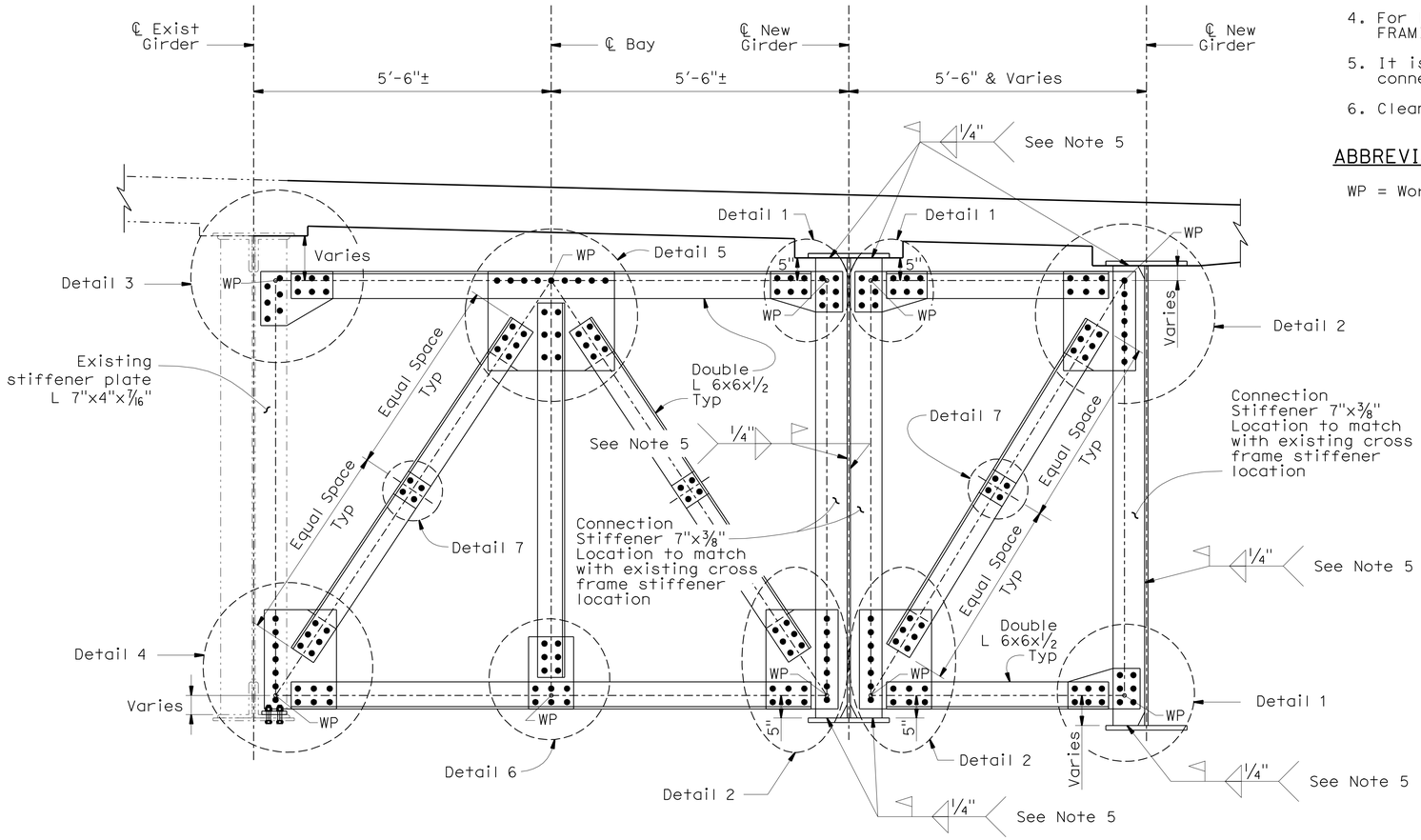

CROSS FRAME TYPE AC

3/4" = 1'-0"

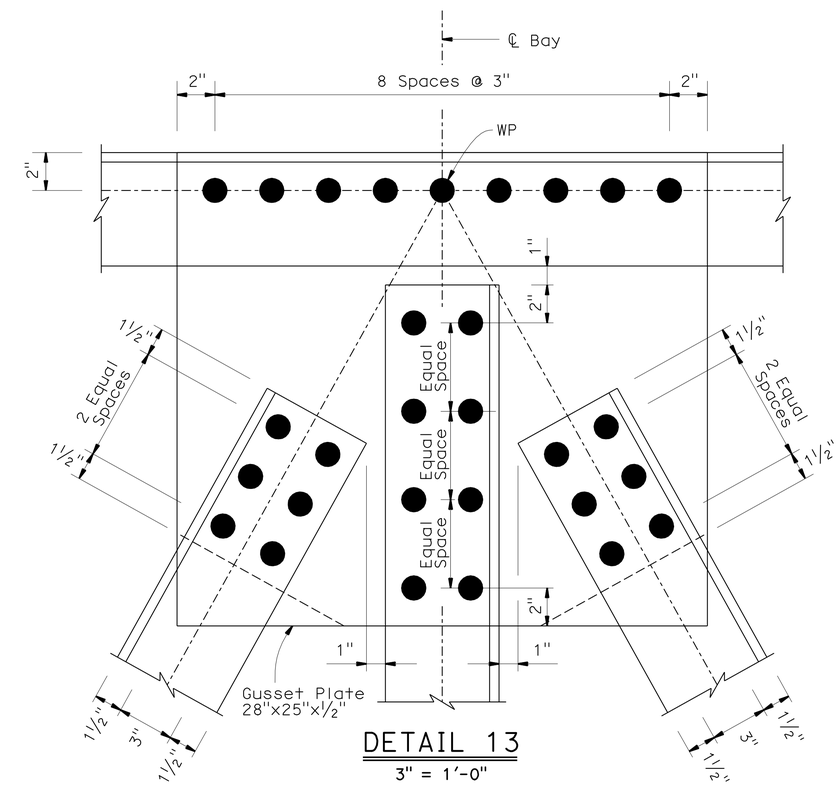

DETAIL 13

3" = 1'-0"

NOTE:
THE CONTRACTOR SHALL VERIFY ALL CONTROLLING FIELD DIMENSIONS BEFORE ORDERING OR FABRICATING ANY MATERIAL.

	BY	CHECKED
DESIGN	F. Wei	S. Barajas / J. Railey
DETAILS	P. Perez	F. Wei
QUANTITIES	F. Wei	L. Sanchez-Manzo

STATE OF CALIFORNIA
DEPARTMENT OF TRANSPORTATION

DIVISION OF ENGINEERING SERVICES
STRUCTURE DESIGN
DESIGN BRANCH 21

BRIDGE NO. 53-0828
POST MILE 17.30

LOS ANGELES RIVER BRIDGE (WIDEN)
GIRDER FRAMING DETAILS NO. 5

STRUCTURES DESIGN DETAIL SHEET (ENGLISH) (REV. 09-01-10)

ORIGINAL SCALE IN INCHES FOR REDUCED PLANS 0 1 2 3

UNIT: 3623
PROJECT NUMBER & PHASE: 0700020869 & 1 CONTRACT NO.: 202111

DISREGARD PRINTS BEARING EARLIER REVISION DATES

REVISION DATES 03/26/10 10/04/10 11/24/10 03/01/11

SHEET 43 OF 74

FILE => 53-0828-I-gfr_dt05.dgn

USERNAME => s124496 DATE PLOTTED => 28-JUN-2011 TIME PLOTTED => 19:39

DIST	COUNTY	ROUTE	POST MILES TOTAL PROJECT	SHEET No.	TOTAL SHEETS
07	LA	710	17.2/26.4	1340	1507

REGISTERED CIVIL ENGINEER 03/01/11 DATE

6-27-11
PLANS APPROVAL DATE

REGISTERED PROFESSIONAL ENGINEER FRANK HSIAOSHIH WEI No. C 52918 Exp. 12-31-12 CIVIL STATE OF CALIFORNIA

The State of California or its officers or agents shall not be responsible for the accuracy or completeness of electronic copies of this plan sheet.

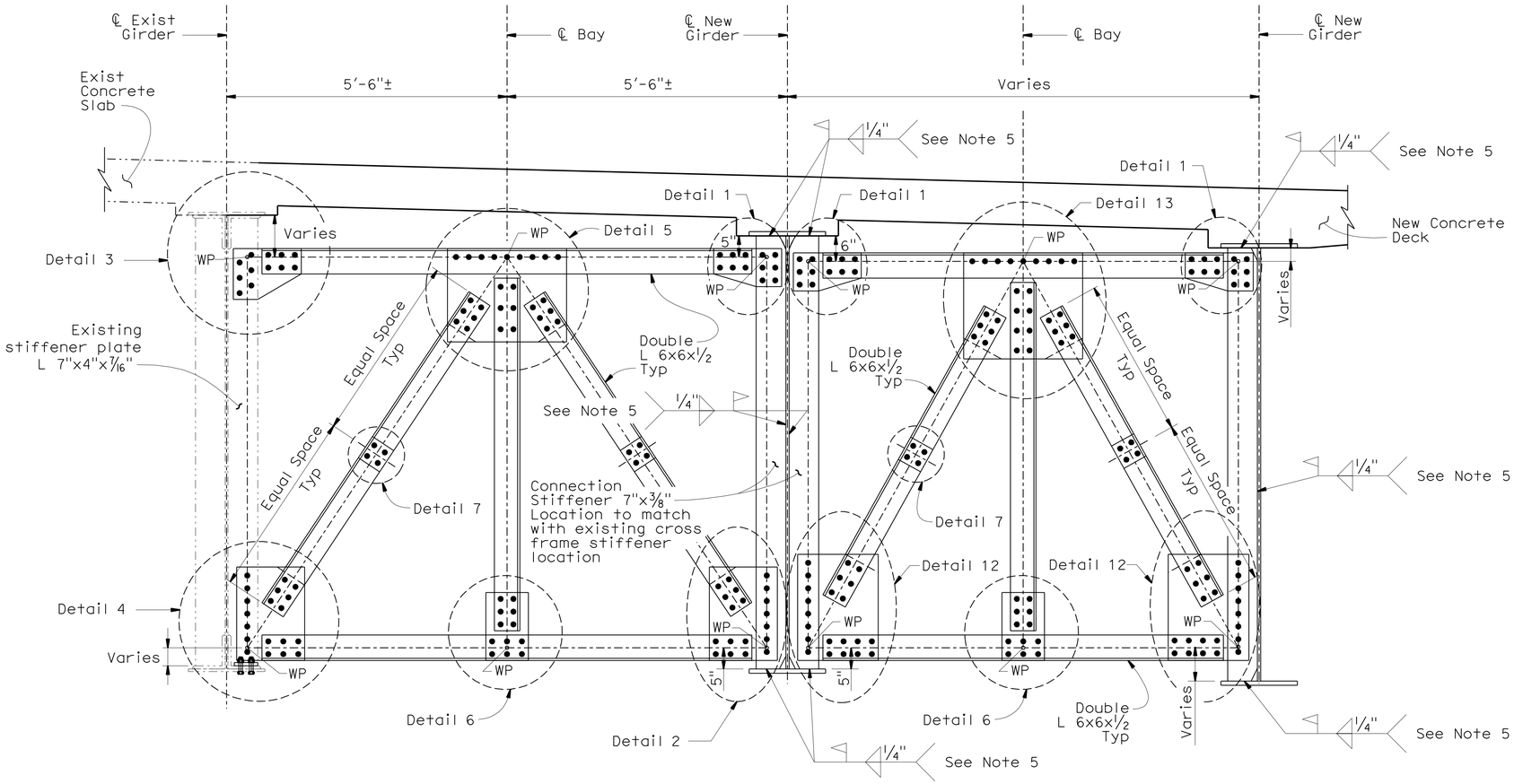

CROSS FRAME TYPE AD

3/4" = 1'-0"

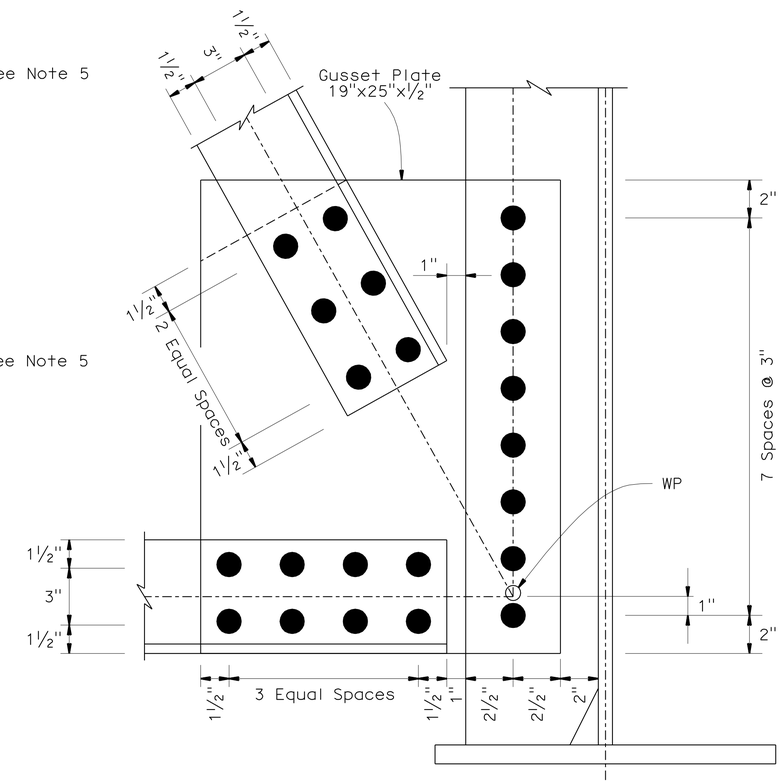

DETAIL 12

3/4" = 1'-0"

NOTES:

1. All bolts are A325, 7/8" Dia HS bolts.
2. For Detail 1, Detail 2, Detail 3, and Detail 4, see "GIRDER FRAMING DETAILS NO. 2" sheet.
3. For Detail 5, Detail 6, and Detail 7, see "GIRDER FRAMING DETAILS NO. 1" sheet.
4. For Detail 13, see "GIRDER FRAMING DETAILS NO. 5" sheet.
5. It is optional for Contractor to field weld connection stiffener to girder.
6. Clean and Paint structural steel.

ABBREVIATIONS:

WP = Working Point

NOTE:
THE CONTRACTOR SHALL VERIFY ALL CONTROLLING FIELD DIMENSIONS BEFORE ORDERING OR FABRICATING ANY MATERIAL.

	BY	CHECKED
DESIGN	F. Wei	S. Barajas / J. Railey
DETAILS	P. Perez	F. Wei
QUANTITIES	F. Wei	L. Sanchez-Manzo

STATE OF CALIFORNIA
DEPARTMENT OF TRANSPORTATION

DIVISION OF ENGINEERING SERVICES
STRUCTURE DESIGN
DESIGN BRANCH 21

BRIDGE NO. 53-0828
POST MILE 17.30

LOS ANGELES RIVER BRIDGE (WIDEN)
GIRDER FRAMING DETAILS NO. 6

STRUCTURES DESIGN DETAIL SHEET (ENGLISH) (REV. 09-01-10)

ORIGINAL SCALE IN INCHES FOR REDUCED PLANS 0 1 2 3

UNIT: 3623
PROJECT NUMBER & PHASE: 0700020869 & 1 CONTRACT NO.: 202111

DISREGARD PRINTS BEARING EARLIER REVISION DATES

REVISION DATES 08/18/10 10/04/10 11/24/10 03/01/11

SHEET 44 OF 74

FILE => 53-0828-I-gfr_dt06.dgn

USERNAME => S124496 DATE PLOTTED => 28-JUN-2011 TIME PLOTTED => 13:39

DIST	COUNTY	ROUTE	POST MILES TOTAL PROJECT	SHEET No.	TOTAL SHEETS
07	LA	710	17.2/26.4	1341	1507

REGISTERED CIVIL ENGINEER 03/01/11 DATE

6-27-11
PLANS APPROVAL DATE

REGISTERED PROFESSIONAL ENGINEER FRANK HSIAOSHIH WEI No. C 52918 Exp. 12-31-12 CIVIL STATE OF CALIFORNIA

The State of California or its officers or agents shall not be responsible for the accuracy or completeness of electronic copies of this plan sheet.

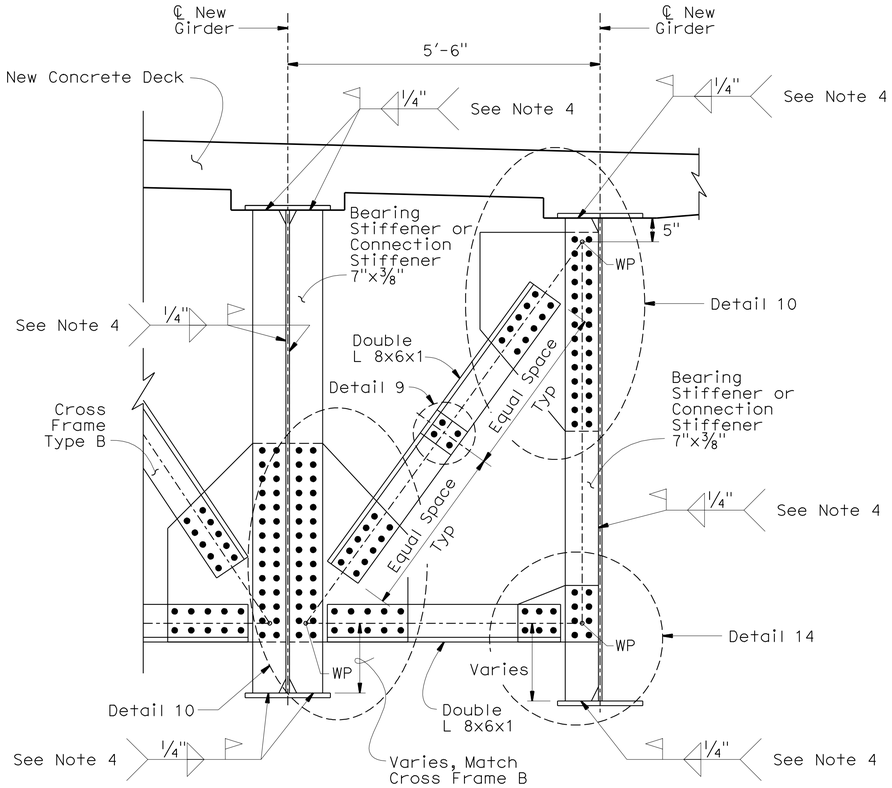

CROSS FRAME TYPE B1

3/4" = 1'-0"

NOTES:

1. All bolts are A325, 7/8" Dia HS bolts.
2. For Detail 8 and Detail 9, see "GIRDER FRAMING DETAILS NO. 3" sheet.
3. For Detail 10, see "GIRDER FRAMING DETAILS NO. 4" sheet.
4. It is optional for Contractor to field weld connection stiffener to girder.
5. Clean and Paint structural steel.

ABBREVIATIONS:

WP = Working Point

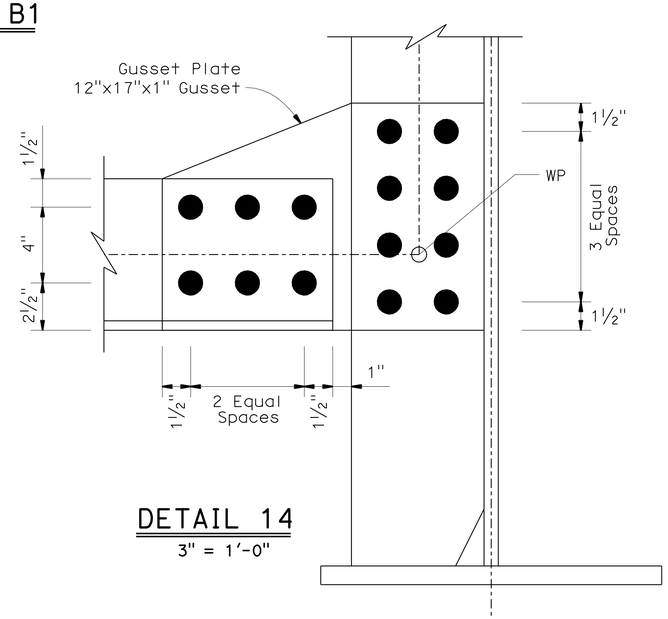

DETAIL 14

3" = 1'-0"

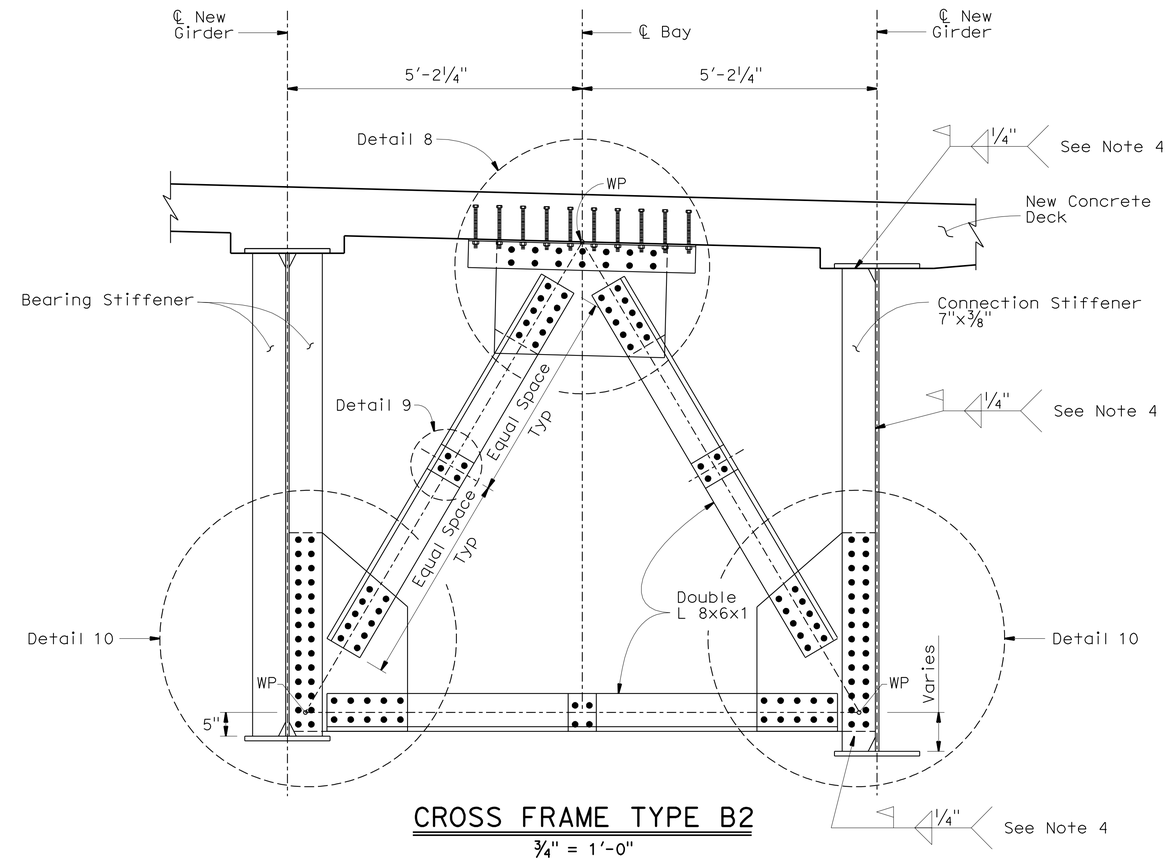

CROSS FRAME TYPE B2

3/4" = 1'-0"

NOTE:
THE CONTRACTOR SHALL VERIFY ALL CONTROLLING FIELD DIMENSIONS BEFORE ORDERING OR FABRICATING ANY MATERIAL.

	BY	CHECKED
DESIGN	F. Wei	S. Barajas / J. Railey
DETAILS	P. Perez	F. Wei
QUANTITIES	F. Wei	L. Sanchez-Manzo

STATE OF CALIFORNIA
DEPARTMENT OF TRANSPORTATION

DIVISION OF ENGINEERING SERVICES
STRUCTURE DESIGN
DESIGN BRANCH 21

BRIDGE NO. 53-0828
POST MILE 17.30

LOS ANGELES RIVER BRIDGE (WIDEN)
GIRDER FRAMING DETAILS NO. 7

STRUCTURES DESIGN DETAIL SHEET (ENGLISH) (REV. 09-01-10)

ORIGINAL SCALE IN INCHES FOR REDUCED PLANS 0 1 2 3

UNIT: 3623
PROJECT NUMBER & PHASE: 0700020869 & 1 CONTRACT NO.: 202111

DISREGARD PRINTS BEARING EARLIER REVISION DATES

REVISION DATES: 08/13/10 10/01/10 11/24/10 03/01/11

SHEET 45 OF 74

FILE => 53-0828-I-gfr_dt07.dgn

USERNAME => s124496 DATE PLOTTED => 28-JUN-2011 TIME PLOTTED => 19:39

DIST	COUNTY	ROUTE	POST MILES TOTAL PROJECT	SHEET No.	TOTAL SHEETS
07	LA	710	17.2/26.4	1342	1507

REGISTERED CIVIL ENGINEER 03/01/11 DATE

6-27-11
PLANS APPROVAL DATE

REGISTERED PROFESSIONAL ENGINEER FRANK HSIAOSHIH WEI No. C 52918 Exp. 12-31-12 CIVIL STATE OF CALIFORNIA

The State of California or its officers or agents shall not be responsible for the accuracy or completeness of electronic copies of this plan sheet.

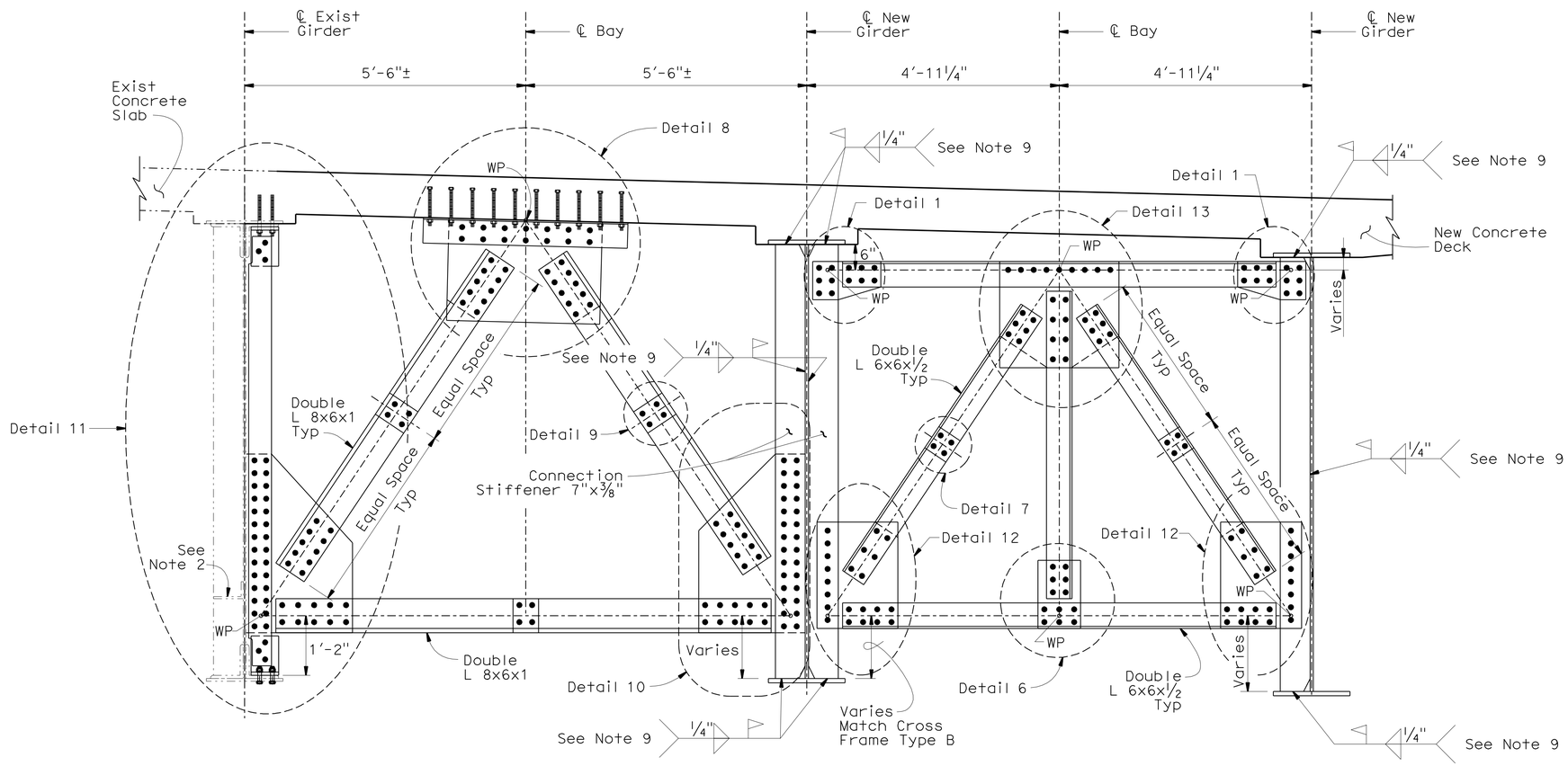

CROSS FRAME TYPE BD

¾" = 1'-0"

NOTES:

1. All bolts are A325, ⅞" Dia HS bolts.
2. Remove Exist stiffener bolts which interfere with the placement of new connections.
3. For Detail 1, see "GIRDER FRAMING DETAILS NO. 2" sheet.
4. For Detail 6 and Detail 7, see "GIRDER FRAMING DETAILS NO. 1" sheet.
5. For Detail 8 and Detail 9, see "GIRDER FRAMING DETAILS NO. 3" sheet.
6. For Detail 10 and Detail 11, see "GIRDER FRAMING DETAILS NO. 4" sheet.
7. For Detail 12, see "GIRDER FRAMING DETAILS NO. 6" sheet.
8. For Detail 13, see "GIRDER FRAMING DETAILS NO. 5" sheet.
9. It is optional for Contractor to field weld connection stiffener to girder.
10. Clean and Paint structural steel.

ABBREVIATIONS:

WP = Working Point

NOTE:
THE CONTRACTOR SHALL VERIFY ALL CONTROLLING FIELD DIMENSIONS BEFORE ORDERING OR FABRICATING ANY MATERIAL.

	BY	CHECKED
DESIGN	F. Wei	S. Barajas / J. Railey
DETAILS	P. Perez	F. Wei
QUANTITIES	F. Wei	L. Sanchez-Manzo

STATE OF CALIFORNIA
DEPARTMENT OF TRANSPORTATION

DIVISION OF ENGINEERING SERVICES
STRUCTURE DESIGN
DESIGN BRANCH 21

BRIDGE NO. 53-0828
POST MILE 17.30

LOS ANGELES RIVER BRIDGE (WIDEN)
GIRDER FRAMING DETAILS NO. 8

STRUCTURES DESIGN DETAIL SHEET (ENGLISH) (REV. 09-01-10)

ORIGINAL SCALE IN INCHES FOR REDUCED PLANS 0 1 2 3

UNIT: 3623
PROJECT NUMBER & PHASE: 0700020869 & 1 CONTRACT NO.: 202111

DISREGARD PRINTS BEARING EARLIER REVISION DATES

REVISION DATES 08/20/10 10/01/10 11/24/10 03/01/11

SHEET 46 OF 74

FILE => 53-0828-I-gfr_dt08.dgn

USERNAME => s124496 DATE PLOTTED => 28-JUN-2011 TIME PLOTTED => 19:39

DIST	COUNTY	ROUTE	POST MILES TOTAL PROJECT	SHEET No.	TOTAL SHEETS
07	LA	710	17.2/26.4	1343	1507

REGISTERED CIVIL ENGINEER — DATE 03/01/11

6-27-11
PLANS APPROVAL DATE

REGISTERED PROFESSIONAL ENGINEER — FRANK HSIAOSHIH WEI — No. C 52918 — Exp. 12-31-12 — CIVIL — STATE OF CALIFORNIA

The State of California or its officers or agents shall not be responsible for the accuracy or completeness of electronic copies of this plan sheet.

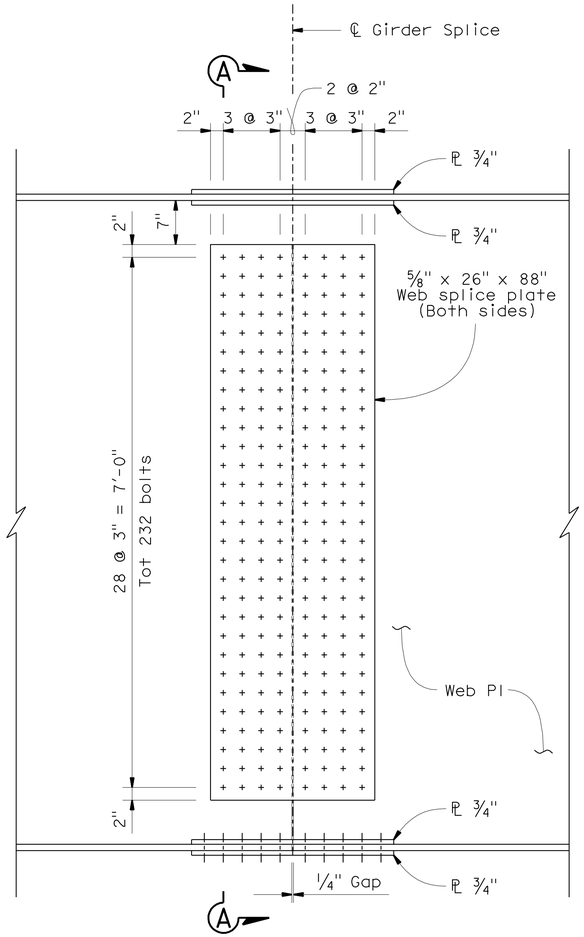

ELEVATION

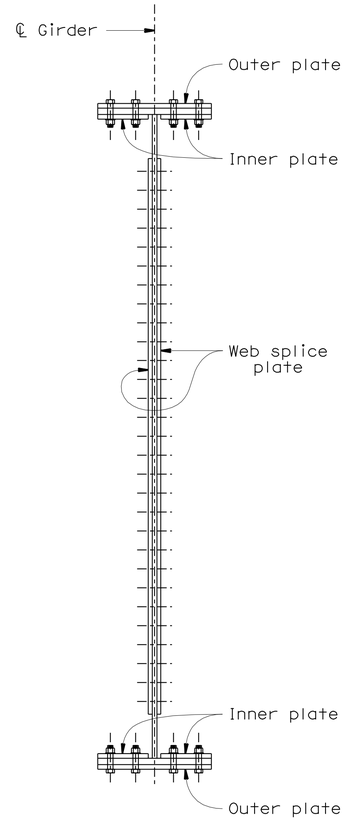

SECTION A-A

GIRDER SPLICE DETAILS

1" = 1'-0"

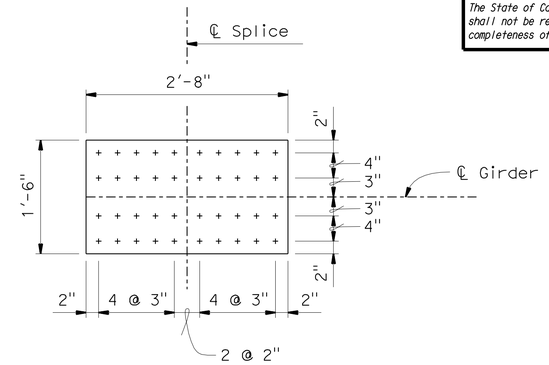

(Outer Plate)

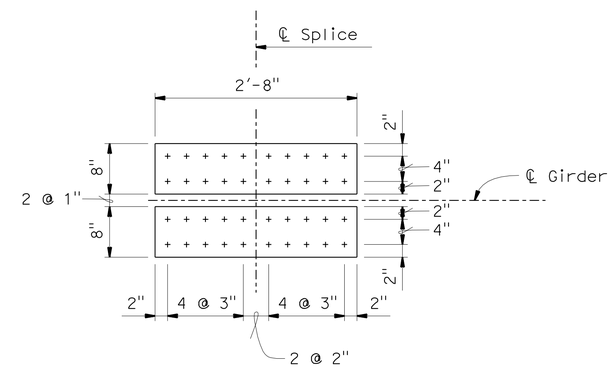

(Inner Plate)

FLANGE SPLICE PLATES

1" = 1'-0"

LEGEND:

+ Indicates A325, 7/8" Dia H.S. bolt.

NOTE:
THE CONTRACTOR SHALL VERIFY ALL CONTROLLING FIELD DIMENSIONS BEFORE ORDERING OR FABRICATING ANY MATERIAL.

	BY	CHECKED
DESIGN	F. Wei	S. Barajas / J. Railey
DETAILS	P. Perez	F. Wei
QUANTITIES	F. Wei	L. Sanchez-Manzo

STATE OF CALIFORNIA
DEPARTMENT OF TRANSPORTATION

DIVISION OF ENGINEERING SERVICES
STRUCTURE DESIGN
DESIGN BRANCH 21

BRIDGE NO. 53-0828
POST MILE 17.30

LOS ANGELES RIVER BRIDGE (WIDEN)
BOLTED GIRDER SPLICE DETAILS

STRUCTURES DESIGN DETAIL SHEET (ENGLISH) (REV. 09-01-10)

ORIGINAL SCALE IN INCHES FOR REDUCED PLANS 0 1 2 3

UNIT: 3623
PROJECT NUMBER & PHASE: 0700020869 & 1 CONTRACT NO.: 202111

DISREGARD PRINTS BEARING EARLIER REVISION DATES

REVISION DATES: 07/31/09 10/01/10 11/01/10 03/01/11

SHEET 47 OF 74

FILE => 53-0828-I-gsp_dt.dgn

USERNAME => s124496 DATE PLOTTED => 28-JUN-2011 TIME PLOTTED => 19:39

DIST	COUNTY	ROUTE	POST MILES TOTAL PROJECT	SHEET No.	TOTAL SHEETS
07	LA	710	17.2/26.4	1344	1507

REGISTERED CIVIL ENGINEER 03/01/11 DATE

6-27-11
PLANS APPROVAL DATE

The State of California or its officers or agents shall not be responsible for the accuracy or completeness of electronic copies of this plan sheet.

REGISTERED PROFESSIONAL ENGINEER FRANK HSIAOSHIH WEI No. C 52918 Exp. 12-31-12 CIVIL STATE OF CALIFORNIA

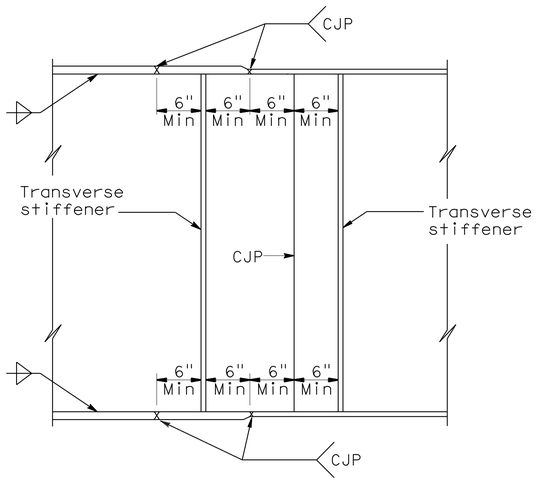

GIRDER SHOP SPLICE

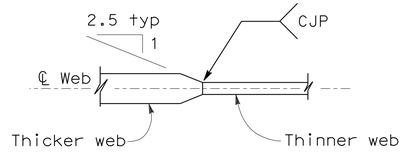

WEB THICKNESS

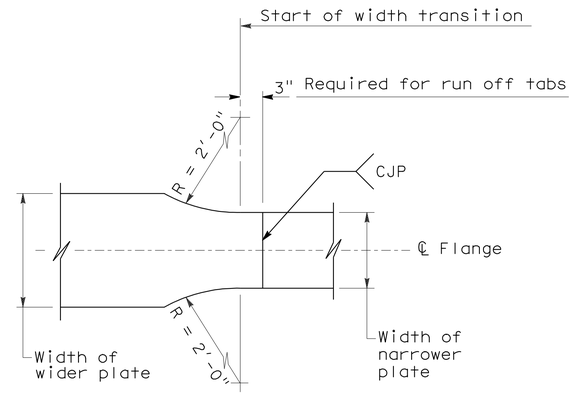

FLANGE WIDTH

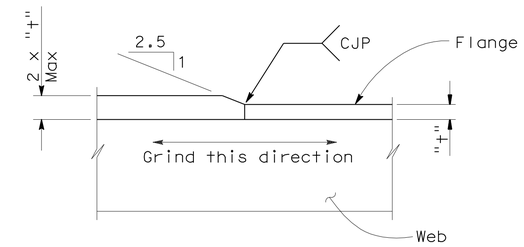

FLANGE THICKNESS

TRANSITION DETAILS

NOTES:

1. Alternative girder splices may be permitted subject to approval by the Engineer.

2. Web splices:
   Grind all weld surfaces flush on the exterior face of exterior girders.

3. Flange splices:
   Grind all weld surfaces flush on tension flanges.
   Grind all weld surfaces flush on compression flanges when required for non-destructive testing (NDT).
   Grind all exterior weld surfaces flush on all bottom compression flanges.

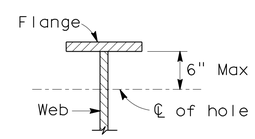

1" Max diameter hole at 4' ± Min spacing to be used for falsework support when specified by the Contractor. Contractor to determine location, size and spacing.

2" Max diameter hole to be drilled where lighting conduit passes through girder web. For location and size of hole see "Road Plans".

HOLES FOR CONDUIT AND FALSEWORK

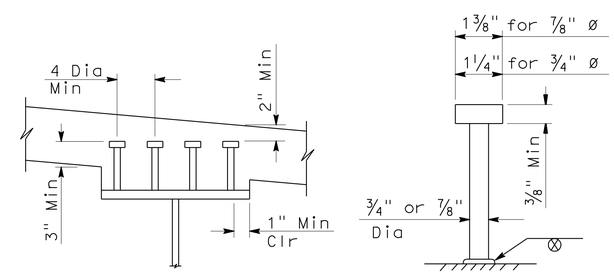

Lengths of studs to be determined by the Contractor, minimum length is 6".
Alternative types of shear connectors may be permitted subject to approval by the Engineer.

STUD CONNECTOR

STANDARD DRAWING

FILE NO. xs1-410-1

APPROVAL DATE 10-21-2009

STATE OF CALIFORNIA DEPARTMENT OF TRANSPORTATION

DIVISION OF ENGINEERING SERVICES

BRIDGE NO. 53-0828

POST MILE 17.30

LOS ANGELES RIVER BRIDGE (WIDEN)

STEEL GIRDER SHOP SPLICE AND STUD CONNECTOR DETAILS

DS OSD 2147A (ENGLISH STANDARD DRAWING "XS" BORDER REV. (02-02-11)

ORIGINAL SCALE IN INCHES FOR REDUCED PLANS 0 1 2 3

UNIT: 3623
PROJECT NUMBER & PHASE: 0700020869 & 1 CONTRACT NO.: 202111

DISREGARD PRINTS BEARING EARLIER REVISION DATES

REVISION DATES 10/01/10 11/01/10 03/01/11

SHEET 48 OF 74

FILE => 53-0828-1-gst_s_dt.dgn

USERNAME => S124196 DATE PLOTTED => 28-JUN-2011 TIME PLOTTED => 19:39

DIST	COUNTY	ROUTE	POST MILES TOTAL PROJECT	SHEET No.	TOTAL SHEETS
07	LA	710	17.2/26.4	1345	1507

REGISTERED CIVIL ENGINEER 03/01/11 DATE

6-27-11
PLANS APPROVAL DATE

The State of California or its officers or agents shall not be responsible for the accuracy or completeness of electronic copies of this plan sheet.

REGISTERED PROFESSIONAL ENGINEER FRANK HSIAOSHIH WEI No. C 52918 Exp. 12-31-12 CIVIL STATE OF CALIFORNIA

North Widening Girders (For South bound Traffic)

CAMBER COMPONENTS \ ORDINATES	SPAN 1				SPAN 2				SPAN 3			SPAN 4			
	1/4	1/2	3/4	℄ Hinge	1/4	1/2	3/4	℄ Hinge	1/4	1/2	3/4	1/4	1/2	3/4	℄ Hinge
DECK SLAB DEAD LOAD (in)	0.89	1.00	0.24	-0.04	0.57	0.80	0.12	-0.25	0.84	1.28	0.81	0.08	0.91	0.85	-0.20
STEEL GIRDER DEAD LOAD (in)	0.24	0.26	0.06	0	0.15	0.21	0.03	-0.06	0.22	0.34	0.21	0.02	0.24	0.22	-0.05
ADDED DEAD LOAD (in)	0.01	0.01	-	-	0.01	0.02	0.01	-	0.02	0.02	0.02	-	0.01	0.01	-
TOTAL CAMBER (in)	1.13	1.27	0.30	-0.04	0.73	1.03	0.16	-0.31	1.08	1.64	1.04	0.10	1.16	1.08	-0.25

South Widening Interior Girders (For North bound Traffic)

CAMBER COMPONENTS \ ORDINATES	SPAN 1				SPAN 2				SPAN 3			SPAN 4			
	1/4	1/2	3/4	℄ Hinge	1/4	1/2	3/4	℄ Hinge	1/4	1/2	3/4	1/4	1/2	3/4	℄ Hinge
DECK SLAB DEAD LOAD (in)	0.90	1.04	0.33	0.06	0.39	0.57	0.05	-0.23	0.72	1.09	0.69	0.06	0.75	0.70	-0.18
STEEL GIRDER DEAD LOAD (in)	0.24	0.26	0.06	-	0.15	0.21	0.03	-0.06	0.22	0.34	0.21	0.02	0.24	0.22	-0.05
ADDED DEAD LOAD (in)	0.01	0.01	-	-	0.01	0.02	0.01	-	0.02	0.02	0.02	-	0.01	0.01	-
TOTAL CAMBER (in)	1.15	1.31	0.39	0.06	0.55	0.80	0.09	-0.29	0.96	1.45	0.92	0.08	1.00	0.93	-0.23

South Widening Exterior Girders (For North bound Traffic)

CAMBER COMPONENTS \ ORDINATES	SPAN 1				SPAN 2				SPAN 3			SPAN 4			
	1/4	1/2	3/4	℄ Hinge	1/4	1/2	3/4	℄ Hinge	1/4	1/2	3/4	1/4	1/2	3/4	℄ Hinge
DECK SLAB DEAD LOAD (in)	0.76	0.88	0.30	-0.09	0.25	0.39	0.02	-0.18	0.53	0.80	0.50	0.04	0.54	0.51	-0.13
STEEL GIRDER DEAD LOAD (in)	0.29	0.34	0.11	0.02	0.13	0.19	0.02	-0.07	0.23	0.34	0.22	0.02	0.24	0.22	-0.05
ADDED DEAD LOAD (in)	0.01	0.01	-	-	0.01	0.02	0.01	-	0.02	0.02	0.02	-	0.01	0.01	-
TOTAL CAMBER (in)	1.06	1.23	0.41	-0.07	0.39	0.60	0.05	-0.25	0.78	1.16	0.74	0.06	0.79	0.74	-0.18

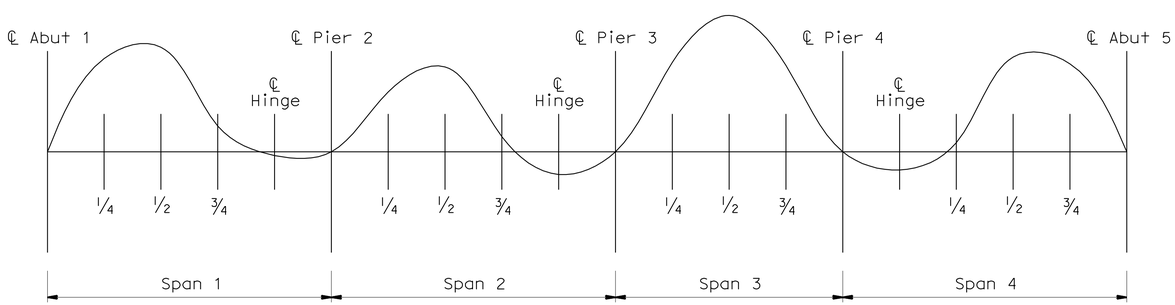

CAMBER DIAGRAM

No Scale

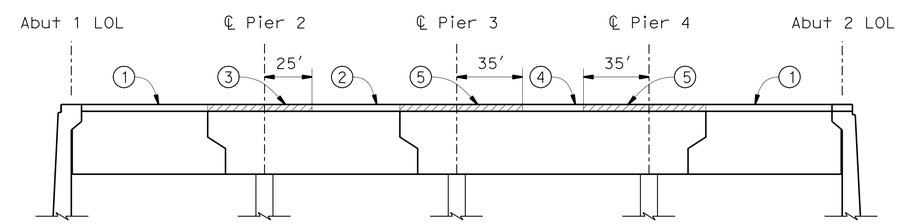

DECK PLACING DIAGRAM

No Scale

Note: Numbers 1 2 etc., indicate the sequence of placing deck concrete. Sections with same sequence number need not be poured simultaneously. 3 may be placed immediately after 2, and 5 may be placed immediately after 4.

For any deviation from the above, the contractor shall submit a diagram to the Engineer for approval.

NOTE:
THE CONTRACTOR SHALL VERIFY ALL CONTROLLING FIELD DIMENSIONS BEFORE ORDERING OR FABRICATING ANY MATERIAL.

	BY	CHECKED
DESIGN	F. Wei	S. Barajas / J. Railey
DETAILS	P. Perez	F. Wei
QUANTITIES	F. Wei	L. Sanchez-Manzo

STATE OF CALIFORNIA
DEPARTMENT OF TRANSPORTATION

DIVISION OF ENGINEERING SERVICES
STRUCTURE DESIGN
DESIGN BRANCH 21

BRIDGE NO. 53-0828
POST MILE 17.30

LOS ANGELES RIVER BRIDGE (WIDEN)
CAMBER TABLE

STRUCTURES DESIGN DETAIL SHEET (ENGLISH) (REV. 09-01-10)

ORIGINAL SCALE IN INCHES FOR REDUCED PLANS 0 1 2 3

UNIT: 3623
PROJECT NUMBER & PHASE: 0700020869 & 1 CONTRACT NO.: 202111

DISREGARD PRINTS BEARING EARLIER REVISION DATES

REVISION DATES: 03/22/10 10/04/10 11/24/10 03/01/11

SHEET 49 OF 74

FILE => 53-0828-m-cam_tab.dgn

USERNAME => s124496 DATE PLOTTED => 28-JUN-2011 TIME PLOTTED => 19:39

DIST	COUNTY	ROUTE	POST MILES TOTAL PROJECT	SHEET No.	TOTAL SHEETS
07	LA	710	17.2/26.4	1346	1507

REGISTERED CIVIL ENGINEER 03/01/11 DATE

6-27-11
PLANS APPROVAL DATE

REGISTERED PROFESSIONAL ENGINEER FRANK HSIAOSHIH WEI No. C 52918 Exp. 12-31-12 CIVIL STATE OF CALIFORNIA

The State of California or its officers or agents shall not be responsible for the accuracy or completeness of electronic copies of this plan sheet.

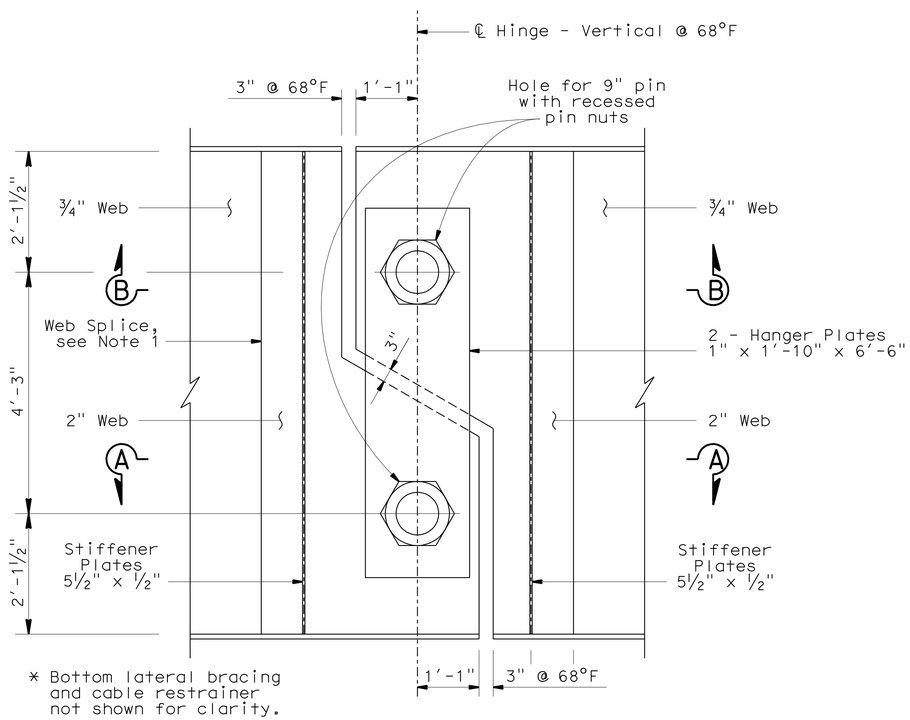

* Bottom lateral bracing and cable restrainer not shown for clarity.

DETAIL AT HINGE

¾" = 1'-0"

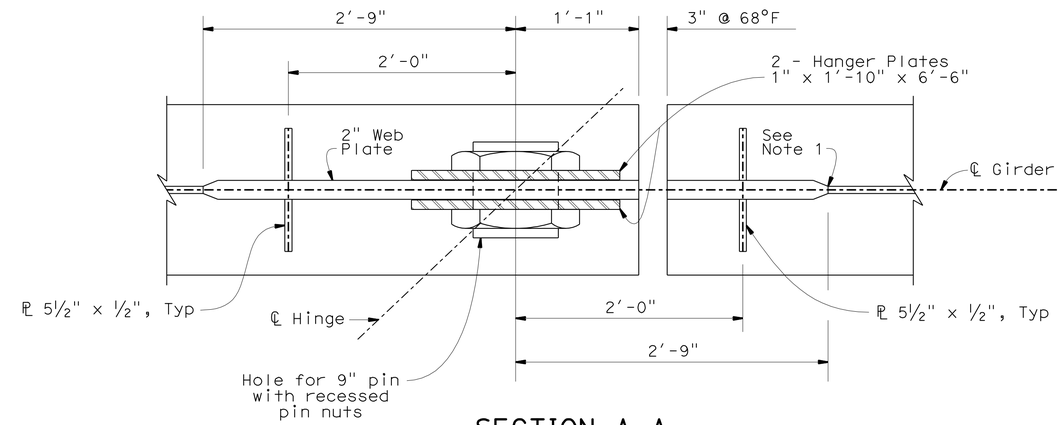

SECTION A-A

1½" = 1'-0"

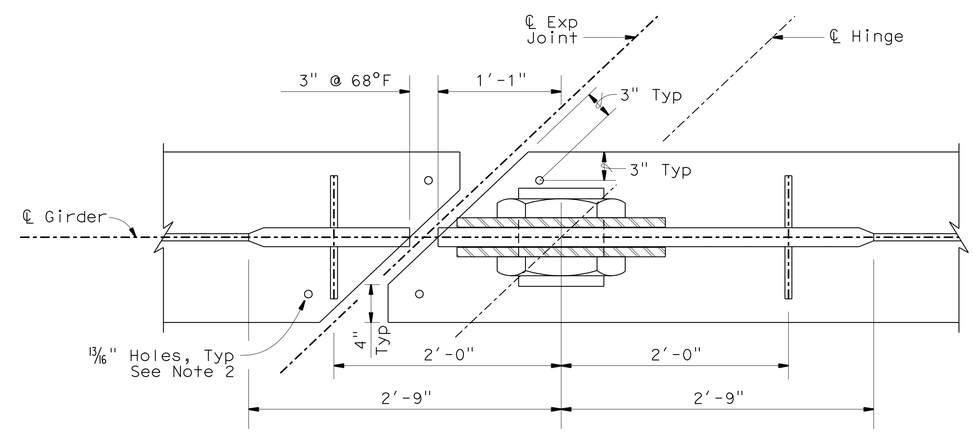

SECTION B-B

1½" = 1'-0"

(See Section A-A for information not shown)

NOTES:

1. For Web Transition Detail, see "STEEL GIRDER SHOP SPLICES AND STUD CONNECTOR DETAILS" sheet.
2. See "EXPANSION JOINT DETAILS NO. 2" and "EXPANSION JOINT DETAILS NO. 3" sheet for bolting detail.

NOTE:
THE CONTRACTOR SHALL VERIFY ALL CONTROLLING FIELD DIMENSIONS BEFORE ORDERING OR FABRICATING ANY MATERIAL.

	BY	CHECKED
DESIGN	F. Wei	S. Barajas / J. Railey
DETAILS	P. Perez	F. Wei
QUANTITIES	F. Wei	L. Sanchez-Manzo

STATE OF CALIFORNIA
DEPARTMENT OF TRANSPORTATION

DIVISION OF ENGINEERING SERVICES
STRUCTURE DESIGN
DESIGN BRANCH 21

BRIDGE NO. 53-0828
POST MILE 17.30

LOS ANGELES RIVER BRIDGE (WIDEN)

HINGE DETAILS

STRUCTURES DESIGN DETAIL SHEET (ENGLISH) (REV. 09-01-10)

ORIGINAL SCALE IN INCHES FOR REDUCED PLANS 0 1 2 3

UNIT: 3623
PROJECT NUMBER & PHASE: 0700020869 & 1 CONTRACT NO.: 202111

DISREGARD PRINTS BEARING EARLIER REVISION DATES → 08/06/10 10/04/10 11/24/10 03/01/11

SHEET 50 OF 74

FILE => 53-0828-n-hingedt.dgn

USERNAME => s124496 DATE PLOTTED => 28-JUN-2011 TIME PLOTTED => 19:39

DIST	COUNTY	ROUTE	POST MILES TOTAL PROJECT	SHEET No.	TOTAL SHEETS
07	LA	710	17.2/26.4	1347	1507

REGISTERED CIVIL ENGINEER 03/01/11 DATE

6-27-11
PLANS APPROVAL DATE

REGISTERED PROFESSIONAL ENGINEER FRANK HSIAOSHIH WEI No. C 52918 Exp. 12-31-12 CIVIL STATE OF CALIFORNIA

The State of California or its officers or agents shall not be responsible for the accuracy or completeness of electronic copies of this plan sheet.

NOTE:

1. Galvanize cable restrainer assemblies after fabrication.

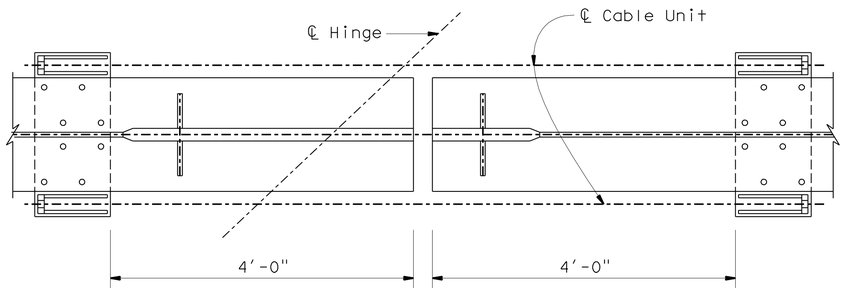

* Bottom Lateral and Cross Frame not shown

PART PLAN
1" = 1'-0"

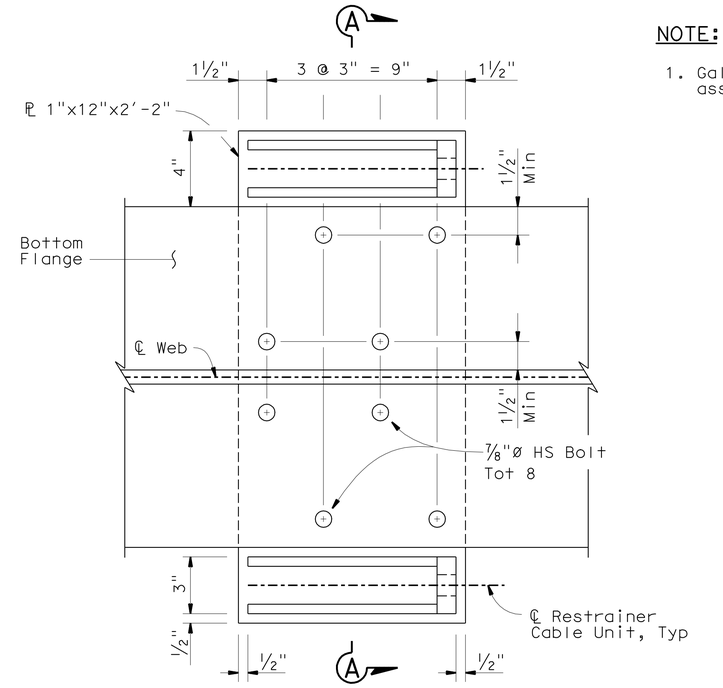

PLAN
3" = 1'-0"

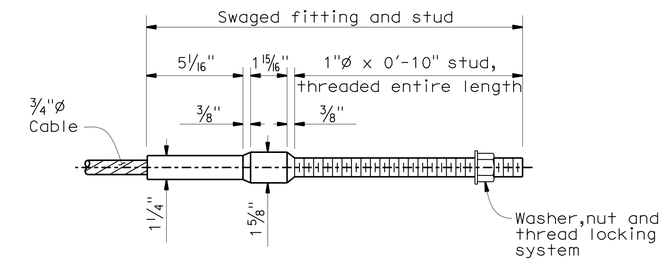

CABLE END ANCHORAGE
No Scale

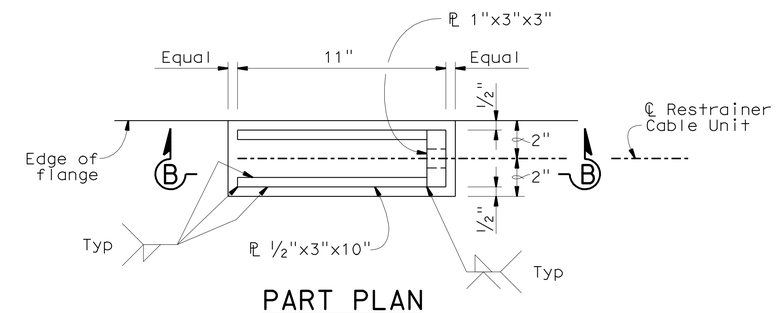

PART PLAN
3" = 1'-0"

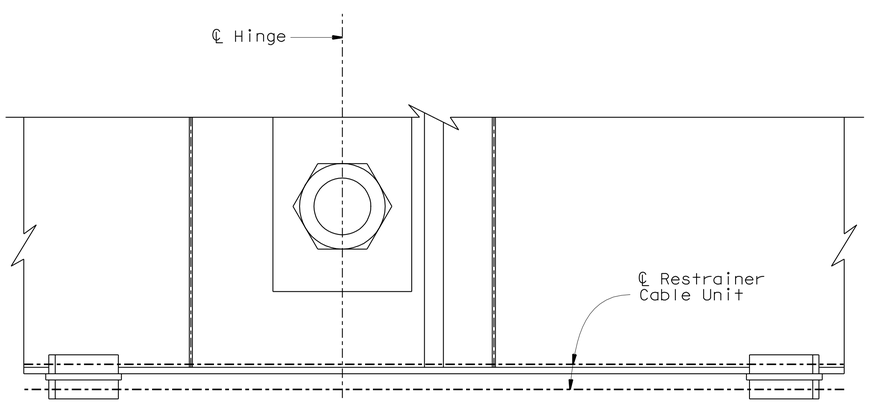

PART ELEVATION
1" = 1'-0"

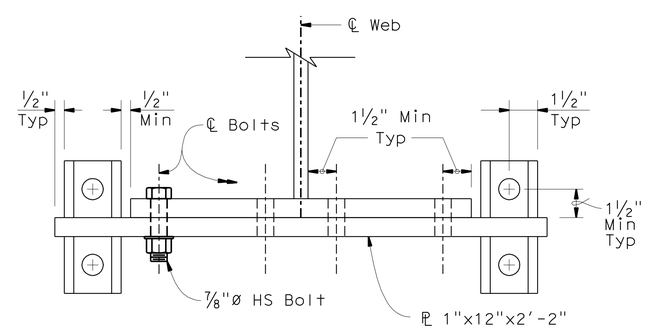

SECTION A-A
3" = 1'-0"

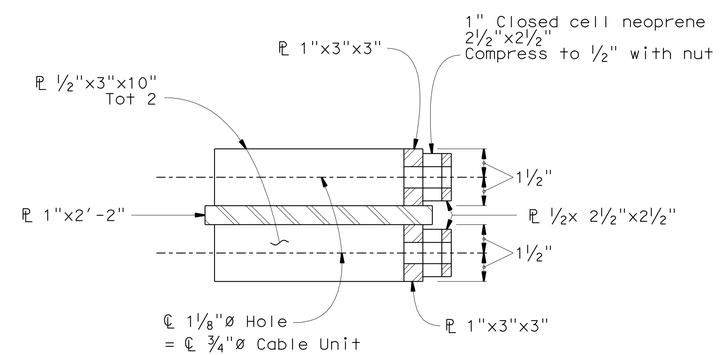

SECTION B-B
3" = 1'-0"

NOTE:
THE CONTRACTOR SHALL VERIFY ALL CONTROLLING FIELD DIMENSIONS BEFORE ORDERING OR FABRICATING ANY MATERIAL.

	BY	CHECKED
DESIGN	F. Wei	S. Barajas / J. Railey
DETAILS	P. Perez	F. Wei
QUANTITIES	F. Wei	L. Sanchez-Manzo

STATE OF CALIFORNIA
DEPARTMENT OF TRANSPORTATION

DIVISION OF ENGINEERING SERVICES
STRUCTURE DESIGN
DESIGN BRANCH 21

BRIDGE NO. 53-0828
POST MILE 17.30

LOS ANGELES RIVER BRIDGE (WIDEN)
CABLE RESTRAINER DETAILS

STRUCTURES DESIGN DETAIL SHEET (ENGLISH) (REV. 09-01-10)

ORIGINAL SCALE IN INCHES FOR REDUCED PLANS 0 1 2 3

UNIT: 3623
PROJECT NUMBER & PHASE: 0700020869 & 1 CONTRACT NO.: 202111

DISREGARD PRINTS BEARING EARLIER REVISION DATES

REVISION DATES: 08/02/10 10/01/10 11/24/10 03/01/11

SHEET 51 OF 74

FILE => 53-0828-n-hngres.dgn

USERNAME => S124496 DATE PLOTTED => 28-JUN-2011 TIME PLOTTED => 19:39

DIST	COUNTY	ROUTE	POST MILES TOTAL PROJECT	SHEET No.	TOTAL SHEETS
07	LA	710	17.2/26.4	1348	1507

REGISTERED CIVIL ENGINEER 03/01/11 DATE

6-27-11
PLANS APPROVAL DATE

REGISTERED PROFESSIONAL ENGINEER FRANK HSIAOSHIH WEI No. C 52918 Exp. 12-31-12 CIVIL STATE OF CALIFORNIA

The State of California or its officers or agents shall not be responsible for the accuracy or completeness of electronic copies of this plan sheet.

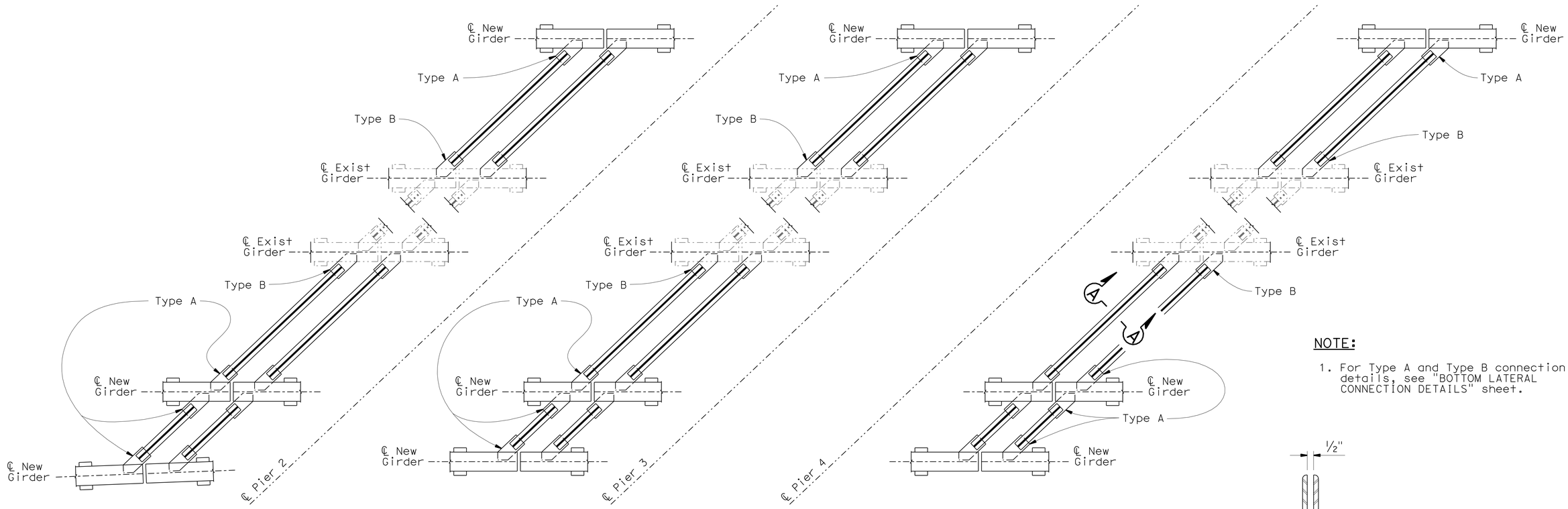

PLAN - CABLE RESTRAINER AND BOTTOM LATERAL

No Scale

NOTE:

1. For Type A and Type B connection details, see "BOTTOM LATERAL CONNECTION DETAILS" sheet.

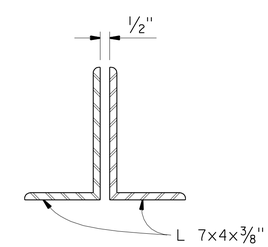

SECTION A-A

3" = 1'-0"

(Typical for all Bottom Lateral)

NOTE:
THE CONTRACTOR SHALL VERIFY ALL CONTROLLING FIELD DIMENSIONS BEFORE ORDERING OR FABRICATING ANY MATERIAL.

	BY	CHECKED
DESIGN	F. Wei	S. Barajas / J. Railey
DETAILS	P. Perez	F. Wei
QUANTITIES	F. Wei	L. Sanchez-Manzo

STATE OF CALIFORNIA
DEPARTMENT OF TRANSPORTATION

DIVISION OF ENGINEERING SERVICES
STRUCTURE DESIGN
DESIGN BRANCH 21

BRIDGE NO. 53-0828
POST MILE 17.30

LOS ANGELES RIVER BRIDGE (WIDEN)
BOTTOM LATERAL CONNECTION PLAN

STRUCTURES DESIGN DETAIL SHEET (ENGLISH) (REV. 09-01-10)

ORIGINAL SCALE IN INCHES FOR REDUCED PLANS 0 1 2 3

UNIT: 3623
PROJECT NUMBER & PHASE: 0700020869 & 1 CONTRACT NO.: 202111

DISREGARD PRINTS BEARING EARLIER REVISION DATES → 07/28/10 10/08/10 11/24/10 03/01/11

SHEET 52 OF 74

FILE => 53-0828-o-b_lat_con_pl.dgn

USERNAME => s124496 DATE PLOTTED => 28-JUN-2011 TIME PLOTTED => 13:39

DIST	COUNTY	ROUTE	POST MILES TOTAL PROJECT	SHEET No.	TOTAL SHEETS
07	LA	710	17.2/26.4	1349	1507

REGISTERED CIVIL ENGINEER 03/01/11 DATE

6-27-11
PLANS APPROVAL DATE

REGISTERED PROFESSIONAL ENGINEER FRANK HSIAOSHIH WEI No. C 52918 Exp. 12-31-12 CIVIL STATE OF CALIFORNIA

The State of California or its officers or agents shall not be responsible for the accuracy or completeness of electronic copies of this plan sheet.

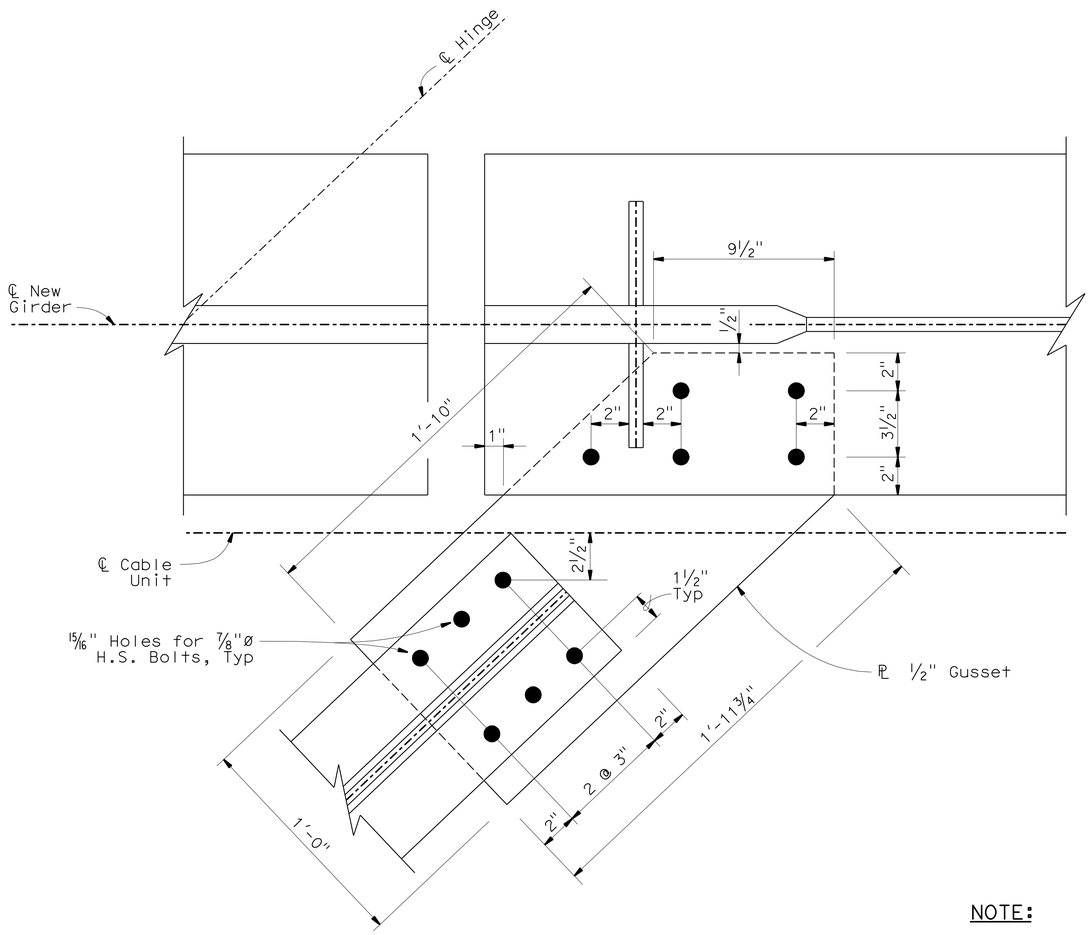

PART PLAN - TYPE A

3" = 1'-0"

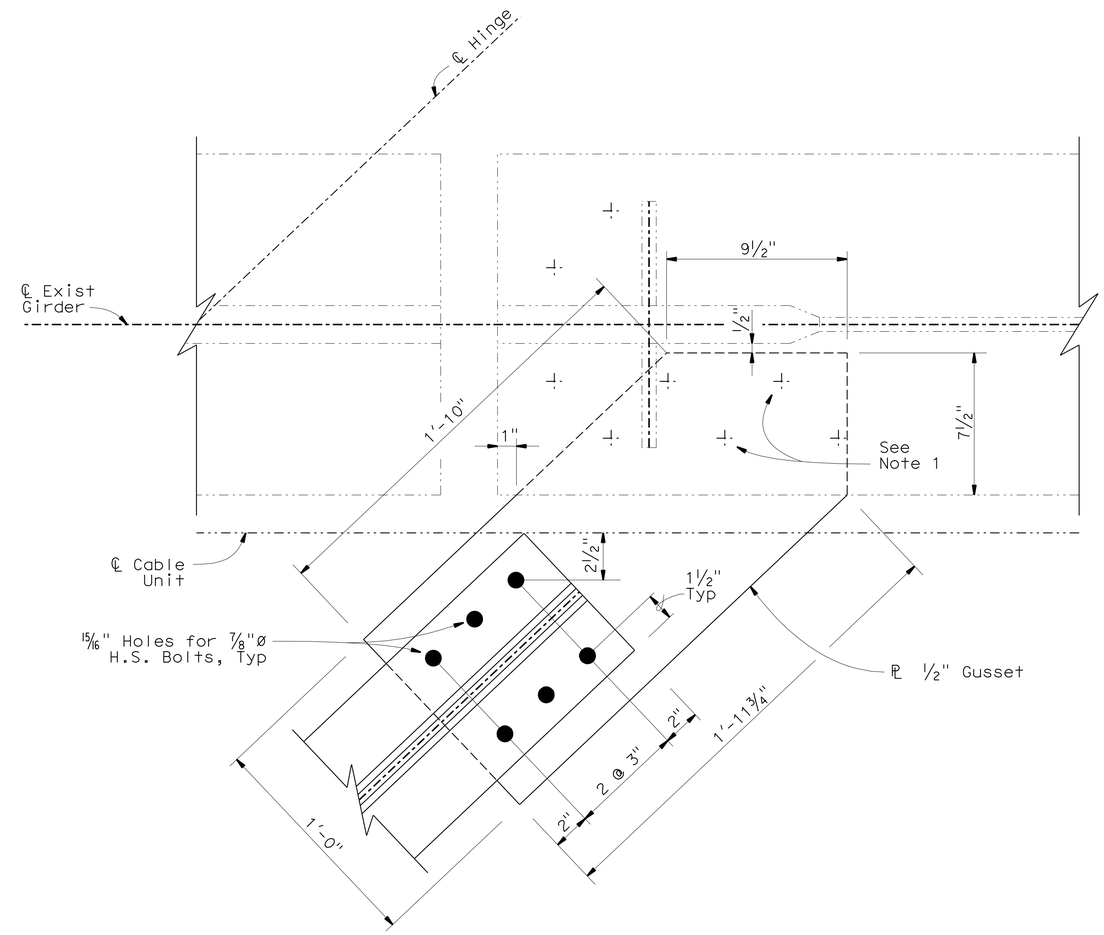

PART PLAN - TYPE B

3" = 1'-0"

NOTE:

1. Field verify the number and location of existing rivets covered by new gusset plate. Remove existing rivets, ream holes, and place ⅞"ø H.S. Bolts. Min 4 bolts for each gusset plate connecting to the existing girder.

NOTE:
THE CONTRACTOR SHALL VERIFY ALL CONTROLLING FIELD DIMENSIONS BEFORE ORDERING OR FABRICATING ANY MATERIAL.

	BY	CHECKED
DESIGN	F. Wei	S. Barajas / J. Railey
DETAILS	P. Perez	F. Wei
QUANTITIES	F. Wei	L. Sanchez-Manzo

STATE OF CALIFORNIA
DEPARTMENT OF TRANSPORTATION

DIVISION OF ENGINEERING SERVICES
STRUCTURE DESIGN
DESIGN BRANCH 21

BRIDGE NO. 53-0828
POST MILE 17.30

LOS ANGELES RIVER BRIDGE (WIDEN)
BOTTOM LATERAL CONNECTION DETAILS

STRUCTURES DESIGN DETAIL SHEET (ENGLISH) (REV. 09-01-10)

ORIGINAL SCALE IN INCHES FOR REDUCED PLANS 0 1 2 3

UNIT: 3623
PROJECT NUMBER & PHASE: 0700020869 & 1 CONTRACT NO.: 202111

DISREGARD PRINTS BEARING EARLIER REVISION DATES → 08/02/10 10/01/10 11/24/10 03/01/11

SHEET 53 OF 74

FILE => 53-0828-o-b_lat_condt.dgn

USERNAME => s124496 DATE PLOTTED => 28-JUN-2011 TIME PLOTTED => 19:39

DIST	COUNTY	ROUTE	POST MILES TOTAL PROJECT	SHEET No.	TOTAL SHEETS
07	LA	710	17.2/26.4	1350	1507

REGISTERED CIVIL ENGINEER 03/01/11 DATE

6-27-11
PLANS APPROVAL DATE

REGISTERED PROFESSIONAL ENGINEER FRANK HSIAOSHIH WEI No. C 52918 Exp. 12-31-12 CIVIL STATE OF CALIFORNIA

The State of California or its officers or agents shall not be responsible for the accuracy or completeness of electronic copies of this plan sheet.

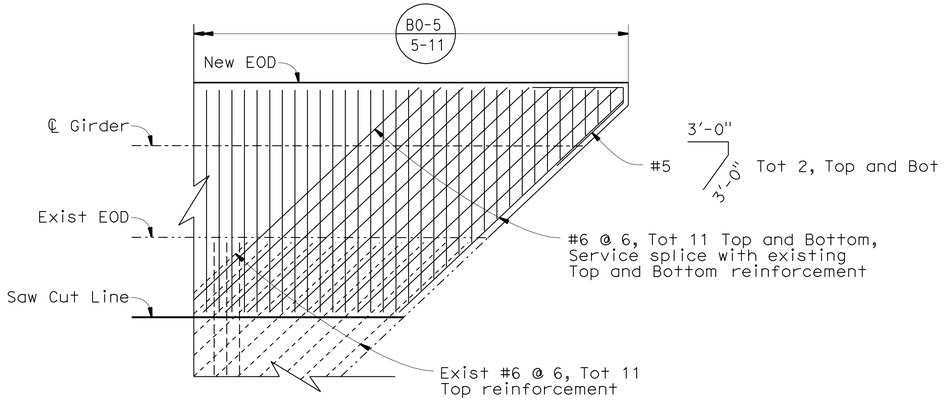

ACUTE CORNER

No Scale

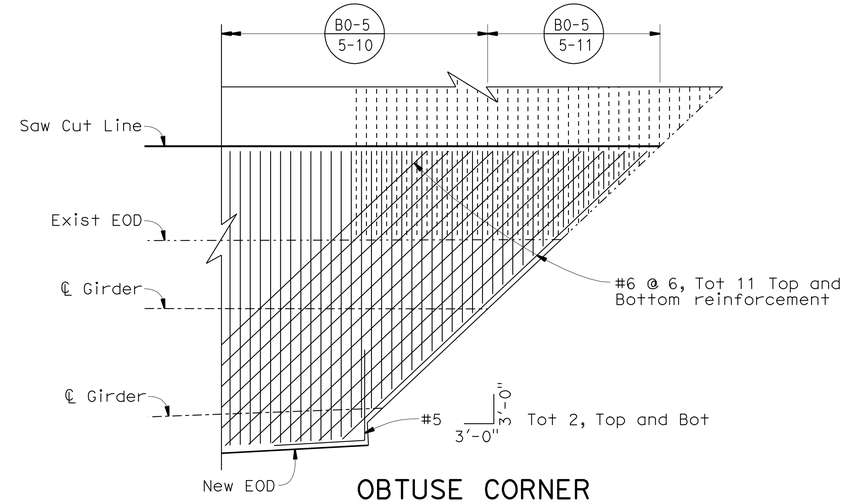

OBTUSE CORNER

No Scale

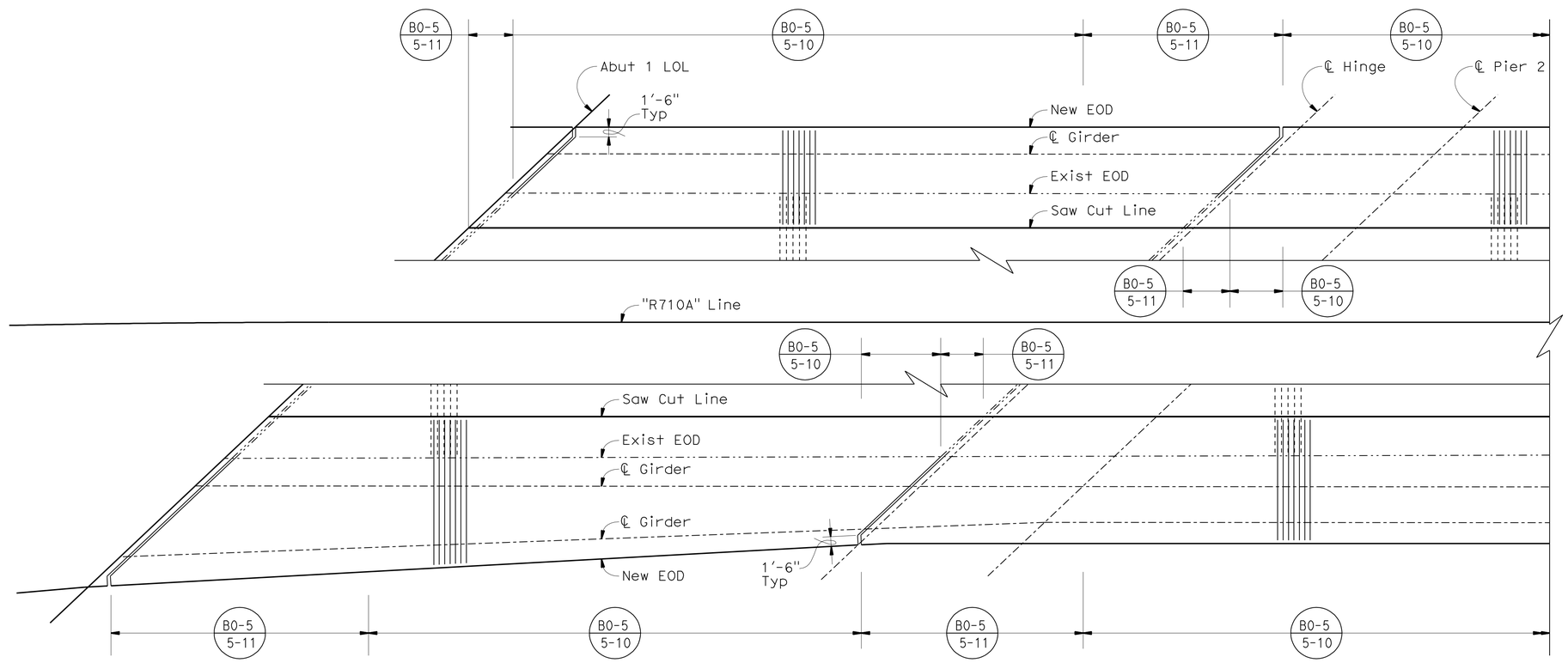

PART DECK TRANSVERSE REINFORCEMENT

No Scale

Span 1 is shown, other spans similar

NOTE:
THE CONTRACTOR SHALL VERIFY ALL CONTROLLING FIELD DIMENSIONS BEFORE ORDERING OR FABRICATING ANY MATERIAL.

	BY	CHECKED
DESIGN	F. Wei	S. Barajas / J. Railey
DETAILS	P. Perez	F. Wei
QUANTITIES	F. Wei	L. Sanchez-Manzo

STATE OF CALIFORNIA
DEPARTMENT OF TRANSPORTATION

DIVISION OF ENGINEERING SERVICES
STRUCTURE DESIGN
DESIGN BRANCH 21

BRIDGE NO. 53-0828
POST MILE 17.30

LOS ANGELES RIVER BRIDGE (WIDEN)

DECK DETAILS

STRUCTURES DESIGN DETAIL SHEET (ENGLISH) (REV. 09-01-10)

ORIGINAL SCALE IN INCHES FOR REDUCED PLANS 0 1 2 3

UNIT: 3623
PROJECT NUMBER & PHASE: 0700020869 & 1 CONTRACT NO.: 202111

DISREGARD PRINTS BEARING EARLIER REVISION DATES

REVISION DATES: 02/02/10 10/01/10 11/24/10 03/01/11

SHEET 54 OF 74

FILE => 53-0828-q-d_dt.dgn

USERNAME => s124496 DATE PLOTTED => 28-JUN-2011 TIME PLOTTED => 19:40

DIST	COUNTY	ROUTE	POST MILES TOTAL PROJECT	SHEET No.	TOTAL SHEETS
07	LA	710	17.2/26.4	1351	1507

REGISTERED CIVIL ENGINEER 03/01/11 DATE

6-27-11
PLANS APPROVAL DATE

REGISTERED PROFESSIONAL ENGINEER FRANK HSIAOSHIH WEI No. C 52918 Exp. 12-31-12 CIVIL STATE OF CALIFORNIA

The State of California or its officers or agents shall not be responsible for the accuracy or completeness of electronic copies of this plan sheet.

NOTES:

1. For Girder Bottom Flange at abutment, see "ABUTMENT DETAILS NO. 6" sheet.
2. For Section B-B, and Section C-C, see "EXPANSION JOINT DETAILS NO. 3" sheet.

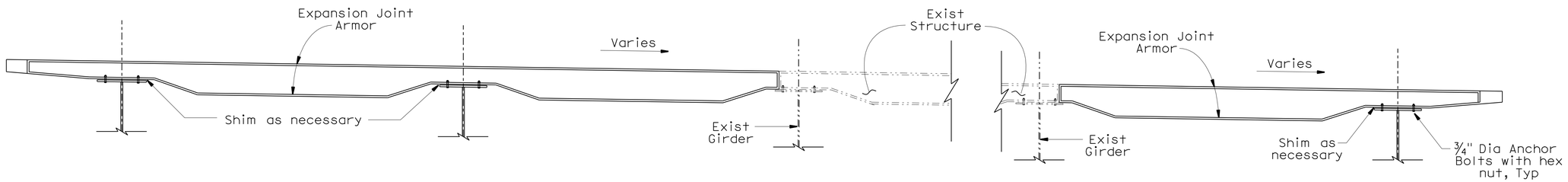

SECTION A-A

3/8" = 1'-0"

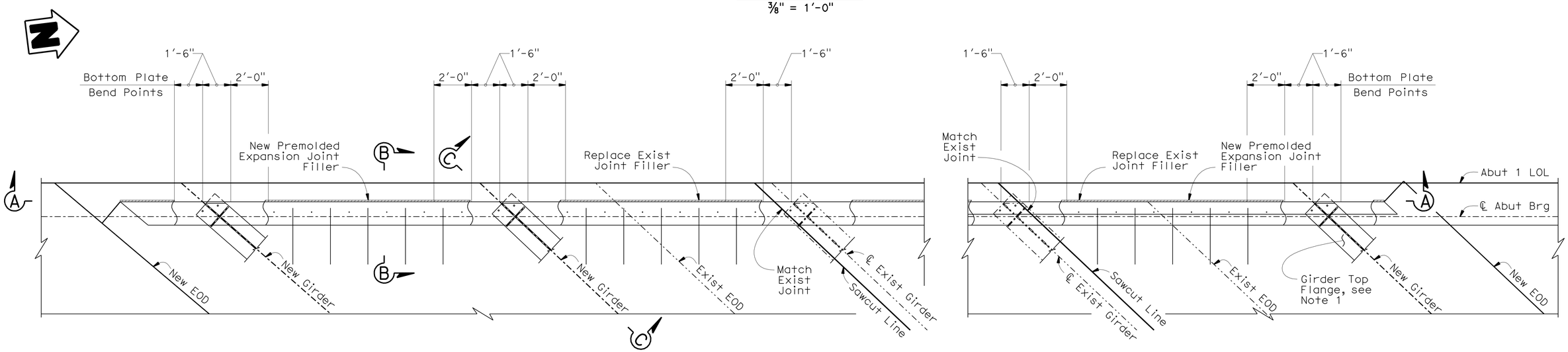

EXPANSION JOINT PLAN AT ABUTMENT

3/8" = 1'-0"

NOTE:
THE CONTRACTOR SHALL VERIFY ALL CONTROLLING FIELD DIMENSIONS BEFORE ORDERING OR FABRICATING ANY MATERIAL.

	BY	CHECKED
DESIGN	F. Wei	S. Barajas / J. Railey
DETAILS	P. Perez	F. Wei
QUANTITIES	F. Wei	L. Sanchez-Manzo

STATE OF CALIFORNIA
DEPARTMENT OF TRANSPORTATION

DIVISION OF ENGINEERING SERVICES
STRUCTURE DESIGN
DESIGN BRANCH 21

BRIDGE NO. 53-0828
POST MILE 17.30

LOS ANGELES RIVER BRIDGE (WIDEN)
EXPANSION JOINT DETAILS NO. 1

STRUCTURES DESIGN DETAIL SHEET (ENGLISH) (REV. 09-01-10)

ORIGINAL SCALE IN INCHES FOR REDUCED PLANS 0 1 2 3

UNIT: 3623
PROJECT NUMBER & PHASE: 0700020869 & 1 CONTRACT NO.: 202111

DISREGARD PRINTS BEARING EARLIER REVISION DATES

REVISION DATES: 08/02/10 10/01/10 11/24/10 03/01/11

SHEET 55 OF 74

FILE => 53-0828-q-ex_jnt_dt01.dgn

USERNAME => 8124496 DATE PLOTTED => 28-JUN-2011 TIME PLOTTED => 20:05

DIST	COUNTY	ROUTE	POST MILES TOTAL PROJECT	SHEET No.	TOTAL SHEETS
07	LA	710	17.2/26.4	1352	1507

REGISTERED CIVIL ENGINEER 03/01/11 DATE

6-27-11
PLANS APPROVAL DATE

REGISTERED PROFESSIONAL ENGINEER FRANK HSIAOSHIH WEI No. C 52918 Exp. 12-31-12 CIVIL STATE OF CALIFORNIA

The State of California or its officers or agents shall not be responsible for the accuracy or completeness of electronic copies of this plan sheet.

NOTE:

1. For Section D-D and section E-E, see "EXPANSION JOINT DETAILS NO. 3" sheet.

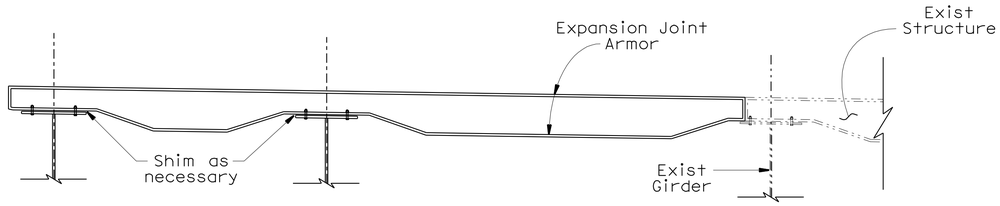

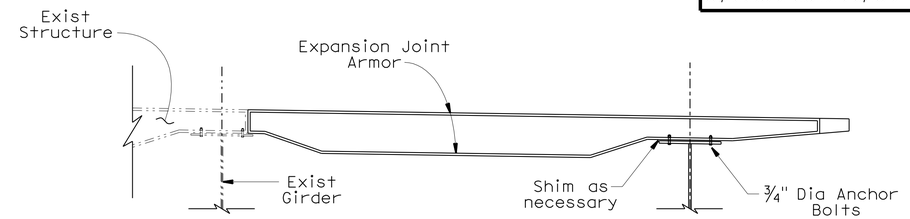

SECTION A-A

3/8" = 1'-0"

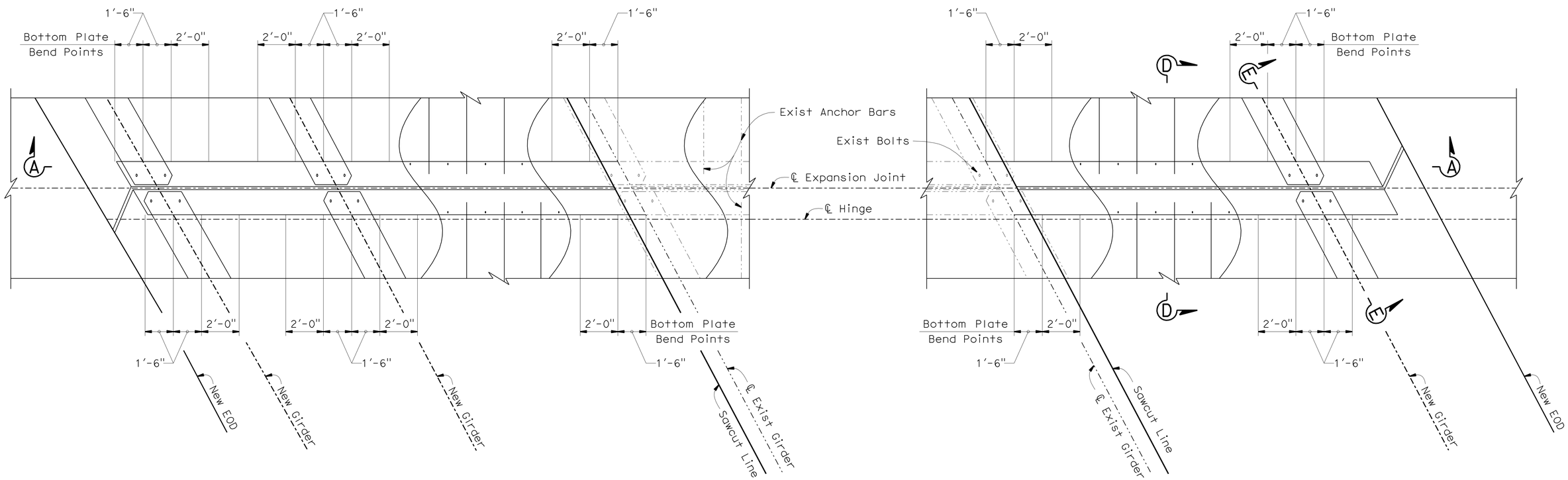

EXPANSION JOINT PLAN AT HINGE

HORIZ: 3/8" = 1'-0"
VERT: 3/4" = 1'-0"

NOTE:
THE CONTRACTOR SHALL VERIFY ALL CONTROLLING FIELD DIMENSIONS BEFORE ORDERING OR FABRICATING ANY MATERIAL.

DESIGN	BY F. Wei	CHECKED S. Barajas / J. Railey	
DETAILS	BY P. Perez	CHECKED F. Wei	
QUANTITIES	BY F. Wei	CHECKED L. Sanchez-Manzo	

STATE OF CALIFORNIA
DEPARTMENT OF TRANSPORTATION

DIVISION OF ENGINEERING SERVICES
STRUCTURE DESIGN
DESIGN BRANCH 21

BRIDGE NO. 53-0828
POST MILE 17.30

LOS ANGELES RIVER BRIDGE (WIDEN)
EXPANSION JOINT DETAILS NO. 2

STRUCTURES DESIGN DETAIL SHEET (ENGLISH) (REV. 09-01-10)

ORIGINAL SCALE IN INCHES FOR REDUCED PLANS 0 1 2 3

UNIT: 3623
PROJECT NUMBER & PHASE: 0700020869 & 1 CONTRACT NO.: 202111

DISREGARD PRINTS BEARING EARLIER REVISION DATES

REVISION DATES: 08/02/10 10/01/10 11/24/10 03/01/11

SHEET 56 OF 74

FILE => 53-0828-q-ex_jnt_dt02.dgn

USERNAME => s124496 DATE PLOTTED => 28-JUN-2011 TIME PLOTTED => 20:05

DIST	COUNTY	ROUTE	POST MILES TOTAL PROJECT	SHEET No.	TOTAL SHEETS
07	LA	710	17.2/26.4	1353	1507

REGISTERED CIVIL ENGINEER 03/01/11 DATE

6-27-11
PLANS APPROVAL DATE

REGISTERED PROFESSIONAL ENGINEER FRANK HSIAOSHIH WEI No. C 52918 Exp. 12-31-12 CIVIL STATE OF CALIFORNIA

The State of California or its officers or agents shall not be responsible for the accuracy or completeness of electronic copies of this plan sheet.

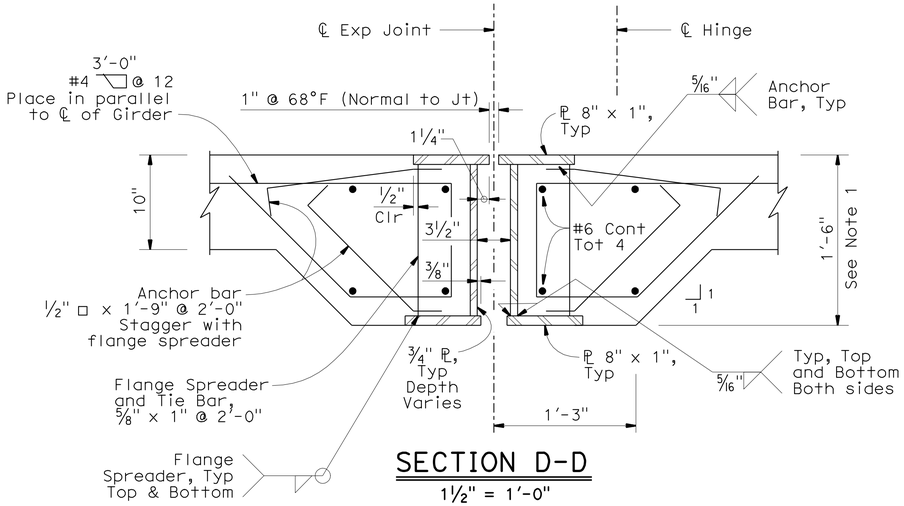

SECTION D-D

1½" = 1'-0"

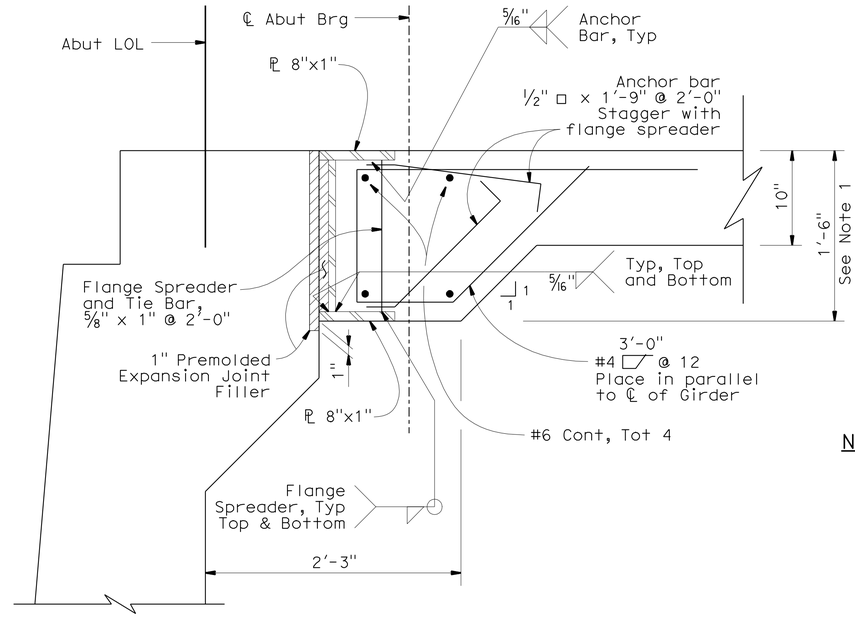

SECTION B-B

1½" = 1'-0"

NOTES:

1. Depth varies at girder ends, see Section A-A on "EXPANSION JOINT DETAILS NO. 1" sheet for details.
2. For locations of Sections B-B and C-C, see "EXPANSION JOINT DETAILS NO. 1" sheet.
3. For locations of Sections D-D and E-E, see "EXPANSION JOINT DETAILS NO. 2" sheet.

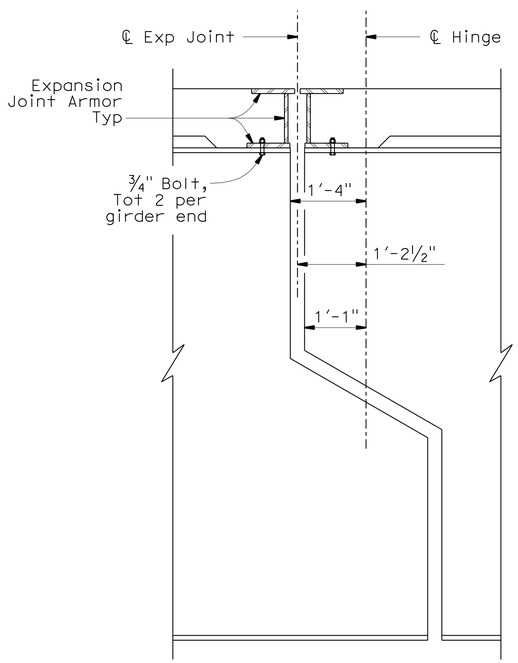

SECTION E-E

¾" = 1'-0"

(See Section D-D for expansion joint reinforcement information.)

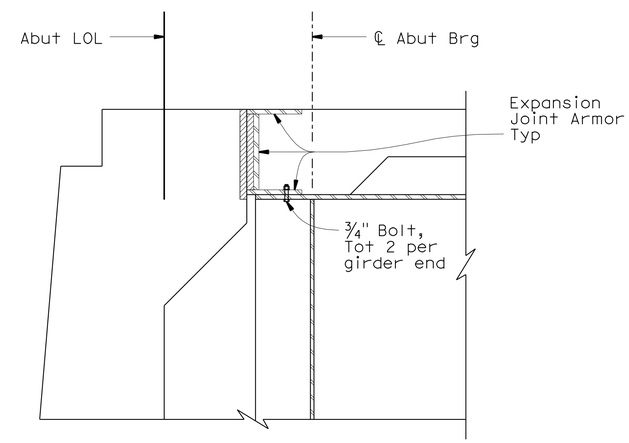

SECTION C-C

¾" = 1'-0"

(See Section B-B for expansion joint reinforcement information.)

NOTE:
THE CONTRACTOR SHALL VERIFY ALL CONTROLLING FIELD DIMENSIONS BEFORE ORDERING OR FABRICATING ANY MATERIAL.

	BY	CHECKED
DESIGN	F. Wei	S. Barajas / J. Railey
DETAILS	P. Perez	F. Wei
QUANTITIES	F. Wei	L. Sanchez-Manzo

STATE OF CALIFORNIA
DEPARTMENT OF TRANSPORTATION

DIVISION OF ENGINEERING SERVICES
STRUCTURE DESIGN
DESIGN BRANCH 21

BRIDGE NO. 53-0828
POST MILE 17.30

LOS ANGELES RIVER BRIDGE (WIDEN)
EXPANSION JOINT DETAILS NO. 3

STRUCTURES DESIGN DETAIL SHEET (ENGLISH) (REV. 09-01-10)

ORIGINAL SCALE IN INCHES FOR REDUCED PLANS 0 1 2 3

UNIT: 3623
PROJECT NUMBER & PHASE: 0700020869 & 1 CONTRACT NO.: 202111

DISREGARD PRINTS BEARING EARLIER REVISION DATES

REVISION DATES: 01/20/10 10/08/10 11/24/10 03/01/11

SHEET 57 OF 74

FILE => 53-0828-q-ex_jnt_dt03.dgn

USERNAME => s124496 DATE PLOTTED => 28-JUN-2011 TIME PLOTTED => 20:05

DIST	COUNTY	ROUTE	POST MILES TOTAL PROJECT	SHEET No.	TOTAL SHEETS
07	LA	710	17.2/26.4	1354	1507

REGISTERED CIVIL ENGINEER 03/01/11 DATE

6-27-11
PLANS APPROVAL DATE

REGISTERED PROFESSIONAL ENGINEER FRANK HSIAOSHIH WEI No. C 52918 Exp. 12-31-12 CIVIL STATE OF CALIFORNIA

The State of California or its officers or agents shall not be responsible for the accuracy or completeness of electronic copies of this plan sheet.

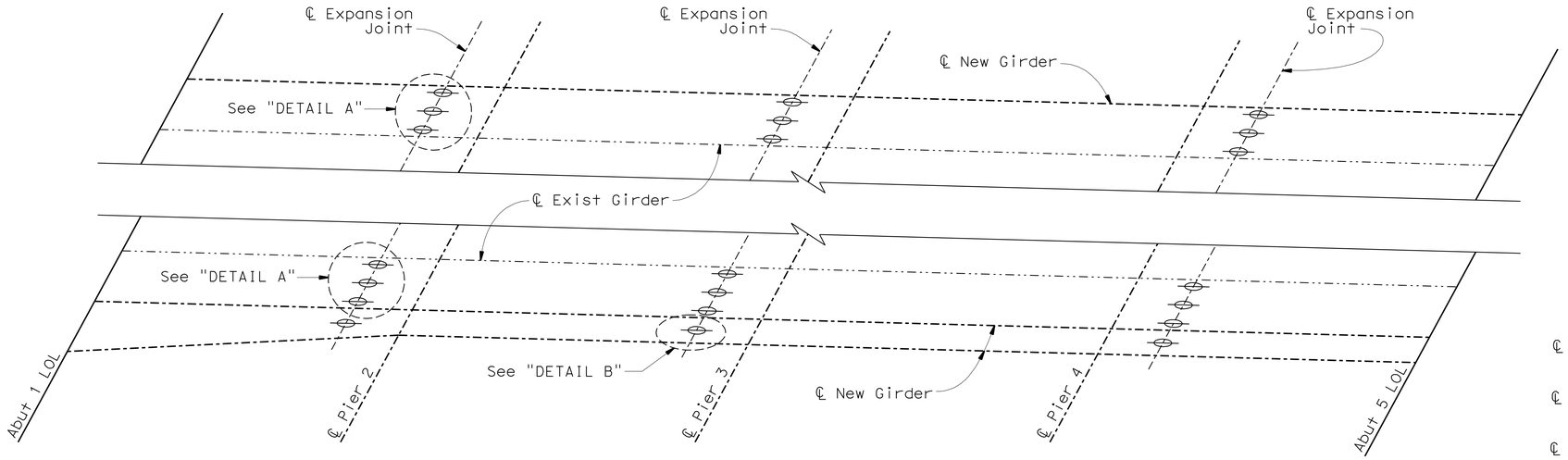

SHEAR LUG LOCATION PLAN
No Scale

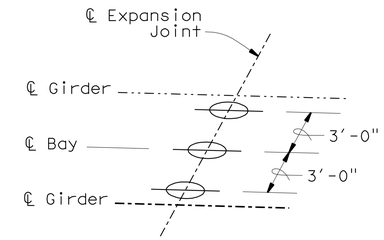

DETAIL A
No Scale

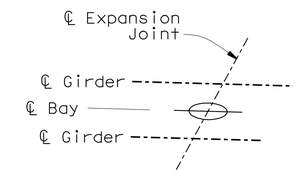

DETAIL B
No Scale

LEGEND:

Indicates shear lug

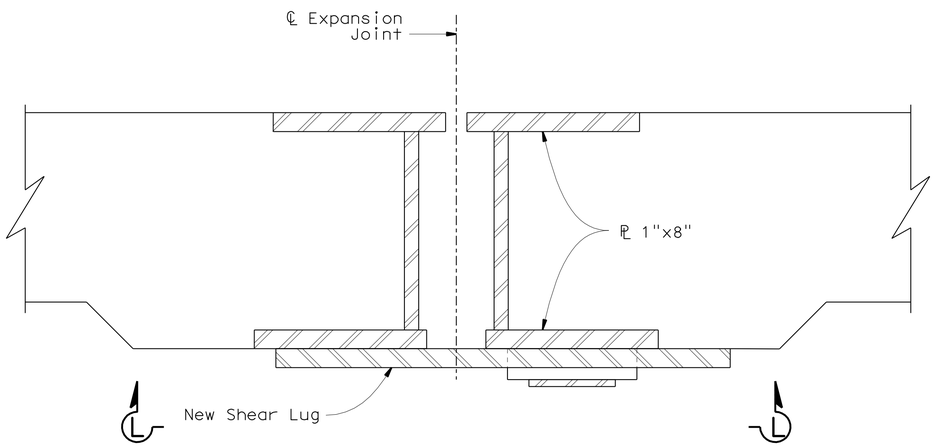

SECTION THROUGH EXPANSION JOINT AT SHEAR LUG
No Scale

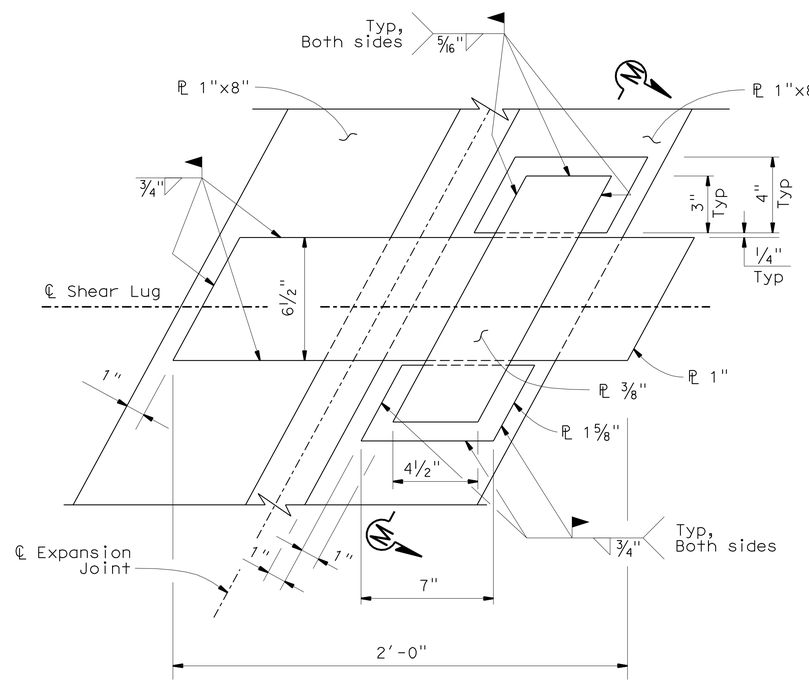

VIEW L-L
No Scale

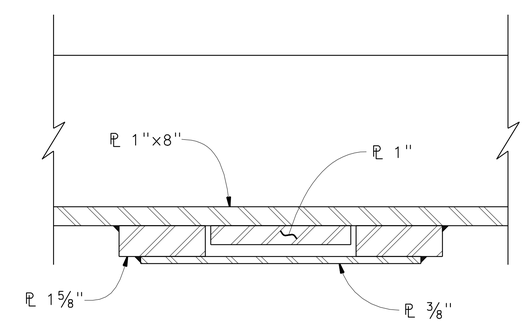

SECTION M-M
No Scale

NOTE:
THE CONTRACTOR SHALL VERIFY ALL CONTROLLING FIELD DIMENSIONS BEFORE ORDERING OR FABRICATING ANY MATERIAL.

	BY	CHECKED
DESIGN	F. Wei	S. Barajas / J. Railey
DETAILS	P. Perez	F. Wei
QUANTITIES	F. Wei	L. Sanchez-Manzo

STATE OF CALIFORNIA
DEPARTMENT OF TRANSPORTATION

DIVISION OF ENGINEERING SERVICES
STRUCTURE DESIGN
DESIGN BRANCH 21

BRIDGE NO. 53-0828
POST MILE 17.30

LOS ANGELES RIVER BRIDGE (WIDEN)
EXPANSION JOINT DETAILS NO. 4

STRUCTURES DESIGN DETAIL SHEET (ENGLISH) (REV. 09-01-10)

ORIGINAL SCALE IN INCHES FOR REDUCED PLANS 0 1 2 3

UNIT: 3623
PROJECT NUMBER & PHASE: 0700020869 & 1 CONTRACT NO.: 202111

DISREGARD PRINTS BEARING EARLIER REVISION DATES

REVISION DATES: 08/02/10 10/04/10 11/24/10 03/01/11

SHEET 58 OF 74

FILE => 53-0828-q-ex_jnt_dt04.dgn

USERNAME => s124496 DATE PLOTTED => 28-JUN-2011 TIME PLOTTED => 20:05

DIST	COUNTY	ROUTE	POST MILES TOTAL PROJECT	SHEET No.	TOTAL SHEETS
07	LA	710	17.2/26.4	1355	1507

REGISTERED CIVIL ENGINEER 03/01/11 DATE

6-27-11
PLANS APPROVAL DATE

REGISTERED PROFESSIONAL ENGINEER FRANK HSIAOSHIH WEI No. C 52918 Exp. 12-31-12 CIVIL STATE OF CALIFORNIA

The State of California or its officers or agents shall not be responsible for the accuracy or completeness of electronic copies of this plan sheet.

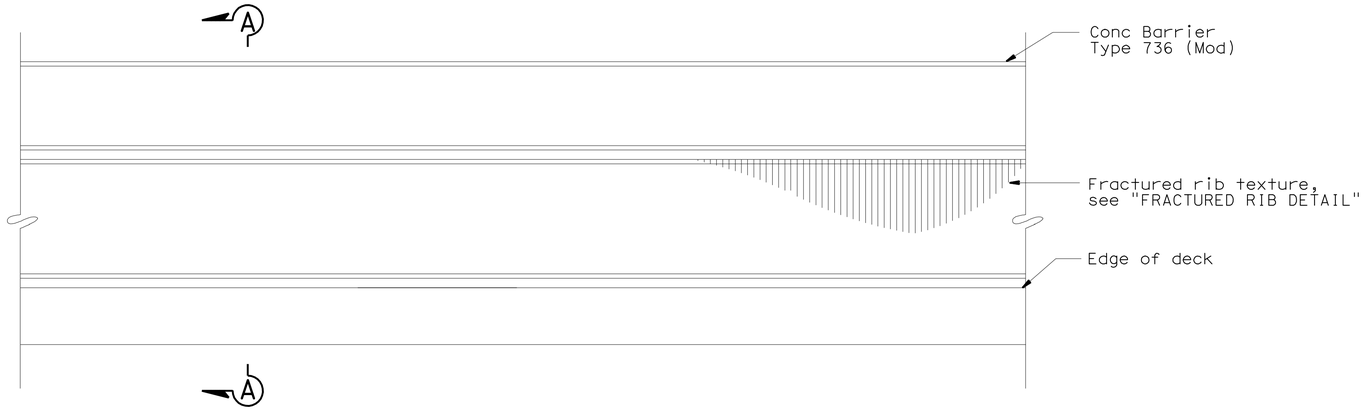

TYPE 736 (MOD) BARRIER ELEVATION - ARCHITECTURAL TREATMENT

No Scale

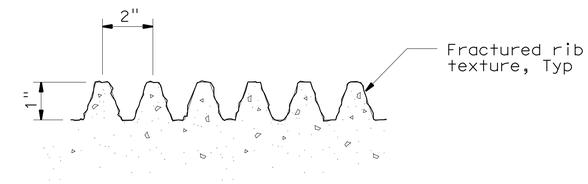

FRACTURED RIB DETAIL

No Scale

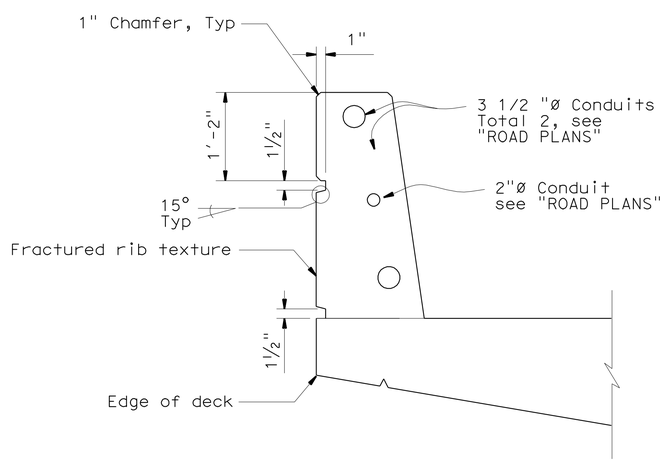

TYPE 736 (MOD) - ARCHITECTURAL AND UTILITY DETAILS

1" = 1'-0"

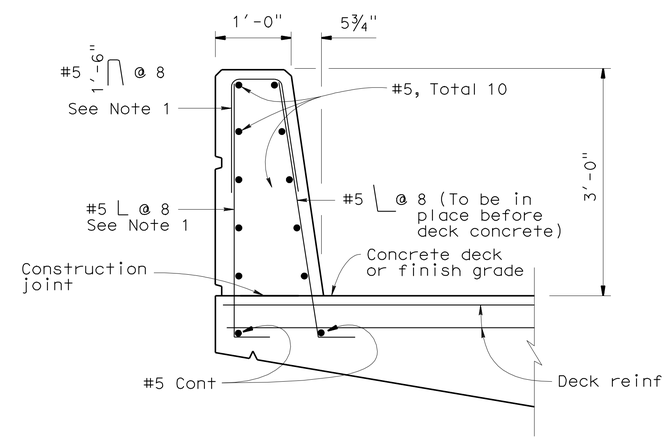

SECTION A-A

1" = 1'-0"

NOTES:

1. Rebar may be adjusted to clear utility pull boxes.
2. For details not shown, see B11-56

NOTE:
THE CONTRACTOR SHALL VERIFY ALL CONTROLLING FIELD DIMENSIONS BEFORE ORDERING OR FABRICATING ANY MATERIAL.

	BY	CHECKED
DESIGN	F. Wei	S. Barajas / J. Railey
DETAILS	P. Perez	F. Wei
QUANTITIES	F. Wei	L. Sanchez-Manzo

STATE OF CALIFORNIA
DEPARTMENT OF TRANSPORTATION

DIVISION OF ENGINEERING SERVICES
STRUCTURE DESIGN
DESIGN BRANCH 21

BRIDGE NO. 53-0828
POST MILE 17.30

LOS ANGELES RIVER BRIDGE (WIDEN)
BARRIER DETAILS

STRUCTURES DESIGN DETAIL SHEET (ENGLISH) (REV. 09-01-10)

ORIGINAL SCALE IN INCHES FOR REDUCED PLANS 0 1 2 3

UNIT: 3623
PROJECT NUMBER & PHASE: 0700020869 & 1 CONTRACT NO.: 202111

DISREGARD PRINTS BEARING EARLIER REVISION DATES

REVISION DATES 08/05/10 10/04/10 11/24/10 03/01/11

SHEET 59 OF 74

FILE => 53-0828-r-bar_dt.dgn

USERNAME => s124496 DATE PLOTTED => 28-JUN-2011 TIME PLOTTED => 20:05

DIST	COUNTY	ROUTE	POST MILES TOTAL PROJECT	SHEET No.	TOTAL SHEETS
07	LA	710	17.2/26.4	1356	1507

REGISTERED CIVIL ENGINEER — DATE 03/01/11

6-27-11
PLANS APPROVAL DATE

REGISTERED PROFESSIONAL ENGINEER — FRANK HSIAOSHIH WEI — No. C 52918 — Exp. 12-31-12 — CIVIL — STATE OF CALIFORNIA

The State of California or its officers or agents shall not be responsible for the accuracy or completeness of electronic copies of this plan sheet.

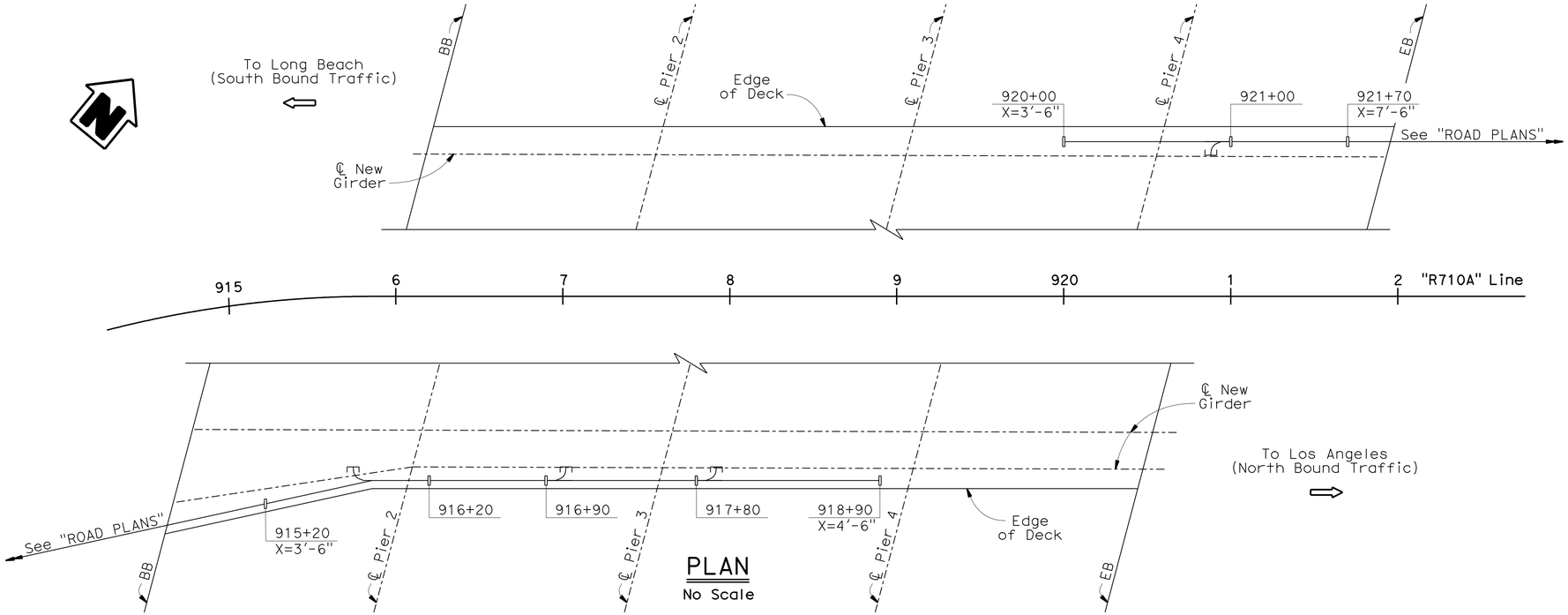

PLAN
No Scale

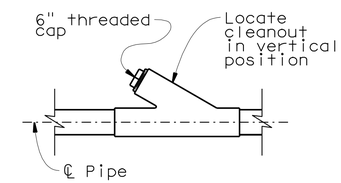

CLEANOUT DETAIL
No Scale

LEGEND:

—▯— Indicates Deck Drain Type D-3 (Mod)

"X" Indicates distance from top of deck to pipe centerline at ℄ deck drain

Indicates cleanout, see "Cleanout Detail"

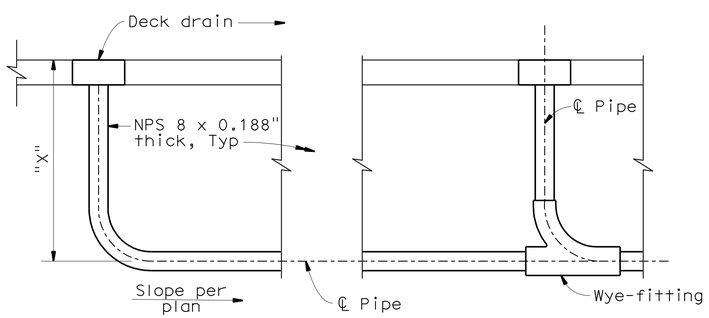

DRAIN PIPE DETAIL
No Scale

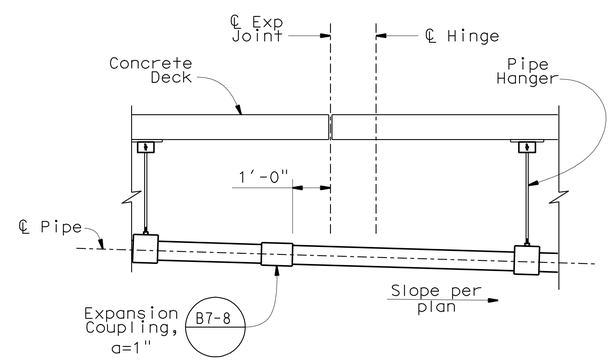

HINGE DRAIN PIPE DETAIL
No Scale

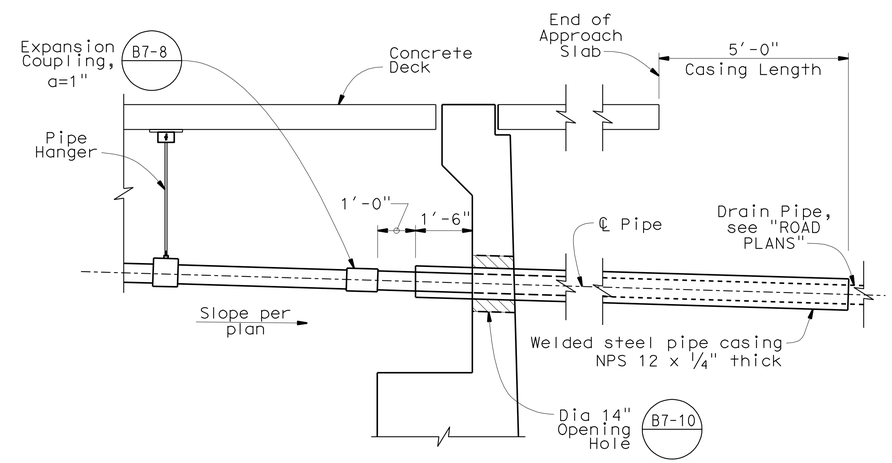

ABUTMENT DRAIN PIPE DETAIL
No Scale

NOTE:
THE CONTRACTOR SHALL VERIFY ALL CONTROLLING FIELD DIMENSIONS BEFORE ORDERING OR FABRICATING ANY MATERIAL.

	BY	CHECKED
DESIGN	F. Wei	S. Barajas / J. Railey
DETAILS	P. Perez	F. Wei
QUANTITIES	F. Wei	L. Sanchez-Manzo

STATE OF CALIFORNIA
DEPARTMENT OF TRANSPORTATION

DIVISION OF ENGINEERING SERVICES
STRUCTURE DESIGN
DESIGN BRANCH 21

BRIDGE NO. 53-0828
POST MILE 17.30

LOS ANGELES RIVER BRIDGE (WIDEN)
DECK DRAIN LAYOUT

STRUCTURES DESIGN DETAIL SHEET (ENGLISH) (REV. 09-01-10)

ORIGINAL SCALE IN INCHES FOR REDUCED PLANS 0 1 2 3

UNIT: 3623
PROJECT NUMBER & PHASE: 0700020869 & 1 CONTRACT NO.: 202111

DISREGARD PRINTS BEARING EARLIER REVISION DATES

REVISION DATES: 01/26/10 10/01/10 11/24/10 03/01/11

SHEET 60 OF 74

FILE => 53-0828-r-dd_lo.dgn

USERNAME => s124496 DATE PLOTTED => 28-JUN-2011 TIME PLOTTED => 20:05

DIST	COUNTY	ROUTE	POST MILES TOTAL PROJECT	SHEET No.	TOTAL SHEETS
07	LA	710	17.2/26.4	1357	1507

REGISTERED CIVIL ENGINEER — DATE 03/01/11

6-27-11
PLANS APPROVAL DATE

REGISTERED PROFESSIONAL ENGINEER FRANK HSIAOSHIH WEI No. C 52918 Exp. 12-31-12 CIVIL STATE OF CALIFORNIA

The State of California or its officers or agents shall not be responsible for the accuracy or completeness of electronic copies of this plan sheet.

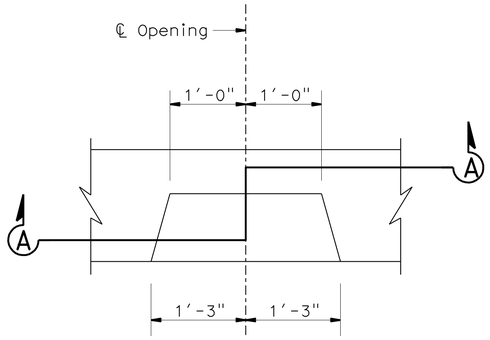

PLAN - BARRIER BOTTOM OPENING AT DECK DRAIN

1" = 1'-0"

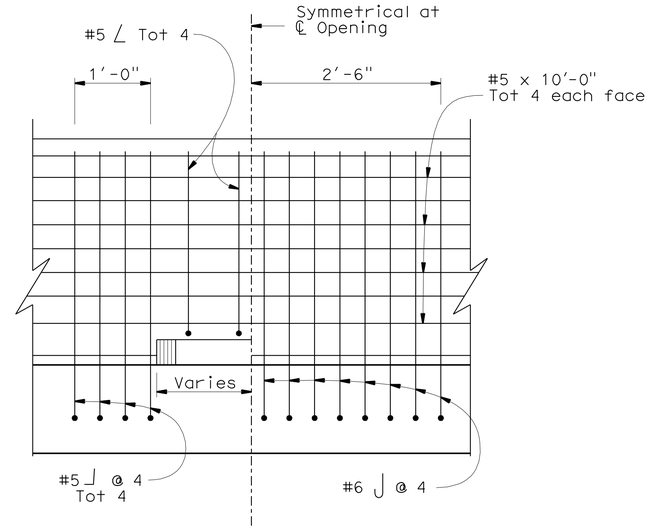

SECTION A-A

1" = 1'-0"

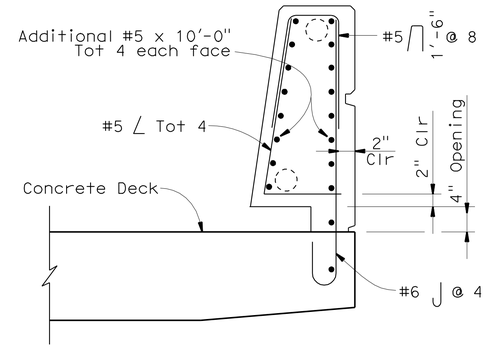

BARRIER AT DECK DRAIN DETAIL

1" = 1'-0"

(For Details not shown, see "BARRIER DETAILS" sheet.)

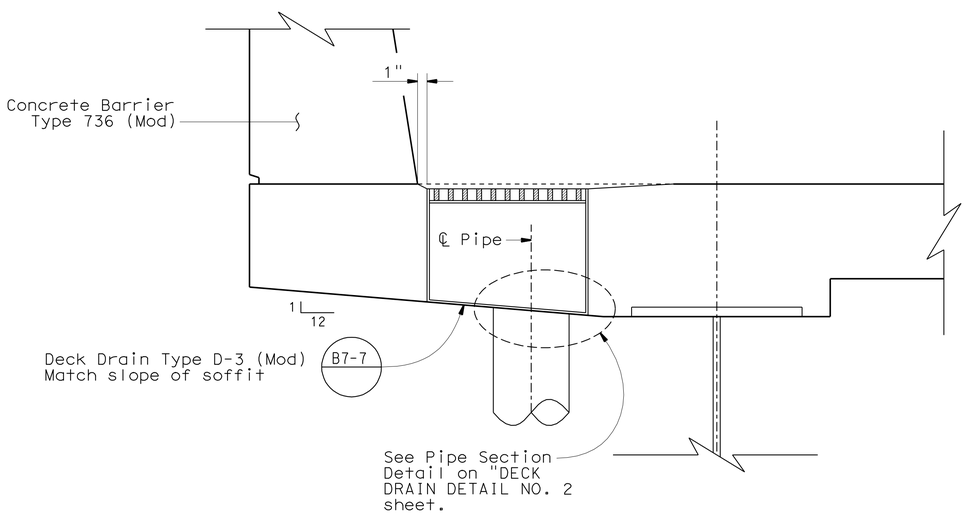

For South Bound Traffic

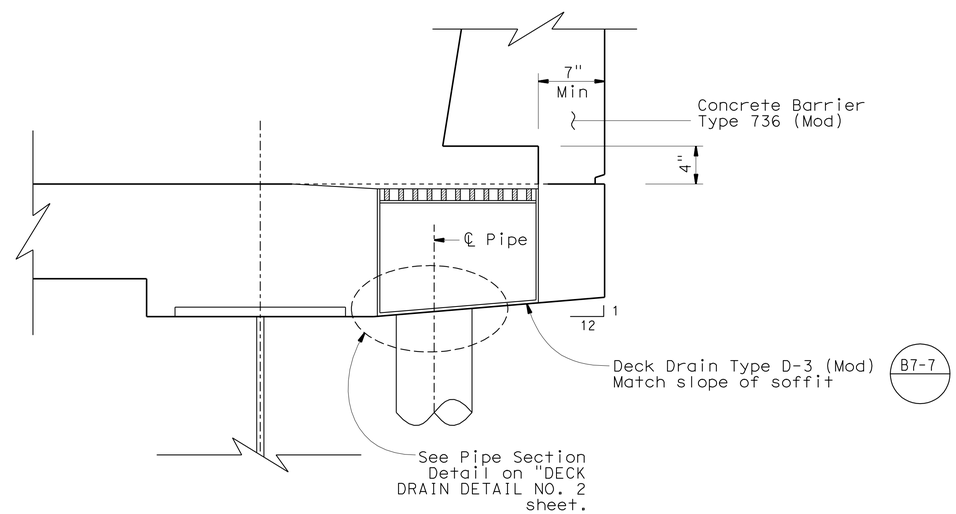

For North Bound Traffic

DECK DRAIN - TYPICAL SECTION

1½" = 1'-0"

NOTE:
THE CONTRACTOR SHALL VERIFY ALL CONTROLLING FIELD DIMENSIONS BEFORE ORDERING OR FABRICATING ANY MATERIAL.

DESIGN	BY F. Wei	CHECKED S. Barajas / J. Railey	
DETAILS	BY P. Perez	CHECKED F. Wei	
QUANTITIES	BY F. Wei	CHECKED L. Sanchez-Manzo	

STATE OF CALIFORNIA
DEPARTMENT OF TRANSPORTATION

DIVISION OF ENGINEERING SERVICES
STRUCTURE DESIGN
DESIGN BRANCH 21

BRIDGE NO. 53-0828
POST MILE 17.30

LOS ANGELES RIVER BRIDGE (WIDEN)
DECK DRAIN DETAILS NO. 1

STRUCTURES DESIGN DETAIL SHEET (ENGLISH) (REV. 09-01-10)

ORIGINAL SCALE IN INCHES FOR REDUCED PLANS 0 1 2 3

UNIT: 3623
PROJECT NUMBER & PHASE: 0700020869 & 1 CONTRACT NO.: 202111

DISREGARD PRINTS BEARING EARLIER REVISION DATES

REVISION DATES 01/28/10 10/01/10 11/24/10 03/01/11

SHEET 61 OF 74

FILE => 53-0828-r-ddet01.dgn

USERNAME => s124496 DATE PLOTTED => 28-JUN-2011 TIME PLOTTED => 20:05

DIST	COUNTY	ROUTE	POST MILES TOTAL PROJECT	SHEET No.	TOTAL SHEETS
07	LA	710	17.2/26.4	1358	1507

REGISTERED CIVIL ENGINEER 03/01/11 DATE

6-27-11
PLANS APPROVAL DATE

REGISTERED PROFESSIONAL ENGINEER FRANK HSIAOSHIH WEI No. C 52918 Exp. 12-31-12 CIVIL STATE OF CALIFORNIA

The State of California or its officers or agents shall not be responsible for the accuracy or completeness of electronic copies of this plan sheet.

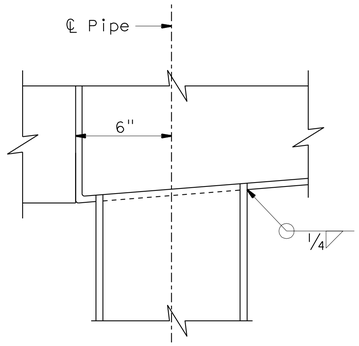

PIPE SECTION

No Scale

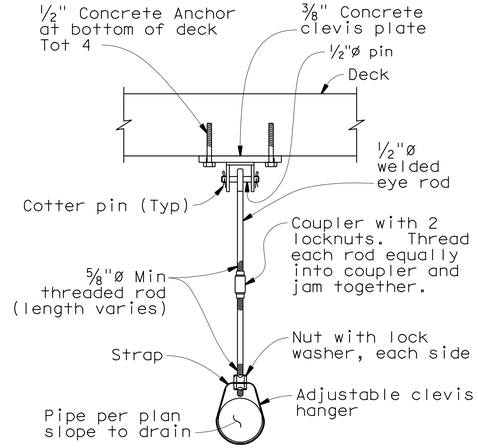

DRAIN PIPE HANGER DETAIL

No Scale

Note: All pipes to be supported by hangers at 10'-0" Max spacing throughout

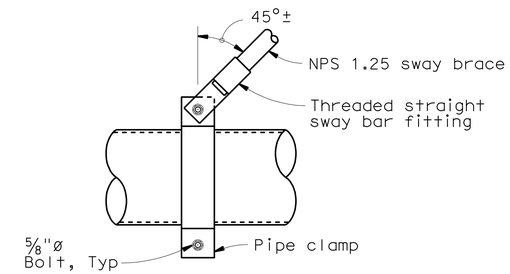

LONGITUDINAL SWAY BRACE

No Scale

Note: All pipes to be supported by longitudinal sway braces at 20'-0" Max spacing throughout.

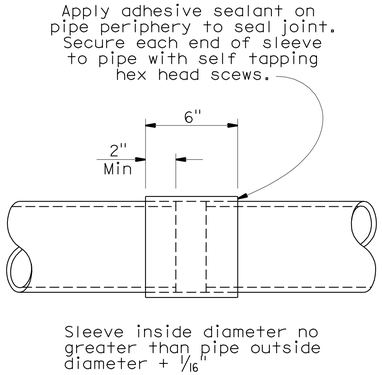

SLEEVE CONNECTION

No Scale

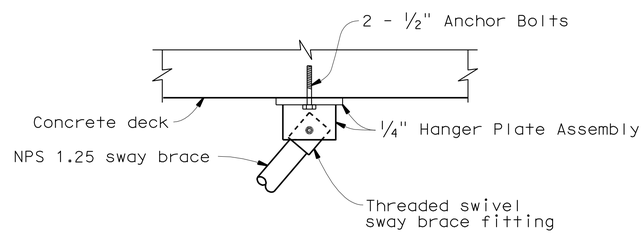

SWAY BRACE ANCHORAGE

No Scale

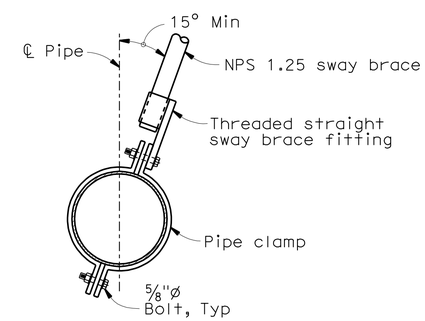

TRANSVERSE SWAY BRACE

No Scale

Note: All pipes to be supported by transverse sway braces at 20'-0" Max spacing throughout.

NOTE:
THE CONTRACTOR SHALL VERIFY ALL CONTROLLING FIELD DIMENSIONS BEFORE ORDERING OR FABRICATING ANY MATERIAL.

	BY	CHECKED
DESIGN	F. Wei	S. Barajas / J. Railey
DETAILS	P. Perez	F. Wei
QUANTITIES	F. Wei	L. Sanchez-Manzo

STATE OF CALIFORNIA DEPARTMENT OF TRANSPORTATION

DIVISION OF ENGINEERING SERVICES STRUCTURE DESIGN DESIGN BRANCH 21

BRIDGE NO. 53-0828
POST MILE 17.30

LOS ANGELES RIVER BRIDGE (WIDEN)
DECK DRAIN DETAILS NO. 2

STRUCTURES DESIGN DETAIL SHEET (ENGLISH) (REV. 09-01-10)

ORIGINAL SCALE IN INCHES FOR REDUCED PLANS 0 1 2 3

UNIT: 3623
PROJECT NUMBER & PHASE: 0700020869 & 1 CONTRACT NO.: 202111

DISREGARD PRINTS BEARING EARLIER REVISION DATES

REVISION DATES 01/26/10 10/04/10 11/24/10 03/01/11

SHEET 62 OF 74

FILE => 53-0828-r-ddet02.dgn

USERNAME => s124496 DATE PLOTTED => 28-JUN-2011 TIME PLOTTED => 20:05

DIST	COUNTY	ROUTE	POST MILES TOTAL PROJECT	SHEET No.	TOTAL SHEETS
07	LA	710	17.2/26.4	1359	1507

REGISTERED CIVIL ENGINEER 03/01/11 DATE

6-27-11
PLANS APPROVAL DATE

REGISTERED PROFESSIONAL ENGINEER FRANK HSIAOSHIH WEI No. C 52918 Exp. 12-31-12 CIVIL STATE OF CALIFORNIA

The State of California or its officers or agents shall not be responsible for the accuracy or completeness of electronic copies of this plan sheet.

LEGEND:

- Structure Excavation (Aerially Deposited Lead Type Z-2)
- Structure Excavation
- Structure Backfill

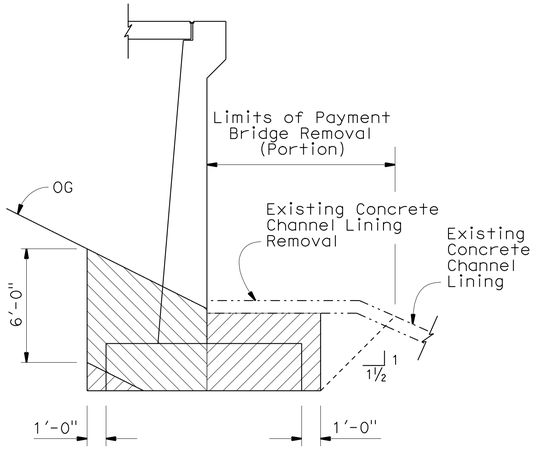

ABUTMENT 1 EXCAVATION

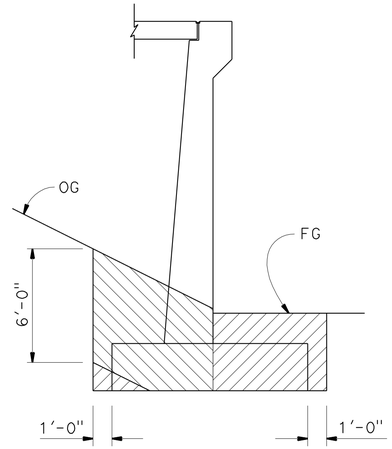

ABUTMENT 5 EXCAVATION

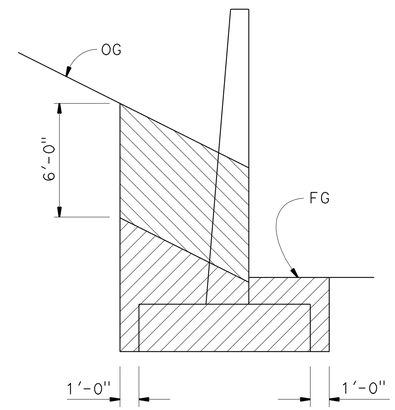

EXCAVATION

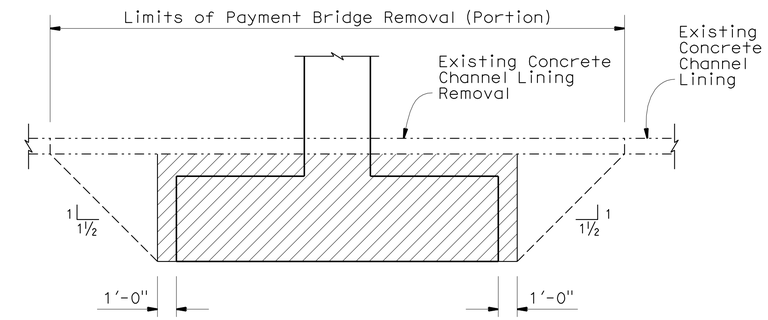

EXCAVATION

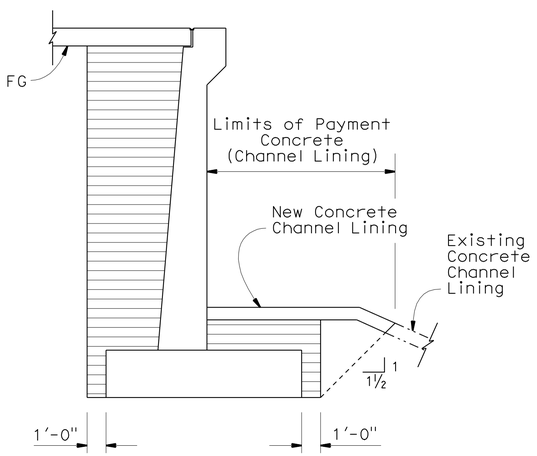

ABUTMENT 1 BACKFILL

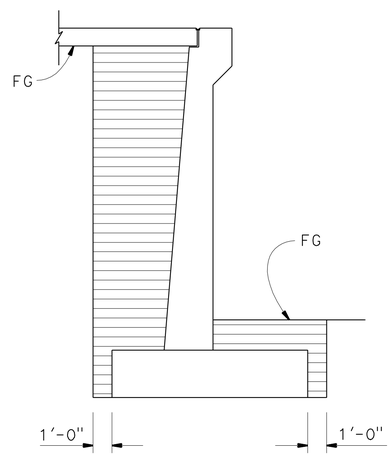

ABUTMENT 5 BACKFILL

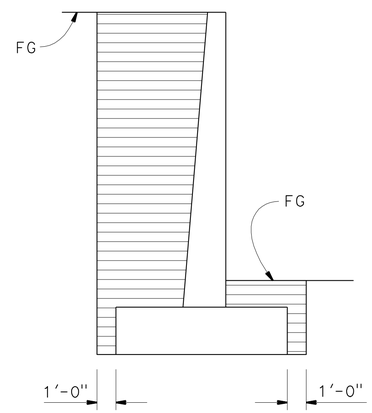

BACKFILL

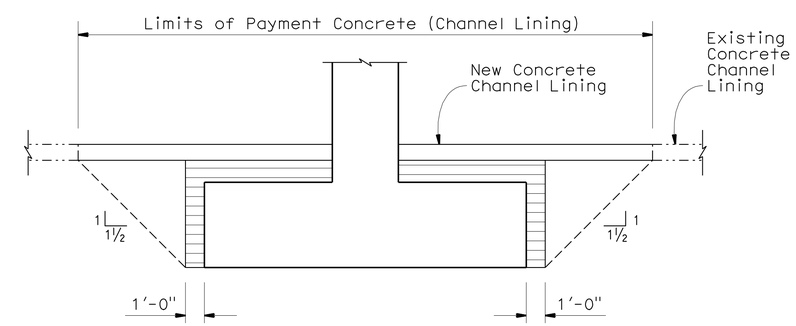

BACKFILL

ABUTMENT

RETAINING WALL

PIER WALL

LIMITS OF PAYMENT FOR EXCAVATION AND BACKFILL

No Scale

NOTE:
THE CONTRACTOR SHALL VERIFY ALL CONTROLLING FIELD DIMENSIONS BEFORE ORDERING OR FABRICATING ANY MATERIAL.

	BY	CHECKED
DESIGN	F. Wei	S. Barajas / J. Railey
DETAILS	P. Perez	F. Wei
QUANTITIES	F. Wei	L. Sanchez-Manzo

STATE OF CALIFORNIA DEPARTMENT OF TRANSPORTATION

DIVISION OF ENGINEERING SERVICES STRUCTURE DESIGN DESIGN BRANCH 21

BRIDGE NO. 53-0828
POST MILE 17.30

LOS ANGELES RIVER BRIDGE (WIDEN)
LIMITS OF PAYMENT FOR EXCAVATION AND BACKFILL

STRUCTURES DESIGN DETAIL SHEET (ENGLISH) (REV. 09-01-10)

ORIGINAL SCALE IN INCHES FOR REDUCED PLANS 0 1 2 3

UNIT: 3623
PROJECT NUMBER & PHASE: 0700020869 & 1 CONTRACT NO.: 202111

DISREGARD PRINTS BEARING EARLIER REVISION DATES 10/01/10 11/24/10 03/01/11

SHEET 63 OF 74

FILE => 53-0828-s-exc_back.dgn

USERNAME => s124496 DATE PLOTTED => 28-JUN-2011 TIME PLOTTED => 20:05

DIST	COUNTY	ROUTE	POST MILES TOTAL PROJECT	SHEET No.	TOTAL SHEETS
07	LA	710	17.2/26.4	1360	1507

REGISTERED CIVIL ENGINEER 03/01/11 DATE

6-27-11
PLANS APPROVAL DATE

REGISTERED PROFESSIONAL ENGINEER FRANK HSIAOSHIH WEI No. C 52918 Exp. 12-31-12 CIVIL STATE OF CALIFORNIA

The State of California or its officers or agents shall not be responsible for the accuracy or completeness of electronic copies of this plan sheet.

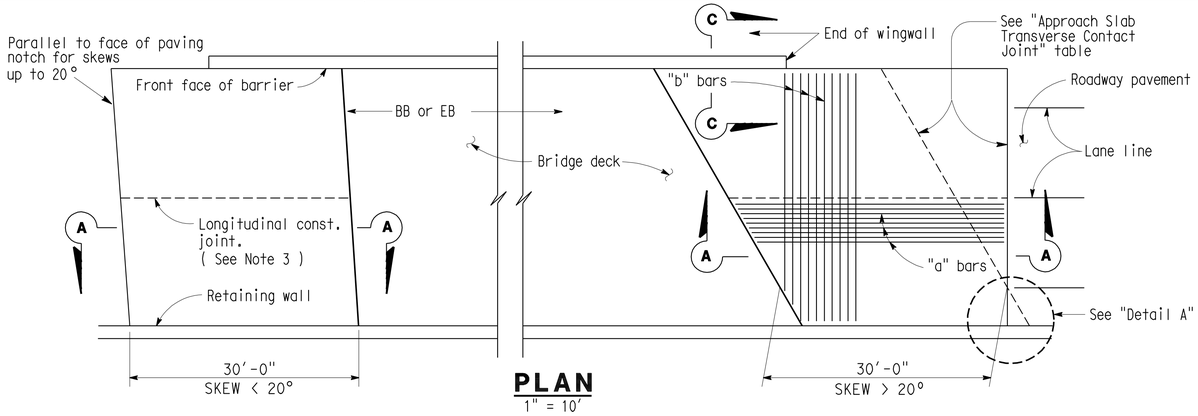

PLAN
1" = 10'

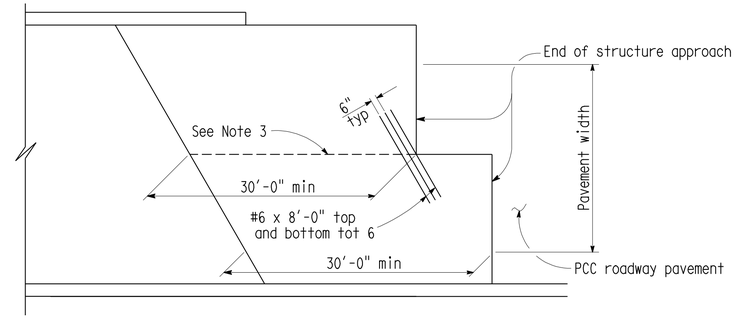

STRUCTURE APPROACH - END STAGGER DETAIL
No Scale

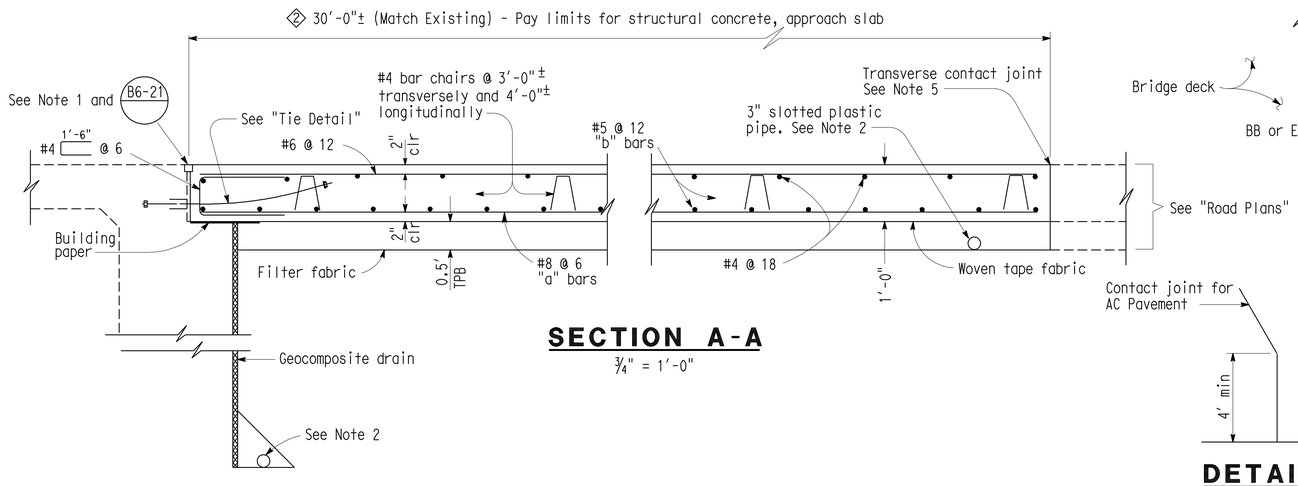

SECTION A-A
¾" = 1'-0"

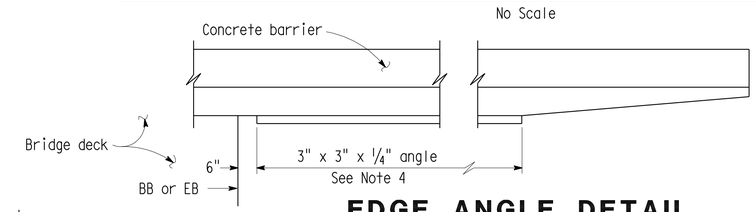

EDGE ANGLE DETAIL
½" = 1'-0"

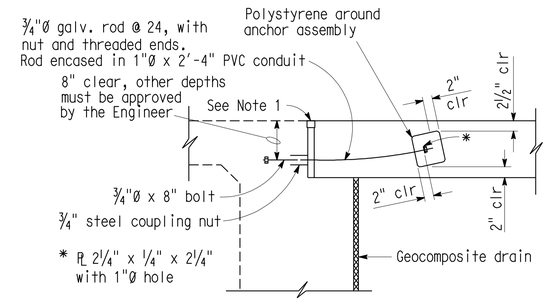

TIE DETAIL
¾" = 1'-0"

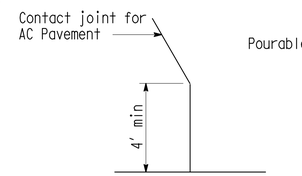

DETAIL A
No Scale

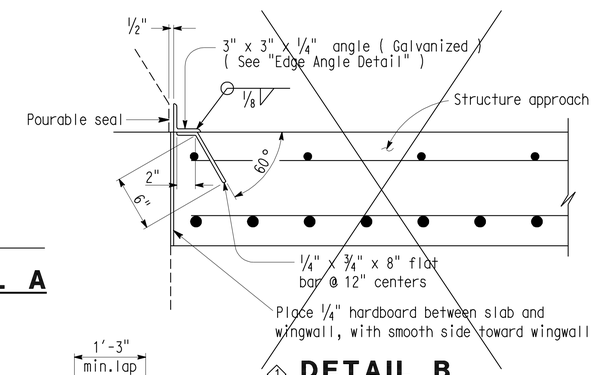

① DETAIL B
1½" = 1'-0"

APPROACH SLAB TRANSVERSE CONTACT JOINT		
APPROACH SKEW	WITH AC ROADWAY PAVEMENT	WITH PCC ROADWAY PAVEMENT
< 20°	Parallel to face of paving notch	Parallel to face of paving notch
20° - 45°	Parallel to face of P N use (Detail A)	Stagger lines 24' to 36' apart
> 45°	Parallel to face of P N use (Detail A)	Stagger at each lane line

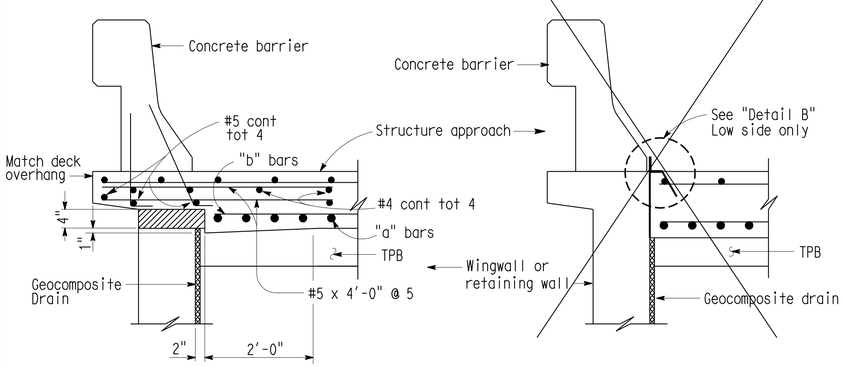

TYPE E-1 **TYPE E-2** ①

SECTION C-C
¾" = 1'-0"
(Type E-1 to be used, unless otherwise shown on plans)

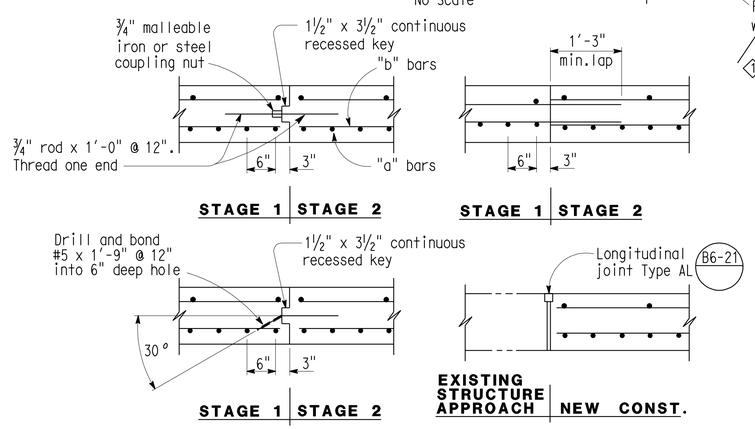

③ LONGITUDINAL CONSTRUCTION JOINT ALTERNATIVES
¾" = 1'-0"

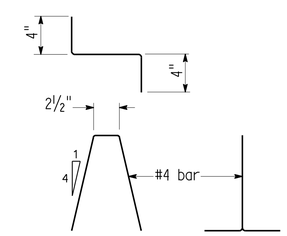

BAR CHAIR DETAIL
1½" = 1'-0"

NOTES:

1. For details not noted or shown, see Structure Plans.
2. For drainage details, see "Structure Approach Drainage Details" sheet.
3. Longitudinal construction joints, when permitted by the Engineer, shall be located on lane lines.
4. End angle at beginning of barrier transition, end of wingwall or end of structure approach, as applicable
5. ② For transverse contact joint with new PCC paving, refer to Standard Plan P10.
6. At the contractor's option, approach slab transverse reinforcement may be placed parallel to paving notch. Spacing of transverse reinforcement is measured along ℄ roadway.

Polystyrene to be removed.

SPECIAL DETAILS

STANDARD DRAWING
FILE NO. xs 22-24
APPROVAL DATE 8/92

① Deleted Detail ③ Added Detail
② Revised Notes

STATE OF CALIFORNIA
DEPARTMENT OF TRANSPORTATION

DIVISION OF ENGINEERING SERVICES

BRIDGE NO. 53-0828
POST MILE 17.30

LOS ANGELES RIVER BRIDGE (WIDEN)
STRUCTURE APPROACH TYPE N(30D)

DS OSD 2147A (ENGLISH STANDARD DRAWING "XS" BORDER REV. (02-02-11)

ORIGINAL SCALE IN INCHES FOR REDUCED PLANS 0 1 2 3

UNIT: 3623
PROJECT NUMBER & PHASE: 0700020869 & 1 CONTRACT NO.: 202111

DISREGARD PRINTS BEARING EARLIER REVISION DATES

REVISION DATES: 10/01/10 11/24/10 03/01/11

SHEET 64 OF 74

FILE => 53-0828-s-sa_N30D.dgn

USERNAME => s124436 DATE PLOTTED => 28-JUN-2011 TIME PLOTTED => 20:05

DIST	COUNTY	ROUTE	POST MILES TOTAL PROJECT	SHEET No.	TOTAL SHEETS
07	LA	710	17.2/26.4	1361	1507

REGISTERED CIVIL ENGINEER 03/01/11 DATE

6-27-11
PLANS APPROVAL DATE

REGISTERED PROFESSIONAL ENGINEER FRANK HSIAOSHIH WEI No. C 52918 Exp. 12-31-12 CIVIL STATE OF CALIFORNIA

The State of California or its officers or agents shall not be responsible for the accuracy or completeness of electronic copies of this plan sheet.

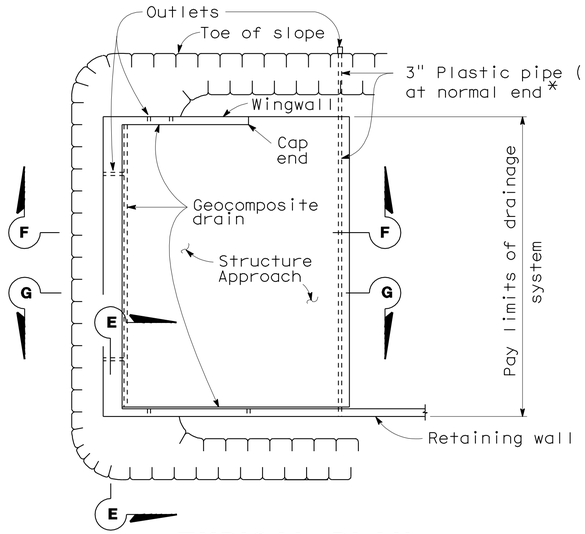

② TYPICAL PLAN

No Scale

*For pipe layout at staggered end, see "Detail B".

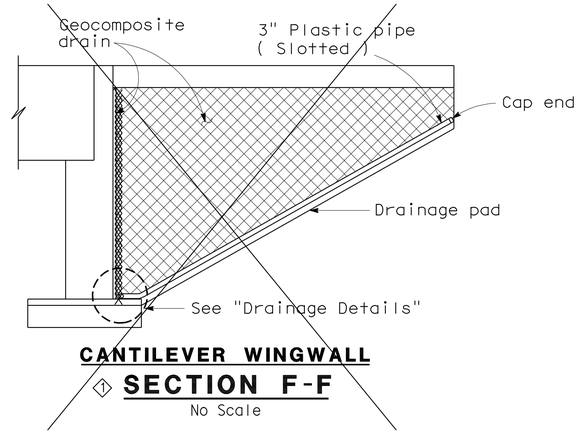

CANTILEVER WINGWALL

① SECTION F-F

No Scale

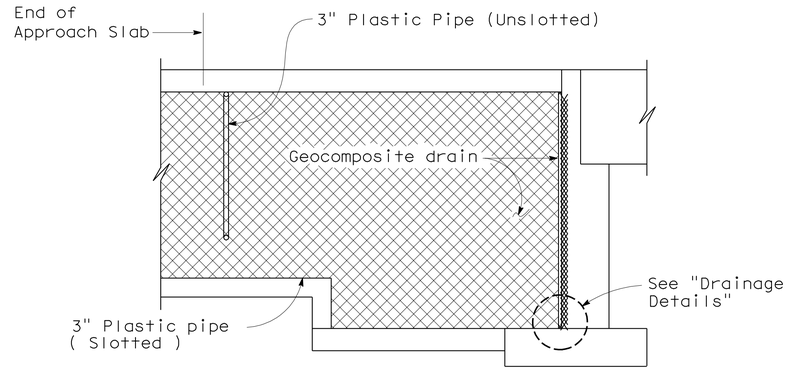

RETAINING WALL WINGWALL

② SECTION G-G

No Scale

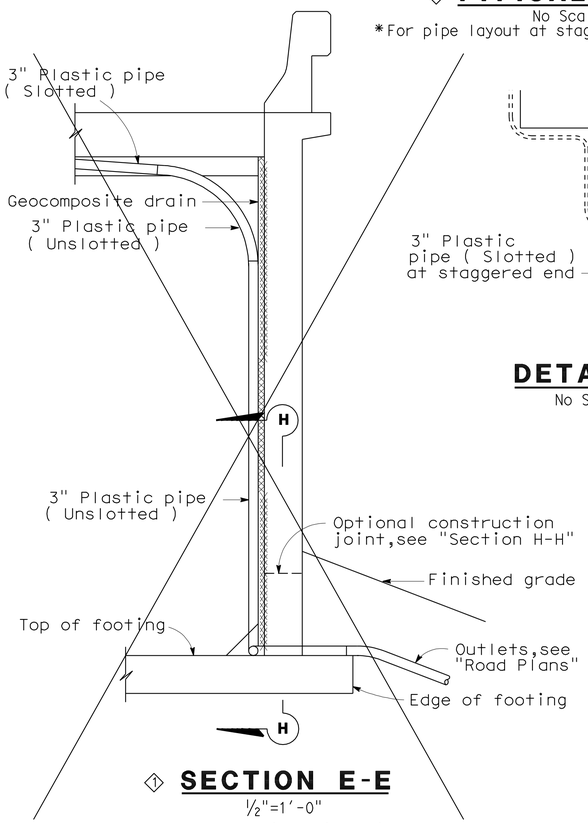

① SECTION E-E

½"=1'-0"

NOTE: Bends and junctions in 3" plastic pipe are 30" radius min.

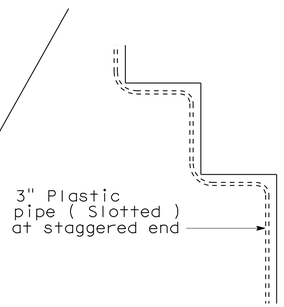

DETAIL B

No Scale

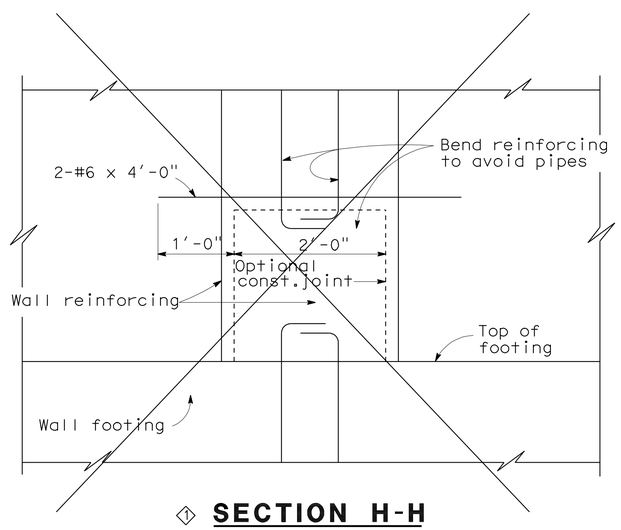

① SECTION H-H

1"=1'-0"

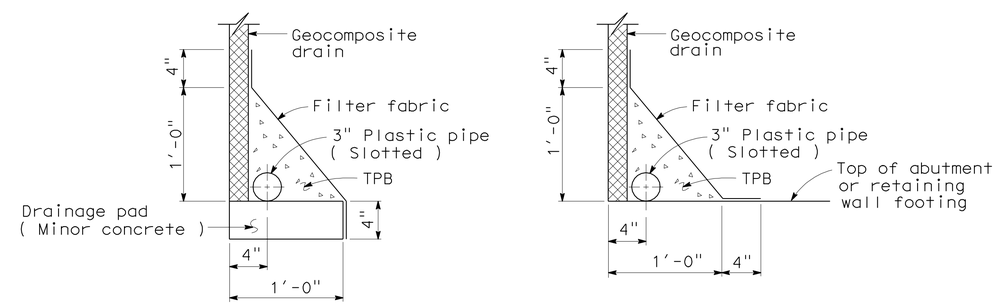

WITHOUT FOOTING **WITH FOOTING**

DRAINAGE DETAILS

1½"=1'-0"

SPECIAL DETAILS

REVISED STANDARD DRAWING

FILE NO. xs3-110e

APPROVAL DATE 4/23/98

① Deleted Detail
② Revised Detail

STATE OF CALIFORNIA DEPARTMENT OF TRANSPORTATION

DIVISION OF ENGINEERING SERVICES

BRIDGE NO. 53-0828
POST MILE 17.30

LOS ANGELES RIVER BRIDGE (WIDEN)
STRUCTURE APPROACH DRAINAGE DETAILS

DS OSD 2147A (ENGLISH STANDARD DRAWING "XS" BORDER REV. (02-02-11)

ORIGINAL SCALE IN INCHES FOR REDUCED PLANS 0 1 2 3

UNIT: 3623
PROJECT NUMBER & PHASE: 0700020869 & 1 CONTRACT NO.: 202111

DISREGARD PRINTS BEARING EARLIER REVISION DATES

REVISION DATES 10/01/10 11/24/10

SHEET 65 OF 74

FILE => 53-0828-s-sadd.dgn

USERNAME => S124496 DATE PLOTTED => 28-JUN-2011 TIME PLOTTED => 20:06

DIST	COUNTY	ROUTE	POST MILES TOTAL PROJECT	SHEET No	TOTAL SHEETS
07	LA	710	17.2/26.4	1362	1507

Tatjana Halda 12-14-10
REGISTERED CIVIL ENGINEER

6-27-11
PLANS APPROVAL DATE

REGISTERED PROFESSIONAL ENGINEER
Tatjana L. Halda
No. C68293
Exp. 9-30-11
CIVIL
STATE OF CALIFORNIA

The State of California or its officers or agents shall not be responsible for the accuracy or completeness of electronic copies of this plan sheet.

This LOTB sheet was prepared in accordance with the Caltrans Soil & Rock Logging, Classification, & Presentation Manual (2010 Edition).

BENCH MARK

PRHV 109

PK Nail SB710 Shldr,
84′ S'ly/Br Rail
63.346′ Lt ℄ Rte 710
Sta 914+96.91
N 1 798 877.209
E 6 508 210.228
Elev = 122.185

PRHV 108

PK Nail SB710 on dike
behind MBGR, 22′ N'LY/Br Rail
61.830′Lt ℄ Rte 710
Sta.922+63.41
N 1 799 364.692
E 6 508 803.633
Elev = 130.541′

PRHV 22

2x2 behind MBGR NB710,
19.5′ S/Br Rail
64.596′ Rt ℄ Rte 710
Sta.914+34.26
N 1 798 740.3198
E 6 508 249.6114
Elev = 118.891′

PRHV 23

PK in NB710 Shldr,
134.5′ N'ly/Br
63.604′ Rt ℄ Rte 710
Sta 9922+46.33
N 1 799 527.5000
E 6 508 870.9780
Elev = 132.493

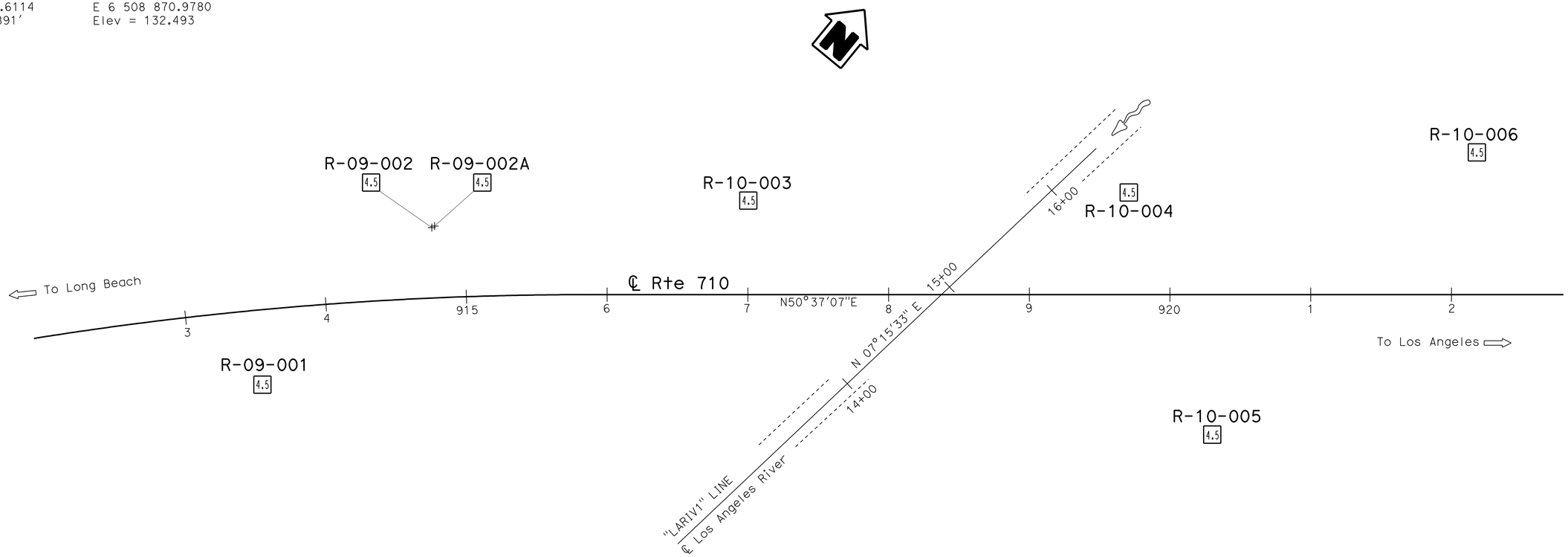

PLAN
1" = 40′

ENGINEERING SERVICES	GEOTECHNICAL SERVICES	STATE OF CALIFORNIA DEPARTMENT OF TRANSPORTATION	DIVISION OF ENGINEERING SERVICES STRUCTURE DESIGN DESIGN BRANCH 21	BRIDGE NO. 53-0828 POST MILE 17.30	LOS ANGELES RIVER BRIDGE (WIDEN) LOG OF TEST BORINGS 1 OF 9
FUNCTIONAL SUPERVISOR NAME: S. Karimi	DRAWN BY: F. Nguyen 10/10 CHECKED BY: K. Lai	FIELD INVESTIGATION BY: T. Halda, J Pratt			

OGS CIVIL LOG OF TEST BORINGS SHEET

ORIGINAL SCALE IN INCHES FOR REDUCED PLANS 0 1 2 3

UNIT: 3643
PROJECT NUMBER & PHASE: 07000208691
CONTRACT NO.: 07-202111

DISREGARD PRINTS BEARING EARLIER REVISION DATES

REVISION DATES: 11-12-10 12-09-10 12-13-10

SHEET 66 OF 74

FILE => 53-0828-z-1tb01.dgn

USERNAME => S124436 DATE PLOTTED => 28-JUN-2011 TIME PLOTTED => 20:06

DIST	COUNTY	ROUTE	POST MILES TOTAL PROJECT	SHEET No	TOTAL SHEETS
07	LA	710	17.2/26.4	1363	1507

Tatjana Halda 12-14-10
REGISTERED CIVIL ENGINEER

6-27-11
PLANS APPROVAL DATE

REGISTERED PROFESSIONAL ENGINEER Tatjana L. Halda No. C68293 Exp. 9-30-11 CIVIL STATE OF CALIFORNIA

The State of California or its officers or agents shall not be responsible for the accuracy or completeness of electronic copies of this plan sheet.

This LOTB sheet was prepared in accordance with the Caltrans Soil & Rock Logging, Classification, & Presentation Manual (2010 Edition).

FOR PLAN VIEW, SEE
"LOG OF TEST BORINGS" 1 OF 9

Note: Groundwater was encountered but not measured in Boring R-09-001.

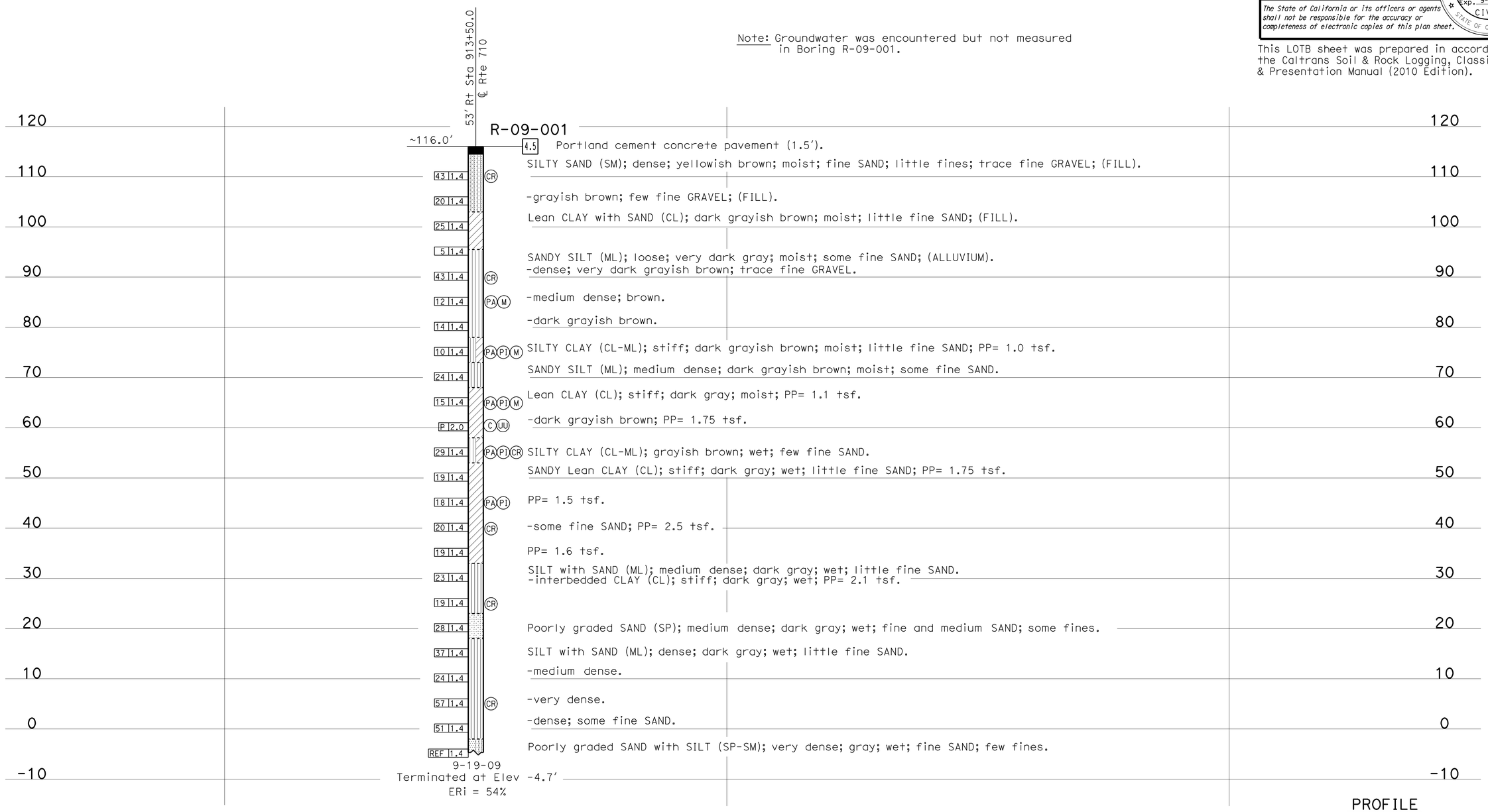

PROFILE
Horiz: 1" = 10'
Vert: 1" = 10'

ENGINEERING SERVICES	GEOTECHNICAL SERVICES	STATE OF CALIFORNIA DEPARTMENT OF TRANSPORTATION	DIVISION OF ENGINEERING SERVICES STRUCTURE DESIGN DESIGN BRANCH 21	BRIDGE NO. 53-0828 POST MILE 17.30	LOS ANGELES RIVER BRIDGE (WIDEN) LOG OF TEST BORINGS 2 OF 9
FUNCTIONAL SUPERVISOR NAME: S. Karimi	DRAWN BY: F. Nguyen 10/10 CHECKED BY: K. Lai	FIELD INVESTIGATION BY: T. Halda, J. Pratt			

OGS CIVIL LOG OF TEST BORINGS SHEET

ORIGINAL SCALE IN INCHES FOR REDUCED PLANS 0 1 2 3

UNIT: 3643
PROJECT NUMBER & PHASE: 07000208691 CONTRACT NO.: 07-202111

DISREGARD PRINTS BEARING EARLIER REVISION DATES

REVISION DATES 11-12-10 12-06-10 12-13-10

SHEET 67 OF 74

FILE => 53-0828-z-ltb02.dgn

USERNAME => s124496 DATE PLOTTED => 28-JUN-2011 TIME PLOTTED => 20:06

DIST	COUNTY	ROUTE	POST MILES TOTAL PROJECT	SHEET No	TOTAL SHEETS
07	LA	710	17.2/26.4	1364	1507

Tatjana Halda 12-14-10
REGISTERED CIVIL ENGINEER

6-27-11
PLANS APPROVAL DATE

The State of California or its officers or agents shall not be responsible for the accuracy or completeness of electronic copies of this plan sheet.

REGISTERED PROFESSIONAL ENGINEER Tatjana L. Halda No. C68293 Exp. 9-30-11 CIVIL STATE OF CALIFORNIA

This LOTB sheet was prepared in accordance with the Caltrans Soil & Rock Logging, Classification, & Presentation Manual (2010 Edition).

FOR PLAN VIEW, SEE
"LOG OF TEST BORINGS" 1 OF 9

Note: Groundwater was encountered but not measured in Borings R-09-002 and R-09-002A.

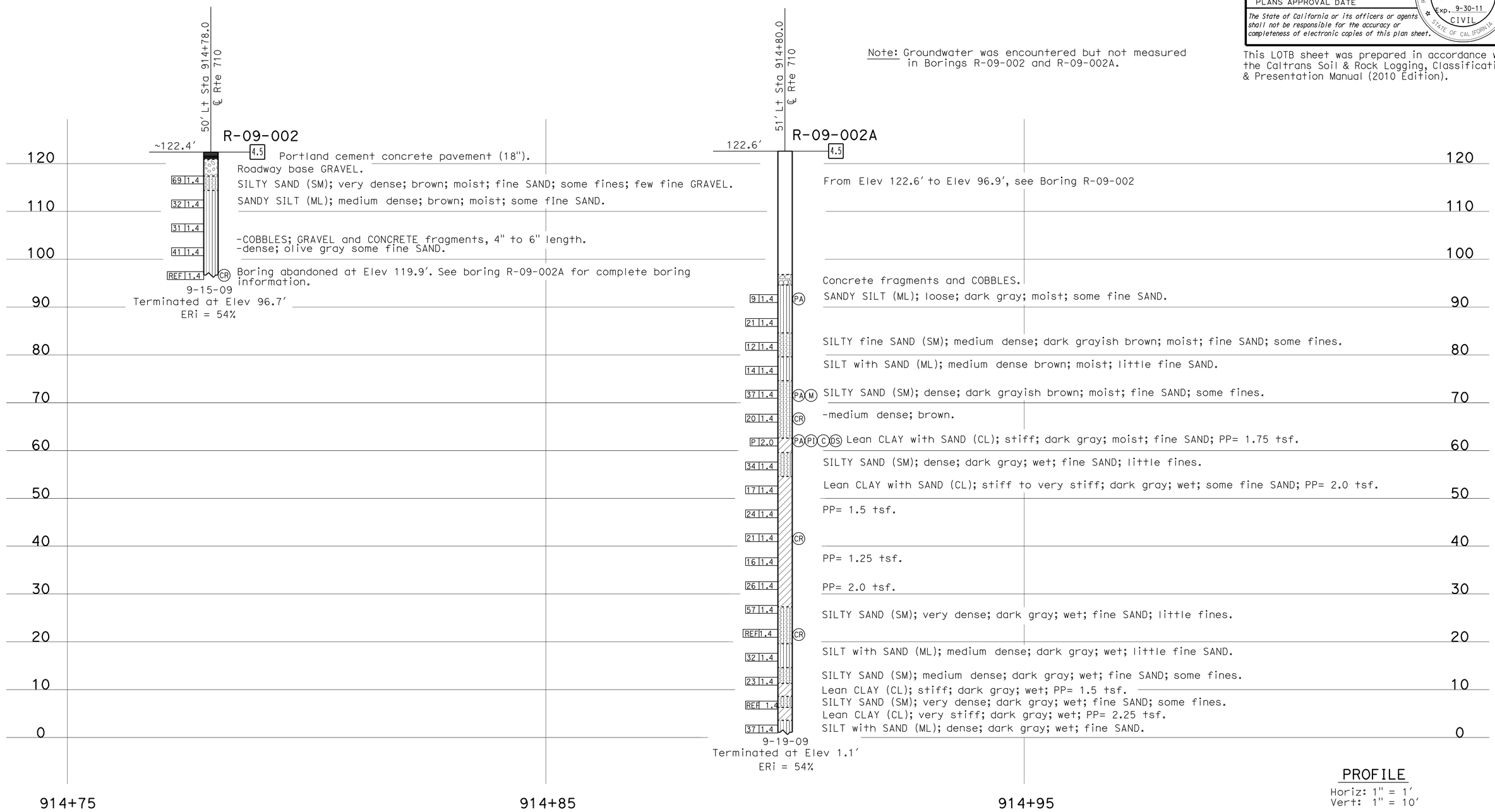

ENGINEERING SERVICES	GEOTECHNICAL SERVICES	STATE OF CALIFORNIA DEPARTMENT OF TRANSPORTATION	DIVISION OF ENGINEERING SERVICES STRUCTURE DESIGN DESIGN BRANCH 21	BRIDGE NO. 53-0828 POST MILE 17.30	LOS ANGELES RIVER BRIDGE (WIDEN) LOG OF TEST BORINGS 3 OF 9
FUNCTIONAL SUPERVISOR NAME: S. Karimi	DRAWN BY: F. Nguyen 10/10 CHECKED BY: K. Lai	FIELD INVESTIGATION BY: T. Halda, J. Pratt			

OGS CIVIL LOG OF TEST BORINGS SHEET

ORIGINAL SCALE IN INCHES FOR REDUCED PLANS 0 1 2 3

UNIT: 3643
PROJECT NUMBER & PHASE: 07000208691 CONTRACT NO.: 07-202111

DISREGARD PRINTS BEARING EARLIER REVISION DATES

REVISION DATES 11-12-10 12-06-10 12-13-10

SHEET 68 OF 74

FILE => 53-0828-z-ltb03.dgn

USERNAME => s124196 DATE PLOTTED => 28-JUN-2011 TIME PLOTTED => 20:06

DIST	COUNTY	ROUTE	POST MILES TOTAL PROJECT	SHEET No	TOTAL SHEETS
07	LA	710	17.2/26.4	1365	1507

Tatjana Halda 12-14-10
REGISTERED CIVIL ENGINEER

6-27-11
PLANS APPROVAL DATE

The State of California or its officers or agents shall not be responsible for the accuracy or completeness of electronic copies of this plan sheet.

REGISTERED PROFESSIONAL ENGINEER Tatjana L. Halda No. C68293 Exp. 9-30-11 CIVIL STATE OF CALIFORNIA

This LOTB sheet was prepared in accordance with the Caltrans Soil & Rock Logging, Classification, & Presentation Manual (2010 Edition).

FOR PLAN VIEW, SEE
"LOG OF TEST BORINGS" 1 OF 9

Note: Groundwater was encountered but not not measured in Boring R-10-004.

R-10-003

66.8' Rt Sta 917+00.3
℄ Rte 710

82.0'

Reinforced concrete slab (12" channel bottom lining).
SANDY SILT (ML); moderately bedded with thin and moderate interbeds of Lean CLAY with SAND (CL); SANDY SILT (ML); loose; dark grayish brown; moist; fine sand. Lean CLAY with SAND (CL); medium stiff; dark grayish brown and olive brown; moist; little fine SAND; trace mica; (undifferentiaed FILL/ALLUVIUM); PP= 0.8 tsf.
SILTY SAND (SM); loose; dark gray; moist; some SILT; (ALLUVIUM).
SILTY SAND (SM); moderately interbedded with Lean CLAY with SAND (CL); SILTY SAND (SM); medium dense; dark grayish brown; moist; fine SAND; little SILT. Lean CLAY with SAND (CL); stiff; dark gray; moist; medium plasticity; PP= 1.25 tsf.
Poorly graded SAND with SILT (SP-SM); medium dense; gray; moist; fine and medium SAND; trace mica.
-dense; cross laminated.
SILT with SAND (ML); stiff; dark gray; wet; little fine SAND; PP= 1.2 tsf.
SILTY SAND (SM); medium dense; dark grayish brown; wet; fine SAND; some SILT.
Lean CLAY with SAND (CL); moderately interbeded with SANDY SILT (ML); Lean CLAY with SAND (CL); stiff; olive brown and gray; wet; little fine SAND; trace CALCITE nodules (< 0.2" diameter, weakly cemented) and thin rootlets (0.04" Dia); SANDY SILT (ML); loose dark gray; wet; some fine SAND; (PALEOSOL).
Poorly graded SAND with SILT (SP-SM); dense; dark gray and gray; wet; fine and medium SAND.
-some GRAVEL; fine and coarse GRAVEL (≤ 2"); subrounded; hard, GRANITIC.
SILTY (ML); very stiff; dark gray; wet; trace fine SAND; trace CALCITE nodules (0.04"); PP= 2.0 tsf.
SANDY SILT (ML); medium dense; dark gray; wet; fine SAND; trace mica.
SILT with SAND (ML); stiff; dark gray; wet; fine SAND; PP= 1.75 tsf.
SILTY SAND (SM); medium dense; dark gray; wet; fine SAND; some SILT; trace charcoal fragments (0.2").
SILTY SAND (SM); moderately interbedded with SILT with SAND (ML). SILTY SAND (SM); medium dense; gray wet; fine SAND; little SILT; few coarse GRAVEL (≤2"). subrounded; hard; DIORITE. SILT with SAND (ML); medium dense; dark gray; wet; fine SAND; trace rootlets (1").
SILT (ML); medium stiff; dark gray and dark greenish gray; wet; from few to trace fine SAND; PP= 0.9 tsf.
Poorly graded SAND (SP); thickly interbedded with SILTY SAND (SM); SAND (SP); very dense; gray; wet; fine and medium SAND; trace SILT. SILTY SAND (SM); medium dense; dark greenish gray; wet; fine SAND; some SILT.
Poorly graded GRAVEL with SAND (GP); very dense; gray; wet; fine and coarse GRAVEL (≤ 1"), subrounded; hard; DIORITE and QUARTZ; some fine and medium SAND.
Poorly graded SAND (SP); medium dense; dark greenish gray; wet; medium and coarse SAND; few fine GRAVEL.
SILT (ML); stiff; dark greenish gray; wet; little fine SAND; PP= 1.25 tsf.
SILTY SAND (SM); very dense; greenish gray; wet; medium and fine SAND; few fine and coarse GRAVEL; few fines.
Poorly graded GRAVEL with SAND (GP); dense; yellowish brown; wet: medium and fine SAND; few fines.
Interbeded SANDY lean CLAY (CL); medium stiff; greenish gray; wet; some fine SAND; PP=0.6 tsf.
-medium and coarse SAND.
Poorly graded SAND with GRAVEL (SP); very dense; grayish brown; wet; fine and medium SAND; little fine GRAVEL; trace fines.
SILTY SAND (SM); dense; dark gray; wet; fine SAND; little fine.
SANDY lean CLAY (CL); very stiff; dark greenish gray; wet; some fine SAND; PP= 4.0 tsf.
SANDY SILT (ML); very stiff; dark gray; wet; some fine SAND; PP= 2.5 tsf.
-little fine SAND.
SILTY SAND (SM); dense; dark gray; wet; fine SAND; some fines.
Poorly graded SAND with GRAVEL (SP); very dense; gray; wet; fine and medium SAND; little fine and coarse GRAVEL; trace fines.

Elev	Blows	Type
5	1.4	
5	1.4	
11	1.4	
18	1.4	
19	1.4	
26	1.4	
37	1.4	
10	1.4	
16	1.4	
7	1.4	
30	1.4	
9	1.4	
15	1.4	
24	1.4	
12	1.4	
21	1.4	
11	1.4	
17	1.4	
18	1.4	
54	1.4	
17	1.4	
57	1.4	
49	1.4	
50/6	1.4	
33	1.4	
27	1.4	
42	1.4	
96	1.4	

GWS Elev 44.6'
9-17-10

5-26-10
Terminated at Elev -59.5'
ERi = 68%

R-10-004

72.5' Lt Sta 919+70.7
℄ Rte 710

82.5'

Reinforced concrete slab (12" channel bottom lining).
SANDY SILT (ML); olive gray; moist; fine SAND.
-loose.
Lean CLAY with SAND (CL); stiff; olive gray; moist; little fine SAND; PP= 1.0 tsf.
SILTY SAND (SM); medium dense; olive gray; moist; fine SAND; some fines.
Poorly graded SAND with SILT (SP); dense; olive gray; moist; fine and medium SAND; few fines.
-medium dense.
SILT (ML); loose; olive gray; moist; few fine SAND.
-medium dense.
-loose; little fine SAND.
SILTY SAND (SM); dense; olive gray; moist fine and medium SAND; little fines.
SILT (ML); medium dense; olive gray; moist; few fine SAND.
SILTY SAND (SM); medium dense; olive gray; moist; fine SAND; little fines.
-dense; fine and medium SAND.
-medium SAND; trace fine GRAVEL.
SANDY SILT (ML); medium dense; olive gray; moist; some fine SAND.
SILTY SAND (SM); medium dense; olive gray; moist; fine SAND.
SILT (ML); stiff; olive gray; moist; few fine SAND; PP=1.0 tsf.
PP= 1.75 tsf.
SILTY SAND (SM); very dense; olive gray; moist; few fine to coarse SAND; little fines; few fine GRAVEL.
-coarse SAND; little GRAVEL.
SANDY SILT (ML); dense olive gray; moist; some fine SAND.
-medium dense; greenish gray.
SILTY SAND (SM); dense olive gray; moist; fine SAND; little fines.
SANDY SILT (ML); medium dense; olive gray; moist; some fine SAND.

Elev	Blows	Type
8	1.4	
4	1.4	PA PI CR
10	1.4	
14	1.4	PA
33	1.4	
19	1.4	PA
19	1.4	
7	1.4	PA
10	1.4	
9	1.4	PA PI
30	1.4	
14	1.4	
13	1.4	PA PI
18	1.4	
39	1.4	
47	1.4	
17	1.4	
22	1.4	
16	1.4	
16	1.4	PA PI CR
13	1.4	
58	1.4	
50/4	1.4	
50/4	1.4	
30	1.4	
17	1.4	PA PI CR
37	1.4	
21	1.4	

6-15-10
Terminated at Elev -59.0'
ERi = 68%

905+00 915+00 925+00

PROFILE
Horiz: 1" = 80'
Vert: 1" = 10'

ENGINEERING SERVICES	GEOTECHNICAL SERVICES	STATE OF CALIFORNIA DEPARTMENT OF TRANSPORTATION	DIVISION OF ENGINEERING SERVICES STRUCTURE DESIGN DESIGN BRANCH 21	BRIDGE NO. 53-0828 POST MILE 17.30	LOS ANGELES RIVER BRIDGE (WIDEN)
FUNCTIONAL SUPERVISOR NAME: S. Karimi	DRAWN BY: F. Nguyen 10/10 CHECKED BY: K. Lai	FIELD INVESTIGATION BY: T. Halda, J. Pratt			LOG OF TEST BORINGS 4 OF 9

OGS CIVIL LOG OF TEST BORINGS SHEET

ORIGINAL SCALE IN INCHES FOR REDUCED PLANS 0 1 2 3

UNIT: 3643
PROJECT NUMBER & PHASE: 07000208691
CONTRACT NO.: 07-202111

DISREGARD PRINTS BEARING EARLIER REVISION DATES

REVISION DATES 11-12-10 12-09-10 12-13-10

SHEET 69 OF 74

FILE => 53-0828-z-ltb04.dgn

USERNAME => S13244396 DATE PLOTTED => 28-JUN-2011 TIME PLOTTED => 20:06

DIST	COUNTY	ROUTE	POST MILES TOTAL PROJECT	SHEET No	TOTAL SHEETS
07	LA	710	17.2/26.4	1366	1507

Tatjana Halda 12-14-10
REGISTERED CIVIL ENGINEER

6-27-11
PLANS APPROVAL DATE

REGISTERED PROFESSIONAL ENGINEER Tatjana L. Halda No. C68293 Exp. 9-30-11 CIVIL STATE OF CALIFORNIA

The State of California or its officers or agents shall not be responsible for the accuracy or completeness of electronic copies of this plan sheet.

This LOTB sheet was prepared in accordance with the Caltrans Soil & Rock Logging, Classification, & Presentation Manual (2010 Edition).

FOR PLAN VIEW, SEE
"LOG OF TEST BORINGS" 1 OF 9

Note: Groundwater was encountered but not measured in Boring R-10-005.

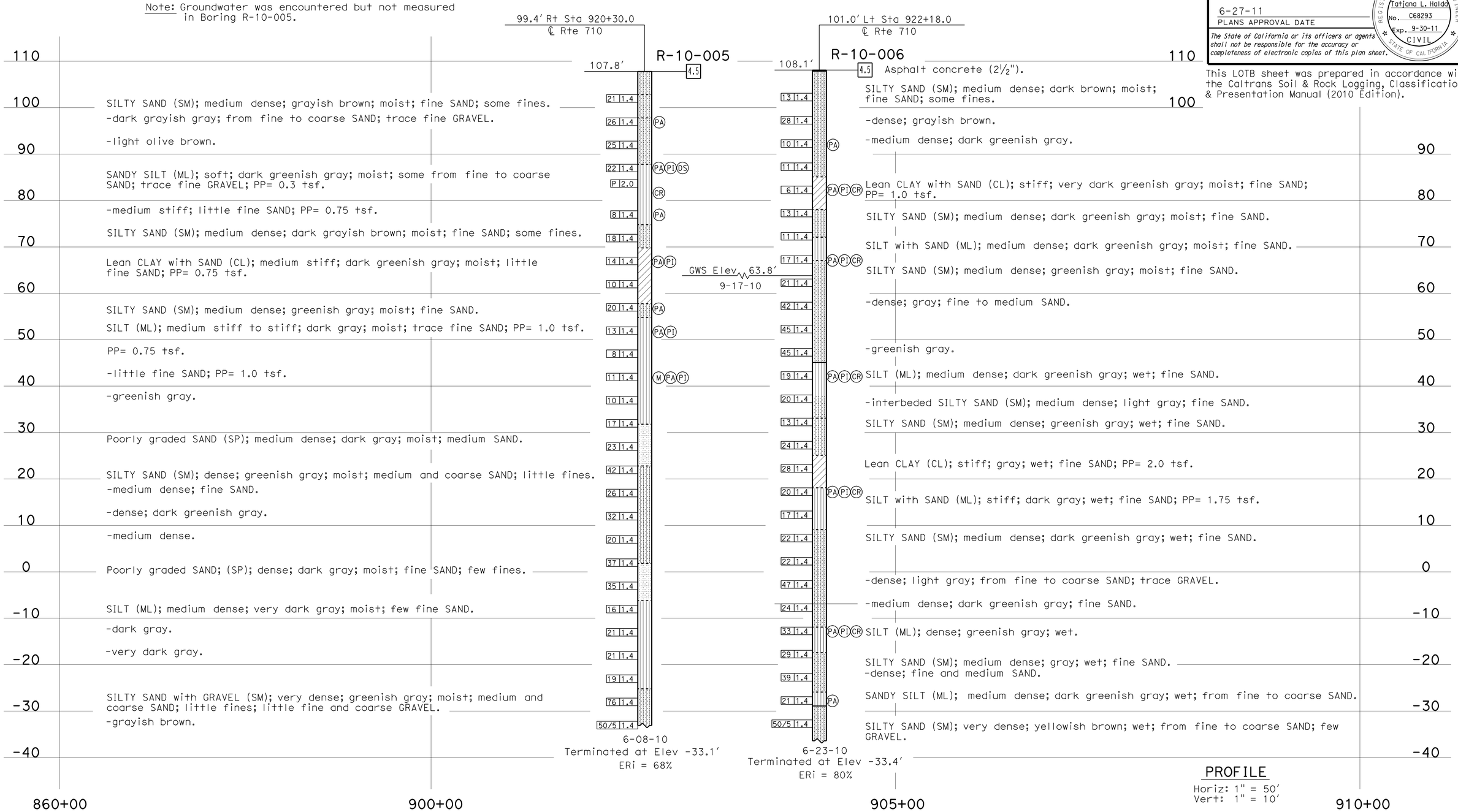

PROFILE
Horiz: 1" = 50'
Vert: 1" = 10'

ENGINEERING SERVICES		GEOTECHNICAL SERVICES	STATE OF CALIFORNIA DEPARTMENT OF TRANSPORTATION	DIVISION OF ENGINEERING SERVICES STRUCTURE DESIGN DESIGN BRANCH 21	BRIDGE NO. 53-0828 POST MILE 17.30	LOS ANGELES RIVER BRIDGE (WIDEN) LOG OF TEST BORINGS 5 OF 9
FUNCTIONAL SUPERVISOR NAME: S. Karimi	DRAWN BY: F. Nguyen 10/10 CHECKED BY: K. Lai	FIELD INVESTIGATION BY: T. Halda, J. Pratt				

OGS CIVIL LOG OF TEST BORINGS SHEET

ORIGINAL SCALE IN INCHES FOR REDUCED PLANS 0 1 2 3

UNIT: 3643
PROJECT NUMBER & PHASE: 07000208691 CONTRACT NO.: 07-202111

DISREGARD PRINTS BEARING EARLIER REVISION DATES → REVISION DATES 11-12-10 12-09-10 12-13-10 SHEET 70 OF 74

FILE => 53-0828-z-ltb05.dgn

USERNAME => s6124196 DATE PLOTTED => 28-JUN-2011 TIME PLOTTED => 20:06

DIST	COUNTY	ROUTE	POST MILES TOTAL PROJECT	SHEET No	TOTAL SHEETS
07	LA	710	17.2/26.4	1367	1507

Tatjana Halda 12-14-10
REGISTERED CIVIL ENGINEER

6-27-11
PLANS APPROVAL DATE

REGISTERED PROFESSIONAL ENGINEER
Tatjana L. Halda
No. C68293
Exp. 9-30-11
CIVIL
STATE OF CALIFORNIA

The State of California or its officers or agents shall not be responsible for the accuracy or completeness of electronic copies of this plan sheet.

REFERENCE: CALTRANS SOIL & ROCK LOGGING, CLASSIFICATION, AND PRESENTATION MANUAL (2010)

CEMENTATION

Description	Criteria
Weak	Crumbles or breaks with handling or little finger pressure.
Moderate	Crumbles or breaks with considerable finger pressure.
Strong	Will not crumble or break with finger pressure.

BOREHOLE IDENTIFICATION

Symbol	Hole Type	Description
Size	A	Auger Boring (hollow or solid stem bucket)
Size	R RW RC P	Rotary drilled boring (conventional) Rotary drilled with self-casing wire-line Rotary core with continuously-sampled, self-casing wire-line Rotary percussion boring (air)
Size	R	Rotary drilled diamond core
Size	HD HA	Hand driven (1-inch soil tube) Hand Auger
●	D	Dynamic Cone Penetration Boring
▲	CPT	Cone Penetration Test (ASTM D 5778)
⬚	O	Other (note on LOTB)

Note: Size in inches.

CONSISTENCY OF COHESIVE SOILS

Description	Shear Strength (tsf)	Pocket Penetrometer Measurement, PP, (tsf)	Torvane Measurement, TV, (tsf)	Vane Shear Measurement, VS, (tsf)
Very Soft	Less than 0.12	Less than 0.25	Less than 0.12	Less than 0.12
Soft	0.12 - 0.25	0.25 - 0.5	0.12 - 0.25	0.12 - 0.25
Medium Stiff	0.25 - 0.5	0.5 - 1	0.25 - 0.5	0.25 - 0.5
Stiff	0.5 - 1	1 - 2	0.5 - 1	0.5 - 1
Very Stiff	1 - 2	2 - 4	1 - 2	1 - 2
Hard	Greater than 2	Greater than 4	Greater than 2	Greater than 2

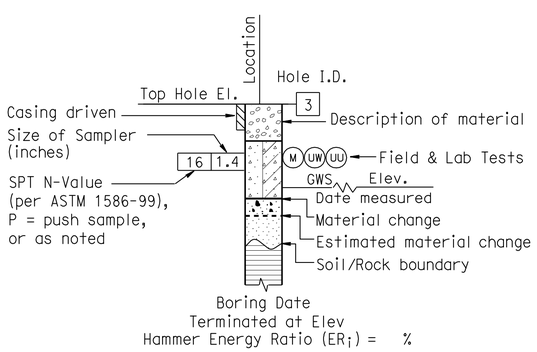

ROTARY BORING

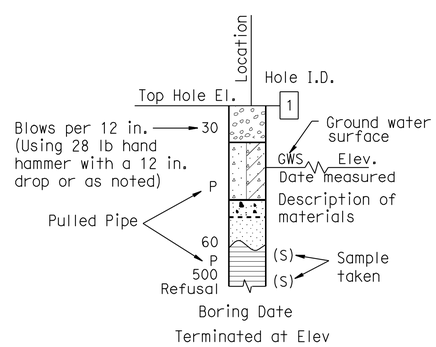

HAND BORING

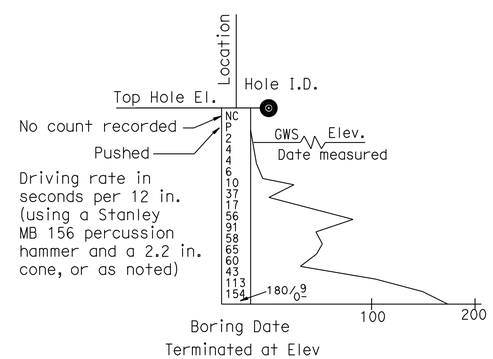

DYNAMIC CONE PENETRATION BORING

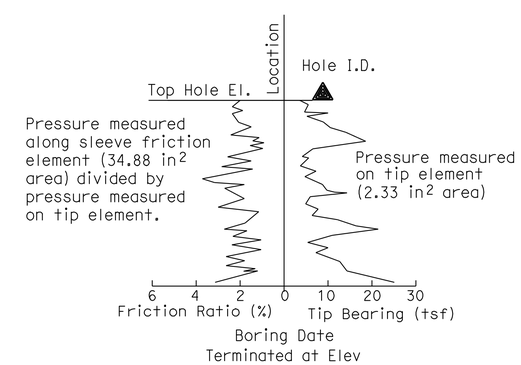

CONE PENETRATION TEST (CPT) BORING

ENGINEERING SERVICES	GEOTECHNICAL SERVICES	STATE OF CALIFORNIA DEPARTMENT OF TRANSPORTATION	DIVISION OF ENGINEERING SERVICES STRUCTURE DESIGN DESIGN BRANCH 21	BRIDGE NO. 53-0828 POST MILE 17.30	LOS ANGELES RIVER BRIDGE (WIDEN) LOG OF TEST BORINGS 6 OF 9
	PREPARED BY: F. Nguyen 10/10				

GS LOTB SOIL LEGEND

ORIGINAL SCALE IN INCHES FOR REDUCED PLANS 0 1 2 3

UNIT: 3643
PROJECT NUMBER & PHASE: 07000208691
CONTRACT NO.: 07-202111

DISREGARD PRINTS BEARING EARLIER REVISION DATES

REVISION DATES: 12-09-10 12-13-10

SHEET 71 OF 74

FILE => 53-0828-z-ltb06.dgn

USERNAME => s124496 DATE PLOTTED => 28-JUN-2011 TIME PLOTTED => 20:06

REFERENCE: CALTRANS SOIL & ROCK LOGGING, CLASSIFICATION, AND PRESENTATION MANUAL (2010)

DIST	COUNTY	ROUTE	POST MILES TOTAL PROJECT	SHEET No	TOTAL SHEETS
07	LA	710	17.2/26.4	1368	1507

Tatjana Halda 12-14-10
REGISTERED CIVIL ENGINEER

6-27-11
PLANS APPROVAL DATE

REGISTERED PROFESSIONAL ENGINEER Tatjana L. Halda No. C68293 Exp. 9-30-11 CIVIL STATE OF CALIFORNIA

The State of California or its officers or agents shall not be responsible for the accuracy or completeness of electronic copies of this plan sheet.

GROUP SYMBOLS AND NAMES

Graphic/Symbol	Group Names	Graphic/Symbol	Group Names
GW	Well-graded GRAVEL Well-graded GRAVEL with SAND	CL	Lean CLAY Lean CLAY with SAND Lean CLAY with GRAVEL SANDY lean CLAY SANDY lean CLAY with GRAVEL GRAVELLY lean CLAY GRAVELLY lean CLAY with SAND
GP	Poorly-graded GRAVEL Poorly-graded GRAVEL with SAND		
GW-GM	Well-graded GRAVEL with SILT Well-graded GRAVEL with SILT and SAND	CL-ML	SILTY CLAY SILTY CLAY with SAND SILTY CLAY with GRAVEL SANDY SILTY CLAY SANDY SILTY CLAY with GRAVEL GRAVELLY SILTY CLAY GRAVELLY SILTY CLAY with SAND
GW-GC	Well-graded GRAVEL with CLAY (or SILTY CLAY) Well-graded GRAVEL with CLAY and SAND (or SILTY CLAY and SAND)		
GP-GM	Poorly-graded GRAVEL with SILT Poorly-graded GRAVEL with SILT and SAND	ML	SILT SILT with SAND SILT with GRAVEL SANDY SILT SANDY SILT with GRAVEL GRAVELLY SILT GRAVELLY SILT with SAND
GP-GC	Poorly-graded GRAVEL with CLAY (or SILTY CLAY) Poorly-graded GRAVEL with CLAY and SAND (or SILTY CLAY and SAND)		
GM	SILTY GRAVEL SILTY GRAVEL with SAND	OL	ORGANIC lean CLAY ORGANIC lean CLAY with SAND ORGANIC lean CLAY with GRAVEL SANDY ORGANIC lean CLAY SANDY ORGANIC lean CLAY with GRAVEL GRAVELLY ORGANIC lean CLAY GRAVELLY ORGANIC lean CLAY with SAND
GC	CLAYEY GRAVEL CLAYEY GRAVEL with SAND		
GC-GM	SILTY, CLAYEY GRAVEL SILTY, CLAYEY GRAVEL with SAND	OL	ORGANIC SILT ORGANIC SILT with SAND ORGANIC SILT with GRAVEL SANDY ORGANIC SILT SANDY ORGANIC SILT with GRAVEL GRAVELLY ORGANIC SILT GRAVELLY ORGANIC SILT with SAND
SW	Well-graded SAND Well-graded SAND with GRAVEL		
SP	Poorly-graded SAND Poorly-graded SAND with GRAVEL	CH	Fat CLAY Fat CLAY with SAND Fat CLAY with GRAVEL SANDY fat CLAY SANDY fat CLAY with GRAVEL GRAVELLY fat CLAY GRAVELLY fat CLAY with SAND
SW-SM	Well-graded SAND with SILT Well-graded SAND with SILT and GRAVEL		
SW-SC	Well-graded SAND with CLAY (or SILTY CLAY) Well-graded SAND with CLAY and GRAVEL (or SILTY CLAY and GRAVEL)	MH	Elastic SILT Elastic SILT with SAND Elastic SILT with GRAVEL SANDY elastic SILT SANDY elastic SILT with GRAVEL GRAVELLY elastic SILT GRAVELLY elastic SILT with SAND
SP-SM	Poorly-graded SAND with SILT Poorly-graded SAND with SILT and GRAVEL		
SP-SC	Poorly-graded SAND with CLAY (or SILTY CLAY) Poorly-graded SAND with CLAY and GRAVEL (or SILTY CLAY and GRAVEL)	OH	ORGANIC fat CLAY ORGANIC fat CLAY with SAND ORGANIC fat CLAY with GRAVEL SANDY ORGANIC fat CLAY SANDY ORGANIC fat CLAY with GRAVEL GRAVELLY ORGANIC fat CLAY GRAVELLY ORGANIC fat CLAY with SAND
SM	SILTY SAND SILTY SAND with GRAVEL		
SC	CLAYEY SAND CLAYEY SAND with GRAVEL	OH	ORGANIC elastic SILT ORGANIC elastic SILT with SAND ORGANIC elastic SILT with GRAVEL SANDY ORGANIC elastic SILT SANDY ORGANIC elastic SILT with GRAVEL GRAVELLY ORGANIC elastic SILT GRAVELLY ORGANIC elastic SILT with SAND
SC-SM	SILTY, CLAYEY SAND SILTY, CLAYEY SAND with GRAVEL		
PT	PEAT	OL/OH	ORGANIC SOIL ORGANIC SOIL with SAND ORGANIC SOIL with GRAVEL SANDY ORGANIC SOIL SANDY ORGANIC SOIL with GRAVEL GRAVELLY ORGANIC SOIL GRAVELLY ORGANIC SOIL with SAND
	COBBLES COBBLES and BOULDERS BOULDERS		

FIELD AND LABORATORY TESTING

- (C) Consolidation (ASTM D 2435)
- (CL) Collapse Potential (ASTM D 5333)
- (CP) Compaction Curve (CTM 216)
- (CR) Corrosivity Testing (CTM 643, CTM 422, CTM 417)
- (CU) Consolidated Undrained Triaxial (ASTM D 4767)
- (DS) Direct Shear (ASTM D 3080)
- (EI) Expansion Index (ASTM D 4829)
- (M) Moisture Content (ASTM D 2216)
- (OC) Organic Content-% (ASTM D 2974)
- (P) Permeability (CTM 220)
- (PA) Particle Size Analysis (ASTM D 422)
- (PI) Plasticity Index (AASHTO T 90) Liquid Limit (AASHTO T 89)
- (PL) Point Load Index (ASTM D 5731)
- (PM) Pressure Meter
- (R) R-Value (CTM 301)
- (SE) Sand Equivalent (CTM 217)
- (SG) Specific Gravity (AASHTO T 100)
- (SL) Shrinkage Limit (ASTM D 427)
- (SW) Swell Potential (ASTM D 4546)
- (UC) Unconfined Compression-Soil (ASTM D 2166) Unconfined Compression-Rock (ASTM D 2938)
- (UU) Unconsolidated Undrained Triaxial (ASTM D 2850)
- (UW) Unit Weight (ASTM D 4767)

APPARENT DENSITY OF COHESIONLESS SOILS

Description	SPT N_{60} (Blows / 12 in.)
Very Loose	0 - 5
Loose	5 - 10
Medium Dense	10 - 30
Dense	30 - 50
Very Dense	Greater than 50

MOISTURE

Description	Criteria
Dry	No discernable moisture
Moist	Moisture present, but no free water
Wet	Visible free water

PERCENT OR PROPORTION OF SOILS

Description	Criteria
Trace	Particles are present but estimated to be less than 5%
Few	5% - 10%
Little	15% - 25%
Some	30% - 45%
Mostly	50% - 100%

PARTICLE SIZE

Description		Size (in.)
Boulder		Greater than 12
Cobble		3 - 12
Gravel	Coarse	3/4 - 3
	Fine	1/5 - 3/4
Sand	Coarse	1/16 - 1/5
	Medium	1/64 - 1/16
	Fine	1/300 - 1/64
Silt and Clay		Less than 1/300

ENGINEERING SERVICES

GEOTECHNICAL SERVICES
PREPARED BY: F. Nguyen 10/10

STATE OF CALIFORNIA
DEPARTMENT OF TRANSPORTATION

DIVISION OF ENGINEERING SERVICES
STRUCTURE DESIGN
DESIGN BRANCH 21

BRIDGE NO. 53-0828
POST MILE 17.30

LOS ANGELES RIVER BRIDGE (WIDEN)
LOG OF TEST BORINGS 7 OF 9

GS LOTB SOIL LEGEND

ORIGINAL SCALE IN INCHES FOR REDUCED PLANS 0 1 2 3

UNIT: 3643
PROJECT NUMBER & PHASE: 07000208691
CONTRACT NO.: 07-202111

DISREGARD PRINTS BEARING EARLIER REVISION DATES
REVISION DATES 12-09-10 12-13-10

SHEET 72 OF 74

FILE => 53-0828-z-ltb07.dgn

USERNAME => s6124196 DATE PLOTTED => 28-JUN-2011 TIME PLOTTED => 20:06

FED. ROAD DIST. No.	STATE	PROJ. No.	FISCAL YEAR	SHEET No.	TOTAL SHEETS
2	CAL.			24	

DIST.	COUNTY	ROUTE	SECTION	SHEET No.	TOTAL SHEETS
VII	LA	~~767~~	CGT	19	20

DISTRICT ENGINEER — CIVIL ENGINEER-LICENSE 13581

APPROVED May 17, 1954

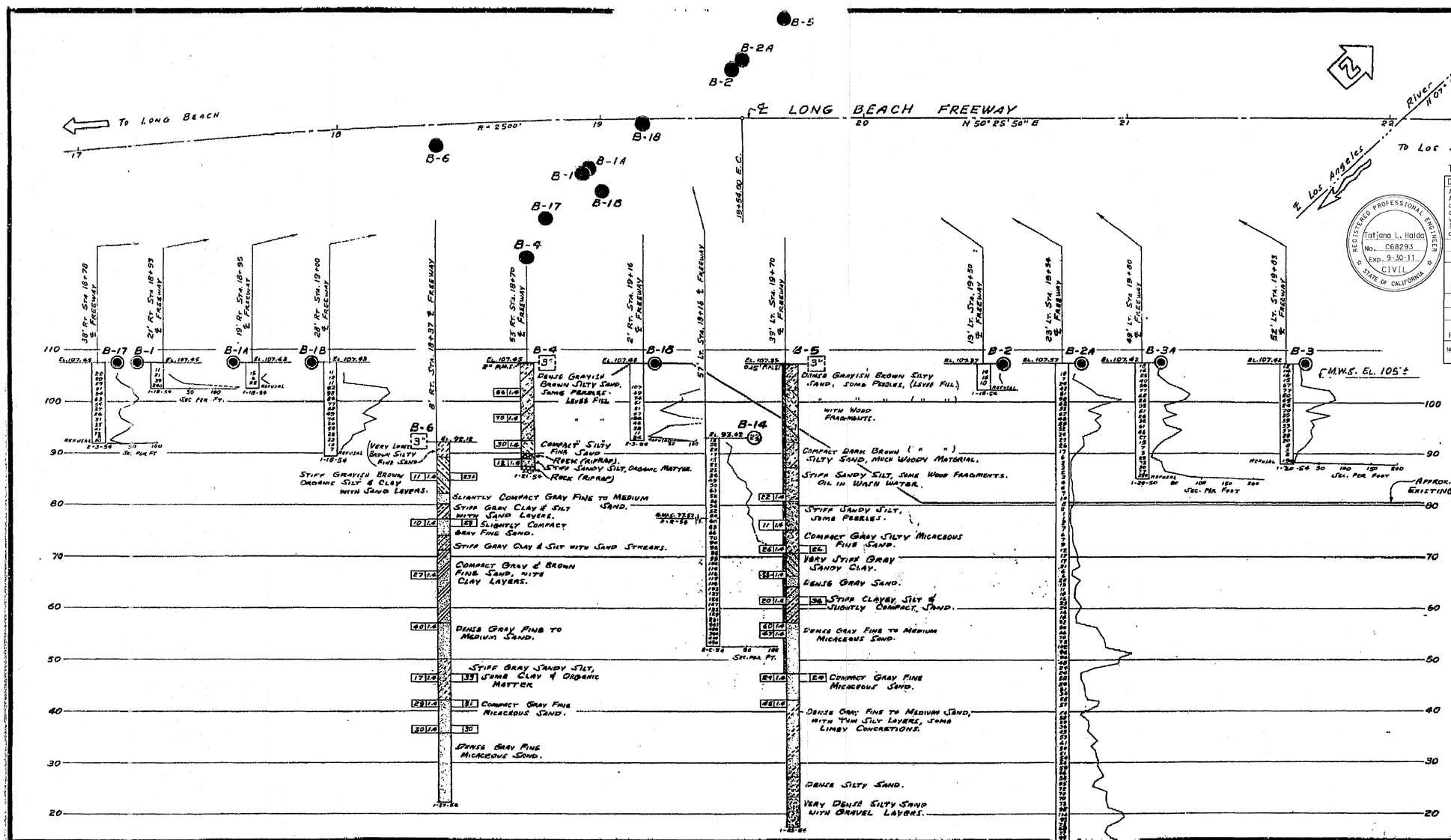

TO ACCOMPANY PLANS DATED 6-27-11

DIVISION OF ENGINEERING SERVICES - MATERIALS AND GEOTECHNICAL SERVICES

As-Built Log of Test Borings sheet is considered an informational document only. As such, the State of California registration seal with signature, license number and registration certificate expiration date confirm that this is a true and accurate copy of the original document. It does not attest to the accuracy or validity of the information contained in the original document. This drawing is available and presented only for the convenience of any bidder, contractor or other interested party.

REGISTERED PROFESSIONAL ENGINEER — Tatjana L. Halda — No. C68293 — Exp. 9-30-11 — CIVIL — STATE OF CALIFORNIA

DIST.	COUNTY	ROUTE	POST MILE-TOTAL PROJECT	Sheet No.	Total Sheets
07	LA	710	17.2/26.4	1369	1507

Tatjana Halda — 12/14/10
REGISTERED CIVIL ENGINEER — DATE

LOS ANGELES RIVER BRIDGE (WIDEN)
LOG OF TEST BORINGS 8 OF 9

UNIT: 3643 — CONTRACT No. 07-202111 — BRIDGE No. 53-0828

PROJECT NUMBER & PHASE: 07000208691

NOTE: A COPY OF THIS LOG OF TEST BORINGS IS AVAILABLE AT OFFICE OF STRUCTURE MAINTENANCE AND INVESTIGATIONS, SACRAMENTO, CALIFORNIA — Sheet 73 of 74

AS BUILT

CORRECTIONS BY J.S.
DATE JUL 18 1955
NO CHANGE THIS SHEET
Jack Sylvester
Res Engr

B.M. 2-S.Gt.-50 ELEV. 101.11
2X2 FLUSH ON E. SIDE TOP OF W. L.A. RIVER LEVEE, 100'± E. OF P.P.#675536, OR N'LY FENCE LINE PRODUCED OF HOUSE #10,400 BLUMONT ROAD AT INTERSECTION WITH LEPOSGWOOD ROAD. 2000' N. OF IMPERIAL HWY BRIDGE.

CLASSIFICATION OF MATERIAL BASED ON STANDARD GRADE SIZE LIMITS

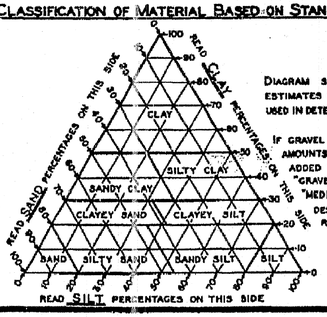

DIAGRAM SHOWING THE BASIS FOR ESTIMATES OF GRADE SIZE DISTRIBUTION USED IN DETERMINATION OF CLASS NAMES

IF GRAVEL IS PRESENT IN APPRECIABLE AMOUNTS THE TERM "GRAVELLY" MAY BE ADDED TO THE CLASS NAME, VIS. "GRAVELLY SAND". THE TERMS "COARSE", "MEDIUM" AND "FINE" WHEN USED TO DESCRIBE GRAVEL, SAND AND SILT REFER TO STANDARD GRADE SIZE LIMITS.

LEGEND OF EARTH MATERIALS

- Gravel
- Sand
- Silt
- Clay
- Sandy Clay or Clayey Sand
- Sandy Silt or Silty Sand
- Silty Clay or Clayey Silt
- Peat and/or Organic Clay
- Filled Material
- Igneous Rock
- Sedimentary Rock
- Metamorphic Rock

LEGEND OF EXPLORATIONS

- Plan of any boring
- Penetrometer
- 2¼" Cone penetrometer
- Sampler boring (dry)
- Rotary boring (wet)
- Auger boring (dry)
- Jet boring
- Core boring
- Test pit

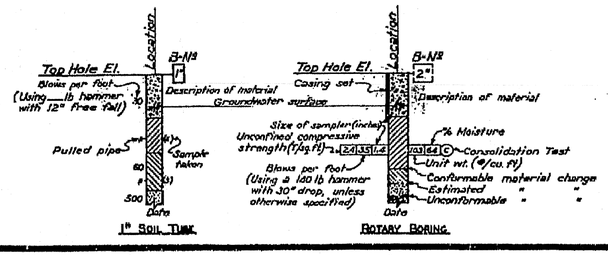

NOTES

THE CONTRACTOR'S ATTENTION IS DIRECTED TO SECTION 2, ARTICLE (C) OF THE STANDARD SPECIFICATIONS AND TO THE SPECIAL PROVISIONS ACCOMPANYING THIS SET OF PLANS. CLASSIFICATION OF EARTH MATERIAL AS SHOWN ON THIS SHEET IS BASED UPON FIELD INSPECTION, AND IS NOT TO BE CONSTRUED TO IMPLY MECHANICAL ANALYSIS. PENETROMETER BORINGS HAVING A RATE OF PENETRATION MEASURED IN SECONDS PER FOOT ARE DRIVEN WITH A Nº 2 McKIERNAN-TERRY AIR HAMMER AT 115 PSI.

STATE OF CALIFORNIA
DEPARTMENT OF PUBLIC WORKS
DIVISION OF HIGHWAYS

BRIDGE ACROSS LOS ANGELES RIVER

LOG OF TEST BORINGS (1 of 2)

SCALE: HORIZ. 1" = 20' VERT. 1" = 10' — BRIDGE 53-828 — FILE — DRAWING 0-3560-19

PREL. DRAWING NO. P-3560 4

FED. AID SECT. NO.	STATE	PROJ. NO.	FISCAL YEAR	SHEET NO.	TOTAL SHEETS
2	CAL.			15	

DIST.	COUNTY	ROUTE	SECTION	SHEET NO.	TOTAL SHEETS
VII	LA	710	50F	20	20

Bridge Engineer — Date Engineer — Structures

Approved May 17, 1954

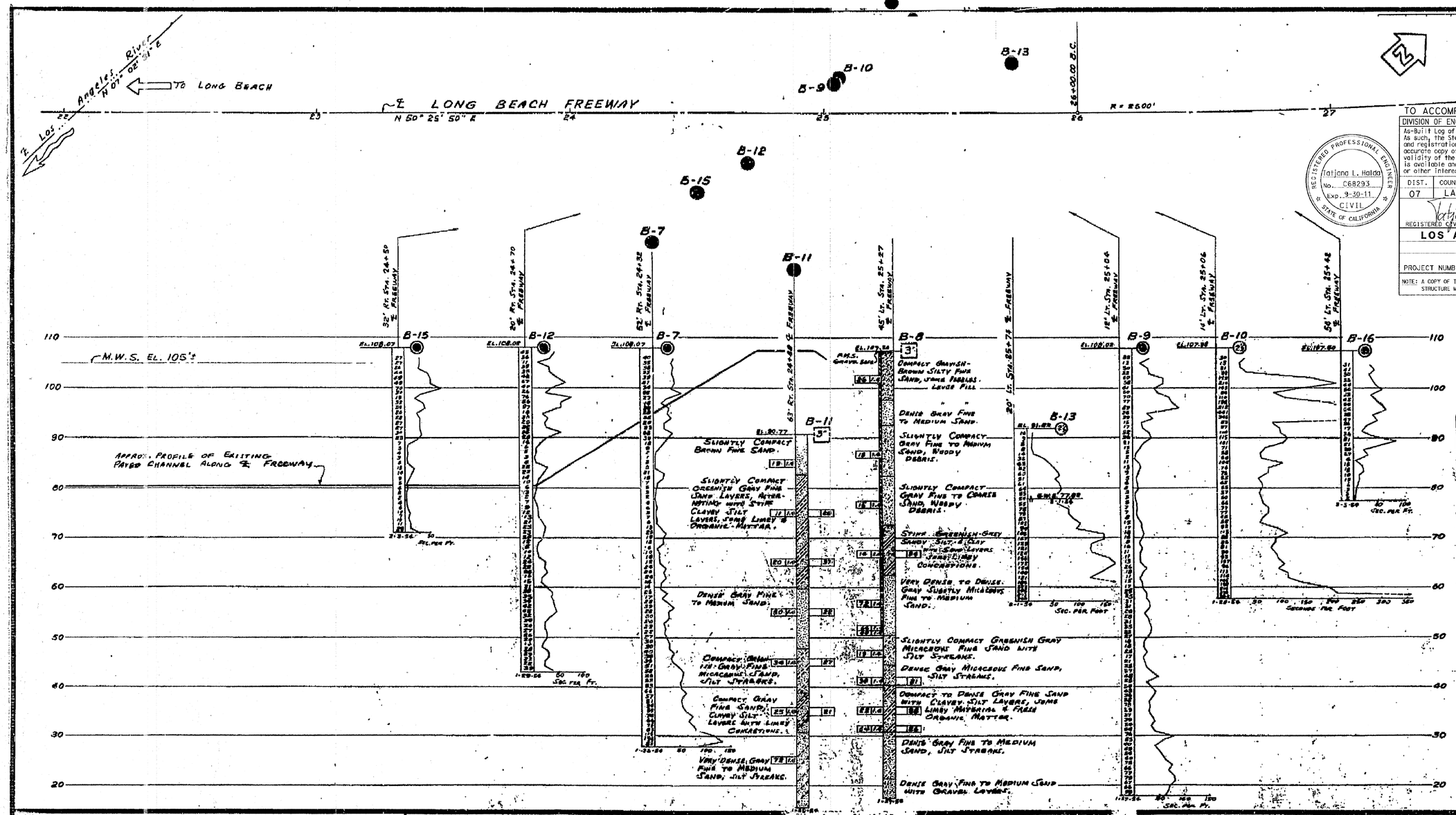

TO ACCOMPANY PLANS DATED 6-27-11

DIVISION OF ENGINEERING SERVICES – MATERIALS AND GEOTECHNICAL SERVICES

As-Built Log of Test Borings sheet is considered an informational document only. As such, the State of California registration seal with signature, license number and registration certificate expiration date confirm that this is a true and accurate copy of the original document. It does not attest to the accuracy or validity of the information contained in the original document. This drawing is available and presented only for the convenience of any bidder, contractor or other interested party.

REGISTERED PROFESSIONAL ENGINEER — Tatjana L. Halda — No. C68293 — Exp. 9-30-11 — CIVIL — STATE OF CALIFORNIA

DIST.	COUNTY	ROUTE	POST MILE-TOTAL PROJECT	Sheet No.	Total Sheets
07	LA	710	17.2/26.4	1370	1507

Tatjana Halda — REGISTERED CIVIL ENGINEER — 12/14/10 DATE

LOS ANGELES RIVER BRIDGE (WIDEN)
LOG OF TEST BORINGS — 9 OF 9

UNIT: 3643 — CONTRACT No. 07-202111 — BRIDGE No. 53-0828

PROJECT NUMBER & PHASE: 07000208691

NOTE: A COPY OF THIS LOG OF TEST BORINGS IS AVAILABLE AT OFFICE OF STRUCTURE MAINTENANCE AND INVESTIGATIONS, SACRAMENTO, CALIFORNIA — Sheet 74 of 74

'Test Boring By Bridge Dept.'

AS BUILT PLANS
Contract No. 54-14VC22
Date Completed
Document No. 70002097

AS BUILT
CORRECTIONS BY J.S.
DATE JUL 18 1955
NO CHANGE THIS SHEET
Jack Sylvester
Res Engr

B.M. 2-SGT.-50 ELEV. 101.11
2x2 PLUG ON S. SIDE TOP OF W. L. A. RIVER LEVEE 100' E. OF P.P. #67536 OR N'LY FENCE LINE PRODUCED OF HOUSE #10,400 BLUMONT ROAD AT INTERSECTION WITH LEDGEWOOD ROAD. 2000' N. OF IMPERIAL HWY (R1968).

CLASSIFICATION OF MATERIAL BASED ON STANDARD GRADE SIZE LIMITS

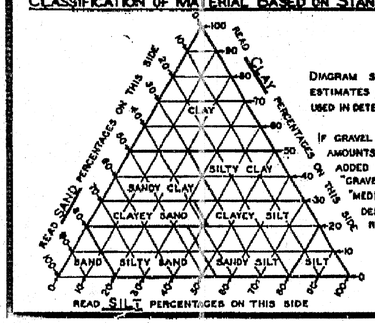

DIAGRAM SHOWING THE BASIS FOR ESTIMATES OF GRADE SIZE DISTRIBUTION USED IN DETERMINATION OF CLASS NAMES

IF GRAVEL IS PRESENT IN APPRECIABLE AMOUNTS THE TERM "GRAVELLY" MAY BE ADDED TO THE CLASS NAME, VIS. "GRAVELLY SAND." THE TERMS "COARSE," "MEDIUM" AND "FINE" WHEN USED TO DESCRIBE GRAVEL, SAND AND SILT REFER TO STANDARD GRADE SIZE LIMITS.

LEGEND OF EARTH MATERIALS

- GRAVEL
- SAND
- SILT
- CLAY
- SANDY CLAY OR CLAYEY SAND
- SANDY SILT OR SILTY SAND
- SILTY CLAY OR CLAYEY SILT
- PEAT AND/OR ORGANIC CLAY
- FILLED MATERIAL
- IGNEOUS ROCK
- SEDIMENTARY ROCK
- METAMORPHIC ROCK

LEGEND OF BORING OPERATIONS

- PLAN OF ANY BORING
- PENETROMETER
- 2¼" CONE PENETROMETER
- SAMPLER BORING (DRY)
- ROTARY BORING (WET)
- AUGER BORING (DRY)
- JET BORING
- CORE BORING
- TEST PIT

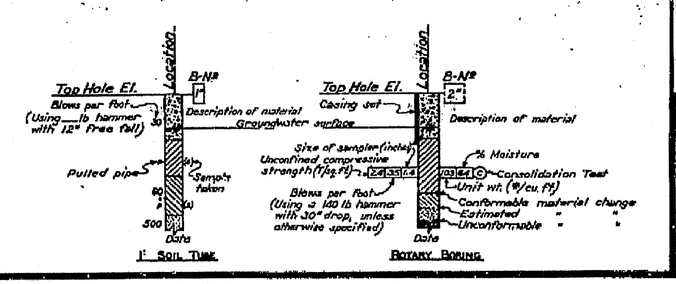

NOTES.

THE CONTRACTOR'S ATTENTION IS DIRECTED TO SECTION 2, ARTICLE (c) OF THE STANDARD SPECIFICATIONS AND TO THE SPECIAL PROVISIONS ACCOMPANYING THIS SET OF PLANS.

CLASSIFICATION OF EARTH MATERIAL AS SHOWN ON THIS SHEET IS BASED UPON FIELD INSPECTION AND IS NOT TO BE CONSTRUED TO IMPLY MECHANICAL ANALYSIS.

PENETROMETER BORINGS HAVING A RATE OF PENETRATION MEASURED IN SECONDS PER FOOT ARE DRIVEN WITH A Nº 2 McKIERNAN-TERRY AIR HAMMER AT 115 PSI.

STATE OF CALIFORNIA
DEPARTMENT OF PUBLIC WORKS
DIVISION OF HIGHWAYS

BRIDGE ACROSS LOS ANGELES RIVER

LOG OF TEST BORINGS (2 of 2)

SCALE HORIZ. 1" = 20' VERT. 1" = 10' — BRIDGE 53-828 — FILE — DRAWING 0-3560-20

PREL. DRAWING NO. P-3560.5

53-0828-z-ltb09.tif

DIST	COUNTY	ROUTE	POST MILES TOTAL PROJECT	SHEET No.	TOTAL SHEETS
07	LA	710	17.2/26.4	1371	1507

REGISTERED CIVIL ENGINEER — DATE 03/01/11

6-27-11
PLANS APPROVAL DATE

REGISTERED PROFESSIONAL ENGINEER — CHUNG-YUAN WEN — No. C 50690 — Exp. 09/30/11 — CIVIL — STATE OF CALIFORNIA

The State of California or its officers or agents shall not be responsible for the accuracy or completeness of electronic copies of this plan sheet.

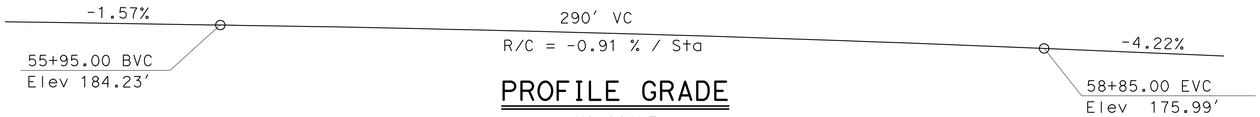

PROFILE GRADE

NO SCALE

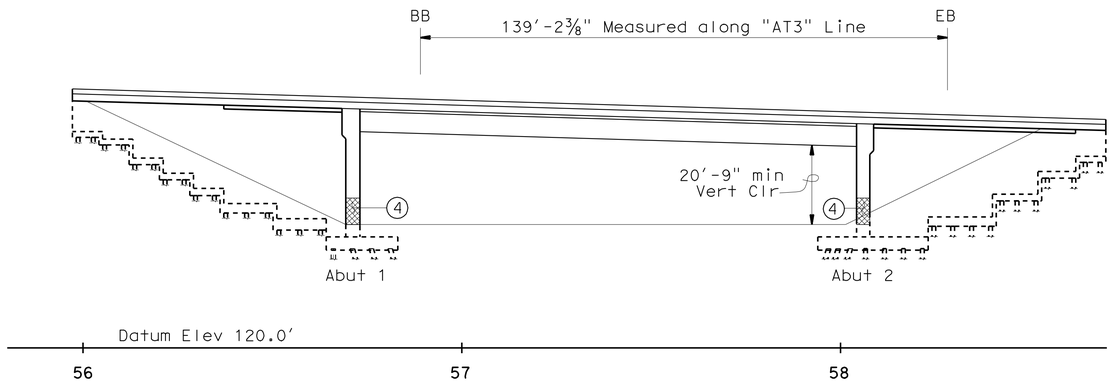

MIRRORED ELEVATION

1" = 20'

QUANTITIES

BRIDGE REMOVAL	LUMP	SUM
STRUCTURE EXCAVATION (BRIDGE)	1,430	CY
STRUCTURE EXCAVATION (TYPE Z-2) (AERIALLY DEPOSITED LEAD)	390	CY
STRUCTURE BACKFILL (BRIDGE)	1,860	CY
FURNISH STEEL PILING (HP 12 X 84)	3,990	LF
DRIVE STEEL PILE (HP 12 X 84)	86	EA
FURNISH STEEL PILING (HP 14 X 117)	4,920	LF
DRIVE STEEL PILE (HP 14 X 117)	100	EA
PRESTRESSING CAST-IN-PLACE CONCRETE	LUMP	SUM
STRUCTURAL CONCRETE, BRIDGE FOOTING	368	CY
STRUCTURAL CONCRETE, BRIDGE	940	CY
STRUCTURAL CONCRETE, APPROACH SLAB (TYPE N)	120	CY
JOINT SEAL (MR 2")	84	LF
BAR REINFORCING STEEL (BRIDGE)	302,040	LB
CABLE RAILING	10	LF
CONCRETE BARRIER (TYPE 736)	449	LF
CONCRETE BARRIER (TYPE 736A)	48	LF

CURVE DATA

Curve	R	Δ	T	L
A	20000'	0°57'27"	167.13'	334.25'

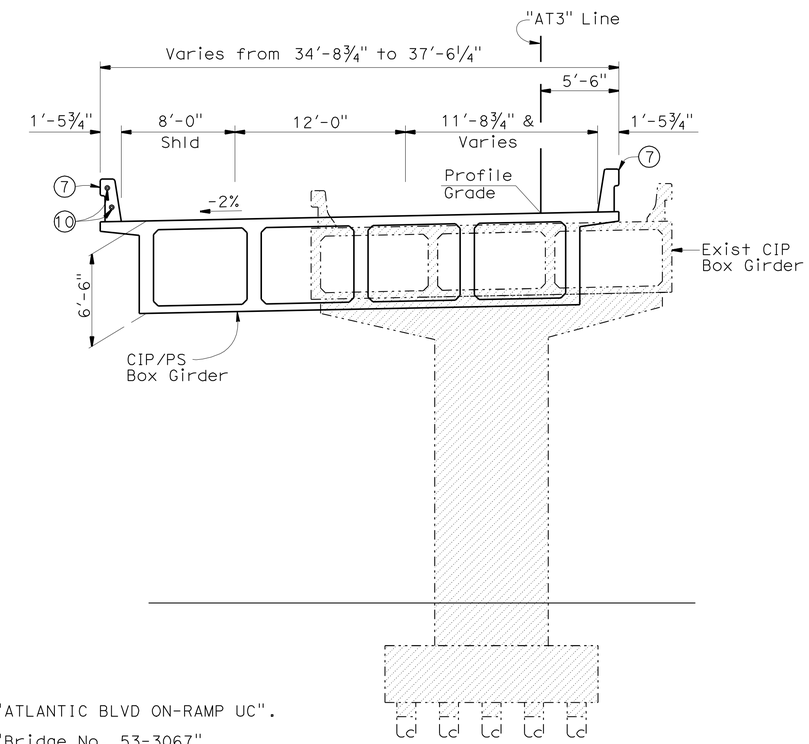

TYPICAL SECTION

3/16" = 1-0"

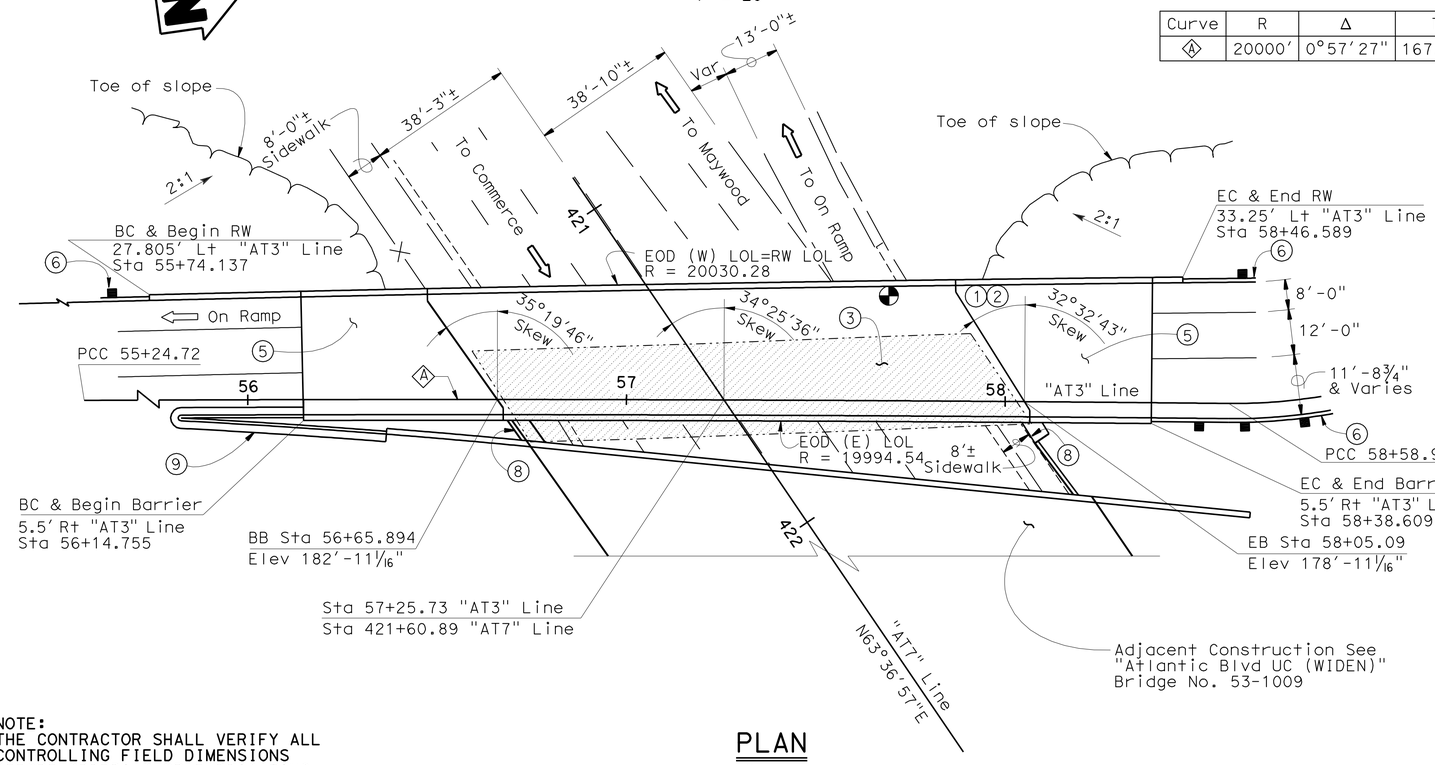

PLAN

1" = 20'

NOTES:

1. Paint "ATLANTIC BLVD ON-RAMP UC".
2. Paint "Bridge No. 53-3067" & Year Constructed.
3. Remove Exist Bridge (Atlantic Blvd U C On Ramp S Bound, Br. No. 53-1008K).
4. Class 2 surface finish (Gun Finish) to match Exist.
5. Structure Approach Slab Type N(30S).
6. MBGR, See "ROAD PLANS".
7. Concrete Barrier Type 736.
8. Cable Railing.
9. Conc Curb Type B4(Mod), see "ROAD PLANS"
10. 2-2"Ø Electric conduit, see "ROAD PLANS"

LEGEND:

- Indicates bridge removal
- Indicates Point of minimum vert clr
- Indicates traffic direction

NOTE:
THE CONTRACTOR SHALL VERIFY ALL CONTROLLING FIELD DIMENSIONS BEFORE ORDERING OR FABRICATING ANY MATERIAL.

CHUNG-YUAN WEN, DESIGN ENGINEER	DESIGN	BY T. CHU	CHECKED J. TJOELKER	LOAD & RESISTANCE FACTOR DESIGN — LIVE LOADING: HL93 W/"LOW-BOY"; PERMIT DESIGN VEHICLE
	DETAILS	BY J. VALENCIA / M. KINGRA	CHECKED K. GHOSH	LAYOUT — BY M. KINGRA — CHECKED T. CHU
	QUANTITIES	BY C. CANCINO	CHECKED A. CARREON	SPECIFICATIONS — BY K. ELLINGSON — PLANS AND SPECS COMPARED T. CHU

ORIGINAL SCALE IN INCHES FOR REDUCED PLANS 0 1 2 3

STATE OF CALIFORNIA
DEPARTMENT OF TRANSPORTATION

DIVISION OF ENGINEERING SERVICES
STRUCTURE DESIGN
DESIGN BRANCH 21

BRIDGE NO. 53-3067
POST MILE 21.91

ATLANTIC BLVD ON-RAMP UC (REPLACE)
GENERAL PLAN

UNIT: 3623
PROJECT NUMBER & PHASE: 0700020869
CONTRACT NO.: 202111

DISREGARD PRINTS BEARING EARLIER REVISION DATES

REVISION DATES: 2/23/10 — 03/01/11 — 11/18/10

SHEET 1 OF 25

USERNAME => s124496 DATE PLOTTED => 28-JUN-2011 TIME PLOTTED => 20:06

STRUCTURES DESIGN GENERAL PLAN SHEET (ENGLISH) (REV.09-01-10)

FILE => 53-1008k-a-gp1.dgn

DIST	COUNTY	ROUTE	POST MILES TOTAL PROJECT	SHEET No.	TOTAL SHEETS
07	LA	710	17.2/26.4	1372	1507

REGISTERED CIVIL ENGINEER 03/01/11 DATE

6-27-11
PLANS APPROVAL DATE

REGISTERED PROFESSIONAL ENGINEER CHUNG-YUAN WEN No. C 50690 Exp. 09/30/11 CIVIL STATE OF CALIFORNIA

The State of California or its officers or agents shall not be responsible for the accuracy or completeness of electronic copies of this plan sheet.

GENERAL NOTES
LOAD AND RESISTANCE FACTOR

DESIGN: AASHTO LRFD Bridge Design Specifications, 4th Edition and the Caltrans Amendments, preface dated 2008; except that geotechnical design of deep foundations, earth retaining systems, Bridge Barrier and Railing, and Structure approach slabs are designed using Bridge Design Specifications ('96 AASHTO w/ Revisions by Caltrans).

SEISMIC DESIGN: Caltrans Seismic Design Criteria (SDC) version 1.4 June 2006

DEAD LOAD: Includes 35 psf for future wearing surface

LIVE LOADING: HL-93 and Permit design load

SEISMIC LOADING: Modified Caltrans SDC ARS Curve
Soil Profile Type D
Moment Magnitude 7.25±0.25
Peak Rock Acceleration 0.6g

CONCRETE:

f_y = 60 ksi

f'_c = 3,600 psi, unless otherwise noted

n = 8

PRESTRESSED CONCRETE: See "Prestressing Notes" on "GIRDER LAYOUT" sheet

PILE DATA TABLE

Location	Pile Type	Nominal Resistance (kips)		Design Tip Elevations (ft)	Specified Tip Elevations (ft)	Nominal Driving Resistance (kips)
		Compression	Tension			
Abut 1	HP 14X117	400	N/A	87(a) 103(c)	87	400
Abut 2	HP 14X117	400	N/A	87(a) 103(c)	87	400
Abut 1 RW H=30'	HP 12X84	180	N/A	N/A	108	180
Abut 1 RW H=26'	HP 12X84	180	N/A	N/A	108	180
Abut 1 RW H=22'	HP 12X84	180	N/A	N/A	108	180
Abut 1 RW H=18'	HP 12X84	180	N/A	N/A	108	180
Abut 1 RW H=14'	HP 12X84	180	N/A	N/A	108	180
Abut 1 RW H=10'	HP 12X84	180	N/A	N/A	108	180
Abut 1 RW H=8'	HP 12X84	180	N/A	N/A	108	180
Abut 2 RW H=26'	HP 12X84	180	N/A	N/A	110	180
Abut 2 RW H=20'	HP 12X84	180	N/A	N/A	110	180
Abut 2 RW H=14'	HP 12X84	180	N/A	N/A	110	180
Abut 2 RW H=8'	HP 12X84	180	N/A	N/A	110	180

NOTE: 1. All design tip elevations are controlled by the following demands: (a) Compression (b) Lateral loads (c) Settlement
2. The specified tip elevation shall not be raised above the design tip elevations for Settlement and Lateral Load.

INDEX TO PLANS

1. GENERAL PLAN
2. INDEX TO PLANS
3. DECK CONTOURS
4. BRIDGE REMOVAL
5. FOUNDATION PLAN
6. ABUTMENT 1 LAYOUT
7. ABUTMENT 2 LAYOUT
8. ABUTMENT DETAILS NO. 1
9. ABUTMENT DETAILS NO. 2
10. ABUTMENT DETAILS NO. 3
11. ABUTMENT DETAILS NO. 4
12. ABUTMENT PILE LAYOUT
13. RETAINING WALL DETAILS NO. 1
14. RETAINING WALL DETAILS NO. 2
15. TYPICAL SECTION
16. GIRDER LAYOUT
17. GIRDER DETAILS
18. STRUCTURE APPROACH TYPE N(30S)
19. STRUCTURE APPROACH DRAINAGE DETAILS
20. LOG OF TEST BORING 1 OF 6
21. LOG OF TEST BORING 2 OF 6
22. LOG OF TEST BORING 3 OF 6
23. LOG OF TEST BORING 4 OF 6
24. LOG OF TEST BORING 5 OF 6
25. LOG OF TEST BORING 6 OF 6

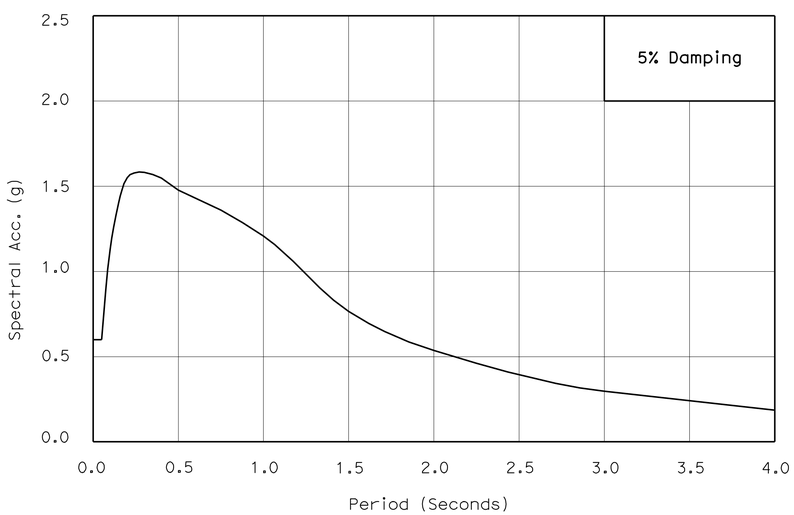

ARS CURVE

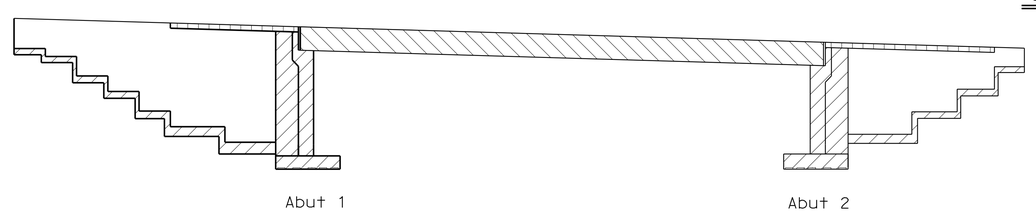

CONCRETE STRENGTH AND TYPE LIMITS

No Scale

- Structural Concrete, Bridge (5,500 psi at 28 days)
- Structural Concrete, Bridge footing (4,000 psi at 28 days)
- Structural Concrete, Bridge
- Structural Concrete, Approach Slab

STANDARD PLANS DATED MAY 2006

	A10A	ACRONYMS AND ABBREVIATIONS (A-L)
	A10B	ACRONYMS AND ABBREVIATIONS (M-Z)
	A10C	SYMBOLS (SHEET 1 OF 2)
	A10D	SYMBOLS (SHEET 2 OF 2)
	A62B	LIMITS OF PAYMENT FOR EXCAVATION AND BACKFILL-BRIDGE SURCHARGE AND WALL
	A62C	LIMITS OF PAYMENT FOR EXCAVATION AND BACKFILL-BRIDGE
	B0-1	BRIDGE DETAILS
	B0-3	BRIDGE DETAILS
	B0-5	BRIDGE DETAILS
	B0-13	BRIDGE DETAILS
	B3-1	RETAINING WALL TYPE 1
	B3-8	RETAINING WALL DETAILS NO. 1
RSP	B6-21	JOINT SEALS (MAXIMUM MOVEMENT RATING = 2")
	B7-1	BOX GIRDER DETAILS
	B8-5	CAST-IN-PLACE PRESTRESSED GIRDER DETAILS
	B11-47	CABLE RAILING
	B11-56	CONCRETE BARRIER TYPE 736
	D99B	EDGE DRAIN OUTLETS AND VENT DETAILS

STANDARD PLAN SHEET NO.

DETAIL NO.

NOTE:
THE CONTRACTOR SHALL VERIFY ALL CONTROLLING FIELD DIMENSIONS BEFORE ORDERING OR FABRICATING ANY MATERIAL.

	BY	CHECKED
DESIGN	T. CHU	J. TJOELKER
DETAILS	M. KINGRA / J. VALENCIA	K. GHOSH
QUANTITIES	C. CANCINO	A. CARREON

STATE OF CALIFORNIA DEPARTMENT OF TRANSPORTATION

DIVISION OF ENGINEERING SERVICES STRUCTURE DESIGN DESIGN BRANCH 21

BRIDGE NO. 53-3067
POST MILE 21.91

ATLANTIC BLVD ON-RAMP UC (REPLACE)

INDEX TO PLANS

STRUCTURES DESIGN DETAIL SHEET (ENGLISH) (REV. 09-01-10)

ORIGINAL SCALE IN INCHES FOR REDUCED PLANS 0 1 2 3

UNIT: 3623
PROJECT NUMBER & PHASE: 0700020869 & 1 CONTRACT NO.: 202111

DISREGARD PRINTS BEARING EARLIER REVISION DATES

REVISION DATES 1/13/10 03/01/11 11/23/10

SHEET 2 OF 25

FILE => 53-1008K-a-itp.dgn

USERNAME => s124496 DATE PLOTTED => 28-JUN-2011 TIME PLOTTED => 20:07

DIST	COUNTY	ROUTE	POST MILES TOTAL PROJECT	SHEET No.	TOTAL SHEETS
07	LA	710	17.2/26.4	1373	1507

REGISTERED CIVIL ENGINEER — DATE 03/01/11

6-27-11
PLANS APPROVAL DATE

REGISTERED PROFESSIONAL ENGINEER — CHUNG-YUAN WEN — No. C 50690 — Exp. 09/30/11 — CIVIL — STATE OF CALIFORNIA

The State of California or its officers or agents shall not be responsible for the accuracy or completeness of electronic copies of this plan sheet.

DECK CONTOUR NOTES:

1. Contours do not include camber
2. Contour interval = 0.1′
3. x. at 0.25′ intervals along "AT3" Line

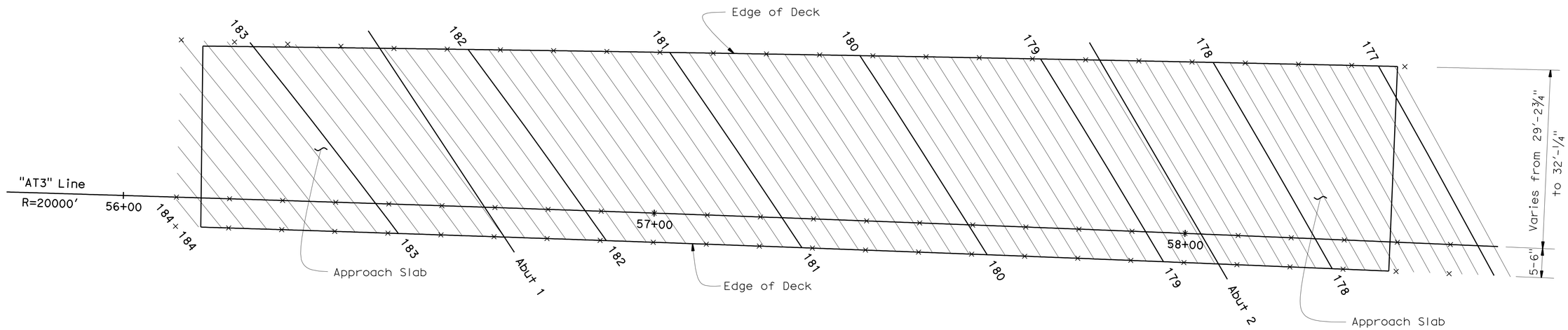

DECK CONTOURS

1" = 10′

NOTE:
THE CONTRACTOR SHALL VERIFY ALL CONTROLLING FIELD DIMENSIONS BEFORE ORDERING OR FABRICATING ANY MATERIAL.

	BY	CHECKED
DESIGN	T. CHU	J. TJOELKER
DETAILS	M. KINGRA	K. GHOSH
QUANTITIES	C. CANCINO	A. CARREON

STATE OF CALIFORNIA
DEPARTMENT OF TRANSPORTATION

DIVISION OF ENGINEERING SERVICES
STRUCTURE DESIGN
DESIGN BRANCH 21

BRIDGE NO. 53-3067
POST MILE 21.91

ATLANTIC BLVD ON-RAMP UC (REPLACE)
DECK CONTOURS

STRUCTURES DESIGN DETAIL SHEET (ENGLISH) (REV. 09-01-10)

ORIGINAL SCALE IN INCHES FOR REDUCED PLANS 0 1 2 3

UNIT: 3623
PROJECT NUMBER & PHASE: 0700020869 & 1 CONTRACT NO.: 202111

DISREGARD PRINTS BEARING EARLIER REVISION DATES → 11/8/10 03/01/11

SHEET 3 OF 25

FILE => 53-1008k-b-dc.dgn

USERNAME => s124496 DATE PLOTTED => 28-JUN-2011 TIME PLOTTED => 20:07

DIST	COUNTY	ROUTE	POST MILES TOTAL PROJECT	SHEET No.	TOTAL SHEETS
07	LA	710	17.2/26.4	1374	1507

REGISTERED CIVIL ENGINEER 03/01/11 DATE

6-27-11
PLANS APPROVAL DATE

REGISTERED PROFESSIONAL ENGINEER CHUNG-YUAN WEN No. C 50690 Exp. 09/30/11 CIVIL STATE OF CALIFORNIA

The State of California or its officers or agents shall not be responsible for the accuracy or completeness of electronic copies of this plan sheet.

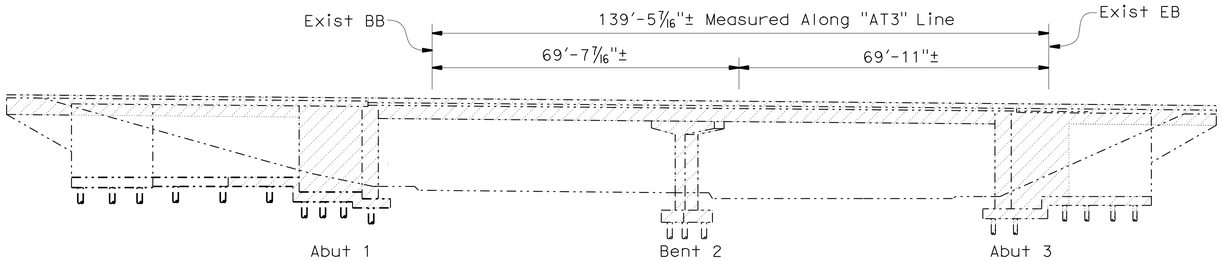

MIRRORED ELEVATION

NO SCALE

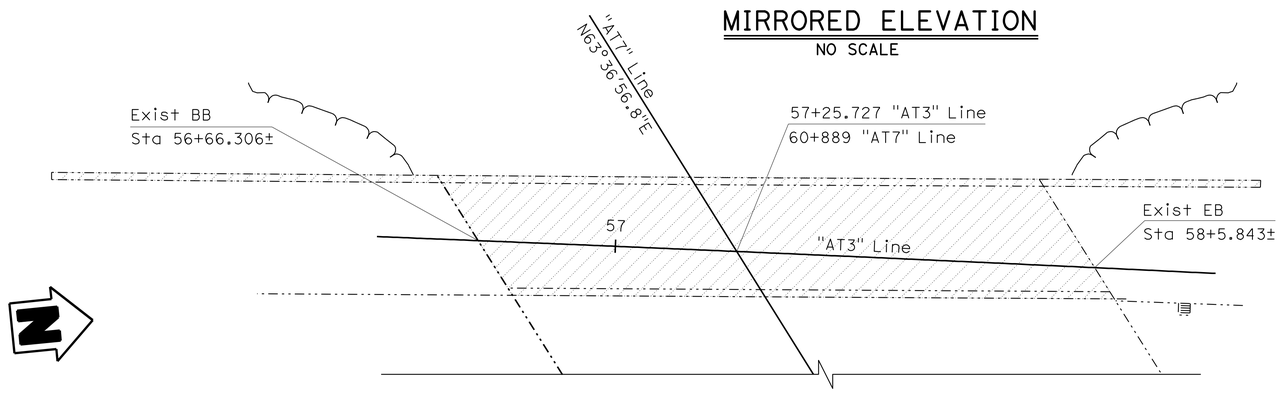

PLAN

NO SCALE

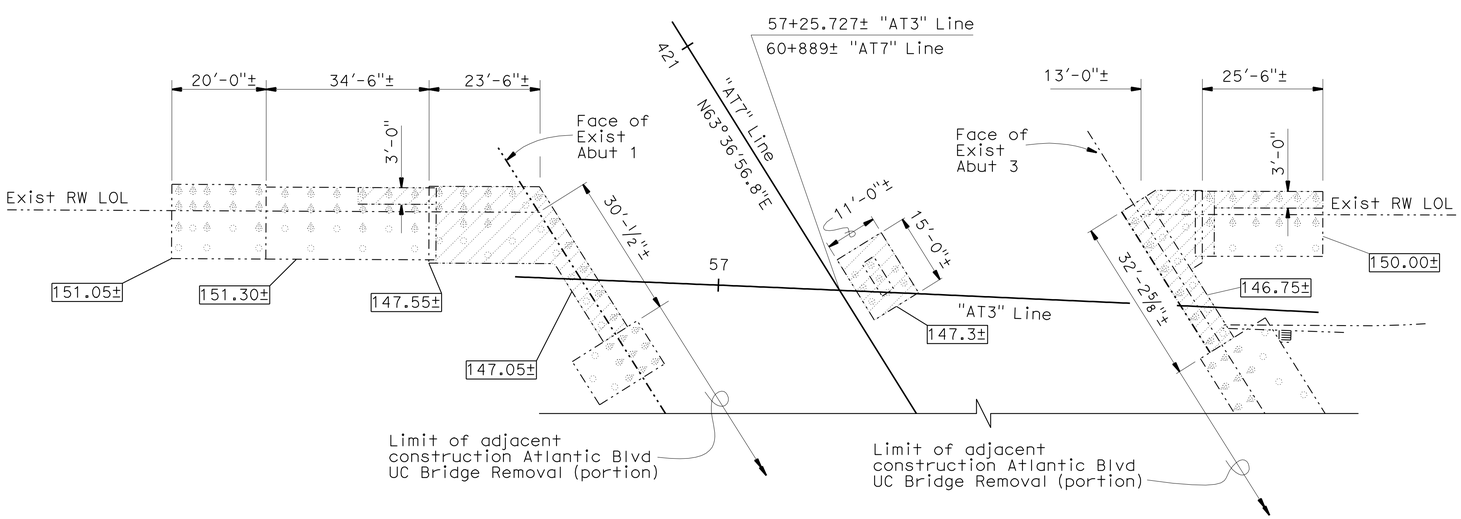

FOUNDATION LAYOUT

NO SCALE

NOTE:
THE CONTRACTOR SHALL VERIFY ALL CONTROLLING FIELD DIMENSIONS BEFORE ORDERING OR FABRICATING ANY MATERIAL.

NOTES:

1. The demolition details shown on this sheet are for the existing bridge of "Atlantic Blvd UC On-Ramp".
2. For dimensions, details, and information not shown, see As-Built plans.
3. Top 3'-0" of Exist pile or 1'-0" below new bridge foundation whichever is lower should be cut off when existing footings identified to be removed.

LEGEND:

- Indicates Bottom of Exist Footing Elevation
- Indicates existing Bridge Removal
- Existing Structure
- Indicates existing Vertical Piles
- Indicates existing Battered Piles

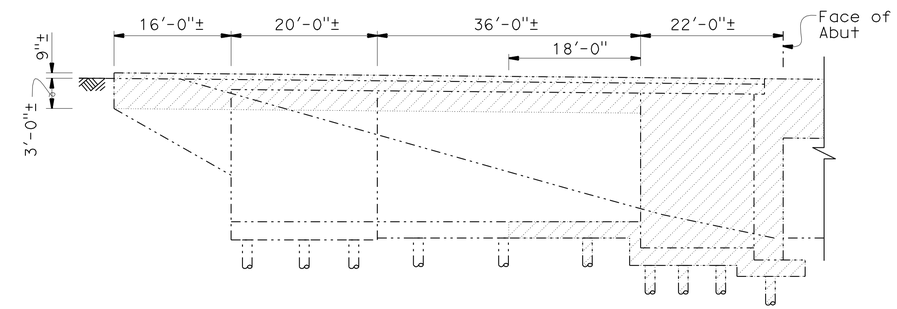

ABUTMENT 1 ELEVATION

NO SCALE

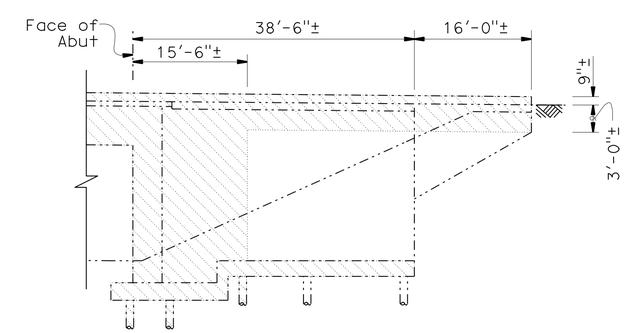

ABUTMENT 3 ELEVATION

NO SCALE

DESIGN	BY K. GHOSH	CHECKED J. TJOELKER	
DETAILS	BY M. KINGRA	CHECKED K. GHOSH	
QUANTITIES	BY C. CANCINO	CHECKED A. CARREON	

STATE OF CALIFORNIA
DEPARTMENT OF TRANSPORTATION

DIVISION OF ENGINEERING SERVICES
STRUCTURE DESIGN
DESIGN BRANCH 21

BRIDGE NO. 53-3067
POST MILE 21.91

ATLANTIC BLVD ON-RAMP UC (REPLACE)
BRIDGE REMOVAL

STRUCTURES DESIGN DETAIL SHEET (ENGLISH) (REV. 09-01-10)

ORIGINAL SCALE IN INCHES FOR REDUCED PLANS 0 1 2 3

UNIT: 3623
PROJECT NUMBER & PHASE: 0700020869 & 1 CONTRACT NO.: 202111

DISREGARD PRINTS BEARING EARLIER REVISION DATES

REVISION DATES 10/01/10 11/18/10 03/01/11

SHEET 4 OF 25

FILE => 53-1008k-e-br_rmvl.dgn

USERNAME => s124496 DATE PLOTTED => 28-JUN-2011 TIME PLOTTED => 20:07

DIST	COUNTY	ROUTE	POST MILES TOTAL PROJECT	SHEET No.	TOTAL SHEETS
07	LA	710	17.2/26.4	1375	1507

REGISTERED CIVIL ENGINEER — DATE 03/01/11

6-27-11
PLANS APPROVAL DATE

REGISTERED PROFESSIONAL ENGINEER — CHUNG-YUAN WEN — No. C 50690 — Exp. 09/30/11 — CIVIL — STATE OF CALIFORNIA

The State of California or its officers or agents shall not be responsible for the accuracy or completeness of electronic copies of this plan sheet.

CURVE DATA

No.	R	Δ	T	L
1	2000.000	76°26′21"	1574.951	2668.229
2	2060.000	11°48′46"	213.115	424.719
3	20000.000	0°57′27"	167.131	334.255
4	142.000	293°53′9"	92.417	728.358

(AA) STA 57+25.728 SB ON RAMP FROM SB ATLANTIC BLVD= STA 421+60.889 ATLANTIC BLVD

(BB) STA 1157+80.995 ℄ ROUTE 710= STA 422+78.059 ATLANTIC BLVD

Bridge Location

(A) - 11.633 Lt ℄, Sta 56+59.901 Elev=181.354 ±
(B) - 16.631 Lt ℄, Sta 57+92.839 Elev=177.589 ±
(C) - 4.682 Rt ℄, Sta 58+08.373 Elev=178.094 ±
(D) - 9.754 Rt ℄, Sta 56+74.466 Elev=181.893 ±

LEGENDS:

xxx.xx	Indicates bottom of footing elevation
I	New straight Piles (Not all piles are shown for clarity)
I	New battered Piles (Not all piles are shown for clarity)
—·—·—	Indicates existing structure
	Indicates new structure

NOTES:

1. The contractor shall verify all controlling field dimensions before ordering or fabricating any material.
2. Existing utilities shown are approximate. See Utility Plans for more information.

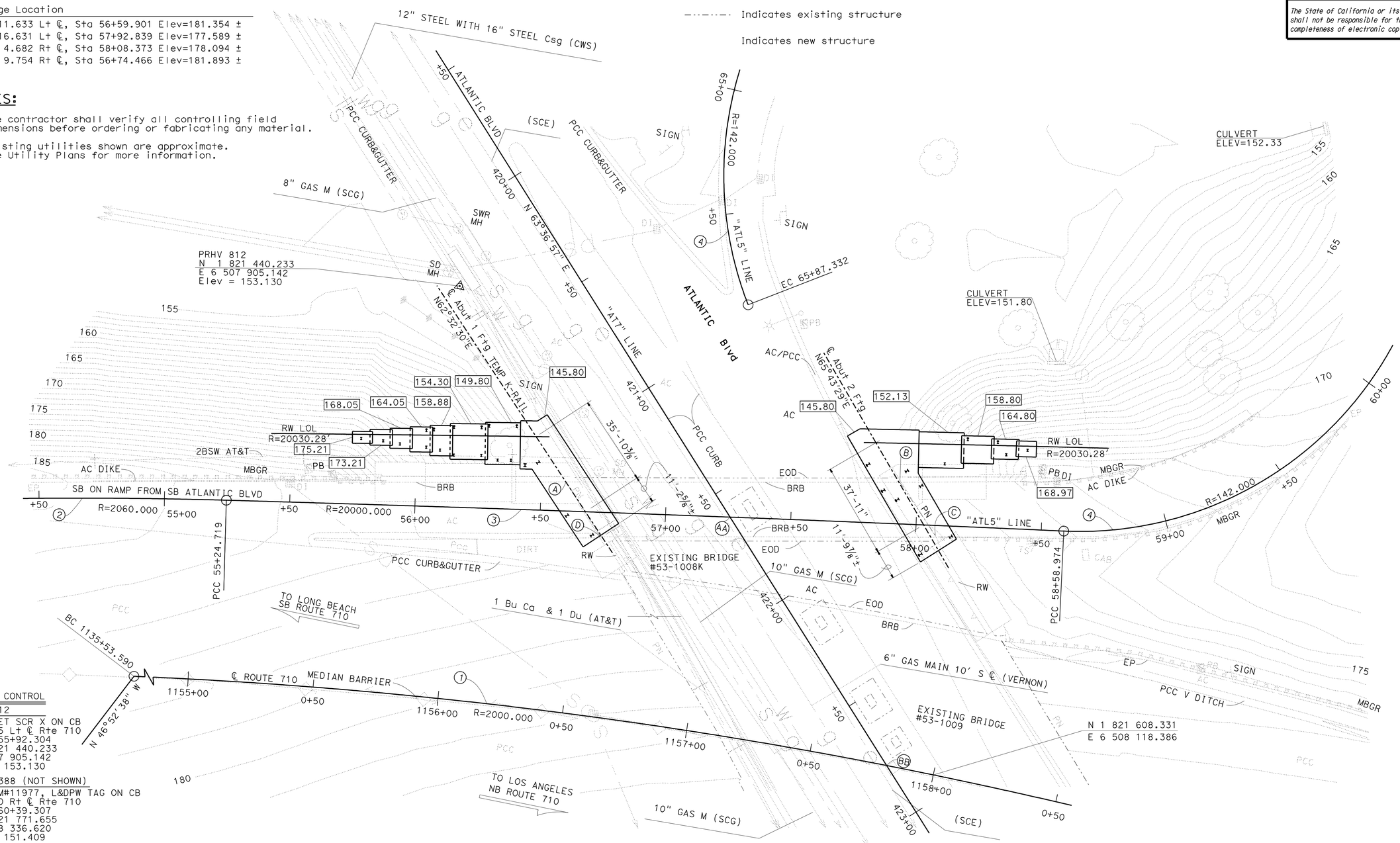

SURVEY CONTROL

PRHV 812
Fnd SET SCR X ON CB
164.575 Lt ℄ Rte 710
Sta 1155+92.304
N 1 821 440.233
E 6 507 905.142
Elev = 153.130

PRHV 8388 (NOT SHOWN)
Fnd BM#11977, L&DPW TAG ON CB
145.850 Rt ℄ Rte 710
Sta 1160+39.307
N 1 821 771.655
E 6 508 336.620
Elev = 151.409

PRELIMINARY INVESTIGATION SECTION

SCALE 1"=20'	VERT.DATUM NAVD 88	PHOTOGRAMMETRY AS OF: X			
	HORZ.DATUM NAD 83	SURVEYED	BY DISTRICT	CHECKED	BY C. Stewart
ALIGNMENT TIES DIST TRAV SHEETS		DRAFTED	BY M. Sadaghiani 07-09	CHECKED	BY L. Manabo

DESIGN	BY K. Kim	CHECKED	G. Matthews
DETAILS	BY M. Kingra	CHECKED	K. Kim
QUANTITIES	BY K. Kim	CHECKED	K. Ghosh

STATE OF CALIFORNIA
DEPARTMENT OF TRANSPORTATION

DIVISION OF ENGINEERING SERVICES
STRUCTURE DESIGN
DESIGN BRANCH 21

BRIDGE NO. 53-3067
POST MILE 21.92

ATLANTIC BLVD ON-RAMP UC (REPLACE)
FOUNDATION PLAN

STRUCTURES FOUNDATION PLAN SHEET (ENGLISH) (REV. 09-01-10)

ORIGINAL SCALE IN INCHES FOR REDUCED PLANS 0 1 2 3

UNIT: 3623
PROJECT NUMBER & PHASE: 0700020869-1
CONTRACT NO.: 202111

DISREGARD PRINTS BEARING EARLIER REVISION DATES → REVISION DATES 1/8/09 9/27/10 11/23/10

SHEET 5 OF 25

FILE => 53-1008K-e-fp.dgn

USERNAME => s124496 DATE PLOTTED => 28-JUN-2011 TIME PLOTTED => 20:07

DIST	COUNTY	ROUTE	POST MILES TOTAL PROJECT	SHEET No.	TOTAL SHEETS
07	LA	710	17.2/26.4	1376	1507

REGISTERED CIVIL ENGINEER — DATE 03/01/11

6-27-11
PLANS APPROVAL DATE

REGISTERED PROFESSIONAL ENGINEER — CHUNG-YUAN WEN — No. C 50690 — Exp. 09/30/11 — CIVIL — STATE OF CALIFORNIA

The State of California or its officers or agents shall not be responsible for the accuracy or completeness of electronic copies of this plan sheet.

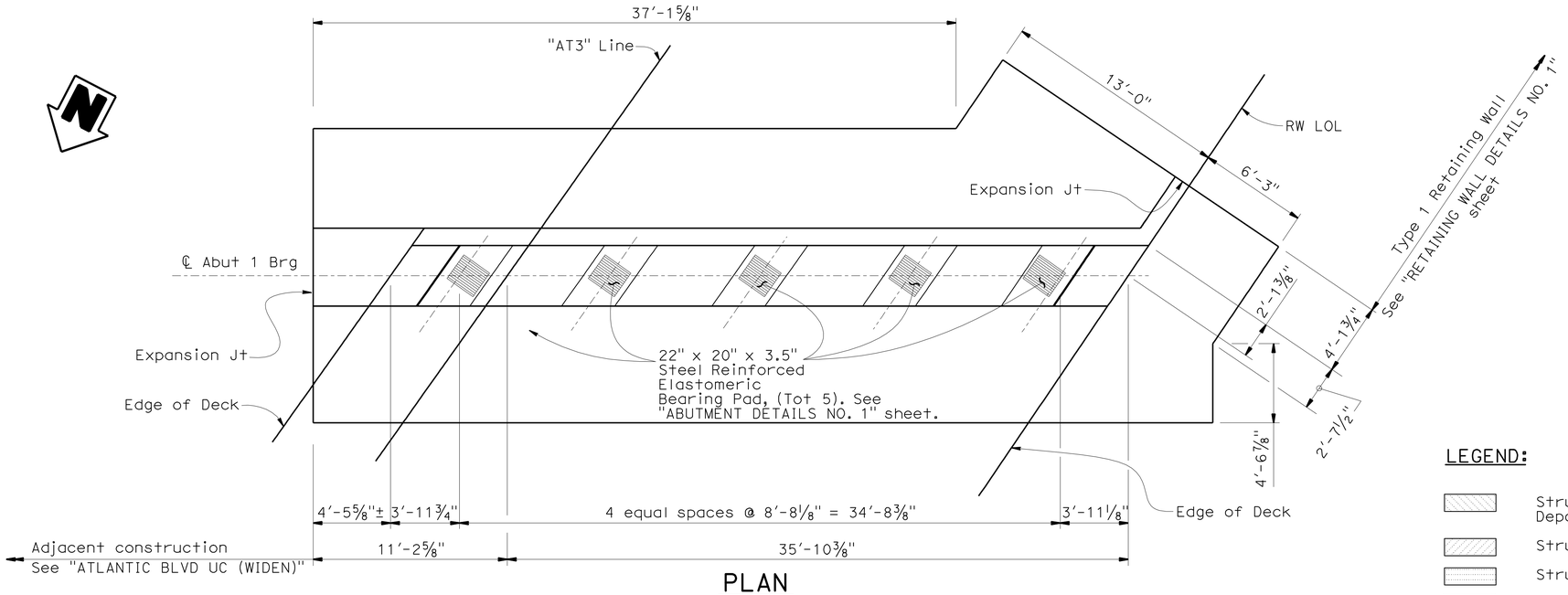

PLAN

¼" = 1-0"

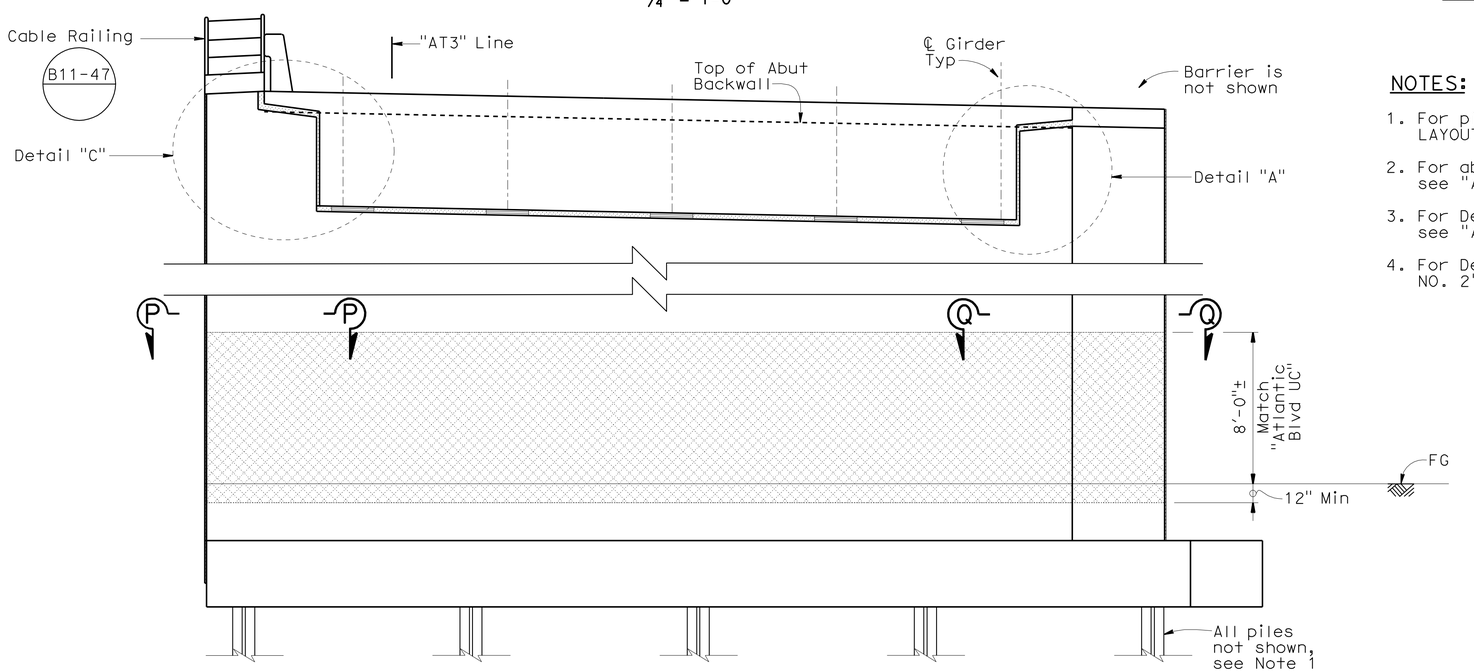

ELEVATION

¼" = 1-0"

NOTE:
THE CONTRACTOR SHALL VERIFY ALL CONTROLLING FIELD DIMENSIONS BEFORE ORDERING OR FABRICATING ANY MATERIAL.

LEGEND:

- Structure Excavation (Aerially Deposited Lead Type Z-2)
- Structure excavation Bridge
- Structure Backfill Bridge
- Class 2 surface finish (Gun Finish)

NOTES:

1. For pile locations, see "ABUTMENT PILE LAYOUT" sheet.
2. For abutment typical section, see "ABUTMENT DETAIL NO. 1" sheet.
3. For Detail "C", Section P-P, and Section Q-Q, see "ABUTMENT DETAILS NO. 3" sheet.
4. For Detail "A", see "ABUTMENT DETAILS NO. 2" sheet.

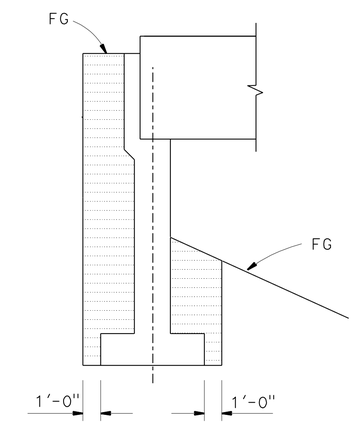

BACKFILL

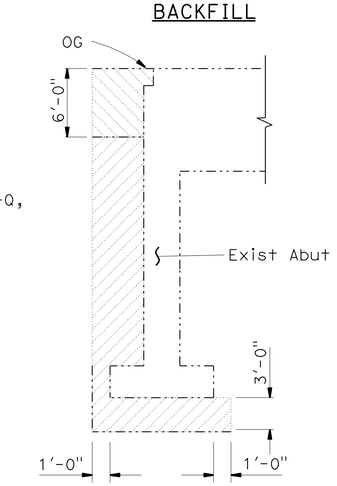

EXCAVATION

ABUTMENT

LIMITS OF PAYMENT FOR EXCAVATION AND BACKFILL

NO SCALE

	BY	CHECKED
DESIGN	T. CHU	J. TJOELKER
DETAILS	M. KINGRA / J. VALENCIA	K. GHOSH
QUANTITIES	C. CANCINO	A. CARREON

STATE OF CALIFORNIA
DEPARTMENT OF TRANSPORTATION

DIVISION OF ENGINEERING SERVICES
STRUCTURE DESIGN
DESIGN BRANCH 21

BRIDGE NO. 53-3067
POST MILE 21.91

ATLANTIC BLVD ON-RAMP UC (REPLACE)

ABUTMENT 1 LAYOUT

STRUCTURES DESIGN DETAIL SHEET (ENGLISH) (REV. 09-01-10)

ORIGINAL SCALE IN INCHES FOR REDUCED PLANS 0 1 2 3

UNIT: 3623
PROJECT NUMBER & PHASE: 0700020869 & 1 CONTRACT NO.: 202111

DISREGARD PRINTS BEARING EARLIER REVISION DATES

REVISION DATES: 7/29/10 03/01/11 11/17/10

SHEET 6 OF 25

FILE => 53-1008k-f-abut_01_lo.dgn

USERNAME => s124496 DATE PLOTTED => 28-JUN-2011 TIME PLOTTED => 20:07

DIST	COUNTY	ROUTE	POST MILES TOTAL PROJECT	SHEET No.	TOTAL SHEETS
07	LA	710	17.2/26.4	1377	1507

REGISTERED CIVIL ENGINEER — 03/01/11 DATE

6-27-11
PLANS APPROVAL DATE

REGISTERED PROFESSIONAL ENGINEER CHUNG-YUAN WEN No. C 50690 Exp. 09/30/11 CIVIL STATE OF CALIFORNIA

The State of California or its officers or agents shall not be responsible for the accuracy or completeness of electronic copies of this plan sheet.

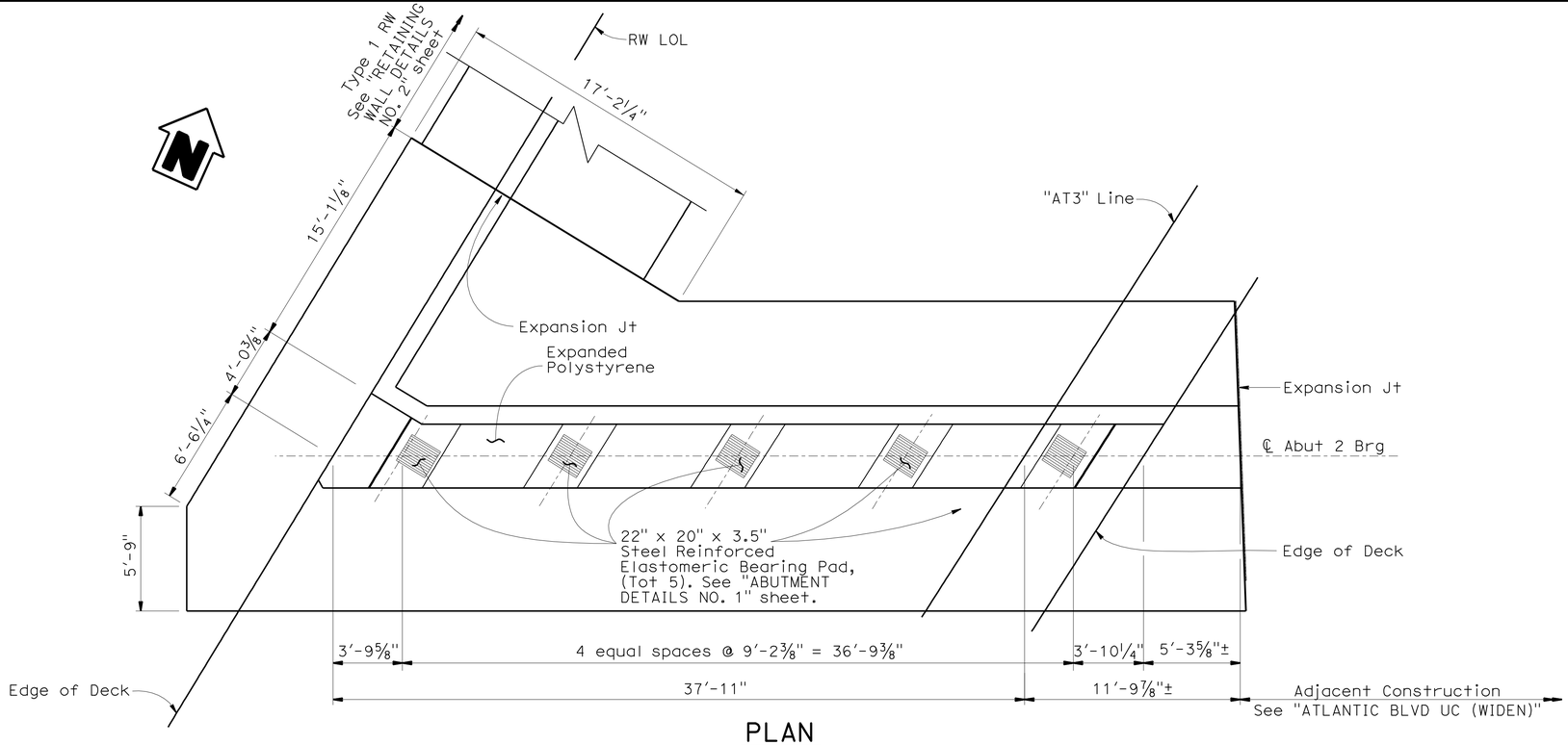

PLAN
¼" = 1-0"

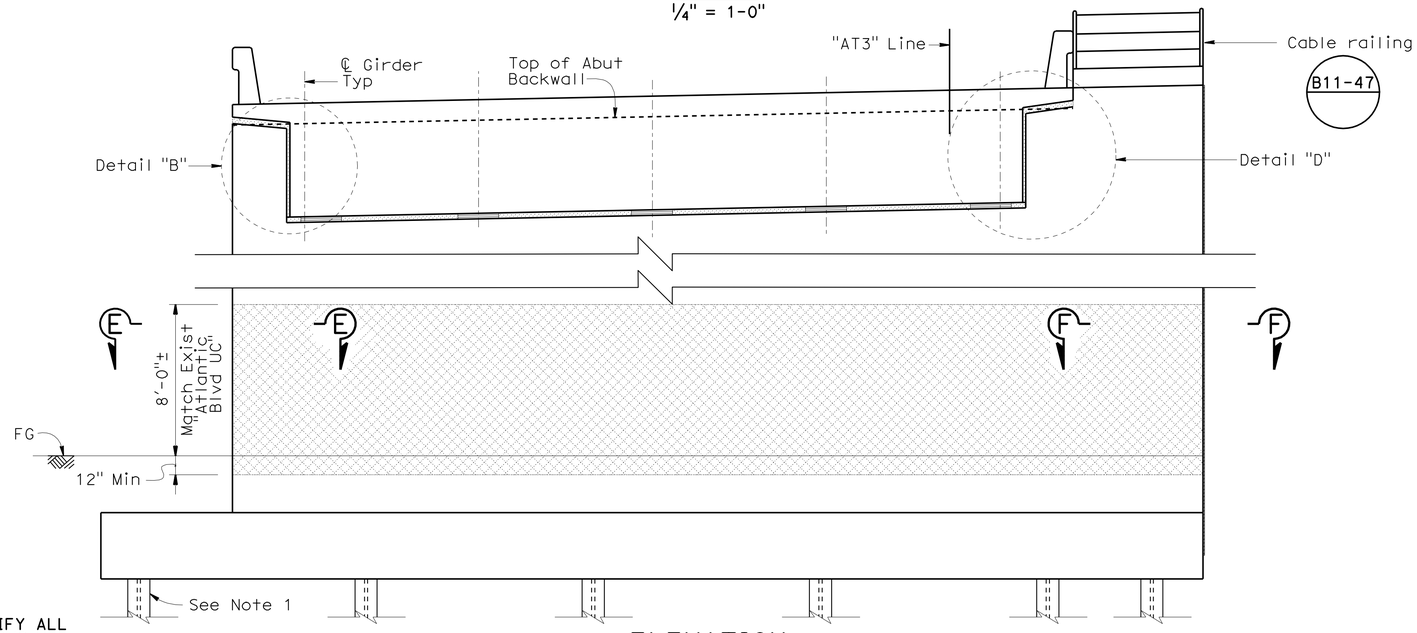

ELEVATION
¼" = 1-0"

* All piles not shown

NOTES:

1. For pile locations and footing dimensions, see "ABUTMENT PILE LAYOUT" sheet.
2. For abutment typical section, see "ABUTMENT DETAIL NO. 1" sheet.
3. For Section E-E and Section F-F, see "ABUTMENT DETAILS NO. 4" sheet.
4. For Excavation and Backfill, see "ABUTMENT 1 LAYOUT" sheet.
5. For Detail "B", see "ABUTMENT DETAILS NO. 2" sheet.
6. For Detail "D", see "ABUTMENT DETAILS NO. 3" sheet.

LEGEND:

Class 2 surface finish (Gun Finish)

NOTE:
THE CONTRACTOR SHALL VERIFY ALL CONTROLLING FIELD DIMENSIONS BEFORE ORDERING OR FABRICATING ANY MATERIAL.

	BY	CHECKED
DESIGN	T. CHU	J. TJOELKER
DETAILS	M. KINGRA / J. VALENCIA	K. GHOSH
QUANTITIES	C. CANCINO	A. CARREON

STATE OF CALIFORNIA
DEPARTMENT OF TRANSPORTATION

DIVISION OF ENGINEERING SERVICES
STRUCTURE DESIGN
DESIGN BRANCH 21

BRIDGE NO. 53-3067
POST MILE 21.91

ATLANTIC BLVD ON-RAMP UC (REPLACE)
ABUTMENT 2 LAYOUT

STRUCTURES DESIGN DETAIL SHEET (ENGLISH) (REV. 09-01-10)

ORIGINAL SCALE IN INCHES FOR REDUCED PLANS 0 1 2 3

UNIT: 3623
PROJECT NUMBER & PHASE: 0700020869 & 1 CONTRACT NO.: 202111

DISREGARD PRINTS BEARING EARLIER REVISION DATES → REVISION DATES 7/26/09 8/30/10 10/07/10 03/01/11

SHEET 7 OF 25

FILE => 53-1008k-f-abut_02_lo.dgn

USERNAME => s124496 DATE PLOTTED => 28-JUN-2011 TIME PLOTTED => 20:07

DIST	COUNTY	ROUTE	POST MILES TOTAL PROJECT	SHEET No.	TOTAL SHEETS
07	LA	710	17.2/26.4	1378	1507

REGISTERED CIVIL ENGINEER — DATE 03/01/11

6-27-11
PLANS APPROVAL DATE

REGISTERED PROFESSIONAL ENGINEER — CHUNG-YUAN WEN — No. C 50690 — Exp. 09/30/11 — CIVIL — STATE OF CALIFORNIA

The State of California or its officers or agents shall not be responsible for the accuracy or completeness of electronic copies of this plan sheet.

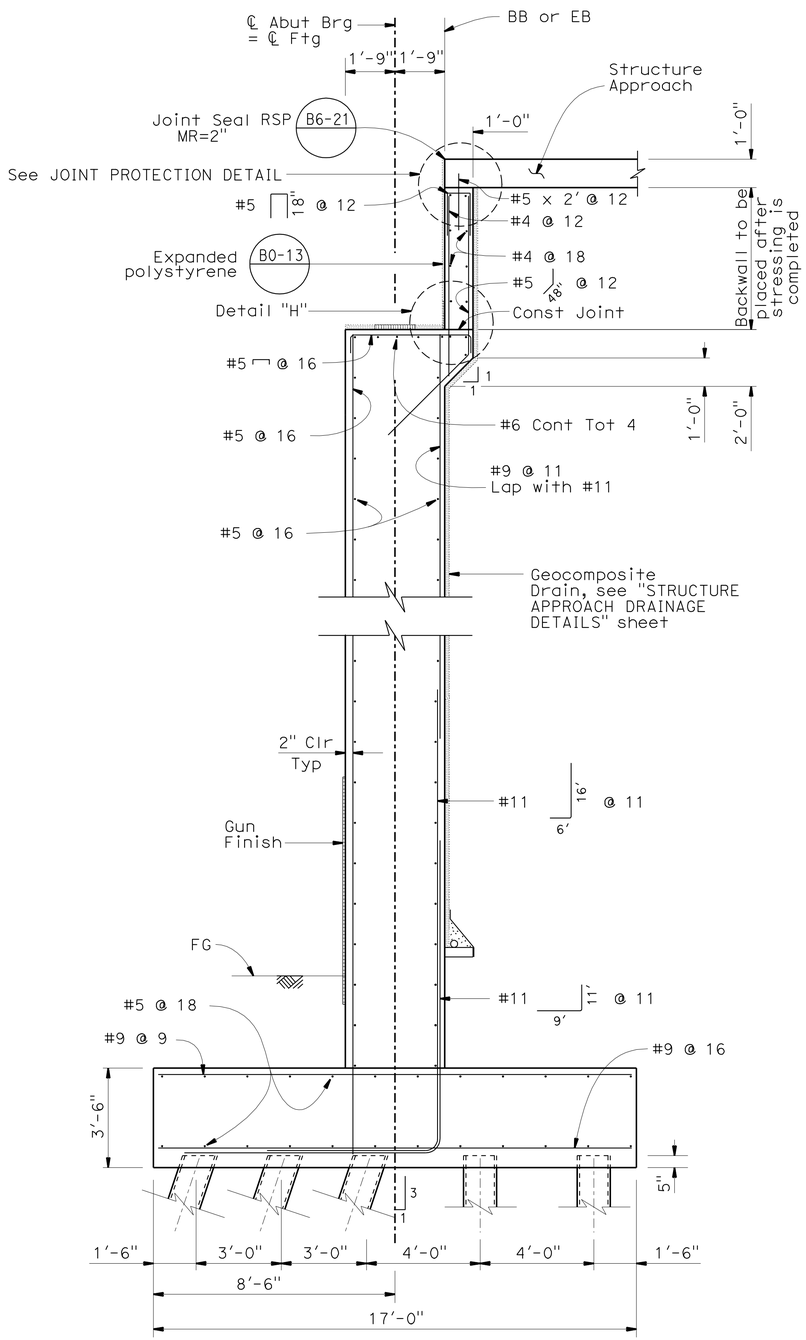

TYPICAL SECTION

3/8"=1'-0"
(Abutment 1 shown Abutment 2 similar)

NOTE:
THE CONTRACTOR SHALL VERIFY ALL CONTROLLING FIELD DIMENSIONS BEFORE ORDERING OR FABRICATING ANY MATERIAL.

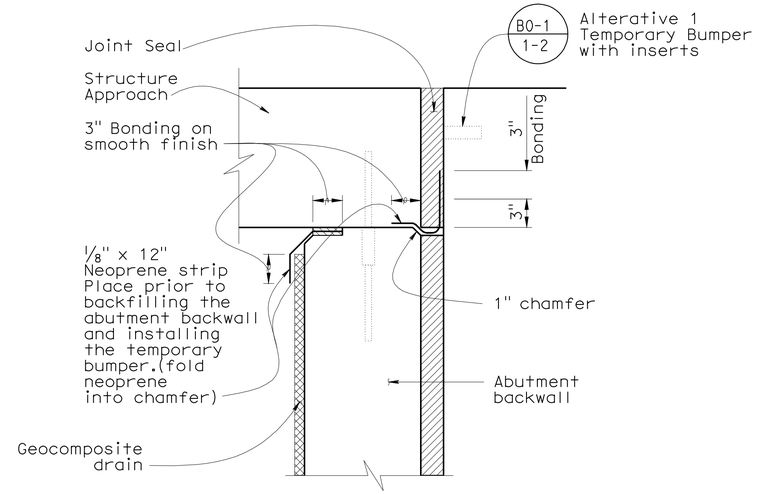

JOINT PROTECTION DETAIL

No Scale

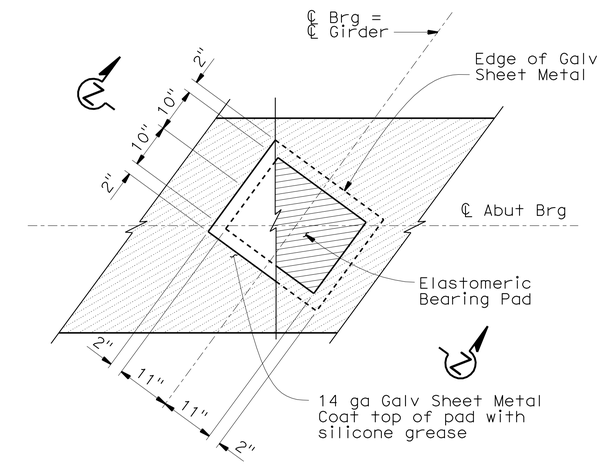

PLAN

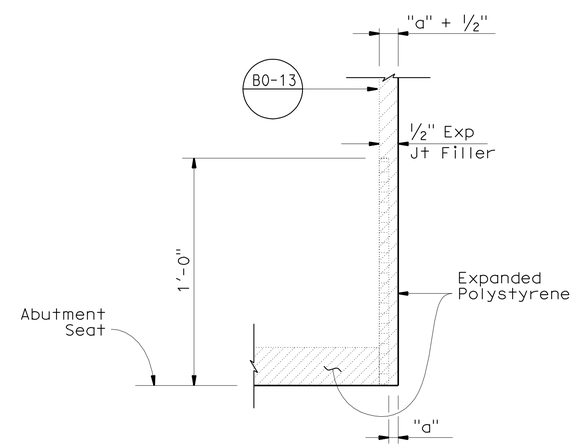

DETAIL "H"

No Scale

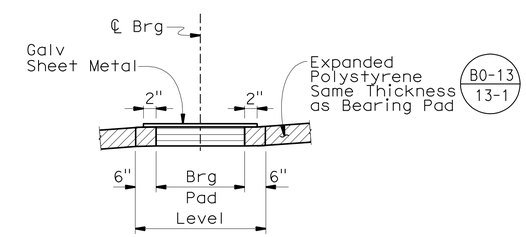

SECTION Z-Z

BEARING PAD DETAIL

No Scale

Note: Details typical at all Bearing Pads. Except details "A" & "B" see "ABUTMENT DETAIL NO. 2"

DESIGN	BY T. CHU	CHECKED J. TJOELKER	
DETAILS	BY M. KINGRA / J. VALENCIA	CHECKED K. GHOSH	
QUANTITIES	BY C. CANCINO	CHECKED A. CARREON	

STATE OF CALIFORNIA
DEPARTMENT OF TRANSPORTATION

DIVISION OF ENGINEERING SERVICES
STRUCTURE DESIGN
DESIGN BRANCH 21

BRIDGE NO. 53-3067
POST MILE 21.91

ATLANTIC BLVD ON-RAMP UC (REPLACE)
ABUTMENT DETAILS NO. 1

STRUCTURES DESIGN DETAIL SHEET (ENGLISH) (REV. 09-01-10)

ORIGINAL SCALE IN INCHES FOR REDUCED PLANS 0 1 2 3

UNIT: 3623
PROJECT NUMBER & PHASE: 0700020869 & 1 CONTRACT NO.: 202111

DISREGARD PRINTS BEARING EARLIER REVISION DATES
REVISION DATES: 1/20/10 11/19/10 10/01/10

SHEET 8 OF 25

FILE => 53-1008K-f-abutdt-01.dgn

USERNAME => s124496 DATE PLOTTED => 28-JUN-2011 TIME PLOTTED => 20:07

DIST	COUNTY	ROUTE	POST MILES TOTAL PROJECT	SHEET No.	TOTAL SHEETS
07	LA	710	17.2/26.4	1379	1507

REGISTERED CIVIL ENGINEER — DATE 03/01/11

6-27-11
PLANS APPROVAL DATE

REGISTERED PROFESSIONAL ENGINEER — CHUNG-YUAN WEN — No. C 50690 — Exp. 09/30/11 — CIVIL — STATE OF CALIFORNIA

The State of California or its officers or agents shall not be responsible for the accuracy or completeness of electronic copies of this plan sheet.

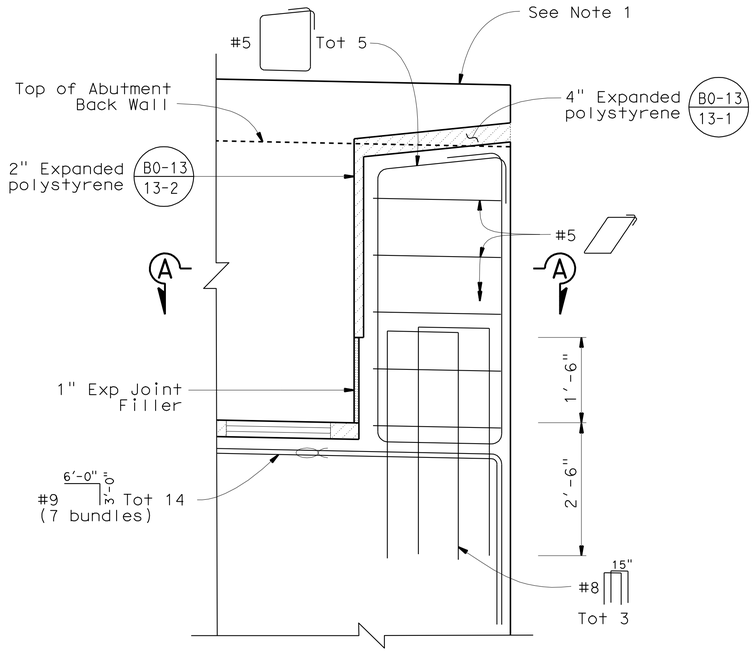

DETAIL "A"
3/4" = 1'-0"

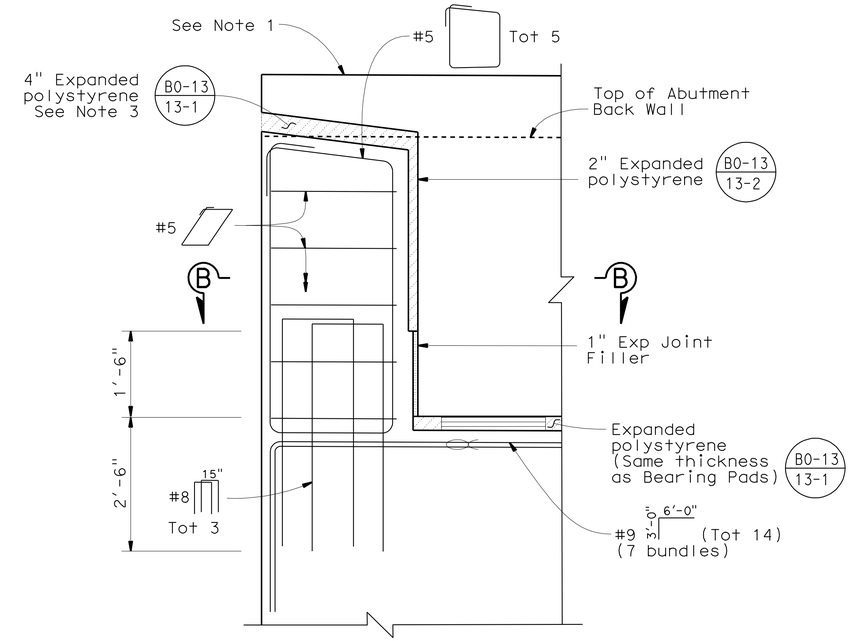

DETAIL "B"
3/4" = 1'-0"

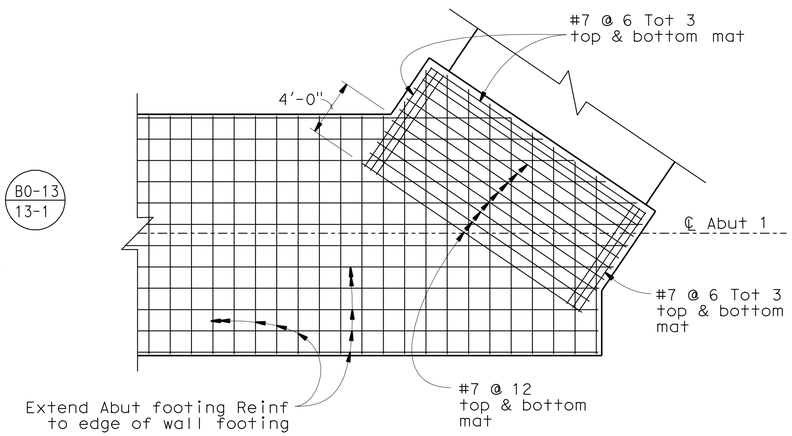

ABUTMENT 1 FOOTING CORNER DETAIL
3/16" = 1'-0"

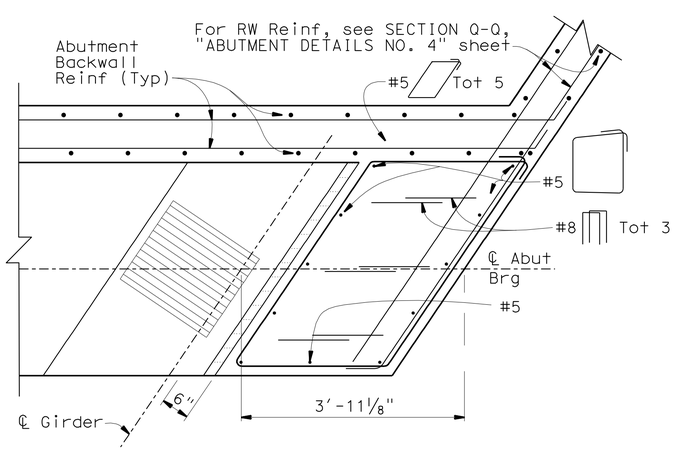

SECTION A-A
3/4" = 1'-0"

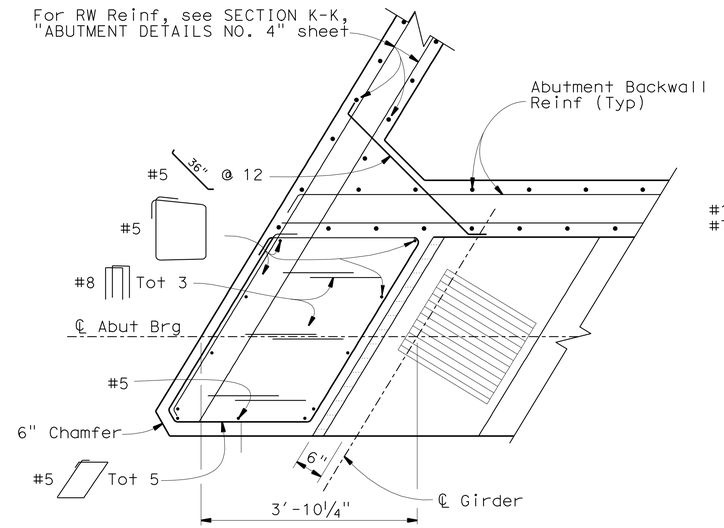

SECTION B-B
3/4" = 1'-0"

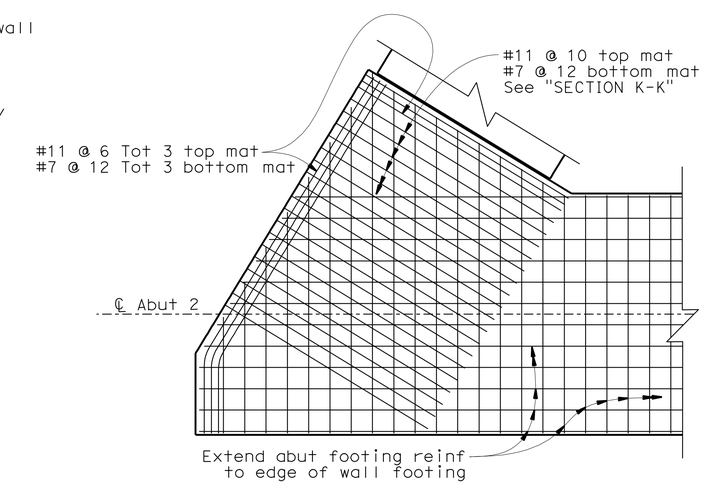

ABUTMENT 2 FOOTING CORNER DETAIL
3/16" = 1'-0"

LEGEND:

Indicates bundled bars

NOTES:

1. Concrete barrier not shown.

NOTE:
THE CONTRACTOR SHALL VERIFY ALL CONTROLLING FIELD DIMENSIONS BEFORE ORDERING OR FABRICATING ANY MATERIAL.

	BY	CHECKED
DESIGN	T. CHU	J. TJOELKER
DETAILS	M. KINGRA / J. VALENCIA	K. GHOSH
QUANTITIES	C. CANCINO	A. CARREON

STATE OF CALIFORNIA
DEPARTMENT OF TRANSPORTATION

DIVISION OF ENGINEERING SERVICES
STRUCTURE DESIGN
DESIGN BRANCH 21

BRIDGE NO. 53-3067
POST MILE 21.91

ATLANTIC BLVD ON-RAMP UC (REPLACE)
ABUTMENT DETAILS NO. 2

STRUCTURES DESIGN DETAIL SHEET (ENGLISH) (REV. 09-01-10)

ORIGINAL SCALE IN INCHES FOR REDUCED PLANS 0 1 2 3

UNIT: 3623
PROJECT NUMBER & PHASE: 0700020869 & 1 CONTRACT NO.: 202111

DISREGARD PRINTS BEARING EARLIER REVISION DATES → 2/8/10 03/01/11 11/17/10

SHEET 9 OF 25

FILE => 53-1008k-f-abutdt-02.dgn

USERNAME => s124496 DATE PLOTTED => 28-JUN-2011 TIME PLOTTED => 20:07

DIST	COUNTY	ROUTE	POST MILES TOTAL PROJECT	SHEET No.	TOTAL SHEETS
07	LA	710	17.2/26.4	1380	1507

REGISTERED CIVIL ENGINEER — 03/01/11 DATE

6-27-11
PLANS APPROVAL DATE

REGISTERED PROFESSIONAL ENGINEER — CHUNG-YUAN WEN — No. C 50690 — Exp. 09/30/11 — CIVIL — STATE OF CALIFORNIA

The State of California or its officers or agents shall not be responsible for the accuracy or completeness of electronic copies of this plan sheet.

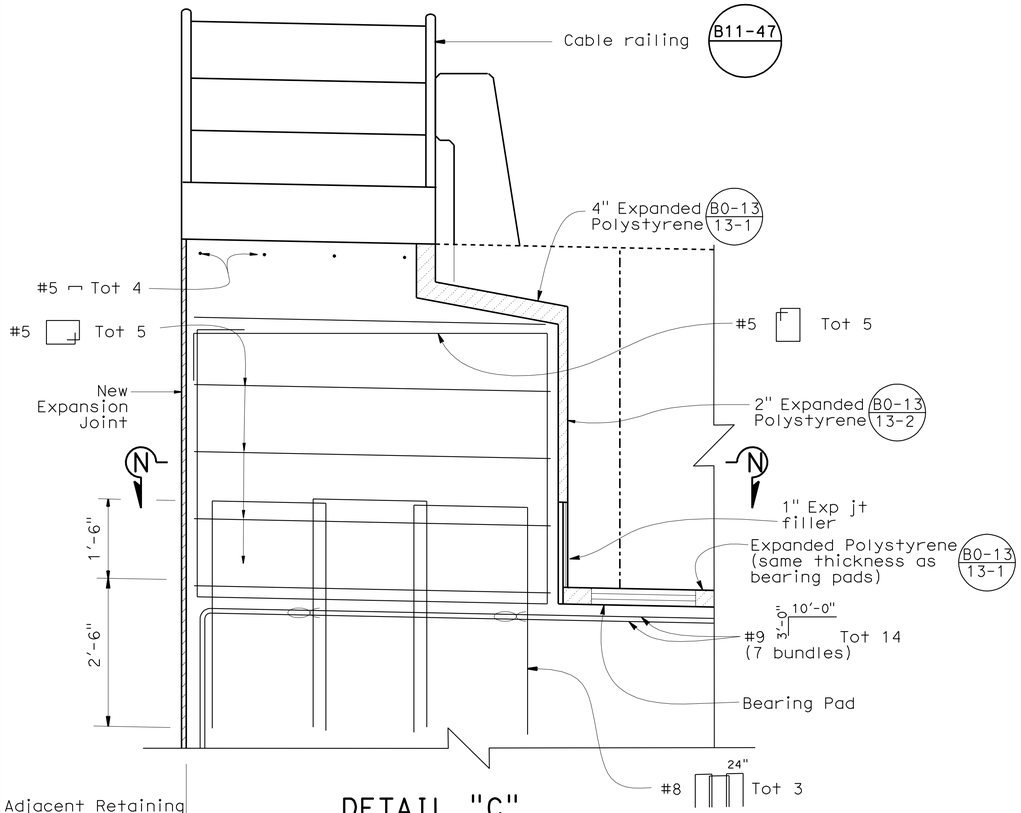

DETAIL "C"

3/4" = 1'-0"

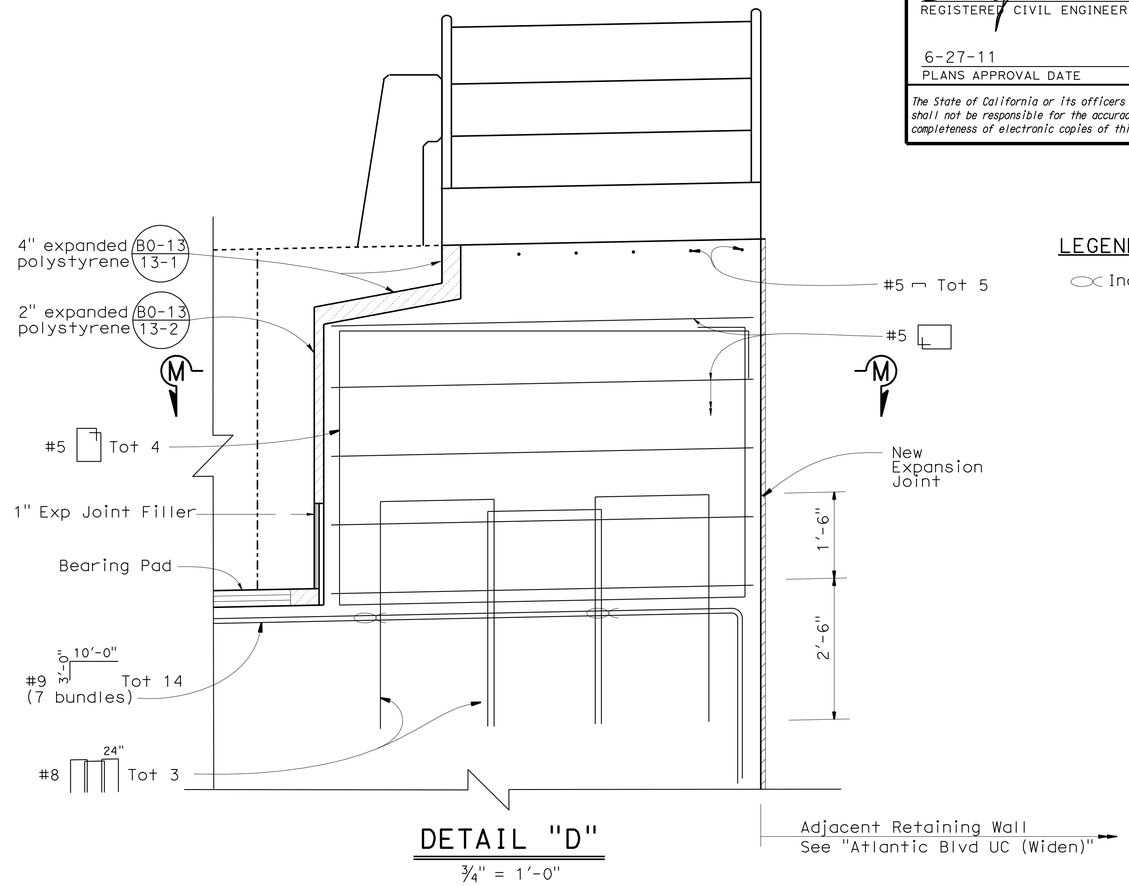

DETAIL "D"

3/4" = 1'-0"

LEGEND:

Indicates bundle bars

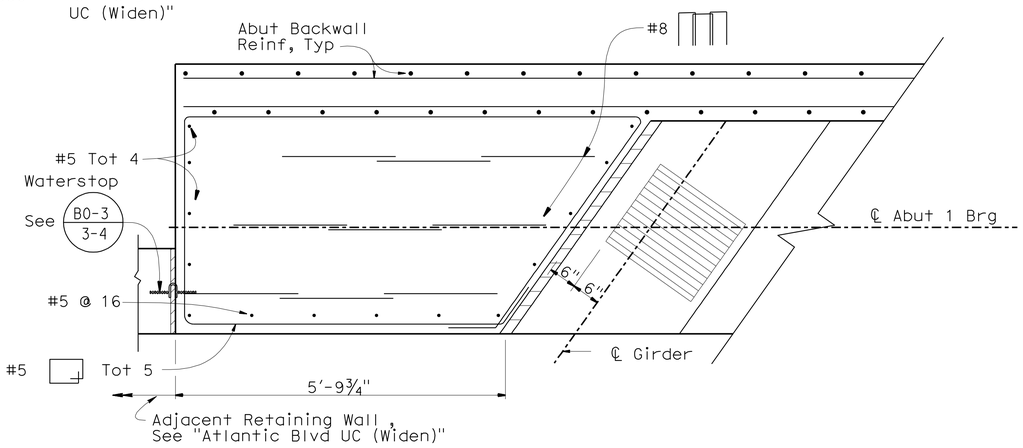

SECTION N-N

3/4" = 1'-0"

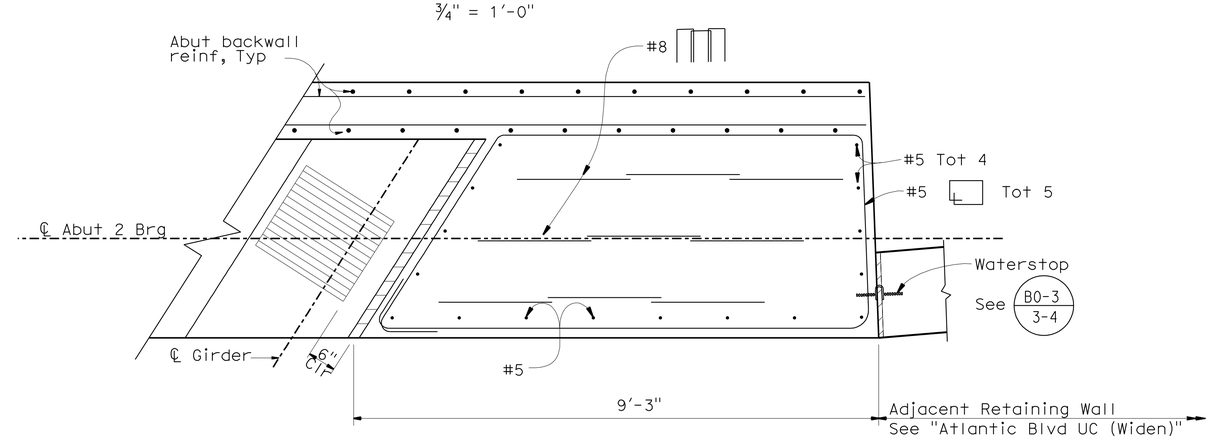

SECTION M-M

3/4" = 1'-0"

NOTE:
THE CONTRACTOR SHALL VERIFY ALL CONTROLLING FIELD DIMENSIONS BEFORE ORDERING OR FABRICATING ANY MATERIAL.

	BY	CHECKED
DESIGN	T. CHU	J. TJOELKER
DETAILS	M. KINGRA / P. PEREZ	K. GHOSH
QUANTITIES	C. CANCINO	A. CARREON

STATE OF CALIFORNIA
DEPARTMENT OF TRANSPORTATION

DIVISION OF ENGINEERING SERVICES
STRUCTURE DESIGN
DESIGN BRANCH 21

BRIDGE NO. 53-3067
POST MILE 21.91

ATLANTIC BLVD ON-RAMP UC (REPLACE)
ABUTMENT DETAILS NO. 3

STRUCTURES DESIGN DETAIL SHEET (ENGLISH) (REV. 09-01-10)

ORIGINAL SCALE IN INCHES FOR REDUCED PLANS 0 1 2 3

UNIT: 3623
PROJECT NUMBER & PHASE: 0700020869 & 1 CONTRACT NO.: 202111

DISREGARD PRINTS BEARING EARLIER REVISION DATES

REVISION DATES: 2/24/10 8/31/10 10/01/10 03/01/11

SHEET 10 OF 25

FILE => 53-1008K-f-abutdt-03.dgn

USERNAME => s174496 DATE PLOTTED => 28-JUN-2011 TIME PLOTTED => 20:07

DIST	COUNTY	ROUTE	POST MILES TOTAL PROJECT	SHEET No.	TOTAL SHEETS
07	LA	710	17.2/26.4	1381	1507

REGISTERED CIVIL ENGINEER 03/01/11 DATE

6-27-11
PLANS APPROVAL DATE

REGISTERED PROFESSIONAL ENGINEER CHUNG-YUAN WEN No. C 50690 Exp. 09/30/11 CIVIL STATE OF CALIFORNIA

The State of California or its officers or agents shall not be responsible for the accuracy or completeness of electronic copies of this plan sheet.

NOTES:

1. Water Stop extended from bottom of R.W. footing up to top of abutment.
2. For Type 1 Retaining Wall see "RETAINING WALL NO. 1" and "RETAINING WALL NO. 2" sheets.

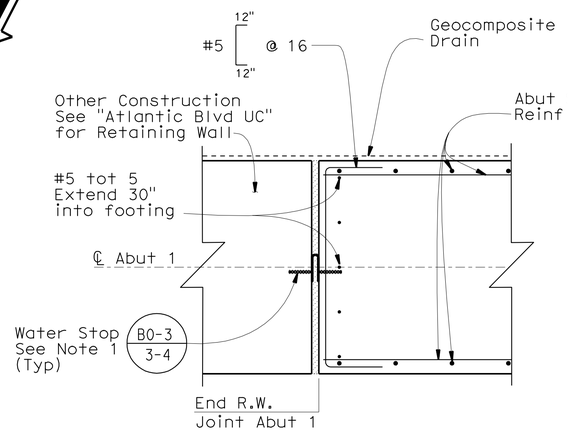

SECTION P-P
¾" = 1-0"

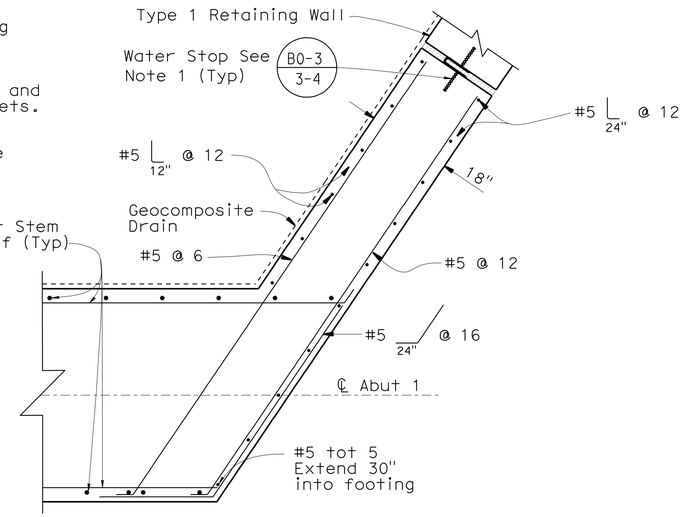

SECTION Q-Q
¾" = 1-0"

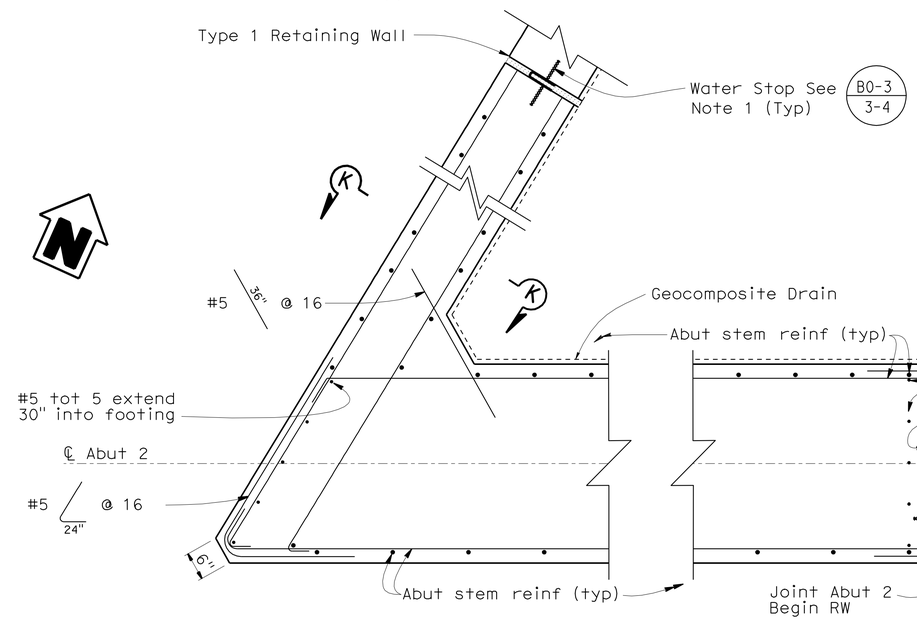

SECTION E-E
¾" = 1-0"

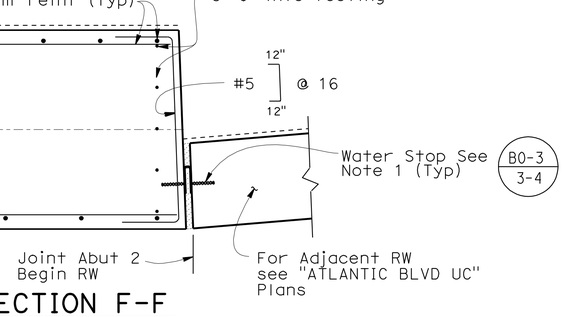

SECTION F-F
¾" = 1-0"

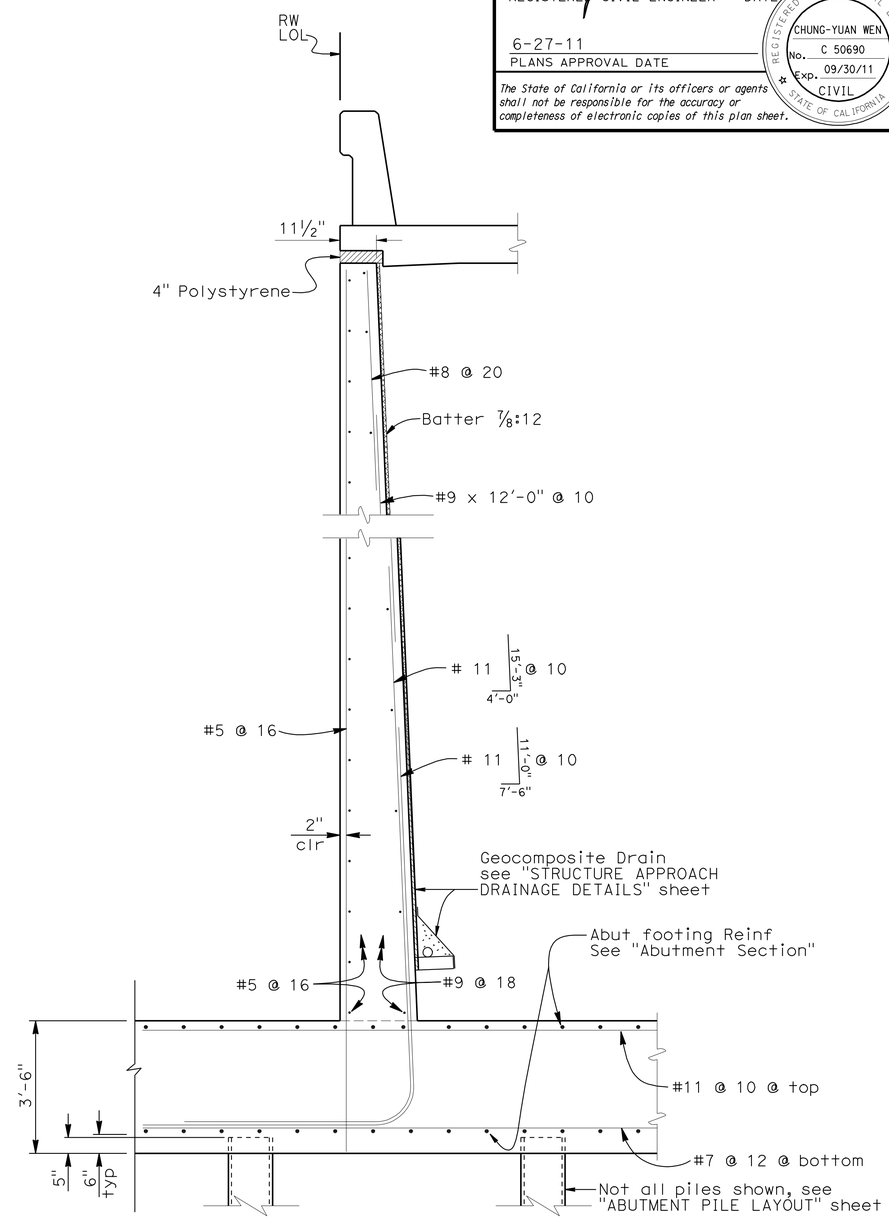

SECTION K-K
No Scale

NOTE:
THE CONTRACTOR SHALL VERIFY ALL CONTROLLING FIELD DIMENSIONS BEFORE ORDERING OR FABRICATING ANY MATERIAL.

	BY	CHECKED
DESIGN	T. CHU	J. TJOELKER
DETAILS	M. KINGRA / J. V. / Y. F.	K. GHOSH
QUANTITIES	C. CANCINO	A. CARREON

STATE OF CALIFORNIA DEPARTMENT OF TRANSPORTATION

DIVISION OF ENGINEERING SERVICES STRUCTURE DESIGN DESIGN BRANCH 21

BRIDGE NO. 53-3067
POST MILE 21.91

ATLANTIC BLVD ON-RAMP UC (REPLACE)
ABUTMENT DETAILS NO. 4

STRUCTURES DESIGN DETAIL SHEET (ENGLISH) (REV. 09-01-10)

ORIGINAL SCALE IN INCHES FOR REDUCED PLANS 0 1 2 3

UNIT: 3623
PROJECT NUMBER & PHASE: 0700020869 & 1 CONTRACT NO.: 202111

DISREGARD PRINTS BEARING EARLIER REVISION DATES

REVISION DATES 2/26/10 03/01/11 11/17/10

SHEET 11 OF 25

FILE => 53-1008k-f-abutdt-04.dgn

USERNAME => s124496 DATE PLOTTED => 28-JUN-2011 TIME PLOTTED => 20:07

DIST	COUNTY	ROUTE	POST MILES TOTAL PROJECT	SHEET No.	TOTAL SHEETS
07	LA	710	17.2/26.4	1382	1507

REGISTERED CIVIL ENGINEER 03/01/11 DATE

6-27-11
PLANS APPROVAL DATE

REGISTERED PROFESSIONAL ENGINEER CHUNG-YUAN WEN No. C 50690 Exp. 09/30/11 CIVIL STATE OF CALIFORNIA

The State of California or its officers or agents shall not be responsible for the accuracy or completeness of electronic copies of this plan sheet.

NOTES:

1. Location of piling may be adjusted to avoid conflicts with existing piling and / or utilities as permitted by Engineer.
2. Location of existing piling and foundation are approximate.
3. Tip protection should be used on H piles to prevent pile breaking in case of hitting the existing abandoned piles.

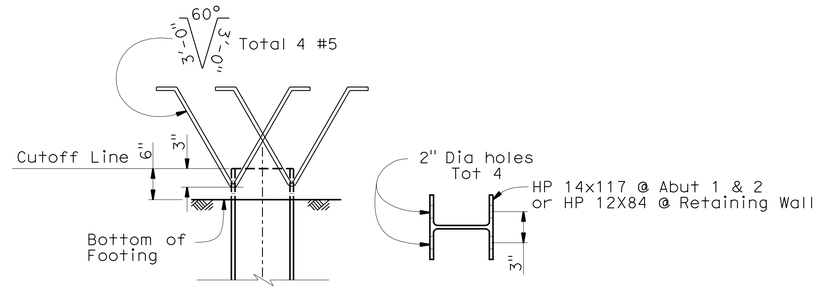

ELEVATION PLAN

STEEL PILE ANCHOR

NO SCALE

LEGENDS:

- Indicates vertical pile
- Indicates battered pile
- Indicates existing vertical pile
- Indicates existing battered pile

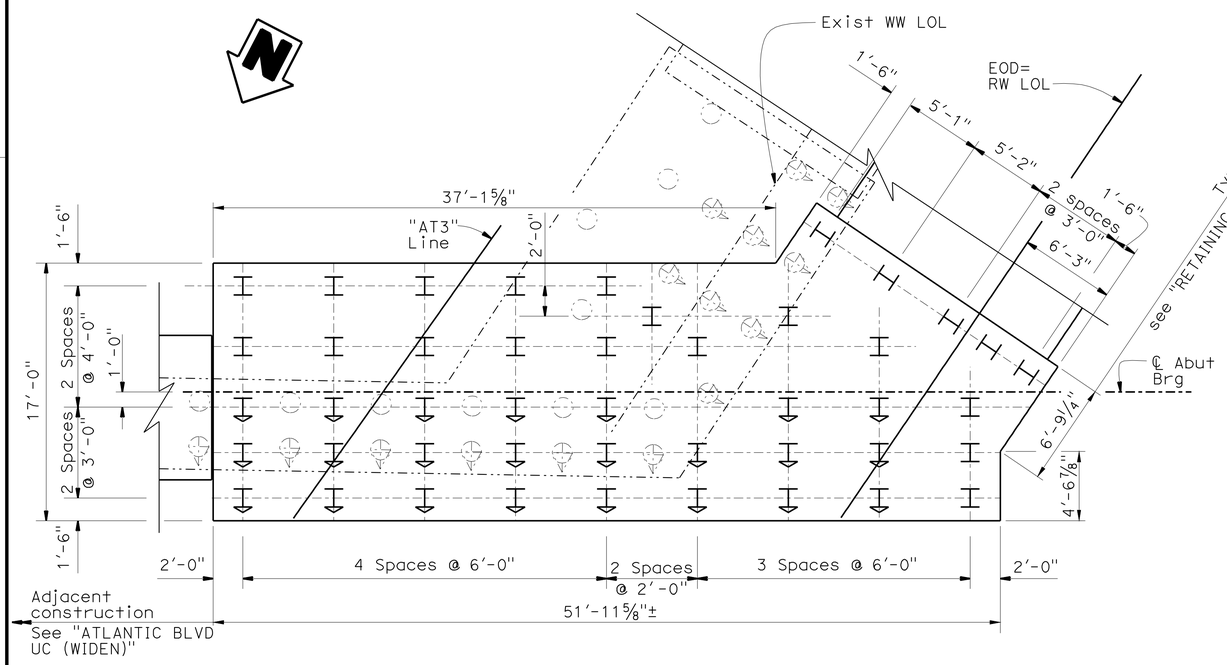

ABUTMENT 1 PILE LAYOUT

1"=5'-0"

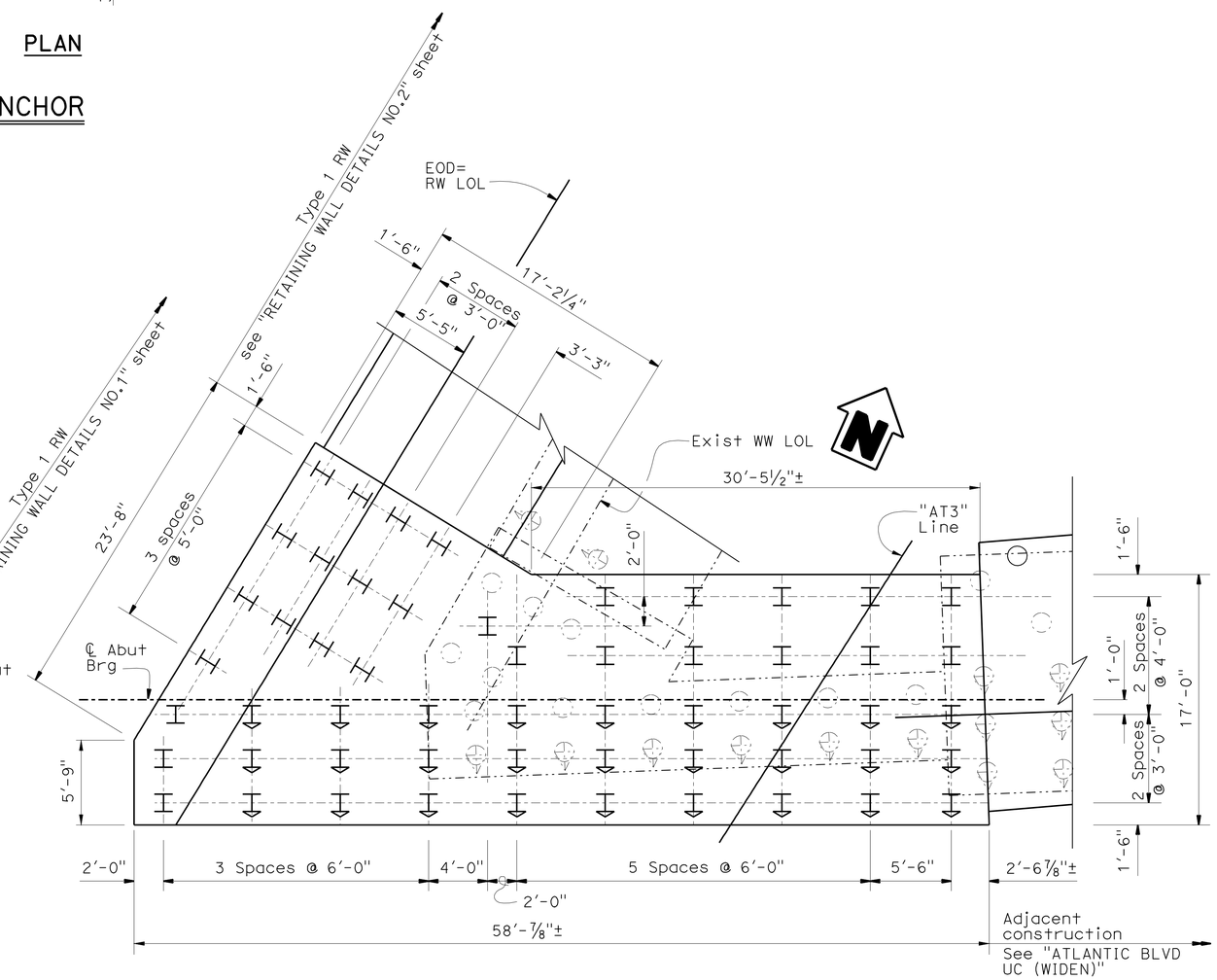

ABUTMENT 2 PILE LAYOUT

1"=5'-0"

NOTE:
THE CONTRACTOR SHALL VERIFY ALL CONTROLLING FIELD DIMENSIONS BEFORE ORDERING OR FABRICATING ANY MATERIAL.

	BY	CHECKED
DESIGN	T. CHU	J. TJOELKER
DETAILS	M. KINGRA	K. GHOSH
QUANTITIES	C. CANCINO	A. CARREON

STATE OF CALIFORNIA
DEPARTMENT OF TRANSPORTATION

DIVISION OF ENGINEERING SERVICES
STRUCTURE DESIGN
DESIGN BRANCH 21

BRIDGE NO. 53-3067
POST MILE 21.91

ATLANTIC BLVD ON-RAMP UC (REPLACE)
ABUTMENT PILE LAYOUT

STRUCTURES DESIGN DETAIL SHEET (ENGLISH) (REV. 09-01-10)

ORIGINAL SCALE IN INCHES FOR REDUCED PLANS 0 1 2 3

UNIT: 3623
PROJECT NUMBER & PHASE: 0700020869 & 1 CONTRACT NO.: 202111

DISREGARD PRINTS BEARING EARLIER REVISION DATES

REVISION DATES: 12/10/09 03/01/11 10/01/10

SHEET 12 OF 25

FILE => 53-1008K-f-pile-lo_01.dgn

USERNAME => s124496 DATE PLOTTED => 28-JUN-2011 TIME PLOTTED => 20:07

DIST	COUNTY	ROUTE	POST MILES TOTAL PROJECT	SHEET No.	TOTAL SHEETS
07	LA	710	17.2/26.4	1383	1507

REGISTERED CIVIL ENGINEER — DATE 03/01/11

6-27-11
PLANS APPROVAL DATE

REGISTERED PROFESSIONAL ENGINEER — CHUNG-YUAN WEN — No. C 50690 — Exp. 09/30/11 — CIVIL — STATE OF CALIFORNIA

The State of California or its officers or agents shall not be responsible for the accuracy or completeness of electronic copies of this plan sheet.

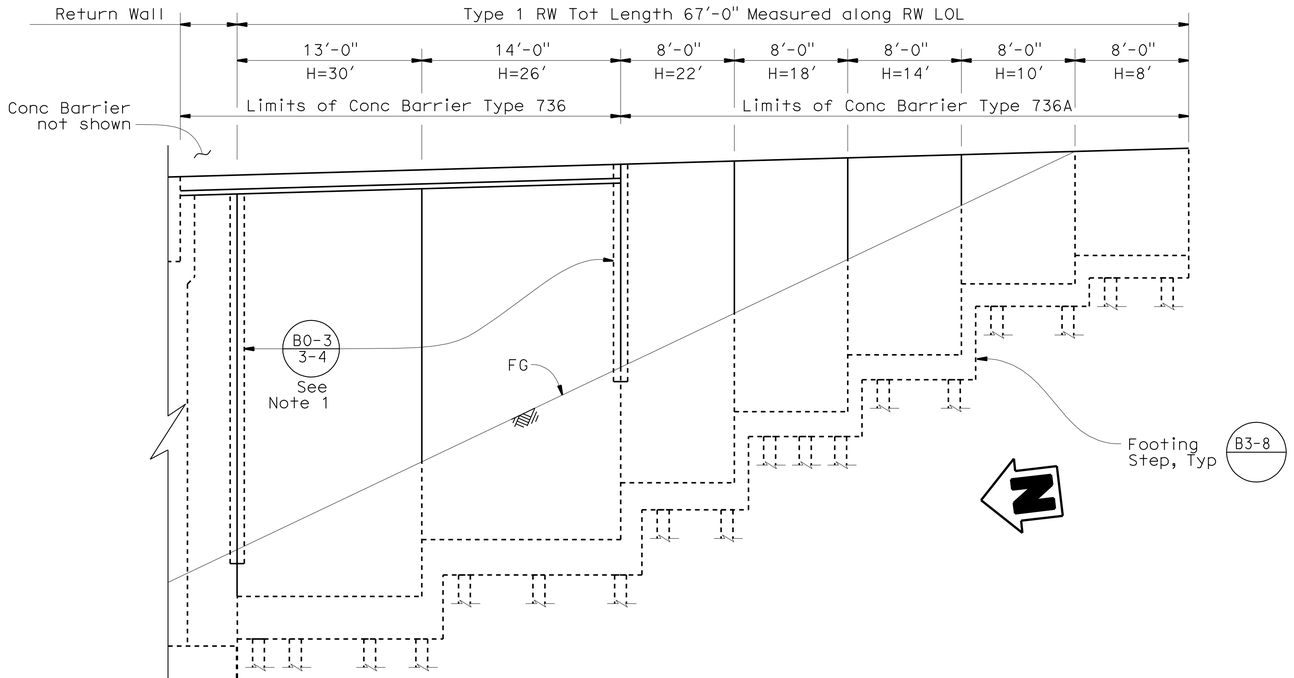

ELEVATION - ABUTMENT 1 RETAINING WALL

B11-56 B3-1

3/16" = 1-0"

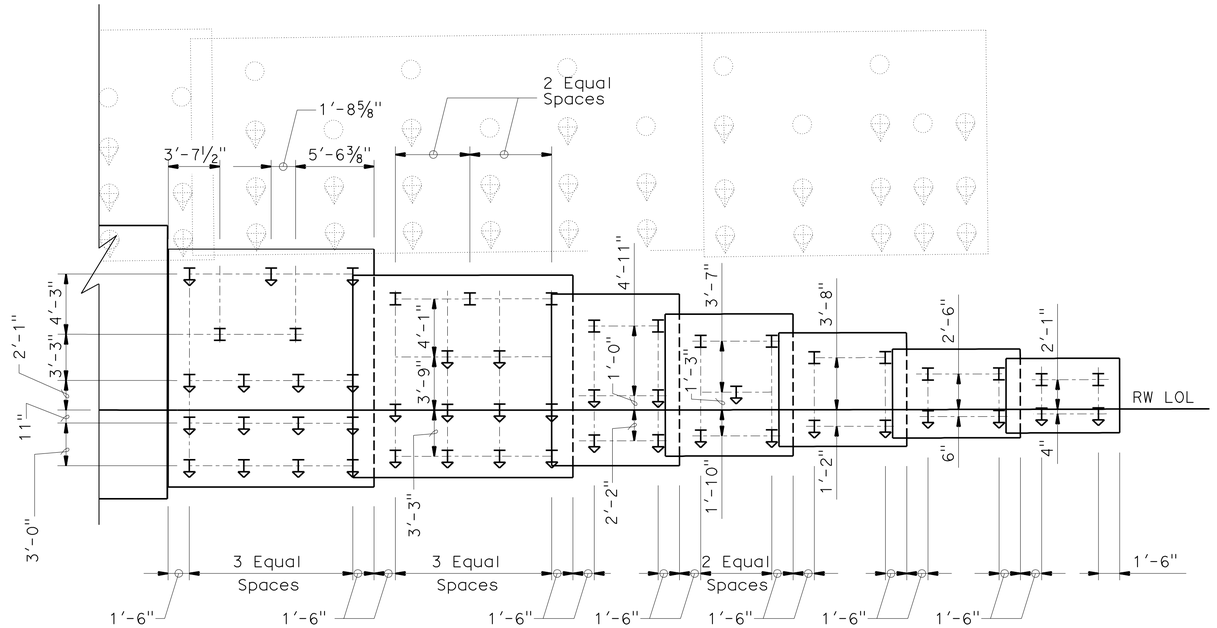

NOTE:
THE CONTRACTOR SHALL VERIFY ALL CONTROLLING FIELD DIMENSIONS BEFORE ORDERING OR FABRICATING ANY MATERIAL.

PLAN - ABUTMENT 1 RETAINING WALL

3/16" = 1-0"

NOTES:

1. Extend water stop 12" below finished grade.
2. For Retaining Wall Removal (portion), see "BRIDGE REMOVAL PLAN" sheet.
3. Refer to Standard Plan B3-1 for rebars and dimensions of Retaining Wall Type 1.

LEGEND:

- Indicates HP vertical piles
- Indicates HP battered piles
- Exist vertical piles
- Exist battered piles
- Structure Excavation (Aerially Deposited Lead Type Z-2)
- Structure excavation Retaining Wall
- Structure Backfill Retaining Wall

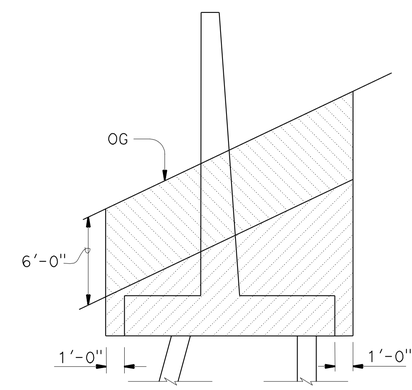

EXCAVATION

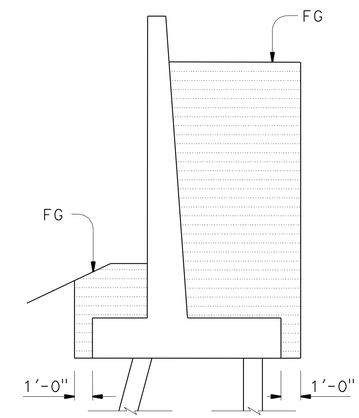

BACKFILL

RETAINING WALL

LIMITS OF PAYMENT FOR EXCAVATION AND BACKFILL

NO SCALE

DESIGN	BY T. CHU	CHECKED J. TJOELKER	
DETAILS	BY M. KINGRA / P. PEREZ	CHECKED K. GHOSH	
QUANTITIES	BY C. CANCINO	CHECKED A. CARREON	

STATE OF CALIFORNIA
DEPARTMENT OF TRANSPORTATION

DIVISION OF ENGINEERING SERVICES
STRUCTURE DESIGN
DESIGN BRANCH 21

BRIDGE NO. 53-3067
POST MILE 21.91

ATLANTIC BLVD ON-RAMP UC (REPLACE)
RETAINING WALL DETAILS NO. 1

STRUCTURES DESIGN DETAIL SHEET (ENGLISH) (REV. 09-01-10)

ORIGINAL SCALE IN INCHES FOR REDUCED PLANS 0 1 2 3

UNIT: 3623
PROJECT NUMBER & PHASE: 0700020869 & 1 CONTRACT NO.: 202111

DISREGARD PRINTS BEARING EARLIER REVISION DATES

REVISION DATES: 8/16/10 03/01/11 11/22/10

SHEET 13 OF 25

FILE => 53-1008k-g-rwdt-01.dgn

USERNAME => s124496 DATE PLOTTED => 28-JUN-2011 TIME PLOTTED => 20:07

DIST	COUNTY	ROUTE	POST MILES TOTAL PROJECT	SHEET No.	TOTAL SHEETS
07	LA	710	17.2/26.4	1384	1507

REGISTERED CIVIL ENGINEER — DATE 03/01/11

6-27-11
PLANS APPROVAL DATE

REGISTERED PROFESSIONAL ENGINEER — CHUNG-YUAN WEN — No. C 50690 — Exp. 09/30/11 — CIVIL — STATE OF CALIFORNIA

The State of California or its officers or agents shall not be responsible for the accuracy or completeness of electronic copies of this plan sheet.

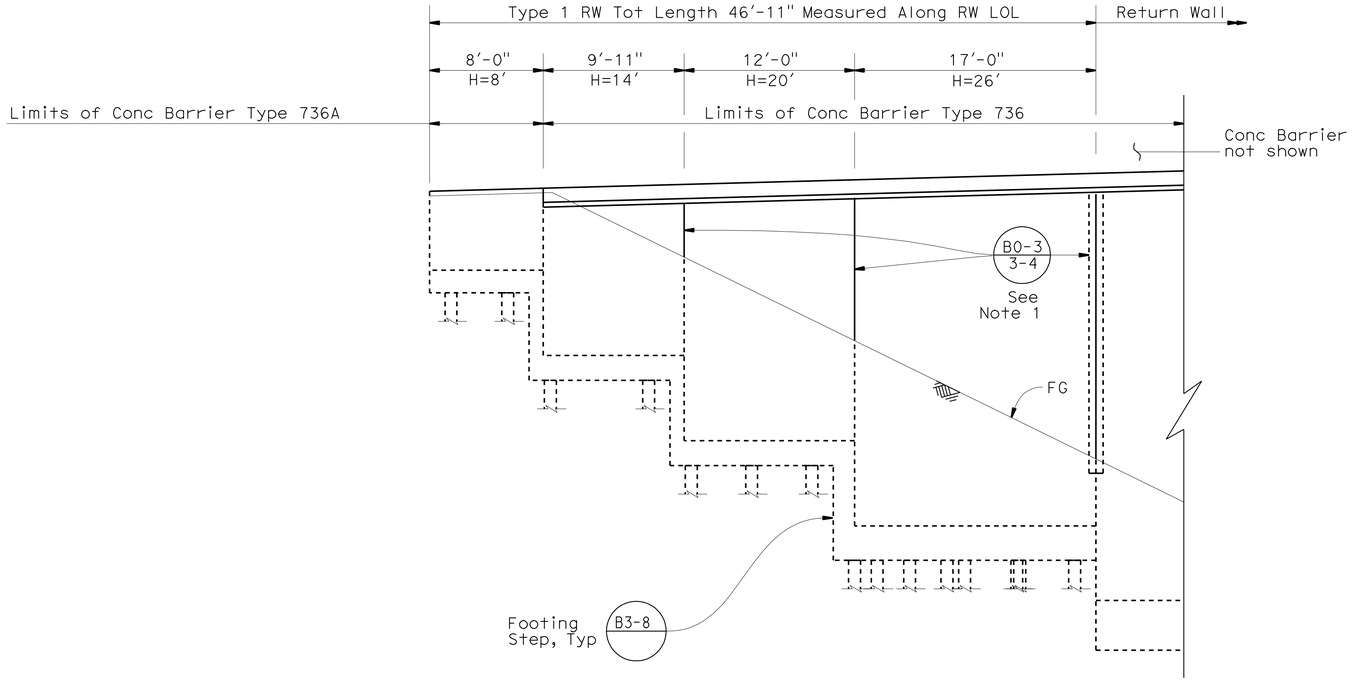

ELEVATION - ABUTMENT 2 RETAINING WALL

3/16" = 1-0"

B11-56 B3-1

NOTES:

1. Extend water stop 12" below finished grade.
2. For Retaining Wall Removal (portion), see "BRIDGE REMOVAL PLAN" sheet.
3. Refer to Standard Plan B3-1 for rebars and dimensions of Retaining Wall Type 1.

LEGEND:

- Indicates HP vertical piles
- Indicates HP battered piles
- Exist vertical piles
- Exist battered piles

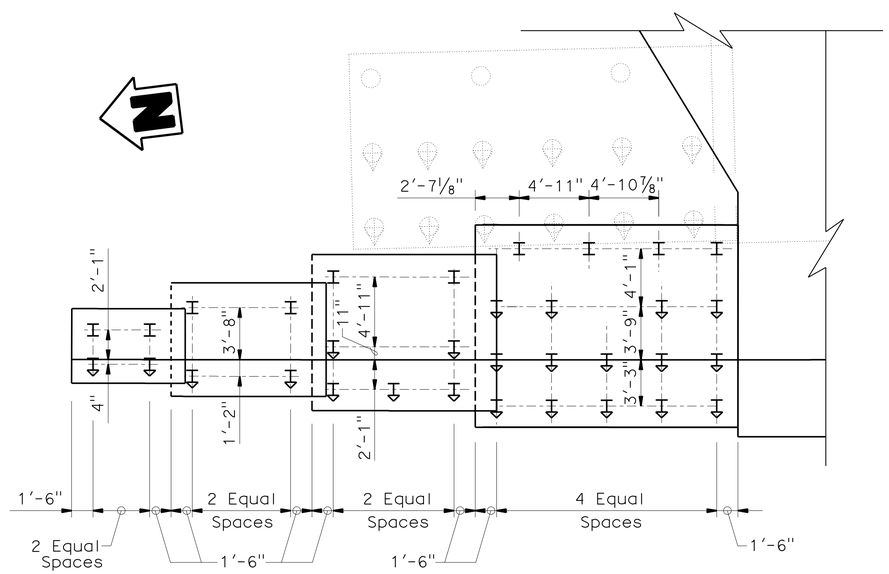

PLAN - ABUTMENT 2 RETAINING WALL

3/16" = 1-0"

NOTE:
THE CONTRACTOR SHALL VERIFY ALL CONTROLLING FIELD DIMENSIONS BEFORE ORDERING OR FABRICATING ANY MATERIAL.

	BY	CHECKED
DESIGN	T. CHU	J. TJOELKER
DETAILS	M. KINGRA / P. PEREZ	K. GHOSH
QUANTITIES	C. CANCINO	A. CARREON

STATE OF CALIFORNIA
DEPARTMENT OF TRANSPORTATION

DIVISION OF ENGINEERING SERVICES
STRUCTURE DESIGN
DESIGN BRANCH 21

BRIDGE NO. 53-3067
POST MILE 21.91

ATLANTIC BLVD ON-RAMP UC (REPLACE)
RETAINING WALL DETAILS NO. 2

STRUCTURES DESIGN DETAIL SHEET (ENGLISH) (REV. 09-01-10)

ORIGINAL SCALE IN INCHES FOR REDUCED PLANS 0 1 2 3

UNIT: 3623
PROJECT NUMBER & PHASE: 0700020869 & 1 CONTRACT NO.: 202111

DISREGARD PRINTS BEARING EARLIER REVISION DATES

REVISION DATES: 8/24/10 8/23/10 10/07/10 03/01/11

SHEET 14 OF 25

FILE => 53-1008k-g-rwd1-02.dgn

USERNAME => s124496 DATE PLOTTED => 28-JUN-2011 TIME PLOTTED => 20:08

DIST	COUNTY	ROUTE	POST MILES TOTAL PROJECT	SHEET No.	TOTAL SHEETS
07	LA	710	17.2/26.4	1385	1507

REGISTERED CIVIL ENGINEER 03/01/11 DATE

6-27-11
PLANS APPROVAL DATE

REGISTERED PROFESSIONAL ENGINEER CHUNG-YUAN WEN No. C 50690 Exp. 09/30/11 CIVIL STATE OF CALIFORNIA

The State of California or its officers or agents shall not be responsible for the accuracy or completeness of electronic copies of this plan sheet.

FALSEWORK RELEASE

Falsework shall be released as soon as permitted by the specifications. Closure pour shall not be placed sooner than 60 days after the falsework had been released.

NOTES:

1. Extend reinforcement to at least the second girder beyond ℄ girder.
2. Dimensions are measured perpendicular to "AT3" Line.

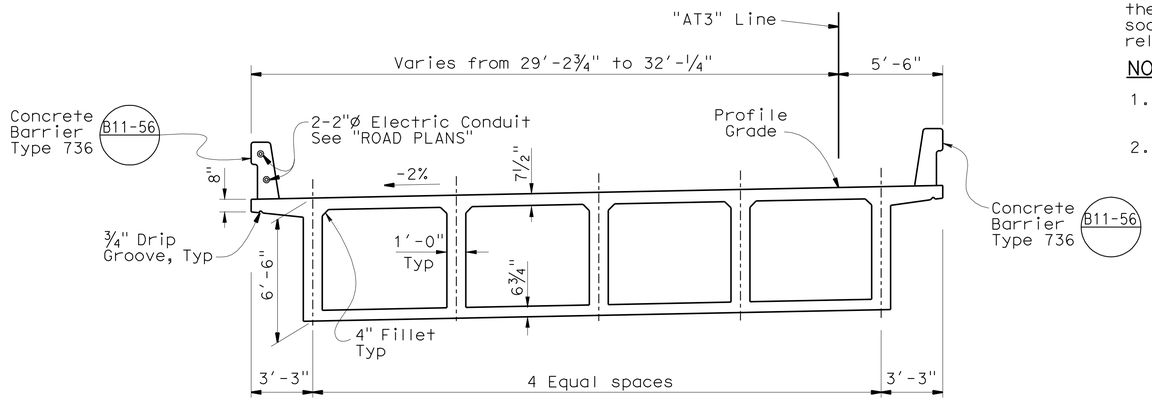

TYPICAL SECTION

¼" = 1-0"

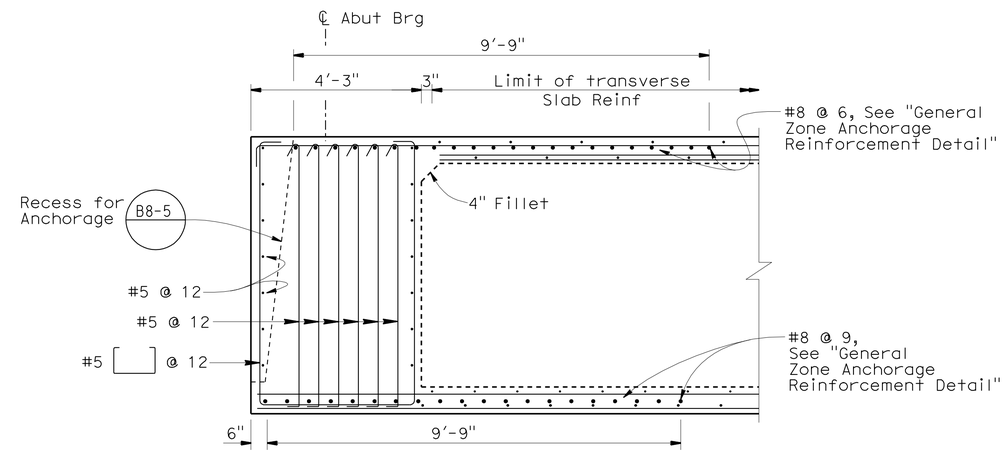

ABUTMENT END DIAPHRAGM

NO SCALE

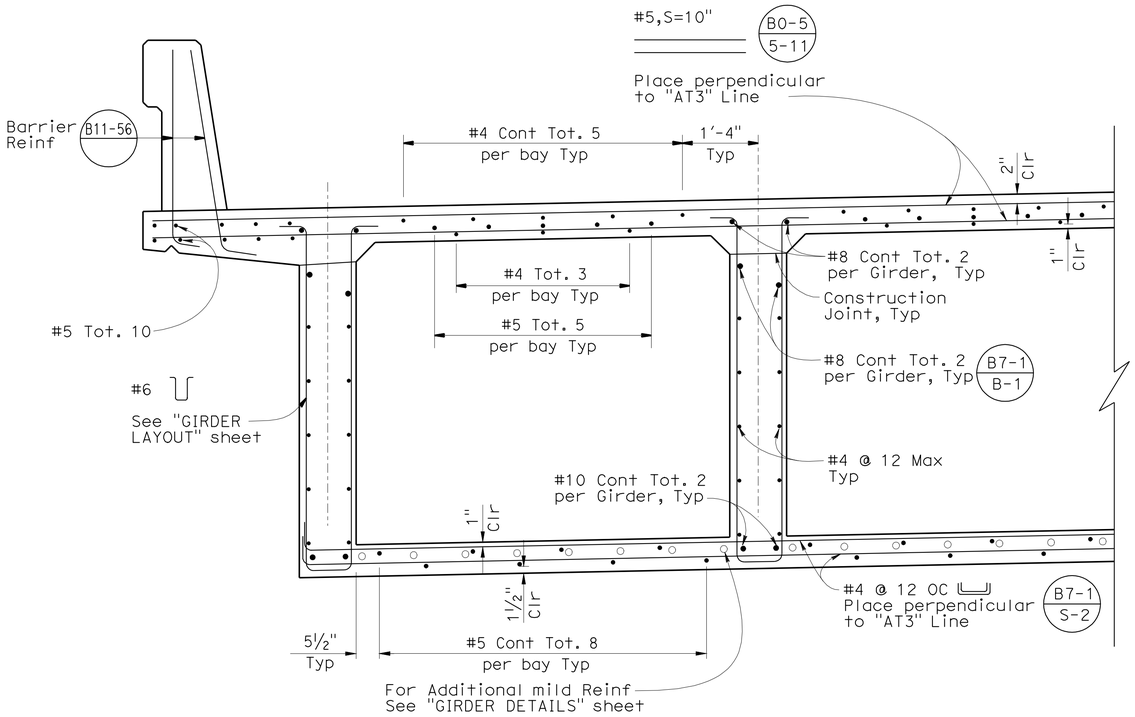

PART TYPICAL SECTION

¾" = 1'-0"

B0-5 B7-1 B8-5

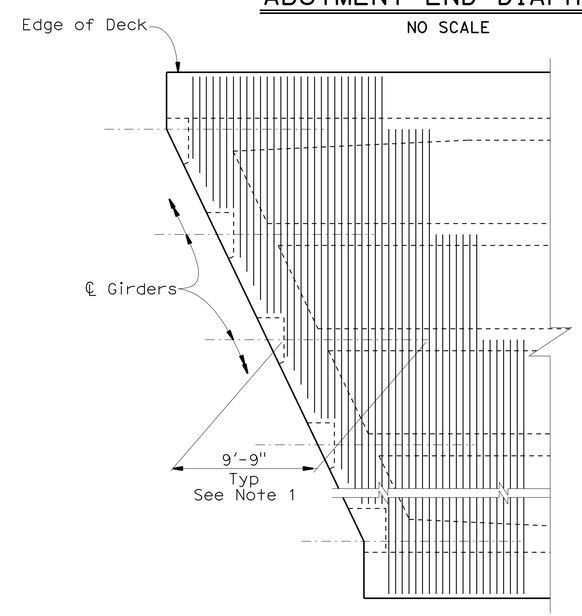

DECK SLAB & BOTTOM SLAB GENERAL ZONE ANCHORAGE REINFORCEMENT DETAIL

No Scale

NOTE:
THE CONTRACTOR SHALL VERIFY ALL CONTROLLING FIELD DIMENSIONS BEFORE ORDERING OR FABRICATING ANY MATERIAL.

	BY	CHECKED
DESIGN	T. CHU	J. TJOELKER
DETAILS	M. KINGRA / J. VALENCIA	K. GHOSH
QUANTITIES	C. CANCINO	A. CARREON

STATE OF CALIFORNIA DEPARTMENT OF TRANSPORTATION

DIVISION OF ENGINEERING SERVICES STRUCTURE DESIGN DESIGN BRANCH 21

BRIDGE NO. 53-3067 POST MILE 21.91

ATLANTIC BLVD ON-RAMP UC (REPLACE)

TYPICAL SECTION

STRUCTURES DESIGN DETAIL SHEET (ENGLISH) (REV. 09-01-10)

ORIGINAL SCALE IN INCHES FOR REDUCED PLANS 0 1 2 3

UNIT: 3623
PROJECT NUMBER & PHASE: 0700020869 & 1 CONTRACT NO.: 202111

DISREGARD PRINTS BEARING EARLIER REVISION DATES

REVISION DATES 7/22/10 11/22/10 11/23/10

SHEET 15 OF 25

FILE => 53-1008K-K-ts01.dgn

USERNAME => bt24496 DATE PLOTTED => 28-JUN-2011 TIME PLOTTED => 20:08

DIST	COUNTY	ROUTE	POST MILES TOTAL PROJECT	SHEET No.	TOTAL SHEETS
07	LA	710	17.2/26.4	1386	1507

REGISTERED CIVIL ENGINEER 03/01/11 DATE

6-27-11
PLANS APPROVAL DATE

REGISTERED PROFESSIONAL ENGINEER CHUNG-YUAN WEN No. C 50690 Exp. 09/30/11 CIVIL STATE OF CALIFORNIA

The State of California or its officers or agents shall not be responsible for the accuracy or completeness of electronic copies of this plan sheet.

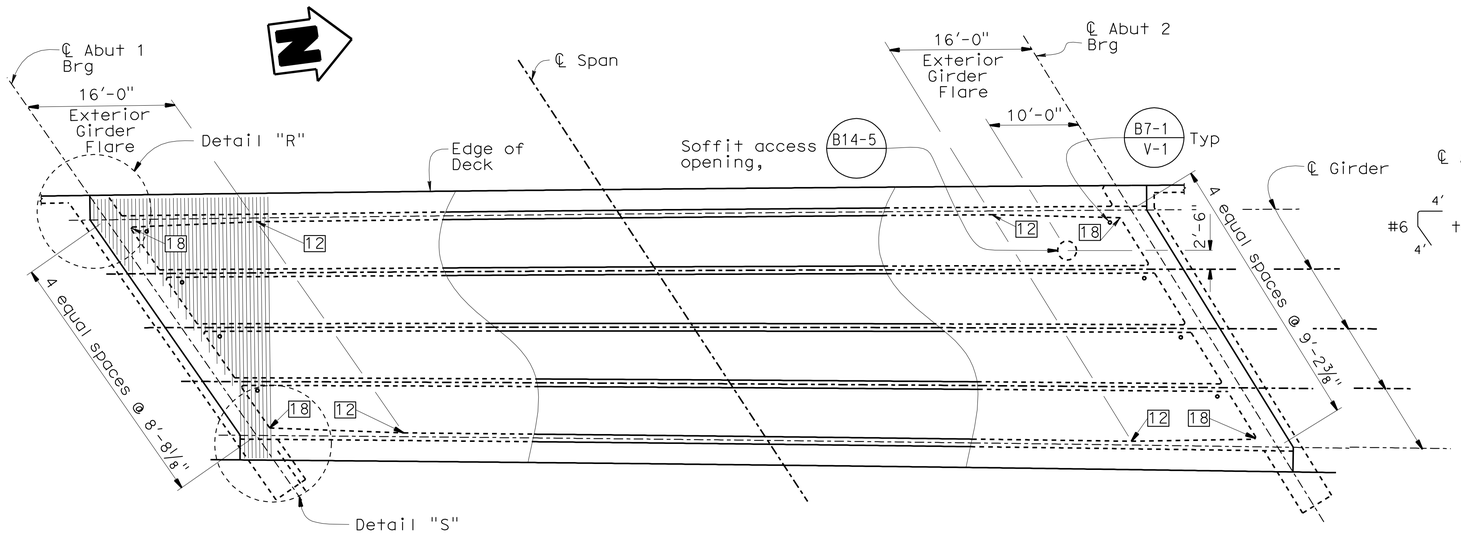

GIRDER LAYOUT

NO SCALE

B0-5 5-11 | B7-1 V-1

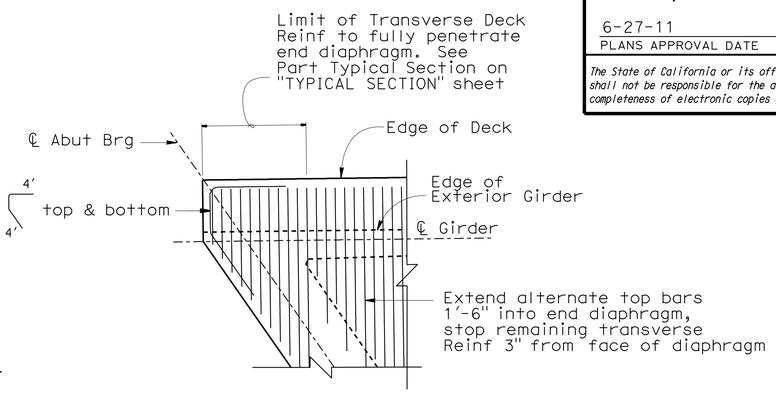

DETAIL "R"

1/4" = 1'-0"

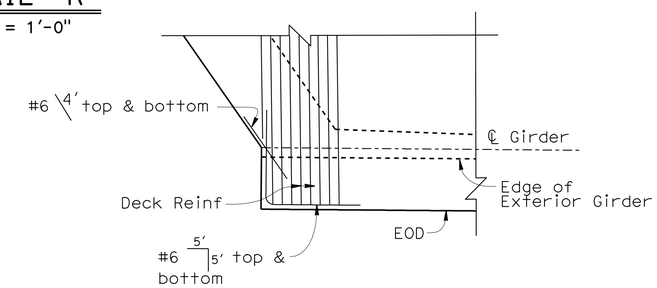

DETAIL "S"

1/2" = 1'-0"

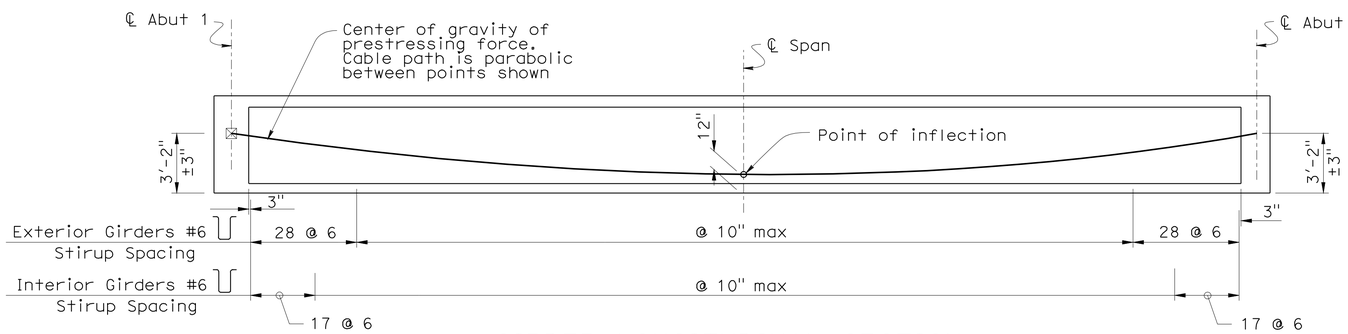

GIRDER LONGITUDINAL SECTION

No Scale

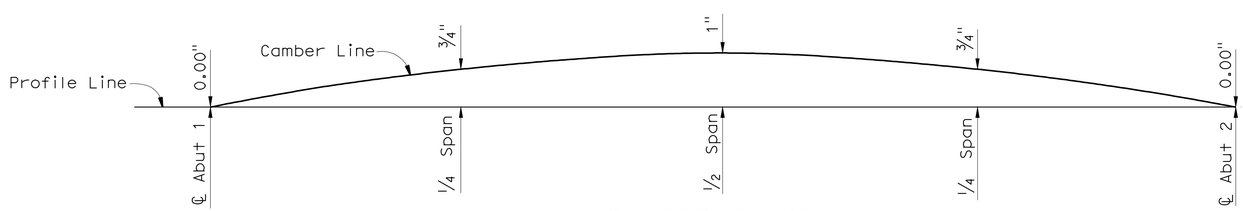

CAMBER DIAGRAM

No Scale

(Does not include allowance for falsework settlement)

NOTE:
THE CONTRACTOR SHALL VERIFY ALL CONTROLLING FIELD DIMENSIONS BEFORE ORDERING OR FABRICATING ANY MATERIAL.

LEGEND:

- ⊠ Indicates point of no movement for one end stressing
- Indicates girder stem width in inches
- ○ Soffit vents

PRESTRESSING NOTES

1860 MPa Low Relaxation Strand:

P_{jack} = 10,700 kips

Anchor Set = 3/8 inches

Total Number of Girders = 5

Distribution of prestress force (Pjack) between girders shall not exceed the ratio of 3:2. Maximum final force variation between girders shall not exceed 725 kips.

Concrete: f'_c = 5 500 psi @ 28 days

f'_{ci} = 3 500 psi @ time of stressing

Contractor shall submit elongation calculations based on initial stress at

⊠ = 0.9564 times jacking stress.

	BY	CHECKED
DESIGN	T. CHU	J. TJOELKER
DETAILS	M. KINGRA / J. VALENCIA	K. GHOSH
QUANTITIES	C. CANCINO	A. CARREON

STATE OF CALIFORNIA DEPARTMENT OF TRANSPORTATION

DIVISION OF ENGINEERING SERVICES STRUCTURE DESIGN DESIGN BRANCH 21

BRIDGE NO. 53-3067 POST MILE 21.91

ATLANTIC BLVD ON-RAMP UC (REPLACE)

GIRDER LAYOUT

STRUCTURES DESIGN DETAIL SHEET (ENGLISH) (REV. 09-01-10)

ORIGINAL SCALE IN INCHES FOR REDUCED PLANS 0 1 2 3

UNIT: 3623
PROJECT NUMBER & PHASE: 0700020869 & 1 CONTRACT NO.: 202111

DISREGARD PRINTS BEARING EARLIER REVISION DATES

REVISION DATES 12/14/09 03/01/11 11/12/10

SHEET 16 OF 25

FILE => 53-1008k-1-g_1001.dgn

USERNAME => s124496 DATE PLOTTED => 28-JUN-2011 TIME PLOTTED => 20:08

DIST	COUNTY	ROUTE	POST MILES TOTAL PROJECT	SHEET No.	TOTAL SHEETS
07	LA	710	17.2/26.4	1387	1507

REGISTERED CIVIL ENGINEER — DATE 03/01/11

6-27-11
PLANS APPROVAL DATE

REGISTERED PROFESSIONAL ENGINEER — CHUNG-YUAN WEN — No. C 50690 — Exp. 09/30/11 — CIVIL — STATE OF CALIFORNIA

The State of California or its officers or agents shall not be responsible for the accuracy or completeness of electronic copies of this plan sheet.

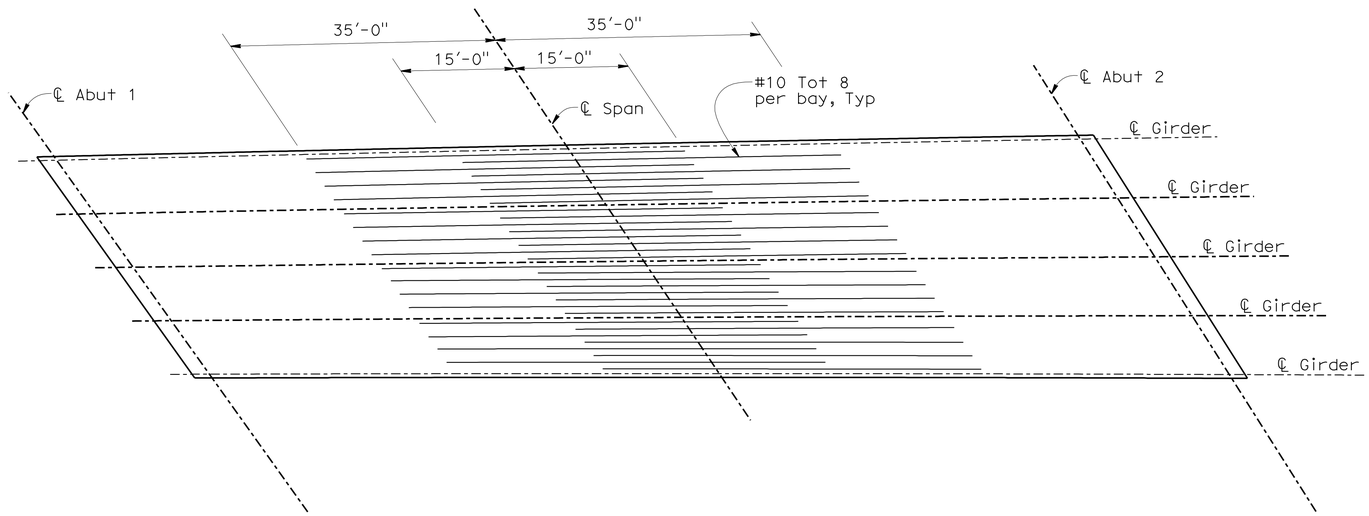

ADDITIONAL BOTTOM SLAB REINFORCEMENT

1" = 10'

NOTE:

1. Bottom reinforecement shall not be spliced.

NOTE:
THE CONTRACTOR SHALL VERIFY ALL CONTROLLING FIELD DIMENSIONS BEFORE ORDERING OR FABRICATING ANY MATERIAL.

	BY	CHECKED
DESIGN	T. CHU	J. TJOELKER
DETAILS	M. KINGRA / J. VALENCIA	K. GHOSH
QUANTITIES	C. CANCINO	A. CARREON

STATE OF CALIFORNIA
DEPARTMENT OF TRANSPORTATION

DIVISION OF ENGINEERING SERVICES
STRUCTURE DESIGN
DESIGN BRANCH 21

BRIDGE NO. 53-3067
POST MILE 21.91

ATLANTIC BLVD ON-RAMP UC (REPLACE)
GIRDER DETAILS

STRUCTURES DESIGN DETAIL SHEET (ENGLISH) (REV. 09-01-10)

ORIGINAL SCALE IN INCHES FOR REDUCED PLANS 0 1 2 3

UNIT: 3623
PROJECT NUMBER & PHASE: 0700020869 & 1 CONTRACT NO.: 202111

DISREGARD PRINTS BEARING EARLIER REVISION DATES

REVISION DATES: 2/11/10 2/22/10 8/27/10 03/01/11

SHEET 17 OF 25

FILE => 53-1008k-1-gdt.dgn

USERNAME => s124496 DATE PLOTTED => 28-JUN-2011 TIME PLOTTED => 20:08

DIST	COUNTY	ROUTE	POST MILES TOTAL PROJECT	SHEET No.	TOTAL SHEETS
07	LA	710	17.2/26.4	1388	1507

REGISTERED CIVIL ENGINEER — DATE 03/01/11

6-27-11
PLANS APPROVAL DATE

REGISTERED PROFESSIONAL ENGINEER — CHUNG-YUAN WEN — No. C 50690 — Exp. 09/30/11 — CIVIL — STATE OF CALIFORNIA

The State of California or its officers or agents shall not be responsible for the accuracy or completeness of electronic copies of this plan sheet.

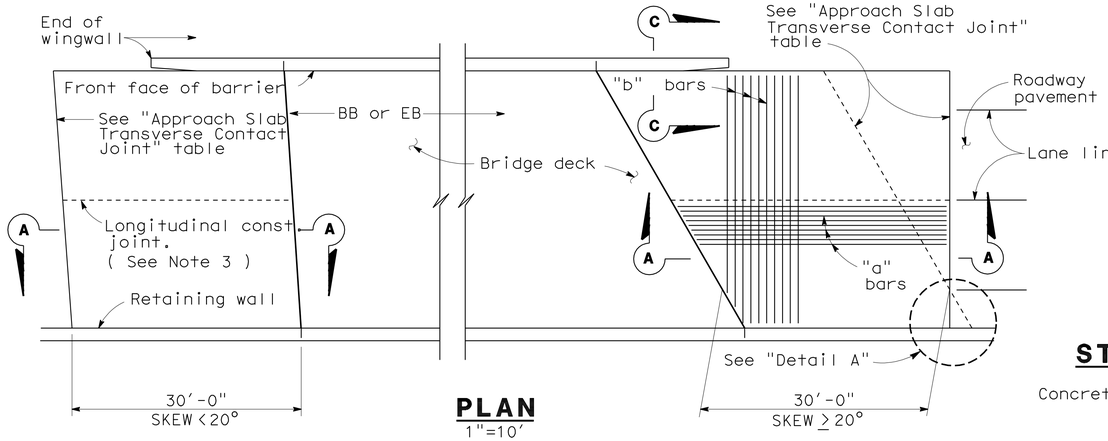

PLAN
1"=10'

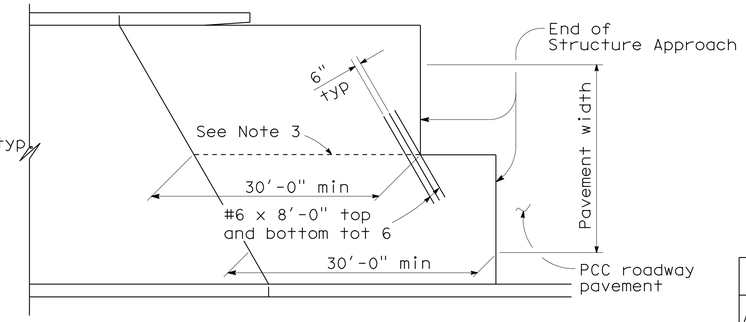

STRUCTURE APPROACH - END STAGGER DETAIL
No Scale

APPROACH SLAB TRANSVERSE CONTACT JOINT		
APPROACH SKEW	WITH AC ROADWAY PAVEMENT	WITH PCC ROADWAY PAVEMENT
< 20°	Parallel to face of paving notch	Parallel to face of paving notch
20° - 45°	Parallel to face of P N use (Detail A)	Stagger lines 24' to 36' apart.
> 45°	Parallel to face of P N use (Detail A)	Stagger at each lane line.

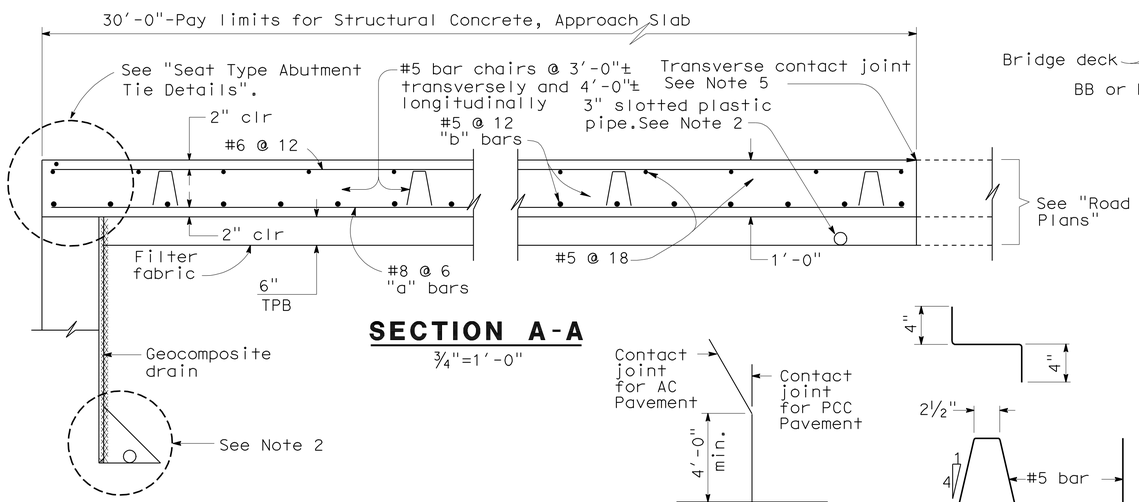

SECTION A-A
¾"=1'-0"

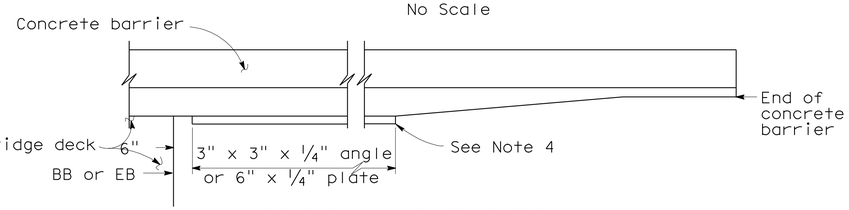

EDGE ANGLE DETAIL
½"=1'-0"

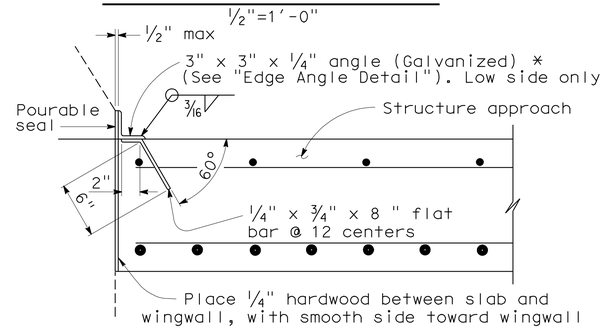

***(TO BE USED WITH TYPE 25 OR TYPE 27 CONCRETE BARRIER)**

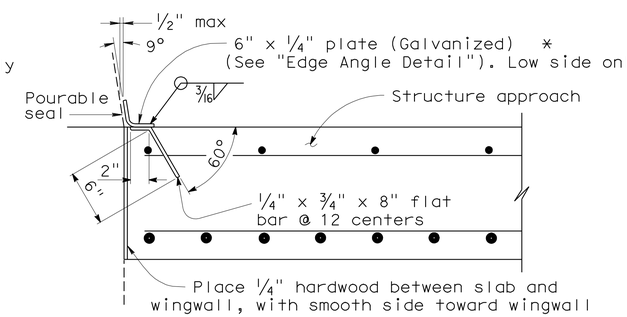

***(TO BE USED WITH TYPE 732 OR TYPE 736 CONCRETE BARRIER)**

DETAIL A
No Scale

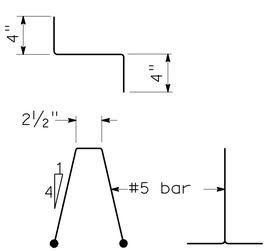

BAR CHAIR DETAIL
1½"=1'-0"

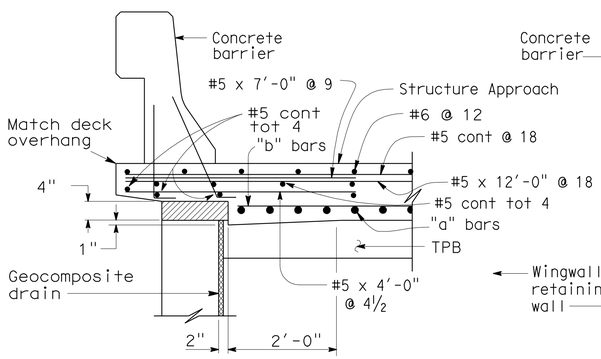

TYPE E-1

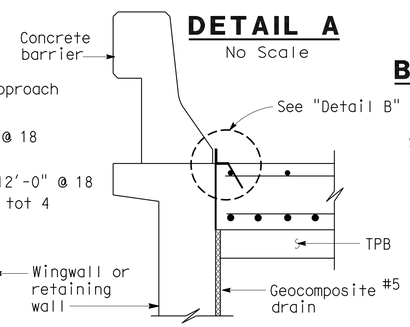

TYPE E-2

SECTION C-C
¾"=1'-0"

(Type E-1 to be used,unless otherwise shown on plans)

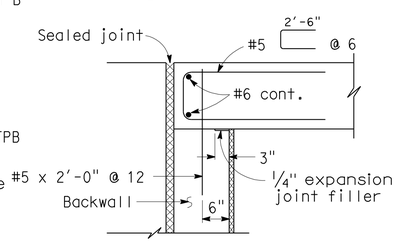

MR ≤ 2"

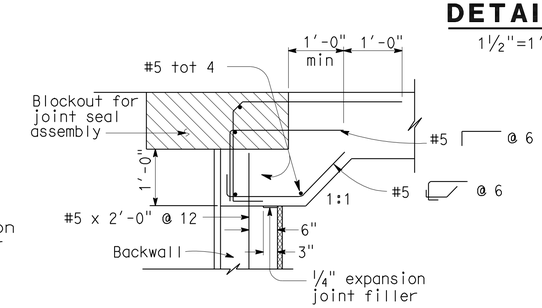

MR > 2"

DETAIL B
1½"=1'-0"

SEAT TYPE ABUTMENT TIE DETAILS (SEE NOTE 1)
¾"=1'-0"

NOTES:

1. For details not shown,see Structure Plans. For MR ≤ 2",adjust bar reinforcement to clear a sawcut for sealed joint,when required.
2. For drainage details,see "Structure Approach Drainage Details" sheet.
3. Longitudinal construction joints,when permitted by the Engineer, shall be located on lane lines.
4. End angle or plate at beginning of barrier transition, end of wingwall or end of structure approach as applicable.
5. For transverse contact joint with new PCC paving, refer to Standard Plan P10.
6. At the contractor's option, approach slab transverse reinforcement may be placed parallel to paving notch. Spacing of transverse reinforcement is measured along ℄ roadway.

Remove all polystyrene.

STANDARD DRAWING		STATE OF CALIFORNIA DEPARTMENT OF TRANSPORTATION	DIVISION OF ENGINEERING SERVICES	BRIDGE NO. 53-3067	ATLANTIC BLVD ON-RAMP UC (REPLACE)
FILE NO. xs3-120e	APPROVAL DATE 3/14/05			POST MILE 21.91	STRUCTURE APPROACH TYPE N(30S)

DS OSD 2147A (ENGLISH STANDARD DRAWING "XS" BORDER REV. (02-02-11)) — ORIGINAL SCALE IN INCHES FOR REDUCED PLANS 0 1 2 3 — UNIT: 3623 — PROJECT NUMBER & PHASE: 0700020869 — CONTRACT NO.: 202111 — DISREGARD PRINTS BEARING EARLIER REVISION DATES — REVISION DATES 03/01/11 — SHEET 18 OF 25

FILE => 53-1008k-u-sap_dt.dgn

USERNAME => s6124436 DATE PLOTTED => 28-JUN-2011 TIME PLOTTED => 20:08

DIST	COUNTY	ROUTE	POST MILES TOTAL PROJECT	SHEET No.	TOTAL SHEETS
07	LA	710	17.2/26.4	1389	1507

REGISTERED CIVIL ENGINEER 03/01/11 DATE

6-27-11
PLANS APPROVAL DATE

REGISTERED PROFESSIONAL ENGINEER CHUNG-YUAN WEN No. C 50690 Exp. 09/30/11 CIVIL STATE OF CALIFORNIA

The State of California or its officers or agents shall not be responsible for the accuracy or completeness of electronic copies of this plan sheet.

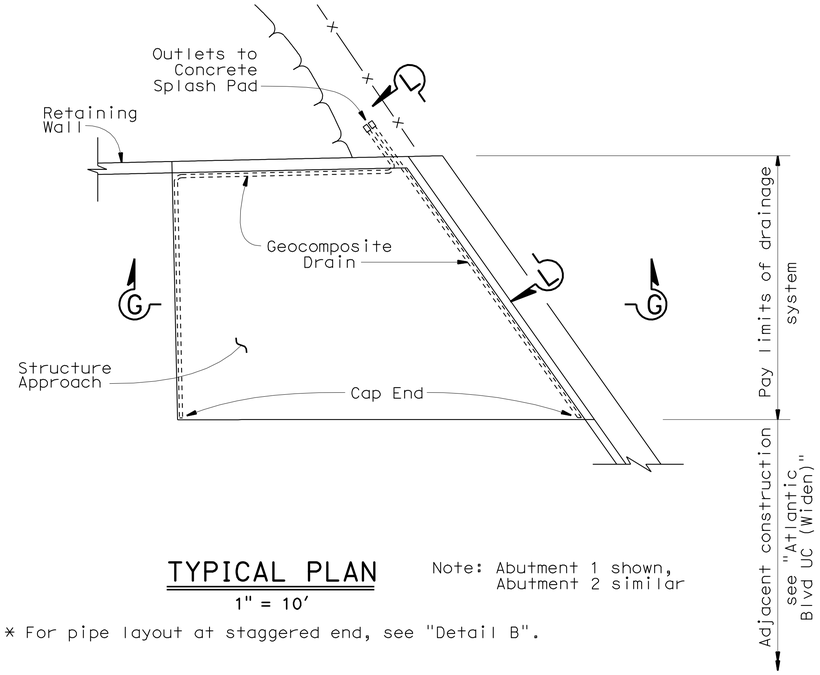

TYPICAL PLAN
1" = 10'

Note: Abutment 1 shown, Abutment 2 similar

* For pipe layout at staggered end, see "Detail B".

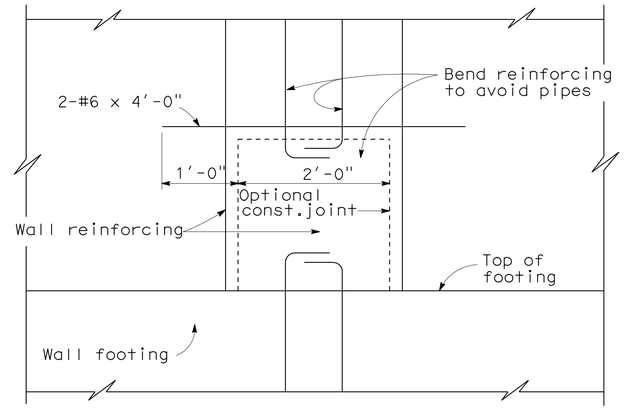

SECTION H-H
1"=1'-0"

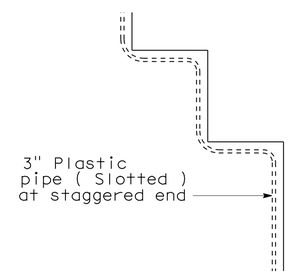

DETAIL B
No Scale

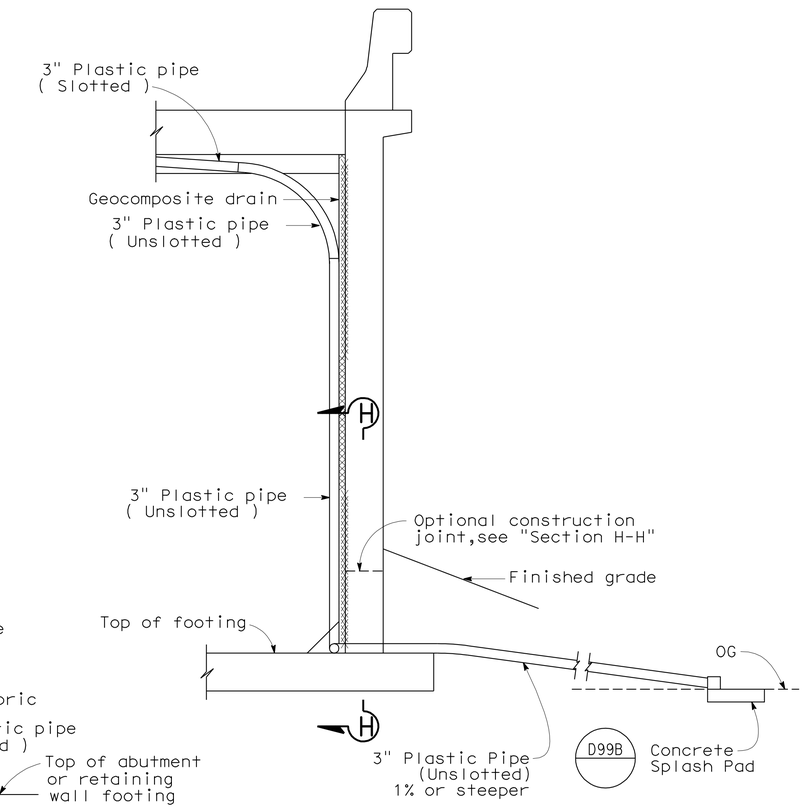

SECTION L-L
½"=1'-0"

NOTE: Bends and junctions in 3" plastic pipe are 30" radius min.

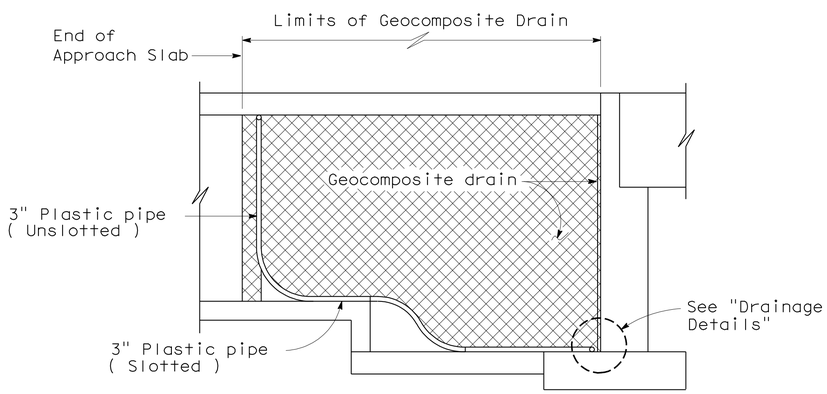

RETAINING WALL WINGWALL
SECTION G-G
¼"=1'-0"

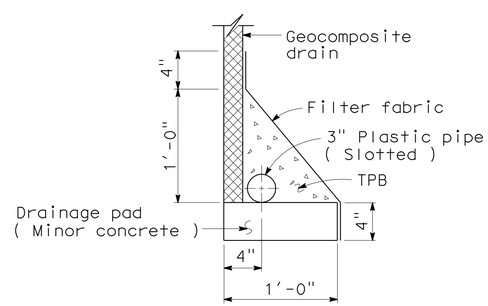

WITHOUT FOOTING

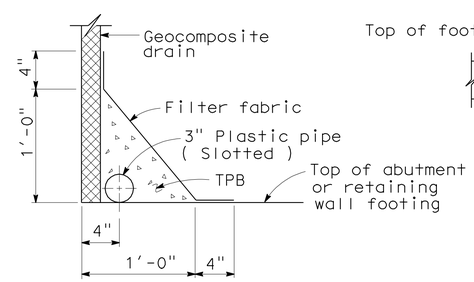

WITH FOOTING
DRAINAGE DETAILS
1½"=1'-0"

NOTE:
THE CONTRACTOR SHALL VERIFY ALL CONTROLLING FIELD DIMENSIONS BEFORE ORDERING OR FABRICATING ANY MATERIAL.

	BY	CHECKED
DESIGN	T. CHU	J. TJOELKER
DETAILS	M. KINGRA / P. PEREZ	K. GHOSH
QUANTITIES	C. CANCINO	A. CARREON

STATE OF CALIFORNIA DEPARTMENT OF TRANSPORTATION

DIVISION OF ENGINEERING SERVICES STRUCTURE DESIGN DESIGN BRANCH 21

BRIDGE NO. 53-3067
POST MILE 21.91

ATLANTIC BLVD ON-RAMP UC (REPLACE)
STRUCTURE APPROACH DRAINAGE DETAILS

STRUCTURES DESIGN DETAIL SHEET (ENGLISH) (REV. 09-01-10)

ORIGINAL SCALE IN INCHES FOR REDUCED PLANS 0 1 2 3

UNIT: 3623
PROJECT NUMBER & PHASE: 0700020869 & 1 CONTRACT NO.: 202111

DISREGARD PRINTS BEARING EARLIER REVISION DATES → REVISION DATES 10/01/10 11/29/10 03/01/11

SHEET 19 OF 25

FILE => 53-1008k-v-saddt.dgn

USERNAME => s124496 DATE PLOTTED => 28-JUN-2011 TIME PLOTTED => 20:08

DIST	COUNTY	ROUTE	POST MILES TOTAL PROJECT	SHEET No	TOTAL SHEETS
07	LA	710	17.2/26.4	1390	1507

Tatjana Halda 12-16-10
REGISTERED CIVIL ENGINEER

6-27-11
PLANS APPROVAL DATE

REGISTERED PROFESSIONAL ENGINEER
Tatjana L. Halda
No. C68293
Exp. 9-30-11
CIVIL
STATE OF CALIFORNIA

The State of California or its officers or agents shall not be responsible for the accuracy or completeness of electronic copies of this plan sheet.

This LOTB sheet was prepared in accordance with the Caltrans Soil & Rock Logging, Classification, & Presentation Manual (June 2010).

BENCH MARK

RTK 722
PD: Fd Pk/Tin NB 710 shldr, 16.5'
S/Atlantic Bl brdg rail
62.9' Rt CL Rte 710
Sta 1156+88.4
N 1821485.5130
E 6508148.8370
Elev = 174.5 ft

PRHV 812
PD: Fd scr X on CB, NB
side Atlantic Bl 90'
W/710 onramp brdg
164.6' Lt CL Rte 710
Sta 1155+92.30 N
1821440.2330 E
6507905.1420
Elev = 153.1 ft

PRHV 7613
PD: Fd Pk SB 710 shldr, 55'
S/Atlantic Bl brdg rail
55.2' Lt CL Rte 710
Sta 1156+13.36
N 1821439.5580
E 6508016.7320
Elev = 182.3 ft

PRHV 7815
PD: Fd 2x2 W shldr 710 SB
off ramp to Atlantic Blvd.
behind MBGR, 15' N/brdg rail
88.9' Lt CL Rte 710
Sta 1162+09.36
N 1822026.9130
E 6508202.6830
Elev = 174.5 ft

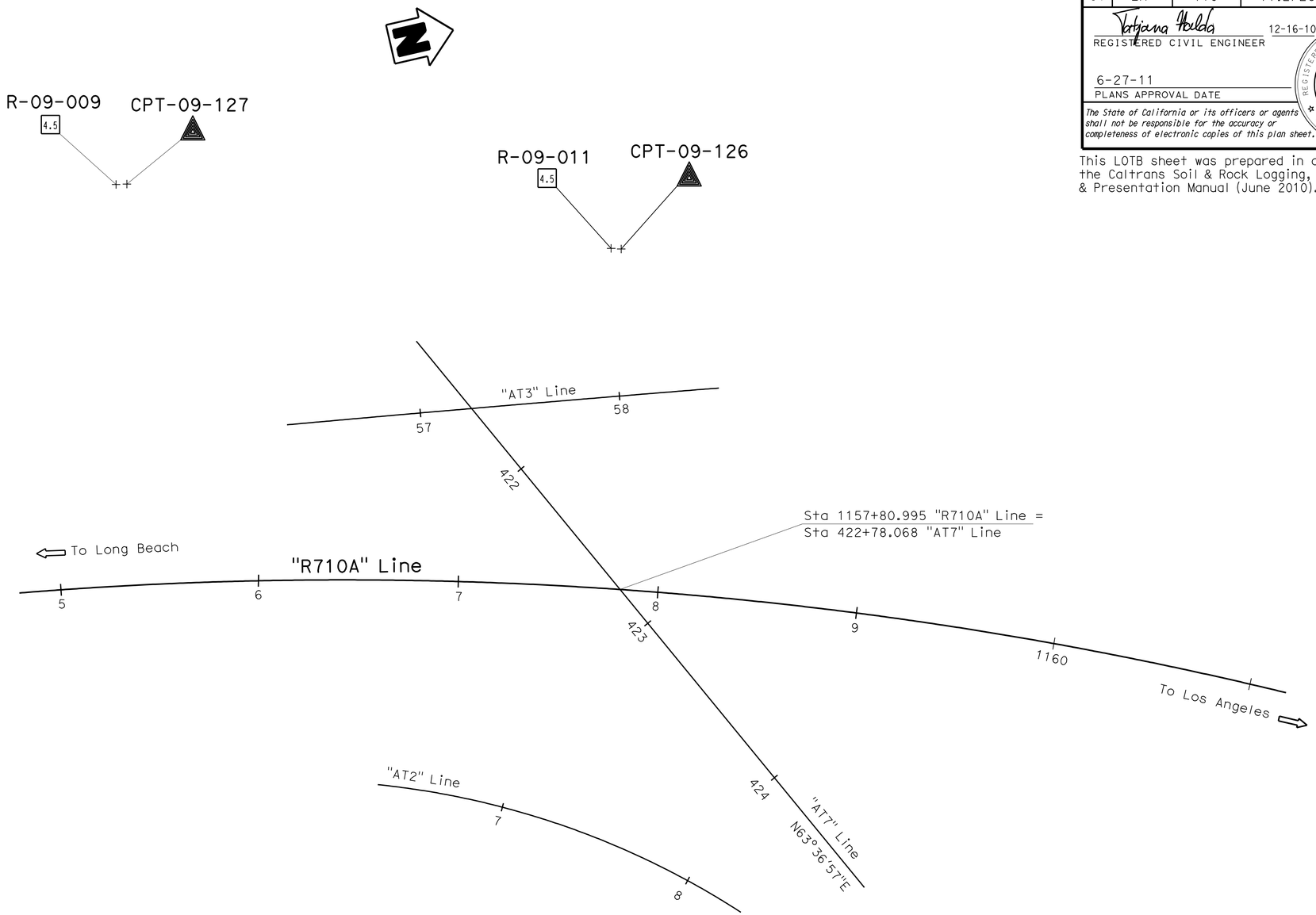

PLAN
1" = 30'

ENGINEERING SERVICES	GEOTECHNICAL SERVICES	STATE OF CALIFORNIA DEPARTMENT OF TRANSPORTATION	DIVISION OF ENGINEERING SERVICES STRUCTURE DESIGN DESIGN BRANCH	BRIDGE NO. 53-3067 POST MILES 21.91	ATLANTIC BLVD UC ON RAMP (REPLACE
FUNCTIONAL SUPERVISOR NAME: S. Karimi	DRAWN BY: F. Nguyen 12/10 CHECKED BY: K. Lai	FIELD INVESTIGATION BY: T. Halda			LOG OF TEST BORINGS 1 OF 6

OGS CIVIL LOG OF TEST BORINGS SHEET

ORIGINAL SCALE IN INCHES FOR REDUCED PLANS 0 1 2 3

CU 07
EA 202111

DISREGARD PRINTS BEARING EARLIER REVISION DATES → 12-16-10

REVISION DATES

SHEET 20 OF 25

FILE => 53-1008k-w-lotb1.dgn

USERNAME => s124496 DATE PLOTTED => 28-JUN-2011 TIME PLOTTED => 20:08

DIST	COUNTY	ROUTE	POST MILES TOTAL PROJECT	SHEET No	TOTAL SHEETS
07	LA	710	17.2/26.4	1391	1507

Tatjana Halda 12-16-10
REGISTERED CIVIL ENGINEER

6-27-11
PLANS APPROVAL DATE

REGISTERED PROFESSIONAL ENGINEER
Tatjana L. Halda
No. C68293
Exp. 9-30-11
CIVIL
STATE OF CALIFORNIA

The State of California or its officers or agents shall not be responsible for the accuracy or completeness of electronic copies of this plan sheet.

This LOTB sheet was prepared in accordance with the Caltrans Soil & Rock Logging, Classification, & Presentation Manual (June 2010).

FOR PLAN VIEW, SEE
"LOG OF TEST BORINGS" 1 OF 6

Note: No ground water encountered during field investigation.

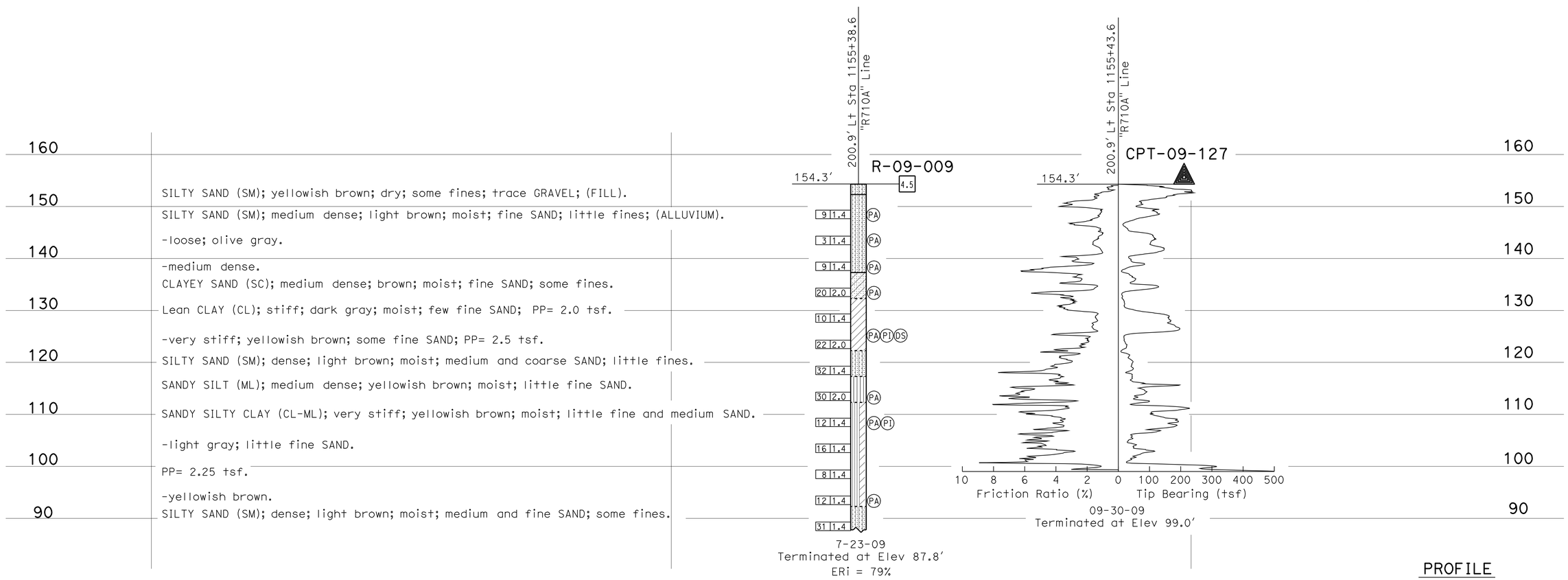

PROFILE
Horiz: 1" = 1'
Vert: 1" = 10'

ENGINEERING SERVICES	GEOTECHNICAL SERVICES	STATE OF CALIFORNIA DEPARTMENT OF TRANSPORTATION	DIVISION OF ENGINEERING SERVICES STRUCTURE DESIGN	BRIDGE NO. 53-3067	ATLANTIC BLVD UC ON-RAMP (REPLACE)
FUNCTIONAL SUPERVISOR	DRAWN BY: C. Christian/ F. Nguyen 12/10	FIELD INVESTIGATION BY:	DESIGN BRANCH	POST MILES 21.91	LOG OF TEST BORINGS 2 OF 6
NAME: S. Karimi	CHECKED BY: K. Lai	T. Halda			

OGS CIVIL LOG OF TEST BORINGS SHEET

ORIGINAL SCALE IN INCHES FOR REDUCED PLANS 0 1 2 3

CU 07
EA 202111

DISREGARD PRINTS BEARING EARLIER REVISION DATES → 12-16-10

REVISION DATES

SHEET 21 OF 25

FILE => 53-1008k-w-lotb2.dgn

USERNAME => s124496 DATE PLOTTED => 28-JUN-2011 TIME PLOTTED => 20:08

DIST	COUNTY	ROUTE	POST MILES TOTAL PROJECT	SHEET No	TOTAL SHEETS
07	LA	710	17.2/26.4	1392	1507

Tatjana Halda 12-16-10
REGISTERED CIVIL ENGINEER

6-27-11
PLANS APPROVAL DATE

REGISTERED PROFESSIONAL ENGINEER Tatjana L. Halda No. C68293 Exp. 9-30-11 CIVIL STATE OF CALIFORNIA

The State of California or its officers or agents shall not be responsible for the accuracy or completeness of electronic copies of this plan sheet.

This LOTB sheet was prepared in accordance with the Caltrans Soil & Rock Logging, Classification, & Presentation Manual (June 2010).

FOR PLAN VIEW, SEE
"LOG OF TEST BORINGS" 1 OF 6

Note: No ground water encountered during field investigation.

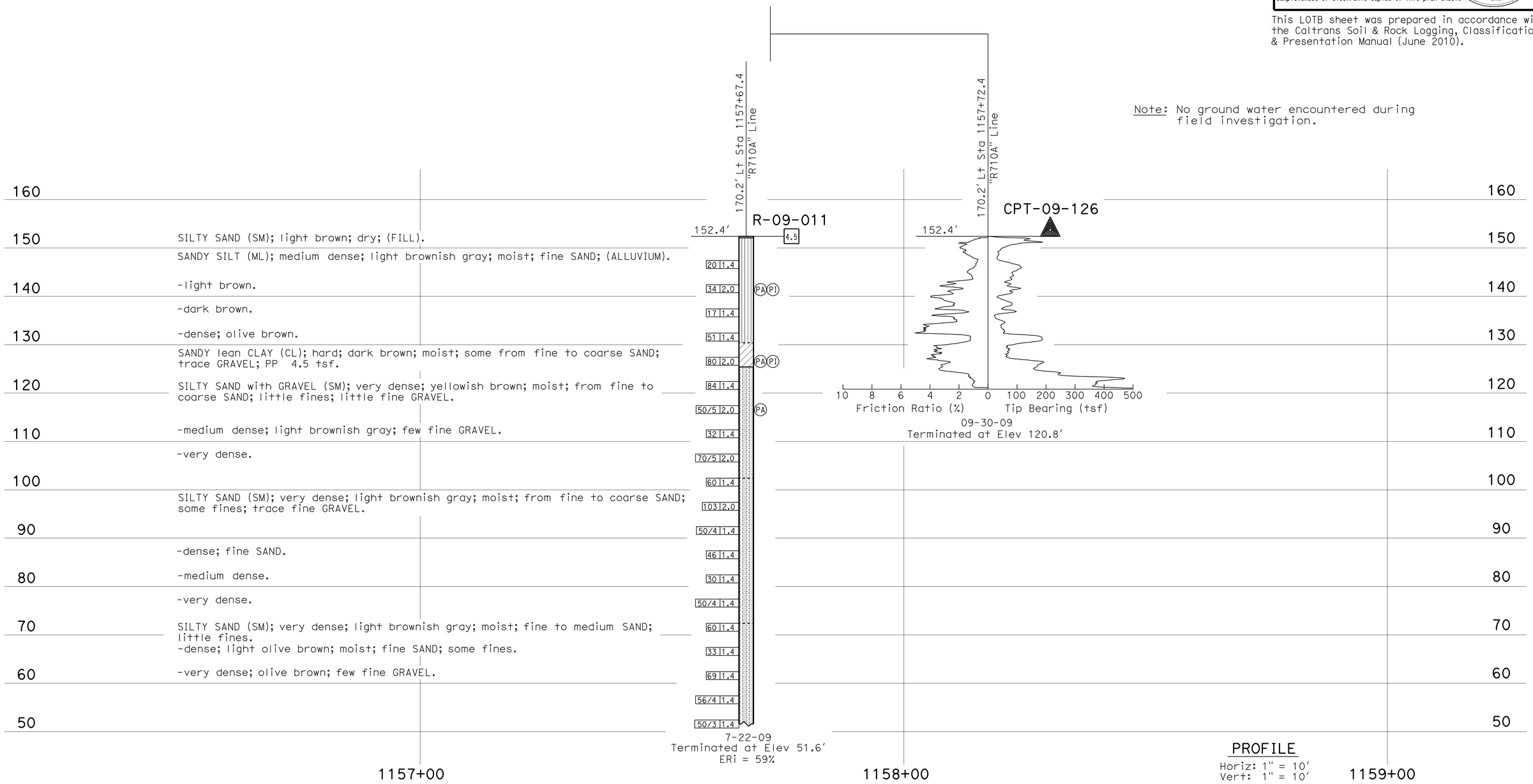

PROFILE
Horiz: 1" = 10'
Vert: 1" = 10'

ENGINEERING SERVICES	GEOTECHNICAL SERVICES	STATE OF CALIFORNIA DEPARTMENT OF TRANSPORTATION	DIVISION OF ENGINEERING SERVICES STRUCTURE DESIGN DESIGN BRANCH	BRIDGE NO. 53-3067 POST MILES 21.91	ATLANTIC BLVD UC ON-RAMP (REPLACE) LOG OF TEST BORINGS 3 OF 6
FUNCTIONAL SUPERVISOR NAME: S. Karimi	DRAWN BY: C. Christian/ F. Nguyen 12/10 CHECKED BY: K. Lai	FIELD INVESTIGATION BY: T. Halda			

OGS CIVIL LOG OF TEST BORINGS SHEET

ORIGINAL SCALE IN INCHES FOR REDUCED PLANS 0 1 2 3

CU 07
EA 202111

DISREGARD PRINTS BEARING EARLIER REVISION DATES 12-16-10

REVISION DATES

SHEET 22 OF 25

FILE => 53-1008k-w-lotb3.dgn

USERNAME => s124496 DATE PLOTTED => 28-JUN-2011 TIME PLOTTED => 20:08

REFERENCE: CALTRANS SOIL & ROCK LOGGING, CLASSIFICATION, AND PRESENTATION MANUAL (2010)

DIST	COUNTY	ROUTE	POST MILES TOTAL PROJECT	SHEET No	TOTAL SHEETS
07	LA	710	17.2/26.4	1393	1507

Tatjana Halda 12-16-10
REGISTERED CIVIL ENGINEER

6-27-11
PLANS APPROVAL DATE

REGISTERED PROFESSIONAL ENGINEER Tatjana L. Halda No. C68293 Exp. 9-30-11 CIVIL STATE OF CALIFORNIA

The State of California or its officers or agents shall not be responsible for the accuracy or completeness of electronic copies of this plan sheet.

CEMENTATION

Description	Criteria
Weak	Crumbles or breaks with handling or little finger pressure.
Moderate	Crumbles or breaks with considerable finger pressure.
Strong	Will not crumble or break with finger pressure.

BOREHOLE IDENTIFICATION

Symbol	Hole Type	Description
Size	A	Auger Boring (hollow or solid stem bucket)
Size	R RW RC P	Rotary drilled boring (conventional) Rotary drilled with self-casing wire-line Rotary core with continuously-sampled, self-casing wire-line Rotary percussion boring (air)
Size	R	Rotary drilled diamond core
Size	HD HA	Hand driven (1-inch soil tube) Hand Auger
●	D	Dynamic Cone Penetration Boring
▲	CPT	Cone Penetration Test (ASTM D 5778)
⬚	O	Other (note on LOTB)

Note: Size in inches.

CONSISTENCY OF COHESIVE SOILS

Description	Shear Strength (tsf)	Pocket Penetrometer Measurement, PP, (tsf)	Torvane Measurement, TV, (tsf)	Vane Shear Measurement, VS, (tsf)
Very Soft	Less than 0.12	Less than 0.25	Less than 0.12	Less than 0.12
Soft	0.12 - 0.25	0.25 - 0.5	0.12 - 0.25	0.12 - 0.25
Medium Stiff	0.25 - 0.5	0.5 - 1	0.25 - 0.5	0.25 - 0.5
Stiff	0.5 - 1	1 - 2	0.5 - 1	0.5 - 1
Very Stiff	1 - 2	2 - 4	1 - 2	1 - 2
Hard	Greater than 2	Greater than 4	Greater than 2	Greater than 2

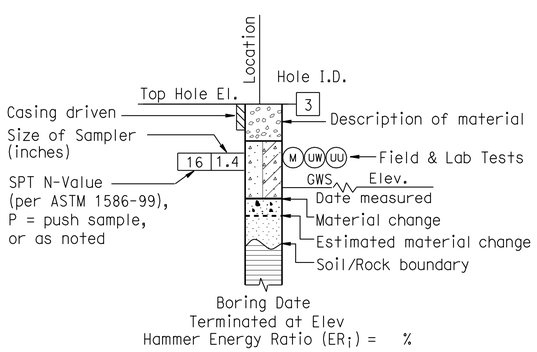

ROTARY BORING

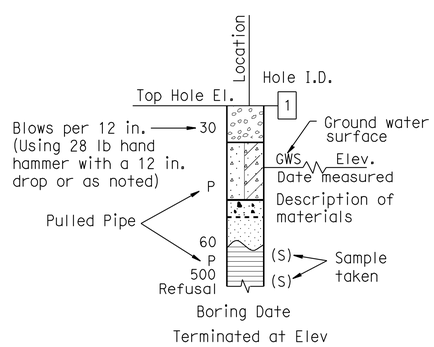

HAND BORING

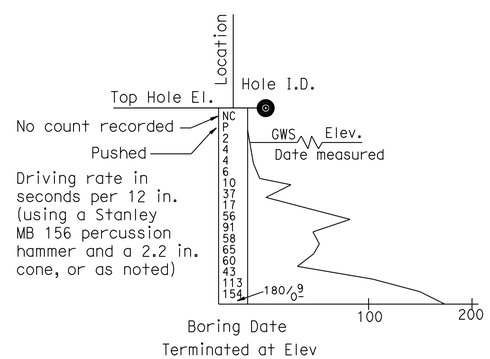

DYNAMIC CONE PENETRATION BORING

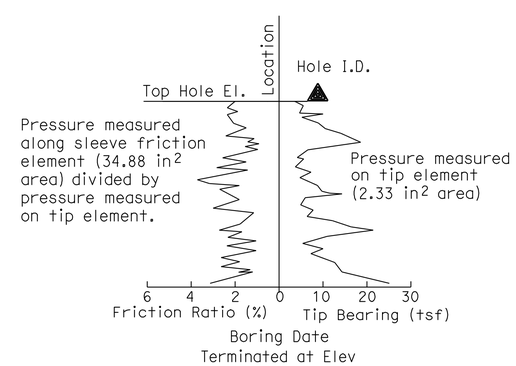

CONE PENETRATION TEST (CPT) BORING

ENGINEERING SERVICES	GEOTECHNICAL SERVICES	STATE OF CALIFORNIA DEPARTMENT OF TRANSPORTATION	DIVISION OF ENGINEERING SERVICES STRUCTURE DESIGN DESIGN BRANCH	BRIDGE NO. 53-3067 POST MILE 21.91	ATLANTIC BLVD UC ON-RAMP (REPLACE) LOG OF TEST BORINGS 4 OF 6
	PREPARED BY: F. Nguyen 12/10				

GS LOTB SOIL LEGEND

ORIGINAL SCALE IN INCHES FOR REDUCED PLANS 0 1 2 3

CU 07
EA 202111

DISREGARD PRINTS BEARING EARLIER REVISION DATES

REVISION DATES

SHEET 23 OF 25

FILE => 53-1008k-w-lotb4.dgn

USERNAME => s124496 DATE PLOTTED => 28-JUN-2011 TIME PLOTTED => 20:08

REFERENCE: CALTRANS SOIL & ROCK LOGGING, CLASSIFICATION, AND PRESENTATION MANUAL (2010)

DIST	COUNTY	ROUTE	POST MILES TOTAL PROJECT	SHEET No	TOTAL SHEETS
07	LA	710	17.2/26.4	1394	1507

Tatjana Halda 12-16-10
REGISTERED CIVIL ENGINEER

6-27-11
PLANS APPROVAL DATE

REGISTERED PROFESSIONAL ENGINEER Tatjana L. Halda No. C68293 Exp. 9-30-11 CIVIL STATE OF CALIFORNIA

The State of California or its officers or agents shall not be responsible for the accuracy or completeness of electronic copies of this plan sheet.

GROUP SYMBOLS AND NAMES

Graphic/Symbol	Group Names	Graphic/Symbol	Group Names
GW	Well-graded GRAVEL Well-graded GRAVEL with SAND	CL	Lean CLAY Lean CLAY with SAND Lean CLAY with GRAVEL SANDY lean CLAY SANDY lean CLAY with GRAVEL GRAVELLY lean CLAY GRAVELLY lean CLAY with SAND
GP	Poorly-graded GRAVEL Poorly-graded GRAVEL with SAND		
GW-GM	Well-graded GRAVEL with SILT Well-graded GRAVEL with SILT and SAND	CL-ML	SILTY CLAY SILTY CLAY with SAND SILTY CLAY with GRAVEL SANDY SILTY CLAY SANDY SILTY CLAY with GRAVEL GRAVELLY SILTY CLAY GRAVELLY SILTY CLAY with SAND
GW-GC	Well-graded GRAVEL with CLAY (or SILTY CLAY) Well-graded GRAVEL with CLAY and SAND (or SILTY CLAY and SAND)		
GP-GM	Poorly-graded GRAVEL with SILT Poorly-graded GRAVEL with SILT and SAND	ML	SILT SILT with SAND SILT with GRAVEL SANDY SILT SANDY SILT with GRAVEL GRAVELLY SILT GRAVELLY SILT with SAND
GP-GC	Poorly-graded GRAVEL with CLAY (or SILTY CLAY) Poorly-graded GRAVEL with CLAY and SAND (or SILTY CLAY and SAND)		
GM	SILTY GRAVEL SILTY GRAVEL with SAND	OL	ORGANIC lean CLAY ORGANIC lean CLAY with SAND ORGANIC lean CLAY with GRAVEL SANDY ORGANIC lean CLAY SANDY ORGANIC lean CLAY with GRAVEL GRAVELLY ORGANIC lean CLAY GRAVELLY ORGANIC lean CLAY with SAND
GC	CLAYEY GRAVEL CLAYEY GRAVEL with SAND		
GC-GM	SILTY, CLAYEY GRAVEL SILTY, CLAYEY GRAVEL with SAND	OL	ORGANIC SILT ORGANIC SILT with SAND ORGANIC SILT with GRAVEL SANDY ORGANIC SILT SANDY ORGANIC SILT with GRAVEL GRAVELLY ORGANIC SILT GRAVELLY ORGANIC SILT with SAND
SW	Well-graded SAND Well-graded SAND with GRAVEL		
SP	Poorly-graded SAND Poorly-graded SAND with GRAVEL	CH	Fat CLAY Fat CLAY with SAND Fat CLAY with GRAVEL SANDY fat CLAY SANDY fat CLAY with GRAVEL GRAVELLY fat CLAY GRAVELLY fat CLAY with SAND
SW-SM	Well-graded SAND with SILT Well-graded SAND with SILT and GRAVEL		
SW-SC	Well-graded SAND with CLAY (or SILTY CLAY) Well-graded SAND with CLAY and GRAVEL (or SILTY CLAY and GRAVEL)	MH	Elastic SILT Elastic SILT with SAND Elastic SILT with GRAVEL SANDY elastic SILT SANDY elastic SILT with GRAVEL GRAVELLY elastic SILT GRAVELLY elastic SILT with SAND
SP-SM	Poorly-graded SAND with SILT Poorly-graded SAND with SILT and GRAVEL		
SP-SC	Poorly-graded SAND with CLAY (or SILTY CLAY) Poorly-graded SAND with CLAY and GRAVEL (or SILTY CLAY and GRAVEL)	OH	ORGANIC fat CLAY ORGANIC fat CLAY with SAND ORGANIC fat CLAY with GRAVEL SANDY ORGANIC fat CLAY SANDY ORGANIC fat CLAY with GRAVEL GRAVELLY ORGANIC fat CLAY GRAVELLY ORGANIC fat CLAY with SAND
SM	SILTY SAND SILTY SAND with GRAVEL		
SC	CLAYEY SAND CLAYEY SAND with GRAVEL	OH	ORGANIC elastic SILT ORGANIC elastic SILT with SAND ORGANIC elastic SILT with GRAVEL SANDY ORGANIC elastic SILT SANDY ORGANIC elastic SILT with GRAVEL GRAVELLY ORGANIC elastic SILT GRAVELLY ORGANIC elastic SILT with SAND
SC-SM	SILTY, CLAYEY SAND SILTY, CLAYEY SAND with GRAVEL		
PT	PEAT	OL/OH	ORGANIC SOIL ORGANIC SOIL with SAND ORGANIC SOIL with GRAVEL SANDY ORGANIC SOIL SANDY ORGANIC SOIL with GRAVEL GRAVELLY ORGANIC SOIL GRAVELLY ORGANIC SOIL with SAND
	COBBLES COBBLES and BOULDERS BOULDERS		

FIELD AND LABORATORY TESTING

- (C) Consolidation (ASTM D 2435)
- (CL) Collapse Potential (ASTM D 5333)
- (CP) Compaction Curve (CTM 216)
- (CR) Corrosivity Testing (CTM 643, CTM 422, CTM 417)
- (CU) Consolidated Undrained Triaxial (ASTM D 4767)
- (DS) Direct Shear (ASTM D 3080)
- (EI) Expansion Index (ASTM D 4829)
- (M) Moisture Content (ASTM D 2216)
- (OC) Organic Content-% (ASTM D 2974)
- (P) Permeability (CTM 220)
- (PA) Particle Size Analysis (ASTM D 422)
- (PI) Plasticity Index (AASHTO T 90) Liquid Limit (AASHTO T 89)
- (PL) Point Load Index (ASTM D 5731)
- (PM) Pressure Meter
- (R) R-Value (CTM 301)
- (SE) Sand Equivalent (CTM 217)
- (SG) Specific Gravity (AASHTO T 100)
- (SL) Shrinkage Limit (ASTM D 427)
- (SW) Swell Potential (ASTM D 4546)
- (UC) Unconfined Compression-Soil (ASTM D 2166) Unconfined Compression-Rock (ASTM D 2938)
- (UU) Unconsolidated Undrained Triaxial (ASTM D 2850)
- (UW) Unit Weight (ASTM D 4767)

APPARENT DENSITY OF COHESIONLESS SOILS

Description	SPT N_{60} (Blows / 12 in.)
Very Loose	0 - 5
Loose	5 - 10
Medium Dense	10 - 30
Dense	30 - 50
Very Dense	Greater than 50

MOISTURE

Description	Criteria
Dry	No discernable moisture
Moist	Moisture present, but no free water
Wet	Visible free water

PERCENT OR PROPORTION OF SOILS

Description	Criteria
Trace	Particles are present but estimated to be less than 5%
Few	5% - 10%
Little	15% - 25%
Some	30% - 45%
Mostly	50% - 100%

PARTICLE SIZE

Description		Size (in.)
Boulder		Greater than 12
Cobble		3 - 12
Gravel	Coarse	3/4 - 3
	Fine	1/5 - 3/4
Sand	Coarse	1/16 - 1/5
	Medium	1/64 - 1/16
	Fine	1/300 - 1/64
Silt and Clay		Less than 1/300

ENGINEERING SERVICES	GEOTECHNICAL SERVICES	STATE OF CALIFORNIA DEPARTMENT OF TRANSPORTATION	DIVISION OF ENGINEERING SERVICES STRUCTURE DESIGN DESIGN BRANCH	BRIDGE NO. 53-3067 POST MILE 21.91	ATLANTIC BLVD UC ON-RAMP (REPLACE) LOG OF TEST BORINGS 5 OF 6
	PREPARED BY: F. Nguyen 12/10				

GS LOTB SOIL LEGEND

ORIGINAL SCALE IN INCHES FOR REDUCED PLANS 0 1 2 3

CU 07
EA 202111

DISREGARD PRINTS BEARING EARLIER REVISION DATES

REVISION DATES

SHEET 24 OF 25

FILE => 53-1008k-w-lotb5.dgn

USERNAME => s6124196 DATE PLOTTED => 28-JUN-2011 TIME PLOTTED => 20:08

FED. ROAD DIST. NO.	STATE	FISCAL YR.	FISCAL YEAR	SHEET NO.	TOTAL SHEETS
2	CAL.			75	

DIST.	COUNTY	ROUTE	POST MILE	SHEET NO.	TOTAL SHEETS
VII	LA	107	R 26.29		

March 1, 1955

Rte 7
PM 21.9

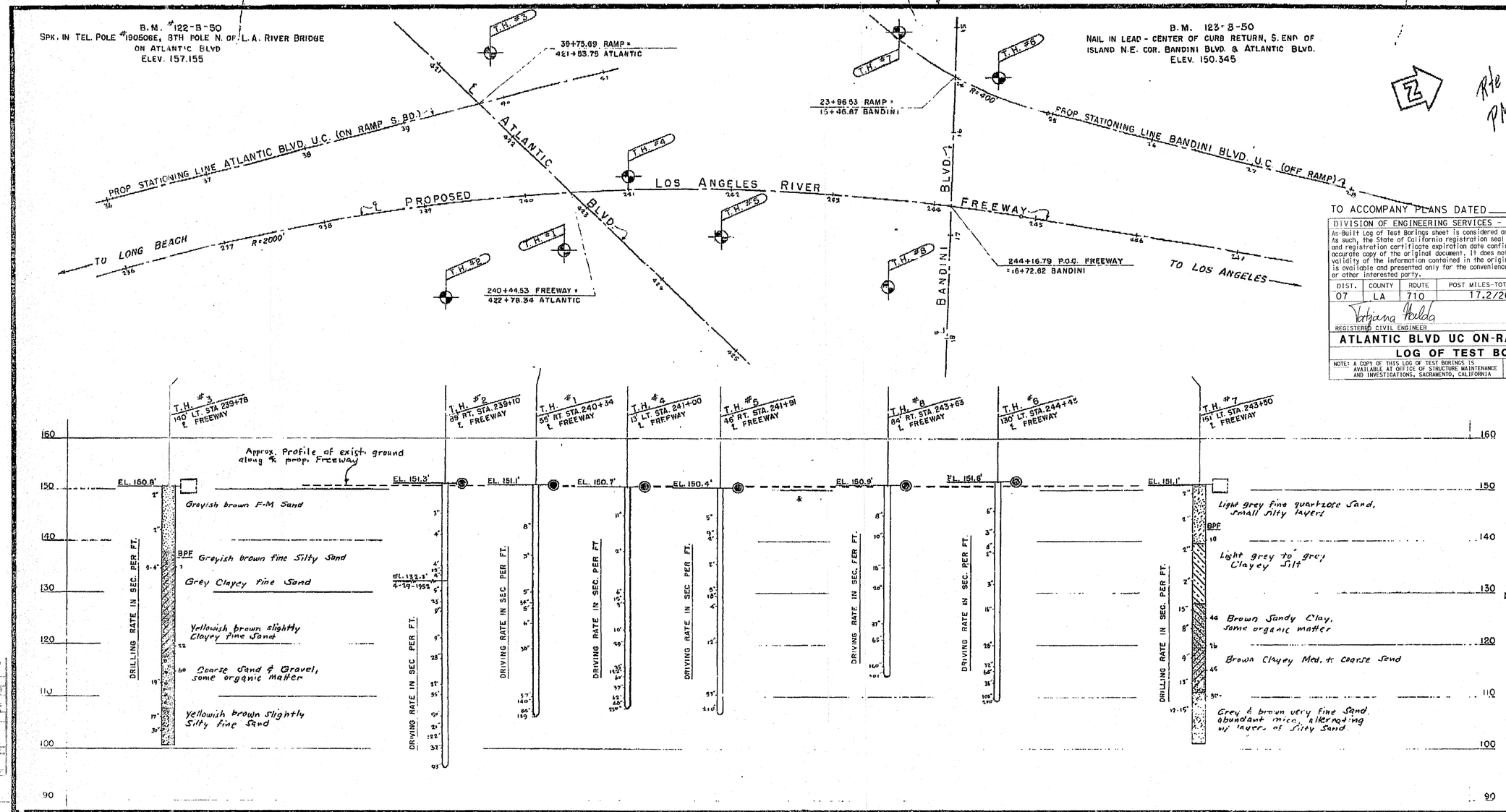

TO ACCOMPANY PLANS DATED 6-27-11

DIVISION OF ENGINEERING SERVICES - GEOTECHNICAL SERVICES

As-Built Log of Test Borings sheet is considered an informational document only. As such, the State of California registration seal with signature, license number and registration certificate expiration date confirm that this is a true and accurate copy of the original document. It does not attest to the accuracy or validity of the information contained in the original document. This drawing is available and presented only for the convenience of any bidder, contractor or other interested party.

DIST.	COUNTY	ROUTE	POST MILES-TOTAL PROJECT	Sheet No.	Total Sheets
07	LA	710	17.2/26.4	1395	1507

Tatjana Haldo — REGISTERED CIVIL ENGINEER — 12-14-10 DATE

REGISTERED PROFESSIONAL ENGINEER — Tatjana L. Haldo — No. C68293 — Exp. 9-30-11 — CIVIL — STATE OF CALIFORNIA

ATLANTIC BLVD UC ON-RAMP (REPLACE)

LOG OF TEST BORINGS 6 OF 6

NOTE: A COPY OF THIS LOG OF TEST BORINGS IS AVAILABLE AT OFFICE OF STRUCTURE MAINTENANCE AND INVESTIGATIONS, SACRAMENTO, CALIFORNIA

CU: 07
EA: 202111

BRIDGE No. 53-3067

Sheet 25 of 25

Test Boring By Bridge Dept.

Core Drill April-May 1952

NOTE: Blows per foot are blows required to drive a 1.4 inch test pipe one foot with a 140 # drop hammer from a free fall of 30 inches.

CLASSIFICATION OF MATERIAL, BASED ON STANDARD GRADE SIZE LIMITS

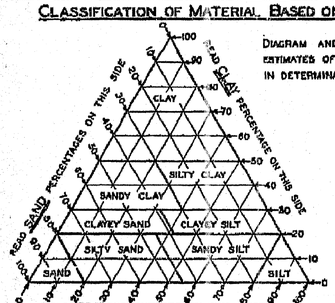

DIAGRAM AND TABLE SHOWING THE BASIS FOR ESTIMATES OF GRADE SIZE DISTRIBUTION USED IN DETERMINATION OF CLASS NAMES.

GROUPING USED IN TRIANGULAR CLASSIFICATION

CLASS NAME	PERCENTAGE OF SIZES PRESENT		
	SAND	SILT	CLAY
SAND	80-100	0-20	0-20
SILTY SAND	45-80	0-55	0-20
SANDY SILT	0-45	35-80	0-20
SILT	0-20	80-100	0-20
CLAYEY SAND	35-80	0-42	20-35
CLAYEY SILT	0-35	32-80	20-35
SANDY CLAY	35-70	0-40	35-90
SILTY CLAY	0-35	20-70	35-80
CLAY	0-50	0-50	50-100

IF GRAVEL IS PRESENT IN APPRECIABLE AMOUNTS THE TERM "GRAVELLY" MAY BE ADDED TO THE CLASS NAME, VIS. "GRAVELLY SAND." THE TERMS "COARSE," "MEDIUM" AND "FINE" WHEN USED TO DESCRIBE GRAVEL, SAND AND SILT REFER TO STANDARD GRADE SIZE LIMITS.

LEGEND OF BORING OPERATIONS

- PLAN OF ANY BORING
- 1" SAMPLER BORING
- ROTARY WASH BORING
- 1" CLOSED SAMPLER DRIVEN
- CORE BORING
- 2½" PENETROMETER DRIVEN
- 1⅜" SAMPLER BORING
- 2" TO 5" AUGER BORING
- 6" TO 20" AUGER BORING
- CASING DRIVEN
- JET BORING
- (S) SAMPLE TAKEN
- 1⅝" A-ROD DRIVEN

THE APPROPRIATE BORING SYMBOLS DESIGNATING THE METHOD OF OPERATION ARE SHOWN AT THE UPPER RIGHT-HAND CORNER OF THE RESPECTIVE BORING. WHERE TOOL CHANGES WERE MADE DURING THE BORING OPERATION SYMBOLS ARE SHOWN AT THE POINT OF CHANGE.

LEGEND OF EARTH MATERIALS

- GRAVEL — G
- SAND — S
- SILT — SI
- CLAY — C
- SILTY SAND — SI S
- CLAYEY SAND — C S
- SANDY SILT — S SI
- CLAYEY SILT — C SI
- SANDY CLAY — SC
- SILTY CLAY — SI C
- PEAT and/or ORGANIC CLAY — O
- SANDSTONE — SS
- SHALE — SH
- BROKEN ROCK (FRAGMENTS) — BR
- ROCK — R
- FILL MATERIAL

ABBREVIATIONS

EL. 69.4	ELEVATION OF GROUND AT TEST HOLE
bpf	BLOWS PER FOOT — (SEE NOTE ABOVE)
P	PULLED PIPE
M	MOISTURE AS % DRY WEIGHT
EL. 64.3 4-12-49	ELEVATION OF GROUND WATER AND DATE

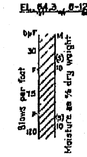

NOTES

THE CONTRACTOR'S ATTENTION IS DIRECTED TO SECTION 2, ARTICLE (c) OF THE STANDARD SPECIFICATIONS AND TO THE SPECIAL PROVISIONS ACCOMPANYING THIS SET OF PLANS.

CLASSIFICATION OF EARTH MATERIAL AS SHOWN ON THIS SHEET IS BASED UPON FIELD INSPECTION AND IS NOT TO BE CONSTRUED TO IMPLY MECHANICAL ANALYSIS.

Box # 124

ATLANTIC & BANDINI BLVD. U.

LOG OF TEST BORINGS

SCALE HORIZ. 1" = 50' VERT. 1" = 10'

BRIDGE No. 53-1009 - 1008 ~~877 - 876~~

FILE No.

DRAWING NO. 8-3097-26

PREL. DRAWING NO. P-3097 32 61

53-1008k-w-lotb6.tif

DIST	COUNTY	ROUTE	POST MILES TOTAL PROJECT	SHEET No.	TOTAL SHEETS
07	LA	710	17.2/26.4	1396	1507

REGISTERED CIVIL ENGINEER — DATE 03/01/11

6-27-11
PLANS APPROVAL DATE

REGISTERED PROFESSIONAL ENGINEER — CHUNG-YUAN WEN — No. C 50690 — Exp. 09/30/11 — CIVIL — STATE OF CALIFORNIA

The State of California or its officers or agents shall not be responsible for the accuracy or completeness of electronic copies of this plan sheet.

CURVE DATA

No.	R	Δ	T	L
A	2000.00′	76°26′21″	1574.95′±	2668.23′

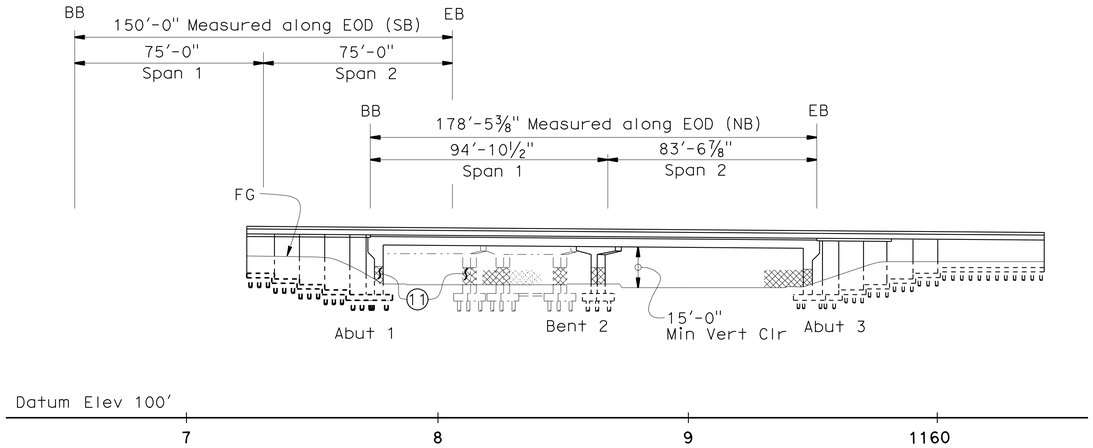

ELEVATION

1″ = 30′

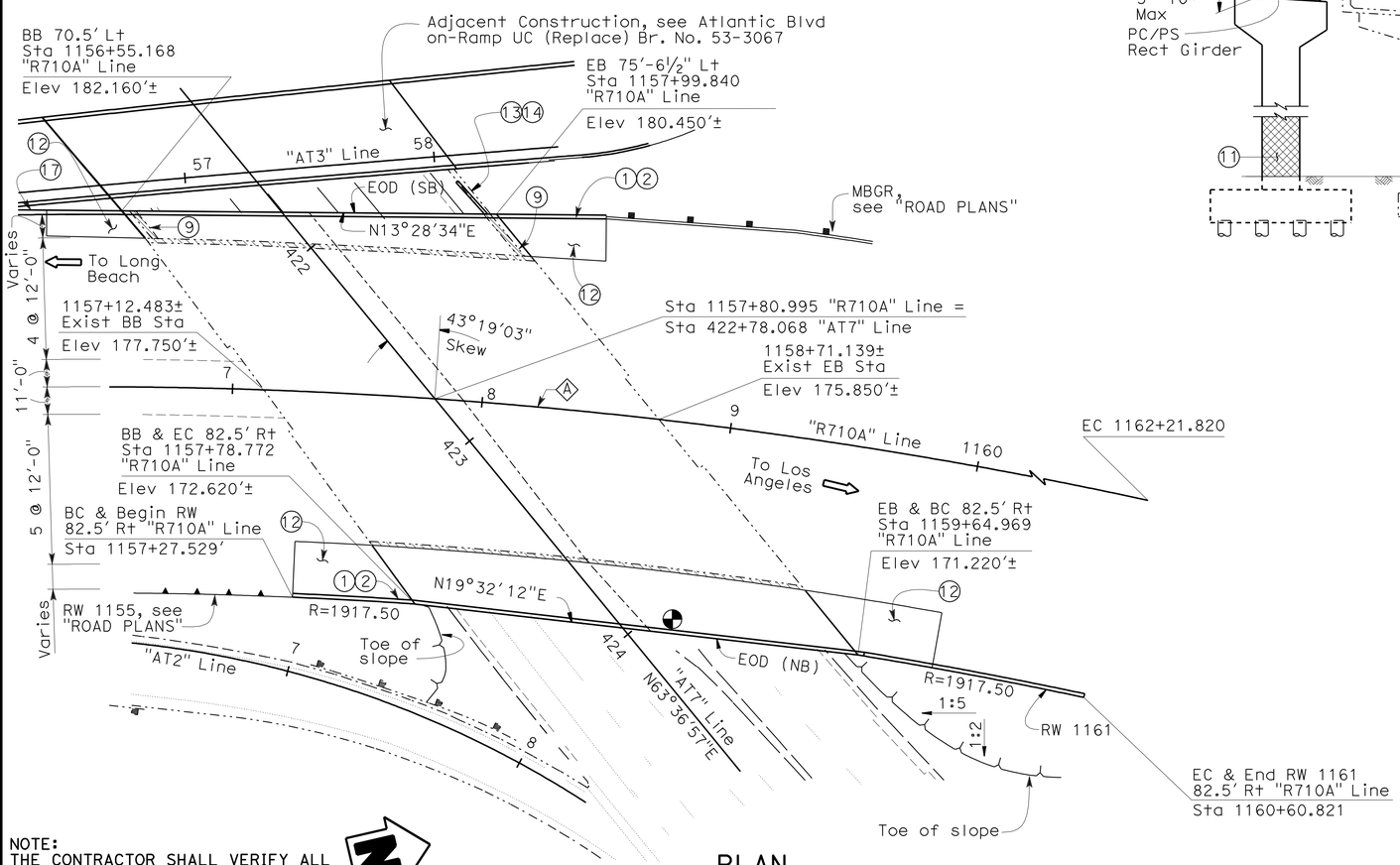

PLAN

1″ = 30′

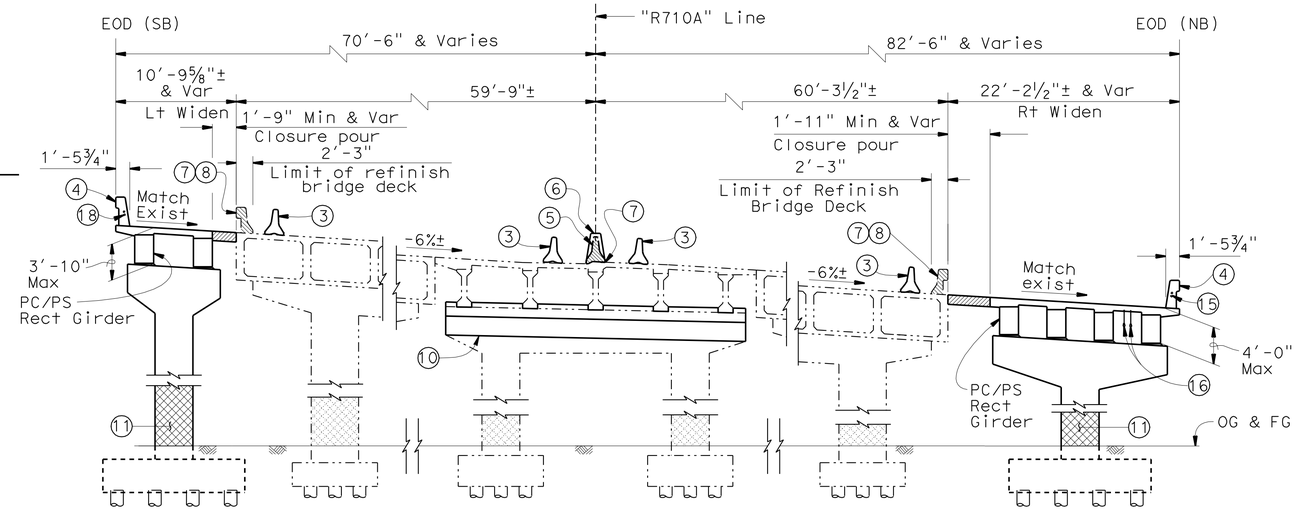

TYPICAL SECTION

⅛″ = 1′-0″

NOTE:

For Quantities see "INDEX TO PLANS" sheet.

LEGEND:

1. Paint "Br. No. 53-1009"
2. Paint "Atlantic Blvd UC"
3. Temporary Railing Type K, see "ROAD PLANS"
4. Concrete Barrier Type 736
5. Remove Concrete Barrier Type 50A(Mod)
6. Construct Concrete Barrier Type 60SA(Mod)
7. Refinish Bridge Deck
8. Remove existing Barrier Type 25(Mod)
9. Remove Exist retaining wall
10. Seat Extender at Exist Median Widen bridge bent
11. Class 2 finish (Gun finish) at Bent and Abutment to match Exist
12. Structure Approach Slab Type N(30D)
13. Remove and replace Exist Retaining Wall
14. Install Cable Railing
15. 2′-2″ ø Electric Conduit, see "ROAD PLANS"
16. 2′-3½″ ø Fiber Optic Conduit, see "ROAD PLANS"
17. Conc Barrier type 736B, see "ROAD PLANS"
18. 1-2″ ø Electric conduit, see "ROAD PLANS"

Bridge Removal (Portion)
Closure Pour
Class 2 Surface Finish (Gun finish)
Point of minimum Vert Clr
Denotes traffic direction
Denotes new structure
Denotes existing structure

NOTE:
THE CONTRACTOR SHALL VERIFY ALL CONTROLLING FIELD DIMENSIONS BEFORE ORDERING OR FABRICATING ANY MATERIAL.

CHUNG-YUAN WEN — DESIGN ENGINEER	DESIGN	BY K. Kim	CHECKED G. Matthews	LOAD & RESISTANCE FACTOR DESIGN — LIVE LOADING: HL93 W/"LOW-BOY"; PERMIT DESIGN VEHICLE
	DETAILS	BY J. Valencia/M. Kingra	CHECKED K. Ghosh	LAYOUT BY J. Valencia — CHECKED K. Kim
	QUANTITIES	BY K. Kim	CHECKED K. Ghosh	SPECIFICATIONS BY K. Ellingson — PLANS AND SPECS COMPARED K. Kim

ORIGINAL SCALE IN INCHES FOR REDUCED PLANS 0 1 2 3

STATE OF CALIFORNIA
DEPARTMENT OF TRANSPORTATION

DIVISION OF ENGINEERING SERVICES
STRUCTURE DESIGN
DESIGN BRANCH 21

BRIDGE NO. 53-1009
POST MILE 21.92

ATLANTIC BLVD UC (WIDEN)
GENERAL PLAN

UNIT: 3623
PROJECT NUMBER & PHASE: 0700020869-1
CONTRACT NO.: 202111

DISREGARD PRINTS BEARING EARLIER REVISION DATES

REVISION DATES: 8/20/10 9/10/10 10/07/10 03/01/11

SHEET 1 OF 33

USERNAME => s124496 DATE PLOTTED => 28-JUN-2011 TIME PLOTTED => 20:09

STRUCTURES DESIGN GENERAL PLAN SHEET (ENGLISH) (REV.09-01-10)

FILE => 53-1009-a-gp01.dgn

DIST	COUNTY	ROUTE	POST MILES TOTAL PROJECT	SHEET No.	TOTAL SHEETS
07	LA	710	17.2/26.4	1397	1507

REGISTERED CIVIL ENGINEER 03/01/11 DATE

6-27-11
PLANS APPROVAL DATE

REGISTERED PROFESSIONAL ENGINEER CHUNG-YUAN WEN No. C 50690 Exp. 09/30/11 CIVIL STATE OF CALIFORNIA

The State of California or its officers or agents shall not be responsible for the accuracy or completeness of electronic copies of this plan sheet.

INDEX TO PLANS

SHEET NO.	SHEET NAME
1.	GENERAL PLAN
2.	INDEX TO PLANS
3.	REMOVAL PLAN NO. 1
4.	REMOVAL PLAN NO. 2
5.	EXCAVATION AND BACKFILL
6.	FOUNDATION PLAN
7.	ABUTMENT 1 LAYOUT
8.	ABUTMENT 3 LAYOUT
9.	ABUTMENT PILE LAYOUT
10.	ABUTMENT DETAILS NO. 1
11.	ABUTMENT DETAILS NO. 2
12.	ABUTMENT DETAILS NO. 3
13.	ABUTMENT DETAILS NO. 4
14.	BENT DETAILS NO. 1
15.	BENT DETAILS NO. 2
16.	BENT DETAILS NO. 3
17.	BENT RETROFIT DETAILS
18.	TYPICAL SECTION NO. 1
19.	TYPICAL SECTION NO. 2
20.	GIRDER LAYOUT
21.	GIRDER REINFORCEMENT
22.	PC/PS GIRDER DETAILS
23.	RETAINING WALL NO. 1161
24.	STRUCTURE APPROACH TYPE N(30D)
25.	STRUCTURE APPROACH DRAINAGE DETAILS
26.	LOG OF TEST BORINGS 1 OF 8
27.	LOG OF TEST BORINGS 2 OF 8
28.	LOG OF TEST BORINGS 3 OF 8
29.	LOG OF TEST BORINGS 4 OF 8
30.	LOG OF TEST BORINGS 5 OF 8
31.	LOG OF TEST BORINGS 6 OF 8
32.	LOG OF TEST BORINGS 7 OF 8
33.	LOG OF TEST BORINGS 8 OF 8

QUANTITIES

BRIDGE REMOVAL (PORTION), LOCATION B	LUMP	SUM
STRUCTURE EXCAVATION (BRIDGE)	195	CY
STRUCTURE EXCAVATION (TYPE Z-2) (AERIALLY DEPOSITED LEAD)	525	CY
STRUCTURE BACKFILL (BRIDGE)	1,400	CY
16" CAST-IN-DRILLED-HOLE CONCRETE PILING	1,010	LF
FURNISH PILING (CLASS 90) (ALTERNATIVE W)	3,750	LF
DRIVE PILE (CLASS 90) (ALTERNATIVE W)	93	EA
FURNISH PILING (CLASS 140) (ALTERNATIVE W)	2,580	LF
DRIVE PILE (CLASS 140) (ALTERNATIVE W)	58	EA
STRUCTURAL CONCRETE, BRIDGE FOOTING	245	CY
STRUCTURAL CONCRETE, BRIDGE	770	CY
STRUCTURAL CONCRETE, APPROACH SLAB (TYPE N)	110	CY
DRILL AND BOND DOWEL	660	LF
FURNISH PRECAST PRESTRESSED RECTANGULAR CONCRETE GIRDER (70'-80')	6	EA
FURNISH PRECAST PRESTRESSED RECTANGULAR CONCRETE GIRDER (80'-90')	6	EA
ERECT PRECAST PRESTRESSED RECTANGULAR CONCRETE GIRDER	12	EA
REFINISH BRIDGE DECK	900	SQFT
JOINT SEAL (MR 1/2")	102	LF
BAR REINFORCING STEEL (BRIDGE)	219,000	LB
BAR REINFORCING STEEL (EPOXY COATED) (BRIDGE)	860	LB
CABLE RAILING	30	LF
CONCRETE BARRIER (TYPE 736)	482	LF
CONCRETE BARRIER (TYPE 736A)	62	LF
CONCRETE BARRIER (TYPE 60SA MOD)	159	LF

NOTE:
THE CONTRACTOR SHALL VERIFY ALL CONTROLLING FIELD DIMENSIONS BEFORE ORDERING OR FABRICATING ANY MATERIAL.

PILE DATA TABLE

Location	Pile Type	Nominal Resistance (kips) Compression	Nominal Resistance (kips) Tension	Design Tip Elevations (ft)	Specified Tip Elevations (ft)	Nominal Driving Resistance (kips)
Abut 1 Lt Widen	Class 140 Alt W	180	N/A	99 (a) 117 (c)	99	180
Abut 1 Rt Widen	Class 140 Alt W	180	N/A	104 (a) 116 (c)	104	180
Bent 2 Lt Widen	16" CIDH/ Class 140	170	60	107 (a-I) 123 (a-II) 114 (c)	107	N/A
Bent 2 Rt Widen	16" CIDH/ Class 140	250	80	107 (a-I) 126 (a-II) 114 (c)	102	N/A
Bent 2 Alt Lt Widen	Class 140 Alt W	170	60	107 (a-I) 123 (a-II) 116 (c)	107	180
Bent 2 Alt Rt Widen	Class 140 Alt W	250	80	92 (a-I) 117 (a-II) 108 (c)	92	250
Abut 3 Lt Widen	Class 140 Alt W	180	N/A	107 (a) 116 (c)	107	180
Abut 3 Rt Widen	Class 140 Alt W	180	N/A	104 (a) 116 (c)	104	180
Abut 1 RW SE, H=24'	Class 90 Alt W	180	N/A	N/A	107	180
Abut 1 RW SE, H=22'	Class 90 Alt W	180	N/A	N/A	109	180
Abut 1 RW SE, H=20'	Class 90 Alt W	180	N/A	N/A	111	180
Abut 1 RW SE, H=18'	Class 90 Alt W	180	N/A	N/A	114	180
Abut 1 RW SE, H=16'	Class 90 Alt W	180	N/A	N/A	116	180
Abut 3 RW NW, H=32'	Class 90 Alt W	180	N/A	N/A	110	180
RW 1161 H=22'	Class 90 Alt W	180	N/A	N/A	108	180
RW 1161 H=20'	Class 90 Alt W	180	N/A	N/A	110	180
RW 1161 H=18'	Class 90 Alt W	180	N/A	N/A	112	180
RW 1161 H=16'	Class 90 Alt W	180	N/A	N/A	115	180
RW 1161 H=14'	Class 90 Alt W	180	N/A	N/A	117	180
RW 1161 H=10'	Class 90 Alt W	180	N/A	N/A	120	180

NOTES:

1. Design Tip Elevations for abutments are controlled by: (a) compression, (c) settlement, and (d) lateral load.
2. Design Tip Elevations for bents are controlled by: (a-I) compression, (Strength limit),(a-II) compression (Extreme Event), (b) tension, (c) settlement, and (d) lateral load.
3. The Specified Tip Elevation shall not be raised above the Design Tip Elevations for tension, settlement, and lateral load.

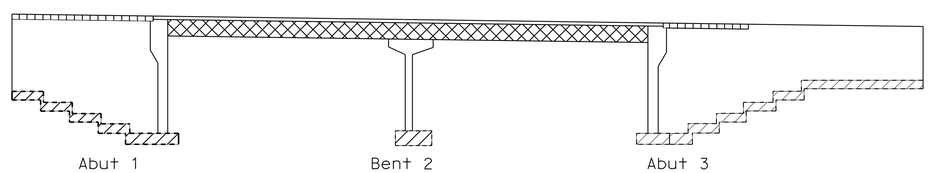

CONCRETE STRENGTH AND TYPE LIMITS

No Scale

- Precast Prestressed Rectangular Girder, see "PC/PS GIRDER DETAIL" sheet
- Structural Concrete, Bridge (f'_c = 4000 psi @ 28 days)
- Structural Concrete, Bridge Footing (f'_c = 4000 psi @ 28 days)
- Structural Concrete, Approach Slab (f'_c = 3600 psi @ 28 days)

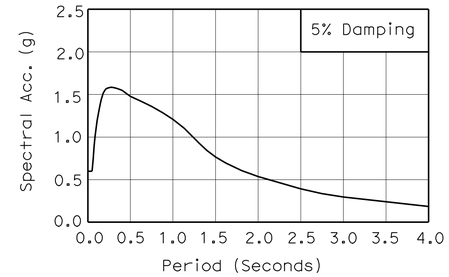

ARS CURVE

GENERAL NOTES

LOAD AND RESISTANCE FACTOR

DESIGN: AASHTO LRFD Bridge Design Specifications, 4th Edition and the Caltrans Amendments, preface dated 2008; except that geotechnical design of deep foundations, earth retaining systems, Bridge Barrier and Railing, and Structure approach slabs are designed using Bridge Design Specifications ('96 AASHTO w/ Revisions by Caltrans).

SEISMIC DESIGN: Caltrans Seismic Design Criteria (SDC) version 1.4 June 2006

LIVE LOADING: HL-93 and Permit design load

SEISMIC LOADING: Caltrans SDC ARS Curve (Modified) for Soil Profile Type D
Moment Magnitude 7.25±0.25
Peak Rock Acceleration 0.6g

CONCRETE: f_y = 60 ksi
f'_c = See "Concrete strength & type limits"
n = 8

PRESTRESSED CONCRETE: See "Prestressing Notes" on "PC/PS GIRDER DETAIL" sheet

STEEL PIPE PILES: ASTM A572

STANDARD PLANS DATED MAY 2006

	A10A	ACRONYMS AND ABBREVIATIONS (A-L)
	A10B	ACRONYMS AND ABBREVIATIONS (M-Y)
	A10C	Symbols (sheet 1 of 2)
	A10D	Symbols (sheet 2 of 2)
	A62B	LIMITS OF PAYMENT FOR EXCAVATION AND BACKFILL BRIDGE SURCHARGE AND WALL
	A62C	LIMITS OF PAYMENT FOR EXCAVATION AND BACKFILL BRIDGE
	A76G	CONCRETE BARRIER TYPE 60S
	B0-1	BRIDGE DETAILS
	B0-3	BRIDGE DETAILS
	B0-5	BRIDGE DETAILS
	B2-3	16" & 24" CAST-IN-DRILLED-HOLE CONCRETE PILE
	B2-5	PILE DETAILS, CLASS 90 AND CLASS 140
	B3-1	RETAINING WALL, TYPE 1
	B3-2	RETAINING WALL, TYPE 1
	B3-8	RETAINING WALL DETAIL NO. 1
	B6-10	UTILITY OPENINGS T-BEAM
RSP	B6-21	JOINT SEAL
	B11-47	CABLE RAILING
	B11-56	CONCRETE BARRIER TYPE 736
	B14-3	COMMUNICATION AND SPRINKLER CONTROL CONDUITS
	D99B	EDGE DRAIN OUTLETS AND VENT DETAILS
RSP	P10	CONCRETE PAVMENT - DOWEL BAR DETAILS
	T3	TEMPORARY RAILING (TYPE K)

STANDARD PLAN SHEET NO.
DETAIL NO.

	BY	CHECKED
DESIGN	K. Kim	G. Matthews
DETAILS	M. Kingra / P. Perez	K. Kim
QUANTITIES	K. Kim	K. Ghosh

STATE OF CALIFORNIA
DEPARTMENT OF TRANSPORTATION

DIVISION OF ENGINEERING SERVICES
STRUCTURE DESIGN
DESIGN BRANCH 21

BRIDGE NO. 53-1009
POST MILE 21.92

ATLANTIC BLVD UC (WIDEN)
INDEX TO PLANS

STRUCTURES DESIGN DETAIL SHEET (ENGLISH) (REV. 09-01-10)

ORIGINAL SCALE IN INCHES FOR REDUCED PLANS 0 1 2 3

UNIT: 3623
PROJECT NUMBER & PHASE: 0700020869-1
CONTRACT NO.: 202111

DISREGARD PRINTS BEARING EARLIER REVISION DATES

REVISION DATES: 5/28/09 10/01/10 03/01/11

SHEET 2 OF 33

FILE => 53-1009-a-itp.dgn

USERNAME => s124496 DATE PLOTTED => 28-JUN-2011 TIME PLOTTED => 20:09

DIST	COUNTY	ROUTE	POST MILES TOTAL PROJECT	SHEET No.	TOTAL SHEETS
07	LA	710	17.2/26.4	1398	1507

REGISTERED CIVIL ENGINEER 03/01/11 DATE

6-27-11
PLANS APPROVAL DATE

REGISTERED PROFESSIONAL ENGINEER CHUNG-YUAN WEN No. C 50690 Exp. 09/30/11 CIVIL STATE OF CALIFORNIA

The State of California or its officers or agents shall not be responsible for the accuracy or completeness of electronic copies of this plan sheet.

LEGEND:

Bridge removal (Portion)

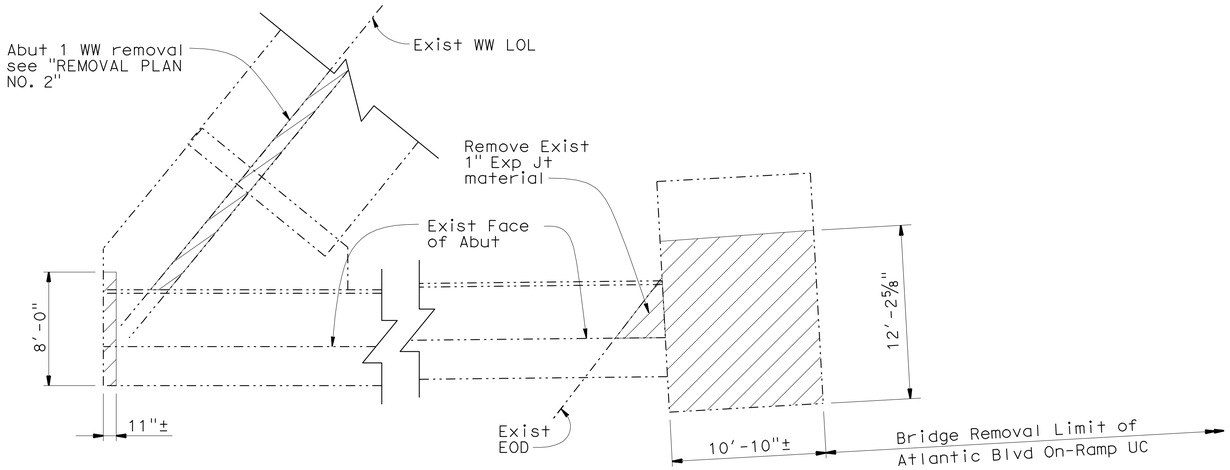

ABUTMENT 1 FOOTING REMOVAL PLAN

NO SCALE

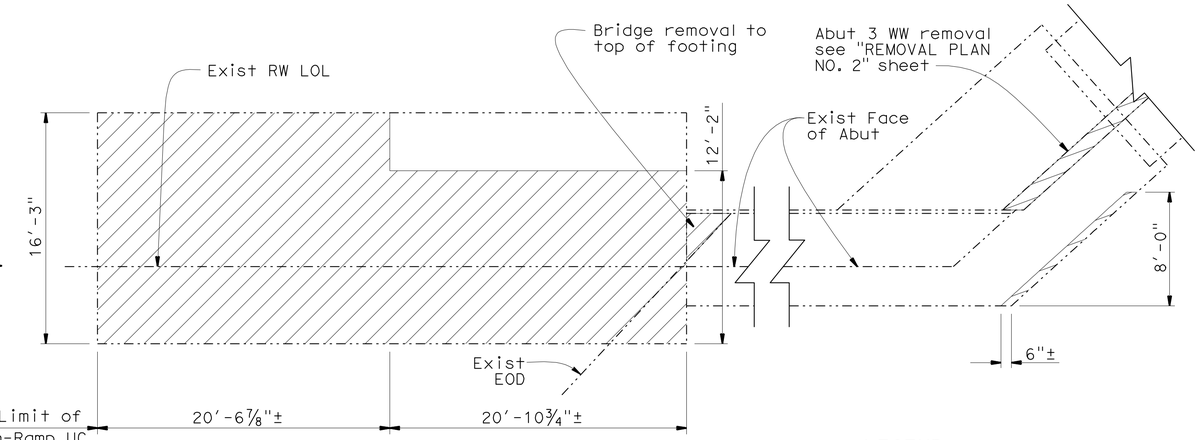

ABUTMENT 3 REMOVAL PLAN

NO SCALE

LEGEND:

Bridge Removal (Portion)

Existing Structure

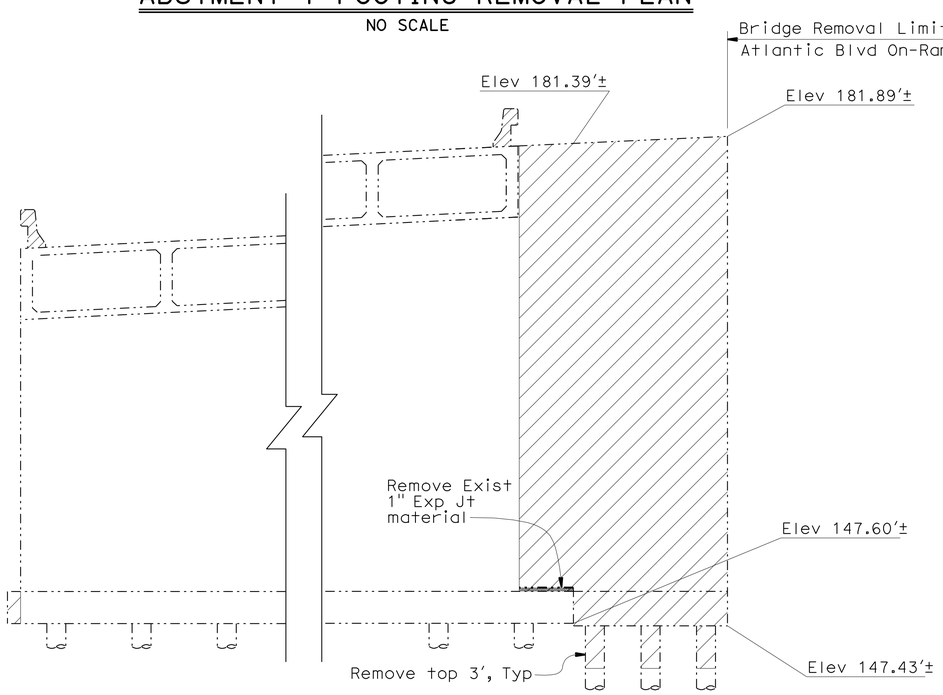

ABUTMENT 1 REMOVAL ELEVATION

NO SCALE

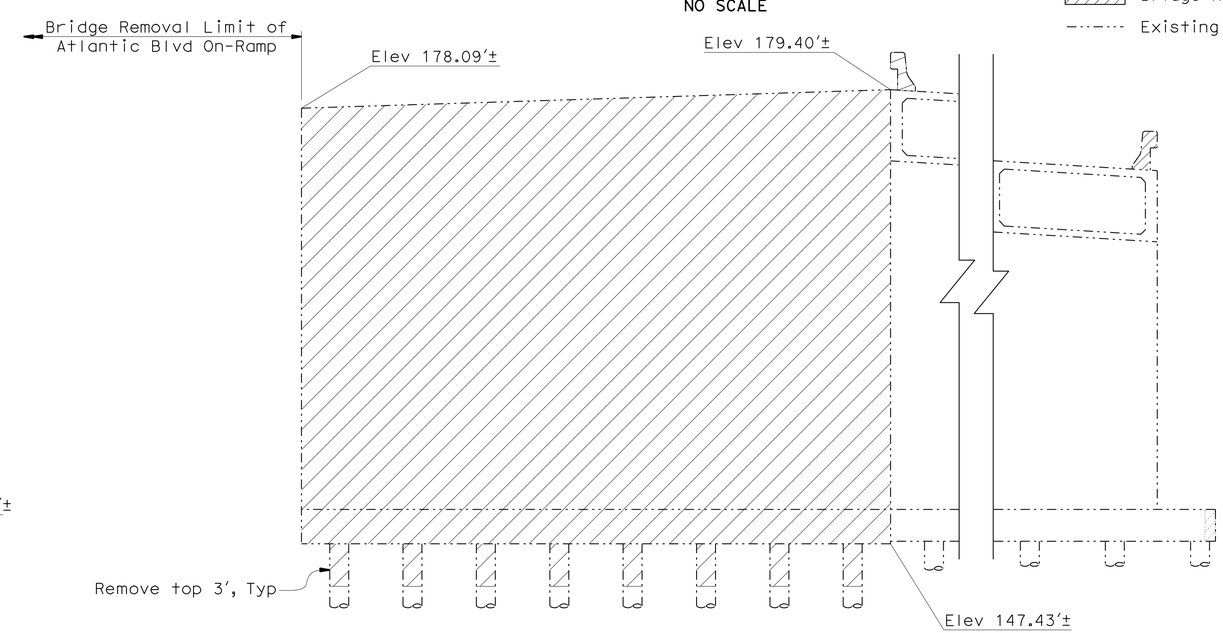

ABUTMENT 3 REMOVAL ELEVATION

NO SCALE

NOTE:
THE CONTRACTOR SHALL VERIFY ALL CONTROLLING FIELD DIMENSIONS BEFORE ORDERING OR FABRICATING ANY MATERIAL.

	BY	CHECKED
DESIGN	K. Kim	G. Matthews
DETAILS	M. Kingra /J. Valencia	K. Kim
QUANTITIES	K. Kim	K. Ghosh

STATE OF CALIFORNIA
DEPARTMENT OF TRANSPORTATION

DIVISION OF ENGINEERING SERVICES
STRUCTURE DESIGN
DESIGN BRANCH 21

BRIDGE NO. 53-1009
POST MILE 21.92

ATLANTIC BLVD UC (WIDEN)
REMOVAL PLAN NO. 1

STRUCTURES DESIGN DETAIL SHEET (ENGLISH) (REV. 09-01-10)

ORIGINAL SCALE IN INCHES FOR REDUCED PLANS 0 1 2 3

UNIT: 3623
PROJECT NUMBER & PHASE: 0700020869-1
CONTRACT NO.: 202111

DISREGARD PRINTS BEARING EARLIER REVISION DATES → 8/31/10 10/01/10 03/01/11

SHEET 3 OF 33

FILE => 53-1009-b-br_rmv01.dgn

USERNAME => s124496 DATE PLOTTED => 28-JUN-2011 TIME PLOTTED => 20:09

DIST	COUNTY	ROUTE	POST MILES TOTAL PROJECT	SHEET No.	TOTAL SHEETS
07	LA	710	17.2/26.4	1399	1507

REGISTERED CIVIL ENGINEER — DATE 03/01/11

6-27-11
PLANS APPROVAL DATE

REGISTERED PROFESSIONAL ENGINEER — CHUNG-YUAN WEN — No. C 50690 — Exp. 09/30/11 — CIVIL — STATE OF CALIFORNIA

The State of California or its officers or agents shall not be responsible for the accuracy or completeness of electronic copies of this plan sheet.

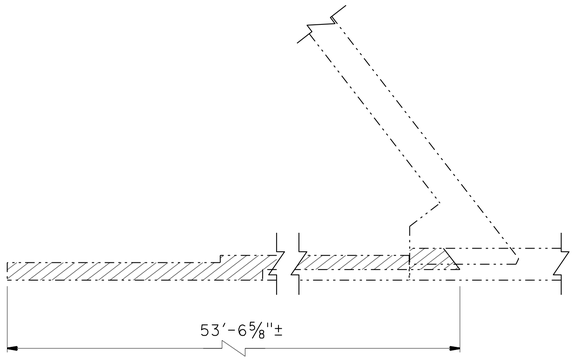

ABUTMENT 1 WINGWALL REMOVAL PLAN
NO SCALE

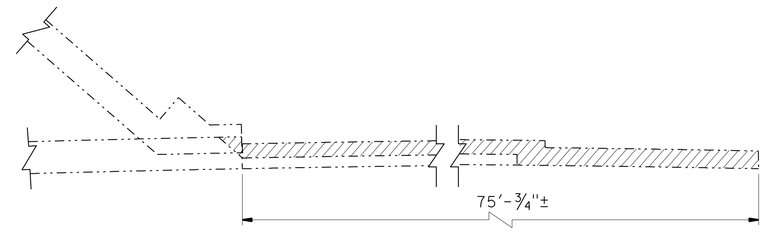

ABUTMENT 3 WINGWALL REMOVAL PLAN
NO SCALE

LEGEND:

Bridge Removal (Portion)

Existing Structure

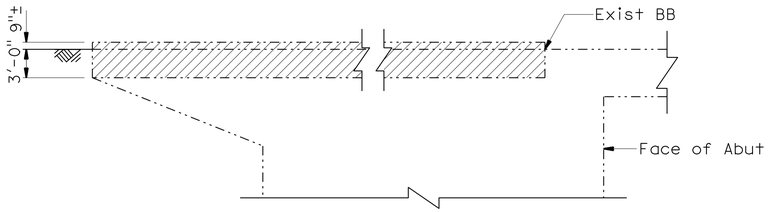

ABUTMENT 1 WINGWALL REMOVAL ELEVATION
NO SCALE

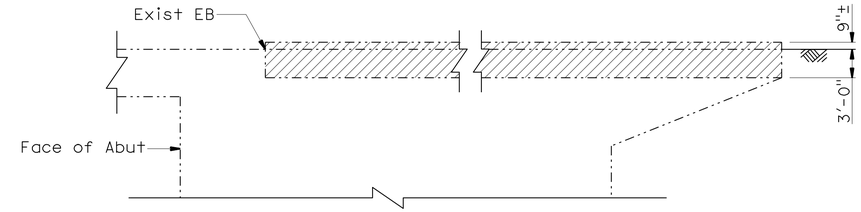

ABUTMENT 3 WINGWALL REMOVAL ELEVATION
NO SCALE

NOTE:
THE CONTRACTOR SHALL VERIFY ALL CONTROLLING FIELD DIMENSIONS BEFORE ORDERING OR FABRICATING ANY MATERIAL.

	BY	CHECKED
DESIGN	K. Kim	G. Matthews
DETAILS	M. Kingra/J. Valencia	K. Kim
QUANTITIES	K. Kim	K. Ghosh

STATE OF CALIFORNIA
DEPARTMENT OF TRANSPORTATION

DIVISION OF ENGINEERING SERVICES
STRUCTURE DESIGN
DESIGN BRANCH 21

BRIDGE NO. 53-1009
POST MILE 21.92

ATLANTIC BLVD UC (WIDEN)
REMOVAL PLAN NO. 2

STRUCTURES DESIGN DETAIL SHEET (ENGLISH) (REV. 09-01-10)

ORIGINAL SCALE IN INCHES FOR REDUCED PLANS 0 1 2 3

UNIT: 3623
PROJECT NUMBER & PHASE: 0700020869-1
CONTRACT NO.: 202111

DISREGARD PRINTS BEARING EARLIER REVISION DATES

REVISION DATES: 9/27/10 10/08/10 03/01/11

SHEET 4 OF 33

FILE => 53-1009-b-br_rmv02.dgn

USERNAME => s124496 DATE PLOTTED => 28-JUN-2011 TIME PLOTTED => 20:09

DIST	COUNTY	ROUTE	POST MILES TOTAL PROJECT	SHEET No.	TOTAL SHEETS
07	LA	710	17.2/26.4	1400	1507

REGISTERED CIVIL ENGINEER — DATE 03/01/11

6-27-11
PLANS APPROVAL DATE

REGISTERED PROFESSIONAL ENGINEER — CHUNG-YUAN WEN — No. C 50690 — Exp. 09/30/11 — CIVIL — STATE OF CALIFORNIA

The State of California or its officers or agents shall not be responsible for the accuracy or completeness of electronic copies of this plan sheet.

LEGENDS:

- Structure Excavation
- Structure Excavation (Aerially Deposited Lead Type Z-2)
- Structure Backfill

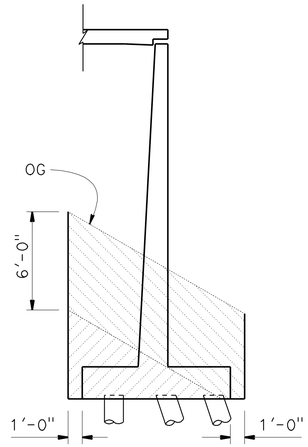

EXCAVATION

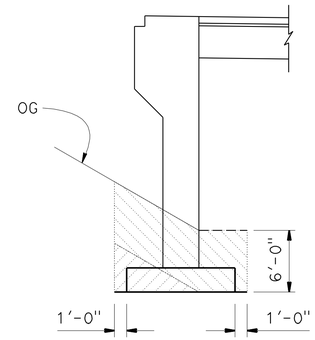

EXCAVATION

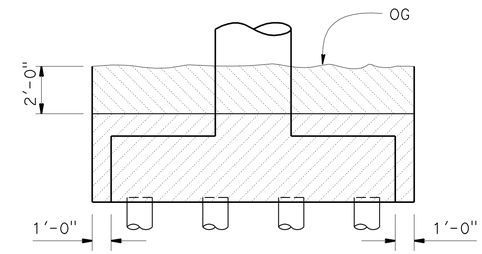

EXCAVATION

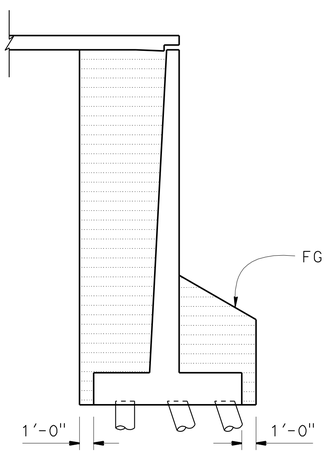

BACKFILL

RETAINING WALL

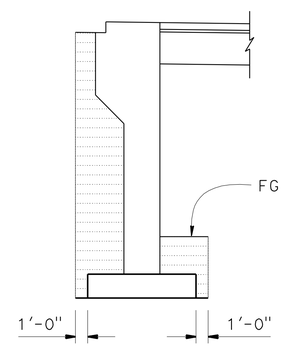

BACKFILL

ABUTMENT

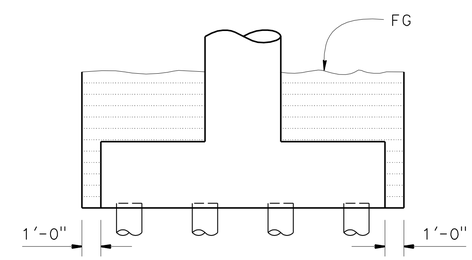

BACKFILL

BENT

LIMITS OF PAYMENT FOR EXCAVATION AND BACKFILL

No Scale

NOTE:
THE CONTRACTOR SHALL VERIFY ALL CONTROLLING FIELD DIMENSIONS BEFORE ORDERING OR FABRICATING ANY MATERIAL.

	BY	CHECKED
DESIGN	K. Kim	G. Matthews
DETAILS	M. Kingra	K. Kim
QUANTITIES	K. Kim	K. Ghosh

STATE OF CALIFORNIA
DEPARTMENT OF TRANSPORTATION

DIVISION OF ENGINEERING SERVICES
STRUCTURE DESIGN
DESIGN BRANCH 21

BRIDGE NO. 53-1009
POST MILE 21.92

ATLANTIC BLVD UC (WIDEN)
EXCAVATION AND BACKFILL

STRUCTURES DESIGN DETAIL SHEET (ENGLISH) (REV. 09-01-10)

ORIGINAL SCALE IN INCHES FOR REDUCED PLANS 0 1 2 3

UNIT: 3623
PROJECT NUMBER & PHASE: 0700020869-1
CONTRACT NO.: 202111

DISREGARD PRINTS BEARING EARLIER REVISION DATES
REVISION DATES 11/23/10 01/31/11 03/01/11

SHEET 5 OF 33

FILE => 53-1009-c-ex_bf.dgn

USERNAME => s124496 DATE PLOTTED => 28-JUN-2011 TIME PLOTTED => 20:09