Dist	COUNTY	ROUTE	POST MILES TOTAL PROJECT	SHEET No.	TOTAL SHEETS
07	Ven	101	42.0	1	45

NH-Q101(179)E

STATE OF CALIFORNIA
DEPARTMENT OF TRANSPORTATION

PROJECT PLANS FOR CONSTRUCTION ON
STATE HIGHWAY
IN VENTURA COUNTY
AT LA CONCHITA
FROM 0.7 MILE NORTH OF PUNTA GORDA
TO 1.5 MILES SOUTH OF RINCON POINT

TO BE SUPPLEMENTED BY STANDARD PLANS DATED MAY 2006

INDEX OF PLANS

SHEET NO.	DESCRIPTION
1	TITLE AND LOCATION MAP
2	TYPICAL CROSS SECTION
3	LAYOUTS
4	CONSTRUCTION DETAILS
5	TEMPORARY WATER POLLUTION CONTROL QUANTITIES
6	DRAINAGE PLAN
7-8	DRAINAGE PROFILE
9-16	DRAINAGE DETAILS
17-18	DRAINAGE QUANTITIES
19-20	UTILITY PLAN
21	CONSTRUCTION AREA SIGNS
22-32	STAGE CONSTRUCTION
33	STAGE CONSTRUCTION QUANTITIES
34	TRAFFIC HANDLING DETAILS
35-36	PAVEMENT DELINEATION PLAN
37	PAVEMENT DELINEATION QUANTITIES
38	SUMMARY OF QUANTITIES
39-45	REVISED AND NEW STANDARD PLANS

THE STANDARD PLANS LIST APPLICABLE TO THIS CONTRACT IS INCLUDED IN THE NOTICE TO BIDDERS AND SPECIAL PROVISIONS BOOK.

LOCATION MAP

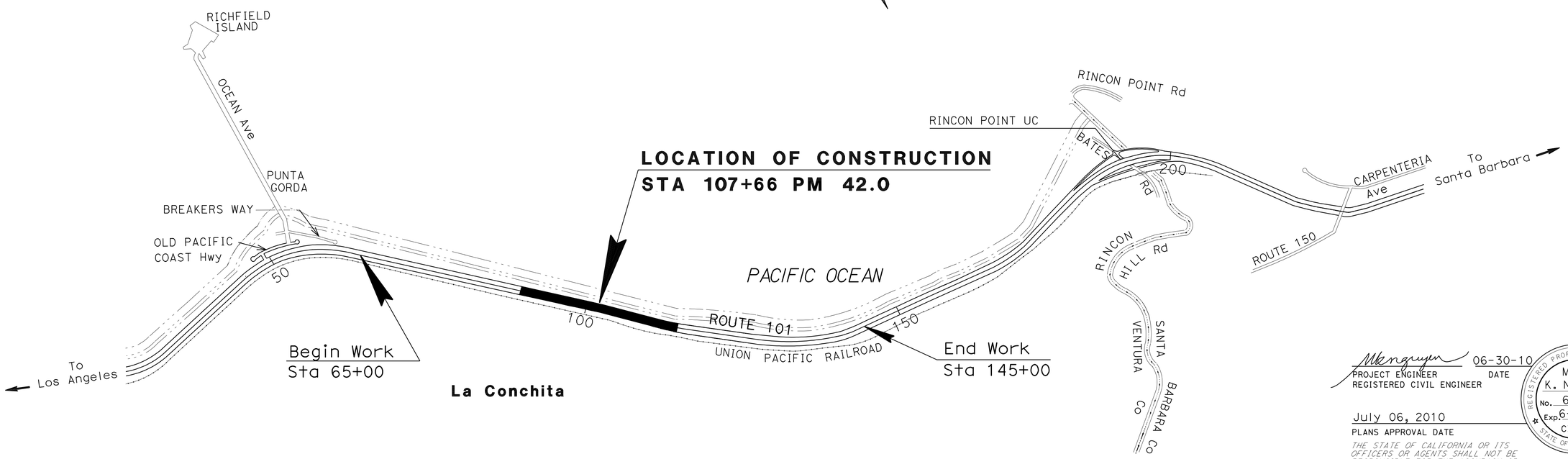

NO SCALE

PROJECT MANAGER: RAVI GHATE
DESIGN ENGINEER: MIKE NGUYEN

PROJECT ENGINEER / REGISTERED CIVIL ENGINEER — DATE: 06-30-10

REGISTERED PROFESSIONAL ENGINEER — MIKE K. NGUYEN No. 67756 Exp. 6-30-11 CIVIL — STATE OF CALIFORNIA

July 06, 2010
PLANS APPROVAL DATE

THE STATE OF CALIFORNIA OR ITS OFFICERS OR AGENTS SHALL NOT BE RESPONSIBLE FOR THE ACCURACY OR COMPLETENESS OF SCANNED COPIES OF THIS PLAN SHEET.

THE CONTRACTOR SHALL POSSESS THE CLASS (OR CLASSES) OF LICENSE AS SPECIFIED IN THE "NOTICE TO BIDDERS".

CONTRACT No.	07-174804
PROJECT ID	0700000167

LAST REVISION 00-00-00 — DATE PLOTTED => 10-JAN-2011 TIME PLOTTED => 10:40

Dist	COUNTY	ROUTE	POST MILES TOTAL PROJECT	SHEET No.	TOTAL SHEETS
07	Ven	101	42.0	2	45

REGISTERED CIVIL ENGINEER DATE 06-30-10

07-06-10
PLANS APPROVAL DATE

REGISTERED PROFESSIONAL ENGINEER MIKE K. NGUYEN No. 67756 Exp. 6-30-11 CIVIL STATE OF CALIFORNIA

THE STATE OF CALIFORNIA OR ITS OFFICERS OR AGENTS SHALL NOT BE RESPONSIBLE FOR THE ACCURACY OR COMPLETENESS OF SCANNED COPIES OF THIS PLAN SHEET.

NOTES:

1. DIMENSIONS OF THE PAVEMENT STRUCTURES (STRUCTURAL SECTIONS) ARE SUBJECT TO TOLERANCES SPECIFIED IN THE STANDARD SPECIFICATIONS
2. SUPERELEVATION AS SHOWN OR AS DIRECTED BY THE ENGINEER.
3. FOR TEMPORARY PAVEMENT CROSS SECTION, SEE STAGE CONSTRUCTION PLANS.

TYPICAL STRUCTURAL SECTIONS

1
- 0.85′ HOT MIX ASPHALT (TYPE B)
- 0.85′ CLASS 3 AGGREGATE BASE

2
- 0.50′ HOT MIX ASPHALT (TYPE B)
- 0.50′ LEAN CONCRETE BASE
- 0.95′ CLASS 3 AGGREGATE BASE

EXISITNG STRUCTURAL SECTIONS

1E
- 0.20′ ASPHALT CONCRETE (TYPE B)
- 0.50′ CLASS B AGGREGATE BASE

2E
- 0.33′ ASPHALT CONCRETE (TYPE B)
- 0.67′ CEMENT TREATED BASE

3E
- 0.21′ PLANT MIXED SURFACING
- 0.50′ IMPORTED SUBBASE MATERIAL

4E
- 0.21′ PLANT MIXED SURFACING
- 1.00′ IMPORTED SUBBASE MATERIAL

CONSTRUCTION

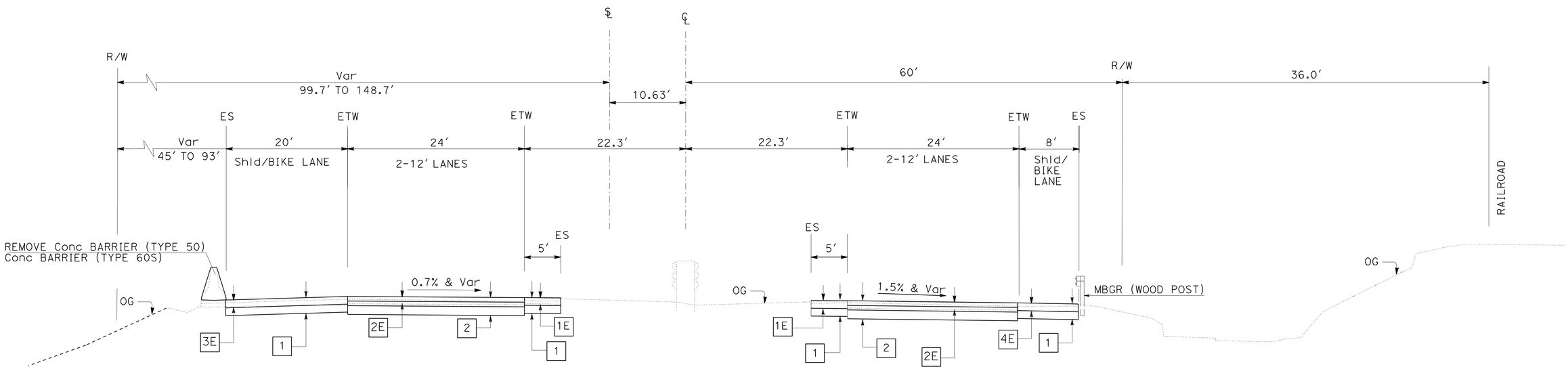

ROUTE 101

STA 102+89 TO 103+39
STA 104+77.39 TO 105+27.39

TYPICAL CROSS SECTION

NO SCALE

X-1

REVISED BY | DATE REVISED
MIKE NGUYEN | PAUL H. HSU
CALCULATED-DESIGNED BY | CHECKED BY
FUNCTIONAL SUPERVISOR: OC LEE

STATE OF CALIFORNIA - DEPARTMENT OF TRANSPORTATION
Caltrans
DESIGN

LAST REVISION 00-00-00 | DATE PLOTTED => 10-JAN-2011 | TIME PLOTTED => 10:40

Dist	COUNTY	ROUTE	POST MILES TOTAL PROJECT	SHEET No.	TOTAL SHEETS
07	Ven	101	42.0	3	45

REGISTERED CIVIL ENGINEER DATE 06-30-10

07-06-10
PLANS APPROVAL DATE

REGISTERED PROFESSIONAL ENGINEER MIKE K. NGUYEN No. 67756 Exp. 6-30-11 CIVIL STATE OF CALIFORNIA

THE STATE OF CALIFORNIA OR ITS OFFICERS OR AGENTS SHALL NOT BE RESPONSIBLE FOR THE ACCURACY OR COMPLETENESS OF SCANNED COPIES OF THIS PLAN SHEET.

NOTE:

1. FOR ACCURATE RIGHT OF WAY AND ACCESS DATA, CONTACT RIGHT OF WAY ENGINEERING AT THE DISTRICT OFFICE.

CURVE DATA

No.	R	Δ	T	L
①	8400′	4°20′15"	318.10′	635.89′
②	6153′	9°25′06"	506.90′	1011.51′

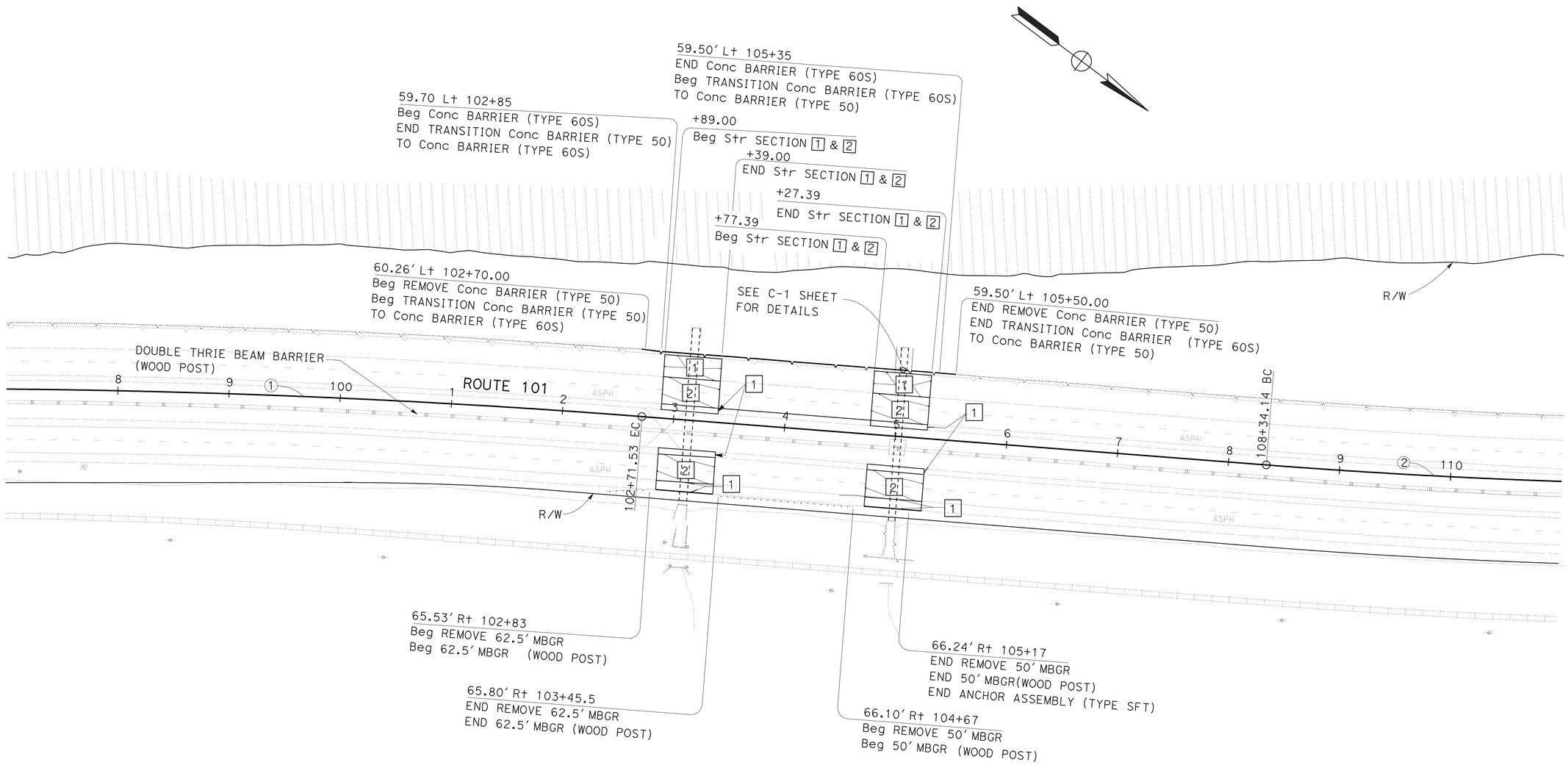

LAYOUT

SCALE 1" = 50′

L-1

STATE OF CALIFORNIA - DEPARTMENT OF TRANSPORTATION

Caltrans

DESIGN

FUNCTIONAL SUPERVISOR: OC LEE

CALCULATED-DESIGNED BY: MIKE NGUYEN

CHECKED BY: PAUL H. HSU

REVISED BY

DATE REVISED

LAST REVISION 00-00-00

DATE PLOTTED => 10-JAN-2011
TIME PLOTTED => 10:40

Dist	COUNTY	ROUTE	POST MILES TOTAL PROJECT	SHEET No.	TOTAL SHEETS
07	Ven	101	42.0	4	45

REGISTERED CIVIL ENGINEER 06-30-10 DATE

07-06-10
PLANS APPROVAL DATE

REGISTERED PROFESSIONAL ENGINEER MIKE K. NGUYEN No. 67756 Exp. 6-30-11 CIVIL STATE OF CALIFORNIA

THE STATE OF CALIFORNIA OR ITS OFFICERS OR AGENTS SHALL NOT BE RESPONSIBLE FOR THE ACCURACY OR COMPLETENESS OF SCANNED COPIES OF THIS PLAN SHEET.

NOTE:

1. SEE STANDARD PLAN FOR TRANSITIONS TO CONCRETE BARRIER (TYPE 50).

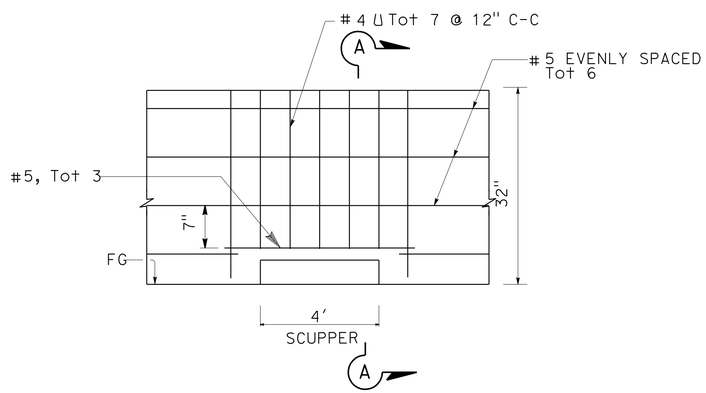

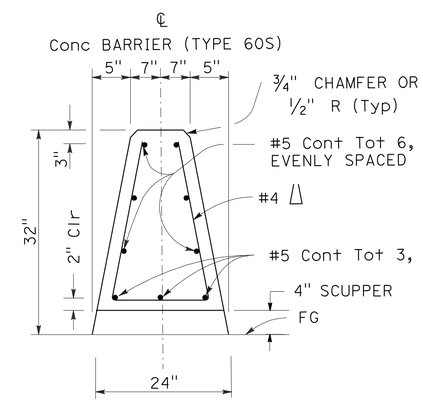

SECTION A-A

CONCRETE BARRIER (TYPE 60S) WITH SCUPPER

CONSTRUCTION DETAILS

NO SCALE

C-1

STATE OF CALIFORNIA - DEPARTMENT OF TRANSPORTATION
Caltrans DESIGN

FUNCTIONAL SUPERVISOR: OC LEE

CALCULATED-DESIGNED BY: MIKE NGUYEN
CHECKED BY: PAUL H. HSU

REVISED BY
DATE REVISED

LAST REVISION 00-00-00 | DATE PLOTTED => 10-JAN-2011 | TIME PLOTTED => 10:41

Dist	COUNTY	ROUTE	POST MILES TOTAL PROJECT	SHEET No.	TOTAL SHEETS
07	Ven	101	42.0	5	45

REGISTERED CIVIL ENGINEER DATE 06-30-10

07-06-10
PLANS APPROVAL DATE

REGISTERED PROFESSIONAL ENGINEER MIKE K. NGUYEN No. 67756 Exp. 6-30-11 CIVIL STATE OF CALIFORNIA

THE STATE OF CALIFORNIA OR ITS OFFICERS OR AGENTS SHALL NOT BE RESPONSIBLE FOR THE ACCURACY OR COMPLETENESS OF SCANNED COPIES OF THIS PLAN SHEET.

WATER POLLUTION CONTROL QUANTITIES

LOCATION \ DESCRIPTION	TEMPORARY COVER	TEMPORARY GRAVEL BAG BERM	TEMPORARY CONSTRUCTION ENTRANCE
	SQYD	LF	EACH
L-1	78	600	2

TEMPORARY WATER POLLUTION CONTROL QUANTITIES

WPCQ-1

REVISED BY | DATE REVISED

MIKE NGUYEN | CALCULATED-DESIGNED BY
PAUL H. HSU | CHECKED BY

FUNCTIONAL SUPERVISOR
OC LEE

STATE OF CALIFORNIA - DEPARTMENT OF TRANSPORTATION
Caltrans
DESIGN

LAST REVISION 00-00-00 | DATE PLOTTED => 10-JAN-2011 | TIME PLOTTED => 10:41

Dist	COUNTY	ROUTE	POST MILES TOTAL PROJECT	SHEET No.	TOTAL SHEETS
07	Ven	101	42.0	6	45

Paul Fong 06-30-10
REGISTERED CIVIL ENGINEER DATE

07-06-10
PLANS APPROVAL DATE

REGISTERED PROFESSIONAL ENGINEER
PAUL FONG
No. C67053
Exp. 9/30/10
CIVIL
STATE OF CALIFORNIA

THE STATE OF CALIFORNIA OR ITS OFFICERS OR AGENTS SHALL NOT BE RESPONSIBLE FOR THE ACCURACY OR COMPLETENESS OF SCANNED COPIES OF THIS PLAN SHEET.

NOTES:

1. THE CONTRACTOR SHALL VERIFY LOCATIONS AND ELEVATIONS OF THE EXISTING AND PROPOSED DRAINAGE SYSTEMS BEFORE COMMENCEMENT OF WORK
2. FOR ACCURATE RIGHT OF WAY AND ACCESS DATA, CONTACT RIGHT OF WAY ENGINEERING AT THE DISTRICT OFFICE.

LEGEND:

X DRAINAGE SYSTEM No.

x DRAINAGE UNIT

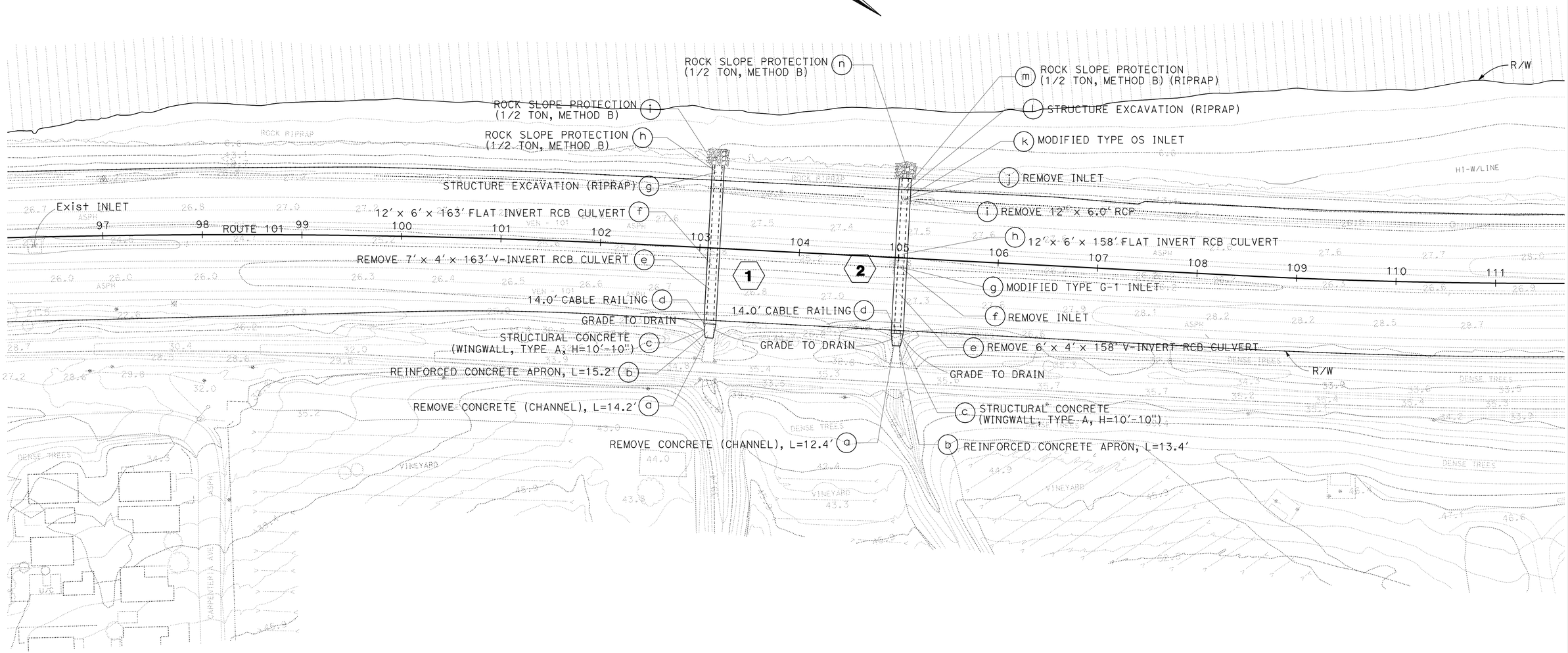

DRAINAGE PLAN

SCALE 1" = 50'

D-1

THIS PLAN ACCURATE FOR DRAINAGE WORK ONLY.

STATE OF CALIFORNIA - DEPARTMENT OF TRANSPORTATION
Caltrans
HYDRAULICS

FUNCTIONAL SUPERVISOR: DAVE BHALLA
CALCULATED-DESIGNED BY: PAUL FONG
CHECKED BY: FUSUNG CHANG
REVISED BY
DATE REVISED

LAST REVISION 00-00-00
DATE PLOTTED => 10-JAN-2011
TIME PLOTTED => 10:41

Dist	COUNTY	ROUTE	POST MILES TOTAL PROJECT	SHEET No.	TOTAL SHEETS
07	Ven	101	42.0	7	45

Paul Fong 06-30-10
REGISTERED CIVIL ENGINEER DATE

07-06-10
PLANS APPROVAL DATE

REGISTERED PROFESSIONAL ENGINEER
PAUL FONG
No. C67053
Exp. 9/30/10
CIVIL
STATE OF CALIFORNIA

THE STATE OF CALIFORNIA OR ITS OFFICERS OR AGENTS SHALL NOT BE RESPONSIBLE FOR THE ACCURACY OR COMPLETENESS OF SCANNED COPIES OF THIS PLAN SHEET.

NOTES:

1. ROCK SLOPE PROTECTION SHALL BE REPLACED AT THE SAME LOCATION.
2. 8" DIAMETER HOLES SHALL BE CONSTRUCTED ON BOTH SIDES OF THE WINGWALLS AND SHALL MATCH THE FLOW LINES TOWARD THE WALLS.

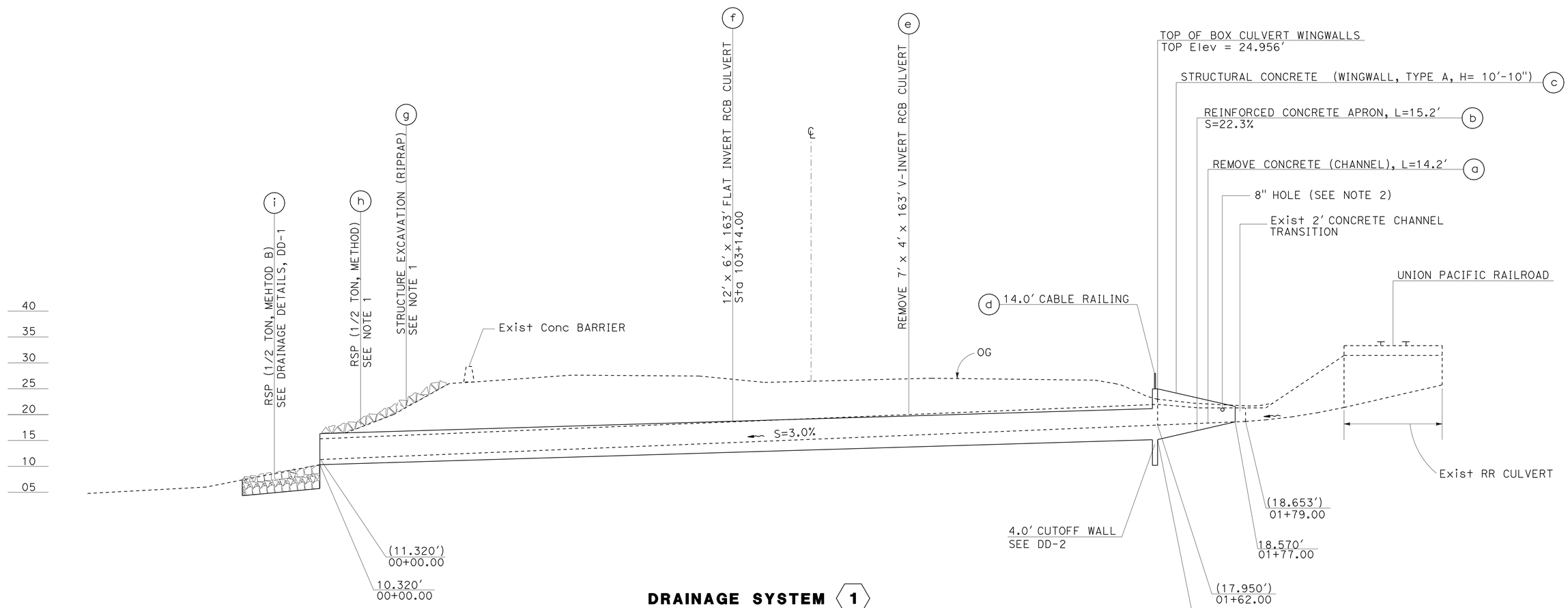

DRAINAGE SYSTEM 1

STATION 103+14.00

SCALE: Horiz 1"=10'
Vert 1"=10'

DRAINAGE PROFILE

DP-1

STATE OF CALIFORNIA - DEPARTMENT OF TRANSPORTATION
Caltrans
HYDRAULICS

FUNCTIONAL SUPERVISOR: DAVE BHALLA
CALCULATED-DESIGNED BY: PAUL FONG
CHECKED BY: FUSUNG CHANG
REVISED BY
DATE REVISED

LAST REVISION 00-00-00
DATE PLOTTED => 10-JAN-2011
TIME PLOTTED => 10:41

Dist	COUNTY	ROUTE	POST MILES TOTAL PROJECT	SHEET No.	TOTAL SHEETS
07	Ven	101	42.0	8	45

Paul Fong 06-30-10
REGISTERED CIVIL ENGINEER DATE

07-06-10
PLANS APPROVAL DATE

REGISTERED PROFESSIONAL ENGINEER
PAUL FONG
No. C67053
Exp. 9/30/10
CIVIL
STATE OF CALIFORNIA

THE STATE OF CALIFORNIA OR ITS OFFICERS OR AGENTS SHALL NOT BE RESPONSIBLE FOR THE ACCURACY OR COMPLETENESS OF SCANNED COPIES OF THIS PLAN SHEET.

NOTES:

1. ROCK SLOPE PROTECTION SHALL BE REPLACED AT THE SAME LOCATION.
2. 12" DIAMETER HOLES SHALL BE CONSTRUCTED ON BOTH SIDES OF THE WINGWALLS AND SHALL MATCH THE FLOW LINES TOWARD THE WALLS.

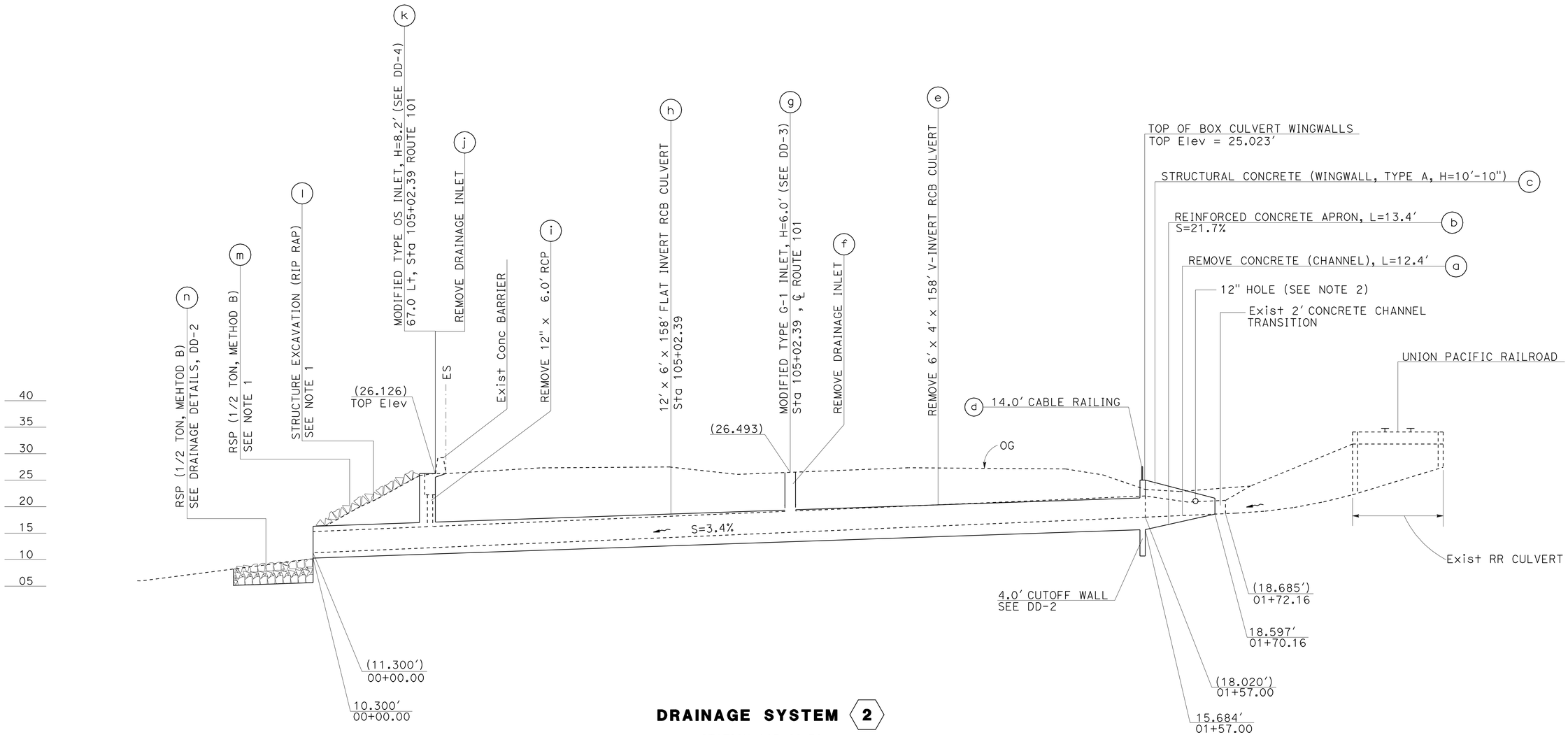

DRAINAGE SYSTEM 2

STATION 105+02.39

SCALE: Horiz 1"=10'
Vert 1"=10'

DRAINAGE PROFILE

DP-2

CALCULATED-DESIGNED BY	PAUL FONG	REVISED BY
CHECKED BY	FUSUNG CHANG	DATE REVISED
FUNCTIONAL SUPERVISOR	DAVE BHALLA	

STATE OF CALIFORNIA - DEPARTMENT OF TRANSPORTATION
Caltrans
HYDRAULICS

LAST REVISION 00-00-00
DATE PLOTTED => 10-JAN-2011
TIME PLOTTED => 10:41

Dist	COUNTY	ROUTE	POST MILES TOTAL PROJECT	SHEET No.	TOTAL SHEETS
07	Ven	101	42.0	9	45

Paul Fong 06-30-10
REGISTERED CIVIL ENGINEER DATE

07-06-10
PLANS APPROVAL DATE

REGISTERED PROFESSIONAL ENGINEER
PAUL FONG
No. C67053
Exp. 9/30/10
CIVIL
STATE OF CALIFORNIA

THE STATE OF CALIFORNIA OR ITS OFFICERS OR AGENTS SHALL NOT BE RESPONSIBLE FOR THE ACCURACY OR COMPLETENESS OF SCANNED COPIES OF THIS PLAN SHEET.

NOTE:

1. ROCK SLOPE PROTECTION NOT SHOWN FOR CLARITY

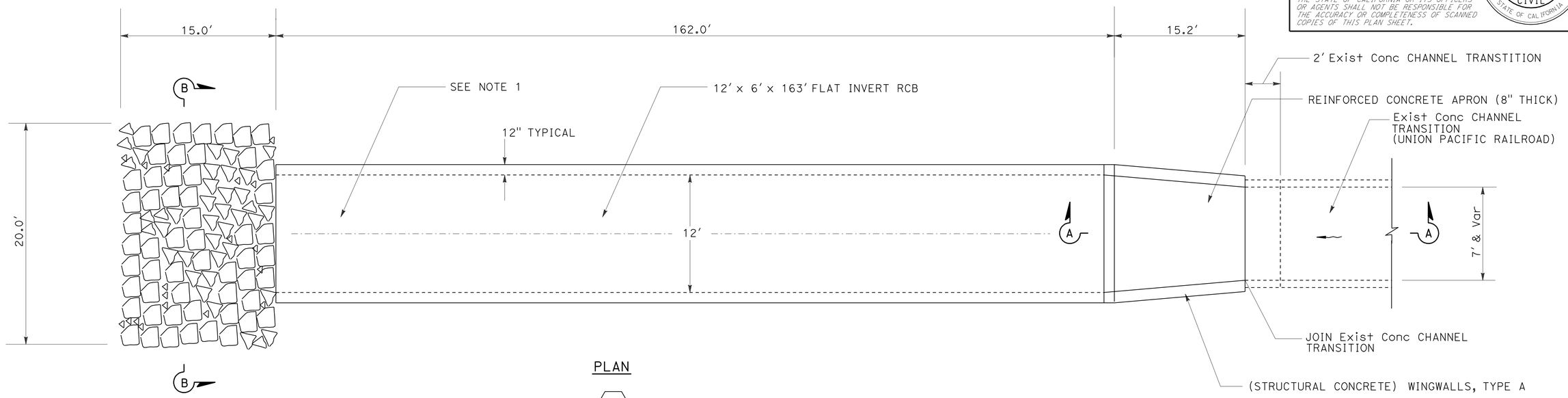

PLAN

1

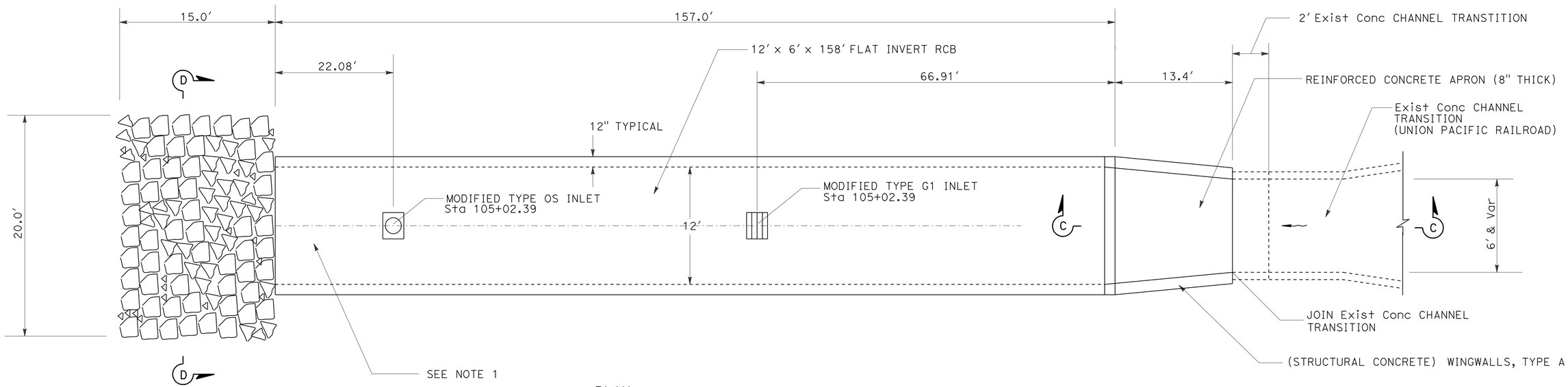

PLAN

2

DRAINAGE DETAILS

NO SCALE

DD-1

STATE OF CALIFORNIA - DEPARTMENT OF TRANSPORTATION
Caltrans
HYDRAULICS

FUNCTIONAL SUPERVISOR: DAVE BHALLA
CALCULATED-DESIGNED BY: PAUL FONG
CHECKED BY: FUSUNG CHANG
REVISED BY
DATE REVISED

LAST REVISION 00-00-00
DATE PLOTTED => 10-JAN-2011
TIME PLOTTED => 10:41

Dist	COUNTY	ROUTE	POST MILES TOTAL PROJECT	SHEET No.	TOTAL SHEETS
07	Ven	101	42.0	10	45

Paul Fong 06-30-10
REGISTERED CIVIL ENGINEER DATE

07-06-10
PLANS APPROVAL DATE

REGISTERED PROFESSIONAL ENGINEER
PAUL FONG
No. C67053
Exp. 9/30/10
CIVIL
STATE OF CALIFORNIA

THE STATE OF CALIFORNIA OR ITS OFFICERS OR AGENTS SHALL NOT BE RESPONSIBLE FOR THE ACCURACY OR COMPLETENESS OF SCANNED COPIES OF THIS PLAN SHEET.

NOTES:

1. REFER TO STANDARD PLANS FOR PARAPET DETAIL AND REINFORCEMENT. #5 BARS SHALL BE USED INSTEAD OF #4 BARS, AND FOR PARAPET "p" BARS REFER TO PARAPET REINFORCEMENT.
2. 8" HOLE IN DIAMETER SHALL BE CONSTRUCTED ON BOTH SIDES OF THE WINGWALLS AND SHALL MATCH THE FLOW LINES TOWARD THE WINGWALLS.
3. 12" HOLE IN DIAMETER SHALL BE CONSTRUCTED ON BOTH SIDES OF THE WINGWALLS AND SHALL MATCH THE FLOW LINES TOWARD THE WINGWALLS.

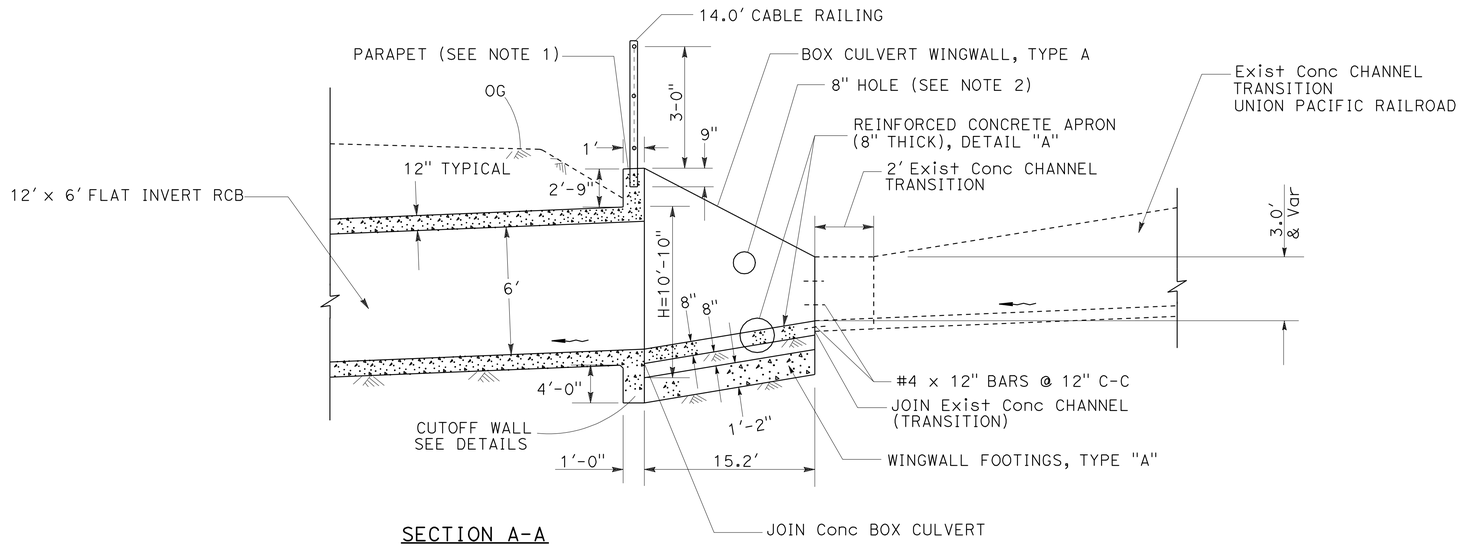

SECTION A-A

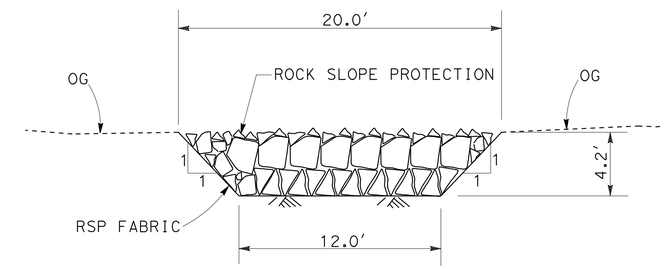

SECTION B-B & D-D

ROCK SLOPE PROTECTION DETAIL
(1/2 TON, METHOD B)

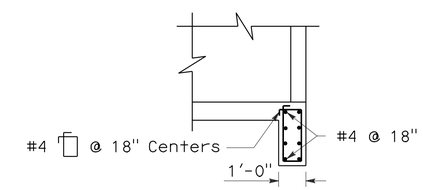

SECTION A-A & C-C
CUTOFF WALLS

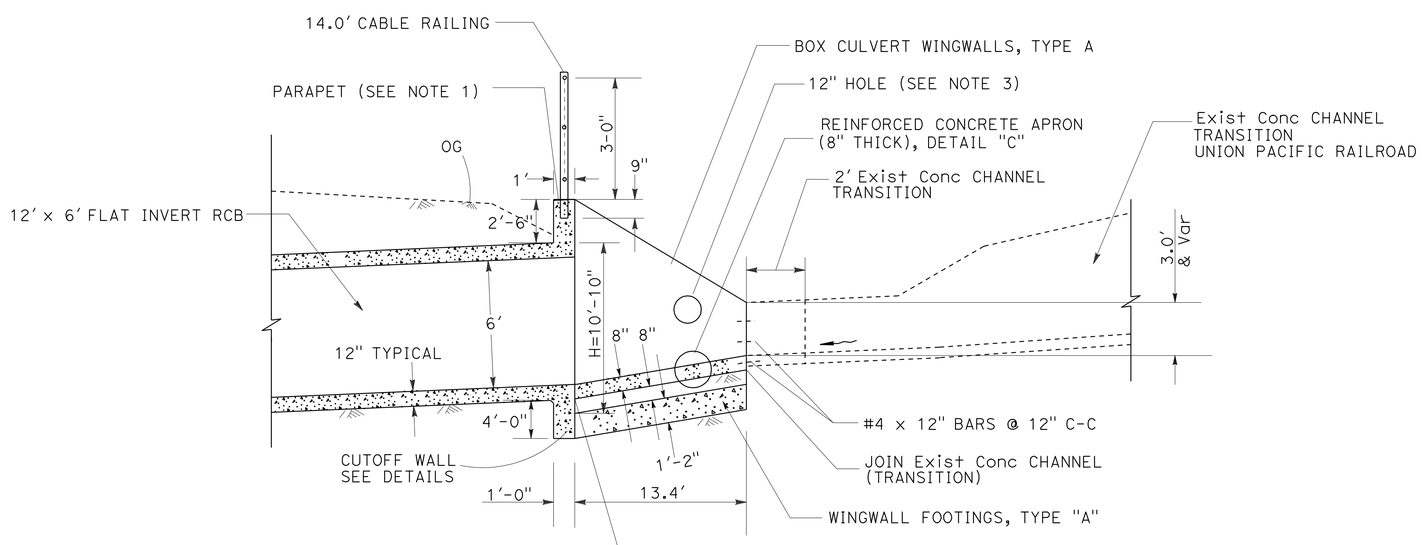

SECTION C-C

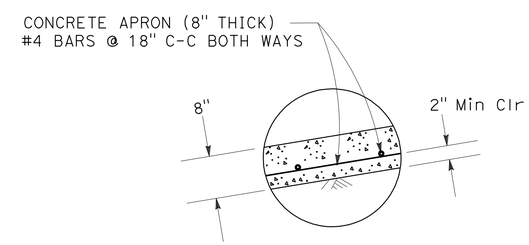

RC APRON DETAILS "A" & "C"

DRAINAGE DETAILS

NO SCALE

DD-2

STATE OF CALIFORNIA - DEPARTMENT OF TRANSPORTATION
Caltrans
HYDRAULICS
FUNCTIONAL SUPERVISOR: DAVE BHALLA
CALCULATED-DESIGNED BY: PAUL FONG
CHECKED BY: FUSUNG CHANG
REVISED BY
DATE REVISED

LAST REVISION 00-00-00
DATE PLOTTED => 10-JAN-2011
TIME PLOTTED => 10:41

Dist	COUNTY	ROUTE	POST MILES TOTAL PROJECT	SHEET No.	TOTAL SHEETS
07	Ven	101	42.0	11	45

Paul Fong 06-30-10
REGISTERED CIVIL ENGINEER DATE

07-06-10
PLANS APPROVAL DATE

REGISTERED PROFESSIONAL ENGINEER
PAUL FONG
No. C67053
Exp. 9/30/10
CIVIL
STATE OF CALIFORNIA

THE STATE OF CALIFORNIA OR ITS OFFICERS OR AGENTS SHALL NOT BE RESPONSIBLE FOR THE ACCURACY OR COMPLETENESS OF SCANNED COPIES OF THIS PLAN SHEET.

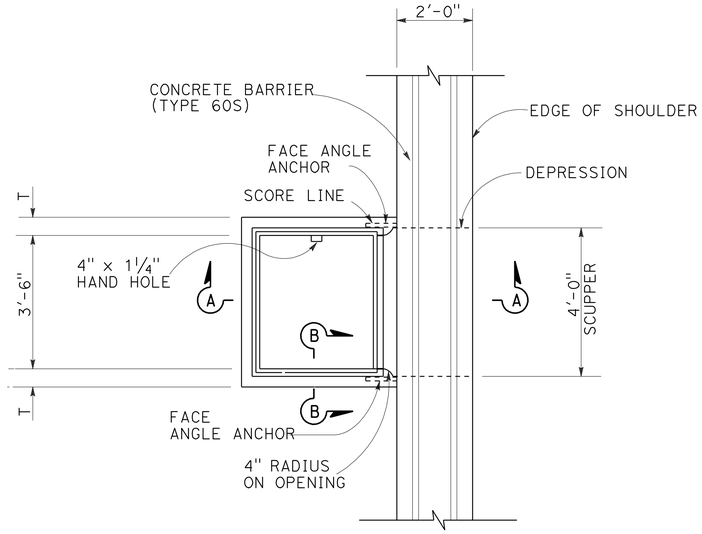

PLAN

MODIFIED TYPE OS

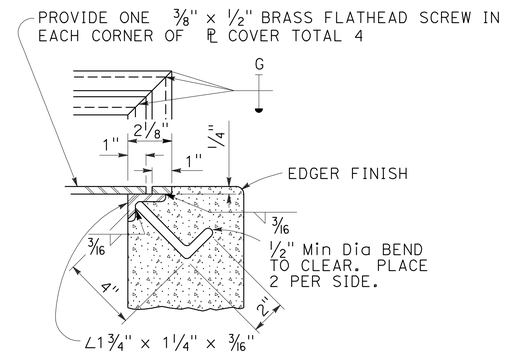

SECTION B-B

NOTES:

1. WALL REINFORCING IS REQUIRED. WALLS SHALL BE REINFORCED WITH #4 BARS @ 18" ± CENTERS PLACED 1½" CLEAR TO INSIDE OF BOX UNLESS OTHERWISE SHOWN.
2. INLET BOTTOM REINFORCING NOT REQUIRED.
3. INSTALL STEPS WITH LOWEST RUNG 1'-0" ABOVE THE FLOOR AND HIGHEST RUNG NOT MORE THAN 6" BELOW TOP OF INLET. THE DISTANCE BETWEEN STEPS SHALL NOT EXCEED 1'-0" AND BE UNIFORM THROUGHOUT THE LENGTH OF THE WALL. PLACE STEPS IN THE WALL WITHOUT AN OPENING. STEP INSERTS MAY BE SUBSTITUTED FOR THE BAR STEPS. STEP INSERTS SHALL COMPLY WITH STATE INDUSTRIAL SAFETY REQUIREMENTS.
4. DEPRESSION SHALL BEGIN FROM THE EDGE OF THE SHOULDER TOWARD THE INLET.
5. FULL PENETRATION BUTT WELDS MAY BE SUBSTITUTED FOR THE FILLET WELDS ON ANCHORS.
6. STANDARD SQUARE, HEXAGON, ROUND OR EQUIVALENT HEADED ANCHORS MAY BE SUBSTITUTED FOR RIGHT ANGLE HOOKS.
7. PRECAST ALTERNATIVE IS OPTIONAL.
8. CAST-IN-PLACE INLETS SHALL BE FORMED AROUND RCB INTERSECTING THE INLET, AND INLET POURED IN ONE CONTINUOUS OPERATION.

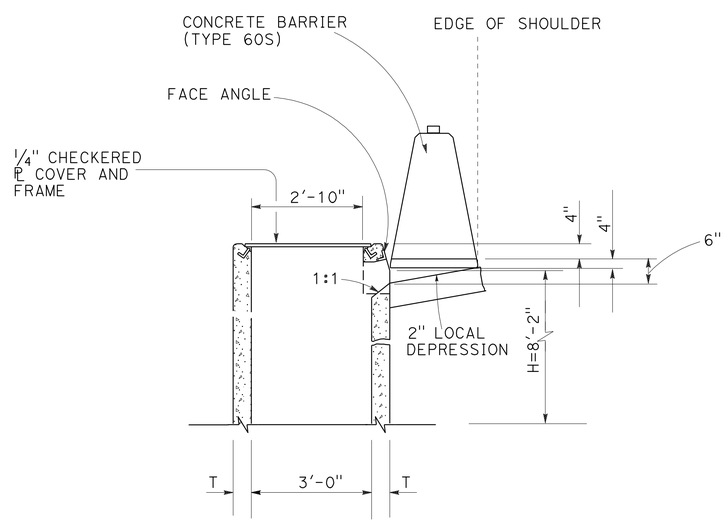

SECTION A-A

DRAINAGE DETAILS

NO SCALE

DD-3

STATE OF CALIFORNIA - DEPARTMENT OF TRANSPORTATION
Caltrans® HYDRAULICS

FUNCTIONAL SUPERVISOR: DAVE BHALLA

CALCULATED-DESIGNED BY: PAUL FONG
CHECKED BY: FUSUNG CHANG

REVISED BY | DATE REVISED

LAST REVISION 00-00-00 | DATE PLOTTED => 10-JAN-2011 | TIME PLOTTED => 10:41

Dist	COUNTY	ROUTE	POST MILES TOTAL PROJECT	SHEET No.	TOTAL SHEETS
07	Ven	101	42.0	12	45

Paul Fong 06-30-10
REGISTERED CIVIL ENGINEER DATE

07-06-10
PLANS APPROVAL DATE

REGISTERED PROFESSIONAL ENGINEER
PAUL FONG
No. C67053
Exp. 9/30/10
CIVIL
STATE OF CALIFORNIA

THE STATE OF CALIFORNIA OR ITS OFFICERS OR AGENTS SHALL NOT BE RESPONSIBLE FOR THE ACCURACY OR COMPLETENESS OF SCANNED COPIES OF THIS PLAN SHEET.

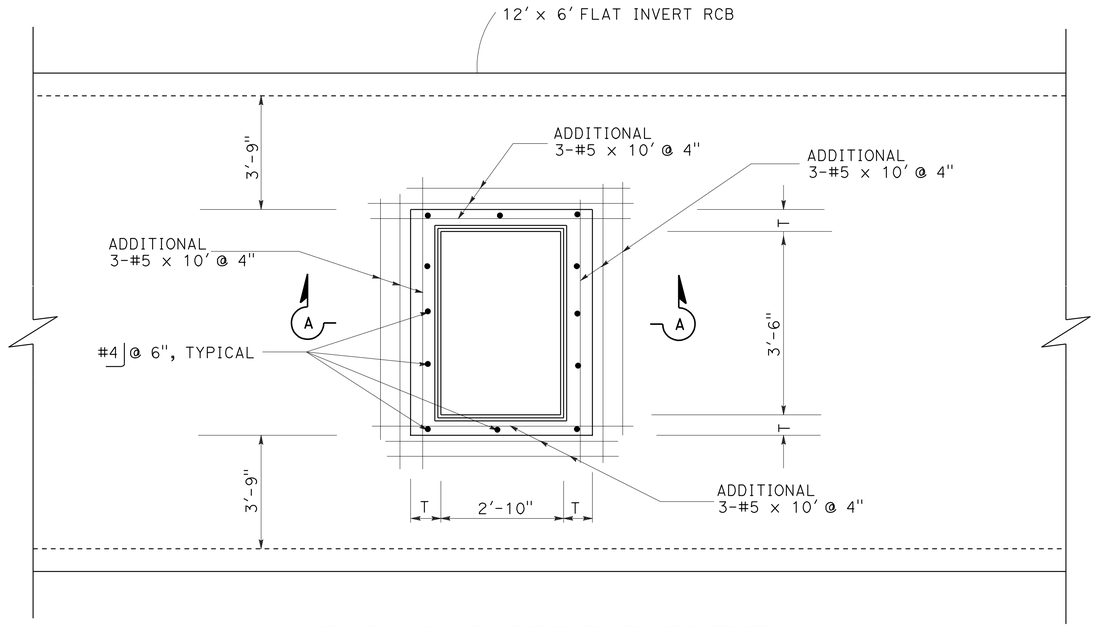

TOP SLAB REINFORCEMENT

MODIFIED TYPE OS ON TOP OF RCB

NOTES:

1. WALLS SHALL BE REINFORCED WITH #4 BARS @ 18" ± CENTERS PLACED 1½" CLEAR TO INSIDE OF BOX UNLESS OTHERWISE SHOWN.
2. PRECAST ALTERNATIVE IS OPTIONAL.
3. SET INLET SO GRATE BARS ARE PARALLEL TO DIRECTION OF PRINCIPAL SURFACE FLOW.
4. CAST-IN-PLACE INLETS SHALL BE FORMED AROUND RCB INTERSECTING THE INLET, AND INLET POURED IN ONE CONTINUOUS OPERATION.

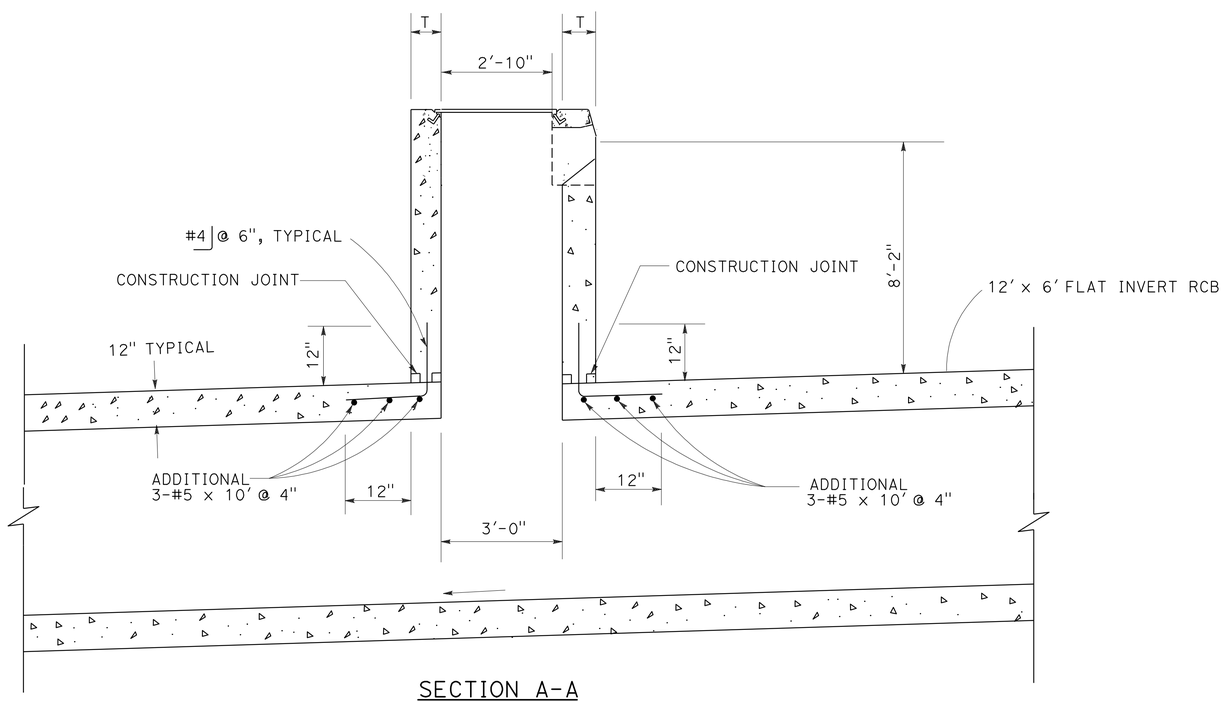

SECTION A-A

DRAINAGE DETAILS

NO SCALE

DD-4

STATE OF CALIFORNIA - DEPARTMENT OF TRANSPORTATION
Caltrans®
HYDRAULICS

FUNCTIONAL SUPERVISOR: DAVE BHALLA

CALCULATED-DESIGNED BY: PAUL FONG
CHECKED BY: FUSUNG CHANG

REVISED BY | DATE REVISED

LAST REVISION 00-00-00 | DATE PLOTTED => 10-JAN-2011 | TIME PLOTTED => 10:41

Dist	COUNTY	ROUTE	POST MILES TOTAL PROJECT	SHEET No.	TOTAL SHEETS
07	Ven	101	42.0	13	45

Paul Fong 06-30-10
REGISTERED CIVIL ENGINEER DATE

07-06-10
PLANS APPROVAL DATE

REGISTERED PROFESSIONAL ENGINEER
PAUL FONG
No. C67053
Exp. 9/30/10
CIVIL
STATE OF CALIFORNIA

THE STATE OF CALIFORNIA OR ITS OFFICERS OR AGENTS SHALL NOT BE RESPONSIBLE FOR THE ACCURACY OR COMPLETENESS OF SCANNED COPIES OF THIS PLAN SHEET.

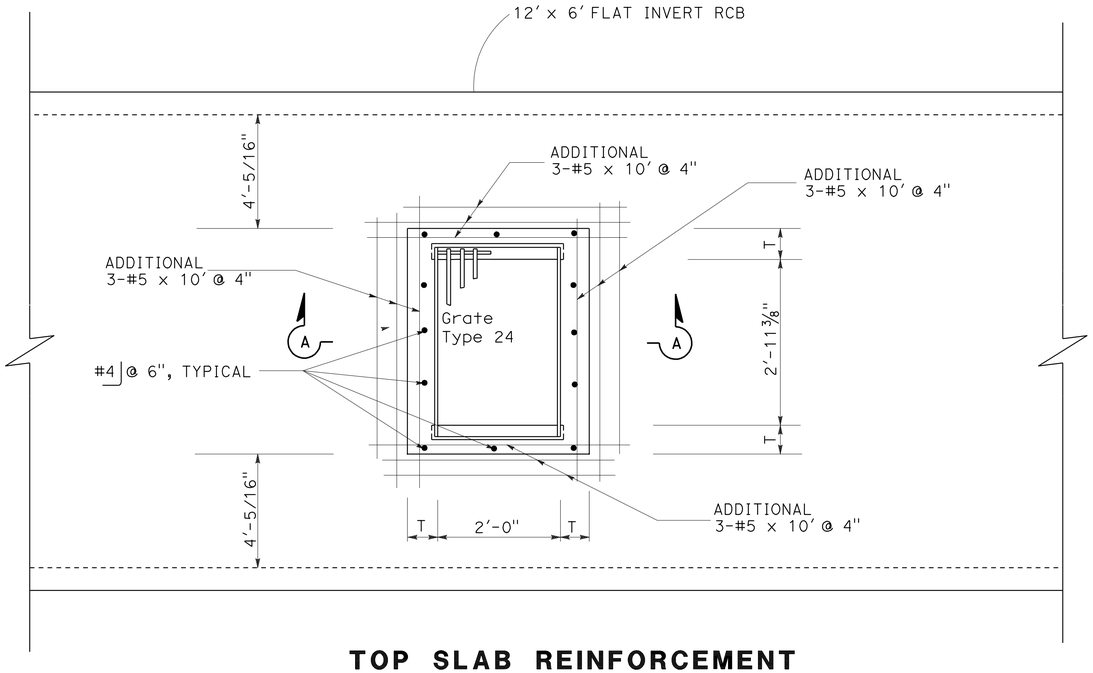

TOP SLAB REINFORCEMENT
MODIFIED TYPE G1 ON TOP OF RCB

NOTES:

1. WALLS SHALL BE REINFORCED WITH #4 BARS @ 1'-6" C-C PLACED 1½" CLEAR TO INSIDE OF BOX UNLESS OTHERWISE SHOWN.
2. PRECAST ALTERNATIVE IS OPTIONAL.
3. SET INLET SO GRATE BARS ARE PARALLEL TO DIRECTION OF PRINCIPAL SURFACE FLOW.
4. CAST-IN-PLACE INLETS SHALL BE FORMED AROUND RCB INTERSECTING THE INLET, AND INLET POURED IN ONE CONTINUOUS OPERATION.

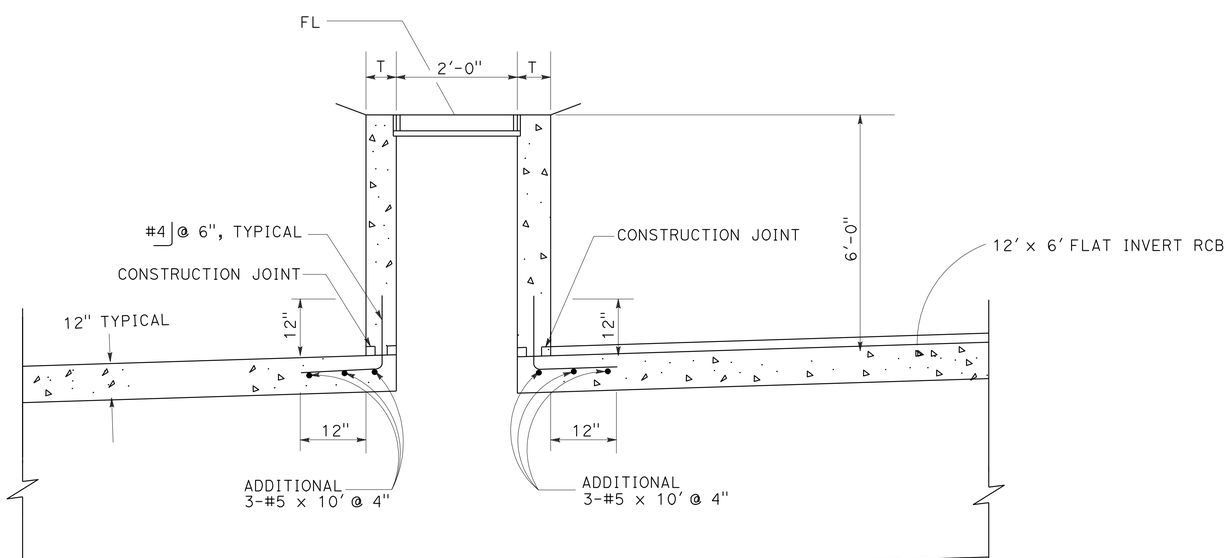

SECTION A-A

DRAINAGE DETAILS

NO SCALE

DD-5

STATE OF CALIFORNIA - DEPARTMENT OF TRANSPORTATION
Caltrans
HYDRAULICS

FUNCTIONAL SUPERVISOR: DAVE BHALLA
CALCULATED-DESIGNED BY: PAUL FONG
CHECKED BY: FUSUNG CHANG
REVISED BY
DATE REVISED

LAST REVISION 00-00-00
DATE PLOTTED => 10-JAN-2011
TIME PLOTTED => 10:41

Dist	COUNTY	ROUTE	POST MILES TOTAL PROJECT	SHEET NO.	TOTAL SHEETS
07	Ven	101	42.0	14	45

REGISTERED ENGINEER - CIVIL 06-30-10

PLANS APPROVAL DATE 07-06-10

REGISTERED PROFESSIONAL ENGINEER MIKE K. NGUYEN No. 67756 Exp. 6-30-11 CIVIL STATE OF CALIFORNIA

The State of California or its officers or agents shall not be responsible for the accuracy or completeness of electronic copies of this plan sheet.

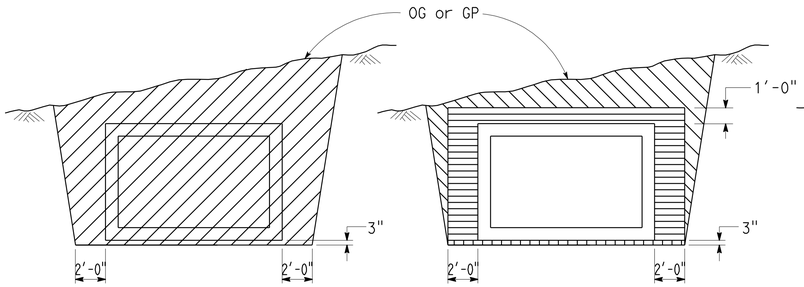

EXCAVATION BACKFILL

IN TRENCH

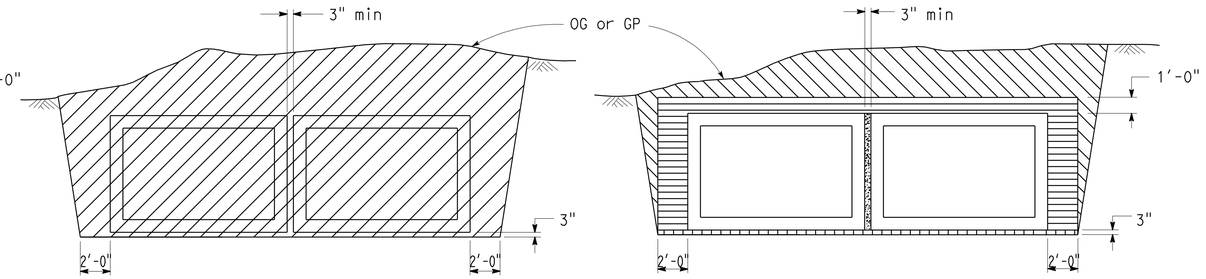

EXCAVATION BACKFILL

IN TRENCH

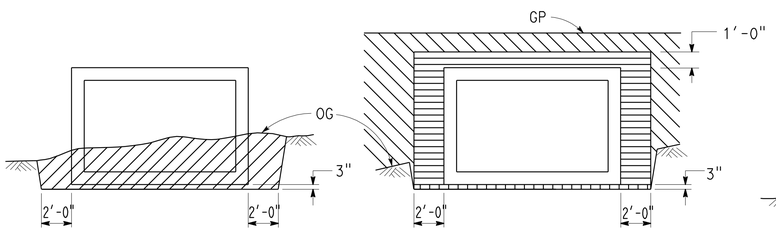

EXCAVATION BACKFILL

IN EMBANKMENT

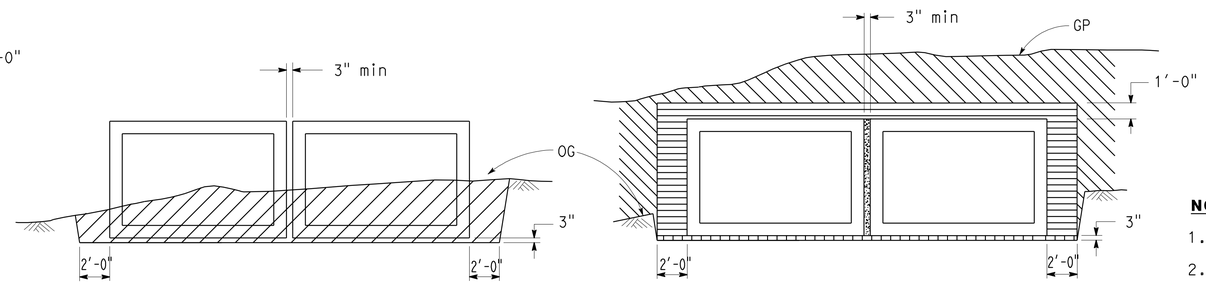

EXCAVATION BACKFILL

IN EMBANKMENT

FILL HEIGHT GREATER THAN 2'-0"

Structure excavation (Culvert)

Structure backfill (Culvert) 95% relative compaction

Roadway embankment

Slurry cement backfill

Sand bedding (Culvert)

Roadway structural section

Original ground

NOTES:

1. Slope or shore excavation sides as necessary.
2. Dimensions shown are minimum.
3. Method 2 and 3 for single or multiple boxes requires an approved external sealing band. See "Precast RCB Culvert, Reinforcement and Design Tables" sheet.
4. Construction of Roadway Structural Section in Method 2 or Method 3 shall not disturb the external sealing band installation.

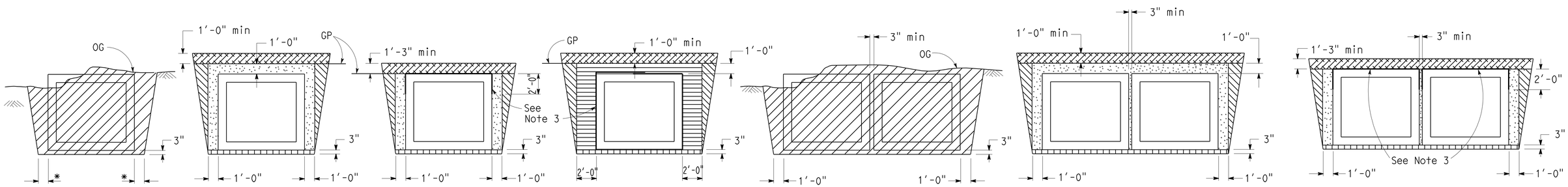

EXCAVATION METHOD 1 METHOD 2 METHOD 3 EXCAVATION METHOD 1 METHOD 2

BACKFILL BACKFILL

FILL HEIGHT 2'-0" OR LESS

* 1'-0" Where Method 1 or 2 Backfill is used.
2'-0" Where Method 3 Backfill is used.

DD-6

STANDARD DRAWING			
FILE NO. xs17-040e	APPROVED BY D FORESTER (RESPONSIBLE TECHNICAL SPECIALIST)	RELEASED BY ROBERTO LACALLE (RESPONSIBLE OFFICE CHIEF)	
	APPROVAL DATE 5-1-08	RELEASE DATE 5-1-08	

STATE OF CALIFORNIA DEPARTMENT OF TRANSPORTATION

DIVISION OF ENGINEERING SERVICES

BRIDGE NO.

POST MILE

CULVERT - PRECAST RCB

EXCAVATION AND BACKFILL DETAILS

DS OSD 2147A (ENGLISH STANDARD DRAWING "XS" BORDER REV. 01/11/08)

ORIGINAL SCALE IN INCHES FOR REDUCED PLANS 0 1 2 3

CU 07314
EA 174801

DISREGARD PRINTS BEARING EARLIER REVISION DATES

REVISION DATES (PRELIMINARY STAGE ONLY) SHEET OF

UNIT 1814 PROJECT NUMBER & PHASE 0700001671

DATE PLOTTED => 10-JAN-2011 TIME PLOTTED => 10:41

Dist	COUNTY	ROUTE	POST MILES TOTAL PROJECT	SHEET NO.	TOTAL SHEETS
07	Ven	101	42.0	15	45

REGISTERED ENGINEER - CIVIL 06-30-10

07-06-10
PLANS APPROVAL DATE

REGISTERED PROFESSIONAL ENGINEER MIKE K. NGUYEN No. 67756 Exp. 6-30-11 CIVIL STATE OF CALIFORNIA

The State of California or its officers or agents shall not be responsible for the accuracy or completeness of electronic copies of this plan sheet.

DESIGN NOTES

Specifications:

Design: Bridge Design Specifications (1983 AASHTO Specifications with revisions by Caltrans). Depth of cover is assumed to be uniform.

Earth Load:

Earth pressures for two conditions:
-140 lb/cf vert, 42 lb/cf horiz
-140 lb/cf vert, 140 lb/cf horiz

Unit Stresses:

f'c = 5.0 KSI
f'y = 65.0 KSI for weld wire fabric
n = 7

Shear:

Maximum allowable shear, $v=3.5\sqrt{f'c}$, PSI

Exclusion:

Axial loading on the members has not been considered.

Earthwork:

See "Precast RCB Culvert, Excavation and Backfill Details" sheet.

GENERAL NOTES

Designation:

Standard single or multiple precast box culverts are shown on the plans as span times height with maximum cover over roof thus: 8' x 5' RCB with 10'-0" or double 10' x 5' RCB with 20'-0", followed by alternatives.

Alternatives:

Single cell:

Standard dimensions of AASHTO Material Specification 'M259' or 'M273'.

Multiple Cell:

Constructed by placing single cells adjacent to each other. Inlet and outlet ends of culvert will be rounded unless square ends are designated. Parapet will be shown unless designated in plans. Such designation may be different for inlet and outlet ends.

Limitations:

Where the overfill is less than 12", Precast RCB culverts are not to be used. Precast RCB culverts are not to be used in siphon or pressurized installations unless appropriate "watertight" jointing is provided.

Special Reinforcement Coverage:

Precast RCB culvert standard details are not to be used in a corrosive environment or where there is a severe abrasive flow condition or freeze-thaw locations.

Special design:

Required for culvert with different conditions, or loads or design bearing pressures greater than those given on these plans. Required for culverts where end details need higher skew angles or higher parapets or barrier sections.

CONSTRUCTION NOTES

Cutoff Walls:

4'-0" Cutoff walls are to be provided at inlet and/or outlet unless channel is lined and unless otherwise shown. These walls are to be extended if scour conditions warrant. See Standard Plans D84, D85 and D86A.

Wingwalls:

Wingwalls shall be cast-in-place and shall conform to standard plan details for box culvert wingwalls. See Standard Plan D84, D85 and D86A.

Earthwork:

See "Precast RCB Culvert, Excavation and Backfill Details" sheet.

Construction Loads:

Strutting may be required near temporary ends. For construction loads on culverts, See Standard Plan D88.

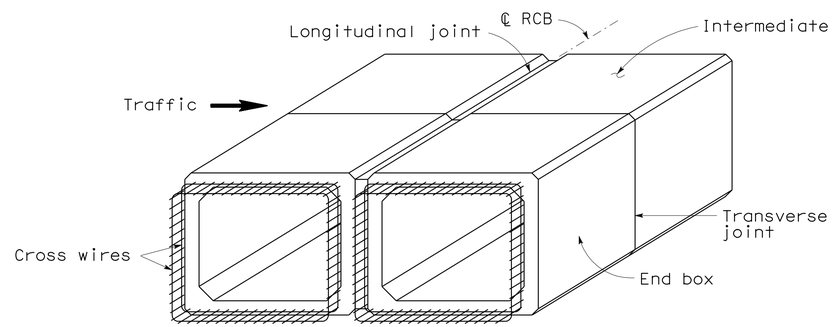

PRECAST RCB TERMINOLOGY

Note: Inner and outer reinforcement to be exposed as required to tie to cast -in-place construction. A minimum of two cross wires shall be exposed on all sides.

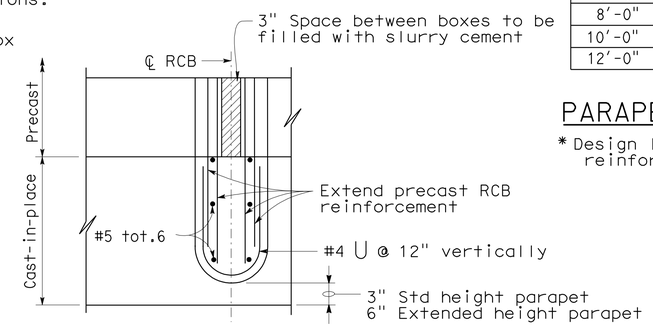

PARTIAL PLAN INTERIOR WALL MULTICELL CULVERT

Parapet "P" Bars			
Span \ Skew Angle	0° to 15°	16° to 30°	31° to 45°
4'-0"	#5	#5	#5
6'-0"	#5	#5	*
8'-0"	#5	#5	*
10'-0"	#5	*	*
12'-0"	#6	*	*

PARAPET REINFORCEMENT

* Design limited by skew of precast reinforced concrete box section

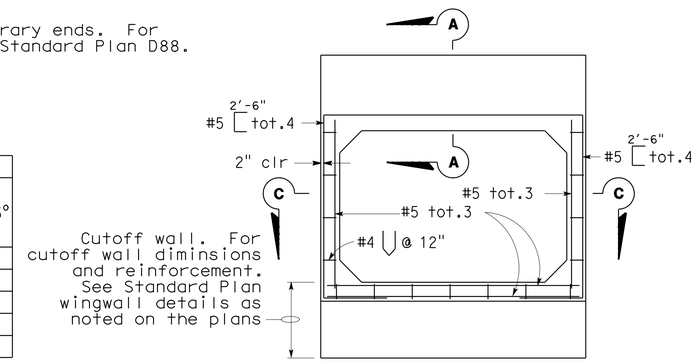

CAST-IN-PLACE END ELEVATION

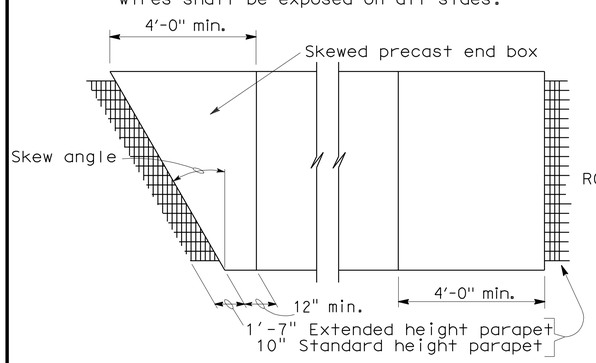

PARTIAL PLAN VIEW

For illustrative purposes only.
For correct skew direction see plans.

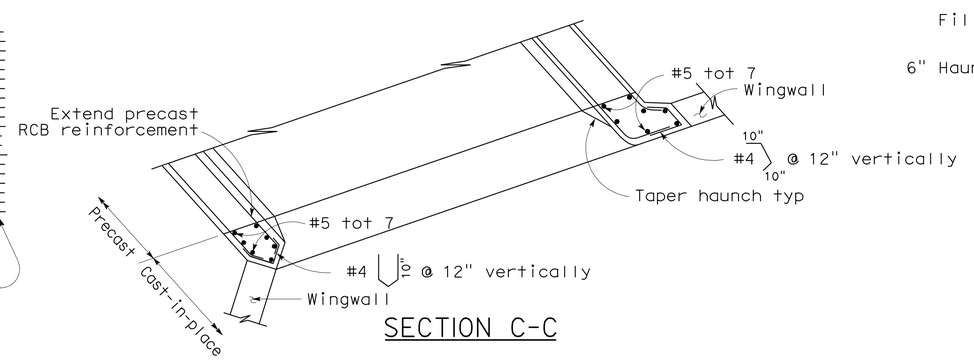

SECTION C-C

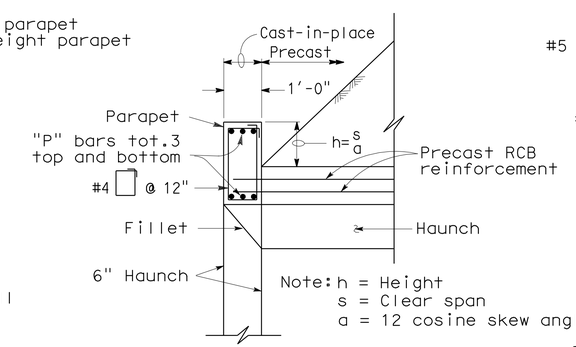

SECTION A-A

(Standard Height Parapet)

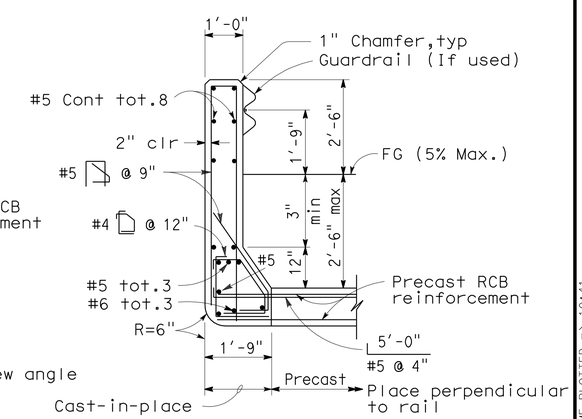

SECTION A-A

(Extended Height Parapet)

TYPICAL CULVERT END DETAILS

For wall and invert reinforcement not shown, See "End Elevation" detail

DD-7

STANDARD DRAWING			
FILE NO. xs17-030e	APPROVED BY D FORESTER, RESPONSIBLE TECHNICAL SPECIALIST	RELEASED BY ROBERTO LACALLE, RESPONSIBLE OFFICE CHIEF	
	APPROVAL DATE 5-1-08	RELEASE DATE 5-1-08	

STATE OF CALIFORNIA DEPARTMENT OF TRANSPORTATION

DIVISION OF ENGINEERING SERVICES

BRIDGE NO.

POST MILE

CULVERT - PRECAST RCB

MISCELLANEOUS DETAILS

DS OSD 2147A (ENGLISH STANDARD DRAWING "XS" BORDER REV. 01/11/08)

ORIGINAL SCALE IN INCHES FOR REDUCED PLANS 0 1 2 3

CU 07314
EA 174801

DISREGARD PRINTS BEARING EARLIER REVISION DATES

REVISION DATES (PRELIMINARY STAGE ONLY) SHEET OF

UNIT 1814 PROJECT NUMBER & PHASE 0700001671

DATE PLOTTED => 10-JAN-2011 TIME PLOTTED => 10:41

Mike K. Nguyen 06-30-10
REGISTERED ENGINEER - CIVIL
07-06-10
PLANS APPROVAL DATE

The State of California or its officers or agents shall not be responsible for the accuracy or completeness of electronic copies of this plan sheet.

REGISTERED PROFESSIONAL ENGINEER MIKE K. NGUYEN No. 67756 Exp. 6-30-11 CIVIL STATE OF CALIFORNIA

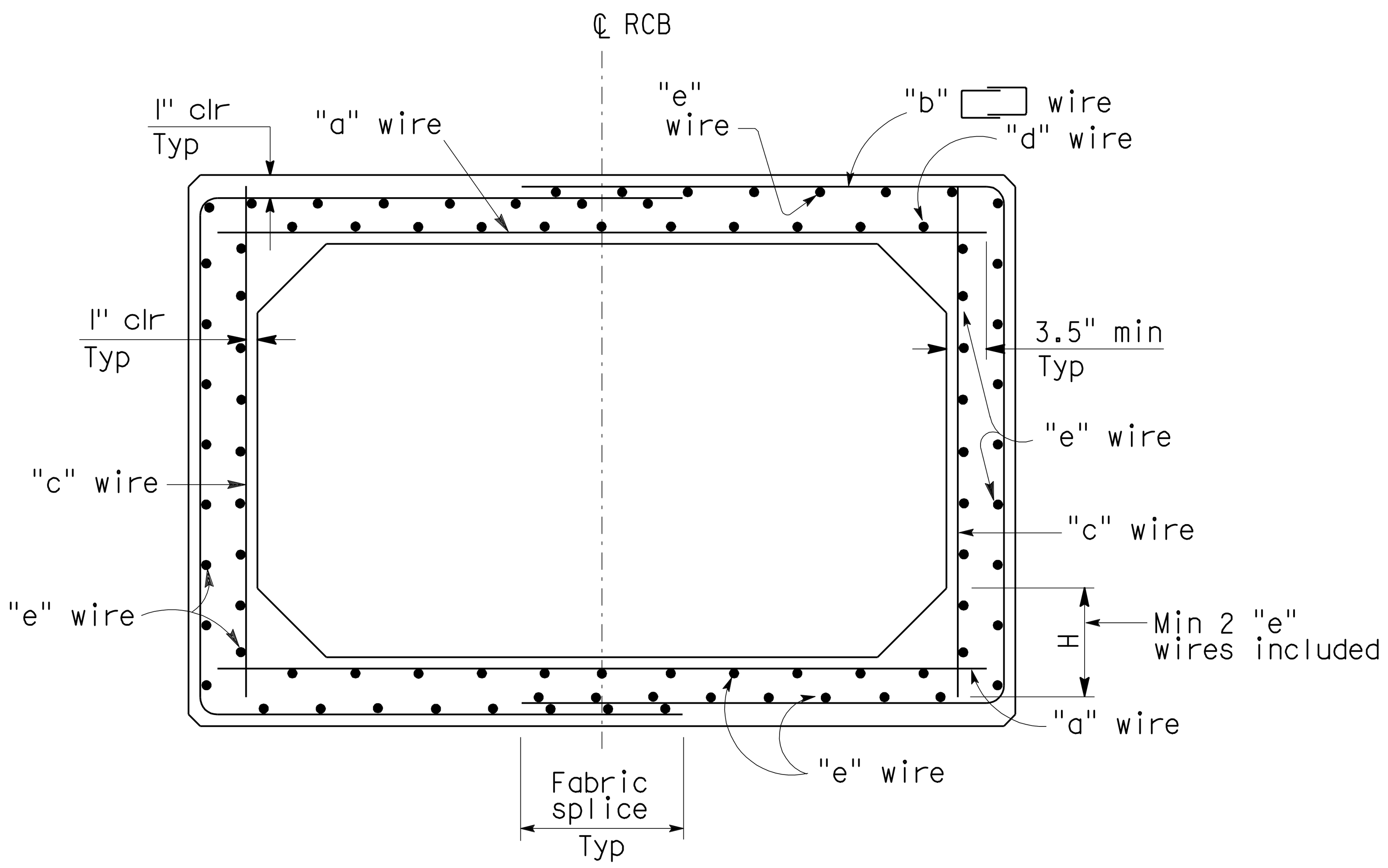

TYPICAL SECTION - SPANS 4'-0" THRU 12'-0"

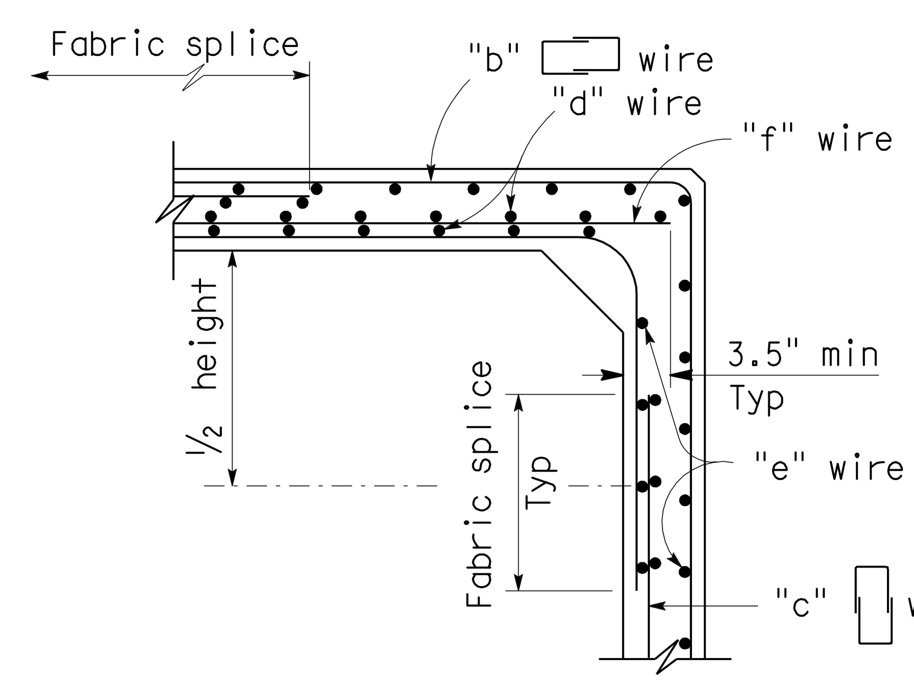

ALTERNATIVE DETAILING OPTION

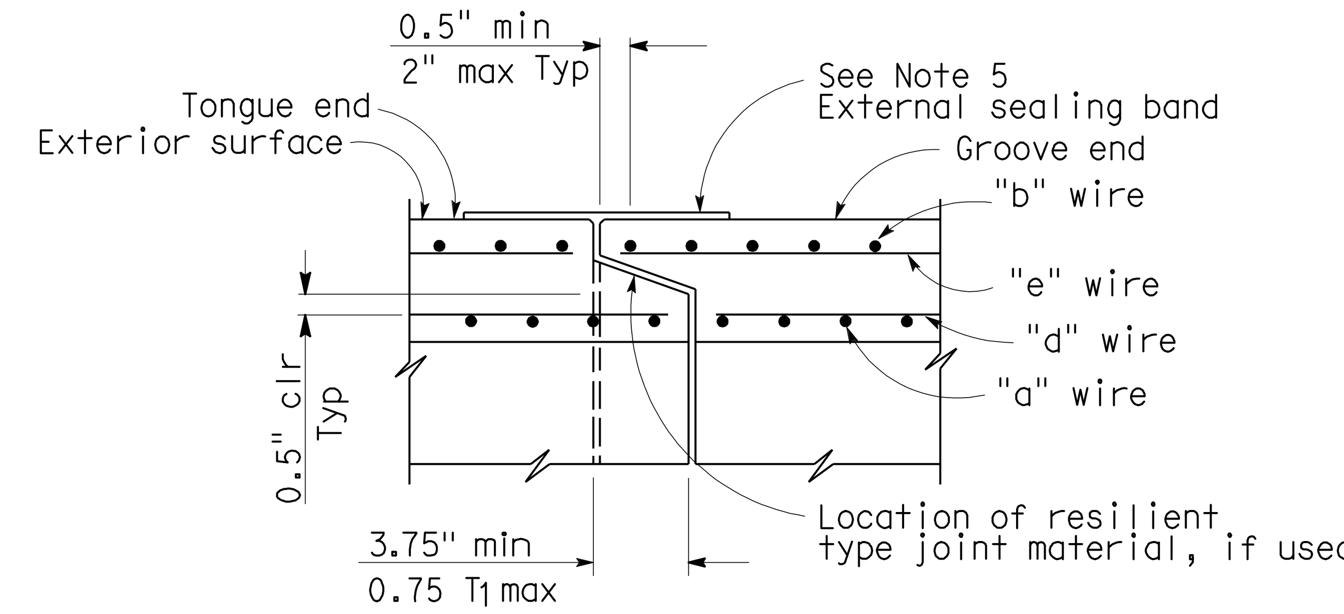

END JOINT DETAIL

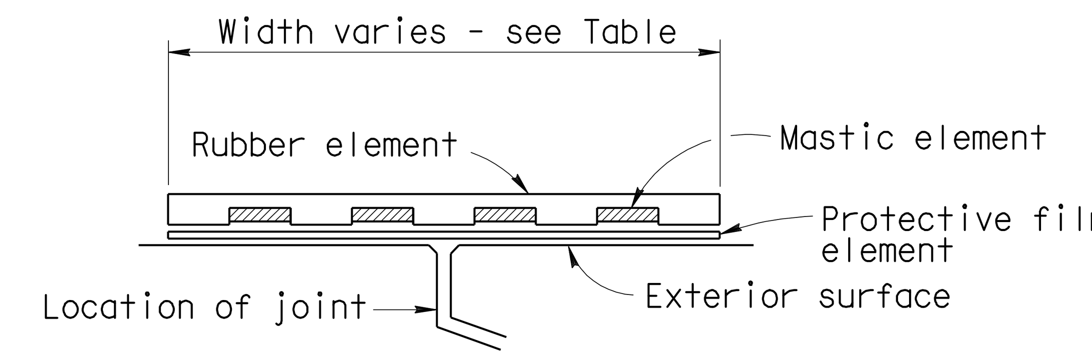

EXTERNAL SEALING BAND SCHEMATIC

NOTES:

1. The inside and outside surfaces of the RCB roof shall be marked "TOP".
2. H minimum shall equal the wall thickness. H maximum shall be 8" for spans through 8' and 14" for spans over 8'.
3. Quantities are approximate and for design purposes only.
4. For design and details not shown see "Precast RCB Culvert, Miscellaneous Details" sheet.
5. For external sealing band applications see "Precast RCB Culvert, Excavation and Backfill Details" sheet.

AASHTO STANDARD SHAPE			M259						M273					
SPAN (ft)			4						4					
HEIGHT (ft)			2		3		4		2		3		4	
Maximum earth cover (ft)			10	20	10	20	10	20	10	20	10	20	10	20
Concrete (inch)	Roof	T_1	5	5	5	5	5	5	7.5	7.5	7.5	7.5	7.5	7.5
	Side wall	T_2	5	5	5	5	5	5	5	5	5	5	5	5
	Invert	T_3	5	5	5	5	5	5	6	6	6	6	6	6
Minimum welded wire fabric Reinf areas (Square inch/LF)		"a"	.41	.41	.43	.43	.45	.45	.29	.29	.31	.31	.31	.31
		"b"	.36	.25	.32	.27	.32	.35	.14	.23	.15	.28	.20	.37
		"c"	.13	.13	.13	.13	.13	.18	.13	.13	.13	.13	.13	.20
		"d"	.21	.13	.22	.13	.23	.13	.15	.13	.16	.13	.16	.13
		"e"	.13	.13	.13	.13	.13	.13	.13	.13	.13	.13	.13	.13
		"f"	.28	.28	.30	.30	.32	.27	.16	.16	.18	.18	.18	.11
* Quantity	Conc	CY/LF	.22		.26		.29		.28		.31		.34	
	Reinf	LB/LF	53	45	56	53	62	63	35	40	40	48	47	61

AASHTO STANDARD SHAPE			M259								M273							
SPAN (ft)			5								5							
HEIGHT (ft)			2		3		4		5		2		3		4		5	
Maximum earth cover (ft)			10	20	10	20	10	20	10	20	10	20	10	20	10	20	10	20
Concrete (inch)	Roof	T_1	6	6	6	6	6	6	6	6	8	8	8	8	8	8	8	8
	Side wall	T_2	6	6	6	6	6	6	6	6	6	6	6	6	6	6	6	6
	Invert	T_3	6	6	6	6	6	6	6	6	7	7	7	7	7	7	7	7
Minimum welded wire fabric Reinf areas (Square inch/LF)		"a"	.38	.38	.41	.41	.42	.42	.43	.43	.31	.31	.33	.33	.34	.34	.34	.34
		"b"	.34	.30	.31	.31	.30	.35	.30	.43	.18	.27	.16	.30	.19	.35	.25	.45
		"c"	.13	.13	.13	.13	.13	.13	.14	.23	.13	.13	.13	.13	.13	.13	.14	.25
		"d"	.17	.13	.19	.13	.19	.13	.20	.13	.14	.13	.15	.13	.16	.13	.16	.13
		"e"	.13	.13	.13	.13	.13	.13	.13	.13	.13	.13	.13	.13	.13	.13	.13	.13
		"f"	.25	.25	.28	.28	.29	.29	.29	.20	.18	.18	.20	.20	.21	.21	.20	.09
* Quantity	Conc	CY/LF	.32		.35		.39		.43		.37		.41		.44		.48	
	Reinf	LB/LF	56	52	61	58	65	67	71	83	42	47	45	55	52	64	62	82

AASHTO STANDARD SHAPE			M259								M273							
SPAN (ft)			6								6							
HEIGHT (ft)			3		4		5		6		3		4		5		6	
Maximum earth cover (ft)			10	20	10	20	10	20	10	20	10	20	10	20	10	20	10	20
Concrete (inch)	Roof	T_1	7	7	7	7	7	7	7	7	8	8	8	8	8	8	8	8
	Side wall	T_2	7	7	7	7	7	7	7	7	7	7	7	7	7	7	7	7
	Invert	T_3	7	7	7	7	7	7	7	7	7	7	7	7	7	7	7	7
Minimum welded wire fabric Reinf areas (Square inch/LF)		"a"	.39	.39	.41	.41	.42	.42	.42	.42	.36	.38	.37	.40	.38	.40	.38	.39
		"b"	.30	.36	.29	.38	.29	.44	.35	.52	.23	.36	.25	.39	.29	.44	.35	.52
		"c"	.14	.14	.14	.14	.14	.14	.17	.29	.14	.14	.14	.14	.14	.14	.18	.29
		"d"	.16	.13	.17	.13	.18	.13	.18	.13	.15	.13	.16	.13	.16	.13	.16	.13
		"e"	.13	.13	.13	.13	.13	.13	.13	.13	.13	.13	.13	.13	.13	.13	.13	.13
		"f"	.25	.25	.27	.27	.28	.28	.25	.13	.22	.24	.23	.26	.24	.26	.20	.10
* Quantity	Conc	CY/LF	.47		.51		.55		.59		.49		.53		.57		.62	
	Reinf	LB/LF	67	71	72	81	78	90	90	110	60	72	67	81	75	89	88	108

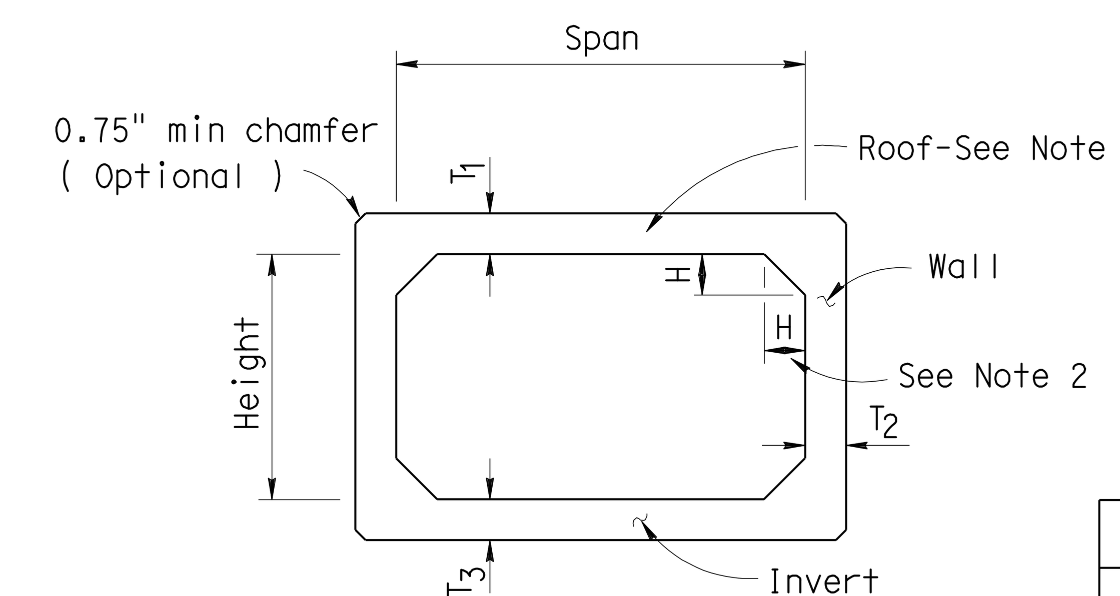

SCHEMATIC

TABLE	
SPAN (ft)	EXTERNAL SEALING BAND WIDTH (inch)
4-6	9
7-8	11
10-12	13

AASHTO STANDARD SHAPE		M259 AND M273										M259 AND M273									
SPAN (ft)		7										8									
HEIGHT (ft)		3		4		5		6		7		4		5		6		7		8	
Maximum earth cover (ft)		10	20	10	20	10	20	10	20	10	20	10	20	10	20	10	20	10	20	10	20
Concrete (Inch)	$T_1=T_2=T_3$	8	8	8	8	8	8	8	8	8	8	8	8	8	8	8	8	8	8	8	8
Minimum welded wire fabric Reinf areas (Square inch/LF)	"a"	.39	.44	.40	.47	.42	.48	.42	.48	.43	.48	.45	.59	.47	.61	.48	.62	.48	.62	.49	.61
	"b"	.31	.42	.30	.43	.30	.47	.35	.53	.42	.62	.34	.55	.37	.58	.41	.63	.47	.71	.55	.82
	"c"	.16	.16	.16	.16	.16	.16	.16	.18	.22	.35	.16	.16	.16	.16	.16	.16	.18	.27	.29	.47
	"d"	.15	.13	.16	.13	.16	.13	.16	.13	.16	.13	.16	.13	.17	.13	.17	.13	.17	.13	.18	.13
	"e"	.13	.13	.13	.13	.13	.13	.13	.13	.13	.13	.13	.13	.13	.13	.13	.13	.13	.13	.13	.13
	"f"	.23	.28	.24	.31	.26	.32	.26	.30	.21	.13	.29	.43	.31	.45	.32	.46	.30	.35	.20	.14
* Quantity Conc	CY/LF	.59		.64		.69		.74		.79		.69		.74		.79		.84		.89	
* Quantity Reinf	LB/LF	77	89	82	97	84	103	98	121	115	146	96	125	106	140	117	149	131	171	156	205

AASHTO STANDARD SHAPE		M259 AND M273												M259 AND M273													
SPAN (ft)		10												12													
HEIGHT (ft)		5		6		7		8		9		10		6		7		8		9		10		11		12	
Maximum earth cover (ft)		10	20	10	20	10	20	10	20	10	20	10	20	10	20	10	20	10	20	10	20	10	20	10	20	10	20
Concrete (Inch)	$T_1=T_2=T_3$	10	10	10	10	10	10	10	10	10	10	10	10	12	12	12	12	12	12	12	12	12	12	12	12	12	12
Minimum welded wire fabric Reinf areas (Square inch/LF)	"a"	.45	.71	.46	.74	.46	.75	.47	.76	.47	.75	.47	.74	.51	.85	.52	.87	.53	.89	.54	.90	.54	.90	.54	.89	.53	.88
	"b"	.45	.67	.47	.70	.50	.74	.55	.81	.62	.90	.71	1.02	.53	.80	.55	.83	.58	.87	.63	.93	.69	1.01	.77	1.12	.86	1.24
	"c"	.21	.21	.21	.21	.21	.21	.21	.21	.27	.40	.40	.60	.25	.25	.25	.25	.25	.25	.25	.25	.25	.35	.38	.54	.51	.76
	"d"	.15	.13	.15	.13	.15	.13	.15	.13	.15	.13	.15	.13	.15	.13	.15	.13	.16	.13	.16	.13	.16	.13	.16	.13	.16	.13
	"e"	.13	.13	.13	.13	.13	.13	.13	.13	.13	.13	.13	.13	.13	.13	.13	.13	.13	.13	.13	.13	.13	.13	.13	.13	.13	.13
	"f"	.24	.50	.25	.53	.25	.54	.26	.55	.20	.35	.07	.14	.26	.60	.27	.62	.28	.64	.29	.65	.29	.55	.16	.35	.02	.12
* Quantity Conc	CY/LF	1.08		1.14		1.20		1.27		1.33		1.39		1.56		1.63		1.70		1.78		1.85		1.93		2.00	
* Quantity Reinf	LB/LF	133	179	142	193	153	206	168	227	189	294	221	304	173	243	184	259	198	276	215	297	233	328	265	372	302	425

* See Note 3

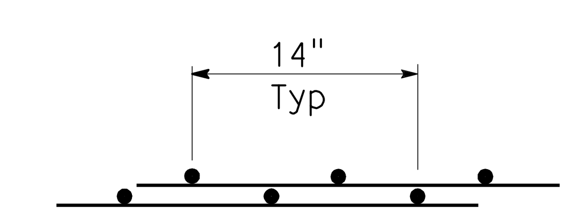

FABRIC SPLICE DETAIL

DESIGN BEARING PRESSURE TSF		
SPAN \ COVER	10'	20'
4' thru 8'	1.1	2.0
10' thru 12'	1.3	2.1

DD-8

Dist	COUNTY	ROUTE	POST MILES TOTAL PROJECT	SHEET No.	TOTAL SHEETS
07	Ven	101	42.0	17	45

Paul Fong 06-30-10
REGISTERED CIVIL ENGINEER DATE

07-06-10
PLANS APPROVAL DATE

REGISTERED PROFESSIONAL ENGINEER PAUL FONG No. C67053 Exp. 9/30/10 CIVIL STATE OF CALIFORNIA

THE STATE OF CALIFORNIA OR ITS OFFICERS OR AGENTS SHALL NOT BE RESPONSIBLE FOR THE ACCURACY OR COMPLETENESS OF SCANNED COPIES OF THIS PLAN SHEET.

NOTES: PIPE JOINTS ARE STANDARD OR AS NOTED ON PLANS

(N) NOT A SEPARATE PAY ITEM, FOR INFORMATION ONLY.

DRAINAGE SHEET NO	DRAINAGE SYSTEM NO ⬡	DRAINAGE UNIT NO ○	HEIGHT OF INLET "H" OR "V" (FT)	STRUCTURAL CONCRETE (BOX CULVERT) (CY)	BAR REINFORCING STEEL (BOX CULVERT) (LB)	STRUCTURAL CONCRETE (WINGWALL) (CY)	BAR REINFORCING STEEL (WINGWALL) (LB)	STRUCTURE EXCAVATION (CULVERT) (CY)	STRUCTURAL BACKFILL (CULVERT) (CY)	STRUCTURE EXCAVATION (WINGWALL) (CY)	STRUCTURAL BACKFILL (WINGWALL) (CY)	REMOVE REINFORCED CONCRETE BOX CULVERT (CY)	REMOVE CONCRETE (CHANNEL) (CY)	REMOVE INLET (EA)	REMOVE PIPE (LF)	MINOR CONCRETE (MINOR STRUCTURE) (CY)	MISCELLANEOUS IRON AND STEEL (LB)	TYPE 24-12 FRAME & GRATE (N) (EA)	COVER TYPE PLATE (N) (EA)	STRUCTURE EXCAVATION (ROCK SLOPE PROTECTION) (CY)	ROCK SLOPE PROTECTION (1/2 TON, METHOD B) (CY)	ROCK SLOPE PROTECTION FABRIC (SQYD)	CABLE RAILING (LF)				MAXIMUM COVER (N) (FT)	DESCRIPTION		DRAINAGE SHEET NO	DRAINAGE SYSTEM NO ⬡	DRAINAGE UNIT NO ○
D-I	I	a											6.0															REMOVE CONCRETE (CHANNEL), L=8.1′,		D-I	I	a
		b														5.5												REINFORCED CONCRETE APRON, L=15.2′				b
		c				25.0	1200			42.0	16.0																	STRUCTURAL CONCRETE (WINGWALL, TYPE "A")				c
		d																					14.0					CABLE RAILING				d
		e										113.0																REMOVE 7′ x 4′ x 163′ V-INVERT RCB CULVERT				e
		f		265.0	30,000			1460	1100																		9.5	12′ x 6′ x 163′ FLAT INVERT RCB CULVERT				f
		g																		80.0								STRUCTURE EXCAVATION (RIP RAP)				g
		h																			80.0							RSP (1/2 TON, METHOD B)				h
		i																		65.0	55.0	80.0						RSP (1/2 TON, METHOD B)				i
D-I	2	a											5.0															REMOVE CONCRETE (CHANNEL), L=8.1′		D-I	2	a
		b														5.0												REINFORCED CONCRETE APRON, L=8.1′				b
		c				23.0	1100			38.0	14.0																	STRUCTURAL CONCRETE (WINGWALL, TYPE "A")				c
		d																					14.0					CABLE RAILING				d
		e										102.8																REMOVE 7′ x 4′ x 158′ V-INVERT RCB CULVERT				e
		f												1														REMOVE INLET				f
		g	6.0													2.0	239.0	1										MODIFIED TYPE G1 INLET				g
		h		255.0	28,500			1260	1050																		9.4	12′ x 6′ x 158′ FLAT INVERT RCB CULVERT				h
SHEET TOTAL				520.0	58,500	48.0	2300	2720	2150	80.0	30.0	215.8	11.0	1		12.5	239.0	1		145.0	135.0	80.0	28.0									

DRAINAGE QUANTITIES

DQ-1

REVISED BY	DATE REVISED

PAUL FONG	FUSUNG CHANG
CALCULATED-DESIGNED BY	CHECKED BY
FUNCTIONAL SUPERVISOR	DAVE BHALLA

STATE OF CALIFORNIA - DEPARTMENT OF TRANSPORTATION
Caltrans®
HYDRAULICS

LAST REVISION 00-00-00
DATE PLOTTED => 10-JAN-2011
TIME PLOTTED => 10:41

Dist	COUNTY	ROUTE	POST MILES TOTAL PROJECT	SHEET No.	TOTAL SHEETS
07	Ven	101	42.0	18	45

Paul Fong 06-30-10
REGISTERED CIVIL ENGINEER DATE

07-06-10
PLANS APPROVAL DATE

REGISTERED PROFESSIONAL ENGINEER PAUL FONG No. C67053 Exp. 9/30/10 CIVIL STATE OF CALIFORNIA

THE STATE OF CALIFORNIA OR ITS OFFICERS OR AGENTS SHALL NOT BE RESPONSIBLE FOR THE ACCURACY OR COMPLETENESS OF SCANNED COPIES OF THIS PLAN SHEET.

NOTES: PIPE JOINTS ARE STANDARD OR AS NOTED ON PLANS

(N) NOT A SEPARATE PAY ITEM, FOR INFORMATION ONLY.

DRAINAGE SHEET NO	DRAINAGE SYSTEM NO ⬡	DRAINAGE UNIT NO ○	HEIGHT OF INLET "H" OR "V" FT	STRUCTURAL CONCRETE (BOX CULVERT) CY	BAR REINFORCING STEEL (BOX CULVERT) LB	STRUCTURAL CONCRETE (WINGWALL) CY	BAR REINFORCING STEEL (WINGWALL) LB	STRUCTURE EXCAVATION (CULVERT) CY	STRUCTURAL BACKFILL (CULVERT) CY	STRUCTURE EXCAVATION (WINGWALL) CY	STRUCTURAL BACKFILL (WINGWALL) CY	REMOVE REINFORCED CONCRETE BOX CULVERT CY	REMOVE CONCRETE (CHANNEL) CY	REMOVE INLET EA	REMOVE PIPE LF	MINOR CONCRETE (MINOR STRUCTURE) CY	MISCELLANEOUS IRON AND STEEL LB	TYPE 24-12 FRAM & GRATE (N) EA	COVER TYPE PLATE (N) EA	STRUCTURE EXCAVATION (ROCK SLOPE PROTECTION) CY	ROCK SLOPE PROTECTION (1/2 TON, METHOD B) CY	ROCK SLOPE PROTECTION FABRIC SQYD	CABLE RAILING LF				MAXIMUM COVER (N) FT	DESCRIPTION		DRAINAGE SHEET NO	DRAINAGE SYSTEM NO ⬡	DRAINAGE UNIT NO ○
D-I	2	i													6.0													REMOVE 12" RCP		D-I	2	i
		j												1														REMOVE INLET				j
		k	8.2													4.5	174.0		1									MODIFIED TYPE OS INLET				k
		l																		70.0								STRUCTURE EXCAVATION (RIP RAP)				l
		m																			70.0							RSP (1/2 TON, METHOD B)				m
		n																		65.0	55.0	80.0						RSP (1/2 TON, METHOD B)				n
SHEET TOTAL														1	6.0	4.5	174.0			135.0	125.0	80.0										
TOTAL			520.0	58,500	48.0	2300	2720	2150	80.0	30.0	215.8	11.0	2	6.0	17.0	413.0		1	280.0	260.0	160.0	28.0										

DRAINAGE QUANTITIES

DQ-2

STATE OF CALIFORNIA - DEPARTMENT OF TRANSPORTATION
Caltrans
HYDRAULICS

FUNCTIONAL SUPERVISOR: DAVE BHALLA

CALCULATED-DESIGNED BY: PAUL FONG
CHECKED BY: FUSUNG CHANG

REVISED BY
DATE REVISED

LAST REVISION 00-00-00
DATE PLOTTED => 10-JAN-2011
TIME PLOTTED => 10:41

Dist	COUNTY	ROUTE	POST MILES TOTAL PROJECT	SHEET No.	TOTAL SHEETS
07	Ven	101	42.0	19	45

REGISTERED CIVIL ENGINEER 06-30-10 DATE

07-06-10
PLANS APPROVAL DATE

REGISTERED PROFESSIONAL ENGINEER HAYKAZ AGHAJANIAN No. C53866 Exp. 12/31/11 CIVIL STATE OF CALIFORNIA

THE STATE OF CALIFORNIA OR ITS OFFICERS OR AGENTS SHALL NOT BE RESPONSIBLE FOR THE ACCURACY OR COMPLETENESS OF SCANNED COPIES OF THIS PLAN SHEET.

NOTES:

1. FOR ACCURATE RIGHT OF WAY AND ACCESS DATA, CONTACT RIGHT OF WAY ENGINEERING AT THE DISTRICT OFFICE.
2. LOCATIONS OF UTILITY FACILITIES SHOWN ON THESE PLANS ARE APPROXIMATE AND SHALL BE VERIFIED BY THE CONTRACTOR PRIOR TO CONSTRUCTION.
3. UTILITY OWNERSHIP ON THIS PROJECT:
   - GAS - SOUTHERN CALIFORNIA GAS COMPANY
   - WATER - CASITAS MUNICIPAL WATER DISTRICT
   - ELECTRIC - SOUTHERN CALIFORNIA EDISON
   - TELEPHONE - AMERICAN TELEPHONE & TELEGRAPH
   - COMMUNICATION - VERIZON, QWEST, SPRINT AND LEVEL-3
   - OIL - CHEVREN AND PACIFIC OPERATORS INCORPORATED
4. (*) Exist MANHOLE OWNED BY AT&T TO BE ADJUSTED TO GRADE PRIOR TO CONSTRUCTION BY OTHERS.

ABBREVIATIONS

AT&T - AMERICAN TELEPHONE & TELEGRAPH
SCG - SOUTHERN CALIFORNIA GAS COMPANY
SCE - SOUTHERN CALIFORNIA EDISON COMPANY
PH - POTHOLE
UG - UNDERGROUND

LOCATION OF Exist TELEPHONE MANHOLE

⊙	UTILITY COMPANY	STATION	OFFSET DISTANCE	NORTHING	EASTING	TOP OF MH LID Elev	TOP OF PAVEMENT Elev
1	MH-309 AT&T (*)	92+40.80	58.85′	1958186.687	6124195.866	26.08′	26.18′
2	MH-310 AT&T (*)	97+12.69	61.05′	1958566.305	6123916.480	25.41′	25.52′
3	MH-311 AT&T (*)	103+54.22	69.34′	1959099.210	6123567.261	25.51′	25.86′

(*) SEE NOTE 4

POTHOLE INFORMATION TABLE

X	UTILITY COMPANY	NORTHING	EASTING	GROUND ELEVATION	DEPTH
1	Level 3 Communication	1958177.68	6124231.31	20.52′	14.25
2	Level 3 Communication	1958240.38	6124189.70	20.52′	4.40′

POTHOLE INFORMATION TABLE

X	UTILITY COMPANY	STATION	OFFSET DISTANCE FROM EP	DEPTH
3	4-DUCT AT&T	103+24.73	4.50′	13.58′
4	4-DUCT AT&T	104+92.69	5.33′	13.50′
5	4-DUCT AT&T	105+08.69	4.75′	13.00′

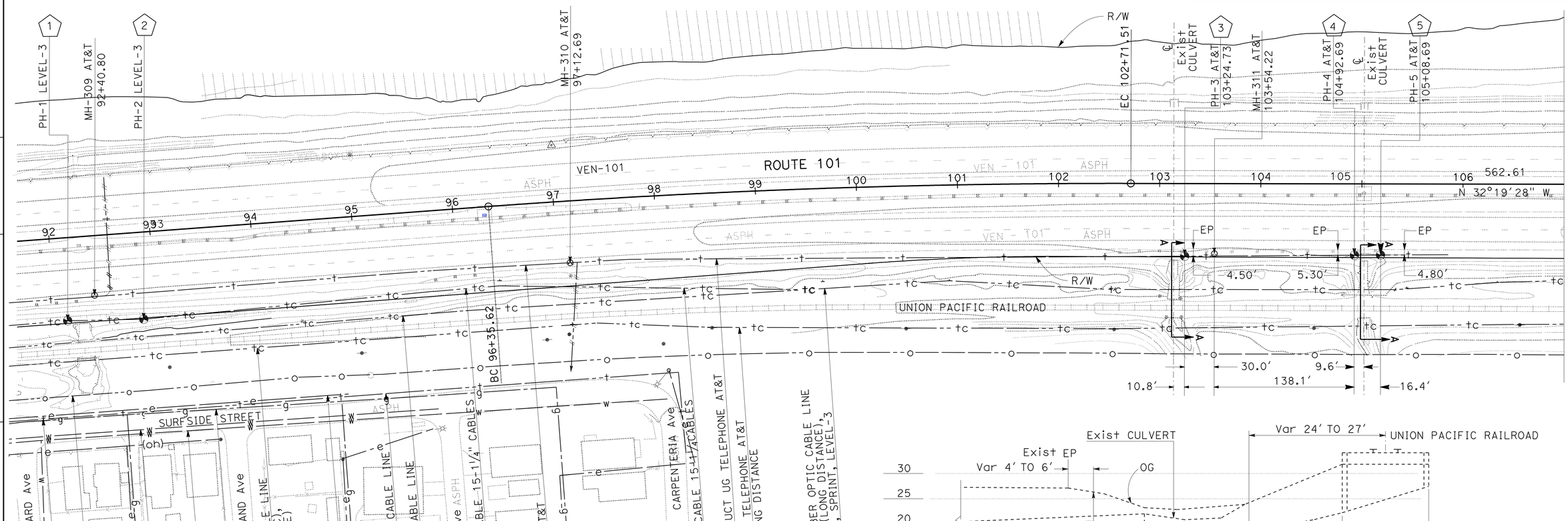

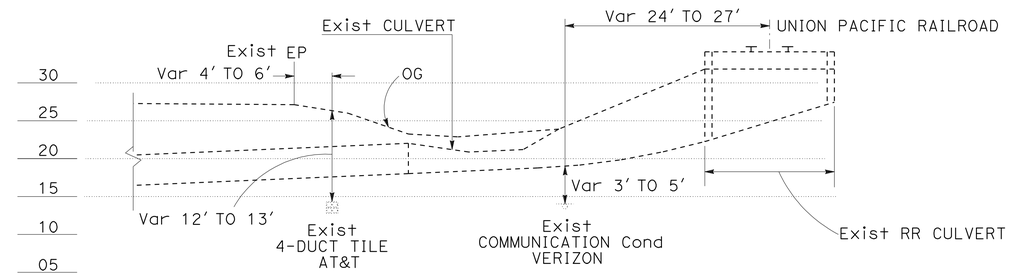

TYPICAL SECTION A-A
SCALE: 1": 10′ HORIZ
1": 10′ VERT

UTILITY PLAN

SCALE 1" = 50′

U-1

THIS PLAN ACCURATE FOR UTILITY INFORMATION ONLY.

STATE OF CALIFORNIA - DEPARTMENT OF TRANSPORTATION
Caltrans UTILITIES ENGINEERING
FUNCTIONAL SUPERVISOR: UGO ANAKWENZE
CALCULATED-DESIGNED BY: H. AGHAJANIAN
CHECKED BY: MIKE K. NGUYEN
REVISED BY / DATE REVISED

LAST REVISION 00-00-00 | DATE PLOTTED => 10-JAN-2011 | TIME PLOTTED => 10:41

Dist	COUNTY	ROUTE	POST MILES TOTAL PROJECT	SHEET No.	TOTAL SHEETS
07	Ven	101	42.0	20	45

REGISTERED CIVIL ENGINEER 06-30-10 DATE

07-06-10
PLANS APPROVAL DATE

REGISTERED PROFESSIONAL ENGINEER HAYKAZ AGHAJANIAN No. C53866 Exp. 12/31/11 CIVIL STATE OF CALIFORNIA

THE STATE OF CALIFORNIA OR ITS OFFICERS OR AGENTS SHALL NOT BE RESPONSIBLE FOR THE ACCURACY OR COMPLETENESS OF SCANNED COPIES OF THIS PLAN SHEET.

NOTES:

1. FOR ACCURATE RIGHT OF WAY AND ACCESS DATA, CONTACT RIGHT OF WAY ENGINEERING AT THE DISTRICT OFFICE.

POTHOLE INFORMATION TABLE

⬠	UTILITY COMPANY	EASTING	NORTHING	GROUND Elevation	DEPTH
1	4-DUCT AT&T	6123273.62	1959562.97	28.51′	8.60′
2	4.5 METAL CASING PACIFIC OPERATORS OFFSHORE	6123016.40	1959928.45	29.11′	10.80′

LOCATION OF EXISTING TELEPHONE MANHOLE

⬠	UTILITY COMPANY	STATION	OFFSET DISTANCE	NORTHING	EASTING	TOP OF MH LID Elev	TOP OF PAVEMENT Elev
(1)	MH-312 AT&T	109+92.02	70.52′	1959639.225	6123224.528	28.17′	28.64′
(2)	MH-313 AT&T	115+79.60	69.45′	1960115.922	6122870.076	28.60′	29.44′

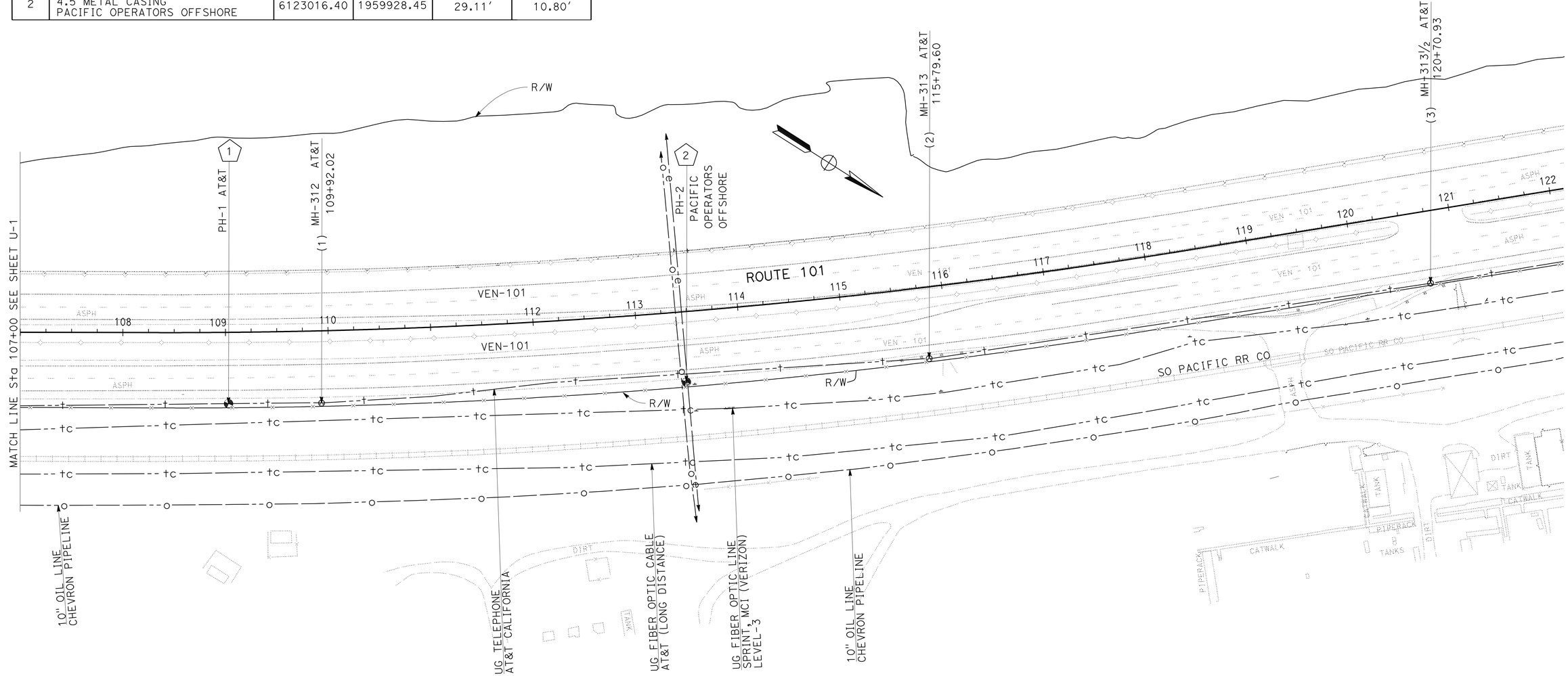

ALL DIMENSIONS ARE IN FEET UNLESS OTHERWISE SHOWN

UTILITY PLAN

SCALE 1" = 50′

THIS PLAN ACCURATE FOR UTILITY INFORMATION ONLY

U-2

STATE OF CALIFORNIA - DEPARTMENT OF TRANSPORTATION
Caltrans UTILITIES ENGINEERING

FUNCTIONAL SUPERVISOR: UGO ANAKWENZE

CALCULATED-DESIGNED BY: H. AGHAJANIAN
CHECKED BY: MIKE K. NGUYEN

REVISED BY | DATE REVISED

LAST REVISION 00-00-00 | DATE PLOTTED => 10-JAN-2011 | TIME PLOTTED => 10:42

Dist	COUNTY	ROUTE	POST MILES TOTAL PROJECT	SHEET No.	TOTAL SHEETS
07	Ven	101	42.0	21	45

REGISTERED CIVIL ENGINEER 06-30-10 DATE

07-06-10
PLANS APPROVAL DATE

REGISTERED PROFESSIONAL ENGINEER MIKE K. NGUYEN No. 67756 Exp. 6-30-11 CIVIL STATE OF CALIFORNIA

THE STATE OF CALIFORNIA OR ITS OFFICERS OR AGENTS SHALL NOT BE RESPONSIBLE FOR THE ACCURACY OR COMPLETENESS OF SCANNED COPIES OF THIS PLAN SHEET.

NOTES:

1. LOCATIONS OF CONSTRUCTION AREA SIGNS SHOWN ARE APPROXIMATE. EXACT LOCATIONS WILL BE DETERMINED BY THE ENGINEER.
2. FOR SIGN "C40" (TRAFFIC FINES DOUBLED IN CONSTRUCTION ZONES), LETTERS SHALL BE BLACK ON WHITE BACKGROUND.
3. FOR ADDITIONAL CONSTRUCTION AREA SIGNS, REFER TO SHEET THD-1.

STATIONARY MOUNTED CONSTRUCTION AREA SIGNS

SIGN No	SIGN CODE	SIGN MESSAGE	PANEL SIZE	No. OF POSTS AND SIZE	No. OF SIGNS
A	W20-1	ROAD WORK AHEAD	48" x 48"	1-6" x 6"	3
B	C40(CA)	TRAFFIC FINES DOUBLED IN CONSTRUCTION ZONES	144" x 60"	2-6" x 8"	2
C	G20-2	END ROAD WORK	36" x 18"	1-4" x 6"	2

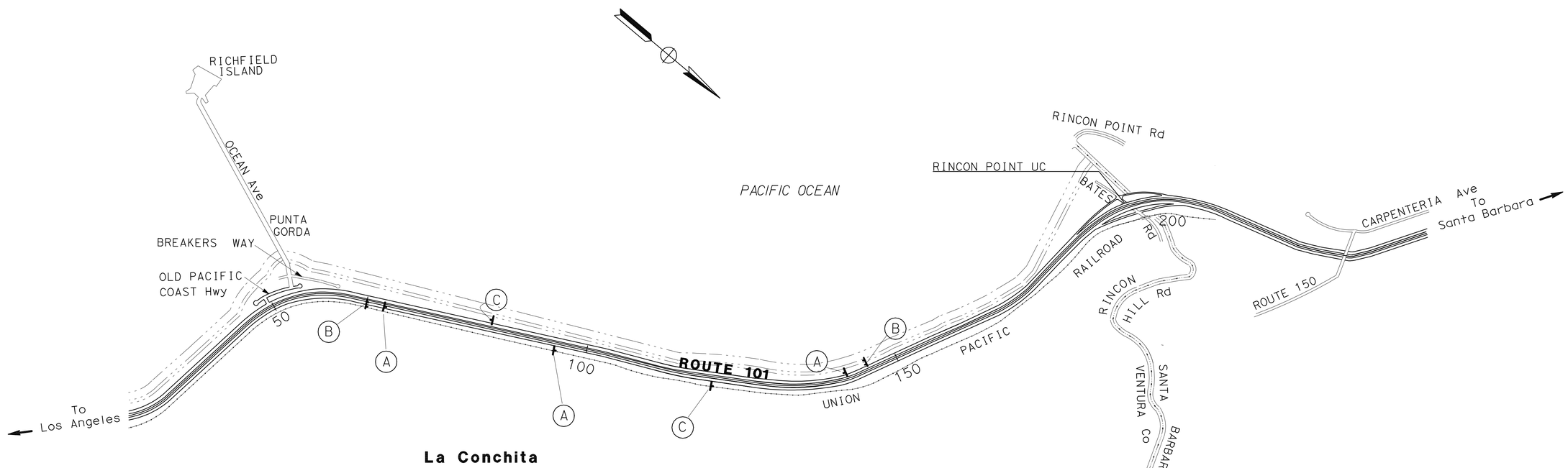

THIS PLAN ACCURATE FOR CONSTRUCTION AREA SIGNS ONLY

CONSTRUCTION AREA SIGNS

NO SCALE

CS-1

STATE OF CALIFORNIA - DEPARTMENT OF TRANSPORTATION
Caltrans® DESIGN
CONSULTANT FUNCTIONAL SUPERVISOR: OC LEE
CALCULATED-DESIGNED BY: MIKE NGUYEN
CHECKED BY: PAUL H. HSU
REVISED BY
DATE REVISED

LAST REVISION 12-31-09 | DATE PLOTTED => 10-JAN-2011 | TIME PLOTTED => 10:42

Dist	COUNTY	ROUTE	POST MILES TOTAL PROJECT	SHEET No.	TOTAL SHEETS
07	Ven	101	42.0	22	45

REGISTERED CIVIL ENGINEER DATE 06-30-10

07-06-10
PLANS APPROVAL DATE

REGISTERED PROFESSIONAL ENGINEER MIKE K. NGUYEN No. 67756 Exp. 6-30-11 CIVIL STATE OF CALIFORNIA

THE STATE OF CALIFORNIA OR ITS OFFICERS OR AGENTS SHALL NOT BE RESPONSIBLE FOR THE ACCURACY OR COMPLETENESS OF SCANNED COPIES OF THIS PLAN SHEET.

NOTES:

1. REMOVE STRIPING AND PAVEMENT MARKERS IN CONFLICT WITH TEMPORARY PAVEMENT DELINEATION.
2. FOR ACCURATE RIGHT OF WAY AND ACCESS DATA, CONTACT RIGHT OF WAY ENGINEERING AT THE DISTRICT OFFICE.

LEGEND:

- CONSTRUCTION AREA
- DIRECTION OF TRAFFIC
- CHANNELIZER (SURFACE MOUNTED)
- TEMPORARY RAILING (TYPE K) WITH SCUPPERS
- TEMPORARY CRASH CUSHION ARRAY 'TS14'
- XX TEMPORARY TRAFFIC STRIPE DETAIL NUMBER
- POINT OF CHANGE IN PAVEMENT DELINEATION

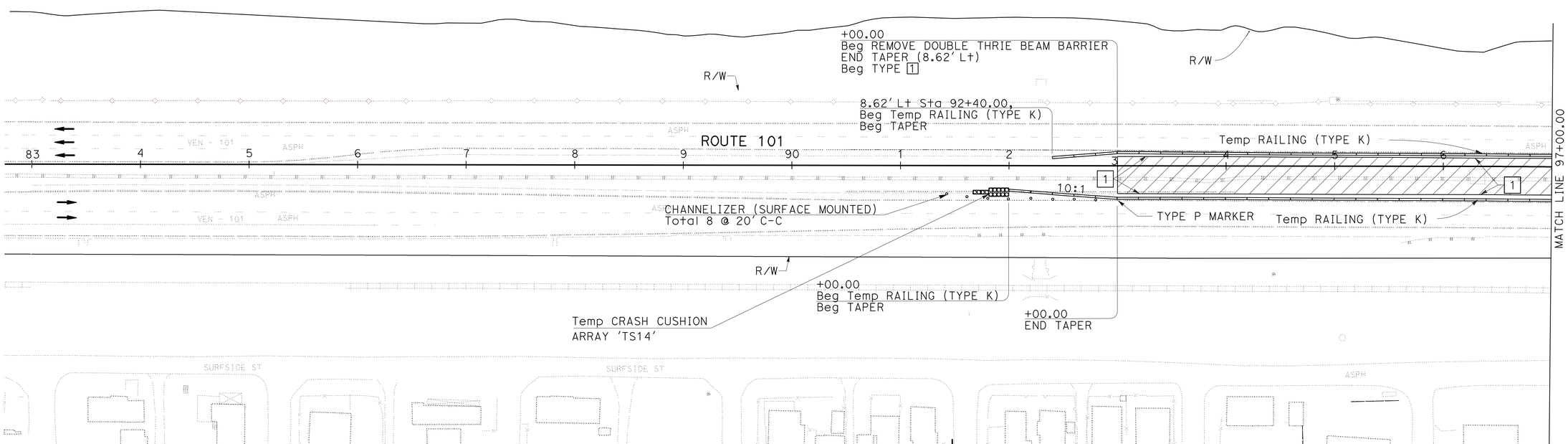

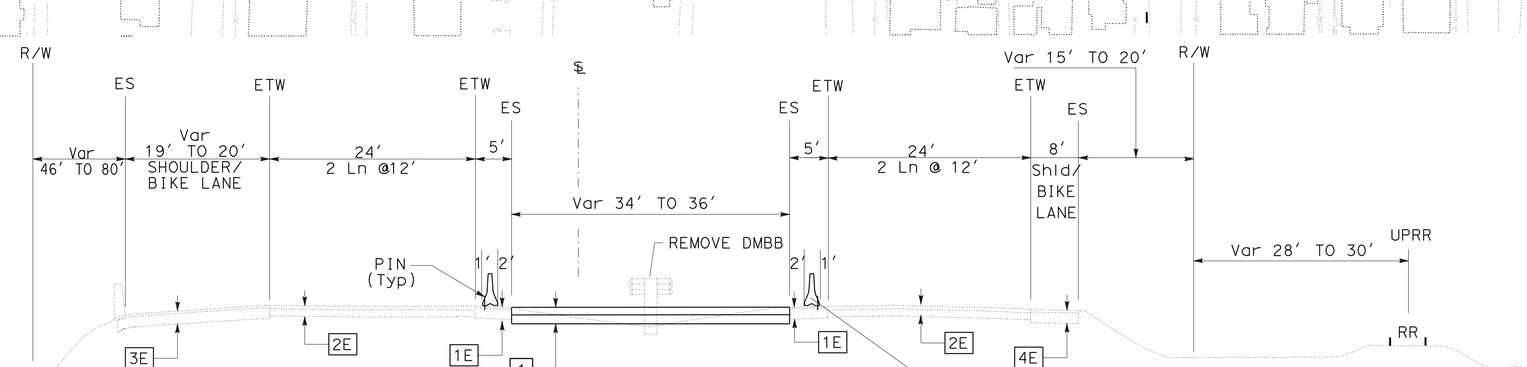

Sta 93+00.00 TO Sta 97+00.00
NO SCALE

STAGE CONSTRUCTION
(STAGE 1)
SCALE 1" = 50'

SC-1

THIS PLAN ACCURATE FOR STAGE CONSTRUCTION WORK ONLY

STATE OF CALIFORNIA - DEPARTMENT OF TRANSPORTATION
Caltrans DESIGN
CONSULTANT FUNCTIONAL SUPERVISOR: OC LEE
CALCULATED-DESIGNED BY: MIKE NGUYEN
CHECKED BY: PAUL H. HSU
REVISED BY / DATE REVISED

LAST REVISION 12-31-09 | DATE PLOTTED => 10-JAN-2011 | TIME PLOTTED => 10:42

Dist	COUNTY	ROUTE	POST MILES TOTAL PROJECT	SHEET No.	TOTAL SHEETS
07	Ven	101	42.0	23	45

REGISTERED CIVIL ENGINEER DATE 06-30-10

07-06-10
PLANS APPROVAL DATE

REGISTERED PROFESSIONAL ENGINEER MIKE K. NGUYEN No. 67756 Exp. 6-30-11 CIVIL STATE OF CALIFORNIA

THE STATE OF CALIFORNIA OR ITS OFFICERS OR AGENTS SHALL NOT BE RESPONSIBLE FOR THE ACCURACY OR COMPLETENESS OF SCANNED COPIES OF THIS PLAN SHEET.

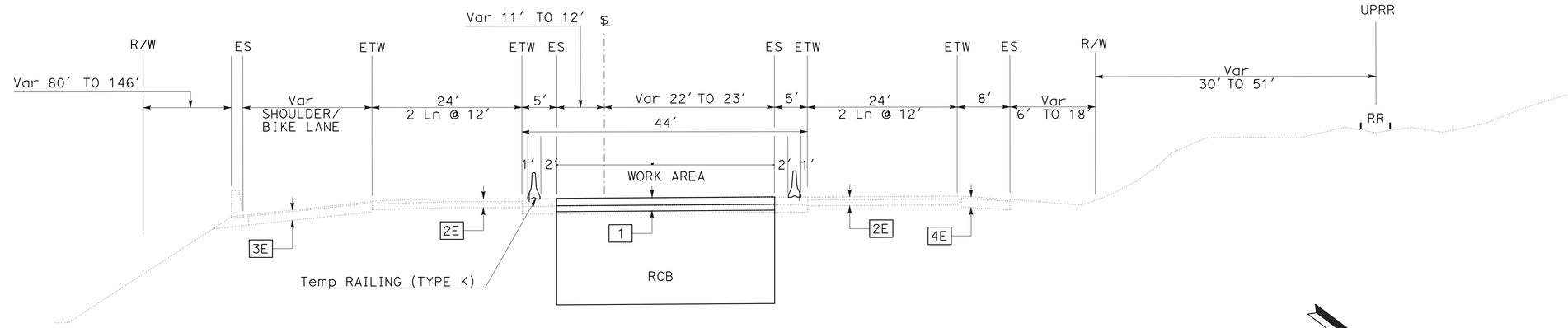

Sta 104+77.39 TO Sta 105+27.39
Sta 102+89.00 TO Sta 103+39.00
NO SCALE

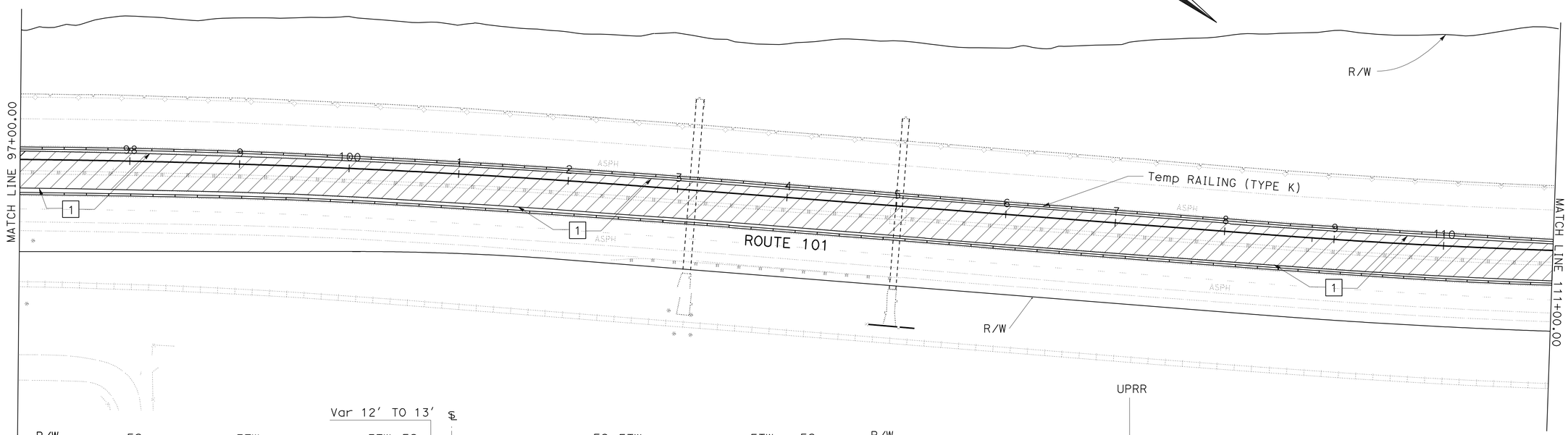

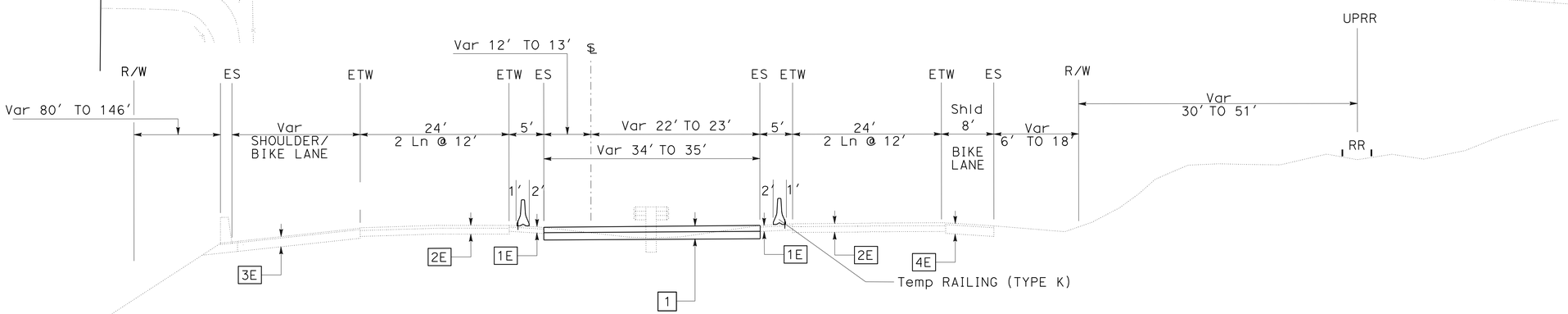

Sta 97+00.00 TO Sta 111+00.00
NO SCALE

NOTE:

1. FOR ACCURATE RIGHT OF WAY AND ACCESS DATA, CONTACT RIGHT OF WAY ENGINEERING AT THE DISTRICT OFFICE.

THIS PLAN ACCURATE FOR STAGE CONSTRUCTION WORK ONLY

STAGE CONSTRUCTION

(STAGE 1)

SCALE 1" = 50'

SC-2

STATE OF CALIFORNIA - DEPARTMENT OF TRANSPORTATION
Caltrans
DESIGN

CONSULTANT FUNCTIONAL SUPERVISOR: OC LEE
CALCULATED-DESIGNED BY: MIKE NGUYEN
CHECKED BY: PAUL H. HSU
REVISED BY
DATE REVISED

LAST REVISION: DATE PLOTTED => 10-JAN-2011 TIME PLOTTED => 10:42
12-31-09

Dist	COUNTY	ROUTE	POST MILES TOTAL PROJECT	SHEET No.	TOTAL SHEETS
07	Ven	101	42.0	24	45

REGISTERED CIVIL ENGINEER DATE 06-30-10

07-06-10
PLANS APPROVAL DATE

REGISTERED PROFESSIONAL ENGINEER MIKE K. NGUYEN No. 67756 Exp. 6-30-11 CIVIL STATE OF CALIFORNIA

THE STATE OF CALIFORNIA OR ITS OFFICERS OR AGENTS SHALL NOT BE RESPONSIBLE FOR THE ACCURACY OR COMPLETENESS OF SCANNED COPIES OF THIS PLAN SHEET.

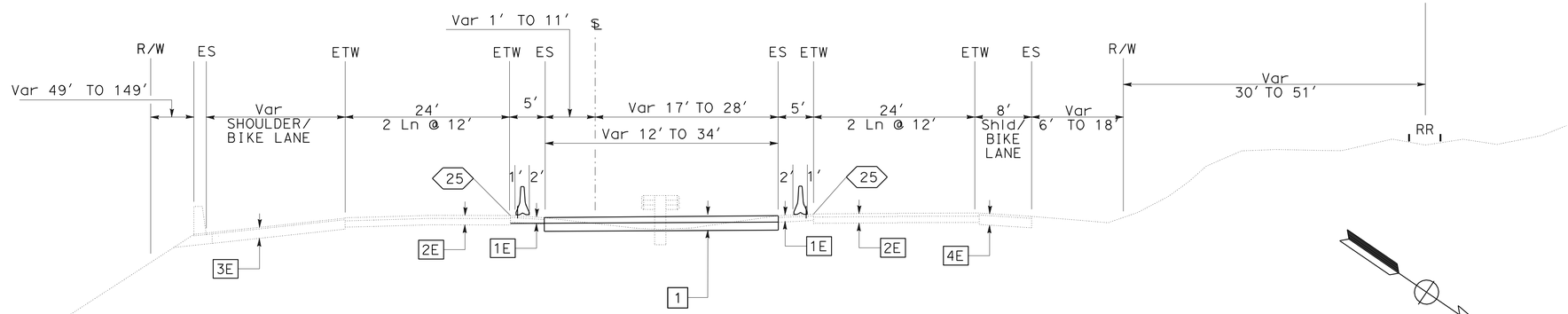

Sta 111+00.00 TO Sta 117+50.00

NO SCALE

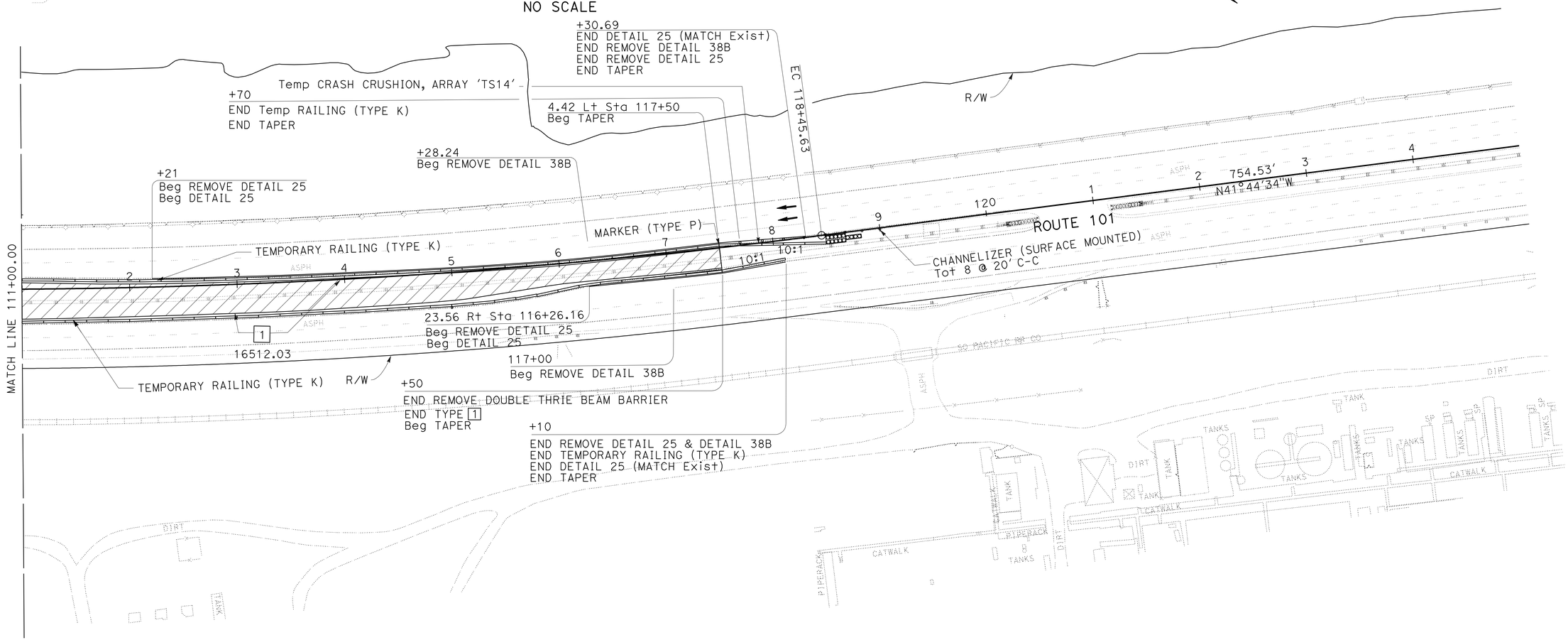

NOTE:

1. FOR ACCURATE RIGHT OF WAY AND ACCESS DATA, CONTACT RIGHT OF WAY ENGINEERING AT THE DISTRICT OFFICE.

THIS PLAN ACCURATE FOR STAGE CONSTRUCTION WORK ONLY

STAGE CONSTRUCTION

(STAGE 1)

SCALE 1" = 50'

SC-3

STATE OF CALIFORNIA - DEPARTMENT OF TRANSPORTATION
Caltrans® DESIGN

CONSULTANT FUNCTIONAL SUPERVISOR: OC LEE

CALCULATED-DESIGNED BY: MIKE NGUYEN
CHECKED BY: PAUL H. HSU

REVISED BY | DATE REVISED

LAST REVISION | DATE PLOTTED => 10-JAN-2011 | TIME PLOTTED => 10:42
12-31-09

Dist	COUNTY	ROUTE	POST MILES TOTAL PROJECT	SHEET No.	TOTAL SHEETS
07	Ven	101	42.0	25	45

REGISTERED CIVIL ENGINEER 06-30-10 DATE

07-06-10
PLANS APPROVAL DATE

REGISTERED PROFESSIONAL ENGINEER MIKE K. NGUYEN No. 67756 Exp. 6-30-11 CIVIL STATE OF CALIFORNIA

THE STATE OF CALIFORNIA OR ITS OFFICERS OR AGENTS SHALL NOT BE RESPONSIBLE FOR THE ACCURACY OR COMPLETENESS OF SCANNED COPIES OF THIS PLAN SHEET.

NOTE:

1. FOR ACCURATE RIGHT OF WAY AND ACCESS DATA, CONTACT RIGHT OF WAY ENGINEERING AT THE DISTRICT OFFICE.

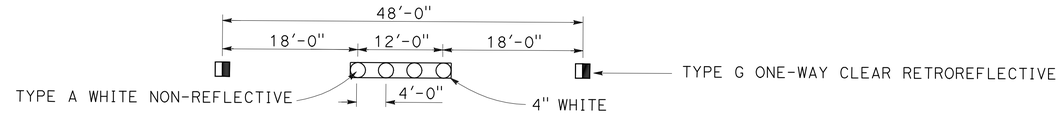

DETAIL 13 (Mod)
NO SCALE

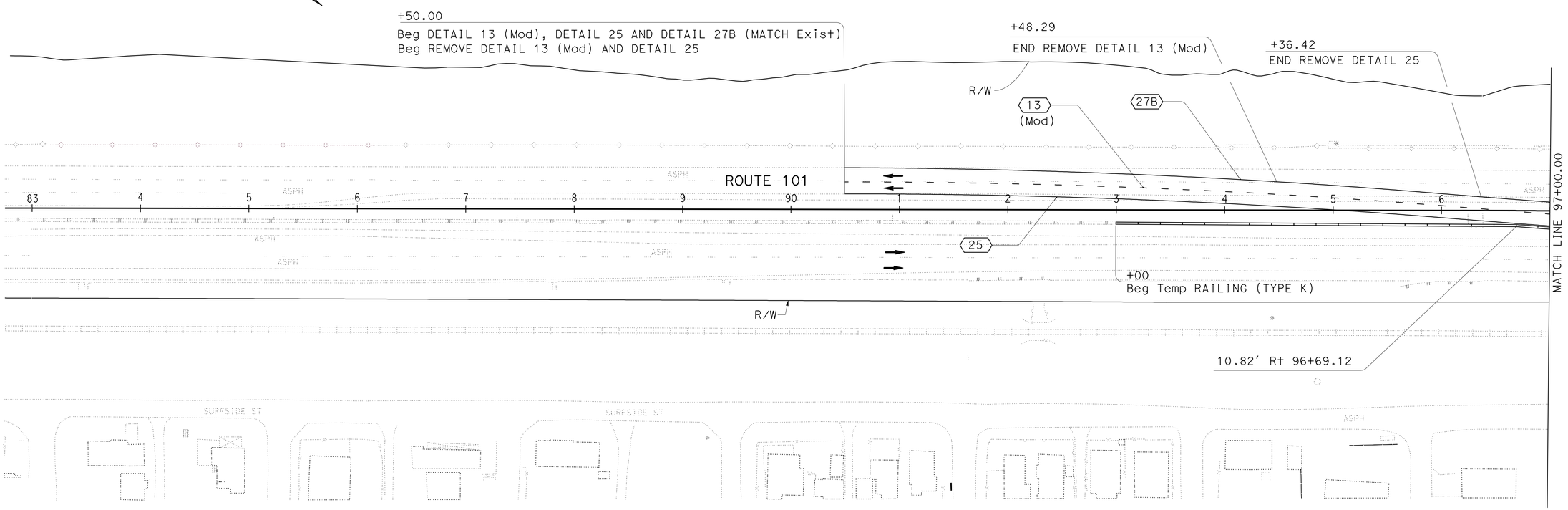

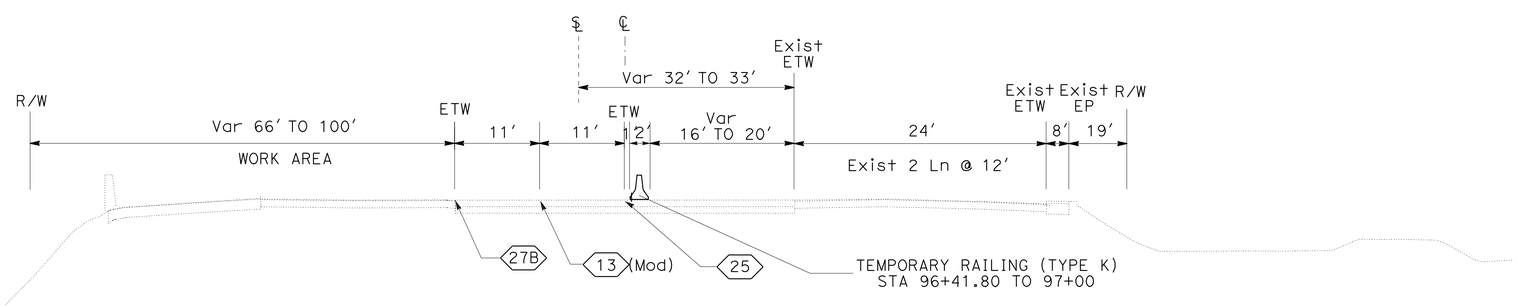

Sta 90+50.00 TO Sta 97+00.00
NO SCALE

STAGE CONSTRUCTION
(STAGE 2)
SCALE 1" = 50'

SC-4

THIS PLAN ACCURATE FOR STAGE CONSTRUCTION WORK ONLY

STATE OF CALIFORNIA - DEPARTMENT OF TRANSPORTATION
Caltrans
DESIGN
CONSULTANT FUNCTIONAL SUPERVISOR: OC LEE
CALCULATED-DESIGNED BY: MIKE NGUYEN
CHECKED BY: PAUL H. HSU
REVISED BY
DATE REVISED

LAST REVISION 12-31-09
DATE PLOTTED => 10-JAN-2011
TIME PLOTTED => 10:42

Dist	COUNTY	ROUTE	POST MILES TOTAL PROJECT	SHEET No.	TOTAL SHEETS
07	Ven	101	42.0	26	45

REGISTERED CIVIL ENGINEER DATE 06-30-10

07-06-10
PLANS APPROVAL DATE

REGISTERED PROFESSIONAL ENGINEER MIKE K. NGUYEN No. 67756 Exp. 6-30-11 CIVIL STATE OF CALIFORNIA

THE STATE OF CALIFORNIA OR ITS OFFICERS OR AGENTS SHALL NOT BE RESPONSIBLE FOR THE ACCURACY OR COMPLETENESS OF SCANNED COPIES OF THIS PLAN SHEET.

NOTE:

1. FOR ACCURATE RIGHT OF WAY AND ACCESS DATA, CONTACT RIGHT OF WAY ENGINEERING AT THE DISTRICT OFFICE.

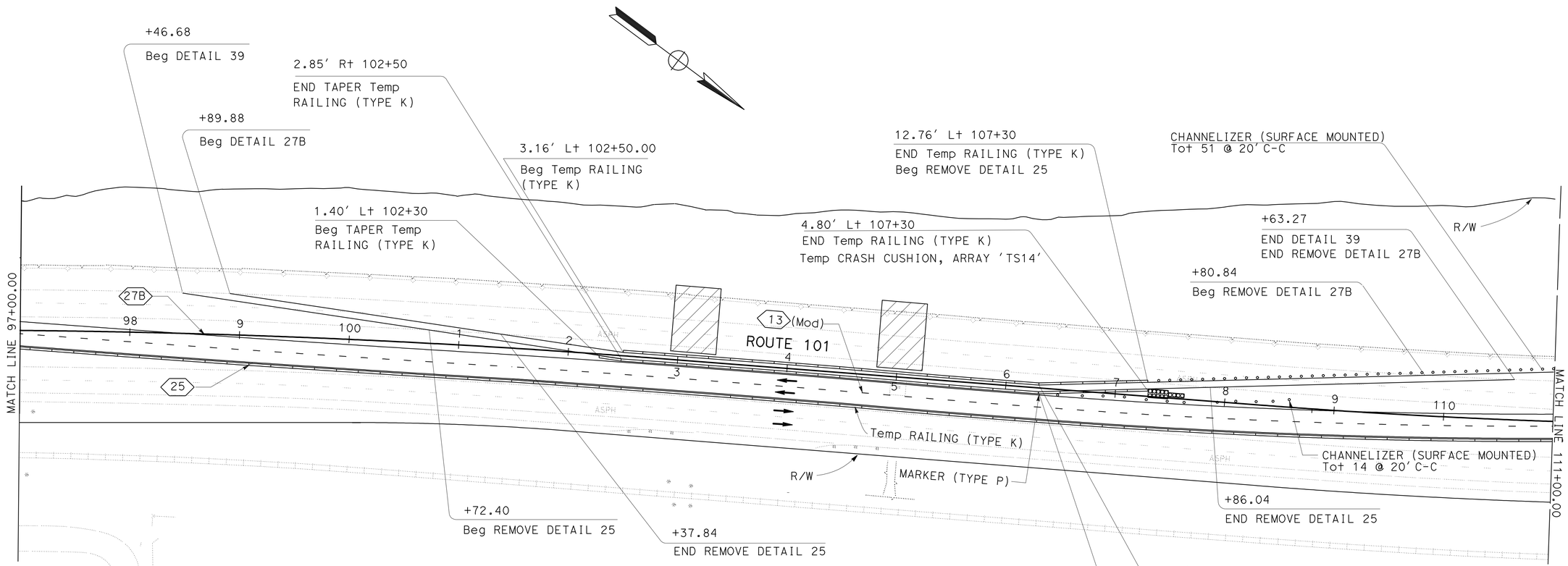

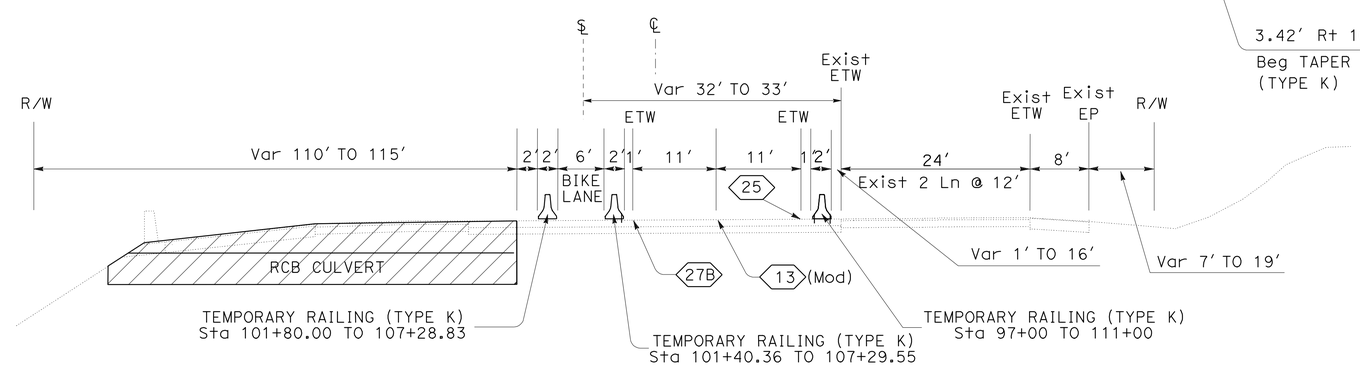

Sta 97+00.00 TO Sta 111+00.00
NO SCALE

THIS PLAN ACCURATE FOR STAGE CONSTRUCTION WORK ONLY

STAGE CONSTRUCTION
(STAGE 2)
SCALE 1" = 50′

SC-5

STATE OF CALIFORNIA - DEPARTMENT OF TRANSPORTATION
Caltrans®
DESIGN
CONSULTAINT FUNCTIONAL SUPERVISOR: OC LEE
CALCULATED-DESIGNED BY: MIKE NGUYEN
CHECKED BY: PAUL H. HSU
REVISED BY
DATE REVISED

LAST REVISION 12-31-09
DATE PLOTTED => 10-JAN-2011
TIME PLOTTED => 10:42

Dist	COUNTY	ROUTE	POST MILES TOTAL PROJECT	SHEET No.	TOTAL SHEETS
07	Ven	101	42.0	27	45

REGISTERED CIVIL ENGINEER 06-30-10 DATE

07-06-10
PLANS APPROVAL DATE

REGISTERED PROFESSIONAL ENGINEER MIKE K. NGUYEN No. 67756 Exp. 6-30-11 CIVIL STATE OF CALIFORNIA

THE STATE OF CALIFORNIA OR ITS OFFICERS OR AGENTS SHALL NOT BE RESPONSIBLE FOR THE ACCURACY OR COMPLETENESS OF SCANNED COPIES OF THIS PLAN SHEET.

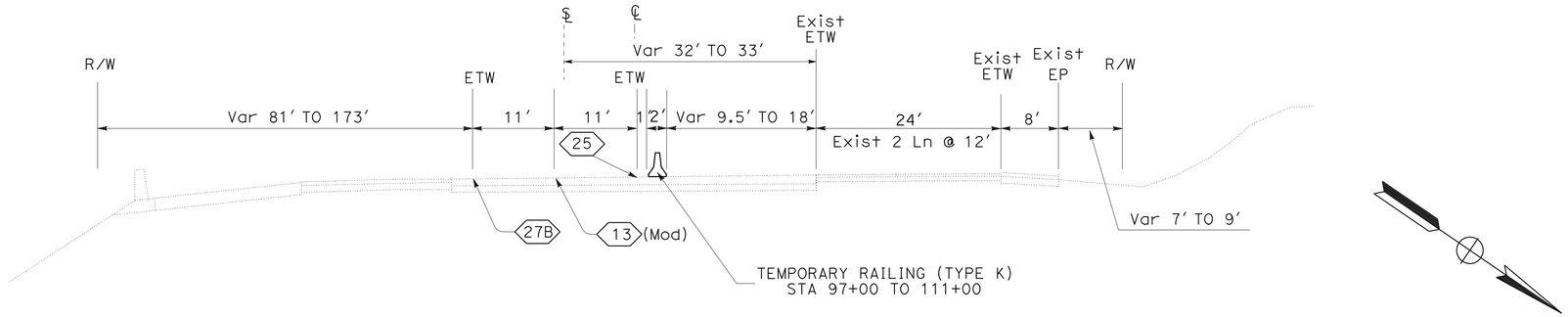

Sta 111+00.00 TO Sta 117+50.00

NO SCALE

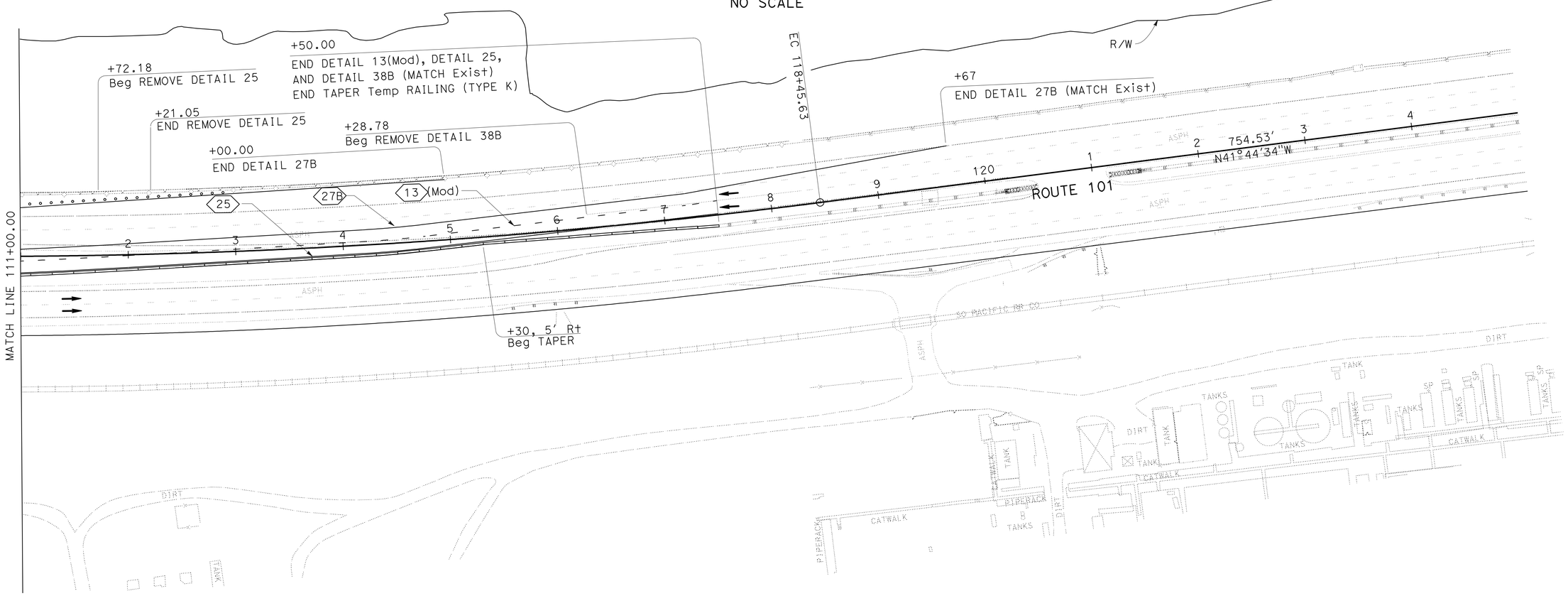

NOTE:

1. FOR ACCURATE RIGHT OF WAY AND ACCESS DATA, CONTACT RIGHT OF WAY ENGINEERING AT THE DISTRICT OFFICE.

THIS PLAN ACCURATE FOR STAGE CONSTRUCTION WORK ONLY

STAGE CONSTRUCTION

(STAGE 2)

SCALE: 1" = 50′

SC-6

STATE OF CALIFORNIA - DEPARTMENT OF TRANSPORTATION
Caltrans DESIGN

CONSULTANT FUNCTIONAL SUPERVISOR: OC LEE

CALCULATED-DESIGNED BY: MIKE NGUYEN
CHECKED BY: PAUL H. HSU

REVISED BY | DATE REVISED

LAST REVISION | DATE PLOTTED => 10-JAN-2011
12-31-09 | TIME PLOTTED => 10:42

Dist	COUNTY	ROUTE	POST MILES TOTAL PROJECT	SHEET No.	TOTAL SHEETS
07	Ven	101	42.0	28	45

REGISTERED CIVIL ENGINEER 06-30-10 DATE

07-06-10
PLANS APPROVAL DATE

REGISTERED PROFESSIONAL ENGINEER MIKE K. NGUYEN No. 67756 Exp. 6-30-11 CIVIL STATE OF CALIFORNIA

THE STATE OF CALIFORNIA OR ITS OFFICERS OR AGENTS SHALL NOT BE RESPONSIBLE FOR THE ACCURACY OR COMPLETENESS OF SCANNED COPIES OF THIS PLAN SHEET.

NOTE:

1. FOR ACCURATE RIGHT OF WAY AND ACCESS DATA, CONTACT RIGHT OF WAY ENGINEERING AT THE DISTRICT OFFICE.

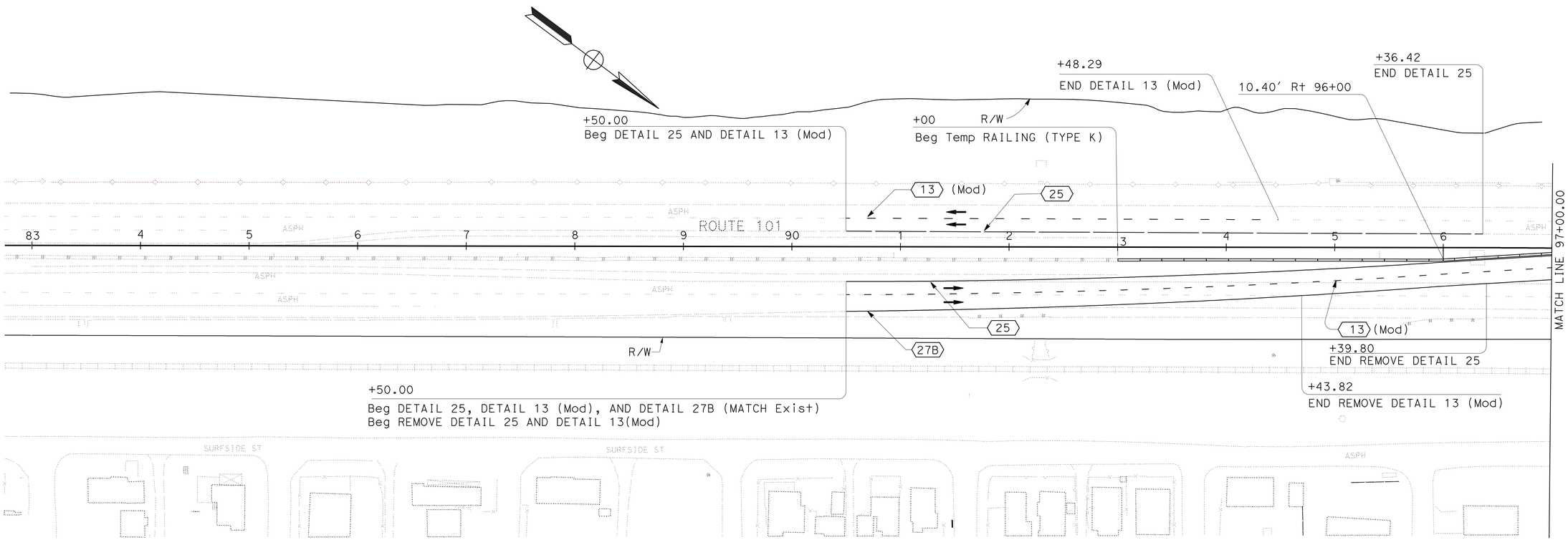

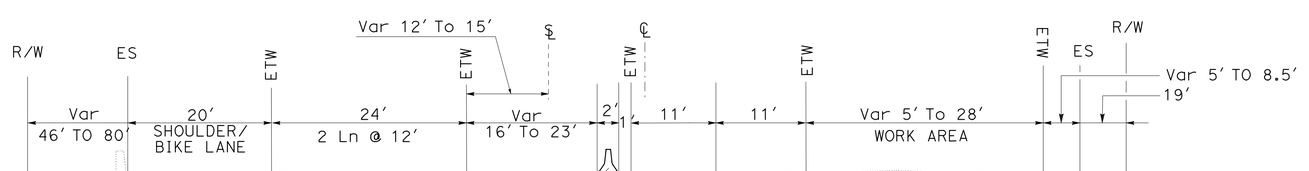

Sta 90+50.00 TO Sta 97+00.00 ROUTE 101

NO SCALE

STAGE CONSTRUCTION
(STAGE 3)

SCALE 1" = 50'

THIS PLAN ACCURATE FOR STAGE CONSTRUCTION WORK ONLY

SC-7

STATE OF CALIFORNIA - DEPARTMENT OF TRANSPORTATION
Caltrans®
DESIGN

CONSULTANT FUNCTIONAL SUPERVISOR: OC LEE

CALCULATED-DESIGNED BY: MIKE NGUYEN
CHECKED BY: PAUL H. HSU

REVISED BY
DATE REVISED

LAST REVISION 12-31-09
DATE PLOTTED => 10-JAN-2011
TIME PLOTTED => 10:42

Dist	COUNTY	ROUTE	POST MILES TOTAL PROJECT	SHEET No.	TOTAL SHEETS
07	Ven	101	42.0	29	45

REGISTERED CIVIL ENGINEER 06-30-10 DATE

07-06-10
PLANS APPROVAL DATE

REGISTERED PROFESSIONAL ENGINEER MIKE K. NGUYEN No. 67756 Exp. 6-30-11 CIVIL STATE OF CALIFORNIA

THE STATE OF CALIFORNIA OR ITS OFFICERS OR AGENTS SHALL NOT BE RESPONSIBLE FOR THE ACCURACY OR COMPLETENESS OF SCANNED COPIES OF THIS PLAN SHEET.

NOTE:

1. FOR ACCURATE RIGHT OF WAY AND ACCESS DATA, CONTACT RIGHT OF WAY ENGINEERING AT THE DISTRICT OFFICE.

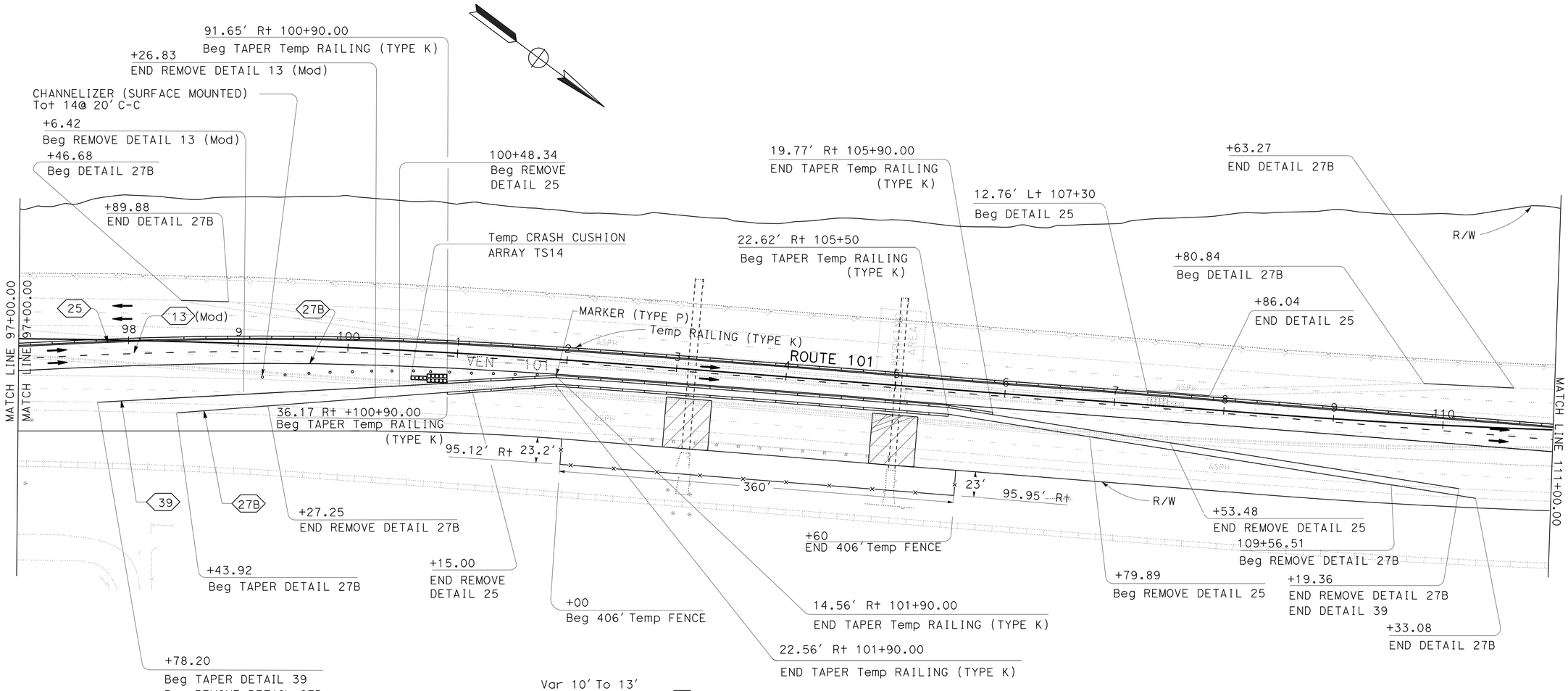

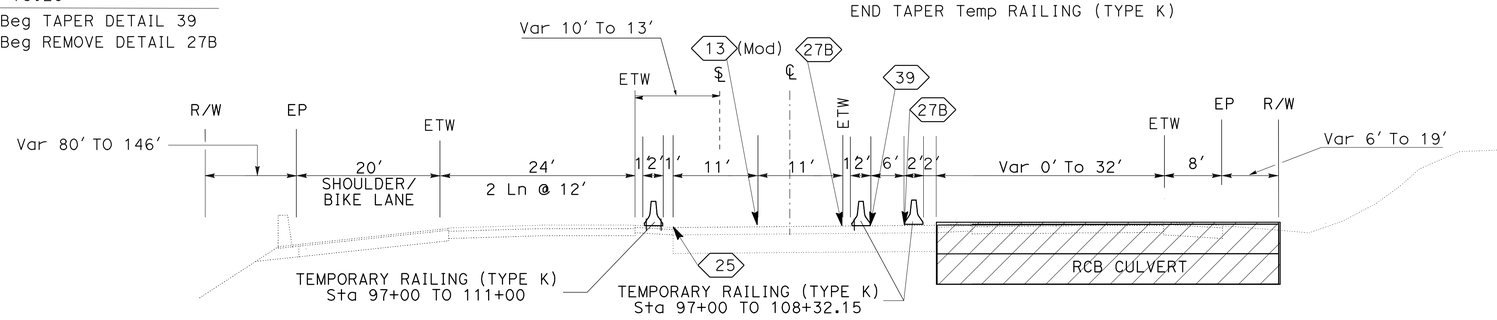

Sta 97+00.00 TO Sta 111+00.00

NO SCALE

THIS PLAN ACCURATE FOR STAGE CONSTRUCTION WORK ONLY

STAGE CONSTRUCTION
(STAGE 3)

SCALE 1" = 50′

SC-8

REVISED BY | DATE REVISED
MIKE NGUYEN | PAUL H. HSU
CALCULATED-DESIGNED BY | CHECKED BY
CONSULTANT FUNCTIONAL SUPERVISOR
OC LEE

STATE OF CALIFORNIA - DEPARTMENT OF TRANSPORTATION
Caltrans
DESIGN

LAST REVISION 12-31-09 | DATE PLOTTED => 10-JAN-2011 | TIME PLOTTED => 10:42

Dist	COUNTY	ROUTE	POST MILES TOTAL PROJECT	SHEET No.	TOTAL SHEETS
07	Ven	101	42.0	30	45

REGISTERED CIVIL ENGINEER 06-30-10 DATE

07-06-10
PLANS APPROVAL DATE

REGISTERED PROFESSIONAL ENGINEER MIKE K. NGUYEN No. 67756 Exp. 6-30-11 CIVIL STATE OF CALIFORNIA

THE STATE OF CALIFORNIA OR ITS OFFICERS OR AGENTS SHALL NOT BE RESPONSIBLE FOR THE ACCURACY OR COMPLETENESS OF SCANNED COPIES OF THIS PLAN SHEET.

NOTE:

1. FOR ACCURATE RIGHT OF WAY AND ACCESS DATA, CONTACT RIGHT OF WAY ENGINEERING AT THE DISTRICT OFFICE.

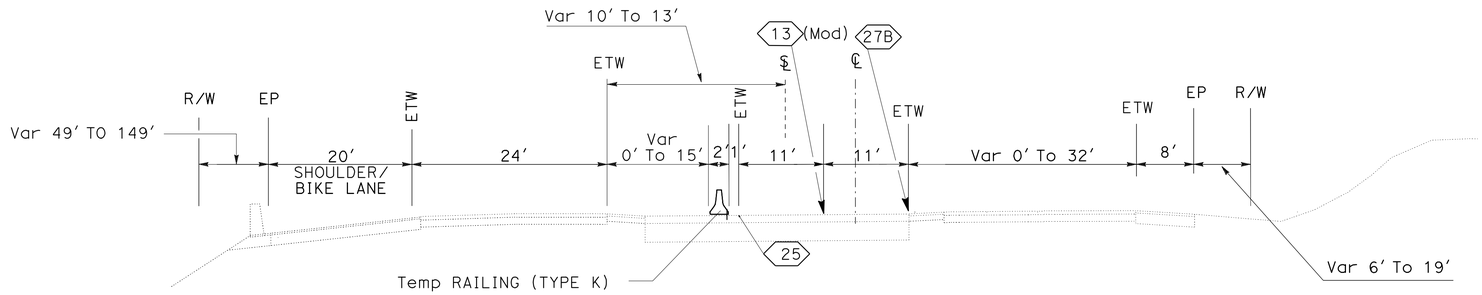

Sta 111+00.00 TO Sta 117+50

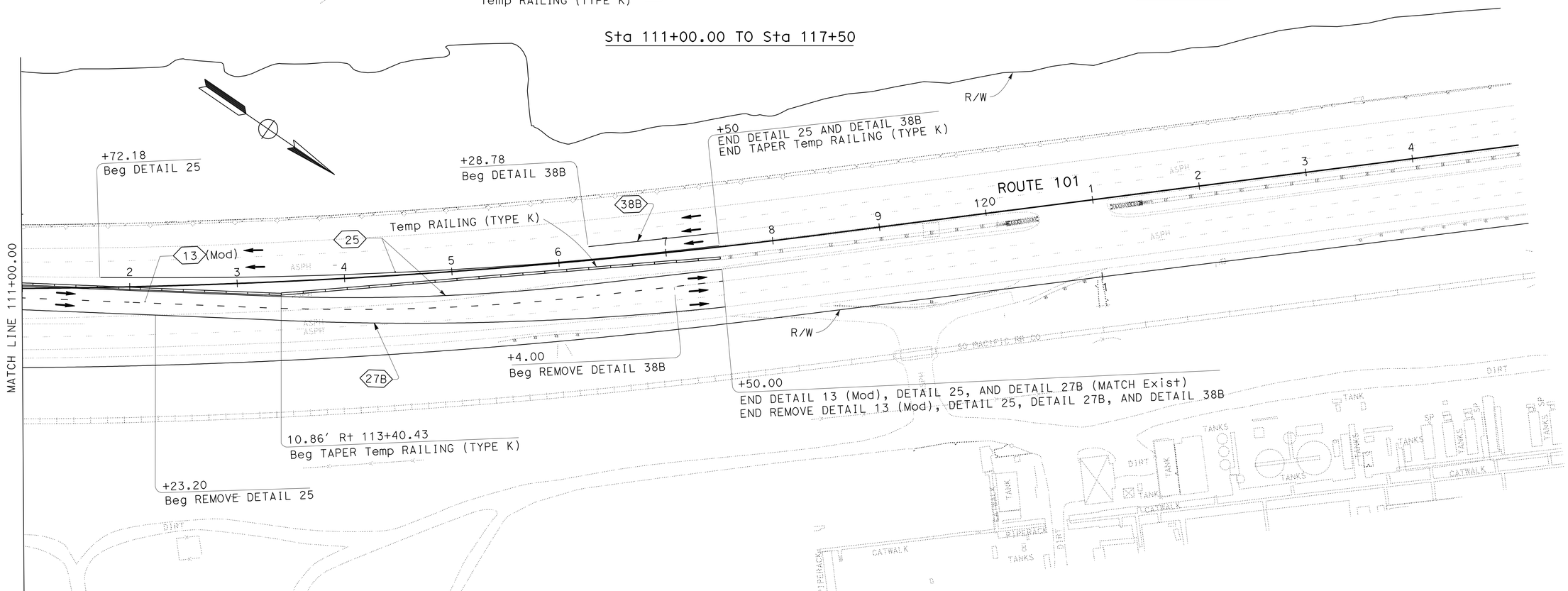

STAGE CONSTRUCTION

(STAGE 3)

SCALE: 1" = 50'

SC-9

THIS PLAN ACCURATE FOR STAGE CONSTRUCTION WORK ONLY

STATE OF CALIFORNIA - DEPARTMENT OF TRANSPORTATION
Caltrans® DESIGN
CONSULTANT FUNCTIONAL SUPERVISOR: OC LEE
CALCULATED-DESIGNED BY: MIKE NGUYEN
CHECKED BY: PAUL H. HSU
REVISED BY / DATE REVISED

LAST REVISION: DATE PLOTTED => 10-JAN-2011 TIME PLOTTED => 10:42
12-31-09

Dist	COUNTY	ROUTE	POST MILES TOTAL PROJECT	SHEET No.	TOTAL SHEETS
07	Ven	101	42.0	31	45

REGISTERED CIVIL ENGINEER 06-30-10 DATE

07-06-10
PLANS APPROVAL DATE

REGISTERED PROFESSIONAL ENGINEER MIKE K. NGUYEN No. 67756 Exp. 6-30-11 CIVIL STATE OF CALIFORNIA

THE STATE OF CALIFORNIA OR ITS OFFICERS OR AGENTS SHALL NOT BE RESPONSIBLE FOR THE ACCURACY OR COMPLETENESS OF SCANNED COPIES OF THIS PLAN SHEET.

NOTES:

1. REMOVE HMA (TYPE B) AND CLASS 3 AGGREGATE BASE AND GRADE TO ORIGINAL SURFACE.
2. FOR ACCURATE RIGHT OF WAY AND ACCESS DATA, CONTACT RIGHT OF WAY ENGINEERING AT THE DISTRICT OFFICE.

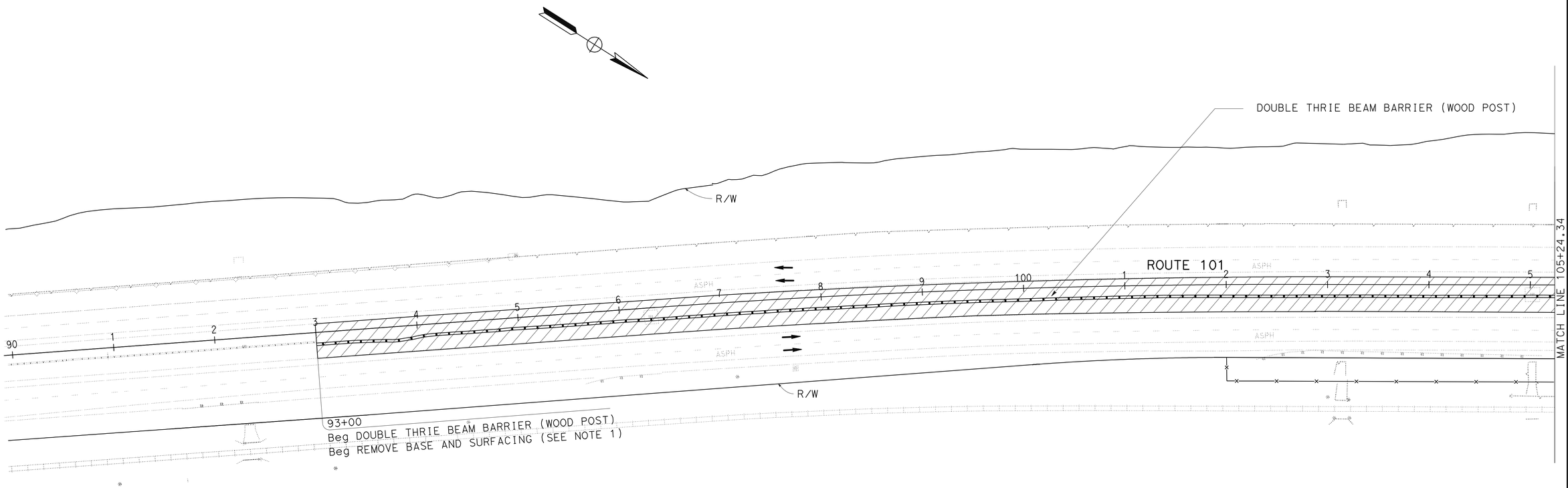

STAGE CONSTRUCTION
(STAGE 4)
SCALE 1" = 50'

SC-10

THIS PLAN ACCURATE FOR STAGE CONSTRUCTION WORK ONLY

REVISED BY | DATE REVISED
MIKE NGUYEN | PAUL H. HSU
CALCULATED-DESIGNED BY | CHECKED BY
CONSULTANT FUNCTIONAL SUPERVISOR: OC LEE
STATE OF CALIFORNIA - DEPARTMENT OF TRANSPORTATION
Caltrans® DESIGN

LAST REVISION 12-31-09 | DATE PLOTTED => 10-JAN-2011 | TIME PLOTTED => 10:42

Dist	COUNTY	ROUTE	POST MILES TOTAL PROJECT	SHEET No.	TOTAL SHEETS
07	Ven	101	42.0	32	45

REGISTERED CIVIL ENGINEER 06-30-10 DATE

07-06-10
PLANS APPROVAL DATE

REGISTERED PROFESSIONAL ENGINEER MIKE K. NGUYEN No. 67756 Exp. 6-30-11 CIVIL STATE OF CALIFORNIA

THE STATE OF CALIFORNIA OR ITS OFFICERS OR AGENTS SHALL NOT BE RESPONSIBLE FOR THE ACCURACY OR COMPLETENESS OF SCANNED COPIES OF THIS PLAN SHEET.

NOTE:

1. FOR ACCURATE RIGHT OF WAY AND ACCESS DATA, CONTACT RIGHT OF WAY ENGINEERING AT THE DISTRICT OFFICE.

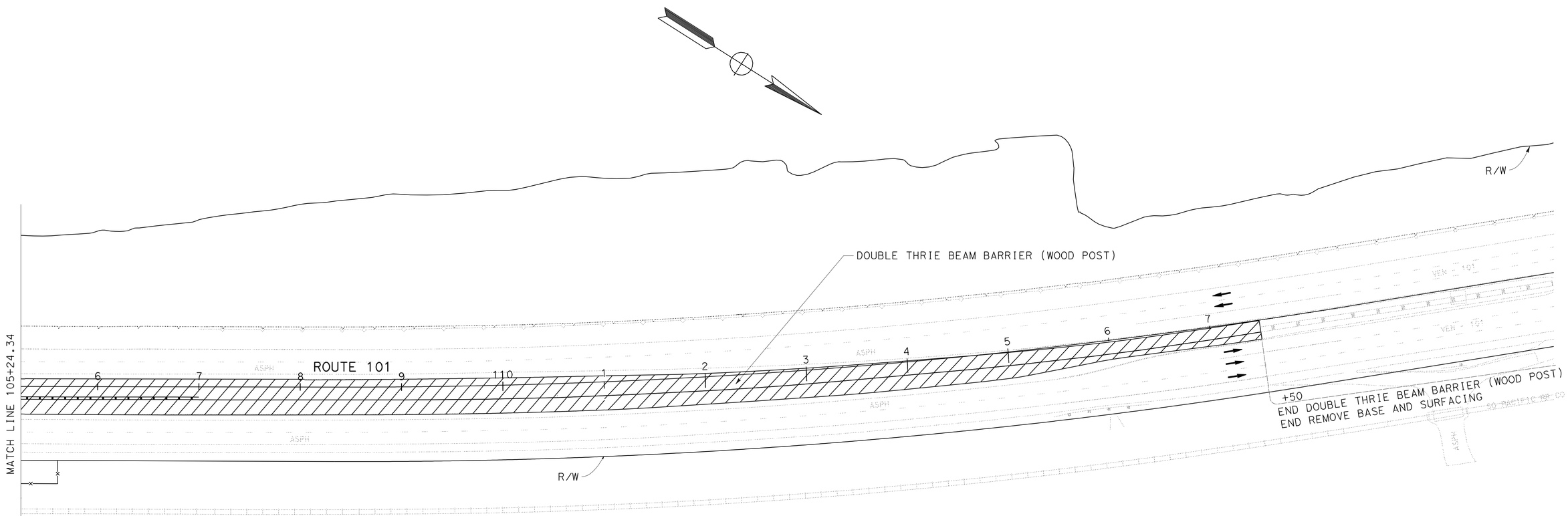

THIS PLAN ACCURATE FOR STAGE CONSTRUCTION WORK ONLY

STAGE CONSTRUTION
(STAGE 4)

SCALE 1" = 50'

SC-11

STATE OF CALIFORNIA - DEPARTMENT OF TRANSPORTATION
Caltrans® DESIGN

CONSULTANT FUNCTIONAL SUPERVISOR: OC LEE

CALCULATED-DESIGNED BY: MIKE NGUYEN
CHECKED BY: PAUL H. HSU

REVISED BY
DATE REVISED

LAST REVISION 12-31-09
DATE PLOTTED => 10-JAN-2011
TIME PLOTTED => 10:42

Dist	COUNTY	ROUTE	POST MILES TOTAL PROJECT	SHEET No.	TOTAL SHEETS
07	Ven	101	42.0	33	45

MKnguyen 06-30-10
REGISTERED CIVIL ENGINEER DATE

07-06-10
PLANS APPROVAL DATE

REGISTERED PROFESSIONAL ENGINEER MIKE K. NGUYEN No. 67756 Exp. 6-30-11 CIVIL STATE OF CALIFORNIA

THE STATE OF CALIFORNIA OR ITS OFFICERS OR AGENTS SHALL NOT BE RESPONSIBLE FOR THE ACCURACY OR COMPLETENESS OF SCANNED COPIES OF THIS PLAN SHEET.

TEMPORARY RAILING (TYPE K)

STAGE	SHEET No.	STATION	LF
1	SC-1 To SC-3	92+00 TO 118+10 (NB)	2,610
		92+40 TO 118+50 (SB)	2,610
2	SC-4 To SC-6	93+00 TO 117+50 (NB)	2,450
		102+30 TO 107+30 (SB)	500
		102+50 TO 107+30 (SB)	480
3	SC-7 To SC-10	93+50 TO 117+50 (NB)	2,390
		100+90 TO 105+90 (NB)	500
		100+90 TO 105+50 (NB)	460
TOTAL			12,000

TEMPORARY CRASH CUSHION MODULE

STAGE	SHEET No.	EA
1	SC-1	14
	SC-3	14
2	SC-5	14
3	SC-8	14
TOTAL		56

CHANNELIZER (SURFACE MOUNTED)

STAGE	SHEET No.	EA
1	SC-1	8
	SC-3	12
2	SC-5	51
	SC-6	25
3	SC-8	14
	SC-9	8
TOTAL		68

REMOVE DOUBLE THRIE BEAM BARRIER

STAGE	SHEET No.	STATION	LF
1	SC-1	93+00 TO 97+00	400
	SC-2	97+00 TO 111+00	1,400
	SC-3	111+00 TO 117+50	650
TOTAL			2,450

STAGE CONSTRUCTION QUANTITIES

SHEET No.	STATION	REMOVE							TEMPORARY TRAFFIC STRIPE (PAINT)					PAVEMENT MARKER (NON-REFLECTIVE)	PAVEMENT MARKER (RETROREFLECTIVE)	PAVEMENT MARKER (RETROREFLECTIVE)	HOT MIX ASPHALT (TYPE B)	CLASS 3 AGGREGATE BASE	ROADWAY EXCAVATION	TEMPORARY FENCE	REMOVE BASE AND SURFACING	DOUBLE THRIE BEAM BARRIER (WOOD POST)	REMARKS
		THERMOPLASTIC TRAFFIC STRIPE				PAVEMENT MARKER																	
		DETAIL 13 (MOD)	DETAIL 27B	DETAIL 38B (8" WHITE)	DETAIL 25	TYPE A	TYPE G	TYPE H	DETAIL 13 (MOD)	DETAIL 38B (8" WHITE)	DETAIL 25 (YELLOW)	DETAIL 27B	DETAIL 39 (6" WHITE)	TYPE A	TYPE G	TYPE H							
		LF	LF	LF	LF	EA	EA	EA	LF	LF	LF	LF	LF	EA	EA	EA	TON	CY	CY	LF	CY	LF	
SC-1 SC-2 SC-3	93+00 TO 118+30.69			182	794		18	19		182	794				18	19	5,112	2,524	4,040				STAGE 1
SC-4	90+50 TO 97+00	120			586	40	10	14	400		650	650		40	10	15							STAGE 2
SC-5	97+00 TO 111+00		83		121			6	1,400		1,400	2,610	1,216	124	31	31							
SC-6	111+00 TO 117+50	180		121	578	60	27	13	650		650	1,050		60	15	15							
SC-7	90+50 TO 97+00	180			650	60	15	15	650		650	650		60	15	15							STAGE 3
SC-8	97+00 TO 111+00	20	212		141	4	2	6	1,400		1,400	2,589	1,241	124	31	31				406.2			
SC-9	111+00 TO 117+50	180	650	46	527	60	21	12	650		650	650		60	15	15							
SC-10	93+00 TO 105+24																				2,698	1,224.3	STAGE 4
SC-11	105+24.34 TO 117+50																				2,350	1,225.7	
SUBTOTAL		680	1,595	349	2,603	224	93	85	7,600	182	6,194	8,199	2,457	468	135	141	5,112	2,524	4,040	406.2	5,048	2,450	
GRAND TOTAL		4,926				402			24,632					468	276		5,112	2,524	4,040	406.2	5,048	2,450	

STAGE CONSTRUCTION QUANTITIES

SCQ-1

STATE OF CALIFORNIA - DEPARTMENT OF TRANSPORTATION
Caltrans® DESIGN
CONSULTANT FUNCTIONAL SUPERVISOR: OC LEE
CALCULATED-DESIGNED BY: MIKE NGUYEN
CHECKED BY: PAUL H. HSU
REVISED BY / DATE REVISED

LAST REVISION 04-28-10 | DATE PLOTTED => 10-JAN-2011 | TIME PLOTTED => 10:42

Dist	COUNTY	ROUTE	POST MILES TOTAL PROJECT	SHEET No.	TOTAL SHEETS
07	Ven	101	42.0	34	45

REGISTERED CIVIL ENGINEER 5/19/10 DATE

07-06-10
PLANS APPROVAL DATE

REGISTERED PROFESSIONAL ENGINEER ALBERT K. YU No. 43220 Exp. 3/31/12 CIVIL STATE OF CALIFORNIA

THE STATE OF CALIFORNIA OR ITS OFFICERS OR AGENTS SHALL NOT BE RESPONSIBLE FOR THE ACCURACY OR COMPLETENESS OF SCANNED COPIES OF THIS PLAN SHEET.

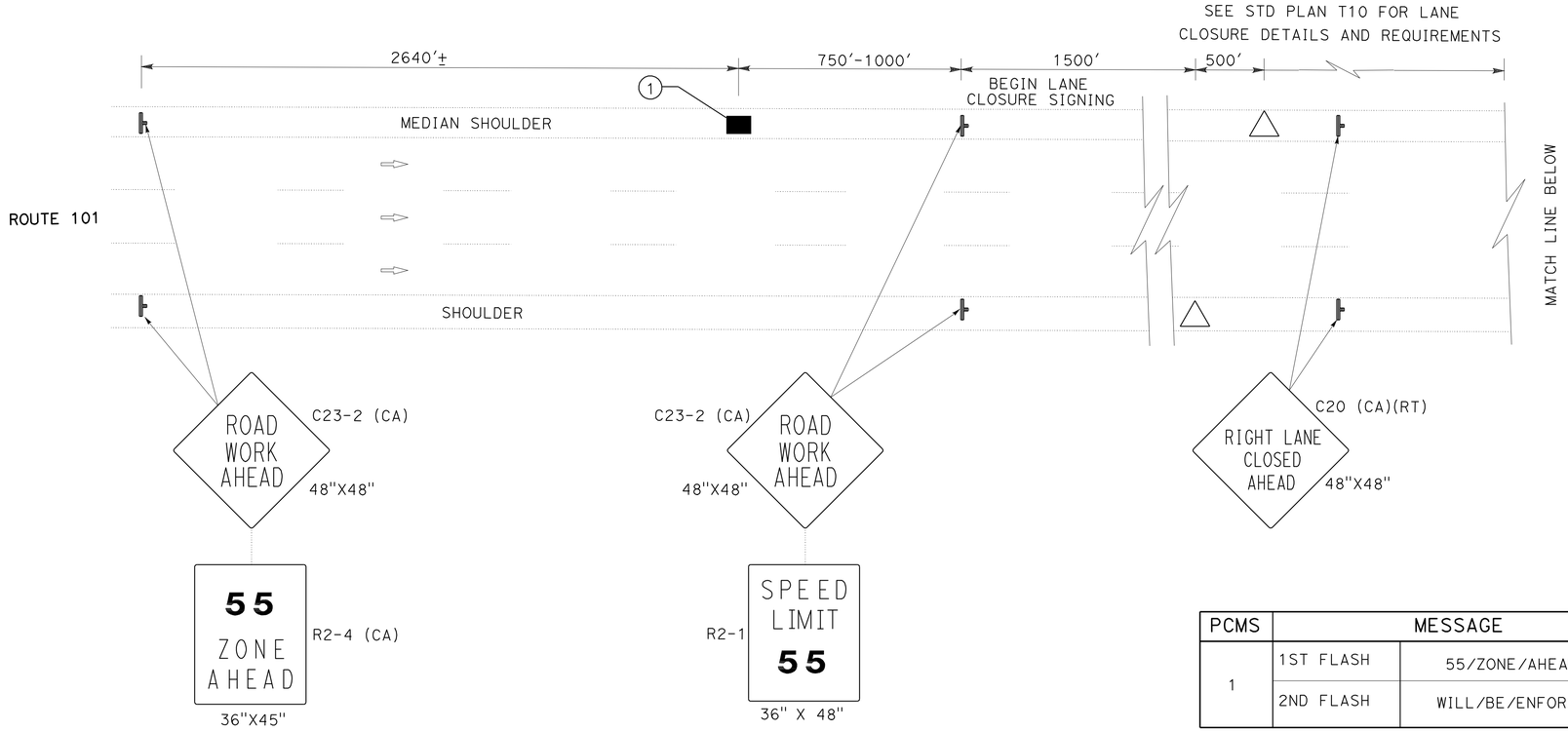

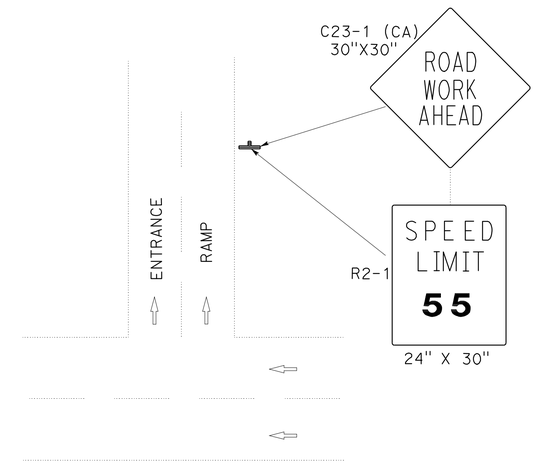

PCMS	MESSAGE	
1	1ST FLASH	55/ZONE/AHEAD
	2ND FLASH	WILL/BE/ENFORCED

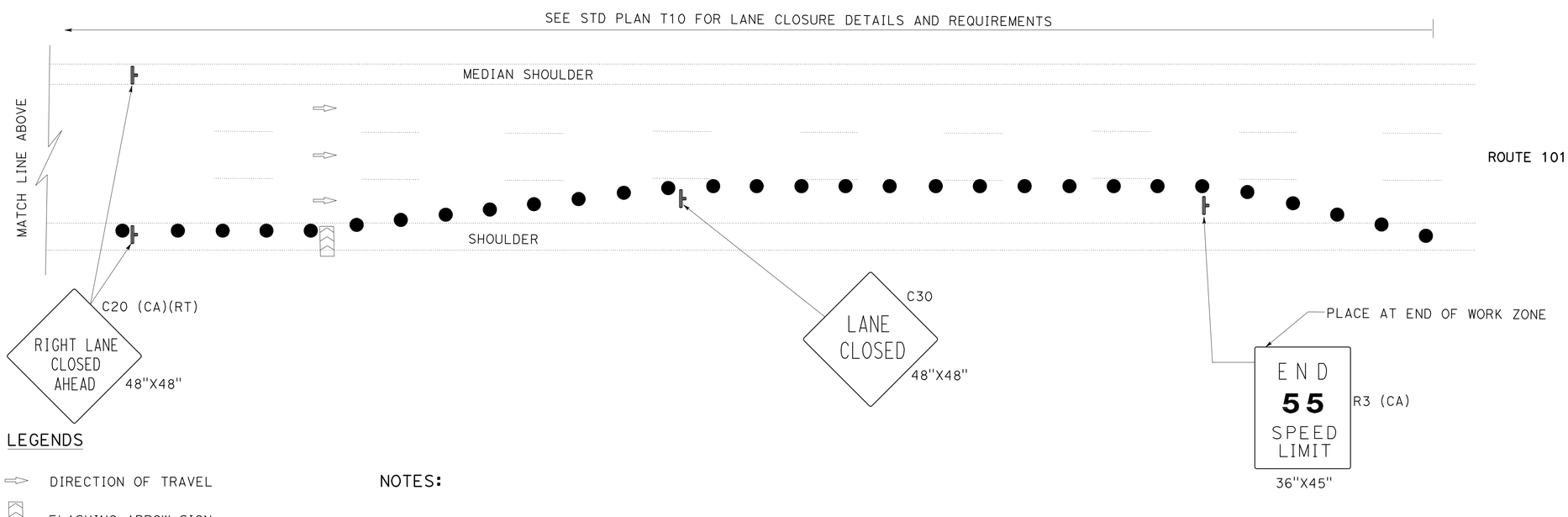

LEGENDS

- DIRECTION OF TRAVEL
- FLASHING ARROW SIGN
- PORTABLE CHANGEABLE MESSAGE SIGN (PCMS)
- TRAFFIC CONE
- RADAR TRAILER

NOTES:

1. SIGN LOCATIONS ARE APPROXIMATE. EXACT LOCATIONS WILL BE DETERMINED BY THE ENGINEER.
2. PORTABLE CHANGEABLE MESSAGE SIGN SHALL BE PLACED ON THE MEDIAN SHOULDER.
3. COVER EXISTING R2-1 SIGNS WITHIN CLOSURE LIMIT (INCLUDING THE FIRST WARNING SIGN W20-1.

THIS PLAN ACCURATE FOR TRAFFIC HANDLING ONLY

TRAFFIC HANDLING DETAILS
SPEED REDUCTION DURING LANE CLOSURE

NO SCALE

THD-1

REVISED BY	DATE REVISED
JC	5/10

CALCULATED-DESIGNED BY: JOCELYN CHIANG
CHECKED BY: ALBERT YU
FUNCTIONAL SUPERVISOR: JOHN YANG

STATE OF CALIFORNIA - DEPARTMENT OF TRANSPORTATION
Caltrans DTM

LAST REVISION 00-00-00
DATE PLOTTED => 10-JAN-2011
TIME PLOTTED => 10:42

Dist	COUNTY	ROUTE	POST MILES TOTAL PROJECT	SHEET No.	TOTAL SHEETS
07	Ven	101	42.0	35	45

REGISTERED CIVIL ENGINEER 06-30-10 DATE

07-06-10
PLANS APPROVAL DATE

REGISTERED PROFESSIONAL ENGINEER MIKE K. NGUYEN No. 67756 Exp. 6-30-11 CIVIL STATE OF CALIFORNIA

THE STATE OF CALIFORNIA OR ITS OFFICERS OR AGENTS SHALL NOT BE RESPONSIBLE FOR THE ACCURACY OR COMPLETENESS OF SCANNED COPIES OF THIS PLAN SHEET.

NOTES:

1. REMOVE STRIPING AND PAVEMENT MARKERS IN CONFLICT WITH PAVEMENT DELINEATION.
2. FOR ACCURATE RIGHT OF WAY AND ACCESS DATA, CONTACT RIGHT OF WAY ENGINEERING AT THE DISTRICT OFFICE.

LEGEND:

XX TRAFFIC STRIPE DETAIL NUMBER

→ DIRECTION OF TRAFFIC

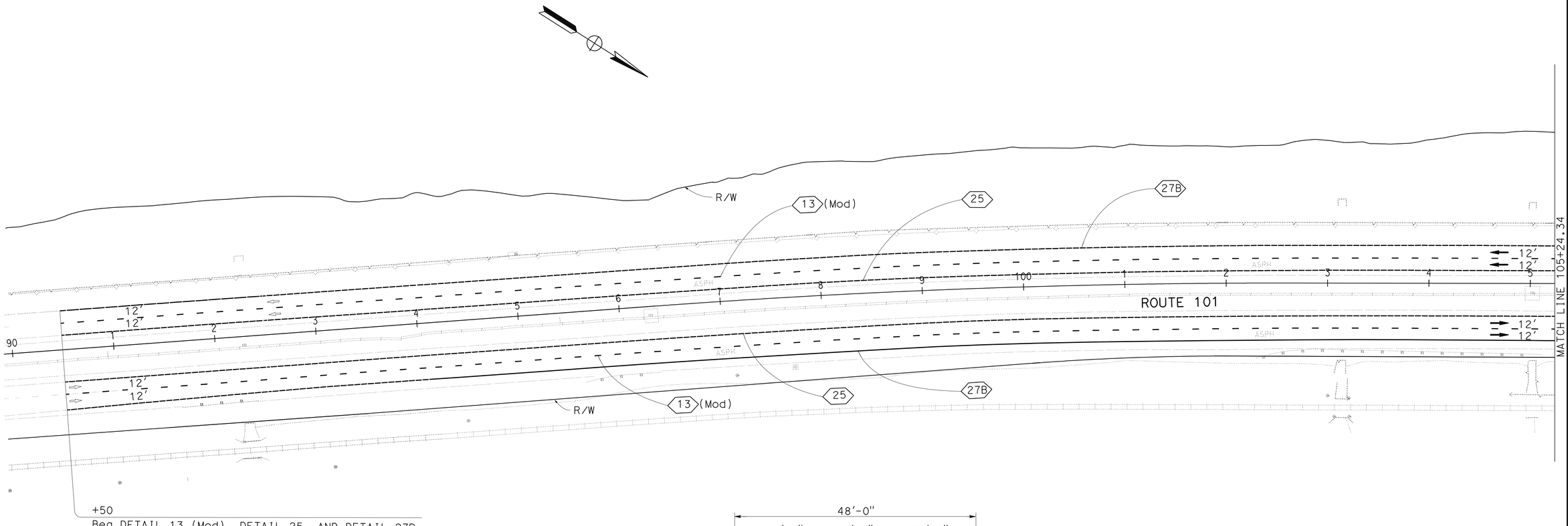

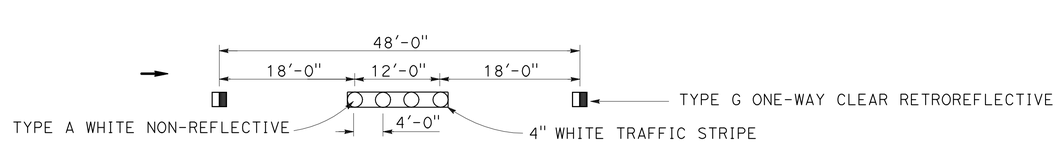

DETAIL 13 (Mod)
NO SCALE

PAVEMENT DELINEATION PLAN

SCALE 1" = 50'

THIS PLAN ACCURATE FOR PAVEMENT DELINEATION WORK ONLY

PD-1

STATE OF CALIFORNIA - DEPARTMENT OF TRANSPORTATION
Caltrans
DESIGN

CONSULTANT FUNCTIONAL SUPERVISOR: OC LEE
CALCULATED-DESIGNED BY: MIKE NGUYEN
CHECKED BY: PAUL H. HSU
REVISED BY
DATE REVISED

LAST REVISION 12-31-09
DATE PLOTTED => 10-JAN-2011
TIME PLOTTED => 10:42

Dist	COUNTY	ROUTE	POST MILES TOTAL PROJECT	SHEET No.	TOTAL SHEETS
07	Ven	101	42.0	36	45

REGISTERED CIVIL ENGINEER 06-30-10 DATE

07-06-10
PLANS APPROVAL DATE

REGISTERED PROFESSIONAL ENGINEER MIKE K. NGUYEN No. 67756 Exp. 6-30-11 CIVIL STATE OF CALIFORNIA

THE STATE OF CALIFORNIA OR ITS OFFICERS OR AGENTS SHALL NOT BE RESPONSIBLE FOR THE ACCURACY OR COMPLETENESS OF SCANNED COPIES OF THIS PLAN SHEET.

NOTE:

1. FOR ACCURATE RIGHT OF WAY AND ACCESS DATA, CONTACT RIGHT OF WAY ENGINEERING AT DISTRICT OFFICE.

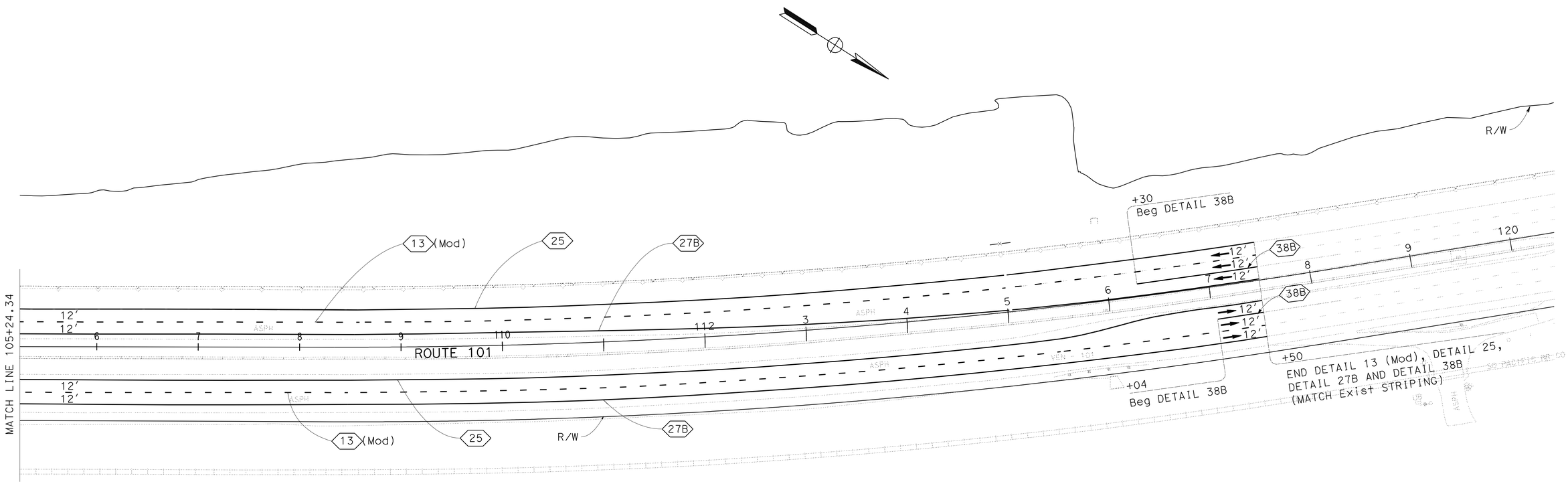

PAVEMENT DELINEATION PLAN

SCALE 1" = 50′

PD-2

THIS PLAN ACCURATE FOR PAVEMENT DELINEATION WORK ONLY

REVISED BY	DATE REVISED

CALCULATED-DESIGNED BY: MIKE NGUYEN
CHECKED BY: PAUL H. HSU

CONSULTANT FUNCTIONAL SUPERVISOR: OC LEE

STATE OF CALIFORNIA - DEPARTMENT OF TRANSPORTATION
Caltrans
DESIGN

LAST REVISION 12-31-09
DATE PLOTTED => 10-JAN-2011
TIME PLOTTED => 10:43

Dist	COUNTY	ROUTE	POST MILES TOTAL PROJECT	SHEET No.	TOTAL SHEETS
07	Ven	101	42.0	37	45

REGISTERED CIVIL ENGINEER DATE 06-30-10

07-06-10
PLANS APPROVAL DATE

REGISTERED PROFESSIONAL ENGINEER MIKE K. NGUYEN No. 67756 Exp. 6-30-11 CIVIL STATE OF CALIFORNIA

THE STATE OF CALIFORNIA OR ITS OFFICERS OR AGENTS SHALL NOT BE RESPONSIBLE FOR THE ACCURACY OR COMPLETENESS OF SCANNED COPIES OF THIS PLAN SHEET.

PAVEMENT DELINEATION QUANTITIES

SHEET No.	STATION	DETAIL No.	THERMOPLASTIC TRAFFIC STRIPE				PAVEMENT MARKER		
							RETROREFLECTIVE		NON-REFLECTIVE
			8" WHITE	4" WHITE	4" YELLOW	4" THERMOPLASTIC TRAFFIC STRIPE (BROKEN 36-12)	TYPE G	TYPE H	
			LF	LF	LF	LF	EA	EA	EA
PD-1 & PD-2	90+50 TO 117+50 (NB & SB)	13 (MOD)				5,400	116		464
	90+50 TO 117+50 (NB & SB)	25			5,400			116	
	90+50 TO 117+50 (NB & SB)	27B		5400					
	117+04 TO 117+50 (NB)	38B	46				6		
	160+30 TO 117+50 (SB)	38B	120				12		
SUBTOTAL			166	5,400	5,400	5,400	134	116	464
TOTAL			166	10,800		5,400	250		464

PAVEMENT DELINEATION QUANTITIES

PDQ-1

STATE OF CALIFORNIA - DEPARTMENT OF TRANSPORTATION
Caltrans DESIGN

CONSULTANT FUNCTIONAL SUPERVISOR: OC LEE
CALCULATED-DESIGNED BY: MIKE NGUYEN
CHECKED BY: PAUL H. HSU
REVISED BY
DATE REVISED

LAST REVISION 12-31-09 | DATE PLOTTED => 10-JAN-2011 TIME PLOTTED => 10:43

Dist	COUNTY	ROUTE	POST MILES TOTAL PROJECT	SHEET No.	TOTAL SHEETS
07	Ven	101	42.0	38	45

REGISTERED CIVIL ENGINEER DATE 06-30-10

07-06-10
PLANS APPROVAL DATE

REGISTERED PROFESSIONAL ENGINEER MIKE K. NGUYEN No. 67756 Exp. 6-30-11 CIVIL STATE OF CALIFORNIA

THE STATE OF CALIFORNIA OR ITS OFFICERS OR AGENTS SHALL NOT BE RESPONSIBLE FOR THE ACCURACY OR COMPLETENESS OF SCANNED COPIES OF THIS PLAN SHEET.

ROADWAY QUANTITIES

SHEET No.	STATION	REMOVE CONCRETE BARRIER (TYPE 50)	REMOVE METAL BEAM GUARD RAILING	CLASS 3 AGGREGATE BASE	LEAN CONCRETE BASE	HOT MIX ASPHALT (TYPE B)	ROADWAY EXCAVATION	CONCRETE BARRIER (TYPE 60S)	METAL BEAM GUARD RAILING (WOOD POST)	TERMINAL ANCHOR ASSEMBLY (TYPE SFT)
		LF	LF	CY	CY	TON	CY	LF	LF	EA
L-1	97+00 TO 111+00	280	112.5	280	89	422	578	280	112.5	1
	TOTAL	280	112.5	280	89	422	578	280	112.5	1

SUMMMARY OF QUANTITIES

Q-1

STATE OF CALIFORNIA - DEPARTMENT OF TRANSPORTATION
Caltrans DESIGN

CONSULTANT FUNCTIONAL SUPERVISOR: OC LEE

CALCULATED-DESIGNED BY: MIKE NGUYEN
CHECKED BY: PAUL H. HSU

REVISED BY
DATE REVISED

LAST REVISION 12-31-09
DATE PLOTTED => 10-JAN-2011
TIME PLOTTED => 10:43

DIST	COUNTY	ROUTE	POST MILES TOTAL PROJECT	SHEET NO.	TOTAL SHEETS
07	Ven	101	42.0	39	45

Randell D. Hiatt
REGISTERED CIVIL ENGINEER

June 6, 2008
PLANS APPROVAL DATE

REGISTERED PROFESSIONAL ENGINEER Randell D. Hiatt No. C50200 Exp. 6-30-09 CIVIL STATE OF CALIFORNIA

The State of California or its officers or agents shall not be responsible for the accuracy or completeness of electronic copies of this plan sheet.

To accompany plans dated 07-06-10

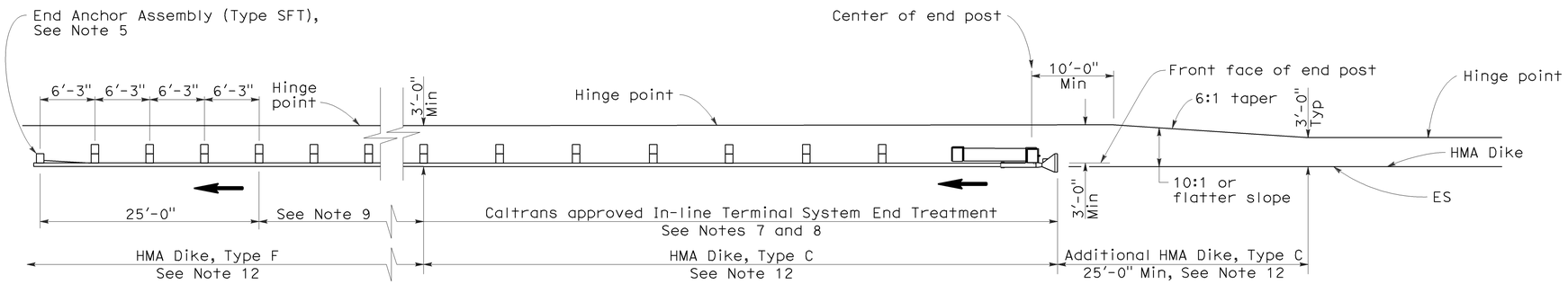

TYPE 11A LAYOUT

(EMBANKMENT GUARD INSTALLATION WITH IN-LINE END TREATMENT AT TRAFFIC APPROACH END OF RAILING)
See Note 6

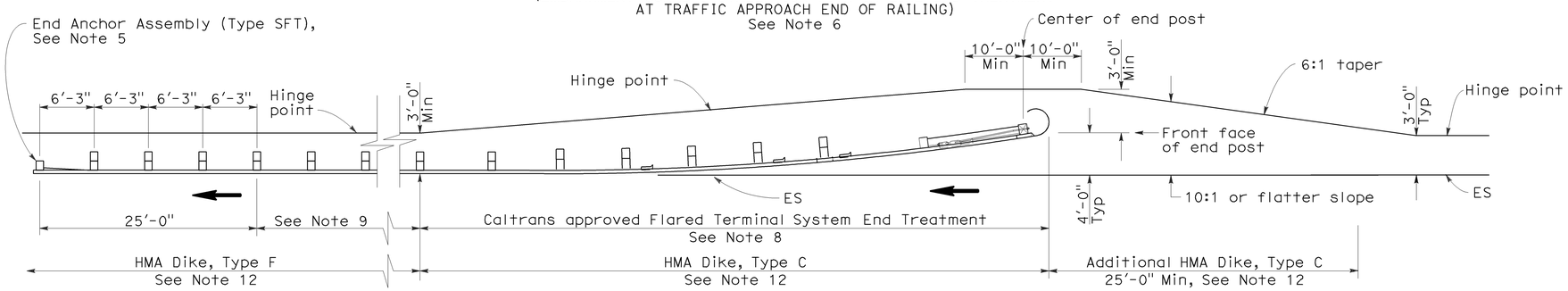

TYPE 11B LAYOUT

(EMBANKMENT GUARD RAILING INSTALLATION WITH FLARED END TREATMENT AT TRAFFIC APPROACH END OF RAILING)
See Note 6

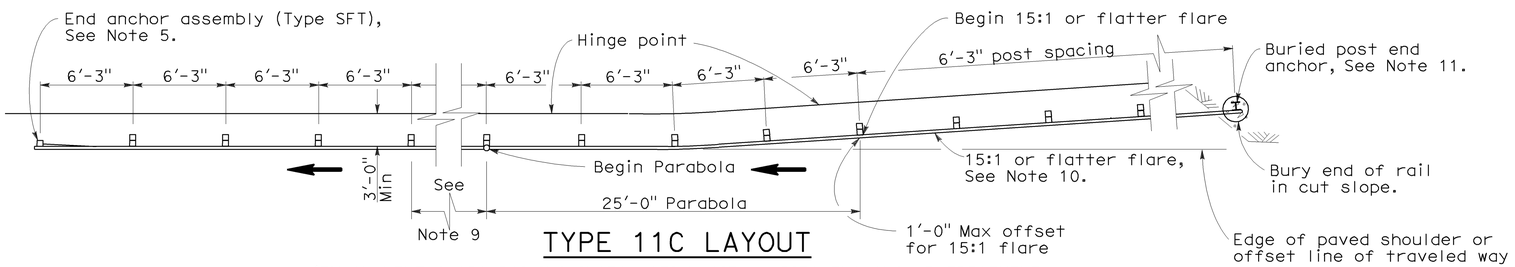

TYPE 11C LAYOUT

(EMBANKMENT GUARD RAILING INSTALLATION WITH BURIED END ANCHOR TREATMENT AT TRAFFIC APPROACH END OF RAILING)
See Notes 6 and 12

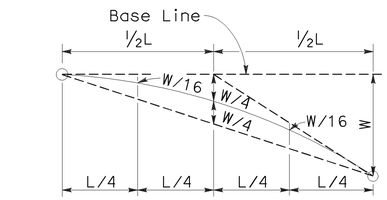

TYPICAL PARABOLIC LAYOUT

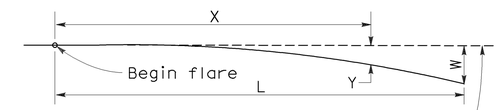

Base Line (Edge of paved shoulder or offset line of edge of traveled way)

$$Y = \frac{WX^2}{L^2}$$

Y = Offset from base line
W = Maximum offset
X = Distance along base line
L = Length of flare

PARABOLIC FLARE OFFSETS

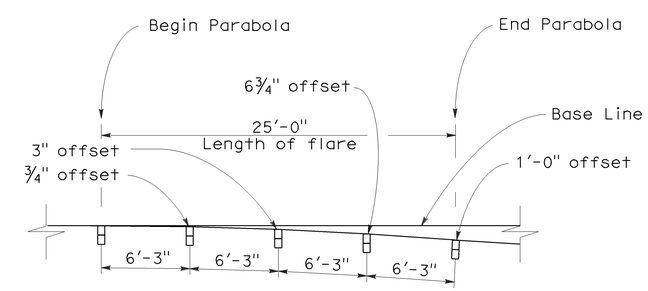

TYPICAL FLARE OFFSETS FOR 1 FOOT MAX END OFFSET

NOTES:

1. Line post, blocks and hardware to be used are shown on Standard Plans A77A1, A77A2, A77B1, A77C1, and A77C2.
2. Guard rail post spacing to be 6'-3" center to center, except as otherwise noted.
3. Except as noted, line posts are 6" x 8" x 6'-0" wood with 6" x 8" x 1'-2" wood blocks. W6 x 9 steel posts, 6'-0" in length, with 6" x 8" x 1'-2" notched wood blocks or recycled plastic blocks may be used for 6" x 8" x 6'-0" wood post with 6" x 8" x 1'-2" wood blocks where applicable and when specified.
4. Direction of adjacent traffic indicated by ⟶.
5. For End Anchor Assembly (Type SFT) details, see Standard Plan A77H1.
6. Layout Types 11A, 11B or 11C are typically used where guard railing is recommended to shield embankment slopes and a crashworthy end treatment is required for only one direction of traffic.
7. In-line Terminal System End Treatments are used where site conditions will not accommodate a flared end treatment.
8. The type of terminal system end treatment to be used will be shown on the Project Plans.
9. Dependent on site conditions (embankment height and side slope), construction of additional guard railing (length equal to multiples of 12'-6" with 6'-3" post spacing) may be advisable.
10. The 15:1 or flatter flare used with buried end anchors is based on the edge of the paved shoulder or offset line of edge of the traveled way. The length of guard railing within the 15:1 or flatter flare is based on site conditions and should be a length equal to multiples of 12'-6".
11. For details of the buried post end anchor used with Type 11C Layout, see Standard Plan A77I2.
12. Where placement of dike is required with guard railing installations, see Revised Standard Plan RSP A77C4 for dike positioning details.

STATE OF CALIFORNIA
DEPARTMENT OF TRANSPORTATION

METAL BEAM GUARD RAILING TYPICAL LAYOUTS FOR EMBANKMENTS

NO SCALE

RSP A77E1 DATED JUNE 6, 2008 SUPERSEDES STANDARD PLAN A77E1 DATED MAY 1, 2006 - PAGE 48 OF THE STANDARD PLANS BOOK DATED MAY 2006.

REVISED STANDARD PLAN RSP A77E1

2006 REVISED STANDARD PLAN RSP A77E1

12-10-07

DIST	COUNTY	ROUTE	POST MILES TOTAL PROJECT	SHEET NO.	TOTAL SHEETS
07	Ven	101	42.0	40	45

Randell D. Hiatt
REGISTERED CIVIL ENGINEER

October 20, 2006
PLANS APPROVAL DATE

REGISTERED PROFESSIONAL ENGINEER
Randell D. Hiatt
No. C50200
Exp. 6-30-07
CIVIL
STATE OF CALIFORNIA

The State of California or its officers or agents shall not be responsible for the accuracy or completeness of electronic copies of this plan sheet.

To accompany plans dated 07-06-10

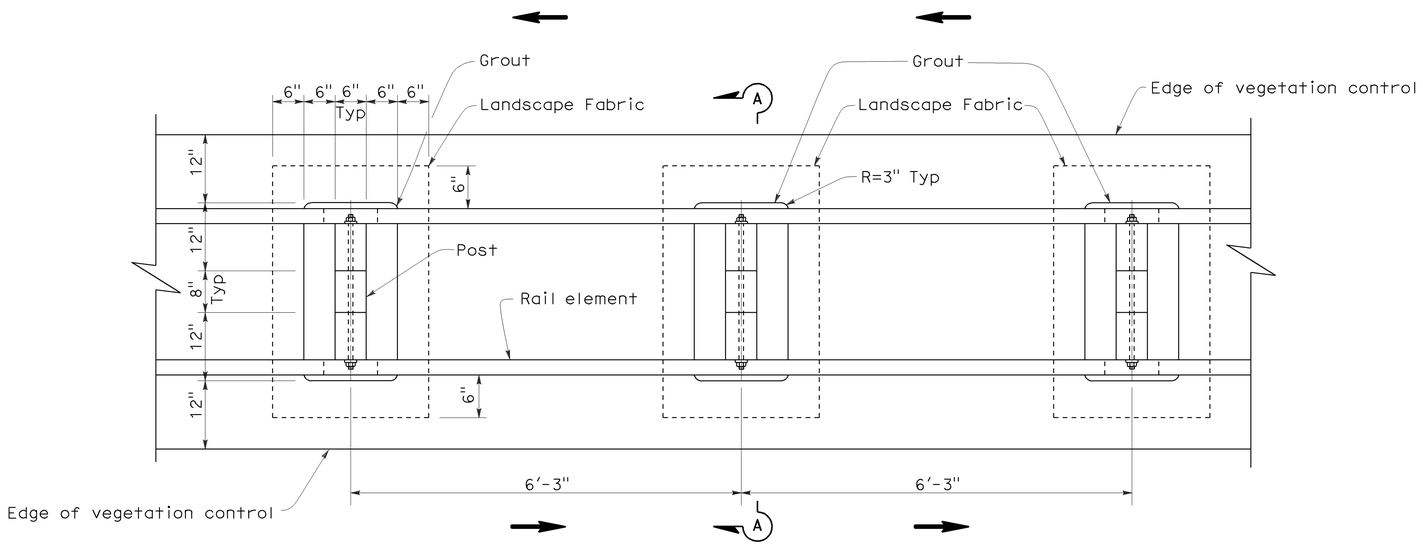

PLAN

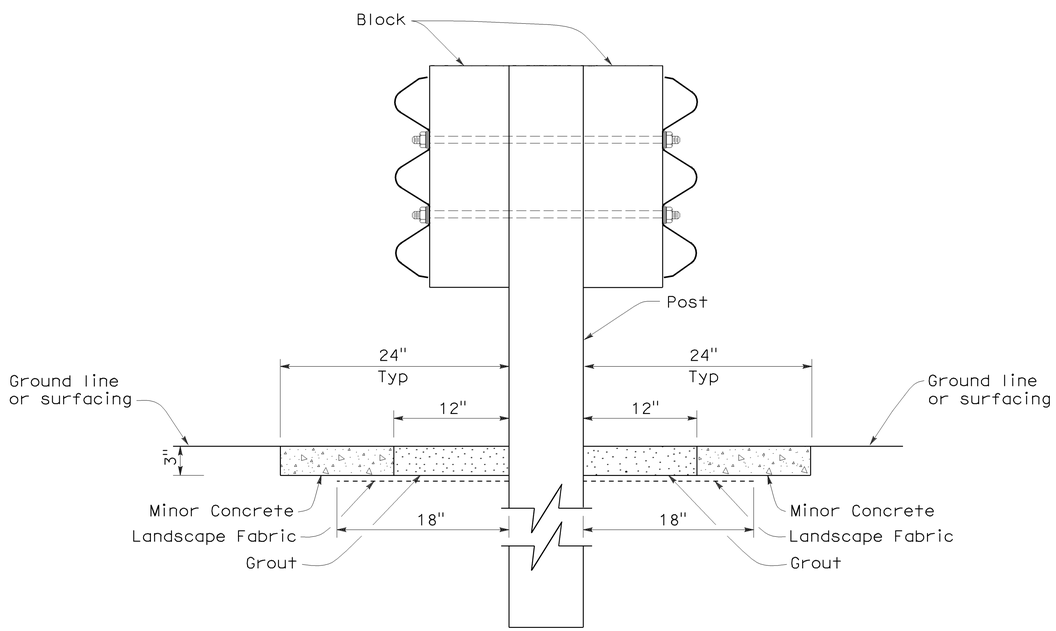

SECTION A-A

NOTE:

1. Direction of adjacent traffic indicated by ⟶.

STATE OF CALIFORNIA
DEPARTMENT OF TRANSPORTATION

DOUBLE THRIE BEAM BARRIER
TYPICAL VEGETATION CONTROL
STANDARD BARRIER RAILING SECTION

NO SCALE

NSP A78C4 DATED OCTOBER 20, 2006 SUPPLEMENTS THE STANDARD PLANS BOOK DATED MAY 2006.

NEW STANDARD PLAN NSP A78C4

2006 NEW STANDARD PLAN NSP A78C4

7-17-06

DIST	COUNTY	ROUTE	POST MILES TOTAL PROJECT	SHEET NO.	TOTAL SHEETS
07	Ven	101	42.0	41	45

REGISTERED CIVIL ENGINEER

June 5, 2009
PLANS APPROVAL DATE

REGISTERED PROFESSIONAL ENGINEER Glenn DeCou No. C34547 Exp. 9-30-09 CIVIL STATE OF CALIFORNIA

The State of California or its officers or agents shall not be responsible for the accuracy or completeness of electronic copies of this plan sheet.

To accompany plans dated 07-06-10

2006 REVISED STANDARD PLAN RSP A85

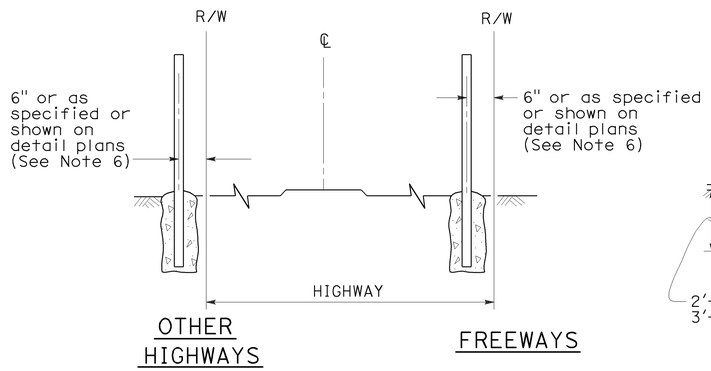

FENCE LOCATION

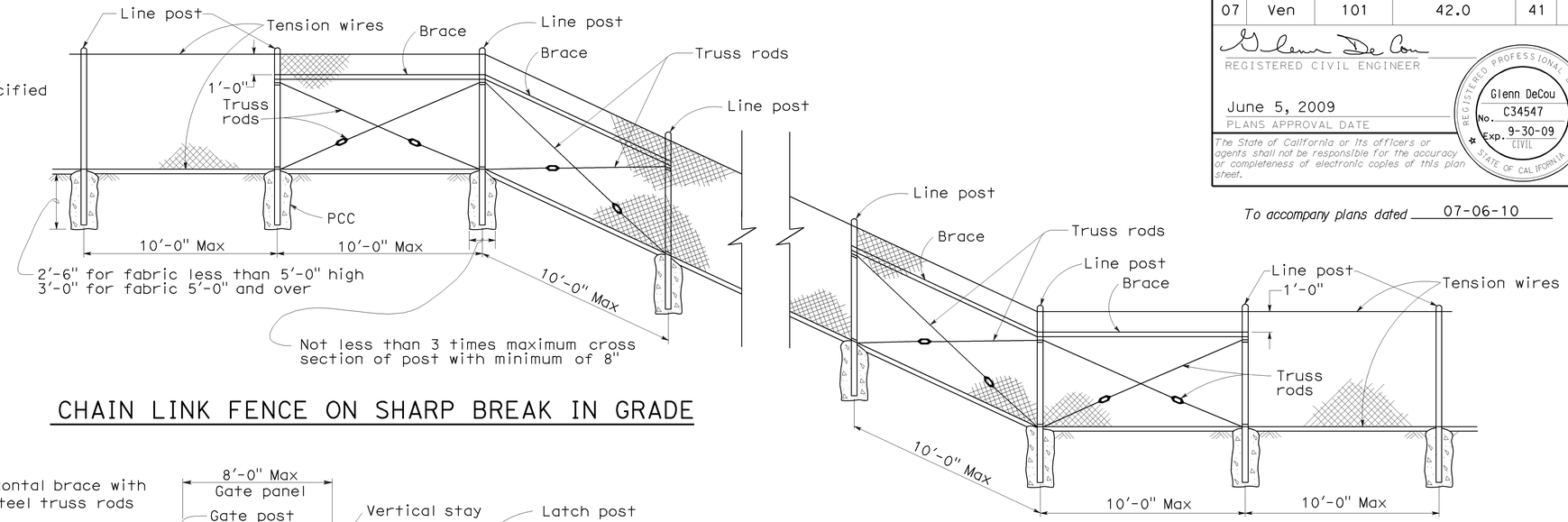

CHAIN LINK FENCE ON SHARP BREAK IN GRADE

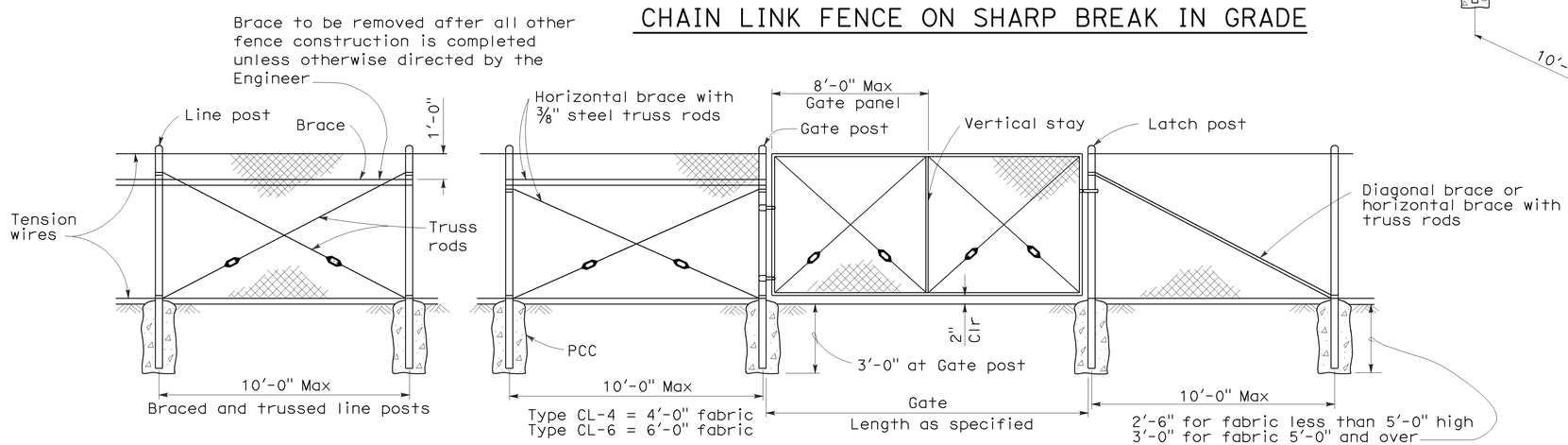

CHAIN LINK GATE INSTALLATION

GATE POST			
FENCE HEIGHT	GATE WIDTHS	NOMINAL ID	WEIGHT PER FOOT
6'-0" and Less	Up thru 6'-0"	2½"	4.95 LB
	Over 6'-0" thru 12'-0"	4"	10.79 LB
	Over 12'-0" thru 18'-0"	5"	14.62 LB
	Over 18'-0" to 24'-0" Max	6"	18.97 LB
Over 6'-0"	Up thru 6'-0"	3"	7.58 LB
	Over 6'-0" thru 12'-0"	5"	14.62 LB
	Over 12'-0" thru 18'-0"	6"	18.97 LB
	Over 18'-0" to 24'-0" Max	8"	28.55 LB

Above post dimensions and weights are minimums. Larger sizes may be used on approval of the Engineer.

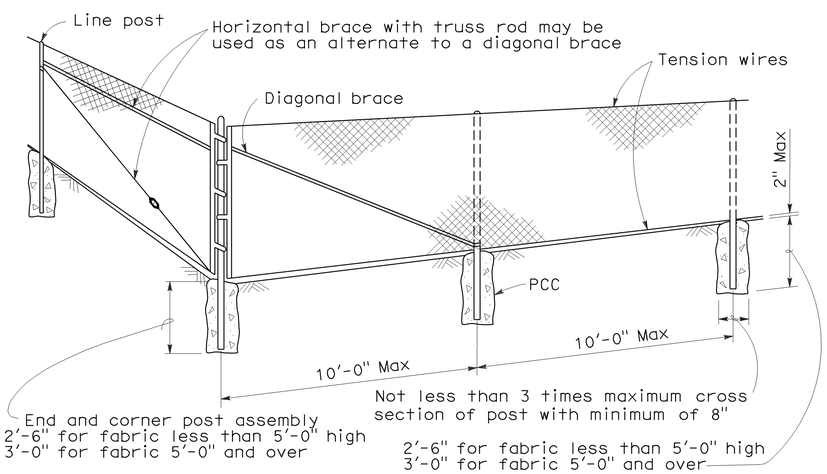

CORNER POST

NOTES:

1. The below table shows examples of post and brace sections which may comply with the Specifications.
2. Sections shown in the tables must also comply with the strength requirements and other provisions of the Specifications.
3. Other sections which comply with the strength requirements and other provisions of the Specifications may be used on approval of the Engineer.
4. Options exercised shall be uniform on any one project.
5. Dimensions shown are nominal.
6. Offset to be 2'-0" at monument locations, measured at right angles to R/W lines. Taper to achieve offset to be at least 20'-0" long.

TYPICAL MEMBER DIMENSIONS (See Notes)											
FENCE HEIGHT	LINE POSTS			END, LATCH & CORNER POSTS				BRACES			
	ROUND ID	H	ROLL FORMED	ROUND ID	ROLL FORMED			ROUND ID	H	ROLL FORMED	
6' & less	1½"	1⅞" × 1⅝"	1⅞" × 1⅝"	2"	3½" × 3½"	2" × 1¾"		1¼"	1½" × 1 5/16"	1⅝" × 1¼"	1¾" × 1¼"
Over 6'	2"	2¼" × 2"	2" × 1¾"	2½"	3½" × 3½"	2½" × 2½"		1¼"	1½" × 1 5/16"	1⅝" × 1¼"	1¾" × 1¼"

STATE OF CALIFORNIA
DEPARTMENT OF TRANSPORTATION

CHAIN LINK FENCE

NO SCALE

RSP A85 DATED JUNE 5, 2009 SUPERSEDES STANDARD PLAN A85
DATED MAY 1, 2006 - PAGE 111 OF THE STANDARD PLANS BOOK DATED MAY 2006.

REVISED STANDARD PLAN RSP A85

5-7-09

DIST	COUNTY	ROUTE	POST MILES TOTAL PROJECT	SHEET NO.	TOTAL SHEETS
07	Ven	101	42.0	42	45

Randell D. Hiatt
REGISTERED CIVIL ENGINEER

June 6, 2008
PLANS APPROVAL DATE

REGISTERED PROFESSIONAL ENGINEER
Randell D. Hiatt
No. C50200
Exp. 6-30-09
CIVIL
STATE OF CALIFORNIA

The State of California or its officers or agents shall not be responsible for the accuracy or completeness of electronic copies of this plan sheet.

To accompany plans dated 07-06-10

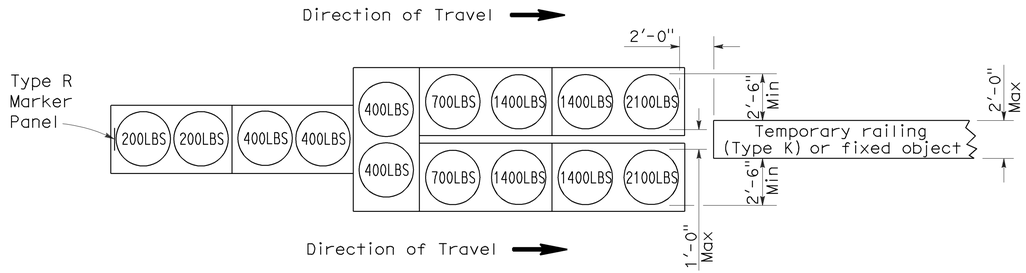

ARRAY 'TU14'

Approach speed 45 mph or more

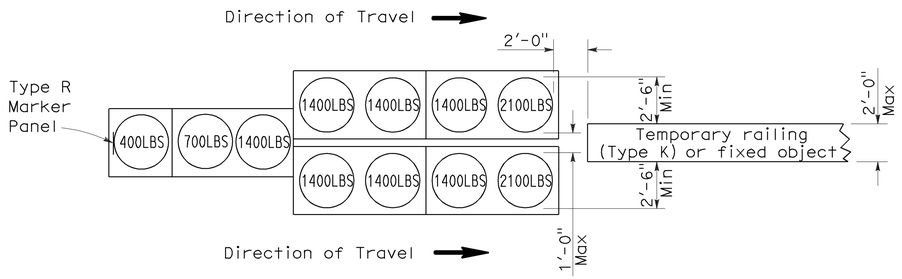

ARRAY 'TU11'

Approach speed less than 45 mph

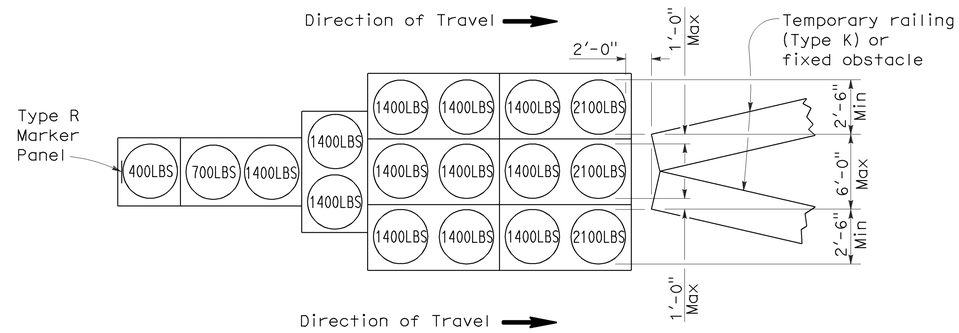

ARRAY 'TU17'

Approach speed less than 45 mph

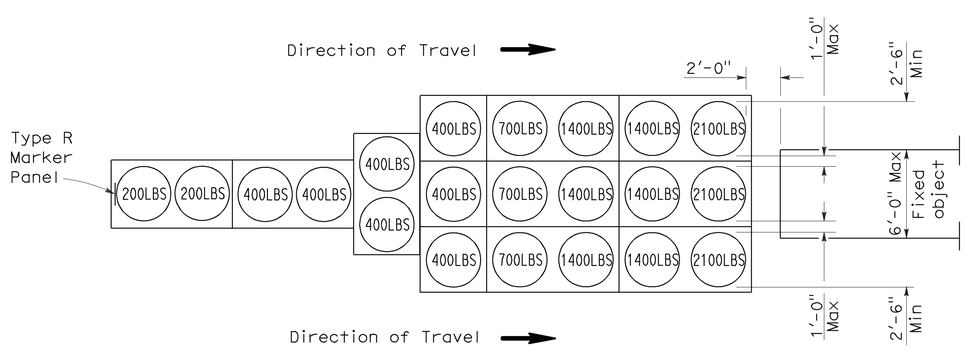

ARRAY 'TU21'

Approach speed 45 mph or more

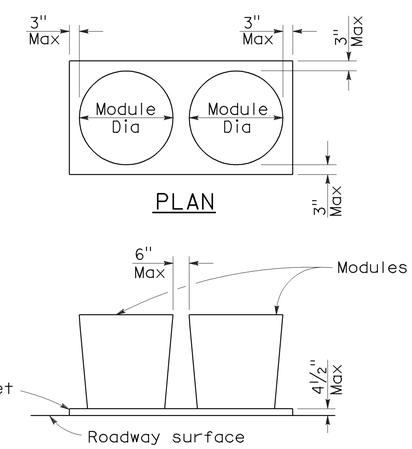

CRASH CUSHION PALLET DETAIL

See Note 7

NOTES:

1. (XXX) Indicates sand filled module location and weight of sand in pounds for each module. Module spacing is based on the greater diameter of the module.
2. All sand weights are nominal.
3. Temporary crash cushion arrays shall not encroach on the traveled way.
4. Place the top of Type R marker panel 1" below the module lid.
5. Refer to Standard Plan A73B for marker details.
6. Approach speeds indicated conform to NCHRP 350 Report criteria.
7. Use of pallets is optional.

STATE OF CALIFORNIA
DEPARTMENT OF TRANSPORTATION

TEMPORARY CRASH CUSHION, SAND FILLED (UNIDIRECTIONAL)

NO SCALE

RSP T1A DATED JUNE 6, 2008 SUPERSEDES STANDARD PLAN T1A
DATED MAY 1, 2006 - PAGE 211 OF THE STANDARD PLANS BOOK DATED MAY 2006.

REVISED STANDARD PLAN RSP T1A

2006 REVISED STANDARD PLAN RSP T1A

DIST	COUNTY	ROUTE	POST MILES TOTAL PROJECT	SHEET NO.	TOTAL SHEETS
07	Ven	101	42.0	43	45

Randell D. Hiatt
REGISTERED CIVIL ENGINEER

June 6, 2008
PLANS APPROVAL DATE

REGISTERED PROFESSIONAL ENGINEER
Randell D. Hiatt
No. C50200
Exp. 6-30-09
CIVIL
STATE OF CALIFORNIA

The State of California or its officers or agents shall not be responsible for the accuracy or completeness of electronic copies of this plan sheet.

To accompany plans dated 07-06-10

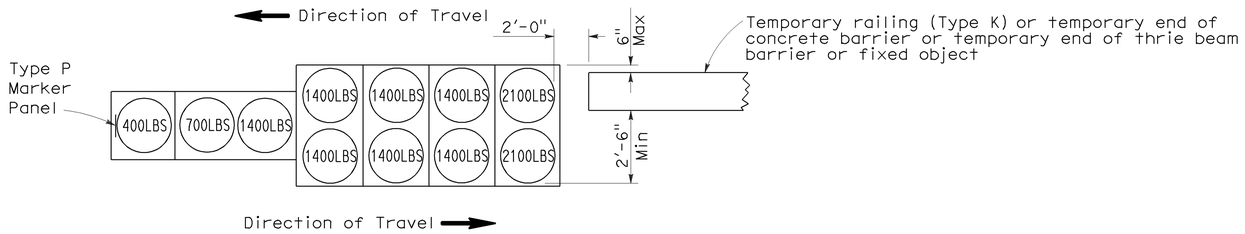

ARRAY 'TB11'

Approach speed less than 45 mph

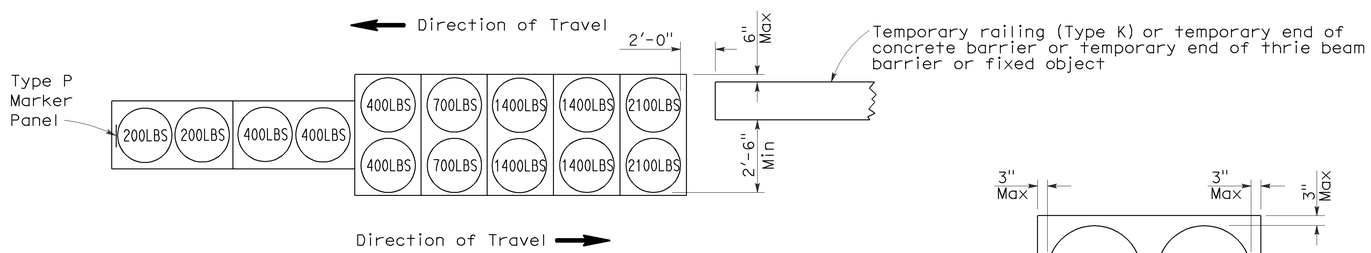

ARRAY 'TB14'

Approach speed 45 mph or more

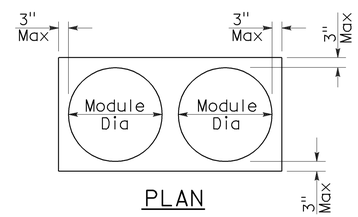

PLAN

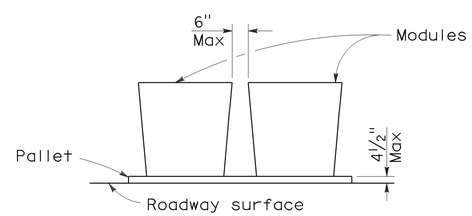

ELEVATION

CRASH CUSHION PALLET DETAIL

See Note 7

NOTES:

1. (XXX) Indicates sand filled module location and weight of sand in pounds for each module. Module spacing is based on the greater diameter of the module.
2. All sand weights are nominal.
3. Temporary crash cushion arrays shall not encroach on the traveled way.
4. Place the Type P marker panel so that the bottom of the panel rests upon the pallet.
5. Refer to Standard Plan A73B for marker details.
6. Approach speeds indicated conform to NCHRP 350 Report criteria.
7. Use of pallets is optional.

STATE OF CALIFORNIA
DEPARTMENT OF TRANSPORTATION

TEMPORARY CRASH CUSHION, SAND FILLED (BIDIRECTIONAL)

NO SCALE

RSP T1B DATED JUNE 6, 2008 SUPERSEDES STANDARD PLAN T1B
DATED MAY 1, 2006 - PAGE 212 OF THE STANDARD PLANS BOOK DATED MAY 2006.

REVISED STANDARD PLAN RSP T1B

2006 REVISED STANDARD PLAN RSP T1B

5-15-08

DIST	COUNTY	ROUTE	POST MILES TOTAL PROJECT	SHEET NO.	TOTAL SHEETS
07	Ven	101	42.0	44	45

Randell D. Hiatt
REGISTERED CIVIL ENGINEER

June 6, 2008
PLANS APPROVAL DATE

REGISTERED PROFESSIONAL ENGINEER
Randell D. Hiatt
No. C50200
Exp. 6-30-09
CIVIL
STATE OF CALIFORNIA

The State of California or its officers or agents shall not be responsible for the accuracy or completeness of electronic copies of this plan sheet.

To accompany plans dated 07-06-10

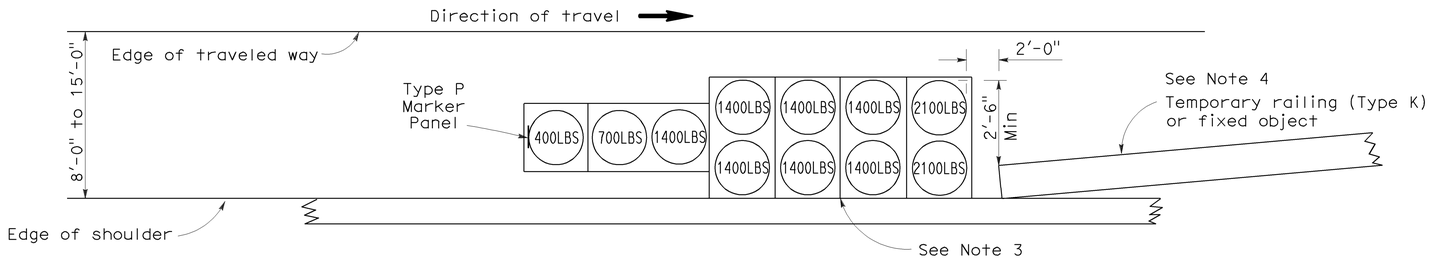

ARRAY 'TS11'

Approach speed less than 45 mph
See Note 9

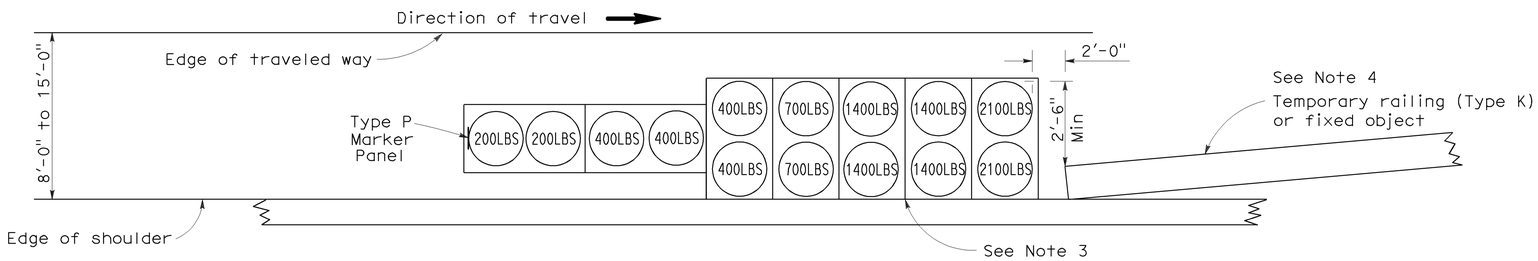

ARRAY 'TS14'

Approach speed 45 mph or more
See Note 9

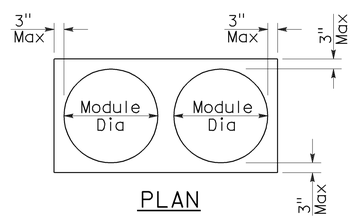

PLAN

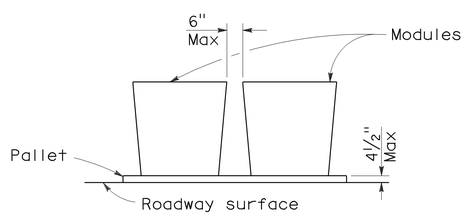

ELEVATION

CRASH CUSHION PALLET DETAIL

See Note 11

NOTES:

1. (XXX) Indicates sand filled module location and weight of sand in pounds for each module. Module spacing is based on the greater diameter of the module.
2. All sand weights are nominal.
3. The temporary crash cushion arrays shown on this plan shall be used only in locations where there will be traffic on one side of the temporary crash cushion array.
4. If the fixed object or approach end of the temporary railing is less than 15'-0" from the edge of traveled way, a temporary crash cushion is required in a construction or work zone.
5. Temporary crash cushion arrays shall not encroach on the traveled way.
6. Arrays for median shoulders shall conform to details shown on this plan for outside shoulders.
7. Place the Type P marker panel so that the bottom of the panel rests upon the pallet and faces traffic.
8. Refer to Standard Plan A73B for marker details.
9. For shoulder widths less than 8'-0", appropriate approved crash cushion protection, other than sand filled modules, shall be provided at fixed objects and at approach ends of temporary railing. The specific type of crash cushion shall be as shown on the project plans or as specified in the Special Provisions, or if not shown on the project plans or specified in the Special Provisions, shall be as approved by the Engineer.
10. Approach speeds indicated conform to NCHRP 350 Report criteria.
11. Use of pallets is optional.

STATE OF CALIFORNIA
DEPARTMENT OF TRANSPORTATION

TEMPORARY CRASH CUSHION, SAND FILLED (SHOULDER INSTALLATIONS)

NO SCALE

RSP T2 DATED JUNE 6, 2008 SUPERSEDES STANDARD PLAN T2
DATED MAY 1, 2006 - PAGE 213 OF THE STANDARD PLANS BOOK DATED MAY 2006.

REVISED STANDARD PLAN RSP T2

2006 REVISED STANDARD PLAN RSP T2

5-15-08

DIST	COUNTY	ROUTE	POST MILES TOTAL PROJECT	SHEET NO.	TOTAL SHEETS
07	Ven	101	42.0	45	45

Greg W. Edwards
REGISTERED CIVIL ENGINEER

November 17, 2006
PLANS APPROVAL DATE

REGISTERED PROFESSIONAL ENGINEER
Greg W. Edwards
No. C36386
Exp. 6-30-08
CIVIL
STATE OF CALIFORNIA

The State of California or its officers or agents shall not be responsible for the accuracy or completeness of electronic copies of this plan sheet.

To accompany plans dated 07-06-10

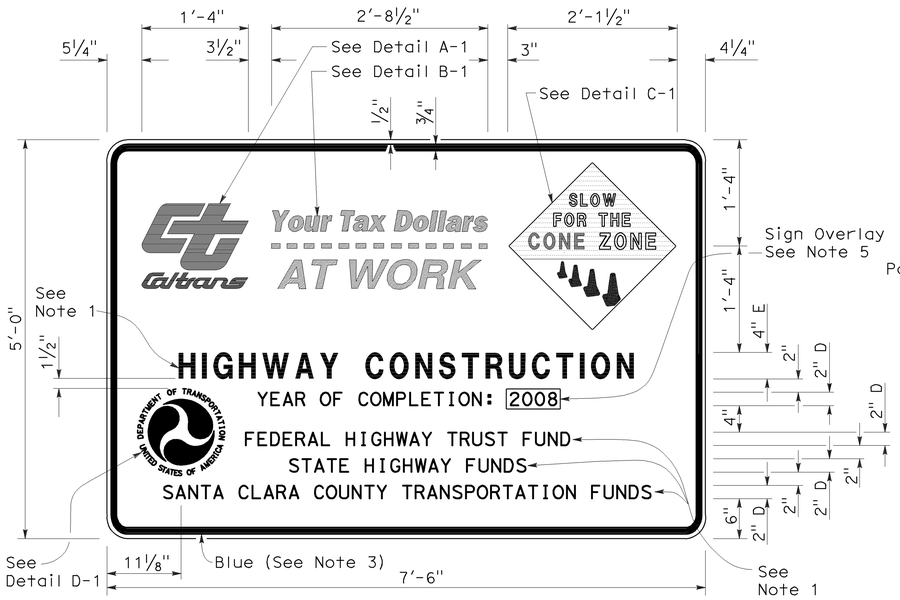

TYPE 1

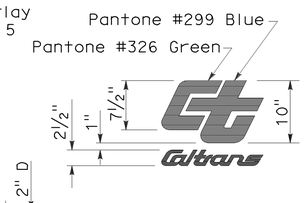

DETAIL A-1

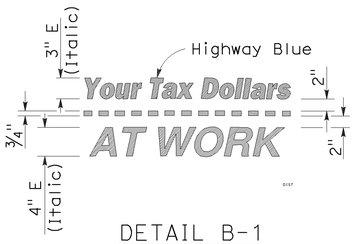

DETAIL B-1
(See Note 3)

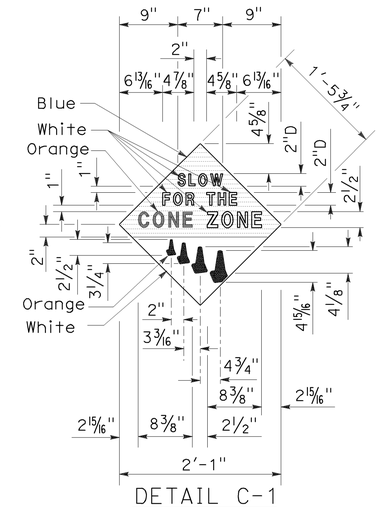

DETAIL C-1
(See Note 4)

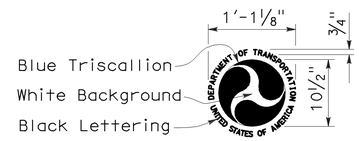

DETAIL D-1
(See Note 6)

NOTES:

1. The sign messages shown for type of project and fund types are examples only. See the Special Provisions for the applicable type of project and fund type messages to be used.
2. Except as otherwise shown, the legend of sign shall be black on a white background (non-reflective).
3. The border of the signs and details "B-1" and "B-2" shall be blue (non-reflective).
4. The diamond in details "C-1" and "C-2" shall be blue for the background of message, " SLOW FOR THE CONE ZONE", and white background for the orange cones. The color and type of font for the "SLOW FOR THE CONE ZONE" message shall be: "SLOW" white D; "FOR THE" white D; "CONE" orange Arial font; "ZONE" white Arial font.
5. Year of completion of project construction shown on the overlay is an example only. See the Special Provisions.
6. Use when the Project involves Federal Highway Trust Fund.

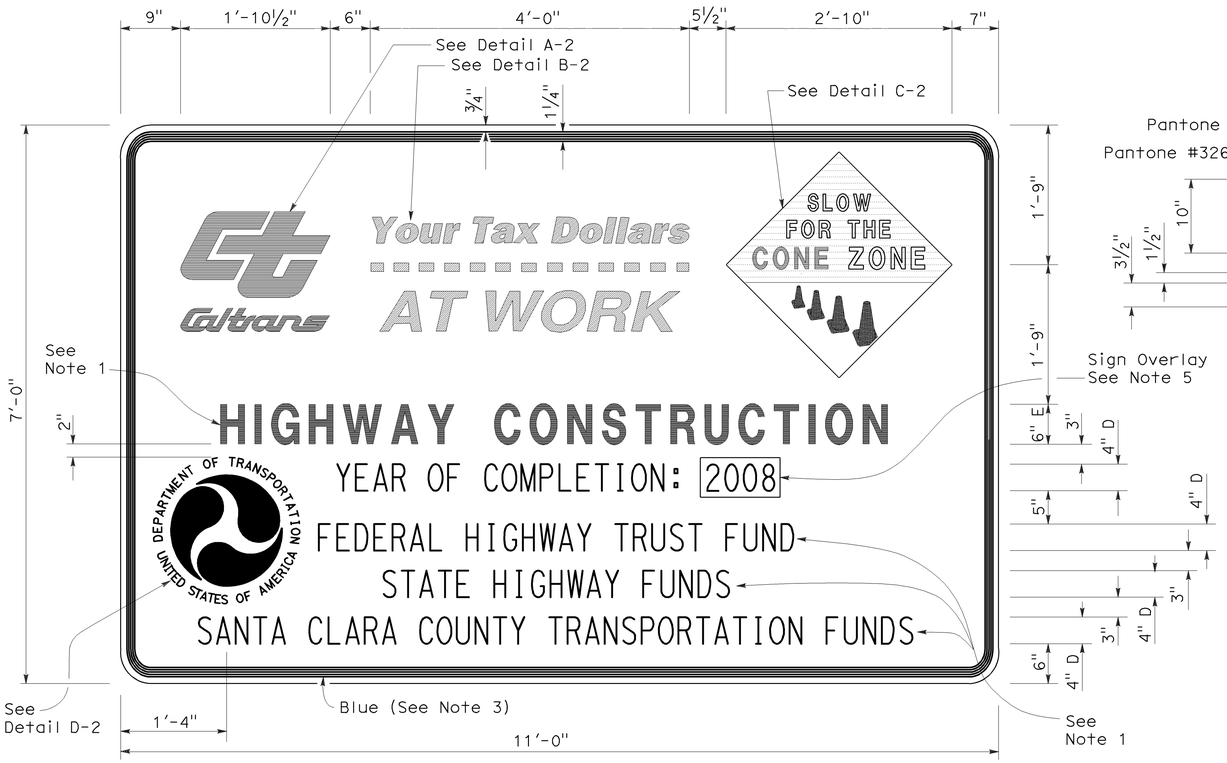

TYPE 2

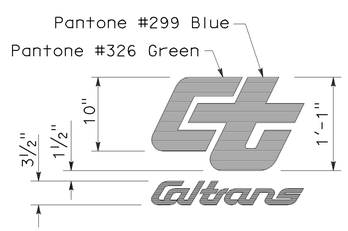

DETAIL A-2

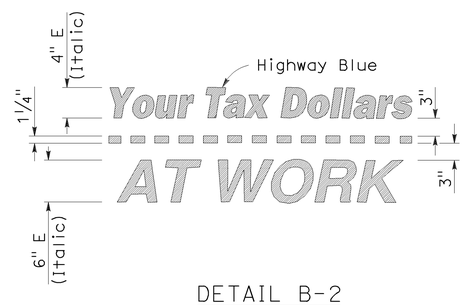

DETAIL B-2
(See Note 3)

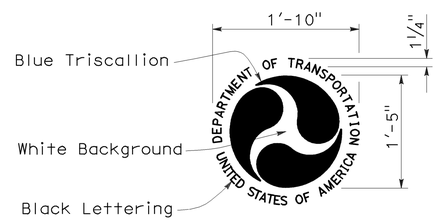

DETAIL D-2
(See Note 6)

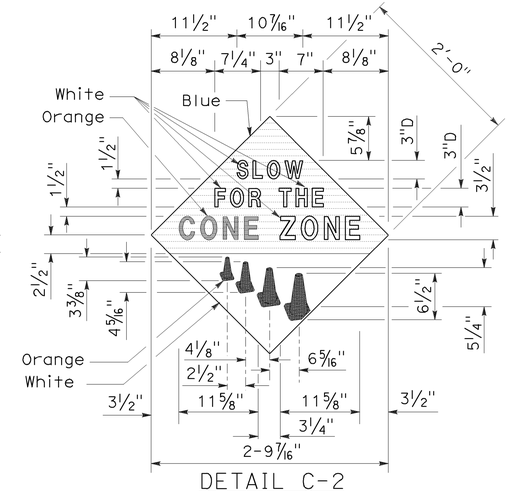

DETAIL C-2
(See Note 4)

STATE OF CALIFORNIA
DEPARTMENT OF TRANSPORTATION

CONSTRUCTION PROJECT FUNDING IDENTIFICATION SIGNS

NO SCALE

RSP T7 DATED NOVEMBER 17, 2006 SUPERSEDES STANDARD PLAN T7
DATED MAY 1, 2006 - PAGE 217 OF THE STANDARD PLANS BOOK DATED MAY 2006.

REVISED STANDARD PLAN RSP T7

2006 REVISED STANDARD PLAN RSP T7

9-7-06