Dist	COUNTY	ROUTE	POST MILES TOTAL PROJECT	SHEET No.	TOTAL SHEETS
07	LA	210	R18.8/R24.9	1	95

STATE OF CALIFORNIA
DEPARTMENT OF TRANSPORTATION

ACNHPI-210-1(831)E

PROJECT PLANS FOR CONSTRUCTION ON
STATE HIGHWAY
IN LOS ANGELES COUNTY
IN LA CANADA FLINTRIDGE AND PASADENA
FROM ROUTE 2/210 SEPARATION
TO ROUTE 134, 210/710, 210 SEPARATION

TO BE SUPPLEMENTED BY STANDARD PLANS DATED 2010

INDEX OF PLANS

SHEET No.	DESCRIPTION
1	TITLE AND LOCATION MAP
2-25	UTILITY PLANS
26	CONSTRUCTION AREA SIGNS
27-31	TRAFFIC HANDLING DETAILS
32	SIGN QUANTITIES
33	SUMMARY OF QUANTITIES
34-81	ELECTRICAL PLANS
82-95	REVISED STANDARD PLANS

THE STANDARD PLANS LIST APPLICABLE TO THIS CONTRACT IS INCLUDED IN THE NOTICE TO BIDDERS AND SPECIAL PROVISIONS BOOK.

LOCATION MAP

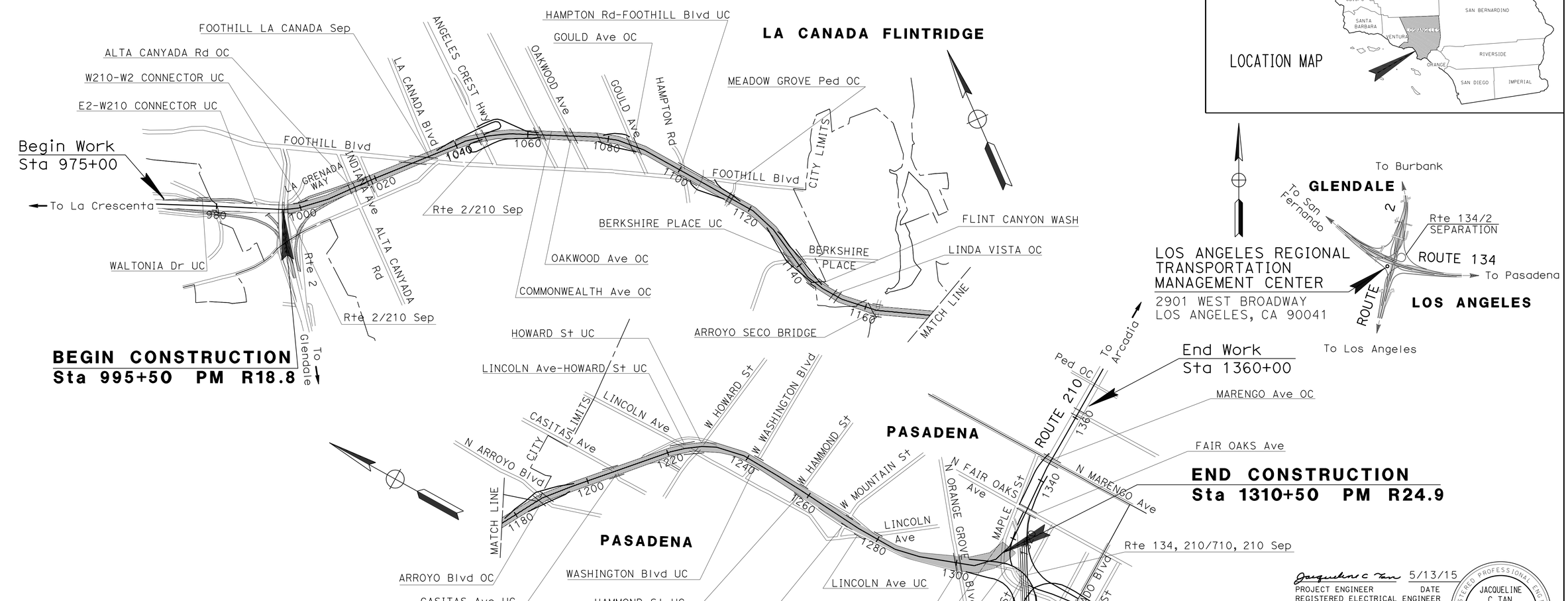

LOCATIONS OF WORK AT HUB BUILDINGS AND LARTMC			
ROUTE	PM	LOCATION	DESCRIPTION
2	R18.7	ROUTE 134/2 SEPARATION (2901 WEST BROADWAY, LOS ANGELES, CA 90041)	LARTMC - LOS ANGELES REGIONAL TRANSPORTATION MANAGEMENT CENTER

THE CONTRACTOR SHALL POSSESS THE CLASS (OR CLASSES) OF LICENSE AS SPECIFIED IN THE "NOTICE TO BIDDERS."

NO SCALE

Jacqueline C Tan 5/13/15
PROJECT ENGINEER DATE
REGISTERED ELECTRICAL ENGINEER

REGISTERED PROFESSIONAL ENGINEER JACQUELINE C.TAN No. E015611 Exp. 12/31/15 ELECT STATE OF CALIFORNIA

August 10, 2015
PLANS APPROVAL DATE

THE STATE OF CALIFORNIA OR ITS OFFICERS OR AGENTS SHALL NOT BE RESPONSIBLE FOR THE ACCURACY OR COMPLETENESS OF SCANNED COPIES OF THIS PLAN SHEET.

CONTRACT No.	07-129974
PROJECT ID	0714000080

PROJECT MANAGER DEREK CHMIELEWSKI
DESIGN MANAGER JACQUELINE TAN

LAST REVISION 00-00-00 DATE PLOTTED => 28-AUG-2015 TIME PLOTTED => 14:12

Dist	COUNTY	ROUTE	POST MILES TOTAL PROJECT	SHEET No.	TOTAL SHEETS
07	LA	210	R18.8/R24.9	2	95

REGISTERED CIVIL ENGINEER DATE 6/25/15

8-10-15
PLANS APPROVAL DATE

REGISTERED PROFESSIONAL ENGINEER
PARVIZ YEGANEH
No. C53797
Exp. 6/30/17
CIVIL
STATE OF CALIFORNIA

THE STATE OF CALIFORNIA OR ITS OFFICERS OR AGENTS SHALL NOT BE RESPONSIBLE FOR THE ACCURACY OR COMPLETENESS OF SCANNED COPIES OF THIS PLAN SHEET.

UTILITY OWNERS:

CABLE TELEVISION/COMMUNICATION
- CHARTER COMMUNICATION
- CROWN CASTLE

ELECTRIC
- SOUTHERN CALIFORNIA EDISON (SCE)
- CITY OF PASADENA WATER AND POWER DEPARTMENT (CPWPD)

GAS
- SOUTHERN CALIFORNIA GAS COMPANY (SCG)

SEWER
- CITY OF GLENDALE
- CITY OF PASADENA DEPARTMENT OF PUBLIC WORK (CPDPW)
- COUNTY OF SANITATION DISTRICT OF LOS ANGELES COUNTY (CSDLAC)
- LOS ANGELES COUNTY DEPARTMENT OF PUBLIC WORKS-SEWER MAINTENANCE DISTRICT (LACDPW-SMD)

TELEPHONE
- AMERICAN TELEPHONE AND TELEGRAPH (AT&T)
- METROPOLITAN TRANSIT DISTRICT (MTA)

WATER
- CITY OF GLENDALE
- CRESCENTA VALLEY WATER DISTRICT (CVWD)
- GLENDALE MUNICIPAL WATER (GMW)
- FOOTHILL MUNICIPAL WATER DISTRICT (FMWD)
- LA CANADA IRRIGATION DISTRICT (LCID)
- CITY OF GLENDALE VALLEY WATER COMPANY (VWC)
- CITY OF PASADENA WATER AND POWER DEPARTMENT (CPWPD)
- METROPOLITAN WATER DISTRICT (MWD)
- LOS ANGELES COUNTY DEPARTMENT OF PUBLIC WORKS (LACDPW)

ABBREVIATIONS:

ABS	- PLASTIC CONDUIT
AT&T	- AMERICAN TELEPHONE AND TELEGRAPH
BSW	- BURIED SERVICE WIRE
Bur Ca	- BURIED CABLE
Bur Wi	- BURIED WIRE
C-Cem	- CONCRETE CEMENT
Cem	- CEMENT CONDUIT
CP	- CONCRETE PIPE
C-PC	- PLASTIC DUCT (NOT ENCASED)
C-PLD	- PLASTIC DUCT
CS	- CONCRETE LINED STEEL
DI	- DUCTILE IRON
Du	- DUCT
E	- EAST
EW	- EAST OF WEST (R/W OR ℄)
HiP	- HIGH PRESSURE (60 psig AND ABOVE)
IP	- IRON PIPE
KV	- KILO VOLT
LoP	- LOW PRESSURE (0-10 psig)
MCD	- MULTIPLE CONCRETE DUCT
MeP	- MEDIUM PRESSURE (10-60 psig)
MTD	- MULTIPLE TILE DUCT
N	- NORTH
NS	- NORTH OF SOUTH
Pwr	- POWER
RC	- RIGID CONDUIT
S	- SOUTH
SN	- SOUTH OF NORTH(R/W OR ℄)
STD	- SINGLE TILE CONDUIT OR SINGLE TILE DUCT
Stl	- STEEL
WE	- WEST OF EAST (R/W OR ℄)
Wtr	- WATER
Vlt	- VAULT
VT	- VITRIFIED TILE

APPROVED FOR EXISTING UTILITIES INFORMATION ONLY

UTILITY PLAN

U-1

REVISED BY | DATE REVISED
HIEU LUU | PARVIZ YEGANEH
CALCULATED-DESIGNED BY | CHECKED BY
FUNCTIONAL SUPERVISOR
CELINA AVILES

STATE OF CALIFORNIA - DEPARTMENT OF TRANSPORTATION
Caltrans OFFICE OF DESIGN A

LAST REVISION 00-00-00 | DATE PLOTTED => 28-AUG-2015 | TIME PLOTTED => 14:12

Dist	COUNTY	ROUTE	POST MILES TOTAL PROJECT	SHEET No.	TOTAL SHEETS
07	LA	210	R18.8/R24.9	3	95

REGISTERED CIVIL ENGINEER 6/25/15 DATE

8-10-15
PLANS APPROVAL DATE

REGISTERED PROFESSIONAL ENGINEER
PARVIZ YEGANEH
No. C53797
Exp. 6/30/17
CIVIL
STATE OF CALIFORNIA

THE STATE OF CALIFORNIA OR ITS OFFICERS OR AGENTS SHALL NOT BE RESPONSIBLE FOR THE ACCURACY OR COMPLETENESS OF SCANNED COPIES OF THIS PLAN SHEET.

NOTE:

1. FOR ACCURATE RIGHT OF WAY DATA, CONTACT RIGHT OF WAY ENGINEERING AT THE DISTRICT OFFICE.
2. UTILITY INVESTIGATIONS WERE NOT CONDUCTED FOR VERTICAL DATA EVALUATION AND ARE BEING DEFERRED TO THE CONTRACTOR. CONTRACTOR WILL CONDUCT LOCATION ACTIVITES TO FACILITATE INSTALLATIONOF WORK PRIOR TO EXCAVATION.

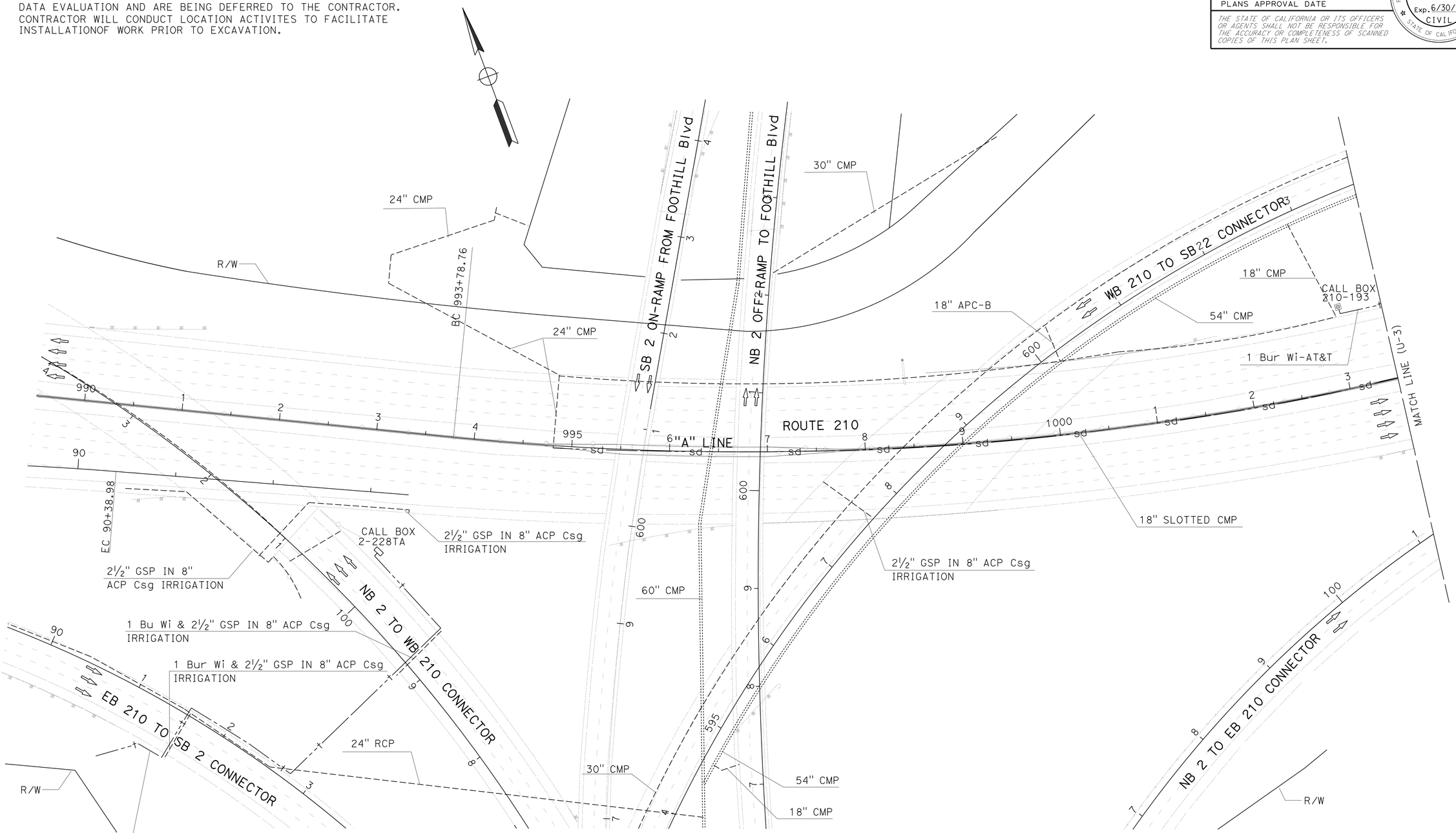

UTILITY PLAN

SCALE: 1" = 50'

APPROVED FOR EXISTING UTILITIES INFORMATION ONLY

U-2

STATE OF CALIFORNIA - DEPARTMENT OF TRANSPORTATION
Caltrans® OFFICE OF DESIGN A

FUNCTIONAL SUPERVISOR: CELINA AVILES
CALCULATED-DESIGNED BY: HIEU LUU
CHECKED BY: PARVIZ YEGANEH
REVISED BY
DATE REVISED

LAST REVISION 00-00-00
DATE PLOTTED => 28-AUG-2015
TIME PLOTTED => 14:12

Dist	COUNTY	ROUTE	POST MILES TOTAL PROJECT	SHEET No.	TOTAL SHEETS
07	LA	210	R18.8/R24.9	4	95

REGISTERED CIVIL ENGINEER 6/25/15 DATE

8-10-15
PLANS APPROVAL DATE

REGISTERED PROFESSIONAL ENGINEER PARVIZ YEGANEH No. C53797 Exp. 6/30/17 CIVIL STATE OF CALIFORNIA

THE STATE OF CALIFORNIA OR ITS OFFICERS OR AGENTS SHALL NOT BE RESPONSIBLE FOR THE ACCURACY OR COMPLETENESS OF SCANNED COPIES OF THIS PLAN SHEET.

NOTE:

1. FOR ACCURATE RIGHT OF WAY DATA, CONTACT RIGHT OF WAY ENGINEERING AT THE DISTRICT OFFICE.
2. UTILITY INVESTIGATIONS WERE NOT CONDUCTED FOR VERTICAL DATA EVALUATION AND ARE BEING DEFERRED TO THE CONTRACTOR. CONTRACTOR WILL CONDUCT LOCATION ACTIVITES TO FACILITATE INSTALLATIONOF WORK PRIOR TO EXCAVATION.

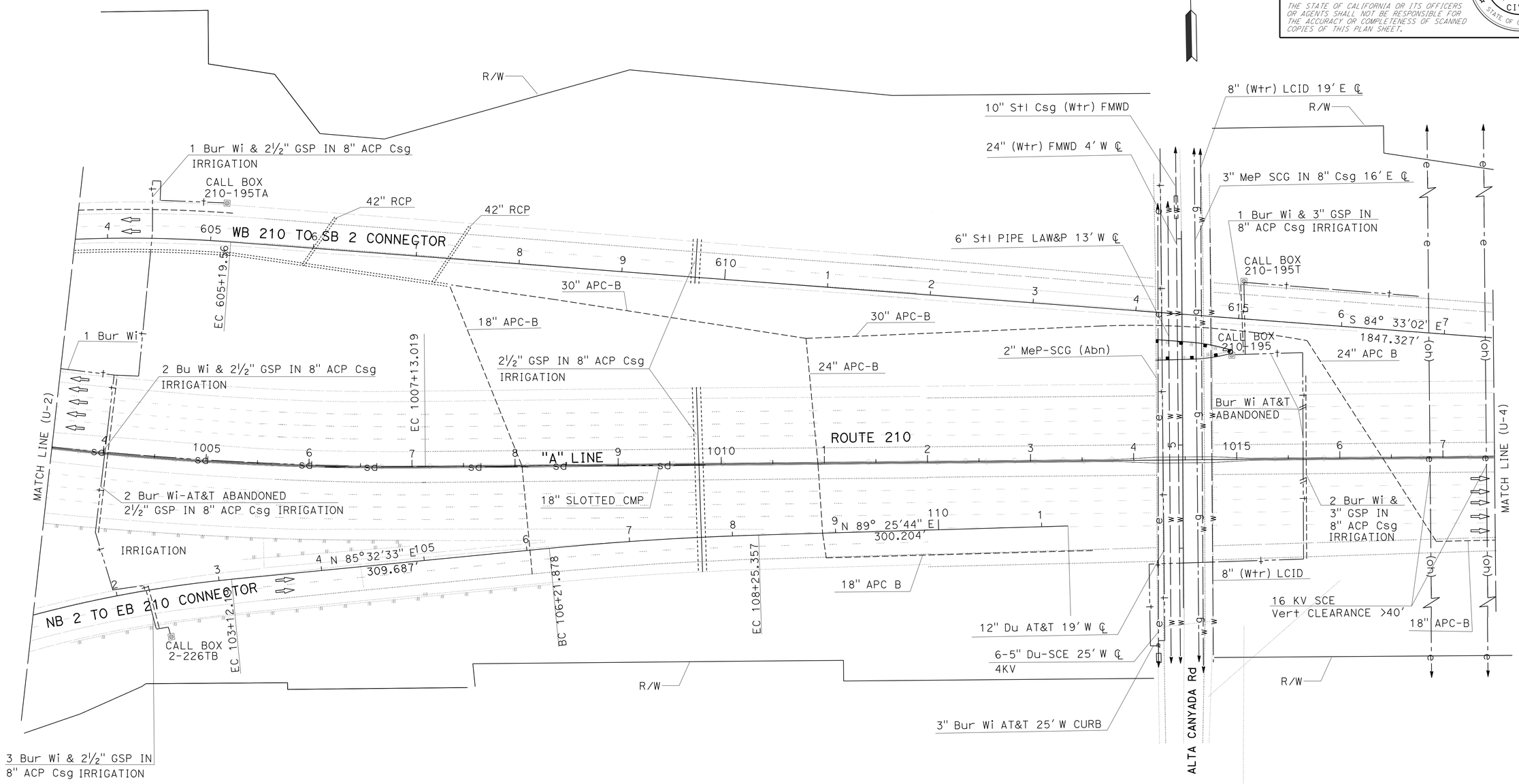

UTILITY PLAN

SCALE: 1" = 50'

APPROVED FOR EXISTING UTILITIES INFORMATION ONLY

U-3

STATE OF CALIFORNIA - DEPARTMENT OF TRANSPORTATION
Caltrans OFFICE OF DESIGN A

FUNCTIONAL SUPERVISOR: CELINA AVILES
CALCULATED-DESIGNED BY: HIEU LUU
CHECKED BY: PARVIZ YEGANEH
REVISED BY
DATE REVISED

LAST REVISION 00-00-00
DATE PLOTTED => 28-AUG-2015
TIME PLOTTED => 14:13

Dist	COUNTY	ROUTE	POST MILES TOTAL PROJECT	SHEET No.	TOTAL SHEETS
07	LA	210	R18.8/R24.9	5	95

REGISTERED CIVIL ENGINEER 6/25/15 DATE

8-10-15
PLANS APPROVAL DATE

REGISTERED PROFESSIONAL ENGINEER PARVIZ YEGANEH No. C53797 Exp. 6/30/17 CIVIL STATE OF CALIFORNIA

THE STATE OF CALIFORNIA OR ITS OFFICERS OR AGENTS SHALL NOT BE RESPONSIBLE FOR THE ACCURACY OR COMPLETENESS OF SCANNED COPIES OF THIS PLAN SHEET.

NOTE:

1. FOR ACCURATE RIGHT OF WAY DATA, CONTACT RIGHT OF WAY ENGINEERING AT THE DISTRICT OFFICE.
2. UTILITY INVESTIGATIONS WERE NOT CONDUCTED FOR VERTICAL DATA EVALUATION AND ARE BEING DEFERRED TO THE CONTRACTOR. CONTRACTOR WILL CONDUCT LOCATION ACTIVITES TO FACILITATE INSTALLATIONOF WORK PRIOR TO EXCAVATION.

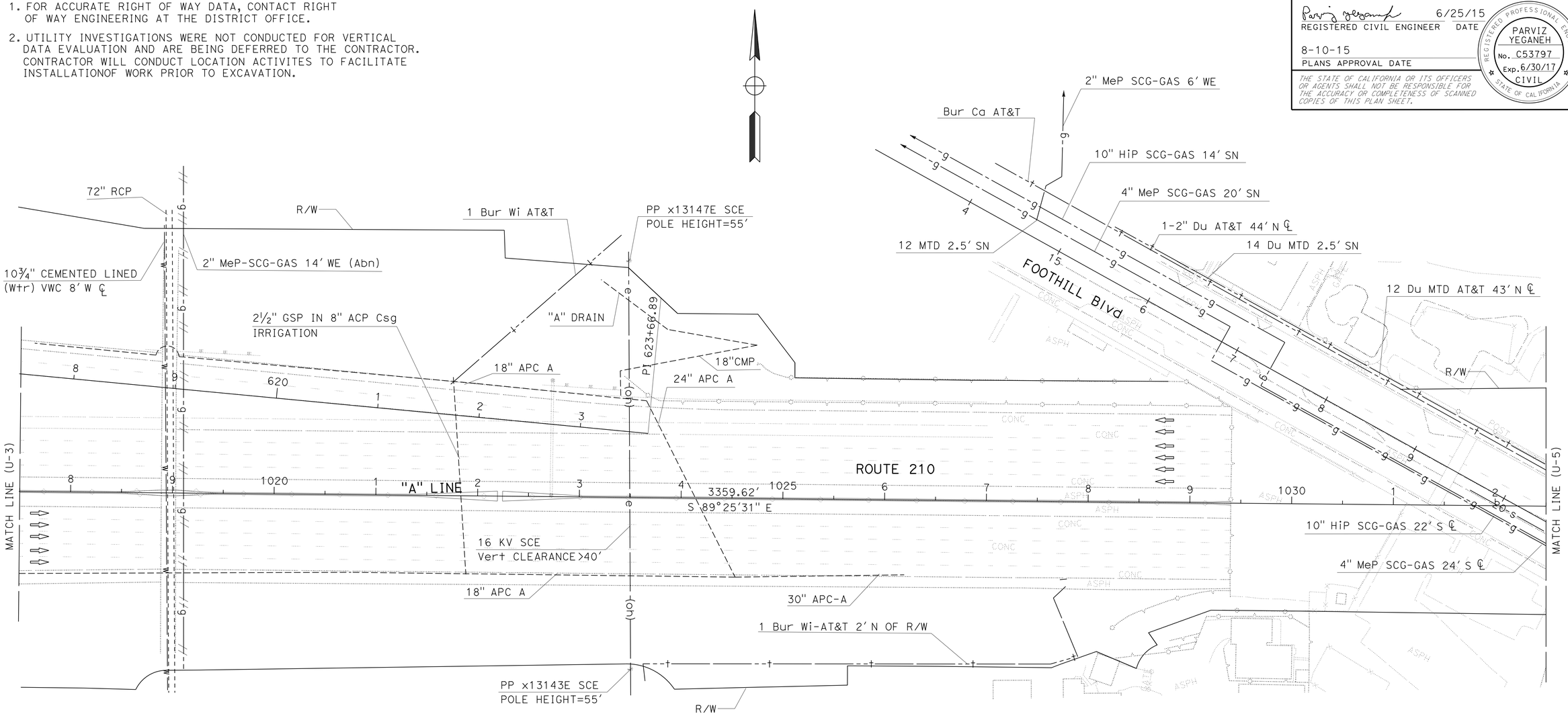

APPROVED FOR EXISTING UTILITIES INFORMATION ONLY

UTILITY PLAN

SCALE: 1" = 50'

U-4

REVISED BY | DATE REVISED
HIEU LUU | PARVIZ YEGANEH
CALCULATED-DESIGNED BY | CHECKED BY
FUNCTIONAL SUPERVISOR | CELINA AVILES

STATE OF CALIFORNIA - DEPARTMENT OF TRANSPORTATION
Caltrans OFFICE OF DESIGN A

LAST REVISION 00-00-00 | DATE PLOTTED => 28-AUG-2015 | TIME PLOTTED => 14:13

Dist	COUNTY	ROUTE	POST MILES TOTAL PROJECT	SHEET No.	TOTAL SHEETS
07	LA	210	R18.8/R24.9	6	95

REGISTERED CIVIL ENGINEER 6/25/15 DATE

8-10-15
PLANS APPROVAL DATE

REGISTERED PROFESSIONAL ENGINEER
PARVIZ YEGANEH
No. C53797
Exp. 6/30/17
CIVIL
STATE OF CALIFORNIA

THE STATE OF CALIFORNIA OR ITS OFFICERS OR AGENTS SHALL NOT BE RESPONSIBLE FOR THE ACCURACY OR COMPLETENESS OF SCANNED COPIES OF THIS PLAN SHEET.

NOTE:

1. FOR ACCURATE RIGHT OF WAY DATA, CONTACT RIGHT OF WAY ENGINEERING AT THE DISTRICT OFFICE.
2. UTILITY INVESTIGATIONS WERE NOT CONDUCTED FOR VERTICAL DATA EVALUATION AND ARE BEING DEFERRED TO THE CONTRACTOR. CONTRACTOR WILL CONDUCT LOCATION ACTIVITES TO FACILITATE INSTALLATIONOF WORK PRIOR TO EXCAVATION.

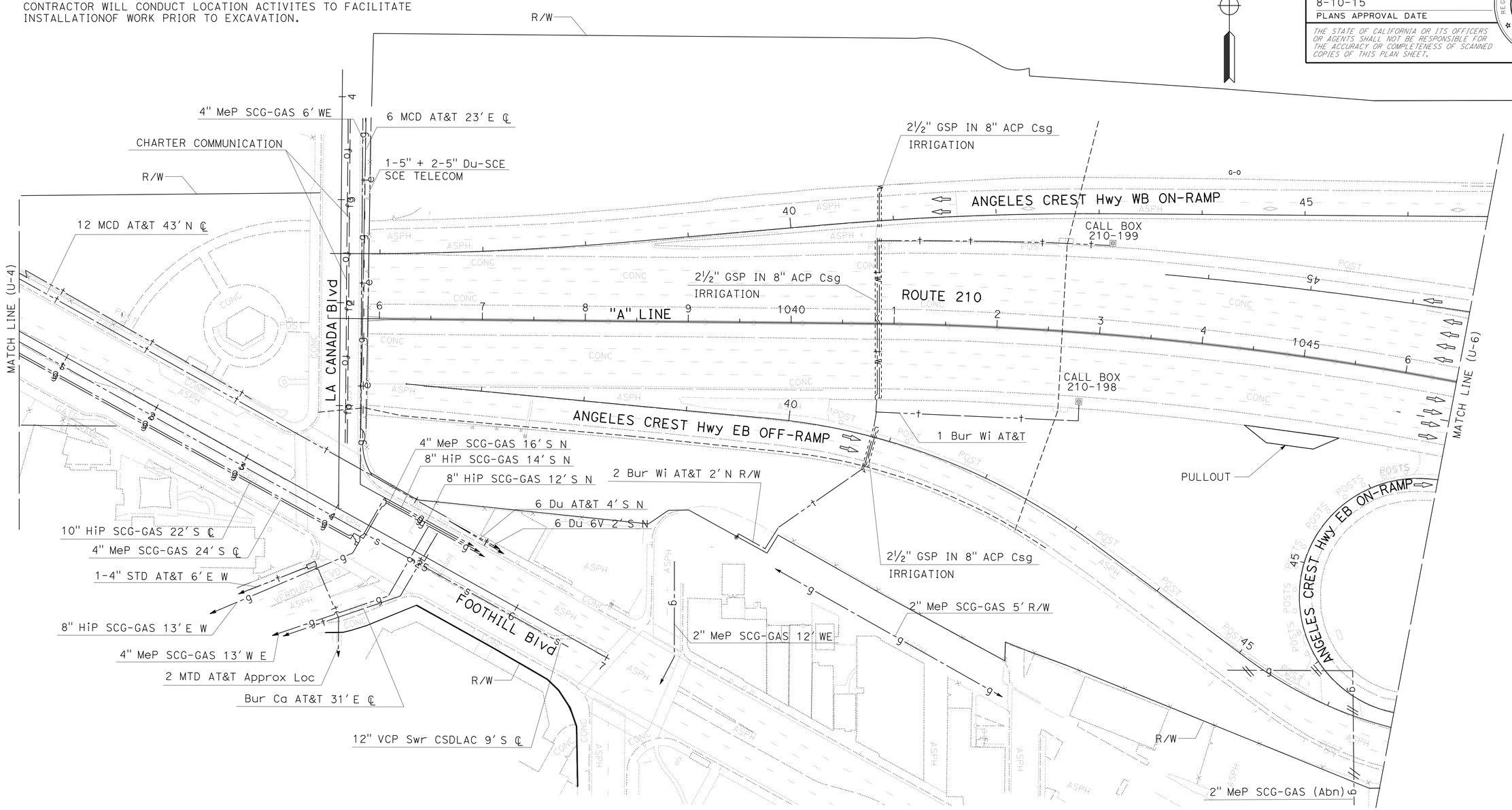

UTILITY PLAN

SCALE: 1" = 50'

APPROVED FOR EXISTING UTILITIES INFORMATION ONLY

U-5

REVISED BY | DATE REVISED
HIEU LUU | PARVIZ YEGANEH
CALCULATED-DESIGNED BY | CHECKED BY
FUNCTIONAL SUPERVISOR
CELINA AVILES

STATE OF CALIFORNIA - DEPARTMENT OF TRANSPORTATION
Caltrans® OFFICE OF DESIGN A

LAST REVISION 00-00-00 | DATE PLOTTED => 28-AUG-2015 | TIME PLOTTED => 14:13

Dist	COUNTY	ROUTE	POST MILES TOTAL PROJECT	SHEET No.	TOTAL SHEETS
07	LA	210	R18.8/R24.9	7	95

Parviz Yeganeh 6/25/15
REGISTERED CIVIL ENGINEER DATE

8-10-15
PLANS APPROVAL DATE

REGISTERED PROFESSIONAL ENGINEER
PARVIZ YEGANEH
No. C53797
Exp. 6/30/17
CIVIL
STATE OF CALIFORNIA

THE STATE OF CALIFORNIA OR ITS OFFICERS OR AGENTS SHALL NOT BE RESPONSIBLE FOR THE ACCURACY OR COMPLETENESS OF SCANNED COPIES OF THIS PLAN SHEET.

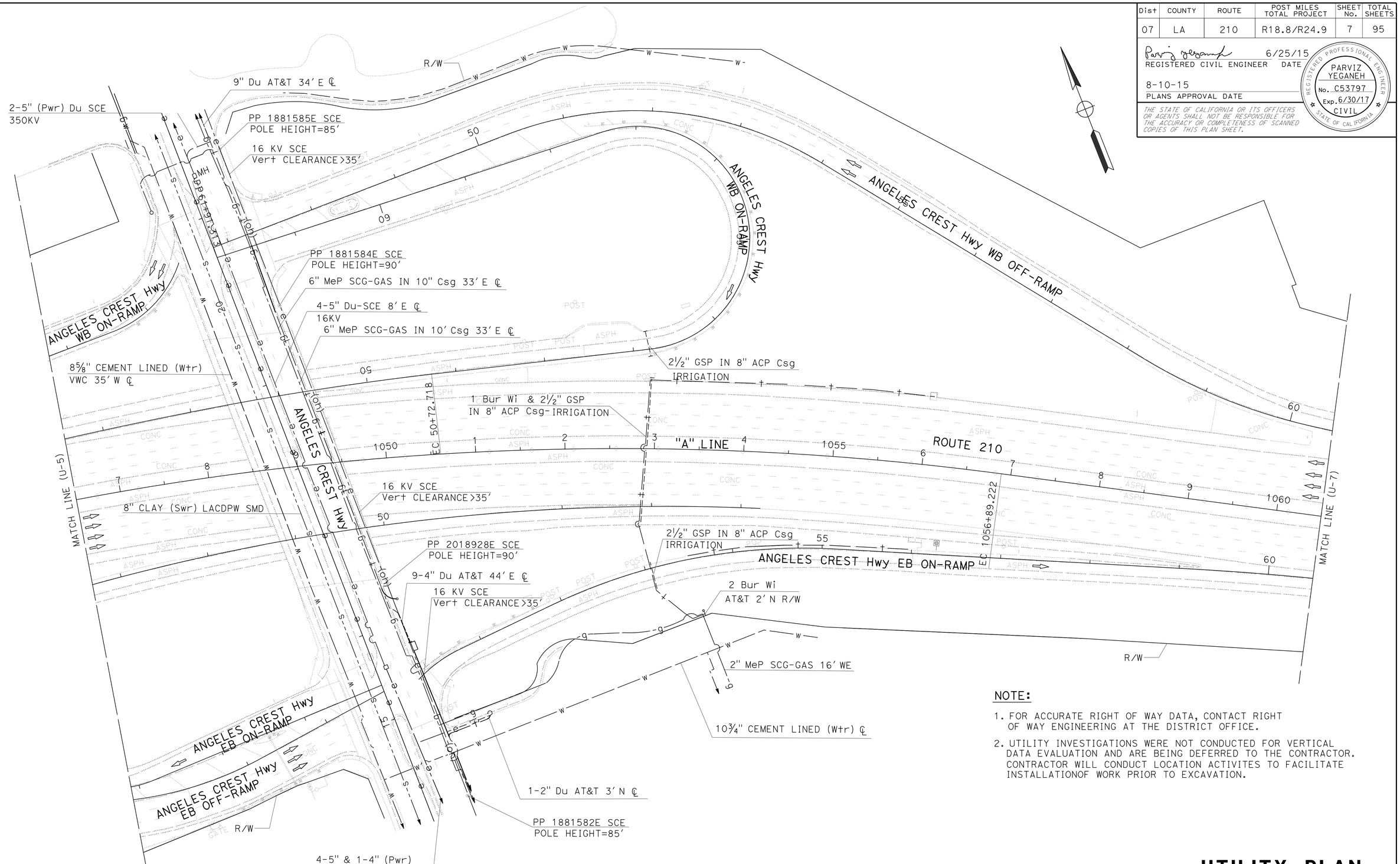

NOTE:

1. FOR ACCURATE RIGHT OF WAY DATA, CONTACT RIGHT OF WAY ENGINEERING AT THE DISTRICT OFFICE.
2. UTILITY INVESTIGATIONS WERE NOT CONDUCTED FOR VERTICAL DATA EVALUATION AND ARE BEING DEFERRED TO THE CONTRACTOR. CONTRACTOR WILL CONDUCT LOCATION ACTIVITES TO FACILITATE INSTALLATIONOF WORK PRIOR TO EXCAVATION.

APPROVED FOR EXISTING UTILITIES INFORMATION ONLY

UTILITY PLAN

SCALE: 1" = 50'

U-6

REVISED BY | DATE REVISED
HIEU LUU | PARVIZ YEGANEH
CALCULATED-DESIGNED BY | CHECKED BY
FUNCTIONAL SUPERVISOR
CELINA AVILES

STATE OF CALIFORNIA - DEPARTMENT OF TRANSPORTATION
Caltrans
OFFICE OF DESIGN A

LAST REVISION 00-00-00 | DATE PLOTTED => 28-AUG-2015 | TIME PLOTTED => 14:13

Dist	COUNTY	ROUTE	POST MILES TOTAL PROJECT	SHEET No.	TOTAL SHEETS
07	LA	210	R18.8/R24.9	8	95

REGISTERED CIVIL ENGINEER 6/25/15 DATE

8-10-15
PLANS APPROVAL DATE

REGISTERED PROFESSIONAL ENGINEER
PARVIZ YEGANEH
No. C53797
Exp. 6/30/17
CIVIL
STATE OF CALIFORNIA

THE STATE OF CALIFORNIA OR ITS OFFICERS OR AGENTS SHALL NOT BE RESPONSIBLE FOR THE ACCURACY OR COMPLETENESS OF SCANNED COPIES OF THIS PLAN SHEET.

NOTE:

1. FOR ACCURATE RIGHT OF WAY DATA, CONTACT RIGHT OF WAY ENGINEERING AT THE DISTRICT OFFICE.
2. UTILITY INVESTIGATIONS WERE NOT CONDUCTED FOR VERTICAL DATA EVALUATION AND ARE BEING DEFERRED TO THE CONTRACTOR. CONTRACTOR WILL CONDUCT LOCATION ACTIVITES TO FACILITATE INSTALLATIONOF WORK PRIOR TO EXCAVATION.

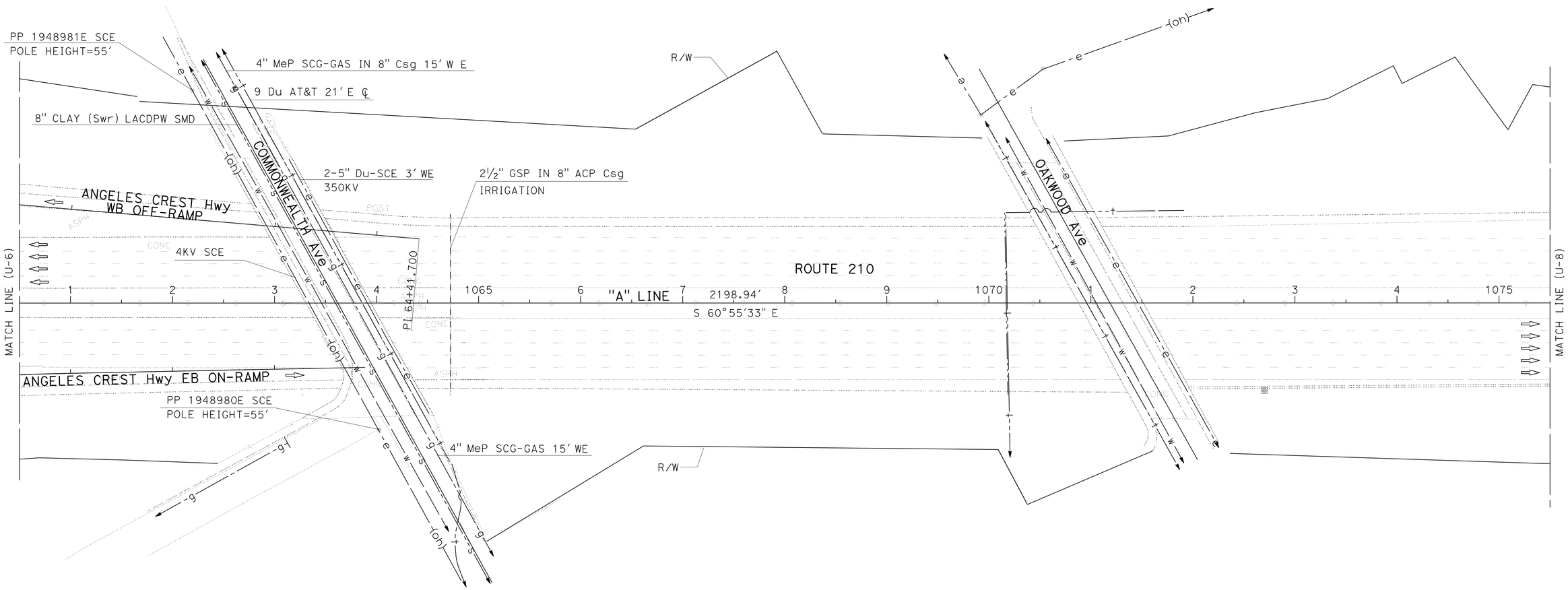

APPROVED FOR EXISTING UTILITIES INFORMATION ONLY

UTILITY PLAN

SCALE: 1" = 50'

U-7

STATE OF CALIFORNIA - DEPARTMENT OF TRANSPORTATION
Caltrans OFFICE OF DESIGN A

FUNCTIONAL SUPERVISOR: CELINA AVILES
CALCULATED-DESIGNED BY: HIEU LUU
CHECKED BY: PARVIZ YEGANEH
REVISED BY
DATE REVISED

LAST REVISION 00-00-00
DATE PLOTTED => 28-AUG-2015
TIME PLOTTED => 14:13

Dist	COUNTY	ROUTE	POST MILES TOTAL PROJECT	SHEET No.	TOTAL SHEETS
07	LA	210	R18.8/R24.9	9	95

REGISTERED CIVIL ENGINEER 6/25/15 DATE

8-10-15
PLANS APPROVAL DATE

REGISTERED PROFESSIONAL ENGINEER PARVIZ YEGANEH No. C53797 Exp. 6/30/17 CIVIL STATE OF CALIFORNIA

THE STATE OF CALIFORNIA OR ITS OFFICERS OR AGENTS SHALL NOT BE RESPONSIBLE FOR THE ACCURACY OR COMPLETENESS OF SCANNED COPIES OF THIS PLAN SHEET.

NOTE:

1. FOR ACCURATE RIGHT OF WAY DATA, CONTACT RIGHT OF WAY ENGINEERING AT THE DISTRICT OFFICE.
2. UTILITY INVESTIGATIONS WERE NOT CONDUCTED FOR VERTICAL DATA EVALUATION AND ARE BEING DEFERRED TO THE CONTRACTOR. CONTRACTOR WILL CONDUCT LOCATION ACTIVITES TO FACILITATE INSTALLATIONOF WORK PRIOR TO EXCAVATION.

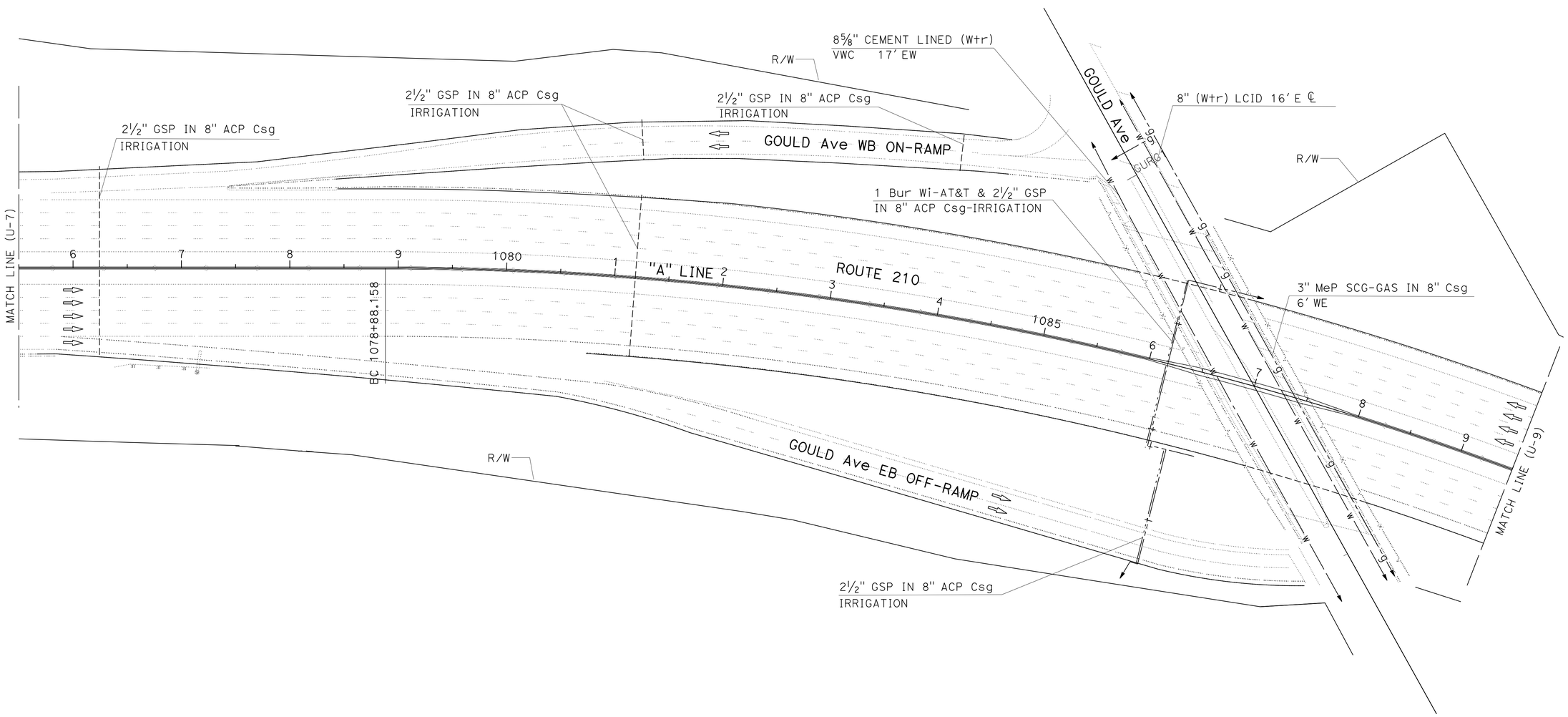

UTILITY PLAN

SCALE: 1" = 50'

APPROVED FOR EXISTING UTILITIES INFORMATION ONLY

U-8

STATE OF CALIFORNIA - DEPARTMENT OF TRANSPORTATION
Caltrans OFFICE OF DESIGN A

FUNCTIONAL SUPERVISOR: CELINA AVILES

CALCULATED-DESIGNED BY: HIEU LUU
CHECKED BY: PARVIZ YEGANEH

REVISED BY
DATE REVISED

LAST REVISION 00-00-00
DATE PLOTTED => 28-AUG-2015
TIME PLOTTED => 14:13

Dist	COUNTY	ROUTE	POST MILES TOTAL PROJECT	SHEET No.	TOTAL SHEETS
07	LA	210	R18.8/R24.9	10	95

REGISTERED CIVIL ENGINEER 6/25/15 DATE

8-10-15
PLANS APPROVAL DATE

REGISTERED PROFESSIONAL ENGINEER
PARVIZ YEGANEH
No. C53797
Exp. 6/30/17
CIVIL
STATE OF CALIFORNIA

THE STATE OF CALIFORNIA OR ITS OFFICERS OR AGENTS SHALL NOT BE RESPONSIBLE FOR THE ACCURACY OR COMPLETENESS OF SCANNED COPIES OF THIS PLAN SHEET.

NOTE:

1. FOR ACCURATE RIGHT OF WAY DATA, CONTACT RIGHT OF WAY ENGINEERING AT THE DISTRICT OFFICE.
2. UTILITY INVESTIGATIONS WERE NOT CONDUCTED FOR VERTICAL DATA EVALUATION AND ARE BEING DEFERRED TO THE CONTRACTOR. CONTRACTOR WILL CONDUCT LOCATION ACTIVITES TO FACILITATE INSTALLATIONOF WORK PRIOR TO EXCAVATION.

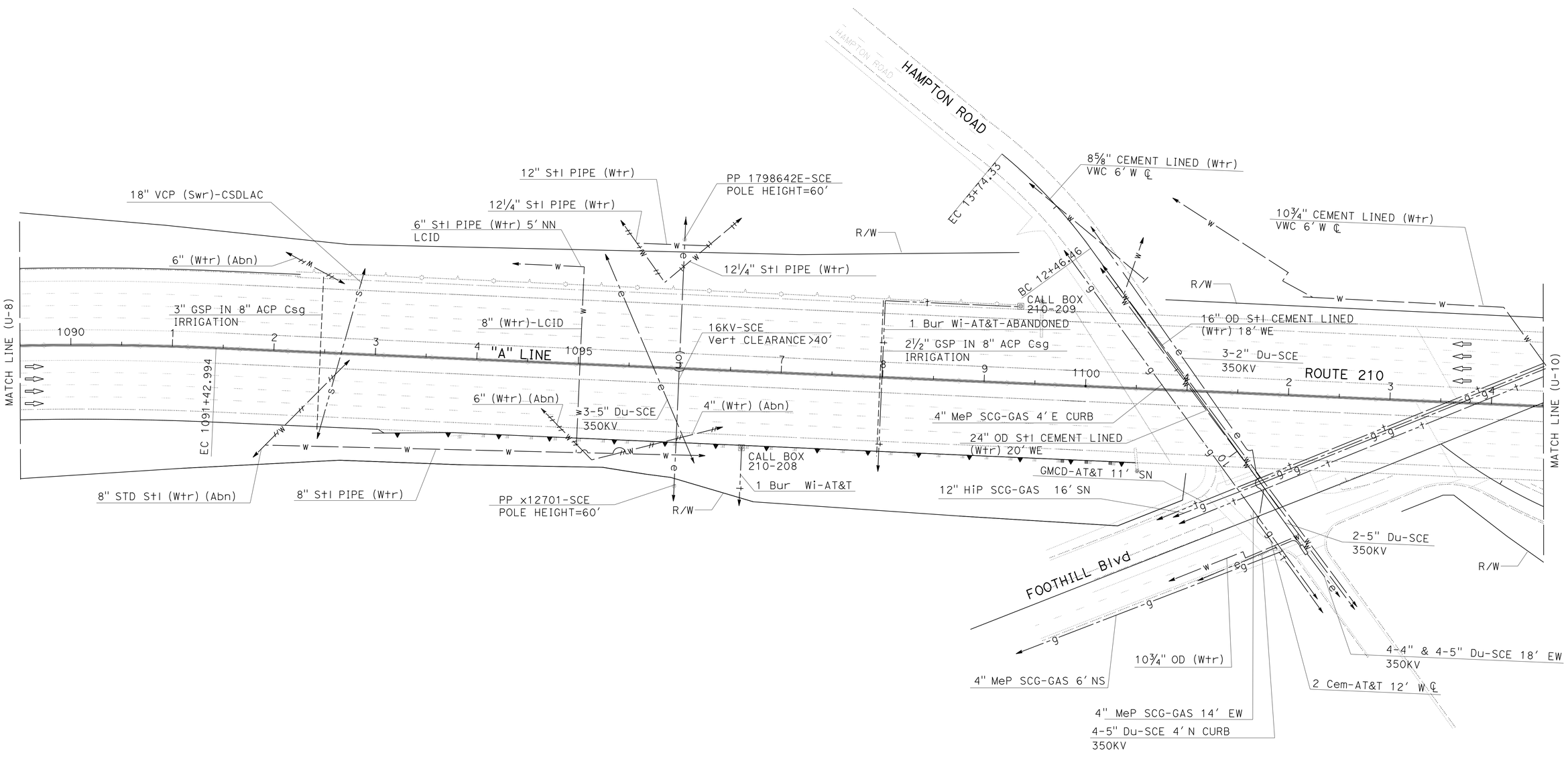

UTILITY PLAN

SCALE: 1" = 50'

APPROVED FOR EXISTING UTILITIES INFORMATION ONLY

U-9

STATE OF CALIFORNIA - DEPARTMENT OF TRANSPORTATION
Caltrans® OFFICE OF DESIGN A

FUNCTIONAL SUPERVISOR: CELINA AVILES
CALCULATED-DESIGNED BY: HIEU LUU
CHECKED BY: PARVIZ YEGANEH
REVISED BY
DATE REVISED

LAST REVISION 00-00-00
DATE PLOTTED => 28-AUG-2015
TIME PLOTTED => 14:13

Dist	COUNTY	ROUTE	POST MILES TOTAL PROJECT	SHEET No.	TOTAL SHEETS
07	LA	210	R18.8/R24.9	11	95

REGISTERED CIVIL ENGINEER 6/25/15 DATE

8-10-15
PLANS APPROVAL DATE

REGISTERED PROFESSIONAL ENGINEER PARVIZ YEGANEH No. C53797 Exp. 6/30/17 CIVIL STATE OF CALIFORNIA

THE STATE OF CALIFORNIA OR ITS OFFICERS OR AGENTS SHALL NOT BE RESPONSIBLE FOR THE ACCURACY OR COMPLETENESS OF SCANNED COPIES OF THIS PLAN SHEET.

NOTE:

1. FOR ACCURATE RIGHT OF WAY DATA, CONTACT RIGHT OF WAY ENGINEERING AT THE DISTRICT OFFICE.
2. UTILITY INVESTIGATIONS WERE NOT CONDUCTED FOR VERTICAL DATA EVALUATION AND ARE BEING DEFERRED TO THE CONTRACTOR. CONTRACTOR WILL CONDUCT LOCATION ACTIVITES TO FACILITATE INSTALLATIONOF WORK PRIOR TO EXCAVATION.

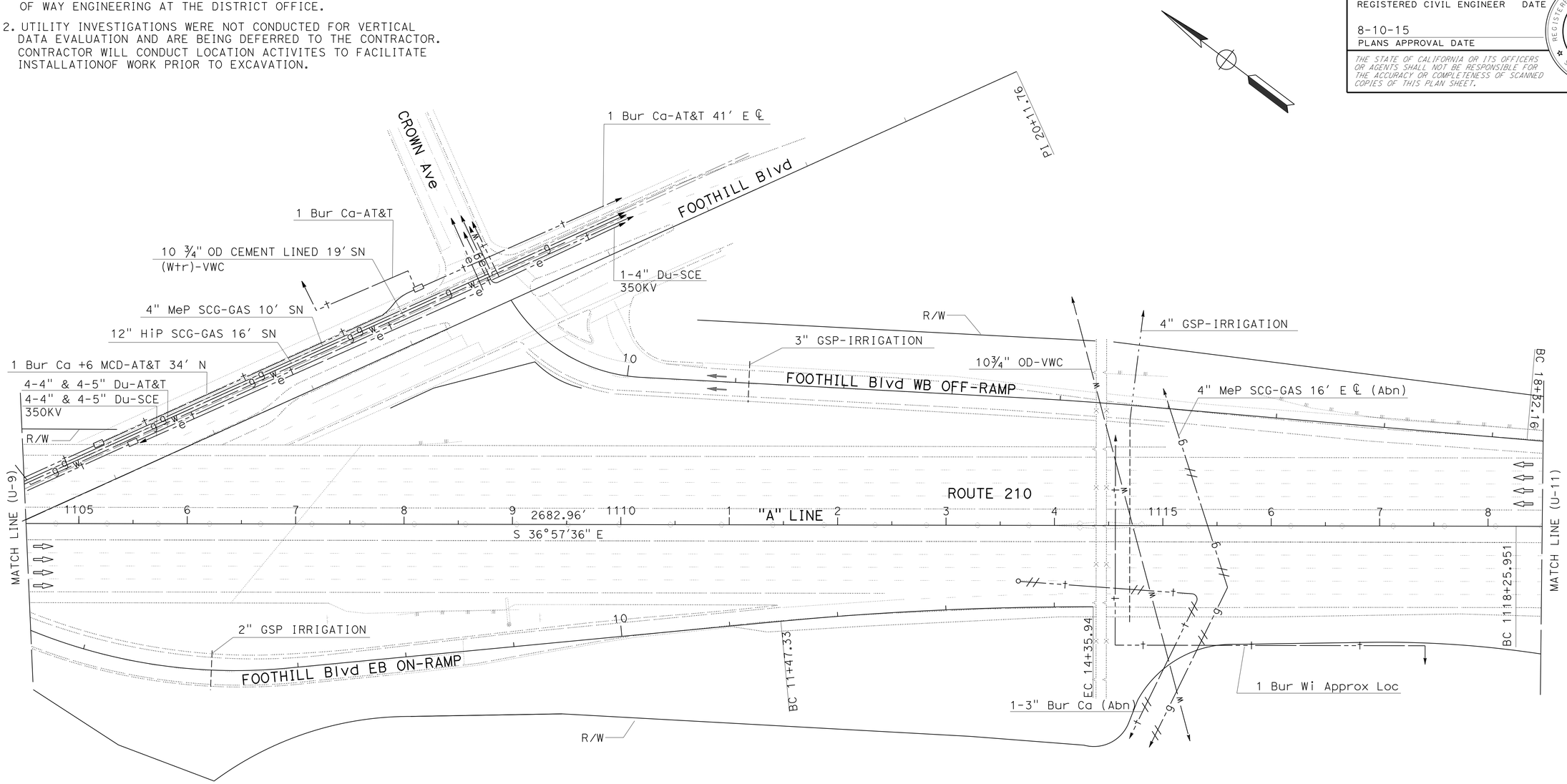

UTILITY PLAN

SCALE: 1" = 50'

APPROVED FOR EXISTING UTILITIES INFORMATION ONLY

U-10

STATE OF CALIFORNIA - DEPARTMENT OF TRANSPORTATION
Caltrans OFFICE OF DESIGN A

FUNCTIONAL SUPERVISOR: CELINA AVILES
CALCULATED-DESIGNED BY: HIEU LUU
CHECKED BY: PARVIZ YEGANEH
REVISED BY
DATE REVISED

LAST REVISION 00-00-00
DATE PLOTTED => 28-AUG-2015
TIME PLOTTED => 14:13

Dist	COUNTY	ROUTE	POST MILES TOTAL PROJECT	SHEET No.	TOTAL SHEETS
07	LA	210	R18.8/R24.9	12	95

REGISTERED CIVIL ENGINEER 6/25/15 DATE

8-10-15
PLANS APPROVAL DATE

THE STATE OF CALIFORNIA OR ITS OFFICERS OR AGENTS SHALL NOT BE RESPONSIBLE FOR THE ACCURACY OR COMPLETENESS OF SCANNED COPIES OF THIS PLAN SHEET.

REGISTERED PROFESSIONAL ENGINEER
PARVIZ YEGANEH
No. C53797
Exp. 6/30/17
CIVIL
STATE OF CALIFORNIA

NOTE:

1. FOR ACCURATE RIGHT OF WAY DATA, CONTACT RIGHT OF WAY ENGINEERING AT THE DISTRICT OFFICE.
2. UTILITY INVESTIGATIONS WERE NOT CONDUCTED FOR VERTICAL DATA EVALUATION AND ARE BEING DEFERRED TO THE CONTRACTOR. CONTRACTOR WILL CONDUCT LOCATION ACTIVITES TO FACILITATE INSTALLATIONOF WORK PRIOR TO EXCAVATION.

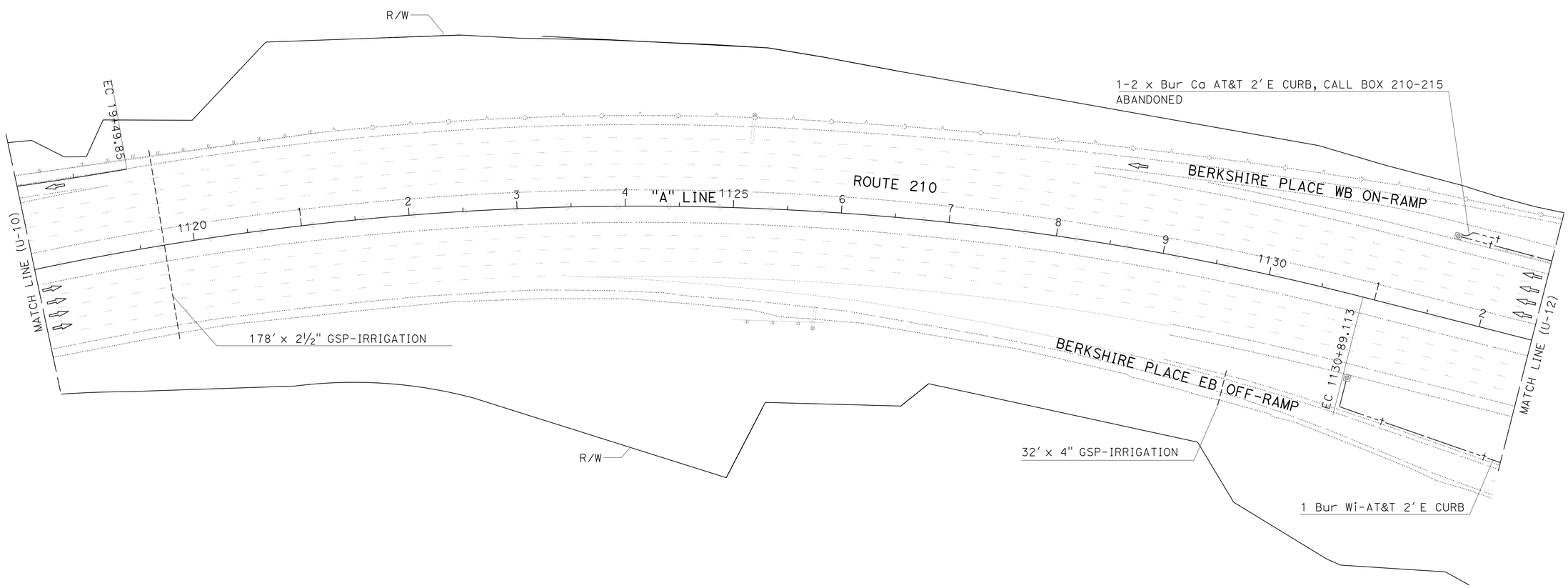

UTILITY PLAN

SCALE: 1" = 50'

APPROVED FOR EXISTING UTILITIES INFORMATION ONLY

U-11

STATE OF CALIFORNIA - DEPARTMENT OF TRANSPORTATION
Caltrans® OFFICE OF DESIGN A

FUNCTIONAL SUPERVISOR: CELINA AVILES

CALCULATED-DESIGNED BY: HIEU LUU
CHECKED BY: PARVIZ YEGANEH

REVISED BY
DATE REVISED

LAST REVISION 00-00-00
DATE PLOTTED => 28-AUG-2015
TIME PLOTTED => 14:13

Dist	COUNTY	ROUTE	POST MILES TOTAL PROJECT	SHEET No.	TOTAL SHEETS
07	LA	210	R18.8/R24.9	13	95

REGISTERED CIVIL ENGINEER DATE 6/25/15

8-10-15
PLANS APPROVAL DATE

REGISTERED PROFESSIONAL ENGINEER PARVIZ YEGANEH No. C53797 Exp. 6/30/17 CIVIL STATE OF CALIFORNIA

THE STATE OF CALIFORNIA OR ITS OFFICERS OR AGENTS SHALL NOT BE RESPONSIBLE FOR THE ACCURACY OR COMPLETENESS OF SCANNED COPIES OF THIS PLAN SHEET.

NOTE:

1. FOR ACCURATE RIGHT OF WAY DATA, CONTACT RIGHT OF WAY ENGINEERING AT THE DISTRICT OFFICE.
2. UTILITY INVESTIGATIONS WERE NOT CONDUCTED FOR VERTICAL DATA EVALUATION AND ARE BEING DEFERRED TO THE CONTRACTOR. CONTRACTOR WILL CONDUCT LOCATION ACTIVITES TO FACILITATE INSTALLATIONOF WORK PRIOR TO EXCAVATION.

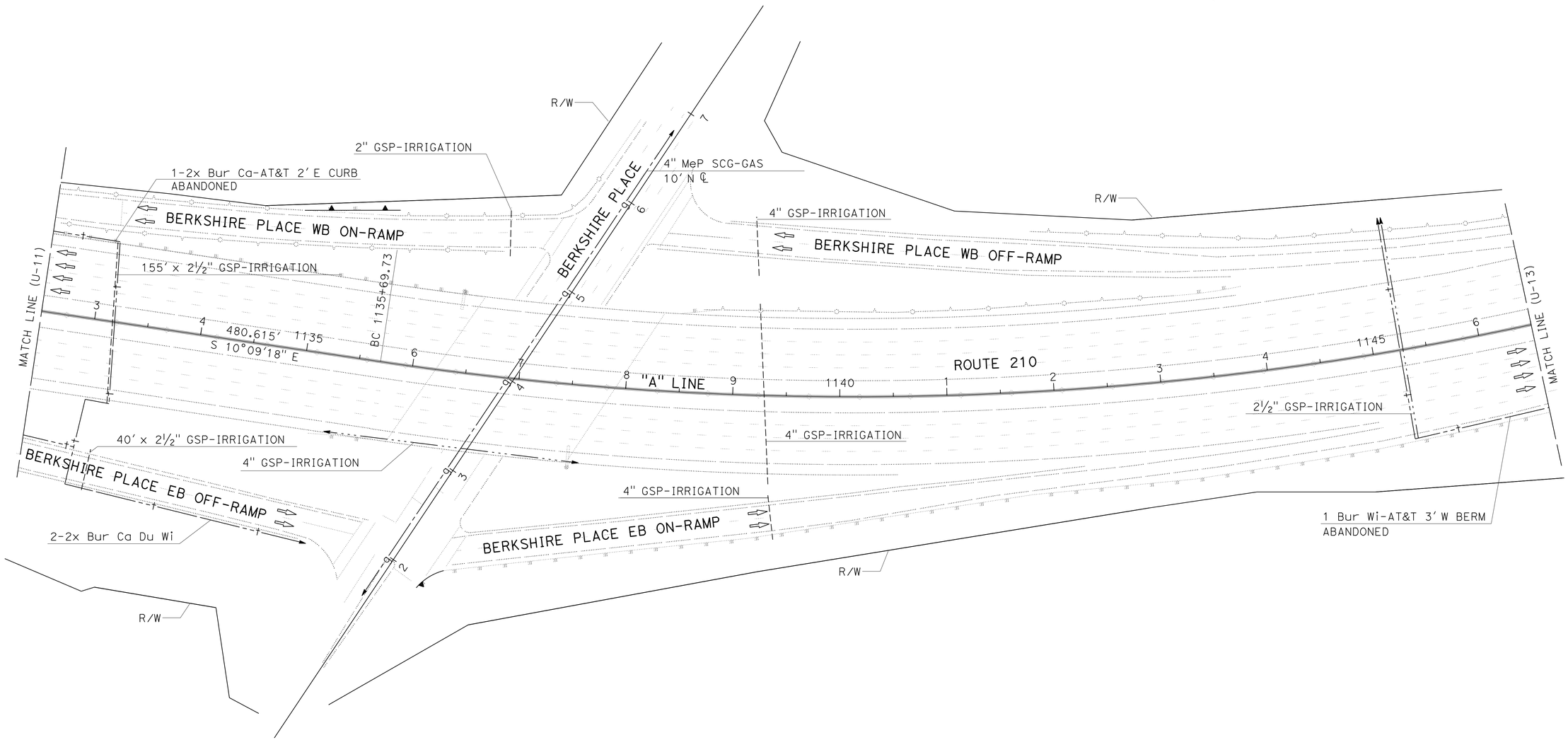

APPROVED FOR EXISTING UTILITIES INFORMATION ONLY

UTILITY PLAN

SCALE: 1" = 50'

U-12

STATE OF CALIFORNIA - DEPARTMENT OF TRANSPORTATION
Caltrans® OFFICE OF DESIGN A

FUNCTIONAL SUPERVISOR: CELINA AVILES

CALCULATED-DESIGNED BY: HIEU LUU
CHECKED BY: PARVIZ YEGANEH

REVISED BY | DATE REVISED

LAST REVISION 00-00-00 | DATE PLOTTED => 28-AUG-2015 | TIME PLOTTED => 14:13

Dist	COUNTY	ROUTE	POST MILES TOTAL PROJECT	SHEET No.	TOTAL SHEETS
07	LA	210	R18.8/R24.9	14	95

REGISTERED CIVIL ENGINEER 6/25/15 DATE

8-10-15
PLANS APPROVAL DATE

REGISTERED PROFESSIONAL ENGINEER
PARVIZ YEGANEH
No. C53797
Exp. 6/30/17
CIVIL
STATE OF CALIFORNIA

THE STATE OF CALIFORNIA OR ITS OFFICERS OR AGENTS SHALL NOT BE RESPONSIBLE FOR THE ACCURACY OR COMPLETENESS OF SCANNED COPIES OF THIS PLAN SHEET.

NOTE:

1. FOR ACCURATE RIGHT OF WAY DATA, CONTACT RIGHT OF WAY ENGINEERING AT THE DISTRICT OFFICE.
2. UTILITY INVESTIGATIONS WERE NOT CONDUCTED FOR VERTICAL DATA EVALUATION AND ARE BEING DEFERRED TO THE CONTRACTOR. CONTRACTOR WILL CONDUCT LOCATION ACTIVITES TO FACILITATE INSTALLATIONOF WORK PRIOR TO EXCAVATION.

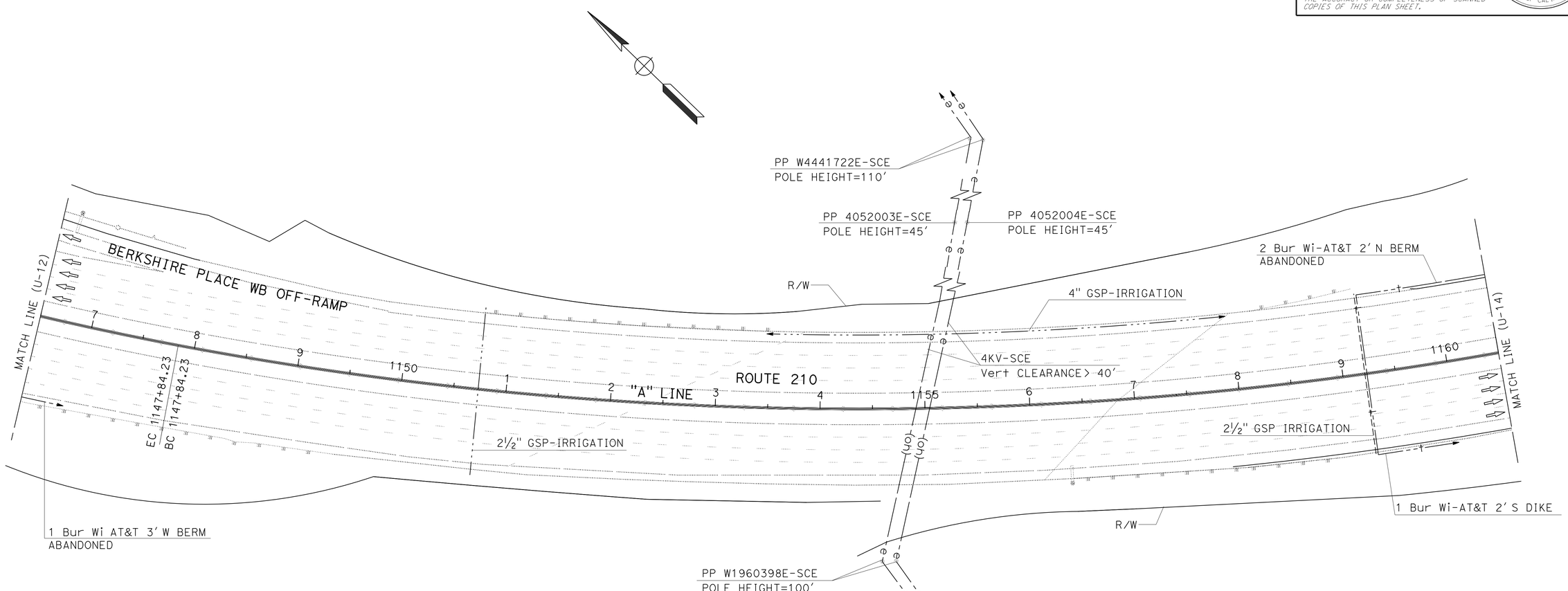

APPROVED FOR EXISTING UTILITIES INFORMATION ONLY

UTILITY PLAN

SCALE: 1" = 50'

U-13

STATE OF CALIFORNIA - DEPARTMENT OF TRANSPORTATION
Caltrans OFFICE OF DESIGN A

FUNCTIONAL SUPERVISOR: CELINA AVILES

CALCULATED-DESIGNED BY: HIEU LUU
CHECKED BY: PARVIZ YEGANEH

REVISED BY
DATE REVISED

LAST REVISION 00-00-00
DATE PLOTTED => 28-AUG-2015
TIME PLOTTED => 14:13

Dist	COUNTY	ROUTE	POST MILES TOTAL PROJECT	SHEET No.	TOTAL SHEETS
07	LA	210	R18.8/R24.9	15	95

REGISTERED CIVIL ENGINEER 6/25/15 DATE

8-10-15
PLANS APPROVAL DATE

REGISTERED PROFESSIONAL ENGINEER
PARVIZ YEGANEH
No. C53797
Exp. 6/30/17
CIVIL
STATE OF CALIFORNIA

THE STATE OF CALIFORNIA OR ITS OFFICERS OR AGENTS SHALL NOT BE RESPONSIBLE FOR THE ACCURACY OR COMPLETENESS OF SCANNED COPIES OF THIS PLAN SHEET.

NOTE:

1. FOR ACCURATE RIGHT OF WAY DATA, CONTACT RIGHT OF WAY ENGINEERING AT THE DISTRICT OFFICE.
2. UTILITY INVESTIGATIONS WERE NOT CONDUCTED FOR VERTICAL DATA EVALUATION AND ARE BEING DEFERRED TO THE CONTRACTOR. CONTRACTOR WILL CONDUCT LOCATION ACTIVITES TO FACILITATE INSTALLATIONOF WORK PRIOR TO EXCAVATION.

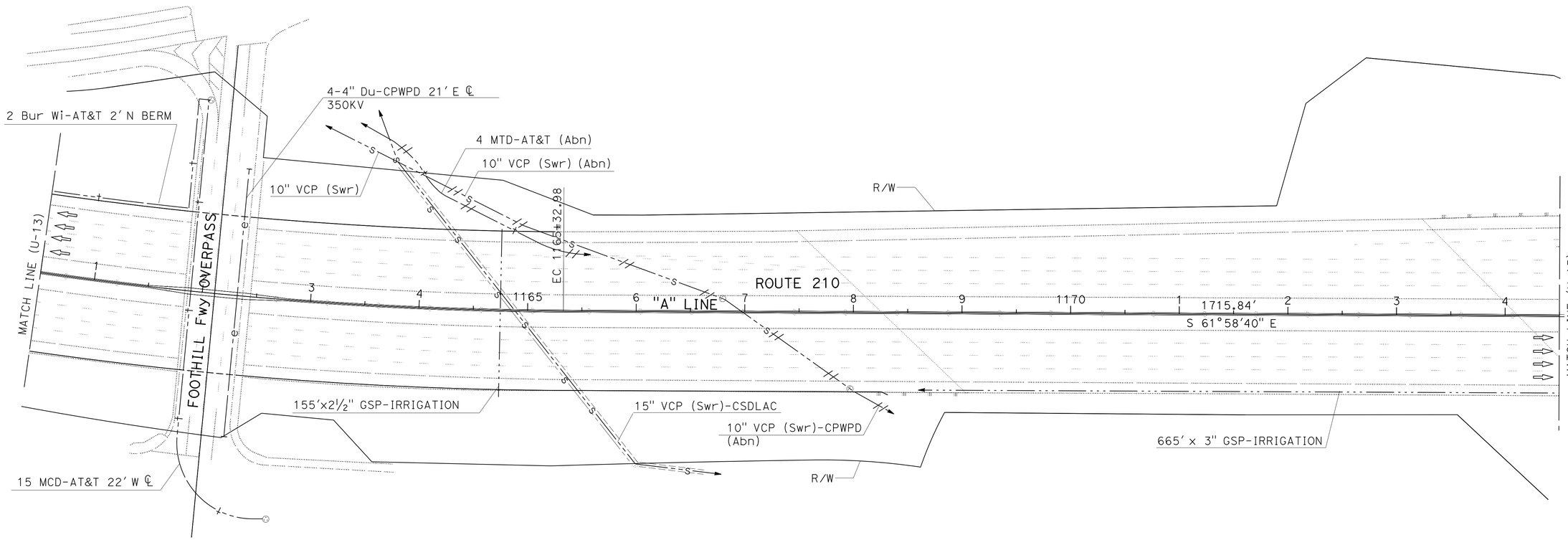

UTILITY PLAN

SCALE: 1" = 50'

APPROVED FOR EXISTING UTILITIES INFORMATION ONLY

U-14

STATE OF CALIFORNIA - DEPARTMENT OF TRANSPORTATION
Caltrans® OFFICE OF DESIGN A

FUNCTIONAL SUPERVISOR: CELINA AVILES
CALCULATED-DESIGNED BY: HIEU LUU
CHECKED BY: PARVIZ YEGANEH
REVISED BY
DATE REVISED

LAST REVISION 00-00-00
DATE PLOTTED => 28-AUG-2015
TIME PLOTTED => 14:13

Dist	COUNTY	ROUTE	POST MILES TOTAL PROJECT	SHEET No.	TOTAL SHEETS
07	LA	210	R18.8/R24.9	16	95

REGISTERED CIVIL ENGINEER 6/25/15 DATE

8-10-15
PLANS APPROVAL DATE

REGISTERED PROFESSIONAL ENGINEER PARVIZ YEGANEH No. C53797 Exp. 6/30/17 CIVIL STATE OF CALIFORNIA

THE STATE OF CALIFORNIA OR ITS OFFICERS OR AGENTS SHALL NOT BE RESPONSIBLE FOR THE ACCURACY OR COMPLETENESS OF SCANNED COPIES OF THIS PLAN SHEET.

NOTE:

1. FOR ACCURATE RIGHT OF WAY DATA, CONTACT RIGHT OF WAY ENGINEERING AT THE DISTRICT OFFICE.
2. UTILITY INVESTIGATIONS WERE NOT CONDUCTED FOR VERTICAL DATA EVALUATION AND ARE BEING DEFERRED TO THE CONTRACTOR. CONTRACTOR WILL CONDUCT LOCATION ACTIVITES TO FACILITATE INSTALLATIONOF WORK PRIOR TO EXCAVATION.

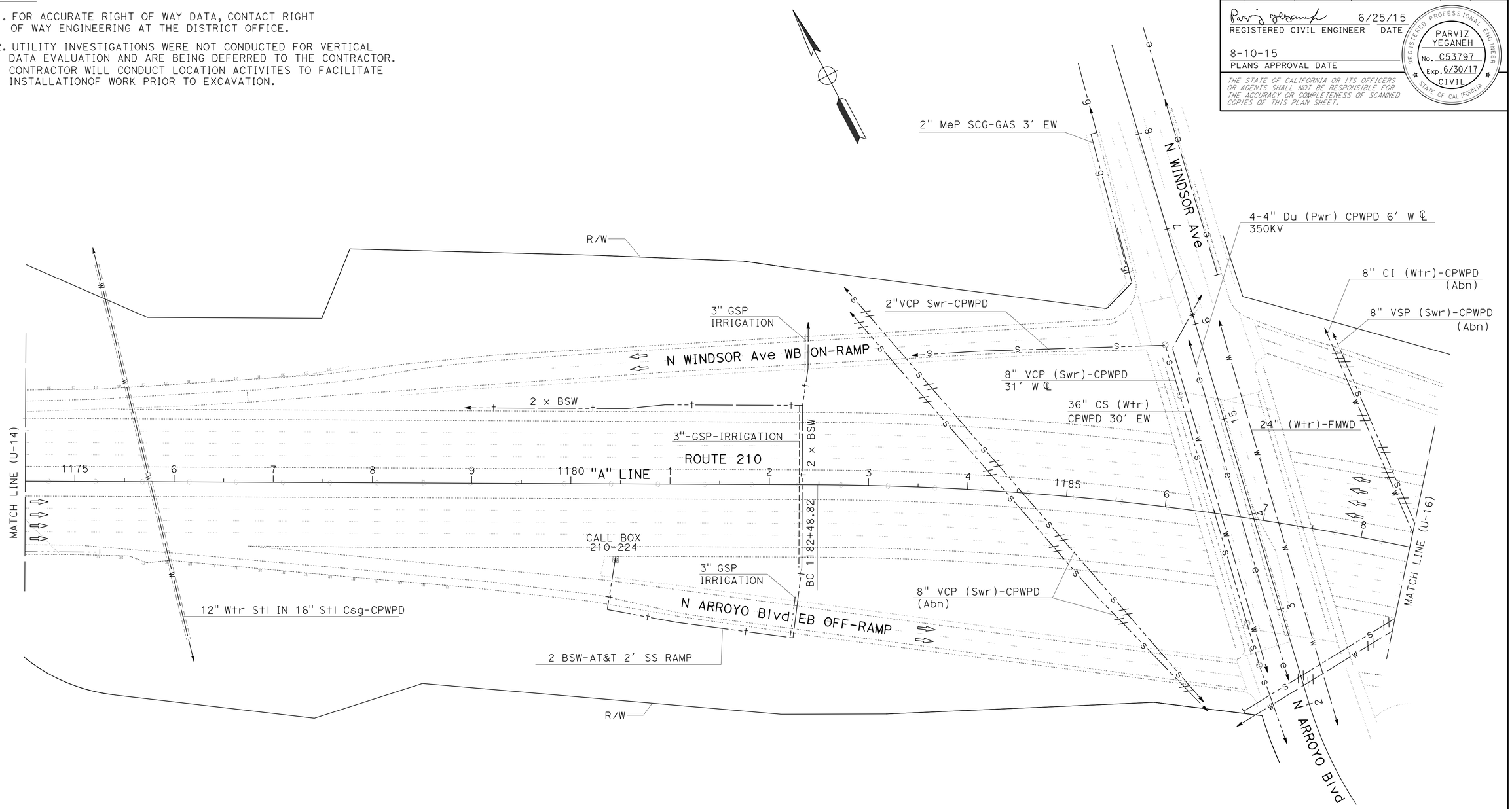

APPROVED FOR EXISTING UTILITIES INFORMATION ONLY

UTILITY PLAN

SCALE: 1" = 50'

U-15

STATE OF CALIFORNIA - DEPARTMENT OF TRANSPORTATION
Caltrans® OFFICE OF DESIGN A

FUNCTIONAL SUPERVISOR: CELINA AVILES

CALCULATED-DESIGNED BY: HIEU LUU
CHECKED BY: PARVIZ YEGANEH

REVISED BY
DATE REVISED

LAST REVISION 00-00-00
DATE PLOTTED => 28-AUG-2015
TIME PLOTTED => 14:13

Dist	COUNTY	ROUTE	POST MILES TOTAL PROJECT	SHEET No.	TOTAL SHEETS
07	LA	210	R18.8/R24.9	17	95

REGISTERED CIVIL ENGINEER 6/25/15 DATE

8-10-15
PLANS APPROVAL DATE

REGISTERED PROFESSIONAL ENGINEER PARVIZ YEGANEH No. C53797 Exp. 6/30/17 CIVIL STATE OF CALIFORNIA

THE STATE OF CALIFORNIA OR ITS OFFICERS OR AGENTS SHALL NOT BE RESPONSIBLE FOR THE ACCURACY OR COMPLETENESS OF SCANNED COPIES OF THIS PLAN SHEET.

NOTE:

1. FOR ACCURATE RIGHT OF WAY DATA, CONTACT RIGHT OF WAY ENGINEERING AT THE DISTRICT OFFICE.
2. UTILITY INVESTIGATIONS WERE NOT CONDUCTED FOR VERTICAL DATA EVALUATION AND ARE BEING DEFERRED TO THE CONTRACTOR. CONTRACTOR WILL CONDUCT LOCATION ACTIVITES TO FACILITATE INSTALLATIONOF WORK PRIOR TO EXCAVATION.

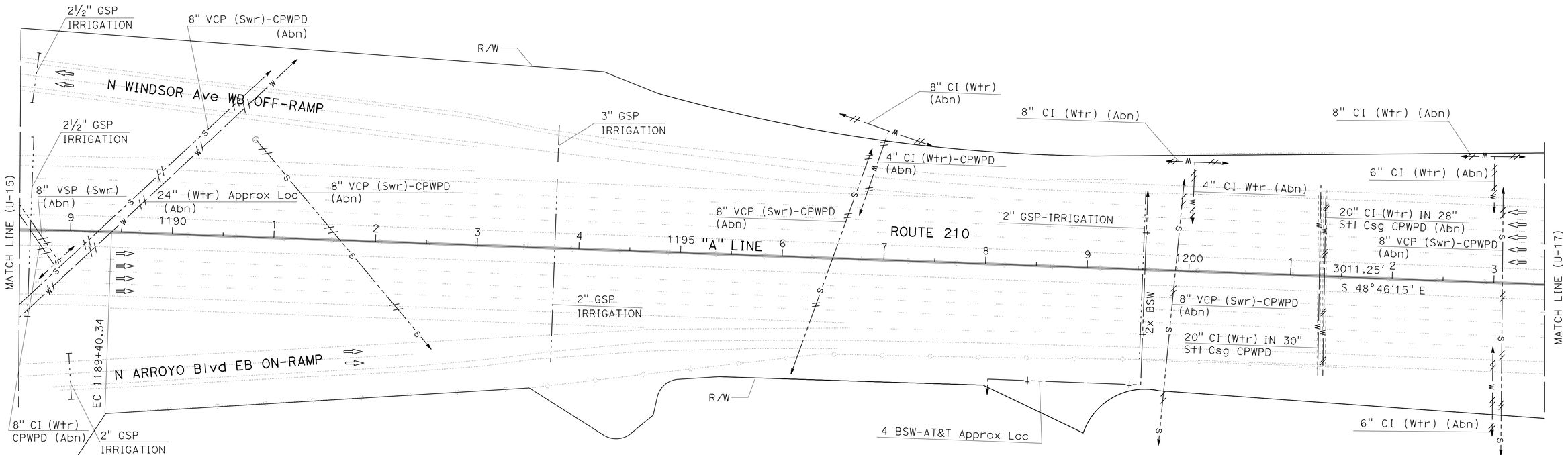

UTILITY PLAN

SCALE: 1" = 50'

APPROVED FOR EXISTING UTILITIES INFORMATION ONLY

U-16

STATE OF CALIFORNIA - DEPARTMENT OF TRANSPORTATION
Caltrans OFFICE OF DESIGN A

FUNCTIONAL SUPERVISOR: CELINA AVILES
CALCULATED-DESIGNED BY: HIEU LUU
CHECKED BY: PARVIZ YEGANEH
REVISED BY
DATE REVISED

LAST REVISION 00-00-00
DATE PLOTTED => 28-AUG-2015
TIME PLOTTED => 14:13

Dist	COUNTY	ROUTE	POST MILES TOTAL PROJECT	SHEET No.	TOTAL SHEETS
07	LA	210	R18.8/R24.9	18	95

REGISTERED CIVIL ENGINEER 6/25/15 DATE

8-10-15
PLANS APPROVAL DATE

REGISTERED PROFESSIONAL ENGINEER
PARVIZ YEGANEH
No. C53797
Exp. 6/30/17
CIVIL
STATE OF CALIFORNIA

THE STATE OF CALIFORNIA OR ITS OFFICERS OR AGENTS SHALL NOT BE RESPONSIBLE FOR THE ACCURACY OR COMPLETENESS OF SCANNED COPIES OF THIS PLAN SHEET.

NOTE:

1. FOR ACCURATE RIGHT OF WAY DATA, CONTACT RIGHT OF WAY ENGINEERING AT THE DISTRICT OFFICE.
2. UTILITY INVESTIGATIONS WERE NOT CONDUCTED FOR VERTICAL DATA EVALUATION AND ARE BEING DEFERRED TO THE CONTRACTOR. CONTRACTOR WILL CONDUCT LOCATION ACTIVITES TO FACILITATE INSTALLATIONOF WORK PRIOR TO EXCAVATION.

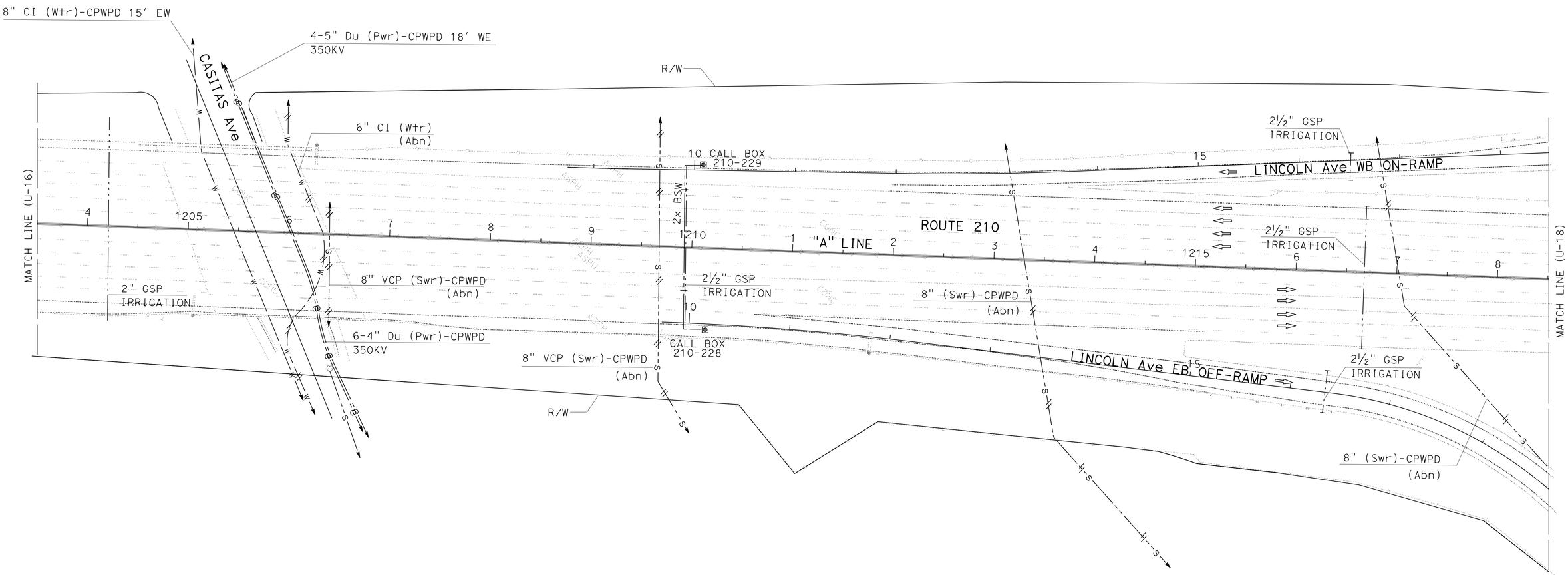

UTILITY PLAN

SCALE: 1" = 50'

APPROVED FOR EXISTING UTILITIES INFORMATION ONLY

U-17

STATE OF CALIFORNIA - DEPARTMENT OF TRANSPORTATION
Caltrans® OFFICE OF DESIGN A

FUNCTIONAL SUPERVISOR: CELINA AVILES
CALCULATED-DESIGNED BY: HIEU LUU
CHECKED BY: PARVIZ YEGANEH
REVISED BY
DATE REVISED

LAST REVISION 00-00-00
DATE PLOTTED => 28-AUG-2015
TIME PLOTTED => 14:13

Dist	COUNTY	ROUTE	POST MILES TOTAL PROJECT	SHEET No.	TOTAL SHEETS
07	LA	210	R18.8/R24.9	19	95

REGISTERED CIVIL ENGINEER DATE 6/25/15

PLANS APPROVAL DATE 8-10-15

REGISTERED PROFESSIONAL ENGINEER PARVIZ YEGANEH No. C53797 Exp. 6/30/17 CIVIL STATE OF CALIFORNIA

THE STATE OF CALIFORNIA OR ITS OFFICERS OR AGENTS SHALL NOT BE RESPONSIBLE FOR THE ACCURACY OR COMPLETENESS OF SCANNED COPIES OF THIS PLAN SHEET.

NOTE:

1. FOR ACCURATE RIGHT OF WAY DATA, CONTACT RIGHT OF WAY ENGINEERING AT THE DISTRICT OFFICE.
2. UTILITY INVESTIGATIONS WERE NOT CONDUCTED FOR VERTICAL DATA EVALUATION AND ARE BEING DEFERRED TO THE CONTRACTOR. CONTRACTOR WILL CONDUCT LOCATION ACTIVITES TO FACILITATE INSTALLATIONOF WORK PRIOR TO EXCAVATION.

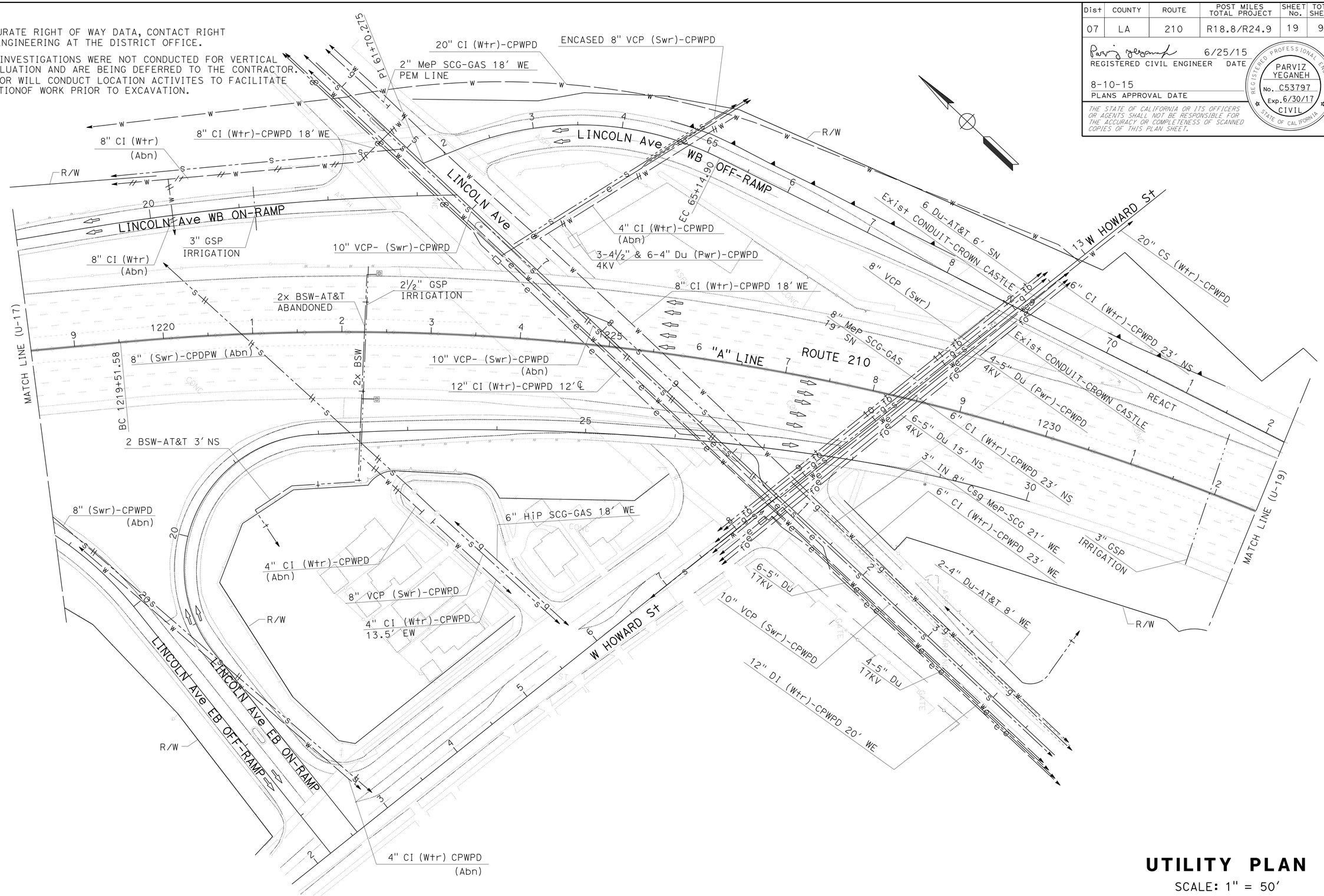

UTILITY PLAN

SCALE: 1" = 50'

APPROVED FOR EXISTING UTILITIES INFORMATION ONLY

U-18

STATE OF CALIFORNIA - DEPARTMENT OF TRANSPORTATION
Caltrans® OFFICE OF DESIGN A

FUNCTIONAL SUPERVISOR: CELINA AVILES

CALCULATED-DESIGNED BY: HIEU LUU
CHECKED BY: PARVIZ YEGANEH

REVISED BY | DATE REVISED

LAST REVISION 00-00-00 | DATE PLOTTED => 28-AUG-2015 | TIME PLOTTED => 14:13

Dist	COUNTY	ROUTE	POST MILES TOTAL PROJECT	SHEET No.	TOTAL SHEETS
07	LA	210	R18.8/R24.9	20	95

REGISTERED CIVIL ENGINEER 6/25/15 DATE

8-10-15
PLANS APPROVAL DATE

REGISTERED PROFESSIONAL ENGINEER PARVIZ YEGANEH No. C53797 Exp. 6/30/17 CIVIL STATE OF CALIFORNIA

THE STATE OF CALIFORNIA OR ITS OFFICERS OR AGENTS SHALL NOT BE RESPONSIBLE FOR THE ACCURACY OR COMPLETENESS OF SCANNED COPIES OF THIS PLAN SHEET.

NOTE:

1. FOR ACCURATE RIGHT OF WAY DATA, CONTACT RIGHT OF WAY ENGINEERING AT THE DISTRICT OFFICE.
2. UTILITY INVESTIGATIONS WERE NOT CONDUCTED FOR VERTICAL DATA EVALUATION AND ARE BEING DEFERRED TO THE CONTRACTOR. CONTRACTOR WILL CONDUCT LOCATION ACTIVITES TO FACILITATE INSTALLATIONOF WORK PRIOR TO EXCAVATION.

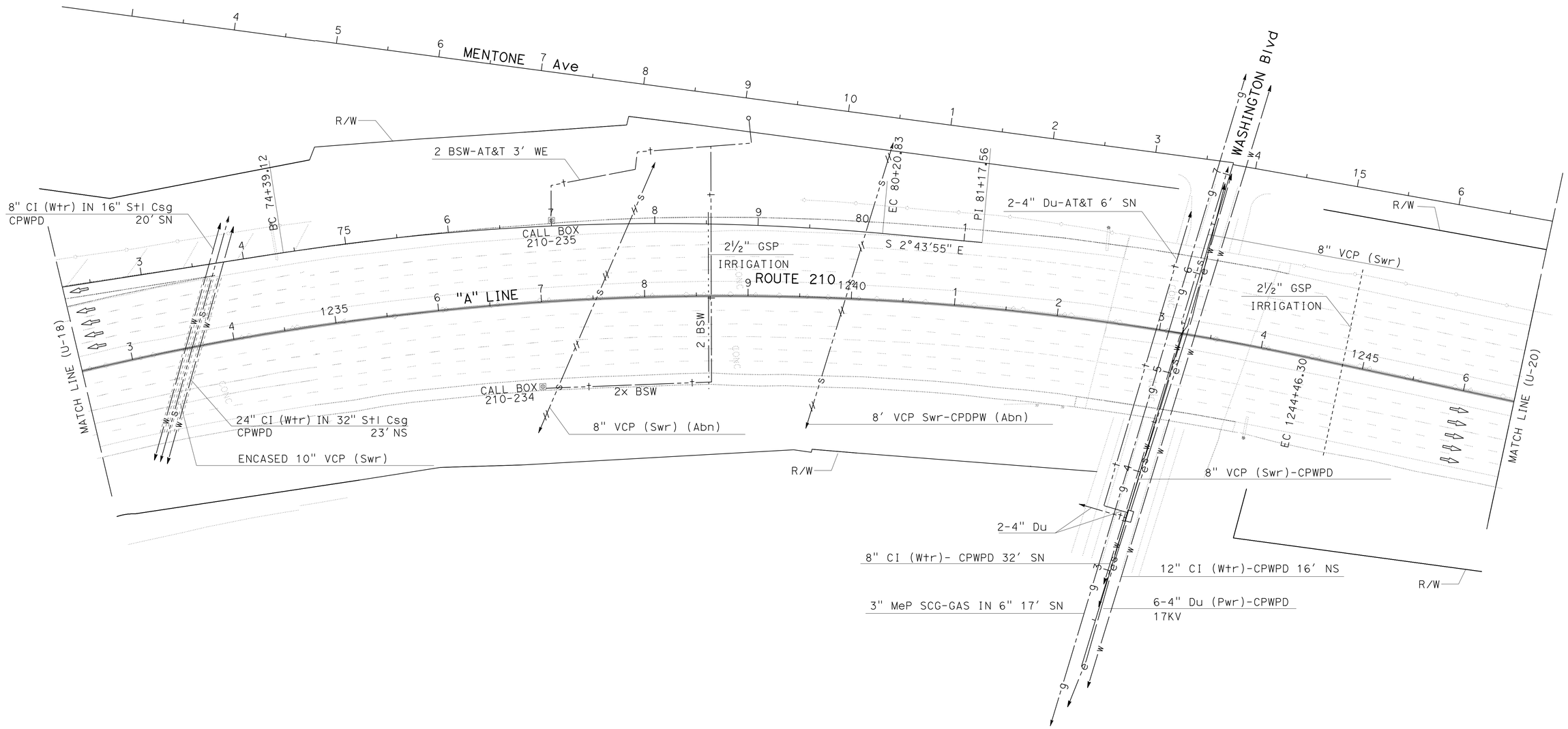

APPROVED FOR EXISTING UTILITIES INFORMATION ONLY

UTILITY PLAN

SCALE: 1" = 50'

U-19

STATE OF CALIFORNIA - DEPARTMENT OF TRANSPORTATION
Caltrans® OFFICE OF DESIGN A

FUNCTIONAL SUPERVISOR: CELINA AVILES

CALCULATED-DESIGNED BY: HIEU LUU
CHECKED BY: PARVIZ YEGANEH

REVISED BY
DATE REVISED

LAST REVISION 00-00-00
DATE PLOTTED => 28-AUG-2015
TIME PLOTTED => 14:13

Dist	COUNTY	ROUTE	POST MILES TOTAL PROJECT	SHEET No.	TOTAL SHEETS
07	LA	210	R18.8/R24.9	21	95

REGISTERED CIVIL ENGINEER 6/25/15 DATE

8-10-15
PLANS APPROVAL DATE

REGISTERED PROFESSIONAL ENGINEER
PARVIZ YEGANEH
No. C53797
Exp. 6/30/17
CIVIL
STATE OF CALIFORNIA

THE STATE OF CALIFORNIA OR ITS OFFICERS OR AGENTS SHALL NOT BE RESPONSIBLE FOR THE ACCURACY OR COMPLETENESS OF SCANNED COPIES OF THIS PLAN SHEET.

NOTE:

1. FOR ACCURATE RIGHT OF WAY DATA, CONTACT RIGHT OF WAY ENGINEERING AT THE DISTRICT OFFICE.
2. UTILITY INVESTIGATIONS WERE NOT CONDUCTED FOR VERTICAL DATA EVALUATION AND ARE BEING DEFERRED TO THE CONTRACTOR. CONTRACTOR WILL CONDUCT LOCATION ACTIVITES TO FACILITATE INSTALLATIONOF WORK PRIOR TO EXCAVATION.

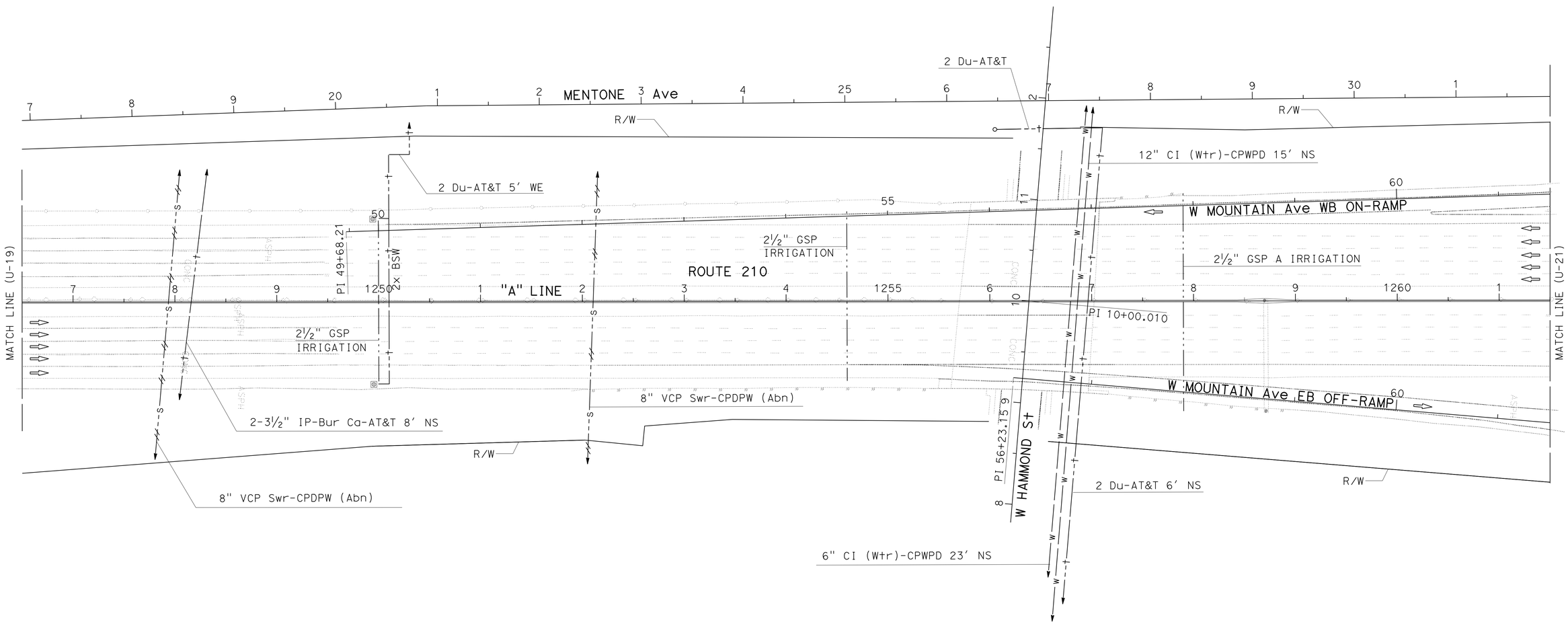

UTILITY PLAN

SCALE: 1" = 50'

APPROVED FOR EXISTING UTILITIES INFORMATION ONLY

U-20

REVISED BY	DATE REVISED
HIEU LUU	PARVIZ YEGANEH

CALCULATED-DESIGNED BY / CHECKED BY

FUNCTIONAL SUPERVISOR: CELINA AVILES

STATE OF CALIFORNIA - DEPARTMENT OF TRANSPORTATION
Caltrans OFFICE OF DESIGN A

LAST REVISION 00-00-00 | DATE PLOTTED => 28-AUG-2015 | TIME PLOTTED => 14:13

Dist	COUNTY	ROUTE	POST MILES TOTAL PROJECT	SHEET No.	TOTAL SHEETS
07	LA	210	R18.8/R24.9	22	95

REGISTERED CIVIL ENGINEER 6/25/15 DATE

8-10-15
PLANS APPROVAL DATE

REGISTERED PROFESSIONAL ENGINEER PARVIZ YEGANEH No. C53797 Exp. 6/30/17 CIVIL STATE OF CALIFORNIA

THE STATE OF CALIFORNIA OR ITS OFFICERS OR AGENTS SHALL NOT BE RESPONSIBLE FOR THE ACCURACY OR COMPLETENESS OF SCANNED COPIES OF THIS PLAN SHEET.

NOTE:

1. FOR ACCURATE RIGHT OF WAY DATA, CONTACT RIGHT OF WAY ENGINEERING AT THE DISTRICT OFFICE.
2. UTILITY INVESTIGATIONS WERE NOT CONDUCTED FOR VERTICAL DATA EVALUATION AND ARE BEING DEFERRED TO THE CONTRACTOR. CONTRACTOR WILL CONDUCT LOCATION ACTIVITES TO FACILITATE INSTALLATIONOF WORK PRIOR TO EXCAVATION.

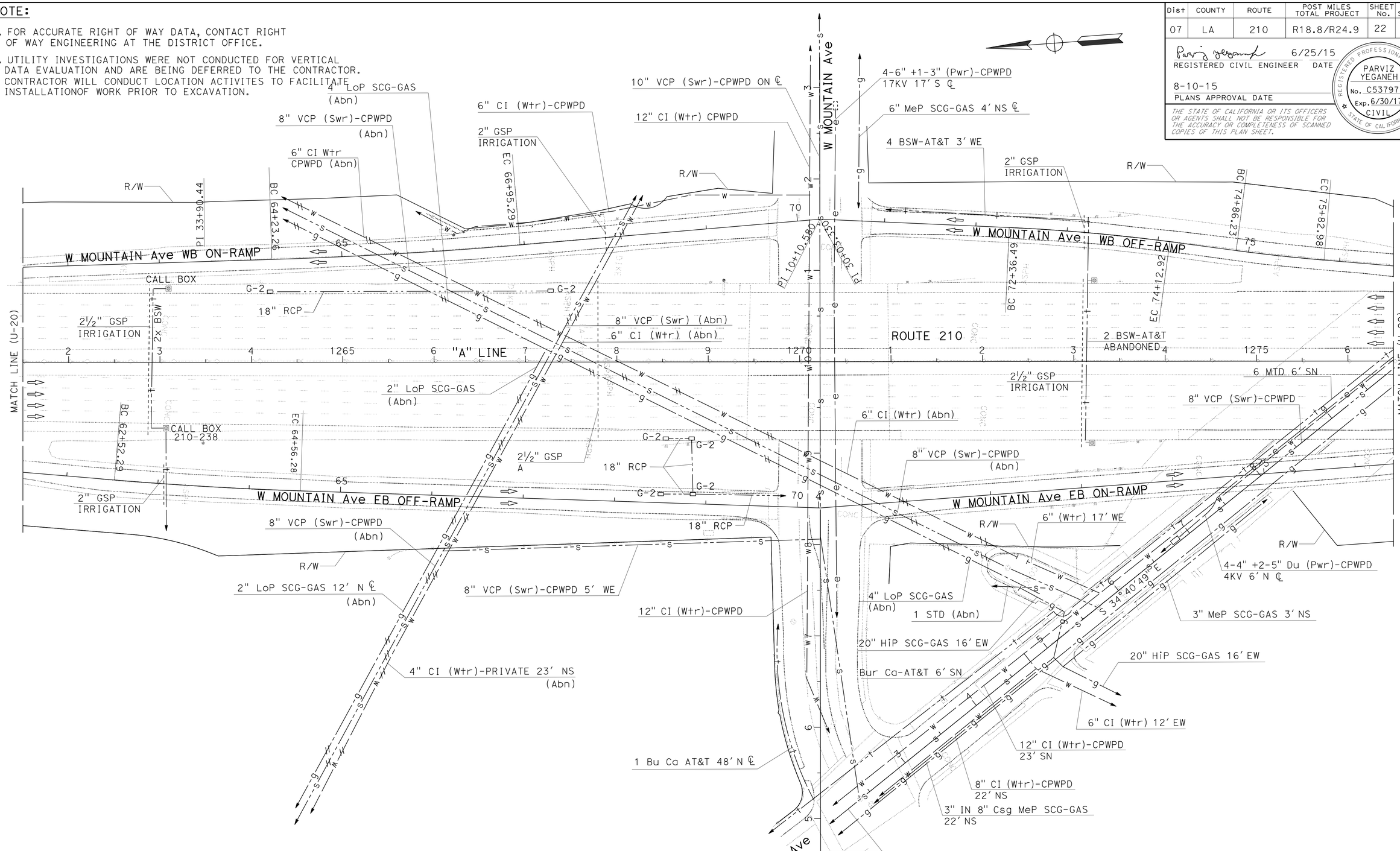

APPROVED FOR EXISTING UTILITIES INFORMATION ONLY

UTILITY PLAN

SCALE: 1" = 50'

U-21

STATE OF CALIFORNIA - DEPARTMENT OF TRANSPORTATION
Caltrans® OFFICE OF DESIGN A

FUNCTIONAL SUPERVISOR: CELINA AVILES
CALCULATED-DESIGNED BY: HIEU LUU
CHECKED BY: PARVIZ YEGANEH
REVISED BY / DATE REVISED

LAST REVISION 00-00-00
DATE PLOTTED => 28-AUG-2015
TIME PLOTTED => 14:13

Dist	COUNTY	ROUTE	POST MILES TOTAL PROJECT	SHEET No.	TOTAL SHEETS
07	LA	210	R18.8/R24.9	23	95

REGISTERED CIVIL ENGINEER 6/25/15 DATE

8-10-15
PLANS APPROVAL DATE

REGISTERED PROFESSIONAL ENGINEER PARVIZ YEGANEH No. C53797 Exp. 6/30/17 CIVIL STATE OF CALIFORNIA

THE STATE OF CALIFORNIA OR ITS OFFICERS OR AGENTS SHALL NOT BE RESPONSIBLE FOR THE ACCURACY OR COMPLETENESS OF SCANNED COPIES OF THIS PLAN SHEET.

NOTE:

1. FOR ACCURATE RIGHT OF WAY DATA, CONTACT RIGHT OF WAY ENGINEERING AT THE DISTRICT OFFICE.
2. UTILITY INVESTIGATIONS WERE NOT CONDUCTED FOR VERTICAL DATA EVALUATION AND ARE BEING DEFERRED TO THE CONTRACTOR. CONTRACTOR WILL CONDUCT LOCATION ACTIVITES TO FACILITATE INSTALLATIONOF WORK PRIOR TO EXCAVATION.

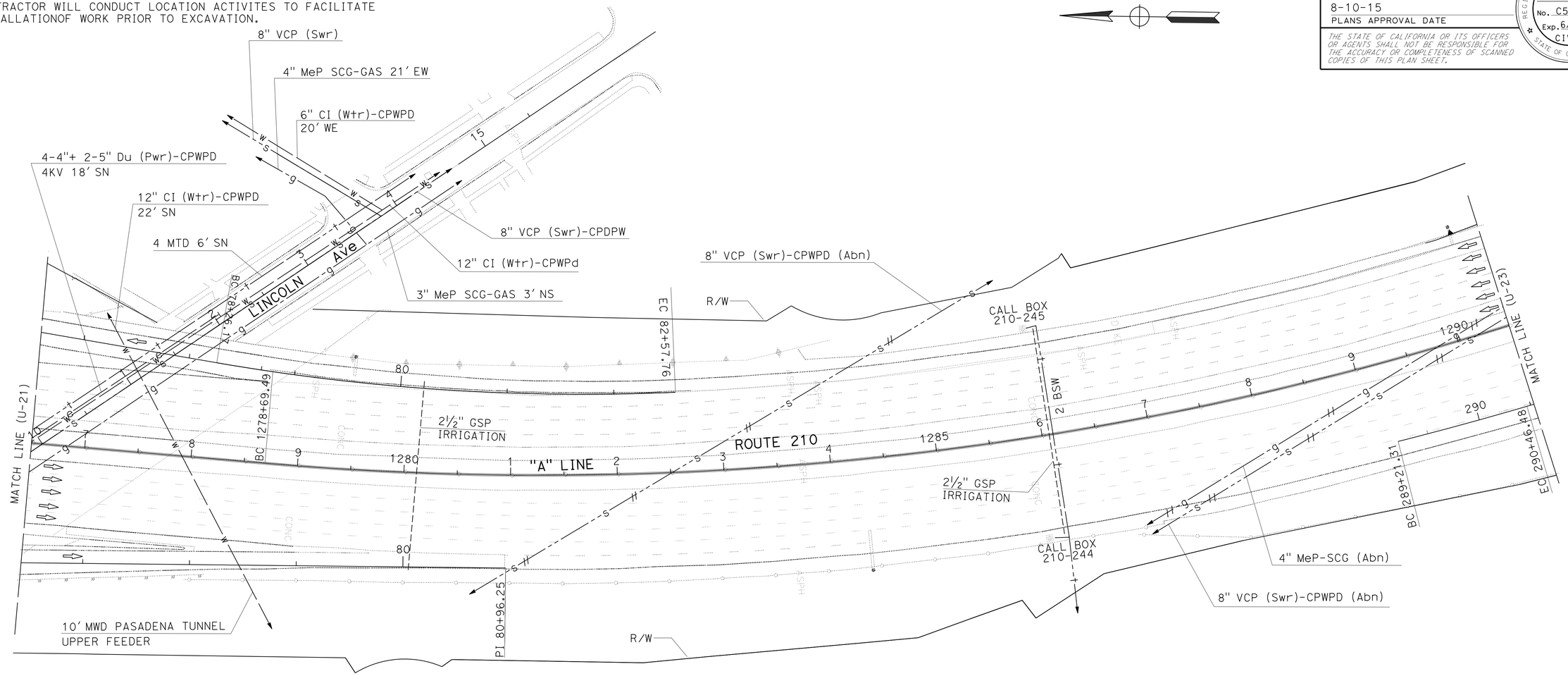

UTILITY PLAN

SCALE: 1" = 50'

APPROVED FOR EXISTING UTILITIES INFORMATION ONLY

U-22

STATE OF CALIFORNIA - DEPARTMENT OF TRANSPORTATION
Caltrans® OFFICE OF DESIGN A

FUNCTIONAL SUPERVISOR: CELINA AVILES
CALCULATED-DESIGNED BY: HIEU LUU
CHECKED BY: PARVIZ YEGANEH
REVISED BY
DATE REVISED

LAST REVISION 00-00-00
DATE PLOTTED => 28-AUG-2015
TIME PLOTTED => 14:13

Dist	COUNTY	ROUTE	POST MILES TOTAL PROJECT	SHEET No.	TOTAL SHEETS
07	LA	210	R18.8/R24.9	24	95

REGISTERED CIVIL ENGINEER 6/25/15 DATE

8-10-15
PLANS APPROVAL DATE

REGISTERED PROFESSIONAL ENGINEER PARVIZ YEGANEH No. C53797 Exp. 6/30/17 CIVIL STATE OF CALIFORNIA

THE STATE OF CALIFORNIA OR ITS OFFICERS OR AGENTS SHALL NOT BE RESPONSIBLE FOR THE ACCURACY OR COMPLETENESS OF SCANNED COPIES OF THIS PLAN SHEET.

NOTE:

1. FOR ACCURATE RIGHT OF WAY DATA, CONTACT RIGHT OF WAY ENGINEERING AT THE DISTRICT OFFICE.
2. UTILITY INVESTIGATIONS WERE NOT CONDUCTED FOR VERTICAL DATA EVALUATION AND ARE BEING DEFERRED TO THE CONTRACTOR. CONTRACTOR WILL CONDUCT LOCATION ACTIVITES TO FACILITATE INSTALLATIONOF WORK PRIOR TO EXCAVATION.

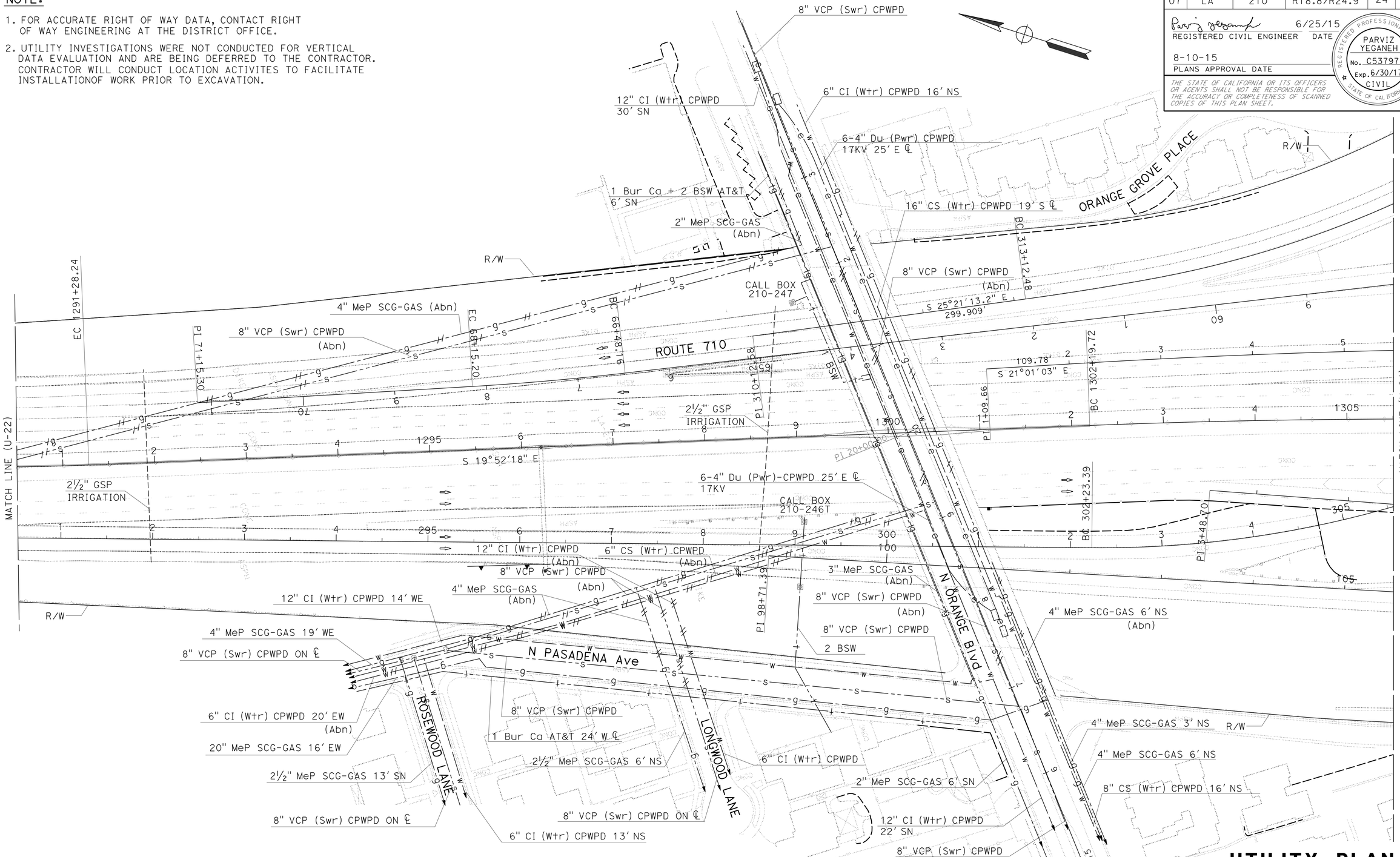

UTILITY PLAN

SCALE: 1" = 50'

APPROVED FOR EXISTING UTILITIES INFORMATION ONLY

U-23

STATE OF CALIFORNIA - DEPARTMENT OF TRANSPORTATION
Caltrans® OFFICE OF DESIGN A

FUNCTIONAL SUPERVISOR: CELINA AVILES
CALCULATED-DESIGNED BY: HIEU LUU
CHECKED BY: PARVIZ YEGANEH
REVISED BY
DATE REVISED

LAST REVISION 00-00-00
DATE PLOTTED => 28-AUG-2015
TIME PLOTTED => 14:13

Dist	COUNTY	ROUTE	POST MILES TOTAL PROJECT	SHEET No.	TOTAL SHEETS
07	LA	210	R18.8/R24.9	25	95

REGISTERED CIVIL ENGINEER 6/25/15 DATE

8-10-15
PLANS APPROVAL DATE

REGISTERED PROFESSIONAL ENGINEER
PARVIZ YEGANEH
No. C53797
Exp. 6/30/17
CIVIL
STATE OF CALIFORNIA

THE STATE OF CALIFORNIA OR ITS OFFICERS OR AGENTS SHALL NOT BE RESPONSIBLE FOR THE ACCURACY OR COMPLETENESS OF SCANNED COPIES OF THIS PLAN SHEET.

NOTE:

1. FOR ACCURATE RIGHT OF WAY DATA, CONTACT RIGHT OF WAY ENGINEERING AT THE DISTRICT OFFICE.
2. UTILITY INVESTIGATIONS WERE NOT CONDUCTED FOR VERTICAL DATA EVALUATION AND ARE BEING DEFERRED TO THE CONTRACTOR. CONTRACTOR WILL CONDUCT LOCATION ACTIVITES TO FACILITATE INSTALLATIONOF WORK PRIOR TO EXCAVATION.

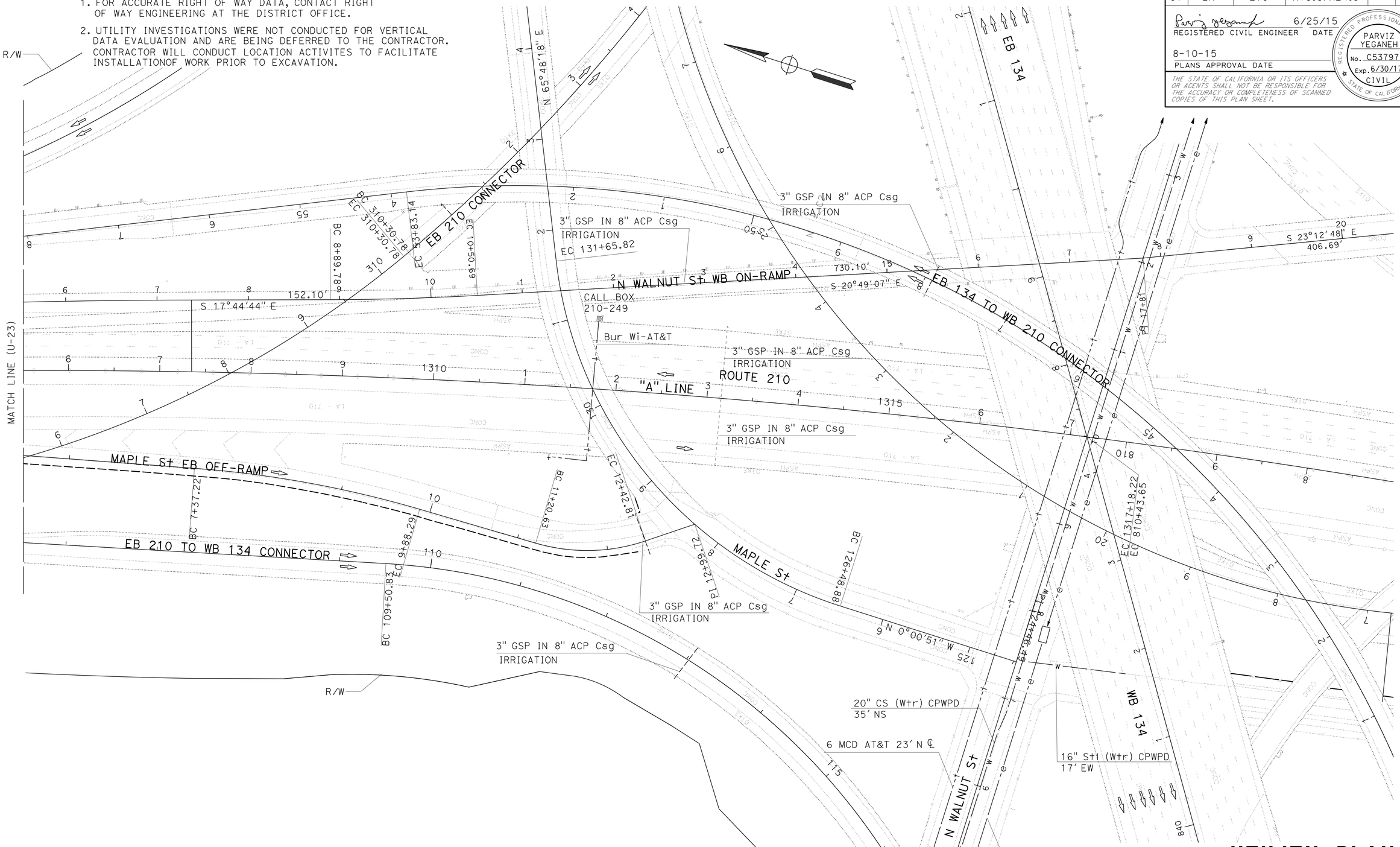

APPROVED FOR EXISTING UTILITIES INFORMATION ONLY

UTILITY PLAN

SCALE: 1" = 50'

U-24

STATE OF CALIFORNIA - DEPARTMENT OF TRANSPORTATION
Caltrans® OFFICE OF DESIGN A

FUNCTIONAL SUPERVISOR: CELINA AVILES

CALCULATED-DESIGNED BY: HIEU LUU
CHECKED BY: PARVIZ YEGANEH

REVISED BY
DATE REVISED

LAST REVISION 00-00-00
DATE PLOTTED => 28-AUG-2015
TIME PLOTTED => 14:13

Dist	COUNTY	ROUTE	POST MILES TOTAL PROJECT	SHEET No.	TOTAL SHEETS
07	LA	210	R18.8/R24.9	26	95

REGISTERED CIVIL ENGINEER 5/13/15 DATE

8-10-15
PLANS APPROVAL DATE

REGISTERED PROFESSIONAL ENGINEER HEATHER LIANG No. C69374 Exp. 06/30/16 CIVIL STATE OF CALIFORNIA

THE STATE OF CALIFORNIA OR ITS OFFICERS OR AGENTS SHALL NOT BE RESPONSIBLE FOR THE ACCURACY OR COMPLETENESS OF SCANNED COPIES OF THIS PLAN SHEET.

STATIONARY MOUNTED CONSTRUCTION AREA SIGNS

SIGN No.	SIGN CODE FEDERAL (MUTCD)	SIGN CODE CALIFORNIA (CA)	PANEL SIZE	SIGN MESSAGE	NUMBER OF POSTS AND SIZE	NUMBER OF SIGNS
A	W20-1		48" x 48"	ROAD WORK 1 MILE	1 - 6" x 6"	4
B	W20-1		48" x 48"	ROAD WORK AHEAD	1 - 6" x 6"	17
C	G20-2		48" x 24"	END ROAD WORK	1 - 4" x 6"	16
D		C40 (CA)	144" x 60"	TRAFFIC FINES DOUBLED IN CONSTRUCTION ZONES	2 - 6" x 8"	4

NOTE:

1. LOCATIONS OF CONSTRUCTION AREA SIGNS ARE APPROXIMATE. EXACT LOCATIONS WILL BE DETERMINED BY THE ENGINEER.

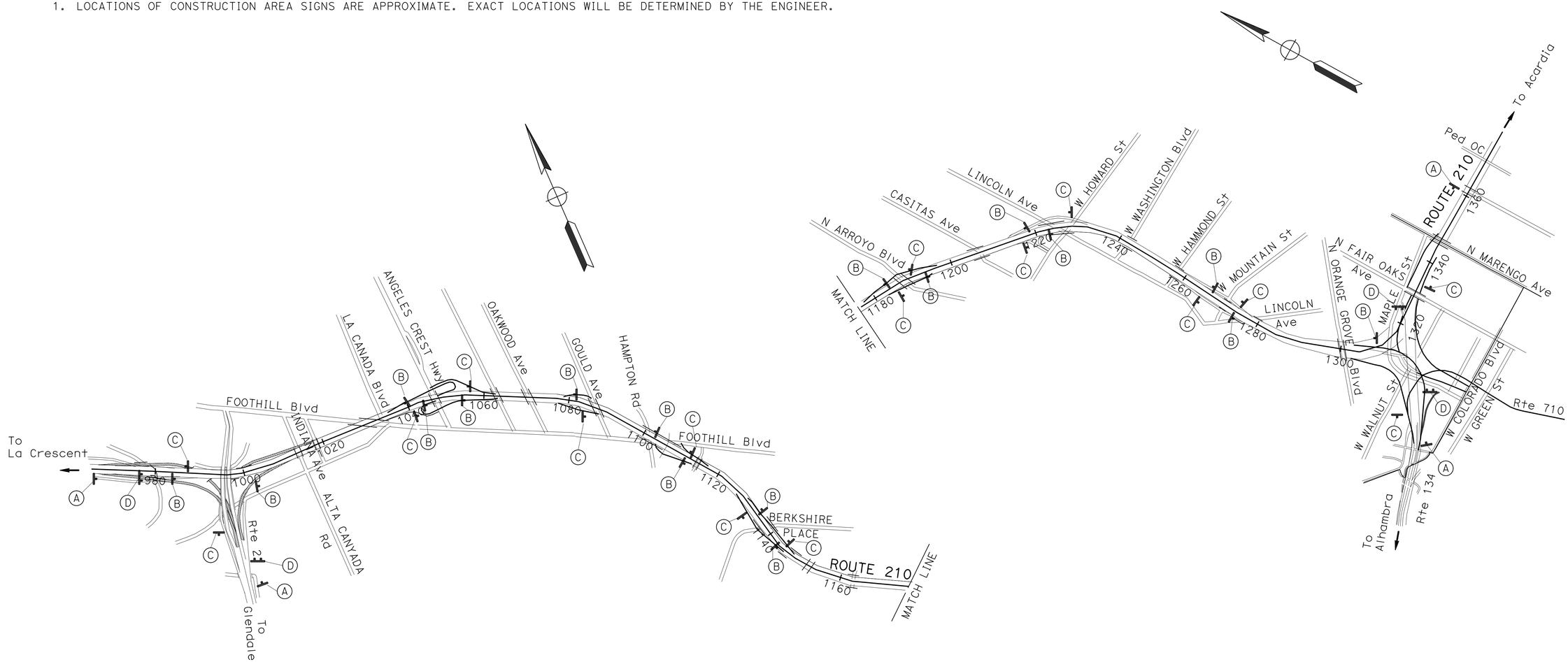

CONSTRUCTION AREA SIGNS

NO SCALE

CS-1

APPROVED FOR CONSTRUCTION AREA SIGN WORK ONLY

STATE OF CALIFORNIA - DEPARTMENT OF TRANSPORTATION
Caltrans
OFFICE OF ITS

FUNCTIONAL SUPERVISOR: JACQUELINE TAN
CALCULATED-DESIGNED BY: HEATHER LIANG
CHECKED BY: PETER LIN
REVISED BY
DATE REVISED

LAST REVISION 00-00-00
DATE PLOTTED => 28-AUG-2015
TIME PLOTTED => 14:13

Dist	COUNTY	ROUTE	POST MILES TOTAL PROJECT	SHEET No.	TOTAL SHEETS
07	LA	210	R18.8/R24.9	27	95

Ali Bamshad 03-03-15
REGISTERED CIVIL ENGINEER DATE

8-10-15
PLANS APPROVAL DATE

REGISTERED PROFESSIONAL ENGINEER ALI R. BAMSHAD No. C48134 Exp. 6-30-16 CIVIL STATE OF CALIFORNIA

THE STATE OF CALIFORNIA OR ITS OFFICERS OR AGENTS SHALL NOT BE RESPONSIBLE FOR THE ACCURACY OR COMPLETENESS OF SCANNED COPIES OF THIS PLAN SHEET.

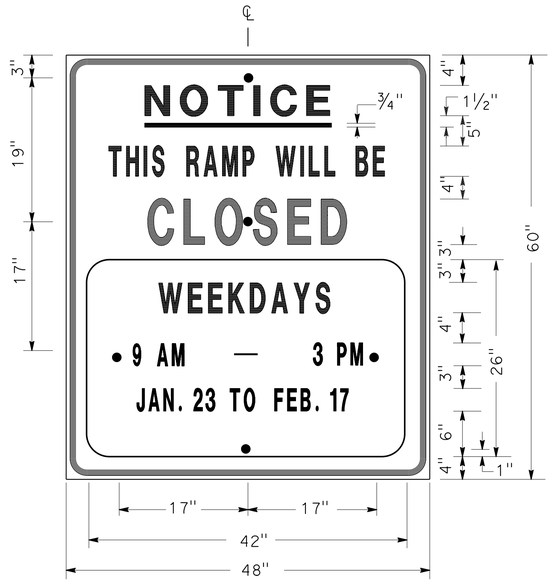

SIGN SP-1

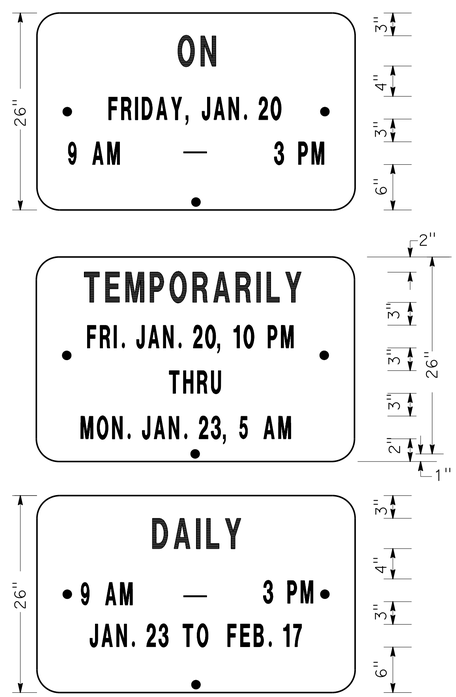

ALTERNATE OVERLAY PANELS (TYPICAL)

SPECIAL ADVANCE NOTICE PUBLICITY SIGN

NOTES: SIGN SP-1

1. LETTERS AND BORDER MUST BE BLACK ON REFLECTORIZED ORANGE BACKGROUND.
2. BOLT HOLES MUST BE 3/8" DIAMETER.
3. BASE MATERIAL MUST BE ALUMINUM (MINIMUM 0.06").
4. SIGNS MUST BE MOUNTED WITH BOTTOMS OF SIGNS A MINIMUM OF 7' ABOVE GROUND.

SIZE	BORDER WIDTH	MARGIN WIDTH	LETTER SIZE					CORNER RADIUS
			LINE 1	LINE 2*	LINE 3	LINE 4	LINE 5, 6, & 7*	
48"x60"	1 1/4"	3/4"	4E	4D	6E	4D		3"
42"x26"	OVERLAY						3D	1 1/2"
* CONDENSED SPACING IF NECESSARY								

SIGN SP-4

NOTES: SIGN SP-4

1. LETTERS - 6" SERIES C.
2. LETTERS AND BORDER MUST BE BLACK ON REFLECTORIZED WHITE BACKGROUND.
3. BOLT HOLES MUST BE 3/8" DIAMETER.
4. BASE MATERIAL MUST BE ALUMINUM (MINIMUM 0.06").
5. SIGNS MUST BE PLACED AT RAMP ENTRANCES IN ADDITION TO SIGNS POSTED IN ACCORDANCE WITH REVISED STANDARD PLAN RSP T14.

SPECIAL SIGN FOR ENTRANCE RAMP CLOSURES

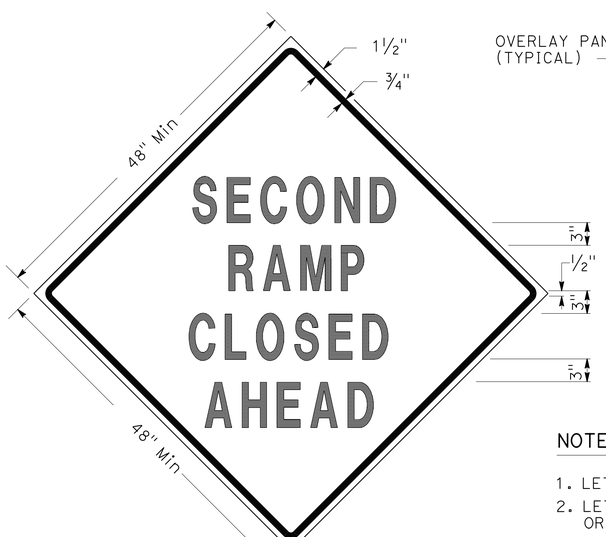

SIGN SP-3

SIGN SP-5

NOTES: SIGNS SP-3 & SP-5

1. LETTERS - 6" SERIES D.
2. LETTERS AND BORDER MUST BE BLACK ON REFLECTORIZED ORANGE BACKGROUND.
3. BOLT HOLES MUST BE 3/8" DIAMETER.
4. BASE MATERIAL MUST BE ALUMINUM (MINIMUM 0.06").
5. SIGNS MUST BE MOUNTED WITH BOTTOMS OF SIGNS A MINIMUM OF 7' ABOVE GROUND.
6. SIGN SP-5 MUST BE USED IF THE OFF-RAMP TO BE CLOSED FOLLOWS A FREEWAY OFF-CONNECTOR.

SPECIAL SIGNS FOR EXIT RAMP CLOSURES

TRAFFIC HANDLING DETAILS
TRAFFIC CONTROL SYSTEM FOR RAMP CLOSURES, DETOUR SIGNS, AND MISCELLANEOUS DETAILS
SHEET 1 OF 2

NO SCALE

THD-1

STATE OF CALIFORNIA - DEPARTMENT OF TRANSPORTATION
Caltrans DTM

FUNCTIONAL SUPERVISOR	CALCULATED-DESIGNED BY	CHECKED BY	REVISED BY	DATE REVISED
XXXXXX	ALBERT K YU	JOCELYN C CHIANG	JC	2/14

LAST REVISION 00-00-00 | DATE PLOTTED => 28-AUG-2015 | TIME PLOTTED => 14:13

Dist	COUNTY	ROUTE	POST MILES TOTAL PROJECT	SHEET No.	TOTAL SHEETS
07	LA	210	R18.8/R24.9	28	95

Ali Bamshad 03-03-15
REGISTERED CIVIL ENGINEER DATE

8-10-15
PLANS APPROVAL DATE

REGISTERED PROFESSIONAL ENGINEER ALI R. BAMSHAD No. C48134 Exp. 6-30-16 CIVIL STATE OF CALIFORNIA

THE STATE OF CALIFORNIA OR ITS OFFICERS OR AGENTS SHALL NOT BE RESPONSIBLE FOR THE ACCURACY OR COMPLETENESS OF SCANNED COPIES OF THIS PLAN SHEET.

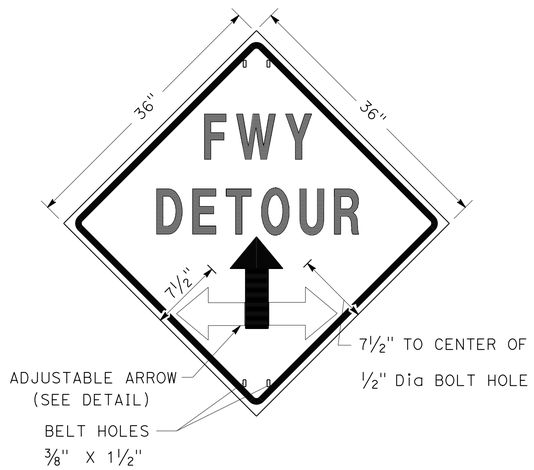

SIGN SP-2

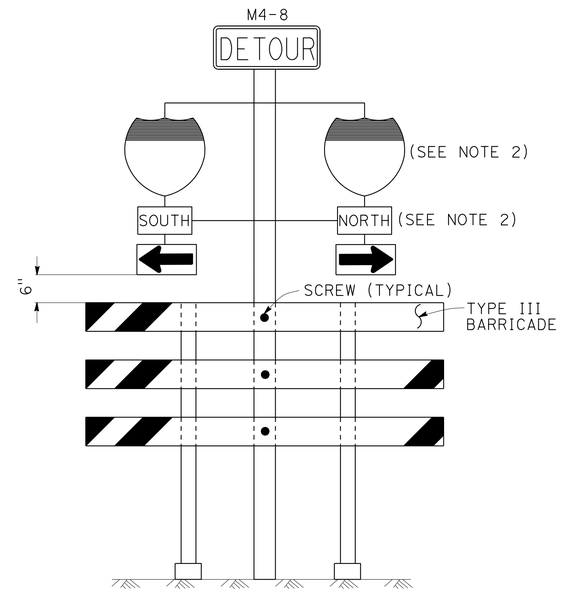

SIGN SP-6 (SEE NOTE 1)

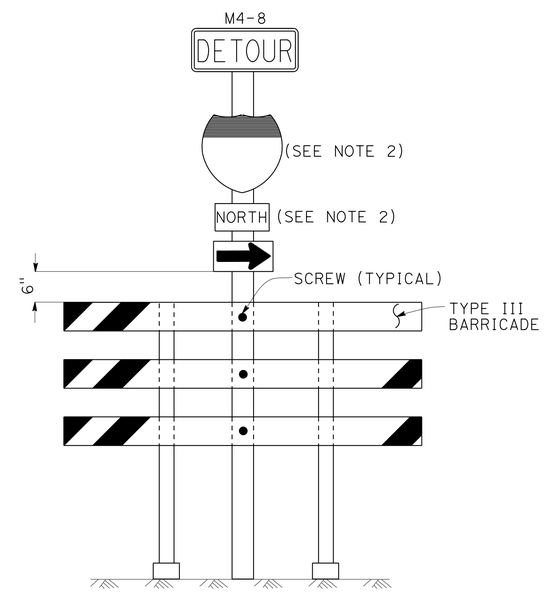

SIGN SP-7 (SEE NOTE 1)

NOTES: SIGN SP-2

1. LETTERS - 6" SERIES E.
2. LETTERS, BORDER AND ARROW - BLACK ON RETROREFLECTORIZED ORANGE BACKGROUND.
3. BASE MATERIAL FOR SIGNS AND ARROWS MUST BE ALUMINUM (MINIMUM 0.06").
4. BELTS (LUGGAGE STRAPS) MUST BE 1" WIDE BY 48" LONG, MADE OF COTTON OR POLYPROPYLENE WEB MATERIAL.
5. SIGNS MUST BE MOUNTED WITH BOTTOMS OF SIGNS A MINIMUM OF 7' ABOVE GROUND EXCEPT AS OTHERWISE SHOWN ON OTHER TRAFFIC HANDLING DETAILS PLANS.

NOTES: SIGNS SP-6 & SP-7

1. IN LIEU OF PLACING SIGNS ON TYPE III BARRICADES, SIGNS, INCLUDING POSTS, MAY BE PLACED INTO THE GROUND OR FASTENED ONTO ELECTROLIERS.
2. USE APPROPRIATE ROUTE MARKER [G26-2(CA), G27-2(CA), G28-2(CA)] AND CARDINAL DIRECTION [NORTH (M3-1), SOUTH (M3-3), EAST (M3-2), WEST (M3-4)].

SPECIAL PORTABLE FREEWAY DETOUR SIGNS

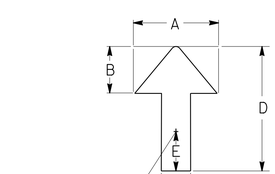

DIMENSIONS				
A	B	C	D	E
6"	3"	2"	8"	1"

ADJUSTABLE ARROW DETAIL

ABBREVIATION

(CA) CALIFORNIA CODE

TRAFFIC HANDLING DETAILS

TRAFFIC CONTROL SYSTEM FOR RAMP CLOSURES, DETOUR SIGNS, AND MISCELLANEOUS DETAILS

SHEET 2 OF 2

NO SCALE

THD-2

STATE OF CALIFORNIA - DEPARTMENT OF TRANSPORTATION
Caltrans® DTM

FUNCTIONAL SUPERVISOR: XXXXXX
CALCULATED-DESIGNED BY: ALBERT K YU
CHECKED BY: JOCELYN C CHIANG
REVISED BY: JC
DATE REVISED: 2/14

LAST REVISION: DATE PLOTTED => 28-AUG-2015 TIME PLOTTED => 14:13
00-00-00

Dist	COUNTY	ROUTE	POST MILES TOTAL PROJECT	SHEET No.	TOTAL SHEETS
07	LA	210	R18.8/R24.9	29	95

REGISTERED CIVIL ENGINEER 03-03-15 DATE

8-10-15
PLANS APPROVAL DATE

REGISTERED PROFESSIONAL ENGINEER ALI R. BAMSHAD No. C48134 Exp. 6-30-16 CIVIL STATE OF CALIFORNIA

THE STATE OF CALIFORNIA OR ITS OFFICERS OR AGENTS SHALL NOT BE RESPONSIBLE FOR THE ACCURACY OR COMPLETENESS OF SCANNED COPIES OF THIS PLAN SHEET.

LEGEND

- SIGN SP-2
- AND/OR — DESIGNATED DETOUR ROUTE
- DETOUR DIRECTION
- CONTROLLED INTERSECTION

NOTES:

1. SP-2 SIGNS MAY BE STRAPPED ON EXISTING ELECTROLIER, SIGNAL POST OR SIGN POST.
2. SP-2 SIGNS MUST NOT BE INSTALLED ON BARRICADES EXCEPT AS OTHERWISE SHOWN.
3. SIGN LOCATIONS ARE APPROXIMATE. EXACT LOCATIONS WILL BE DETERMINED BY THE ENGINEER.
4. SP-2 SIGNS MUST BE POSTED AT EACH CONTROLLED INTERSECTION (EXCEPT AT COMMERCIAL PROPERTY, RESIDENTIAL COMPLEX OR T-INTERSECTION FROM ONE-WAY STREET) ALONG THE DESIGNATED DETOUR ROUTE.
5. UNLESS OTHERWISE SHOWN ON OTHER THD PLANS, WHEN CONTROLLED INTERSECTIONS ALONG THE DESIGNATED DETOUR ROUTE ARE CLOSELY SPACED, PLACE SP-2 SIGNS AT CONTROLLED INTERSECTIONS AT A DISTANCE NOT TO EXCEED 1/4 MILE FROM THE PRECEDING DETOUR SIGN.
6. EXCEPT AS OTHERWISE SHOWN ON OTHER PLANS OR SPECIFIED IN THE SPECIAL PROVISIONS, SP-2 SIGNS MUST BE PLACED AS SHOWN ON THIS PLAN.

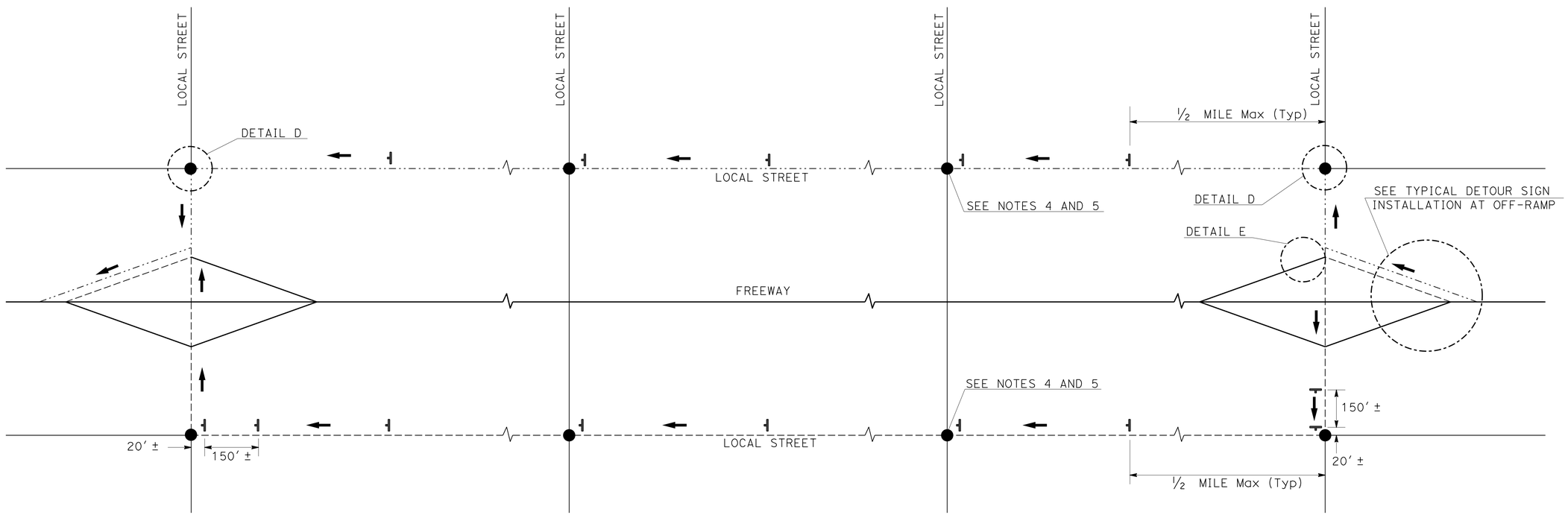

TYPICAL DETOUR SIGN INSTALLATION ALONG DESIGNATED DETOUR ROUTE

TRAFFIC HANDLING DETAILS

TRAFFIC CONTROL SYSTEM FOR DETOUR SIGN INSTALLATION ALONG DESIGNATED DETOUR ROUTE

SHEET 1 OF 3

NO SCALE

THD-3

STATE OF CALIFORNIA - DEPARTMENT OF TRANSPORTATION
Caltrans DTM

FUNCTIONAL SUPERVISOR: XXXXXX
CALCULATED-DESIGNED BY: ALBERT K YU
CHECKED BY: JOCELYN C CHIANG
REVISED BY: JC
DATE REVISED: 2/14

LAST REVISION 00-00-00
DATE PLOTTED => 28-AUG-2015
TIME PLOTTED => 14:13

Dist	COUNTY	ROUTE	POST MILES TOTAL PROJECT	SHEET No.	TOTAL SHEETS
07	LA	210	R18.8/R24.9	30	95

REGISTERED CIVIL ENGINEER 03-03-15 DATE

8-10-15
PLANS APPROVAL DATE

ALI R. BAMSHAD No. C48134 Exp. 6-30-16 CIVIL — REGISTERED PROFESSIONAL ENGINEER — STATE OF CALIFORNIA

THE STATE OF CALIFORNIA OR ITS OFFICERS OR AGENTS SHALL NOT BE RESPONSIBLE FOR THE ACCURACY OR COMPLETENESS OF SCANNED COPIES OF THIS PLAN SHEET.

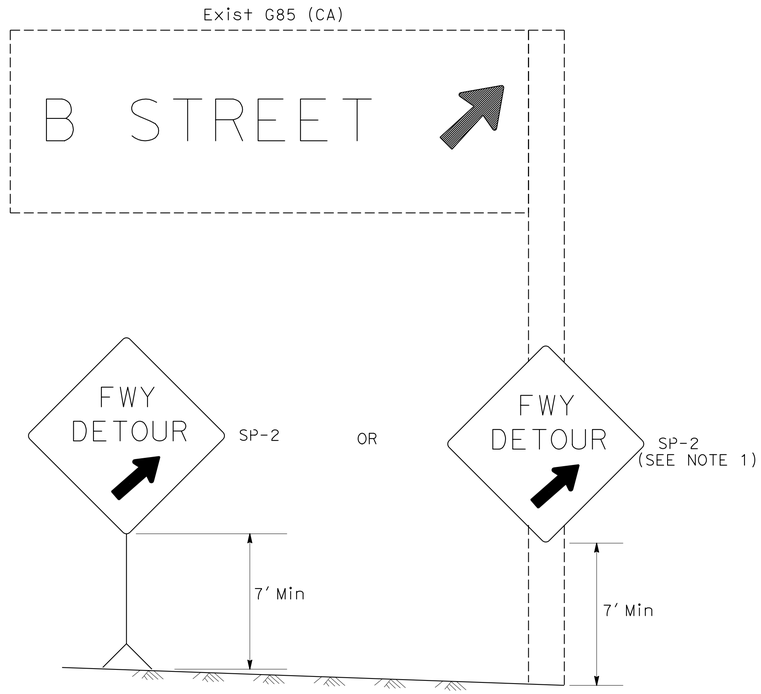

DETAIL A (SEE NOTE 3)

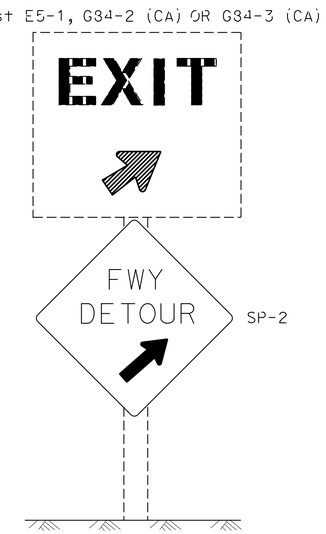

DETAIL B (SEE NOTE 3)

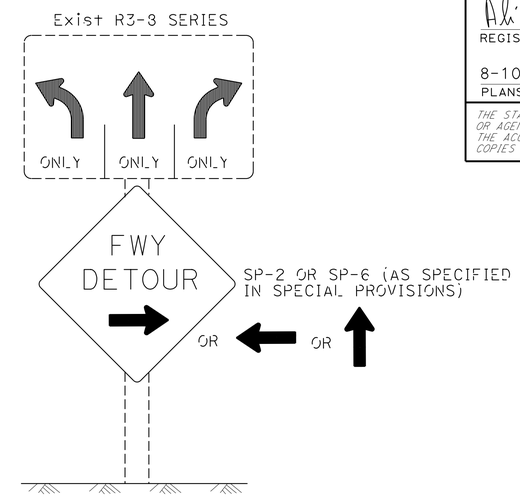

DETAIL C (SEE NOTES 4, 5, AND 6)

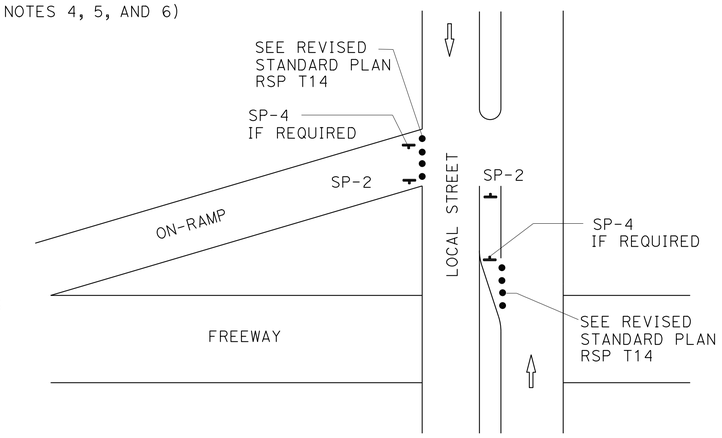

DETAIL E

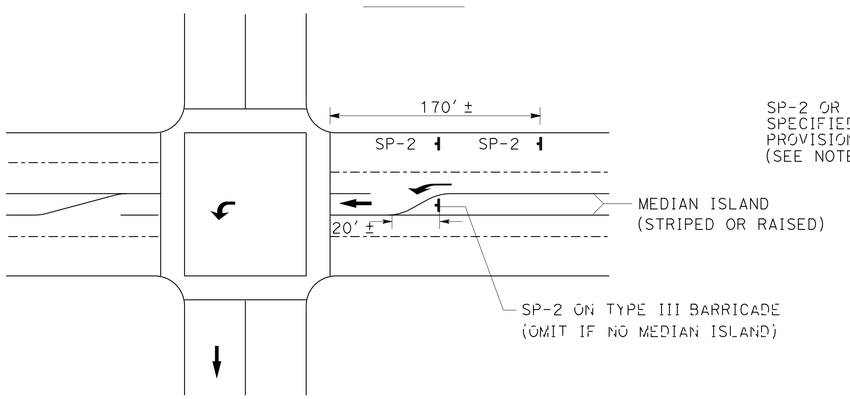

DETAIL D

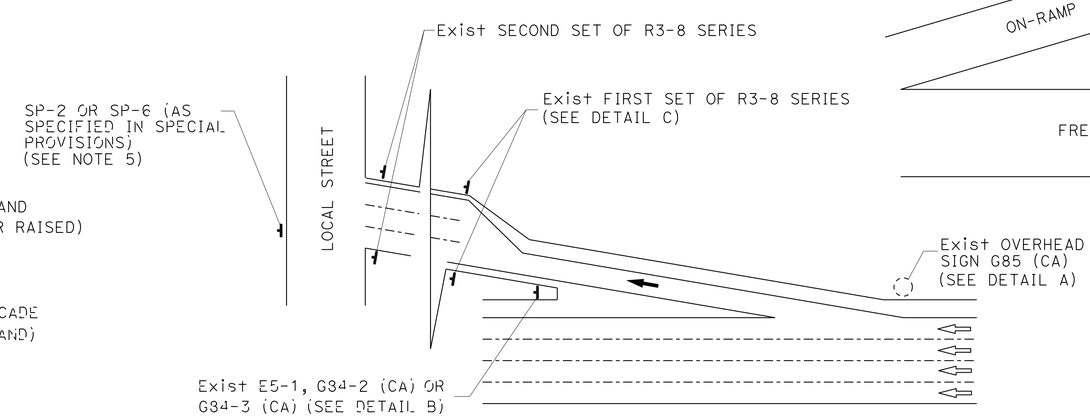

TYPICAL DETOUR SIGN INSTALLATION AT OFF-RAMP

LEGEND

- • TRAFFIC CONE
- TEMPORARY TRAFFIC CONTROL SIGN
- → DETOUR DIRECTION
- ◌ EXISTING OVERHEAD SIGN

NOTES: SIGN SP-2

1. SP-2 SIGNS MAY BE STRAPPED ON EXISTING ELECTROLIER, SIGNAL POST OR SIGN POST.
2. SP-2 SIGNS MUST NOT BE INSTALLED ON BARRICADES EXCEPT AS OTHERWISE SHOWN.
3. OMIT DETAILS A AND B FOR FULL FREEWAY CLOSURES.
4. SEE TRAFFIC HANDLING DETAILS-TRAFFIC CONTROL SYSTEM FOR RAMP CLOSURES, DETOUR SIGNS, AND MISCELLANEOUS DETAILS PLAN SHEET 2 OF 2 FOR SP-6 SIGN DETAILS.
5. IF R3-8 SERIES SIGNS ARE NOT PRESENT AT THE OFF-RAMP, SP-2 OR SP-6 SIGNS MUST BE FASTENED ONTO EXISTING ELECTROLIER, SIGNAL POST OR SIGN POST.
6. EXCEPT FOR DETAILS A & B, OMIT SP-2 SIGNS IF RAMP HAS MANDATORY SINGLE MOVE.

SIGN CODE LEGEND

XXYY-Y: FEDERAL SIGN CODE PER MANUAL ON UNIFORM TRAFFIC CONTROL DEVICES (MUTCD)

XXYY-Y (CA): CALIFORNIA SIGN CODE PER CALIFORNIA MUTCD

TRAFFIC HANDLING DETAILS
TRAFFIC CONTROL SYSTEM FOR DETOUR SIGN INSTALLATION ALONG DESIGNATED DETOUR ROUTE
SHEET 2 OF 3

NO SCALE

THD-4

STATE OF CALIFORNIA - DEPARTMENT OF TRANSPORTATION
Caltrans® DTM

FUNCTIONAL SUPERVISOR: XXXXXX
CALCULATED-DESIGNED BY: ALBERT K YU
CHECKED BY: JOCELYN C CHIANG
REVISED BY: JC
DATE REVISED: 2/14

LAST REVISION 00-00-00 DATE PLOTTED => 28-AUG-2015 TIME PLOTTED => 14:13

Dist	COUNTY	ROUTE	POST MILES TOTAL PROJECT	SHEET No.	TOTAL SHEETS
07	LA	210	R18.8/R24.9	31	95

Ali Bamshad 03-03-15
REGISTERED CIVIL ENGINEER DATE

8-10-15
PLANS APPROVAL DATE

REGISTERED PROFESSIONAL ENGINEER ALI R. BAMSHAD No. C48134 Exp. 6-30-16 CIVIL STATE OF CALIFORNIA

THE STATE OF CALIFORNIA OR ITS OFFICERS OR AGENTS SHALL NOT BE RESPONSIBLE FOR THE ACCURACY OR COMPLETENESS OF SCANNED COPIES OF THIS PLAN SHEET.

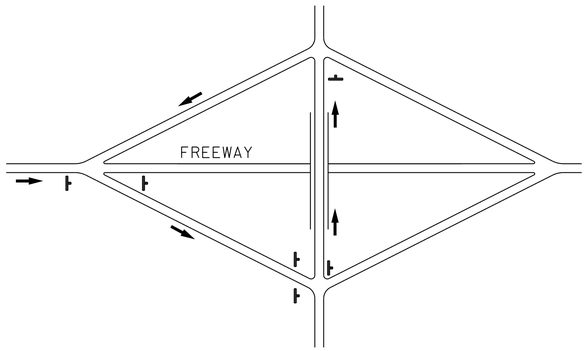

TYPE I

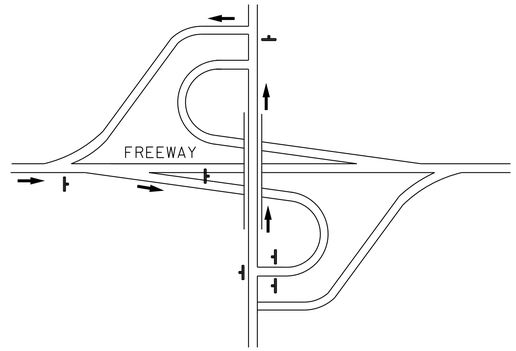

TYPE II

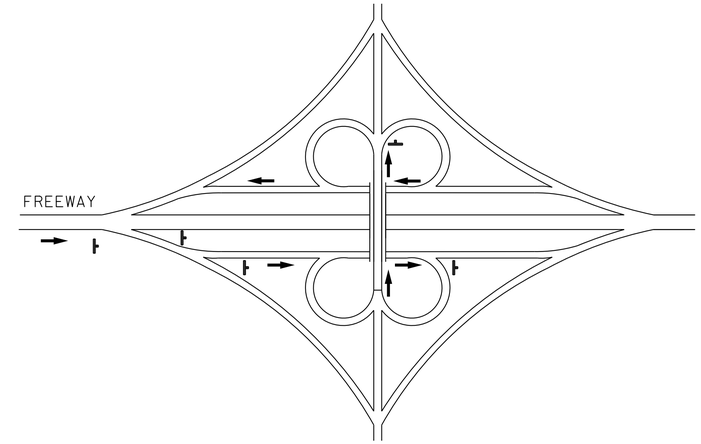

TYPE III

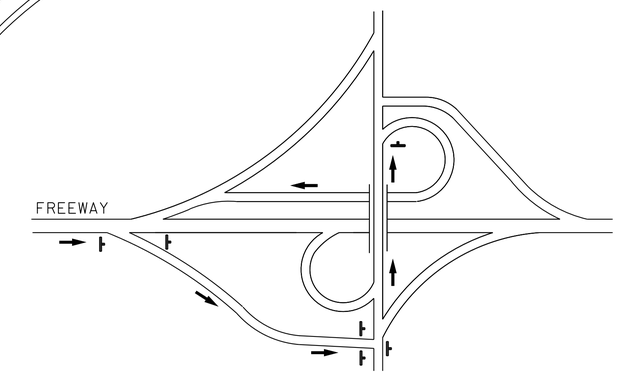

TYPE IV

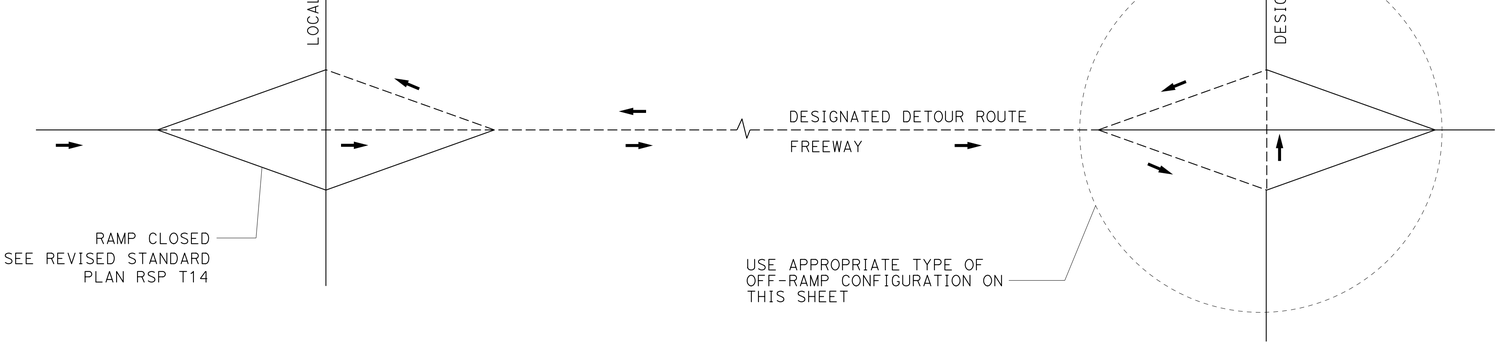

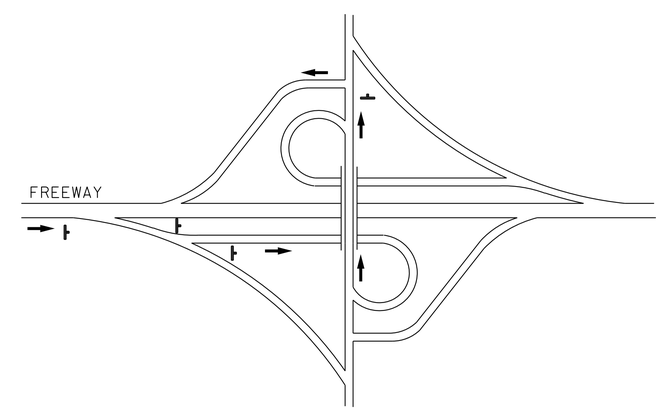

TYPE V

TYPE OF OFF-RAMP CONFIGURATION	MINIMUM No. OF SP-2
TYPE I	6
TYPE II	6
TYPE III	5
TYPE IV	6
TYPE V	4

TYPICAL DETOUR SIGN INSTALLATION FOR OFF-RAMP CLOSURE

NOTES:

1. FOR RAMP CONFIGURATIONS NOT SHOWN, THE EXACT LOCATIONS AND MINIMUM NUMBER OF SP-2 SIGNS MUST BE DETERMINED BY THE ENGINEER.
2. SEE TRAFFIC HANDLING DETAILS-TRAFFIC CONTROL SYSTEM FOR RAMP CLOSURES, DETOUR SIGNS, AND MISCELLANEOUS DETAILS PLAN SHEET 2 OF 2 FOR SP-2 SIGN DETAILS.

LEGEND

- SIGN SP-2
- DETOUR DIRECTION
- ----- DESIGNATED DETOUR ROUTE

TRAFFIC HANDLING DETAILS
TRAFFIC CONTROL SYSTEM FOR DETOUR SIGN INSTALLATION ALONG DESIGNATED DETOUR ROUTE
SHEET 3 OF 3

NO SCALE

THD-5

STATE OF CALIFORNIA - DEPARTMENT OF TRANSPORTATION
Caltrans DTM

FUNCTIONAL SUPERVISOR: XXXXXX
CALCULATED-DESIGNED BY: ALBERT K YU
CHECKED BY: JOCELYN C CHIANG
REVISED BY: JC
DATE REVISED: 2/14

LAST REVISION 00-00-00
DATE PLOTTED => 28-AUG-2015
TIME PLOTTED => 14:13

Dist	COUNTY	ROUTE	POST MILES TOTAL PROJECT	SHEET No.	TOTAL SHEETS
07	LA	210	R18.8/R24.9	32	95

REGISTERED CIVIL ENGINEER 5/13/15 DATE

8-101-15
PLANS APPROVAL DATE

REGISTERED PROFESSIONAL ENGINEER
HEATHER LIANG
No. C69374
Exp. 06/30/16
CIVIL
STATE OF CALIFORNIA

THE STATE OF CALIFORNIA OR ITS OFFICERS OR AGENTS SHALL NOT BE RESPONSIBLE FOR THE ACCURACY OR COMPLETENESS OF SCANNED COPIES OF THIS PLAN SHEET.

CHANGEABLE MESSAGE SIGN QUANTITIES

SHEET No.	SIGN No.	LOCATION	SIGN CODE	X	h	ELEVATION		CIDH CONCRETE PILE (SIGN FOUNDATION)	SIGN STRUCTURE (TRUSS) (TWO SIDES WALKWAY)	
						Elev. A	Elev. B	60" Dia	FURNISH	INSTALL
				LF	LF	ft	ft	LF	LB	LB
E-25	FT207	FWBT, STA 1092+00	UNBALANCED BUTTERFLY	25.5	16	100	104.0	22	16,312	16,312
						TOTAL		22	16,312	16,312

STATE OF CALIFORNIA - DEPARTMENT OF TRANSPORTATION
Caltrans® OFFICE OF ITS

FUNCTIONAL SUPERVISOR: JACQUELINE TAN
CALCULATED-DESIGNED BY: HEATHER LIANG
CHECKED BY: PETER LIN
REVISED BY
DATE REVISED

SIGN QUANTITIES

SQ-1

LAST REVISION 00-00-00
DATE PLOTTED => 28-AUG-2015
TIME PLOTTED => 14:13

Dist	COUNTY	ROUTE	POST MILES TOTAL PROJECT	SHEET No.	TOTAL SHEETS
07	LA	210	R18.8/R24.9	33	95

Heather Liang 5/13/15
REGISTERED CIVIL ENGINEER DATE

8-10-15
PLANS APPROVAL DATE

REGISTERED PROFESSIONAL ENGINEER
HEATHER LIANG
No. C69374
Exp. 06/30/16
CIVIL
STATE OF CALIFORNIA

THE STATE OF CALIFORNIA OR ITS OFFICERS OR AGENTS SHALL NOT BE RESPONSIBLE FOR THE ACCURACY OR COMPLETENESS OF SCANNED COPIES OF THIS PLAN SHEET.

TEMPORARY WATER POLLUTION CONTROL QUANTITIES

DESCRIPTION	UNIT	QUANTITY
TEMPORARY COVER	SQYD	300
TEMPORARY DRAINAGE INLET PROTECTION	EA	200
TEMPORARY SILT FENCE	LF	4000
TEMPORARY CONSTRUCTION ENTERANCE	EA	1

SUMMARY OF QUANTITIES

Q-1

REVISED BY
DATE REVISED
HEATHER LIANG
PETER LIN
CALCULATED-DESIGNED BY
CHECKED BY
FUNCTIONAL SUPERVISOR
JACQUELINE TAN
STATE OF CALIFORNIA - DEPARTMENT OF TRANSPORTATION
Caltrans
OFFICE OF ITS

LAST REVISION 00-00-00
DATE PLOTTED => 28-AUG-2015
TIME PLOTTED => 14:13

Dist	COUNTY	ROUTE	POST MILES TOTAL PROJECT	SHEET No.	TOTAL SHEETS
07	LA	210	R18.8/R24.9	34	95

REGISTERED ELECTRICAL ENGINEER 5/13/15 DATE

8-10-15
PLANS APPROVAL DATE

REGISTERED PROFESSIONAL ENGINEER JACQUELINE C. TAN No. E015611 Exp. 12/31/15 ELECTRICAL STATE OF CALIFORNIA

THE STATE OF CALIFORNIA OR ITS OFFICERS OR AGENTS SHALL NOT BE RESPONSIBLE FOR THE ACCURACY OR COMPLETENESS OF SCANNED COPIES OF THIS PLAN SHEET.

NOTES: (FOR SHEETS E-2 TO E-43)

1. EXISTING IRRIGATION SYSTEMS ARE NOT SHOWN FOR CLARITY.
2. FIBER OPTICS CONDUITS MUST HAVE A TRACER WIRE, EXCEPT IN TYPE 1 CONDUITS. SEE E-32 FOR DETAILS.
3. COMMUNICATION CONDUIT MUST BE CENTERED IN THE PAVED SHOULDER.
4. INSTALL ALL CABLES IN LOWER SIZE 4" CONDUIT. UPPER SIZE 4" CONDUIT, PT.

ABBREVIATIONS: (FOR SHEETS E-2 TO E-43)

#	NUMBER
12SMFO	12 SINGLEMODE FIBER OPTIC CABLE
48SMFO	48 SINGLEMODE FIBER OPTIC CABLE
72SMFO	48 SINGLEMODE FIBER OPTIC CABLE
AC	ALTERNATING CURRENT
BNC	BAYONET NAVY CONNECTOR
CAT-5E	CATEGORY 5 ENHANCED CABLE
CN	CABLE NODE
DB-9	9 PIN D-SUBMINIATURE CONNECTOR
DN	DATA NODE
FDU	FIBER DISTRIBUTION UNIT
FOSE	FIBER OPTIC SPLICE ENCLOSURE
HT	HIGH TEMPERATURE
IP	INTERNET PROTOCOL
PDA	POWER DISTRIBUTION ASSEMBLY
RG-6A/U	COAXIAL CABLE
RJ-45	8 PIN 8 CONDUCTOR CONNECTOR
RMS	RAMP METERING SYSTEM
RS 232	SERIAL CABLE
RX	RECEIVER
SCE	SOUTHERN CALIFORNIA EDISON
SFP	SMALL FORM-FACTOR PLUGGABLE
SMFO	SINGLEMODE FIBER OPTIC
TR	TAMPER RESISTANT
TS	TEMPERATURE SENSOR
TV	TELEVISION
TX	TRANSMITTER
TIA-232	TELECOMMUNICATION INDUSTRIES ASSOCIATION STANDARD RS-232
TIA-422	TELECOMMUNICATION INDUSTRIES ASSOCIATION STANDARD RS-422
VN	VIDEO NODE

LEGEND: (FOR SHEETS E-2 TO E-43)

V S	SPLICE VAULT WITH SPLICE ENCLOSURE(S)
V S	EXISTING SPLICE VAULT
CCTV	CCTV CAMERA CONTROLLER CABINET
6	WIRE SIZE, IF NOT INDICATED MUST BE #12 AWG
F	FAN
L	INDICATOR LAMP
	THERMOSTATIC CONTROL
THERMO	ADJUSTABLE CALIBRATED THERMOSTAT
R	DUPLEX RECEPTACLE
	DELIMITER FOR PROJECT NOTES

EXAMPLE: 1 FO 2

EQUIPMENT IDENTIFICATION

FT188
- POST MILE ACCURATE TO 1/10 MILE (WITHOUT DECIMAL)
- FREEWAY ROUTE

COMMUNICATION SYSTEM

NO SCALE

(LEGEND, NOTES AND ABBREVIATIONS)

E-1

REVISED BY | DATE REVISED
HIEU LUU | JACQUELINE C. TAN
CALCULATED-DESIGNED BY | CHECKED BY
FUNCTIONAL SUPERVISOR
JACQUELINE C. TAN

STATE OF CALIFORNIA - DEPARTMENT OF TRANSPORTATION
Caltrans OFFICE OF ITS

LAST REVISION 07-06-11 | DATE PLOTTED => 28-AUG-2015 | TIME PLOTTED => 14:13

Dist	COUNTY	ROUTE	POST MILES TOTAL PROJECT	SHEET No.	TOTAL SHEETS
07	LA	210	R18.8/R24.9	35	95

Jacqueline C Tan 5/13/15
REGISTERED ELECTRICAL ENGINEER DATE

8-10-15
PLANS APPROVAL DATE

REGISTERED PROFESSIONAL ENGINEER
JACQUELINE C. TAN
No. E015611
Exp. 12/31/15
ELECTRICAL
STATE OF CALIFORNIA

THE STATE OF CALIFORNIA OR ITS OFFICERS OR AGENTS SHALL NOT BE RESPONSIBLE FOR THE ACCURACY OR COMPLETENESS OF ELECTRONIC COPIES OF THIS PLAN SHEET.

NOTE:

FOR ACCURATE RIGHT OF WAY DATA, CONTACT RIGHT OF WAY ENGINEERING AT THE DISTRICT OFFICE.

LEGEND: (THIS SHEET ONLY)

1. INSTALL 2-48SMFO, 1-72SMFO AND 4 SIZE 1" INNERDUCTS IN 4"C. INSTALL 4"C, PT.
2. TRENCH AND INSTALL CONDUITS IN Exist PAVEMENT. SEE SHEET E-35 FOR DETAIL.
3. ATTACH TYPE 1 CONDUITS TO THE BRIDGE RAILING. SEE STRUCTURE PLAN FOR DETAIL.
4. INSTALL 1-48SMFO, 1 SIZE 1" INNERDUCTS IN 3"C.
5. INSTALL 1-72SMFO, 1-48SMFO CABLE, 2 SIZE 1" INNERDUCTS IN 3"C.
6. JACK CONDUIT UNDERNEATH THE ROADWAY. SEE SHEET E-36 FOR DETAIL.
7. INSTALL 2#4, 1#4(G) IN 3"C.
8. INSTALL MODEL 334 CONTROLLER CABINET ON NEW FOUNDATION. SEE SHEETS E-38 AND E-39 FOR CONTROLLER CABINET FOUNDATION AND CABINET WIRING DETAILS.
9. EXISTING 120/240V TYPE III-BF SERVICE EQUIPMENT ENCLOSURE WITH:
   - 1-100 A, 240 V, 2P, CB - MAIN
   - 1- 30 A, 240 V, 2P, CB - Ltg CIRCUIT #1
   - 1- 30 A, 240 V, 2P, CB - Ltg CIRCUIT #2
   - 1- 30 A, 240 V, 2P, CB - Ltg CIRCUIT #3
   - 1- 20 A, 240 V, 2P, CB - SOFFITS
   - 1- 15 A, 120 V, 1P, CB - PEC

   ADD
   - 1- 20 A, 240 V, 1P, CB - INTERNET PROTOCOL NODE

   CTID No.07-53-210-R-18.750
   ADDRESS: 1890 1/2 LA GRANADA Way
10. Exist 4"C, PT. ADD 1-72SMFO, 1-48SMFO CABLE, 2 SIZE 1" INNERDUCTS
11. Exist 3"C, 2#4, 4#6, 3#8. ADD 2#4, 1#4 (G).
12. INSTALL 1-48SMFO AND 1 SIZE 1" INNERDUCTS IN 3"C. INSTALL 3"C, PT.

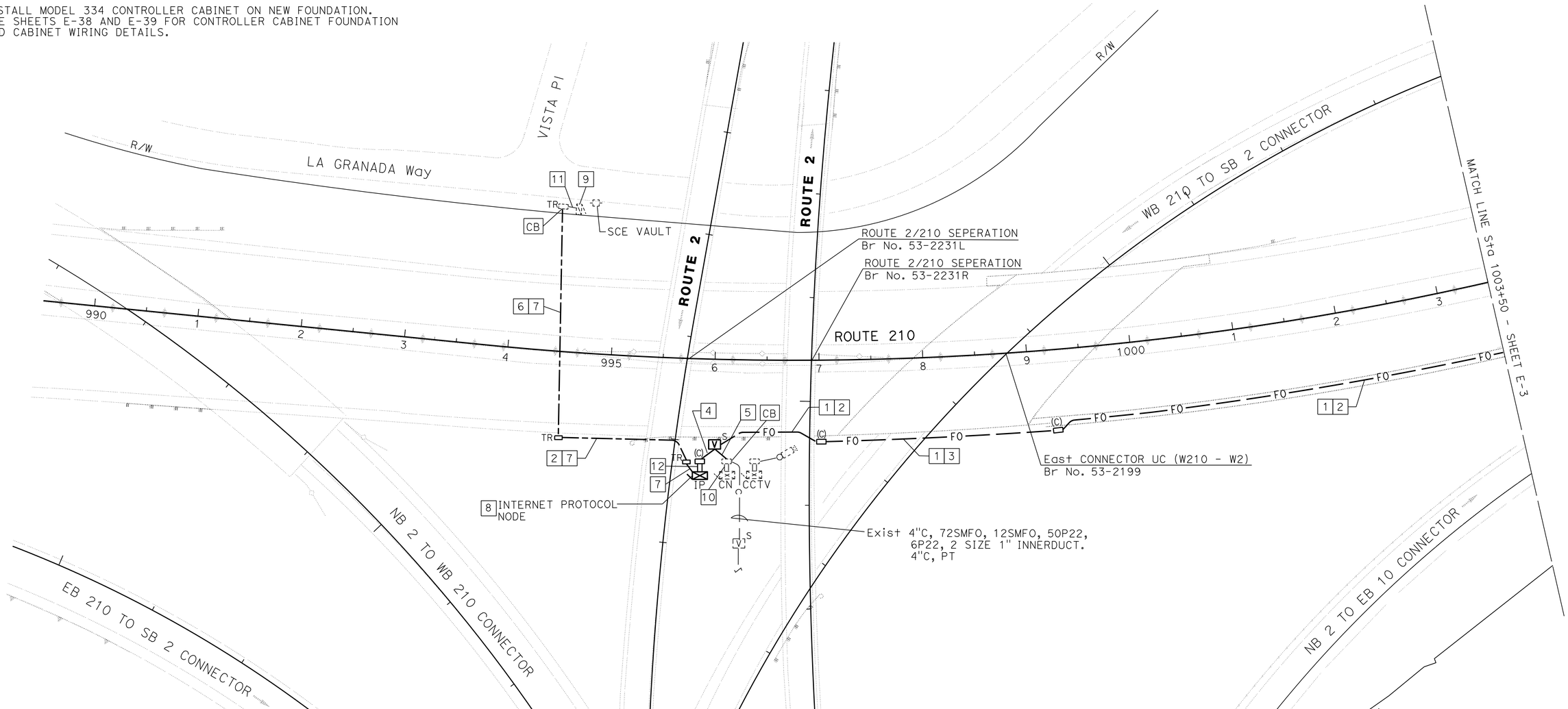

COMMUNICATION SYSTEM

SCALE: 1" = 50'

APPROVED FOR ELECTRICAL WORK ONLY

E-2

STATE OF CALIFORNIA - DEPARTMENT OF TRANSPORTATION
Caltrans **OFFICE OF ITS**

FUNCTIONAL SUPERVISOR: JACQUELINE C. TAN
CALCULATED-DESIGNED BY: HIEU LUU
CHECKED BY: JACQUELINE C. TAN
REVISED BY
DATE REVISED

LAST REVISION 00-00-00
DATE PLOTTED => 28-AUG-2015
TIME PLOTTED => 14:13

Dist	COUNTY	ROUTE	POST MILES TOTAL PROJECT	SHEET No.	TOTAL SHEETS
07	LA	210	R18.8/R24.9	36	95

Jacqueline C Tan 5/13/15
REGISTERED ELECTRICAL ENGINEER DATE

8-10-15
PLANS APPROVAL DATE

REGISTERED PROFESSIONAL ENGINEER JACQUELINE C. TAN No. E015611 Exp. 12/31/15 ELECTRICAL STATE OF CALIFORNIA

THE STATE OF CALIFORNIA OR ITS OFFICERS OR AGENTS SHALL NOT BE RESPONSIBLE FOR THE ACCURACY OR COMPLETENESS OF ELECTRONIC COPIES OF THIS PLAN SHEET.

NOTE:
FOR ACCURATE RIGHT OF WAY DATA, CONTACT RIGHT OF WAY ENGINEERING AT THE DISTRICT OFFICE.

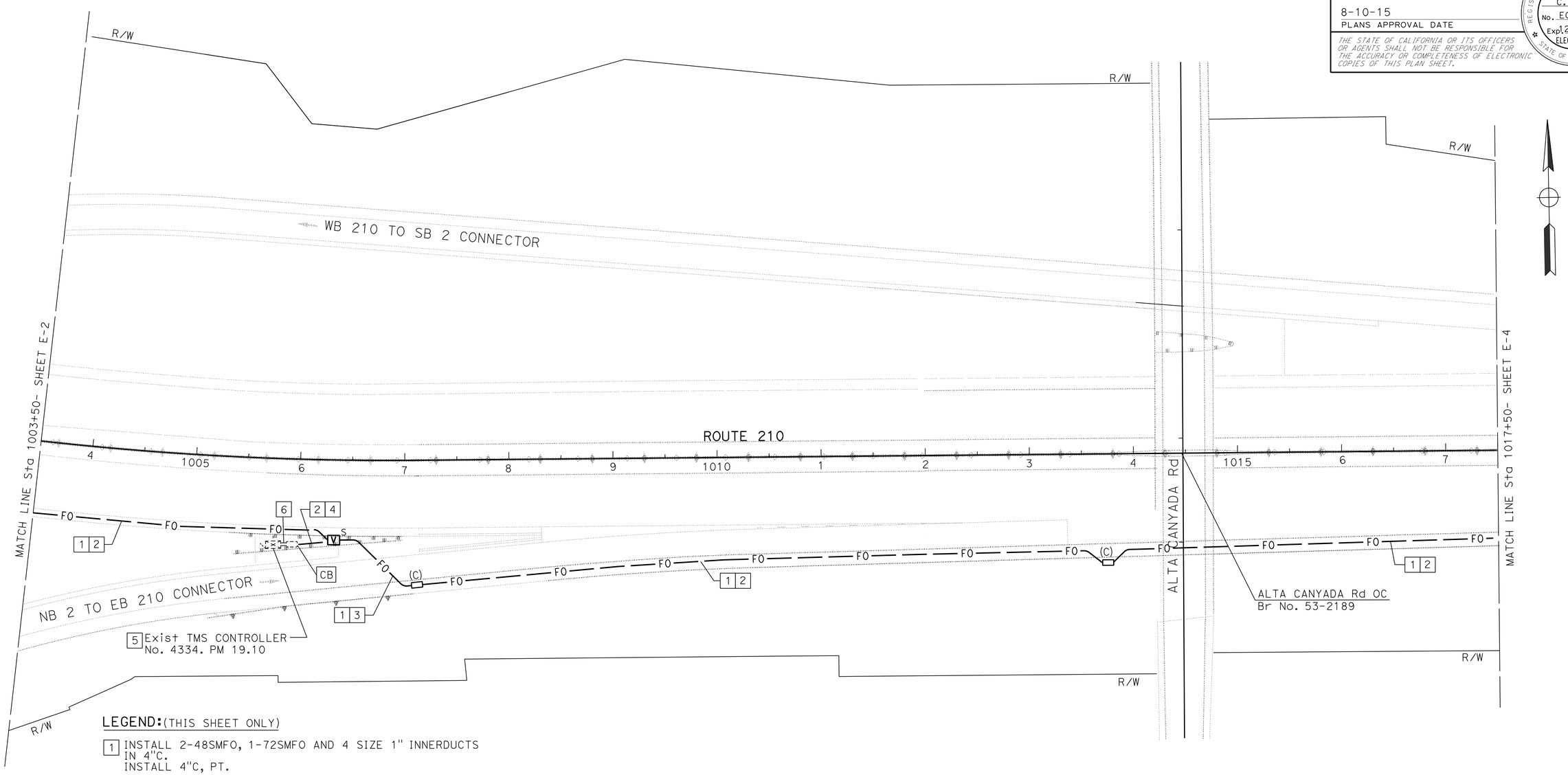

LEGEND:(THIS SHEET ONLY)

1. INSTALL 2-48SMFO, 1-72SMFO AND 4 SIZE 1" INNERDUCTS IN 4"C.
   INSTALL 4"C, PT.
2. TRENCH AND INSTALL CONDUITS IN Exist PAVEMENT. SEE SHEET E-35 FOR DETAIL.
3. JACK CONDUIT UNDERNEATH THE ROADWAY. SEE SHEET E-36 FOR DETAIL.
4. INSTALL 3"C, 1-12SMFO, 1 SIZE 1" INNERDUCT.
5. RS MODEL 170 CONTROLLER UNIT. INSTALL DEPARTMENT-FURNISHED MODEL 2070 CONTROLLER UNIT. INSTALL ETHERNET SWITCH TYPE 1 WITH 2 SFP MODULE INTERNET CARD & FDU AND EQUIPMENT PER DETAILS SHEET E-38.
6. Exist 3"C, PT. ADD 1-12SMFO.

COMMUNICATION SYSTEM

SCALE: 1" = 50'

APPROVED FOR ELECTRICAL WORK ONLY

E-3

REVISED BY | DATE REVISED
HIEU LUU | JACQUELINE C. TAN
CALCULATED-DESIGNED BY | CHECKED BY
FUNCTIONAL SUPERVISOR
JACQUELINE C. TAN

STATE OF CALIFORNIA - DEPARTMENT OF TRANSPORTATION
Caltrans **OFFICE OF ITS**

LAST REVISION 00-00-00 | DATE PLOTTED => 28-AUG-2015 | TIME PLOTTED => 14:13

Dist	COUNTY	ROUTE	POST MILES TOTAL PROJECT	SHEET No.	TOTAL SHEETS
07	LA	210	R18.8/R24.9	37	95

Jacqueline C Tan 5/13/15
REGISTERED ELECTRICAL ENGINEER DATE

8-10-15
PLANS APPROVAL DATE

REGISTERED PROFESSIONAL ENGINEER JACQUELINE C. TAN No. E015611 Exp. 12/31/15 ELECTRICAL STATE OF CALIFORNIA

THE STATE OF CALIFORNIA OR ITS OFFICERS OR AGENTS SHALL NOT BE RESPONSIBLE FOR THE ACCURACY OR COMPLETENESS OF ELECTRONIC COPIES OF THIS PLAN SHEET.

NOTE:
FOR ACCURATE RIGHT OF WAY DATA, CONTACT RIGHT OF WAY ENGINEERING AT THE DISTRICT OFFICE.

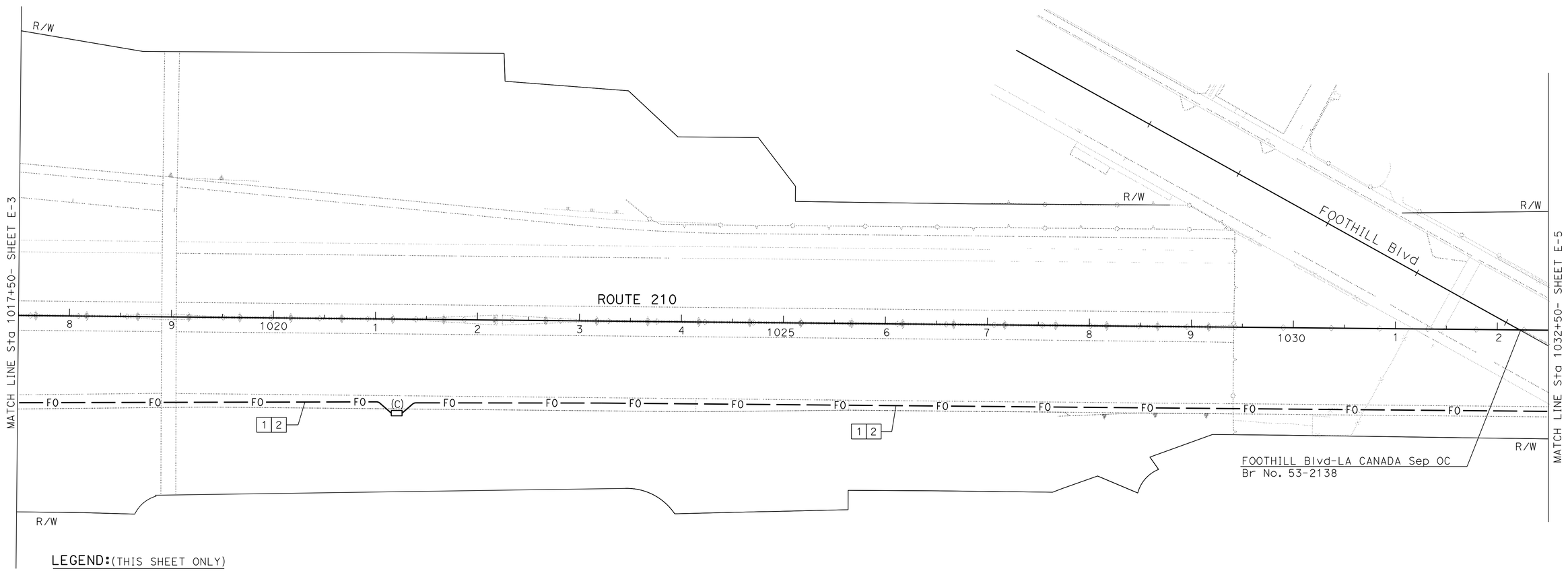

LEGEND:(THIS SHEET ONLY)

1 INSTALL 2-48SMFO, 1-72SMFO AND 4 SIZE 1" INNERDUCTS IN 4"C.
INSTALL 4"C, PT.

2 TRENCH AND INSTALL CONDUITS IN Exist PAVEMENT.
SEE SHEET E-35 FOR DETAIL.

COMMUNICATION SYSTEM

SCALE: 1" = 50'

APPROVED FOR ELECTRICAL WORK ONLY

E-4

STATE OF CALIFORNIA - DEPARTMENT OF TRANSPORTATION
Caltrans OFFICE OF ITS

FUNCTIONAL SUPERVISOR: JACQUELINE C. TAN
CALCULATED-DESIGNED BY: HIEU LUU
CHECKED BY: JACQUELINE C. TAN
REVISED BY
DATE REVISED

LAST REVISION 00-00-00 | DATE PLOTTED => 28-AUG-2015 | TIME PLOTTED => 14:13

Dist	COUNTY	ROUTE	POST MILES TOTAL PROJECT	SHEET No.	TOTAL SHEETS
07	LA	210	R18.8/R24.9	38	95

Jacqueline C Tan 5/13/15
REGISTERED ELECTRICAL ENGINEER DATE

8-10-15
PLANS APPROVAL DATE

REGISTERED PROFESSIONAL ENGINEER JACQUELINE C. TAN No. E015611 Exp. 12/31/15 ELECTRICAL STATE OF CALIFORNIA

THE STATE OF CALIFORNIA OR ITS OFFICERS OR AGENTS SHALL NOT BE RESPONSIBLE FOR THE ACCURACY OR COMPLETENESS OF ELECTRONIC COPIES OF THIS PLAN SHEET.

NOTE:
FOR ACCURATE RIGHT OF WAY DATA, CONTACT RIGHT OF WAY ENGINEERING AT THE DISTRICT OFFICE.

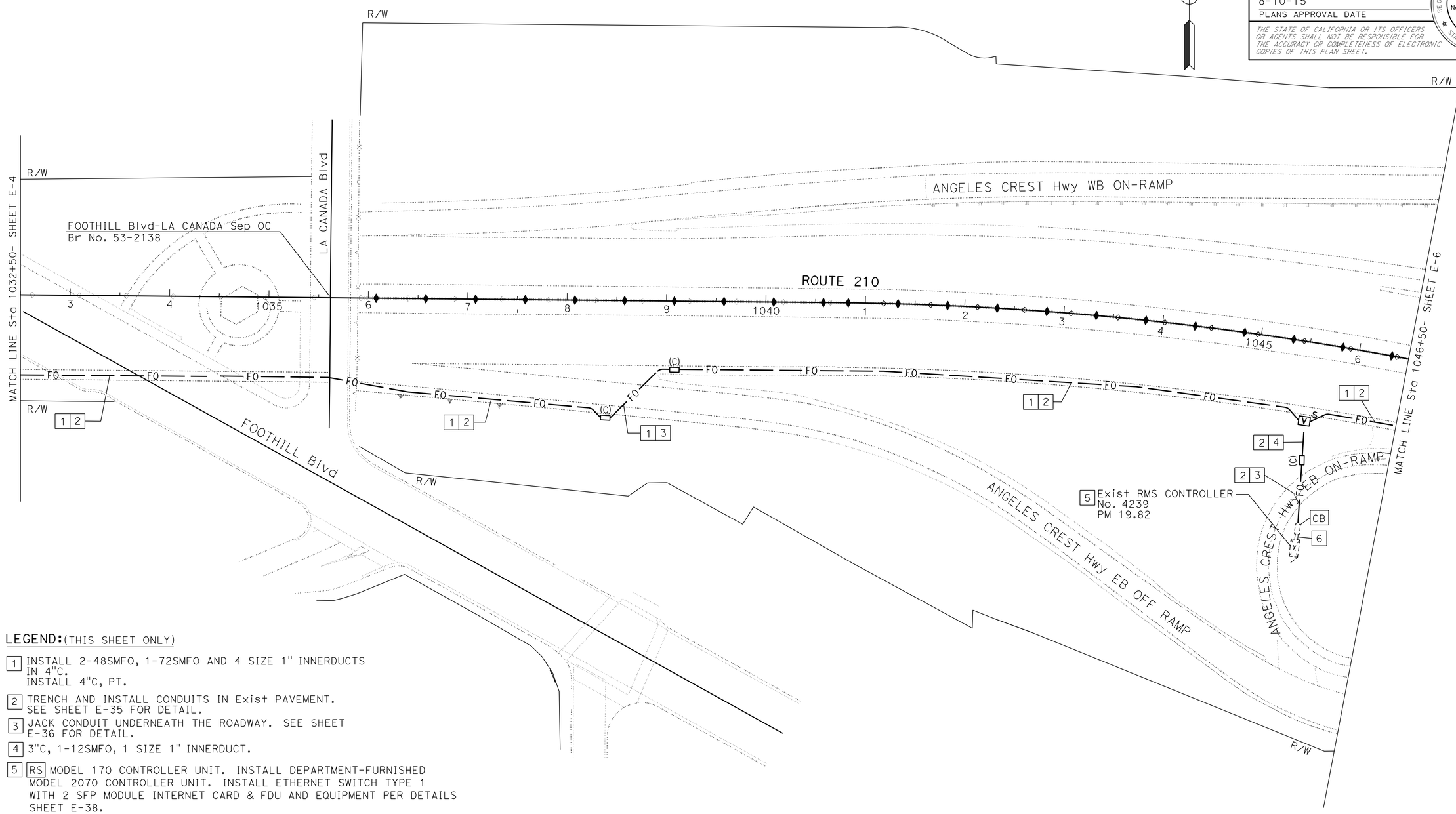

LEGEND:(THIS SHEET ONLY)

1. INSTALL 2-48SMFO, 1-72SMFO AND 4 SIZE 1" INNERDUCTS IN 4"C.
   INSTALL 4"C, PT.
2. TRENCH AND INSTALL CONDUITS IN Exist PAVEMENT. SEE SHEET E-35 FOR DETAIL.
3. JACK CONDUIT UNDERNEATH THE ROADWAY. SEE SHEET E-36 FOR DETAIL.
4. 3"C, 1-12SMFO, 1 SIZE 1" INNERDUCT.
5. RS MODEL 170 CONTROLLER UNIT. INSTALL DEPARTMENT-FURNISHED MODEL 2070 CONTROLLER UNIT. INSTALL ETHERNET SWITCH TYPE 1 WITH 2 SFP MODULE INTERNET CARD & FDU AND EQUIPMENT PER DETAILS SHEET E-38.
6. Exist 3"C, PT. ADD 1-12SMFO.

COMMUNICATION SYSTEM

SCALE: 1 " = 50'

APPROVED FOR ELECTRICAL WORK ONLY

E-5

STATE OF CALIFORNIA - DEPARTMENT OF TRANSPORTATION
Caltrans **OFFICE OF ITS**

FUNCTIONAL SUPERVISOR: JACQUELINE C. TAN
CALCULATED-DESIGNED BY: HIEU LUU
CHECKED BY: JACQUELINE C. TAN
REVISED BY
DATE REVISED

LAST REVISION 00-00-00
DATE PLOTTED => 28-AUG-2015
TIME PLOTTED => 14:13

Dist	COUNTY	ROUTE	POST MILES TOTAL PROJECT	SHEET No.	TOTAL SHEETS
07	LA	210	R18.8/R24.9	39	95

Jacqueline C Tan 5/13/15
REGISTERED ELECTRICAL ENGINEER DATE

8-10-15
PLANS APPROVAL DATE

REGISTERED PROFESSIONAL ENGINEER JACQUELINE C. TAN No. E015611 Exp. 12/31/15 ELECTRICAL STATE OF CALIFORNIA

THE STATE OF CALIFORNIA OR ITS OFFICERS OR AGENTS SHALL NOT BE RESPONSIBLE FOR THE ACCURACY OR COMPLETENESS OF ELECTRONIC COPIES OF THIS PLAN SHEET.

NOTE:
FOR ACCURATE RIGHT OF WAY DATA, CONTACT RIGHT OF WAY ENGINEERING AT THE DISTRICT OFFICE.

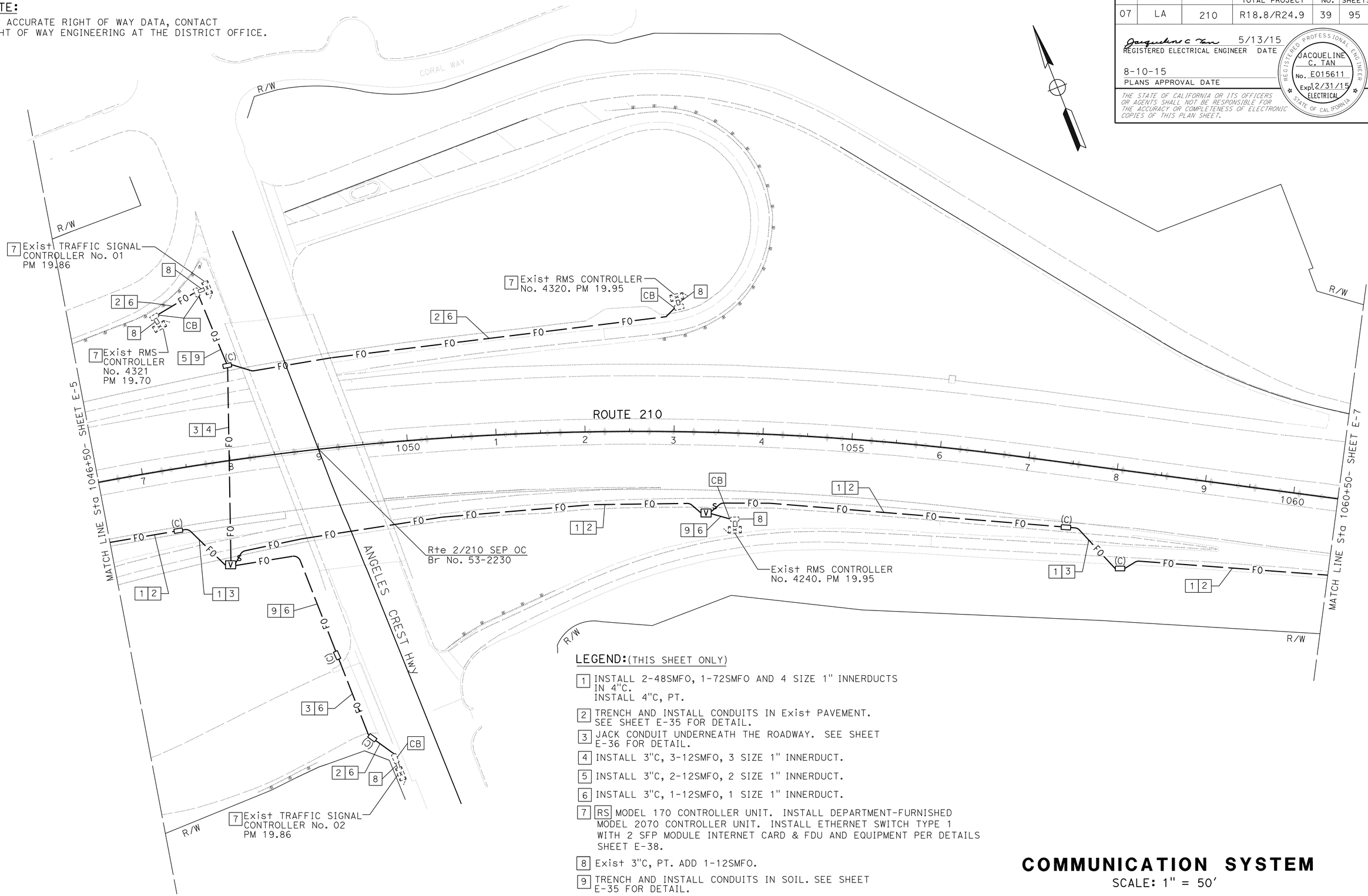

LEGEND:(THIS SHEET ONLY)

1. INSTALL 2-48SMFO, 1-72SMFO AND 4 SIZE 1" INNERDUCTS IN 4"C.
   INSTALL 4"C, PT.
2. TRENCH AND INSTALL CONDUITS IN Exist PAVEMENT. SEE SHEET E-35 FOR DETAIL.
3. JACK CONDUIT UNDERNEATH THE ROADWAY. SEE SHEET E-36 FOR DETAIL.
4. INSTALL 3"C, 3-12SMFO, 3 SIZE 1" INNERDUCT.
5. INSTALL 3"C, 2-12SMFO, 2 SIZE 1" INNERDUCT.
6. INSTALL 3"C, 1-12SMFO, 1 SIZE 1" INNERDUCT.
7. RS MODEL 170 CONTROLLER UNIT. INSTALL DEPARTMENT-FURNISHED MODEL 2070 CONTROLLER UNIT. INSTALL ETHERNET SWITCH TYPE 1 WITH 2 SFP MODULE INTERNET CARD & FDU AND EQUIPMENT PER DETAILS SHEET E-38.
8. Exist 3"C, PT. ADD 1-12SMFO.
9. TRENCH AND INSTALL CONDUITS IN SOIL. SEE SHEET E-35 FOR DETAIL.

COMMUNICATION SYSTEM

SCALE: 1" = 50'

E-6

APPROVED FOR ELECTRICAL WORK ONLY

STATE OF CALIFORNIA - DEPARTMENT OF TRANSPORTATION
Caltrans **OFFICE OF ITS**

FUNCTIONAL SUPERVISOR: JACQUELINE C. TAN
CALCULATED-DESIGNED BY: HIEU LUU
CHECKED BY: JACQUELINE C. TAN
REVISED BY
DATE REVISED

LAST REVISION 00-00-00
DATE PLOTTED => 28-AUG-2015
TIME PLOTTED => 14:13

Dist	COUNTY	ROUTE	POST MILES TOTAL PROJECT	SHEET No.	TOTAL SHEETS
07	LA	210	R18.8/R24.9	40	95

Jacqueline C Tan 5/13/15
REGISTERED ELECTRICAL ENGINEER DATE

8-10-15
PLANS APPROVAL DATE

REGISTERED PROFESSIONAL ENGINEER
JACQUELINE C. TAN
No. E015611
Exp. 12/31/15
ELECTRICAL
STATE OF CALIFORNIA

THE STATE OF CALIFORNIA OR ITS OFFICERS OR AGENTS SHALL NOT BE RESPONSIBLE FOR THE ACCURACY OR COMPLETENESS OF ELECTRONIC COPIES OF THIS PLAN SHEET.

NOTE:
FOR ACCURATE RIGHT OF WAY DATA, CONTACT
RIGHT OF WAY ENGINEERING AT THE DISTRICT OFFICE.

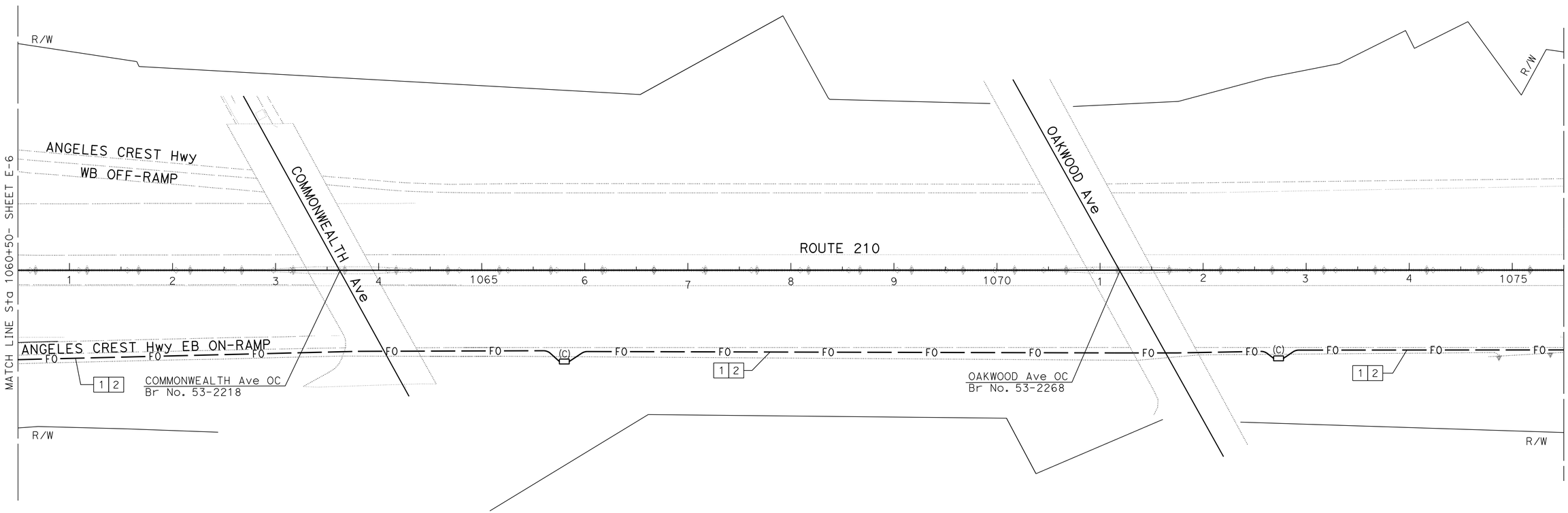

LEGEND:(THIS SHEET ONLY)

1 INSTALL 2-48SMFO, 1-72SMFO AND 4 SIZE 1" INNERDUCTS IN 4"C.
INSTALL 4"C, PT.

2 TRENCH AND INSTALL CONDUITS IN Exist PAVEMENT.
SEE SHEET E-35 FOR DETAIL.

COMMUNICATION SYSTEM

SCALE: 1" = 50'

APPROVED FOR ELECTRICAL WORK ONLY

E-7

STATE OF CALIFORNIA - DEPARTMENT OF TRANSPORTATION
Caltrans OFFICE OF ITS

FUNCTIONAL SUPERVISOR: JACQUELINE C. TAN
CALCULATED-DESIGNED BY: HIEU LUU
CHECKED BY: JACQUELINE C. TAN
REVISED BY
DATE REVISED

LAST REVISION 00-00-00
DATE PLOTTED => 28-AUG-2015
TIME PLOTTED => 14:13

Dist	COUNTY	ROUTE	POST MILES TOTAL PROJECT	SHEET No.	TOTAL SHEETS
07	LA	210	R18.8/R24.9	41	95

REGISTERED ELECTRICAL ENGINEER 5/13/15 DATE

8-10-15
PLANS APPROVAL DATE

REGISTERED PROFESSIONAL ENGINEER JACQUELINE C. TAN No. E015611 Exp. 12/31/15 ELECTRICAL STATE OF CALIFORNIA

THE STATE OF CALIFORNIA OR ITS OFFICERS OR AGENTS SHALL NOT BE RESPONSIBLE FOR THE ACCURACY OR COMPLETENESS OF ELECTRONIC COPIES OF THIS PLAN SHEET.

NOTE:
FOR ACCURATE RIGHT OF WAY DATA, CONTACT RIGHT OF WAY ENGINEERING AT THE DISTRICT OFFICE.

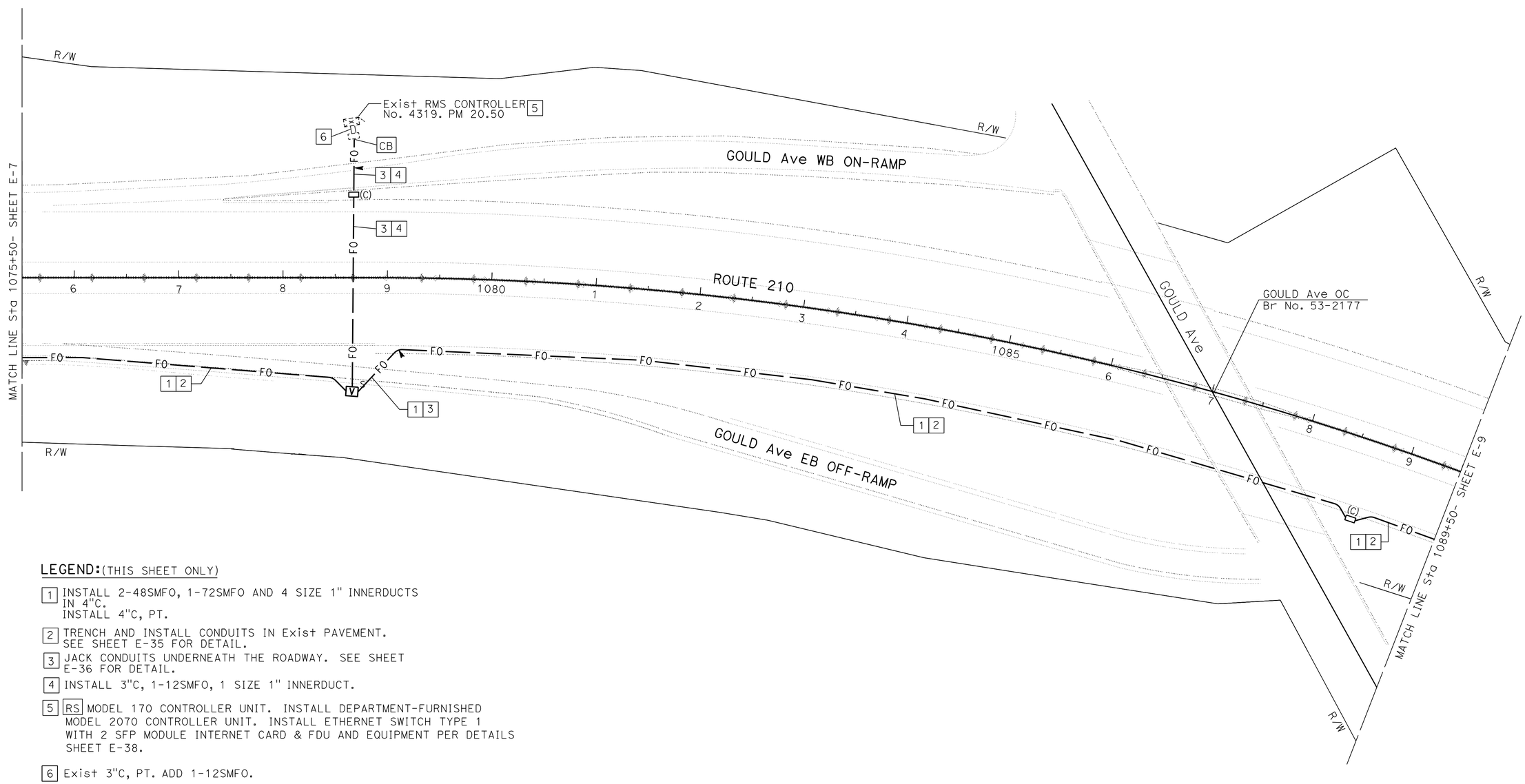

LEGEND:(THIS SHEET ONLY)

1. INSTALL 2-48SMFO, 1-72SMFO AND 4 SIZE 1" INNERDUCTS IN 4"C.
   INSTALL 4"C, PT.
2. TRENCH AND INSTALL CONDUITS IN Exist PAVEMENT. SEE SHEET E-35 FOR DETAIL.
3. JACK CONDUITS UNDERNEATH THE ROADWAY. SEE SHEET E-36 FOR DETAIL.
4. INSTALL 3"C, 1-12SMFO, 1 SIZE 1" INNERDUCT.
5. RS MODEL 170 CONTROLLER UNIT. INSTALL DEPARTMENT-FURNISHED MODEL 2070 CONTROLLER UNIT. INSTALL ETHERNET SWITCH TYPE 1 WITH 2 SFP MODULE INTERNET CARD & FDU AND EQUIPMENT PER DETAILS SHEET E-38.
6. Exist 3"C, PT. ADD 1-12SMFO.

COMMUNICATION SYSTEM

SCALE: 1" = 50'

APPROVED FOR ELECTRICAL WORK ONLY

E-8

STATE OF CALIFORNIA - DEPARTMENT OF TRANSPORTATION
Caltrans **OFFICE OF ITS**

FUNCTIONAL SUPERVISOR: JACQUELINE C. TAN
CALCULATED-DESIGNED BY: HIEU LUU
CHECKED BY: JACQUELINE C. TAN
REVISED BY
DATE REVISED

LAST REVISION 00-00-00
DATE PLOTTED => 28-AUG-2015
TIME PLOTTED => 14:13

Dist	COUNTY	ROUTE	POST MILES TOTAL PROJECT	SHEET No.	TOTAL SHEETS
07	LA	210	R18.8/R24.9	42	95

REGISTERED ELECTRICAL ENGINEER 5/13/15 DATE

8-10-15
PLANS APPROVAL DATE

REGISTERED PROFESSIONAL ENGINEER JACQUELINE C. TAN No. E015611 Exp. 12/31/15 ELECTRICAL STATE OF CALIFORNIA

THE STATE OF CALIFORNIA OR ITS OFFICERS OR AGENTS SHALL NOT BE RESPONSIBLE FOR THE ACCURACY OR COMPLETENESS OF ELECTRONIC COPIES OF THIS PLAN SHEET.

NOTE:
FOR ACCURATE RIGHT OF WAY DATA, CONTACT RIGHT OF WAY ENGINEERING AT THE DISTRICT OFFICE.

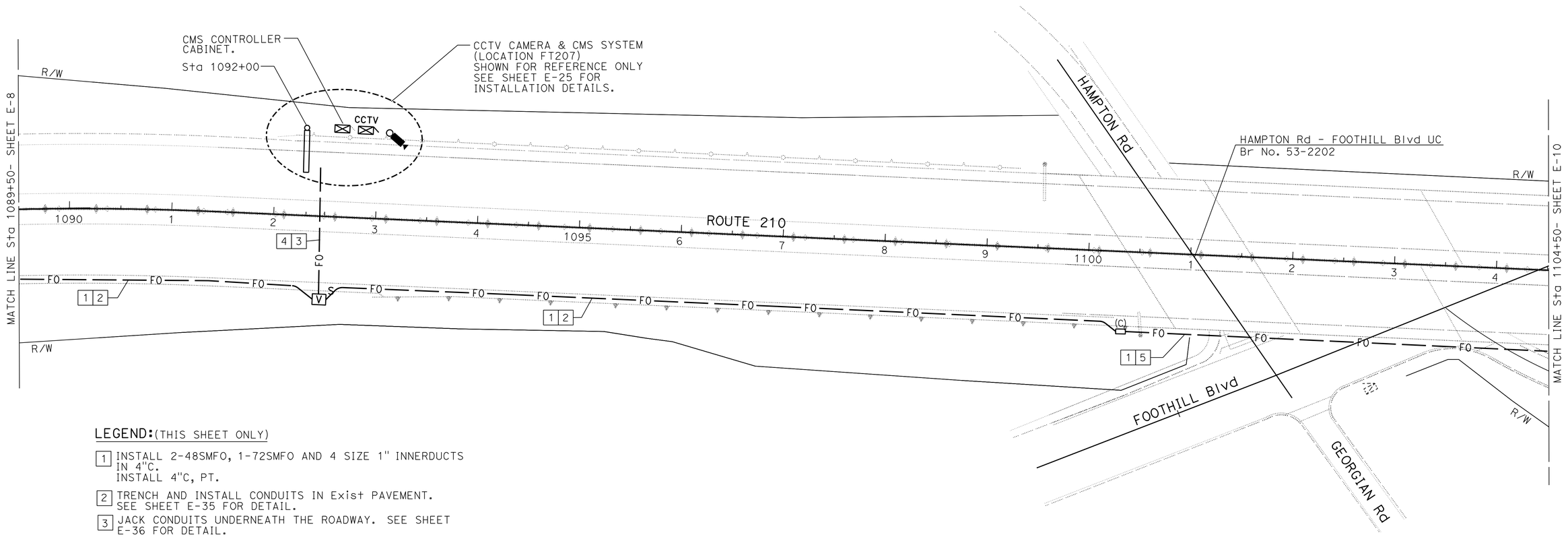

LEGEND:(THIS SHEET ONLY)

1. INSTALL 2-48SMFO, 1-72SMFO AND 4 SIZE 1" INNERDUCTS IN 4"C. INSTALL 4"C, PT.
2. TRENCH AND INSTALL CONDUITS IN Exist PAVEMENT. SEE SHEET E-35 FOR DETAIL.
3. JACK CONDUITS UNDERNEATH THE ROADWAY. SEE SHEET E-36 FOR DETAIL.
4. INSTALL 3"C, 2-12SMFO, 2 SIZE 1" INNERDUCT.
5. ATTACH TYPE 1 CONDUITS TO THE Exist BRIDGE RAILING. SEE STRUCTURAL PLAN FOR DETAIL.

COMMUNICATION SYSTEM

SCALE: 1" = 50'

E-9

APPROVED FOR ELECTRICAL WORK ONLY

STATE OF CALIFORNIA - DEPARTMENT OF TRANSPORTATION
Caltrans OFFICE OF ITS

FUNCTIONAL SUPERVISOR: JACQUELINE C. TAN
CALCULATED-DESIGNED BY: HIEU LUU
CHECKED BY: JACQUELINE C. TAN
REVISED BY
DATE REVISED

LAST REVISION 00-00-00
DATE PLOTTED => 28-AUG-2015
TIME PLOTTED => 14:13

Dist	COUNTY	ROUTE	POST MILES TOTAL PROJECT	SHEET No.	TOTAL SHEETS
07	LA	210	R18.8/R24.9	43	95

REGISTERED ELECTRICAL ENGINEER 5/13/15 DATE

8-10-15
PLANS APPROVAL DATE

REGISTERED PROFESSIONAL ENGINEER JACQUELINE C. TAN No. E015611 Exp.12/31/15 ELECTRICAL STATE OF CALIFORNIA

THE STATE OF CALIFORNIA OR ITS OFFICERS OR AGENTS SHALL NOT BE RESPONSIBLE FOR THE ACCURACY OR COMPLETENESS OF ELECTRONIC COPIES OF THIS PLAN SHEET.

NOTE:
FOR ACCURATE RIGHT OF WAY DATA, CONTACT RIGHT OF WAY ENGINEERING AT THE DISTRICT OFFICE.

LEGEND:(THIS SHEET ONLY)

1. INSTALL 2-48SMFO, 1-72SMFO AND 4 SIZE 1" INNERDUCTS IN 4"C.
   INSTALL 4"C, PT.
2. TRENCH AND INSTALL CONDUITS IN Exist PAVEMENT. SEE SHEET E-35 FOR DETAIL.
3. JACK CONDUITS UNDERNEATH THE ROADWAY. SEE SHEET E-36 FOR DETAIL.
4. INSTALL 3"C, 2-12SMFO, 2 SIZE 1" INNERDUCT.
5. INSTALL 3"C, 1-12SMFO, 1 SIZE 1" INNERDUCT.
6. RS MODEL 170 CONTROLLER UNIT. INSTALL DEPARTMENT-FURNISHED MODEL 2070 CONTROLLER UNIT. INSTALL ETHERNET SWITCH TYPE 1 WITH 2 SFP MODULE INTERNET CARD & FDU AND EQUIPMENT PER DETAILS SHEET E-38.
7. Exist 3"C, PT. ADD 1-12SMFO.
8. INSTALL AN ETHERNET CARD INSIDE THE Exist MODEL 170 CONTROLLER CABINET.
9. ATTACH TYPE 1 CONDUITS TO THE Exist BRIDGE RAILING. SEE STRUCTURAL PLAN FOR DETAIL.
10. TRENCH AND INSTALL CONDUITS IN SOIL. SEE SHEET E-35 FOR DETAIL.

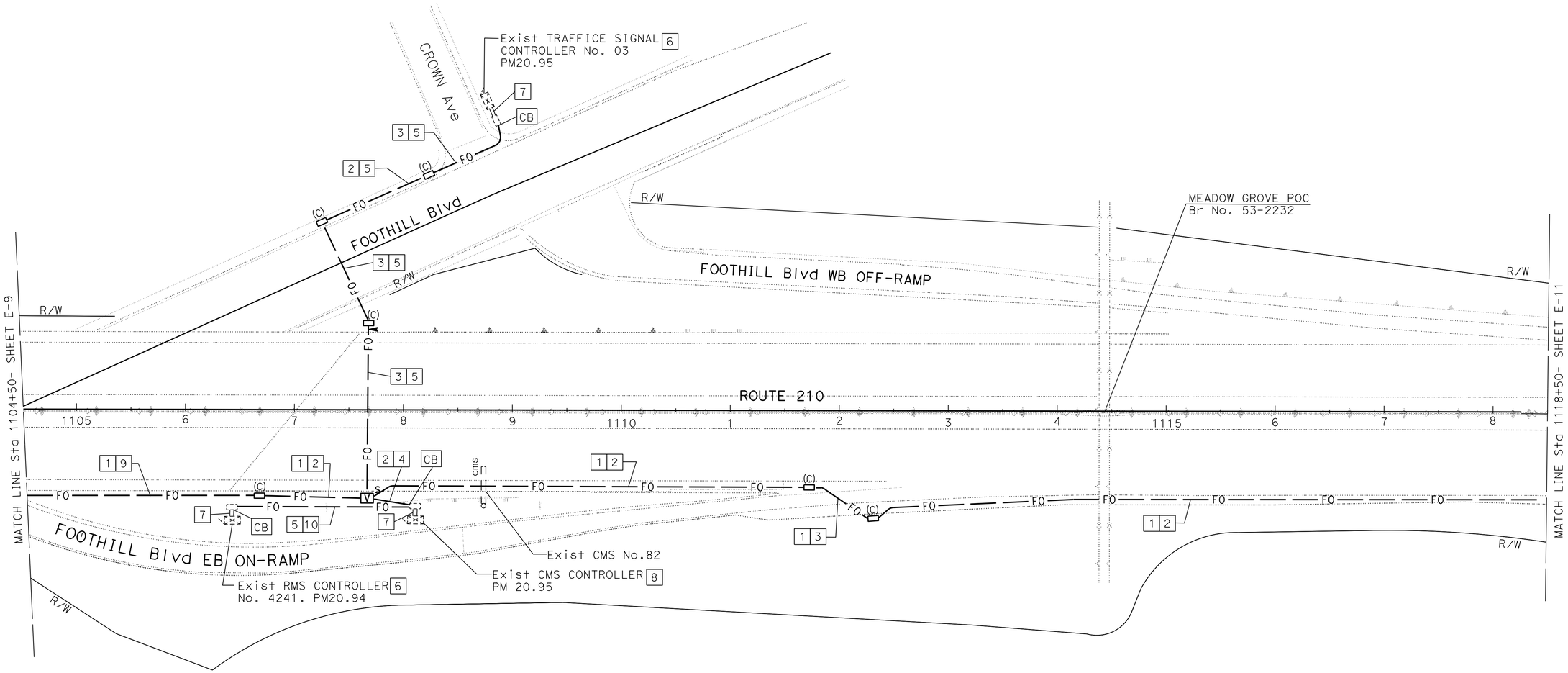

COMMUNICATION SYSTEM

SCALE: 1" = 50'

APPROVED FOR ELECTRICAL WORK ONLY

E-10

STATE OF CALIFORNIA - DEPARTMENT OF TRANSPORTATION
Caltrans OFFICE OF ITS

FUNCTIONAL SUPERVISOR: JACQUELINE C. TAN
CALCULATED-DESIGNED BY: HIEU LUU
CHECKED BY: JACQUELINE C. TAN
REVISED BY / DATE REVISED

LAST REVISION 00-00-00
DATE PLOTTED => 28-AUG-2015
TIME PLOTTED => 14:13

Dist	COUNTY	ROUTE	POST MILES TOTAL PROJECT	SHEET No.	TOTAL SHEETS
07	LA	210	R18.8/R24.9	44	95

REGISTERED ELECTRICAL ENGINEER — DATE 5/13/15

PLANS APPROVAL DATE 8-10-15

REGISTERED PROFESSIONAL ENGINEER — JACQUELINE C. TAN — No. E015611 — Exp. 12/31/15 — ELECTRICAL — STATE OF CALIFORNIA

THE STATE OF CALIFORNIA OR ITS OFFICERS OR AGENTS SHALL NOT BE RESPONSIBLE FOR THE ACCURACY OR COMPLETENESS OF ELECTRONIC COPIES OF THIS PLAN SHEET.

NOTE:

FOR ACCURATE RIGHT OF WAY DATA, CONTACT RIGHT OF WAY ENGINEERING AT THE DISTRICT OFFICE.

LEGEND: (THIS SHEET ONLY)

1. INSTALL 2-48SMFO, 1-72SMFO AND 4 SIZE 1" INNERDUCTS IN 4"C.
   INSTALL 4"C, PT.
2. TRENCH AND INSTALL CONDUITS IN Exist PAVEMENT. SEE SHEET E-35 FOR DETAIL.
3. JACK CONDUITS UNDERNEATH THE ROADWAY. SEE SHEET E-36 FOR DETAIL.

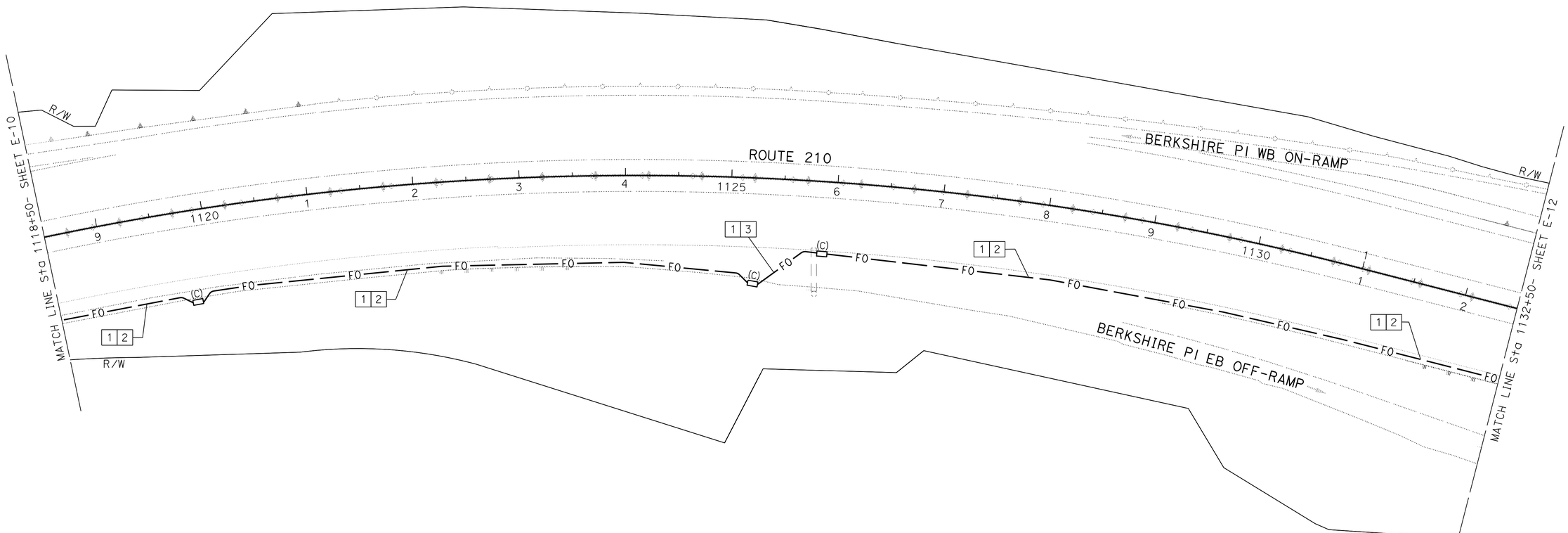

COMMUNICATION SYSTEM

SCALE: 1" = 50'

APPROVED FOR ELECTRICAL WORK ONLY

E-11

STATE OF CALIFORNIA - DEPARTMENT OF TRANSPORTATION
Caltrans OFFICE OF ITS

FUNCTIONAL SUPERVISOR: JACQUELINE C. TAN
CALCULATED-DESIGNED BY: HIEU LUU
CHECKED BY: JACQUELINE C. TAN
REVISED BY
DATE REVISED

LAST REVISION 00-00-00
DATE PLOTTED => 28-AUG-2015
TIME PLOTTED => 14:13

Dist	COUNTY	ROUTE	POST MILES TOTAL PROJECT	SHEET No.	TOTAL SHEETS
07	LA	210	R18.8/R24.9	45	95

REGISTERED ELECTRICAL ENGINEER 5/13/15 DATE

8-10-15
PLANS APPROVAL DATE

REGISTERED PROFESSIONAL ENGINEER JACQUELINE C. TAN No. E015611 Exp. 12/31/15 ELECTRICAL STATE OF CALIFORNIA

THE STATE OF CALIFORNIA OR ITS OFFICERS OR AGENTS SHALL NOT BE RESPONSIBLE FOR THE ACCURACY OR COMPLETENESS OF ELECTRONIC COPIES OF THIS PLAN SHEET.

NOTE:
FOR ACCURATE RIGHT OF WAY DATA, CONTACT RIGHT OF WAY ENGINEERING AT THE DISTRICT OFFICE.

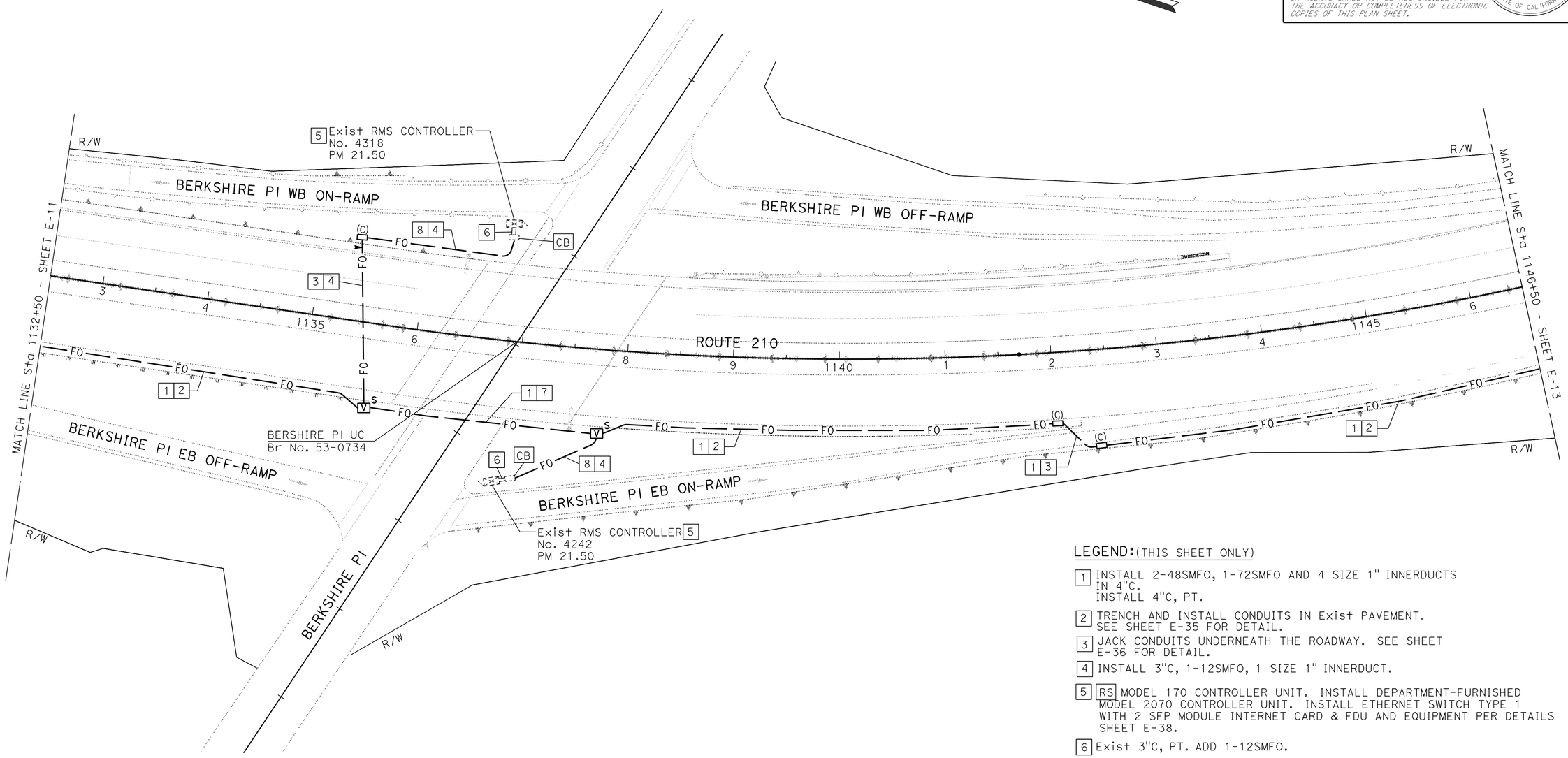

LEGEND:(THIS SHEET ONLY)

1. INSTALL 2-48SMFO, 1-72SMFO AND 4 SIZE 1" INNERDUCTS IN 4"C. INSTALL 4"C, PT.
2. TRENCH AND INSTALL CONDUITS IN Exist PAVEMENT. SEE SHEET E-35 FOR DETAIL.
3. JACK CONDUITS UNDERNEATH THE ROADWAY. SEE SHEET E-36 FOR DETAIL.
4. INSTALL 3"C, 1-12SMFO, 1 SIZE 1" INNERDUCT.
5. RS MODEL 170 CONTROLLER UNIT. INSTALL DEPARTMENT-FURNISHED MODEL 2070 CONTROLLER UNIT. INSTALL ETHERNET SWITCH TYPE 1 WITH 2 SFP MODULE INTERNET CARD & FDU AND EQUIPMENT PER DETAILS SHEET E-38.
6. Exist 3"C, PT. ADD 1-12SMFO.
7. ATTACH TYPE 1 CONDUITS TO THE BRIDGE RAILING. SEE STRUCTURE PLAN FOR DETAIL.
8. TRENCH AND INSTALL CONDUITS IN SOIL. SEE SHEET E-35 FOR DETAIL.

COMMUNICATION SYSTEM

SCALE: 1" = 50'

APPROVED FOR ELECTRICAL WORK ONLY

E-12

STATE OF CALIFORNIA - DEPARTMENT OF TRANSPORTATION
Caltrans OFFICE OF ITS

FUNCTIONAL SUPERVISOR: JACQUELINE C. TAN
CALCULATED-DESIGNED BY: HIEU LUU
CHECKED BY: JACQUELINE C. TAN
REVISED BY
DATE REVISED

LAST REVISION 00-00-00
DATE PLOTTED => 28-AUG-2015
TIME PLOTTED => 14:13

Dist	COUNTY	ROUTE	POST MILES TOTAL PROJECT	SHEET No.	TOTAL SHEETS
07	LA	210	R18.8/R24.9	46	95

REGISTERED ELECTRICAL ENGINEER 5/13/15 DATE

8-10-15
PLANS APPROVAL DATE

REGISTERED PROFESSIONAL ENGINEER JACQUELINE C. TAN No. E015611 Exp. 12/31/15 ELECTRICAL STATE OF CALIFORNIA

THE STATE OF CALIFORNIA OR ITS OFFICERS OR AGENTS SHALL NOT BE RESPONSIBLE FOR THE ACCURACY OR COMPLETENESS OF ELECTRONIC COPIES OF THIS PLAN SHEET.

NOTE:

FOR ACCURATE RIGHT OF WAY DATA, CONTACT RIGHT OF WAY ENGINEERING AT THE DISTRICT OFFICE.

LEGEND: (THIS SHEET ONLY)

1. INSTALL 2-48SMFO, 1-72SMFO AND 4 SIZE 1" INNERDUCTS IN 4"C.
   INSTALL 4"C, PT.
2. TRENCH AND INSTALL CONDUITS IN Exist PAVEMENT. SEE SHEET E-35 FOR DETAIL.
3. ATTACH TYPE 1 CONDUITS TO THE BRIDGE RAILING. SEE STRUCTURE PLAN FOR DETAIL.
4. JACK CONDUITS UNDERNEATH THE ROADWAY. SEE SHEET E-36 FOR DETAIL.
5. INSTALL 3"C, 1-12SMFO, 1 SIZE 1" INNERDUCT.
6. RS MODEL 170 CONTROLLER UNIT. INSTALL DEPARTMENT-FURNISHED MODEL 2070 CONTROLLER UNIT. INSTALL ETHERNET SWITCH TYPE 1 WITH 2 SFP MODULE INTERNET CARD & FDU AND EQUIPMENT PER DETAILS SHEET E-36.

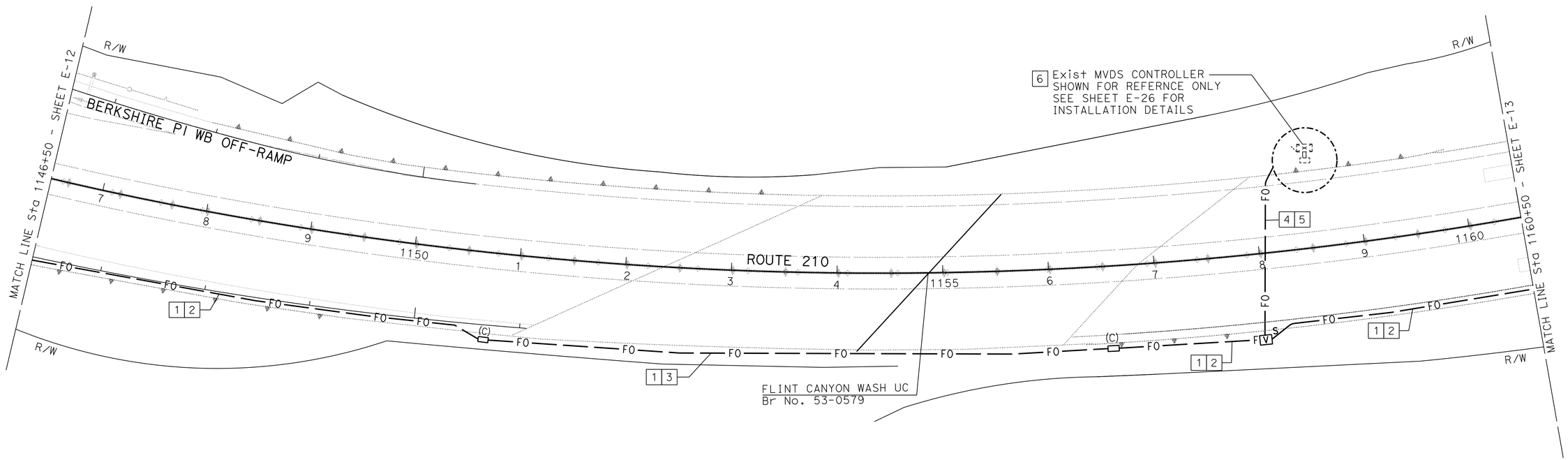

COMMUNICATION SYSTEM

SCALE: 1" = 50'

APPROVED FOR ELECTRICAL WORK ONLY

E-13

STATE OF CALIFORNIA - DEPARTMENT OF TRANSPORTATION
Caltrans **OFFICE OF ITS**

FUNCTIONAL SUPERVISOR: JACQUELINE C. TAN
CALCULATED-DESIGNED BY: HIEU LUU
CHECKED BY: JACQUELINE C. TAN
REVISED BY
DATE REVISED

LAST REVISION 00-00-00
DATE PLOTTED => 28-AUG-2015
TIME PLOTTED => 14:13

Dist	COUNTY	ROUTE	POST MILES TOTAL PROJECT	SHEET No.	TOTAL SHEETS
07	LA	210	R18.8/R24.9	47	95

Jacqueline C Tan 5/13/15
REGISTERED ELECTRICAL ENGINEER DATE

8-10-15
PLANS APPROVAL DATE

REGISTERED PROFESSIONAL ENGINEER JACQUELINE C. TAN No. E015611 Exp. 12/31/15 ELECTRICAL STATE OF CALIFORNIA

THE STATE OF CALIFORNIA OR ITS OFFICERS OR AGENTS SHALL NOT BE RESPONSIBLE FOR THE ACCURACY OR COMPLETENESS OF ELECTRONIC COPIES OF THIS PLAN SHEET.

NOTE:
FOR ACCURATE RIGHT OF WAY DATA, CONTACT RIGHT OF WAY ENGINEERING AT THE DISTRICT OFFICE.

LEGEND:(THIS SHEET ONLY)

1. INSTALL 2-48SMFO, 1-72SMFO AND 4 SIZE 1" INNERDUCTS IN 4"C.
   INSTALL 4"C, PT.
2. TRENCH AND INSTALL CONDUITS IN Exist PAVEMENT. SEE SHEET E-35 FOR DETAIL.
3. ATTACH TYPE 1 CONDUITS TO THE BRIDGE RAILING. SEE STRUCTURE PLAN FOR DETAIL.

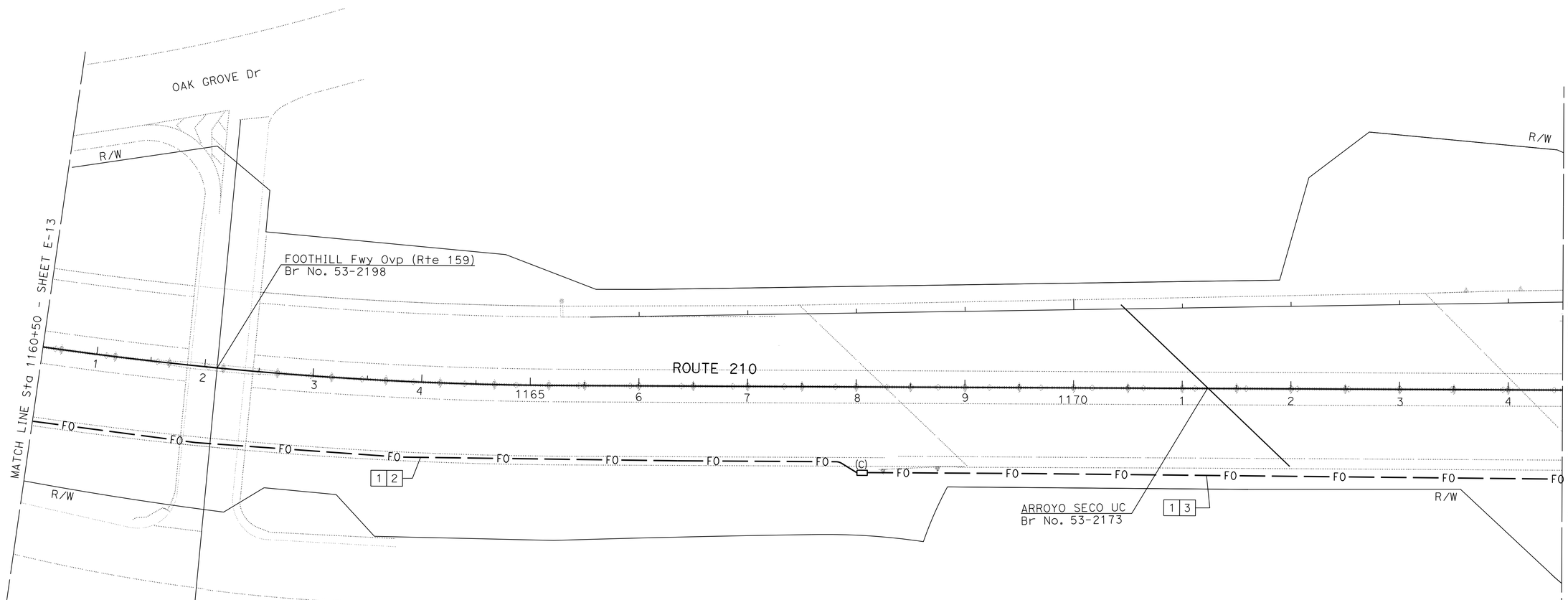

COMMUNICATION SYSTEM
SCALE: 1" = 50'

APPROVED FOR ELECTRICAL WORK ONLY

E-14

REVISED BY | DATE REVISED
HIEU LUU | JACQUELINE C. TAN
CALCULATED-DESIGNED BY | CHECKED BY
FUNCTIONAL SUPERVISOR | JACQUELINE C. TAN
STATE OF CALIFORNIA - DEPARTMENT OF TRANSPORTATION
Caltrans OFFICE OF ITS

LAST REVISION 00-00-00 | DATE PLOTTED => 28-AUG-2015 | TIME PLOTTED => 14:13

Dist	COUNTY	ROUTE	POST MILES TOTAL PROJECT	SHEET No.	TOTAL SHEETS
07	LA	210	R18.8/R24.9	48	95

REGISTERED ELECTRICAL ENGINEER 5/13/15 DATE

8-10-15
PLANS APPROVAL DATE

REGISTERED PROFESSIONAL ENGINEER JACQUELINE C. TAN No. E015611 Exp. 12/31/15 ELECTRICAL STATE OF CALIFORNIA

THE STATE OF CALIFORNIA OR ITS OFFICERS OR AGENTS SHALL NOT BE RESPONSIBLE FOR THE ACCURACY OR COMPLETENESS OF ELECTRONIC COPIES OF THIS PLAN SHEET.

NOTE:

FOR ACCURATE RIGHT OF WAY DATA, CONTACT RIGHT OF WAY ENGINEERING AT THE DISTRICT OFFICE.

LEGEND: (THIS SHEET ONLY)

1. INSTALL 2-48SMFO, 1-72SMFO AND 4 SIZE 1" INNERDUCTS IN 4"C. INSTALL 4"C, PT.
2. TRENCH AND INSTALL CONDUITS IN Exist PAVEMENT. SEE SHEET E-35 FOR DETAIL.
3. JACK CONDUITS UNDERNEATH THE ROADWAY. SEE SHEET E-36 FOR DETAIL.
4. INSTALL 3"C, 1-12SMFO, 1 SIZE 1" INNERDUCT.
5. RS MODEL 170 CONTROLLER UNIT. INSTALL DEPARTMENT-FURNISHED MODEL 2070 CONTROLLER UNIT. INSTALL ETHERNET SWITCH TYPE 1 WITH 2 SFP MODULE INTERNET CARD & FDU AND EQUIPMENT PER DETAILS SHEET E-38.
6. Exist 3"C, PT. ADD 1-12SMFO
7. INSTALL 3"C, 2-12SMFO, 2 SIZE 1" INNERDUCT.

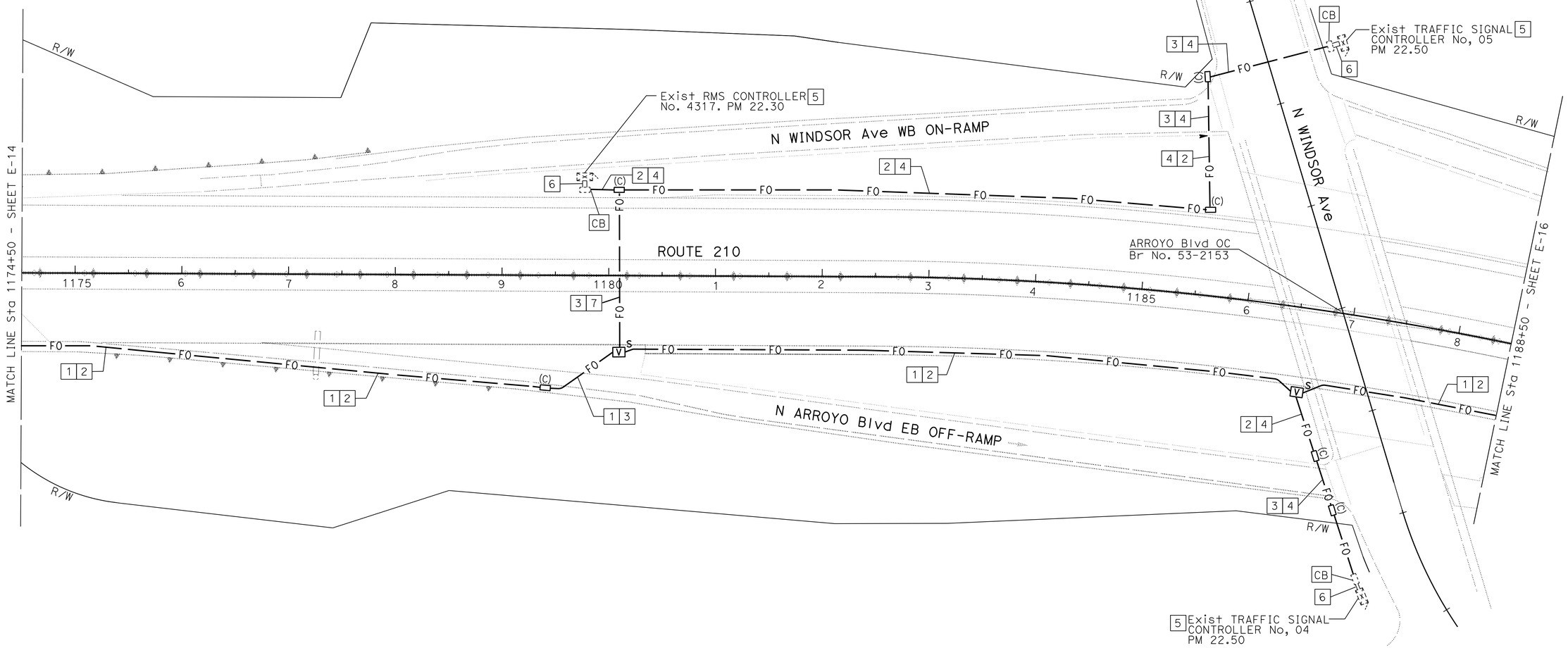

COMMUNICATION SYSTEM

SCALE: 1" = 50'

APPROVED FOR ELECTRICAL WORK ONLY

E-15

STATE OF CALIFORNIA - DEPARTMENT OF TRANSPORTATION
Caltrans OFFICE OF ITS

FUNCTIONAL SUPERVISOR: JACQUELINE C. TAN
CALCULATED-DESIGNED BY: HIEU LUU
CHECKED BY: JACQUELINE C. TAN
REVISED BY
DATE REVISED

LAST REVISION 00-00-00 | DATE PLOTTED => 28-AUG-2015 | TIME PLOTTED => 14:13

BORDER LAST REVISED 7/2/2010 | USERNAME => s115484 | DGN FILE => 712997ua015.dgn | RELATIVE BORDER SCALE IS IN INCHES 0 1 2 3 | UNIT 1885 | PROJECT NUMBER & PHASE 07140000801

Dist	COUNTY	ROUTE	POST MILES TOTAL PROJECT	SHEET No.	TOTAL SHEETS
07	LA	210	R18.8/R24.9	49	95

Jacqueline C Tan 5/13/15
REGISTERED ELECTRICAL ENGINEER DATE

8-10-15
PLANS APPROVAL DATE

REGISTERED PROFESSIONAL ENGINEER JACQUELINE C. TAN No. E015611 Exp. 12/31/15 ELECTRICAL STATE OF CALIFORNIA

THE STATE OF CALIFORNIA OR ITS OFFICERS OR AGENTS SHALL NOT BE RESPONSIBLE FOR THE ACCURACY OR COMPLETENESS OF ELECTRONIC COPIES OF THIS PLAN SHEET.

NOTE:
FOR ACCURATE RIGHT OF WAY DATA, CONTACT RIGHT OF WAY ENGINEERING AT THE DISTRICT OFFICE.

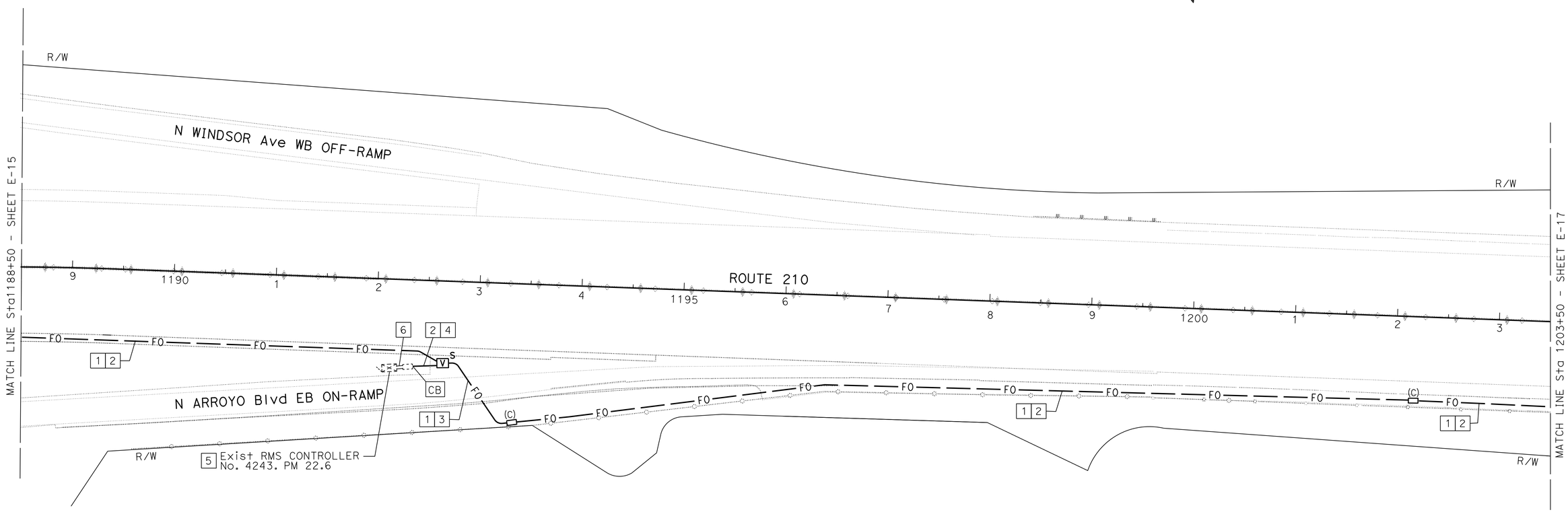

LEGEND:(THIS SHEET ONLY)

1. INSTALL 2-48SMFO, 1-72SMFO AND 4 SIZE 1" INNERDUCTS IN 4"C. INSTALL 4"C, PT.
2. TRENCH AND INSTALL CONDUITS IN Exist PAVEMENT. SEE SHEET E-35 FOR DETAIL.
3. JACK CONDUITS UNDERNEATH THE ROADWAY. SEE SHEET E-36 FOR DETAIL.
4. INSTALL 3"C, 1-12SMFO, 1 SIZE 1" INNERDUCT.
5. RS MODEL 170 CONTROLLER UNIT. INSTALL DEPARTMENT-FURNISHED MODEL 2070 CONTROLLER UNIT. INSTALL ETHERNET SWITCH TYPE 1 WITH 2 SFPMODULE INTERNET CARD & FDU AND EQUIPMENT PER DETAILS SHEET E-38.
6. Exist 3"C, PT. ADD 1-12SMFO

COMMUNICATION SYSTEM

SCALE: 1" = 50'

APPROVED FOR ELECTRICAL WORK ONLY

E-16

REVISED BY	DATE REVISED
HIEU LUU	

CALCULATED-DESIGNED BY	CHECKED BY
JACQUELINE C. TAN	

FUNCTIONAL SUPERVISOR: JACQUELINE C. TAN

STATE OF CALIFORNIA - DEPARTMENT OF TRANSPORTATION
Caltrans OFFICE OF ITS

LAST REVISION 00-00-00 | DATE PLOTTED => 28-AUG-2015 | TIME PLOTTED => 14:13

Dist	COUNTY	ROUTE	POST MILES TOTAL PROJECT	SHEET No.	TOTAL SHEETS
07	LA	210	R18.8/R24.9	50	95

REGISTERED ELECTRICAL ENGINEER 5/13/15 DATE

8-10-15
PLANS APPROVAL DATE

REGISTERED PROFESSIONAL ENGINEER JACQUELINE C. TAN No. E015611 Exp. 12/31/15 ELECTRICAL STATE OF CALIFORNIA

THE STATE OF CALIFORNIA OR ITS OFFICERS OR AGENTS SHALL NOT BE RESPONSIBLE FOR THE ACCURACY OR COMPLETENESS OF ELECTRONIC COPIES OF THIS PLAN SHEET.

NOTE:
FOR ACCURATE RIGHT OF WAY DATA, CONTACT RIGHT OF WAY ENGINEERING AT THE DISTRICT OFFICE.

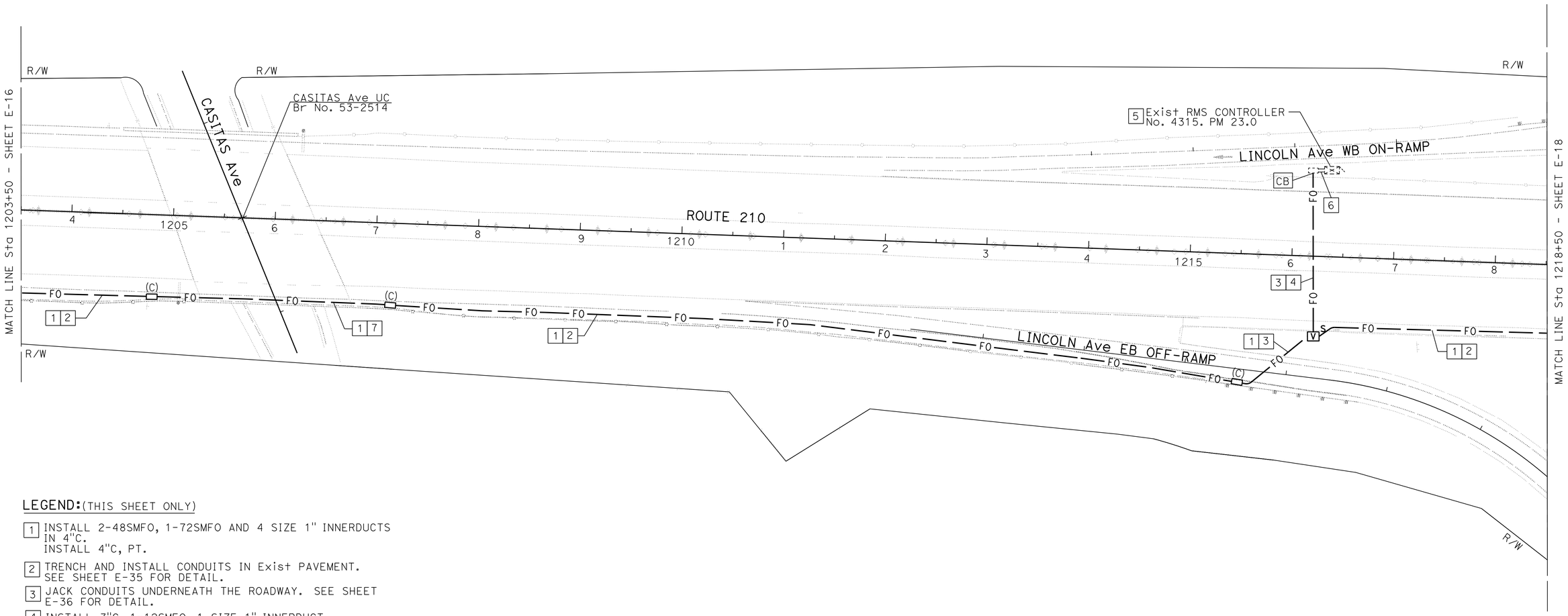

LEGEND:(THIS SHEET ONLY)

1. INSTALL 2-48SMFO, 1-72SMFO AND 4 SIZE 1" INNERDUCTS IN 4"C.
   INSTALL 4"C, PT.
2. TRENCH AND INSTALL CONDUITS IN Exist PAVEMENT. SEE SHEET E-35 FOR DETAIL.
3. JACK CONDUITS UNDERNEATH THE ROADWAY. SEE SHEET E-36 FOR DETAIL.
4. INSTALL 3"C, 1-12SMFO, 1 SIZE 1" INNERDUCT.
5. RS MODEL 170 CONTROLLER UNIT. INSTALL DEPARTMENT-FURNISHED MODEL 2070 CONTROLLER UNIT. INSTALL ETHERNET SWITCH TYPE 1 WITH 2 SFP MODULE INTERNET CARD & FDU AND EQUIPMENT PER DETAILS SHEET E-38.
6. Exist 3"C, PT. ADD 1-12SMFO
7. ATTACH TYPE 1 CONDUITS TO THE BRIDGE RAILING. SEE STRUCTURE PLAN FOR DETAIL.

COMMUNICATION SYSTEM

SCALE: 1" = 50'

APPROVED FOR ELECTRICAL WORK ONLY

E-17

STATE OF CALIFORNIA - DEPARTMENT OF TRANSPORTATION
Caltrans OFFICE OF ITS

FUNCTIONAL SUPERVISOR: JACQUELINE C. TAN
CALCULATED-DESIGNED BY: HIEU LUU
CHECKED BY: JACQUELINE C. TAN
REVISED BY
DATE REVISED

LAST REVISION 00-00-00
DATE PLOTTED => 28-AUG-2015
TIME PLOTTED => 14:13

Dist	COUNTY	ROUTE	POST MILES TOTAL PROJECT	SHEET No.	TOTAL SHEETS
07	LA	210	R18.8/R24.9	51	95

REGISTERED ELECTRICAL ENGINEER 5/13/15 DATE

8-10-15
PLANS APPROVAL DATE

REGISTERED PROFESSIONAL ENGINEER JACQUELINE C. TAN No. E015611 Exp. 12/31/15 ELECTRICAL STATE OF CALIFORNIA

THE STATE OF CALIFORNIA OR ITS OFFICERS OR AGENTS SHALL NOT BE RESPONSIBLE FOR THE ACCURACY OR COMPLETENESS OF ELECTRONIC COPIES OF THIS PLAN SHEET.

NOTE:
FOR ACCURATE RIGHT OF WAY DATA, CONTACT RIGHT OF WAY ENGINEERING AT THE DISTRICT OFFICE.

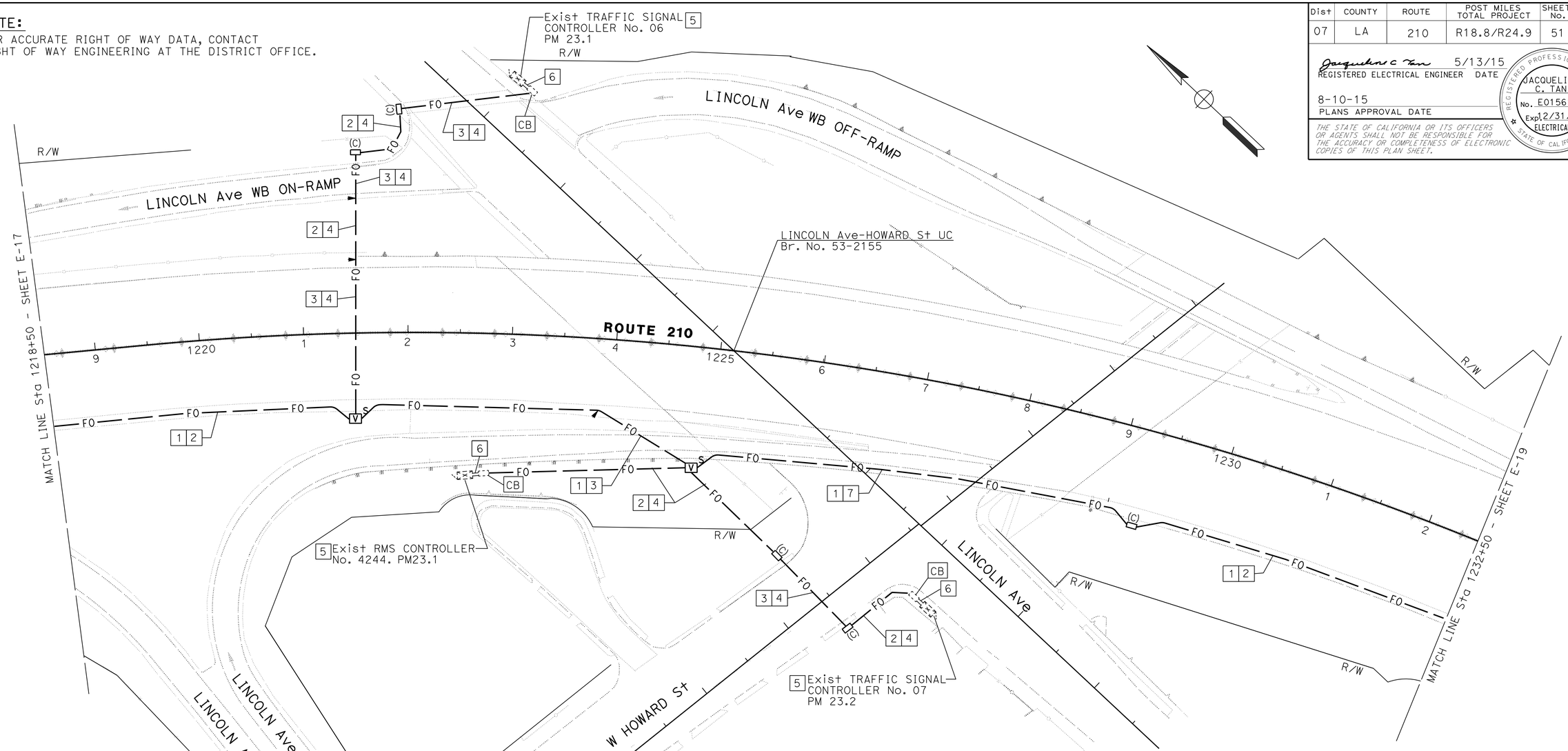

LEGEND:(THIS SHEET ONLY)

1. INSTALL 2-48SMFO, 1-72SMFO AND 4 SIZE 1" INNERDUCTS IN 4"C.
   INSTALL 4"C, PT.
2. TRENCH AND INSTALL CONDUITS IN Exist PAVEMENT. SEE SHEET E-35 FOR DETAIL.
3. JACK CONDUITS UNDERNEATH THE ROADWAY. SEE SHEET E-36 FOR DETAIL.
4. INSTALL 3"C, 1-12SMFO, 1 SIZE 1" INNERDUCT.
5. RS MODEL 170 CONTROLLER UNIT. INSTALL DEPARTMENT-FURNISHED MODEL 2070 CONTROLLER UNIT. IINSTALL ETHERNET SWITCH TYPE 1 WITH 2 SFP MODULE INTERNET CARD & FDU AND EQUIPMENT PER DETAILS SHEET E-38.
6. Exist 3"C, PT. ADD 1-12SMFO.
7. ATTACH TYPE 1 CONDUITS TO THE BRIDGE RAILING. SEE STRUCTURE PLAN FOR DETAIL.

COMMUNICATION SYSTEM

SCALE: 1" = 50'

APPROVED FOR ELECTRICAL WORK ONLY

E-18

STATE OF CALIFORNIA - DEPARTMENT OF TRANSPORTATION
Caltrans **OFFICE OF ITS**

FUNCTIONAL SUPERVISOR: JACQUELINE C. TAN
CALCULATED-DESIGNED BY: HIEU LUU
CHECKED BY: JACQUELINE C. TAN
REVISED BY / DATE REVISED

LAST REVISION 00-00-00
DATE PLOTTED => 28-AUG-2015
TIME PLOTTED => 14:13

Dist	COUNTY	ROUTE	POST MILES TOTAL PROJECT	SHEET No.	TOTAL SHEETS
07	LA	210	R18.8/R24.9	52	95

REGISTERED ELECTRICAL ENGINEER 5/13/15 DATE

8-10-15
PLANS APPROVAL DATE

REGISTERED PROFESSIONAL ENGINEER JACQUELINE C. TAN No. E015611 Exp. 12/31/15 ELECTRICAL STATE OF CALIFORNIA

THE STATE OF CALIFORNIA OR ITS OFFICERS OR AGENTS SHALL NOT BE RESPONSIBLE FOR THE ACCURACY OR COMPLETENESS OF ELECTRONIC COPIES OF THIS PLAN SHEET.

NOTE:
FOR ACCURATE RIGHT OF WAY DATA, CONTACT RIGHT OF WAY ENGINEERING AT THE DISTRICT OFFICE.

LEGEND:(THIS SHEET ONLY)

1. INSTALL 2-48SMFO, 1-72SMFO AND 4 SIZE 1" INNERDUCTS IN 4"C.
   INSTALL 4"C, PT.
2. TRENCH AND INSTALL CONDUITS IN Exist PAVEMENT. SEE SHEET E-35 FOR DETAIL.
3. JACK CONDUITS UNDERNEATH THE ROADWAY. SEE SHEET E-36 FOR DETAIL.
4. INSTALL 3"C, 1-12SMFO, 1 SIZE 1" INNERDUCT.
5. ATTACH TYPE 1 CONDUITS TO THE BRIDGE RAILING. SEE STRUCTURE PLAN FOR DETAIL.

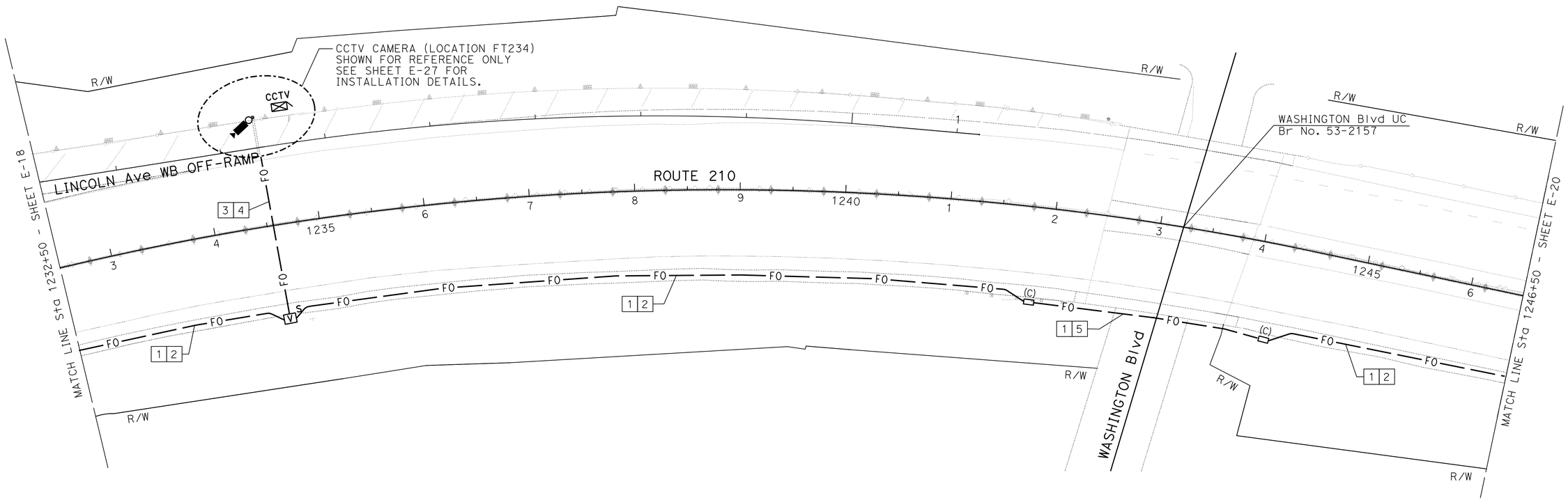

COMMUNICATION SYSTEM

SCALE: 1" = 50'

APPROVED FOR ELECTRICAL WORK ONLY

E-19

STATE OF CALIFORNIA - DEPARTMENT OF TRANSPORTATION
Caltrans **OFFICE OF ITS**

FUNCTIONAL SUPERVISOR: JACQUELINE C. TAN
CALCULATED-DESIGNED BY: HIEU LUU
CHECKED BY: JACQUELINE C. TAN
REVISED BY
DATE REVISED

LAST REVISION 00-00-00
DATE PLOTTED => 28-AUG-2015
TIME PLOTTED => 14:13

Dist	COUNTY	ROUTE	POST MILES TOTAL PROJECT	SHEET No.	TOTAL SHEETS
07	LA	210	R18.8/R24.9	53	95

REGISTERED ELECTRICAL ENGINEER 5/13/15 DATE

8-10-15
PLANS APPROVAL DATE

REGISTERED PROFESSIONAL ENGINEER JACQUELINE C. TAN No. E015611 Exp. 12/31/15 ELECTRICAL STATE OF CALIFORNIA

THE STATE OF CALIFORNIA OR ITS OFFICERS OR AGENTS SHALL NOT BE RESPONSIBLE FOR THE ACCURACY OR COMPLETENESS OF ELECTRONIC COPIES OF THIS PLAN SHEET.

NOTE:

FOR ACCURATE RIGHT OF WAY DATA, CONTACT RIGHT OF WAY ENGINEERING AT THE DISTRICT OFFICE.

LEGEND: (THIS SHEET ONLY)

1. INSTALL 2-48SMFO, 1-72SMFO AND 4 SIZE 1" INNERDUCTS IN 4"C. INSTALL 4"C, PT.
2. TRENCH AND INSTALL CONDUITS IN Exist PAVEMENT. SEE SHEET E-35 FOR DETAIL.
3. JACK CONDUITS UNDERNEATH THE ROADWAY. SEE SHEET E-36 FOR DETAIL.
4. ATTACH TYPE 1 CONDUITS TO THE BRIDGE RAILING. SEE STRUCTURE PLAN FOR DETAIL.
5. INSTALL 3"C, 1-12SMFO, 1 SIZE 1" INNERDUCT.
6. TRENCH AND INSTALL CONDUITS IN SOIL. SEE SHEET E-35 FOR DETAIL.

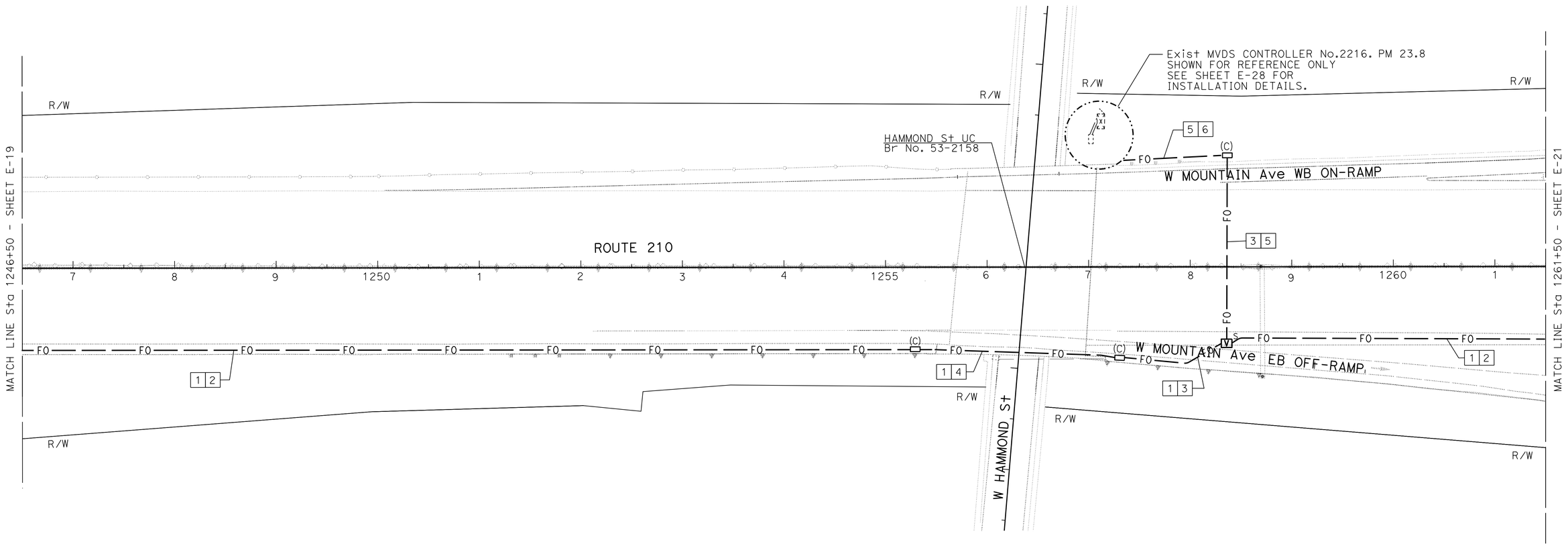

COMMUNICATION SYSTEM

SCALE: 1" = 50'

APPROVED FOR ELECTRICAL WORK ONLY

E-20

STATE OF CALIFORNIA - DEPARTMENT OF TRANSPORTATION
Caltrans **OFFICE OF ITS**

FUNCTIONAL SUPERVISOR: JACQUELINE C. TAN
CALCULATED-DESIGNED BY: HIEU LUU
CHECKED BY: JACQUELINE C. TAN
REVISED BY
DATE REVISED

LAST REVISION 00-00-00
DATE PLOTTED => 28-AUG-2015
TIME PLOTTED => 14:13

Dist	COUNTY	ROUTE	POST MILES TOTAL PROJECT	SHEET No.	TOTAL SHEETS
07	LA	210	R18.8/R24.9	54	95

REGISTERED ELECTRICAL ENGINEER 5/13/15 DATE

8-10-15
PLANS APPROVAL DATE

REGISTERED PROFESSIONAL ENGINEER JACQUELINE C. TAN No. E015611 Exp. 12/31/15 ELECTRICAL STATE OF CALIFORNIA

THE STATE OF CALIFORNIA OR ITS OFFICERS OR AGENTS SHALL NOT BE RESPONSIBLE FOR THE ACCURACY OR COMPLETENESS OF ELECTRONIC COPIES OF THIS PLAN SHEET.

NOTE:

FOR ACCURATE RIGHT OF WAY DATA, CONTACT RIGHT OF WAY ENGINEERING AT THE DISTRICT OFFICE.

LEGEND: (THIS SHEET ONLY)

1. INSTALL 2-48SMFO, 1-72SMFO AND 4 SIZE 1" INNERDUCTS IN 4"C. INSTALL 4"C, PT.
2. TRENCH AND INSTALL CONDUITS IN Exist PAVEMENT. SEE SHEET E-35 FOR DETAIL.
3. JACK CONDUITS UNDERNEATH THE ROADWAY. SEE SHEET E-36 FOR DETAIL.
4. INSTALL 3"C, 1-12SMFO, 1 SIZE 1" INNERDUCT.
5. RS MODEL 170 CONTROLLER UNIT. INSTALL DEPARTMENT-FURNISHED MODEL 2070 CONTROLLER UNIT. INSTALL ETHERNET SWITCH TYPE 1 WITH 2 SFP MODULE INTERNET CARD & FDU AND EQUIPMENT PER DETAILS SHEET E-38.
6. Exist 3"C, PT. ADD 1-12SMFO.
7. ATTACH TYPE 1 CONDUITS TO THE BRIDGE RAILING. SEE STRUCTURE PLAN FOR DETAIL.

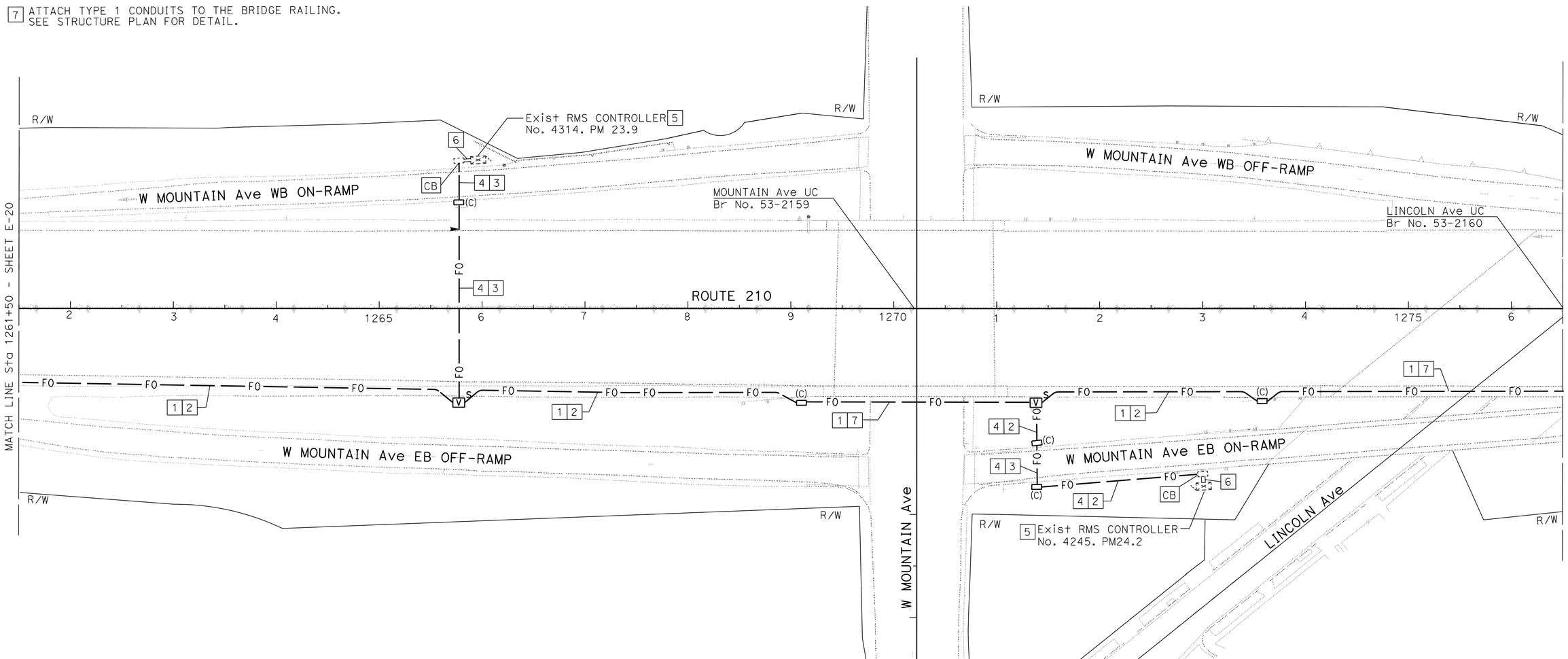

COMMUNICATION SYSTEM

SCALE: 1" = 50'

APPROVED FOR ELECTRICAL WORK ONLY

E-21

STATE OF CALIFORNIA - DEPARTMENT OF TRANSPORTATION
Caltrans OFFICE OF ITS

FUNCTIONAL SUPERVISOR: JACQUELINE C. TAN
CALCULATED-DESIGNED BY: HIEU LUU
CHECKED BY: JACQUELINE C. TAN
REVISED BY
DATE REVISED

LAST REVISION 00-00-00 | DATE PLOTTED => 28-AUG-2015 | TIME PLOTTED => 14:13

BORDER LAST REVISED 7/2/2010 | USERNAME => s115484 | DGN FILE => 712997ua021.dgn | RELATIVE BORDER SCALE IS IN INCHES 0 1 2 3 | UNIT 1885 | PROJECT NUMBER & PHASE 07140000801

Dist	COUNTY	ROUTE	POST MILES TOTAL PROJECT	SHEET No.	TOTAL SHEETS
07	LA	210	R18.8/R24.9	55	95

REGISTERED ELECTRICAL ENGINEER 5/13/15 DATE

8-10-15
PLANS APPROVAL DATE

REGISTERED PROFESSIONAL ENGINEER JACQUELINE C. TAN No. E015611 Exp. 12/31/15 ELECTRICAL STATE OF CALIFORNIA

THE STATE OF CALIFORNIA OR ITS OFFICERS OR AGENTS SHALL NOT BE RESPONSIBLE FOR THE ACCURACY OR COMPLETENESS OF ELECTRONIC COPIES OF THIS PLAN SHEET.

NOTE:
FOR ACCURATE RIGHT OF WAY DATA, CONTACT RIGHT OF WAY ENGINEERING AT THE DISTRICT OFFICE.

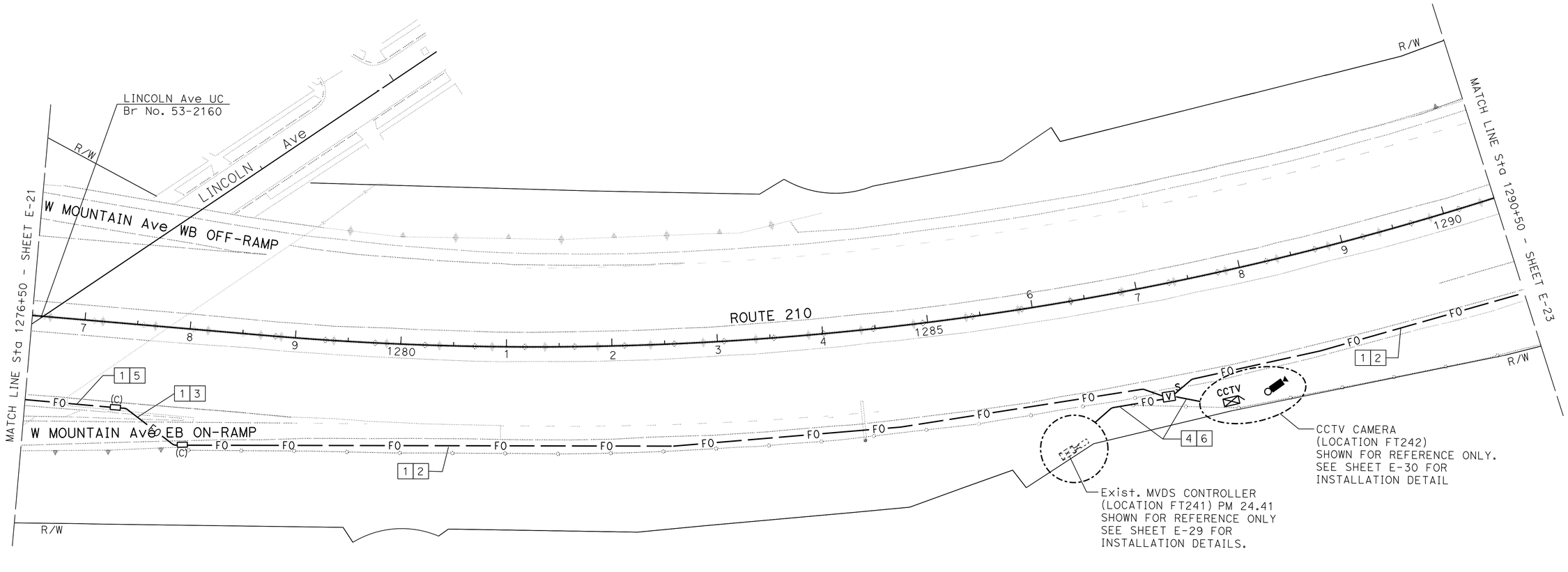

LEGEND:(THIS SHEET ONLY)

1. INSTALL 2-48SMFO, 1-72SMFO AND 4 SIZE 1" INNERDUCTS IN 4"C.
   INSTALL 4"C, PT.
2. TRENCH AND INSTALL CONDUITS IN Exist PAVEMENT. SEE SHEET E-35 FOR DETAIL.
3. JACK CONDUITS UNDERNEATH THE ROADWAY. SEE SHEET E-36 FOR DETAIL.
4. TRENCH AND INSTALL CONDUITS IN SOIL. SEE SHEET E-35 FOR DETAIL.
5. ATTACH TYPE 1 CONDUITS TO THE BRIDGE RAILING. SEE STRUCTURE PLAN FOR DETAIL.
6. INSTALL 3"C, 1-12SMFO, 1 SIZE 1" INNERDUCT.

COMMUNICATION SYSTEM

SCALE: 1" = 50'

APPROVED FOR ELECTRICAL WORK ONLY

E-22

STATE OF CALIFORNIA - DEPARTMENT OF TRANSPORTATION
Caltrans OFFICE OF ITS

FUNCTIONAL SUPERVISOR: JACQUELINE C. TAN
CALCULATED-DESIGNED BY: HIEU LUU
CHECKED BY: JACQUELINE C. TAN
REVISED BY
DATE REVISED

LAST REVISION 00-00-00
DATE PLOTTED => 28-AUG-2015
TIME PLOTTED => 14:13

Dist	COUNTY	ROUTE	POST MILES TOTAL PROJECT	SHEET No.	TOTAL SHEETS
07	LA	210	R18.8/R24.9	56	95

REGISTERED ELECTRICAL ENGINEER 5/13/15 DATE

8-10-15
PLANS APPROVAL DATE

REGISTERED PROFESSIONAL ENGINEER JACQUELINE C. TAN No. E015611 Exp. 12/31/15 ELECTRICAL STATE OF CALIFORNIA

THE STATE OF CALIFORNIA OR ITS OFFICERS OR AGENTS SHALL NOT BE RESPONSIBLE FOR THE ACCURACY OR COMPLETENESS OF ELECTRONIC COPIES OF THIS PLAN SHEET.

NOTE:

FOR ACCURATE RIGHT OF WAY DATA, CONTACT RIGHT OF WAY ENGINEERING AT THE DISTRICT OFFICE.

LEGEND:(THIS SHEET ONLY)

1 INSTALL 2-48SMFO, 1-72SMFO AND 4 SIZE 1" INNERDUCTS IN 4"C.
INSTALL 4"C, PT.

2 TRENCH AND INSTALL CONDUITS IN Exist PAVEMENT.
SEE SHEET E-35 FOR DETAIL.

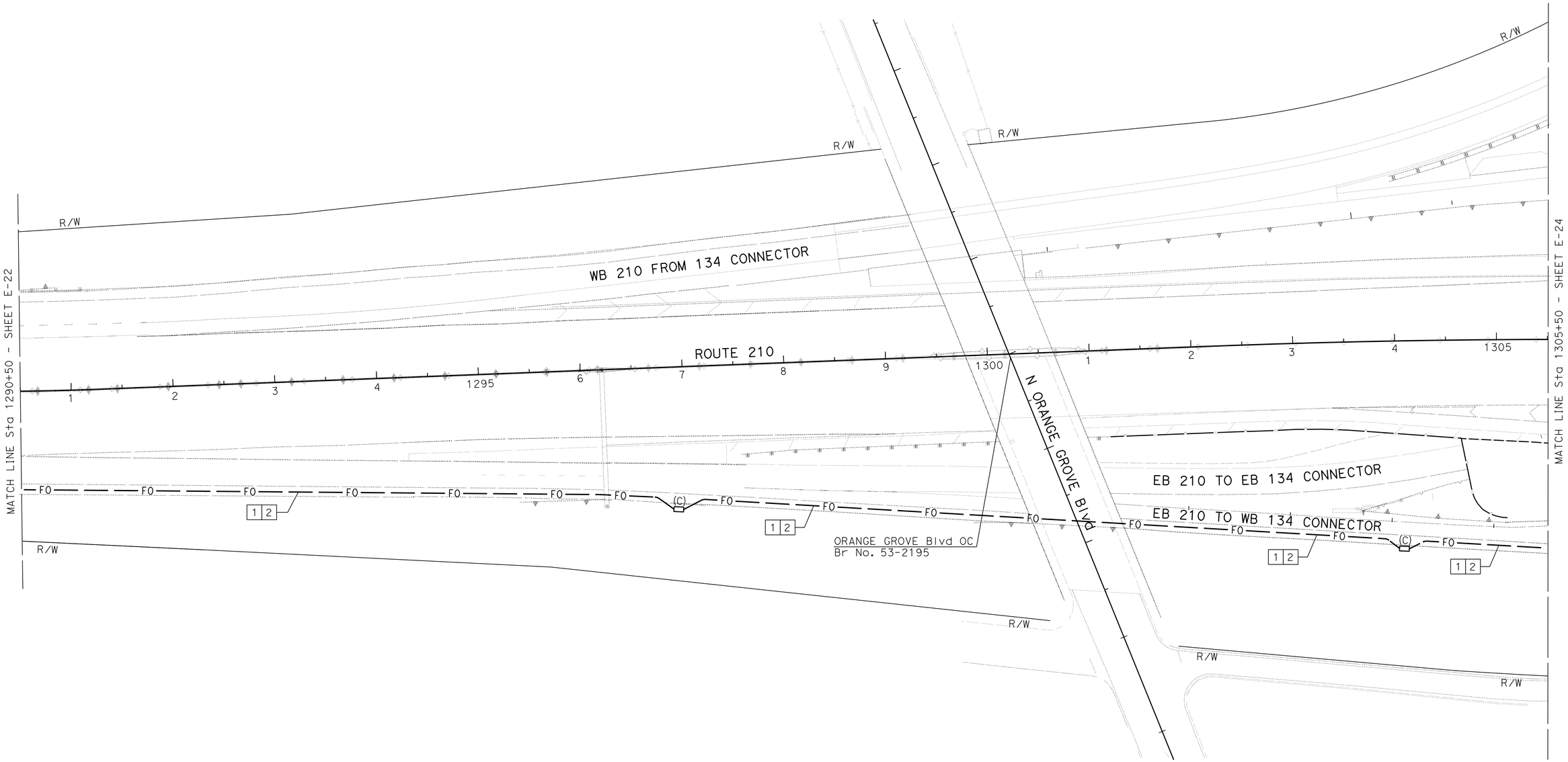

COMMUNICATION SYSTEM

SCALE: 1" = 50'

E-23

APPROVED FOR ELECTRICAL WORK ONLY

REVISED BY | DATE REVISED
HIEU LUU | JACQUELINE C. TAN
CALCULATED-DESIGNED BY | CHECKED BY
FUNCTIONAL SUPERVISOR
JACQUELINE C. TAN

STATE OF CALIFORNIA - DEPARTMENT OF TRANSPORTATION
Caltrans OFFICE OF ITS

LAST REVISION 00-00-00 | DATE PLOTTED => 28-AUG-2015 | TIME PLOTTED => 14:13

Dist	COUNTY	ROUTE	POST MILES TOTAL PROJECT	SHEET No.	TOTAL SHEETS
07	LA	210	R18.8/R24.9	57	95

REGISTERED ELECTRICAL ENGINEER 5/13/15 DATE

8-10-15
PLANS APPROVAL DATE

REGISTERED PROFESSIONAL ENGINEER JACQUELINE C. TAN No. E015611 Exp. 12/31/15 ELECTRICAL STATE OF CALIFORNIA

THE STATE OF CALIFORNIA OR ITS OFFICERS OR AGENTS SHALL NOT BE RESPONSIBLE FOR THE ACCURACY OR COMPLETENESS OF ELECTRONIC COPIES OF THIS PLAN SHEET.

NOTE:

FOR ACCURATE RIGHT OF WAY DATA, CONTACT RIGHT OF WAY ENGINEERING AT THE DISTRICT OFFICE.

LEGEND: (THIS SHEET ONLY)

1. INSTALL 2-48SMFO, 1-72SMFO AND 4 SIZE 1" INNERDUCTS IN 4"C. INSTALL 4"C, PT.
2. TRENCH AND INSTALL CONDUITS IN Exist PAVEMENT. SEE SHEET E-35 FOR DETAIL.
3. JACK CONDUITS UNDERNEATH THE ROADWAY. SEE SHEET E-36 FOR DETAIL.
4. TRENCH AND INSTALL CONDUITS IN SOIL. SEE SHEET E-35 FOR DETAIL.
5. INSTALL 3"C, 1-12SMFO, 1 SIZE 1" INNERDUCT.
6. RS MODEL 170 CONTROLLER UNIT. INSTALL DEPARTMENT-FURNISHED MODEL 2070 CONTROLLER UNIT. INSTALL ETHERNET SWITCH TYPE 1 WITH 2 SFP MODULE INTERNET CARD & FDU AND EQUIPMENT PER DETAILS SHEET E-38.
7. Exist 3"C, PT. ADD 1-12SMFO.
8. INSTALL MODEL 334 CONTROLLER CABINET ON NEW FOUNDATION. SEE SHEET E-38 AND E-39 FOR CONTROLLER CABINET FOUNDATION AND CABINET WIRING DETAILS.
9. EXISTING 120/240V TYPE III-BF SERVICE EQUIPMENT ENCLOSURE WITH:
   1-100 A, 240 V, 2P, CB - MAIN
   1-40 A, 120 V, 1P, CB - RMS
   1-30 A, 120 V, 1P, CB - CCTV CAMERA
   1-20 A, 120 V, 1P, CB - DATA NODE
   ADD
   1- 20 A, 240 V, 1P, CB - INTERNET PROTOCOL NODE
   Citd No.07-53-134-R-022.557
   ADDRESS: 271 Walnut St
10. INSTALL 3"C, 2#4, 1#4 (G).
11. INSTALL CONDUITS IN THE SAME TRENCH.
12. INSTALL 1-48SMFO AND 1" INNERDUCT IN 4"C.
13. INSTALL 1-72SMFO, 1-48SMFO, 2 SIZE 1" INNERDUCT IN 4"C.
14. Exist 4"C, PT. ADD 1-72SMFO, 1-48 SMFO.
15. RC PULL BOX COVER. INSTALL TAMPER RESISTANT COVER.

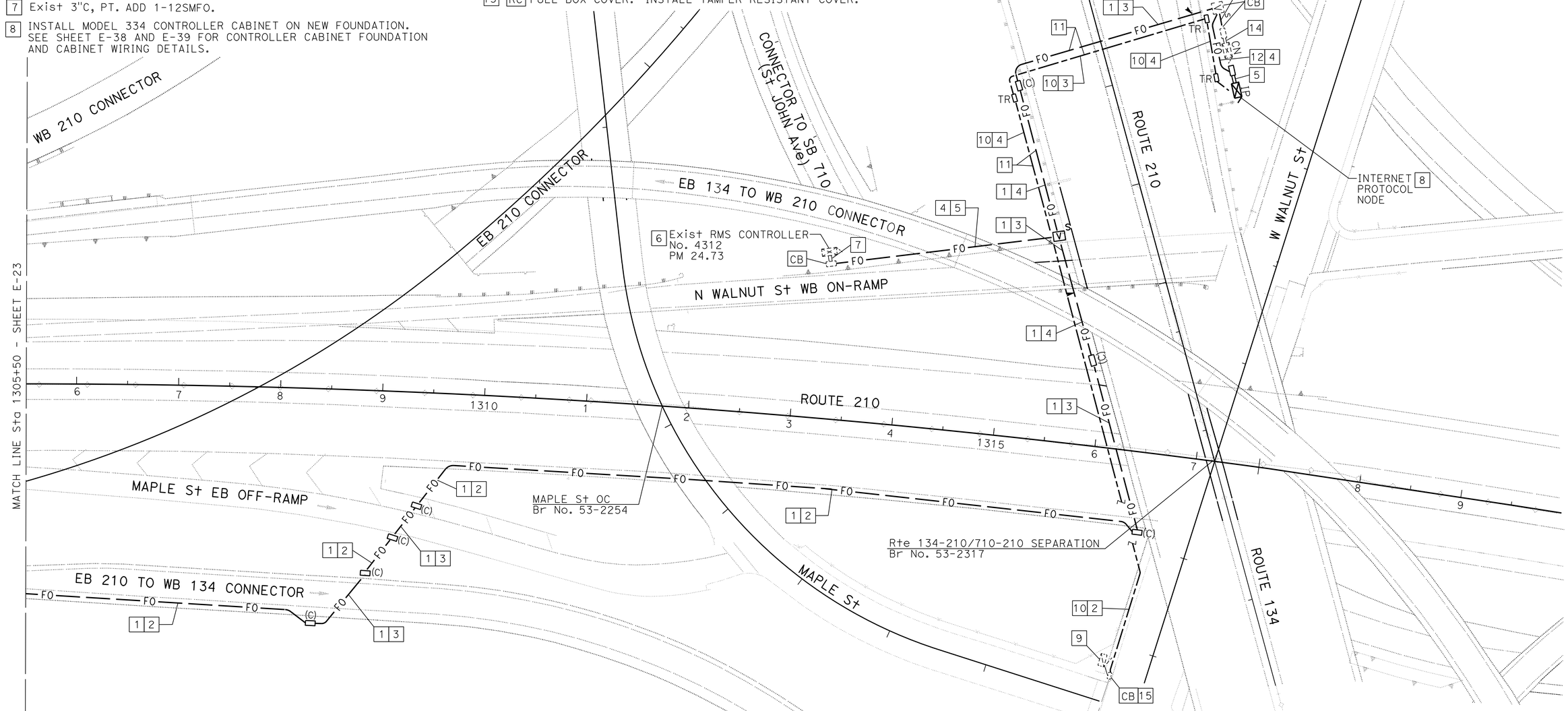

COMMUNICATION SYSTEM

SCALE: 1" = 50'

APPROVED FOR ELECTRICAL WORK ONLY

E-24

STATE OF CALIFORNIA - DEPARTMENT OF TRANSPORTATION
Caltrans OFFICE OF ITS

FUNCTIONAL SUPERVISOR: JACQUELINE C. TAN
CALCULATED-DESIGNED BY: HIEU LUU
CHECKED BY: JACQUELINE C. TAN
REVISED BY / DATE REVISED

LAST REVISION 00-00-00 | DATE PLOTTED => 28-AUG-2015 | TIME PLOTTED => 14:13

Dist	COUNTY	ROUTE	POST MILES TOTAL PROJECT	SHEET No.	TOTAL SHEETS
07	LA	210	R18.8/R24.9	58	95

Jacqueline C Tan 5/13/15
REGISTERED ELECTRICAL ENGINEER DATE

8-10-15
PLANS APPROVAL DATE

REGISTERED PROFESSIONAL ENGINEER JACQUELINE C. TAN No. E015611 Exp 12/31/13 ELECTRICAL STATE OF CALIFORNIA

THE STATE OF CALIFORNIA OR ITS OFFICERS OR AGENTS SHALL NOT BE RESPONSIBLE FOR THE ACCURACY OR COMPLETENESS OF SCANNED COPIES OF THIS PLAN SHEET.

NOTE:

FOR ACCURATE RIGHT OF WAY DATA, CONTACT RIGHT OF WAY ENGINEERING AT THE DISTRICT OFFICE.

LEGEND: (THIS SHEET ONLY)

1. Exist TYPE III-BF, 120 / 240 V, 100A, 1 PHASE, 3 WIRE, SERVICE EQUIPMENT ENCLOSURE WITH:
   (1) 100 A, 240 V, 2P - MAIN BREAKER
   (1) 30 A, 120 V, 1P - RAMP METERING (Loc 29)
   RC 20 A, 120 V, 1P - TDC
   ADD:
   (1) 30 A, 240 V, 2P - CMS PANEL
   (1) 30 A, 120 V, 1P - CMS CABINET
   (1) 30 A, 120 V, 1P - CCTV CAMERA
   ADDRESS: 4705 1/2 GOULD Ave
   ID No. 07-53-210-0-020.530
2. Exist 3"C, 2#4, 2#8, 1#8(G).
   Exist 3"C, ADD 4#4, 3#1, 1#2(G).
3. INSTALL 3"C, 4#4, 3#1, 1#2(G).
4. INSTALL 2"C, 2#4, 1#8(G).
5. INSTALL DEPARTMENT-FURNISHED MODEL 170E CONTROLLER ASSEMBLY. SEE SHEETS E-39 AND E-41 FOR CONTROLLER CABINET FOUNDATION AND CONTROLLER ASSEMBLY DETAILS.
6. INSTALL 3"C, 2#4, 1#8(G) AND 3"C, DEPARTMENT-FURNISHED CMS CONTROL CABLE, 1#8(G).
7. INSTALL 3"C, 3#1, 1#1(G) AND 3"C, DEPARTMENT-FURNISHED CMS CONTROL CABLE. 1#8(G).
8. INSTALL DEPARTMENT-FURNISHED MODEL 500 LED CMS PANEL ON SIGN STRUCTURE. SEE STANDARD PLANS FOR DETAILS.
9. INSTALL MODEL 334-TV CONTROLLER CABINET. SEE SHEETS E-39 AND E-42 FOR CONTROLLER CABINET FOUNDATION AND WIRING DETAILS.
10. INSTALL 3"C, 2#4, 1#8(G) AND 3"C, COMPOSITE VIDEO CABLE, 1#8(G).
11. INSTALL 2"C, COMPOSITE VIDEO CABLE. 1#8(G).
12. INSTALL CCTV CAMERA ASSEMBLY ON TYPE CCTV 45 POLE. SEE SHEET E-43 FOR DETAILS.
13. TRENCH CONDUITS IN SOIL.
14. INSTALL 2"C, 1" INNERDUCT, 12SMFO CABLE.
15. JACK CONDUITS UNDERNEATH THE ROADWAY. SEE SHEET E-33 FOR DETAIL.
16. RC PULL BOX COVER. INSTALL TAMPER RESISTANT COVER.

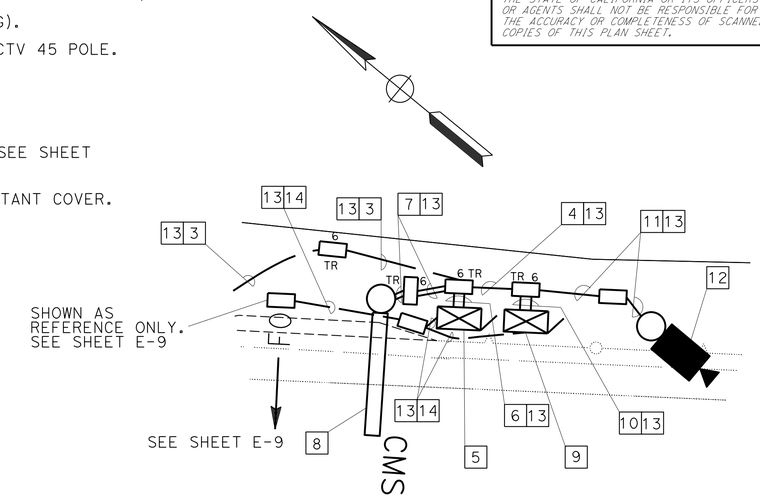

DETAIL A

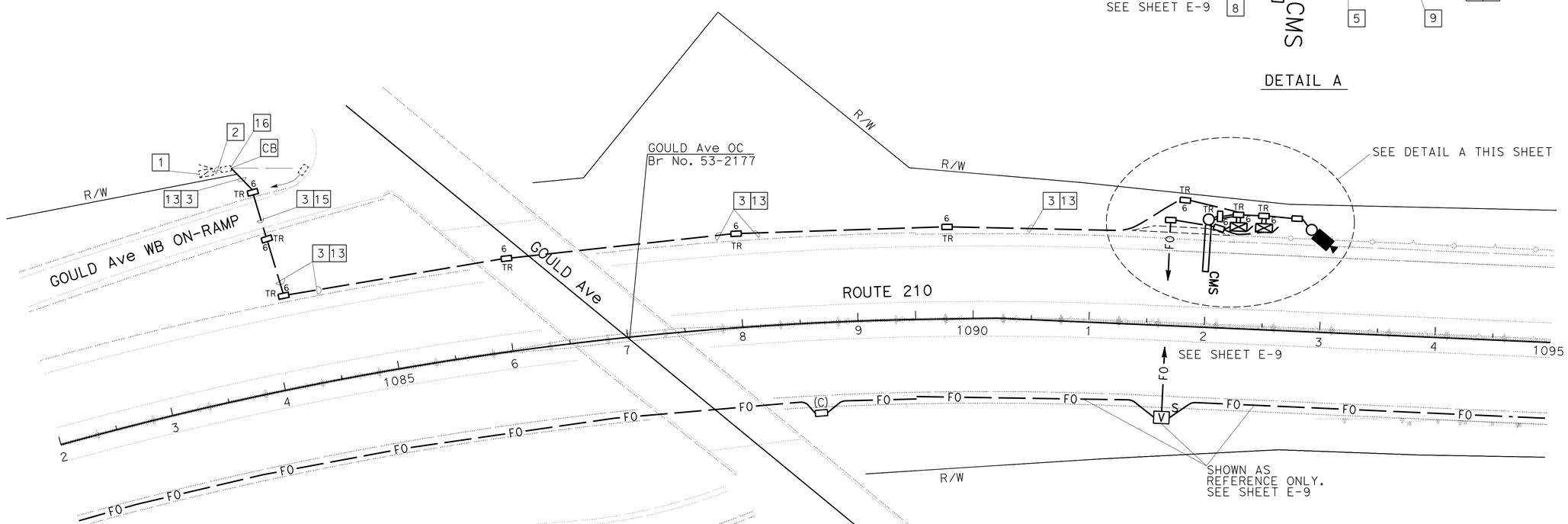

CHANGEABLE MESSAGE SIGN AND CLOSED CIRCUIT TELEVISION CAMERA (LOCATION FT207)

SCALE: 1" = 50'

APPROVED FOR ELECTRICAL WORK ONLY

E-25

STATE OF CALIFORNIA - DEPARTMENT OF TRANSPORTATION
Caltrans
OFFICE OF ITS

FUNCTIONAL SUPERVISOR: JACQUELINE C. TAN
CALCULATED-DESIGNED BY: CONWAY CHU
CHECKED BY: JACQUELINE C. TAN
REVISED BY
DATE REVISED

LAST REVISION 07-21-14
DATE PLOTTED => 28-AUG-2015
TIME PLOTTED => 14:13

Dist	COUNTY	ROUTE	POST MILES TOTAL PROJECT	SHEET No.	TOTAL SHEETS
07	LA	210	R18.8/R24.9	59	95

Jacqueline C Tan 5/13/15
REGISTERED ELECTRICAL ENGINEER DATE

8-10-15
PLANS APPROVAL DATE

REGISTERED PROFESSIONAL ENGINEER
JACQUELINE C. TAN
No. E015611
Exp 12/31/13
ELECTRICAL
STATE OF CALIFORNIA

THE STATE OF CALIFORNIA OR ITS OFFICERS OR AGENTS SHALL NOT BE RESPONSIBLE FOR THE ACCURACY OR COMPLETENESS OF SCANNED COPIES OF THIS PLAN SHEET.

NOTE:

FOR ACCURATE RIGHT OF WAY DATA, CONTACT
RIGHT OF WAY ENGINEERING AT THE DISTRICT OFFICE.

LEGEND: (THIS SHEET ONLY)

1. Exist TYPE III-BF, 120 / 240 V, 100 A, 1 PHASE, 3 WIRE, SERVICE EQUIPMENT ENCLOSURE WITH:
   (1) 100 A, 240 V, 2P - MAIN BREAKER
   RC 20 A, 120 V, 1P - 334 CONTROLLER FOR MVDS
   ADD:
   (1) 20 A, 120 V, 1P - TMS
   ADDRESS: 120 ½ OAK GROVE Dr
   ID No.: 07-53-210-R-022.005
2. Exist 2"C, 2#8, 1#8(G).
3. Exist 3"C, 12P18, 1#8(G). RC 12P18. ADD 4 DLC.
4. Exist 3"C, 2-12P18, 1#8(G). RC 2-12P18. ADD 8 DLC.
   Exist 3"C, ADD 1" INNERDUCT, 12SMFO CABLE.
5. RS MVDS EQUIPMENT. INSTALL DEPARTMENT-FURNISHED MODEL 2070 CONTROLLER AND EQUIPMENT. SEE SHEET E-38 FOR DETAILS.
6. INSTALL 2"C, 1" INNERDUCT, 12SMFO CABLE.
7. TRENCH CONDUITS IN SOIL.
8. RC PULL BOX COVER. INSTALL TAMPER RESISTANT COVER.

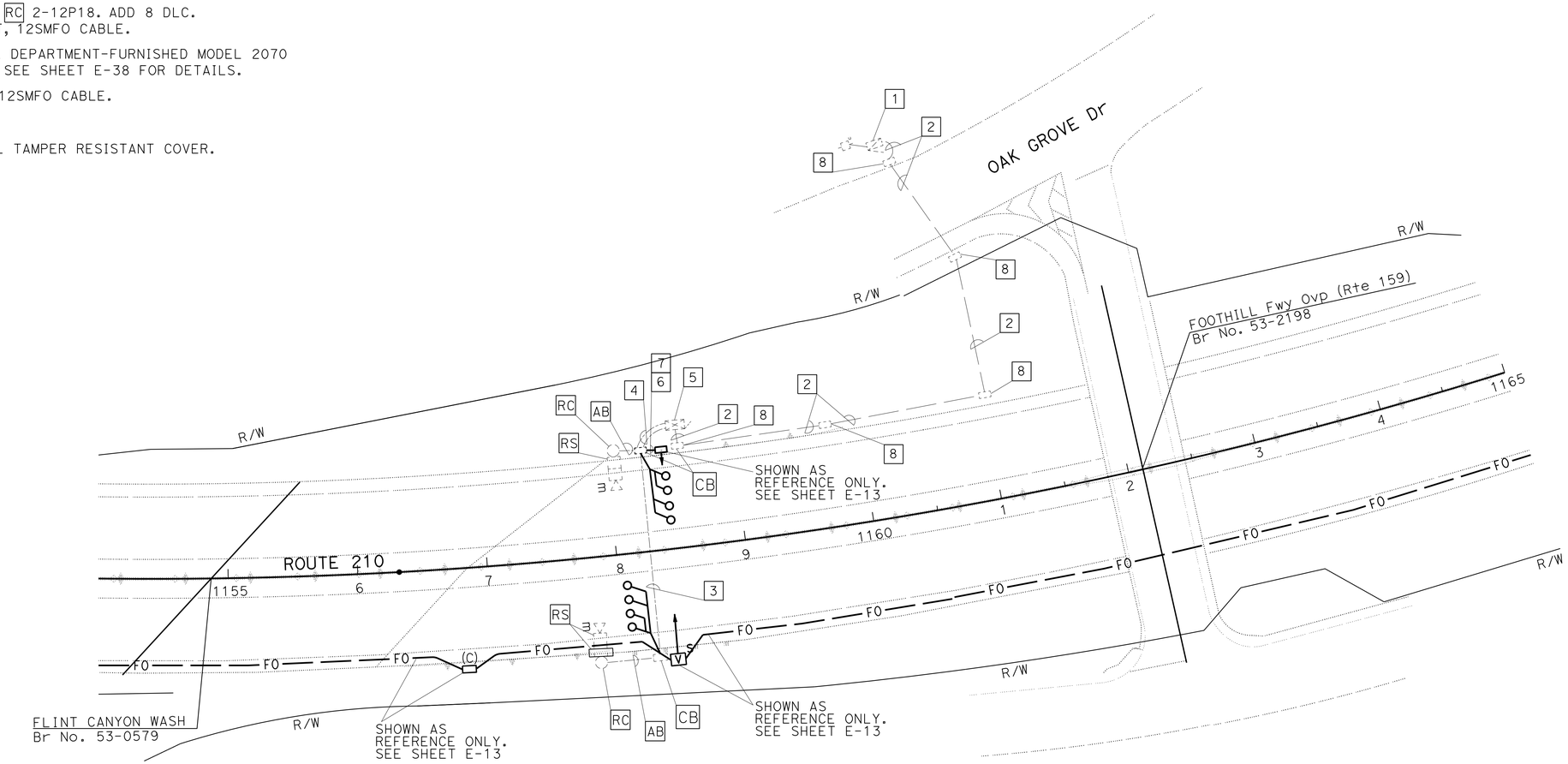

MODIFY TRAFFIC MONITORING STATION

SCALE: 1" = 50'

(LOCATION FT219)

APPROVED FOR ELECTRICAL WORK ONLY

E-26

STATE OF CALIFORNIA - DEPARTMENT OF TRANSPORTATION
Caltrans
OFFICE OF ITS

FUNCTIONAL SUPERVISOR: JACQUELINE C. TAN
CALCULATED-DESIGNED BY: CONWAY CHU
CHECKED BY: JACQUELINE C. TAN
REVISED BY
DATE REVISED

LAST REVISION 07-21-14
DATE PLOTTED => 28-AUG-2015
TIME PLOTTED => 14:13

Dist	COUNTY	ROUTE	POST MILES TOTAL PROJECT	SHEET No.	TOTAL SHEETS
07	LA	210	R18.8/R24.9	60	95

REGISTERED ELECTRICAL ENGINEER 5/13/15 DATE

8-10-15
PLANS APPROVAL DATE

REGISTERED PROFESSIONAL ENGINEER JACQUELINE C. TAN No. E015611 Exp 12/31/13 ELECTRICAL STATE OF CALIFORNIA

THE STATE OF CALIFORNIA OR ITS OFFICERS OR AGENTS SHALL NOT BE RESPONSIBLE FOR THE ACCURACY OR COMPLETENESS OF SCANNED COPIES OF THIS PLAN SHEET.

NOTE:

FOR ACCURATE RIGHT OF WAY DATA, CONTACT RIGHT OF WAY ENGINEERING AT THE DISTRICT OFFICE.

LEGEND: (THIS SHEET ONLY)

1. **Exist TYPE III-BF, 120 / 240 V, 100 A, 1 PHASE, 3 WIRE, SERVICE EQUIPMENT ENCLOSURE WITH:**
   (1) 100 A, 240 V, 2P - MAIN BREAKER
   (1) 30 A, 120 V, 1P - RAMP METERING (Loc 29)
   RC 20 A, 120 V, 1P - TDC
   ADD:
   (1) 30 A, 120 V, 1P - CCTV CAMERA
   ADDRESS: 1309 1/2 MENTONE Ave
   ID No. 07-53-210-0-020.530
2. **Exist 2#4, 1#8(G). ADD 2#4.**
3. INSTALL 2"C, 2#4, 1#8(G).
4. INSTALL 3"C, 2#4, 1#8(G), COMPOSITE VIDEO CABLE AND 3"C, 12SMFO CABLE.
5. INSTALL MODEL 334-TV CONTROLLER CABINET. SEE SHEETS E-39 AND E-42 FOR CONTROLLER CABINET FOUNDATION AND WIRING DETAILS.
6. INSTALL 2"C, COMPOSITE VIDEO CABLE, 1#8(G).
7. Exist 1.5"C, 2#8. ADD COMPOSITE VIDEO CABLE. 1#8(G).
8. INSTALL CCTV CAMERA ASSEMBLY WITH TYPE CCTV 15 ON TOP OF SIGN POLE. SEE ES-16A FOR DETAILS.
9. TRENCH CONDUITS IN SOIL.
10. INSTALL 2"C, 1" INNERDUCT, 12SMFO CABLE.
11. RC PULL BOX COVER. INSTALL TAMPER RESISTANT COVER.

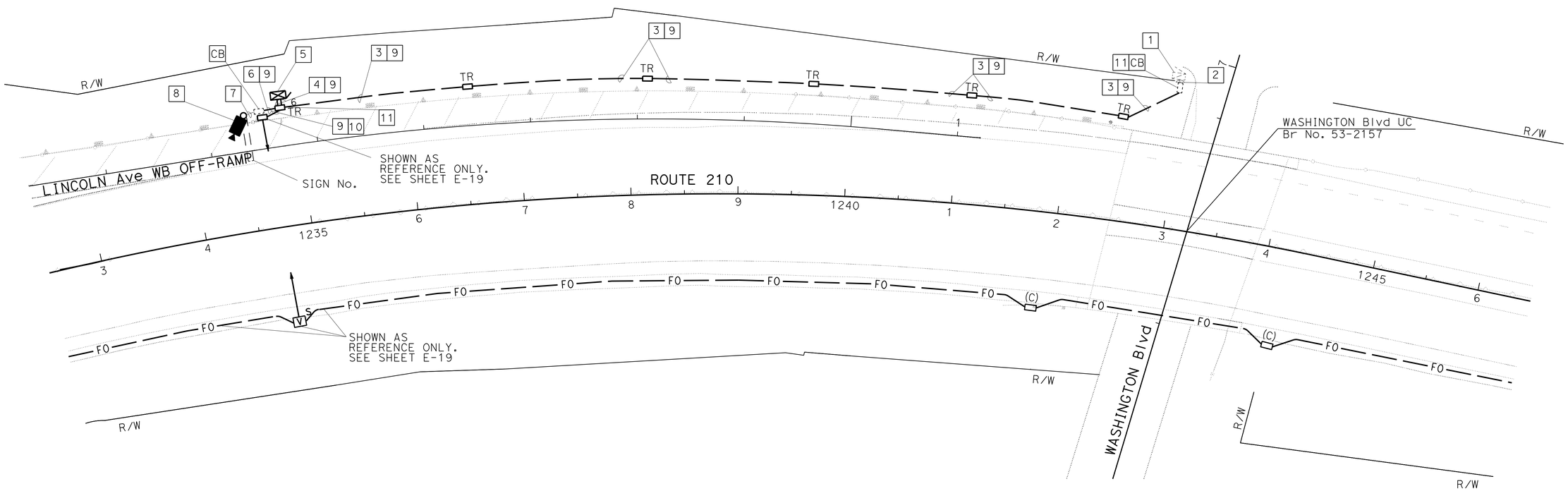

CLOSED CIRCUIT TELEVISION CAMERA (LOCATION FT234)

SCALE: 1" = 50'

APPROVED FOR ELECTRICAL WORK ONLY

E-27

STATE OF CALIFORNIA - DEPARTMENT OF TRANSPORTATION
Caltrans
OFFICE OF ITS

FUNCTIONAL SUPERVISOR: JACQUELINE C. TAN
CALCULATED-DESIGNED BY: CONWAY CHU
CHECKED BY: JACQUELINE C. TAN
REVISED BY
DATE REVISED

LAST REVISION 07-21-14
DATE PLOTTED => 28-AUG-2015
TIME PLOTTED => 14:13

Dist	COUNTY	ROUTE	POST MILES TOTAL PROJECT	SHEET No.	TOTAL SHEETS
07	LA	210	R18.8/R24.9	61	95

Jacqueline C Tan 5/13/15
REGISTERED ELECTRICAL ENGINEER DATE

8-10-15
PLANS APPROVAL DATE

REGISTERED PROFESSIONAL ENGINEER
JACQUELINE C. TAN
No. E015611
Exp. 12/31/15
ELECTRICAL
STATE OF CALIFORNIA

THE STATE OF CALIFORNIA OR ITS OFFICERS OR AGENTS SHALL NOT BE RESPONSIBLE FOR THE ACCURACY OR COMPLETENESS OF SCANNED COPIES OF THIS PLAN SHEET.

NOTE:

FOR ACCURATE RIGHT OF WAY DATA, CONTACT
RIGHT OF WAY ENGINEERING AT THE DISTRICT OFFICE.

LEGEND: (THIS SHEET ONLY)

1 Exist TYPE III-BF, 120 / 240 V, 100 A, 1 PHASE, 3 WIRE, SERVICE EQUIPMENT ENCLOSURE WITH:
(1) 100 A, 240 V, 2P - MAIN BREAKER
(1) 20 A, 120 V, 1P - 334 CONTROLLER FOR MVDS
(1) 20 A, 120 V, 1P - TDC
(2) 20 A, 120 V, 1P - SPARES
RC 20 A, 120 V, 1P - 334 CONTROLLER FOR MVDS
RC 20 A, 120 V, 1P - TDC
ADD:
(1) 20 A, 120 V, 1P - TMS
ADDRESS: 402 1/2 HAMMOND St
ID No.: 07-53-210-R-023.810

2 Exist 2"C, 4#10 AND 1#8(G). RC 4#10. ADD 2#8.

3 Exist 2"C, 2#10 AND 1#8(G). RC 2#10. ADD 2#8.

4 INSTALL 3"C, 5 DLC, 1#8(G).

5 Exist 2"C, 12P18 AND 1#8(G). RC 12P18. ADD 5 DLC.

6 INSTALL 3"C, 6 DLC, 1#8(G).

7 Exist 3"C, 12P18 AND 1#8(G). RC 12P18. ADD 11 DLC.
3"C, 12SMFO CABLE, 1#8(G).

8 RS MVDS EQUIPMENT. INSTALL DEPARTMENT-FURNISHED MODEL 2070 CONTROLLER AND EQUIPMENT. SEE SHEET E-38 FOR DETAILS.

9 TRENCH CONDUITS IN SOIL.

10 INSTALL 2"C, 1" INNERDUCT, 12SMFO CABLE.

11 RC PULL BOX COVER. INSTALL TAMPER RESISTANT COVER.

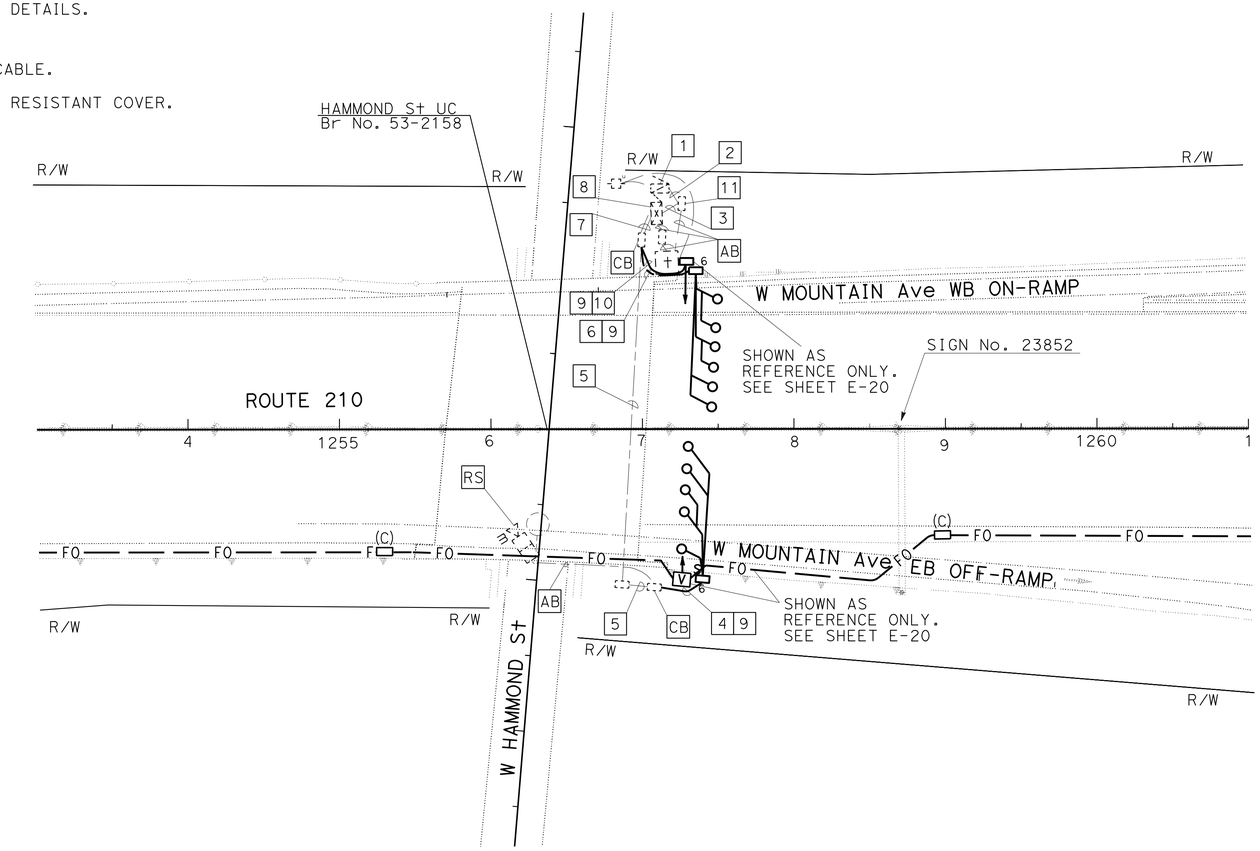

MODIFY TRAFFIC MONITORING STATION

SCALE: 1" = 50'

(LOCATION FT221)

APPROVED FOR ELECTRICAL WORK ONLY

E-28

STATE OF CALIFORNIA - DEPARTMENT OF TRANSPORTATION
Caltrans
OFFICE OF ITS

FUNCTIONAL SUPERVISOR: JACQUELINE C. TAN
CALCULATED-DESIGNED BY: CONWAY CHU
CHECKED BY: JACQUELINE C. TAN
REVISED BY
DATE REVISED

LAST REVISION 07-21-14
DATE PLOTTED => 28-AUG-2015
TIME PLOTTED => 14:13

Dist	COUNTY	ROUTE	POST MILES TOTAL PROJECT	SHEET No.	TOTAL SHEETS
07	LA	210	R18.8/R24.9	62	95

REGISTERED ELECTRICAL ENGINEER 5/13/15 DATE

8-10-15
PLANS APPROVAL DATE

REGISTERED PROFESSIONAL ENGINEER JACQUELINE C. TAN No. E015611 Exp 12/31/13 ELECTRICAL STATE OF CALIFORNIA

THE STATE OF CALIFORNIA OR ITS OFFICERS OR AGENTS SHALL NOT BE RESPONSIBLE FOR THE ACCURACY OR COMPLETENESS OF SCANNED COPIES OF THIS PLAN SHEET.

NOTE:

FOR ACCURATE RIGHT OF WAY DATA, CONTACT
RIGHT OF WAY ENGINEERING AT THE DISTRICT OFFICE.

LEGEND: (THIS SHEET ONLY)

1 Exist TYPE III-BF, 120 / 240 V, 100 A, 1 PHASE, 3 WIRE, SERVICE EQUIPMENT ENCLOSURE WITH:
(1) 100 A, 240 V, 2P - MAIN BREAKER
(1) 20 A, 120 V, 1P - 334 CONTROLLER FOR MVDS
(1) 20 A, 120 V, 1P - TDC
(2) 20 A, 120 V, 1P - SPARES
RC 20 A, 120 V, 1P - 334 CONTROLLER FOR MVDS
RC 20 A, 120 V, 1P - TDC
ADD:
(1) 20 A, 120 V, 1P - TMS
ADDRESS: 834 1/2 WINONA Ave
ID No.: 07-53-210-R-024.390

2 Exist 2"C, 4#10 AND 1#8(G). RC 4#10. ADD 4#8.

3 Exist 2"C, 2#10 AND 1#8(G). RC 2#10. ADD 2#8.

4 INSTALL 3"C, 6 DLC, 1#8(G).

5 Exist 3"C, 12P18 AND 1#8(G). RC 12P18. ADD 6 DLC.

6 INSTALL 3"C, 6 DLC, 1#8(G).

7 INSTALL 3"C, 12 DLC, 1#8(G).

8 Exist 3"C, 2-12P18 AND 1#8(G). RC 12P18. ADD 12 DLC.
Exist 3"C, INSTALL 1" INNERDUCT, 12SMFO CABLE.

9 RS MVDS EQUIPMENT. INSTALL DEPARTMENT-FURNISHED MODEL 2070 CONTROLLER AND EQUIPMENT. SEE SHEET E-38 FOR DETAILS.

10 TRENCH CONDUITS IN SOIL.

11 INSTALL 2"C, 1" INNERDUCT, 12SMFO CABLE.

12 Exist 2"C. RC 2#12P18, 1#8(G). ADD 1" INNERDUCT, 12SMFO CABLE.

13 RC PULL BOX COVER. INSTALL TAMPER RESISTANT COVER.

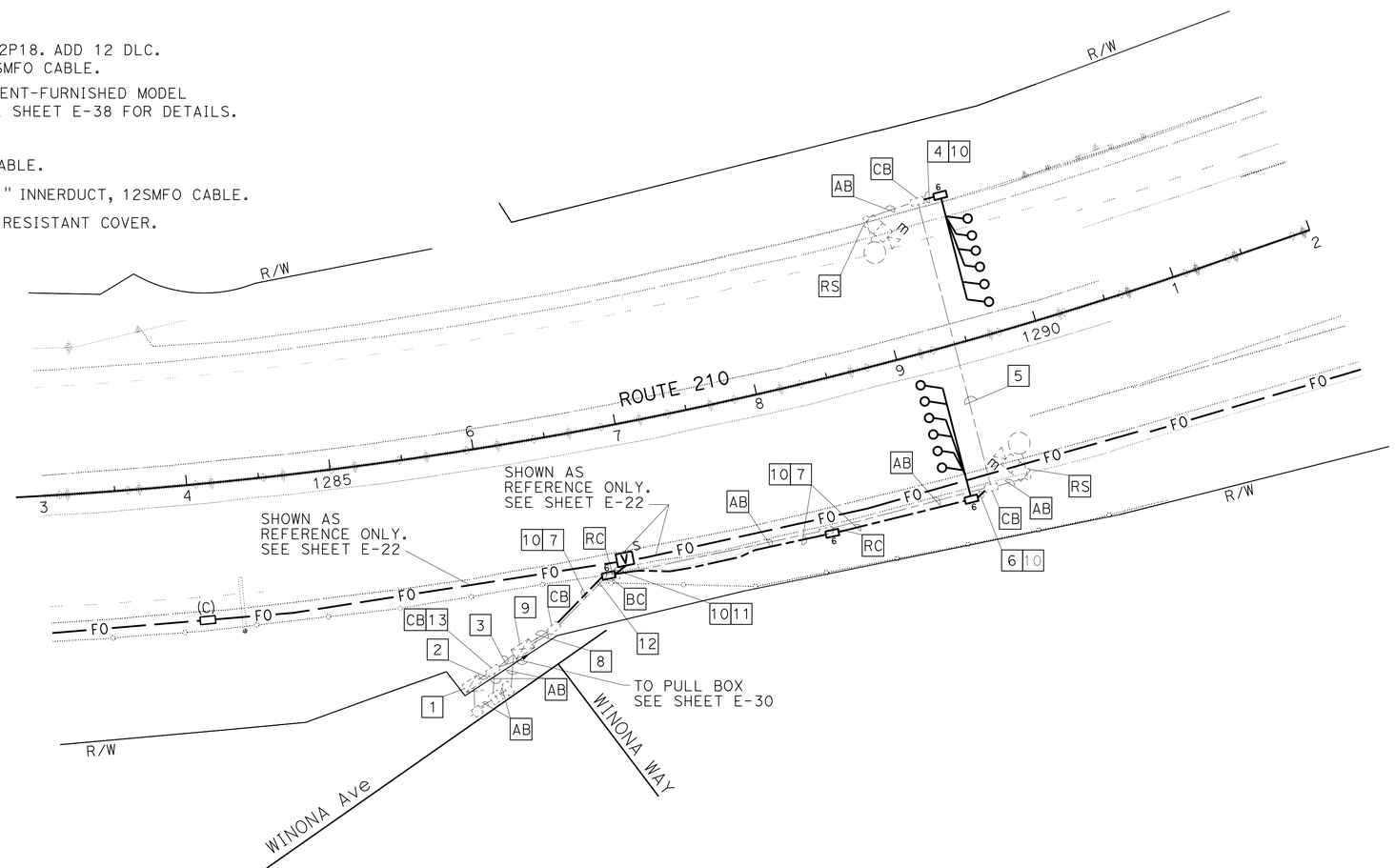

MODIFY TRAFFIC MONITORING STATION

SCALE: 1" = 50'

(LOCATION FT241)

APPROVED FOR ELECTRICAL WORK ONLY

E-29

STATE OF CALIFORNIA - DEPARTMENT OF TRANSPORTATION
Caltrans
OFFICE OF ITS

FUNCTIONAL SUPERVISOR: JACQUELINE C. TAN
CALCULATED-DESIGNED BY: CONWAY CHU
CHECKED BY: JACQUELINE C. TAN
REVISED BY
DATE REVISED

LAST REVISION 07-21-14
DATE PLOTTED => 28-AUG-2015
TIME PLOTTED => 14:13

Dist	COUNTY	ROUTE	POST MILES TOTAL PROJECT	SHEET No.	TOTAL SHEETS
07	LA	210	R18.8/R24.9	63	95

Jacqueline C Tan 5/13/15
REGISTERED ELECTRICAL ENGINEER DATE

8-10-15
PLANS APPROVAL DATE

REGISTERED PROFESSIONAL ENGINEER
JACQUELINE C. TAN
No. E015611
Exp 12/31/13
ELECTRICAL
STATE OF CALIFORNIA

THE STATE OF CALIFORNIA OR ITS OFFICERS OR AGENTS SHALL NOT BE RESPONSIBLE FOR THE ACCURACY OR COMPLETENESS OF SCANNED COPIES OF THIS PLAN SHEET.

NOTE:

FOR ACCURATE RIGHT OF WAY DATA, CONTACT RIGHT OF WAY ENGINEERING AT THE DISTRICT OFFICE.

LEGEND: (THIS SHEET ONLY)

1. INSTALL 2"C, 2#8, 1#8(G).
2. INSTALL 2"C, COMPOSITE VIDEO CABLE, 1#8(G).
3. INSTALL 3"C, COMPOSITE VIDEO CABLE, 2#8, 1#8(G) AND 3"C, 1" INNERDUCT, 12SMFO CABLE.
4. INSTALL MODEL 334-TV CONTROLLER CABINET AND EQUIPMENT. SEE SHEET E-42 FOR DETAILS.
5. INSTALL CCTV CAMERA ASSEMBLY ON TYPE CCTV 45 POLE.
6. TRENCH CONDUIT IN SOIL.
7. INSTALL 2"C, 1" INNERDUCT, 12SMFO CABLE.

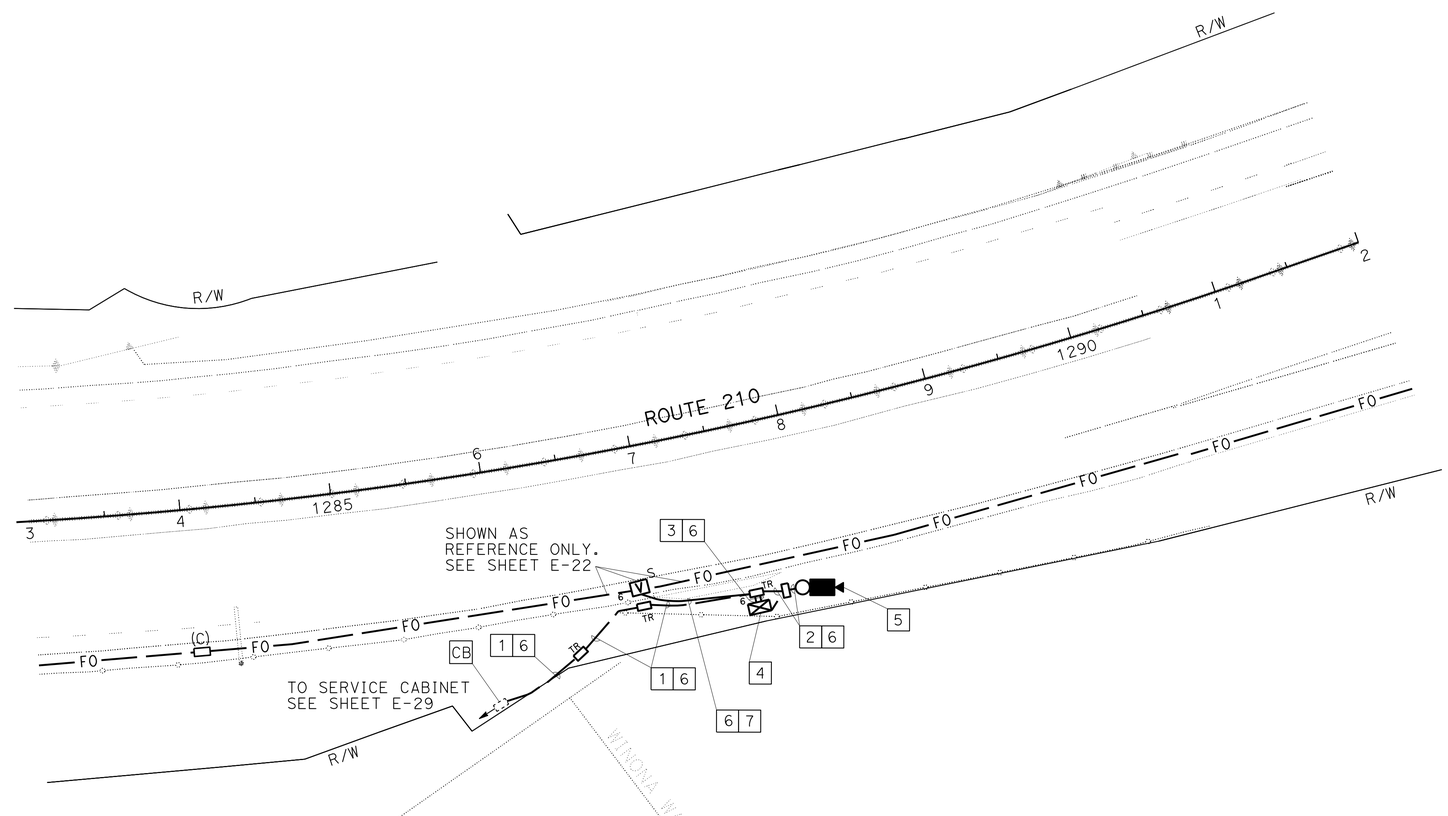

CLOSED CIRCUIT TELEVISION CAMERA (LOCATION FT242)

SCALE: 1" = 50'

APPROVED FOR ELECTRICAL WORK ONLY

E-30

STATE OF CALIFORNIA - DEPARTMENT OF TRANSPORTATION
Caltrans
OFFICE OF ITS

FUNCTIONAL SUPERVISOR: JACQUELINE C. TAN
CALCULATED-DESIGNED BY: CONWAY CHU
CHECKED BY: JACQUELINE C. TAN
REVISED BY
DATE REVISED

LAST REVISION 07-21-14
DATE PLOTTED => 28-AUG-2015
TIME PLOTTED => 14:13

Dist	COUNTY	ROUTE	POST MILES TOTAL PROJECT	SHEET No.	TOTAL SHEETS
07	LA	210	R18.8/R24.9	64	95

REGISTERED ELECTRICAL ENGINEER — DATE 5/13/15

8-10-15
PLANS APPROVAL DATE

REGISTERED PROFESSIONAL ENGINEER — JACQUELINE C.TAN — No. E015611 — Exp. 12/31/13 — ELECTRICAL — STATE OF CALIFORNIA

THE STATE OF CALIFORNIA OR ITS OFFICERS OR AGENTS SHALL NOT BE RESPONSIBLE FOR THE ACCURACY OR COMPLETENESS OF SCANNED COPIES OF THIS PLAN SHEET.

LEGEND:(THIS SHEET ONLY)

1. SEE SHEET E-38 FOR COMPONENT DETAILS.
2. ETHERNET SWITCH TYPE 1 WITH TWO SFP MODULES.
3. SHOWN FOR REFERENCE ONY. SEE SHEET E-38 FOR COMPONENT DETAILS.
4. ETHERNET SWITCH TYPE 2 WITH TWO SFP MODULES.

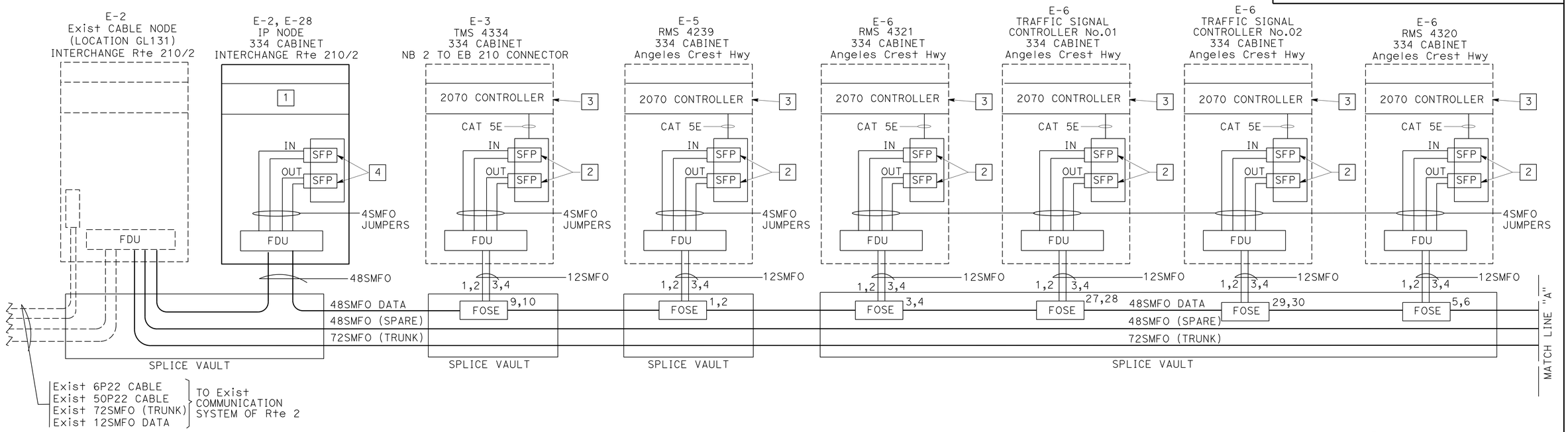

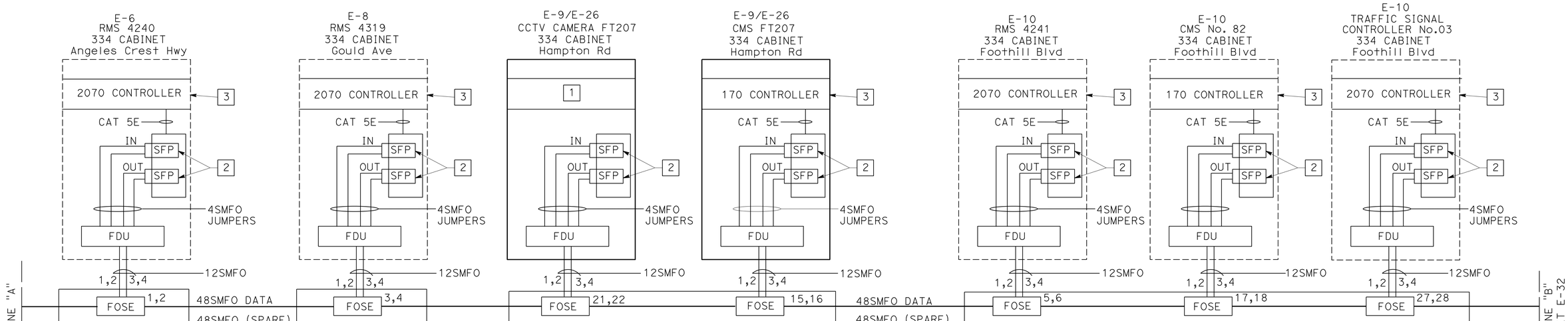

COMMUNICATION SYSTEM

NO SCALE

(BLOCK DIAGRAM)

E-31

STATE OF CALIFORNIA - DEPARTMENT OF TRANSPORTATION
Caltrans® OFFICE OF ITS

FUNCTIONAL SUPERVISOR: JACQUELINE C TAN
CALCULATED-DESIGNED BY: HIEU LUU
CHECKED BY: JACQUELINE C TAN
REVISED BY
DATE REVISED

LAST REVISION 00-00-00
DATE PLOTTED => 28-AUG-2015
TIME PLOTTED => 14:13

Dist	COUNTY	ROUTE	POST MILES TOTAL PROJECT	SHEET No.	TOTAL SHEETS
07	LA	210	R18.8/R24.9	65	95

REGISTERED ELECTRICAL ENGINEER 5/13/15 DATE

8-10-15
PLANS APPROVAL DATE

REGISTERED PROFESSIONAL ENGINEER JACQUELINE C.TAN No. E015611 Exp. 12/31/13 ELECTRICAL STATE OF CALIFORNIA

THE STATE OF CALIFORNIA OR ITS OFFICERS OR AGENTS SHALL NOT BE RESPONSIBLE FOR THE ACCURACY OR COMPLETENESS OF SCANNED COPIES OF THIS PLAN SHEET.

LEGEND:(THIS SHEET ONLY)

1. SEE SHEET E-38 FOR COMPONENT DETAILS.
2. ETHERNET SWITCH TYPE 1 WITH TWO SFP MODULES.
3. SHOWN FOR REFERENCE ONY. SEE SHEET E-38 FOR COMPONENT DETAILS.

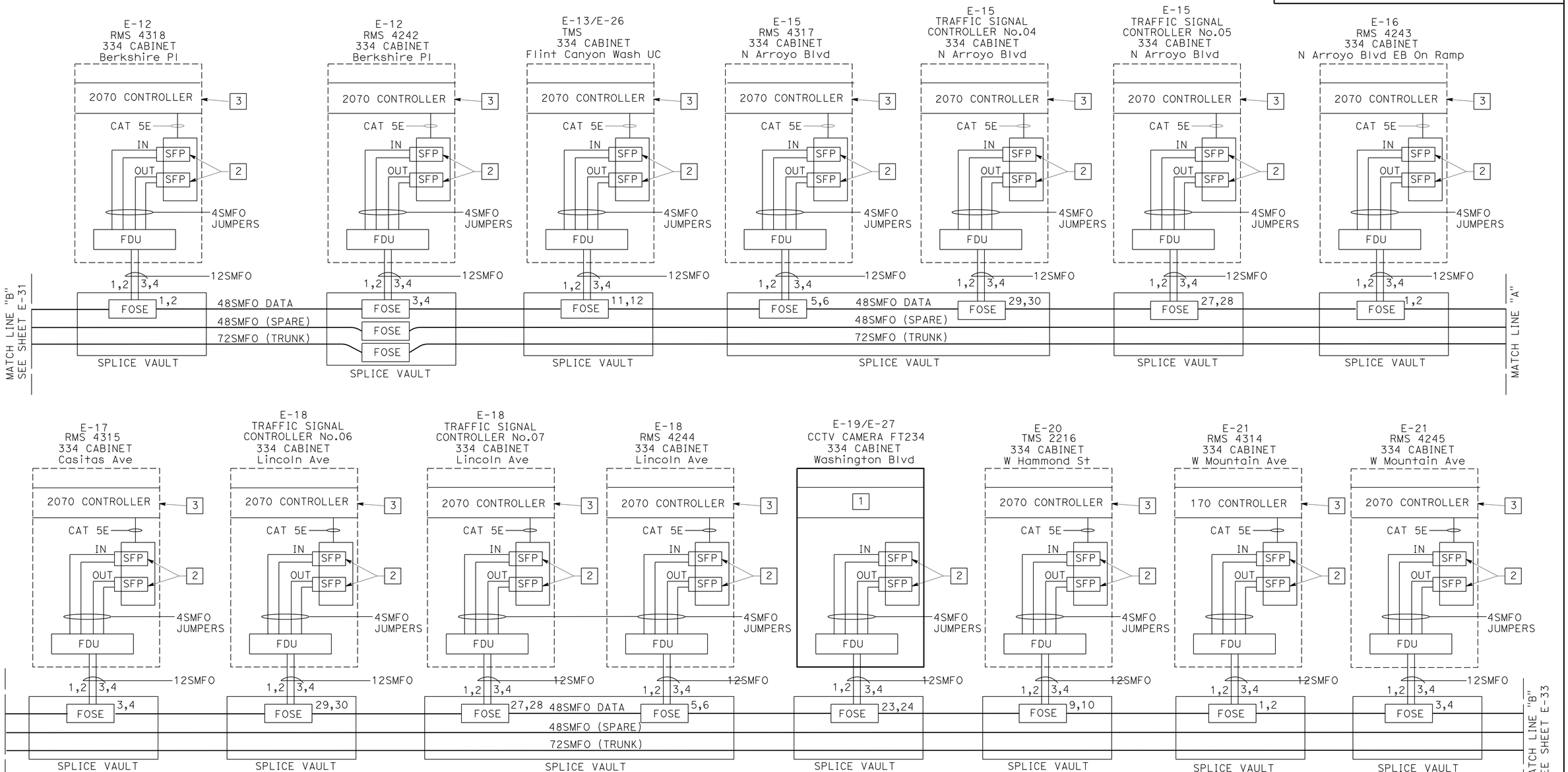

COMMUNICATION SYSTEM

NO SCALE

(BLOCK DIAGRAM)

E-32

STATE OF CALIFORNIA - DEPARTMENT OF TRANSPORTATION
Caltrans® OFFICE OF ITS

FUNCTIONAL SUPERVISOR: JACQUELINE C TAN
CALCULATED-DESIGNED BY: HIEU LUU
CHECKED BY: JACQUELINE C TAN
REVISED BY
DATE REVISED

LAST REVISION 00-00-00
DATE PLOTTED => 28-AUG-2015
TIME PLOTTED => 14:13

Dist	COUNTY	ROUTE	POST MILES TOTAL PROJECT	SHEET No.	TOTAL SHEETS
07	LA	210	R18.8/R24.9	66	95

REGISTERED ELECTRICAL ENGINEER — DATE 5/13/15

PLANS APPROVAL DATE 8-10-15

REGISTERED PROFESSIONAL ENGINEER JACQUELINE C.TAN No. E015611 Exp. 12/31/13 ELECTRICAL STATE OF CALIFORNIA

THE STATE OF CALIFORNIA OR ITS OFFICERS OR AGENTS SHALL NOT BE RESPONSIBLE FOR THE ACCURACY OR COMPLETENESS OF SCANNED COPIES OF THIS PLAN SHEET.

LEGEND:(THIS SHEET ONLY)

1. SEE SHEET E-38 FOR COMPONENT DETAILS.
2. ETHERNET SWITCH TYPE 1 WITH TWO SFP MODULES.
3. SHOWN FOR REFERENCE ONY. SEE SHEET E-38 FOR COMPONENT DETAILS.
4. ETHERNET SWITCH TYPE 2 WITH TWO SFP MODULES.

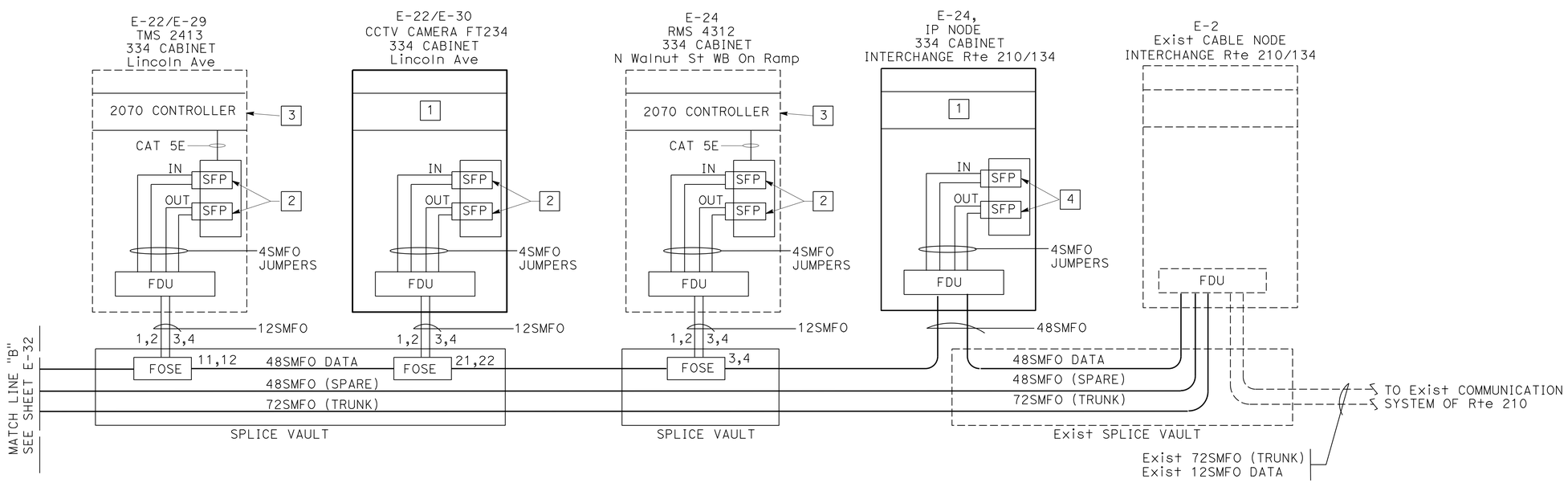

COMMUNICATION SYSTEM

NO SCALE

(BLOCK DIAGRAM)

E-33

STATE OF CALIFORNIA - DEPARTMENT OF TRANSPORTATION

Caltrans® OFFICE OF ITS

FUNCTIONAL SUPERVISOR: JACQUELINE C TAN

CALCULATED-DESIGNED BY: HIEU LUU — CHECKED BY: JACQUELINE C TAN

REVISED BY — DATE REVISED

LAST REVISION 00-00-00 — DATE PLOTTED => 28-AUG-2015 — TIME PLOTTED => 14:13

Dist	COUNTY	ROUTE	POST MILES TOTAL PROJECT	SHEET No.	TOTAL SHEETS
07	LA	210	R18.8/R24.9	67	95

Jacqueline C Tan 5/13/15
REGISTERED ELECTRICAL ENGINEER DATE

8-10-15
PLANS APPROVAL DATE

REGISTERED PROFESSIONAL ENGINEER JACQUELINE C. TAN No. E015611 Exp. 12/31/15 ELECTRICAL STATE OF CALIFORNIA

THE STATE OF CALIFORNIA OR ITS OFFICERS OR AGENTS SHALL NOT BE RESPONSIBLE FOR THE ACCURACY OR COMPLETENESS OF ELECTRONIC COPIES OF THIS PLAN SHEET.

DATA DISTRIBUTION FIBER OPTIC CABLE (48SMFO) ASSIGNMENT TABLE (PM 18.8 to PM 24.9)

FIBER	USE	Rte 210 EB\Rte 2 INTERCHANGE NEW IP NODE	Rte 210 EB TMS 4334	Rte 210 EB RMS 4239	Rte 210 WB RMS 4321	Rte 210 WB TRAFFIC SIGNAL No.01	Rte 210 EB TRAFFIC SIGNAL No.02	Rte 210 EB RMS 4320	Rte 210 EB RMS 4240	Rte 210 WB RMS 4319	Rte 210 WB CCTV CAMERA FT207	Rte 210 WB CMS No. FT207	Rte 210 EB RMS 4241	Rte 210 EB CMS No. 82	Rte 210 WB TRAFFIC SIGNAL No.03	Rte 210 WB RMS 4318	Rte 210 EB RMS 4242	Rte 210 WB TMS No.	Rte 210 WB RMS 4317	Rte 210 WB TRAFFIC SIGNAL No.04	Rte 210 EB TRAFFIC SIGNAL No.05	Rte 210 EB RMS 4243	Rte 210 WB RMS 4315	Rte 210 EB TRAFFIC SIGNAL No.06	Rte 210 WB TRAFFIC SIGNAL No.07	Rte 210 EB RMS 4244	Rte 210 WB CCTV CAMERA FT234	Rte 10 EB TMS 2216	Rte 10 EB RMS 4314	Rte 10 WB RMS 4245	Rte 10 WB TMS 2413	Rte 210 WB CCTV CAMERA FT242	Rte 210 WB RMS 4312	Rte 210/Rte 134 INTERCHANGE NEW IP NODE	FIBER
1	RMS - Tx	X		X					X							X						X						X						X	1
2	RMS - Rx	X		X					X							X						X						X						X	2
3	RMS - Tx	X			X					X							X						X							X				X	3
4	RMS - Rx	X			X					X							X						X							X				X	4
5	RMS - Tx	X						X					X						X							X							X	X	5
6	RMS - Rx	X						X					X						X							X							X	X	6
7		X																																X	7
8		X																																X	8
9	TMS - Tx	X	X																								X							X	9
10	TMS - Rx	X	X																								X							X	10
11	TMS - Tx	X																X												X				X	11
12	TMS - Rx	X																X												X				X	12
13		X																																X	13
14		X																																X	14
15	CMS 1 - Tx	X										X																						X	15
16	CMS 1 - Rx	X										X																						X	16
17	CMS 2 - Tx	X												X																				X	17
18	CMS 2 - Rx	X												X																				X	18
19		X																																X	19
20		X																																X	20
21	CCTV 1 - Tx	X									X																				X		X	21
22	CCTV 1 - Rx	X									X																				X		X	22
23	CCTV 2 - Tx	X																									X							X	23
24	CCTV 2 - Rx	X																									X							X	24
25		X																																X	25
26		X																																X	26
27	TS 1- Tx	X				X									X						X				X									X	27
28	TS 1- Rx	X				X									X						X				X									X	28
29	TS 2 - Tx	X					X													X				X										X	29
30	TS 2 - Rx	X					X													X				X										X	30
31		X																																X	31
32		X																																X	32
33		X																																X	33
34		X																																X	34
35		X																																X	35
•		X																																X	•
•		X																																X	•
48		X																																X	48

LEGEND: (THIS SHEET ONLY)

X - TERMINATED ACTIVE ON FDU

O - TERMINATED SPARE WITH F/O PIGTAIL IN CABINET

NOTE: (THIS SHEET ONLY)

1. FIBER NUMBERS MAY BE RE-ASSIGNED BY THE ENGINEER DURING CONSTRUCTION.

COMMUNICATION SYSTEM

(FIBER ASSIGNMENT TABLE) (DATA DISTRIBUTION)

E-34

STATE OF CALIFORNIA - DEPARTMENT OF TRANSPORTATION
Caltrans OFFICE OF ITS

FUNCTIONAL SUPERVISOR: JACQUELINE C. TAN

CALCULATED-DESIGNED BY: HIEU LUU

CHECKED BY: JACQUELINE C. TAN

REVISED BY

DATE REVISED

LAST REVISION 00-00-00

DATE PLOTTED => 28-AUG-2015
TIME PLOTTED => 14:13

Dist	COUNTY	ROUTE	POST MILES TOTAL PROJECT	SHEET No.	TOTAL SHEETS
07	LA	210	R18.8/R24.9	68	95

Jacqueline C Tan 5/13/15
REGISTERED ELECTRICAL ENGINEER DATE

8-10-15
PLANS APPROVAL DATE

REGISTERED PROFESSIONAL ENGINEER JACQUELINE C. TAN No. E015611 Exp. 12/31/15 ELECTRICAL STATE OF CALIFORNIA

THE STATE OF CALIFORNIA OR ITS OFFICERS OR AGENTS SHALL NOT BE RESPONSIBLE FOR THE ACCURACY OR COMPLETENESS OF ELECTRONIC COPIES OF THIS PLAN SHEET.

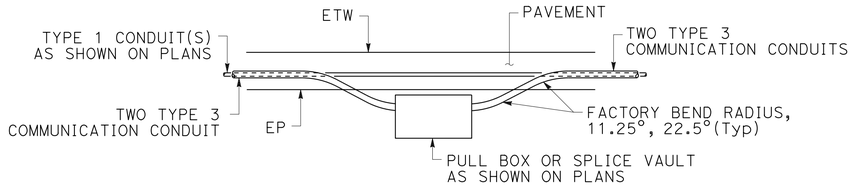

OUTSIDE SHOULDER PULL BOX INSTALLATION (TOP VIEW)

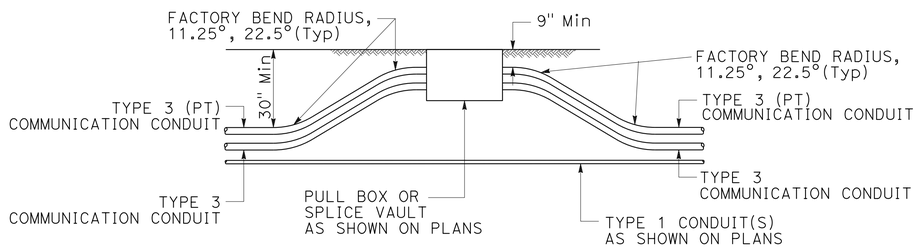

PULL BOX FOR SOIL AREA TRENCHING (ELEVATION)

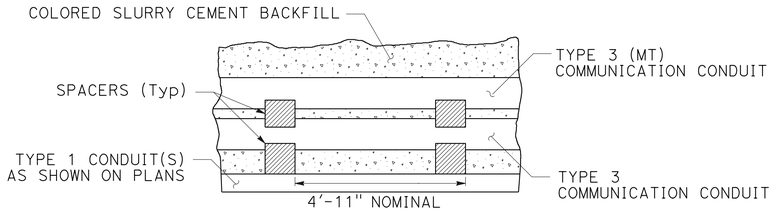

CONDUIT SPACER PLACEMENT (SIDE VIEW)

NOTES: (THIS SHEET ONLY)

1. REPLACE AC DIKE IN KIND, AS NECESSARY.
2. TRENCH TO BE CENTERED IN SHOULDER OR AS DIRECTED BY ENGINEER.
3. MAINTAIN 30" MINIMUM COVER AND BACKFILL TRENCH WITH SLURRY CEMENT BETWEEN PULL BOX AND PAVED SHOULDER.
4. WHERE TRENCH TRANSITIONS FROM ASPHALT TO UNPAVED AREA, EXCEPT AT PULL BOXES, CONDUIT TO GRADUALLY TRANSITION FROM 24" MINIMUM DEPTH TO 30" MINIMUM DEPTH WITHIN THE ASPHALT AREA.
5. 24" MINIMUM COVER MAY BE REDUCED TO 9" MINIMUM COVER IF NEEDED TO CLEAR A STORM DRAIN OR OTHER FIXED OBJECT AS DIRECTED BY RESIDENT ENGINEER.
6. PROVIDE MINIMUM 4'-11" CLEARANCE BETWEEN ANY CONDUIT AND EXISTING STRUCTURE FOUNDATIONS.
7. ANCHOR/RESTRAIN TOP CONDUIT FROM FLOATING DURING SLURRY CEMENT BACKFILL.
8. CONDUITS MUST BE INSTALLED IN NEW ASPHALT PAVEMENT AFTER AGGREGATE BASE IS PLACED AND COMPACTED. CONDUIT INSTALLATION MUST PRECLUDE ROADWAY PAVING.

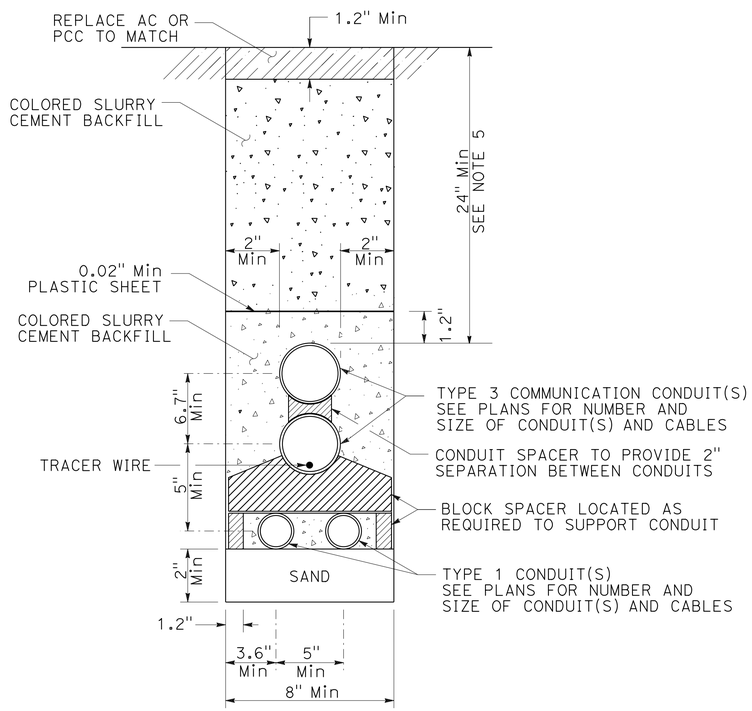

TRENCH IN EXISTING PAVEMENT (CONCRETE OR ASPHALT) WITH TYPE 3 COMMUNICATION CONDUIT(S) AND TYPE 1 CONDUIT(S)

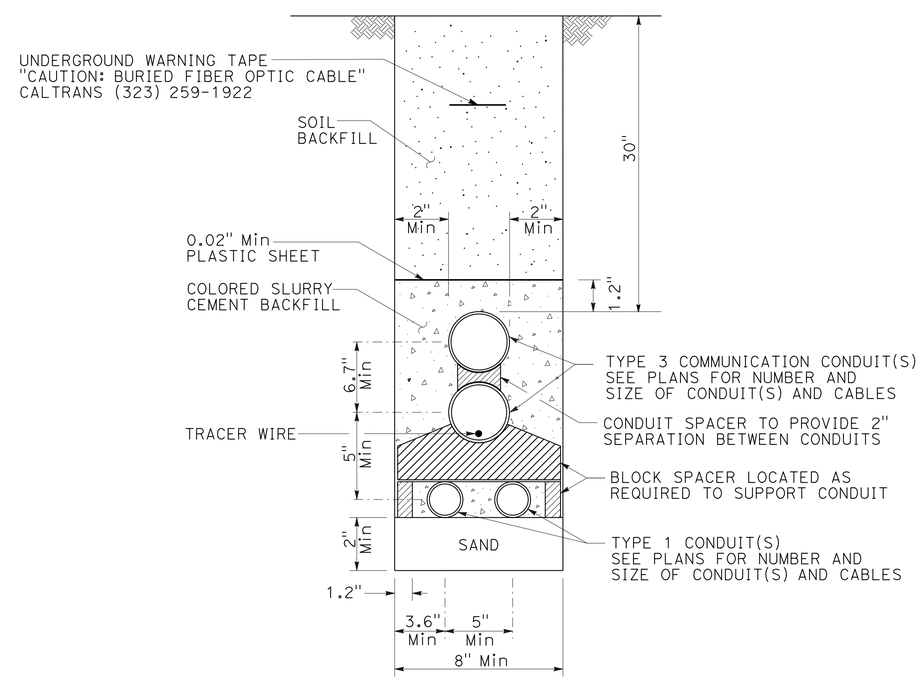

TRENCH IN SOIL WITH TYPE 3 COMMUNICATION CONDUIT(S) AND TYPE 1 CONDUIT(S)

ELECTRICAL DETAILS

NO SCALE

(TYPICAL COMMUNICATION CONDUIT INSTALLATION DETAILS)

FOR LEGEND, ABBREVIATIONS AND NOTES SEE SHEET E-1.

E-35

STATE OF CALIFORNIA - DEPARTMENT OF TRANSPORTATION
Caltrans OFFICE OF ITS

FUNCTIONAL SUPERVISOR: JACQUELINE C. TAN
CALCULATED-DESIGNED BY: HIEU LUU
CHECKED BY: JACQUELINE C. TAN
REVISED BY
DATE REVISED

LAST REVISION 00-00-00
DATE PLOTTED => 28-AUG-2015
TIME PLOTTED => 14:13

Dist	COUNTY	ROUTE	POST MILES TOTAL PROJECT	SHEET No.	TOTAL SHEETS
07	LA	210	R18.8/R24.9	69	95

Jacqueline C Tan 5/13/15
REGISTERED ELECTRICAL ENGINEER DATE

8-10-15
PLANS APPROVAL DATE

REGISTERED PROFESSIONAL ENGINEER JACQUELINE C. TAN No. E015611 Exp. 12/31/15 ELECTRICAL STATE OF CALIFORNIA

THE STATE OF CALIFORNIA OR ITS OFFICERS OR AGENTS SHALL NOT BE RESPONSIBLE FOR THE ACCURACY OR COMPLETENESS OF ELECTRONIC COPIES OF THIS PLAN SHEET.

NOTES: (THIS SHEET ONLY)

1. JACKED COMMUNICATION CONDUITS SHALL BE 30" MINIMUM BELOW FINISHED GRADE.
2. PLACE PULL BOXES OR SPLICE VAULTS AS SHOWN PER PLANS.
3. BENDS MUST BE FACTORY BENDS.

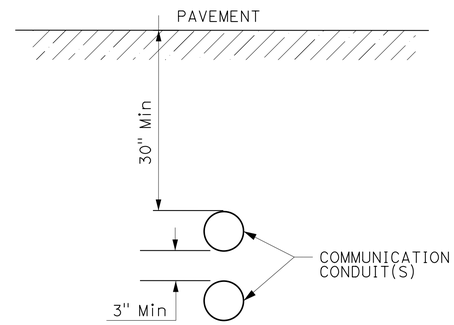

SECTION A-A

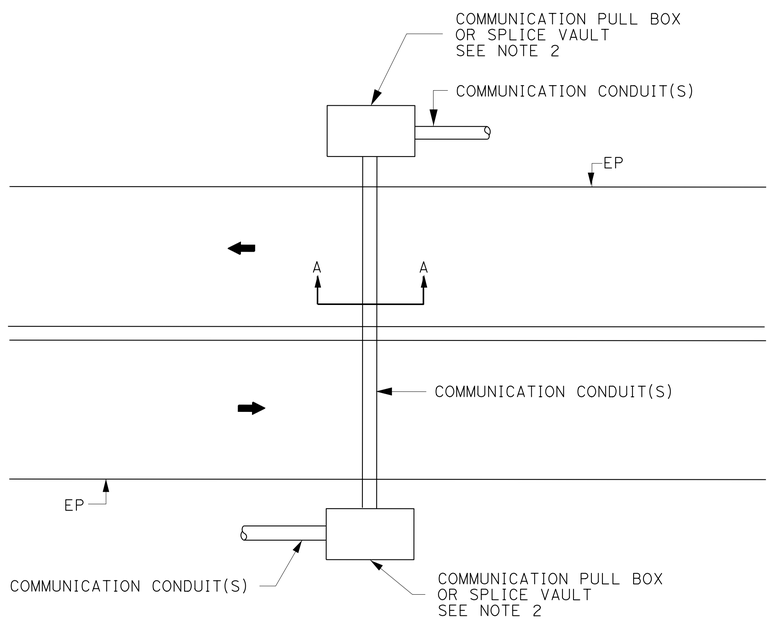

TYPICAL MAINLINE CROSSING (4 OR MORE LANES)

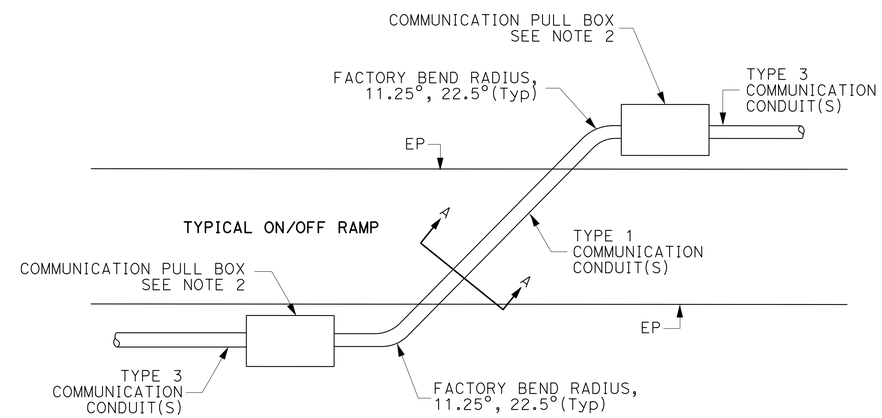

TYPICAL ON/OFF RAMP CROSSING

ELECTRICAL DETAILS

NO SCALE

(JACKED CONDUIT DETAILS)

FOR LEGEND, ABBREVIATIONS AND NOTES SEE SHEET E-1.

E-36

STATE OF CALIFORNIA - DEPARTMENT OF TRANSPORTATION
Caltrans OFFICE OF ITS

FUNCTIONAL SUPERVISOR: JACQUELINE C. TAN
CALCULATED-DESIGNED BY: HIEU LUU
CHECKED BY: JACQUELINE C. TAN
REVISED BY
DATE REVISED

LAST REVISION 00-00-00 | DATE PLOTTED => 28-AUG-2015 | TIME PLOTTED => 14:14

Dist	COUNTY	ROUTE	POST MILES TOTAL PROJECT	SHEET No.	TOTAL SHEETS
07	LA	210	R18.8/R24.9	70	95

REGISTERED ELECTRICAL ENGINEER — DATE 5/13/15

8-10-15
PLANS APPROVAL DATE

REGISTERED PROFESSIONAL ENGINEER — JACQUELINE C. TAN — No. E015611 — Exp. 12/31/15 — ELECTRICAL — STATE OF CALIFORNIA

THE STATE OF CALIFORNIA OR ITS OFFICERS OR AGENTS SHALL NOT BE RESPONSIBLE FOR THE ACCURACY OR COMPLETENESS OF ELECTRONIC COPIES OF THIS PLAN SHEET.

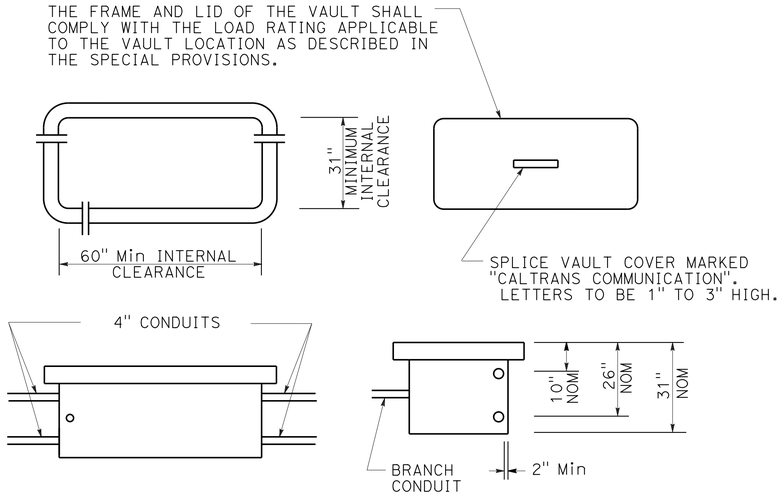

SPLICE VAULT DIMENSIONS

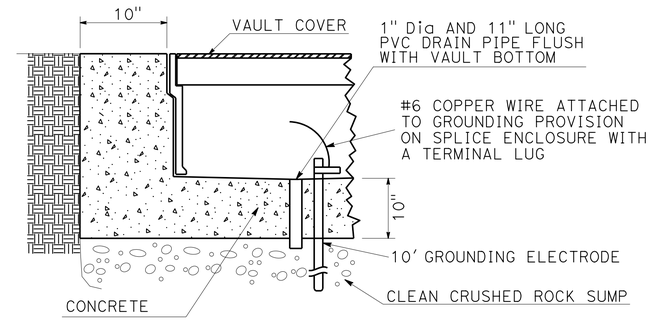

SPLICE VAULT INSTALLATION

INSTALLATION IN ASPHALT PAVEMENT OR COMPACTED EARTH

INSTALLATION NOTES:

1. CONCRETE ENCASEMENT AROUND SPLICE VAULT MUST BE MINOR CONCRETE.
2. PAVEMENT AND SUBGRADE TO BE AS DIRECTED BY THE ENGINEER.
3. LONGER SIDE OF THE SPLICE VAULT MUST BE PARALLEL TO THE DIRECTION OF TRAVEL.

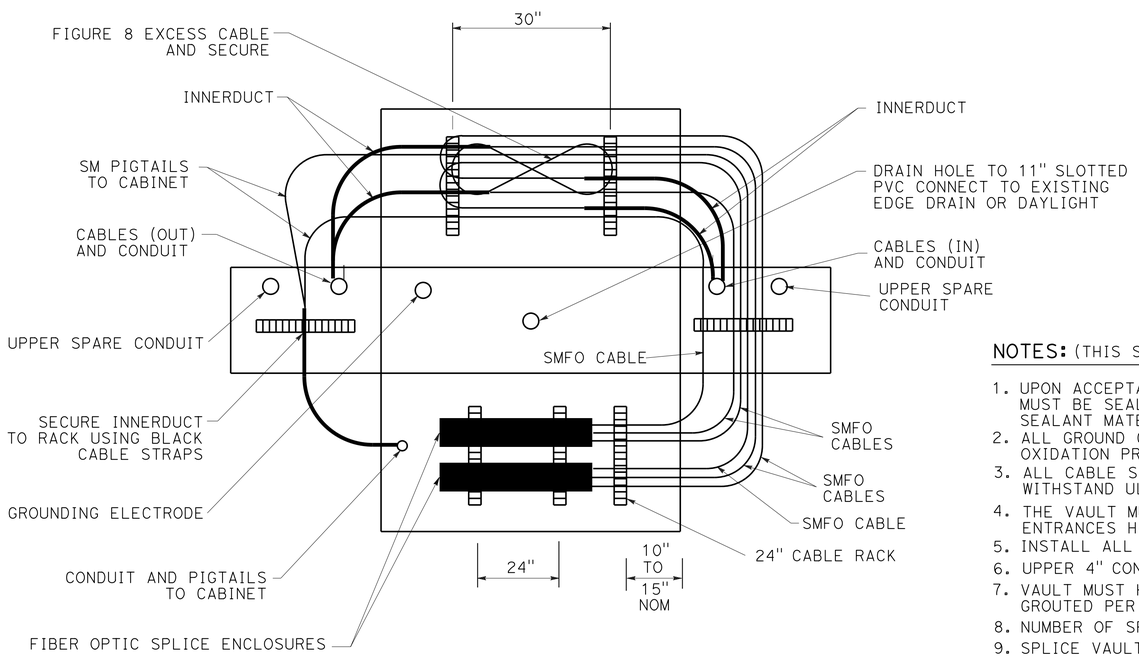

CABLE INSTALLATION

TOP VIEW - WALLS FOLDED DOWN FOR CLARITY

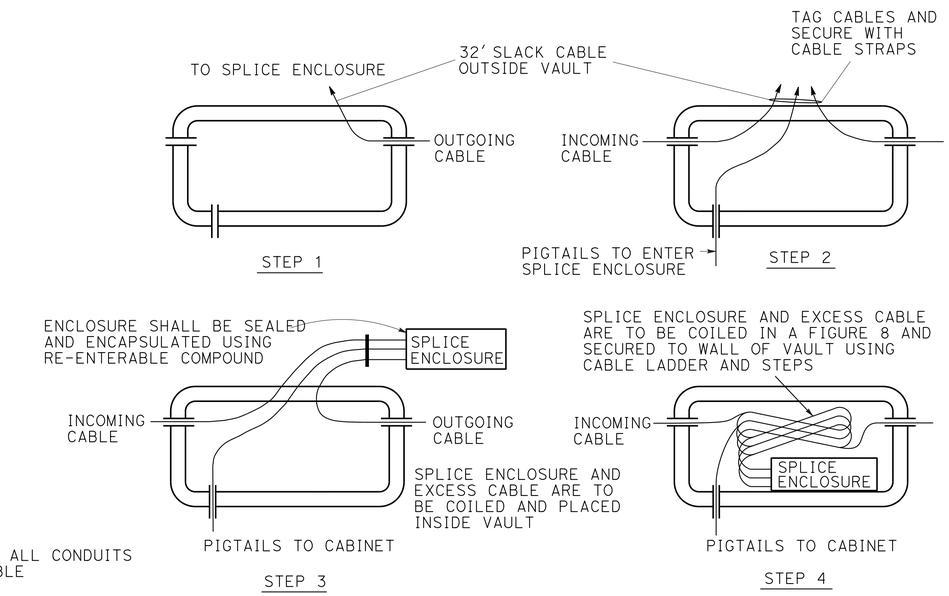

SPLICE PROCEDURE

NOTES: (THIS SHEET ONLY)

1. UPON ACCEPTANCE OF THE WORK ALL CONDUITS MUST BE SEALED WITH COMPATIBLE SEALANT MATERIAL
2. ALL GROUND CONNECTIONS MUST BE COATED WITH OXIDATION PROHIBITING COMPOUND.
3. ALL CABLE STRAPS MUST BE DESIGNED TO WITHSTAND ULTRA-VIOLET EXPOSURE.
4. THE VAULT MUST BE CAULKED AFTER ALL KNOWN ENTRANCES HAVE BEEN MADE.
5. INSTALL ALL CABLES IN LOWER 4" CONDUIT.
6. UPPER 4" CONDUIT IS SPARE ONLY.
7. VAULT MUST HAVE INTEGRAL BASE OR MUST BE GROUTED PER STANDARD SPECIFICATION OF PULL BOXES.
8. NUMBER OF SPLICE ENCLOSURES MAY VARY.
9. SPLICE VAULTS MUST BE STEEL PLATED.
10. ADDITIONAL KNOCKOUTS ARE NEEDED ON THE LONGER SIDE OF THE SPLICE VAULT.
11. COIL 32' OF FIBER OPTIC CABLES IN SPLICE VAULT.

ELECTRICAL DETAILS

NO SCALE

(SPLICE VAULT DETAILS)

FOR LEGEND, ABBREVIATIONS AND NOTES SEE SHEET E-1.

E-37

STATE OF CALIFORNIA - DEPARTMENT OF TRANSPORTATION
Caltrans OFFICE OF ITS

FUNCTIONAL SUPERVISOR: JACQUELINE C. TAN
CALCULATED-DESIGNED BY: HIEU LUU
CHECKED BY: JACQUELINE C. TAN
REVISED BY
DATE REVISED

LAST REVISION 00-00-00
DATE PLOTTED => 28-AUG-2015
TIME PLOTTED => 14:14

Dist	COUNTY	ROUTE	POST MILES TOTAL PROJECT	SHEET No.	TOTAL SHEETS
07	LA	210	R18.8/R24.9	71	95

REGISTERED ELECTRICAL ENGINEER DATE 5/13/15

8-10-15
PLANS APPROVAL DATE

REGISTERED PROFESSIONAL ENGINEER JACQUELINE C. TAN No. E015611 Exp. 12/31/15 ELECTRICAL STATE OF CALIFORNIA

THE STATE OF CALIFORNIA OR ITS OFFICERS OR AGENTS SHALL NOT BE RESPONSIBLE FOR THE ACCURACY OR COMPLETENESS OF ELECTRONIC COPIES OF THIS PLAN SHEET.

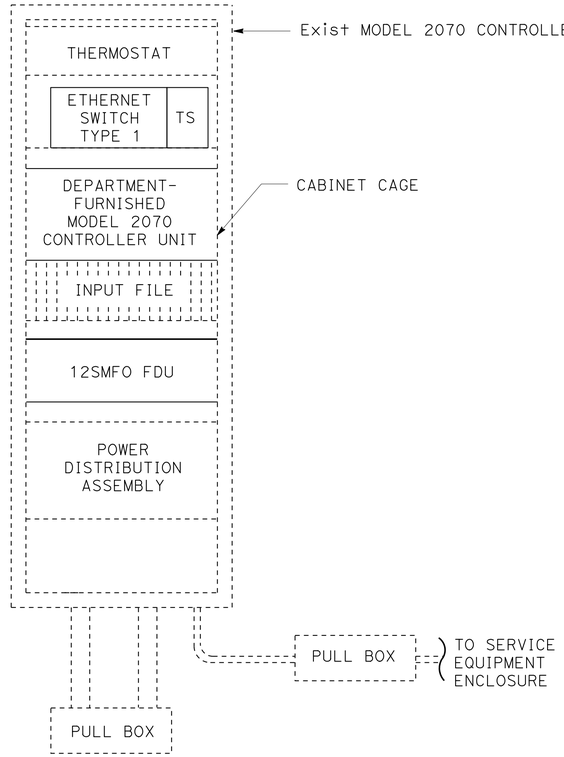

Exist MODEL 2070 CONTROLLER ASSEMBLY
EQUIPMENT LAYOUT FOR RMS AND TMS

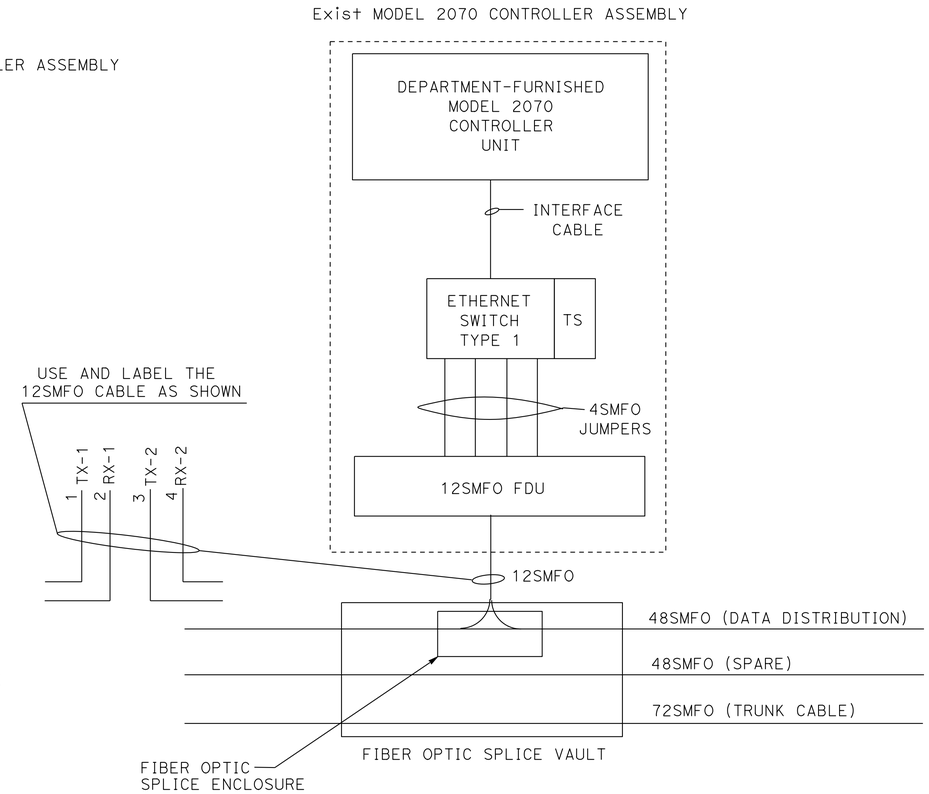

Exist MODEL 2070 CONTROLLER ASSEMBLY
WIRING DETAIL FOR RMS AND TMS

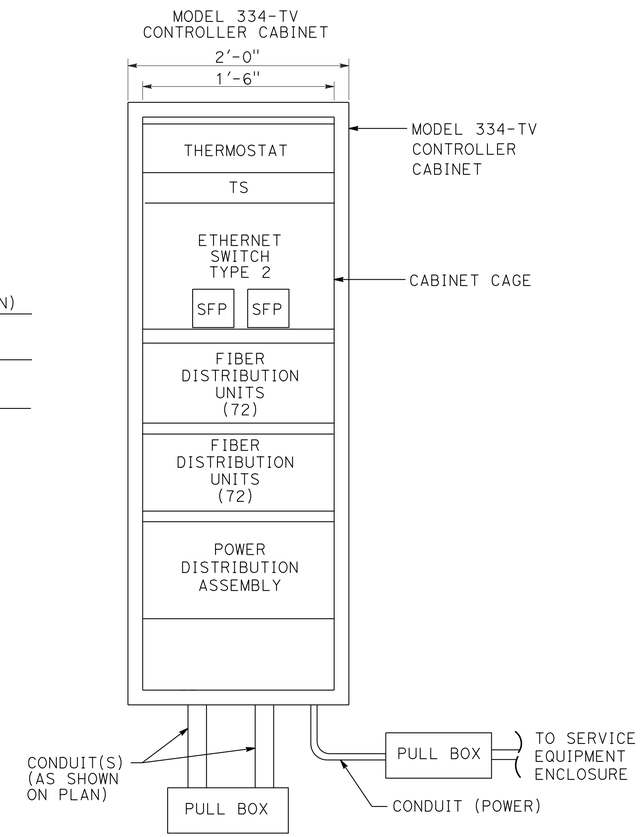

MODEL 334-TV CONTROLLER CABINET
EQUIPMENT LAYOUT FOR IP NODE

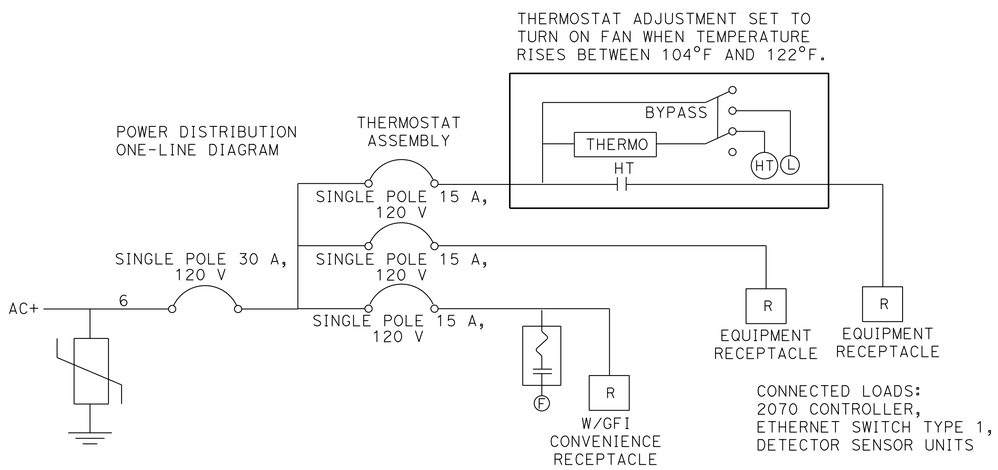

Exist POWER DISTRIBUTION ASSEMBLY

ELECTRICAL DETAILS

NO SCALE

(RMS/TMS, IP NODE DETAILS)

FOR LEGEND, ABBREVIATIONS AND NOTES SEE SHEET E-1.

E-38

STATE OF CALIFORNIA - DEPARTMENT OF TRANSPORTATION
Caltrans OFFICE OF ITS

FUNCTIONAL SUPERVISOR: JACQUELINE C. TAN
CALCULATED-DESIGNED BY: HIEU LUU
CHECKED BY: JACQUELINE C. TAN
REVISED BY
DATE REVISED

LAST REVISION 00-00-00
DATE PLOTTED => 28-AUG-2015
TIME PLOTTED => 14:14

Dist	COUNTY	ROUTE	POST MILES TOTAL PROJECT	SHEET No.	TOTAL SHEETS
07	LA	210	R18.8/R24.9	72	95

REGISTERED ELECTRICAL ENGINEER 5/13/15 DATE

8-10-15
PLANS APPROVAL DATE

REGISTERED PROFESSIONAL ENGINEER JACQUELINE C. TAN No. E015611 Exp. 12/31/15 ELECTRICAL STATE OF CALIFORNIA

THE STATE OF CALIFORNIA OR ITS OFFICERS OR AGENTS SHALL NOT BE RESPONSIBLE FOR THE ACCURACY OR COMPLETENESS OF ELECTRONIC COPIES OF THIS PLAN SHEET.

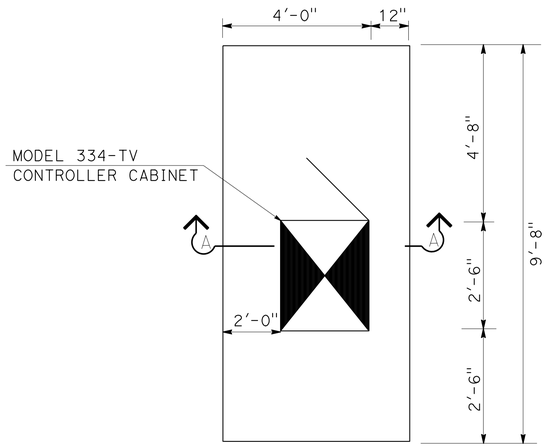

DETAIL A
PLAN VIEW

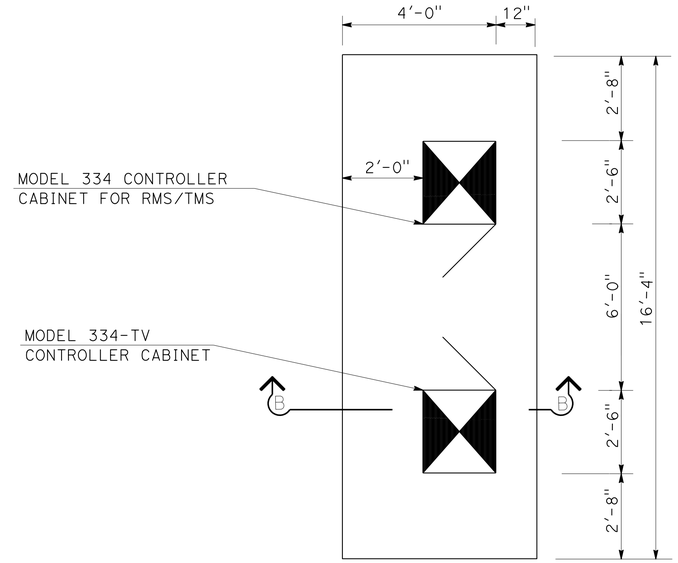

DETAIL B
PLAN VIEW

NOTES: (THIS SHEET ONLY)

1. CABINETS TO BE INSTALLED 30 FEET FROM ETW OR 6 FEET FROM MBGR FOR TYPICAL FIXED OBJECT INSTALLATION DETAILS.
2. CONSTRUCT PAD AND GRADE TO DRAIN AROUND AND AWAY FOR CABINET IN KEEPING WITH EXISTING DRAINAGE PATTERN.
3. CABINET DOOR MUST BE LOCATED PER PLAN AND HINGED TO AWAY FROM TRAVEL WAY.
4. FOR INFORMATION NOT SHOWN, SEE STANDARD PLAN SHEET ES-3C.

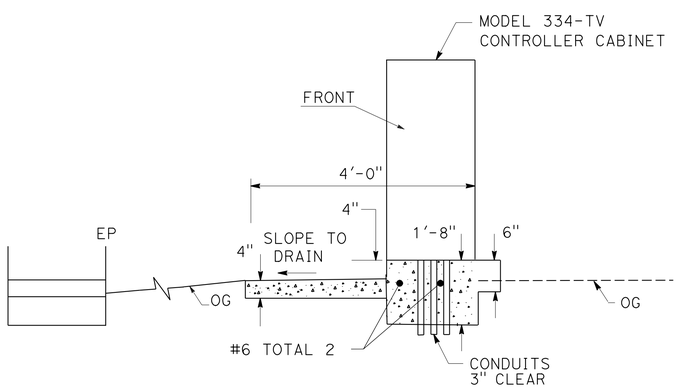

SECTION A-A
ELEVATION VIEW FOR DETAIL A

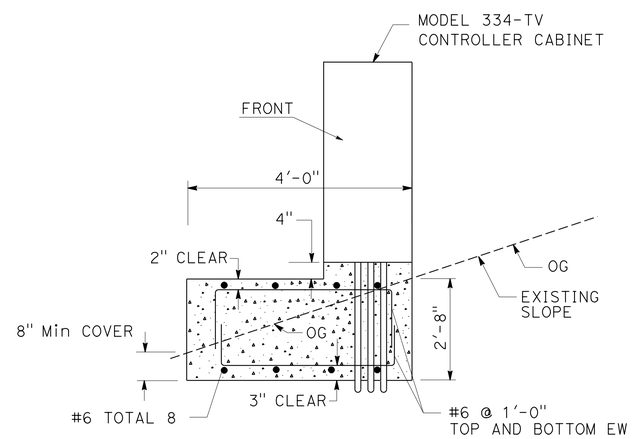

SECTION B-B
ELEVATION VIEW FOR DETAIL B

(CONTROLLER CABINET FOUNDATION DETAILS)

FOR LEGEND, ABBREVIATIONS AND NOTES SEE SHEET E-1.

ELECTRICAL DETAILS

NO SCALE

E-39

STATE OF CALIFORNIA - DEPARTMENT OF TRANSPORTATION
Caltrans OFFICE OF ITS

FUNCTIONAL SUPERVISOR: JACQUELINE C. TAN
CALCULATED-DESIGNED BY: HIEU LUU
CHECKED BY: JACQUELINE C. TAN
REVISED BY
DATE REVISED

LAST REVISION 00-00-00
DATE PLOTTED => 28-AUG-2015
TIME PLOTTED => 14:14

Dist	COUNTY	ROUTE	POST MILES TOTAL PROJECT	SHEET No.	TOTAL SHEETS
07	LA	210	R18.8/R24.9	73	95

REGISTERED ELECTRICAL ENGINEER 5/13/15 DATE

8-10-15
PLANS APPROVAL DATE

REGISTERED PROFESSIONAL ENGINEER JACQUELINE C. TAN No. E015611 Exp. 12/31/15 ELECTRICAL STATE OF CALIFORNIA

THE STATE OF CALIFORNIA OR ITS OFFICERS OR AGENTS SHALL NOT BE RESPONSIBLE FOR THE ACCURACY OR COMPLETENESS OF ELECTRONIC COPIES OF THIS PLAN SHEET.

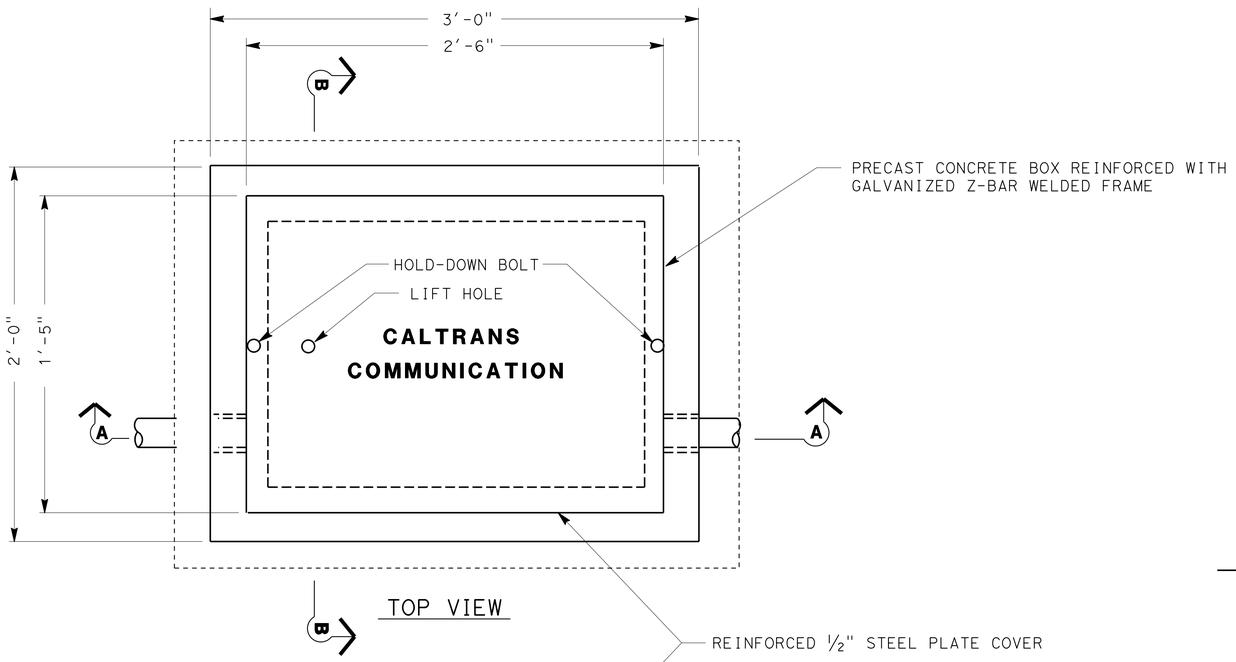

TOP VIEW

NOTES: (THIS SHEET ONLY)

1. FOR DETAILS NOT SHOWN SEE Std PLAN RSP ES-8B.
2. CONDUITS SHOWN ARE FOR EXAMPLE ONLY. ADDITIONAL CONDUITS MAY BE REQURIED AS SHOWN ON THE PLAN SHEETS.
3. SEE SPECIAL PROVISIONS REGARDING HOLD-DOWN BOLTS FOR TRAFFIC COVERS.

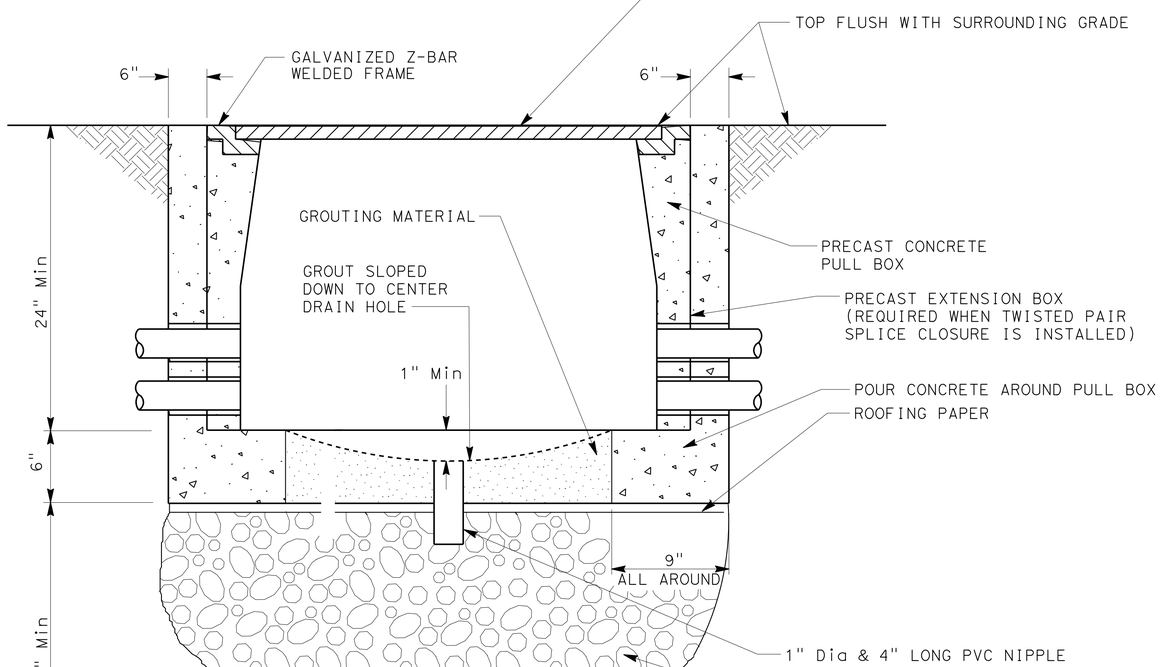

SECTION A-A

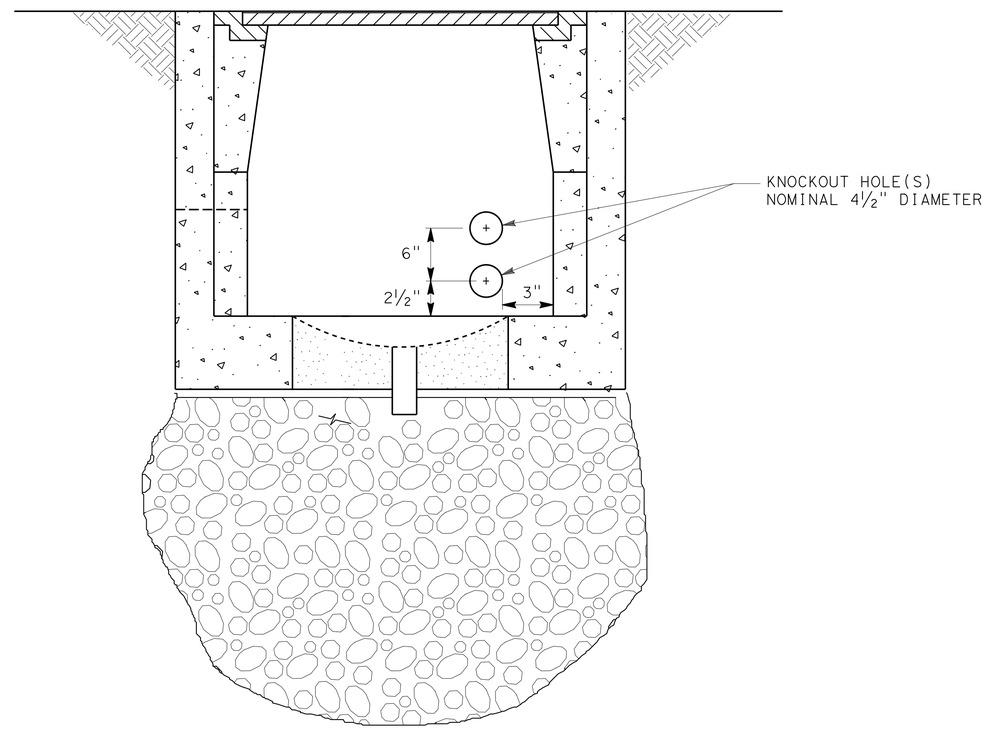

SECTION B-B

(COMMUNICATION PULL BOX DETAILS)

ELECTRICAL DETAILS

NO SCALE

E-40

STATE OF CALIFORNIA - DEPARTMENT OF TRANSPORTATION
Caltrans OFFICE OF ITS

FUNCTIONAL SUPERVISOR: JACQUELINE C. TAN
CALCULATED-DESIGNED BY: HIEU LUU
CHECKED BY: JACQUELINE C. TAN
REVISED BY
DATE REVISED

LAST REVISION 00-00-00 | DATE PLOTTED => 28-AUG-2015 | TIME PLOTTED => 14:14

Dist	COUNTY	ROUTE	POST MILES TOTAL PROJECT	SHEET No.	TOTAL SHEETS
07	LA	210	R18.8/R24.9	74	95

Jacqueline C Tan 5/13/15
REGISTERED ELECTRICAL ENGINEER DATE

8-10-15
PLANS APPROVAL DATE

REGISTERED PROFESSIONAL ENGINEER JACQUELINE C. TAN No. E015611 Exp. 12/31/15 ELECTRICAL STATE OF CALIFORNIA

THE STATE OF CALIFORNIA OR ITS OFFICERS OR AGENTS SHALL NOT BE RESPONSIBLE FOR THE ACCURACY OR COMPLETENESS OF ELECTRONIC COPIES OF THIS PLAN SHEET.

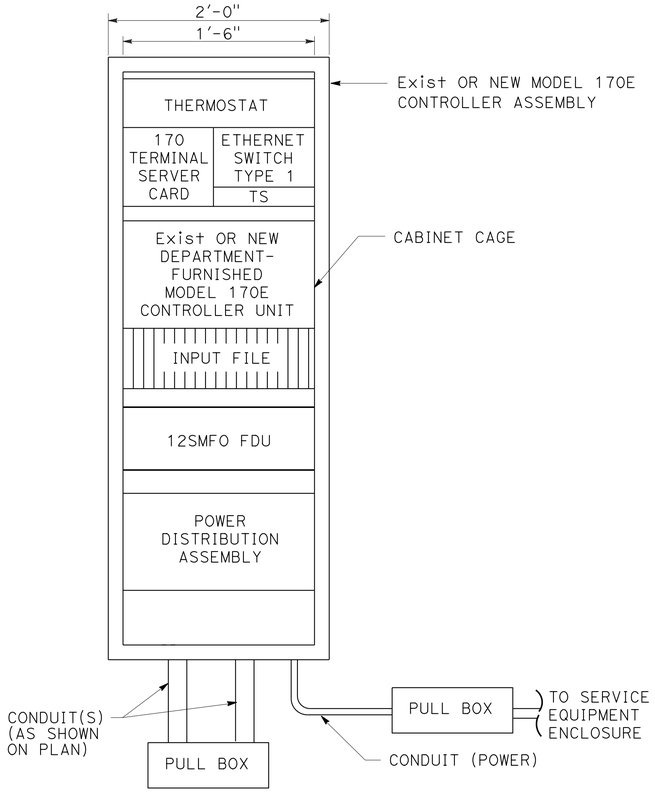

Exist OR NEW
MODEL 170E CONTROLLER ASSEMBLY
EQUIPMENT LAYOUT FOR CMS

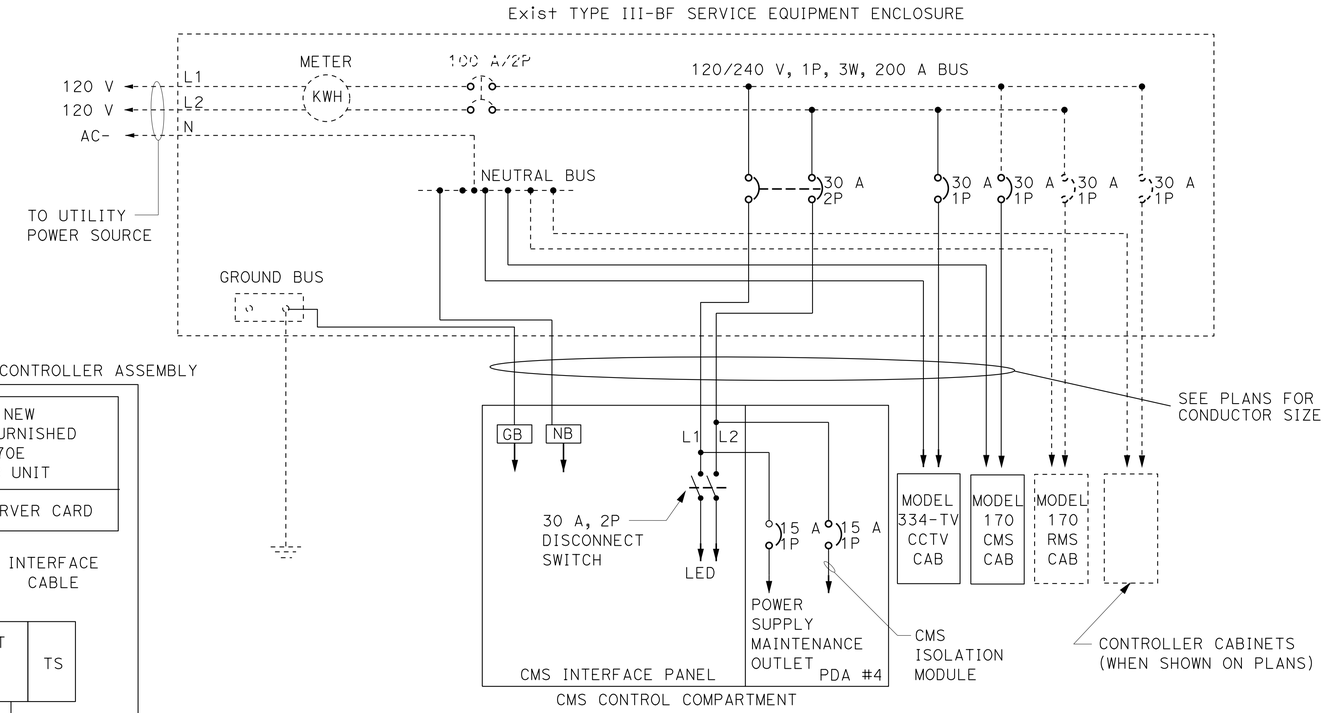

TYPICAL MODEL 500 LED CMS SYSTEM WIRING
AND CIRCUIT BREAKERS

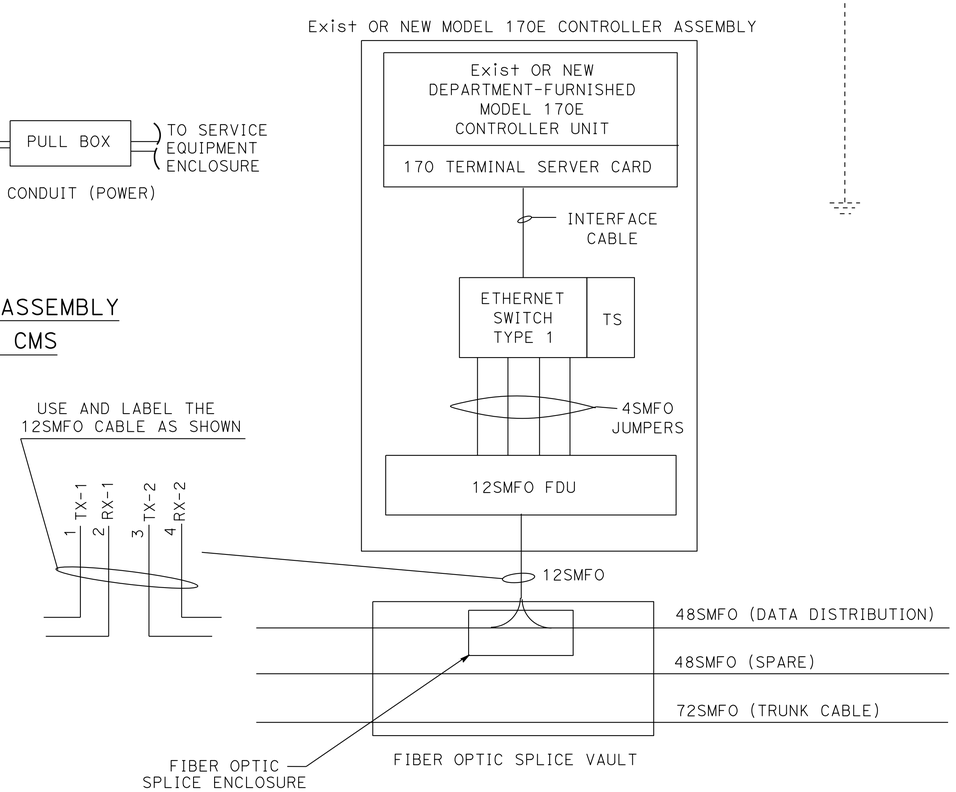

Exist OR NEW MODEL 170E CONTROLLER ASSEMBLY WIRING DETAIL FOR CMS

ELECTRICAL DETAILS

NO SCALE

FOR LEGEND, ABBREVIATIONS AND NOTES SEE SHEET E-1.

E-41

STATE OF CALIFORNIA - DEPARTMENT OF TRANSPORTATION
Caltrans OFFICE OF ITS

FUNCTIONAL SUPERVISOR: JACQUELINE C. TAN
CALCULATED-DESIGNED BY: HIEU LUU
CHECKED BY: JACQUELINE C. TAN
REVISED BY
DATE REVISED

LAST REVISION 00-00-00
DATE PLOTTED => 28-AUG-2015
TIME PLOTTED => 14:14

Dist	COUNTY	ROUTE	POST MILES TOTAL PROJECT	SHEET No.	TOTAL SHEETS
07	LA	210	R18.8/R24.9	75	95

REGISTERED ELECTRICAL ENGINEER — DATE: 5/13/15

PLANS APPROVAL DATE: 8-10-15

REGISTERED PROFESSIONAL ENGINEER — JACQUELINE C. TAN — No. E015611 — Exp. 12/31/15 — ELECTRICAL — STATE OF CALIFORNIA

THE STATE OF CALIFORNIA OR ITS OFFICERS OR AGENTS SHALL NOT BE RESPONSIBLE FOR THE ACCURACY OR COMPLETENESS OF ELECTRONIC COPIES OF THIS PLAN SHEET.

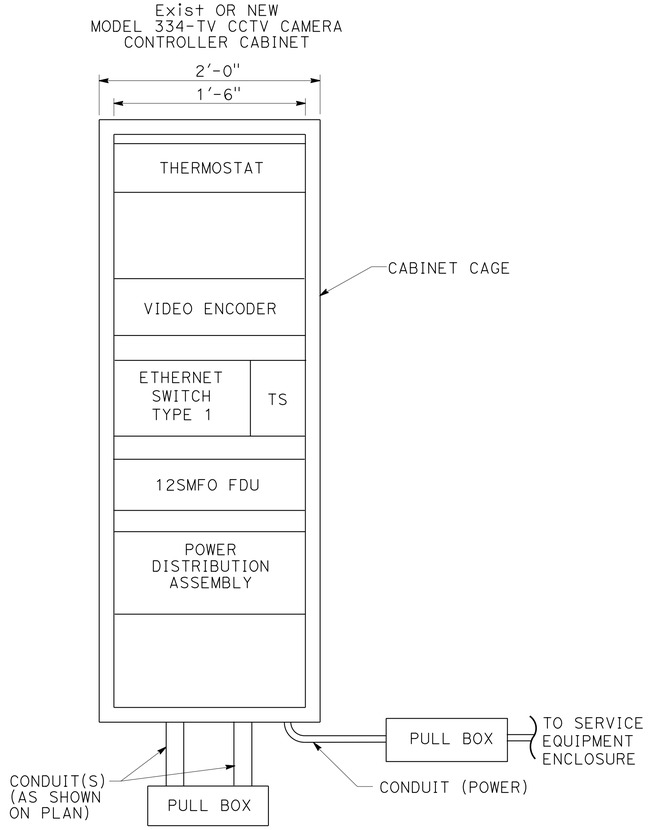

MODEL 334-TV CONTROLLER CABINET EQUIPMENT LAYOUT

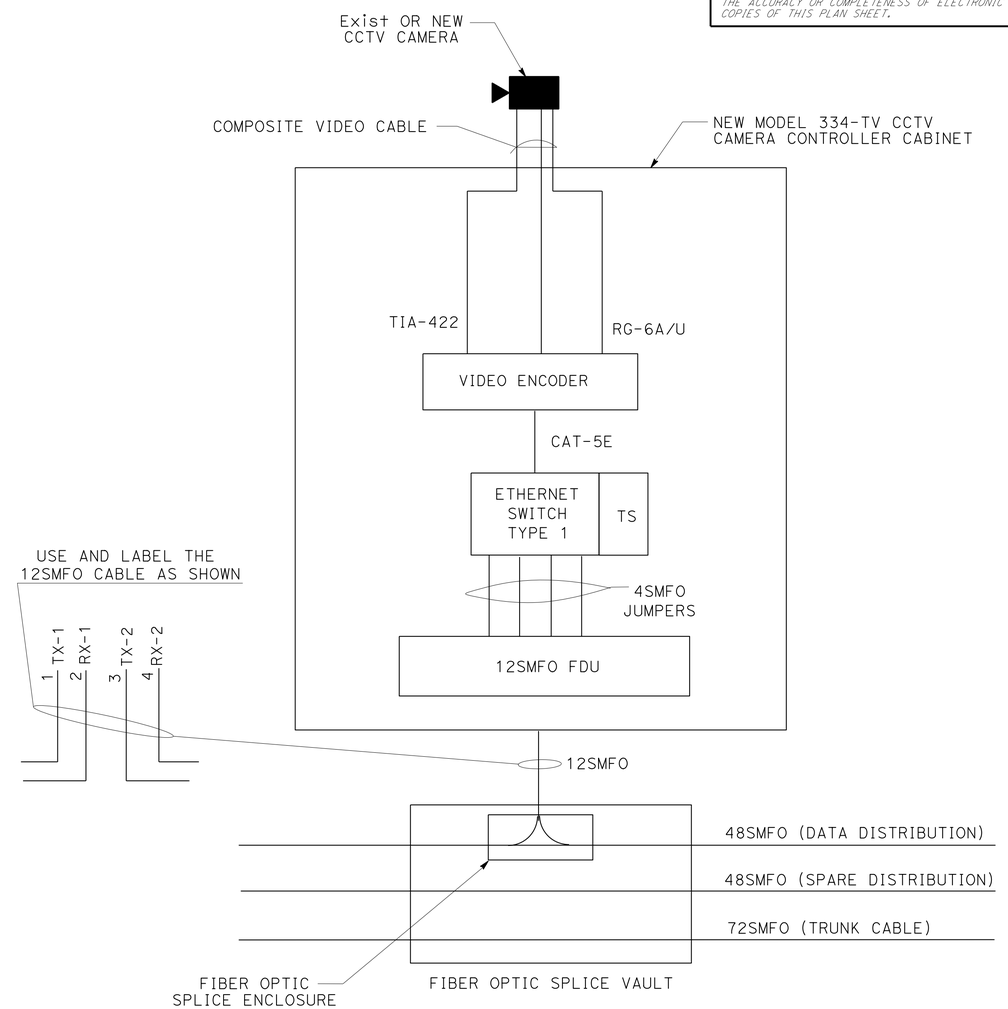

MODEL 334-TV CONTROLLER CABINET WIRING DETAIL

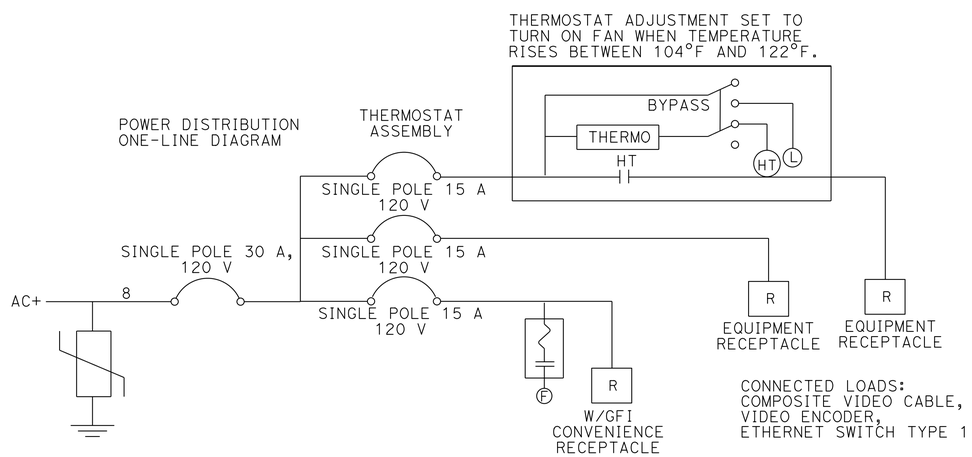

POWER DISTRIBUTION ASSEMBLY

CLOSED CIRCUIT TELEVISION CAMERA SYSTEM
(MODEL 334-TV CONTROLLER CABINET DETAILS)

ELECTRICAL DETAILS

NO SCALE

FOR LEGEND, ABBREVIATIONS AND NOTES SEE SHEET E-1.

E-42

STATE OF CALIFORNIA - DEPARTMENT OF TRANSPORTATION
Caltrans OFFICE OF ITS

FUNCTIONAL SUPERVISOR: JACQUELINE C. TAN
CALCULATED-DESIGNED BY: HIEU LUU
CHECKED BY: JACQUELINE C. TAN
REVISED BY
DATE REVISED

LAST REVISION 00-00-00
DATE PLOTTED => 28-AUG-2015
TIME PLOTTED => 14:14

Dist	COUNTY	ROUTE	POST MILES TOTAL PROJECT	SHEET No.	TOTAL SHEETS
07	LA	210	R18.8/R24.9	76	95

REGISTERED ELECTRICAL ENGINEER 5/13/15 DATE

8-10-15
PLANS APPROVAL DATE

REGISTERED PROFESSIONAL ENGINEER JACQUELINE C. TAN No. E015611 Exp. 12/31/15 ELECTRICAL STATE OF CALIFORNIA

THE STATE OF CALIFORNIA OR ITS OFFICERS OR AGENTS SHALL NOT BE RESPONSIBLE FOR THE ACCURACY OR COMPLETENESS OF ELECTRONIC COPIES OF THIS PLAN SHEET.

NOTES: (THIS SHEET ONLY)

1. THE CONTRACTOR MUST PROVIDE CABLE LENGTH FROM THE CAMERA ASSEMBLY TO THE LOCAL PATCH PANEL INCLUDING CONNECTORS AS SHOWN IN THIS SHEET.
2. THE CONTRACTOR MUST PROVIDE ALL CABLES FROM THE LOCAL PATCH PANEL TO THE DIGITAL VIDEO ENCODER AND PDA.
3. ALL CABLES MUST BE ALUMINUM SHIELDED TO PREVENT CROSS TALK.
4. IN THE CCTV CAMERA CONTROLLER CABINET, THE NUMBER INDENTIFIES THE SPECIFIC CONDUCTOR TO BE USED FOR THE INDICATED FUNCTION.
5. CONNECT ALL DRAIN WIRES OF SHIELDED-CONDUCTORS TO CABINET GROUND AT THE LOCAL PATCH PANEL.
6. INSTALL CONNECTORS IN ACCORDANCE WITH THE MANUFACTURER'S INSTRUCTIONS.
7. WATERPROOF ALL CONNECTORS AND CABLES USING WATER-TIGHT GROMMETS, SEALING COMPOUNDS AND TAPE.

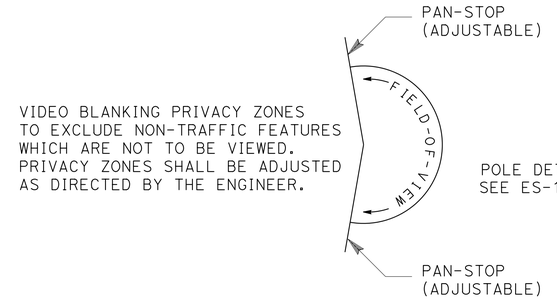

ADJUSTABLE PAN-STOP DETAIL

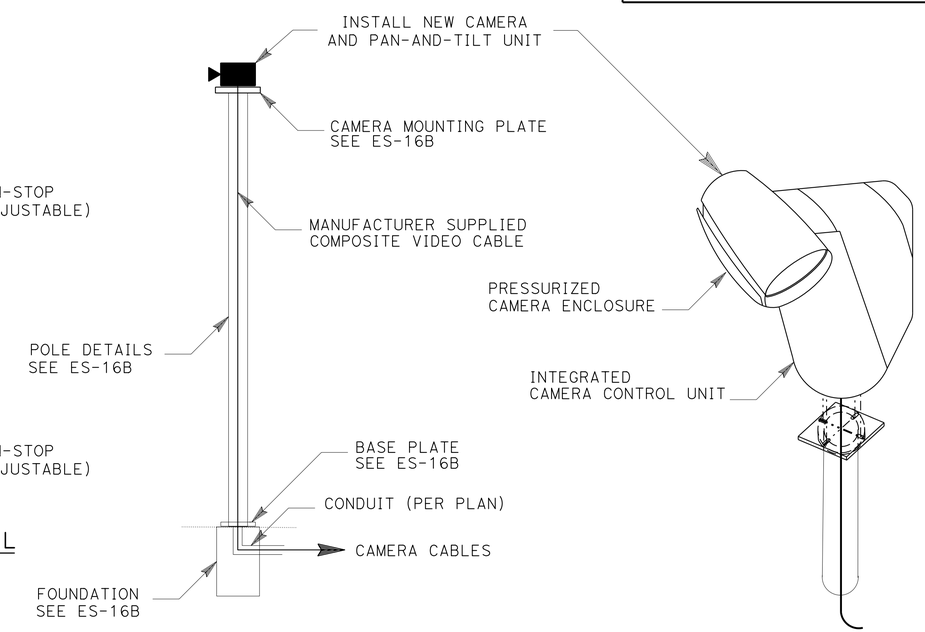

TYPICAL CAMERA WITH PAN-AND-TILT UNIT

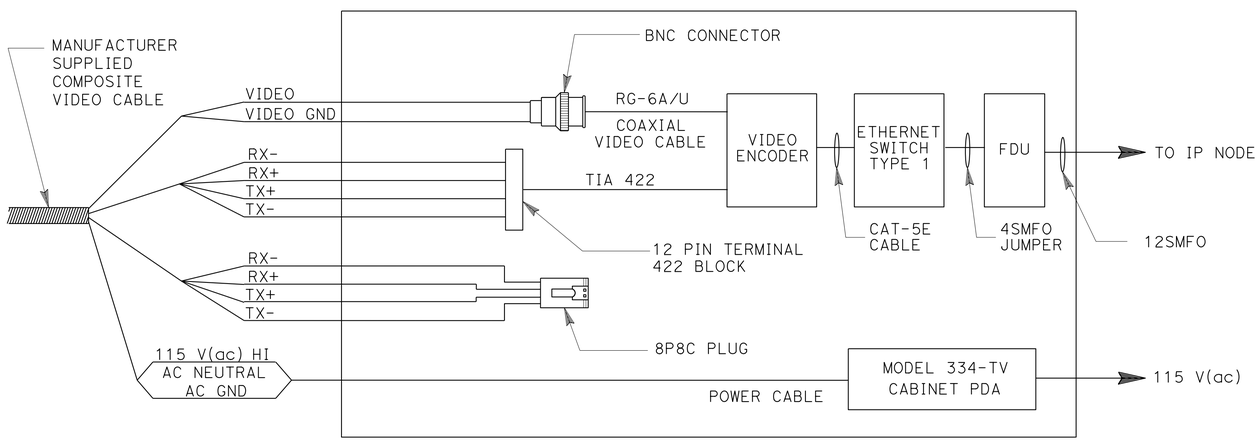

TYPICAL WIRING DIAGRAM

CLOSED CIRCUIT TELEVISION CAMERA SYSTEM
(WIRING DIAGRAM WITH PAN-AND-TILT UNIT)

FOR LEGEND, ABBREVIATIONS AND NOTES SEE SHEET E-1.

ELECTRICAL DETAILS
NO SCALE

E-43

REVISED BY | DATE REVISED
HIEU LUU | JACQUELINE C. TAN
CALCULATED-DESIGNED BY | CHECKED BY
FUNCTIONAL SUPERVISOR
JACQUELINE C. TAN

STATE OF CALIFORNIA - DEPARTMENT OF TRANSPORTATION
Caltrans OFFICE OF ITS

LAST REVISION 00-00-00 | DATE PLOTTED => 28-AUG-2015 | TIME PLOTTED => 14:14

Dist	COUNTY	ROUTE	POST MILES TOTAL PROJECT	SHEET No.	TOTAL SHEETS
07	LA	210	R18.8/R24.9	77	95

REGISTERED ELECTRICAL ENGINEER 5/13/15 DATE

8-10-15
PLANS APPROVAL DATE

REGISTERED PROFESSIONAL ENGINEER JACQUELINE C. TAN No. E015611 Exp. 12/31/15 ELECTRICAL STATE OF CALIFORNIA

THE STATE OF CALIFORNIA OR ITS OFFICERS OR AGENTS SHALL NOT BE RESPONSIBLE FOR THE ACCURACY OR COMPLETENESS OF ELECTRONIC COPIES OF THIS PLAN SHEET.

NOTE: (THIS SHEET ONLY)

1. FOR ABBREVIATIONS AND NOTES SEE SHEET E-1.

LEGEND: (THIS SHEET ONLY)

[1] CONNECTORIZING DONE AT THE MODEL 334-TV CONTROLLER CABINET.

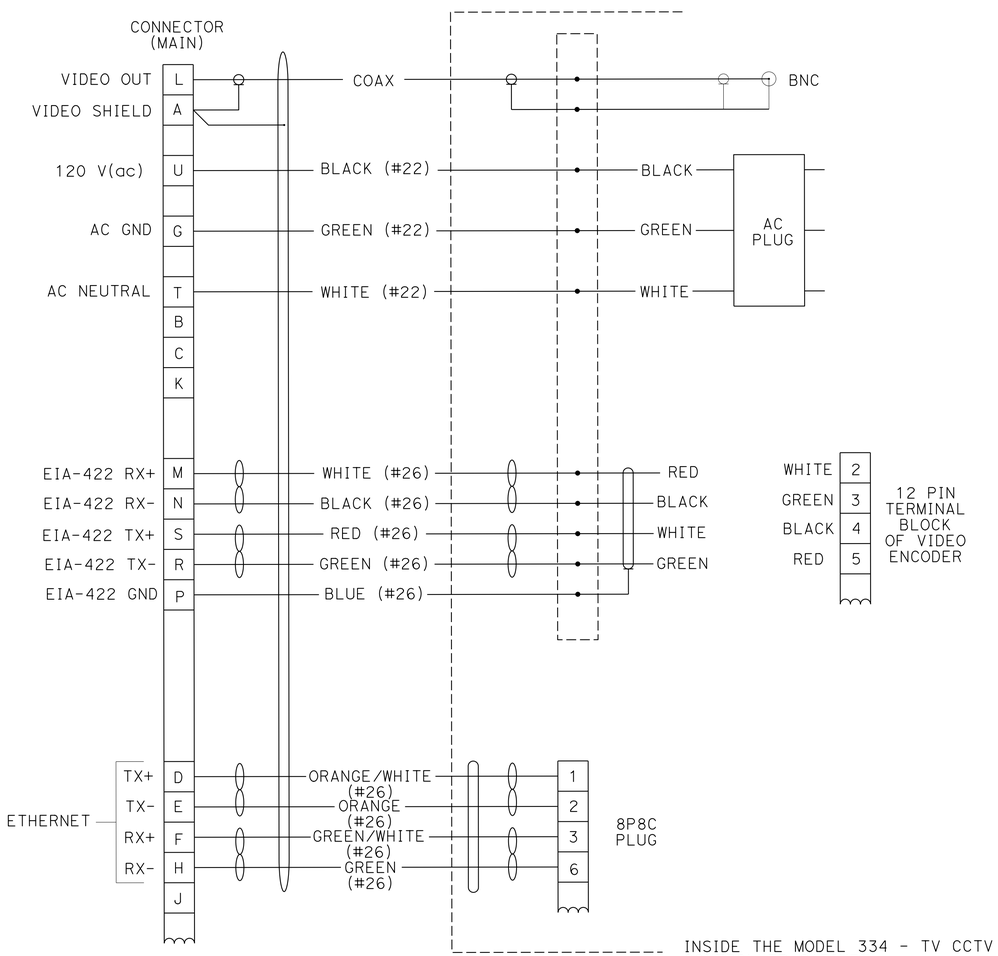

CABLE SCHEMATIC

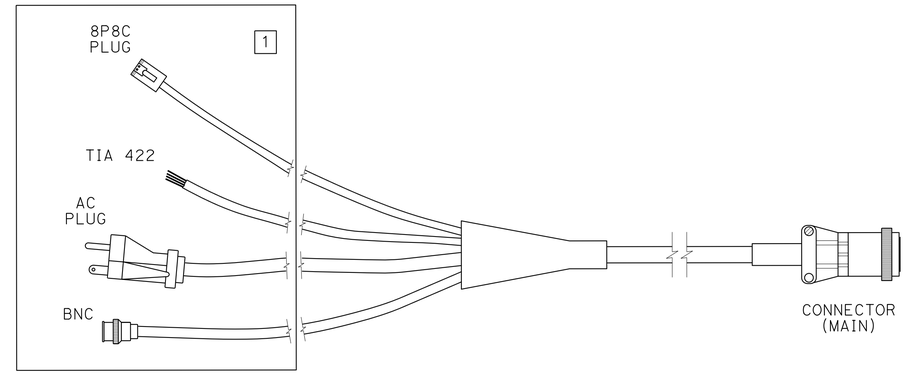

COMPOSITE VIDEO CABLE

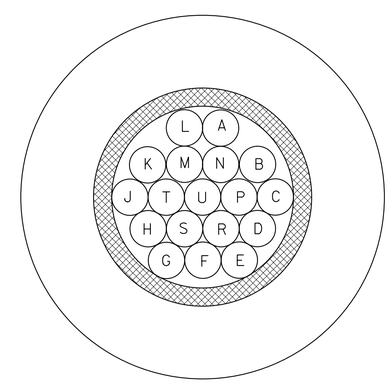

COMPOSITE VIDEO CABLE CROSS SECTION

(TYPICAL COMPOSITE VIDEO CABLE)

FOR LEGEND, ABBREVIATIONS AND NOTES SEE SHEET E-1.

ELECTRICAL DETAILS

NO SCALE

E-44

STATE OF CALIFORNIA - DEPARTMENT OF TRANSPORTATION
Caltrans **OFFICE OF ITS**

FUNCTIONAL SUPERVISOR: JACQUELINE C. TAN
CALCULATED-DESIGNED BY: HIEU LUU
CHECKED BY: JACQUELINE C. TAN
REVISED BY
DATE REVISED

LAST REVISION 00-00-00
DATE PLOTTED => 28-AUG-2015
TIME PLOTTED => 14:14

Dist	COUNTY	ROUTE	POST MILES TOTAL PROJECT	SHEET No.	TOTAL SHEETS
07	LA	210	R18.8/R24.9	78	95

Jacqueline C Tan 5/13/15
REGISTERED ELECTRICAL ENGINEER DATE

8-10-15
PLANS APPROVAL DATE

REGISTERED PROFESSIONAL ENGINEER
JACQUELINE C. TAN
No. E015611
Exp. 12/31/15
ELECTRICAL
STATE OF CALIFORNIA

THE STATE OF CALIFORNIA OR ITS OFFICERS OR AGENTS SHALL NOT BE RESPONSIBLE FOR THE ACCURACY OR COMPLETENESS OF ELECTRONIC COPIES OF THIS PLAN SHEET.

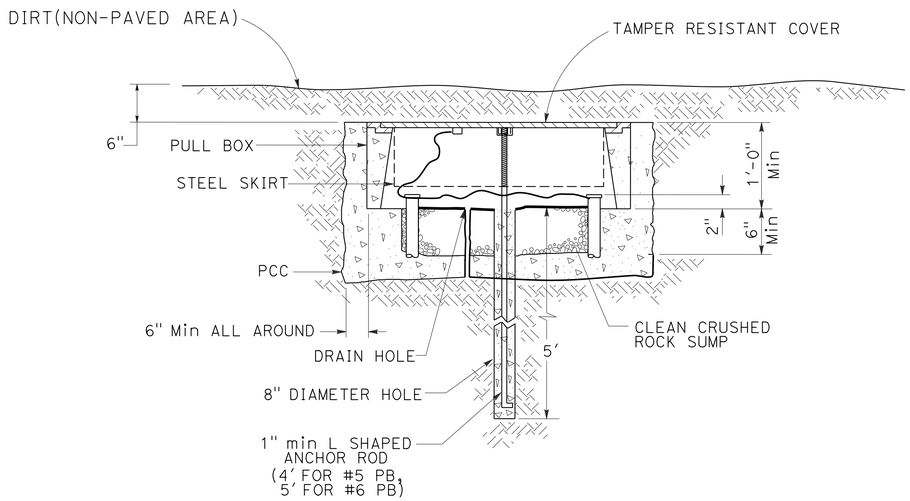

Pull Box Installation Details For Non-paved Areas

No Scale

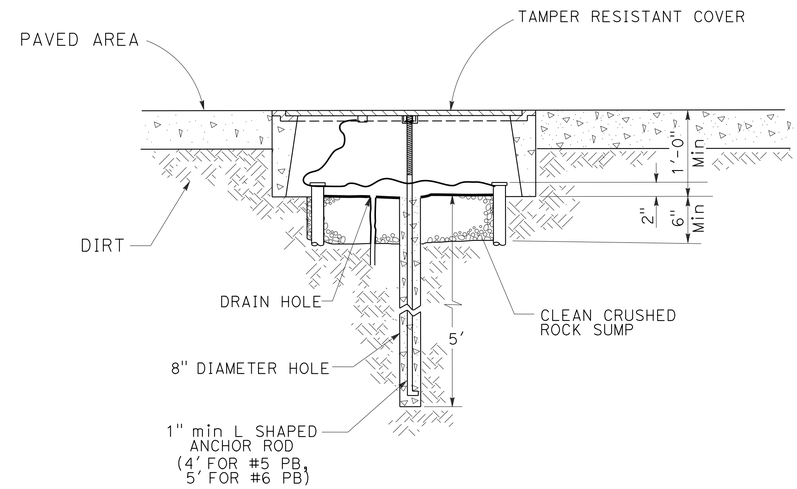

Pull Box Installation Details For Paved Areas

No Scale

(PULL BOX WITH TAMPER RESISTANT COVER INSTALLATION DETAILS)

ELECTRICAL DETAILS
NO SCALE

E-45

REVISED BY	DATE REVISED

CALCULATED-DESIGNED BY	CHECKED BY
HIEU LUU	JACQUELINE C. TAN

FUNCTIONAL SUPERVISOR: JACQUELINE C. TAN

STATE OF CALIFORNIA - DEPARTMENT OF TRANSPORTATION
Caltrans OFFICE OF ITS

LAST REVISION 00-00-00 | DATE PLOTTED => 28-AUG-2015 | TIME PLOTTED => 14:14

Dist	COUNTY	ROUTE	POST MILES TOTAL PROJECT	SHEET No.	TOTAL SHEETS
07	LA	210	R18.8/R24.9	79	95

REGISTERED ELECTRICAL ENGINEER 5/13/15 DATE

8-10-15
PLANS APPROVAL DATE

REGISTERED PROFESSIONAL ENGINEER JACQUELINE C. TAN No. E015611 Exp. 12/31/15 ELECTRICAL STATE OF CALIFORNIA

THE STATE OF CALIFORNIA OR ITS OFFICERS OR AGENTS SHALL NOT BE RESPONSIBLE FOR THE ACCURACY OR COMPLETENESS OF SCANNED COPIES OF THIS PLAN SHEET.

NOTE: ITEMS SHOWN IN THE TABLE ARE NOT A SEPARATE PAY ITEM, FOR INFORMATION ONLY

COMMUNICATION SYSTEM

SHEET No.	2-4"C TYPE 3	2-4"C TYPE 1	1-3"C TYPE 1	1-3"C TYPE 3	4 SIZE 1" INNERDUCTS	2-48SMFO	1-72SMFO	12SMFO	COMMUNICATION PULL BOX	PULL BOX WITH TAMPER RESISTANT COVER	SPLICE VAULT	FIBER OPTIC SPLICE ENCLOSURE	ETHERNET SWITCH TYPE 1	ETHERNET SWITCH TYPE 2	FDU	MODEL 334 CONTROLLER CABINET	2#4	1#4G	20 A, 1P CIRCUIT BREAKER	EXPANSION JOINT
	LF	LF	LF	LF	LF	LF	LF	LF	EA	EA	EA	EA	EA	EA	EA	EA	LF	LF	EA	EA
E-2	700	200	700	100	4000	1000	1000	—	1	2	1	—	—	1	3	1	700	700	1	4
E-3	1400	200	—	50	6400	1600	1600	50	1	—	1	1	1	—	1	—	—	—	—	—
E-4	1500	—	—	—	6000	1500	1500	—	1	—	—	—	—	—	—	—	—	—	—	—
E-5	1400	200	100	150	6400	1600	1600	300	2	—	1	1	1	—	1	—	—	—	—	—
E-6	1400	300	500	500	6800	1700	1700	1400	3	—	2	2	4	—	4	—	—	—	—	—
E-7	1500	—	—	—	6000	1500	1500	—	2	—	—	—	—	—	—	—	—	—	—	—
E-8	1400	200	500	50	6400	1600	1600	500	2	—	1	1	1	—	—	—	—	—	—	4
E-9	1500	—	500	—	6000	1500	1500	—	1	—	1	2	2	—	2	—	—	—	—	—
E-10	1400	100	600	500	6000	1500	1500	1100	3	—	1	1	3	—	3	—	—	—	—	—
E-11	1400	100	—	—	6000	1500	1500	—	3	—	—	—	—	—	—	—	—	—	—	—
E-12	1200	400	500	500	6400	1600	1600	1100	2	—	2	2	2	—	2	—	—	—	—	4
E-13	1200	400	500	50	6400	1600	1600	600	2	—	1	1	1	—	—	—	—	—	—	4
E-14	900	700	—	—	6400	1600	1600	—	—	—	—	—	—	—	—	—	—	—	—	4
E-15	1400	200	400	1000	6400	1600	1600	1800	4	—	2	2	3	—	3	—	—	—	—	—
E-16	1500	200	—	100	6800	1700	1700	100	1	—	1	1	1	—	1	—	—	—	—	—
E-17	1400	400	400	100	7200	1800	1800	500	2	—	1	1	1	—	1	—	—	—	—	4
E-18	1000	600	600	600	6400	1600	1600	2000	4	—	2	2	3	—	3	—	—	—	—	4
E-19	1300	200	400	100	6000	1500	1500	500	2	—	1	1	1	—	1	—	—	—	—	4
E-20	1400	300	—	—	6800	1700	1700	—	3	—	—	—	—	—	3	—	—	—	—	4
E-21	1300	300	—	300	6000	1500	1500	1000	1	—	2	2	2	—	2	—	—	—	—	4
E-22	1300	300	—	300	6000	1500	1500	400	1	—	1	1	2	—	2	—	—	—	—	4
E-23	1500	—	—	—	6000	1500	1500	—	2	—	—	—	—	—	—	—	—	—	—	—
E-24	1000	1000	1400	400	8000	2000	2000	500	5	5	1	1	1	1	3	1	1400	1400	1	—

ELECTRICAL QUANTITIES

FOR LEGEND, ABBREVIATIONS AND GENERAL NOTES SEE SHEET E-1.

E-46

STATE OF CALIFORNIA - DEPARTMENT OF TRANSPORTATION
OFFICE OF ITS
Caltrans

FUNCTIONAL SUPERVISOR: JACQUELINE C. TAN
CALCULATED-DESIGNED BY: HIEU LUU
CHECKED BY: JACQUELINE C. TAN
REVISED BY
DATE REVISED

LAST REVISION 00-00-00
DATE PLOTTED =>
TIME PLOTTED =>

Dist	COUNTY	ROUTE	POST MILES TOTAL PROJECT	SHEET No.	TOTAL SHEETS
07	LA	210	R18.8/R24.9	80	95

REGISTERED CIVIL ENGINEER DATE 5/13/15

8-10-15
PLANS APPROVAL DATE

REGISTERED PROFESSIONAL ENGINEER
JACQUELINE C. TAN
No. E015611
Exp. 12/31/15
ELECTRICAL
STATE OF CALIFORNIA

THE STATE OF CALIFORNIA OR ITS OFFICERS OR AGENTS SHALL NOT BE RESPONSIBLE FOR THE ACCURACY OR COMPLETENESS OF SCANNED COPIES OF THIS PLAN SHEET.

NOTE: ITEMS SHOWN IN TABLES ARE NOT A SEPARATE PAY ITEM.
FOR INFORMATION ONLY.

CLOSED CIRCUIT TELEVISION CAMERA

SHEET No.	CCTV CAMERA LOCATION	3"C TYPE 1	2"C TYPE 1	SIZE 1" INNERDUCT	12SMFO	#6 TAMPER RESISTANT PULL BOX	#5 TAMPER RESISTANT PULL BOX	#4 AWG	1#8(G)	30 A CIRCUIT BREAKER	MODEL 334-TV CONTROLLER CABINET	CCTV POLE TYPE 15	CCTV POLE TYPE 45	CCTV CAMERA ASSEMBLY	COMPOSITE VIDEO CABLE	PULL BOX WITH TAMPER RESISTANT COVER	VIDEO ENCODER	ETHERNET SWITCH TYPE 1	12-FIBER FDU	#5 PULL BOX
		LF	LF	LF	LF	EA	EA	LF	LF	EA	EA	EA	EA	EA	LF	EA	EA	EA	EA	EA
E-27	FT234	20	900	15	50	1	5	1800	900	1	1	1	—	1	1	7	1	1	1	—
E-30	FT242	20	340	15	105	1	2	560	280	1	1	—	1	1	1	—	1	1	1	1

CHANGEABLE MESSAGE SIGN AND CLOSED CIRCUIT TELEVISION CAMERA (LOCATION FT207)

SHEET No.	3"C TYPE 1	SIZE 1" INNERDUCT	12SMFO	PULL BOX WITH TAMPER RESISTANT COVER	#5 PULL BOX	#4 AWG	#1 AWG	1#2(G)	1#8(G)	40 A, 2P CIRCUIT BREAKER	30 A CIRCUIT BREAKER	MODEL 334/334-TV CONTROLLER CABINET	CCTV POLE TYPE CCTV 45	CCTV CAMERA ASSEMBLY	COMPOSITE VIDEO CABLE	TAMPER RESISTANT COVER	VIDEO ENCODER	ETHERNET SWITCH TYPE 1	12-FIBER FDU	170 TERMINAL CARD
	LF	LF	LF	EA	EA	LF	LF	LF	LF	EA	EA	EA	EA	EA	LF	EA	EA	EA	EA	EA
E-25	1120	150	150	10	3	4100	2600	1000	30	1	2	1	1	1	80	1	1	2	2	1

MODIFY TRAFFIC MONITORING STATION

SHEET No.	3"C TYPE 1	2"C TYPE 1	12SMFO	#6 PULL BOX	DLC	#8 AWG	#8(G)	TYPE E LOOP	20 A CIRCUIT BREAKER	ETHERNET SWITCH TYPE 1	12SMFO FDU	TAMPER RESISTANT COVER	#5 PULL BOX	SIZE 1" INNERDUCT
	LF	LF	LF	EA	LF	LF	LF	EA	EA	EA	EA	EA	EA	LF
E-26	—	—	20	—	1600	1200	600	8	1	1	1	5	1	—
E-28	40	50	75	2	1950	60	—	11	1	1	1	1	1	—
E-29	320	—	150	4	5380	90	—	12	1	1	1	1	—	100

ELECTRICAL QUANTITIES

E-47

REVISED BY | DATE REVISED
CONWAY CHU | JACQUELINE C. TAN
CALCULATED-DESIGNED BY | CHECKED BY
FUNCTIONAL SUPERVISOR | JACQUELINE C. TAN
STATE OF CALIFORNIA - DEPARTMENT OF TRANSPORTATION
Caltrans
OFFICE OF ITS

LAST REVISION 09-23-14 | DATE PLOTTED => 28-AUG-2015 | TIME PLOTTED => 14:14

DIST	COUNTY	ROUTE	POST MILES TOTAL PROJECT	SHEET No.	TOTAL SHEETS
07	LA	210	R18.8/R24.9	81	95

LAITH BAHIA 06-26-15
REGISTERED CIVIL ENGINEER DATE

8-10-15
PLANS APPROVAL DATE

REGISTERED PROFESSIONAL ENGINEER
LAITH BAHIA
No. C53068
Exp. 06-30-17
CIVIL
STATE OF CALIFORNIA

The State of California or its officers or agents shall not be responsible for the accuracy or completeness of scanned copies of this plan sheet.

BRIDGE TABLE

	Bridge Name	PM	Bridge Number	Rail Type	BB to EB Length (ft)	Approach Installation Length (ft)	Departure Installation Length (ft)	Total Installation Length (ft)	MR and Joint Seal Type	Hinge	No. of Span
1	East Connector UC (W210 - W2)	R18.91	53-2199	9	176.9	37	36	250	1" TYPE A	NO	1
2	Hampton - Foothill Blvd UC	R20.85	53-2202	9	663	30	25	718	1½" TYPE B	YES	5
3	Berkshire Place UC	R21.53	53-0734	9	159	20	12	191	1½" TYPE B	NO	1
4	Flint Canyon Wash Bridge	R21.84	53-0579	9	451.6	180	0	632	1½" TYPE B	NO	4
5	Arroyo Seco	R22.14	53-2173	9	579	15	18	612	2" TYPE B	NO	3
6	Casitas Ave UC	R22.84	53-2154	25	143	0	0	143	1" TYPE B	NO	1
7	Lincoln-Howard UC	R23.19	53-2155	9	551	16	16	583	1" TYPE B	YES	6
8	Washington Blvd UC	R23.55	53-2157	25	140	12	4	156	1" TYPE B	NO	1
9	Hammond Street UC	R23.80	53-2158	25	132	14	6	152	1" TYPE B	NO	1
10	Mountain Avenue UC	R24.06	53-2159	9	153	0	0	153	1" TYPE B	NO	1
11	Lincoln Ave UC	R24.17	53-2160	25	248.9	30	24	303	1" TYPE B	NO	3

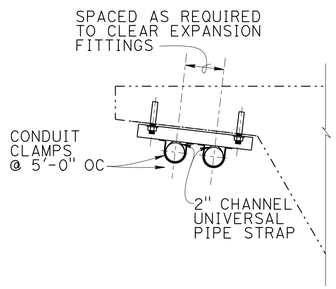

SECTION B-B
¾" = 1'-0"

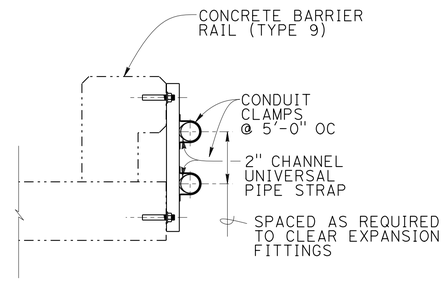

SECTION A-A
¾" = 1'-0"

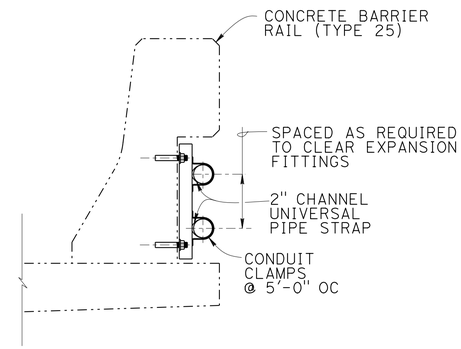

NOTE: Elevation similar to Type 9 Elevation

SECTION FOR TYPE 25 BARRIER
¾" = 1'-0"

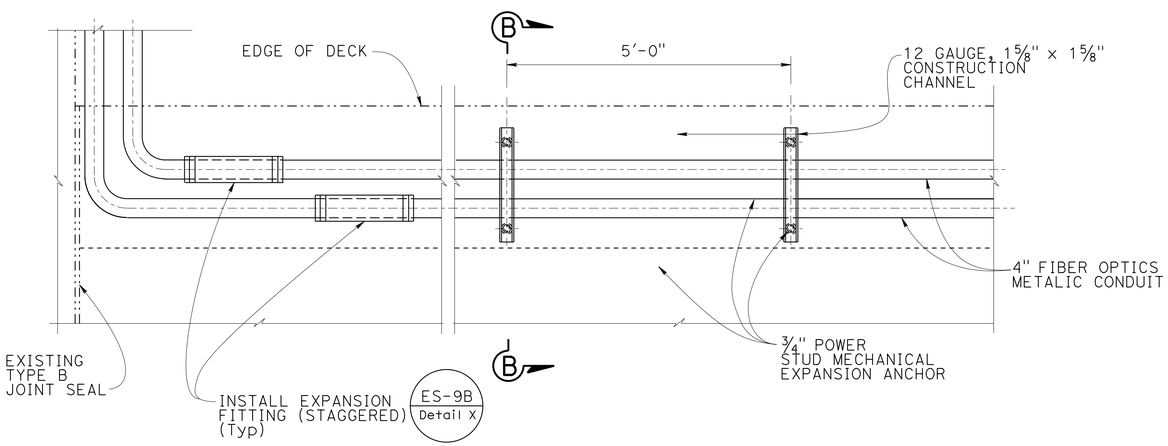

PLAN AT MOUNTAIN AVENUE UC
¾" = 1'-0"

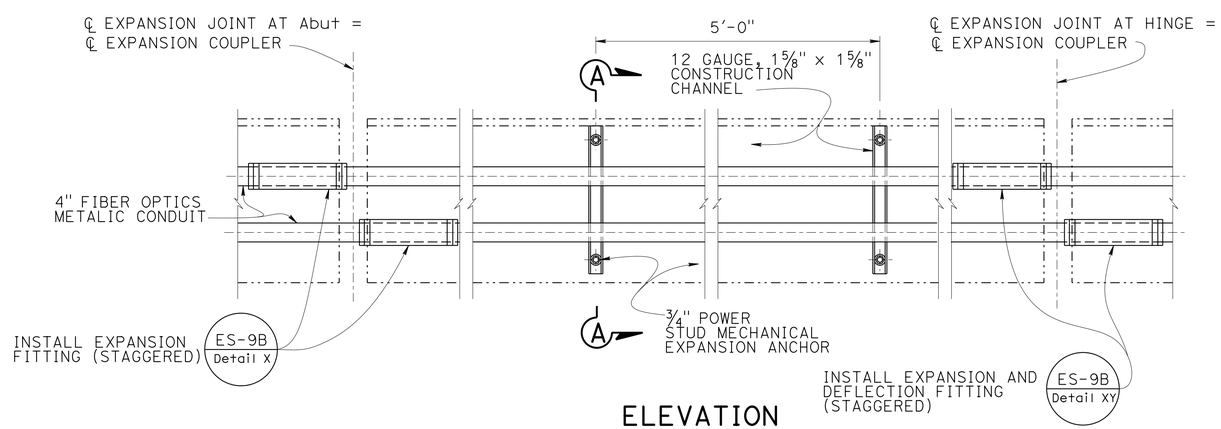

ELEVATION
¾" = 1'-0"

DESIGN	BY J. Massoomi	CHECKED L. Bahia	
DETAILS	BY L. Xiong	CHECKED L. Bahia	
QUANTITIES	BY X	CHECKED X	

STATE OF CALIFORNIA
DEPARTMENT OF TRANSPORTATION

DIVISION OF ENGINEERING SERVICES
STRUCTURE DESIGN
DESIGN BRANCH 14

BRIDGE NO. Varies
POST MILE 18.8-24.9

TMS
FIBER OPTIC CONDUIT

SES-1

STRUCTURES DESIGN DETAIL SHEET (ENGLISH) (REV. 09-01-10)

ORIGINAL SCALE IN INCHES FOR REDUCED PLANS 0 1 2 3

UNIT: 3613
PROJECT NUMBER & PHASE: 07140000801
CONTRACT NO.: 07-129971

DISREGARD PRINTS BEARING EARLIER REVISION DATES

REVISION DATES: 10-29-14 5-6-15 06-26-15

SHEET 1 OF 1

FILE => 7129971_ses1.dgn

USERNAME => s113484 DATE PLOTTED => 28-AUG-2015 TIME PLOTTED => 14:14

M

Maint	MAINTENANCE
Max	MAXIMUM
MB	METAL BEAM
MBB	METAL BEAM BARRIER
MBGR	METAL BEAM GUARD RAILING
Med	MEDIAN
MGS	MIDWEST GUARDRAIL SYSTEM
MH	MANHOLE
Min	MINIMUM
Misc	MISCELLANEOUS
Misc I & S	MISCELLANEOUS IRON AND STEEL
Mkr	MARKER
Mod	MODIFIED,
	MODIFY
Mon	MONUMENT
MP	METAL PLATE
MPGR	METAL PLATE GUARD RAILING
MR	MOVEMENT RATING
MSE	MECHANICALLY STABILIZED EMBANKMENT
Mt	MOUNTAIN, MOUNT
Mtl	MATERIAL
MVP	MAINTENANCE VEHICLE PULLOUT

N

N	NORTH
NB	NORTHBOUND
No.	NUMBER (MUST HAVE PERIOD)
Nos.	NUMBERS (MUST HAVE PERIOD)
NPS	NOMINAL PIPE SIZE
NS	NEAR SIDE
NSP	NEW STANDARD PLAN
NTS	NOT TO SCALE

O

Oblr	OBLITERATE
OC	OVERCROSSING
OD	OUTSIDE DIAMETER
OF	OUTSIDE FACE
OG	ORIGINAL GROUND
OGAC	OPEN GRADED ASPHALT CONCRETE
OGFC	OPEN GRADED FRICTION COURSE
OH	OVERHEAD
OHWM	ORDINARY HIGH WATER MARK
O-O	OUT TO OUT
Opp	OPPOSITE
OSD	OVERSIDE DRAIN

P

P	PAGE
PAP	PERFORATED ALUMINUM PIPE
PB	PULL BOX
PC	POINT OF CURVATURE,
	PRECAST
PCC	POINT OF COMPOUND CURVE,
	PORTLAND CEMENT CONCRETE
PCMS	PORTABLE CHANGEABLE MESSAGE SIGN
PCP	PERFORATED CONCRETE PIPE,
	PRESTRESSED CONCRETE PIPE
PCVC	POINT OF COMPOUND VERTICAL CURVE
PEC	PERMIT TO ENTER AND CONSTRUCT
Ped	PEDESTRIAN
Ped OC	PEDESTRIAN OVERCROSSING
Ped UC	PEDESTRIAN UNDERCROSSING
Perm Mtl	PERMEABLE MATERIAL

P continued

PG	PROFILE GRADE
PI	POINT OF INTERSECTION
PJP	PARTIAL JOINT PENETRATION
Pkwy	PARKWAY
ℙ,PL	PLATE
P/L	PROPERTY LINE
PM	POST MILE,
	TIME FROM NOON TO MIDNIGHT
PN	PAVING NOTCH
POC	POINT OF HORIZONTAL CURVE
POT	POINT OF TANGENT
POVC	POINT OF VERTICAL CURVE
PP	PIPE PILE,
	PLASTIC PIPE,
	POWER POLE
PPL	PREFORMED PERMEABLE LINER
PPP	PERFORATED PLASTIC PIPE
PRC	POINT OF REVERSE CURVE
PRF	PAVEMENT REINFORCING FABRIC
PRVC	POINT OF REVERSE VERTICAL CURVE
PS&E	PLANS, SPECIFICATIONS AND ESTIMATES
PS, P/S	PRESTRESSED
PSP	PERFORATED STEEL PIPE
PT	POINT OF TANGENCY
PVC	POLYVINYL CHLORIDE
Pvmt	PAVEMENT

Q

Qty	QUANTITY

R

R	RADIUS
R & D	REMOVE AND DISPOSE
R & S	REMOVE AND SALVAGE
R/C	RATE OF CHANGE
RCA	REINFORCED CONCRETE ARCH
RCB	REINFORCED CONCRETE BOX
RCP	REINFORCED CONCRETE PIPE
RCPA	REINFORCED CONCRETE PIPE ARCH
Rd	ROAD
Reinf	REINFORCED,
	REINFORCEMENT,
	REINFORCING
Rel	RELOCATE
Repl	REPLACEMENT
Ret	RETAINING
Rev	REVISED, REVISION
Rdwy	ROADWAY
RHMA	RUBBERIZED HOT MIX ASPHALT
Riv	RIVER
RM	ROAD-MIXED
RP	RADIUS POINT,
	REFERENCE POINT
RR	RAILROAD
RSP	ROCK SLOPE PROTECTION,
	REVISED STANDARD PLAN
Rt	RIGHT
Rte	ROUTE
RW	REDWOOD,
	RETAINING WALL
R/W	RIGHT OF WAY
Rwy	RAILWAY

S

S	SOUTH,
	SUPPLEMENT
SAE	STRUCTURE APPROACH EMBANKMENT
Salv	SALVAGE
SAPP	STRUCTURAL ALUMINUM PLATE PIPE
SB	SOUTHBOUND
SC	SAND CUSHION
SCSP	SLOTTED CORRUGATED STEEL PIPE
SD	STORM DRAIN
Sec	SECOND,
	SECTION
Sep	SEPARATION
SG	SUBGRADE
Shld	SHOULDER
Sht	SHEET
Sim	SIMILAR
℄	STATION LINE
SM	SELECTED MATERIAL
Spec	SPECIAL,
	SPECIFICATIONS
SPP	SLOTTED PLASTIC PIPE
SS	SLOPE STAKE
SSBM	STRAP AND SADDLE BRACKET METHOD
SSD	STRUCTURAL SECTION DRAIN
SSPA	STRUCTURAL STEEL PLATE ARCH
SSPP	STRUCTURAL STEEL PLATE PIPE
SSPPA	STRUCTURAL STEEL PLATE PIPE ARCH
SSRP	STEEL SPIRAL RIB PIPE
St	STREET
Sta	STATION
STBB	SINGLE THRIE BEAM BARRIER
Std	STANDARD
Str	STRUCTURE
Surf	SURFACING
SW	SIDEWALK,
	SOUND WALL
Swr	SEWER
Sym	SYMMETRICAL
S4S	SURFACE 4 SIDES

T

T	SEMI-TANGENT
Tan	TANGENT
TBB	THRIE BEAM BARRIER
Tbr	TIMBER
TC	TOP OF CURB
TCB	TRAFFIC CONTROL BOX
TCE	TEMPORARY CONSTRUCTION EASEMENT
Tel	TELEPHONE
Temp	TEMPORARY
TG	TOP OF GRADE
Tot	TOTAL
TP	TELEPHONE POLE
TPB	TREATED PERMEABLE BASE
TPM	TREATED PERMEABLE MATERIAL
Trans	TRANSITION

T continued

TS	TRANSVERSE,
	TRAFFIC SIGNAL,
	TUBULAR STEEL
Typ	TYPICAL

U

UC	UNDERCROSSING
UD	UNDERDRAIN
UG	UNDERGROUND
UON	UNLESS OTHERWISE NOTED
UP	UNDERPASS

V

V	VALVE,
	DESIGN SPEED
Var	VARIABLE,
	VARIES
VC	VERTICAL CURVE
VCP	VITRIFIED CLAY PIPE
Vert	VERTICAL
Via	VIADUCT
Vol	VOLUME

W

W	WEST,
	WIDTH
WB	WESTBOUND
WH	WEEP HOLE
WM	WIRE MESH
WS	WATER SURFACE
WSP	WELDED STEEL PIPE
Wt	WEIGHT
WV	WATER VALVE
WW	WINGWALL
WWLOL	WINGWALL LAYOUT LINE

X

X Sec	CROSS SECTION
Xing	CROSSING

Y

Yr	YEAR
Yrs	YEARS

Dist	COUNTY	ROUTE	POST MILES TOTAL PROJECT	SHEET No.	TOTAL SHEETS
07	LA	210	R18.8/R24.9	82	95

Grace M. Tsushima
REGISTERED CIVIL ENGINEER

July 19, 2013
PLANS APPROVAL DATE

REGISTERED PROFESSIONAL ENGINEER
Grace M. Tsushima
No. C49814
Exp. 9-30-14
CIVIL
STATE OF CALIFORNIA

THE STATE OF CALIFORNIA OR ITS OFFICERS OR AGENTS SHALL NOT BE RESPONSIBLE FOR THE ACCURACY OR COMPLETENESS OF SCANNED COPIES OF THIS PLAN SHEET.

TO ACCOMPANY PLANS DATED 8-10-15

UNIT OF MEASUREMENT SYMBOLS:

Some of the symbols used in the project plan quantity tables and in the Bid Item List are:

TABLE A

SYMBOL USED	DEFINITIONS
ACRE	ACRE
CF	CUBIC FOOT
CY	CUBIC YARD
EA	EACH
GAL	GALLON
LB	POUND
LF	LINEAR FOOT
SQFT	SQUARE FOOT
SQYD	SQUARE YARD
STA	100 FEET
TAB	TABLET
TON	2,000 POUNDS

Some of the symbols used in the plans other than in the project plan quantity tables are:

TABLE B

SYMBOL USED	DEFINITIONS
ksi	KIPS PER SQUARE INCH
ksf	KIPS PER SQUARE FOOT
psi	POUNDS PER SQUARE INCH
psf	POUNDS PER SQUARE FOOT
lb/ft^3, pcf	POUNDS PER CUBIC FOOT
tsf	TONS PER SQUARE FOOT
mph, MPH *	MILES PER HOUR
ø	NOMINAL DIAMETER
oz	OUNCE
lb	POUND
kip	1,000 POUNDS
cal	CALORIE
ft	FOOT OR FEET
gal	GALLON

* For use on a sign panel only

STATE OF CALIFORNIA
DEPARTMENT OF TRANSPORTATION

ABBREVIATIONS (SHEET 2 OF 2)

NO SCALE

RSP A10B DATED JULY 19, 2013 SUPERSEDES STANDARD PLAN A10B DATED MAY 20, 2011 - PAGE 2 OF THE STANDARD PLANS BOOK DATED 2010.

REVISED STANDARD PLAN RSP A10B

2010 REVISED STANDARD PLAN RSP A10B

6-7-13

Dist	COUNTY	ROUTE	POST MILES TOTAL PROJECT	SHEET No.	TOTAL SHEETS
07	LA	210	R18.8/R24.9	83	95

REGISTERED CIVIL ENGINEER

July 19, 2013
PLANS APPROVAL DATE

REGISTERED PROFESSIONAL ENGINEER
Gurinderpal Bhullar
No. C48815
Exp. 9-30-14
CIVIL
STATE OF CALIFORNIA

THE STATE OF CALIFORNIA OR ITS OFFICERS OR AGENTS SHALL NOT BE RESPONSIBLE FOR THE ACCURACY OR COMPLETENESS OF SCANNED COPIES OF THIS PLAN SHEET.

TO ACCOMPANY PLANS DATED 8-10-15

2010 REVISED STANDARD PLAN RSP T9

TABLE 1

TAPER LENGTH CRITERIA AND CHANNELIZING DEVICE SPACING

SPEED (S)	MINIMUM TAPER LENGTH * FOR WIDTH OF OFFSET 12 FEET (W)				MAXIMUM CHANNELIZING DEVICE SPACING		
					X	Y	Z **
	TANGENT 2L	MERGING L	SHIFTING L/2	SHOULDER L/3	TAPER	TANGENT	CONFLICT
mph	ft	ft	ft	ft	ft	ft	ft
20	160	80	40	27	20	40	10
25	250	125	63	42	25	50	12
30	360	180	90	60	30	60	15
35	490	245	123	82	35	70	17
40	640	320	160	107	40	80	20
45	1080	540	270	180	45	90	22
50	1200	600	300	200	50	100	25
55	1320	660	330	220	55	110	27
60	1440	720	360	240	60	120	30
65	1560	780	390	260	65	130	32
70	1680	840	420	280	70	140	35

* - For other offsets, use the following merging taper length formula for L:
For speed of 40 mph or less, $L = WS^2/60$
For speed of 45 mph or more, $L = WS$

Where: L = Taper length in feet
W = Width of offset in feet
S = Posted speed limit, off-peak 85th-percentile speed prior to work starting, or the anticipated operating speed in mph

** - Use for taper and tangent sections where there are no pavement markings or where there is a conflict between existing pavement markings and channelizers (CA).

TABLE 2

LONGITUDINAL BUFFER SPACE AND FLAGGER STATION SPACING

SPEED *	Min D **	DOWNGRADE Min D ***		
		-3%	-6%	-9%
mph	ft	ft	ft	ft
20	115	116	120	126
25	155	158	165	173
30	200	205	215	227
35	250	257	271	287
40	305	315	333	354
45	360	378	400	427
50	425	446	474	507
55	495	520	553	593
60	570	598	638	686
65	645	682	728	785
70	730	771	825	891

* - Speed is posted speed limit, off-peak 85th-percentile speed prior to work starting, or the anticipated operating speed in mph

** - Longitudinal buffer space or flagger station spacing

*** - Use on sustained downgrade steeper than -3 percent and longer than 1 mile.

TABLE 3

ADVANCE WARNING SIGN SPACING

ROAD TYPE	DISTANCE BETWEEN SIGNS *		
	A	B	C
	ft	ft	ft
URBAN - 25 mph OR LESS	100	100	100
URBAN - MORE THAN 25 mph TO 40 mph	250	250	250
URBAN - MORE THAN 40 mph	350	350	350
RURAL	500	500	500
EXPRESSWAY / FREEWAY	1000	1500	2640

* - The distances are approximate, are intended for guidance purposes only, and should be applied with engineering judgment. These distances should be adjusted by the Engineer for field conditions, if necessary, by increasing or decreasing the recommmended distances.

STATE OF CALIFORNIA
DEPARTMENT OF TRANSPORTATION

TRAFFIC CONTROL SYSTEM TABLES FOR LANE AND RAMP CLOSURES

NO SCALE

RSP T9 DATED JULY 19, 2013 SUPERSEDES RSP T9 DATED APRIL 19, 2013 THAT SUPPLEMENTS THE STANDARD PLANS BOOK DATED 2010.

REVISED STANDARD PLAN RSP T9

Dist	COUNTY	ROUTE	POST MILES TOTAL PROJECT	SHEET No.	TOTAL SHEETS
07	LA	210	R18.8/R24.9	84	95

REGISTERED CIVIL ENGINEER

April 19, 2013
PLANS APPROVAL DATE

REGISTERED PROFESSIONAL ENGINEER Gurinderpal Bhullar No. C48815 Exp. 9-30-14 CIVIL STATE OF CALIFORNIA

THE STATE OF CALIFORNIA OR ITS OFFICERS OR AGENTS SHALL NOT BE RESPONSIBLE FOR THE ACCURACY OR COMPLETENESS OF SCANNED COPIES OF THIS PLAN SHEET.

TO ACCOMPANY PLANS DATED ~~8-10-15~~

NOTES:

See Revised Standard Plan RSP T9 for tables.

Use cone spacing X for taper segment, Y for tangent segment or Z for conflict situations, as approriate, per Table 1, unless X, Y, or Z cone spacing is shown on this sheet.

Unless otherwise specified in the special provisions, all temporary warning signs shall have black legend on fluorescent orange background.

California codes are designated by (CA). Otherwise, Federal (MUTCD) codes are shown.

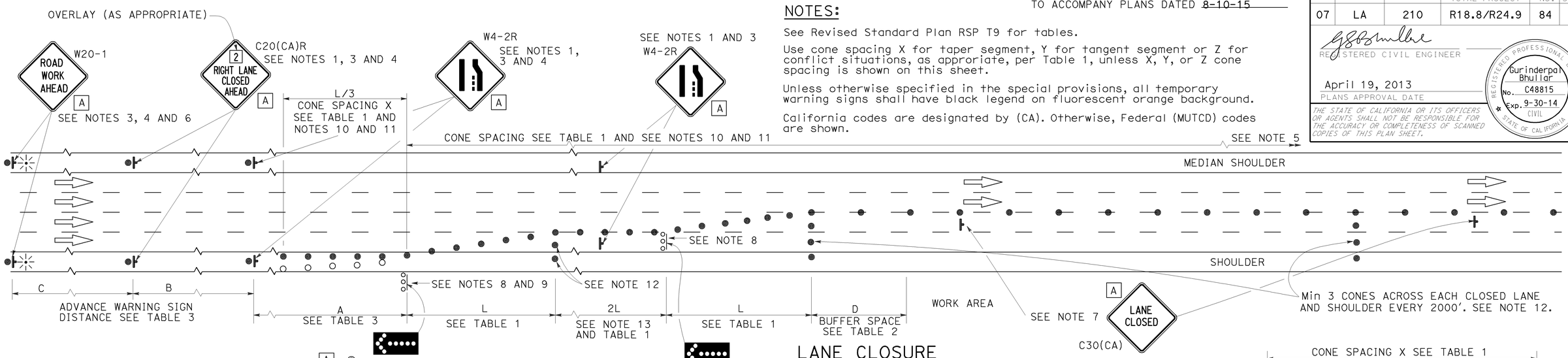

LANE CLOSURE

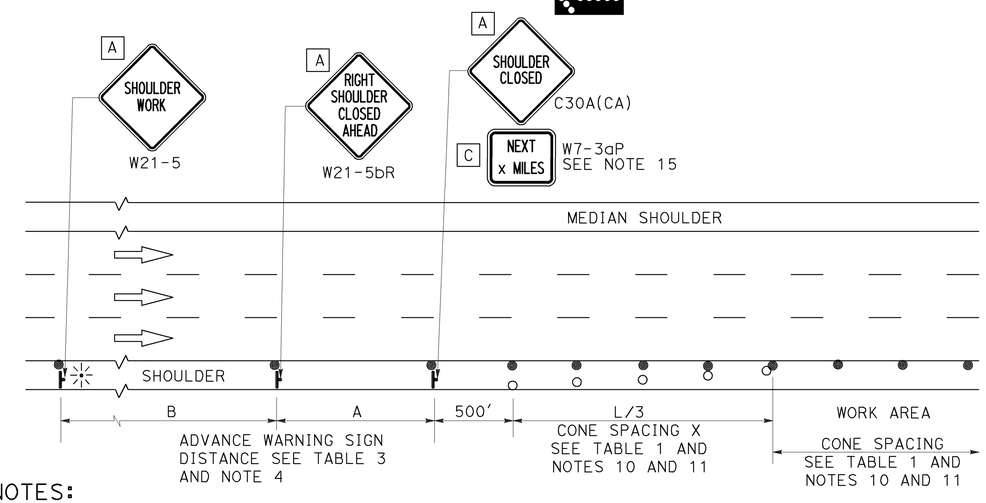

SHOULDER CLOSURE

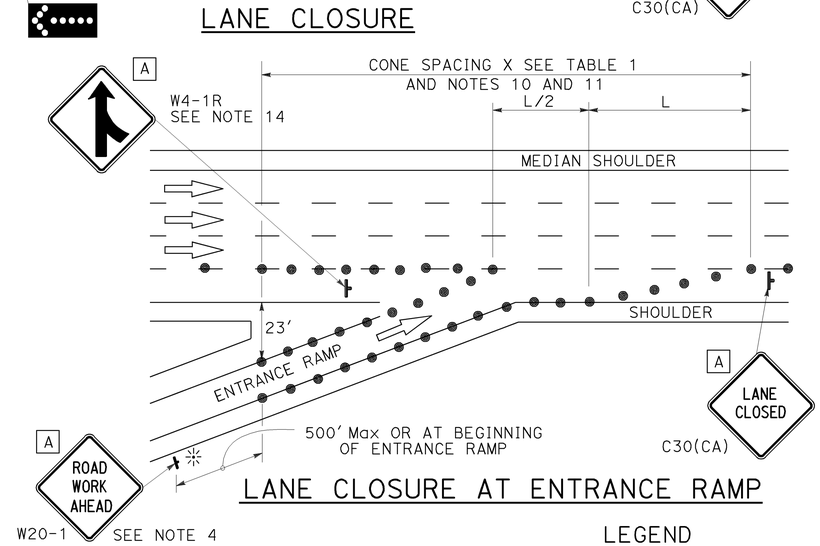

LANE CLOSURE AT ENTRANCE RAMP

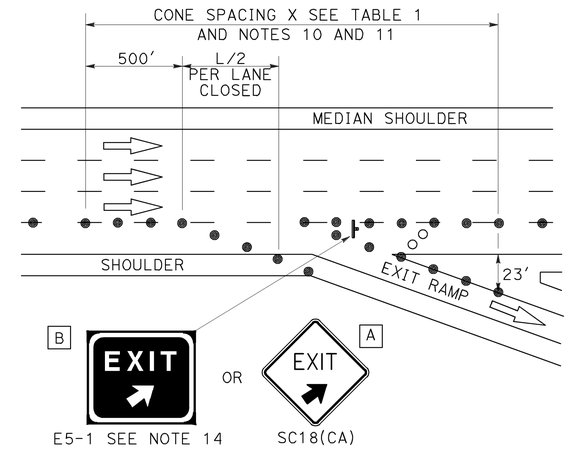

LANE CLOSURE AT EXIT RAMP

NOTES:

1. Median lane closures shall conform to the details as shown except that C20(CA)L and W4-2L signs shall be used.
2. At least one person shall be assigned to provide full time maintenance of traffic control devices for lane closures.
3. Duplicate sign installations are not required:
   a) On opposite shoulder if at least one-half of the available lanes remain open to traffic.
   b) In the median if the width of the median shoulder is less than 8' and the outside lanes are to be closed.
4. Each advance warning sign on each side of the roadway shall be equipped with at least two flags for daytime closure. Each flag shall be at least 16" x 16" in size and shall be orange or fluorescent red-orange in color. Flashing beacons shall be placed at the locations indicated for lane closure during hours of darkness.
5. A G20-2 "END ROAD WORK" sign, with minimum size of 48" x 24" as appropriate, shall be placed at the end of the lane closure unless the end of work area is obvious or ends within a larger project's limits.
6. If the W20-1 sign would follow within 2000' of a stationary W20-1 or G20-1 "ROAD WORK NEXT _____ MILES", use a C20(CA) sign for the first advance warning sign.
7. Place a C30(CA) sign every 2000' throughout length of lane closure.
8. One flashing arrow sign for each lane closed. The flashing arrow signs shall be Type I.
9. A minimum 1500' of sight distance shall be provided where possible for vehicles approaching the first flashing arrow sign. Lane closures shall not begin at top of crest vertical curve or on a horizontal curve.
10. All cones used for lane closures during the hours of darkness shall be fitted with retroreflective bands (or sleeves) as specified in the specifications.
11. Portable delineators, placed at one-half the spacing indicated for traffic cones may be used instead of cones for daytime closures only.
12. Unless otherwise specified in the special provisions, a minimum of 3 cones shall be placed transversely across each closed lane and shoulder at each location where a taper across a traffic lane ends and every 2000' as shown on the "Lane Closure" detail. Two Type II barricades may be used instead of the 3 cones. The transverse alignment of the cones or barricades on the closed shoulder may be shifted from the transverse alignment to provide access to the work.
13. Unless otherwise specified in the special provisions, the 2L tangent shown along lane lines shall be used between the L tapers required for each closed traffic lane.
14. Unless otherwise specified in the special provisions, the E5-1 or SC18(CA) and W4-1 signs shall be used as shown.
15. A W7-3aP "NEXT____ MILES" plaque must be used if theshoulder closure extends beyond the distance that can be perceived by road users.

LEGEND

- TRAFFIC CONE
- TRAFFIC CONE (OPTIONAL TAPER)
- TEMPORARY TRAFFIC CONTROL SIGN
- FLASHING ARROW SIGN (FAS)
- FAS SUPPORT OR TRAILER
- PORTABLE FLASHING BEACON

SIGN PANEL SIZE (Min)

A	48" x 48"
B	72" x 60"
C	36" x 30"

STATE OF CALIFORNIA
DEPARTMENT OF TRANSPORTATION

TRAFFIC CONTROL SYSTEM FOR LANE CLOSURE ON FREEWAYS AND EXPRESSWAYS

NO SCALE

RSP T10 DATED APRIL 19, 2013 SUPERSEDES STANDARD PLAN T10 DATED MAY 20, 2011 - PAGE 237 OF THE STANDARD PLANS BOOK DATED 2010.

REVISED STANDARD PLAN RSP T10

2010 REVISED STANDARD PLAN RSP T10

12-18-12

Dist	COUNTY	ROUTE	POST MILES TOTAL PROJECT	SHEET No.	TOTAL SHEETS
07	LA	210	R18.8/R24.9	84	95

REGISTERED CIVIL ENGINEER

April 19, 2013
PLANS APPROVAL DATE

REGISTERED PROFESSIONAL ENGINEER Gurinderpal Bhullar No. C48815 Exp. 9-30-14 CIVIL STATE OF CALIFORNIA

THE STATE OF CALIFORNIA OR ITS OFFICERS OR AGENTS SHALL NOT BE RESPONSIBLE FOR THE ACCURACY OR COMPLETENESS OF SCANNED COPIES OF THIS PLAN SHEET.

TO ACCOMPANY PLANS DATED 8-10-15

TYPICAL RAMP CLOSURES

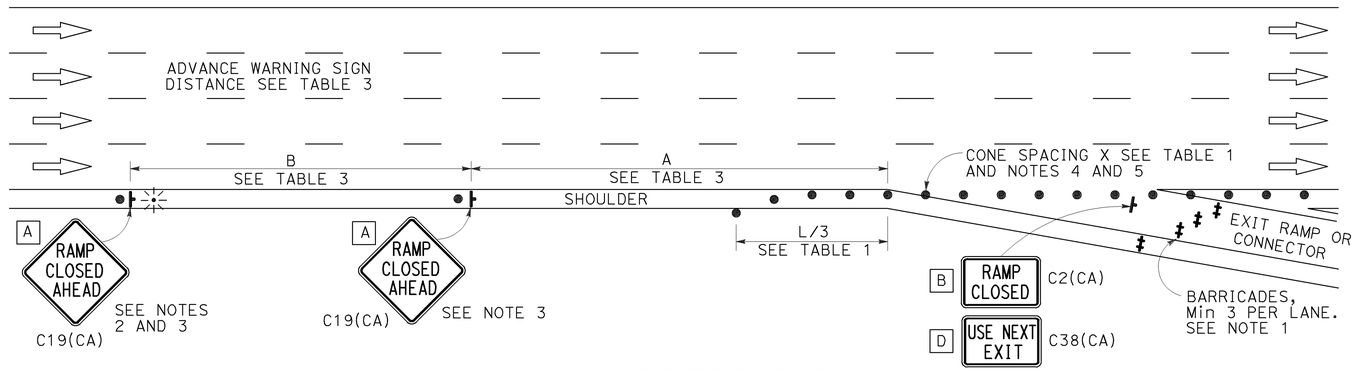

EXIT RAMP OR CONNECTOR

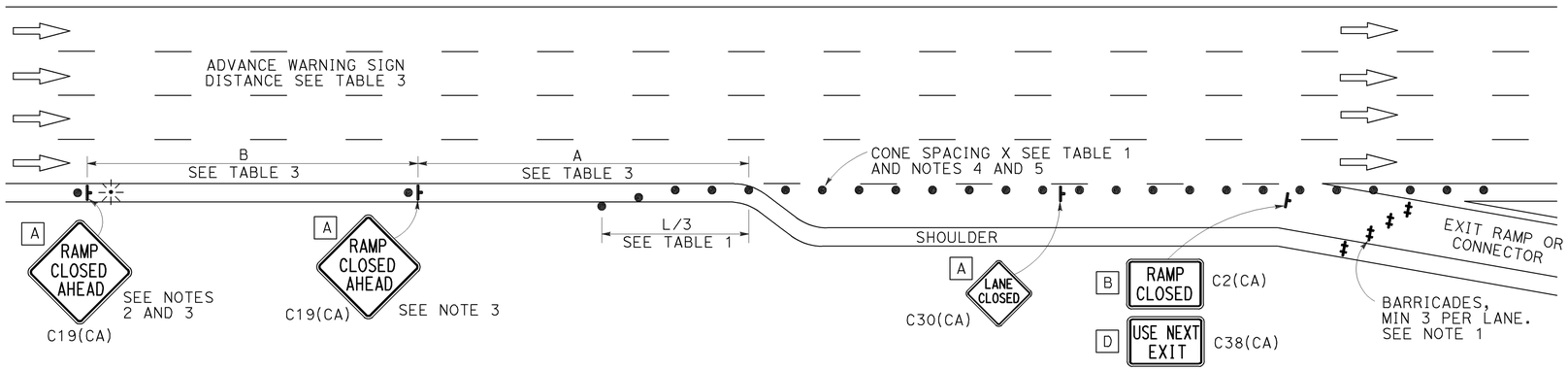

EXIT RAMP OR CONNECTOR WITH ADDITIONAL LANE

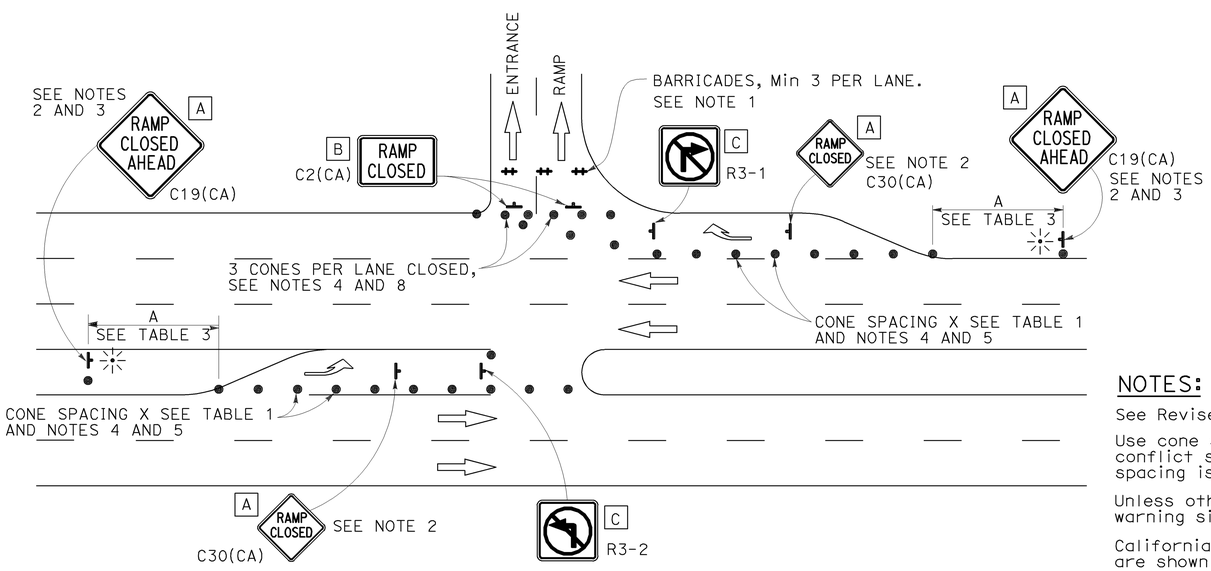

ENTRANCE RAMP WITH TURNING POCKETS

SIGN PANEL SIZE (Min)

- A 48" × 48"
- B 48" × 30"
- C 36" × 36"
- D 48" × 36"

LEGEND

- TRAFFIC CONE
- TEMPORARY TRAFFIC CONTROL SIGN
- BARRICADES
- PORTABLE FLASHING BEACON

NOTES:

1. Barricades shall be Type I, II, or III for closures lasting one week or less and Type III for closures lasting longer than one week.
2. In addition to placing the C19(CA) "RAMP CLOSED AHEAD" and C30(CA) "RAMP CLOSED" signs, black on orange overlay plates with the word "CLOSED" may be mounted, as directed by the Engineer, on all guide signs that refer to the closed ramp. The letter size on the overlay shall be the same as the guide sign.
3. Each advance C19(CA) "RAMP CLOSED AHEAD" sign shall be equipped with at least two flags for daytime closure. Each flag shall be at least 16" × 16" in size and shall be orange or fluorescent red-orange in color. A flashing beacon shall be placed on top of the first C19(CA) sign during hours of darkness.
4. All cones used for ramp closures during the hours of darkness shall be fitted with retroreflective bands (or sleeves) as specified in the specifications.
5. Portable delineators, placed at one-half the spacing indicated for traffic cones, may be used instead of cones for daytime ramp closures only.
6. At least one person shall be assigned to provide full time maintenance of traffic control devices, unless otherwise directed by the Engineer.
7. The existing "EXIT" signs shall be covered during ramp closures.
8. A minimum of 3 cones shall be placed transversely across each closed lane and shoulder.

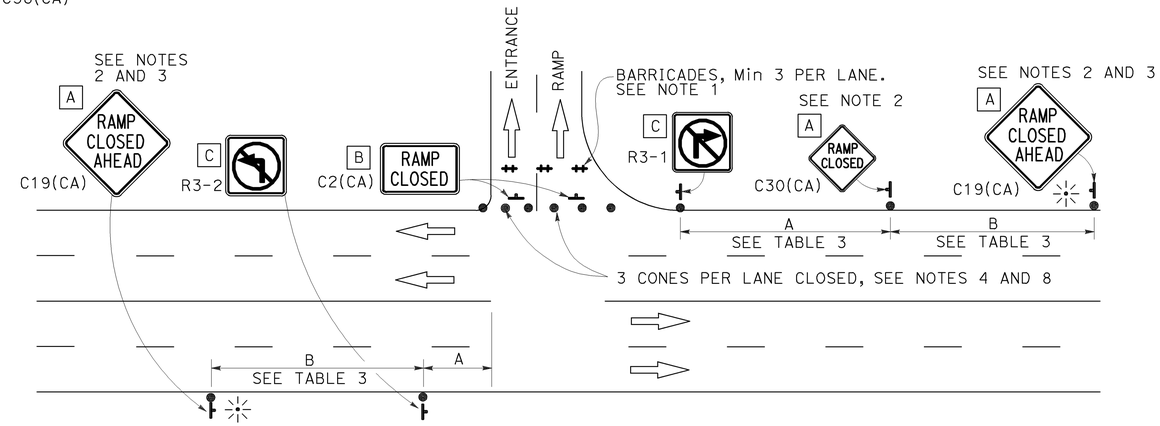

ENTRANCE RAMP WITHOUT TURNING POCKETS

NOTES:

See Revised Standard Plan RSP T9 for tables.

Use cone spacing X for taper segment, Y for tangent segment or Z for conflict situations, as approriate, per Table 1, unless X, Y, or Z cone spacing is shown on this sheet.

Unless otherwise specified in the special provisions, all temporary warning signs shall have black legend on fluorescent orange background.

California codes are designated by (CA). Otherwise, Federal (MUTCD) codes are shown.

STATE OF CALIFORNIA
DEPARTMENT OF TRANSPORTATION

TRAFFIC CONTROL SYSTEM FOR RAMP CLOSURE

NO SCALE

RSP T14 DATED APRIL 19, 2013 SUPERSEDES STANDARD PLAN T14
DATED MAY 20, 2011 - PAGE 242 OF THE STANDARD PLANS BOOK DATED 2010.

REVISED STANDARD PLAN RSP T14

2010 REVISED STANDARD PLAN RSP T14

12-18-12

DIST	COUNTY	ROUTE	KILOMETER POST TOTAL PROJECT	SHEET NO.	TOTAL SHEETS
07	LA	210	R18.8/R24.9	86	95

REGISTERED CIVIL ENGINEER

January 24, 2005
PLANS APPROVAL DATE

REGISTERED PROFESSIONAL ENGINEER Tillat Sattar No. C42892 Exp. 03-31-2006 CIVIL STATE OF CALIFORNIA

The State of California or its officers or agents shall not be responsible for the accuracy or completeness of electronic copies of this plan sheet.

To get to the Caltrans web site, go to: http://www.dot.ca.gov

Caltrans Metric

To accompany plans dated 8-10-15

2004 REVISED Std PLAN RSP S140

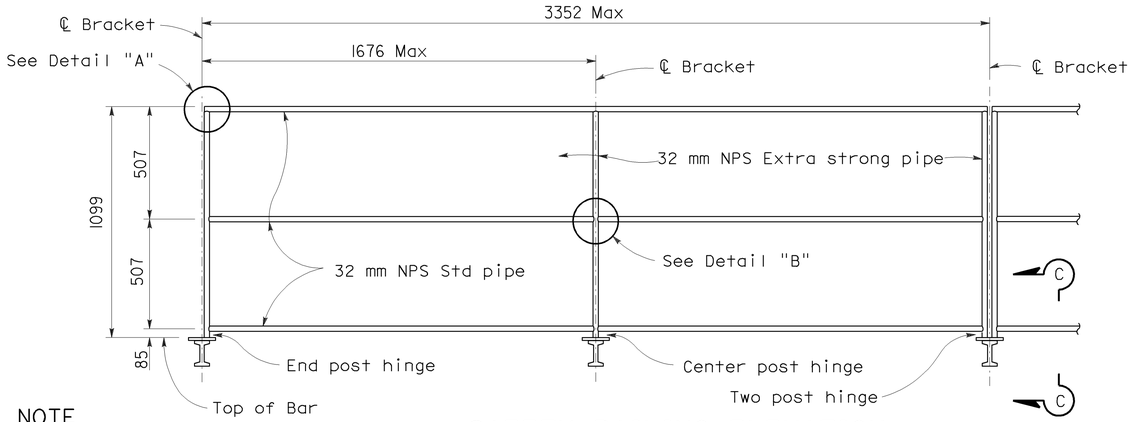

NOTE
Chain assembly behind (see detail this page)

SAFETY RAILING ELEVATION

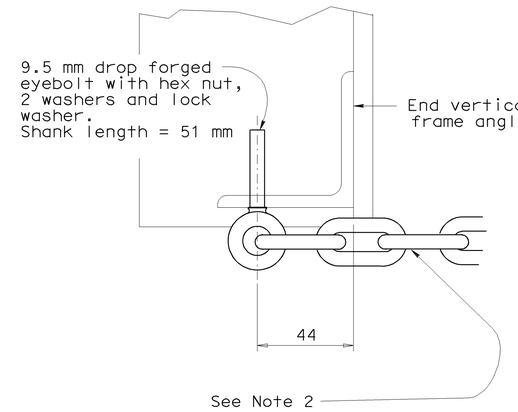

SECTION D-D

NOTE
See Revised Standard Plans RSP S101 and RSP S105 and RSP S109 for walkway bracket spacing.

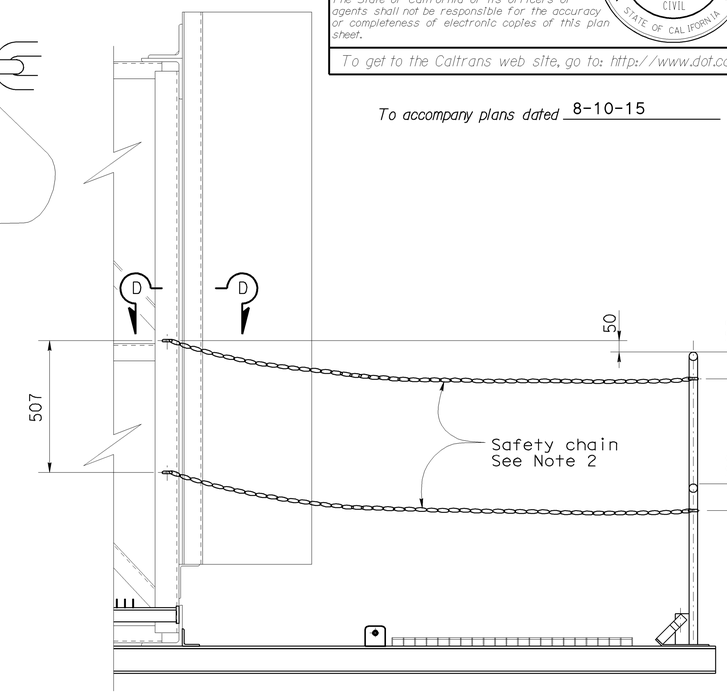

CHAIN ASSEMBLY

NOTES
1. Special care shall be taken to insure that the complete hinge and latch assembly will hold the safety railing in a steady manner, free of wobble while in the raised position. Maximum allowable displacement from vertical at top of railing when latched shall be 12 mm.
2. Safety chain shall be 9.5 mm galvanized steel coil chain, approximately 39.4 links per meter. Length shall be minimum which allows lock-up of safety railing. Minimum of two safety chains per safety railing. Material shall be grade 43 high test chain ASTM A413.

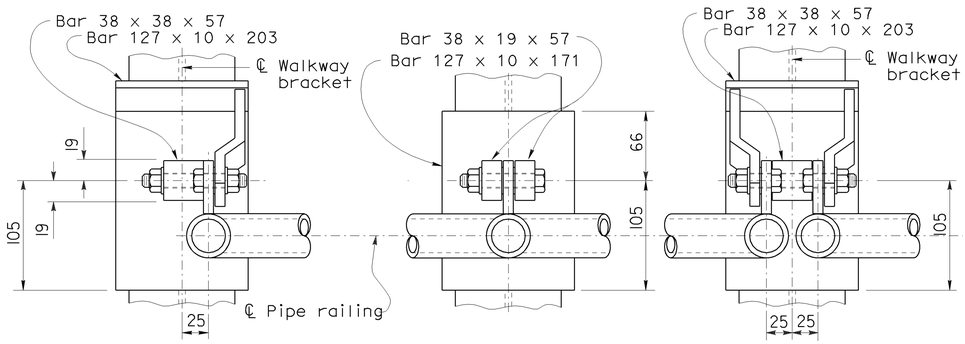

END POST CENTER POST TWO POST

WELDED HINGE - PLAN

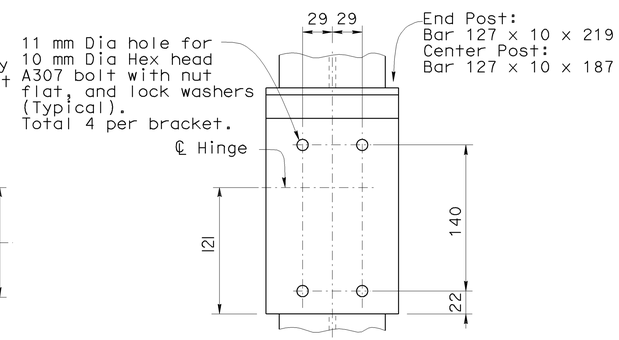

TYPICAL BOLTED (ALTERNATIVE)
HINGED CONNECTION

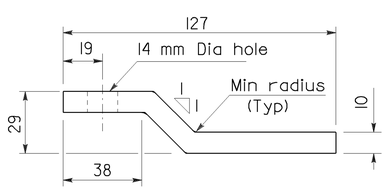

PLAN - KICKER BAR

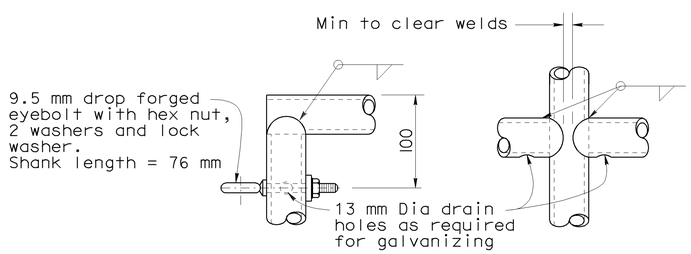

DETAIL A DETAIL B

NOTE
Alternative venting methods may be used if approved by the Engineer.

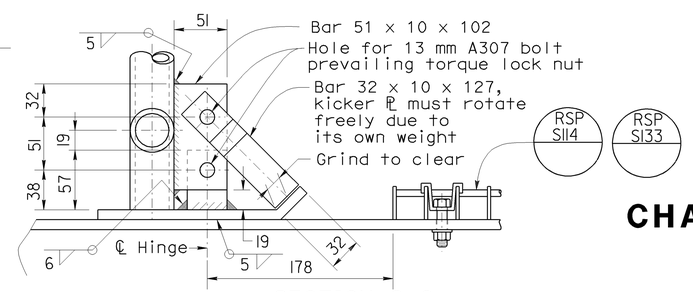

SECTION C-C
ELEVATION VIEW

STATE OF CALIFORNIA
DEPARTMENT OF TRANSPORTATION

OVERHEAD SIGN-TRUSS SINGLE POST TYPE WALKWAY SAFETY RAILING DETAILS CHANGEABLE MESSAGE SIGNS MODEL 500 AND 510

NO SCALE

ALL DIMENSIONS ARE IN MILLIMETERS UNLESS OTHERWISE SHOWN

RSP S140 DATED JANUARY 24, 2005 SUPERSEDES STANDARD PLAN S140 DATED JULY 1, 2004-PAGE 410 OF THE STANDARD PLANS BOOK DATED JULY 2004.

REVISED STANDARD PLAN RSP S140

DIST	COUNTY	ROUTE	KILOMETER POST TOTAL PROJECT	SHEET NO.	TOTAL SHEETS
07	LA	210	R18.8/R24.9	87	95

Caltrans Metric

REGISTERED CIVIL ENGINEER

January 24, 2005
PLANS APPROVAL DATE

REGISTERED PROFESSIONAL ENGINEER
Tillat Sattar
No. C42892
Exp. 03-31-2006
CIVIL
STATE OF CALIFORNIA

The State of California or its officers or agents shall not be responsible for the accuracy or completeness of electronic copies of this plan sheet.

To get to the Caltrans web site, go to: http://www.dot.ca.gov

To accompany plans dated 8-10-15

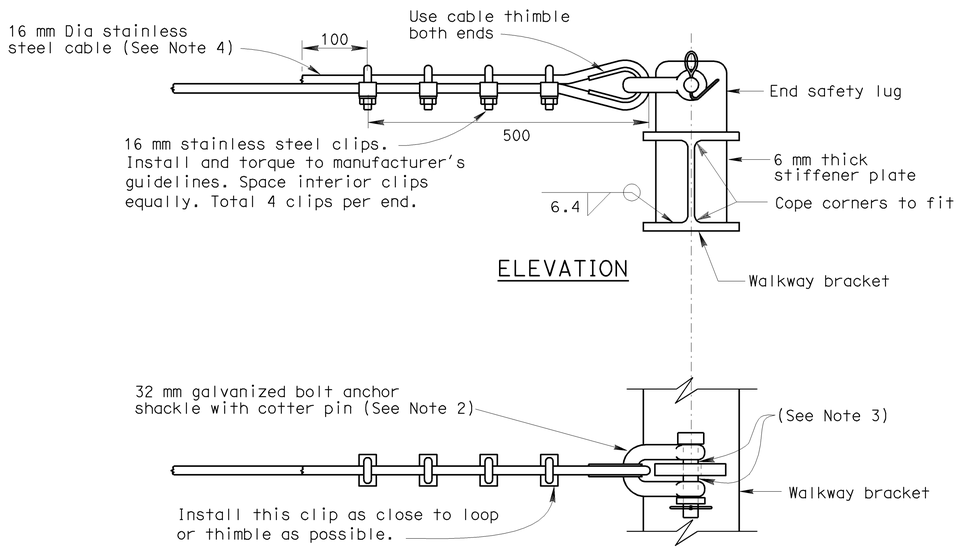

ELEVATION

PLAN

END VIEW SAFETY CABLE

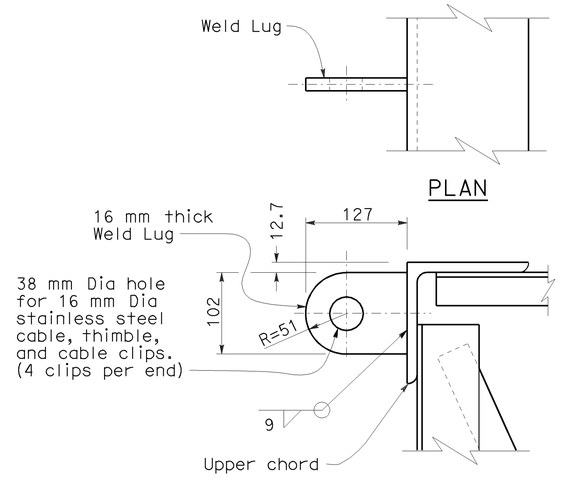

PLAN

ELEVATION

BACKSIDE WELD LUG

Note: Backside weld lug shall be installed only for projects requiring backside walkways.

NOTES

1. Stainless steel cable shall be plain with 6 x 19 IWRC construction using Type 302 or 304 stainless steel strands. Minimun cable breaking strength shall exceed 155 kN. Cable shall be free of kinks, knots, or deformation and shall be continuous between end lugs. Splices not allowed.
2. Shackle shall be galvanized steel with working load limit of 107 kN.
3. Place an equal amount of washers on each side to align cable with end lug without restricting shakle bolt rotation or contacting cable.
4. Cable shall be installed with a deflection not to exceed 25 mm, measure from taut position, when pulled with an upward force of 0.13 kN at midpoint between any two walkway brackets.
5. For walkway grating details, see sheet RSP S114 or RSP S133.

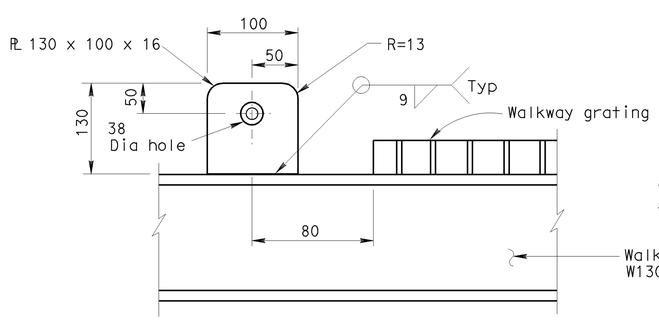

INTERIOR SAFETY LUG DETAIL

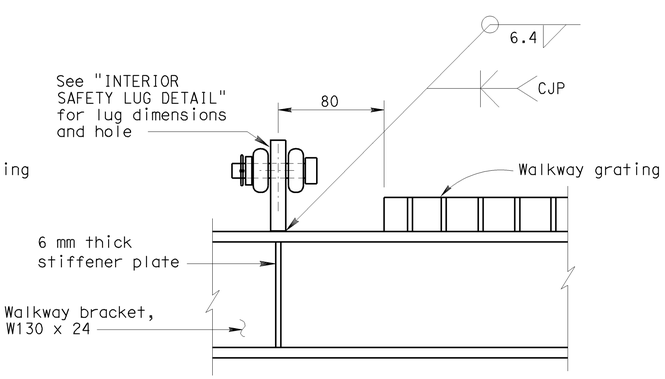

END SAFETY LUG DETAIL

STATE OF CALIFORNIA
DEPARTMENT OF TRANSPORTATION

OVERHEAD SIGN-TRUSS SINGLE POST TYPE SAFETY CABLE ANCHORAGE DETAILS CHANGEABLE MESSAGE SIGNS MODEL 500 AND 510

NO SCALE

ALL DIMENSIONS ARE IN MILLIMETERS UNLESS OTHERWISE SHOWN

RSP S141 DATED JANUARY 24, 2005 SUPERSEDES STANDARD PLAN S141 DATED JULY 1, 2004-PAGE 411 OF THE STANDARD PLANS BOOK DATED JULY 2004.

REVISED STANDARD PLAN RSP S141

2004 REVISED Std PLAN RSP S141

DIST	COUNTY	ROUTE	KILOMETER POST TOTAL PROJECT	SHEET NO.	TOTAL SHEETS
07	LA	210	R18.8/R24.9	88	95

Caltrans Metric

REGISTERED ELECTRICAL ENGINEER

October 5, 2007
PLANS APPROVAL DATE

REGISTERED PROFESSIONAL ENGINEER Jeffery G. McRae No. E14512 Exp. 6-30-08 ELECTRICAL STATE OF CALIFORNIA

The State of California or its officers or agents shall not be responsible for the accuracy or completeness of electronic copies of this plan sheet.

To get to the Caltrans web site, go to: http://www.dot.ca.gov

To accompany plans dated 8-10-15

2004 REVISED Std PLAN RSP ES-1A

ELECTROLIERS

STANDARD TYPES
15, 15D
15 STRUCTURE
21, 21D STRUCTURE
30
31
32
35
36-20A

High mast lighting standard

Double arm lighting standard

Existing electrolier

Electrolier foundation (Future installation)

NOTES

1. Luminaires shall be 310 W HPS when installed on Type 21, 21D, 30, 31, 32, 35 and 36-20A Standards, unless otherwise specified. Luminaires shall be 200 W HPS when installed on other type standards or poles, unless otherwise specified.
2. Luminaires shall be the cutoff type, ANSI Type III medium cutoff lighting distribution, unless otherwise specified.
3. Variations noted adjacent to symbol on project plans.

Electrolier (see project notes or project plans)

Luminaire on wood pole

STANDARD NOTES

- AB — Abandon. If applied to conduit, remove conductors.
- BC — Install pull box in existing conduit run.
- BP — Pedestrian barricade, type as indicated on plan.
- CB — Install conduit into existing pull box.
- CC — Connect new and existing conduit. Remove existing conductors and install conductors as indicated.
- CF — Conduit to remain for future use. Remove conductors. Install pull wire or rope.
- DH — Detector handhole.
- FA — Foundation to be abandoned.
- IS — Install sign on signal mast arm.
- NS — No slip base on standard.
- PEC — Photoelectric control.
- PEU — Photoelectric unit.
- RC — Equipment or material to be removed and become the property of the Contractor.
- RE — Remove electrolier, fuses and ballast. Tape ends of conductors.
- RL — Relocate equipment.
- RR — Remove and reuse equipment.
- RS — Remove and salvage equipment.
- SC — Splice new to existing conductors.
- SD — Service disconnect.
- SF — Standard to remain for future use. Remove luminaire, pole conductors, fuses and ballast. Tape disconnects.
- TSP — Telephone service point.

ABBREVIATIONS AND EQUIPMENT DESIGNATIONS

PROPOSED	EXISTING	
BBS	bbs	Battery backup system
BC	bc	Bolt circle
C	C	Conduit
CCTV	cctv	Closed circuit television
CKT	ckt	Circuit
CMS	cms	Changeable message sign
DLC	dlc	Loop detector lead-in cable
EMS	ems	Extinguishable message sign
EVC	evc	Emergency vehicle cable
EVD	evd	Emergency vehicle detector
FB	fb	Flashing beacon
FBCA	fbca	Flashing beacon control assembly
FBS	fbs	Flashing beacon with slip base
FO	fo	Fiber optic
G	G	Ground (Equipment Grounding Conductor)
GFCI	GFCI	Ground fault circuit interrupt
HAR	har	Highway advisory radio
HEX	hex	Hexagonal
HPS	hps	High pressure sodium
IISNS	iisns	Internally illuminated street name sign
ISL	isl	Induction sign lighting
LED	led	Light emitting diode
LMA	lma	Luminaire mast arm
LPS	lps	Low pressure sodium
LTG	ltg	Lighting
LUM	lum	Luminaire
MAT	mat	Mast arm mounted vehicle signal faces, top attachment
MAS	mas	Mast arm mounted vehicle signal faces, side attachment
MAS-4A	mas-4A	Mast arm mounted vehicle signal faces, side attachment - 4 signal section
MAS-4B	mas-4B	
MAS-4C	mas-4C	
MAS-5A	mas-5A	Mast arm mounted vehicle signal faces, side attachment - 5 signal section
MAS-5B	mas-5B	
MC	mc	Mercury contactor
M/M	m/m	Multiple to multiple transformer
MT	mt	Conduit with pull wire or rope only
MTG	mtg	Mounting
	mv	Mercury vapor lighting fixture
N	N	Neutral (Grounded Conductor)
NC	NC	Normally closed
NO	NO	Normally open
PB	pb	Pull box
PEC	pec	Photoelectric control (Type I, II, III, IV or V as shown)
PED	ped	Pedestrian
PEU	peu	Photoelectric unit
PPB	ppb	Pedestrian push button
RL	RL	Relocated equipment
RM	rm	Ramp metering
SB	sb	Slip base
SIC	sic	Signal interconnect cable
SIG	sig	Signal
SMA	sma	Signal mast arm
SNS	sns	Street name sign
SP	sp	Service point
TDC	tdc	Telephone demarcation cabinet
TMS	tms	Traffic monitoring station
TOS	tos	Traffic Operations System
VEH	veh	Vehicle
XFMR	xfmr	Transformer
COMM	comm	Communication
RWIS	rwis	Roadway weather information system

SOFFIT AND WALL MOUNTED LUMINAIRES

Pendant, 70 W HPS unless otherwise specified.

Flush, 70 W HPS unless otherwise specified.

Wall surface, 70 W HPS unless otherwise specified.

Existing soffit or wall luminaire to remain unmodified.

Existing soffit or wall luminaire to be modified as specified.

NOTE

Arrow indicates "street side" of luminaire.

STATE OF CALIFORNIA
DEPARTMENT OF TRANSPORTATION

ELECTRICAL SYSTEMS (SYMBOLS AND ABBREVIATIONS)

NO SCALE

ALL DIMENSIONS ARE IN MILLIMETERS UNLESS OTHERWISE SHOWN

RSP ES-1A DATED OCTOBER 5, 2007 SUPERSEDES STANDARD PLAN ES-1A DATED JULY 1, 2004-PAGE 413 OF THE STANDARD PLANS BOOK DATED JULY 2004.

REVISED STANDARD PLAN RSP ES-1A

DIST	COUNTY	ROUTE	KILOMETER POST TOTAL PROJECT	SHEET NO.	TOTAL SHEETS
07	LA	210	R18.8/R24.9	89	95

Caltrans Metric

REGISTERED ELECTRICAL ENGINEER

October 5, 2007
PLANS APPROVAL DATE

REGISTERED PROFESSIONAL ENGINEER Jeffery G. McRae No. E14512 Exp. 6-30-08 ELECTRICAL STATE OF CALIFORNIA

The State of California or its officers or agents shall not be responsible for the accuracy or completeness of electronic copies of this plan sheet.

To get to the Caltrans web site, go to: http://www.dot.ca.gov

To accompany plans dated 8-10-15

CONDUIT

PROPOSED	EXISTING	
		Lighting conduit, unless otherwise indicated or noted
		Traffic signal conduit
C	c	Communication conduit
T	t	Telephone conduit
F	f	Fire alarm conduit
FO	fo	Fiber optic conduit
		Conduit termination (RSP ES-9A C)
R	r	Conduit riser in/on structure or Service pole

SERVICE EQUIPMENT

PROPOSED	EXISTING	
OH	oh	Overhead lines
U	u	Wood pole "U" indicates utility owned
		Pole guy-with anchor
		Utility transformer-ground mounted
III		Service equipment enclosure type
		Service equipment enclosure door indicates front of enclosure
T	t	Telephone demarcation cabinet

POLE-MOUNTED SERVICE DESIGNATION

Type of installation

TYPE H SERVICE - 8.8 m ← Pole height above grade

ILLUMINATED OVERHEAD SIGN

PROPOSED	EXISTING	
		Overhead sign - Single post
		Overhead sign - Two post
		Overhead sign - Mounted on structure
		Overhead sign with electrolier

SIGNAL EQUIPMENT

PROPOSED	EXISTING	
		Pedestrian signal face
		Pedestrian push button post
		Pedestrian barricade
		Vehicle signal face (with backplate, 3-Section: red, yellow and green)
		Vehicle signal face with angle visors
PV	PV	Modifications of basic symbols: "L" Indicates all non-arrow sections louvered "LG" Indicates louvered green section only "PV" indicates 300 mm programmed visibility sections "200" indicates all 200 mm sections (only when specified)
		Type 15TS and Vehicle signal face
		Vehicle signal face with red, yellow and green left arrow sections
		Vehicle signal face with red and yellow sections and up green arrow
		Vehicle signal face (5 Section) with red, yellow and green sections and yellow and green right arrows
		Type 1 Standard and attached vehicle signal faces
		Standard with signal mast arm only and attached vehicle signal faces and internally illuminated street name sign
		Type 33 Standard, Left-turn vehicle signal face and sign
		Standard with luminaire and signal mast arms and attached vehicle signal faces
		Cantilever flashing beacon Type 9 Frame, with a sign unless otherwise specified or indicated
Y Y	Y Y	Type 15-FBS Standard with two vehicle signal face sections with lens, backplate and visor with a sign
R	Y	Flashing beacon. One vehicle signal face section with lens, backplate and visor. "R" indicates red indication, "Y" indicates yellow indication
		Controller assembly. Door indicates front of cabinet
		Guard post
		Type 1 Standard with "Meter On" sign
		Emergency vehicle detector

NOTES

1. All signal sections shall be 300 mm unless shown otherwise.
2. Signal heads shall be provided with backplates unless shown otherwise.
3. Signal indication shall be LED.

STATE OF CALIFORNIA
DEPARTMENT OF TRANSPORTATION

ELECTRICAL SYSTEMS (SYMBOLS AND ABBREVIATIONS)

NO SCALE

ALL DIMENSIONS ARE IN MILLIMETERS UNLESS OTHERWISE SHOWN

RSP ES-1B DATED OCTOBER 5, 2007 SUPERSEDES STANDARD PLAN ES-1B DATED JULY 1, 2004-PAGE 414 OF THE STANDARD PLANS BOOK DATED JULY 2004.

REVISED STANDARD PLAN RSP ES-1B

2004 REVISED Std PLAN RSP ES-1B

DIST	COUNTY	ROUTE	KILOMETER POST TOTAL PROJECT	SHEET NO.	TOTAL SHEETS
07	LA	210	R18.8/R24.9	90	95

Caltrans Metric

Jeffery G. McRae
REGISTERED ELECTRICAL ENGINEER

October 5, 2007
PLANS APPROVAL DATE

REGISTERED PROFESSIONAL ENGINEER
Jeffery G. McRae
No. E14512
Exp. 6-30-08
ELECTRICAL
STATE OF CALIFORNIA

The State of California or its officers or agents shall not be responsible for the accuracy or completeness of electronic copies of this plan sheet.

To get to the Caltrans web site, go to: http://www.dot.ca.gov

To accompany plans dated 8-10-15

EQUIPMENT IDENTIFICATION

ILLUMINATED SIGN IDENTIFICATION NUMBER:

Sign No. 12345 — Sign number - Place on post or structure

10 ISL SCI 1.0

- 1.0 — Transformer rating (kVA)
- SCI — Lighting control type
- ISL — Number and type of fixtures

Do NOT place on standard or structure

ELECTROLIER OR EQUIPMENT IDENTIFICATION NUMBER:

12345 - 4.6

- 4.6 — Mast arm length in meters, if shown. Do not place on standard or structure.
- 12345 — Equipment number - Place on standard or structure. Existing equipment numbers are shown in parenthesis

CONDUIT AND CONDUCTOR IDENTIFICATION:

41C, 2#10, 15#14, 2 DLC

- 2#10, 15#14, 2 DLC — Number and size of conductors and cables
- 41C — Size of conduit in millimeters

ø1, ø2, ø2P, etc.	Traffic phase identification for signal faces, detectors and phase diagrams
1 2 3	Project note numbers
A B C	Equipment description, installation or item numbers
1 2 3	Conduit run numbers

SIGNAL AND LIGHTING STANDARD (TYPICAL DESIGNATION):

19A - 3 - 161

- 161 — Wind velocity=161 km/h
- 3 — Case 3 arm loading
- 19A — Standard type
- Standard Plan sheet number
- Detail number or letter

WIRING DIAGRAM LEGEND

P	Pole
CB	Circuit breaker
A	Ampere
V	Volt
M	Metered
UM	Unmetered
NB	Neutral bus
GB	Ground bus
G	Equipment grounding conductor
N	Grounded conductor (Neutral)

- External conductor
- Conductor or bus
- Tie point
- Contactor coil
- Contactor, Contact NO
- Terminal blocks
- Contactor, Contact NC
- Enclosure bond
- Grounding electrode
- Circuit breaker
- Receptacle

PULL BOXES

PROPOSED	EXISTING	
		Pull box-No. 5 unless otherwise indicated or noted.
3	9A(21)	Pull box-Additional designations or descriptions

3 = No. 3½ pull box
5 = No. 5 pull box
6 = No. 6 pull box
7 = No. 7 (Ceiling pull box)
8 = No. 8 (Pendant soffit pull box)
9 = No. 9 pull box
9A = No. 9A pull box

(C) = Communications pull box
(E) = Pull box with extension
(S) = Sprinkler control pull box
(21) = Anchor bolts and conduit for future installation of Type 21 Standard
(T) = Traffic pull box

MISCELLANEOUS EQUIPMENT

PROPOSED	EXISTING	
CMS	cms	Changeable message sign
		Closed circuit television camera
		Highway advisory radio pole and antenna
EMS	ems	Extinguishable message sign
		Detection device
M V	m v	M = Microwave sensor V = Video image sensor

VEHICLE DETECTORS

5 J 9 U

- Vehicle detector designation
- U = Upper
  L = Lower
- Slot number in input file
- Input file (I or J)
- Phase

PROPOSED	EXISTING	
		Type A detector loop. Outline of sawcut shown.
		Type B detector loop. Outline of sawcut shown.
		Type C detector loop. Outline of sawcut shown.
		Type D detector loop. Outline of sawcut shown.
		Type E detector loop. Outline of sawcut shown.
		Type Q detector loop. Outline of sawcut shown.
		Magnetic detector
DH	dh	Detector handhole
		Microwave or video detection zone

STATE OF CALIFORNIA
DEPARTMENT OF TRANSPORTATION

ELECTRICAL SYSTEMS (SYMBOLS AND ABBREVIATIONS)

NO SCALE

ALL DIMENSIONS ARE IN MILLIMETERS UNLESS OTHERWISE SHOWN

RSP ES-1C DATED OCTOBER 5, 2007 SUPERSEDES STANDARD PLAN ES-1C DATED JULY 1, 2004-PAGE 415 OF THE STANDARD PLANS BOOK DATED JULY 2004.

REVISED STANDARD PLAN RSP ES-1C

2004 REVISED Std PLAN RSP ES-1C

10-1-07

Dist	COUNTY	ROUTE	POST MILES TOTAL PROJECT	SHEET No.	TOTAL SHEETS
07	LA	210	R18.8/R24.9	91	95

Theresa Gabriel
REGISTERED ELECTRICAL ENGINEER

July 19, 2013
PLANS APPROVAL DATE

REGISTERED PROFESSIONAL ENGINEER Theresa Aziz Gabriel No. E15129 Exp. 6-30-14 ELECTRICAL STATE OF CALIFORNIA

THE STATE OF CALIFORNIA OR ITS OFFICERS OR AGENTS SHALL NOT BE RESPONSIBLE FOR THE ACCURACY OR COMPLETENESS OF SCANNED COPIES OF THIS PLAN SHEET.

TO ACCOMPANY PLANS DATED 8-10-15

2010 REVISED STANDARD PLAN RSP ES-5B

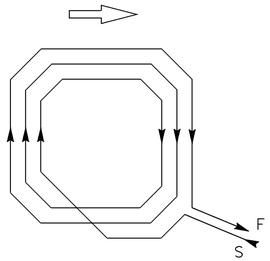

WINDING DETAIL

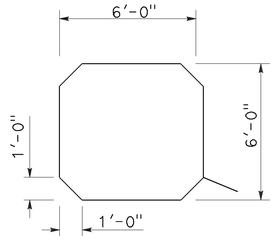

SAWCUT DETAIL

TYPE A LOOP DETECTOR CONFIGURATION

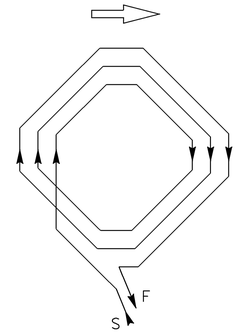

WINDING DETAIL

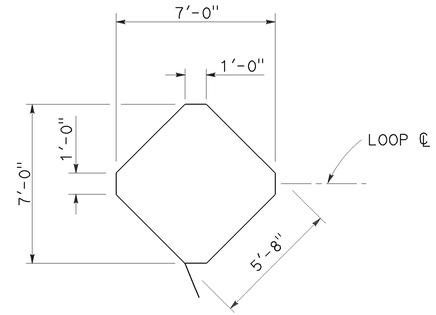

SAWCUT DETAIL

TYPE B LOOP DETECTOR CONFIGURATION

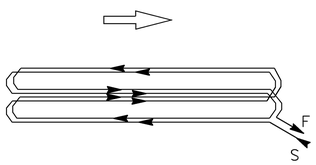

WINDING DETAIL

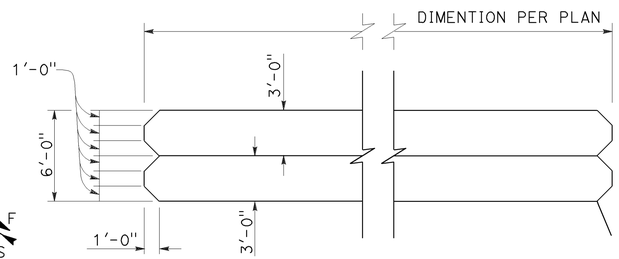

SAWCUT DETAIL

TYPE C LOOP DETECTOR CONFIGURATION

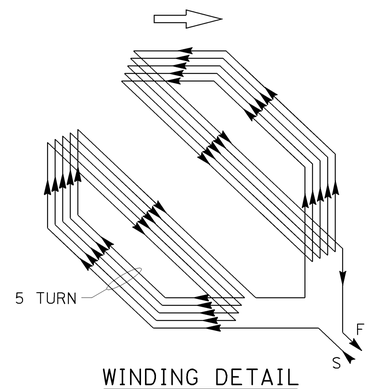

WINDING DETAIL

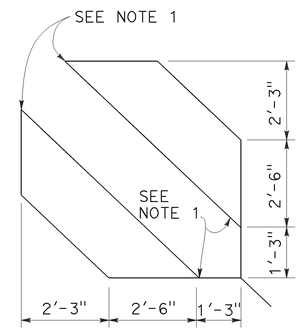

SAWCUT DETAIL

TYPE D LOOP DETECTOR CONFIGURATION

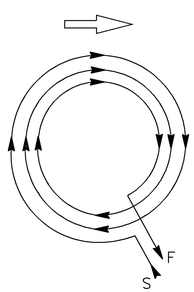

WINDING DETAIL

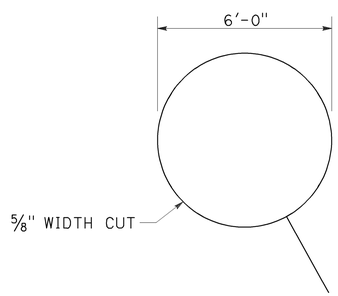

SAWCUT DETAIL

TYPE E LOOP DETECTOR CONFIGURATION

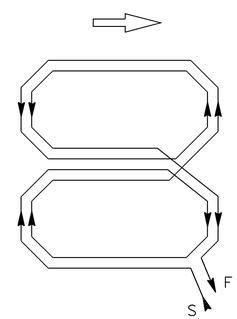

WINDING DETAIL

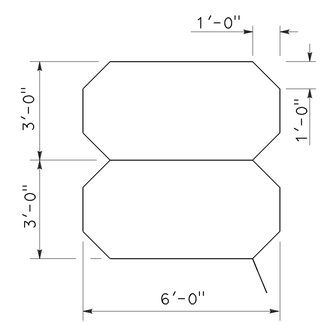

SAWCUT DETAIL

TYPE Q LOOP DETECTOR CONFIGURATION

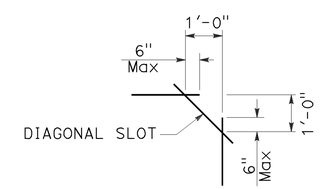

PLAN VIEW OF DIAGONAL SLOT AT CORNERS

NOTES:

1. Round corners of acute angle sawcuts to prevent damage to conductors.
2. Typical distance separating loops from edge to edge is 10' for Type A, B, D and E installation in single lane.

STATE OF CALIFORNIA
DEPARTMENT OF TRANSPORTATION

ELECTRICAL SYSTEMS (DETECTORS)

NO SCALE

RSP ES-5B DATED JULY 19, 2013 SUPERSEDES STANDARD PLAN ES-5B DATED MAY 20, 2011 - PAGE 449 OF THE STANDARD PLANS BOOK DATED 2010.

REVISED STANDARD PLAN RSP ES-5B

Dist	COUNTY	ROUTE	POST MILES TOTAL PROJECT	SHEET No.	TOTAL SHEETS
07	LA	210	R18.8/R24.9	92	95

REGISTERED CIVIL ENGINEER

July 19, 2013
PLANS APPROVAL DATE

REGISTERED PROFESSIONAL ENGINEER
Stanley P. Johnson
No. C57793
Exp. 3-31-14
CIVIL
STATE OF CALIFORNIA

THE STATE OF CALIFORNIA OR ITS OFFICERS OR AGENTS SHALL NOT BE RESPONSIBLE FOR THE ACCURACY OR COMPLETENESS OF SCANNED COPIES OF THIS PLAN SHEET.

TO ACCOMPANY PLANS DATED 8-10-15

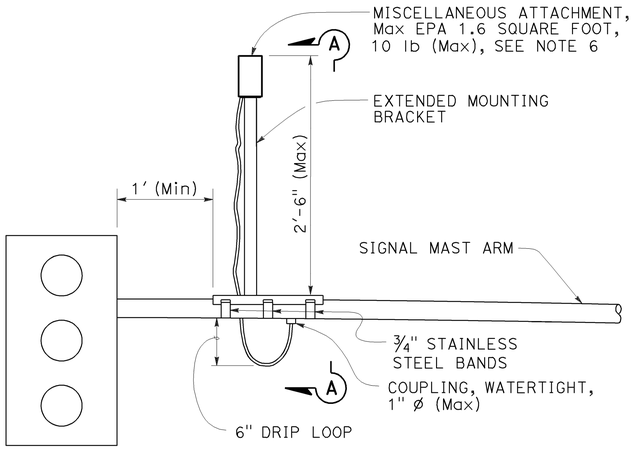

SIGNAL MAST ARM MOUNT

DETAIL A

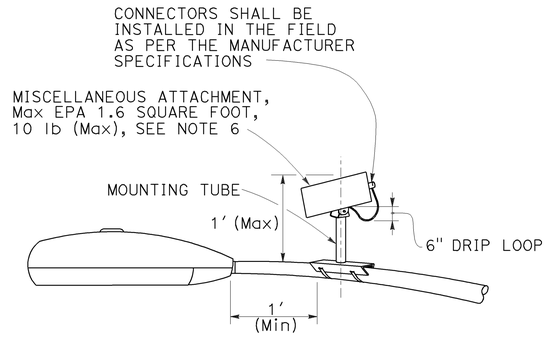

LUMINAIRE MAST ARM MOUNT

DETAIL B

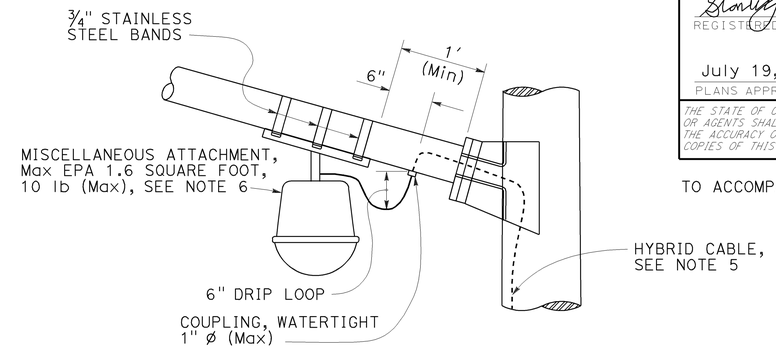

LUMINAIRE MAST ARM MOUNT

DETAIL C

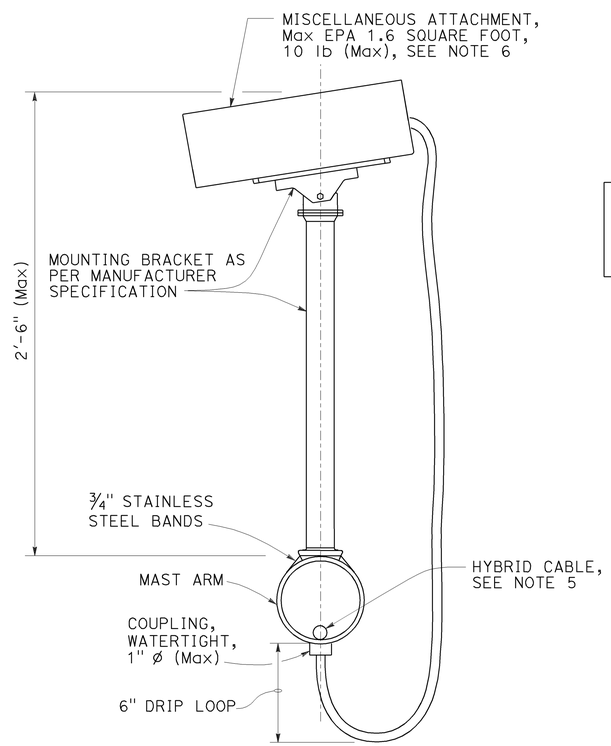

SECTION A-A

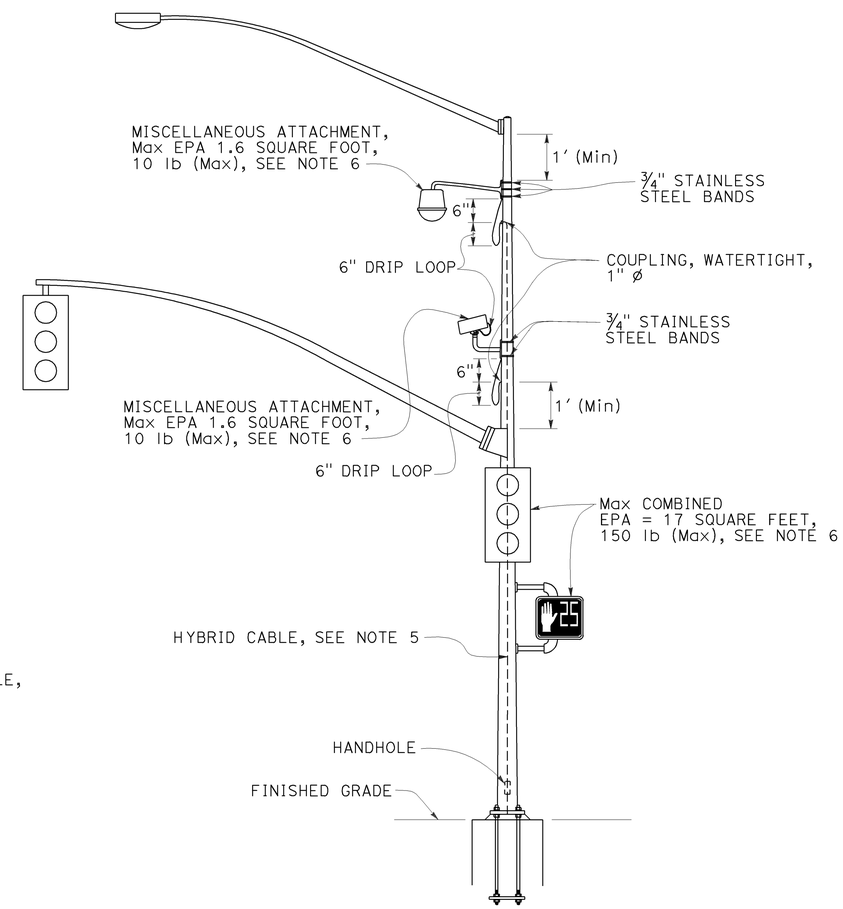

SIGNAL POLE MOUNT

DETAIL D

NOTES:

1. Exact mounting location of miscellaneous attachment and bracket shall be approved by the Engineer per manufacturer's recommendation.
2. Location of cable entrances on signal pole shall be a minimum of 1′ from any flange or base plate.
3. Hybrid cable entrances on signal pole shall be drilled for weathertight coupling as required.
4. Hybrid cable shall have a drip loop at the entrance into signal pole, luminaire mast arm and signal mast arm.
5. A single hybrid cable shall run continuous and shall not be twisted from the miscellaneous attachment to the controller cabinet. No splices shall be allowed.
6. Use the manufacturer's Effective Projected Area (EPA) for miscellaneous attachment. The maximum EPA for each miscellaneous attachment shall be 1.6 square feet.
7. Maximum of two miscellaneous attachments per traffic signal structure.
8. Maximum of one miscellaneous attachment per mast arm.
9. Miscellaneous attachment shall be mounted using clamping devices.

STATE OF CALIFORNIA
DEPARTMENT OF TRANSPORTATION

ELECTRICAL SYSTEMS (SIGNAL AND LIGHTING, MISCELLANEOUS ATTACHMENT)

NO SCALE

RSP ES-7R DATED JULY 19, 2013 SUPERSEDES STANDARD PLAN ES-7R
DATED MAY 20, 2011 - PAGE 479 OF THE STANDARD PLANS BOOK DATED 2010.

REVISED STANDARD PLAN RSP ES-7R

2010 REVISED STANDARD PLAN RSP ES-7R

6-17-13

DIST	COUNTY	ROUTE	POST MILES TOTAL PROJECT	SHEET NO.	TOTAL SHEETS
07	LA	210	R18.8/R24.9	93	95

Theresa Gabriel
REGISTERED ELECTRICAL ENGINEER

July 19, 2013
PLANS APPROVAL DATE

REGISTERED PROFESSIONAL ENGINEER Theresa Aziz Gabriel No. E15129 Exp. 6-30-14 ELECTRICAL STATE OF CALIFORNIA

THE STATE OF CALIFORNIA OR ITS OFFICERS OR AGENTS SHALL NOT BE RESPONSIBLE FOR THE ACCURACY OR COMPLETENESS OF SCANNED COPIES OF THIS PLAN SHEET.

TO ACCOMPANY PLANS DATED 8-10-15

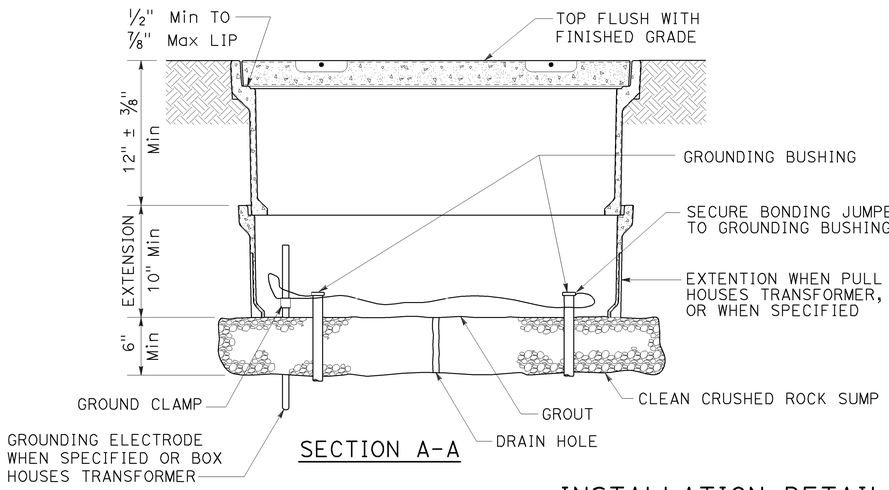

SECTION A-A

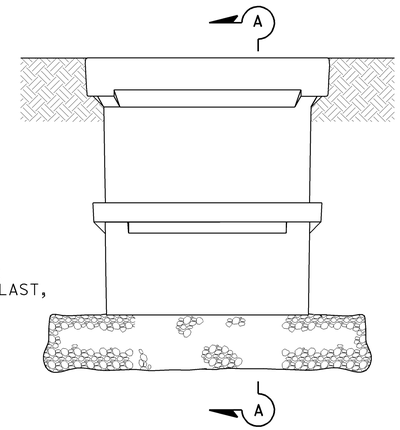

SIDE VIEW

INSTALLATION DETAILS

DETAIL A

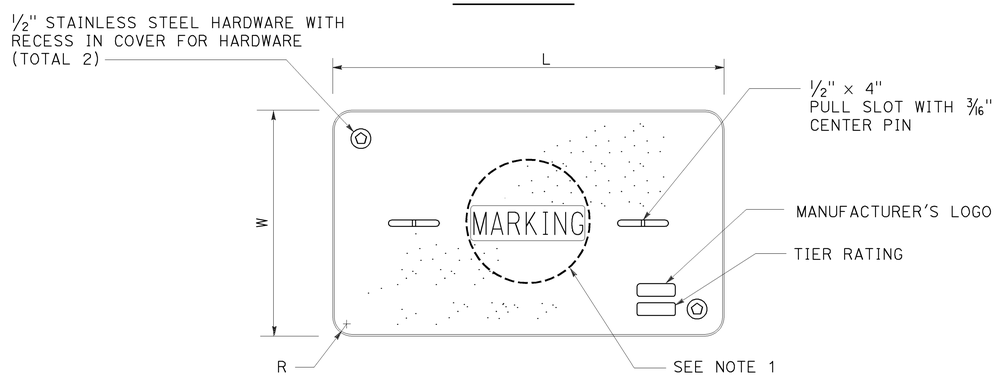

COVER TOP VIEW

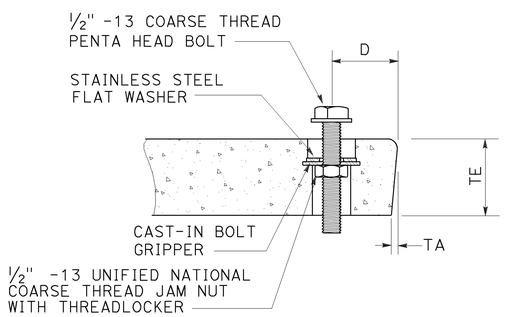

TYPICAL COVER CAPTIVE BOLT

OR SIMILAR

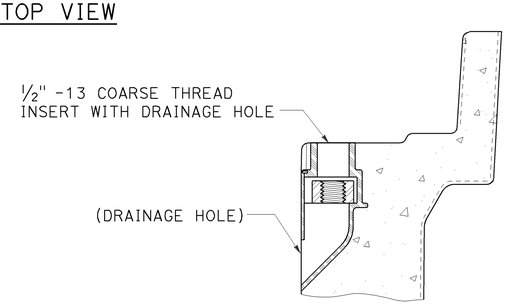

TYPICAL THREADED INSERT

OR SIMILAR

DIMENSION TABLE										
PULL BOX	PULL BOX			COVER						
	MINIMUM DEPTH BOX	MINIMUM DEPTH EXTENSION	MAXIMUM WEIGHT	L	W	R	TE	TA	D	MAXIMUM WEIGHT
No. 3½	12"	N/A	40 lb	1′ - 3⅜"	10⅛"	1⅜"	2"	⅛"	1¾"	30 lb
No. 5	12"	10"	55 lb	1′ - 11¼"	1′ - 1¾"	1⅜"	2"	⅛"	1¾"	60 lb
No. 6	12"	10"	70 lb	2′ - 6½"	1′ - 5½"	1⅜"	2"	⅛"	2"	85 lb

NOTES:

1. Pull box covers shall be marked as follows: "SERVICE" Service circuits between service point and service disconnect; "SPRINKLER-CONTROL" sprinkler control circuits, 50 V or less; "CALTRANS" on all pull boxes, except pull boxes marked "SPRINKLER-CONTROL"; and "TELEPHONE" Telephone service;

   A) No. 3½ pull box.
      1) "SIGNAL" - Traffic signal circuits with or without lighting or sign lighting circuits.
      2) "LIGHTING" - Lighting or sign lighting circuits where voltage is under 600 V.

   B) No. 5, 6, 9 or 9A pull box.
      1) "TRAFFIC SIGNAL" - Traffic signal circuits with or without lighting or sign lighting circuits.
      2) "LIGHTING" - Lighting or sign lighting circuits where voltage is under 600 V.
      3) "LIGHTING-HIGH VOLTAGE" - Lighting or sign lighting circuits where voltage is above 600 V.
      4) "IRRIGATION" - Circuits to irrigation controller 120 V or more.
      5) "RAMP METER" - Ramp meter circuits.
      6) "COUNT STATION" - Count or speed monitor circuits.
      7) "COMMUNICATIONS" - Communication circuits.
      8) "TOS COMMUNICATIONS" - TOS communication line.
      9) "TOS POWER" - TOS power.
      10) "TDC POWER" - Telephone demarcation cabinet power.
      11) "CCTV" - Closed circuit television circuits.
      12) "TMS" - Traffic monitoring station circuits.
      13) "CMS" - Changeable message sign circuits.
      14) "HAR" - Highway advisory radio circuits.
      15) "BOOSTER PUMP" - Booster pump circuit.

2. The nominal dimensions of the opening in which the cover sets shall be the same as the cover dimensions except the length and width dimensions shall be ⅛" greater.

3. Covers and boxes shall be interchangeable with California standard male and female gages. When interchanged with a standard male or female gage, the top surfaces shall be flush within ⅛". Top outside radius of covers and pull boxes shall have a ⅛" radius.

4. Pull box extension may be another pull box as long as the bottom edge of the pull box can fit into the cover opening.

5. All dimensions for the cover for non-traffic pull box are nominal values.

STATE OF CALIFORNIA
DEPARTMENT OF TRANSPORTATION

ELECTRICAL SYSTEMS (NON-TRAFFIC PULL BOX)

NO SCALE

RSP ES-8A DATED JULY 19, 2013 SUPERSEDES RSP ES-8A DATED JANUARY 20, 2012 THAT SUPPLEMENTS THE STANDARD PLANS BOOK DATED 2010.

REVISED STANDARD PLAN RSP ES-8A

2010 REVISED STANDARD PLAN RSP ES-8A

7-15-13

DIST	COUNTY	ROUTE	POST MILES TOTAL PROJECT	SHEET NO.	TOTAL SHEETS
07	LA	210	R18.8/R24.9	94	95

Theresa Gabriel
REGISTERED ELECTRICAL ENGINEER

July 19, 2013
PLANS APPROVAL DATE

REGISTERED PROFESSIONAL ENGINEER Theresa Aziz Gabriel No. E15129 Exp. 6-30-14 ELECTRICAL STATE OF CALIFORNIA

THE STATE OF CALIFORNIA OR ITS OFFICERS OR AGENTS SHALL NOT BE RESPONSIBLE FOR THE ACCURACY OR COMPLETENESS OF SCANNED COPIES OF THIS PLAN SHEET.

TO ACCOMPANY PLANS DATED 8-10-15

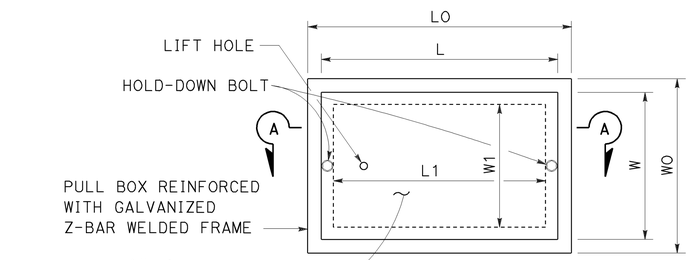

TOP VIEW

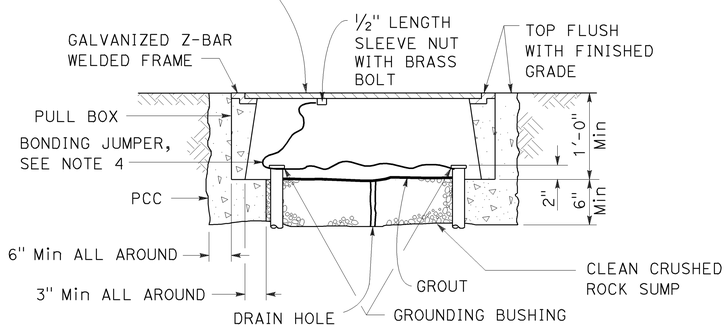

SECTION A-A

No. 3½(T), No. 5(T) AND No. 6(T) TRAFFIC PULL BOX

NOTES:

1. Traffic pull box shall be provided with steel cover and special concrete footing. Steel cover shall have embossed non-skid pattern.
2. Steel reinforcing shall be as regularly used in the standard products of the respective manufacturer.
3. Pull box covers shall be marked as follows: "SERVICE" Service circuits between service point and service disconnect; "SPRINKLER-CONTROL" Sprinkler control circuits, 50 V or less; "CALTRANS" On all pull boxes, except pull boxes marked "SPRINKLER-CONTROL"; and "TELEPHONE" Telephone service.
   A) No. 3½(T) pull box.
      1) "SIGNAL" - Traffic signal circuits with or without lighting or sign lighting circuits.
      2) "LIGHTING" - Lighting or sign lighting circuits where voltage is under 600 V.
   B) No. 5(T) or 6(T) pull box.
      1) "TRAFFIC SIGNAL" - Traffic signal circuits with or without lighting or sign lighting circuits.
      2) "LIGHTING" - Lighting or sign lighting circuits where voltage is under 600 V.
      3) "LIGHTING-HIGH VOLTAGE" - Lighting or sign lighting circuits where voltage is above 600 V.
      4) "IRRIGATION" - Circuits to irrigation controller 120 V or more.
      5) "RAMP METER" - Ramp meter circuits.
      6) "COUNT STATION" - Count or speed monitor circuits.
      7) "COMMUNICATION" - Communication circuits.
      8) "TOS COMMUNICATIONS" - TOS communications line.
      9) "TOS POWER" - TOS power.
      10) "TDC POWER" - Telephone demarcation cabinet power.
      11) "CCTV" - Closed circuit television circuits.
      12) "TMS" - Traffic monitoring station circuits.
      13) "CMS" - Changeable message sign circuits.
      14) "HAR" - Highway advisory radio circuits.
      15) "BOOSTER PUMP" - Booster pump circuit.
4. Bonding jumper for metal covers shall be 3' long, minimum.
5. The nominal dimensions of the opening in which the cover sets shall be the same as the cover dimensions except the length and width dimensions shall be ⅛" greater.
6. Covers and boxes shall be interchangeable with California standard male and female gages. When interchanged with a standard male or female gage, the top surfaces shall be flush within ⅛".

DIMENSION TABLE

PULL BOX	PULL BOX						COVER				
	MINIMUM * THICKNESS	MINIMUM DEPTH BOX AND EXTENSION	WO	LO	L1	W1	L **	W **	R	EDGE THICKNESS	EDGE TAPER
No. 3½(T)	1½"	1'-0"	1'-5"± 1"	1'-8⅞"±	1'-2½"±	10⅝"± 1"	1'-8"±	1'-1¾"±	0"	½"	NONE
No. 5(T)	1¾"	1'-0"	1'-11½"± 1"	2'-5½"±	1'-7"±	1'-1"± 1"	2'-3"±	1'-4"±	0"	½"	NONE
No. 6(T)	2"	1'-0"	2'-6"± 1"	2'-11½"±	1'-11½"±	1'-5"± 1"	2'-9"±	1'-8"±	0"	½"	NONE

* EXCLUDING CONDUIT WEB ** TOP DIMENSION

STATE OF CALIFORNIA
DEPARTMENT OF TRANSPORTATION

ELECTRICAL SYSTEMS (TRAFFIC PULL BOX)

NO SCALE

RSP ES-8B DATED JULY 19, 2013 SUPERSEDES RSP ES-8B DATED JANUARY 20, 2012 THAT SUPPLEMENTS THE STANDARD PLANS BOOK DATED 2010.

REVISED STANDARD PLAN RSP ES-8B

2010 REVISED STANDARD PLAN RSP ES-8B

Dist	COUNTY	ROUTE	POST MILES TOTAL PROJECT	SHEET No.	TOTAL SHEETS
07	LA	210	R18.8/R24.9	95	95

REGISTERED CIVIL ENGINEER

November 15, 2013
PLANS APPROVAL DATE

REGISTERED PROFESSIONAL ENGINEER
Stanley P. Johnson
No. C57793
Exp. 3-31-14
CIVIL
STATE OF CALIFORNIA

THE STATE OF CALIFORNIA OR ITS OFFICERS OR AGENTS SHALL NOT BE RESPONSIBLE FOR THE ACCURACY OR COMPLETENESS OF SCANNED COPIES OF THIS PLAN SHEET.

TO ACCOMPANY PLANS DATED 8-10-15

POLE TYPE	POLE DATA				BASE PLATE DATA				CIDH	
	HEIGHT "h"	Min OD		THICKNESS	"C"	THICKNESS	ANCHOR BOLT SIZE	BC = BOLT CIRCLE	Dia	"d"
		BASE	TOP							
CCTV 25	25′	7⅜"	3¾"	0.1793"	1′-1"	1"	1½" ø x 36"	11½"	2′-6"	7′-0"
CCTV 30	30′	8"			1′-1½"			1′-0"		7′-6"
CCTV 35	35′	8⅝"			1′-2"			1′-1"		8′-0"
CCTV 40	40′	9⅜"			1′-3"			1′-1½"		8′-6"
CCTV 45	45′	10"						1′-2"		

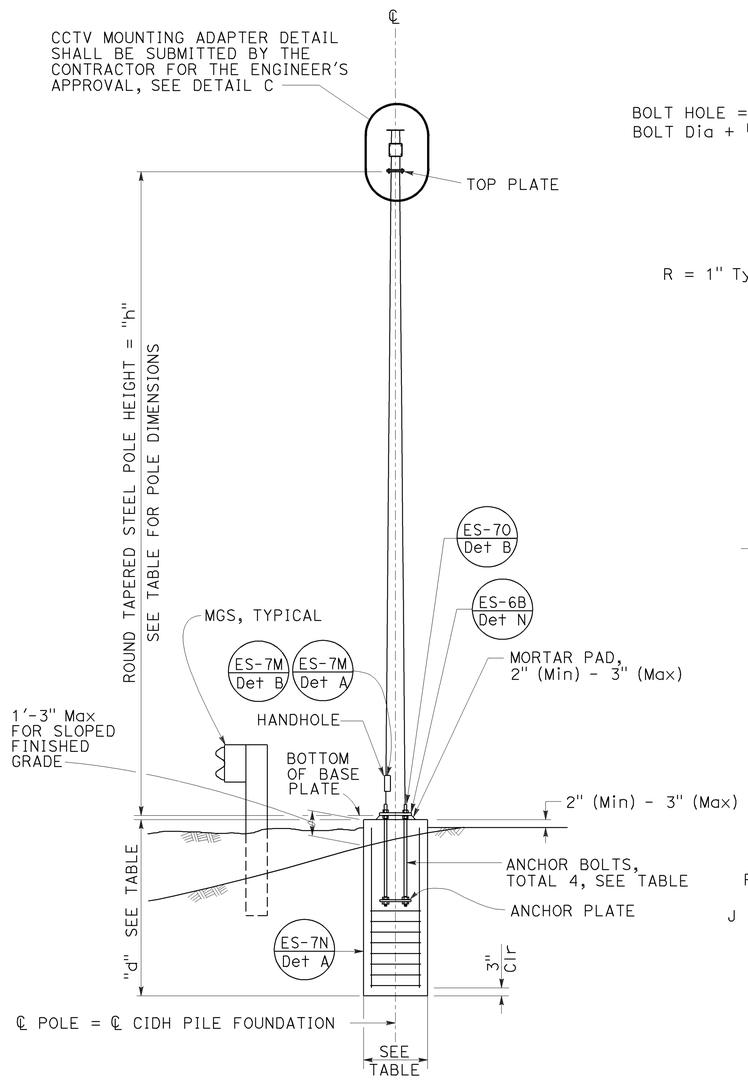

ELEVATION A

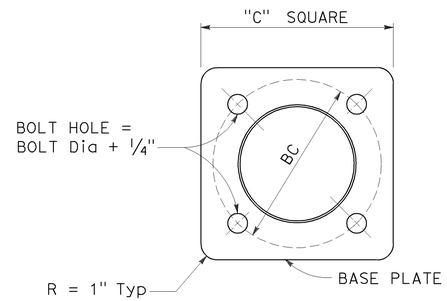

BASE PLATE

DETAIL A

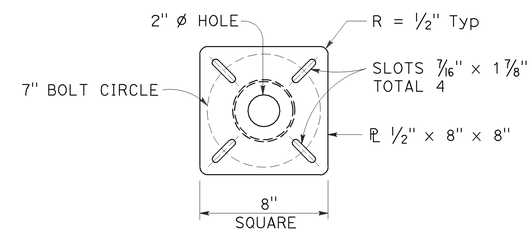

TOP PLATE

DETAIL B

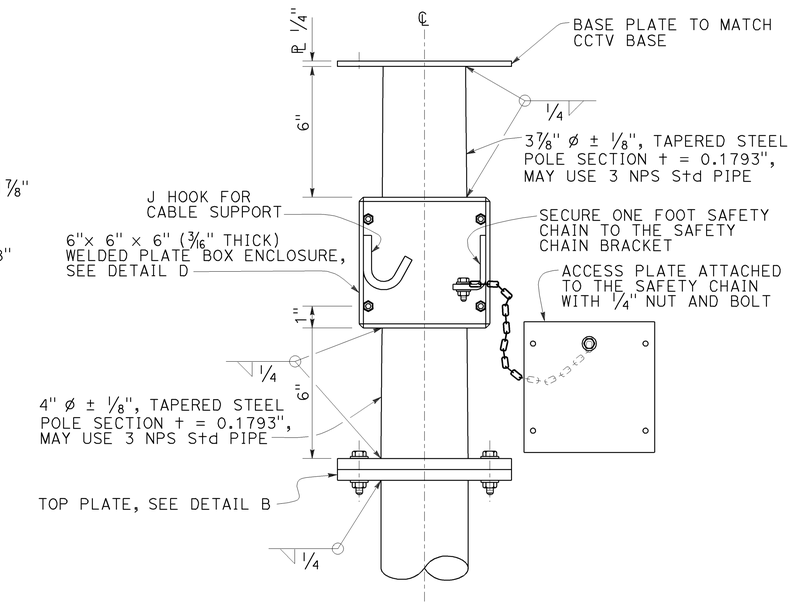

CLOSED CIRCUIT TELEVISION MOUNTING ADAPTER

DETAIL C

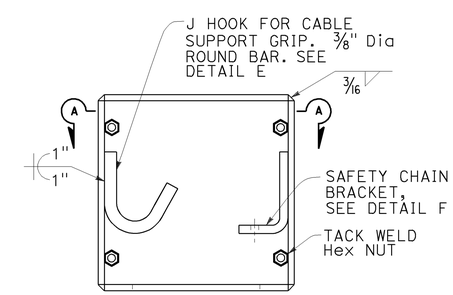

BOX ENCLOSURE

DETAIL D

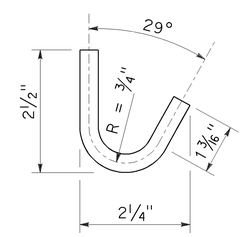

J HOOK

DETAIL E

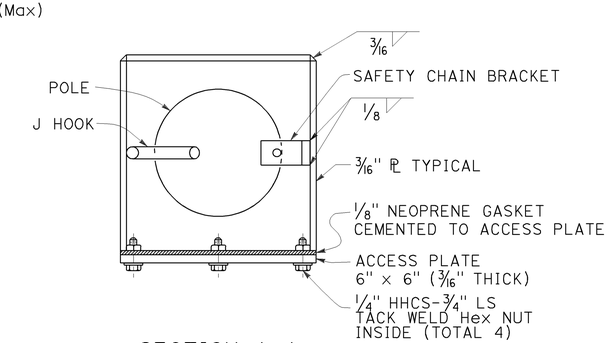

SECTION A-A

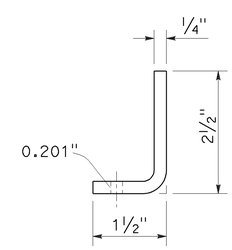

SAFETY CHAIN BRACKET

DETAIL F

NOTES:

1. The Contractor shall verify controlling field dimensions before ordering or fabricating any material.
2. During pole installation, the post shall be raked as necessary with the use of leveling nuts to provide a plumb pole axis.
3. Wind Loadings (3-second gust): 100 mph
4. Unit Stresses (Structural Steel):
   a. fy = 55,000 psi (tapered steel tube and anchor bolts)
   b. fy = 50,000 psi (unless otherwise noted)
5. Unit Stresses (Reinforced Concrete):
   a. f′c = 3,625 psi
   b. fy = 60,000 psi

STATE OF CALIFORNIA
DEPARTMENT OF TRANSPORTATION

ELECTRICAL SYSTEMS (CLOSED CIRCUIT TELEVISION, 25' TO 45' POLE)

NO SCALE

RSP ES-16B DATED NOVEMBER 15, 2013 SUPERSEDES STANDARD PLAN ES-16B DATED MAY 20, 2011 - PAGE 501 OF THE STANDARD PLANS BOOK DATED 2010.

REVISED STANDARD PLAN RSP ES-16B

2010 REVISED STANDARD PLAN RSP ES-16B

10-4-13