SARRAL-005-3(029)N
CMLN-6207(056)

Dist	COUNTY	ROUTE	KILOMETER POST TOTAL PROJECT	SHEET No.	TOTAL SHEETS
07	LA	5	50.8/58.0	1	869

STATE OF CALIFORNIA
DEPARTMENT OF TRANSPORTATION

PROJECT PLANS FOR CONSTRUCTION ON
STATE HIGHWAY
IN LOS ANGELES COUNTY
IN LOS ANGELES AND BURBANK FROM 0.3 KM SOUTH OF COHASSET STREET UNDERCROSSING TO 0.1 KM NORTH OF SHELDON STREET OVERCROSSING

TO BE SUPPLEMENTED BY STANDARD PLANS DATED JULY 2004

INDEX OF PLANS

SHEET No.	DESCRIPTION
1	TITLE AND LOCATION MAP
2-8	TYPICAL CROSS SECTIONS
9-32	LAYOUTS
33-56	PROFILES AND SUPERELEVATION DIAGRAM
57-99	CONSTRUCTION DETAILS
100-103	TEMPORARY WATER POLLUTION CONTROL
104-115	CONTOUR GRADING PLANS
116-213	DRAINAGE PLANS, PROFILES, DETAILS AND QUANTITIES
214-237	UTILITY PLANS
238	CONSTRUCTION AREA SIGNS
239-309	STAGE CONSTRUCTION PLANS AND QUANTITIES
310-315	TRAFFIC HANDLING DETAILS
316-320	DETOUR PLANS
321-347	PAVEMENT DELINEATION PLANS, DETAILS AND QUANTITIES
348-408	SIGN PLANS, DETAILS AND QUANTITIES
409-425	SUMMARY OF QUANTITIES
426-441	RETAINING WALL PLANS
442-482	SOUND WALL PLANS
483	PLANT LIST
484-500	PLANTING PLANS
501-517	IRRIGATION PLANS
518-519	LANDSCAPE DETAILS
520-634	ELECTRICAL PLANS
635-712	REVISED AND NEW STANDARD PLANS
STRUCTURE PLANS	
713-733	COHASSET STREET UC (WIDEN), Br No. 53-1111
734-767	HOLLYWOOD WAY UC (WIDEN), Br No. 53-1112
768-771	LANARK STREET UC, Br No. 53-1113
772-776	PENROSE STREET UC, Br No. 53-1116
777-781	TUXFORD STREET UC, Br No. 53-1117
782-814	SUN VALLEY OH (WIDEN), Br No. 53-1134
815-818	BRIDGE APPROACH SLAB REPLACEMENT
819-826	RETAINING WALL No. 518
827-839	RETAINING WALL No. 513
840-860	REATINING WALL No. 523
861-869	RETAINING WALL No. 539

THE STANDARD PLANS LIST APPLICABLE TO THIS CONTRACT IS INCLUDED IN THE NOTICE TO BIDDERS AND SPECIAL PROVISIONS BOOK.

LOCATION MAP

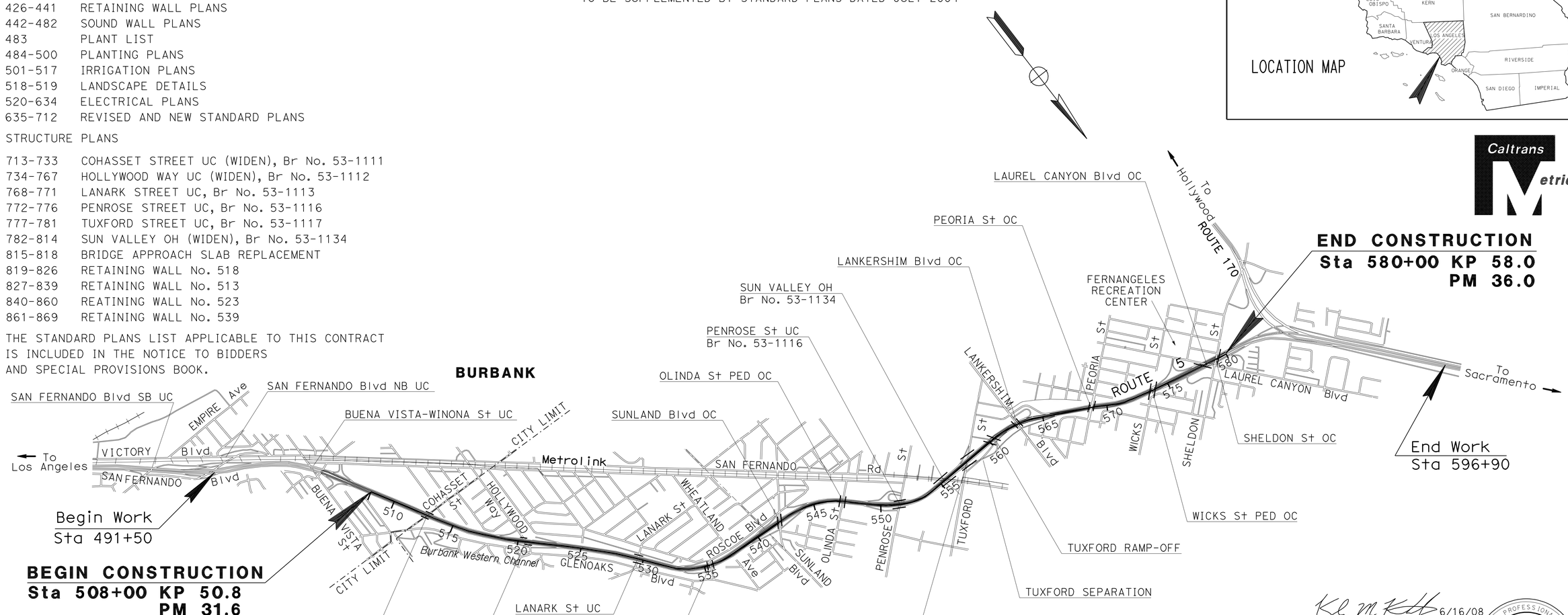

NO SCALE

THE CONTRACTOR SHALL POSSESS THE CLASS (OR CLASSES) OF LICENSE AS SPECIFIED IN THE "NOTICE TO BIDDERS."

PROJECT ENGINEER
REGISTERED CIVIL ENGINEER
6/16/08
DATE

REGISTERED PROFESSIONAL ENGINEER
KYLE M KUNITAKE
No. 63726
Exp. 9/30/10
CIVIL
STATE OF CALIFORNIA

May 3, 2010
PLANS APPROVAL DATE

THE STATE OF CALIFORNIA OR ITS OFFICERS OR AGENTS SHALL NOT BE RESPONSIBLE FOR THE ACCURACY OR COMPLETENESS OF ELECTRONIC COPIES OF THIS PLAN SHEET.

PROJECT MANAGER: MUMBIE FREDSON-COLE
DESIGN ENGINEER: KYLE KUNITAKE

LAST REVISION 04-15-08
DATE PLOTTED => 03-MAY-2010
TIME PLOTTED => 13:25

CONTRACT No. 07-1218V4

Dist	COUNTY	ROUTE	KILOMETER POST TOTAL PROJECT	SHEET No.	TOTAL SHEETS
07	LA	5	50.8/58.0	2	869

REGISTERED CIVIL ENGINEER 7/02/08 DATE

5-3-10
PLANS APPROVAL DATE

REGISTERED PROFESSIONAL ENGINEER KYLE M KUNITAKE No. 63726 Exp. 9/30/10 CIVIL STATE OF CALIFORNIA

THE STATE OF CALIFORNIA OR ITS OFFICERS OR AGENTS SHALL NOT BE RESPONSIBLE FOR THE ACCURACY OR COMPLETENESS OF ELECTRONIC COPIES OF THIS PLAN SHEET.

Caltrans Metric

NOTES:

1. DIMENSIONS OF THE STRUCTURAL SECTIONS ARE SUBJECT TO TOLERANCES SPECIFIED IN THE STANDARD SPECIFICATIONS.
2. SUPERELEVATION AS SHOWN OR AS DIRECTED BY THE ENGINEER.
3. SEE LAYOUT PLANS FOR SOUNDWALL AND RETAINING WALL LIMITS.
4. SOUNDWALL AND RETAINING WALL TO BE REMOVED AS SHOWN ON PLANS.
5. BARRIER ALIGNMENT VARIES FROM ROUTE ℄ FROM STA 508+00 TO 529+06.
6. FOR TYPICAL CROSS SECTION FOR SLAB REPLACEMENT, SEE SHEETS X-6 AND X-7.

DESIGN DESIGNATION (ROUTE 5)

2002 ADT = 188,000 D = 55%
2027 ADT = 410,000 D = 55%
DHV = 32,800 D = 105 km/h

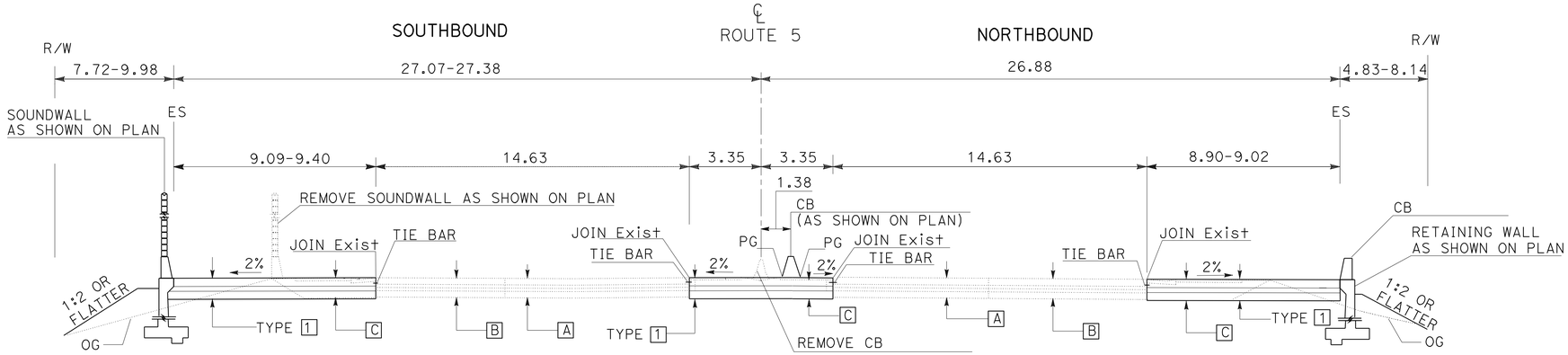

ROUTE 5

Sta 513+06.40 TO 513+87.00

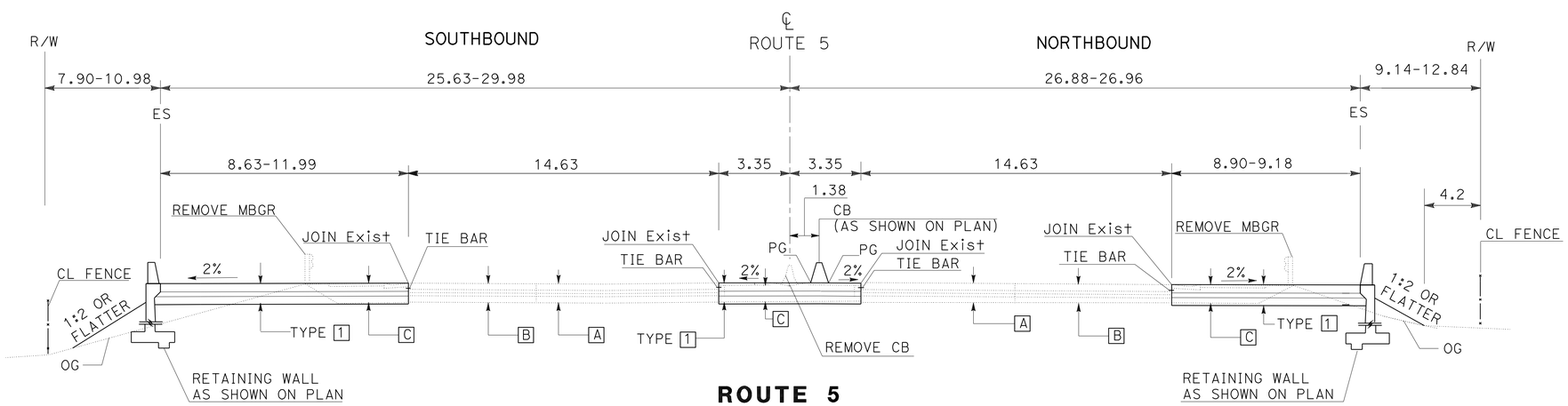

ROUTE 5

Sta 509+13.40 TO 513+06.70

LEGEND:

JPCP - JOINTED PLAIN CONCRETE PAVEMENT
RS - RAPID SETTING CONCRETE
HMA - HOT MIX ASPHALT
PRF - PAVEMENT REINFORCING FABRIC
RSC - RAPID STRENGTH CONCRETE

EXISTING STRUCTURAL SECTIONS

A	204 mm PCC 101 mm CTB 101 mm AB 204 mm AS
B	229 mm PCC 101 mm CTB 76 mm AB 204 mm AS
C	76 mm AC VARIABLE THICKNESS AS
D	101 mm AC 204 mm CTB 101 mm AB 204 mm AS
E	260 mm PCC 150 mm LCB 215 mm AB

TYPICAL STRUCTURAL SECTIONS

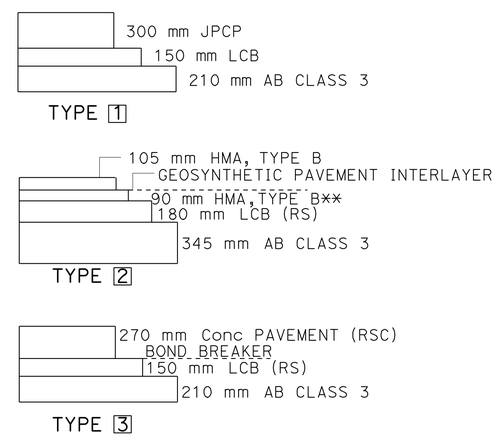

** THE TRAFFIC LOOP SHOULD BE CUT AND EPOXY FILLED IN THIS LAYER OF HMA PRIOR TO PLACING THE FABRIC AND FINAL LAYER.

ALL DIMENSIONS ARE IN METERS UNLESS OTHERWISE SHOWN

TYPICAL CROSS SECTIONS

NO SCALE

X-1

REVISED BY	DATE REVISED
KK	2-08
KK	9-07

CALCULATED-DESIGNED BY: JOSEPH KIBE
CHECKED BY: AMIR EL SHARIEF
FUNCTIONAL SUPERVISOR: CELINA AVILES

STATE OF CALIFORNIA - DEPARTMENT OF TRANSPORTATION
Caltrans DESIGN

LAST REVISION 02-18-08 | DATE PLOTTED => 03-MAY-2010 | TIME PLOTTED => 12:42

Dist	COUNTY	ROUTE	KILOMETER POST TOTAL PROJECT	SHEET No.	TOTAL SHEETS
07	LA	5	50.8/58.0	3	869

REGISTERED CIVIL ENGINEER 7/02/08 DATE

5-3-10
PLANS APPROVAL DATE

REGISTERED PROFESSIONAL ENGINEER KYLE M KUNITAKE No. 63726 Exp. 9/30/10 CIVIL STATE OF CALIFORNIA

THE STATE OF CALIFORNIA OR ITS OFFICERS OR AGENTS SHALL NOT BE RESPONSIBLE FOR THE ACCURACY OR COMPLETENESS OF ELECTRONIC COPIES OF THIS PLAN SHEET.

Caltrans Metric

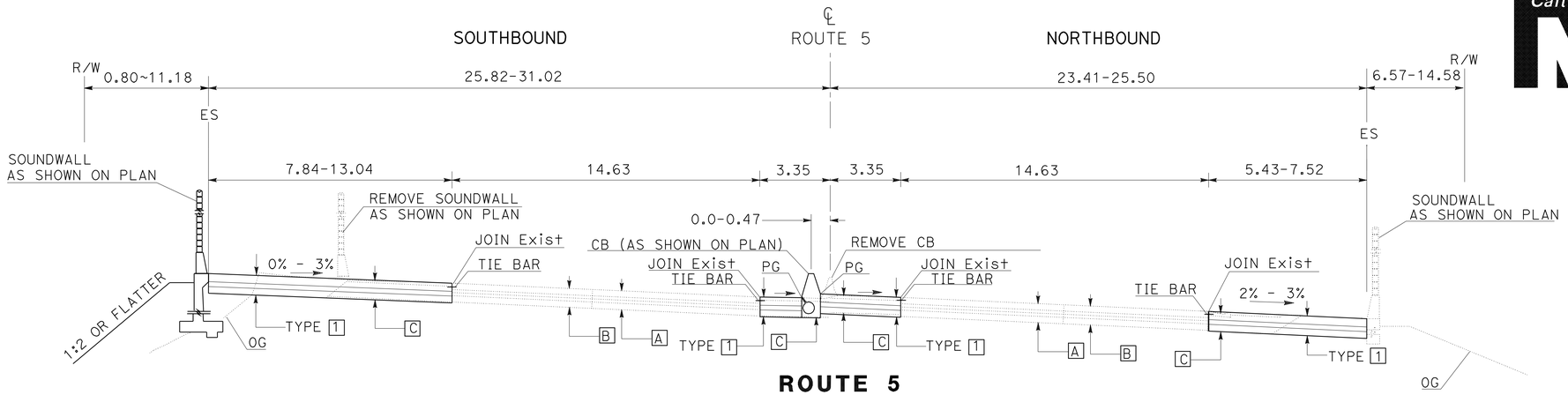

ROUTE 5
Sta 527+17.98 TO 529+54.83

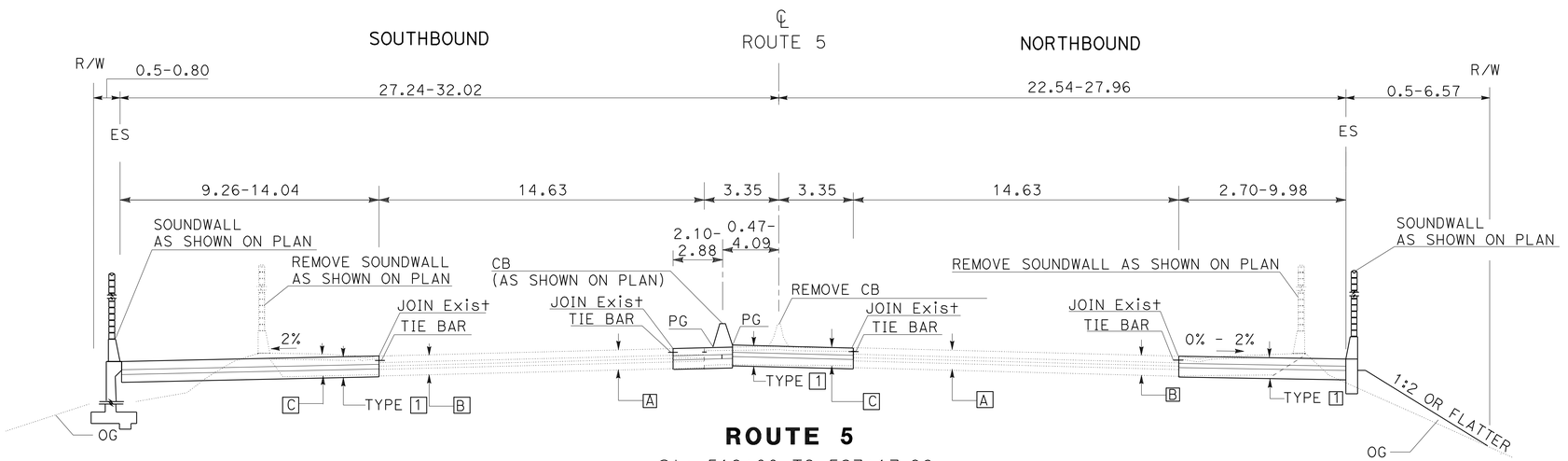

ROUTE 5
Sta 519+00 TO 527+17.98

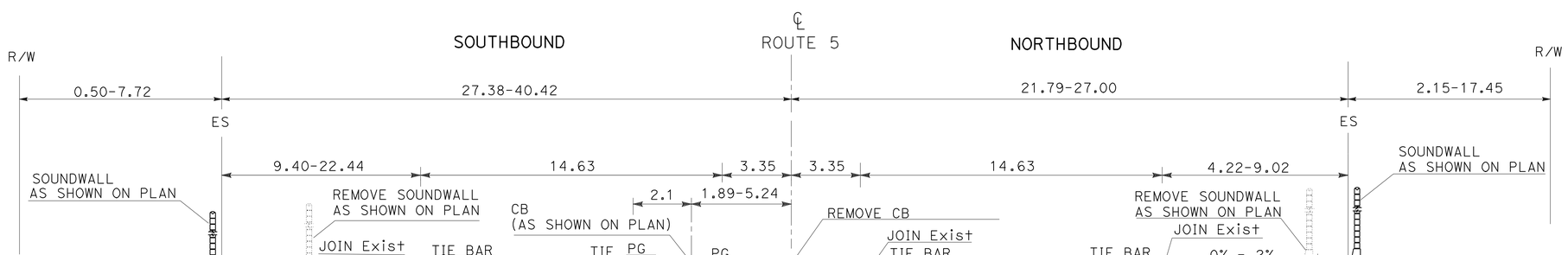

ROUTE 5
Sta 513+87.00 TO 519+00.00

ALL DIMENSIONS ARE IN METERS
UNLESS OTHERWISE SHOWN

TYPICAL CROSS SECTIONS

NO SCALE

X-2

REVISED BY	DATE REVISED
KK	2-08
KK	9-07

CALCULATED-DESIGNED BY: JOSEPH KIBE
CHECKED BY: AMIR EL SHARIEF
FUNCTIONAL SUPERVISOR: CELINA AVILES

STATE OF CALIFORNIA - DEPARTMENT OF TRANSPORTATION
Caltrans
DESIGN

LAST REVISION 02-18-08 | DATE PLOTTED => 03-MAY-2010 | TIME PLOTTED => 12:42

Dist	COUNTY	ROUTE	KILOMETER POST TOTAL PROJECT	SHEET No.	TOTAL SHEETS
07	LA	5	50.8/58.0	4	869

REGISTERED CIVIL ENGINEER 7/02/08 DATE

5-3-10
PLANS APPROVAL DATE

REGISTERED PROFESSIONAL ENGINEER KYLE M KUNITAKE No. 63726 Exp. 9/30/10 CIVIL STATE OF CALIFORNIA

THE STATE OF CALIFORNIA OR ITS OFFICERS OR AGENTS SHALL NOT BE RESPONSIBLE FOR THE ACCURACY OR COMPLETENESS OF ELECTRONIC COPIES OF THIS PLAN SHEET.

Caltrans Metric

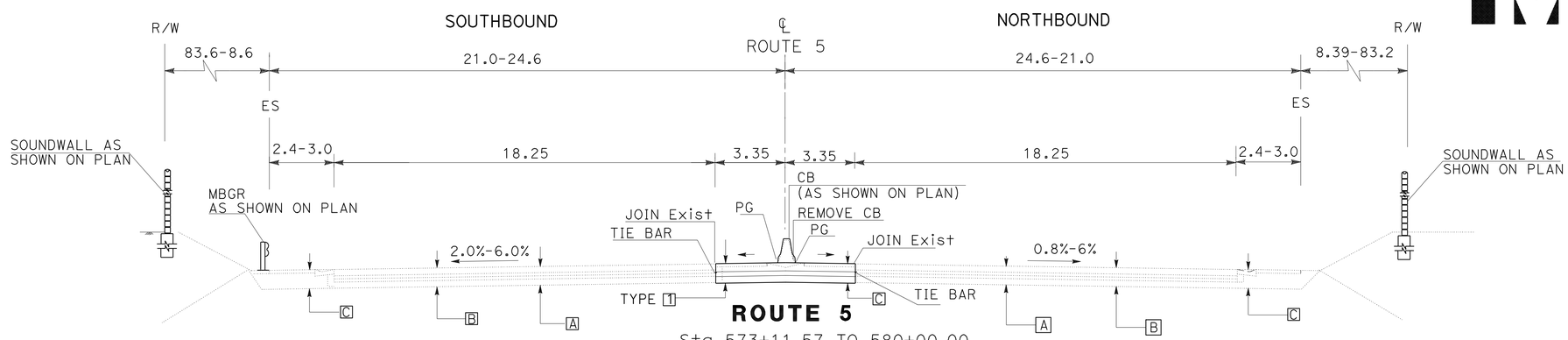

* MATCH Exist SLOPE

ROUTE 5

Sta 573+11.57 TO 580+00.00
Sta 564+99.46 TO 570+07.42
Sta 554+85.39 TO 560+76.02
Sta 547+29.09 TO 549+83.65
Sta 536+98.34 TO 543+01.74

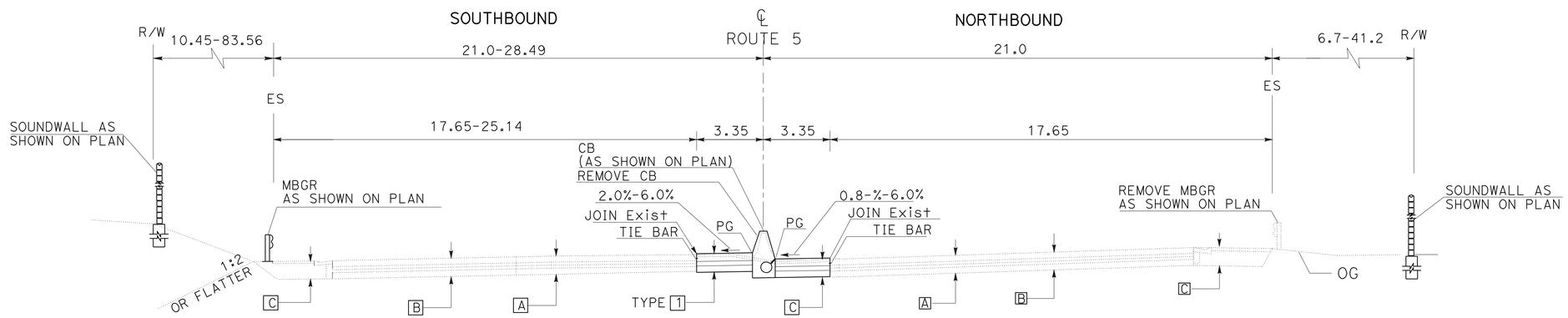

* MATCH Exist SLOPE

ROUTE 5

Sta 570+07.42 TO 573+11.58
Sta 549+83.65 TO 554+85.39
Sta 531+65.29 TO 536+98.34

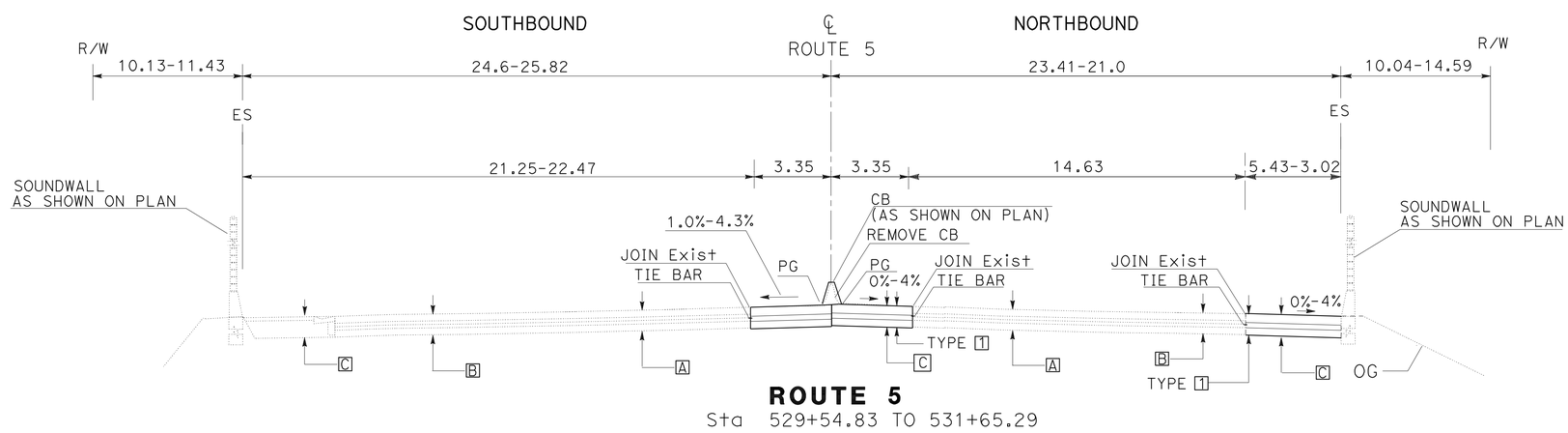

ROUTE 5

Sta 529+54.83 TO 531+65.29

ALL DIMENSIONS ARE IN METERS
UNLESS OTHERWISE SHOWN

TYPICAL CROSS SECTIONS

NO SCALE

X-3

KK	2-08		
KK	9-07	REVISED BY	DATE REVISED
JOSEPH KIBE			
AMIR EL SHARIEF			
CALCULATED-DESIGNED BY			
CHECKED BY			
FUNCTIONAL SUPERVISOR			
CELINA AVILES			

STATE OF CALIFORNIA - DEPARTMENT OF TRANSPORTATION
Caltrans **DESIGN**

LAST REVISION 02-18-08 | DATE PLOTTED => 03-MAY-2010 | TIME PLOTTED => 12:42

Dist	COUNTY	ROUTE	KILOMETER POST TOTAL PROJECT	SHEET No.	TOTAL SHEETS
07	LA	5	50.8/58.0	5	869

REGISTERED CIVIL ENGINEER 7/02/08 DATE

5-3-10
PLANS APPROVAL DATE

REGISTERED PROFESSIONAL ENGINEER KYLE M KUNITAKE No. 63726 Exp. 9/30/10 CIVIL STATE OF CALIFORNIA

THE STATE OF CALIFORNIA OR ITS OFFICERS OR AGENTS SHALL NOT BE RESPONSIBLE FOR THE ACCURACY OR COMPLETENESS OF ELECTRONIC COPIES OF THIS PLAN SHEET.

Caltrans Metric

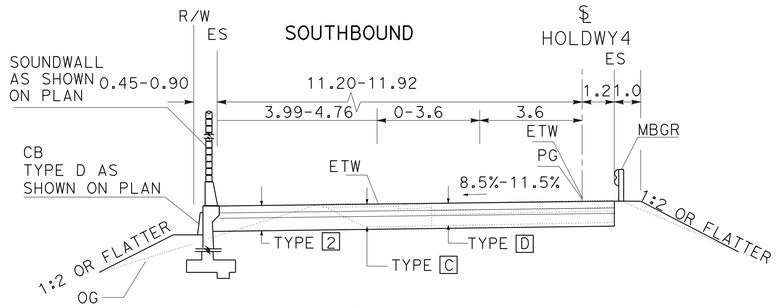

SB HOLLYWOOD WAY ON-RAMP

Sta 519+23.92 TO 519+53.576

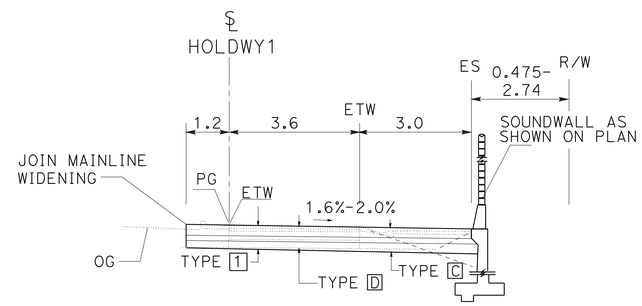

NB HOLLYWOOD WAY OFF-RAMP

Sta 519+38.00 TO 519+52.15

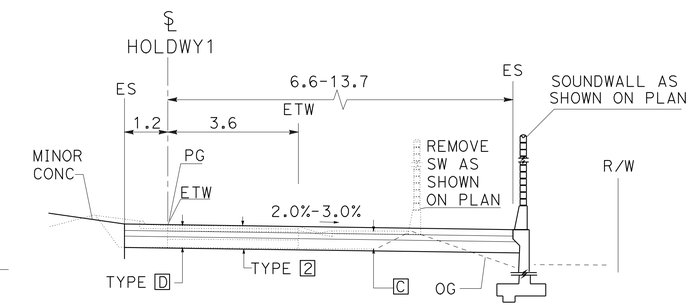

NB HOLLYWOOD WAY OFF-RAMP

Sta 519+52.15 TO 520+44.30

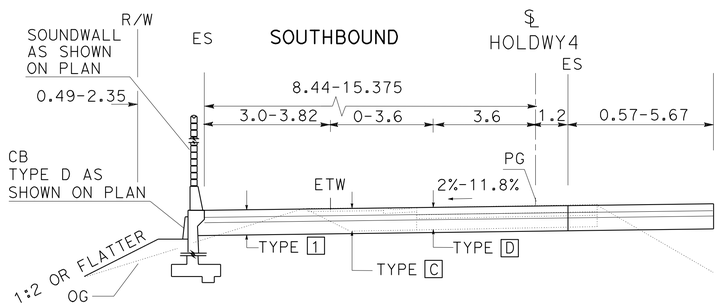

SB HOLLYWOOD WAY ON-RAMP

Sta 518+08.18 TO 519+23.92

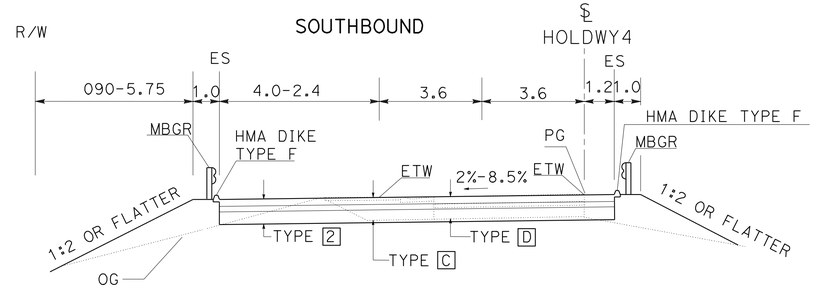

SB HOLLYWOOD WAY ON-RAMP

Sta 519+53.576 TO 519+94.902

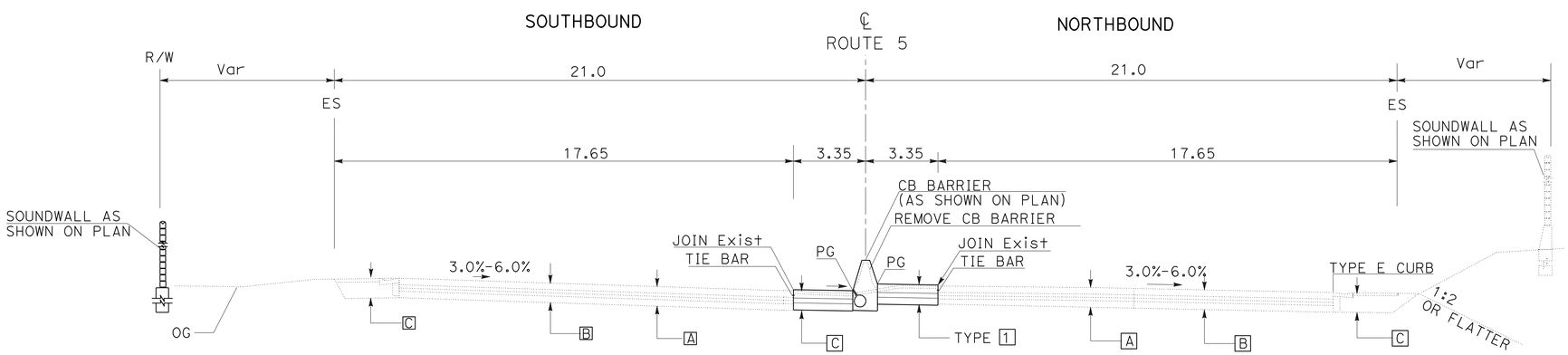

ROUTE 5

Sta 560+76.02 TO 564+99.46
Sta 543+01.74 TO 547+29.09

ALL DIMENSIONS ARE IN METERS
UNLESS OTHERWISE SHOWN

TYPICAL CROSS SECTIONS

NO SCALE

X-4

×	KK	12/07	
×	KK	9/07	
	REVISED BY	DATE REVISED	
×	JOSEPH KIBE	AMIR EL SHARIEF	
	CALCULATED-DESIGNED BY	CHECKED BY	
×	FUNCTIONAL SUPERVISOR	CELINA AVILES	

STATE OF CALIFORNIA - DEPARTMENT OF TRANSPORTATION
Caltrans
DESIGN

LAST REVISION 12-18-07 | DATE PLOTTED => 03-MAY-2010 | TIME PLOTTED => 12:42

Dist	COUNTY	ROUTE	KILOMETER POST TOTAL PROJECT	SHEET No.	TOTAL SHEETS
07	LA	5	50.8/58.0	6	869

REGISTERED CIVIL ENGINEER 7/02/08 DATE

5-3-10
PLANS APPROVAL DATE

REGISTERED PROFESSIONAL ENGINEER KYLE M KUNITAKE No. 63726 Exp. 9/30/10 CIVIL STATE OF CALIFORNIA

THE STATE OF CALIFORNIA OR ITS OFFICERS OR AGENTS SHALL NOT BE RESPONSIBLE FOR THE ACCURACY OR COMPLETENESS OF ELECTRONIC COPIES OF THIS PLAN SHEET.

Caltrans Metric

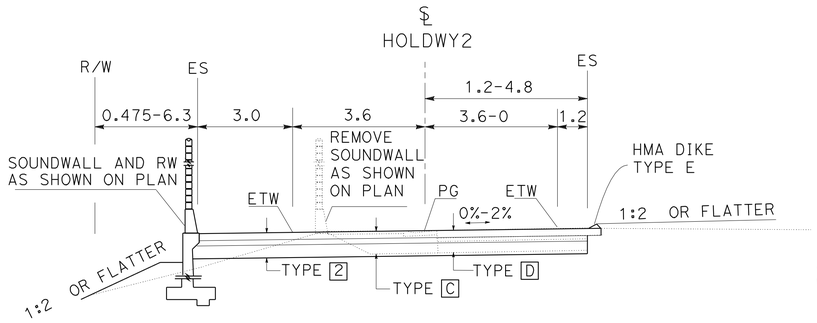

SB HOLLYWOOD WAY OFF-RAMP

Sta 522+05.20 TO 523+68.92

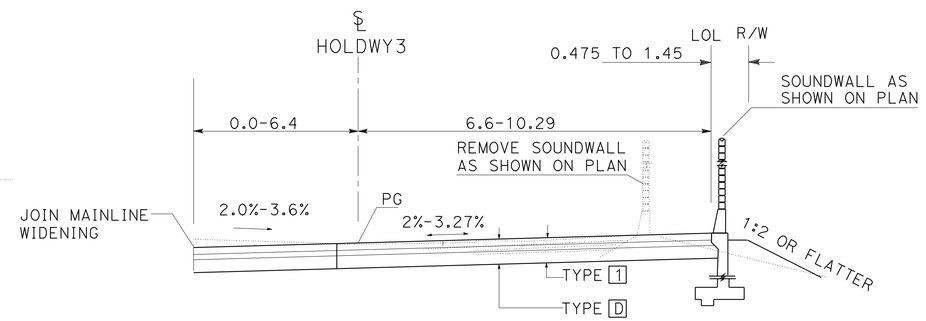

NB HOLLYWOOD WAY ON-RAMP

Sta 523+47+04 TO 525+36.14

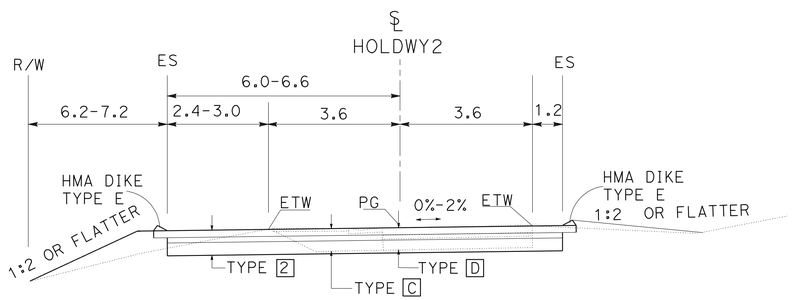

SB HOLLYWOOD WAY OFF-RAMP

Sta 520+92.24 TO 522+05.20

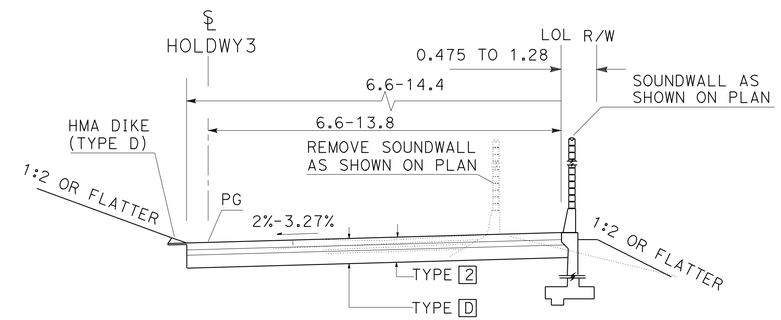

NB HOLLYWOOD WAY ON-RAMP

Sta 521+25.18 TO 523+47.04

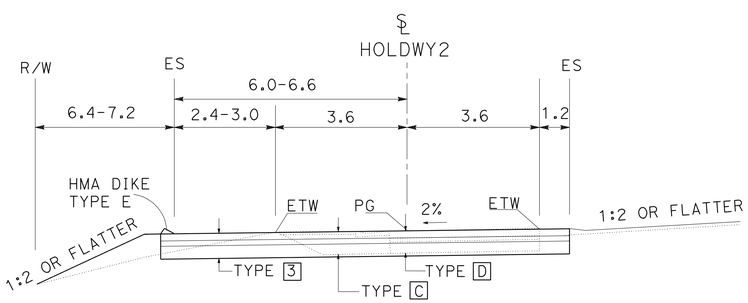

SB HOLLYWOOD WAY OFF-RAMP

Sta 520+41.43 TO 520+92.24

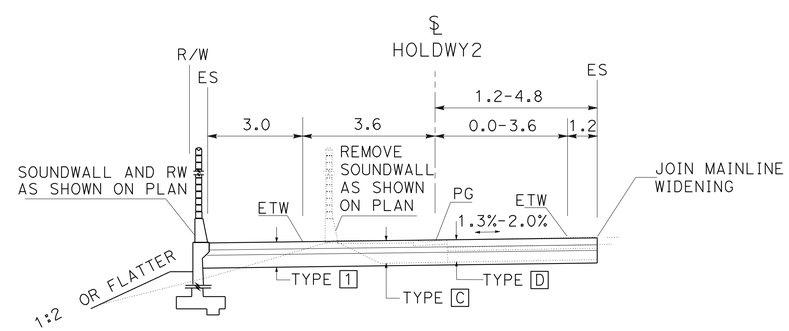

SB HOLLYWOOD WAY OFF-RAMP

Sta 523+68.92 TO 524+51.215

ALL DIMENSIONS ARE IN METERS
UNLESS OTHERWISE SHOWN

TYPICAL CROSS SECTIONS

NO SCALE

X-5

STATE OF CALIFORNIA - DEPARTMENT OF TRANSPORTATION
Caltrans
DESIGN

FUNCTIONAL SUPERVISOR: CELINA AVILES
CALCULATED-DESIGNED BY: JOSEPH KIBE
CHECKED BY: AMIR EL SHARIEF
REVISED BY: KK 10/07
DATE REVISED: KK 12/07

LAST REVISION 12-03-07
DATE PLOTTED => 03-MAY-2010
TIME PLOTTED => 12:42

Dist	COUNTY	ROUTE	KILOMETER POST TOTAL PROJECT	SHEET No.	TOTAL SHEETS
07	LA	5	50.8/58.0	7	869

Peter Vandinh 5-5-09
REGISTERED CIVIL ENGINEER DATE

5-3-10
PLANS APPROVAL DATE

REGISTERED PROFESSIONAL ENGINEER PETER VAN DINH No. C62666 Exp. 6-30-10 CIVIL STATE OF CALIFORNIA

THE STATE OF CALIFORNIA OR ITS OFFICERS OR AGENTS SHALL NOT BE RESPONSIBLE FOR THE ACCURACY OR COMPLETENESS OF ELECTRONIC COPIES OF THIS PLAN SHEET.

Caltrans Metric

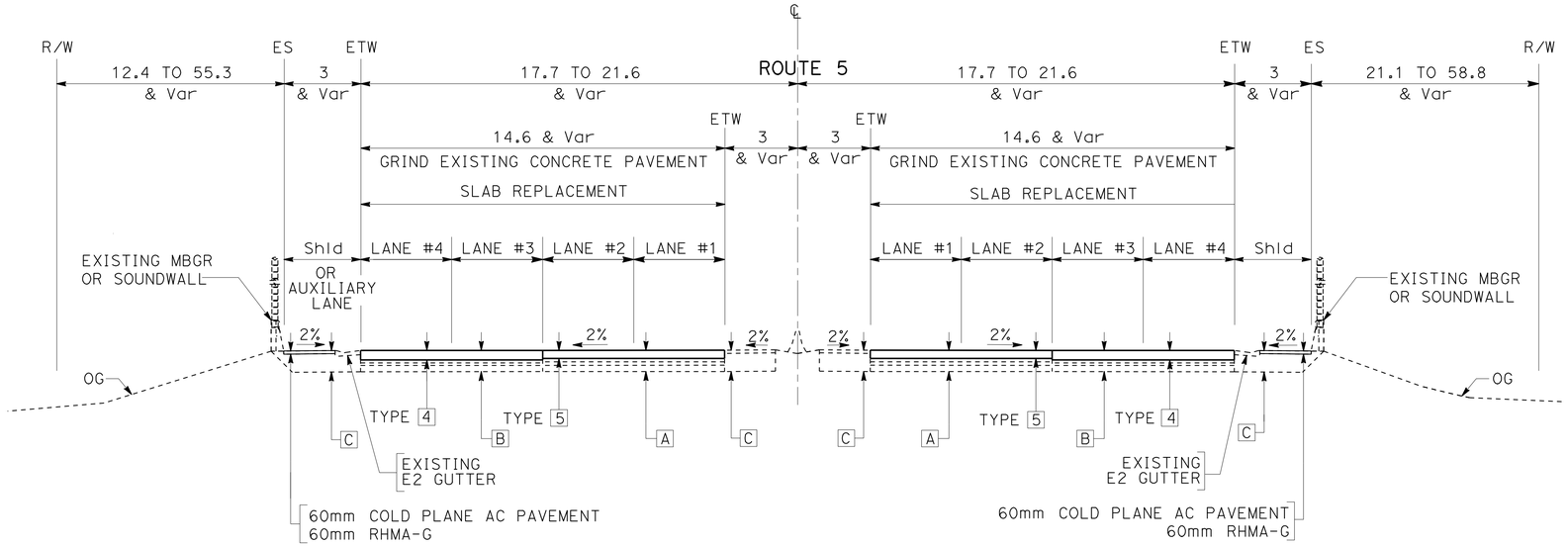

SOUTHBOUND NORTHBOUND

ROUTE 5

STA 531+65 TO STA 580+00

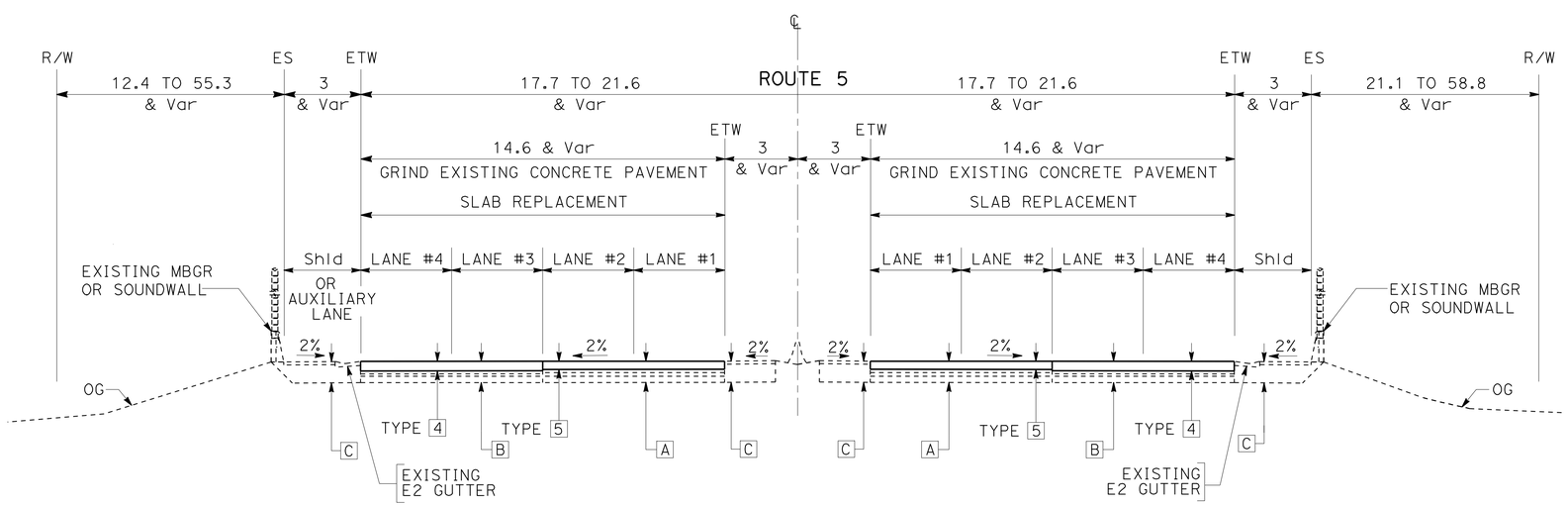

SOUTHBOUND NORTHBOUND

ROUTE 5

STA 520+10 TO STA 531+65

NOTES:

1. EXISTING UTILITY FACILITIES AND DRAINAGE INLETS HAVE NOT BEEN PLOTTED ON THESE PLANS.
2. EXACT LOCATIONS OF REPLACE CONCRETE PAVEMENT (RSC) WILL BE DETERMINED BY THE ENGINEER. SEE QUANTITY SHEETS FOR LIMITS.
3. SEE QUANTITY SHEETS FOR LIMITS OF GRIND EXISTING CONCRETE PAVEMENT. EXACT LOCATIONS WILL BE DETERMINED BY THE ENGINEER.
4. APPROACH SLABS AND BRIDGE DECKS ARE EXCLUDED FROM GRINDING.

ABBREVIATION:

RHMA-G - RUBBERIZED HOT MIX ASPHALT (GAP GRADED)

PROPOSED STRUCTURAL SECTION

TYPE 4 — 230mm REPLACE CONCRETE PAVEMENT (RSC)

TYPE 5 — 200mm REPLACE CONCRETE PAVEMENT (RSC)

TYPE 6 —
275mm REPLACE CONCRETE PAVEMENT (RSC)
---------- BOND BREAKER
150mm LEAN CONCRETE BASE (RAPID SETTING)
215mm CLASS 3 AGGREGATE BASE

ALL DIMENSIONS ARE IN METERS UNLESS OTHERWISE SHOWN

TYPICAL CROSS SECTIONS

NO SCALE

X-6

REVISED BY	DATE REVISED

CALCULATED-DESIGNED BY: PETER DINH
CHECKED BY: PAUL CRISPI
FUNCTIONAL SUPERVISOR: PAUL CRISPI

STATE OF CALIFORNIA - DEPARTMENT OF TRANSPORTATION
Caltrans MAINTENANCE ENGINEERING

LAST REVISION 00-00-00
DATE PLOTTED => 03-MAY-2010
TIME PLOTTED => 12:42

Dist	COUNTY	ROUTE	KILOMETER POST TOTAL PROJECT	SHEET No.	TOTAL SHEETS
07	LA	5	50.8/58.0	8	869

REGISTERED CIVIL ENGINEER 5-5-09 DATE

5-3-10
PLANS APPROVAL DATE

REGISTERED PROFESSIONAL ENGINEER PETER VAN DINH No. C62666 Exp 6-30-10 CIVIL STATE OF CALIFORNIA

THE STATE OF CALIFORNIA OR ITS OFFICERS OR AGENTS SHALL NOT BE RESPONSIBLE FOR THE ACCURACY OR COMPLETENESS OF ELECTRONIC COPIES OF THIS PLAN SHEET.

Caltrans Metric

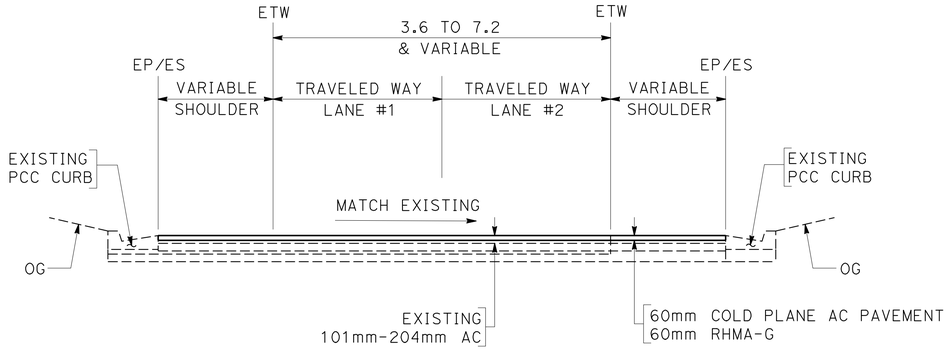

RAMPS

SB ON-RAMP FROM ROSCOE BOULEVARD
NB OFF-RAMP TO ROSCOE BOULEVARD
SB ON-RAMP FROM SUNLAND BOULEVARD
NB OFF-RAMP TO SUNLAND BOULEVARD
SB OFF-RAMP TO SUNLAND BOULEVARD
NB ON-RAMP FROM SUNLAND BOULEVARD
NB OFF-RAMP TO PENROSE STREET
NB ON-RAMP FROM TUXFORD STREET
NB OFF-RAMP TO LANKERSHIM BOULEVARD
SB OFF-RAMP TO LANKERSHIM BOULEVARD
NB ON-RAMP FROM LANKERSHIM BOULEVARD
SB OFF-RAMP TO LAUREL CANYON BOULEVARD
NB OFF-RAMP TO LAUREL CANYON BOULEVARD

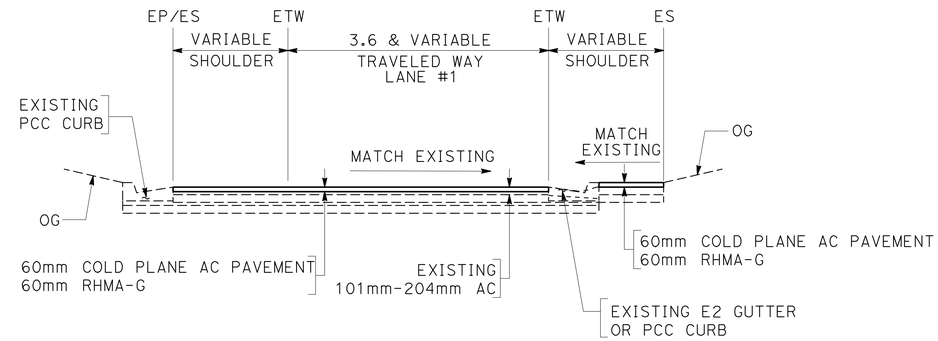

RAMP

SB ON-RAMP FROM LANKERSHIM BOULEVARD

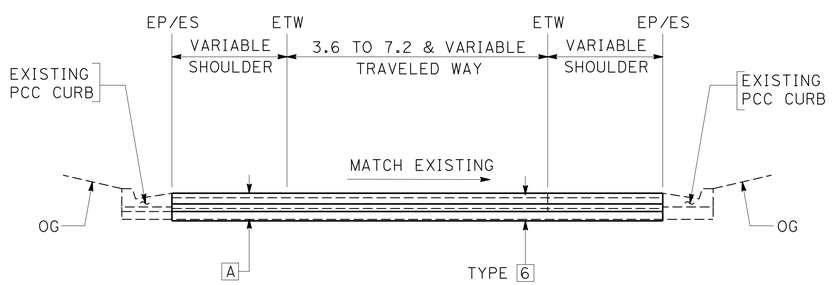

RAMP TERMINI

NB OFF-RAMP TO ROSCOE BOULEVARD
NB OFF-RAMP TO PENROSE STREET
SB OFF-RAMP TO PENROSE STREET
NB OFF-RAMP TO TUXFORD STREET
SB OFF-RAMP TO LAUREL CANYON BOULEVARD
NB OFF-RAMP TO LAUREL CANYON BOULEVARD
SB OFF-RAMP TO HOLLYWOOD WAY

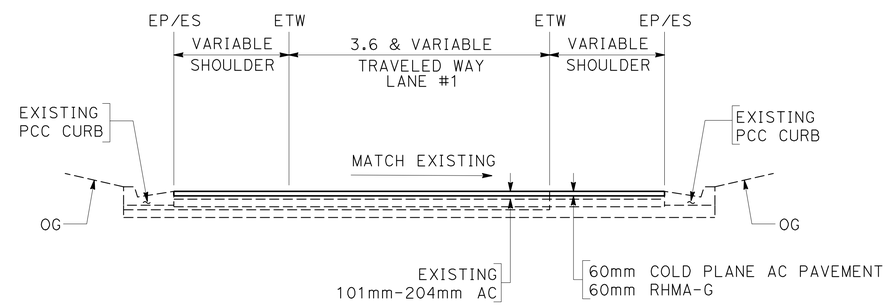

RAMPS

SB OFF-RAMP TO PENROSE STREET
SB ON-RAMP FROM PENROSE STREET
SB ON-RAMP FROM TUXFORD STREET
NB OFF-RAMP TO TUXFORD STREET
SB ON-RAMP FROM LAUREL CANYON BOULEVARD
NB ON-RAMP FROM SHELDON STREET

ALL DIMENSIONS ARE IN
METERS UNLESS OTHERWISE SHOWN

TYPICAL CROSS SECTIONS

NO SCALE

X-7

STATE OF CALIFORNIA - DEPARTMENT OF TRANSPORTATION
Caltrans MAINTENANCE ENGINEERING

FUNCTIONAL SUPERVISOR: PAUL CRISPI
CALCULATED-DESIGNED BY: PETER DINH
CHECKED BY: PAUL CRISPI
REVISED BY
DATE REVISED

LAST REVISION 00-00-00
DATE PLOTTED => 03-MAY-2010
TIME PLOTTED => 12:43

Dist	COUNTY	ROUTE	KILOMETER POST TOTAL PROJECT	SHEET No.	TOTAL SHEETS
07	LA	5	50.8/58.0	9	869

REGISTERED CIVIL ENGINEER 7/02/08 DATE

5-3-10
PLANS APPROVAL DATE

REGISTERED PROFESSIONAL ENGINEER KYLE M KUNITAKE No. 63726 Exp. 9/30/10 CIVIL STATE OF CALIFORNIA

THE STATE OF CALIFORNIA OR ITS OFFICERS OR AGENTS SHALL NOT BE RESPONSIBLE FOR THE ACCURACY OR COMPLETENESS OF ELECTRONIC COPIES OF THIS PLAN SHEET.

Caltrans Metric

NOTE:

1. FOR COMPLETE RIGHT OF WAY AND ACCURATE ACCESS DATA, SEE RIGHT OF WAY RECORD MAPS AT DISTRICT OFFICE.

2. SEE CONSTRUCTION DETAILS FOR TEMPORARY FENCE TYPICAL SECTIONS.

CLOSURE WALLS LEGEND
(SEE CONSTRUCTION DETAILS):

(A) — CHAIN LINK FENCE
(B) — Conc MASONRY BLOCK WALL
(C) — WOOD FENCE

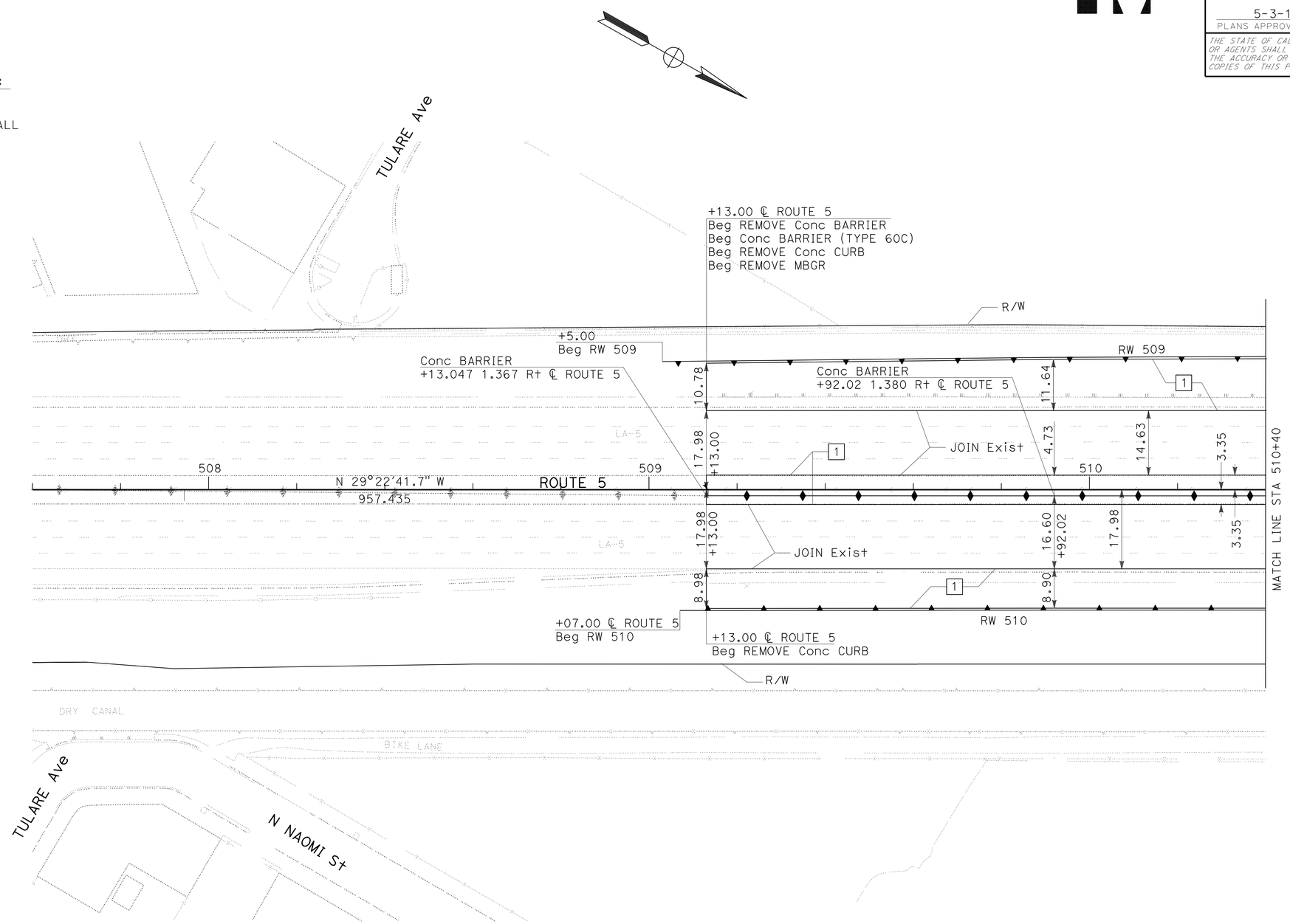

ALL DIMENSIONS ARE IN METERS
UNLESS OTHERWISE SHOWN

LAYOUT
SCALE 1:500

L-1

REVISED BY	DATE REVISED
KK	02-07
AE	06-07

JOSEPH KIBE
KYLE KUNITAKE
CALCULATED-DESIGNED BY
CHECKED BY
FUNCTIONAL SUPERVISOR
CELINA AVILES

STATE OF CALIFORNIA - DEPARTMENT OF TRANSPORTATION
Caltrans
DESIGN

LAST REVISION 02-22-08
DATE PLOTTED => 03-MAY-2010
TIME PLOTTED => 12:43

Dist	COUNTY	ROUTE	KILOMETER POST TOTAL PROJECT	SHEET No.	TOTAL SHEETS
07	LA	5	50.8/58.0	10	869

REGISTERED CIVIL ENGINEER 7/02/08 DATE

5-3-10
PLANS APPROVAL DATE

REGISTERED PROFESSIONAL ENGINEER KYLE M KUNITAKE No. 63726 Exp. 9/30/10 CIVIL STATE OF CALIFORNIA

THE STATE OF CALIFORNIA OR ITS OFFICERS OR AGENTS SHALL NOT BE RESPONSIBLE FOR THE ACCURACY OR COMPLETENESS OF ELECTRONIC COPIES OF THIS PLAN SHEET.

Caltrans Metric

NOTES:

1. FOR COMPLETE RIGHT OF WAY AND ACCURATE ACCESS DATA, SEE RIGHT OF WAY RECORD MAPS AT DISTRICT OFFICE.
2. WORK AROUND MAINTENANCE EASEMENT, PARCEL No. 78715.

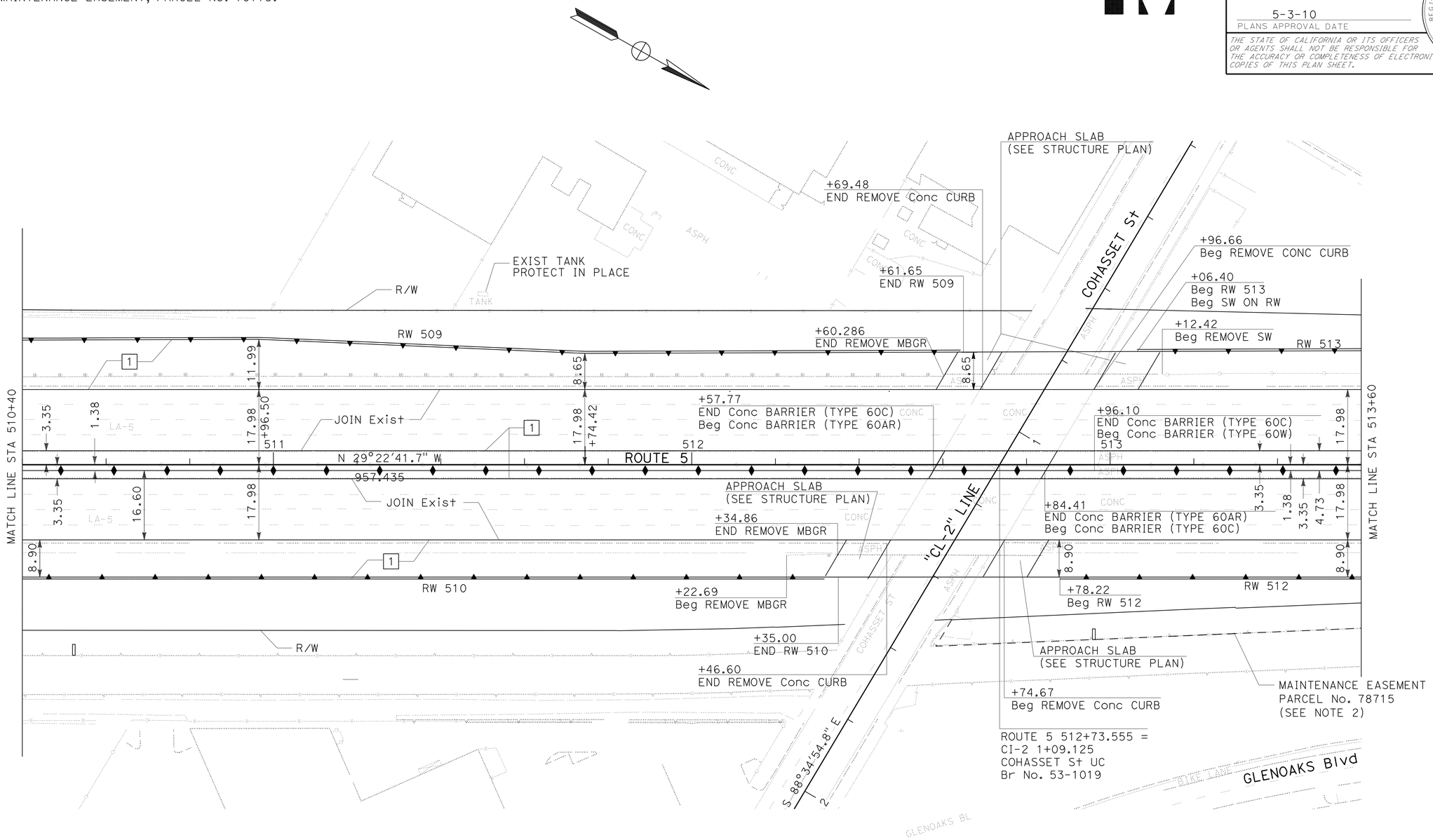

ALL DIMENSIONS ARE IN METERS
UNLESS OTHERWISE SHOWN

LAYOUT

SCALE 1:500

L-2

KK	02-08	JOSEPH KIBE	CALCULATED-DESIGNED BY
AE	06-07	KYLE KUNITAKE	CHECKED BY
REVISED BY	DATE REVISED	CELINA AVILES	FUNCTIONAL SUPERVISOR

STATE OF CALIFORNIA - DEPARTMENT OF TRANSPORTATION
Caltrans **DESIGN**

LAST REVISION 02-22-08 | DATE PLOTTED => 03-MAY-2010 | TIME PLOTTED => 12:43

Dist	COUNTY	ROUTE	KILOMETER POST TOTAL PROJECT	SHEET No.	TOTAL SHEETS
07	LA	5	50.8/58.0	11	869

REGISTERED CIVIL ENGINEER 7/02/08 DATE

5-3-10
PLANS APPROVAL DATE

REGISTERED PROFESSIONAL ENGINEER KYLE M KUNITAKE No. 63726 Exp. 9/30/10 CIVIL STATE OF CALIFORNIA

THE STATE OF CALIFORNIA OR ITS OFFICERS OR AGENTS SHALL NOT BE RESPONSIBLE FOR THE ACCURACY OR COMPLETENESS OF ELECTRONIC COPIES OF THIS PLAN SHEET.

Caltrans Metric

NOTES:

1. FOR COMPLETE RIGHT OF WAY AND ACCURATE ACCESS DATA, SEE RIGHT OF WAY RECORD MAPS AT DISTRICT OFFICE.
2. WORK AROUND MAINTENANCE EASEMENT, PARCEL #78715.

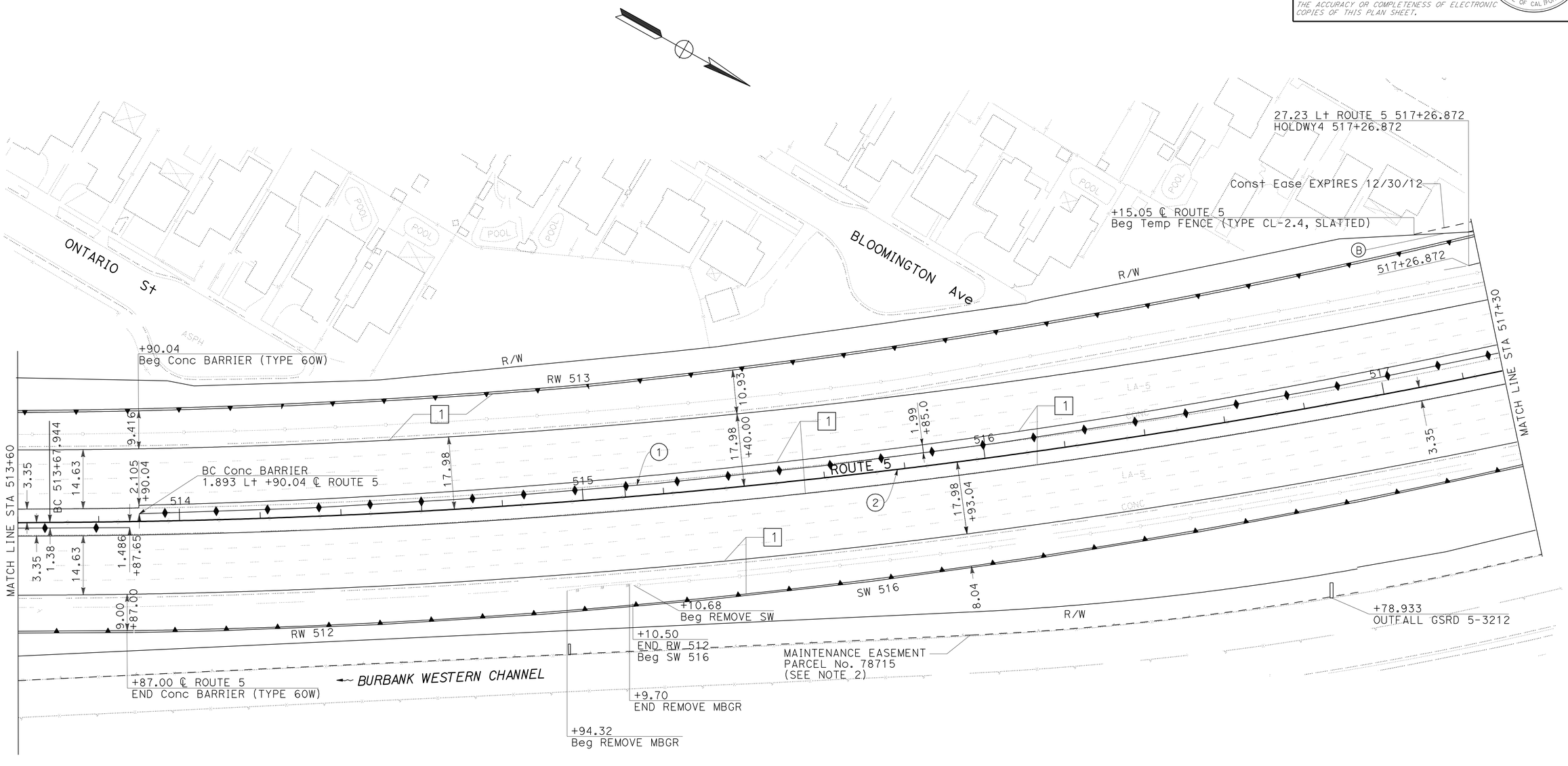

CURVE DATA

No.	R	Δ	T	L
1	1780.06	12°50'57"	200.44	399.19
2	1828.79	15°19'47"	246.12	489.30

ALL DIMENSIONS ARE IN METERS UNLESS OTHERWISE SHOWN

LAYOUT

SCALE 1:500

L-3

STATE OF CALIFORNIA - DEPARTMENT OF TRANSPORTATION
Caltrans
DESIGN

FUNCTIONAL SUPERVISOR: CELINA AVILES
CALCULATED-DESIGNED BY: JOSEPH KIBE
CHECKED BY: KYLE KUNITAKE
REVISED BY: AE
DATE REVISED: 06-07
REVISED BY: KK
DATE REVISED: 02-08

LAST REVISION 02-22-08
DATE PLOTTED => 03-MAY-2010
TIME PLOTTED => 12:43

Dist	COUNTY	ROUTE	KILOMETER POST TOTAL PROJECT	SHEET No.	TOTAL SHEETS
07	LA	5	50.8/58.0	12	869

REGISTERED CIVIL ENGINEER 7/02/08 DATE

5-3-10
PLANS APPROVAL DATE

REGISTERED PROFESSIONAL ENGINEER KYLE M KUNITAKE No. 63726 Exp. 9/30/10 CIVIL STATE OF CALIFORNIA

THE STATE OF CALIFORNIA OR ITS OFFICERS OR AGENTS SHALL NOT BE RESPONSIBLE FOR THE ACCURACY OR COMPLETENESS OF ELECTRONIC COPIES OF THIS PLAN SHEET.

Caltrans Metric

NOTES:

1. FOR COMPLETE RIGHT OF WAY AND ACCURATE ACCESS DATA, SEE RIGHT OF WAY RECORD MAPS AT DISTRICT OFFICE.
2. WORK AROUND MAINTENANCE AND FOOTING EASEMENT, PARCEL #78715.

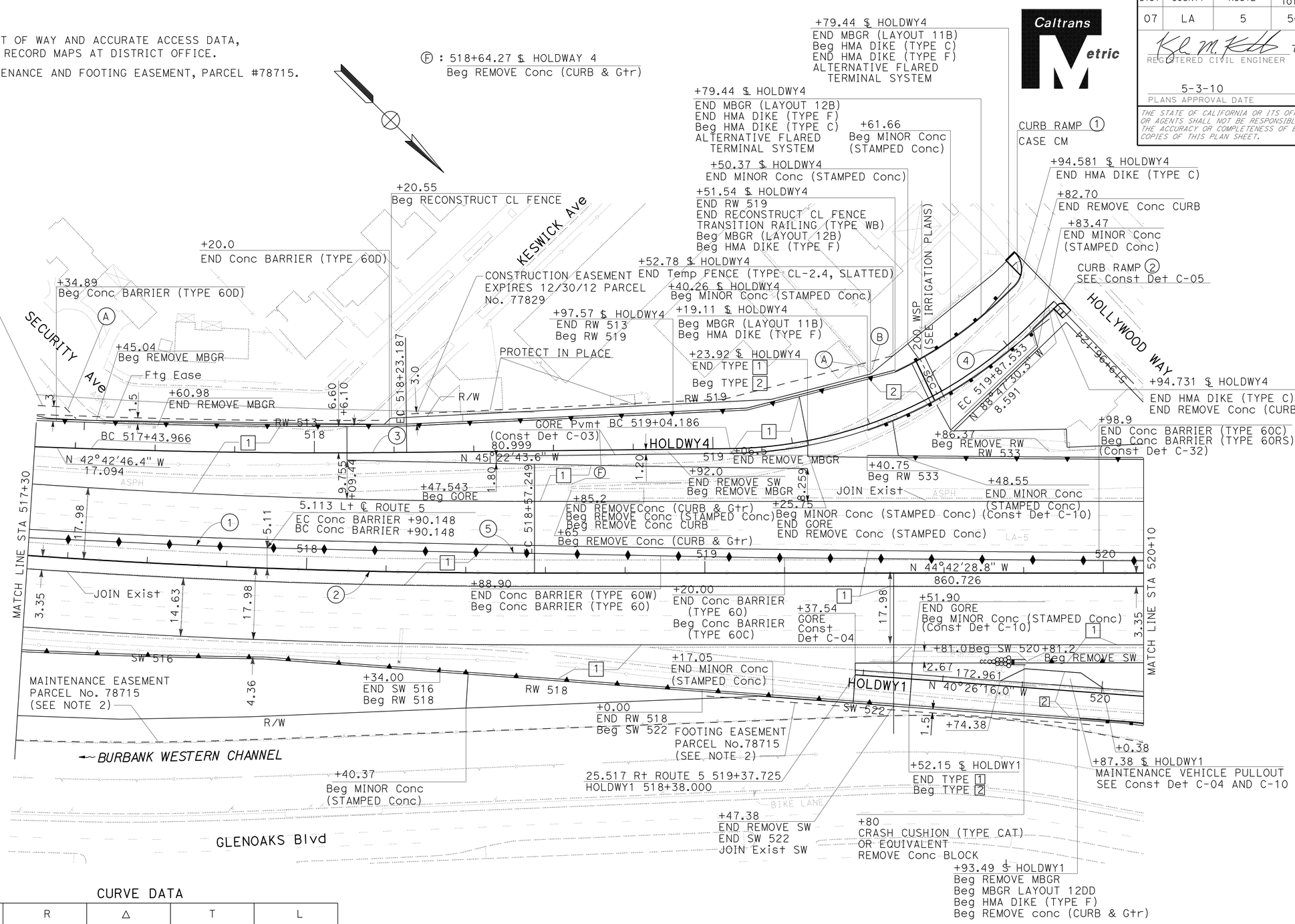

CURVE DATA

No.	R	Δ	T	L
1	1780.06	12°50'57"	200.44	399.19
2	1828.79	15°19'47"	246.12	489.30
3	1702.65	2°39'57"	39.62	79.22
4	110.00	43°24'53"	43.79	83.35
5	10026.27	1°16'46"	111.94	223.88

ALL DIMENSIONS ARE IN METERS
UNLESS OTHERWISE SHOWN

LAYOUT

SCALE 1:500

L-4

REVISED BY	DATE REVISED
KK	02-08
AE	06-07

CALCULATED-DESIGNED BY: JOSEPH KIBE
CHECKED BY: KYLE KUNITAKE
FUNCTIONAL SUPERVISOR: CELINA AVILES

STATE OF CALIFORNIA - DEPARTMENT OF TRANSPORTATION
Caltrans
DESIGN

LAST REVISION 02-22-08
DATE PLOTTED => 03-MAY-2010
TIME PLOTTED => 12:43

Dist	COUNTY	ROUTE	KILOMETER POST TOTAL PROJECT	SHEET No.	TOTAL SHEETS
07	LA	5	50.8/58.0	13	869

REGISTERED CIVIL ENGINEER 7/02/08 DATE

5-3-10
PLANS APPROVAL DATE

REGISTERED PROFESSIONAL ENGINEER KYLE M KUNITAKE No. 63726 Exp. 9/30/10 CIVIL STATE OF CALIFORNIA

THE STATE OF CALIFORNIA OR ITS OFFICERS OR AGENTS SHALL NOT BE RESPONSIBLE FOR THE ACCURACY OR COMPLETENESS OF ELECTRONIC COPIES OF THIS PLAN SHEET.

Caltrans Metric

NOTES:

1. FOR COMPLETE RIGHT OF WAY AND ACCURATE ACCESS DATA, SEE RIGHT OF WAY RECORD MAPS AT DISTRICT OFFICE.
2. WORK AROUND FOOTING AND MAINTENANCE EASEMENTS, PARCEL #77863.

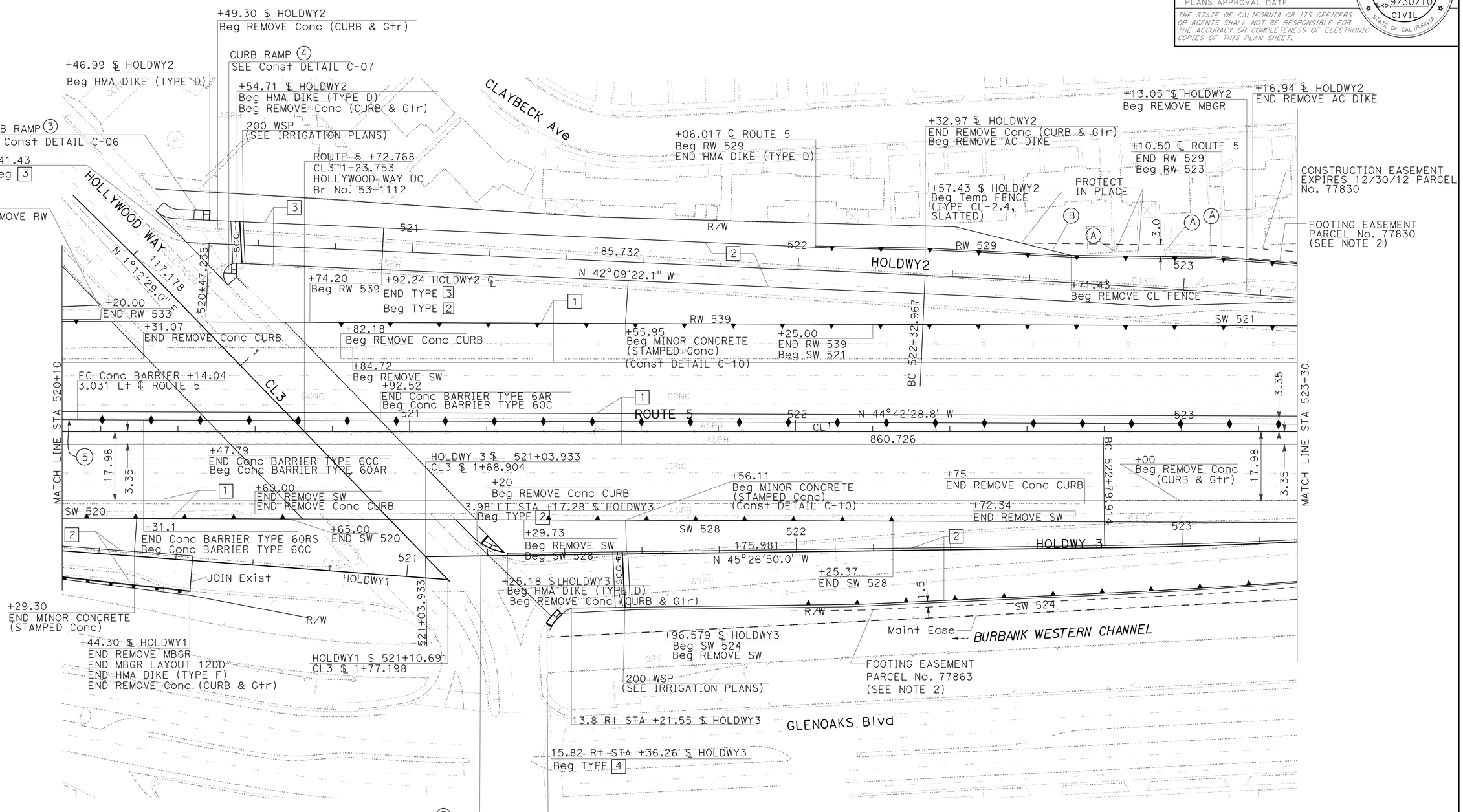

CURVE DATA

No.	R	Δ	T	L
5	10026.27	1°16'46"	111.94	223.88

ALL DIMENSIONS ARE IN METERS
UNLESS OTHERWISE SHOWN

LAYOUT

SCALE 1:500

L-5

REVISED BY	DATE REVISED
KK	02-08
AE	06-07

JOSEPH KIBE
KYLE KUNITAKE
CALCULATED-DESIGNED BY
CHECKED BY
FUNCTIONAL SUPERVISOR
CELINA AVILES

STATE OF CALIFORNIA - DEPARTMENT OF TRANSPORTATION
Caltrans
DESIGN

LAST REVISION 02-22-08
DATE PLOTTED => 03-MAY-2010
TIME PLOTTED => 12:43

Dist	COUNTY	ROUTE	KILOMETER POST TOTAL PROJECT	SHEET No.	TOTAL SHEETS
07	LA	5	50.8/58.0	14	869

REGISTERED CIVIL ENGINEER 7/02/08 DATE

5-3-10
PLANS APPROVAL DATE

REGISTERED PROFESSIONAL ENGINEER KYLE M KUNITAKE No. 63726 Exp. 9/30/10 CIVIL STATE OF CALIFORNIA

THE STATE OF CALIFORNIA OR ITS OFFICERS OR AGENTS SHALL NOT BE RESPONSIBLE FOR THE ACCURACY OR COMPLETENESS OF ELECTRONIC COPIES OF THIS PLAN SHEET.

Caltrans Metric

NOTES:

1. FOR COMPLETE RIGHT OF WAY AND ACCURATE ACCESS DATA, SEE RIGHT OF WAY RECORD MAPS AT DISTRICT OFFICE.
2. WORK AROUND FOOTING AND MAINTENANCE EASMENTS, PARCEL #77863.

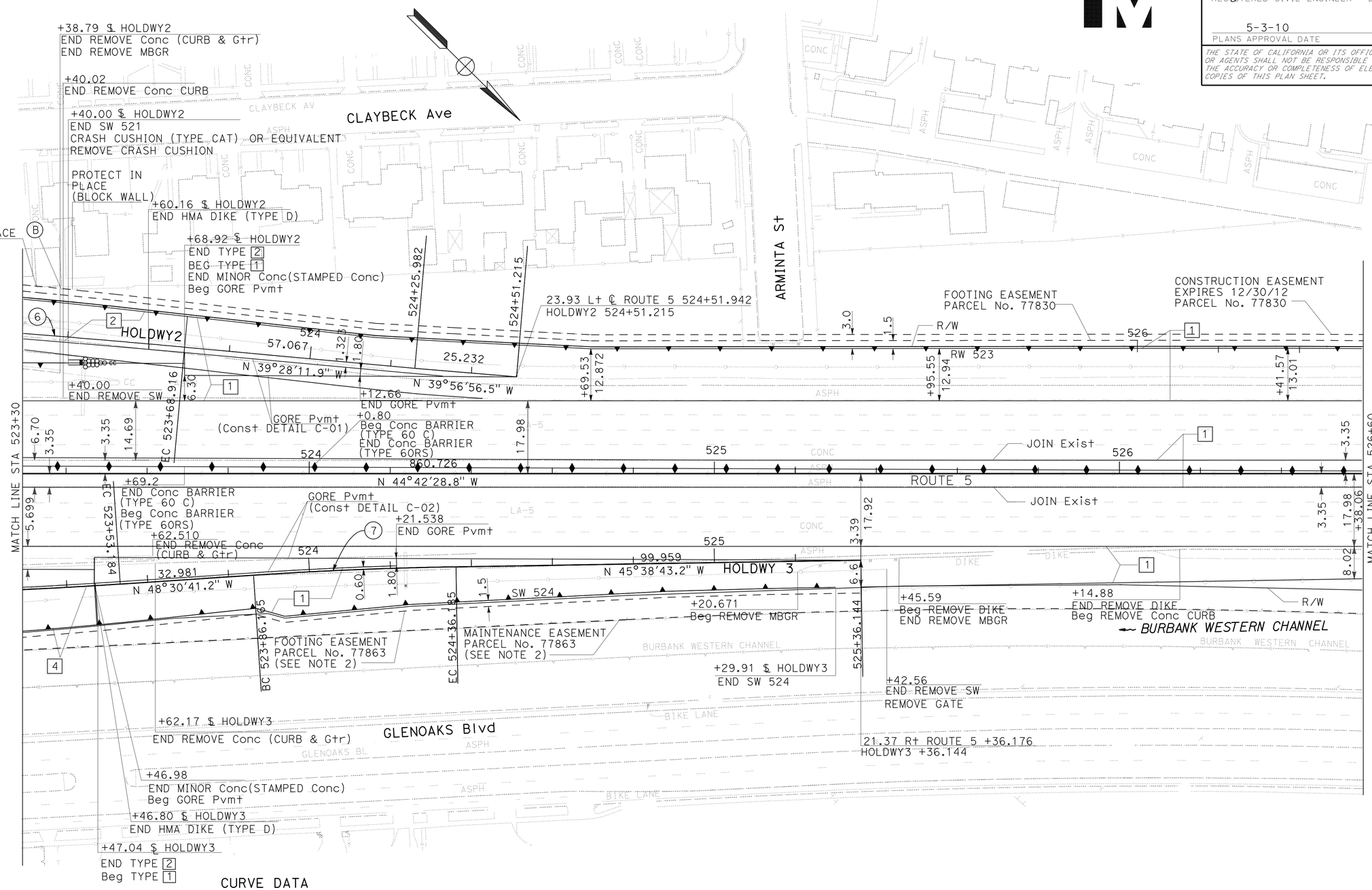

CURVE DATA

No.	R	Δ	T	L
6	2899.98	2°41'10"	67.99	135.95
7	999.95	2°51'58"	25.02	50.02

ALL DIMENSIONS ARE IN METERS UNLESS OTHERWISE SHOWN

LAYOUT

SCALE 1:500

L-6

REVISED BY	DATE REVISED
AE	06-07
KK	02-08

JOSEPH KIBE — KYLE KUNITAKE — CALCULATED-DESIGNED BY — CHECKED BY

FUNCTIONAL SUPERVISOR: CELINA AVILES

STATE OF CALIFORNIA - DEPARTMENT OF TRANSPORTATION — Caltrans — DESIGN

LAST REVISION 02-22-08 — DATE PLOTTED => 03-MAY-2010 — TIME PLOTTED => 12:43

Dist	COUNTY	ROUTE	KILOMETER POST TOTAL PROJECT	SHEET No.	TOTAL SHEETS
07	LA	5	50.8/58.0	15	869

REGISTERED CIVIL ENGINEER 7/02/08 DATE

5-3-10
PLANS APPROVAL DATE

REGISTERED PROFESSIONAL ENGINEER KYLE M KUNITAKE No. 63726 Exp. 9/30/10 CIVIL STATE OF CALIFORNIA

THE STATE OF CALIFORNIA OR ITS OFFICERS OR AGENTS SHALL NOT BE RESPONSIBLE FOR THE ACCURACY OR COMPLETENESS OF ELECTRONIC COPIES OF THIS PLAN SHEET.

Caltrans Metric

NOTES:

1. FOR COMPLETE RIGHT OF WAY AND ACCURATE ACCESS DATA, SEE RIGHT OF WAY RECORD MAPS AT DISTRICT OFFICE.
2. WORK AROUND MAINTENANCE EASEMENT, PARCEL #77863.

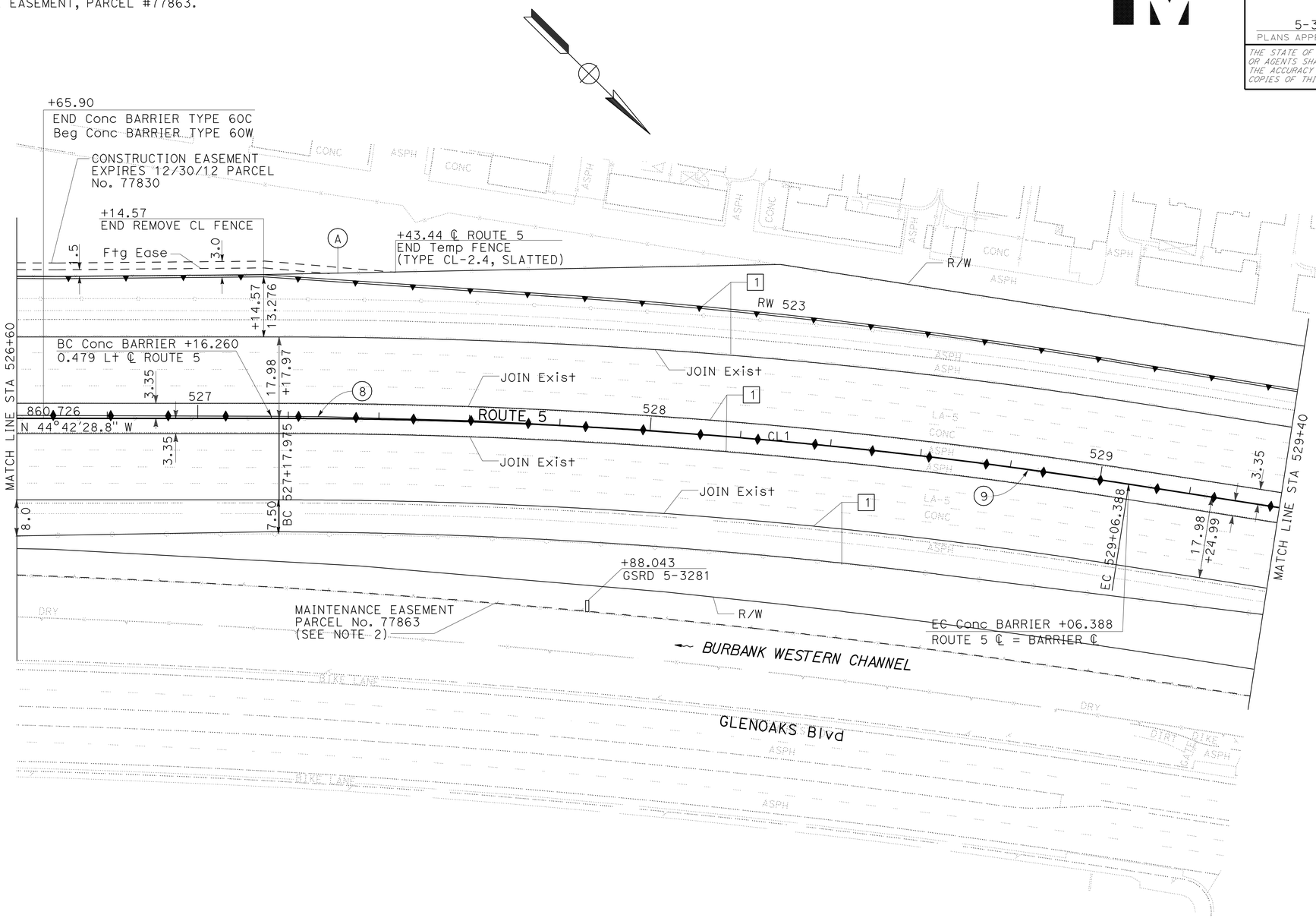

CURVE DATA

No.	R	Δ	T	L
8	1260.06	8°38'47"	95.26	190.15
9	1219.26	8°51'14"	94.39	188.41

ALL DIMENSIONS ARE IN METERS
UNLESS OTHERWISE SHOWN

LAYOUT

SCALE 1:500

L-7

KK	02-08		
AE	06-07		
REVISED BY	DATE REVISED		
JOSEPH KIBE			
KYLE KUNITAKE			
CALCULATED-DESIGNED BY			
CHECKED BY			
FUNCTIONAL SUPERVISOR			
CELINA AVILES			

STATE OF CALIFORNIA - DEPARTMENT OF TRANSPORTATION
Caltrans **DESIGN**

LAST REVISION 02-22-08 | DATE PLOTTED => 03-MAY-2010 | TIME PLOTTED => 12:44

Dist	COUNTY	ROUTE	KILOMETER POST TOTAL PROJECT	SHEET No.	TOTAL SHEETS
07	LA	5	50.8/58.0	16	869

REGISTERED CIVIL ENGINEER 7/02/08 DATE

5-3-10
PLANS APPROVAL DATE

REGISTERED PROFESSIONAL ENGINEER KYLE M KUNITAKE No. 63726 Exp. 9/30/10 CIVIL STATE OF CALIFORNIA

THE STATE OF CALIFORNIA OR ITS OFFICERS OR AGENTS SHALL NOT BE RESPONSIBLE FOR THE ACCURACY OR COMPLETENESS OF ELECTRONIC COPIES OF THIS PLAN SHEET.

Caltrans Metric

NOTES:

1. FOR COMPLETE RIGHT OF WAY AND ACCURATE ACCESS DATA, SEE RIGHT OF WAY RECORD MAPS AT DISTRICT OFFICE.
2. WORK AROUND MAINTENANCE EASEMENT, PARCEL #79502.

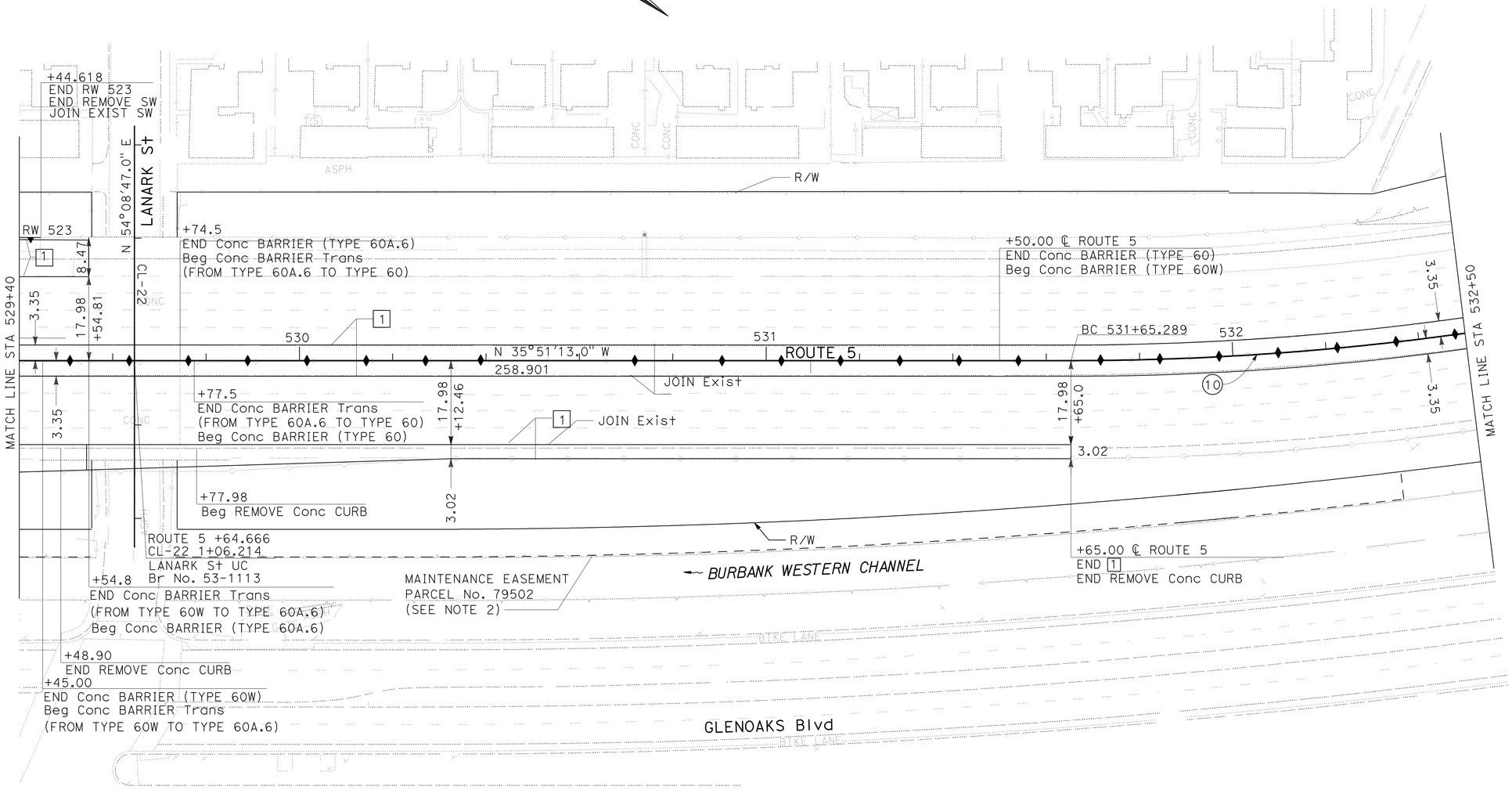

CURVE DATA

No.	R	Δ	T	L
10	609.60	50°6'4"	284.92	533.05

ALL DIMENSIONS ARE IN METERS
UNLESS OTHERWISE SHOWN

LAYOUT

SCALE 1:500

L-8

REVISED BY	DATE REVISED
KK	02-08
AE	06-07

CALCULATED-DESIGNED BY: JOSEPH KIBE
CHECKED BY: KYLE KUNITAKE

FUNCTIONAL SUPERVISOR: CELINA AVILES

STATE OF CALIFORNIA - DEPARTMENT OF TRANSPORTATION
Caltrans
DESIGN

LAST REVISION 02-22-08
DATE PLOTTED => 03-MAY-2010
TIME PLOTTED => 1244

Dist	COUNTY	ROUTE	KILOMETER POST TOTAL PROJECT	SHEET No.	TOTAL SHEETS
07	LA	5	50.8/58.0	17	869

REGISTERED CIVIL ENGINEER 7/02/08 DATE

5-3-10
PLANS APPROVAL DATE

REGISTERED PROFESSIONAL ENGINEER KYLE M KUNITAKE No. 63726 Exp. 9/30/10 CIVIL STATE OF CALIFORNIA

THE STATE OF CALIFORNIA OR ITS OFFICERS OR AGENTS SHALL NOT BE RESPONSIBLE FOR THE ACCURACY OR COMPLETENESS OF ELECTRONIC COPIES OF THIS PLAN SHEET.

Caltrans Metric

NOTE:

1. FOR COMPLETE RIGHT OF WAY AND ACCURATE ACCESS DATA, SEE RIGHT OF WAY RECORD MAPS AT DISTRICT OFFICE.

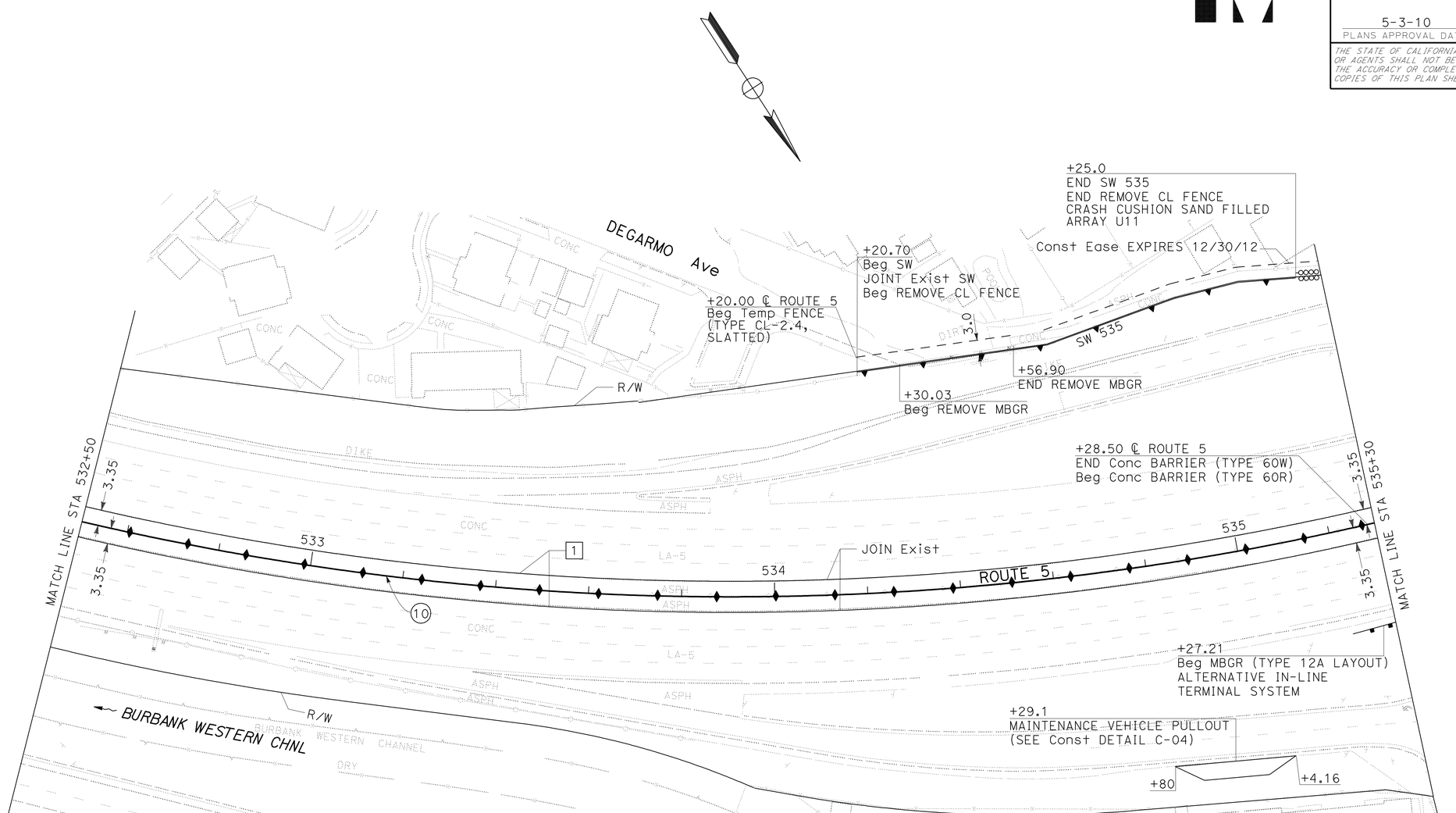

CURVE DATA

No.	R	Δ	T	L
10	609.60	50°6'4"	284.92	533.05

ALL DIMENSIONS ARE IN METERS
UNLESS OTHERWISE SHOWN

LAYOUT

SCALE 1:500

L-9

CALCULATED-DESIGNED BY	JOSEPH KIBE	REVISED BY	AE
CHECKED BY	KYLE KUNITAKE	DATE REVISED	06-07
FUNCTIONAL SUPERVISOR	CELINA AVILES		KK 02-08

STATE OF CALIFORNIA - DEPARTMENT OF TRANSPORTATION
Caltrans **DESIGN**

LAST REVISION 02-22-08 DATE PLOTTED => 03-MAY-2010 TIME PLOTTED => 12:44

Dist	COUNTY	ROUTE	KILOMETER POST TOTAL PROJECT	SHEET No.	TOTAL SHEETS
07	LA	5	50.8/58.0	18	869

REGISTERED CIVIL ENGINEER 7/02/08 DATE

5-3-10
PLANS APPROVAL DATE

REGISTERED PROFESSIONAL ENGINEER KYLE M KUNITAKE No. 63726 Exp. 9/30/10 CIVIL STATE OF CALIFORNIA

THE STATE OF CALIFORNIA OR ITS OFFICERS OR AGENTS SHALL NOT BE RESPONSIBLE FOR THE ACCURACY OR COMPLETENESS OF ELECTRONIC COPIES OF THIS PLAN SHEET.

Caltrans Metric

NOTE:

1. FOR COMPLETE RIGHT OF WAY AND ACCURATE ACCESS DATA, SEE RIGHT OF WAY RECORD MAPS AT DISTRICT OFFICE.

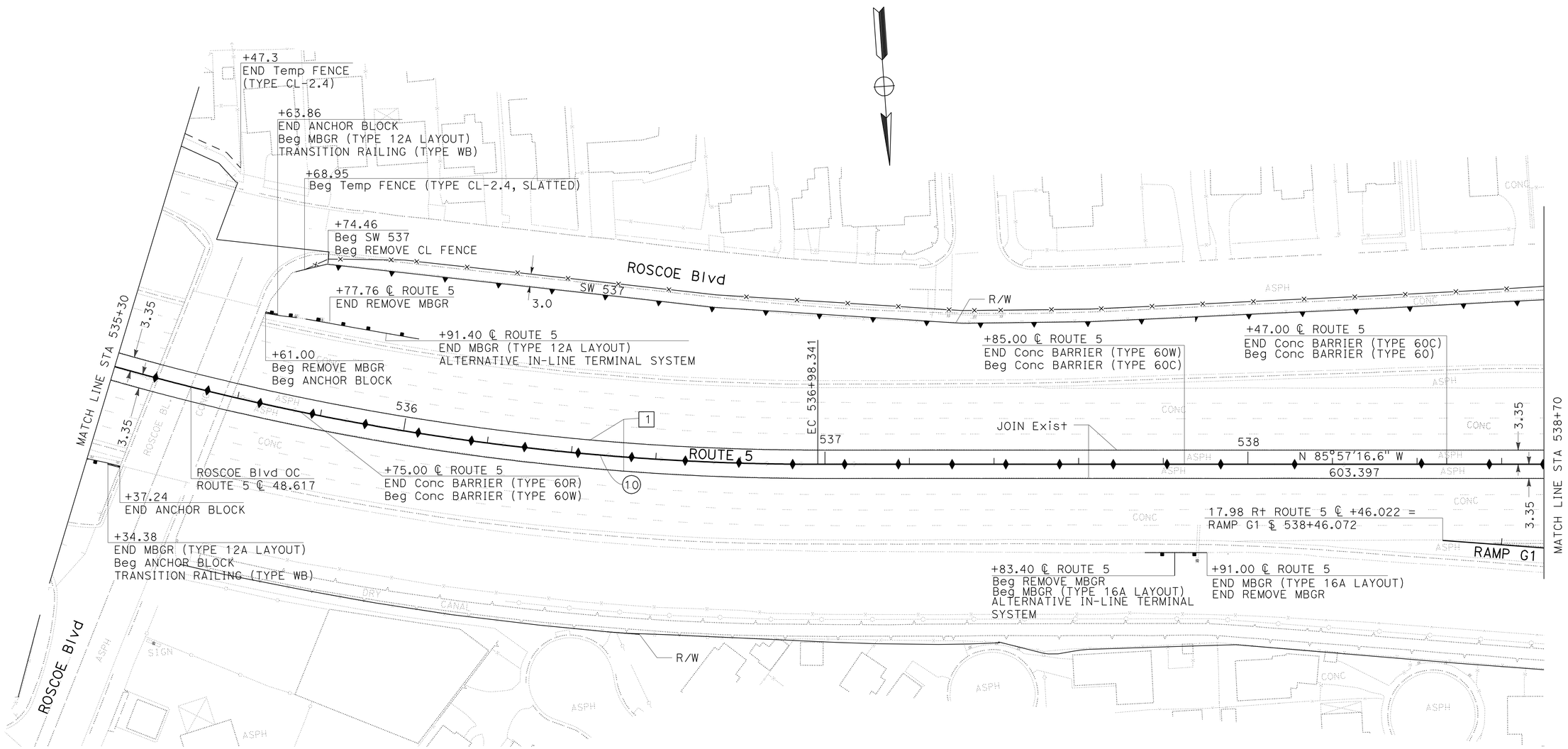

CURVE DATA

No.	R	Δ	T	L
10	609.60	50°6'4"	284.92	533.05

ALL DIMENSIONS ARE IN METERS UNLESS OTHERWISE SHOWN

LAYOUT

SCALE 1:500

L-10

KK	02-08	JOSEPH KIBE	CALCULATED-DESIGNED BY
AE	06-07	KYLE KUNITAKE	CHECKED BY
REVISED BY	DATE REVISED		

FUNCTIONAL SUPERVISOR CELINA AVILES

STATE OF CALIFORNIA - DEPARTMENT OF TRANSPORTATION

Caltrans **DESIGN**

LAST REVISION 02-22-08 DATE PLOTTED => 03-MAY-2010 TIME PLOTTED => 12:44

Dist	COUNTY	ROUTE	KILOMETER POST TOTAL PROJECT	SHEET No.	TOTAL SHEETS
07	LA	5	50.8/58.0	19	869

REGISTERED CIVIL ENGINEER 7/02/08 DATE

5-3-10
PLANS APPROVAL DATE

REGISTERED PROFESSIONAL ENGINEER KYLE M KUNITAKE No. 63726 Exp. 9/30/10 CIVIL STATE OF CALIFORNIA

THE STATE OF CALIFORNIA OR ITS OFFICERS OR AGENTS SHALL NOT BE RESPONSIBLE FOR THE ACCURACY OR COMPLETENESS OF ELECTRONIC COPIES OF THIS PLAN SHEET.

Caltrans Metric

NOTE:

1. FOR COMPLETE RIGHT OF WAY AND ACCURATE ACCESS DATA, SEE RIGHT OF WAY RECORD MAPS AT DISTRICT OFFICE.

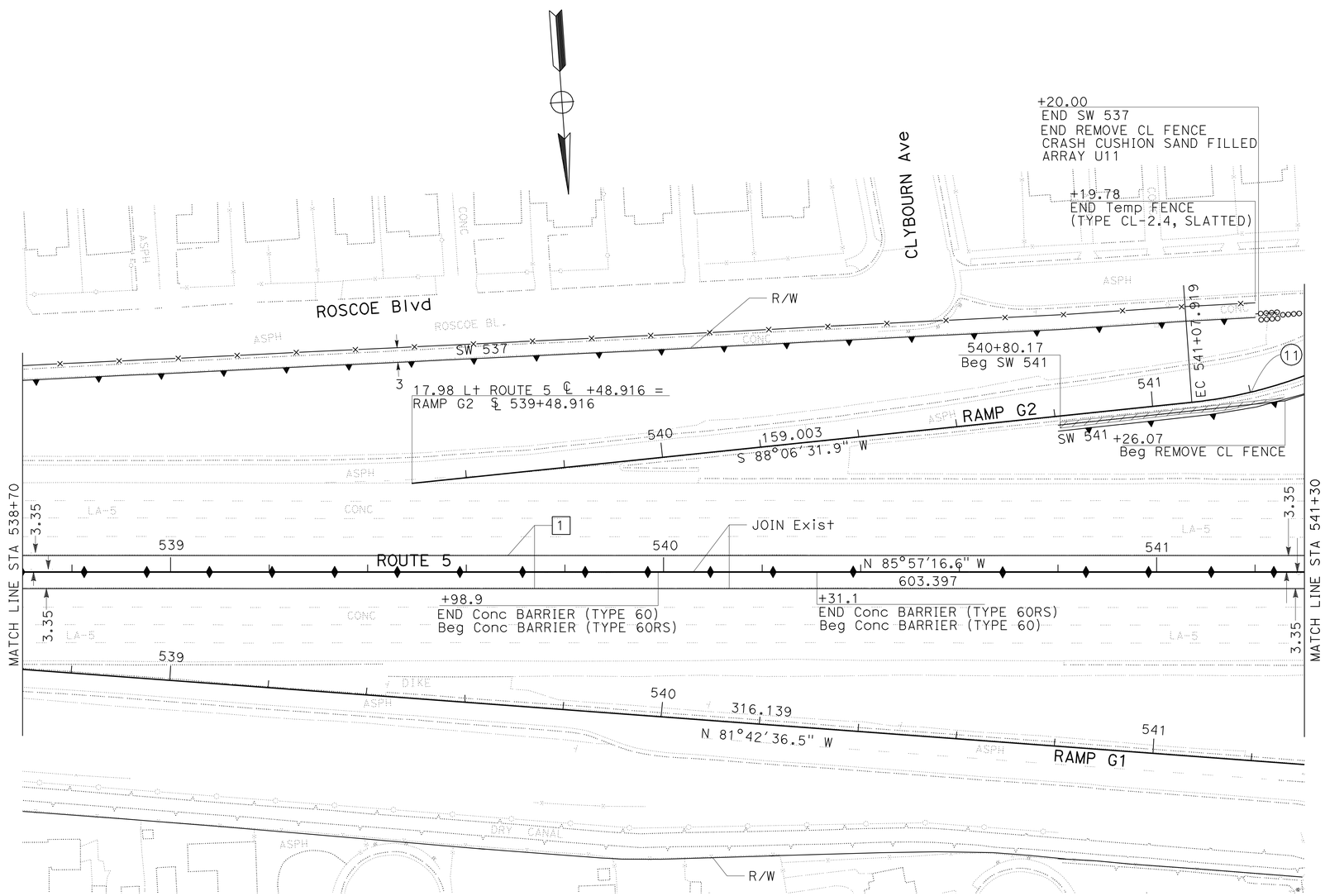

CURVE DATA

No.	R	Δ	T	L
11	91.09	28°19'9"	23.07	45.20

ALL DIMENSIONS ARE IN METERS
UNLESS OTHERWISE SHOWN

LAYOUT

SCALE 1:500

L-11

STATE OF CALIFORNIA - DEPARTMENT OF TRANSPORTATION
Caltrans **DESIGN**

FUNCTIONAL SUPERVISOR: CELINA AVILES
CALCULATED-DESIGNED BY: JOSEPH KIBE
CHECKED BY: KYLE KUNITAKE
REVISED BY: AE KK
DATE REVISED: 06-07 02-08

LAST REVISION 02-22-08
DATE PLOTTED => 03-MAY-2010
TIME PLOTTED => 12:44

Dist	COUNTY	ROUTE	KILOMETER POST TOTAL PROJECT	SHEET No.	TOTAL SHEETS
07	LA	5	50.8/58.0	20	869

REGISTERED CIVIL ENGINEER 7/02/08 DATE

5-3-10
PLANS APPROVAL DATE

REGISTERED PROFESSIONAL ENGINEER KYLE M KUNITAKE No. 63726 Exp. 9/30/10 CIVIL STATE OF CALIFORNIA

THE STATE OF CALIFORNIA OR ITS OFFICERS OR AGENTS SHALL NOT BE RESPONSIBLE FOR THE ACCURACY OR COMPLETENESS OF ELECTRONIC COPIES OF THIS PLAN SHEET.

Caltrans Metric

NOTE:

1. FOR COMPLETE RIGHT OF WAY AND ACCURATE ACCESS DATA, SEE RIGHT OF WAY RECORD MAPS AT DISTRICT OFFICE.

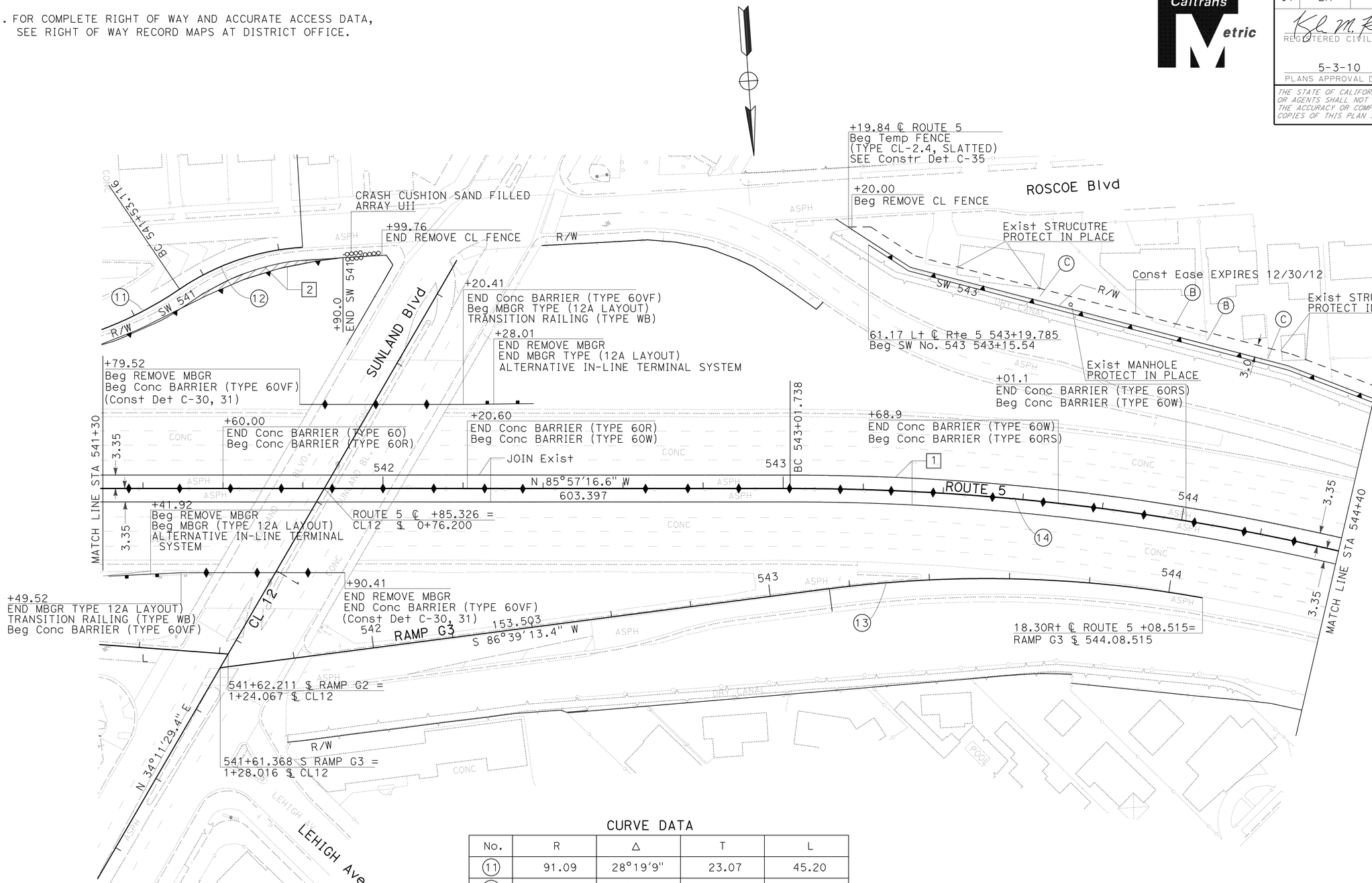

CURVE DATA

No.	R	Δ	T	L
11	91.09	28°19'9"	23.07	45.20
12	60.96	30°53'36"	16.85	32.87
13	304.80	17°36'11"	47.19	93.64
14	609.60	40°9'58"	222.88	427.35

ALL DIMENSIONS ARE IN METERS UNLESS OTHERWISE SHOWN

LAYOUT

SCALE 1:500 **L-12**

CTT	10-08		
KK	02-08		
AE	06-07		
REVISED BY	DATE REVISED		
JOSEPH KIBE	KYLE KUNITAKE		
CALCULATED-DESIGNED BY	CHECKED BY		
FUNCTIONAL SUPERVISOR	CELINA AVILES		

STATE OF CALIFORNIA - DEPARTMENT OF TRANSPORTATION
Caltrans
DESIGN

LAST REVISION 10-03-08 | DATE PLOTTED => 03-MAY-2010 | TIME PLOTTED => 12:44

Dist	COUNTY	ROUTE	KILOMETER POST TOTAL PROJECT	SHEET No.	TOTAL SHEETS
07	LA	5	50.8/58.0	21	869

REGISTERED CIVIL ENGINEER 7/02/08 DATE

5-3-10
PLANS APPROVAL DATE

REGISTERED PROFESSIONAL ENGINEER KYLE M KUNITAKE No. 63726 Exp. 9/30/10 CIVIL STATE OF CALIFORNIA

THE STATE OF CALIFORNIA OR ITS OFFICERS OR AGENTS SHALL NOT BE RESPONSIBLE FOR THE ACCURACY OR COMPLETENESS OF ELECTRONIC COPIES OF THIS PLAN SHEET.

Caltrans Metric

NOTE:

1. FOR COMPLETE RIGHT OF WAY AND ACCURATE ACCESS DATA, SEE RIGHT OF WAY RECORD MAPS AT DISTRICT OFFICE.

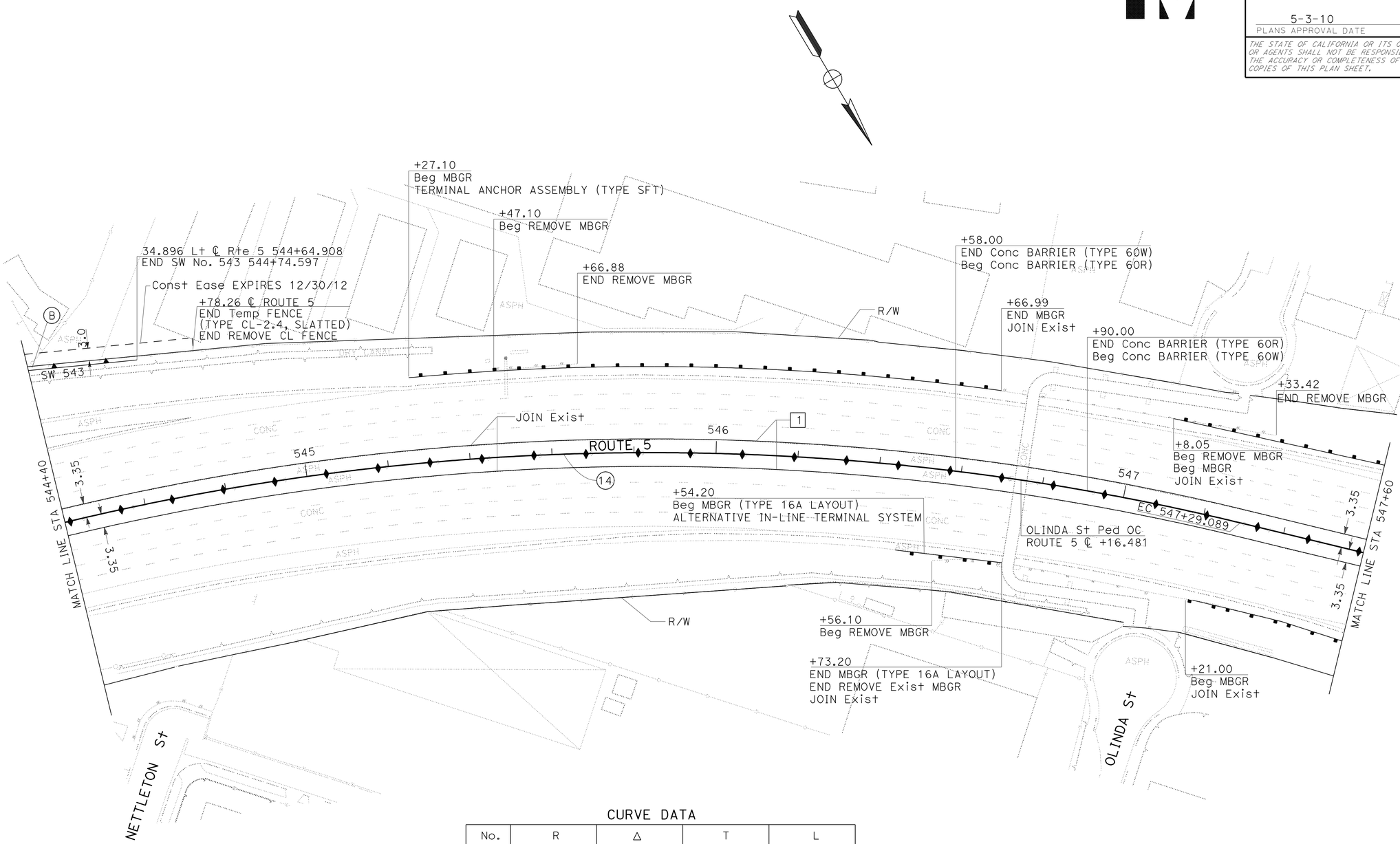

CURVE DATA

No.	R	Δ	T	L
14	609.60	40°9'58"	222.88	427.35

ALL DIMENSIONS ARE IN METERS
UNLESS OTHERWISE SHOWN

LAYOUT

SCALE 1:500

L-13

CTT	10-08		
KK	02-08		
AE	06-07		
REVISED BY	DATE REVISED		
JOSEPH KIBE	KYLE KUNITAKE	CALCULATED-DESIGNED BY	CHECKED BY
FUNCTIONAL SUPERVISOR	CELINA AVILES		

STATE OF CALIFORNIA - DEPARTMENT OF TRANSPORTATION
Caltrans
DESIGN

LAST REVISION 10-03-08 DATE PLOTTED => 03-MAY-2010 TIME PLOTTED => 12:44

Dist	COUNTY	ROUTE	KILOMETER POST TOTAL PROJECT	SHEET No.	TOTAL SHEETS
07	LA	5	50.8/58.0	22	869

REGISTERED CIVIL ENGINEER 7/02/08 DATE

5-3-10
PLANS APPROVAL DATE

REGISTERED PROFESSIONAL ENGINEER KYLE M KUNITAKE No. 63726 Exp. 9/30/10 CIVIL STATE OF CALIFORNIA

THE STATE OF CALIFORNIA OR ITS OFFICERS OR AGENTS SHALL NOT BE RESPONSIBLE FOR THE ACCURACY OR COMPLETENESS OF ELECTRONIC COPIES OF THIS PLAN SHEET.

Caltrans Metric

NOTE:

1. FOR COMPLETE RIGHT OF WAY AND ACCURATE ACCESS DATA, SEE RIGHT OF WAY RECORD MAPS AT DISTRICT OFFICE.

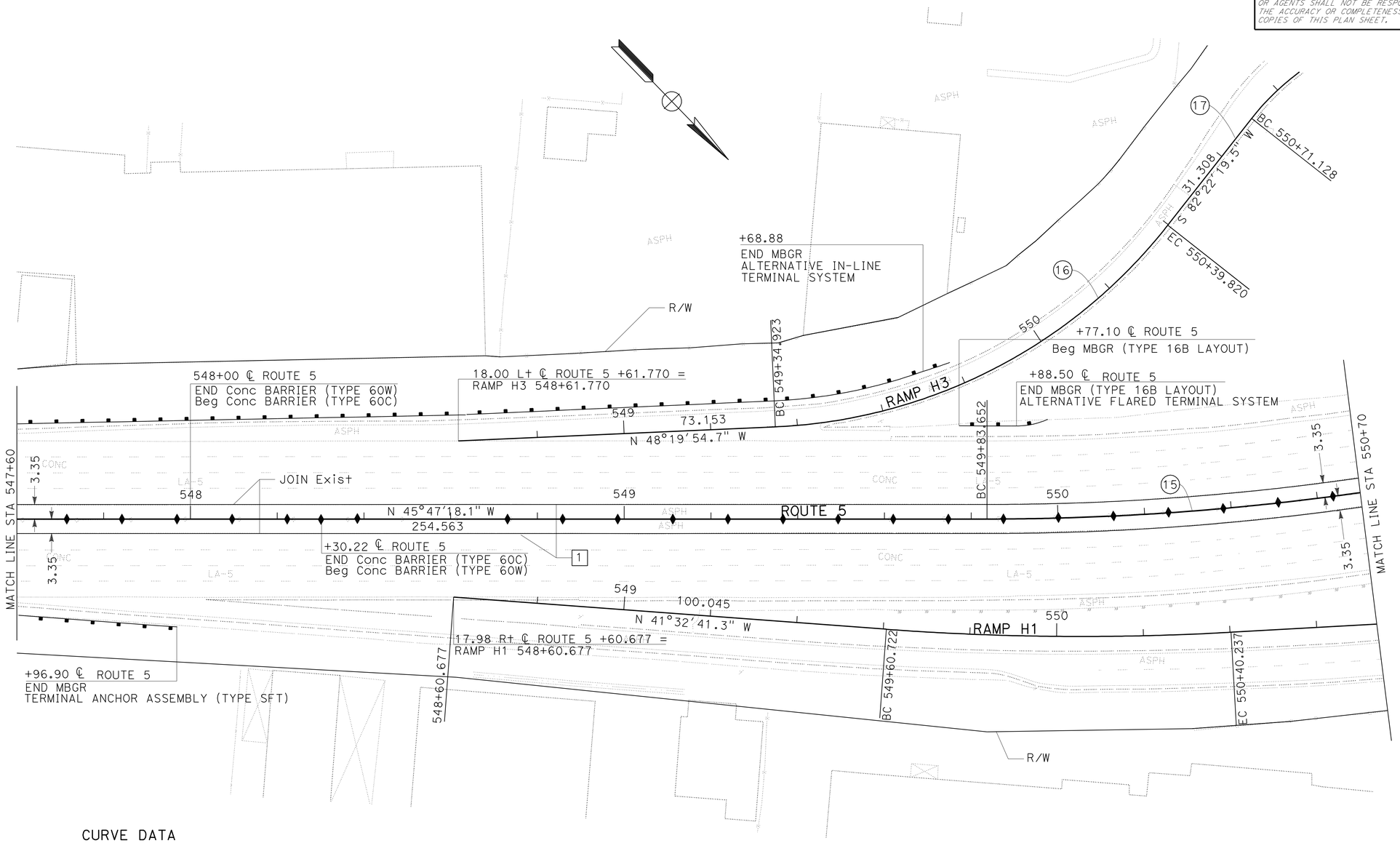

CURVE DATA

No.	R	Δ	T	L
15	609.60	47°9'27"	266.06	501.73
16	121.92	49°17'44"	55.94	104.90
17	57.30	56°33'50"	30.83	56.57

ALL DIMENSIONS ARE IN METERS
UNLESS OTHERWISE SHOWN

LAYOUT

SCALE 1:500

L-14

KK	02-08		
AE	06-07		
REVISED BY	DATE REVISED		
JOSEPH KIBE		CALCULATED-DESIGNED BY	
KYLE KUNITAKE		CHECKED BY	
FUNCTIONAL SUPERVISOR			
CELINA AVILES			

STATE OF CALIFORNIA - DEPARTMENT OF TRANSPORTATION

Caltrans **DESIGN**

LAST REVISION 02-22-08 | DATE PLOTTED => 03-MAY-2010 | TIME PLOTTED => 12:44

Dist	COUNTY	ROUTE	KILOMETER POST TOTAL PROJECT	SHEET No.	TOTAL SHEETS
07	LA	5	50.8/58.0	23	869

REGISTERED CIVIL ENGINEER 7/02/08 DATE

5-3-10
PLANS APPROVAL DATE

REGISTERED PROFESSIONAL ENGINEER KYLE M KUNITAKE No. 63726 Exp. 9/30/10 CIVIL STATE OF CALIFORNIA

THE STATE OF CALIFORNIA OR ITS OFFICERS OR AGENTS SHALL NOT BE RESPONSIBLE FOR THE ACCURACY OR COMPLETENESS OF ELECTRONIC COPIES OF THIS PLAN SHEET.

Caltrans Metric

NOTE:

1. FOR COMPLETE RIGHT OF WAY AND ACCURATE ACCESS DATA, SEE RIGHT OF WAY RECORD MAPS AT DISTRICT OFFICE.

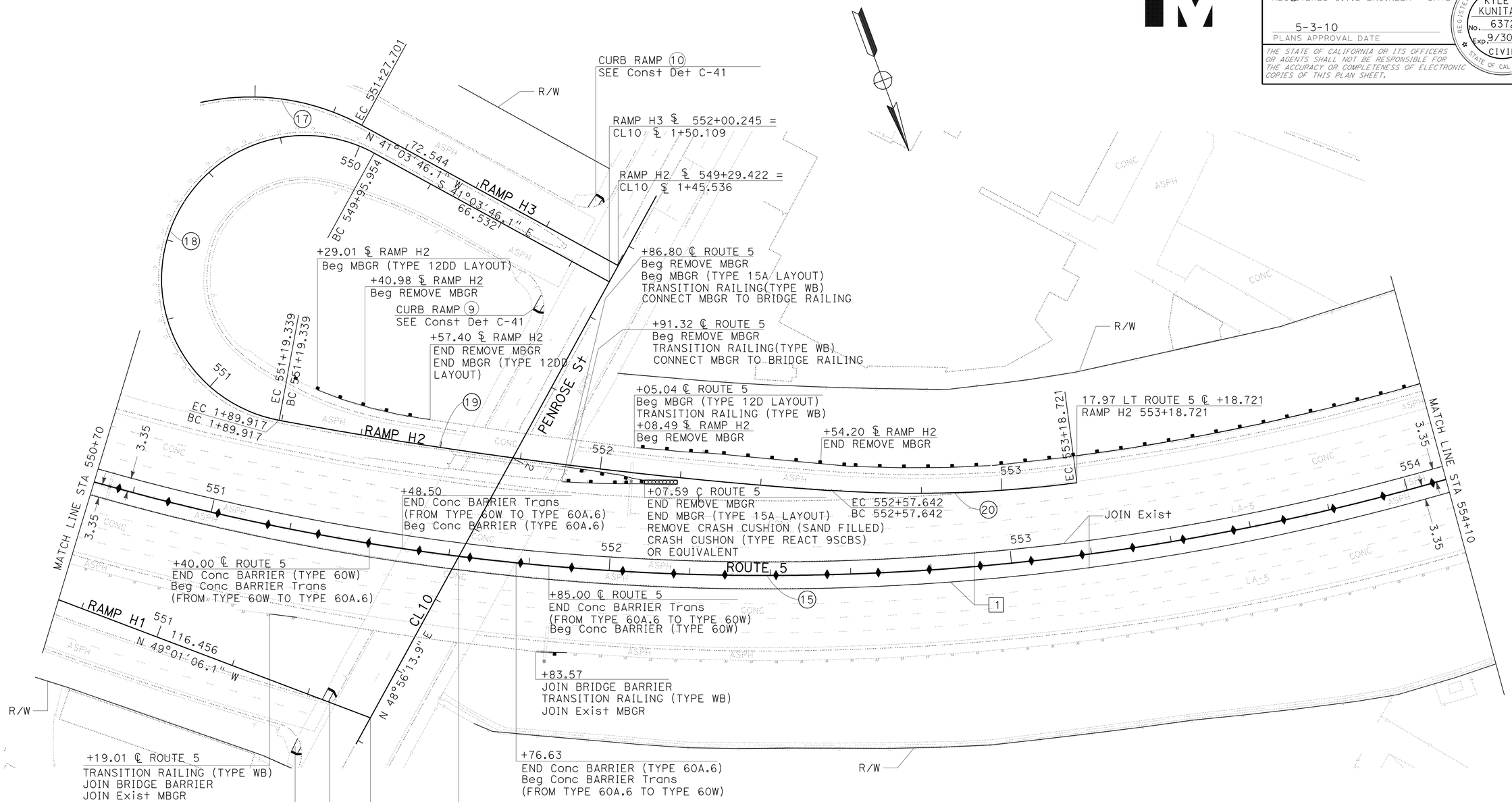

CURVE DATA

No.	R	Δ	T	L
15	609.60	47°9'27"	266.06	501.73
17	57.30	56°33'50"	30.83	56.57
18	35.66	198°14'3"	222.22	123.38
19	1219.17	6°29'59"	69.23	138.30
20	304.82	11°28'51"	30.64	61.08

ALL DIMENSIONS ARE IN METERS UNLESS OTHERWISE SHOWN

LAYOUT

SCALE 1:500

L-15

KK	02-08		
AE	06-07		
REVISED BY	DATE REVISED		
JOSEPH KIBE			
KYLE KUNITAKE			
CALCULATED-DESIGNED BY			
CHECKED BY			
FUNCTIONAL SUPERVISOR			
CELINA AVILES			

STATE OF CALIFORNIA - DEPARTMENT OF TRANSPORTATION

Caltrans **DESIGN**

LAST REVISION 06-03-09 DATE PLOTTED => 03-MAY-2010 TIME PLOTTED => 13:14

Dist	COUNTY	ROUTE	KILOMETER POST TOTAL PROJECT	SHEET No.	TOTAL SHEETS
07	LA	5	50.8/58.0	24	869

REGISTERED CIVIL ENGINEER 7/02/08 DATE

5-3-10
PLANS APPROVAL DATE

REGISTERED PROFESSIONAL ENGINEER KYLE M KUNITAKE No. 63726 Exp. 9/30/10 CIVIL STATE OF CALIFORNIA

THE STATE OF CALIFORNIA OR ITS OFFICERS OR AGENTS SHALL NOT BE RESPONSIBLE FOR THE ACCURACY OR COMPLETENESS OF ELECTRONIC COPIES OF THIS PLAN SHEET.

Caltrans Metric

NOTE:

1. FOR COMPLETE RIGHT OF WAY AND ACCURATE ACCESS DATA, SEE RIGHT OF WAY RECORD MAPS AT DISTRICT OFFICE.

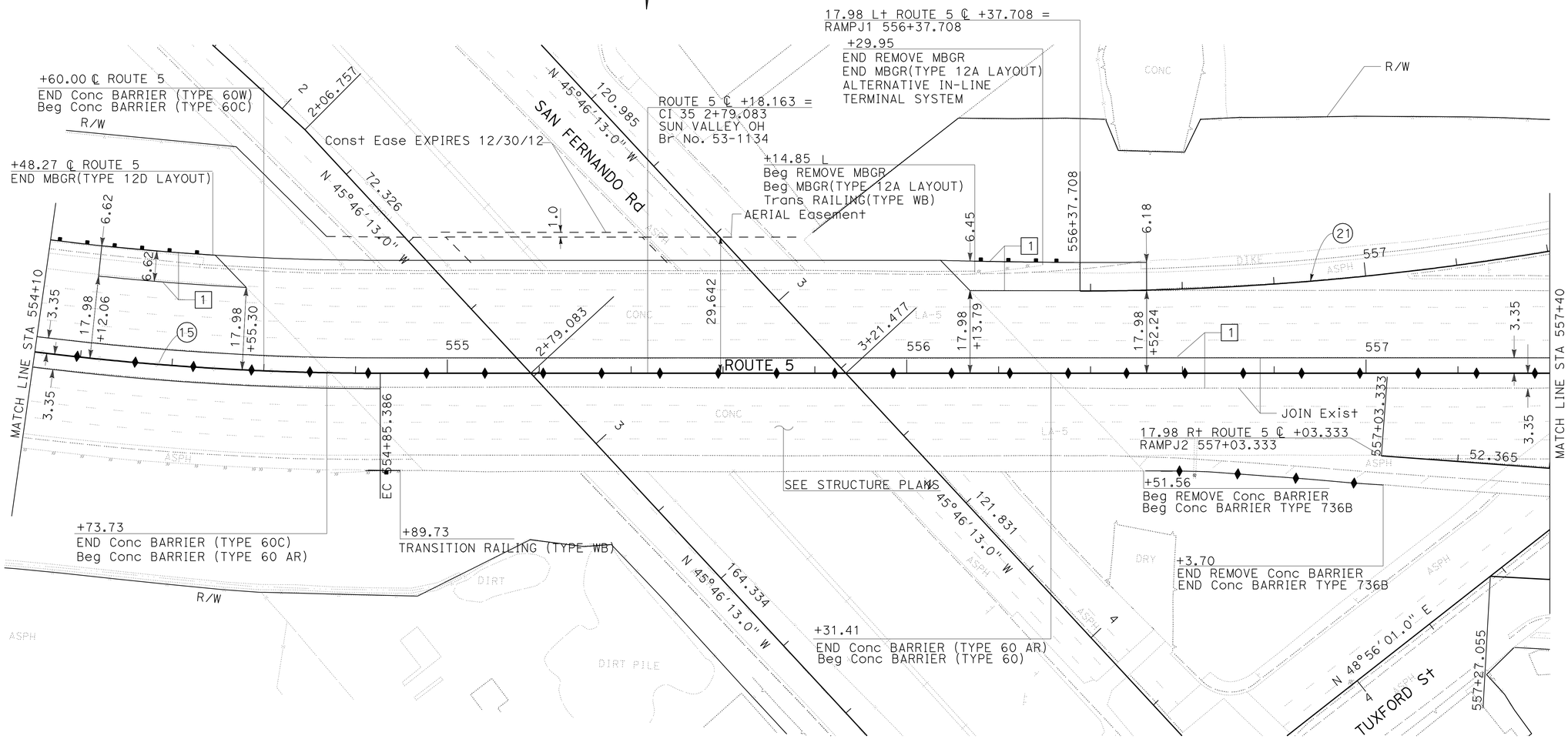

CURVE DATA

No.	R	Δ	T	L
15	609.60	47°9'27"	266.06	501.73
21	609.58	10°46'32"	57.49	114.64

ALL DIMENSIONS ARE IN METERS
UNLESS OTHERWISE SHOWN

LAYOUT

SCALE 1:500

L-16

REVISED BY	DATE REVISED
KK	02-08
AE	06-07

CALCULATED-DESIGNED BY: JOSEPH KIBE
CHECKED BY: KYLE KUNITAKE
FUNCTIONAL SUPERVISOR: CELINA AVILES

STATE OF CALIFORNIA - DEPARTMENT OF TRANSPORTATION
Caltrans
DESIGN

LAST REVISION 02-22-08 | DATE PLOTTED => 03-MAY-2010 | TIME PLOTTED => 13:14

Dist	COUNTY	ROUTE	KILOMETER POST TOTAL PROJECT	SHEET No.	TOTAL SHEETS
07	LA	5	50.8/58.0	25	869

REGISTERED CIVIL ENGINEER 7/02/08 DATE

5-3-10
PLANS APPROVAL DATE

REGISTERED PROFESSIONAL ENGINEER KYLE M KUNITAKE No. 63726 Exp. 9/30/10 CIVIL STATE OF CALIFORNIA

THE STATE OF CALIFORNIA OR ITS OFFICERS OR AGENTS SHALL NOT BE RESPONSIBLE FOR THE ACCURACY OR COMPLETENESS OF ELECTRONIC COPIES OF THIS PLAN SHEET.

Caltrans Metric

NOTE:

1. FOR COMPLETE RIGHT OF WAY AND ACCURATE ACCESS DATA, SEE RIGHT OF WAY RECORD MAPS AT DISTRICT OFFICE.

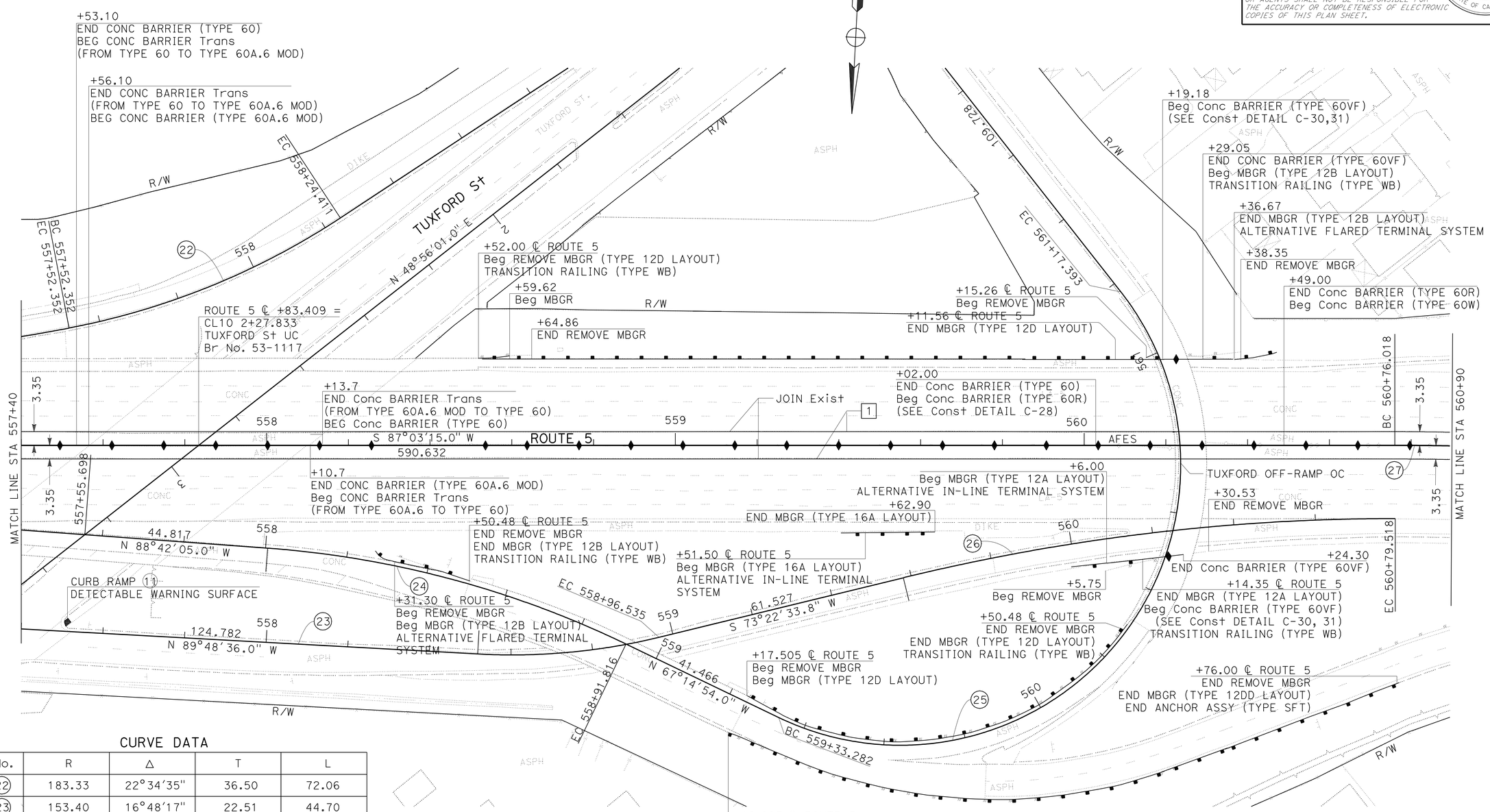

CURVE DATA

No.	R	Δ	T	L
22	183.33	22°34'35"	36.50	72.06
23	153.40	16°48'17"	22.51	44.70
24	242.45	21°27'12"	46.19	91.30
25	68.58	153°49'5"	294.91	184.11
26	509.24	13°40'15"	61.02	121.46
27	731.52	33°9'56"	217.84	423.44

ALL DIMENSIONS ARE IN METERS UNLESS OTHERWISE SHOWN

LAYOUT

SCALE 1:500

L-17

CALCULATED-DESIGNED BY	JOSEPH KIBE	REVISED BY	AE
CHECKED BY	KYLE KUNITAKE	DATE REVISED	06-07
FUNCTIONAL SUPERVISOR	CELINA AVILES		KK 02-08

STATE OF CALIFORNIA - DEPARTMENT OF TRANSPORTATION

Caltrans **DESIGN**

LAST REVISION 02-22-08 DATE PLOTTED => 03-MAY-2010 TIME PLOTTED => 13:14

Dist	COUNTY	ROUTE	KILOMETER POST TOTAL PROJECT	SHEET No.	TOTAL SHEETS
07	LA	5	50.8/58.0	26	869

REGISTERED CIVIL ENGINEER 7/02/08 DATE

5-3-10
PLANS APPROVAL DATE

REGISTERED PROFESSIONAL ENGINEER KYLE M KUNITAKE No. 63726 Exp. 9/30/10 CIVIL STATE OF CALIFORNIA

THE STATE OF CALIFORNIA OR ITS OFFICERS OR AGENTS SHALL NOT BE RESPONSIBLE FOR THE ACCURACY OR COMPLETENESS OF ELECTRONIC COPIES OF THIS PLAN SHEET.

Caltrans Metric

NOTE:

1. FOR COMPLETE RIGHT OF WAY AND ACCURATE ACCESS DATA, SEE RIGHT OF WAY RECORD MAPS AT DISTRICT OFFICE.

CURVE DATA

No.	R	Δ	T	L
27	731.52	33°9'56"	217.84	423.44
28	35.66	194°1'55"	289.78	120.77

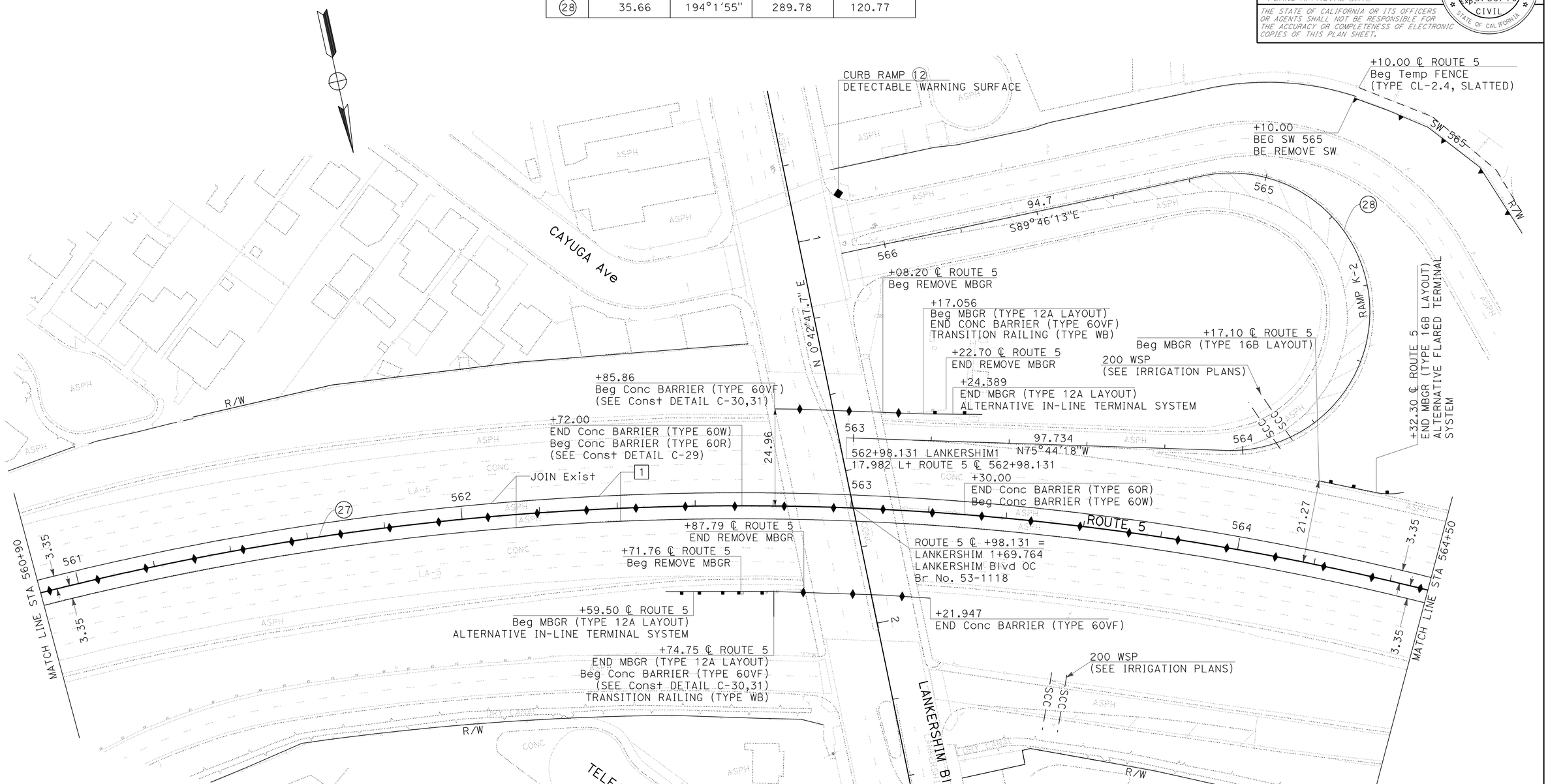

ALL DIMENSIONS ARE IN METERS UNLESS OTHERWISE SHOWN

LAYOUT

SCALE 1:500

L-18

REVISED BY	DATE REVISED
KK	02-08
AE	06-07

CALCULATED-DESIGNED BY: JOSEPH KIBE
CHECKED BY: KYLE KUNITAKE
FUNCTIONAL SUPERVISOR: CELINA AVILES

STATE OF CALIFORNIA - DEPARTMENT OF TRANSPORTATION
Caltrans
DESIGN

LAST REVISION 06-03-09
DATE PLOTTED => 03-MAY-2010
TIME PLOTTED => 13:14

Dist	COUNTY	ROUTE	KILOMETER POST TOTAL PROJECT	SHEET No.	TOTAL SHEETS
07	LA	5	50.8/58.0	27	869

REGISTERED CIVIL ENGINEER 7/02/08 DATE

5-3-10
PLANS APPROVAL DATE

REGISTERED PROFESSIONAL ENGINEER KYLE M KUNITAKE No. 63726 Exp. 9/30/10 CIVIL STATE OF CALIFORNIA

THE STATE OF CALIFORNIA OR ITS OFFICERS OR AGENTS SHALL NOT BE RESPONSIBLE FOR THE ACCURACY OR COMPLETENESS OF ELECTRONIC COPIES OF THIS PLAN SHEET.

Caltrans Metric

NOTE:

1. FOR COMPLETE RIGHT OF WAY AND ACCURATE ACCESS DATA, SEE RIGHT OF WAY RECORD MAPS AT DISTRICT OFFICE.

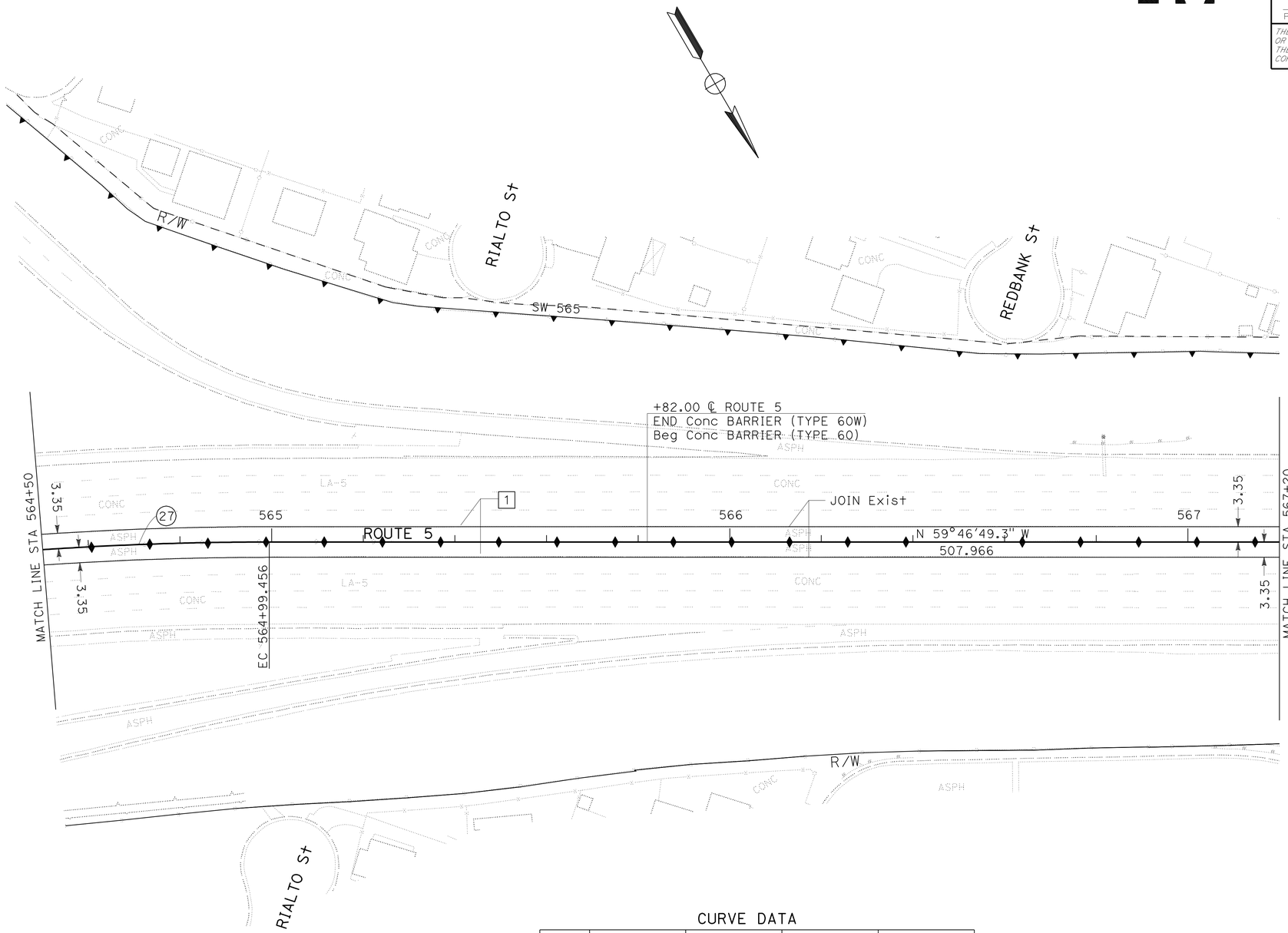

CURVE DATA

No.	R	Δ	T	L
27	731.52	33°9'56"	217.84	423.44

ALL DIMENSIONS ARE IN METERS UNLESS OTHERWISE SHOWN

LAYOUT

SCALE 1:500

L-19

STATE OF CALIFORNIA - DEPARTMENT OF TRANSPORTATION
Caltrans **DESIGN**

FUNCTIONAL SUPERVISOR: CELINA AVILES

CALCULATED-DESIGNED BY: JOSEPH KIBE
CHECKED BY: KYLE KUNITAKE

REVISED BY: AE — DATE REVISED: 06-07
REVISED BY: KK — DATE REVISED: 02-08

LAST REVISION 02-22-08 | DATE PLOTTED => 03-MAY-2010 | TIME PLOTTED => 13:14

Dist	COUNTY	ROUTE	KILOMETER POST TOTAL PROJECT	SHEET No.	TOTAL SHEETS
07	LA	5	50.8/58.0	28	869

REGISTERED CIVIL ENGINEER 7/02/08 DATE

5-3-10
PLANS APPROVAL DATE

REGISTERED PROFESSIONAL ENGINEER KYLE M KUNITAKE No. 63726 Exp. 9/30/10 CIVIL STATE OF CALIFORNIA

THE STATE OF CALIFORNIA OR ITS OFFICERS OR AGENTS SHALL NOT BE RESPONSIBLE FOR THE ACCURACY OR COMPLETENESS OF ELECTRONIC COPIES OF THIS PLAN SHEET.

Caltrans Metric

NOTE:

1. FOR COMPLETE RIGHT OF WAY AND ACCURATE ACCESS DATA, SEE RIGHT OF WAY RECORD MAPS AT DISTRICT OFFICE.

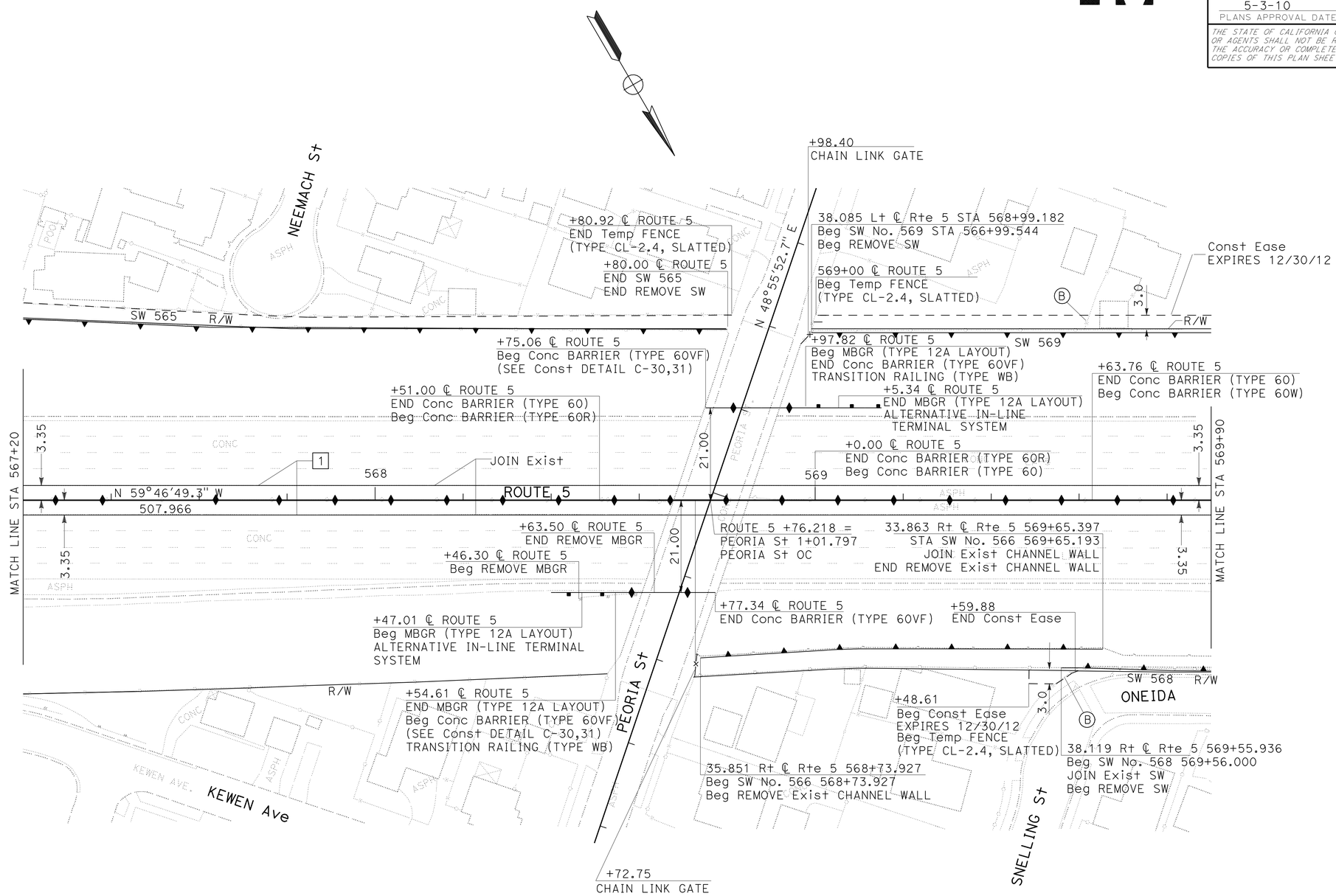

ALL DIMENSIONS ARE IN METERS
UNLESS OTHERWISE SHOWN

LAYOUT

SCALE 1:500

L-20

CTT	10-08		
KK	02-08		
AE	06-07	REVISED BY	DATE REVISED
JOSEPH KIBE		CALCULATED-DESIGNED BY	
KYLE KUNITAKE		CHECKED BY	
FUNCTIONAL SUPERVISOR			
CELINA AVILES			

STATE OF CALIFORNIA - DEPARTMENT OF TRANSPORTATION

Caltrans **DESIGN**

LAST REVISION 10-03-08 | DATE PLOTTED => | TIME PLOTTED =>

Dist	COUNTY	ROUTE	KILOMETER POST TOTAL PROJECT	SHEET No.	TOTAL SHEETS
07	LA	5	50.8/58.0	29	869

REGISTERED CIVIL ENGINEER 7/02/08 DATE

5-3-10
PLANS APPROVAL DATE

REGISTERED PROFESSIONAL ENGINEER KYLE M KUNITAKE No. 63726 Exp. 9/30/10 CIVIL STATE OF CALIFORNIA

THE STATE OF CALIFORNIA OR ITS OFFICERS OR AGENTS SHALL NOT BE RESPONSIBLE FOR THE ACCURACY OR COMPLETENESS OF ELECTRONIC COPIES OF THIS PLAN SHEET.

Caltrans Metric

NOTES:

1. FOR COMPLETE RIGHT OF WAY AND ACCURATE ACCESS DATA, SEE RIGHT OF WAY RECORD MAPS AT DISTRICT OFFICE.

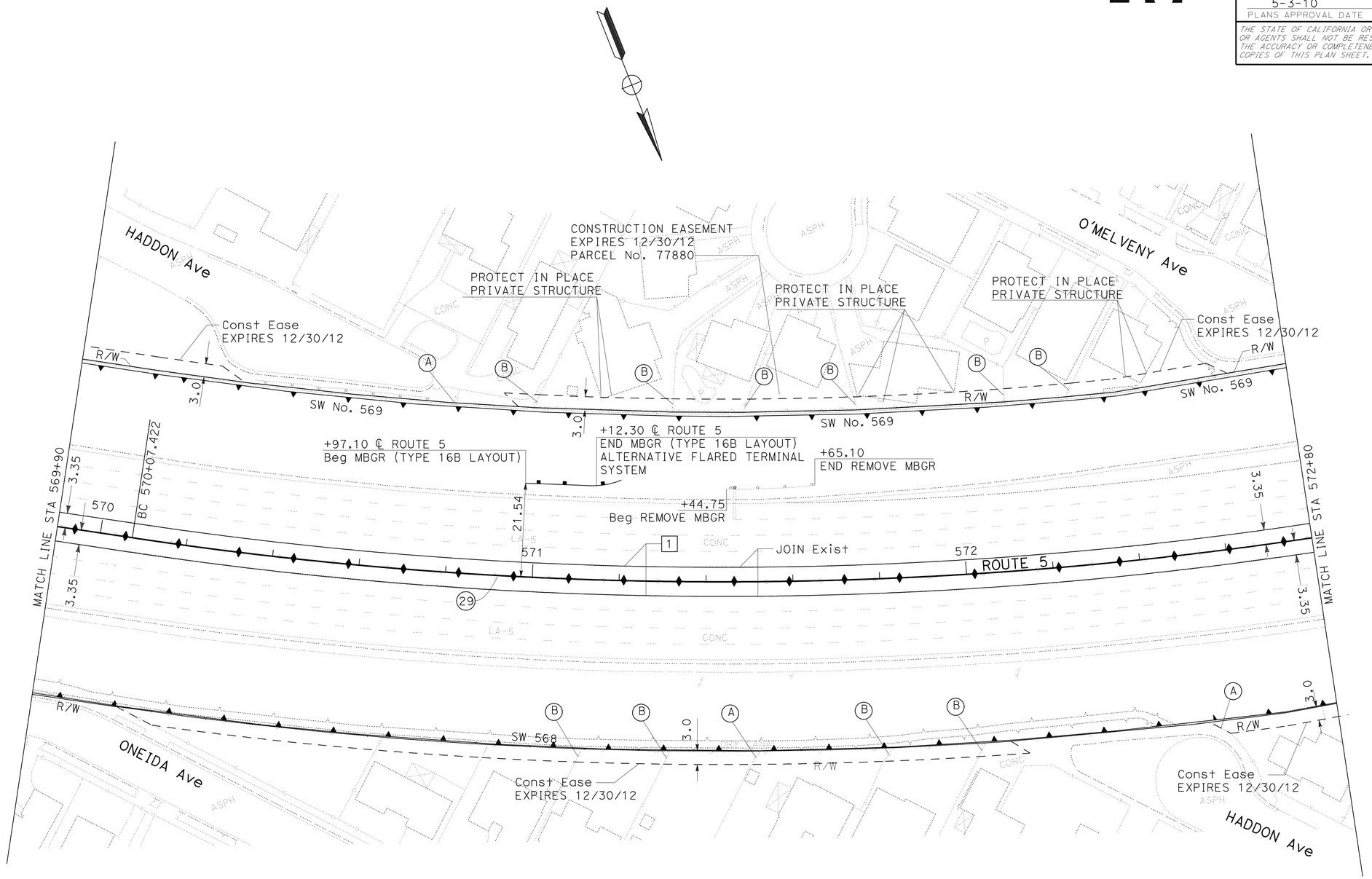

CURVE DATA

No.	R	Δ	T	L
29	914.43	19°3'27"	153.49	304.15

ALL DIMENSIONS ARE IN METERS
UNLESS OTHERWISE SHOWN

LAYOUT

SCALE 1:500

L-21

STATE OF CALIFORNIA - DEPARTMENT OF TRANSPORTATION
Caltrans
DESIGN

FUNCTIONAL SUPERVISOR: CELINA AVILES
CALCULATED-DESIGNED BY: JOSEPH KIBE
CHECKED BY: KYLE KUNITAKE
REVISED BY: AE KK CTT
DATE REVISED: 06-07 02-08 10-08

LAST REVISION 10-02-08 | DATE PLOTTED => 03-MAY-2010 | TIME PLOTTED => 13:15

Dist	COUNTY	ROUTE	KILOMETER POST TOTAL PROJECT	SHEET No.	TOTAL SHEETS
07	LA	5	50.8/58.0	30	869

REGISTERED CIVIL ENGINEER 7/02/08 DATE

5-3-10
PLANS APPROVAL DATE

REGISTERED PROFESSIONAL ENGINEER KYLE M KUNITAKE No. 63726 Exp. 9/30/10 CIVIL STATE OF CALIFORNIA

THE STATE OF CALIFORNIA OR ITS OFFICERS OR AGENTS SHALL NOT BE RESPONSIBLE FOR THE ACCURACY OR COMPLETENESS OF ELECTRONIC COPIES OF THIS PLAN SHEET.

Caltrans Metric

NOTE:

1. FOR COMPLETE RIGHT OF WAY AND ACCURATE ACCESS DATA, SEE RIGHT OF WAY RECORD MAPS AT DISTRICT OFFICE.

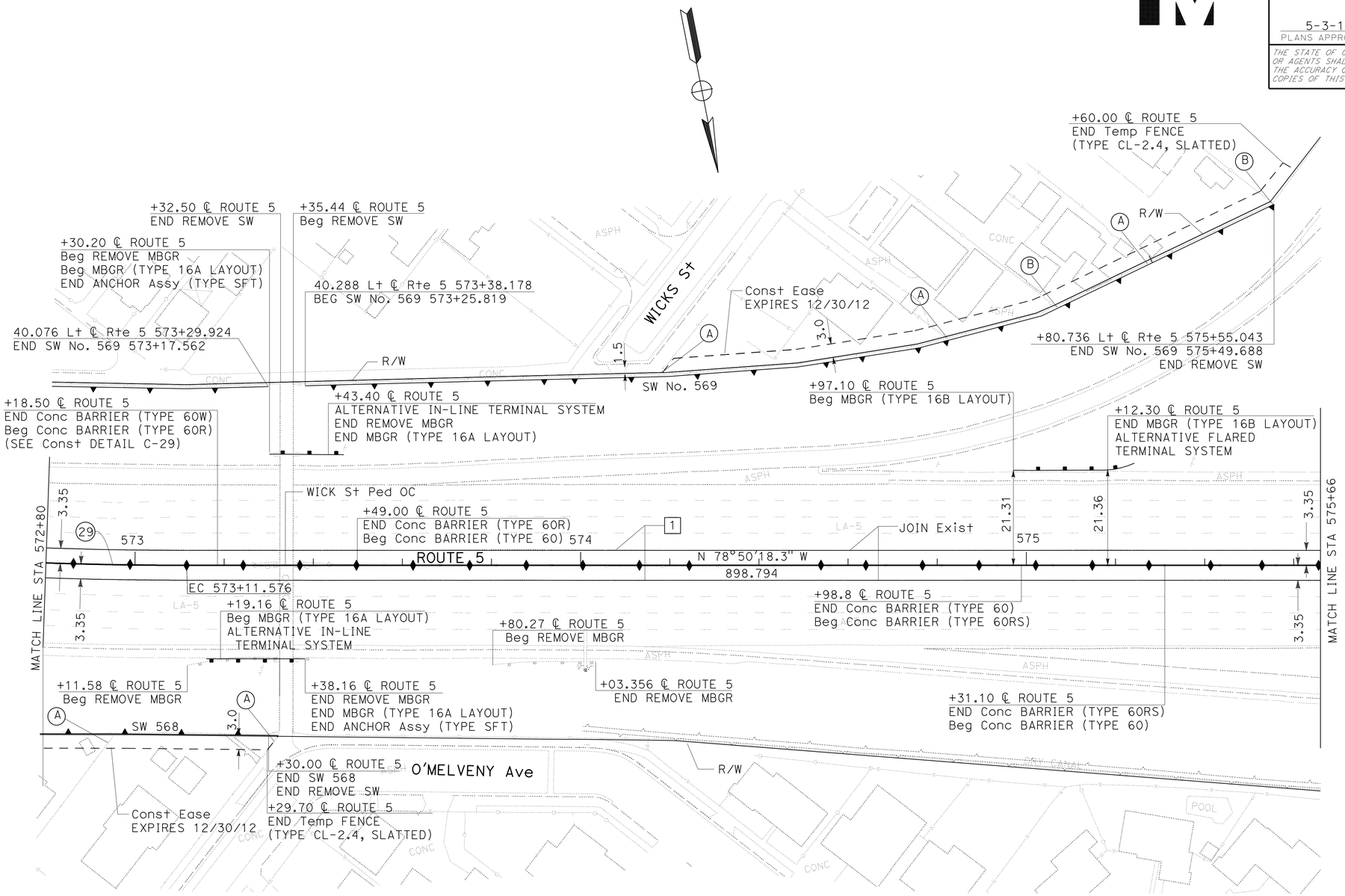

CURVE DATA

No.	R	Δ	T	L
29	914.43	19°3'27"	153.49	304.15

ALL DIMENSIONS ARE IN METERS
UNLESS OTHERWISE SHOWN

LAYOUT

SCALE 1:500

L-22

CTT	KK	AE	REVISED BY	JOSEPH KIBE	CALCULATED-DESIGNED BY	FUNCTIONAL SUPERVISOR
10-08	02-08	06-07	DATE REVISED	KYLE KUNITAKE	CHECKED BY	CELINA AVILES

STATE OF CALIFORNIA - DEPARTMENT OF TRANSPORTATION
Caltrans **DESIGN**

LAST REVISION 10-02-08 DATE PLOTTED => 03-MAY-2010 TIME PLOTTED => 13:15

Dist	COUNTY	ROUTE	KILOMETER POST TOTAL PROJECT	SHEET No.	TOTAL SHEETS
07	LA	5	50.8/58.0	31	869

REGISTERED CIVIL ENGINEER 7/02/08 DATE

5-3-10
PLANS APPROVAL DATE

REGISTERED PROFESSIONAL ENGINEER KYLE M KUNITAKE No. 63726 Exp. 9/30/10 CIVIL STATE OF CALIFORNIA

THE STATE OF CALIFORNIA OR ITS OFFICERS OR AGENTS SHALL NOT BE RESPONSIBLE FOR THE ACCURACY OR COMPLETENESS OF ELECTRONIC COPIES OF THIS PLAN SHEET.

Caltrans Metric

NOTE:

1. FOR COMPLETE RIGHT OF WAY AND ACCURATE ACCESS DATA, SEE RIGHT OF WAY RECORD MAPS AT DISTRICT OFFICE.

CURVE DATA

No.	R	Δ	T	L
30	121.92	21°28′17″	23.12	45.69
31	25.30	115°23′57″	40.02	50.95
32	36.58	43°8′07″	14.46	27.54
33	121.92	37°45′08″	41.69	80.33

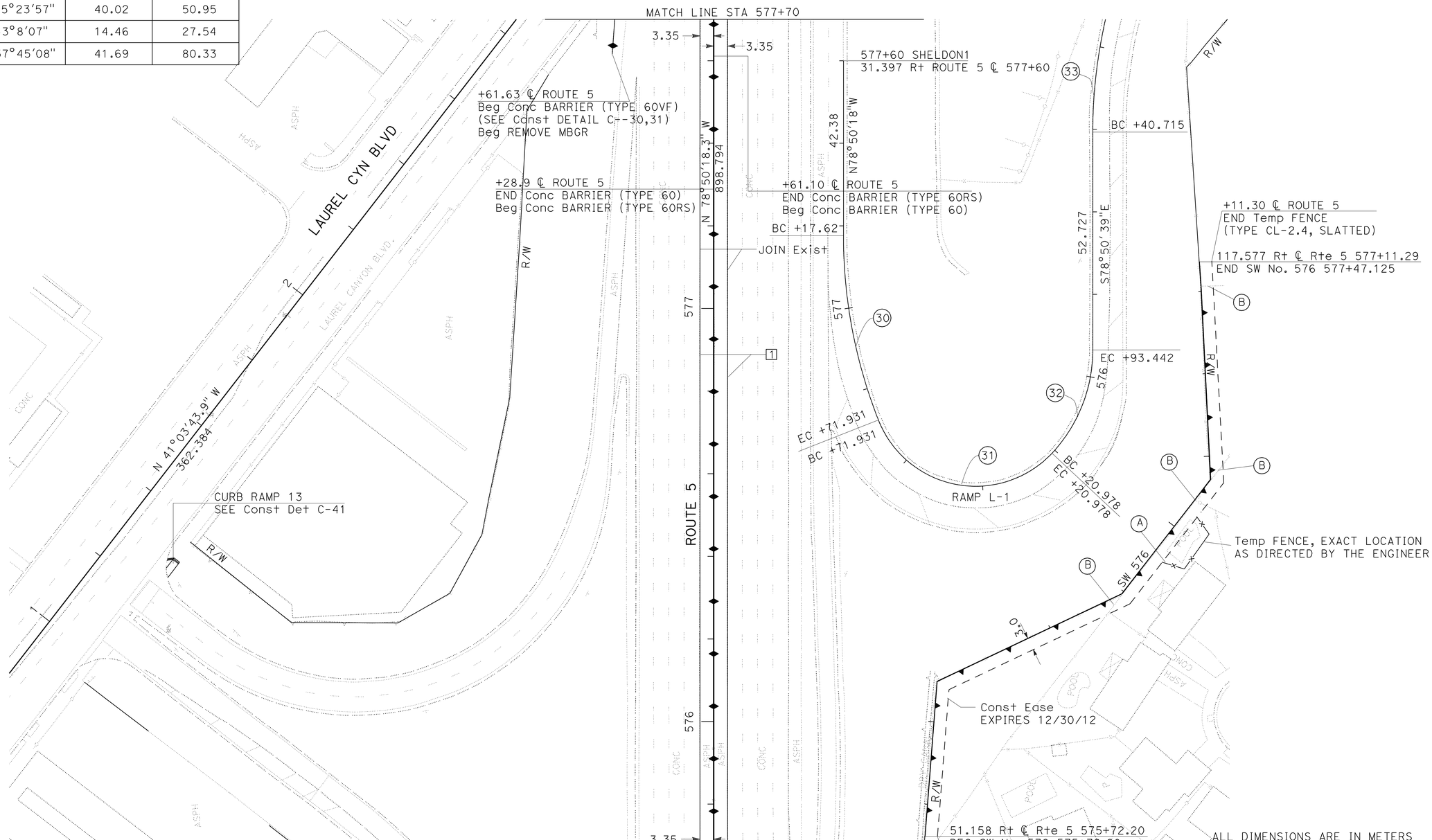

ALL DIMENSIONS ARE IN METERS UNLESS OTHERWISE SHOWN

LAYOUT

SCALE 1:500

L-23

CTT	10-08		
KK	02-08		
AE	06-07		
REVISED BY	DATE REVISED		
JOSEPH KIBE		CALCULATED-DESIGNED BY	
KYLE KUNITAKE		CHECKED BY	
FUNCTIONAL SUPERVISOR			
CELINA AVILES			

STATE OF CALIFORNIA - DEPARTMENT OF TRANSPORTATION
Caltrans
DESIGN

LAST REVISION 06-03-09 | DATE PLOTTED => 03-MAY-2010 TIME PLOTTED => 13:15

Dist	COUNTY	ROUTE	KILOMETER POST TOTAL PROJECT	SHEET No.	TOTAL SHEETS
07	LA	5	50.8/58.0	32	869

REGISTERED CIVIL ENGINEER 7/02/08 DATE

5-3-10
PLANS APPROVAL DATE

REGISTERED PROFESSIONAL ENGINEER KYLE M KUNITAKE No. 63726 Exp. 9/30/10 CIVIL STATE OF CALIFORNIA

THE STATE OF CALIFORNIA OR ITS OFFICERS OR AGENTS SHALL NOT BE RESPONSIBLE FOR THE ACCURACY OR COMPLETENESS OF ELECTRONIC COPIES OF THIS PLAN SHEET.

Caltrans Metric

NOTE:

1. FOR COMPLETE RIGHT OF WAY AND ACCURATE ACCESS DATA, SEE RIGHT OF WAY RECORD MAPS AT DISTRICT OFFICE.

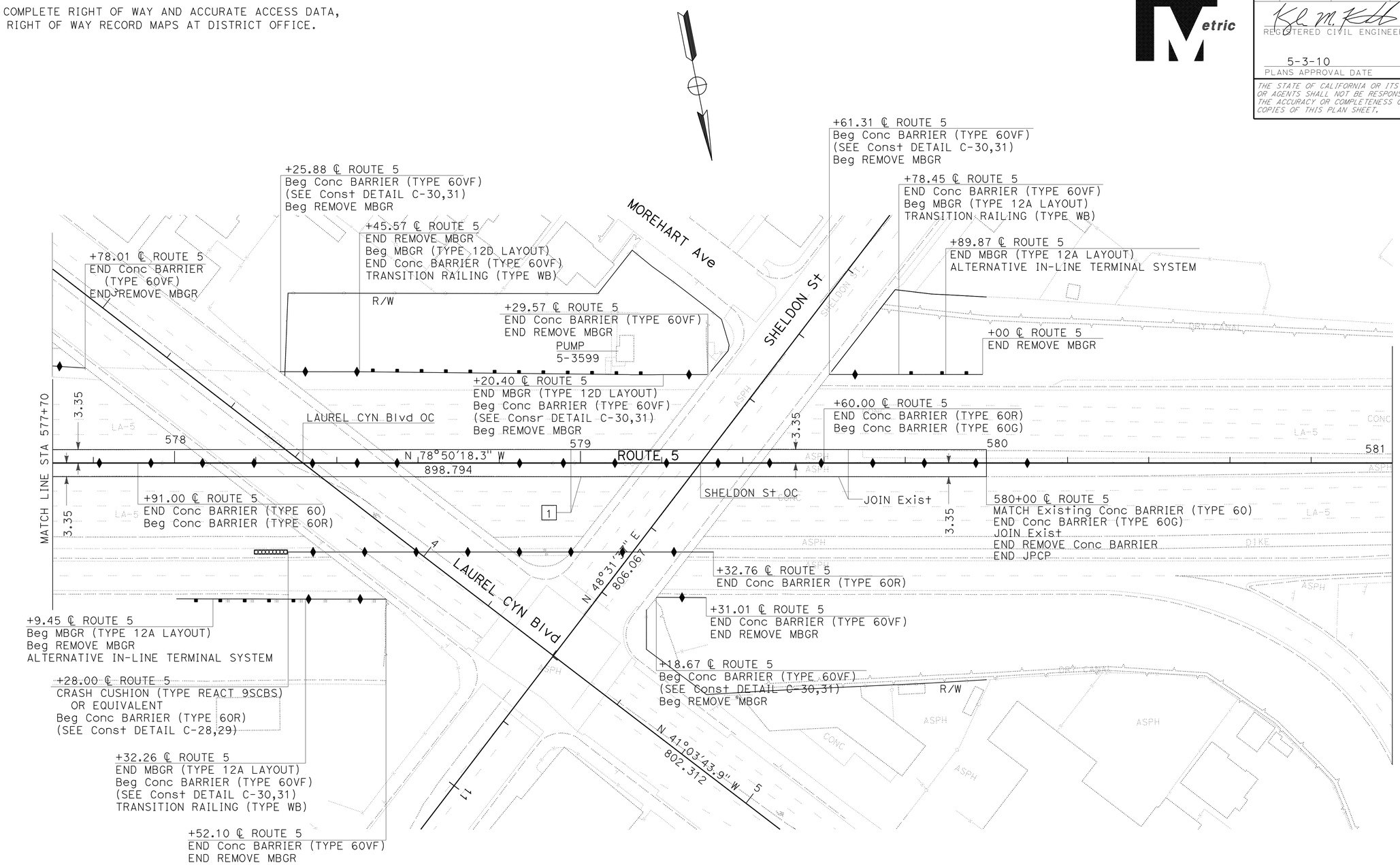

ALL DIMENSIONS ARE IN METERS
UNLESS OTHERWISE SHOWN

LAYOUT

SCALE 1:500

L-24

KK	02-08	REVISED BY	DATE REVISED
AE	06-07	JOSEPH KIBE	KYLE KUNITAKE
CALCULATED-DESIGNED BY	CHECKED BY	FUNCTIONAL SUPERVISOR	CELINA AVILES

STATE OF CALIFORNIA - DEPARTMENT OF TRANSPORTATION
Caltrans **DESIGN**

LAST REVISION 02-22-08 DATE PLOTTED => 03-MAY-2010 TIME PLOTTED => 13:15

Dist	COUNTY	ROUTE	KILOMETER POST TOTAL PROJECT	SHEET No.	TOTAL SHEETS
07	LA	5	50.8/58.0	33	869

REGISTERED CIVIL ENGINEER 6/16/08 DATE

5-3-10
PLANS APPROVAL DATE

REGISTERED PROFESSIONAL ENGINEER KYLE M KUNITAKE No. 63726 Exp. 9/30/10 CIVIL STATE OF CALIFORNIA

THE STATE OF CALIFORNIA OR ITS OFFICERS OR AGENTS SHALL NOT BE RESPONSIBLE FOR THE ACCURACY OR COMPLETENESS OF ELECTRONIC COPIES OF THIS PLAN SHEET.

Caltrans Metric

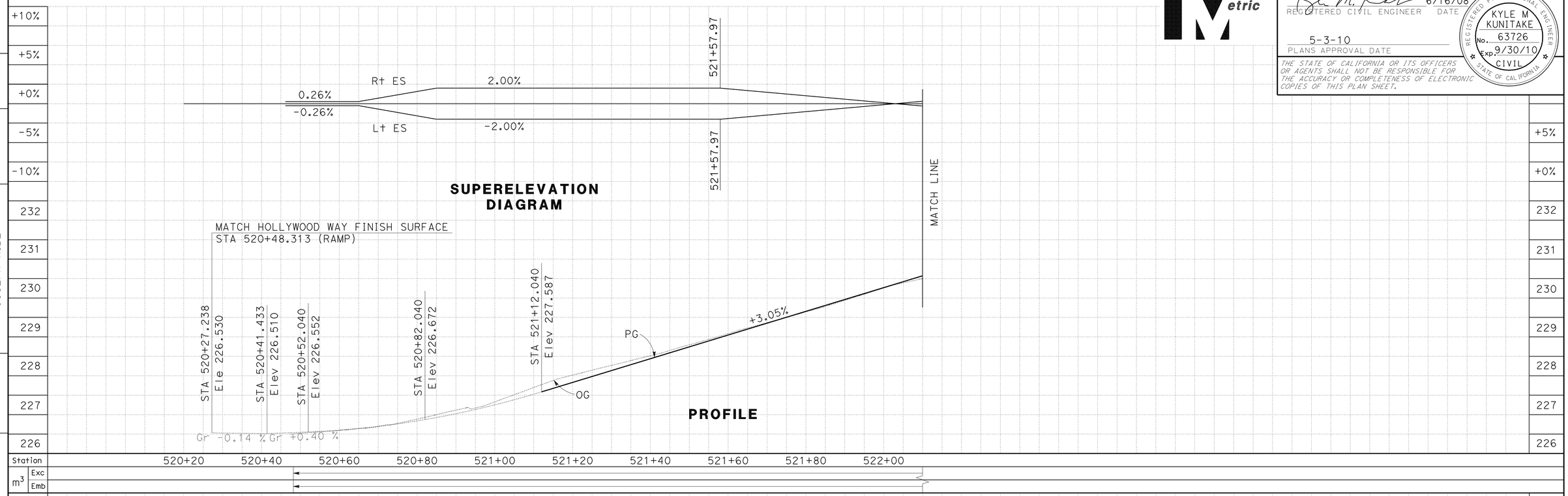

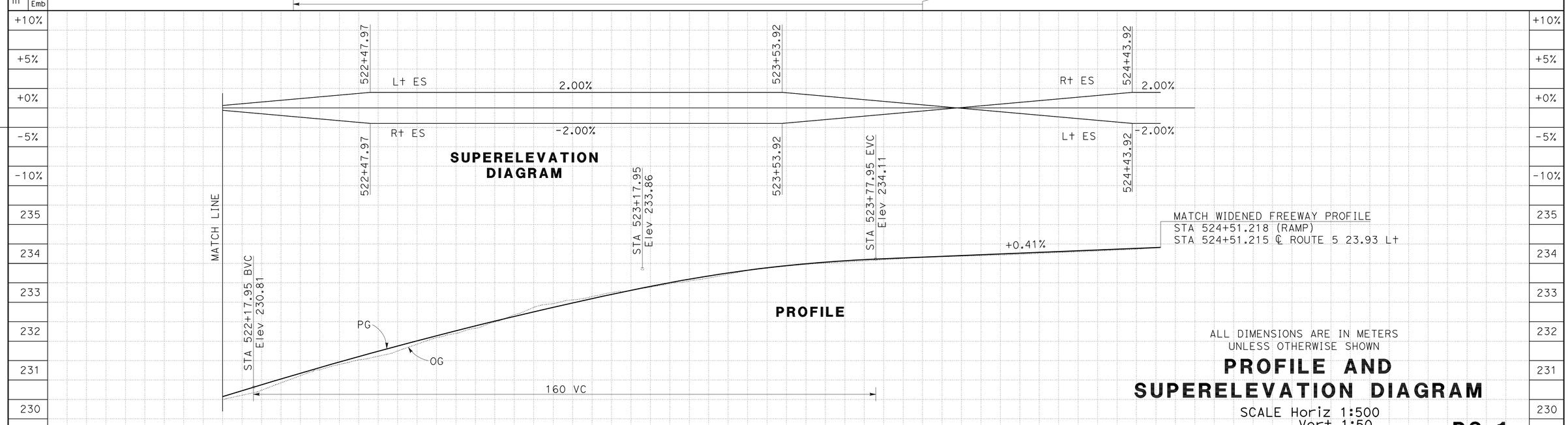

ALL DIMENSIONS ARE IN METERS
UNLESS OTHERWISE SHOWN

PROFILE AND SUPERELEVATION DIAGRAM

SCALE Horiz 1:500
Vert 1:50

PS-1

REVISED BY	DATE REVISED
KK	2/1/08

DAWIT WORKU — JOSEPH KIBE — CALCULATED-DESIGNED BY — CHECKED BY

FUNCTIONAL SUPERVISOR: CELINA AVILES

STATE OF CALIFORNIA - DEPARTMENT OF TRANSPORTATION
Caltrans
DESIGN

LAST REVISION 05-16-08 — DATE PLOTTED => 03-MAY-2010 — TIME PLOTTED => 13:15

Dist	COUNTY	ROUTE	KILOMETER POST TOTAL PROJECT	SHEET No.	TOTAL SHEETS
07	LA	5	50.8/58.0	34	869

REGISTERED CIVIL ENGINEER 6/16/08 DATE

5-3-10
PLANS APPROVAL DATE

REGISTERED PROFESSIONAL ENGINEER KYLE M KUNITAKE No. 63726 Exp. 9/30/10 CIVIL STATE OF CALIFORNIA

THE STATE OF CALIFORNIA OR ITS OFFICERS OR AGENTS SHALL NOT BE RESPONSIBLE FOR THE ACCURACY OR COMPLETENESS OF ELECTRONIC COPIES OF THIS PLAN SHEET.

Caltrans Metric

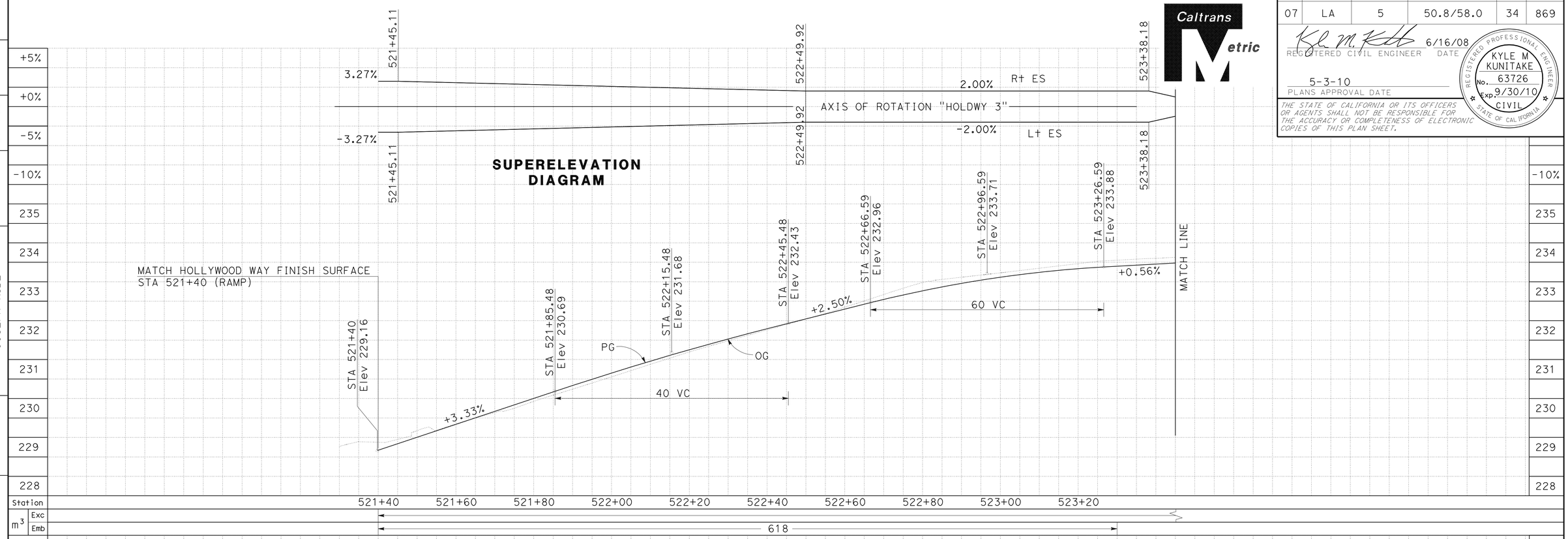

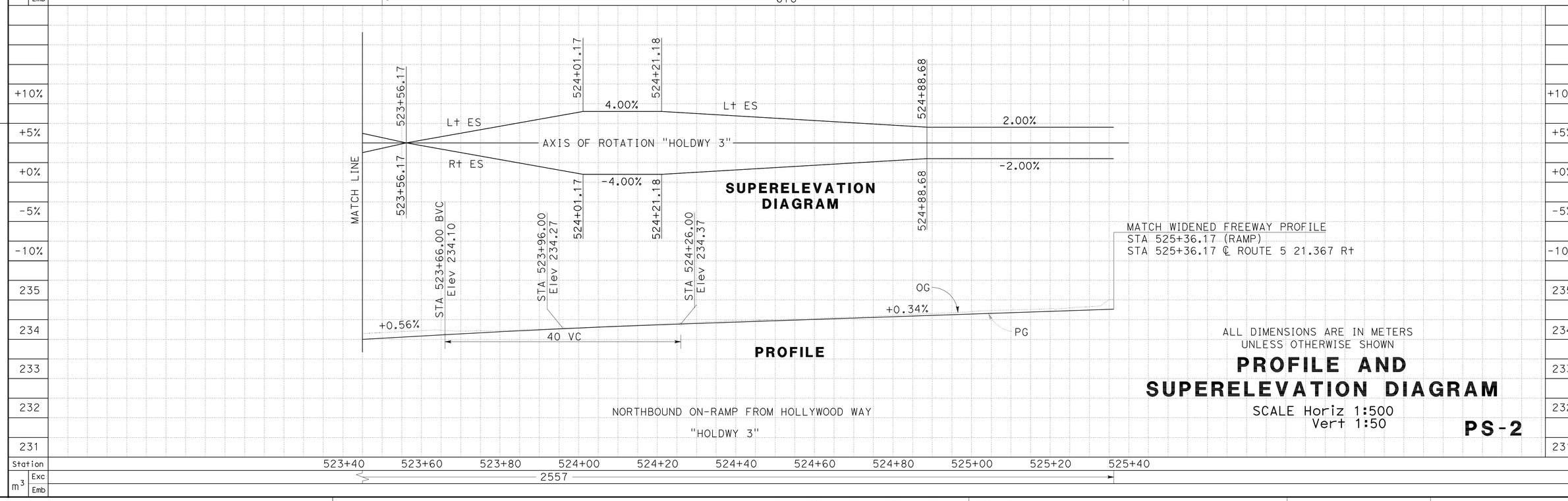

ALL DIMENSIONS ARE IN METERS
UNLESS OTHERWISE SHOWN

PROFILE AND SUPERELEVATION DIAGRAM

SCALE Horiz 1:500
Vert 1:50

NORTHBOUND ON-RAMP FROM HOLLYWOOD WAY
"HOLDWY 3"

PS-2

REVISED BY	DATE REVISED
KK	2/1/08

DAWIT WORKU — JOSEPH KIBE — CALCULATED-DESIGNED BY — CHECKED BY

FUNCTIONAL SUPERVISOR: CELINA AVILES

STATE OF CALIFORNIA - DEPARTMENT OF TRANSPORTATION
Caltrans
DESIGN

LAST REVISION 05-16-08 — DATE PLOTTED => 03-MAY-2010 — TIME PLOTTED => 13:15

Dist	COUNTY	ROUTE	KILOMETER POST TOTAL PROJECT	SHEET No.	TOTAL SHEETS
07	LA	5	50.8/58.0	35	869

REGISTERED CIVIL ENGINEER 6/16/08 DATE

5-3-10
PLANS APPROVAL DATE

REGISTERED PROFESSIONAL ENGINEER KYLE M KUNITAKE No. 63726 Exp. 9/30/10 CIVIL STATE OF CALIFORNIA

THE STATE OF CALIFORNIA OR ITS OFFICERS OR AGENTS SHALL NOT BE RESPONSIBLE FOR THE ACCURACY OR COMPLETENESS OF ELECTRONIC COPIES OF THIS PLAN SHEET.

Caltrans Metric

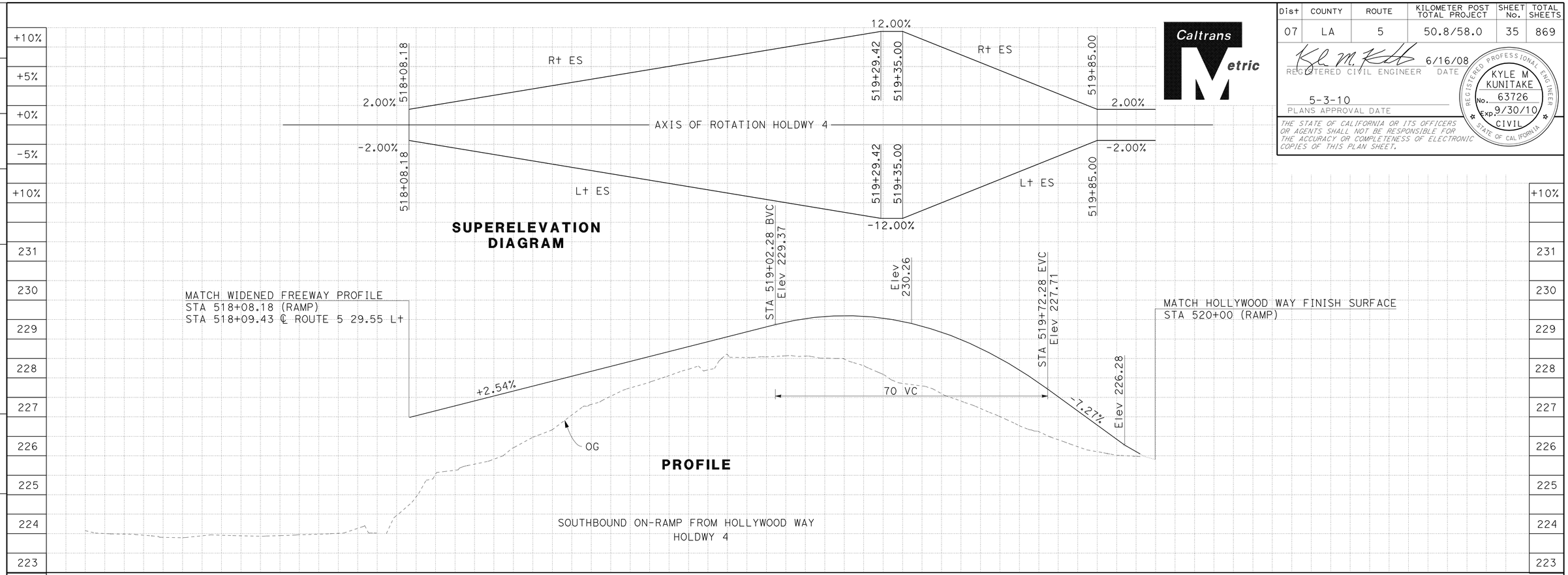

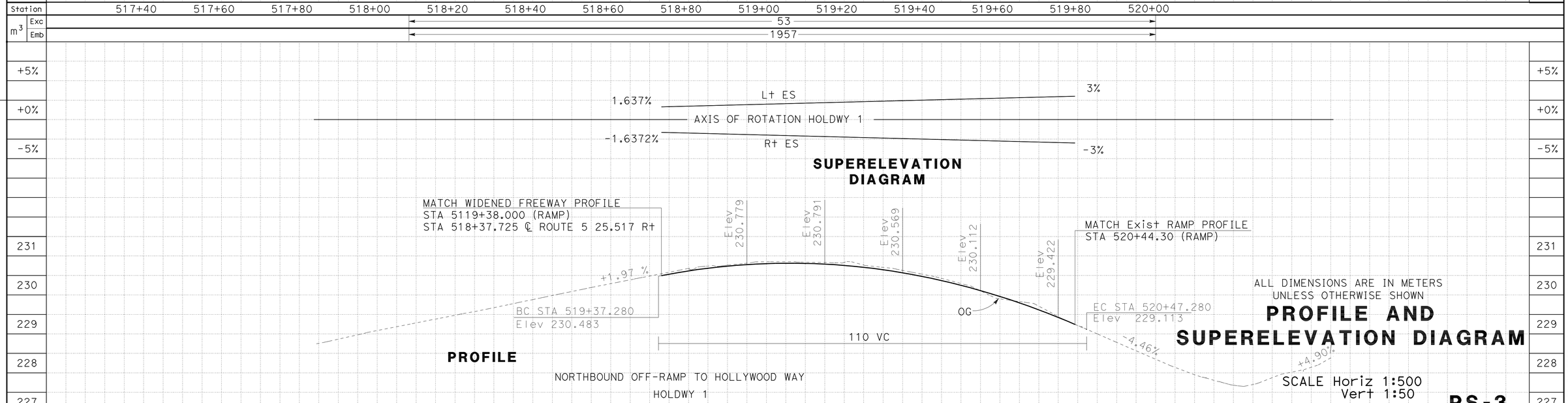

ALL DIMENSIONS ARE IN METERS
UNLESS OTHERWISE SHOWN

PROFILE AND SUPERELEVATION DIAGRAM

SCALE Horiz 1:500
Vert 1:50

PS-3

REVISED BY	KK	DATE REVISED 2/1/08
CALCULATED-DESIGNED BY	DAWIT WORKU	
CHECKED BY	JOSEPH KIBE	
FUNCTIONAL SUPERVISOR	CELINA AVILES	

STATE OF CALIFORNIA - DEPARTMENT OF TRANSPORTATION
Caltrans
DESIGN

LAST REVISION 05-16-08
DATE PLOTTED => 03-MAY-2010
TIME PLOTTED => 13:15

Dist	COUNTY	ROUTE	KILOMETER POST TOTAL PROJECT	SHEET No.	TOTAL SHEETS
07	LA	5	50.8/58.0	36	869

REGISTERED CIVIL ENGINEER 6/16/08 DATE

5-3-10
PLANS APPROVAL DATE

REGISTERED PROFESSIONAL ENGINEER KYLE M KUNITAKE No. 63726 Exp. 9/30/10 CIVIL STATE OF CALIFORNIA

THE STATE OF CALIFORNIA OR ITS OFFICERS OR AGENTS SHALL NOT BE RESPONSIBLE FOR THE ACCURACY OR COMPLETENESS OF ELECTRONIC COPIES OF THIS PLAN SHEET.

PG 1 : - RIGHT BOTTOM OF BARRIER

PG 2 : - LEFT BOTTOM OF BARRIER

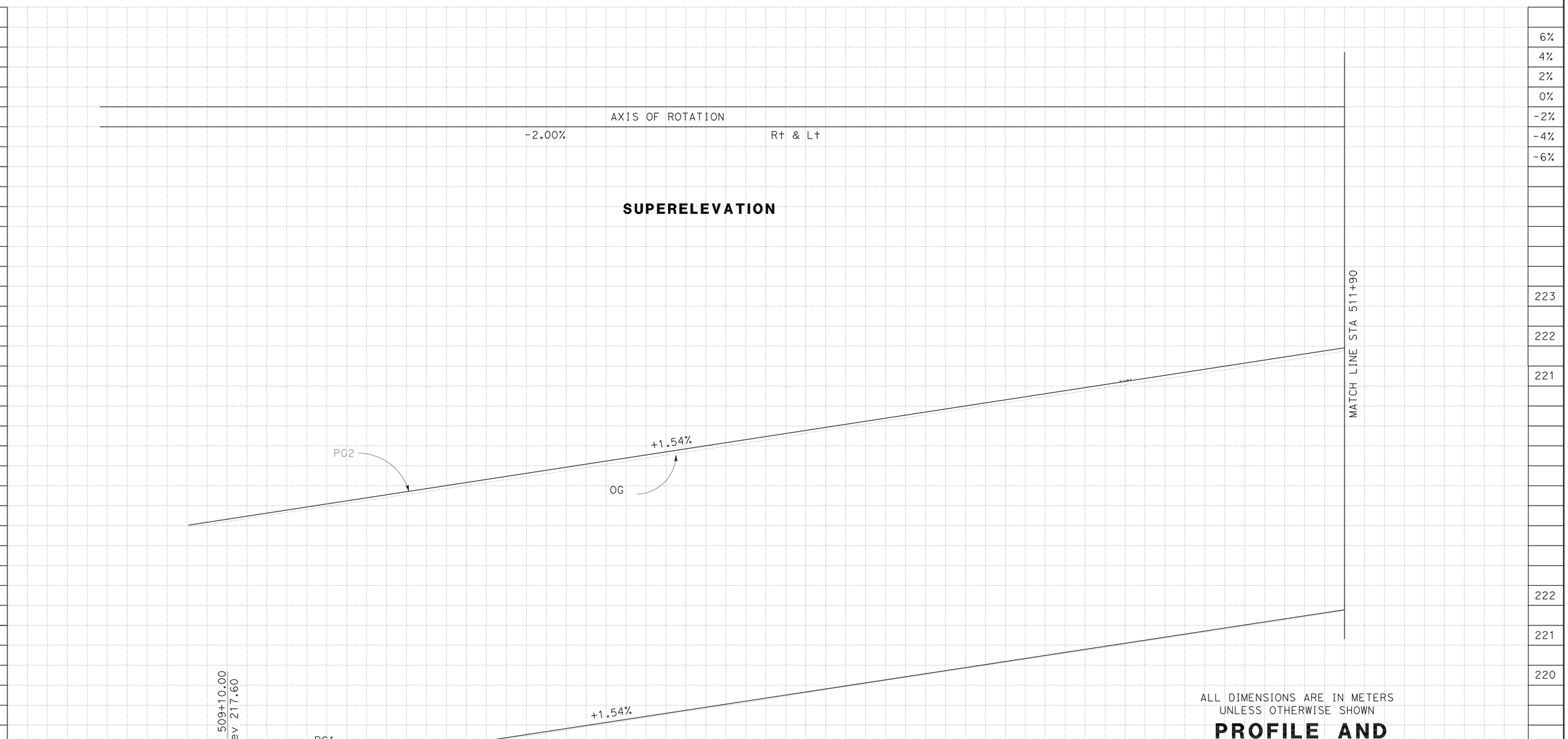

ALL DIMENSIONS ARE IN METERS
UNLESS OTHERWISE SHOWN

PROFILE AND SUPERELEVATION DIAGRAM

SCALE Horiz 1:500
Vert 1:50

PS-4

REVISED BY | DATE REVISED

A ELSHARIEF

CALCULATED-DESIGNED BY | CHECKED BY

FUNCTIONAL SUPERVISOR

CELINA AVILES

STATE OF CALIFORNIA - DEPARTMENT OF TRANSPORTATION

Caltrans OFFICE OF DESIGN D

LAST REVISION 01-17-08

DATE PLOTTED => 03-MAY-2010
TIME PLOTTED => 13:16

Dist	COUNTY	ROUTE	KILOMETER POST TOTAL PROJECT	SHEET No.	TOTAL SHEETS
07	LA	5	50.8/58.0	37	869

REGISTERED CIVIL ENGINEER 6/16/08 DATE

5-3-10
PLANS APPROVAL DATE

REGISTERED PROFESSIONAL ENGINEER KYLE M KUNITAKE No. 63726 Exp. 9/30/10 CIVIL STATE OF CALIFORNIA

THE STATE OF CALIFORNIA OR ITS OFFICERS OR AGENTS SHALL NOT BE RESPONSIBLE FOR THE ACCURACY OR COMPLETENESS OF ELECTRONIC COPIES OF THIS PLAN SHEET.

Caltrans Metric

PG 1 : - RIGHT BOTTOM OF BARRIER
PG 2 : - LEFT BOTTOM OF BARRIER

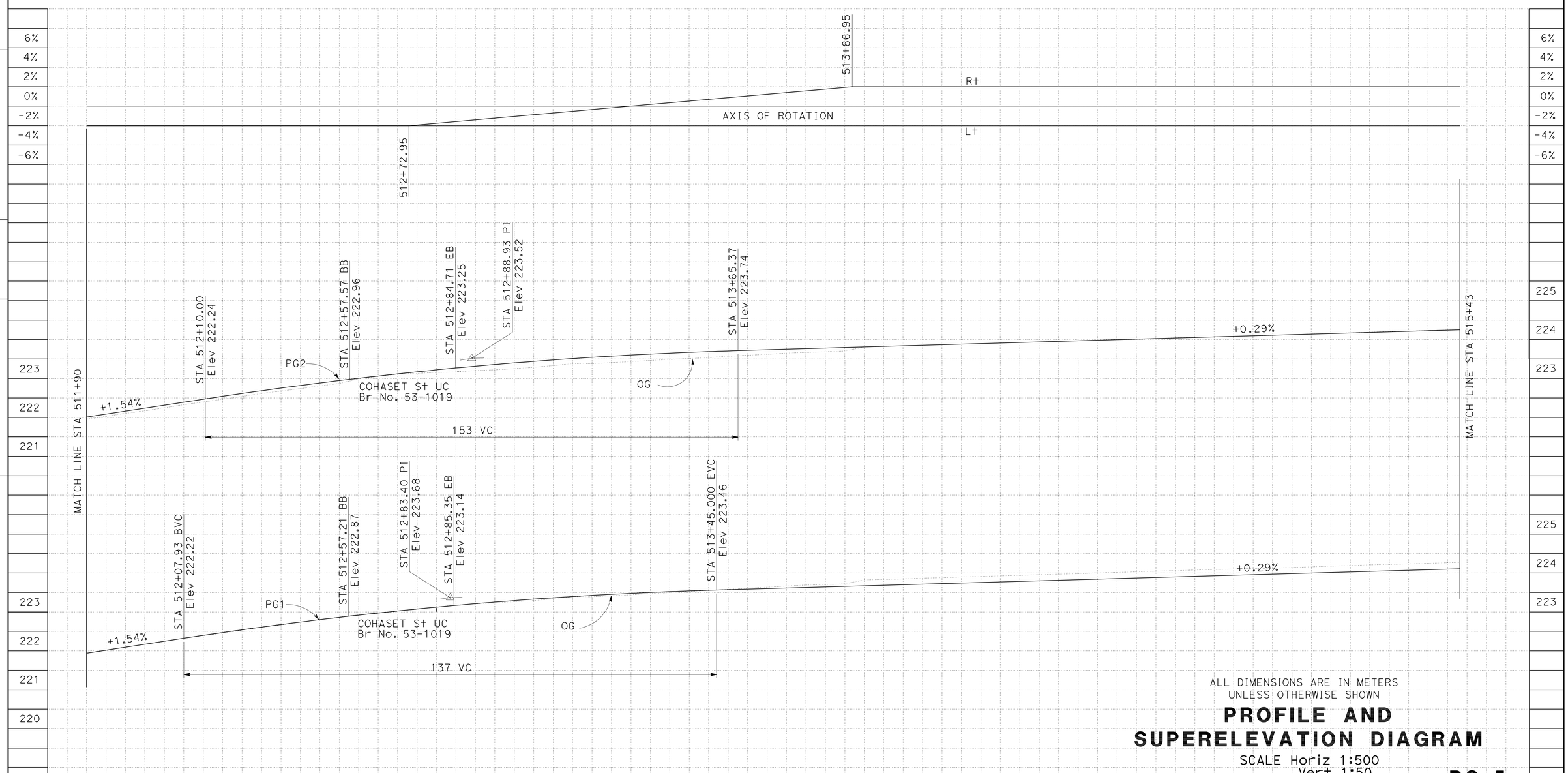

ALL DIMENSIONS ARE IN METERS
UNLESS OTHERWISE SHOWN

PROFILE AND SUPERELEVATION DIAGRAM

SCALE Horiz 1:500
Vert 1:50

PS-5

REVISED BY	DATE REVISED
KK	1/1/08

CALCULATED-DESIGNED BY: A ELSHARIEF
CHECKED BY:

FUNCTIONAL SUPERVISOR: CELINA AVILES

STATE OF CALIFORNIA - DEPARTMENT OF TRANSPORTATION
Caltrans OFFICE OF DESIGN D

LAST REVISION DATE PLOTTED => 03-MAY-2010
01-17-08 TIME PLOTTED => 13:16

Dist	COUNTY	ROUTE	KILOMETER POST TOTAL PROJECT	SHEET No.	TOTAL SHEETS
07	LA	5	50.8/58.0	38	869

REGISTERED CIVIL ENGINEER 6/16/08 DATE

5-3-10
PLANS APPROVAL DATE

REGISTERED PROFESSIONAL ENGINEER KYLE M KUNITAKE No. 63726 Exp. 9/30/10 CIVIL STATE OF CALIFORNIA

THE STATE OF CALIFORNIA OR ITS OFFICERS OR AGENTS SHALL NOT BE RESPONSIBLE FOR THE ACCURACY OR COMPLETENESS OF ELECTRONIC COPIES OF THIS PLAN SHEET.

Caltrans Metric

PG 1 : - RIGHT BOTTOM OF BARRIER
PG 2 : - LEFT BOTTOM OF BARRIER

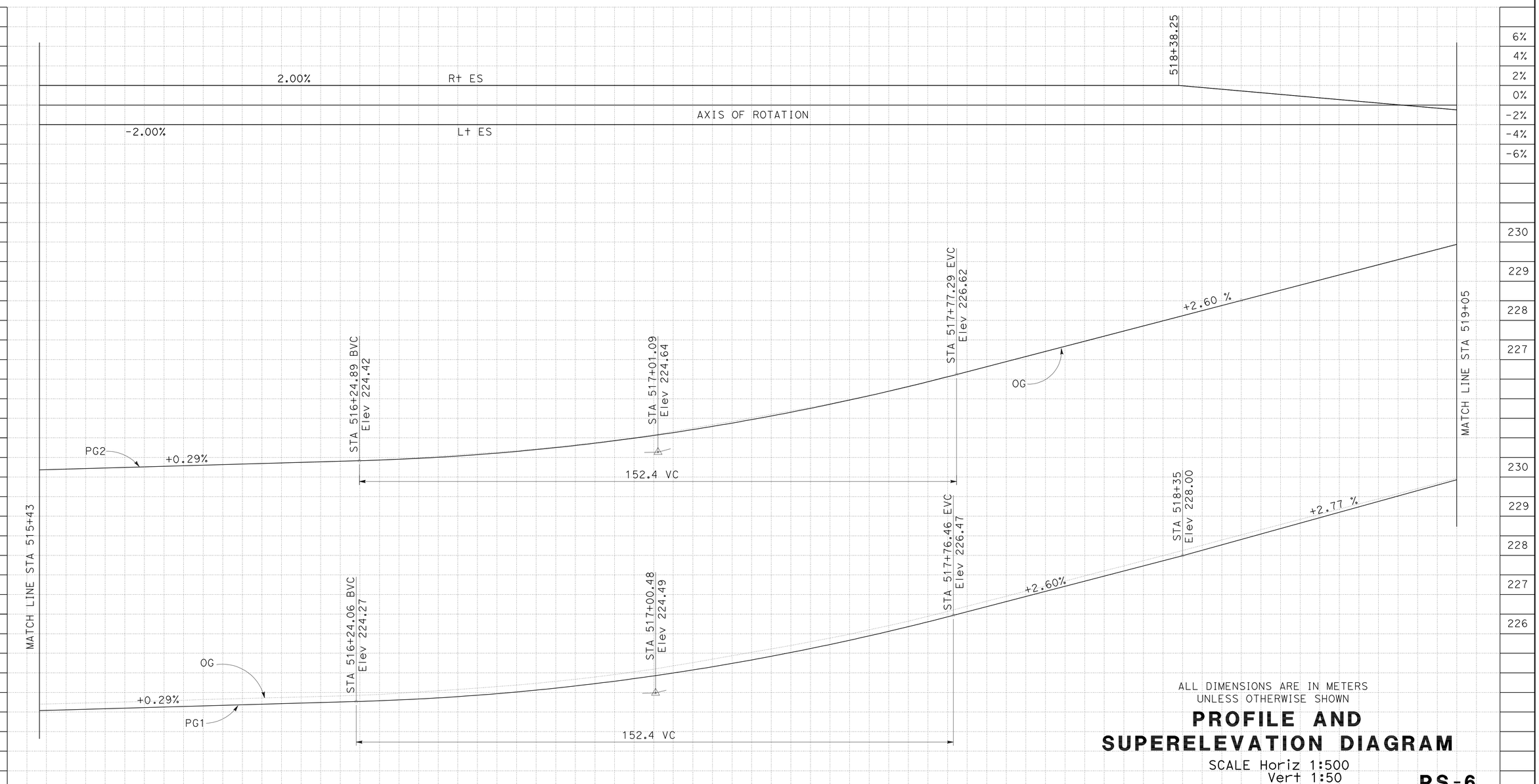

ALL DIMENSIONS ARE IN METERS
UNLESS OTHERWISE SHOWN

PROFILE AND SUPERELEVATION DIAGRAM

SCALE Horiz 1:500
Vert 1:50

PS-6

REVISED BY	DATE REVISED
KK	1/1/08

CALCULATED-DESIGNED BY: A ELSHARIEF
CHECKED BY:

FUNCTIONAL SUPERVISOR: CELINA AVILES

STATE OF CALIFORNIA - DEPARTMENT OF TRANSPORTATION
Caltrans OFFICE OF DESIGN D

LAST REVISION 01-17-08
DATE PLOTTED => 03-MAY-2010
TIME PLOTTED => 13:16

Dist	COUNTY	ROUTE	KILOMETER POST TOTAL PROJECT	SHEET No.	TOTAL SHEETS
07	LA	5	50.8/58.0	39	869

REGISTERED CIVIL ENGINEER 6/16/08 DATE

5-3-10
PLANS APPROVAL DATE

REGISTERED PROFESSIONAL ENGINEER KYLE M KUNITAKE No. 63726 Exp. 9/30/10 CIVIL STATE OF CALIFORNIA

THE STATE OF CALIFORNIA OR ITS OFFICERS OR AGENTS SHALL NOT BE RESPONSIBLE FOR THE ACCURACY OR COMPLETENESS OF ELECTRONIC COPIES OF THIS PLAN SHEET.

Caltrans Metric

PG 1 : - RIGHT BOTTOM OF BARRIER
PG 2 : - LEFT BOTTOM OF BARRIER

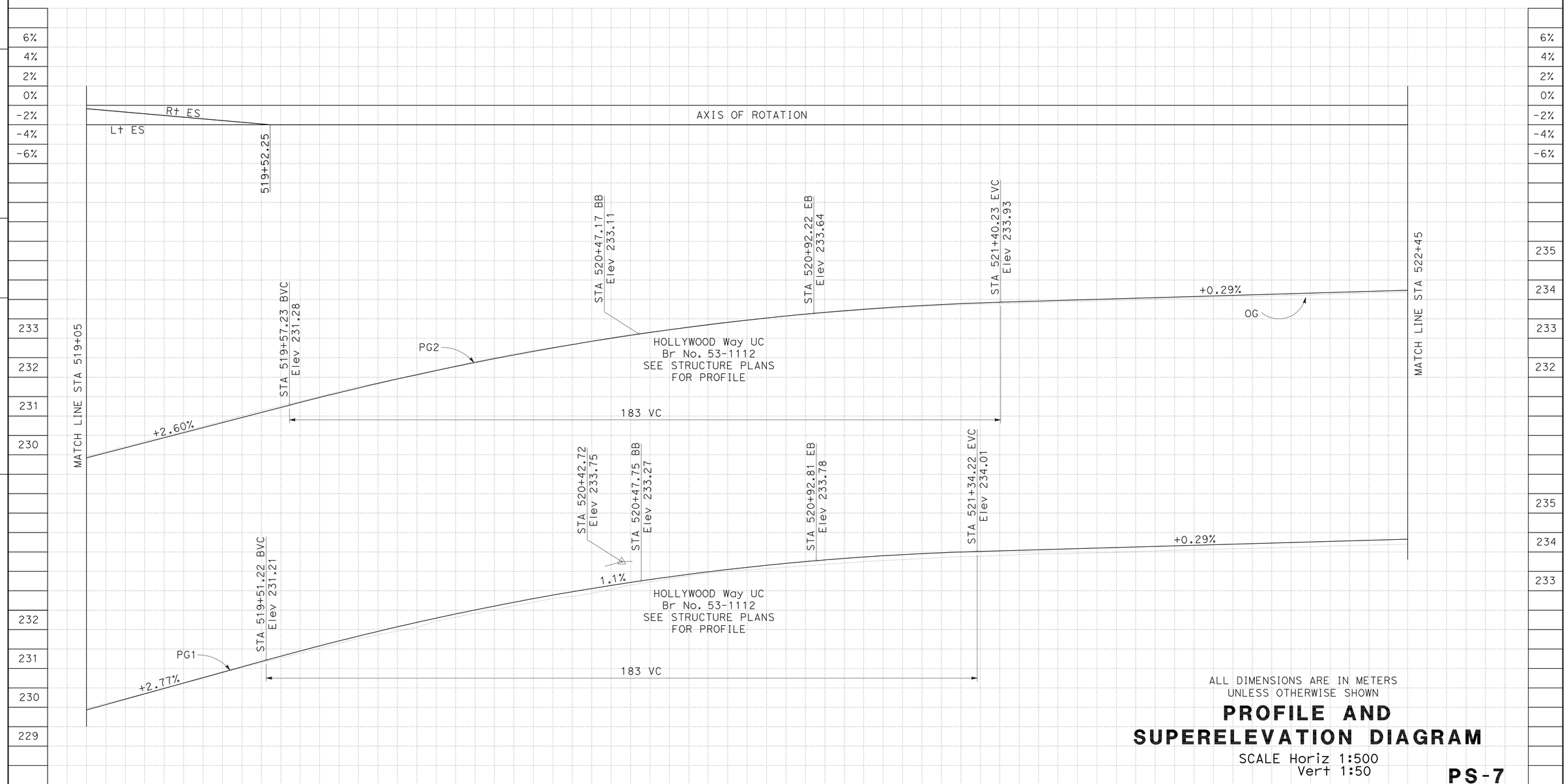

ALL DIMENSIONS ARE IN METERS
UNLESS OTHERWISE SHOWN

PROFILE AND SUPERELEVATION DIAGRAM

SCALE Horiz 1:500
Vert 1:50

PS-7

REVISED BY	DATE REVISED
KK	1/1/08

CALCULATED-DESIGNED BY: A ELSHARIEF
CHECKED BY:
FUNCTIONAL SUPERVISOR: CELINA AVILES

STATE OF CALIFORNIA - DEPARTMENT OF TRANSPORTATION
Caltrans OFFICE OF DESIGN D

LAST REVISION 01-17-08
DATE PLOTTED => 03-MAY-2010
TIME PLOTTED => 13:16

Dist	COUNTY	ROUTE	KILOMETER POST TOTAL PROJECT	SHEET No.	TOTAL SHEETS
07	LA	5	50.8/58.0	40	869

REGISTERED CIVIL ENGINEER 6/16/08 DATE

5-3-10
PLANS APPROVAL DATE

REGISTERED PROFESSIONAL ENGINEER KYLE M KUNITAKE No. 63726 Exp. 9/30/10 CIVIL STATE OF CALIFORNIA

THE STATE OF CALIFORNIA OR ITS OFFICERS OR AGENTS SHALL NOT BE RESPONSIBLE FOR THE ACCURACY OR COMPLETENESS OF ELECTRONIC COPIES OF THIS PLAN SHEET.

Caltrans Metric

PG 1 : - RIGHT BOTTOM OF BARRIER
PG 2 : - LEFT BOTTOM OF BARRIER

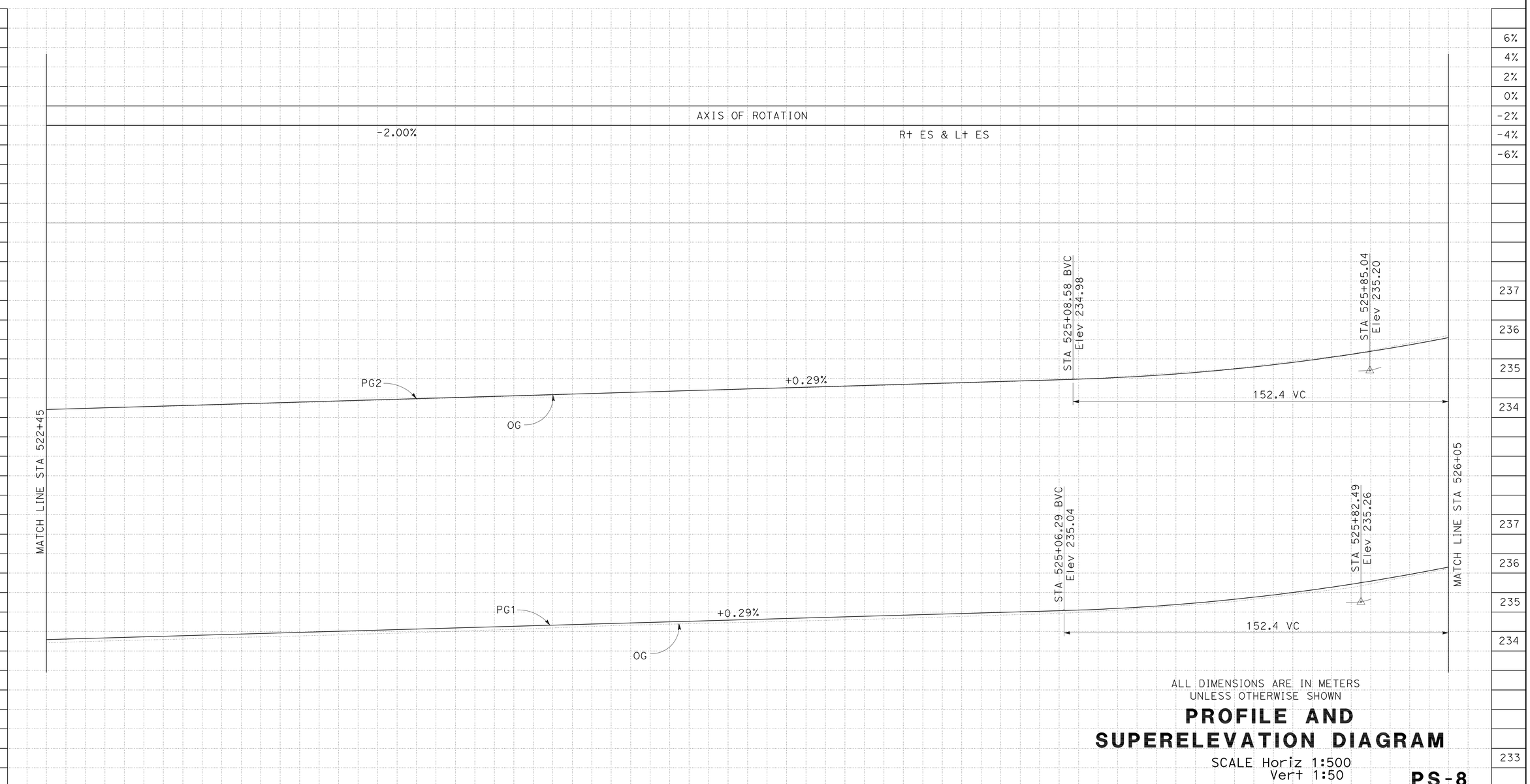

ALL DIMENSIONS ARE IN METERS
UNLESS OTHERWISE SHOWN

PROFILE AND SUPERELEVATION DIAGRAM

SCALE Horiz 1:500
Vert 1:50

PS-8

STATE OF CALIFORNIA - DEPARTMENT OF TRANSPORTATION
Caltrans OFFICE OF DESIGN D

FUNCTIONAL SUPERVISOR: CELINA AVILES

CALCULATED-DESIGNED BY / CHECKED BY

REVISED BY: KK
DATE REVISED: 1/1/08

A ELSHARIEF

LAST REVISION 01-17-08
DATE PLOTTED => 03-MAY-2010
TIME PLOTTED => 13:16

Dist	COUNTY	ROUTE	KILOMETER POST TOTAL PROJECT	SHEET No.	TOTAL SHEETS
07	LA	5	50.8/58.0	41	869

REGISTERED CIVIL ENGINEER 6/16/08 DATE

5-3-10
PLANS APPROVAL DATE

REGISTERED PROFESSIONAL ENGINEER KYLE M KUNITAKE No. 63726 Exp. 9/30/10 CIVIL STATE OF CALIFORNIA

THE STATE OF CALIFORNIA OR ITS OFFICERS OR AGENTS SHALL NOT BE RESPONSIBLE FOR THE ACCURACY OR COMPLETENESS OF ELECTRONIC COPIES OF THIS PLAN SHEET.

Caltrans Metric

PG 1 : - RIGHT BOTTOM OF BARRIER
PG 2 : - LEFT BOTTOM OF BARRIER

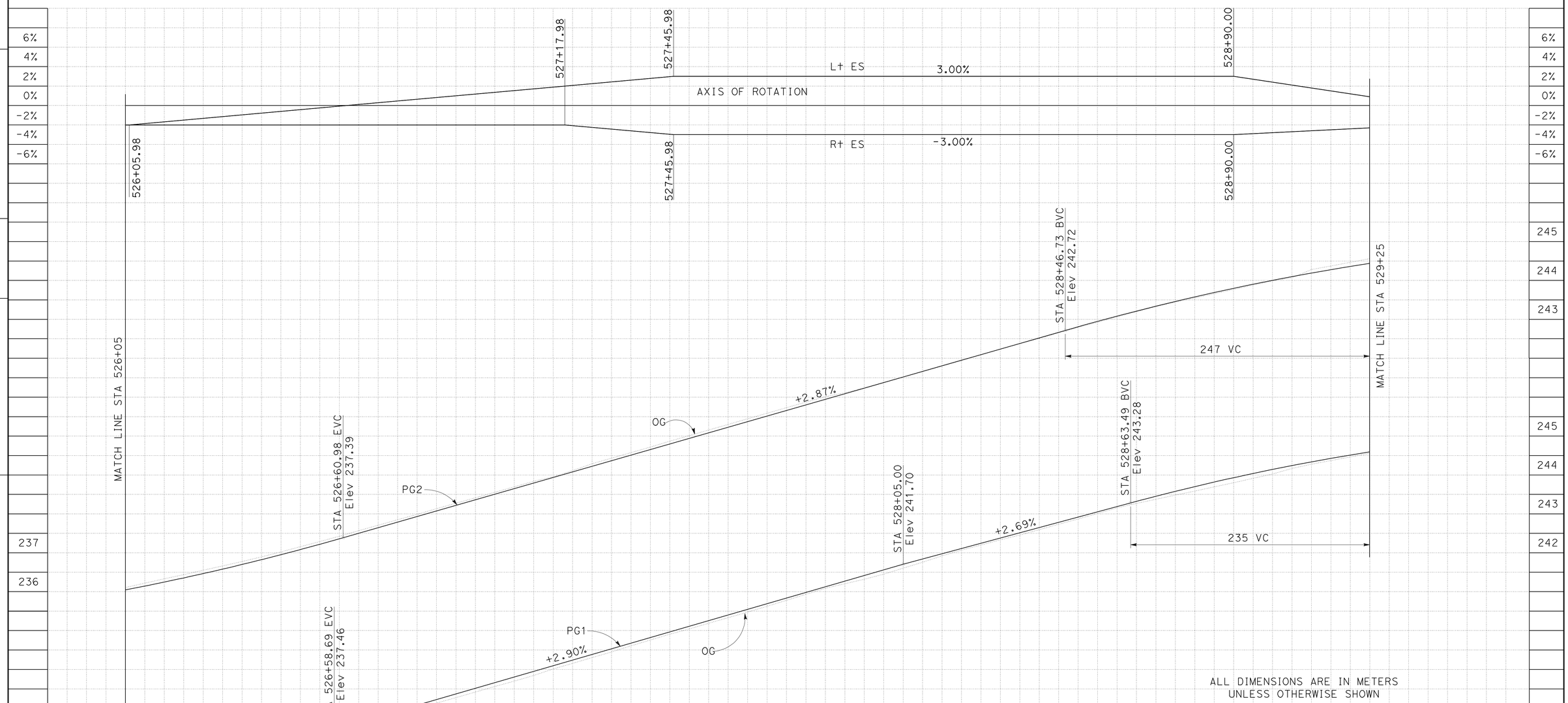

ALL DIMENSIONS ARE IN METERS
UNLESS OTHERWISE SHOWN

PROFILE AND SUPERELEVATION DIAGRAM

SCALE Horiz 1:500
Vert 1:50

PS-9

STATE OF CALIFORNIA - DEPARTMENT OF TRANSPORTATION
Caltrans OFFICE OF DESIGN D

FUNCTIONAL SUPERVISOR: CELINA AVILES

CALCULATED-DESIGNED BY: A ELSHARIEF
CHECKED BY:

REVISED BY: KK
DATE REVISED: 1/1/08

LAST REVISION: 01-17-08
DATE PLOTTED => 03-MAY-2010
TIME PLOTTED => 13:16

Dist	COUNTY	ROUTE	KILOMETER POST TOTAL PROJECT	SHEET No.	TOTAL SHEETS
07	LA	5	50.8/58.0	42	869

REGISTERED CIVIL ENGINEER 6/16/08 DATE

5-3-10
PLANS APPROVAL DATE

REGISTERED PROFESSIONAL ENGINEER KYLE M KUNITAKE No. 63726 Exp. 9/30/10 CIVIL STATE OF CALIFORNIA

THE STATE OF CALIFORNIA OR ITS OFFICERS OR AGENTS SHALL NOT BE RESPONSIBLE FOR THE ACCURACY OR COMPLETENESS OF ELECTRONIC COPIES OF THIS PLAN SHEET.

Caltrans Metric

PG 1 : - RIGHT BOTTOM OF BARRIER
PG 2 : - LEFT BOTTOM OF BARRIER

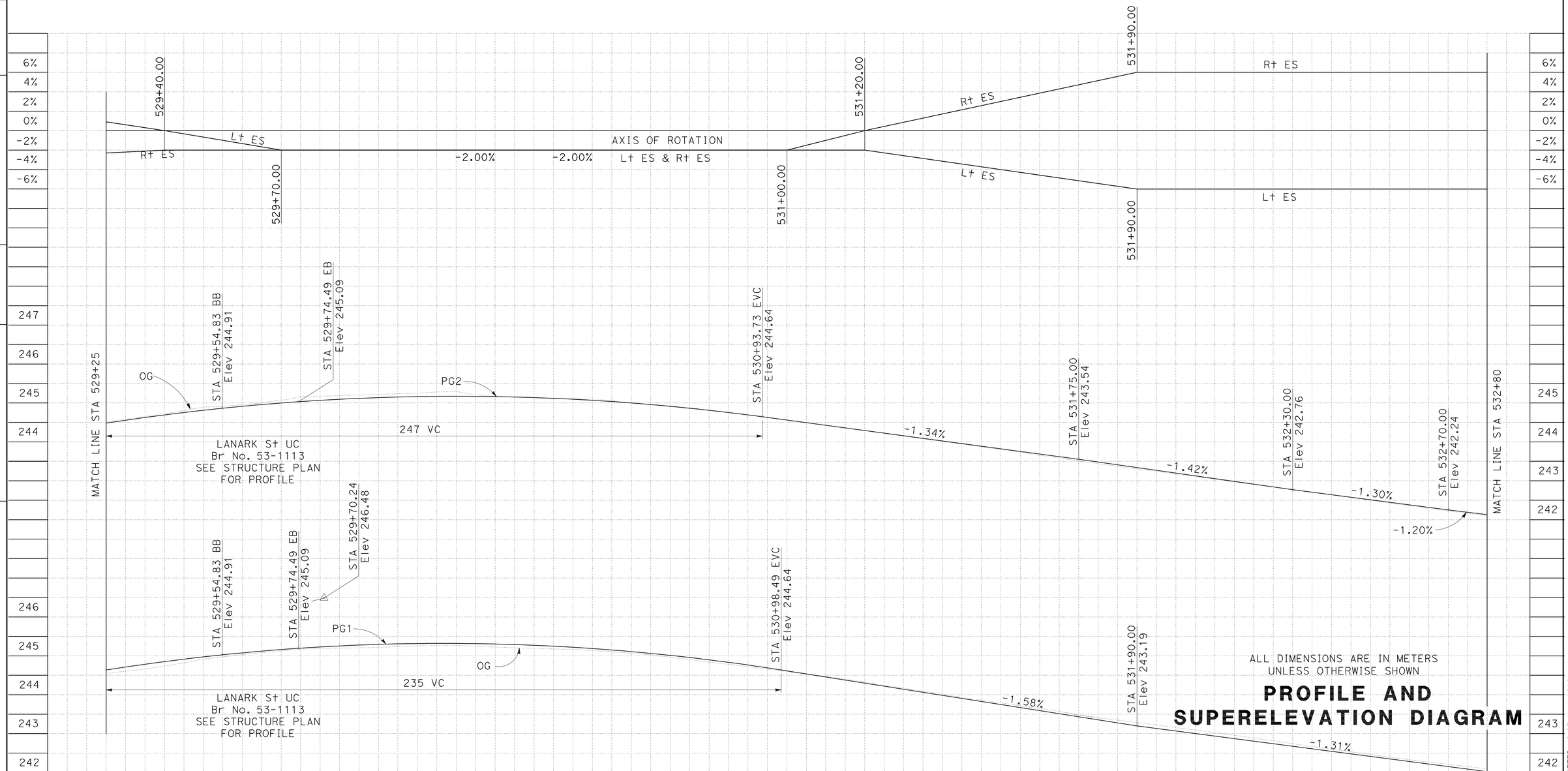

ALL DIMENSIONS ARE IN METERS
UNLESS OTHERWISE SHOWN

PROFILE AND SUPERELEVATION DIAGRAM

SCALE Horiz 1:500
Vert 1:50

PS-10

REVISED BY	DATE REVISED
KK	1/1/08

CALCULATED-DESIGNED BY: A ELSHARIEF
CHECKED BY: KYLE KUNITAKE
FUNCTIONAL SUPERVISOR: CELINA AVILES

STATE OF CALIFORNIA - DEPARTMENT OF TRANSPORTATION
Caltrans OFFICE OF DESIGN D

LAST REVISION 01-17-08
DATE PLOTTED => 03-MAY-2010
TIME PLOTTED => 13:16

Dist	COUNTY	ROUTE	KILOMETER POST TOTAL PROJECT	SHEET No.	TOTAL SHEETS
07	LA	5	50.8/58.0	43	869

REGISTERED CIVIL ENGINEER 6/16/08 DATE

5-3-10
PLANS APPROVAL DATE

REGISTERED PROFESSIONAL ENGINEER KYLE M KUNITAKE No. 63726 Exp. 9/30/10 CIVIL STATE OF CALIFORNIA

THE STATE OF CALIFORNIA OR ITS OFFICERS OR AGENTS SHALL NOT BE RESPONSIBLE FOR THE ACCURACY OR COMPLETENESS OF ELECTRONIC COPIES OF THIS PLAN SHEET.

Caltrans Metric

PG 1 : - RIGHT BOTTOM OF BARRIER
PG 2 : - LEFT BOTTOM OF BARRIER

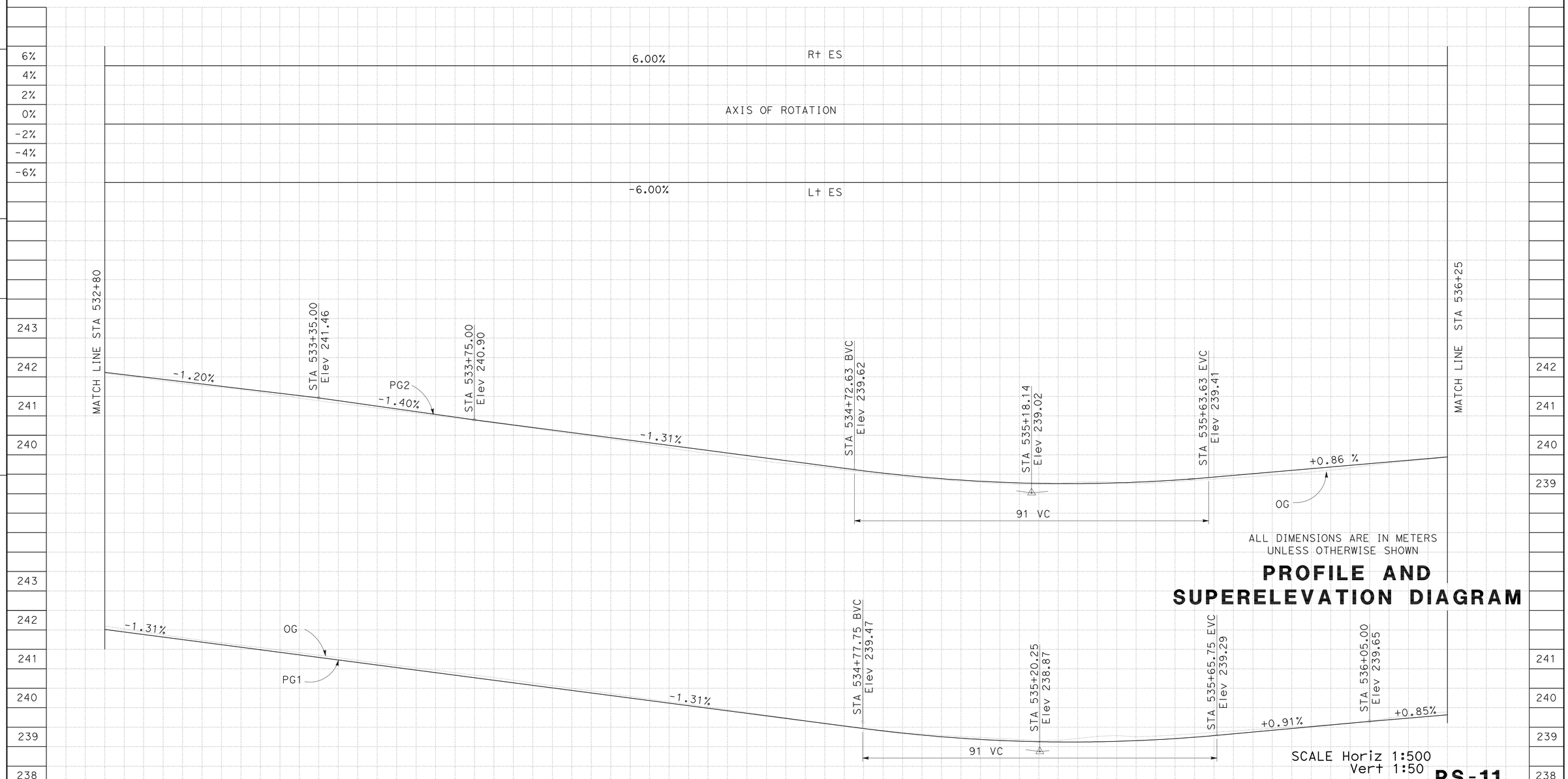

ALL DIMENSIONS ARE IN METERS
UNLESS OTHERWISE SHOWN

PROFILE AND SUPERELEVATION DIAGRAM

SCALE Horiz 1:500
Vert 1:50

PS-11

REVISED BY	DATE REVISED
KK	1/1/08

A ELSHARIEF
KYLE KUNITAKE
CALCULATED-DESIGNED BY
CHECKED BY
FUNCTIONAL SUPERVISOR
CELINA AVILES

STATE OF CALIFORNIA - DEPARTMENT OF TRANSPORTATION
Caltrans OFFICE OF DESIGN D

LAST REVISION 01-17-08
DATE PLOTTED => 03-MAY-2010
TIME PLOTTED => 13:16

Dist	COUNTY	ROUTE	KILOMETER POST TOTAL PROJECT	SHEET No.	TOTAL SHEETS
07	LA	5	50.8/58.0	44	869

REGISTERED CIVIL ENGINEER 6/16/08 DATE

5-3-10
PLANS APPROVAL DATE

REGISTERED PROFESSIONAL ENGINEER KYLE M KUNITAKE No. 63726 Exp. 9/30/10 CIVIL STATE OF CALIFORNIA

THE STATE OF CALIFORNIA OR ITS OFFICERS OR AGENTS SHALL NOT BE RESPONSIBLE FOR THE ACCURACY OR COMPLETENESS OF ELECTRONIC COPIES OF THIS PLAN SHEET.

Caltrans Metric

PG 1 : - RIGHT BOTTOM OF BARRIER
PG 2 : - LEFT BOTTOM OF BARRIER

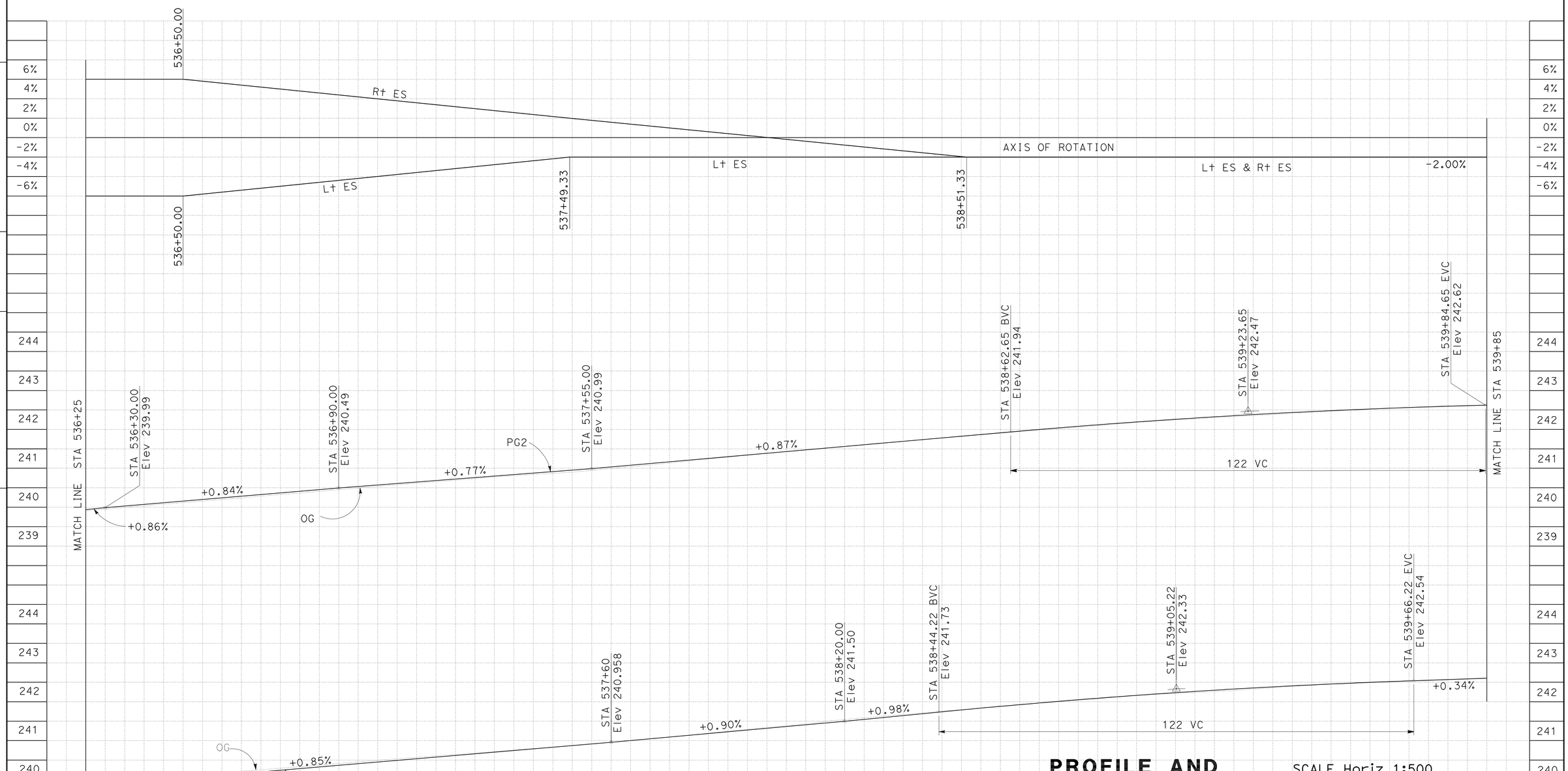

ALL DIMENSIONS ARE IN METERS UNLESS OTHERWISE SHOWN

PROFILE AND SUPERELEVATION DIAGRAM

SCALE Horiz 1:500
Vert 1:50

PS-12

REVISED BY	DATE REVISED
KK	1/1/08

A ELSHARIEF
KYLE KUNITAKE
CALCULATED-DESIGNED BY
CHECKED BY
FUNCTIONAL SUPERVISOR
CELINA AVILES

STATE OF CALIFORNIA - DEPARTMENT OF TRANSPORTATION
Caltrans OFFICE OF DESIGN D

LAST REVISION 01-17-08
DATE PLOTTED => 03-MAY-2010
TIME PLOTTED => 13:16

Dist	COUNTY	ROUTE	KILOMETER POST TOTAL PROJECT	SHEET No.	TOTAL SHEETS
07	LA	5	50.8/58.0	45	869

REGISTERED CIVIL ENGINEER 6/16/08 DATE

5-3-10
PLANS APPROVAL DATE

REGISTERED PROFESSIONAL ENGINEER KYLE M KUNITAKE No. 63726 Exp. 9/30/10 CIVIL STATE OF CALIFORNIA

THE STATE OF CALIFORNIA OR ITS OFFICERS OR AGENTS SHALL NOT BE RESPONSIBLE FOR THE ACCURACY OR COMPLETENESS OF ELECTRONIC COPIES OF THIS PLAN SHEET.

Caltrans Metric

PG 1 : - RIGHT BOTTOM OF BARRIER
PG 2 : - LEFT BOTTOM OF BARRIER

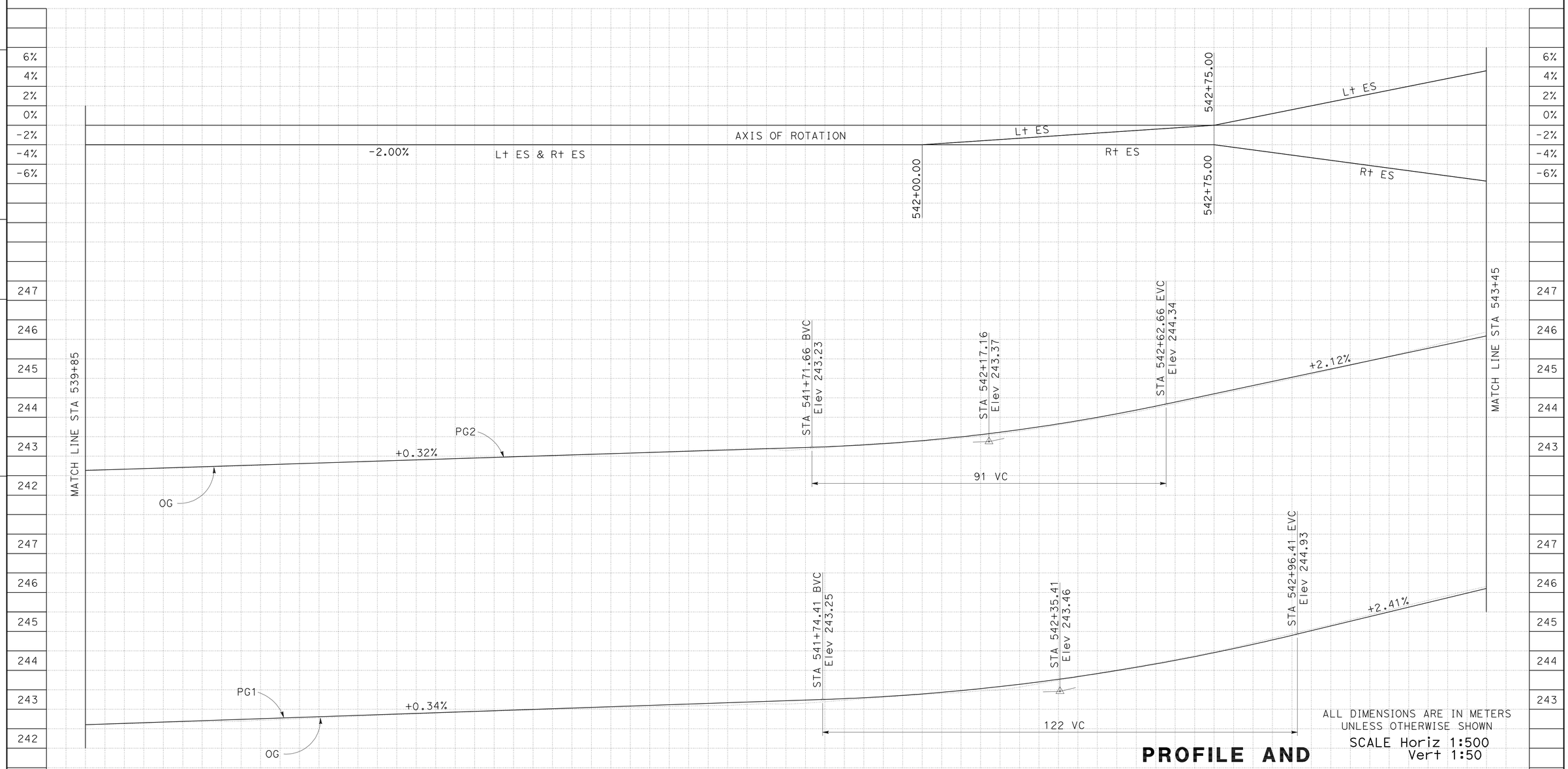

ALL DIMENSIONS ARE IN METERS
UNLESS OTHERWISE SHOWN

SCALE Horiz 1:500
Vert 1:50

PROFILE AND SUPERELEVATION DIAGRAM PS-13

REVISED BY	DATE REVISED
KK	1/1/08

CALCULATED-DESIGNED BY: A ELSHARIEF
CHECKED BY: KYLE KUNITAKE
FUNCTIONAL SUPERVISOR: CELINA AVILES

STATE OF CALIFORNIA - DEPARTMENT OF TRANSPORTATION
Caltrans OFFICE OF DESIGN D

LAST REVISION 01-17-08
DATE PLOTTED => 03-MAY-2010
TIME PLOTTED => 13:17

Dist	COUNTY	ROUTE	KILOMETER POST TOTAL PROJECT	SHEET No.	TOTAL SHEETS
07	LA	5	50.8/58.0	46	869

REGISTERED CIVIL ENGINEER 6/16/08 DATE

5-3-10
PLANS APPROVAL DATE

REGISTERED PROFESSIONAL ENGINEER KYLE M KUNITAKE No. 63726 Exp. 9/30/10 CIVIL STATE OF CALIFORNIA

THE STATE OF CALIFORNIA OR ITS OFFICERS OR AGENTS SHALL NOT BE RESPONSIBLE FOR THE ACCURACY OR COMPLETENESS OF ELECTRONIC COPIES OF THIS PLAN SHEET.

Caltrans Metric

PG 1 : - RIGHT BOTTOM OF BARRIER
PG 2 : - LEFT BOTTOM OF BARRIER

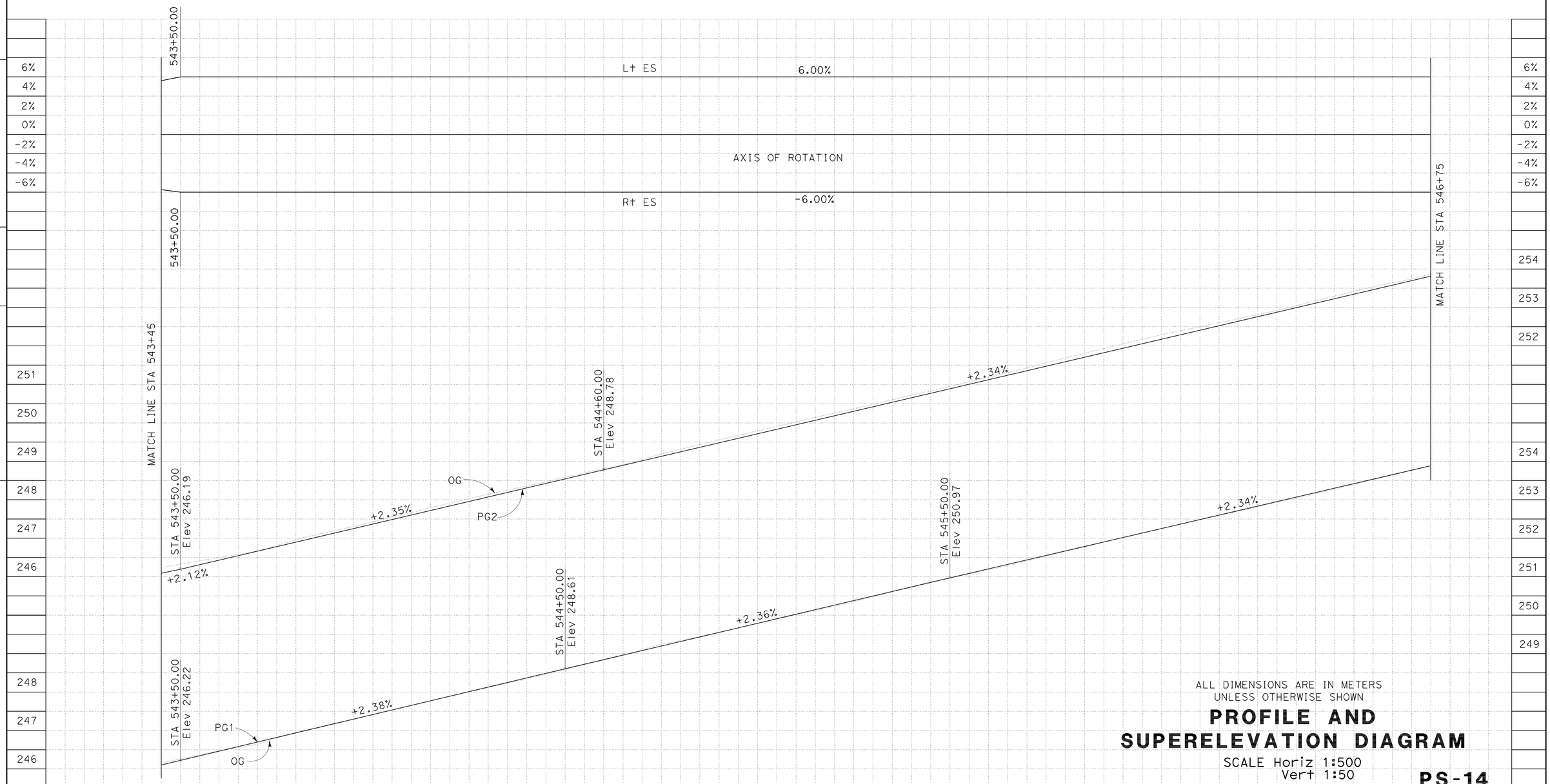

ALL DIMENSIONS ARE IN METERS
UNLESS OTHERWISE SHOWN

PROFILE AND SUPERELEVATION DIAGRAM

SCALE Horiz 1:500
Vert 1:50

PS-14

REVISED BY	DATE REVISED
KK	1/1/08

CALCULATED-DESIGNED BY: A ELSHARIEF
CHECKED BY: KYLE KUNITAKE
FUNCTIONAL SUPERVISOR: CELINA AVILES

STATE OF CALIFORNIA - DEPARTMENT OF TRANSPORTATION
Caltrans OFFICE OF DESIGN D

LAST REVISION 01-17-08
DATE PLOTTED => 03-MAY-2010
TIME PLOTTED => 13:17

Dist	COUNTY	ROUTE	KILOMETER POST TOTAL PROJECT	SHEET No.	TOTAL SHEETS
07	LA	5	50.8/58.0	47	869

REGISTERED CIVIL ENGINEER 6/16/08 DATE

5-3-10
PLANS APPROVAL DATE

REGISTERED PROFESSIONAL ENGINEER KYLE M KUNITAKE No. 63726 Exp. 9/30/10 CIVIL STATE OF CALIFORNIA

THE STATE OF CALIFORNIA OR ITS OFFICERS OR AGENTS SHALL NOT BE RESPONSIBLE FOR THE ACCURACY OR COMPLETENESS OF ELECTRONIC COPIES OF THIS PLAN SHEET.

Caltrans Metric

PG 1 : - RIGHT BOTTOM OF BARRIER
PG 2 : - LEFT BOTTOM OF BARRIER

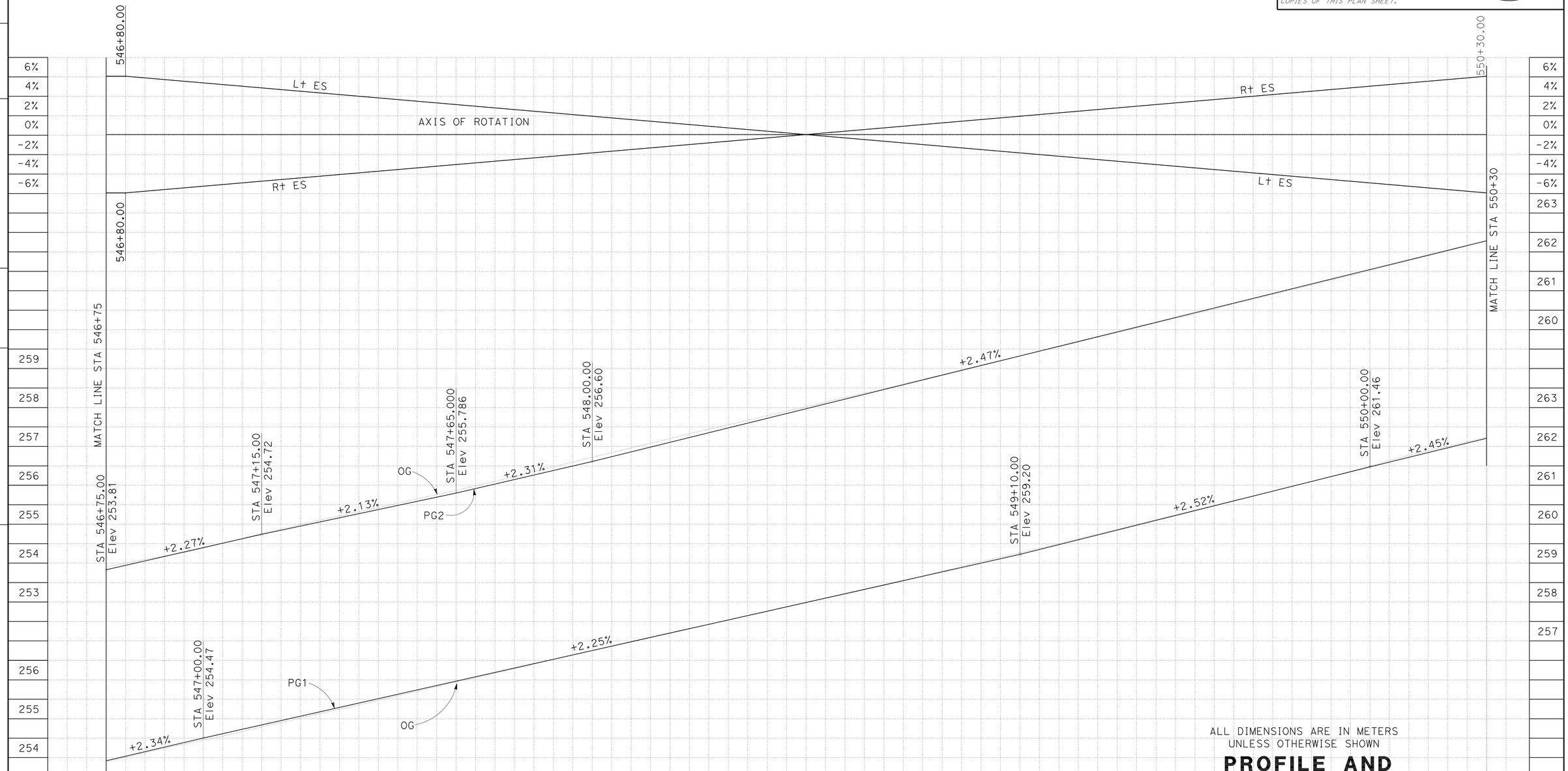

ALL DIMENSIONS ARE IN METERS
UNLESS OTHERWISE SHOWN

PROFILE AND SUPERELEVATION DIAGRAM

SCALE Horiz 1:500
Vert 1:50

PS-15

REVISED BY	KK	DATE REVISED	1/1/08
CALCULATED-DESIGNED BY	A ELSHARIEF		
CHECKED BY	KYLE KUNITAKE		
FUNCTIONAL SUPERVISOR	CELINA AVILES		

STATE OF CALIFORNIA - DEPARTMENT OF TRANSPORTATION
Caltrans OFFICE OF DESIGN D

LAST REVISION 01-17-08 DATE PLOTTED => 03-MAY-2010 TIME PLOTTED => 13:17

Dist	COUNTY	ROUTE	KILOMETER POST TOTAL PROJECT	SHEET No.	TOTAL SHEETS
07	LA	5	50.8/58.0	48	869

REGISTERED CIVIL ENGINEER 6/16/08 DATE

5-3-10
PLANS APPROVAL DATE

REGISTERED PROFESSIONAL ENGINEER KYLE M KUNITAKE No. 63726 Exp. 9/30/10 CIVIL STATE OF CALIFORNIA

THE STATE OF CALIFORNIA OR ITS OFFICERS OR AGENTS SHALL NOT BE RESPONSIBLE FOR THE ACCURACY OR COMPLETENESS OF ELECTRONIC COPIES OF THIS PLAN SHEET.

Caltrans Metric

PG 1 : - RIGHT BOTTOM OF BARRIER
PG 2 : - LEFT BOTTOM OF BARRIER

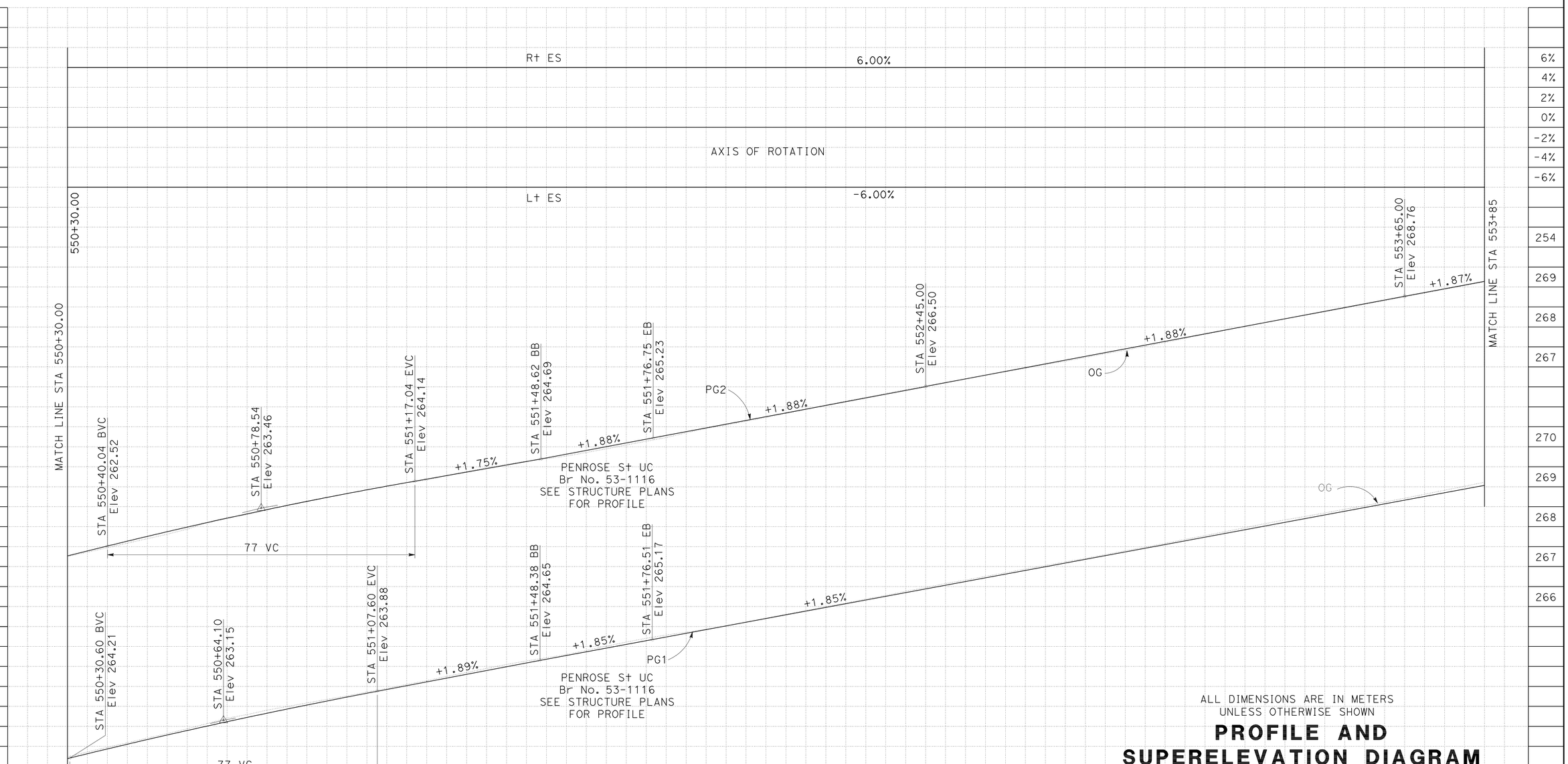

ALL DIMENSIONS ARE IN METERS
UNLESS OTHERWISE SHOWN

PROFILE AND SUPERELEVATION DIAGRAM

SCALE Horiz 1:500
Vert 1:50

PS-16

REVISED BY	DATE REVISED
KK	1/1/08

A ELSHARIEF
KYLE KUNITAKE
CALCULATED-DESIGNED BY
CHECKED BY
FUNCTIONAL SUPERVISOR
CELINA AVILES

STATE OF CALIFORNIA - DEPARTMENT OF TRANSPORTATION
Caltrans OFFICE OF DESIGN D

LAST REVISION 01-17-08
DATE PLOTTED => 03-MAY-2010
TIME PLOTTED => 13:17

Dist	COUNTY	ROUTE	KILOMETER POST TOTAL PROJECT	SHEET No.	TOTAL SHEETS
07	LA	5	50.8/58.0	49	869

REGISTERED CIVIL ENGINEER 6/16/08 DATE

5-3-10
PLANS APPROVAL DATE

REGISTERED PROFESSIONAL ENGINEER KYLE M KUNITAKE No. 63726 Exp. 9/30/10 CIVIL STATE OF CALIFORNIA

THE STATE OF CALIFORNIA OR ITS OFFICERS OR AGENTS SHALL NOT BE RESPONSIBLE FOR THE ACCURACY OR COMPLETENESS OF ELECTRONIC COPIES OF THIS PLAN SHEET.

Caltrans Metric

PG 1 : - RIGHT BOTTOM OF BARRIER
PG 2 : - LEFT BOTTOM OF BARRIER

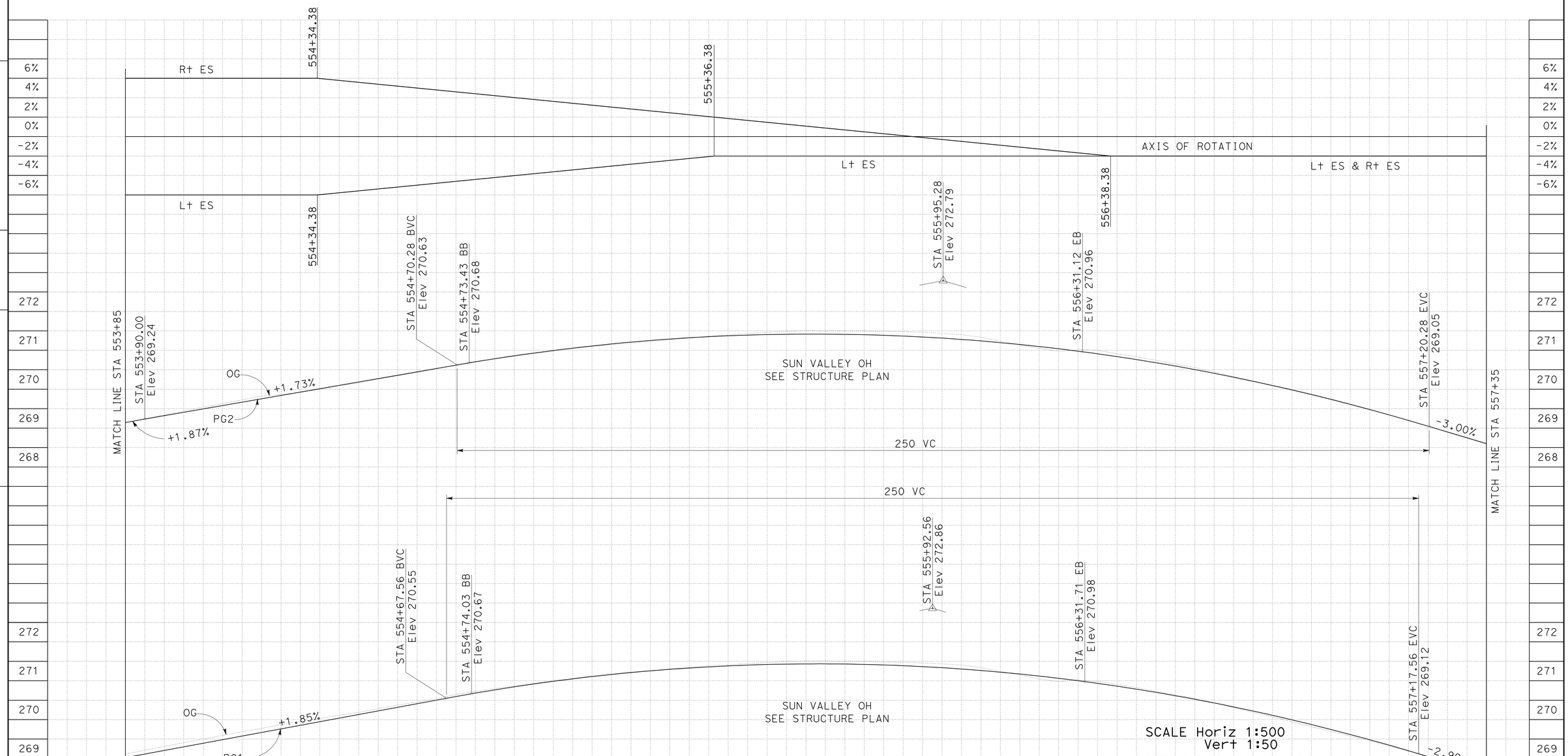

SCALE Horiz 1:500
Vert 1:50

ALL DIMENSIONS ARE IN METERS
UNLESS OTHERWISE SHOWN

PROFILE AND SUPERELEVATION DIAGRAM PS-17

REVISED BY	DATE REVISED
KK	1/1/08

CALCULATED-DESIGNED BY: A ELSHARIEF
CHECKED BY: KYLE KUNITAKE
FUNCTIONAL SUPERVISOR: CELINA AVILES

STATE OF CALIFORNIA - DEPARTMENT OF TRANSPORTATION
Caltrans OFFICE OF DESIGN D

LAST REVISION 01-17-08
DATE PLOTTED => 03-MAY-2010
TIME PLOTTED => 13:17

Dist	COUNTY	ROUTE	KILOMETER POST TOTAL PROJECT	SHEET No.	TOTAL SHEETS
07	LA	5	50.8/58.0	50	869

REGISTERED CIVIL ENGINEER 6/16/08 DATE

5-3-10
PLANS APPROVAL DATE

REGISTERED PROFESSIONAL ENGINEER KYLE M KUNITAKE No. 63726 Exp. 9/30/10 CIVIL STATE OF CALIFORNIA

THE STATE OF CALIFORNIA OR ITS OFFICERS OR AGENTS SHALL NOT BE RESPONSIBLE FOR THE ACCURACY OR COMPLETENESS OF ELECTRONIC COPIES OF THIS PLAN SHEET.

Caltrans Metric

PG 1 : - RIGHT BOTTOM OF BARRIER
PG 2 : - LEFT BOTTOM OF BARRIER

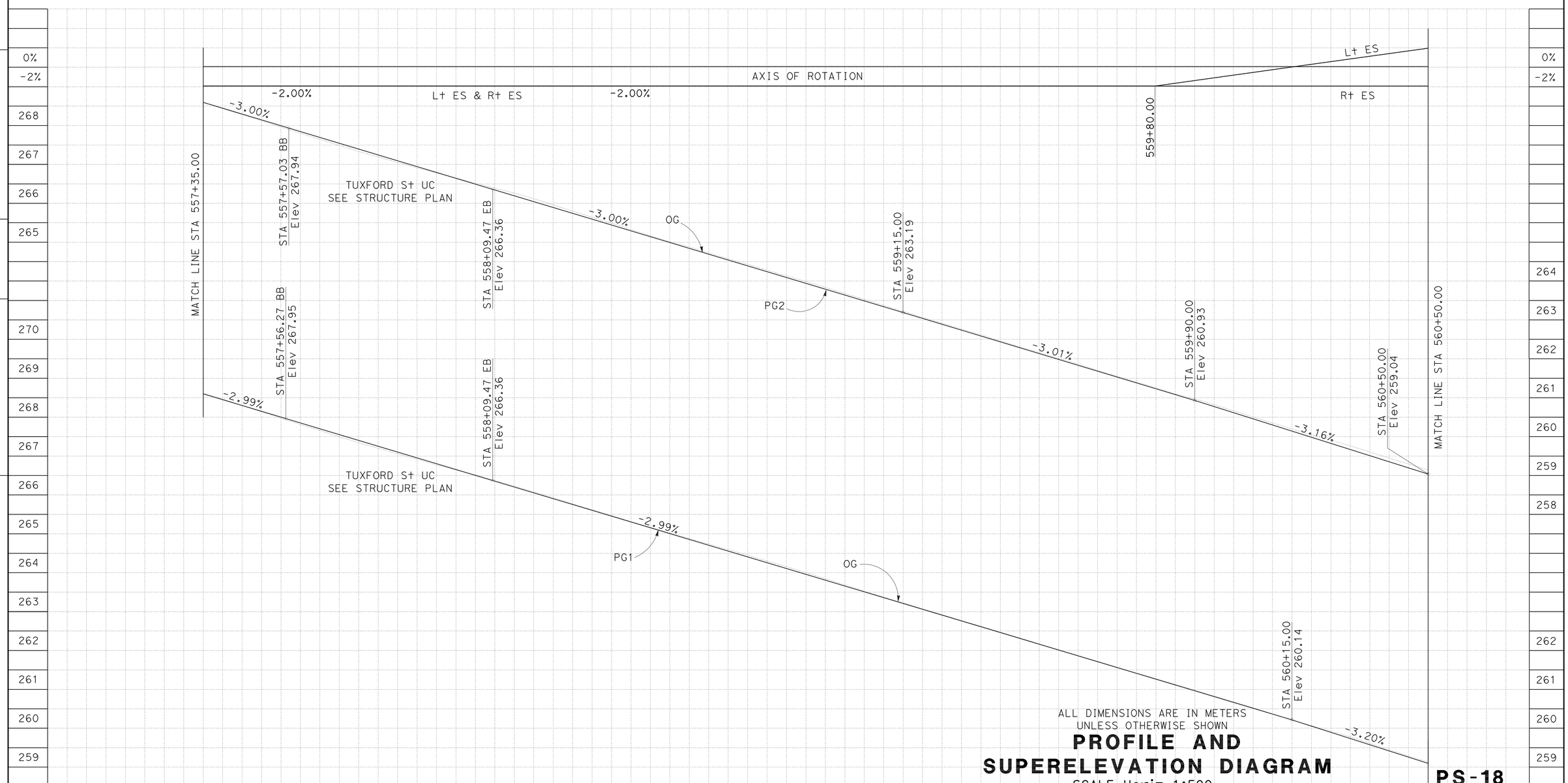

ALL DIMENSIONS ARE IN METERS
UNLESS OTHERWISE SHOWN

PROFILE AND SUPERELEVATION DIAGRAM

SCALE Horiz 1:500
Vert 1:50

PS-18

REVISED BY	KK
DATE REVISED	1/1/08
CALCULATED-DESIGNED BY	A ELSHARIEF
CHECKED BY	KYLE KUNITAKE
FUNCTIONAL SUPERVISOR	CELINA AVILES

STATE OF CALIFORNIA - DEPARTMENT OF TRANSPORTATION
Caltrans OFFICE OF DESIGN D

LAST REVISION 01-17-08
DATE PLOTTED => 03-MAY-2010
TIME PLOTTED => 13:17

Dist	COUNTY	ROUTE	KILOMETER POST TOTAL PROJECT	SHEET No.	TOTAL SHEETS
07	LA	5	50.8/58.0	51	869

Caltrans Metric

REGISTERED CIVIL ENGINEER 6/16/08 DATE

5-3-10
PLANS APPROVAL DATE

REGISTERED PROFESSIONAL ENGINEER KYLE M KUNITAKE No. 63726 Exp. 9/30/10 CIVIL STATE OF CALIFORNIA

THE STATE OF CALIFORNIA OR ITS OFFICERS OR AGENTS SHALL NOT BE RESPONSIBLE FOR THE ACCURACY OR COMPLETENESS OF ELECTRONIC COPIES OF THIS PLAN SHEET.

PG 1 : - RIGHT BOTTOM OF BARRIER
PG 2 : - LEFT BOTTOM OF BARRIER

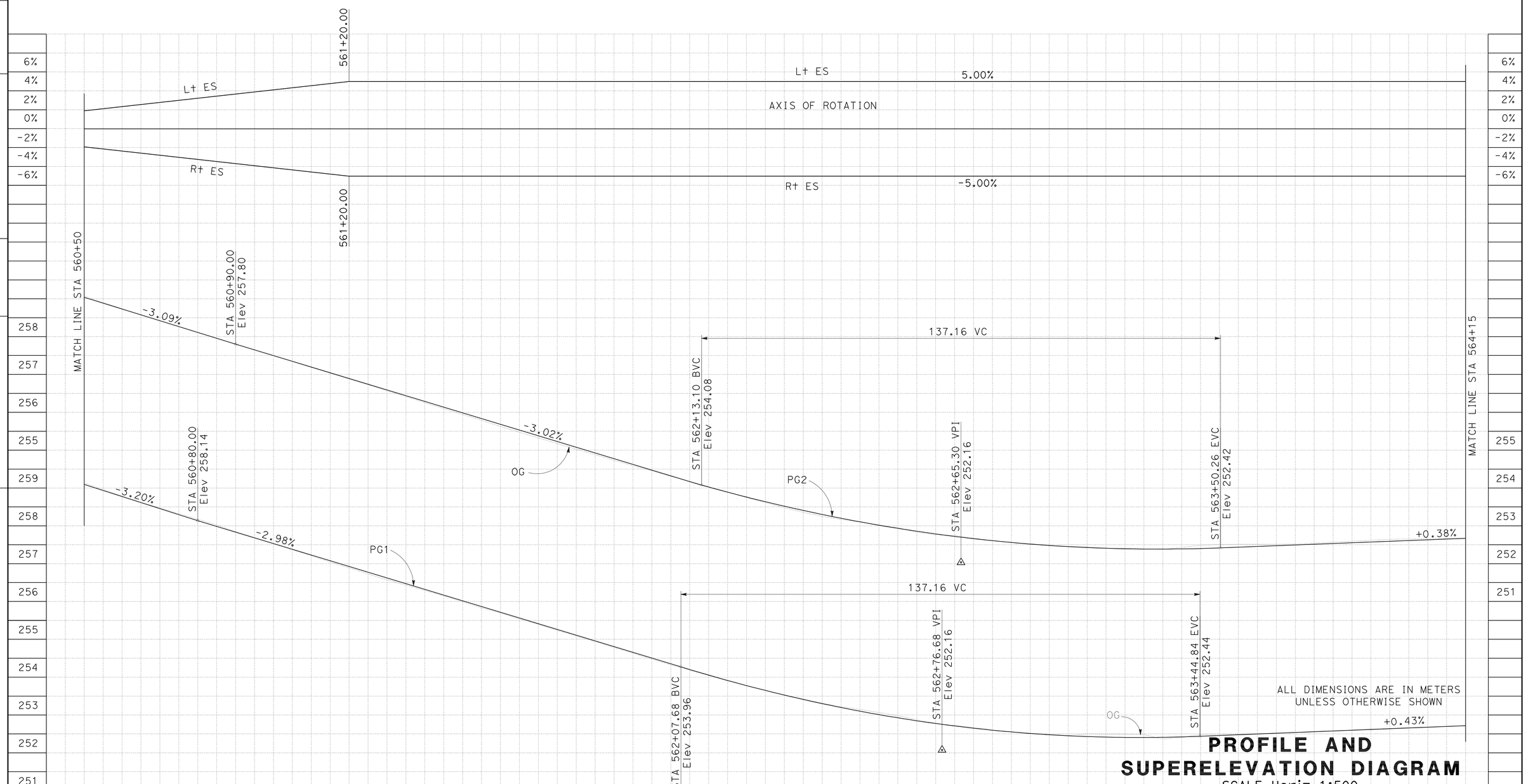

ALL DIMENSIONS ARE IN METERS UNLESS OTHERWISE SHOWN

PROFILE AND SUPERELEVATION DIAGRAM

SCALE Horiz 1:500
Vert 1:50

PS-19

REVISED BY	DATE REVISED
KK	1/1/08

CALCULATED-DESIGNED BY: A ELSHARIEF
CHECKED BY: KYLE KUNITAKE
FUNCTIONAL SUPERVISOR: CELINA AVILES

STATE OF CALIFORNIA - DEPARTMENT OF TRANSPORTATION
Caltrans OFFICE OF DESIGN D

LAST REVISION 01-17-08
DATE PLOTTED => 03-MAY-2010
TIME PLOTTED => 13:17

Dist	COUNTY	ROUTE	KILOMETER POST TOTAL PROJECT	SHEET No.	TOTAL SHEETS
07	LA	5	50.8/58.0	52	869

REGISTERED CIVIL ENGINEER 6/16/08 DATE

5-3-10
PLANS APPROVAL DATE

REGISTERED PROFESSIONAL ENGINEER KYLE M KUNITAKE No. 63726 Exp. 9/30/10 CIVIL STATE OF CALIFORNIA

THE STATE OF CALIFORNIA OR ITS OFFICERS OR AGENTS SHALL NOT BE RESPONSIBLE FOR THE ACCURACY OR COMPLETENESS OF ELECTRONIC COPIES OF THIS PLAN SHEET.

Caltrans Metric

PG 1 : - RIGHT BOTTOM OF BARRIER
PG 2 : - LEFT BOTTOM OF BARRIER

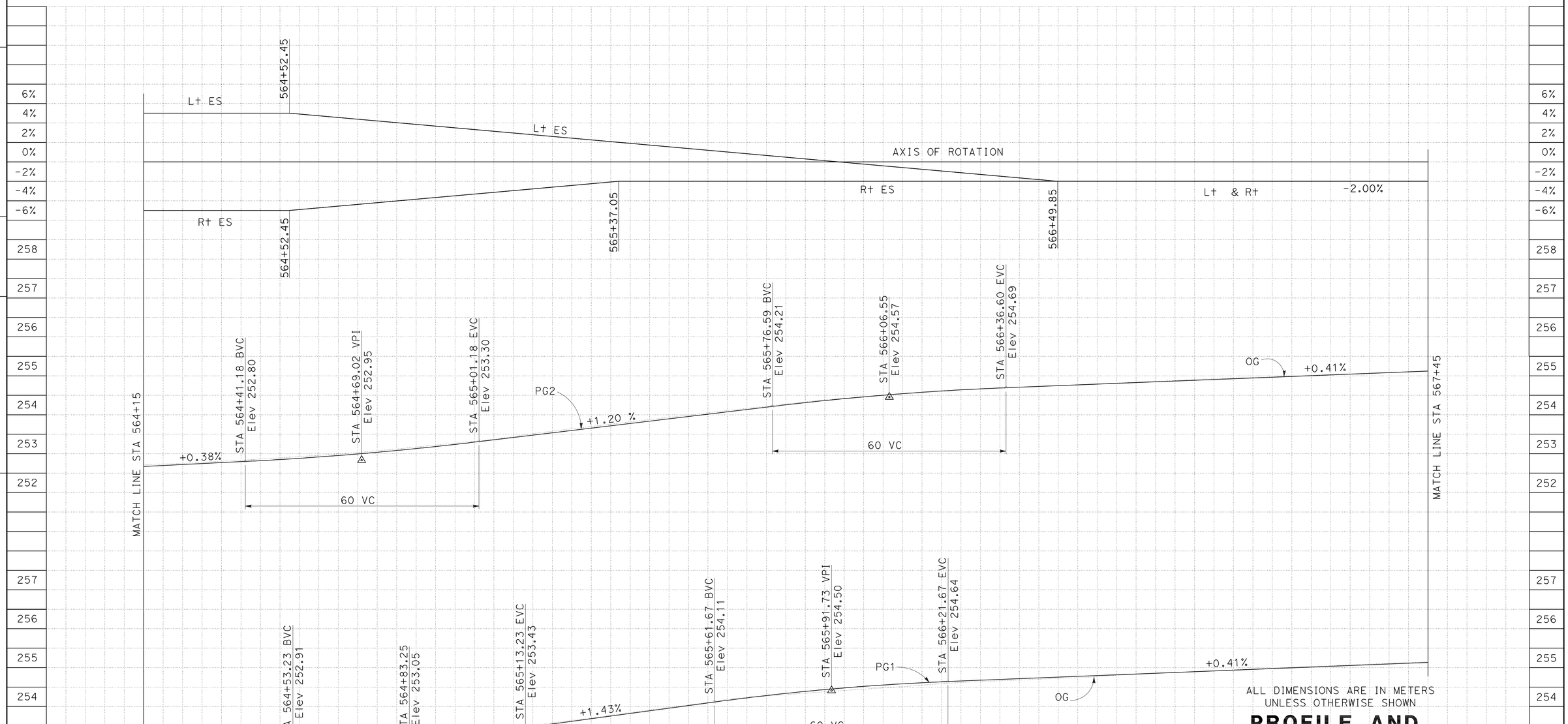

ALL DIMENSIONS ARE IN METERS
UNLESS OTHERWISE SHOWN

PROFILE AND SUPERELEVATION DIAGRAM

SCALE Horiz 1:500
Vert 1:50

PS-20

REVISED BY	DATE REVISED
KK	1/1/08

CALCULATED-DESIGNED BY: A ELSHARIEF
CHECKED BY: KYLE KUNITAKE
FUNCTIONAL SUPERVISOR: CELINA AVILES

STATE OF CALIFORNIA - DEPARTMENT OF TRANSPORTATION
Caltrans OFFICE OF DESIGN D

LAST REVISION 01-17-08
DATE PLOTTED => 03-MAY-2010
TIME PLOTTED => 13:17

Dist	COUNTY	ROUTE	KILOMETER POST TOTAL PROJECT	SHEET No.	TOTAL SHEETS
07	LA	5	50.8/58.0	53	869

REGISTERED CIVIL ENGINEER 6/16/08 DATE

5-3-10
PLANS APPROVAL DATE

REGISTERED PROFESSIONAL ENGINEER KYLE M KUNITAKE No. 63726 Exp. 9/30/10 CIVIL STATE OF CALIFORNIA

THE STATE OF CALIFORNIA OR ITS OFFICERS OR AGENTS SHALL NOT BE RESPONSIBLE FOR THE ACCURACY OR COMPLETENESS OF ELECTRONIC COPIES OF THIS PLAN SHEET.

Caltrans Metric

PG 1 : - RIGHT BOTTOM OF BARRIER
PG 2 : - LEFT BOTTOM OF BARRIER

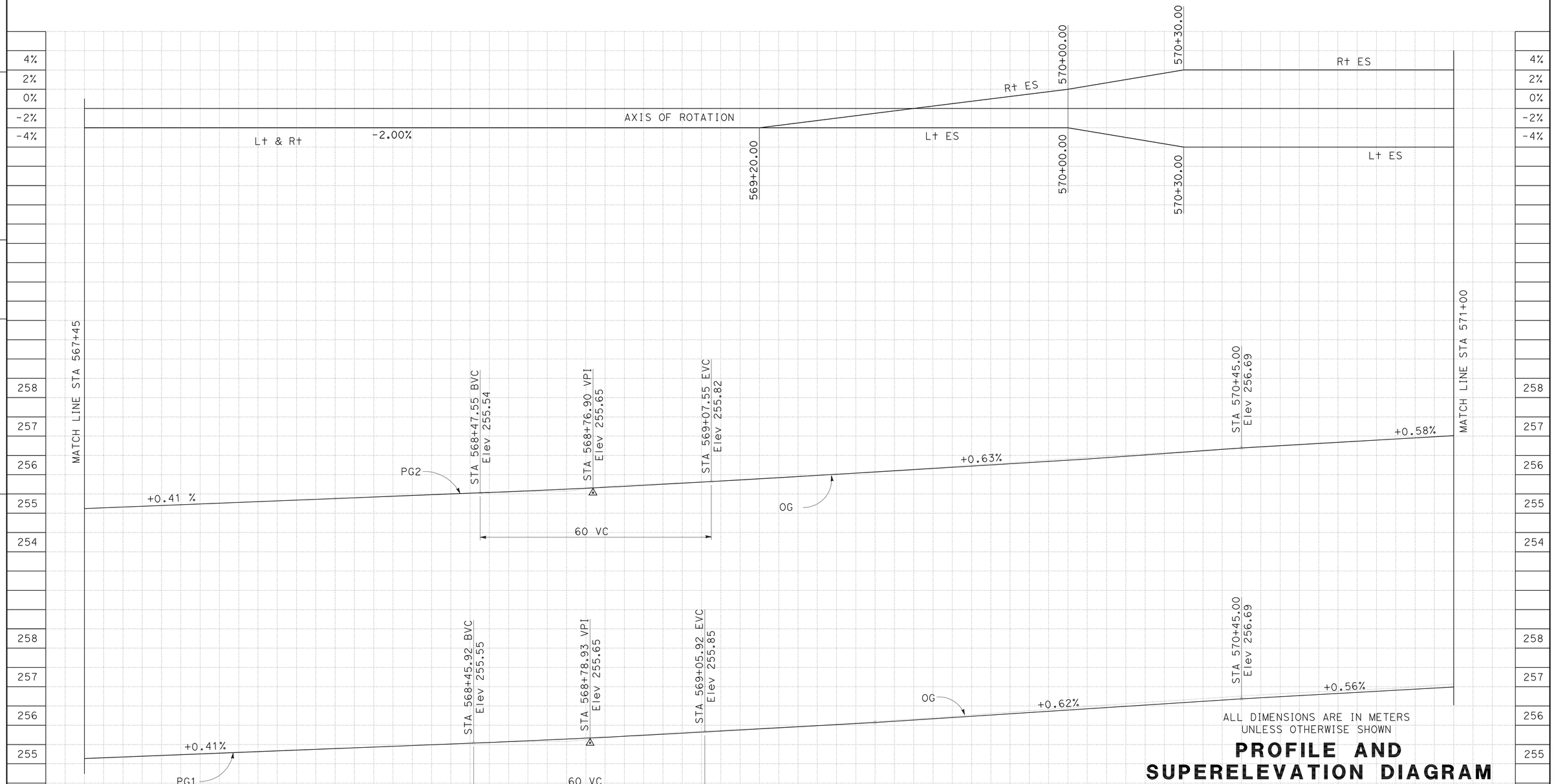

ALL DIMENSIONS ARE IN METERS
UNLESS OTHERWISE SHOWN

PROFILE AND SUPERELEVATION DIAGRAM

SCALE Horiz 1:500
Vert 1:50

PS-21

REVISED BY	DATE REVISED
KK	1/1/08

A ELSHARIEF — KYLE KUNITAKE — CALCULATED-DESIGNED BY — CHECKED BY

FUNCTIONAL SUPERVISOR: CELINA AVILES

STATE OF CALIFORNIA - DEPARTMENT OF TRANSPORTATION
Caltrans OFFICE OF DESIGN D

LAST REVISION 01-17-08 — DATE PLOTTED => 03-MAY-2010 — TIME PLOTTED => 13:17

Dist	COUNTY	ROUTE	KILOMETER POST TOTAL PROJECT	SHEET No.	TOTAL SHEETS
07	LA	5	50.8/58.0	54	869

REGISTERED CIVIL ENGINEER 6/16/08 DATE

5-3-10
PLANS APPROVAL DATE

REGISTERED PROFESSIONAL ENGINEER KYLE M KUNITAKE No. 63726 Exp. 9/30/10 CIVIL STATE OF CALIFORNIA

THE STATE OF CALIFORNIA OR ITS OFFICERS OR AGENTS SHALL NOT BE RESPONSIBLE FOR THE ACCURACY OR COMPLETENESS OF ELECTRONIC COPIES OF THIS PLAN SHEET.

Caltrans Metric

PG 1 : - RIGHT BOTTOM OF BARRIER
PG 2 : - LEFT BOTTOM OF BARRIER

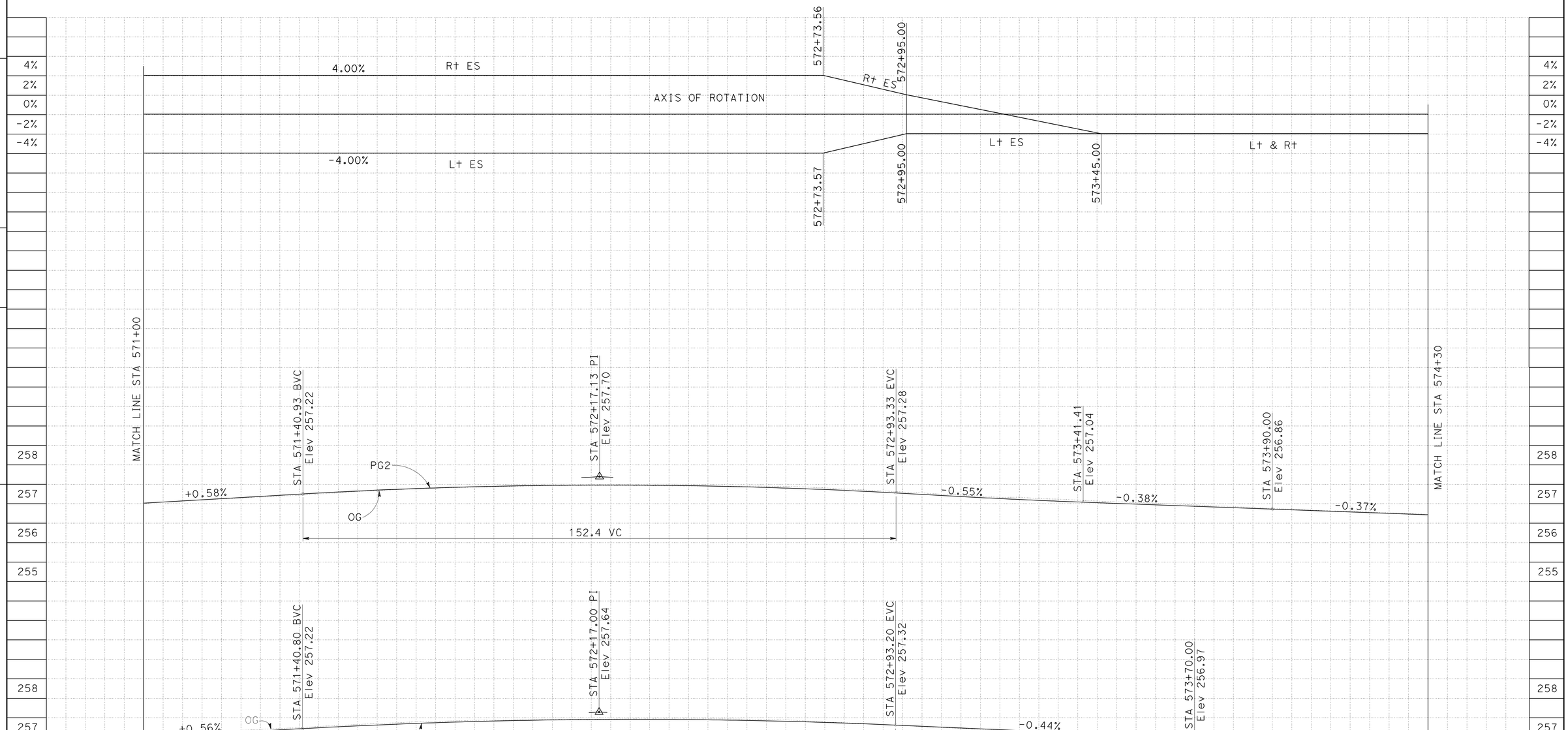

ALL DIMENSIONS ARE IN METERS
UNLESS OTHERWISE SHOWN

PROFILE AND SUPERELEVATION DIAGRAM

SCALE Horiz 1:500
Vert 1:50

PS-22

REVISED BY	DATE REVISED
KK	1/1/08

CALCULATED-DESIGNED BY: A ELSHARIEF
CHECKED BY: KYLE KUNITAKE
FUNCTIONAL SUPERVISOR: CELINA AVILES

STATE OF CALIFORNIA - DEPARTMENT OF TRANSPORTATION
Caltrans OFFICE OF DESIGN D

LAST REVISION 01-17-08
DATE PLOTTED => 03-MAY-2010
TIME PLOTTED => 13:18

Dist	COUNTY	ROUTE	KILOMETER POST TOTAL PROJECT	SHEET No.	TOTAL SHEETS
07	LA	5	50.8/58.0	55	869

REGISTERED CIVIL ENGINEER 6/16/08 DATE

5-3-10
PLANS APPROVAL DATE

REGISTERED PROFESSIONAL ENGINEER KYLE M KUNITAKE No. 63726 Exp. 9/30/10 CIVIL STATE OF CALIFORNIA

THE STATE OF CALIFORNIA OR ITS OFFICERS OR AGENTS SHALL NOT BE RESPONSIBLE FOR THE ACCURACY OR COMPLETENESS OF ELECTRONIC COPIES OF THIS PLAN SHEET.

Caltrans Metric

PG 1 : - RIGHT BOTTOM OF BARRIER
PG 2 : - LEFT BOTTOM OF BARRIER

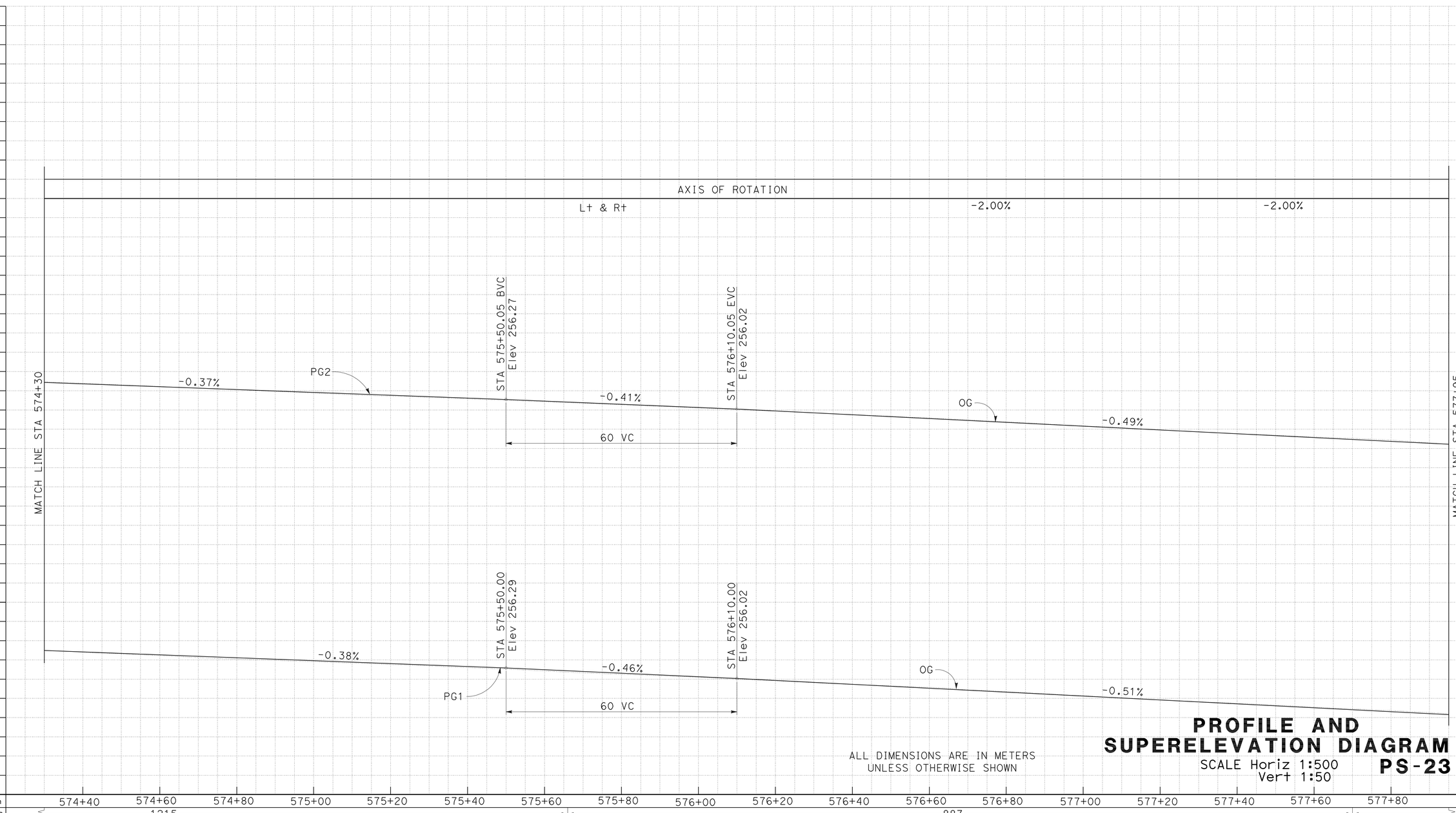

ALL DIMENSIONS ARE IN METERS
UNLESS OTHERWISE SHOWN

PROFILE AND SUPERELEVATION DIAGRAM

SCALE Horiz 1:500
Vert 1:50

PS-23

REVISED BY	DATE REVISED
KK	1/1/08

A ELSHARIEF
KYLE KUNITAKE
CALCULATED-DESIGNED BY
CHECKED BY
FUNCTIONAL SUPERVISOR
CELINA AVILES

STATE OF CALIFORNIA - DEPARTMENT OF TRANSPORTATION
Caltrans OFFICE OF DESIGN D

LAST REVISION 01-17-08
DATE PLOTTED => 03-MAY-2010
TIME PLOTTED => 13:18

Dist	COUNTY	ROUTE	KILOMETER POST TOTAL PROJECT	SHEET No.	TOTAL SHEETS
07	LA	5	50.8/58.0	56	869

REGISTERED CIVIL ENGINEER 6/16/08 DATE

5-3-10
PLANS APPROVAL DATE

REGISTERED PROFESSIONAL ENGINEER KYLE M KUNITAKE No. 63726 Exp. 9/30/10 CIVIL STATE OF CALIFORNIA

THE STATE OF CALIFORNIA OR ITS OFFICERS OR AGENTS SHALL NOT BE RESPONSIBLE FOR THE ACCURACY OR COMPLETENESS OF ELECTRONIC COPIES OF THIS PLAN SHEET.

Caltrans Metric

PG 1 : - RIGHT BOTTOM OF BARRIER
PG 2 : - LEFT BOTTOM OF BARRIER

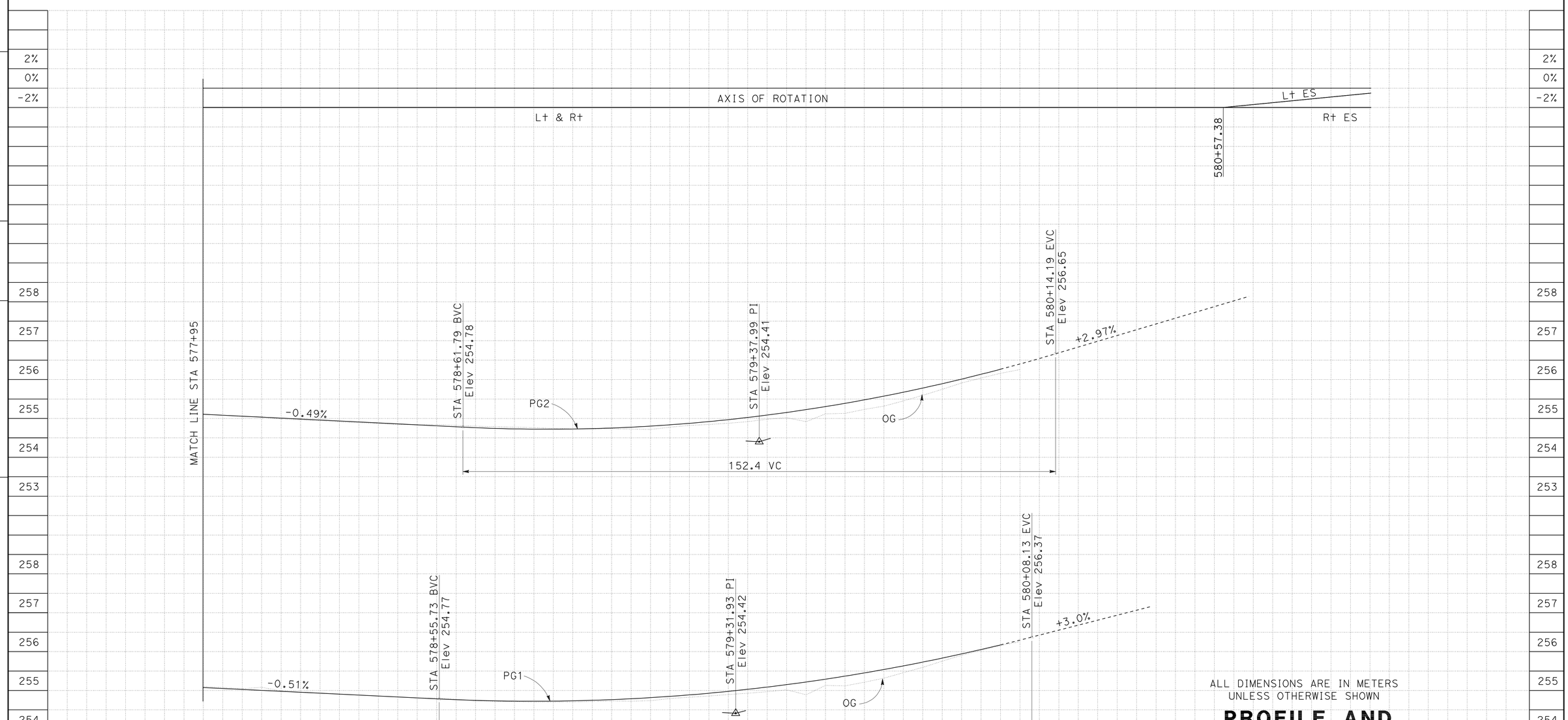

ALL DIMENSIONS ARE IN METERS
UNLESS OTHERWISE SHOWN

PROFILE AND SUPERELEVATION DIAGRAM

SCALE Horiz 1:500
Vert 1:50

PS-24

REVISED BY	DATE REVISED
KK	1/1/08

CALCULATED-DESIGNED BY: A ELSHARIEF
CHECKED BY: KYLE KUNITAKE
FUNCTIONAL SUPERVISOR: CELINA AVILES

STATE OF CALIFORNIA - DEPARTMENT OF TRANSPORTATION
Caltrans OFFICE OF DESIGN D

LAST REVISION 01-17-08
DATE PLOTTED => 03-MAY-2010
TIME PLOTTED => 13:18

Dist	COUNTY	ROUTE	KILOMETER POST TOTAL PROJECT	SHEET No.	TOTAL SHEETS
07	LA	5	50.8/58.0	57	869

REGISTERED CIVIL ENGINEER 7/02/08 DATE

5-3-10
PLANS APPROVAL DATE

REGISTERED PROFESSIONAL ENGINEER
KYLE M KUNITAKE
No. 63726
Exp. 9/30/10
CIVIL
STATE OF CALIFORNIA

THE STATE OF CALIFORNIA OR ITS OFFICERS OR AGENTS SHALL NOT BE RESPONSIBLE FOR THE ACCURACY OR COMPLETENESS OF ELECTRONIC COPIES OF THIS PLAN SHEET.

Caltrans Metric

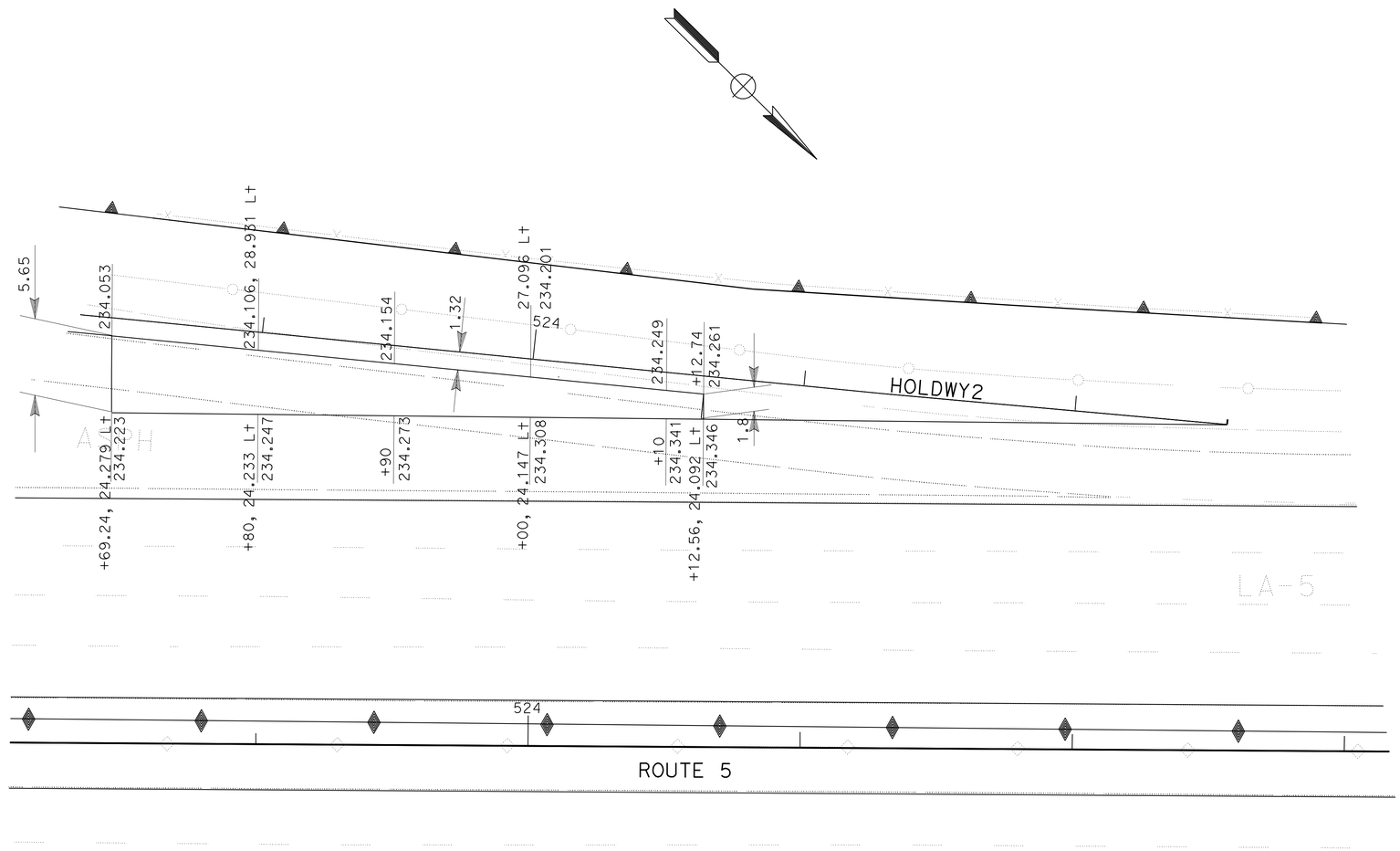

GORE AREA AT HOLDWY2
SOUTHBOUND HOLLYWOOD WAY OFF RAMP

ALL DIMENSIONS ARE IN METERS
UNLESS OTHERWISE SHOWN

CONSTRUCTION DETAILS

SCALE 1:200

C-1

STATE OF CALIFORNIA - DEPARTMENT OF TRANSPORTATION
Caltrans DESIGN

FUNCTIONAL SUPERVISOR: CELINA AVILES
CALCULATED-DESIGNED BY: AMIR ELSHARIEF
CHECKED BY: KYLE KUNITAKE
REVISED BY
DATE REVISED

LAST REVISION: 00-00-00
DATE PLOTTED => 03-MAY-2010
TIME PLOTTED => 13:18

Dist	COUNTY	ROUTE	KILOMETER POST TOTAL PROJECT	SHEET No.	TOTAL SHEETS
07	LA	5	50.8/58.0	58	869

REGISTERED CIVIL ENGINEER 7/02/08 DATE

5-3-10
PLANS APPROVAL DATE

REGISTERED PROFESSIONAL ENGINEER KYLE M KUNITAKE No. 63726 Exp. 9/30/10 CIVIL STATE OF CALIFORNIA

THE STATE OF CALIFORNIA OR ITS OFFICERS OR AGENTS SHALL NOT BE RESPONSIBLE FOR THE ACCURACY OR COMPLETENESS OF ELECTRONIC COPIES OF THIS PLAN SHEET.

Caltrans Metric

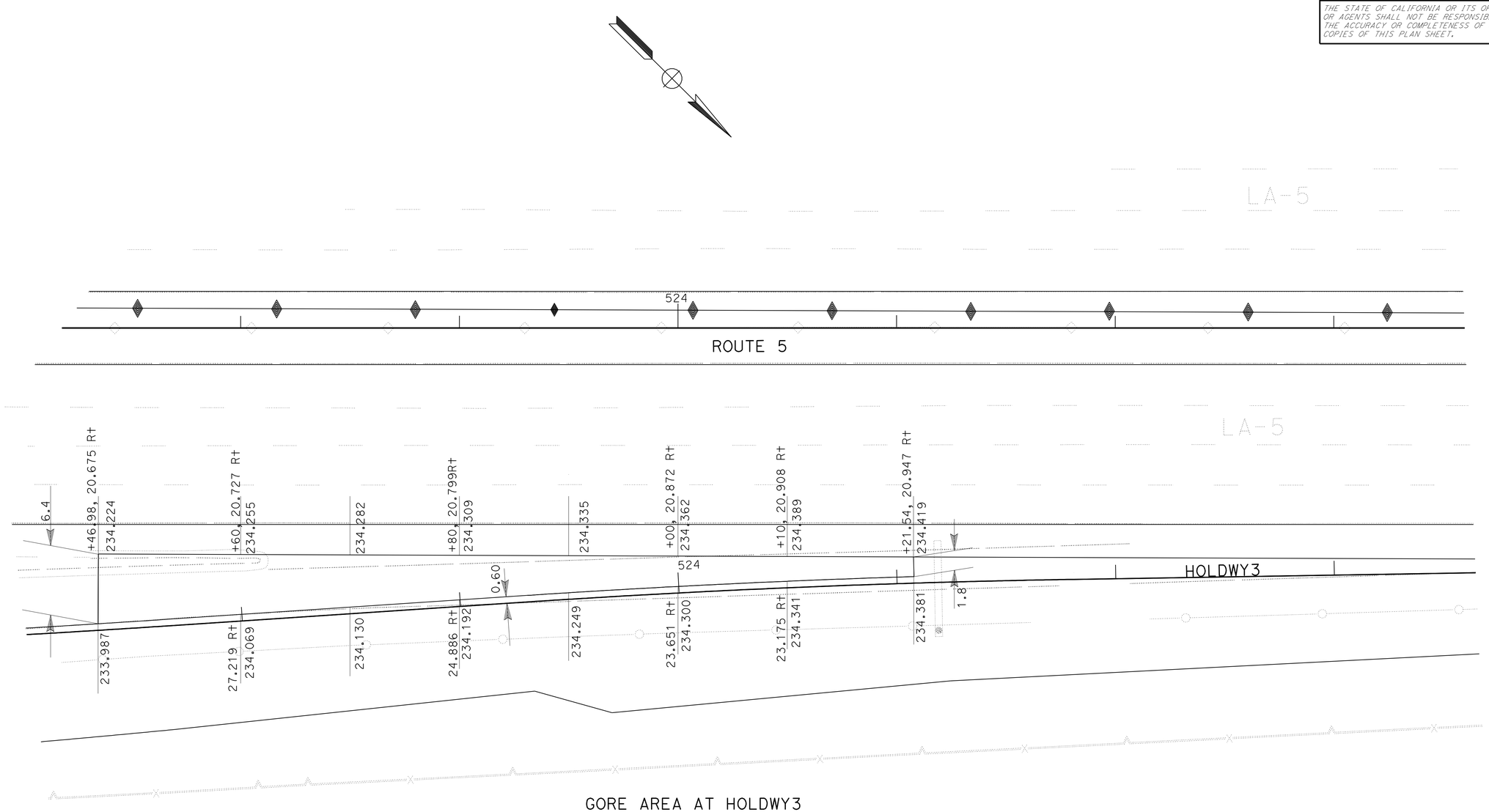

GORE AREA AT HOLDWY3
NORTHBOUND HOLLYWOOD WAY ON RAMP

ALL DIMENSIONS ARE IN METERS
UNLESS OTHERWISE SHOWN

CONSTRUCTION DETAILS

SCALE 1:200

C-2

STATE OF CALIFORNIA - DEPARTMENT OF TRANSPORTATION
Caltrans DESIGN

FUNCTIONAL SUPERVISOR: CELINA AVILES
CALCULATED-DESIGNED BY: AMIR ELSHARIEF
CHECKED BY: KYLE KUNITAKE
REVISED BY
DATE REVISED

LAST REVISION 00-00-00
DATE PLOTTED => 03-MAY-2010
TIME PLOTTED => 13:18

Dist	COUNTY	ROUTE	KILOMETER POST TOTAL PROJECT	SHEET No.	TOTAL SHEETS
07	LA	5	50.8/58.0	59	869

REGISTERED CIVIL ENGINEER 7/02/08 DATE

5-3-10
PLANS APPROVAL DATE

REGISTERED PROFESSIONAL ENGINEER KYLE M KUNITAKE No. 63726 Exp. 9/30/10 CIVIL STATE OF CALIFORNIA

THE STATE OF CALIFORNIA OR ITS OFFICERS OR AGENTS SHALL NOT BE RESPONSIBLE FOR THE ACCURACY OR COMPLETENESS OF ELECTRONIC COPIES OF THIS PLAN SHEET.

Caltrans Metric

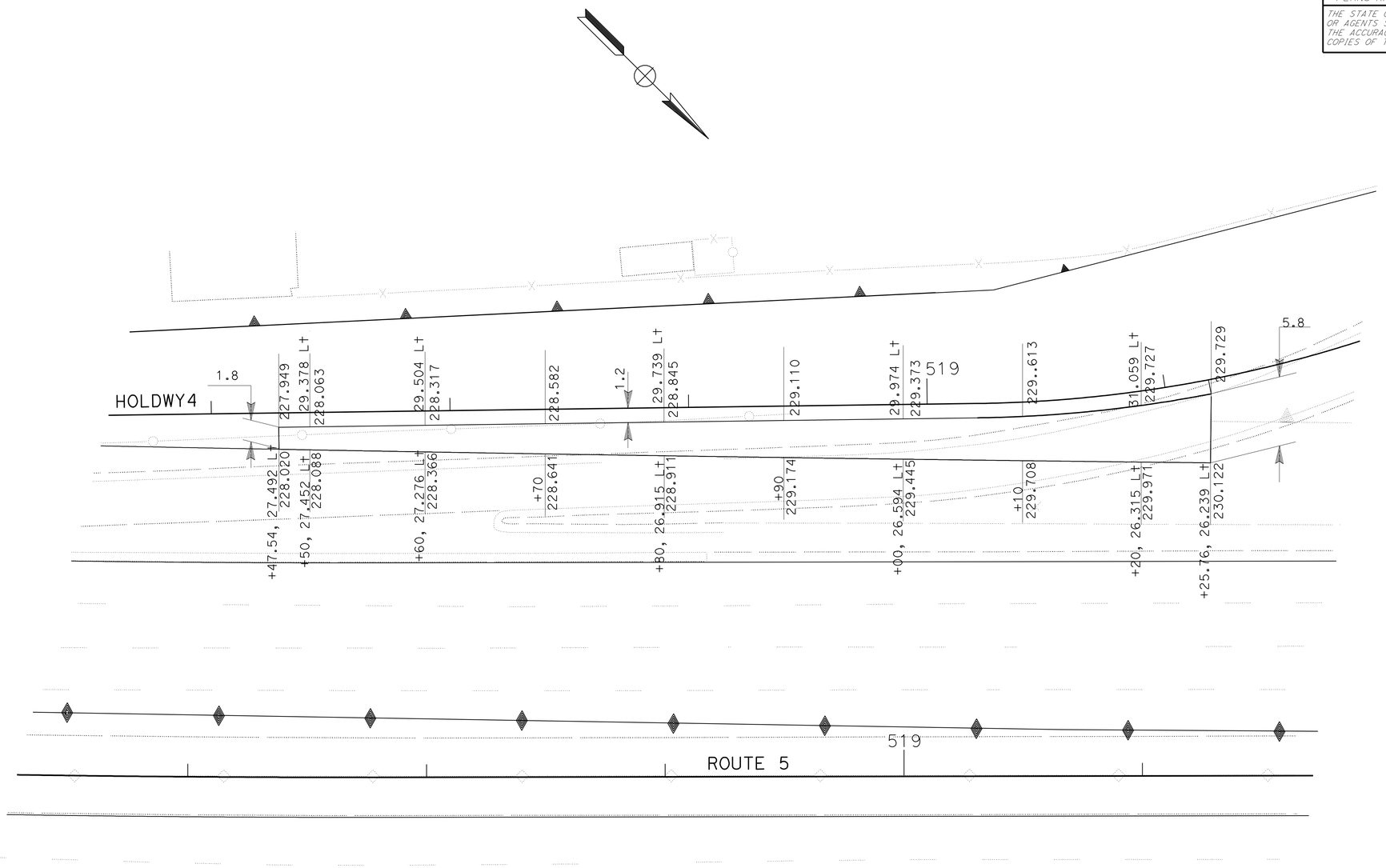

GORE AREA AT HOLDWY4
SOUTHBOUND HOLLYWOOD WAY ON RAMP

ALL DIMENSIONS ARE IN METERS
UNLESS OTHERWISE SHOWN

CONSTRUCTION DETAILS

SCALE 1:200

C-3

STATE OF CALIFORNIA - DEPARTMENT OF TRANSPORTATION
Caltrans
DESIGN

FUNCTIONAL SUPERVISOR: CELINA AVILES
CALCULATED-DESIGNED BY: AMIR ELSHARIEF
CHECKED BY: KYLE KUNITAKE
REVISED BY
DATE REVISED

LAST REVISION 00-00-00
DATE PLOTTED => 03-MAY-2010
TIME PLOTTED => 13:18

Dist	COUNTY	ROUTE	KILOMETER POST TOTAL PROJECT	SHEET No.	TOTAL SHEETS
07	LA	5	50.8/58.0	60	869

REGISTERED CIVIL ENGINEER 7/02/08 DATE

5-3-10
PLANS APPROVAL DATE

REGISTERED PROFESSIONAL ENGINEER KYLE M KUNITAKE No. 63726 Exp. 9/30/10 CIVIL STATE OF CALIFORNIA

THE STATE OF CALIFORNIA OR ITS OFFICERS OR AGENTS SHALL NOT BE RESPONSIBLE FOR THE ACCURACY OR COMPLETENESS OF ELECTRONIC COPIES OF THIS PLAN SHEET.

Caltrans Metric

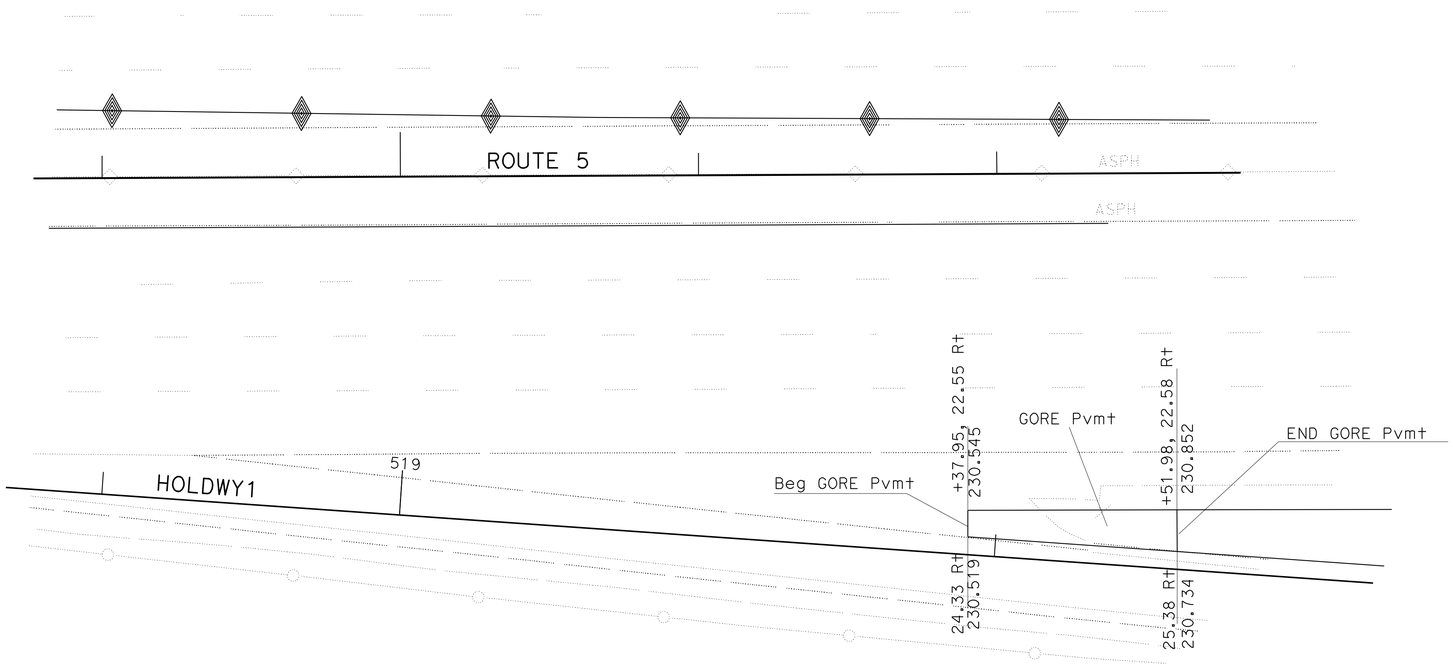

GORE AREA AT HOLDWY1
NORTHBOUND HOLLYWOOD WAY OFF RAMP

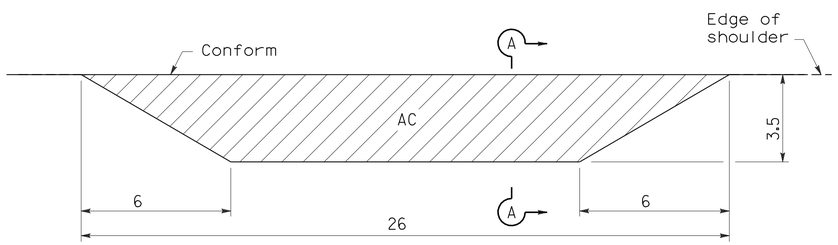

PLAN

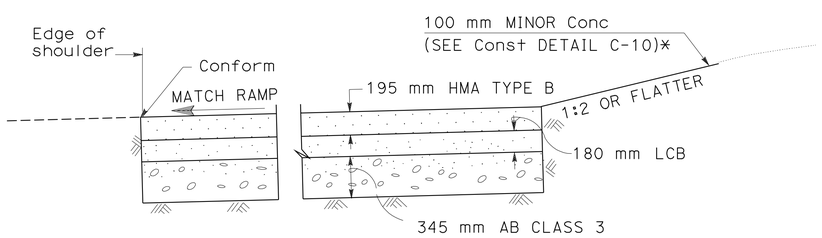

*STA 519+74.38 TO 520+00.38

SECTION A-A

MAITENANCE VEHICLE PULLOUT DETAIL

NO SCALE

ALL DIMENSIONS ARE IN METERS
UNLESS OTHERWISE SHOWN

CONSTRUCTION DETAILS

SCALE 1:200

C-4

STATE OF CALIFORNIA - DEPARTMENT OF TRANSPORTATION
Caltrans
DESIGN

FUNCTIONAL SUPERVISOR: CELINA AVILES
CALCULATED-DESIGNED BY: AMIR ELSHARIEF
CHECKED BY: KYLE KUNITAKE
REVISED BY
DATE REVISED

LAST REVISION 00-00-00
DATE PLOTTED => 03-MAY-2010
TIME PLOTTED => 13:18

Dist	COUNTY	ROUTE	KILOMETER POST TOTAL PROJECT	SHEET No.	TOTAL SHEETS
07	LA	5	50.8/58.0	61	869

REGISTERED CIVIL ENGINEER 7/02/08 DATE

5-3-10
PLANS APPROVAL DATE

REGISTERED PROFESSIONAL ENGINEER KYLE M KUNITAKE No. 63726 Exp. 9/30/10 CIVIL STATE OF CALIFORNIA

THE STATE OF CALIFORNIA OR ITS OFFICERS OR AGENTS SHALL NOT BE RESPONSIBLE FOR THE ACCURACY OR COMPLETENESS OF ELECTRONIC COPIES OF THIS PLAN SHEET.

Caltrans Metric

NOTES:

1. SEE CURB RAMP CASE CM FOR GROOVING AND DETECTABLE WARNING SURFACE DETAILS.
2. MAXIMUM SLOPES OF ADJOINING GUTTERS, THE ROAD SURFACE IMMEDIATELY ADJACENT TO THE CURB RAMP OR ACCESSIBLE ROUTE SHALL NOT EXCEED 5 PERCENT WITHIN 1.22 m OF THE TOP AND BOTTOM OF THE CURB RAMP.

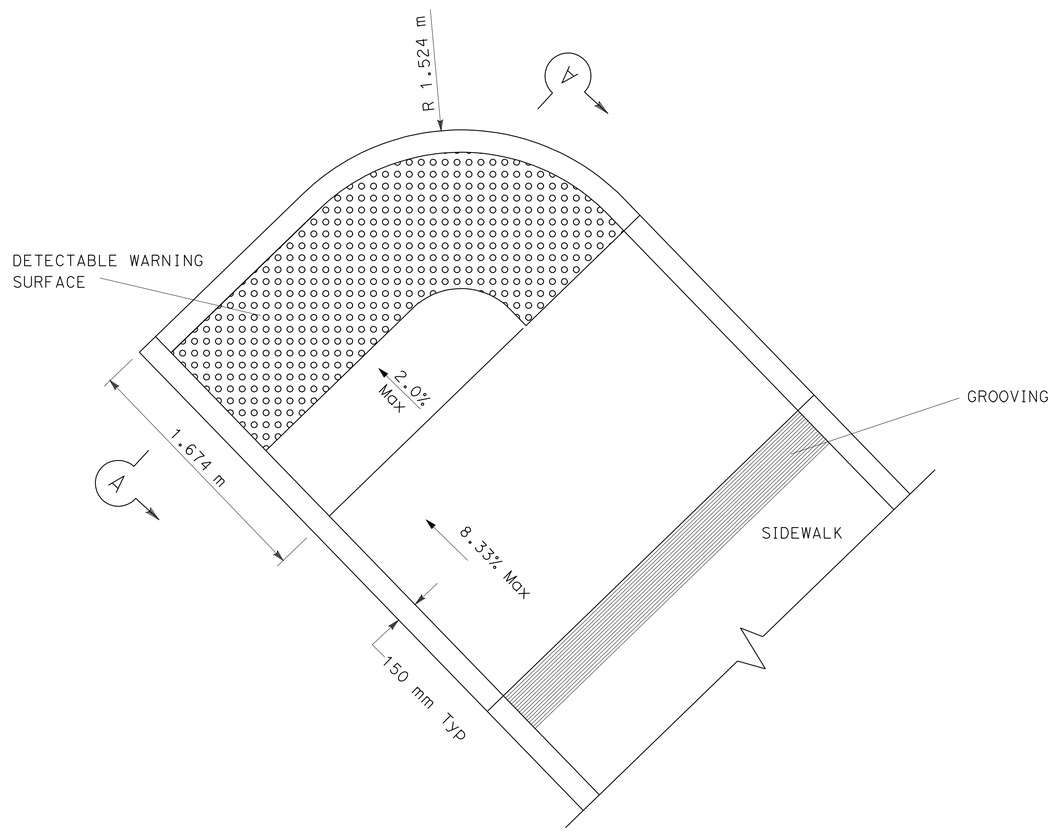

CURB RAMP CASE CM (MOD) (2)

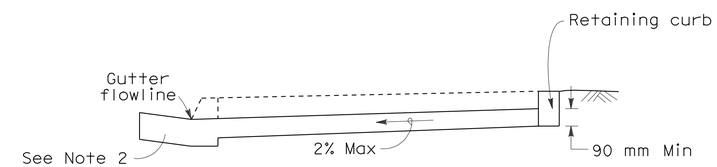

SECTION A-A

ALL DIMENSIONS ARE IN METERS
UNLESS OTHERWISE SHOWN

CONSTRUCTION DETAILS

SCALE 1:20

C-5

STATE OF CALIFORNIA - DEPARTMENT OF TRANSPORTATION
Caltrans DESIGN

FUNCTIONAL SUPERVISOR: CELINA AVILES
CALCULATED-DESIGNED BY: KATHY DO PHAM
CHECKED BY: AMIR ELSHARIEF
REVISED BY / DATE REVISED

LAST REVISION 00-00-00 | DATE PLOTTED => 03-MAY-2010 | TIME PLOTTED => 13:18

Dist	COUNTY	ROUTE	KILOMETER POST TOTAL PROJECT	SHEET No.	TOTAL SHEETS
07	LA	5	50.8/58.0	62	869

REGISTERED CIVIL ENGINEER 7/02/08 DATE

5-3-10
PLANS APPROVAL DATE

REGISTERED PROFESSIONAL ENGINEER KYLE M KUNITAKE No. 63726 Exp. 9/30/10 CIVIL STATE OF CALIFORNIA

THE STATE OF CALIFORNIA OR ITS OFFICERS OR AGENTS SHALL NOT BE RESPONSIBLE FOR THE ACCURACY OR COMPLETENESS OF ELECTRONIC COPIES OF THIS PLAN SHEET.

Caltrans Metric

NOTES:

1. SEE CURB RAMP CASE CM FOR GROOVING AND DETECTABLE WARNING SURFACE DETAILS.
2. MAXIMUM SLOPES OF ADJOINING GUTTERS, THE ROAD SURFACE IMMEDIATELY ADJACENT TO THE CURB RAMP OR ACCESSIBLE ROUTE SHALL NOT EXCEED 5 PERCENT WITHIN 1.22 m OF THE TOP AND BOTTOM OF THE CURB RAMP.

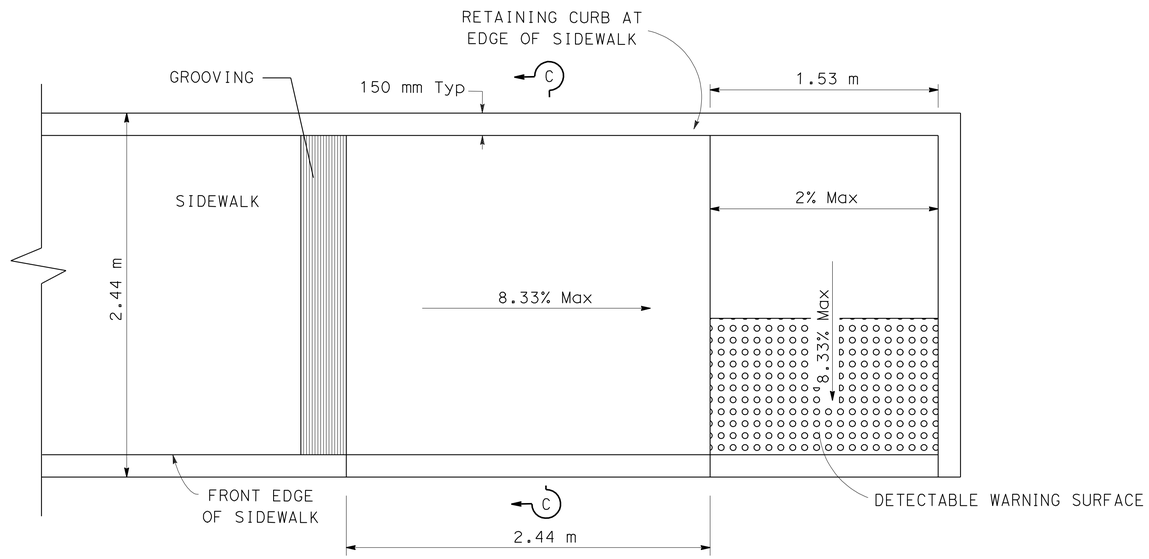

CURB RAMP CASE C (MOD) (3)

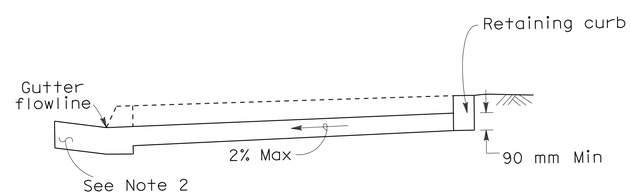

SECTION C-C

ALL DIMENSIONS ARE IN METERS
UNLESS OTHERWISE SHOWN

CONSTRUCTION DETAILS

SCALE 1:20

C-6

STATE OF CALIFORNIA - DEPARTMENT OF TRANSPORTATION
Caltrans DESIGN

FUNCTIONAL SUPERVISOR CELINA AVILES
CALCULATED-DESIGNED BY KATHY DO PHAM
CHECKED BY AMIR ELSHARIEF
REVISED BY
DATE REVISED

LAST REVISION 00-00-00 DATE PLOTTED => 03-MAY-2010 TIME PLOTTED => 13:18

Dist	COUNTY	ROUTE	KILOMETER POST TOTAL PROJECT	SHEET No.	TOTAL SHEETS
07	LA	5	50.8/58.0	63	869

REGISTERED CIVIL ENGINEER 7/02/08 DATE

5-3-10
PLANS APPROVAL DATE

REGISTERED PROFESSIONAL ENGINEER KYLE M KUNITAKE No. 63726 Exp. 9/30/10 CIVIL STATE OF CALIFORNIA

THE STATE OF CALIFORNIA OR ITS OFFICERS OR AGENTS SHALL NOT BE RESPONSIBLE FOR THE ACCURACY OR COMPLETENESS OF ELECTRONIC COPIES OF THIS PLAN SHEET.

Caltrans Metric

NOTES:

1. SEE CURB RAMP CASE C MODIFIED FOR GROOVING AND DETECTABLE WARNING SURFACE DETAILS.
2. MAXIMUM SLOPES OF ADJOINING GUTTERS, THE ROAD SURFACE IMMEDIATELY ADJACENT TO THE CURB RAMP OR ACCESSIBLE ROUTE SHALL NOT EXCEED 5 PERCENT WITHIN 1.22 m OF THE TOP AND BOTTOM OF THE CURB RAMP.
3. FOR DETAILS NOT SHOWN, SEE REVISED STANDARD PLAN RSPA88A.

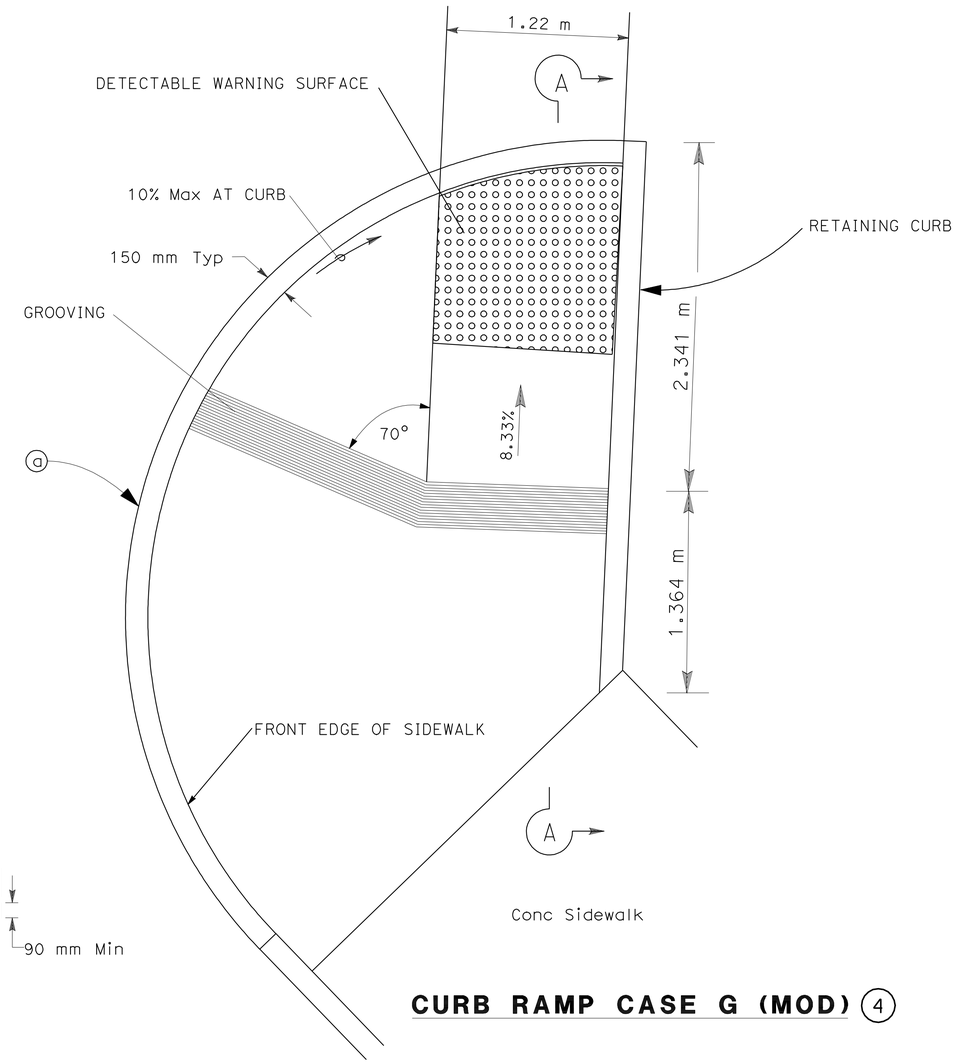

CURB RAMP CASE G (MOD) (4)

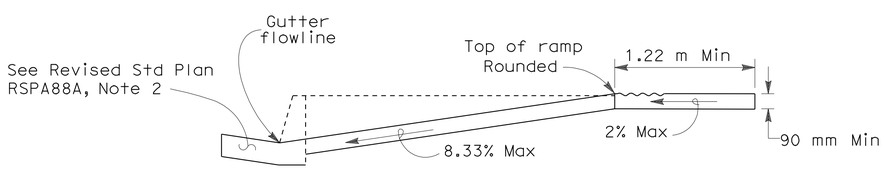

SECTION A-A

CURVE DATA

No.	R	Δ	T	L
a	3.20	136°36'09"	8.04	7.63

ALL DIMENSIONS ARE IN METERS UNLESS OTHERWISE SHOWN

CONSTRUCTION DETAILS

SCALE 1:20

C-7

STATE OF CALIFORNIA - DEPARTMENT OF TRANSPORTATION
Caltrans
DESIGN

FUNCTIONAL SUPERVISOR: CELINA AVILES
CALCULATED-DESIGNED BY: KATHY DO PHAM
CHECKED BY: AMIR ELSHARIEF
REVISED BY: DW
DATE REVISED: 05-08

LAST REVISION 00-00-00
DATE PLOTTED => 03-MAY-2010
TIME PLOTTED => 13:18

Dist	COUNTY	ROUTE	KILOMETER POST TOTAL PROJECT	SHEET No.	TOTAL SHEETS
07	LA	5	50.8/58.0	64	869

REGISTERED CIVIL ENGINEER 7/02/08 DATE

5-3-10
PLANS APPROVAL DATE

REGISTERED PROFESSIONAL ENGINEER KYLE M KUNITAKE No. 63726 Exp. 9/30/10 CIVIL STATE OF CALIFORNIA

THE STATE OF CALIFORNIA OR ITS OFFICERS OR AGENTS SHALL NOT BE RESPONSIBLE FOR THE ACCURACY OR COMPLETENESS OF ELECTRONIC COPIES OF THIS PLAN SHEET.

Caltrans Metric

NOTE:

1. FOR DETAILS NOT SHOWN, SEE REVISED STANDARD PLAN RSPA88A.

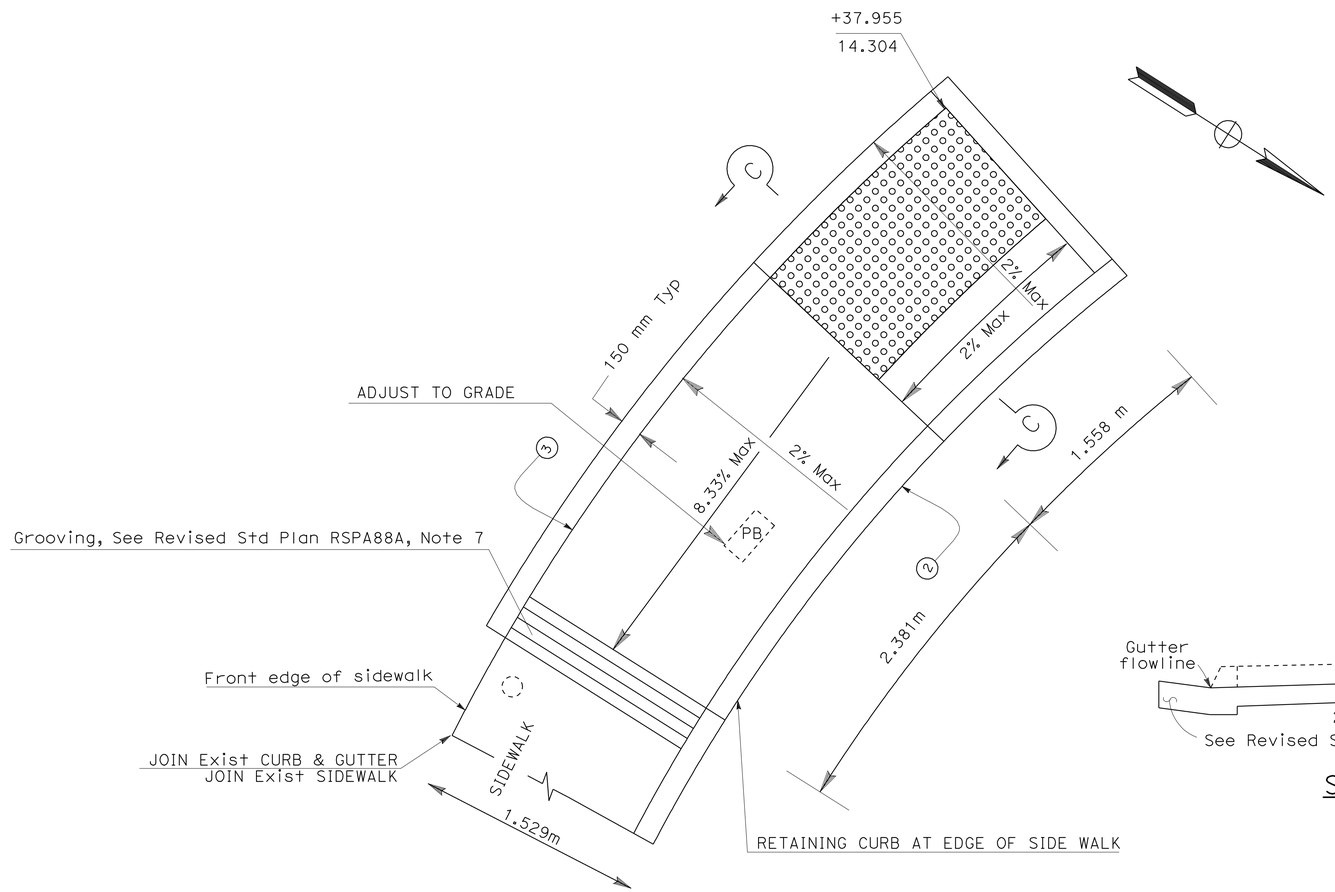

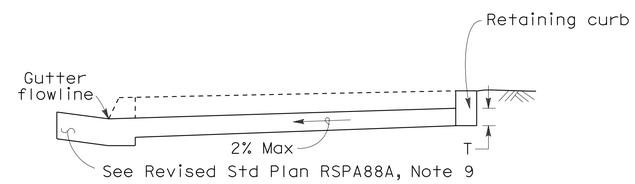

SECTION C-C

CURB RAMP CASE C (MOD) (6)

CURVE DATA

No.	R	Δ	T	L
(2)	11.85	25°46'50"	2.71	5.33
(3)	13.81	23°51'20"	2.92	5.75

ALL DIMENSIONS ARE IN METERS
UNLESS OTHERWISE SHOWN

CONSTRUCTION DETAILS

SCALE 1:20

C-8

STATE OF CALIFORNIA - DEPARTMENT OF TRANSPORTATION
Caltrans DESIGN

FUNCTIONAL SUPERVISOR CELINA AVILES
CALCULATED-DESIGNED BY KATHY DO PHAM
CHECKED BY AMIR ELSHARIEF
REVISED BY DW
DATE REVISED 05-08

LAST REVISION 00-00-00 DATE PLOTTED => 03-MAY-2010 TIME PLOTTED => 13:19

NOTE: FOR COMPLETE RIGHT OF WAY AND ACCURATE ACCESS DATA, SEE RIGHT OF WAY RECORD MAPS AT DISTRICT OFFICE.

Dist	COUNTY	ROUTE	KILOMETER POST TOTAL PROJECT	SHEET No.	TOTAL SHEETS
07	LA	5	50.8/58.0	65	869

LICENSED LANDSCAPE ARCHITECT

5-3-10
PLANS APPROVAL DATE

LICENSED LANDSCAPE ARCHITECT ANTHONY PETER CHACON No. 1422 Signature 4-30-10 Renewal Date Date STATE OF CALIFORNIA

THE STATE OF CALIFORNIA OR ITS OFFICERS OR AGENTS SHALL NOT BE RESPONSIBLE FOR THE ACCURACY OR COMPLETENESS OF ELECTRONIC COPIES OF THIS PLAN SHEET.

MELÉNDREZ
617 SOUTH OLIVE ST., 11TH FLOOR
LOS ANGELES, CA. 90014

100 SOUTH MAIN ST.
LOS ANGELES, CA. 90012

IRRIGATION CROSSOVERS

LOCATION		SIDE		CONDUIT TYPE (2)	(N) WATER LINE CROSSOVER	(N) SPRINKLER CONTROL CROSSOVER
LINE	STATION	L†	R†	SIZE (mm) DN 200 / LENGTH (m)	SIZE (mm) DN	SIZE (mm) DN
ROUTE 5	519+50	-	-	14	65	50
ROUTE 5	520+60	-	-	10	65	50
ROUTE 5	521+60	-	-	10	65	50
ROUTE 5	563+50	-	-	13	65	50
ROUTE 5	564+10	-	-	16	65	50
	TOTAL			63		

(N) - NOT A SEPARATE PAY ITEM FOR INFORMATION ONLY
DN - DIAMETER NOMINAL
X - DENOTES REQUIREMENT

CONDUIT TYPE
(Applicable when circled below and shown under the 'CONDUIT TYPE' column heading)

1 BITUMINOUS COATED CORRUGATED STEEL PIPE (1.626 mm THICK)
(2) WELDED STEEL PIPE
3 CORRUGATED HIGH DENSITY POLYETHYLENE PIPE
4 ALTERNATIVE CONDUIT

IRRIGATION SLEEVE

* FOR USE UNDER MINOR CONCRETE

LOCATION		SIDE		CONDUIT TYPE (3)	(N) WATER LINE CROSSOVER	(N) SPRINKLER CONTROL CROSSOVER
LINE	STATION	L†	R†	SIZE (mm) DN 100 / LENGTH (m)	SIZE (mm) DN	SIZE (mm) DN
						-
ROUTE 5	518+42	-	-	57	20/25	-
ROUTE 5	519+30	-	-	20	20	-
ROUTE 5	519+50	-	-	10	20	-
ROUTE 5	519+90	-	-	40	20	-
ROUTE 5	521+58	-	-	102	20/25	-
ROUTE 5	521+58	-	-	70	20/25	-
	TOTAL			299		

(N) - NOT A SEPARATE PAY ITEM FOR INFORMATION ONLY
DN - DIAMETER NOMINAL
X - DENOTES REQUIREMENT

CONDUIT TYPE
(Applicable when circled below and shown under the 'CONDUIT TYPE' column heading)

1 BITUMINOUS COATED CORRUGATED STEEL PIPE (1.626 mm THICK)
2 CORRUGATED STEEL PIPE (1.626 mm THICK)
(3) POLYVINYL CHLORIDE (PVC) PLASTIC PIPE
4 ALTERNATIVE CONDUIT

THIS PLAN ACCURATE FOR IRRIGATION WORK ONLY.

CONSTRUCTION DETAILS (IRRIGATION CROSSOVERS) (IRRIGATION SLEEVE)

C-9

STATE OF CALIFORNIA - DEPARTMENT OF TRANSPORTATION
Caltrans

CONSULTANT SENIOR LANDSCAPE ARCHITECT: T. CHACON
CALCULATED-DESIGNED BY: D. SHIRAI
CHECKED BY: Y. KIM
REVISED BY: L. RAZO
DATE REVISED: 05-04-07

LAST REVISION 00-00-00
DATE PLOTTED => 03-MAY-2010
TIME PLOTTED => 13:19

Dist	COUNTY	ROUTE	KILOMETER POST TOTAL PROJECT	SHEET No.	TOTAL SHEETS
07	LA	5	50.8/58.0	66	869

Caltrans Metric

Keith Sellers
LICENSED LANDSCAPE ARCHITECT

5-3-10
PLANS APPROVAL DATE

LICENSED LANDSCAPE ARCHITECT KEITH SELLERS No. 5288 Keith Sellers Registration 04-30-10 Renewal Date 00-00-00 Date STATE OF CALIFORNIA

THE STATE OF CALIFORNIA OR ITS OFFICERS OR AGENTS SHALL NOT BE RESPONSIBLE FOR THE ACCURACY OR COMPLETENESS OF ELECTRONIC COPIES OF THIS PLAN SHEET.

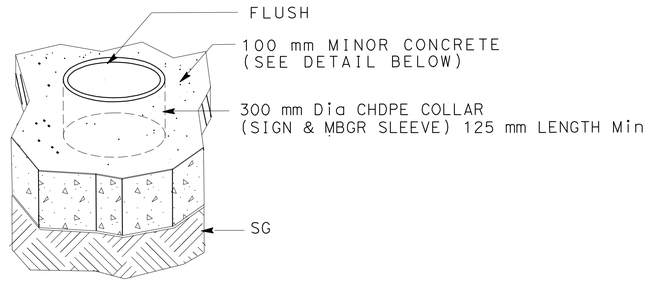

COLLAR DETAIL

NOTE:
PLACE 300 mm Dia. CHDPE COLLAR (125 mm LENGTH Min)
AS FORM (CLEAR) AROUND POST

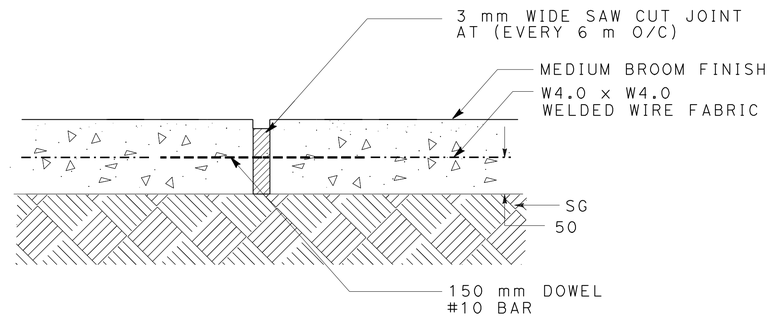

JOINT DETAIL

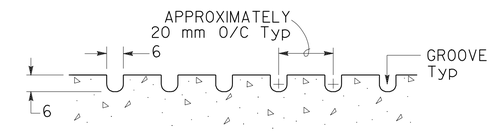

GROOVING DETAIL

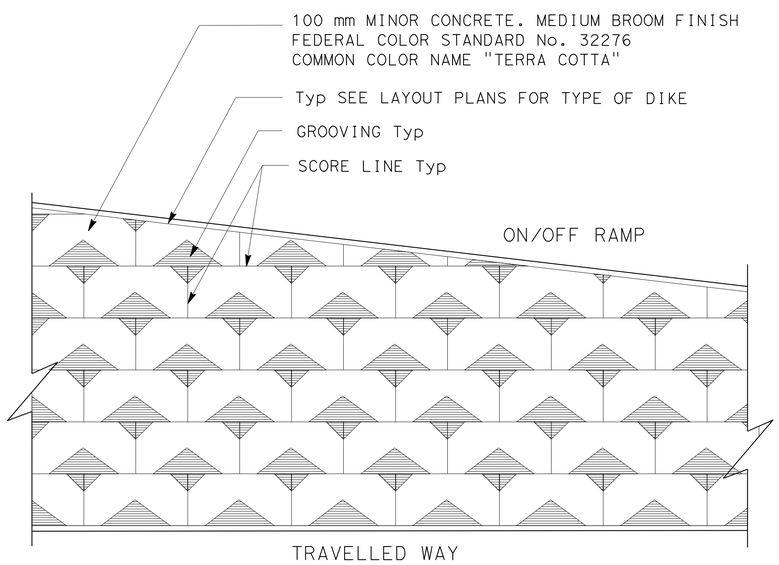

TYPICAL MINOR CONCRETE (STAMPED CONCRETE) LAYOUT

(FOR LOCATIONS OF MINOR CONCRETE (STAMPED CONCRETE) SEE THE MINOR CONCRETE (STAMPED CONCRETE) TABLE SHOWN ON SHEET Q-10, SUMMARY OF QUANTITIES

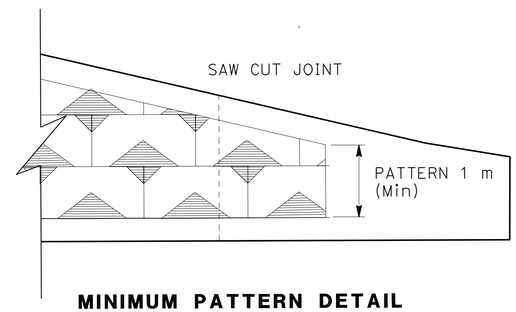

MINIMUM PATTERN DETAIL

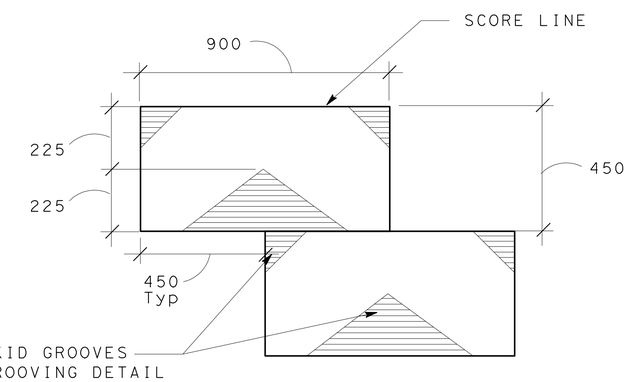

STAMPED CONCRETE PATTERN DETAIL

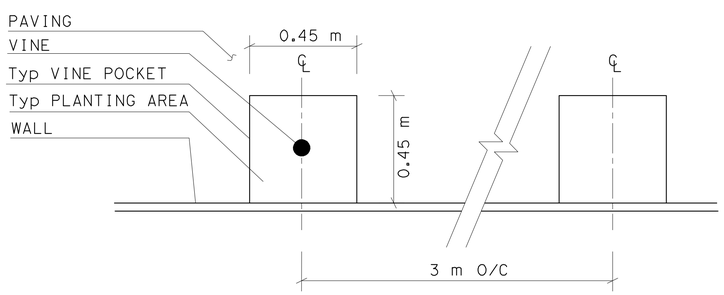

VINE CUT-OUTS IN GORE AREA

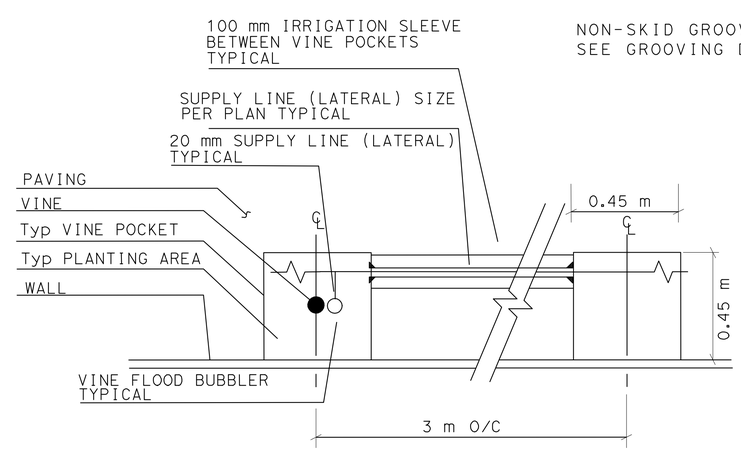

SLEEVE LAYOUT FOR VINE CUT-OUTS IN GORE AREAS

ALL DIMENSIONS ARE IN
MILLIMETERS UNLESS OTHERWISE SHOWN

CONSTRUCTION DETAILS MINOR CONCRETE (STAMPED CONCRETE)

NO SCALE

C-10

STATE OF CALIFORNIA - DEPARTMENT OF TRANSPORTATION
Caltrans LANDSCAPE ARCHITECTURE

SENIOR LANDSCAPE ARCHITECT: PATRICIA WATANABE
CALCULATED-DESIGNED BY: J MILLMAN
CHECKED BY: KEITH SELLERS
REVISED BY
DATE REVISED

LAST REVISION 00-00-00
DATE PLOTTED => 03-MAY-2010
TIME PLOTTED => 13:19

Dist	COUNTY	ROUTE	KILOMETER POST TOTAL PROJECT	SHEET No.	TOTAL SHEETS
07	LA	5	50.8/58.0	67	869

REGISTERED CIVIL ENGINEER 7/02/08 DATE

5-3-10
PLANS APPROVAL DATE

REGISTERED PROFESSIONAL ENGINEER KYLE M KUNITAKE No. 63726 Exp. 9/30/10 CIVIL STATE OF CALIFORNIA

THE STATE OF CALIFORNIA OR ITS OFFICERS OR AGENTS SHALL NOT BE RESPONSIBLE FOR THE ACCURACY OR COMPLETENESS OF ELECTRONIC COPIES OF THIS PLAN SHEET.

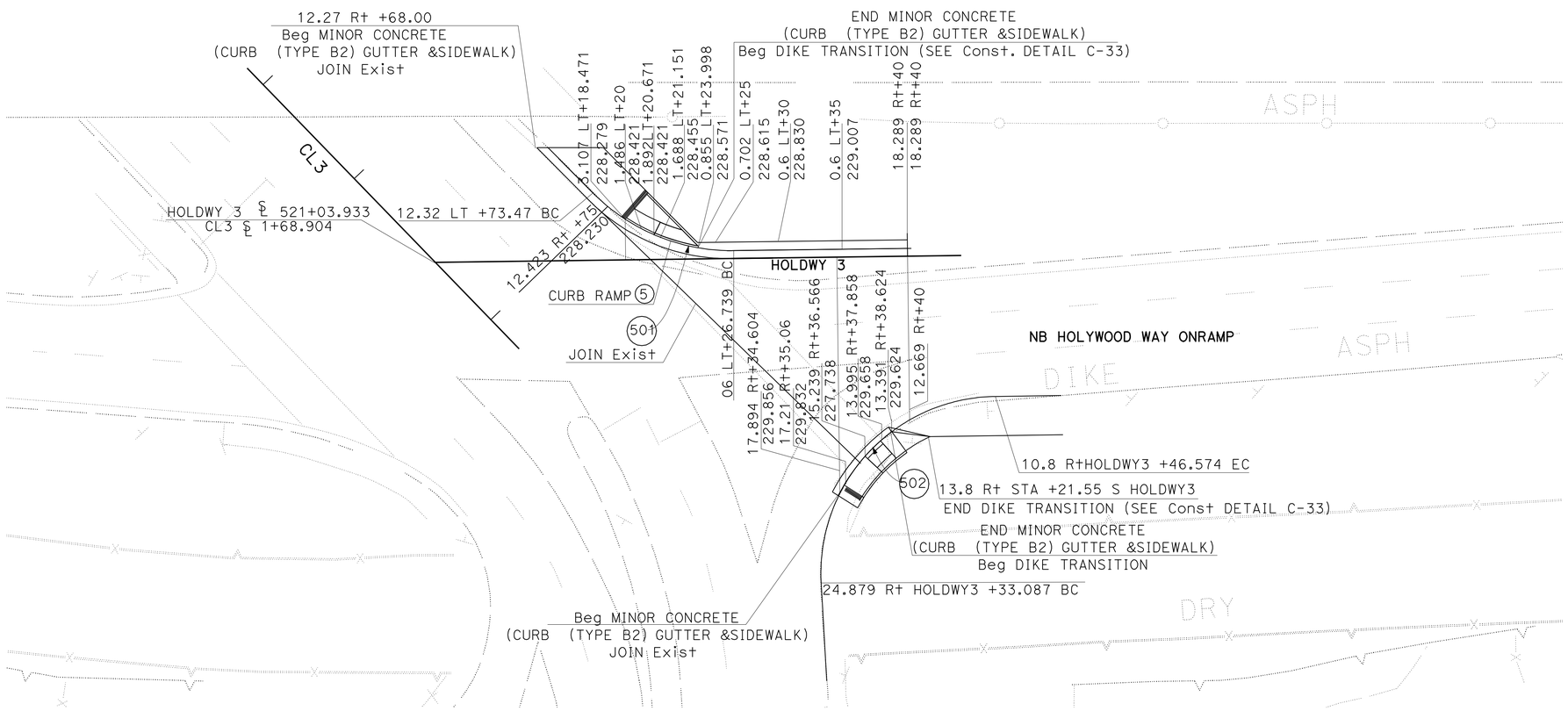

CURVE DATA

No.	R	Δ	T	L
501	14.89	45°57′40″	6.31	11.94
502	13.50	92°27′30″	14.09	21.78

ALL DIMENSIONS ARE IN METERS
UNLESS OTHERWISE SHOWN

CONSTRUCTION DETAILS

SCALE 1:20

C-11

STATE OF CALIFORNIA - DEPARTMENT OF TRANSPORTATION
Caltrans DESIGN

FUNCTIONAL SUPERVISOR CELINA AVILES
CALCULATED-DESIGNED BY JOSEPH KIBE
CHECKED BY KYLE KUNITAKE
REVISED BY
DATE REVISED

LAST REVISION 00-00-00 DATE PLOTTED => 03-MAY-2010 TIME PLOTTED => 13:19

Dist	COUNTY	ROUTE	KILOMETER POST TOTAL PROJECT	SHEET No.	TOTAL SHEETS
07	LA	5	50.8/58.0	68	869

REGISTERED CIVIL ENGINEER 7/02/08 DATE

5-3-10
PLANS APPROVAL DATE

REGISTERED PROFESSIONAL ENGINEER KYLE M KUNITAKE No. 63726 Exp. 9/30/10 CIVIL STATE OF CALIFORNIA

THE STATE OF CALIFORNIA OR ITS OFFICERS OR AGENTS SHALL NOT BE RESPONSIBLE FOR THE ACCURACY OR COMPLETENESS OF ELECTRONIC COPIES OF THIS PLAN SHEET.

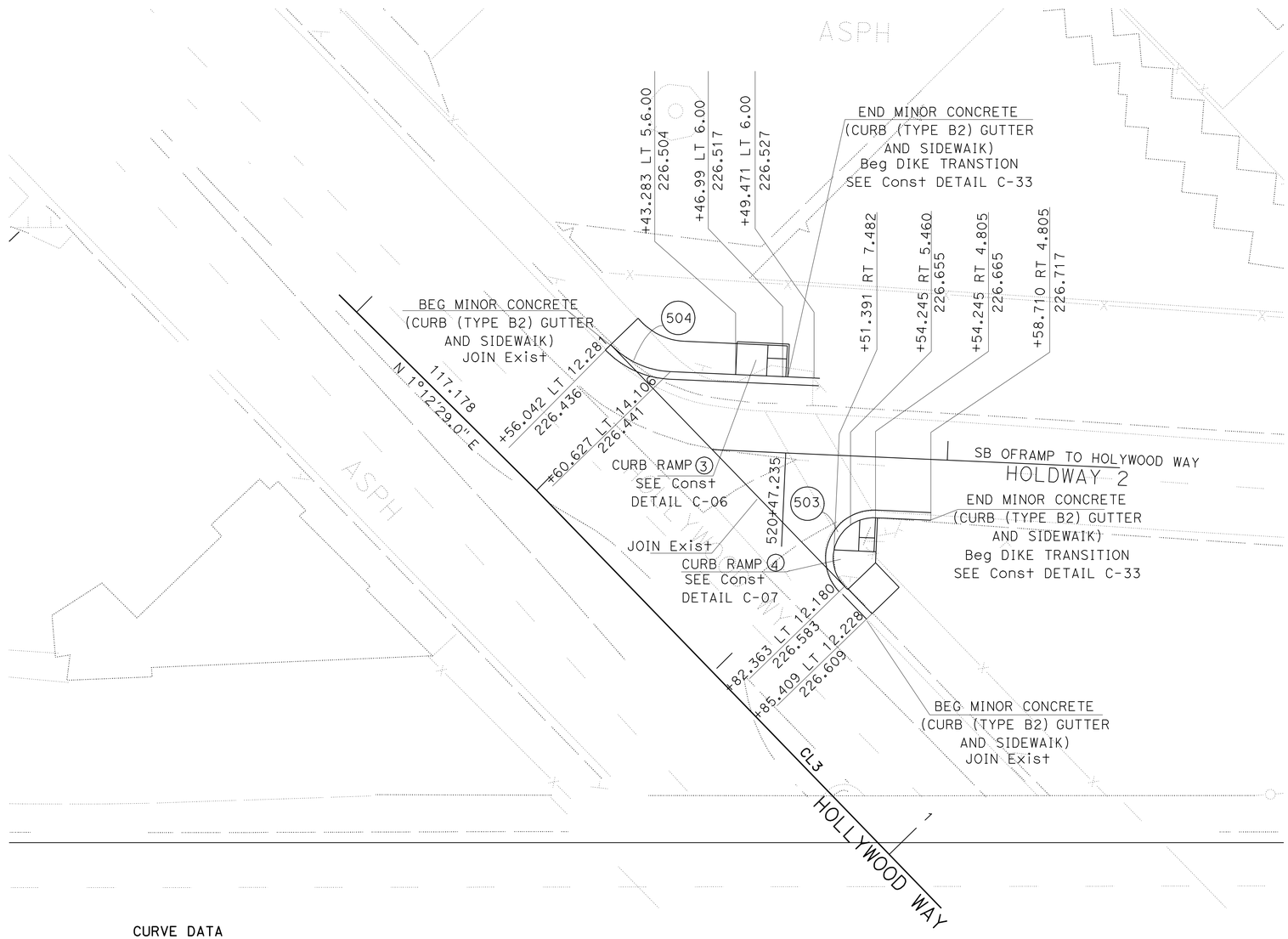

CURVE DATA

No.	R	Δ	T	L
503	3.20	136°36'09"	8.04	7.63
504	7.00	43°23'51"	2.79	5.30

ALL DIMENSIONS ARE IN METERS
UNLESS OTHERWISE SHOWN

CONSTRUCTION DETAILS

SCALE 1:20

C-12

STATE OF CALIFORNIA - DEPARTMENT OF TRANSPORTATION
Caltrans DESIGN

FUNCTIONAL SUPERVISOR: CELINA AVILES
CALCULATED-DESIGNED BY: JOSEPH KIBE
CHECKED BY: KYLE KUNITAKE
REVISED BY
DATE REVISED

LAST REVISION 00-00-00
DATE PLOTTED => 03-MAY-2010
TIME PLOTTED => 13:19

Dist	COUNTY	ROUTE	KILOMETER POST TOTAL PROJECT	SHEET No.	TOTAL SHEETS
07	LA	5	50.8/58.0	69	869

REGISTERED CIVIL ENGINEER 7/02/08 DATE

5-3-10
PLANS APPROVAL DATE

REGISTERED PROFESSIONAL ENGINEER KYLE M KUNITAKE No. 63726 Exp. 9/30/10 CIVIL STATE OF CALIFORNIA

THE STATE OF CALIFORNIA OR ITS OFFICERS OR AGENTS SHALL NOT BE RESPONSIBLE FOR THE ACCURACY OR COMPLETENESS OF ELECTRONIC COPIES OF THIS PLAN SHEET.

Caltrans Metric

NOTE: 1. FOR COMPLETE RIGHT OF WAY AND ACCURATE ACCESS DATA, SEE RIGHT OF WAY RECORD MAPS AT DISTRICT OFFICE.

LEGEND:

- AERIALLY DEPOSITED LEAD STRUCTURAL EXC (TYPE Y2)
- AERIALLY DEPOSITED LEAD STRUCTURAL EXC (TYPE Y1)
- AERIALLY DEPOSITED LEAD STRUCTURAL EXC (TYPE Z3)
- AERIALLY DEPOSITED LEAD ROADWAY EXCAVATION (TYPE Y1)
- AERIALLY DEPOSITED LEAD ROADWAY EXC (TYPE Z3)
- AERIALLY DEPOSITED LEAD GRUBBING EXCAVATION (TYPE Y1)
- AERIALLY DEPOSITED LEAD GRUBBING EXCAVATION (TYPE Z3)

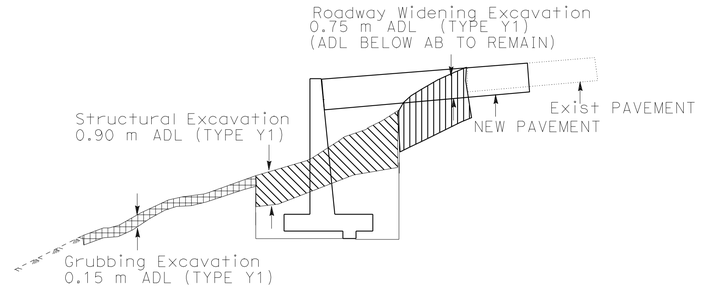

TYPICAL SECTION K-K

NO SCALE

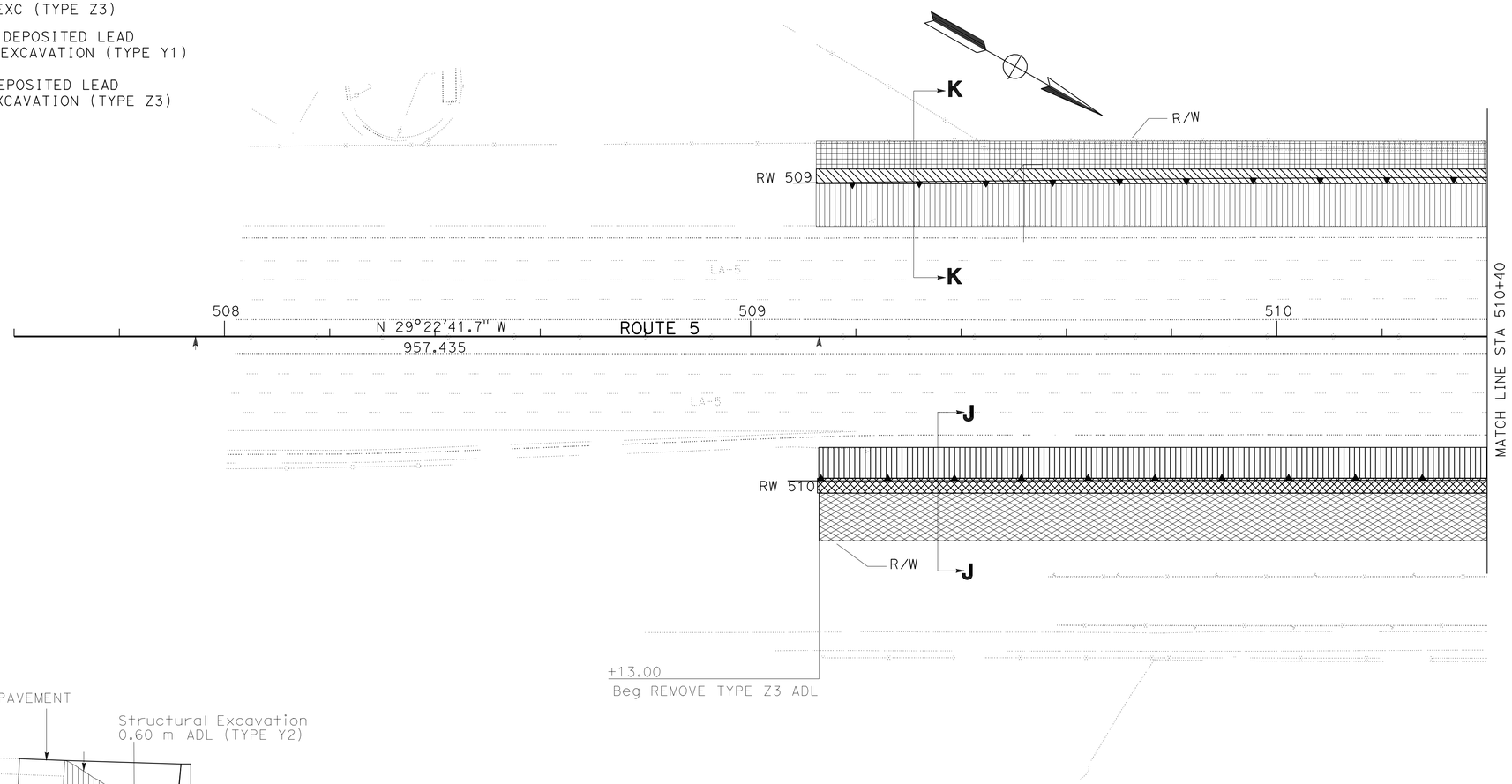

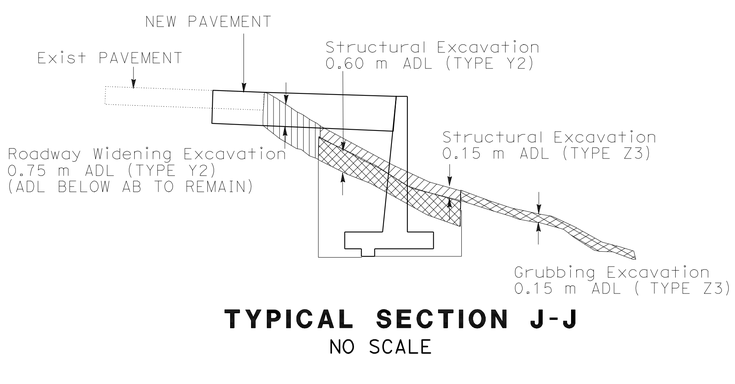

TYPICAL SECTION J-J

NO SCALE

ALL DIMENSIONS ARE IN METERS
UNLESS OTHERWISE SHOWN

CONSTRUCTION DETAILS

SCALE 1:500

C-13

STATE OF CALIFORNIA - DEPARTMENT OF TRANSPORTATION
Caltrans
DESIGN

FUNCTIONAL SUPERVISOR: CELINA AVILES
CALCULATED-DESIGNED BY: AMIR ELSHARIEF
CHECKED BY: KYLE KUNITAKE
REVISED BY
DATE REVISED

LAST REVISION 00-00-00
DATE PLOTTED => 03-MAY-2010
TIME PLOTTED => 13:19

Dist	COUNTY	ROUTE	KILOMETER POST TOTAL PROJECT	SHEET No.	TOTAL SHEETS
07	LA	5	50.8/58.0	70	869

REGISTERED CIVIL ENGINEER 7/02/08 DATE

5-3-10
PLANS APPROVAL DATE

REGISTERED PROFESSIONAL ENGINEER KYLE M KUNITAKE No. 63726 Exp. 9/30/10 CIVIL STATE OF CALIFORNIA

THE STATE OF CALIFORNIA OR ITS OFFICERS OR AGENTS SHALL NOT BE RESPONSIBLE FOR THE ACCURACY OR COMPLETENESS OF ELECTRONIC COPIES OF THIS PLAN SHEET.

Caltrans Metric

NOTE: 1. FOR COMPLETE RIGHT OF WAY AND ACCURATE ACCESS DATA, SEE RIGHT OF WAY RECORD MAPS AT DISTRICT OFFICE.

LEGEND:

- AERIALLY DEPOSITED LEAD STRUCTURAL EXCAVATION (TYPE Y2)
- AERIALLY DEPOSITED LEAD STRUCTURAL EXC (TYPE Y1)
- AERIALLY DEPOSITED LEAD STRUCTURAL EXC (TYPE Z3)
- AERIALLY DEPOSITED LEAD ROADWAY EXCAVATION (TYPE Y1)
- AERIALLY DEPOSITED LEAD ROADWAY EXC (TYPE Z3)
- AERIALLY DEPOSITED LEAD GRUBBING EXCAVATION (TYPE Y1)
- AERIALLY DEPOSITED LEAD GRUBBING EXCAVATION (TYPE Z3)

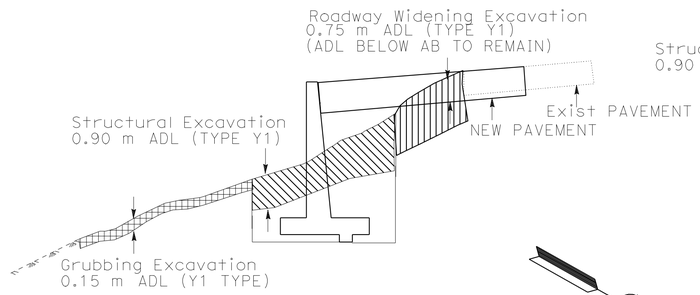

TYPICAL SECTION K-K

NO SCALE

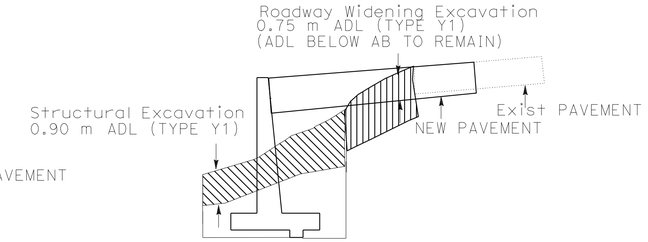

TYPICAL SECTION M-M

NO SCALE

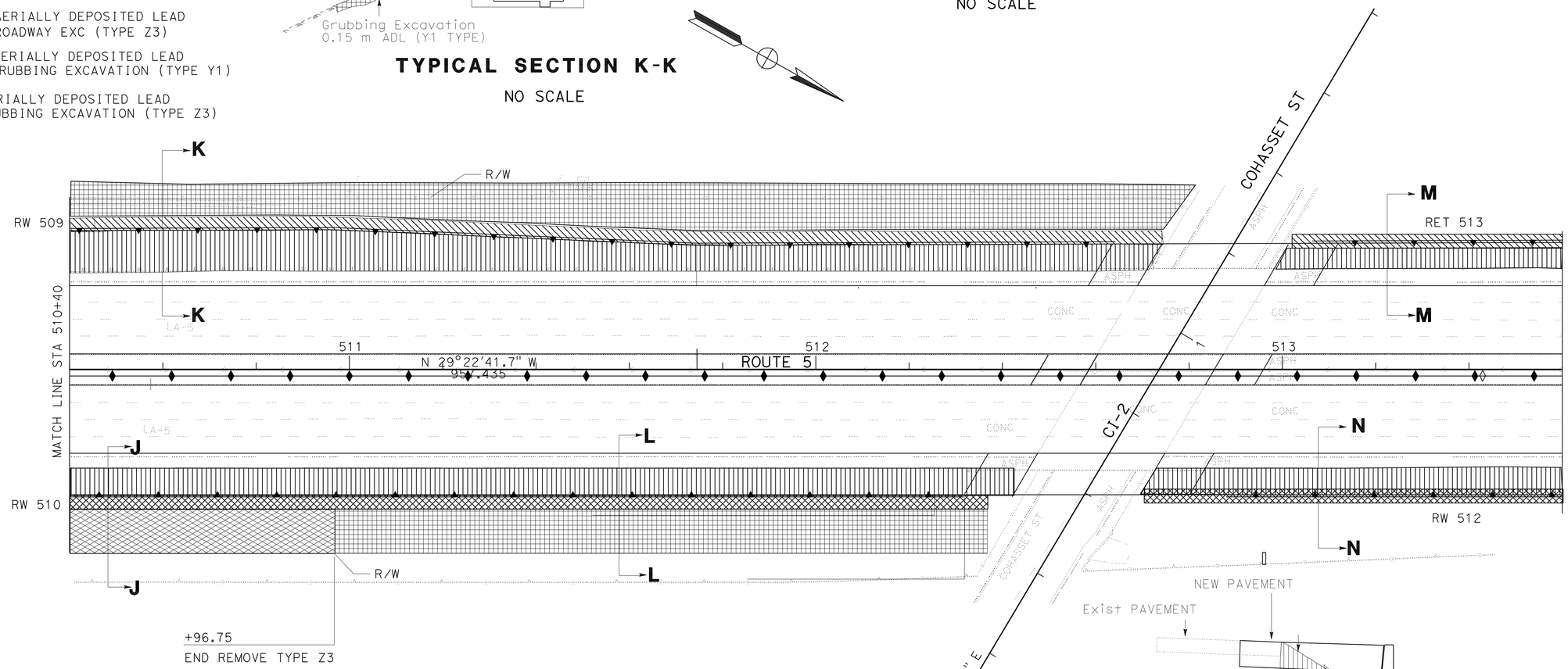

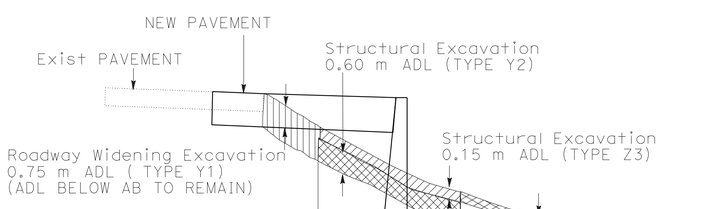

TYPICAL SECTION J-J

NO SCALE

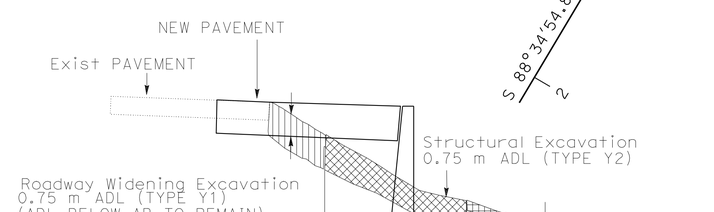

TYPICAL SECTION L-L

NO SCALE

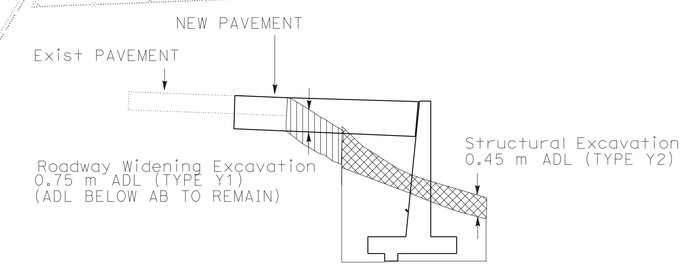

TYPICAL SECTION N-N

NO SCALE

ALL DIMENSIONS ARE IN METERS UNLESS OTHERWISE SHOWN

CONSTRUCTION DETAILS

SCALE 1:500

C-14

STATE OF CALIFORNIA - DEPARTMENT OF TRANSPORTATION
Caltrans
DESIGN

FUNCTIONAL SUPERVISOR: CELINA AVILES
CALCULATED-DESIGNED BY: AMIR ELSHARIEF
CHECKED BY: KYLE KUNITAKE
REVISED BY / DATE REVISED

LAST REVISION 00-00-00 | DATE PLOTTED => 03-MAR-2010 | TIME PLOTTED => 13:19

Dist	COUNTY	ROUTE	KILOMETER POST TOTAL PROJECT	SHEET No.	TOTAL SHEETS
07	LA	5	50.8/58.0	71	869

REGISTERED CIVIL ENGINEER 7/02/08 DATE

5-3-10
PLANS APPROVAL DATE

REGISTERED PROFESSIONAL ENGINEER KYLE M KUNITAKE No. 63726 Exp. 9/30/10 CIVIL STATE OF CALIFORNIA

THE STATE OF CALIFORNIA OR ITS OFFICERS OR AGENTS SHALL NOT BE RESPONSIBLE FOR THE ACCURACY OR COMPLETENESS OF ELECTRONIC COPIES OF THIS PLAN SHEET.

Caltrans Metric

NOTE: 1. FOR COMPLETE RIGHT OF WAY AND ACCURATE ACCESS DATA, SEE RIGHT OF WAY RECORD MAPS AT DISTRICT OFFICE.

LEGEND:

- AERIALLY DEPOSITED LEAD STRUCTURAL EXCAVATION (TYPE Y2)
- AERIALLY DEPOSITED LEAD STRUCTURAL EXC (TYPE Y1)
- AERIALLY DEPOSITED LEAD STRUCTURAL EXC (TYPE Z3)
- AERIALLY DEPOSITED LEAD ROADWAY EXCAVATION (TYPE Y1)
- AERIALLY DEPOSITED LEAD ROADWAY EXC (TYPE Z3)
- AERIALLY DEPOSITED LEAD GRUBBING EXCAVATION (TYPE Y1)
- AERIALLY DEPOSITED LEAD GRUBBING EXCAVATION (TYPE Z3)

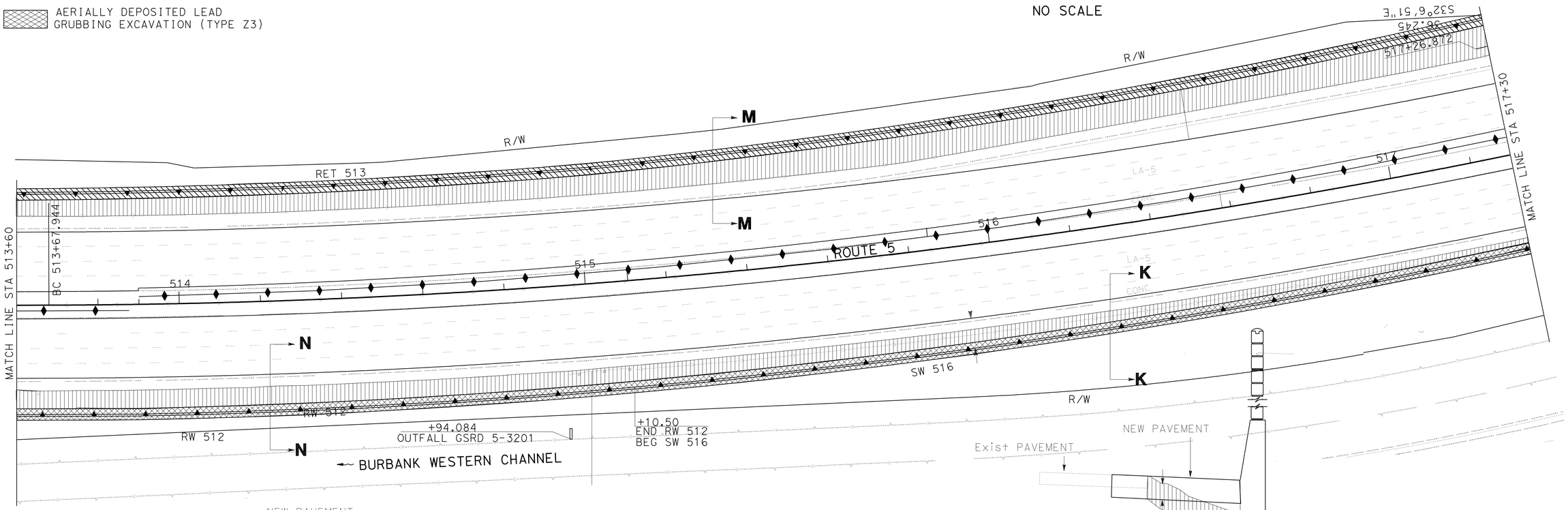

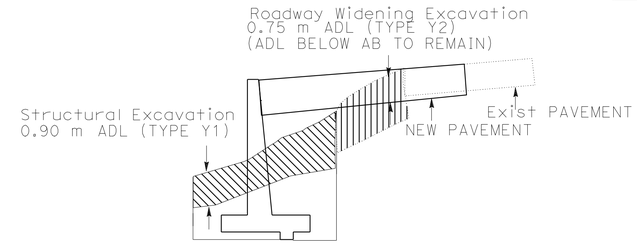

TYPICAL SECTION M-M
NO SCALE

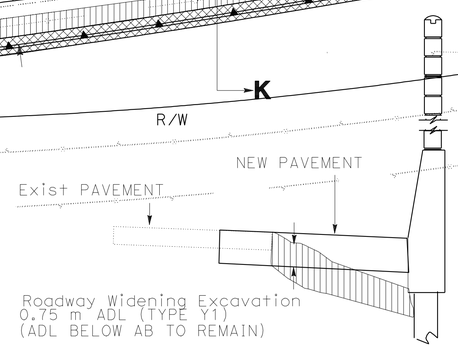

TYPICAL SECTION K-K
NO SCALE

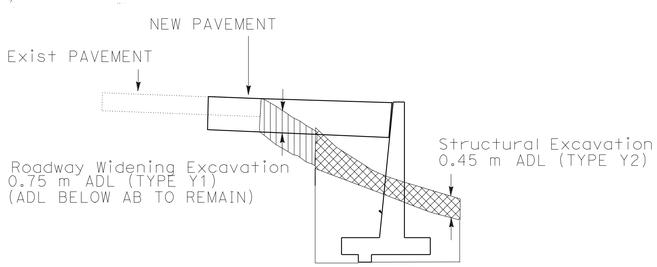

TYPICAL SECTION N-N
NO SCALE

ALL DIMENSIONS ARE IN METERS
UNLESS OTHERWISE SHOWN

CONSTRUCTION DETAILS

SCALE 1:500

C-15

STATE OF CALIFORNIA - DEPARTMENT OF TRANSPORTATION
Caltrans
DESIGN

FUNCTIONAL SUPERVISOR: CELINA AVILES
CALCULATED-DESIGNED BY: AMIR ELSHARIEF
CHECKED BY: KYLE KUNITAKE
REVISED BY / DATE REVISED

LAST REVISION 00-00-00 | DATE PLOTTED => 03-MAY-2010 | TIME PLOTTED => 13:20

Dist	COUNTY	ROUTE	KILOMETER POST TOTAL PROJECT	SHEET No.	TOTAL SHEETS
07	LA	5	50.8/58.0	72	869

REGISTERED CIVIL ENGINEER 7/02/08 DATE

5-3-10
PLANS APPROVAL DATE

REGISTERED PROFESSIONAL ENGINEER KYLE M KUNITAKE No. 63726 Exp. 9/30/10 CIVIL STATE OF CALIFORNIA

THE STATE OF CALIFORNIA OR ITS OFFICERS OR AGENTS SHALL NOT BE RESPONSIBLE FOR THE ACCURACY OR COMPLETENESS OF ELECTRONIC COPIES OF THIS PLAN SHEET.

Caltrans Metric

NOTE: 1. FOR COMPLETE RIGHT OF WAY AND ACCURATE ACCESS DATA, SEE RIGHT OF WAY RECORD MAPS AT DISTRICT OFFICE.

LEGEND:

- AERIALLY DEPOSITED LEAD STRUCTURAL EXCAVATION (TYPE Y2)
- AERIALLY DEPOSITED LEAD STRUCTURAL EXC (TYPE Y1)
- AERIALLY DEPOSITED LEAD STRUCTURAL EXC (TYPE Z3)
- AERIALLY DEPOSITED LEAD ROADWAY EXCAVATION (TYPE Y1)
- AERIALLY DEPOSITED LEAD ROADWAY EXC (TYPE Z3)
- AERIALLY DEPOSITED LEAD GRUBBING EXCAVATION (TYPE Y1)
- AERIALLY DEPOSITED LEAD GRUBBING EXCAVATION (TYPE Z3)

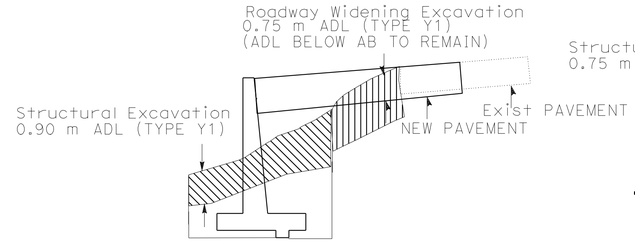

TYPICAL SECTION M-M
NO SCALE

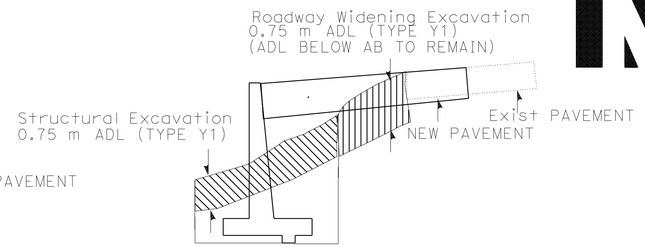

TYPICAL SECTION K-K
NO SCALE

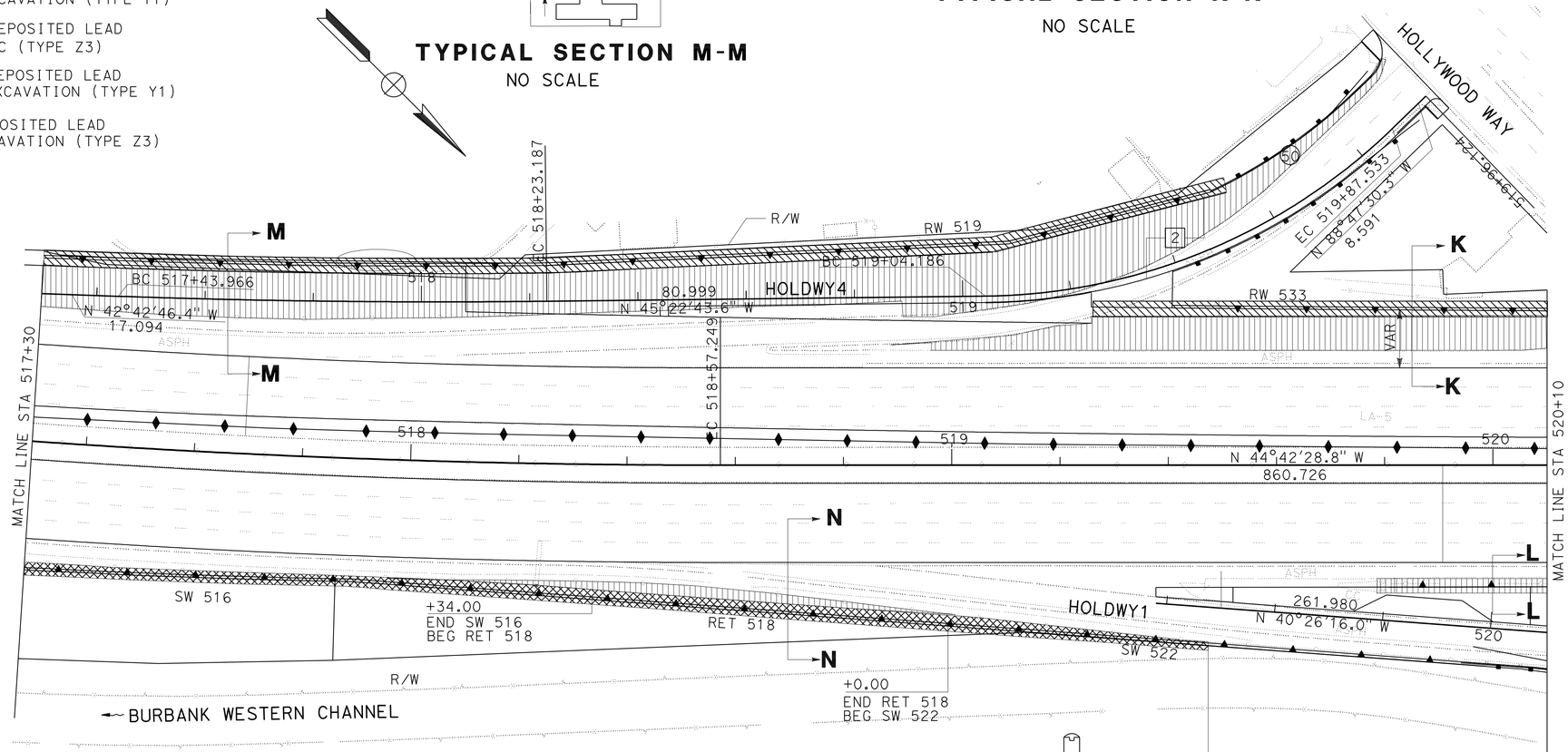

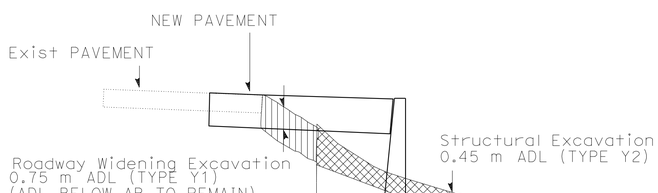

TYPICAL SECTION N-N
NO SCALE

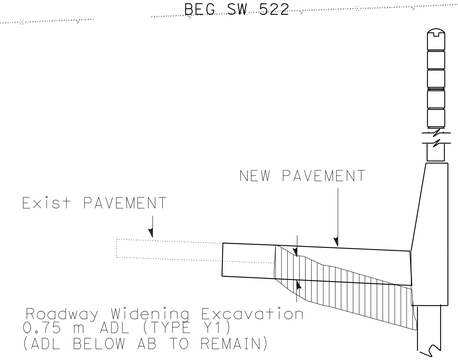

TYPICAL SECTION L-L
NO SCALE

ALL DIMENSIONS ARE IN METERS
UNLESS OTHERWISE SHOWN

CONSTRUCTION DETAILS

SCALE 1:500

C-16

STATE OF CALIFORNIA - DEPARTMENT OF TRANSPORTATION
Caltrans
DESIGN

FUNCTIONAL SUPERVISOR: CELINA AVILES
CALCULATED-DESIGNED BY: AMIR ELSHARIEF
CHECKED BY: KYLE KUNITAKE
REVISED BY / DATE REVISED

LAST REVISION 00-00-00 | DATE PLOTTED => 03-MAY-2010 | TIME PLOTTED => 13:20

Dist	COUNTY	ROUTE	KILOMETER POST TOTAL PROJECT	SHEET No.	TOTAL SHEETS
07	LA	5	50.8/58.0	73	869

REGISTERED CIVIL ENGINEER 7/02/08 DATE

5-3-10
PLANS APPROVAL DATE

REGISTERED PROFESSIONAL ENGINEER KYLE M KUNITAKE No. 63726 Exp. 9/30/10 CIVIL STATE OF CALIFORNIA

THE STATE OF CALIFORNIA OR ITS OFFICERS OR AGENTS SHALL NOT BE RESPONSIBLE FOR THE ACCURACY OR COMPLETENESS OF ELECTRONIC COPIES OF THIS PLAN SHEET.

Caltrans Metric

NOTE: 1. FOR COMPLETE RIGHT OF WAY AND ACCURATE ACCESS DATA, SEE RIGHT OF WAY RECORD MAPS AT DISTRICT OFFICE.

LEGEND:

- AERIALLY DEPOSITED LEAD STRUCTURAL EXCAVATION (TYPE Y2)
- AERIALLY DEPOSITED LEAD STRUCTURAL EXC (TYPE Y1)
- AERIALLY DEPOSITED LEAD STRUCTURAL EXC (TYPE Z3)
- AERIALLY DEPOSITED LEAD ROADWAY EXCAVATION (TYPE Y1)
- AERIALLY DEPOSITED LEAD ROADWAY EXC (TYPE Z3)
- AERIALLY DEPOSITED LEAD GRUBBING EXCAVATION (TYPE Y1)
- AERIALLY DEPOSITED LEAD GRUBBING EXCAVATION (TYPE Z3)

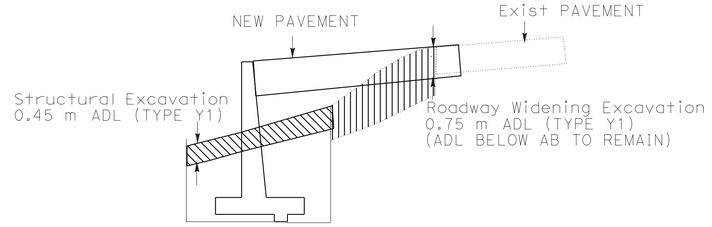

TYPICAL SECTION M-M

NO SCALE

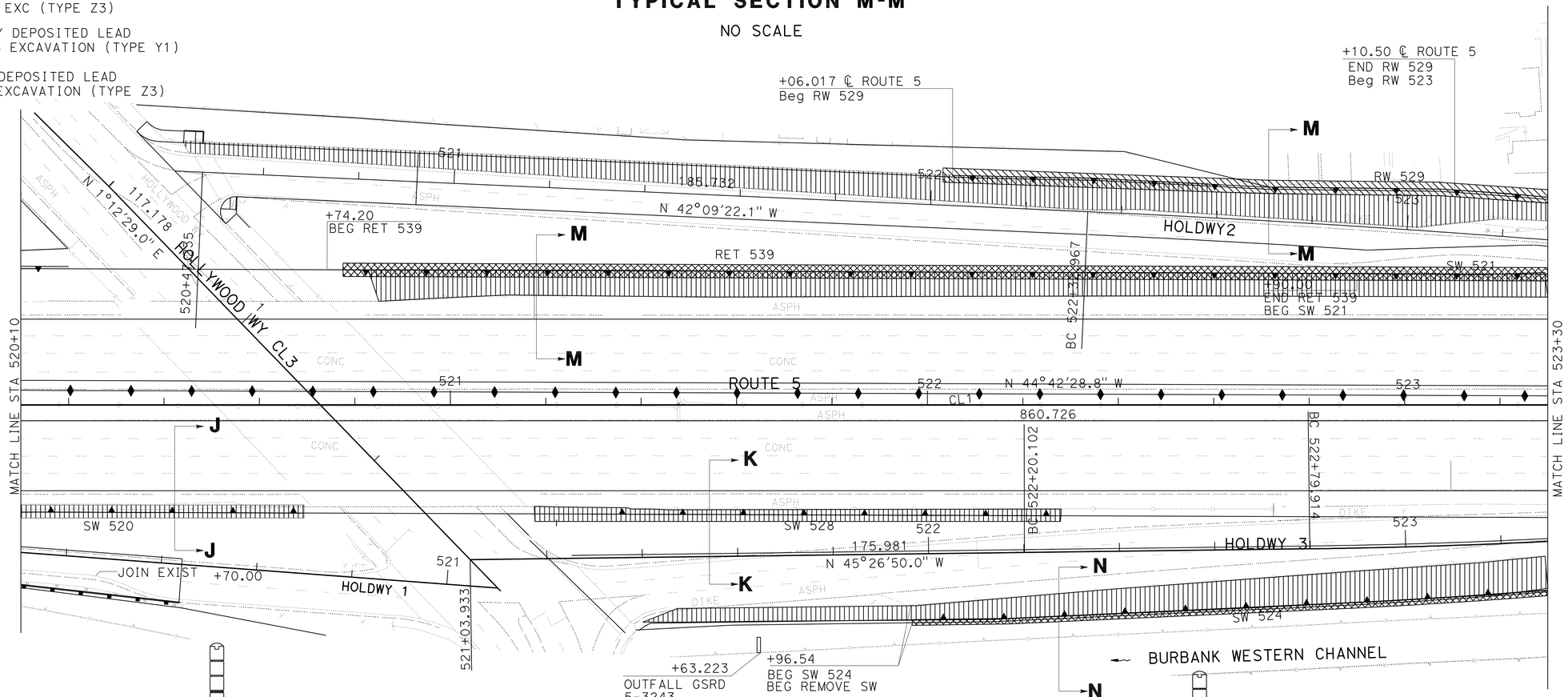

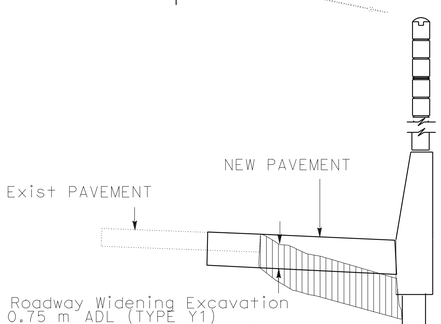

TYPICAL SECTION J-J

NO SCALE

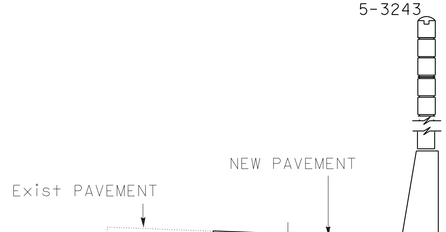

TYPICAL SECTION K-K

NO SCALE

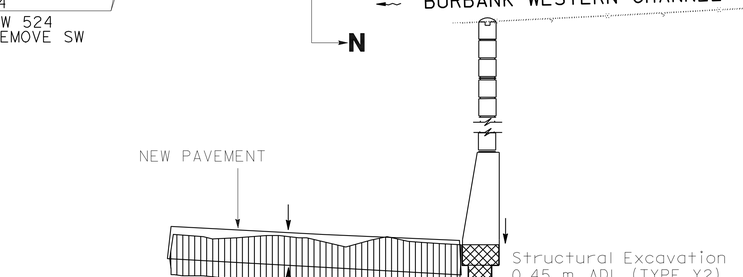

TYPICAL SECTION N-N

NO SCALE

ALL DIMENSIONS ARE IN METERS UNLESS OTHERWISE SHOWN

CONSTRUCTION DETAILS

SCALE 1:500

C-17

REVISED BY | DATE REVISED

AMIR ELSHARIEF

KYLE KUNITAKE

CALCULATED-DESIGNED BY

CHECKED BY

FUNCTIONAL SUPERVISOR

CELINA AVILES

STATE OF CALIFORNIA - DEPARTMENT OF TRANSPORTATION

Caltrans DESIGN

LAST REVISION 00-00-00 | DATE PLOTTED => 03-MAY-2010 | TIME PLOTTED => 13:20

Dist	COUNTY	ROUTE	KILOMETER POST TOTAL PROJECT	SHEET No.	TOTAL SHEETS
07	LA	5	50.8/58.0	74	869

REGISTERED CIVIL ENGINEER 7/02/08 DATE

5-3-10
PLANS APPROVAL DATE

REGISTERED PROFESSIONAL ENGINEER KYLE M KUNITAKE No. 63726 Exp. 9/30/10 CIVIL STATE OF CALIFORNIA

THE STATE OF CALIFORNIA OR ITS OFFICERS OR AGENTS SHALL NOT BE RESPONSIBLE FOR THE ACCURACY OR COMPLETENESS OF ELECTRONIC COPIES OF THIS PLAN SHEET.

Caltrans Metric

NOTE: 1. FOR COMPLETE RIGHT OF WAY AND ACCURATE ACCESS DATA, SEE RIGHT OF WAY RECORD MAPS AT DISTRICT OFFICE.

LEGEND:

- AERIALLY DEPOSITED LEAD STRUCTURAL EXCAVATION (TYPE Y2)
- AERIALLY DEPOSITED LEAD STRUCTURAL EXC (TYPE Y1)
- AERIALLY DEPOSITED LEAD STRUCTURAL EXC (TYPE Z3)
- AERIALLY DEPOSITED LEAD ROADWAY EXCAVATION (TYPE Y1)
- AERIALLY DEPOSITED LEAD ROADWAY EXC (TYPE Z3)
- AERIALLY DEPOSITED LEAD GRUBBING EXCAVATION (TYPE Y1)
- AERIALLY DEPOSITED LEAD GRUBBING EXCAVATION (TYPE Z3)

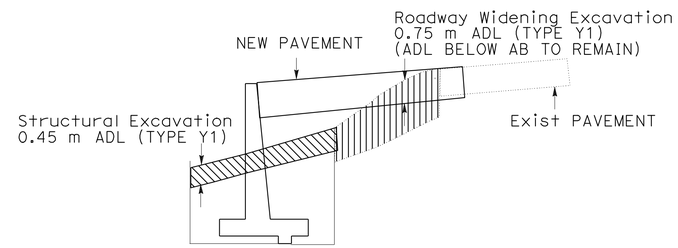

TYPICAL SECTION M-M

NO SCALE

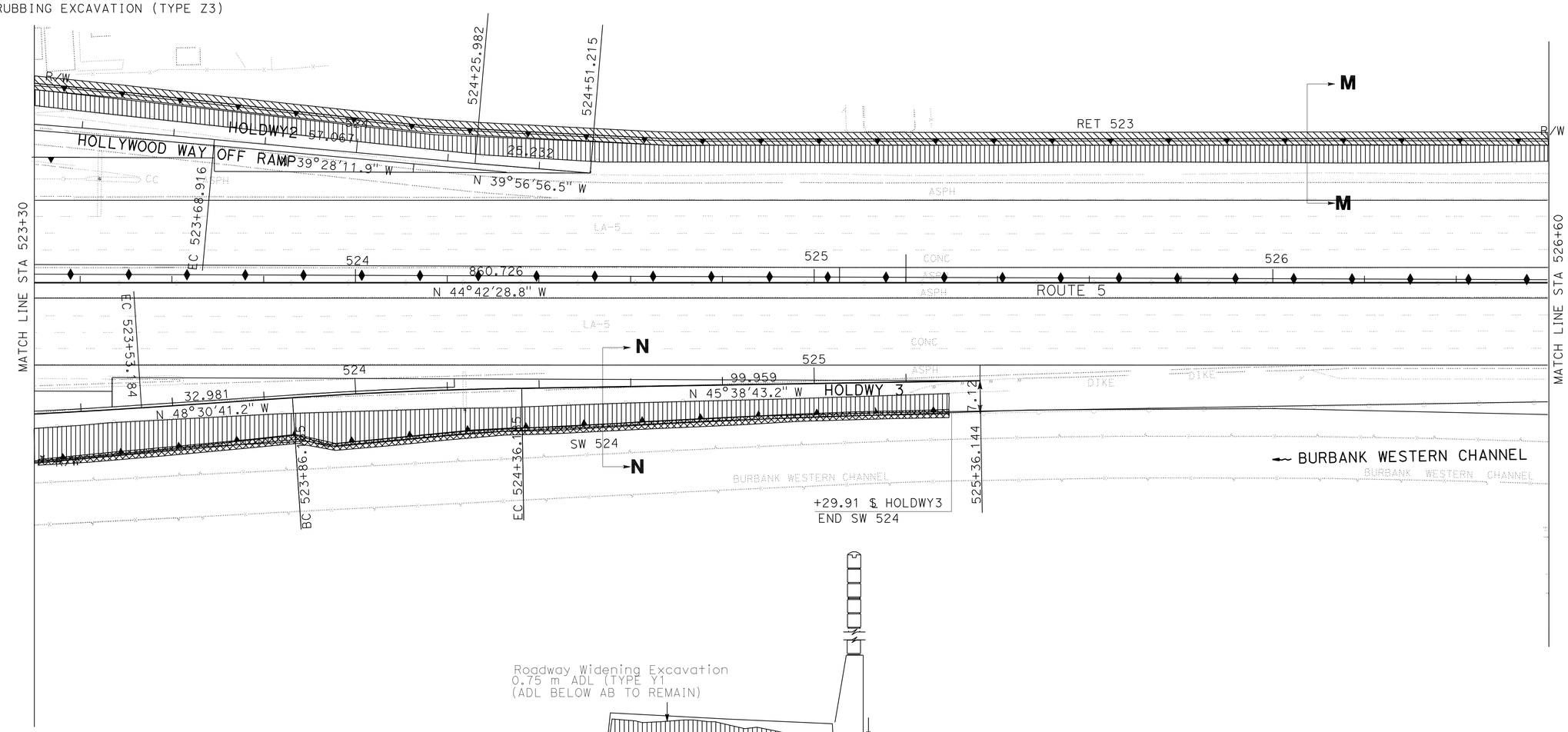

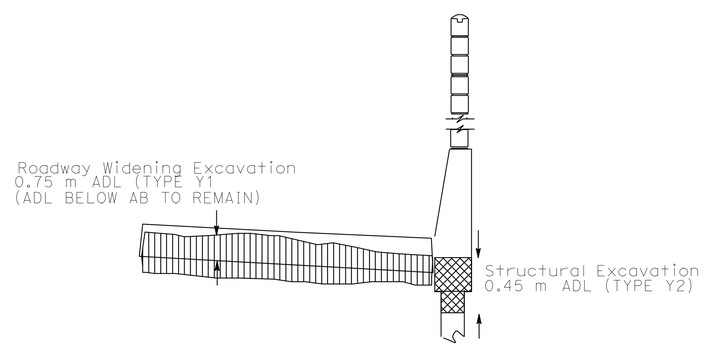

TYPICAL SECTION N-N

NO SCALE

ALL DIMENSIONS ARE IN METERS
UNLESS OTHERWISE SHOWN

CONSTRUCTION DETAILS

SCALE 1:500

C-18

STATE OF CALIFORNIA - DEPARTMENT OF TRANSPORTATION
Caltrans
DESIGN

FUNCTIONAL SUPERVISOR: CELINA AVILES
CALCULATED-DESIGNED BY: AMIR ELSHARIEF
CHECKED BY: KYLE KUNITAKE
REVISED BY / DATE REVISED

LAST REVISION 00-00-00 | DATE PLOTTED => 03-MAY-2010 | TIME PLOTTED => 13:20

Dist	COUNTY	ROUTE	KILOMETER POST TOTAL PROJECT	SHEET No.	TOTAL SHEETS
07	LA	5	50.8/58.0	75	869

REGISTERED CIVIL ENGINEER 7/02/08 DATE

5-3-10
PLANS APPROVAL DATE

REGISTERED PROFESSIONAL ENGINEER KYLE M KUNITAKE No. 63726 Exp. 9/30/10 CIVIL STATE OF CALIFORNIA

THE STATE OF CALIFORNIA OR ITS OFFICERS OR AGENTS SHALL NOT BE RESPONSIBLE FOR THE ACCURACY OR COMPLETENESS OF ELECTRONIC COPIES OF THIS PLAN SHEET.

Caltrans Metric

NOTE: 1. FOR COMPLETE RIGHT OF WAY AND ACCURATE ACCESS DATA, SEE RIGHT OF WAY RECORD MAPS AT DISTRICT OFFICE.

LEGEND:

- AERIALLY DEPOSITED LEAD STRUCTURAL EXCAVATION (TYPE Y2)
- AERIALLY DEPOSITED LEAD STRUCTURAL EXC (TYPE Y1)
- AERIALLY DEPOSITED LEAD STRUCTURAL EXC (TYPE Z3)
- AERIALLY DEPOSITED LEAD ROADWAY EXCAVATION (TYPE Y1)
- AERIALLY DEPOSITED LEAD ROADWAY EXC (TYPE Z3)
- AERIALLY DEPOSITED LEAD GRUBBING EXCAVATION (TYPE Y1)
- AERIALLY DEPOSITED LEAD GRUBBING EXCAVATION (TYPE Z3)

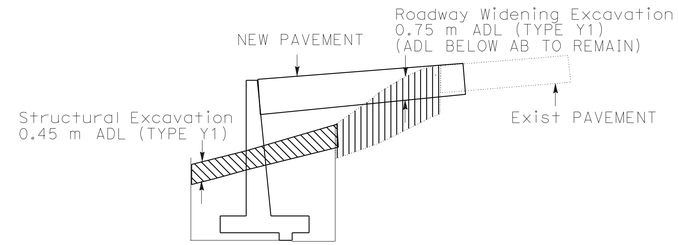

TYPICAL SECTION M-M

NO SCALE

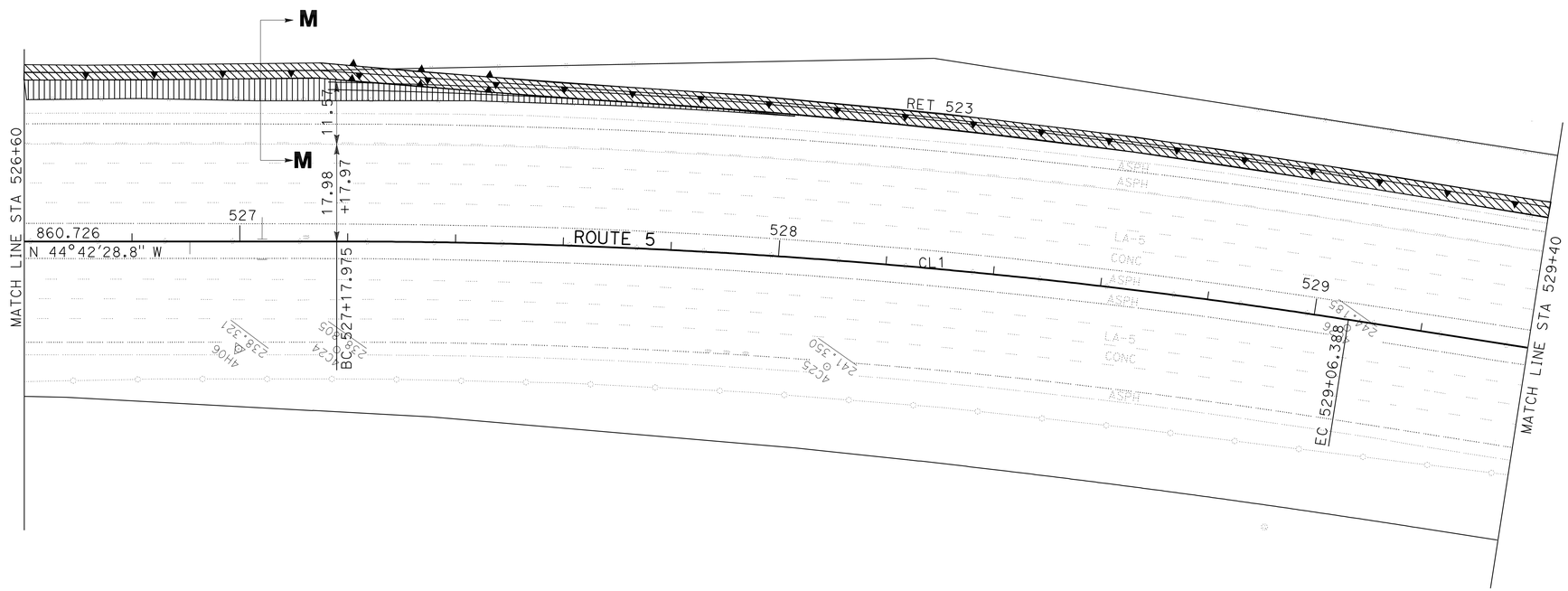

ALL DIMENSIONS ARE IN METERS
UNLESS OTHERWISE SHOWN

CONSTRUCTION DETAILS

SCALE 1:500

C-19

STATE OF CALIFORNIA - DEPARTMENT OF TRANSPORTATION
Caltrans DESIGN

FUNCTIONAL SUPERVISOR: CELINA AVILES
CALCULATED-DESIGNED BY: AMIR ELSHARIEF
CHECKED BY: KYLE KUNITAKE
REVISED BY / DATE REVISED

LAST REVISION 00-00-00
DATE PLOTTED => 03-MAY-2010
TIME PLOTTED => 13:20

Dist	COUNTY	ROUTE	KILOMETER POST TOTAL PROJECT	SHEET No.	TOTAL SHEETS
07	LA	5	50.8/58.0	76	869

REGISTERED CIVIL ENGINEER 7/02/08 DATE

5-3-10
PLANS APPROVAL DATE

REGISTERED PROFESSIONAL ENGINEER KYLE M KUNITAKE No. 63726 Exp. 9/30/10 CIVIL STATE OF CALIFORNIA

THE STATE OF CALIFORNIA OR ITS OFFICERS OR AGENTS SHALL NOT BE RESPONSIBLE FOR THE ACCURACY OR COMPLETENESS OF ELECTRONIC COPIES OF THIS PLAN SHEET.

Caltrans Metric

NOTE: 1. FOR COMPLETE RIGHT OF WAY AND ACCURATE ACCESS DATA, SEE RIGHT OF WAY RECORD MAPS AT DISTRICT OFFICE.

LEGEND:

- AERIALLY DEPOSITED LEAD STRUCTURAL EXCAVATION (TYPE Y2)
- AERIALLY DEPOSITED LEAD STRUCTURAL EXC (TYPE Y1)
- AERIALLY DEPOSITED LEAD STRUCTURAL EXC (TYPE Z3)
- AERIALLY DEPOSITED LEAD ROADWAY EXCAVATION (TYPE Y1)
- AERIALLY DEPOSITED LEAD ROADWAY EXC (TYPE Z3)
- AERIALLY DEPOSITED LEAD GRUBBING EXCAVATION (TYPE Y1)
- AERIALLY DEPOSITED LEAD GRUBBING EXCAVATION (TYPE Z3)

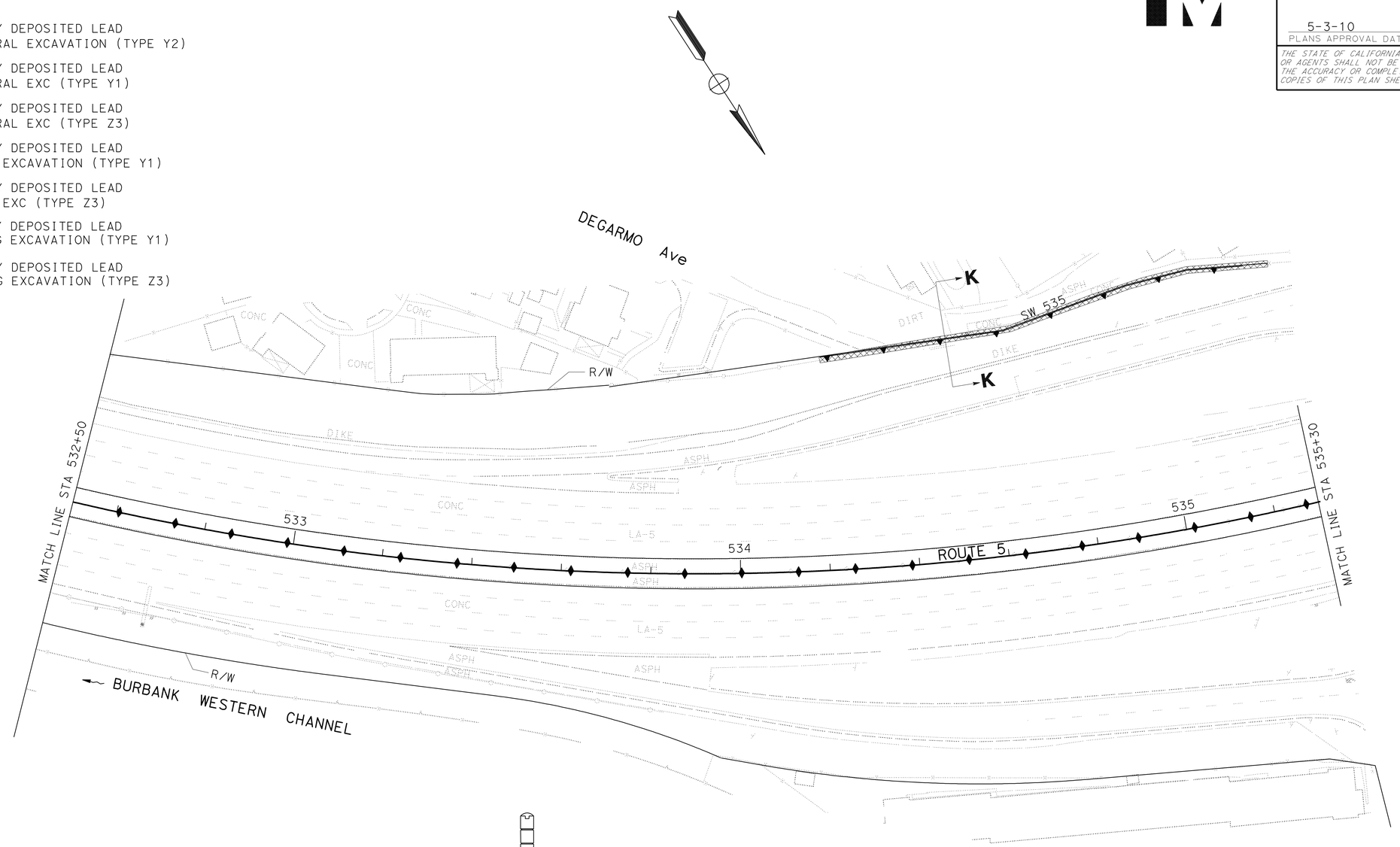

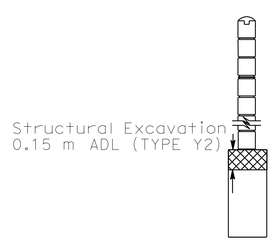

TYPICAL SECTION K-K
NO SCALE

ALL DIMENSIONS ARE IN METERS
UNLESS OTHERWISE SHOWN

CONSTRUCTION DETAILS

SCALE 1:500

C-20

STATE OF CALIFORNIA - DEPARTMENT OF TRANSPORTATION
Caltrans **DESIGN**

FUNCTIONAL SUPERVISOR: CELINA AVILES
CALCULATED-DESIGNED BY: AMIR ELSHARIEF
CHECKED BY: KYLE KUNITAKE
REVISED BY / DATE REVISED

LAST REVISION 00-00-00 | DATE PLOTTED => 03-MAY-2010 | TIME PLOTTED => 13:20

Dist	COUNTY	ROUTE	KILOMETER POST TOTAL PROJECT	SHEET No.	TOTAL SHEETS
07	LA	5	50.8/58.0	77	869

REGISTERED CIVIL ENGINEER 7/02/08 DATE

5-3-10
PLANS APPROVAL DATE

REGISTERED PROFESSIONAL ENGINEER KYLE M KUNITAKE No. 63726 Exp. 9/30/10 CIVIL STATE OF CALIFORNIA

THE STATE OF CALIFORNIA OR ITS OFFICERS OR AGENTS SHALL NOT BE RESPONSIBLE FOR THE ACCURACY OR COMPLETENESS OF ELECTRONIC COPIES OF THIS PLAN SHEET.

Caltrans Metric

NOTE: 1. FOR COMPLETE RIGHT OF WAY AND ACCURATE ACCESS DATA, SEE RIGHT OF WAY RECORD MAPS AT DISTRICT OFFICE.

LEGEND:

- AERIALLY DEPOSITED LEAD STRUCTURAL EXCAVATION (TYPE Y2)
- AERIALLY DEPOSITED LEAD STRUCTURAL EXC (TYPE Y1)
- AERIALLY DEPOSITED LEAD STRUCTURAL EXC (TYPE Z3)
- AERIALLY DEPOSITED LEAD ROADWAY EXCAVATION (TYPE Y1)
- AERIALLY DEPOSITED LEAD ROADWAY EXC (TYPE Z3)
- AERIALLY DEPOSITED LEAD GRUBBING EXCAVATION (TYPE Y1)
- AERIALLY DEPOSITED LEAD GRUBBING EXCAVATION (TYPE Z3)

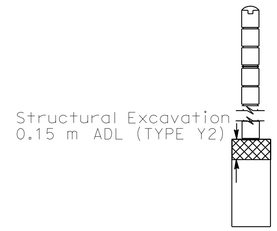

TYPICAL SECTION K-K

NO SCALE

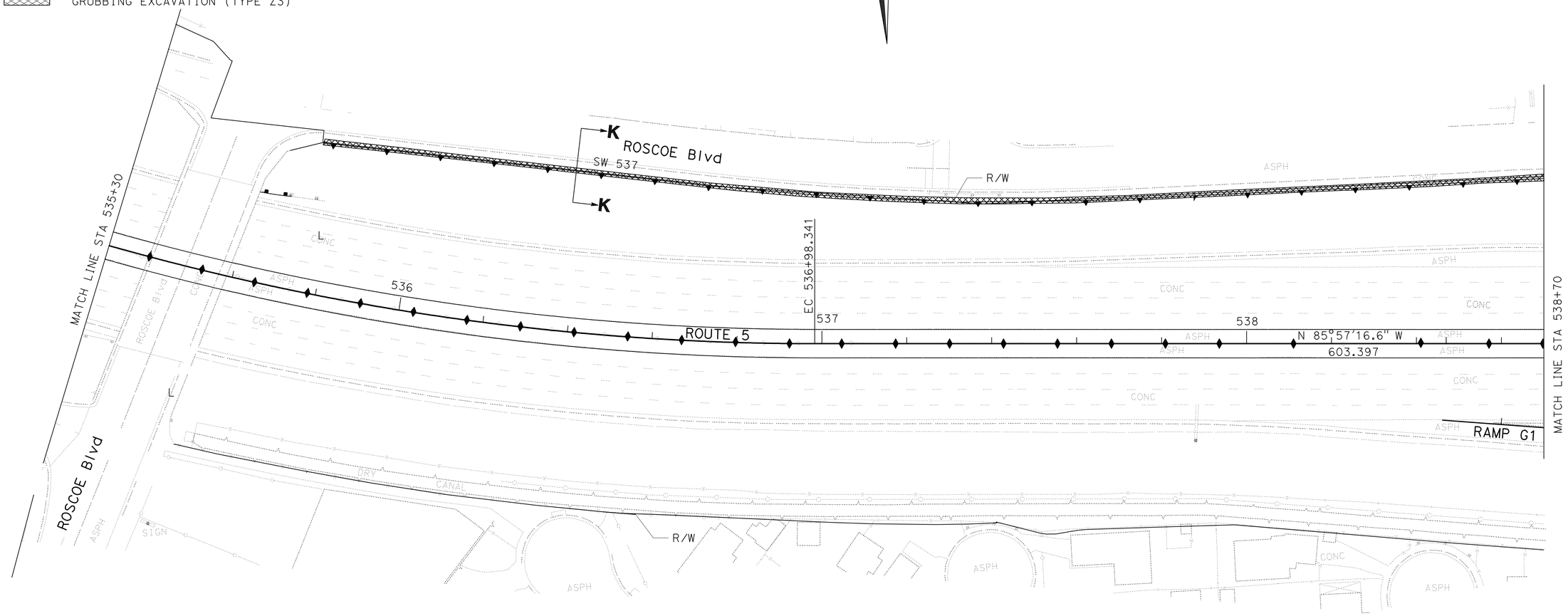

ALL DIMENSIONS ARE IN METERS
UNLESS OTHERWISE SHOWN

CONSTRUCTION DETAILS

SCALE 1:500

C-21

STATE OF CALIFORNIA - DEPARTMENT OF TRANSPORTATION
Caltrans **DESIGN**

FUNCTIONAL SUPERVISOR: CELINA AVILES
CALCULATED-DESIGNED BY: AMIR ELSHARIEF
CHECKED BY: KYLE KUNITAKE
REVISED BY / DATE REVISED

LAST REVISION 00-00-00 | DATE PLOTTED => 03-MAY-2010 | TIME PLOTTED => 13:20

Dist	COUNTY	ROUTE	KILOMETER POST TOTAL PROJECT	SHEET No.	TOTAL SHEETS
07	LA	5	50.8/58.0	78	869

REGISTERED CIVIL ENGINEER 7/02/08 DATE

5-3-10
PLANS APPROVAL DATE

REGISTERED PROFESSIONAL ENGINEER KYLE M KUNITAKE No. 63726 Exp. 9/30/10 CIVIL STATE OF CALIFORNIA

THE STATE OF CALIFORNIA OR ITS OFFICERS OR AGENTS SHALL NOT BE RESPONSIBLE FOR THE ACCURACY OR COMPLETENESS OF ELECTRONIC COPIES OF THIS PLAN SHEET.

Caltrans Metric

NOTE: 1. FOR COMPLETE RIGHT OF WAY AND ACCURATE ACCESS DATA, SEE RIGHT OF WAY RECORD MAPS AT DISTRICT OFFICE.

LEGEND:

- AERIALLY DEPOSITED LEAD STRUCTURAL EXCAVATION (TYPE Y2)
- AERIALLY DEPOSITED LEAD STRUCTURAL EXC (TYPE Y1)
- AERIALLY DEPOSITED LEAD STRUCTURAL EXC (TYPE Z3)
- AERIALLY DEPOSITED LEAD ROADWAY EXCAVATION (TYPE Y1)
- AERIALLY DEPOSITED LEAD ROADWAY EXC (TYPE Z3)
- AERIALLY DEPOSITED LEAD GRUBBING EXCAVATION (TYPE Y1)
- AERIALLY DEPOSITED LEAD GRUBBING EXCAVATION (TYPE Z3)

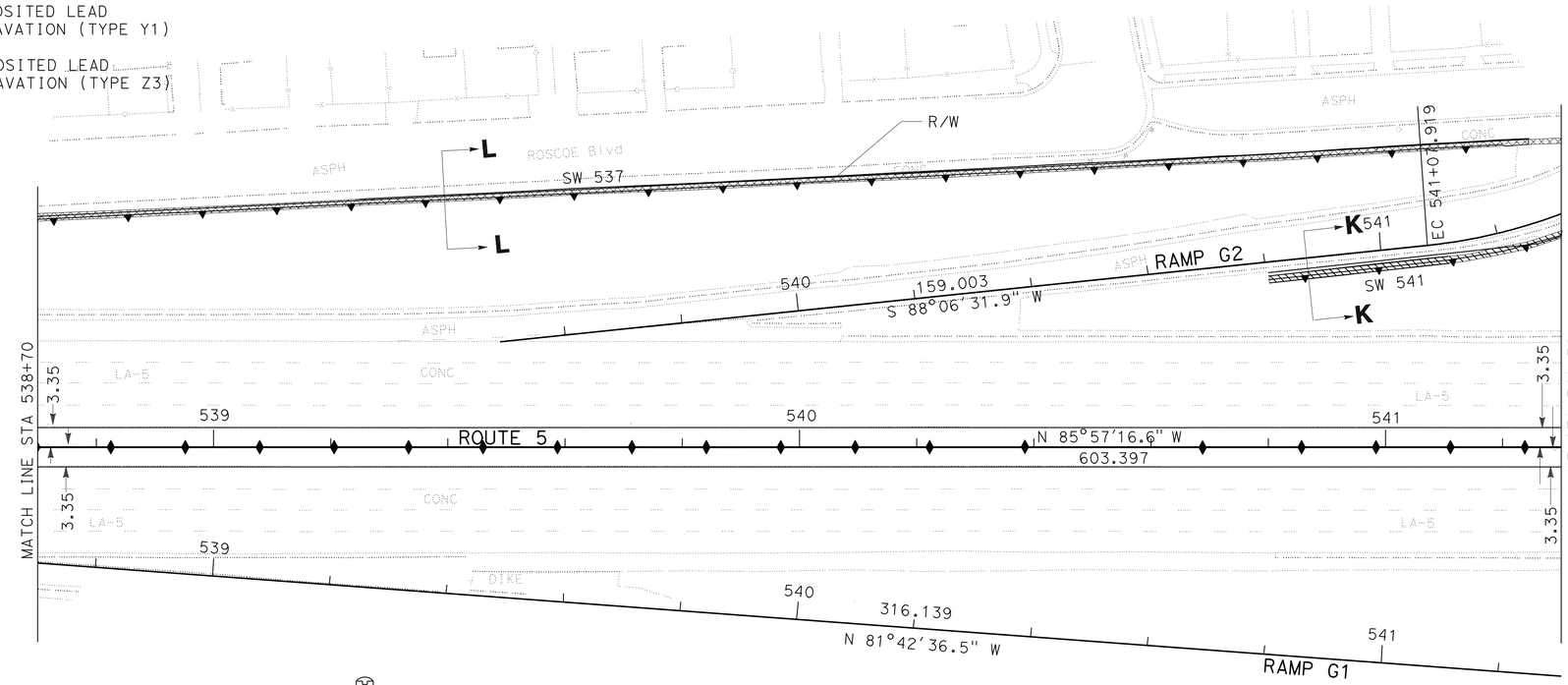

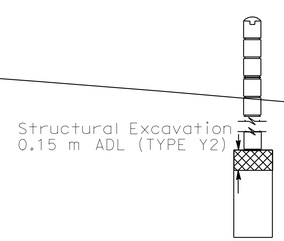

TYPICAL SECTION L-L
NO SCALE

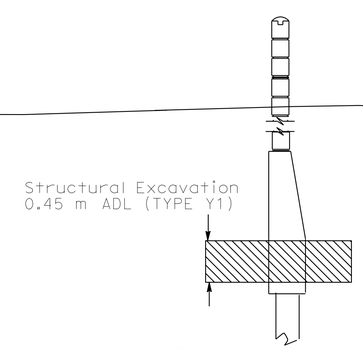

TYPICAL SECTION K-K
NO SCALE

ALL DIMENSIONS ARE IN METERS
UNLESS OTHERWISE SHOWN

CONSTRUCTION DETAILS

SCALE 1:500

C-22

STATE OF CALIFORNIA - DEPARTMENT OF TRANSPORTATION
Caltrans
DESIGN

FUNCTIONAL SUPERVISOR: CELINA AVILES
CALCULATED-DESIGNED BY: AMIR ELSHARIEF
CHECKED BY: KYLE KUNITAKE
REVISED BY / DATE REVISED

LAST REVISION 00-00-00
DATE PLOTTED => 03-MAY-2010
TIME PLOTTED => 13:21

Dist	COUNTY	ROUTE	KILOMETER POST TOTAL PROJECT	SHEET No.	TOTAL SHEETS
07	LA	5	50.8/58.0	79	869

REGISTERED CIVIL ENGINEER 7/02/08 DATE

5-3-10
PLANS APPROVAL DATE

REGISTERED PROFESSIONAL ENGINEER KYLE M KUNITAKE No. 63726 Exp. 9/30/10 CIVIL STATE OF CALIFORNIA

THE STATE OF CALIFORNIA OR ITS OFFICERS OR AGENTS SHALL NOT BE RESPONSIBLE FOR THE ACCURACY OR COMPLETENESS OF ELECTRONIC COPIES OF THIS PLAN SHEET.

Caltrans Metric

NOTE: 1. FOR COMPLETE RIGHT OF WAY AND ACCURATE ACCESS DATA, SEE RIGHT OF WAY RECORD MAPS AT DISTRICT OFFICE.

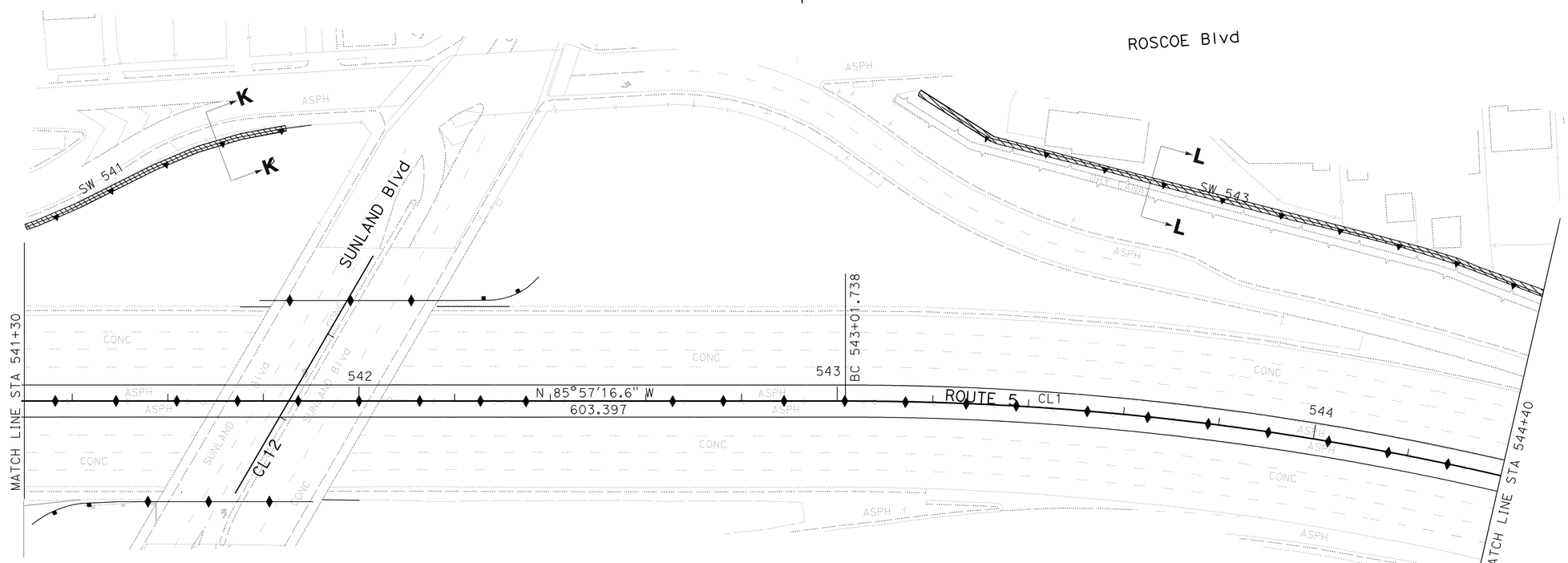

LEGEND:

- AERIALLY DEPOSITED LEAD STRUCTURAL EXCAVATION (TYPE Y2)
- AERIALLY DEPOSITED LEAD STRUCTURAL EXC (TYPE Y1)
- AERIALLY DEPOSITED LEAD STRUCTURAL EXC (TYPE Z3)
- AERIALLY DEPOSITED LEAD ROADWAY EXCAVATION (TYPE Y1)
- AERIALLY DEPOSITED LEAD ROADWAY EXC (TYPE Z3)
- AERIALLY DEPOSITED LEAD GRUBBING EXCAVATION (TYPE Y1)
- AERIALLY DEPOSITED LEAD GRUBBING EXCAVATION (TYPE Z3)

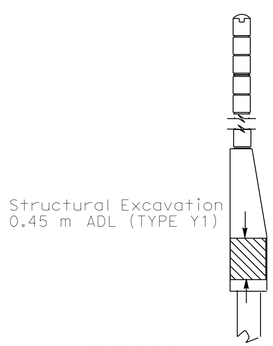

TYPICAL SECTION K-K
NO SCALE

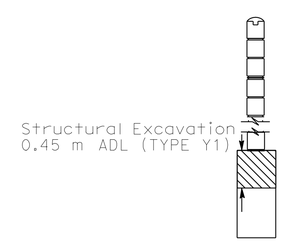

TYPICAL SECTION L-L
NO SCALE

ALL DIMENSIONS ARE IN METERS
UNLESS OTHERWISE SHOWN

CONSTRUCTION DETAILS

SCALE 1:500

C-23

STATE OF CALIFORNIA - DEPARTMENT OF TRANSPORTATION
Caltrans DESIGN

FUNCTIONAL SUPERVISOR: CELINA AVILES
CALCULATED-DESIGNED BY: AMIR ELSHARIEF
CHECKED BY: KYLE KUNITAKE
REVISED BY / DATE REVISED

LAST REVISION 00-00-00
DATE PLOTTED => 03-MAY-2010
TIME PLOTTED => 13:21

Dist	COUNTY	ROUTE	KILOMETER POST TOTAL PROJECT	SHEET No.	TOTAL SHEETS
07	LA	5	50.8/58.0	80	869

REGISTERED CIVIL ENGINEER 7/02/08 DATE

5-3-10
PLANS APPROVAL DATE

REGISTERED PROFESSIONAL ENGINEER KYLE M KUNITAKE No. 63726 Exp. 9/30/10 CIVIL STATE OF CALIFORNIA

THE STATE OF CALIFORNIA OR ITS OFFICERS OR AGENTS SHALL NOT BE RESPONSIBLE FOR THE ACCURACY OR COMPLETENESS OF ELECTRONIC COPIES OF THIS PLAN SHEET.

Caltrans Metric

NOTE: 1. FOR COMPLETE RIGHT OF WAY AND ACCURATE ACCESS DATA, SEE RIGHT OF WAY RECORD MAPS AT DISTRICT OFFICE.

LEGEND:

- AERIALLY DEPOSITED LEAD STRUCTURAL EXCAVATION (TYPE Y2)
- AERIALLY DEPOSITED LEAD STRUCTURAL EXC (TYPE Y1)
- AERIALLY DEPOSITED LEAD STRUCTURAL EXC (TYPE Z3)
- AERIALLY DEPOSITED LEAD ROADWAY EXCAVATION (TYPE Y1)
- AERIALLY DEPOSITED LEAD ROADWAY EXC (TYPE Z3)
- AERIALLY DEPOSITED LEAD GRUBBING EXCAVATION (TYPE Y1)
- AERIALLY DEPOSITED LEAD GRUBBING EXCAVATION (TYPE Z3)

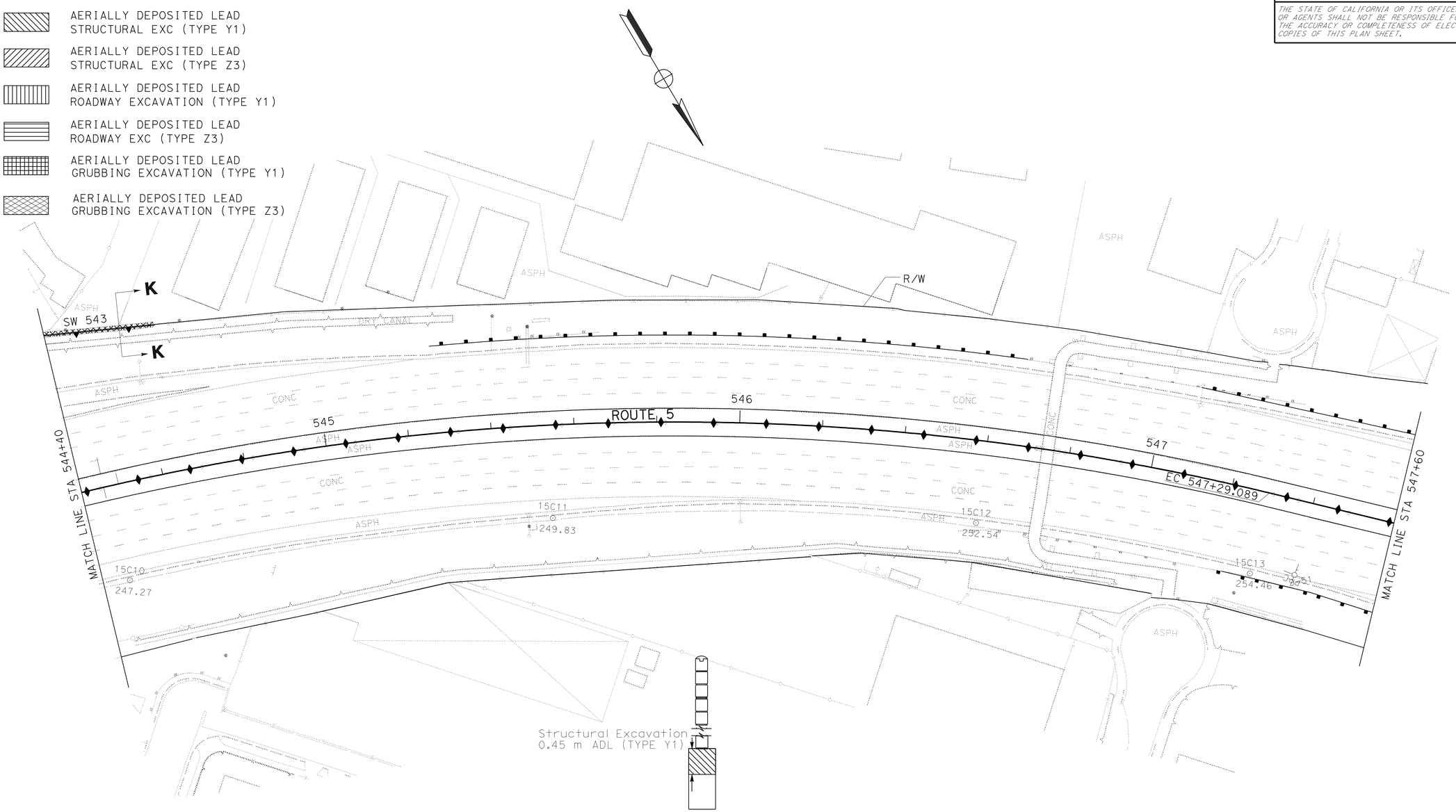

TYPICAL SECTION K-K

NO SCALE

ALL DIMENSIONS ARE IN METERS
UNLESS OTHERWISE SHOWN

CONSTRUCTION DETAILS

SCALE 1:500

C-24

STATE OF CALIFORNIA - DEPARTMENT OF TRANSPORTATION
Caltrans
DESIGN

FUNCTIONAL SUPERVISOR: CELINA AVILES
CALCULATED-DESIGNED BY: AMIR ELSHARIEF
CHECKED BY: KYLE KUNITAKE
REVISED BY / DATE REVISED

LAST REVISION 00-00-00 DATE PLOTTED => 03-MAY-2010 TIME PLOTTED => 13:21

Dist	COUNTY	ROUTE	KILOMETER POST TOTAL PROJECT	SHEET No.	TOTAL SHEETS
07	LA	5	50.8/58.0	81	869

REGISTERED CIVIL ENGINEER 7/02/08 DATE

5-3-10
PLANS APPROVAL DATE

REGISTERED PROFESSIONAL ENGINEER KYLE M KUNITAKE No. 63726 Exp. 9/30/10 CIVIL STATE OF CALIFORNIA

THE STATE OF CALIFORNIA OR ITS OFFICERS OR AGENTS SHALL NOT BE RESPONSIBLE FOR THE ACCURACY OR COMPLETENESS OF ELECTRONIC COPIES OF THIS PLAN SHEET.

Caltrans Metric

NOTE: 1. FOR COMPLETE RIGHT OF WAY AND ACCURATE ACCESS DATA, SEE RIGHT OF WAY RECORD MAPS AT DISTRICT OFFICE.

LEGEND:

- AERIALLY DEPOSITED LEAD STRUCTURAL EXCAVATION (TYPE Y2)
- AERIALLY DEPOSITED LEAD STRUCTURAL EXC (TYPE Y1)
- AERIALLY DEPOSITED LEAD STRUCTURAL EXC (TYPE Z3)
- AERIALLY DEPOSITED LEAD ROADWAY EXCAVATION (TYPE Y1)
- AERIALLY DEPOSITED LEAD ROADWAY EXC (TYPE Z3)
- AERIALLY DEPOSITED LEAD GRUBBING EXCAVATION (TYPE Y1)
- AERIALLY DEPOSITED LEAD GRUBBING EXCAVATION (TYPE Z3)

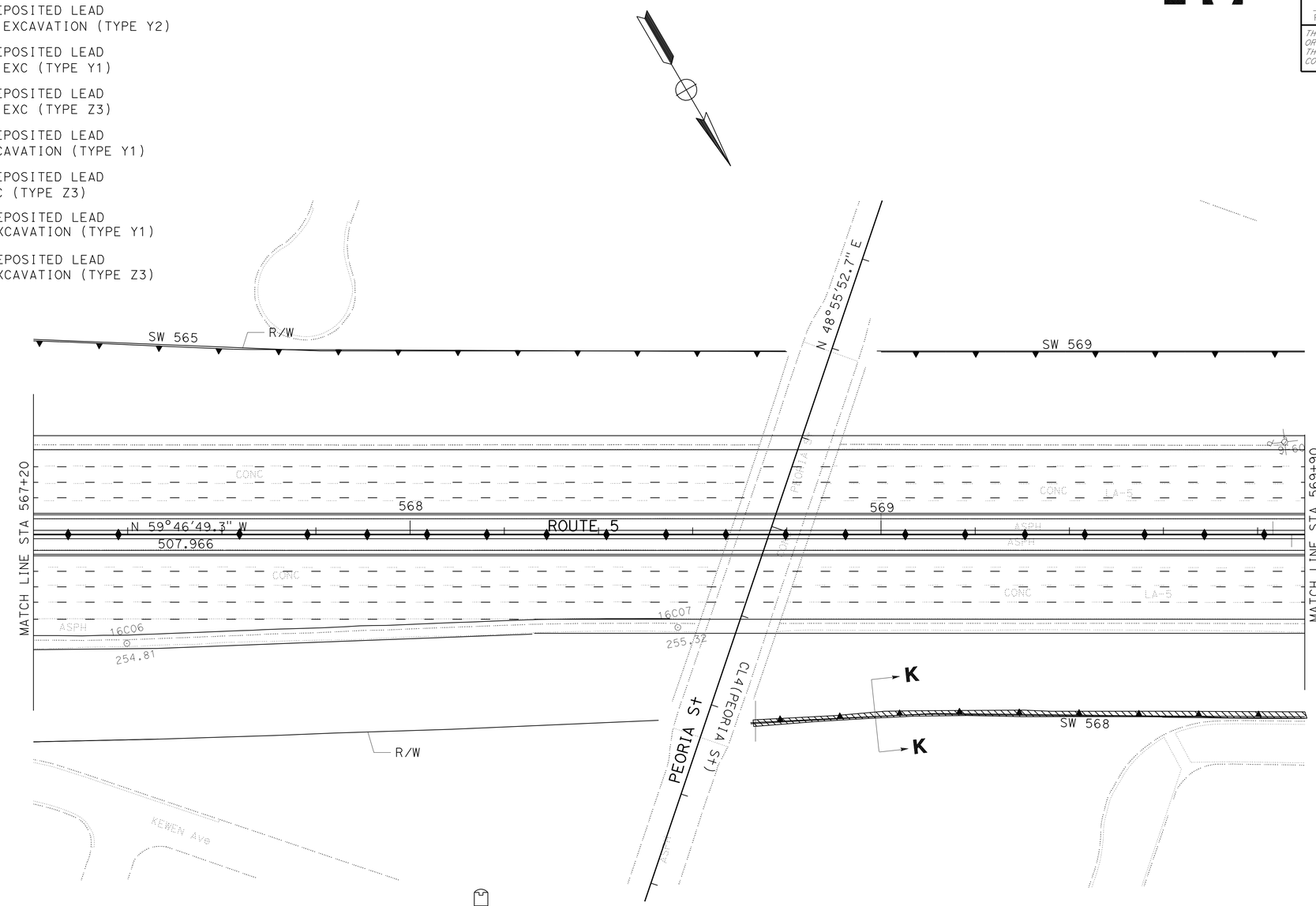

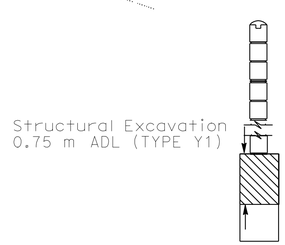

TYPICAL SECTION K-K

NO SCALE

ALL DIMENSIONS ARE IN METERS
UNLESS OTHERWISE SHOWN

CONSTRUCTION DETAILS

SCALE 1:500

C-25

STATE OF CALIFORNIA - DEPARTMENT OF TRANSPORTATION
Caltrans DESIGN

FUNCTIONAL SUPERVISOR: CELINA AVILES
CALCULATED-DESIGNED BY: AMIR ELSHARIEF
CHECKED BY: KYLE KUNITAKE
REVISED BY / DATE REVISED

LAST REVISION 00-00-00
DATE PLOTTED => 03-MAY-2010
TIME PLOTTED => 13:21

Dist	COUNTY	ROUTE	KILOMETER POST TOTAL PROJECT	SHEET No.	TOTAL SHEETS
07	LA	5	50.8/58.0	82	869

REGISTERED CIVIL ENGINEER 7/02/08 DATE

5-3-10
PLANS APPROVAL DATE

REGISTERED PROFESSIONAL ENGINEER KYLE M KUNITAKE No. 63726 Exp. 9/30/10 CIVIL STATE OF CALIFORNIA

THE STATE OF CALIFORNIA OR ITS OFFICERS OR AGENTS SHALL NOT BE RESPONSIBLE FOR THE ACCURACY OR COMPLETENESS OF ELECTRONIC COPIES OF THIS PLAN SHEET.

Caltrans Metric

NOTE: 1. FOR COMPLETE RIGHT OF WAY AND ACCURATE ACCESS DATA, SEE RIGHT OF WAY RECORD MAPS AT DISTRICT OFFICE.

LEGEND:

- AERIALLY DEPOSITED LEAD STRUCTURAL EXCAVATION (TYPE Y2)
- AERIALLY DEPOSITED LEAD STRUCTURAL EXC (TYPE Y1)
- AERIALLY DEPOSITED LEAD STRUCTURAL EXC (TYPE Z3)
- AERIALLY DEPOSITED LEAD ROADWAY EXCAVATION (TYPE Y1)
- AERIALLY DEPOSITED LEAD ROADWAY EXC (TYPE Z3)
- AERIALLY DEPOSITED LEAD GRUBBING EXCAVATION (TYPE Y1)
- AERIALLY DEPOSITED LEAD GRUBBING EXCAVATION (TYPE Z3)

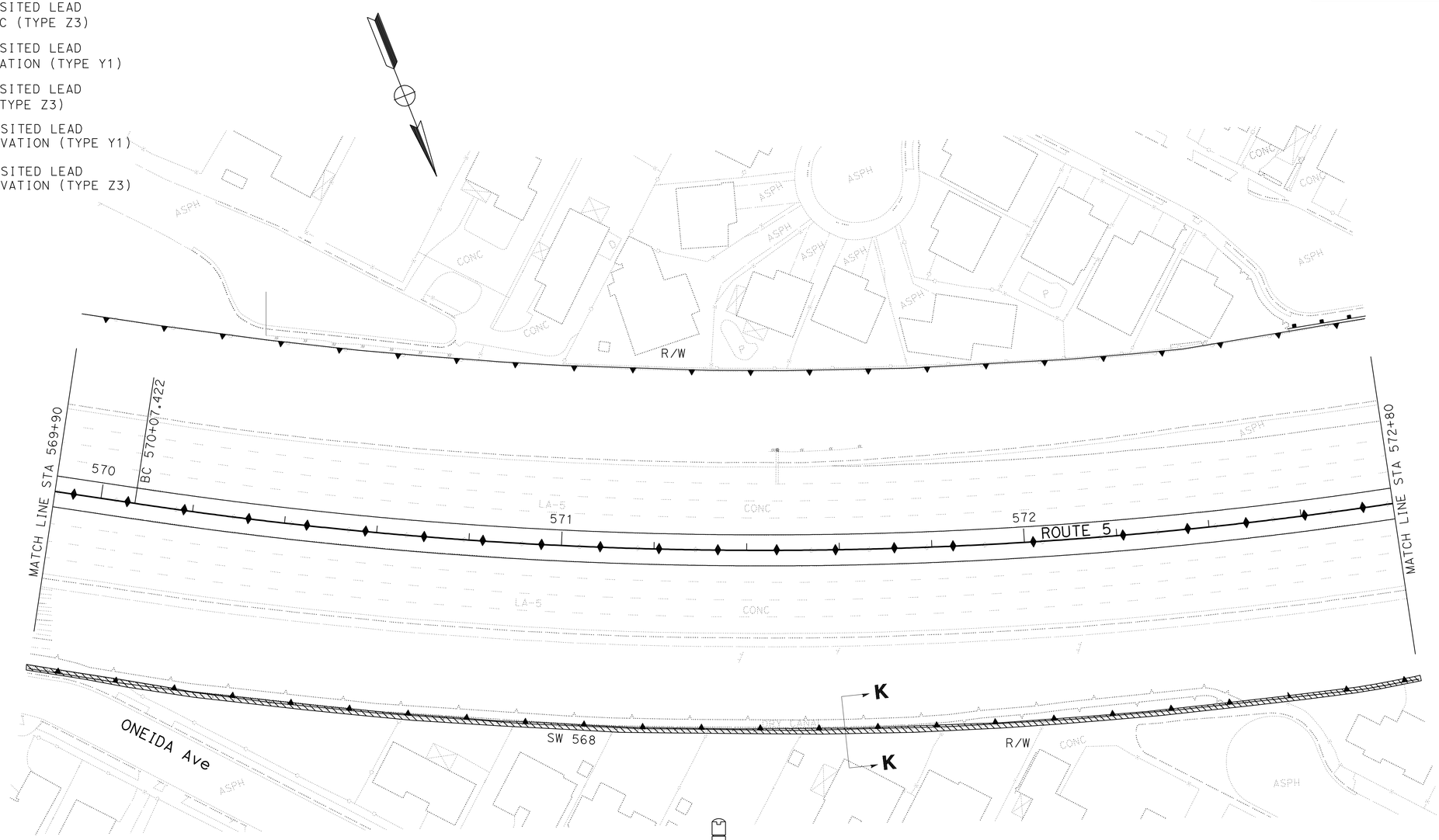

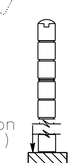

Structural Excavation
0.75 m ADL (TYPE Y1)

TYPICAL SECTION K-K
NO SCALE

ALL DIMENSIONS ARE IN METERS
UNLESS OTHERWISE SHOWN

CONSTRUCTION DETAILS

SCALE 1:500

C-26

STATE OF CALIFORNIA - DEPARTMENT OF TRANSPORTATION
Caltrans
DESIGN

FUNCTIONAL SUPERVISOR: CELINA AVILES
CALCULATED-DESIGNED BY: AMIR ELISHARIEF
CHECKED BY: KYLE KUNITAKE
REVISED BY
DATE REVISED

LAST REVISION 00-00-00 | DATE PLOTTED => 03-MAY-2010 | TIME PLOTTED => 13:21

Dist	COUNTY	ROUTE	KILOMETER POST TOTAL PROJECT	SHEET No.	TOTAL SHEETS
07	LA	5	50.8/58.0	83	869

REGISTERED CIVIL ENGINEER 7/02/08 DATE

5-3-10
PLANS APPROVAL DATE

REGISTERED PROFESSIONAL ENGINEER KYLE M KUNITAKE No. 63726 Exp. 9/30/10 CIVIL STATE OF CALIFORNIA

THE STATE OF CALIFORNIA OR ITS OFFICERS OR AGENTS SHALL NOT BE RESPONSIBLE FOR THE ACCURACY OR COMPLETENESS OF ELECTRONIC COPIES OF THIS PLAN SHEET.

Caltrans Metric

NOTE: 1. FOR COMPLETE RIGHT OF WAY AND ACCURATE ACCESS DATA, SEE RIGHT OF WAY RECORD MAPS AT DISTRICT OFFICE.

LEGEND:

- AERIALLY DEPOSITED LEAD STRUCTURAL EXCAVATION (TYPE Y2)
- AERIALLY DEPOSITED LEAD STRUCTURAL EXC (TYPE Y1)
- AERIALLY DEPOSITED LEAD STRUCTURAL EXC (TYPE Z3)
- AERIALLY DEPOSITED LEAD ROADWAY EXCAVATION (TYPE Y1)
- AERIALLY DEPOSITED LEAD ROADWAY EXC (TYPE Z3)
- AERIALLY DEPOSITED LEAD GRUBBING EXCAVATION (TYPE Y1)
- AERIALLY DEPOSITED LEAD GRUBBING EXCAVATION (TYPE Z3)

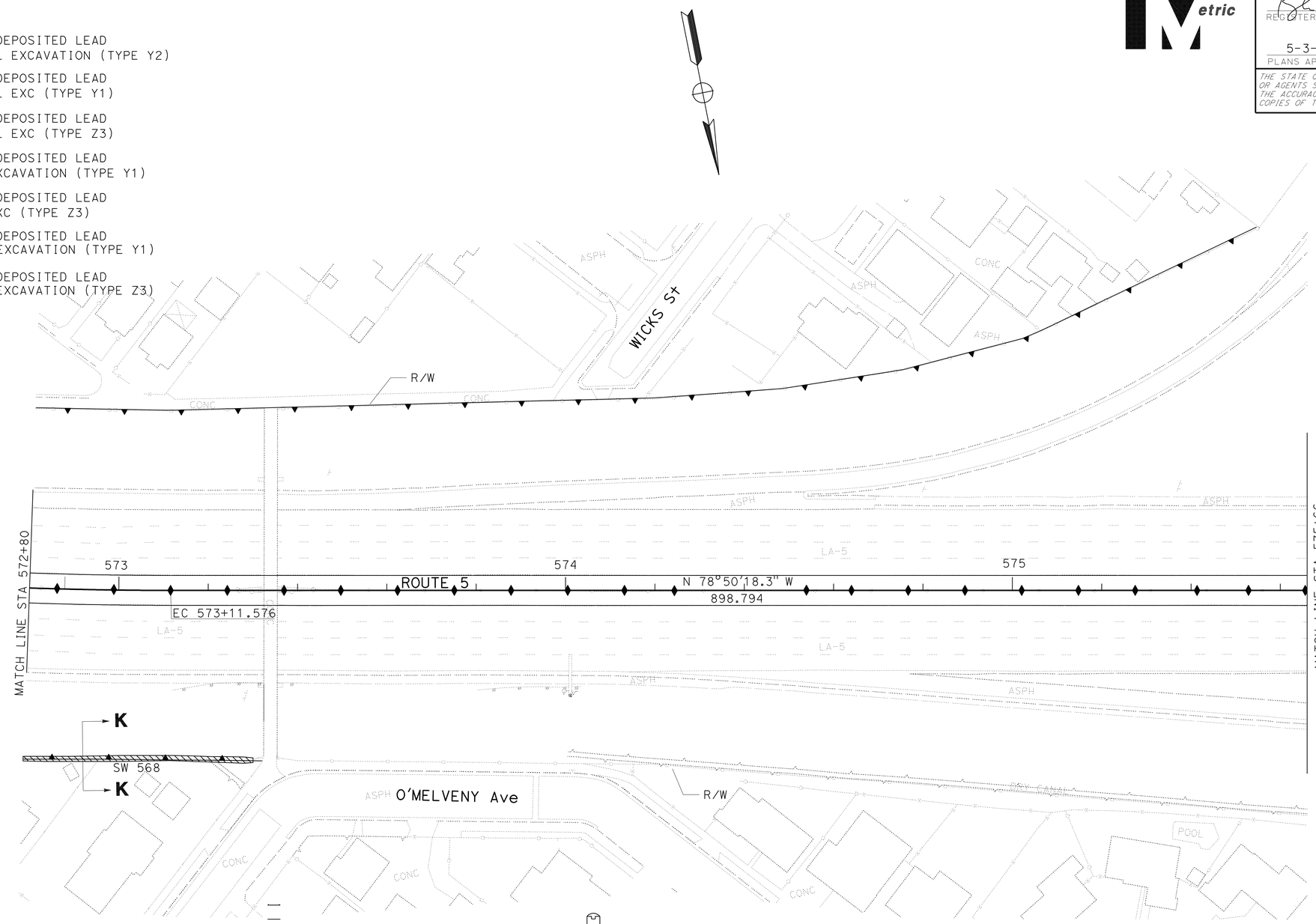

TYPICAL SECTION K-K
NO SCALE

ALL DIMENSIONS ARE IN METERS
UNLESS OTHERWISE SHOWN

CONSTRUCTION DETAILS

SCALE 1:500

C-27

STATE OF CALIFORNIA - DEPARTMENT OF TRANSPORTATION
Caltrans **DESIGN**

FUNCTIONAL SUPERVISOR: CELINA AVILES
CALCULATED-DESIGNED BY: AMIR ELSHARIEF
CHECKED BY: KYLE KUNITAKE
REVISED BY / DATE REVISED

LAST REVISION 00-00-00 | DATE PLOTTED => 03-MAY-2010 | TIME PLOTTED => 13:21

DIST.	COUNTY	ROUTE	KILOMETER POST TOTAL PROJECT	SHEET NO.	TOTAL SHEETS
07	LA	5	50.8/58.0	84	869

REGISTERED ENGINEER - CIVIL

5-3-10

PLANS APPROVAL DATE

REGISTERED PROFESSIONAL ENGINEER KYLE M KUNITAKE No. 63726 Exp. 9/30/10 CIVIL STATE OF CALIFORNIA

The State of California or its officers or agents shall not be responsible for the accuracy or completeness of electronic copies of this plan sheet.

Caltrans Metric

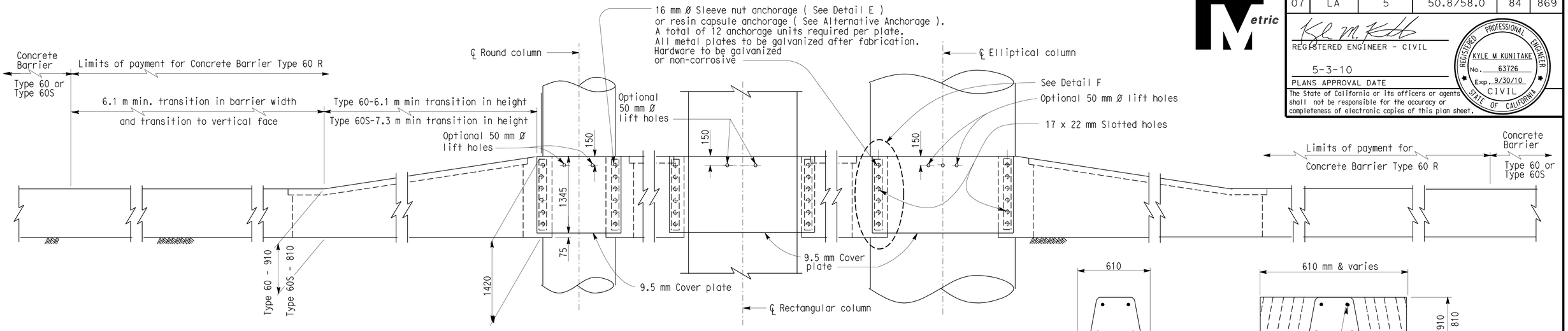

ELEVATION

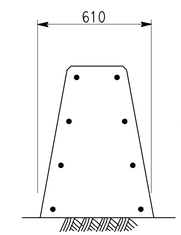

SECTION A-A

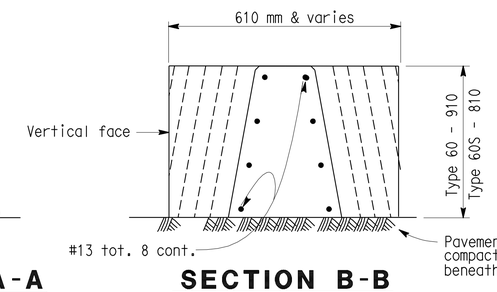

SECTION B-B

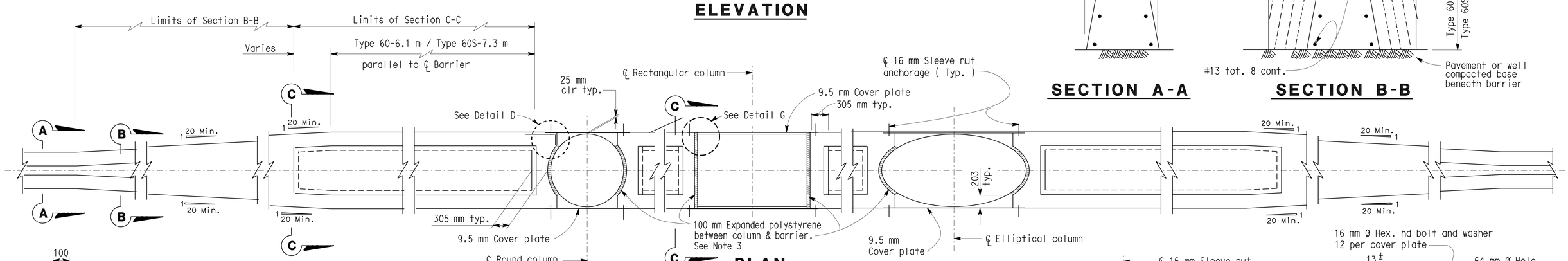

PLAN

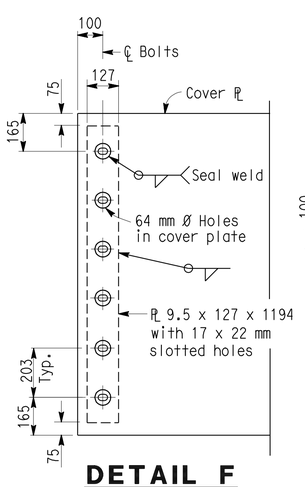

DETAIL F

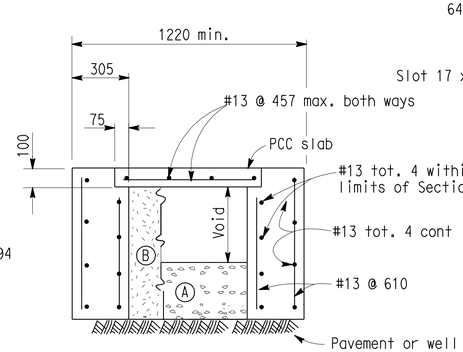

SECTION C-C

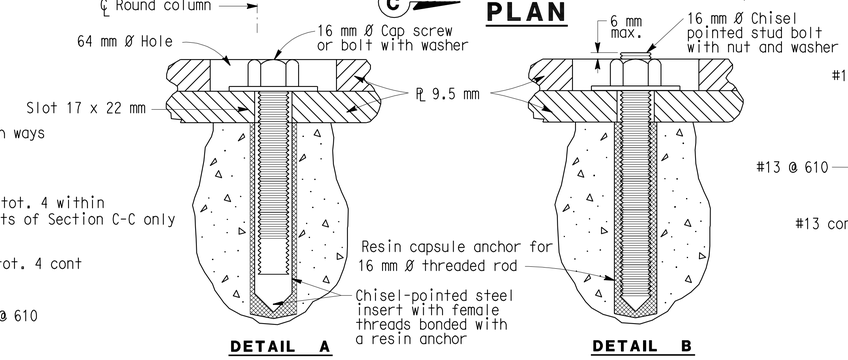

DETAIL A DETAIL B

ALTERNATIVE ANCHORAGE

NOTES: 1) Resin capsule anchorage is subject to approval of the Engineer. Installation procedures shall comply with manufacturer's instructions.

2) Detail B similar to Detail A except for anchorage devices.

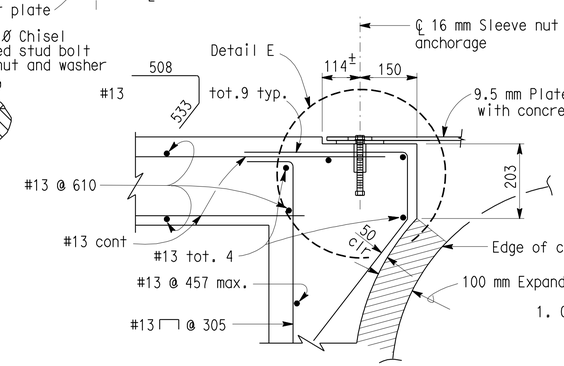

DETAIL D

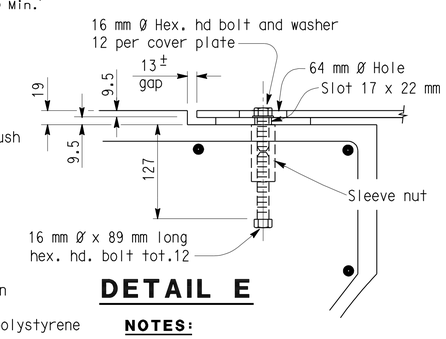

DETAIL E

NO SCALE

ALL DIMENSIONS ARE IN MILLMETERS UNLESS OTHERWISE SHOWN

NOTES:

1. Contractor options for fill between barrier walls.
   - (A) Place 610 mm PCC at base between barrier walls.
   - (B) Place granular material from base to bottom of 100 mm cap.
2. Forming material for 100 mm cap may remain in place.
3. Enclose column with 100 mm expanded polystyrene at locations where concrete or cement treated base encases the column.
4. For Detail G, see Transition at Bridge Column sheet 2 of 2.

C-28

STANDARD DRAWING				
RELEASE DATE 8/26/03	DESIGN BY RALPH BISHOP	CHECKED N ABDIN	RELEASED BY Roberto Lavalle OFFICE CHIEF	
FILE NO. xs16-090-1	DETAILS BY BEN MATSUO	CHECKED N ABDIN		
	SUBMITTED BY R.C. ANDERSON	DRAWING DATE 6/99		

STATE OF CALIFORNIA DEPARTMENT OF TRANSPORTATION

DIVISION OF ENGINEERING SERVICES

BRIDGE NO. Var

KILOMETER POST Var

BARRIER - CONCRETE TYPE 60R TRANSITION AT BRIDGE COLUMN

DS OSD 2147A (METRIC) (REV. 2/25/97)

ORIGINAL SCALE IN MILLIMETERS FOR REDUCED PLANS 0 10 20 30 40 50 60 70 80 90 100

CU 07276
EA 1218V1

DISREGARD PRINTS BEARING EARLIER REVISION DATES

REVISION DATES (PRELIMINARY STAGE ONLY)

SHEET 1 OF 2

USERNAME => trrene

71218vga028.dgn

DATE PLOTTED => 03-MAY-2010 TIME PLOTTED => 13:21

DIST.	COUNTY	ROUTE	KILOMETER POST TOTAL PROJECT	SHEET NO.	TOTAL SHEETS
07	LA	5	50.8/58.0	85	869

REGISTERED ENGINEER - CIVIL

5-3-10

PLANS APPROVAL DATE

REGISTERED PROFESSIONAL ENGINEER KYLE M KUNITAKE No. 63726 Exp. 9/30/10 CIVIL STATE OF CALIFORNIA

The State of California or its officers or agents shall not be responsible for the accuracy or completeness of electronic copies of this plan sheet.

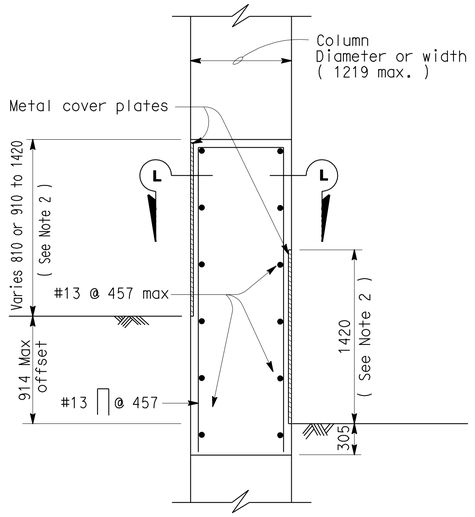

TYPICAL SECTION

Roadway offset 914 mm or less
Column width less than 1219 mm

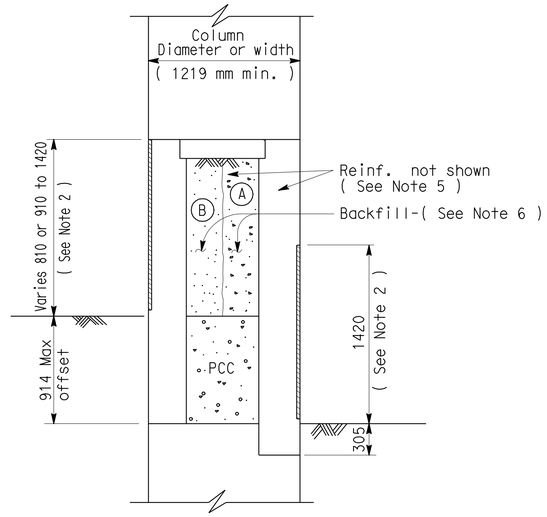

TYPICAL SECTION

Roadway offset 914 mm or less
Column widths greater than 1219 mm

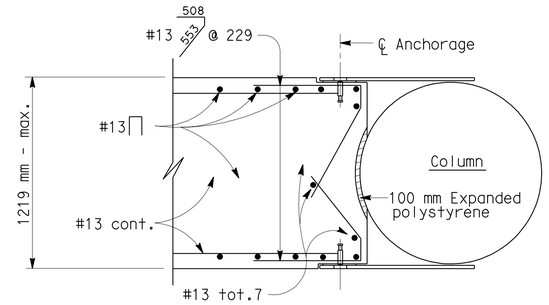

SECTION L-L

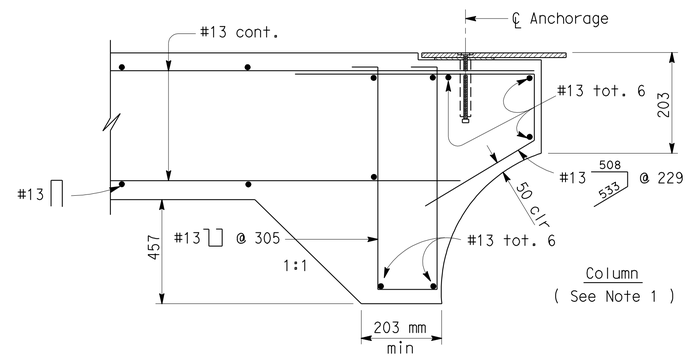

SECTION M-M

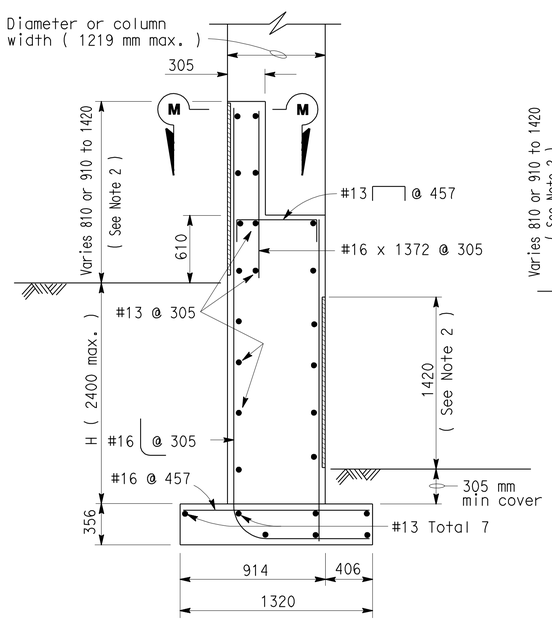

TYPICAL SECTION

Roadway offsets greater than 914 mm
Column widths 1219 mm or less

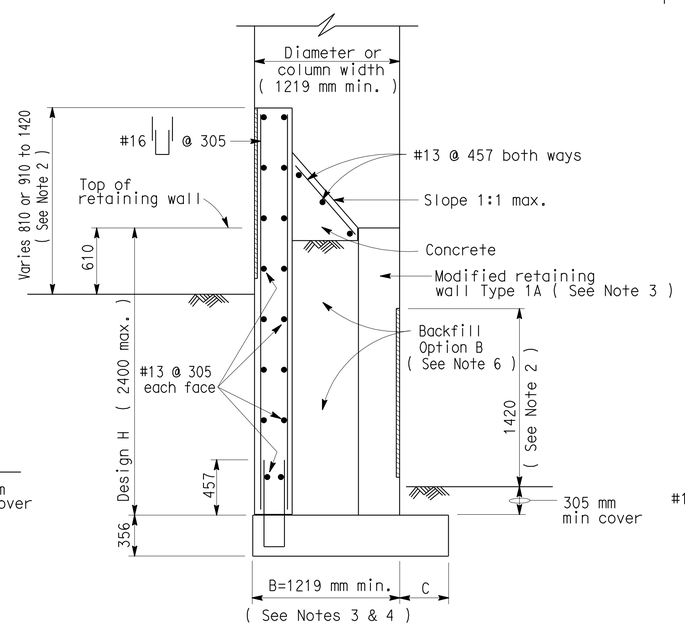

TYPICAL SECTION

Roadway offsets greater than 914 mm
Column widths greater than 1219 mm

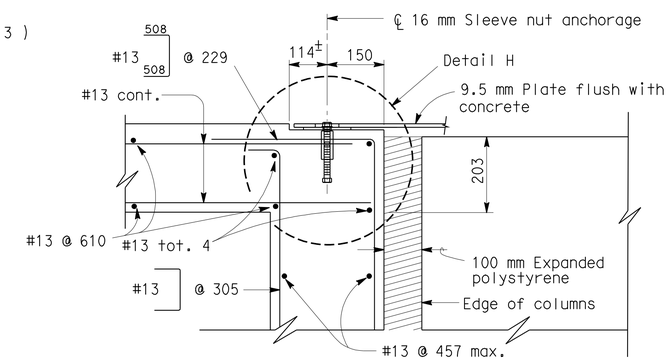

DETAIL G

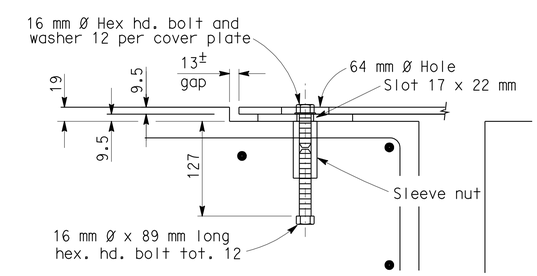

DETAIL H

NOTES:

1. These details are to be combined with "Concrete Barrier Type 60 R" Sheet No.1. Details not indicated are similar to the details shown elsewhere on said sheet.
2. Metal plate details at columns shown on Concrete Barrier Type 60 R Sheet No.1.
3. For Retaining Wall Type 1A details, see Standard Plans.
4. Extend retaining wall footing dimension "B" to satisfy column width as indicated.
5. Extend reinforcement as shown in Section C-C on Concrete Barrier Type 60 R Sheet No.1.
6. Contractor options for fill between barrier walls:
   - (A) Place PCC between barrier walls, may be placed monolithic.
   - (B) Place granular material from base to bottom of concrete cap.

NO SCALE
ALL DIMENSIONS ARE IN MILLMETERS UNLESS OTHERWISE SHOWN

C-29

STANDARD DRAWING

RELEASE DATE 8/26/03	DESIGN BY R. BISHOP	CHECKED D. SOON	RELEASED BY
FILE NO. xs16-090-2	DETAILS BY BEN MATSUO	CHECKED R. BISHOP	OFFICE CHIEF
	SUBMITTED BY R.C. ANDERSON	DRAWING DATE 6/99	

STATE OF CALIFORNIA
DEPARTMENT OF TRANSPORTATION

DIVISION OF ENGINEERING SERVICES

BRIDGE NO. Var
KILOMETER POST Var

BARRIER - CONCRETE TYPE 60R TRANSITION AT BRIDGE COLUMN

DS OSD 2147A (METRIC) (REV. 2/25/97)

ORIGINAL SCALE IN MILLIMETERS FOR REDUCED PLANS 0 10 20 30 40 50 60 70 80 90 100

CU 07276
EA 1218V1

DISREGARD PRINTS BEARING EARLIER REVISION DATES

REVISION DATES (PRELIMINARY STAGE ONLY)

SHEET 2 OF 2

USERNAME => trrene

71218vgd029.dgn

DATE PLOTTED => 03-MAY-2010 TIME PLOTTED => 13:22

DIST	COUNTY	ROUTE	KILOMETER POST TOTAL PROJECT	SHEET No	TOTAL
07	LA	5	50.8/58.0	86	869

Caltrans Metric

REGISTERED CIVIL ENGINEER

5-3-10
PLANS APPROVAL DATE

REGISTERED PROFESSIONAL ENGINEER
KYLE M KUNITAKE
No. 63726
Exp. 9/30/10
CIVIL
STATE OF CALIFORNIA

The State of California or its officers or agents shall not be responsible for the accuracy or completeness of electronic copies of this plan sheet.

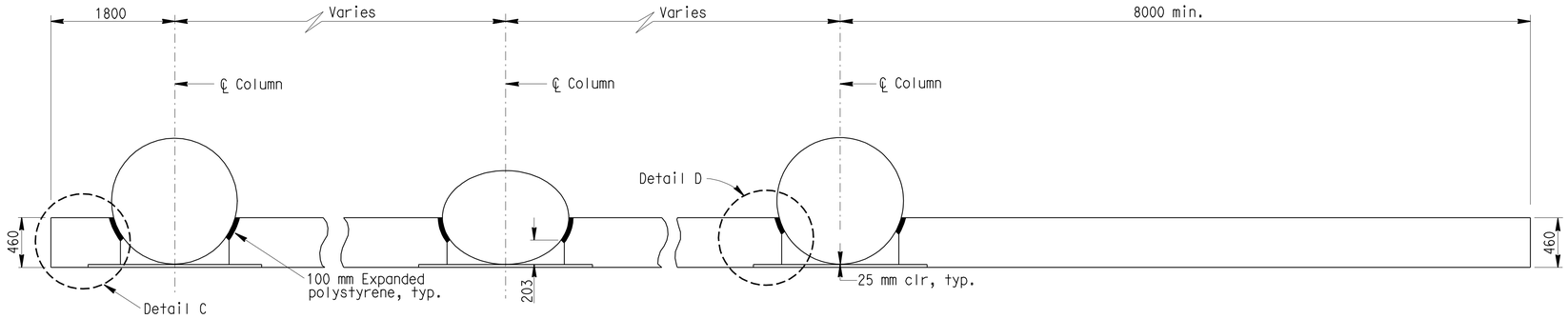

PLAN-CIRCULAR COLUMNS

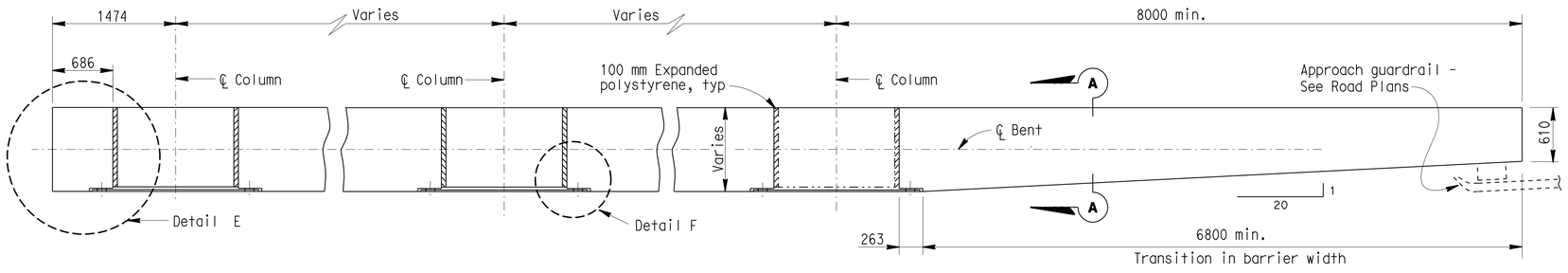

PLAN-RECTANGULAR COLUMNS

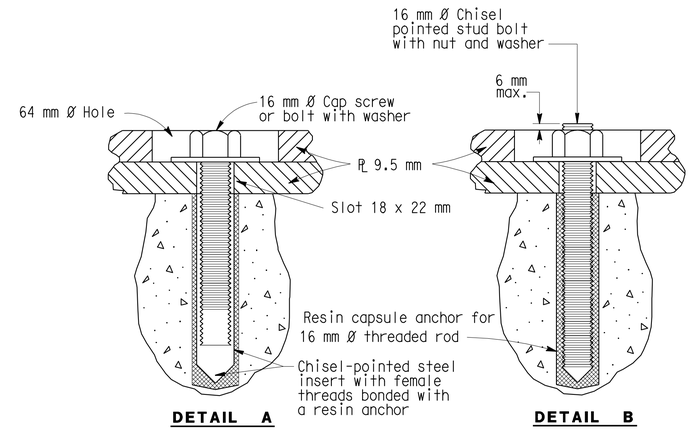

ALTERNATIVE ANCHORAGE

See Notes 1 and 2

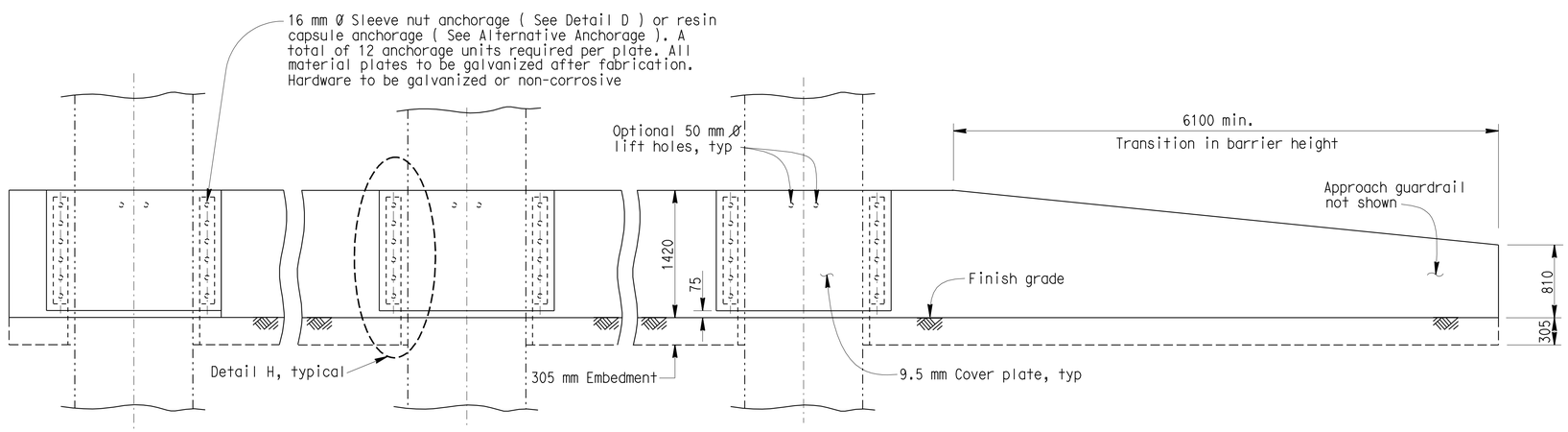

ELEVATION

NOTES:

1. Resin capsule anchorage is subject to approval of the engineer. Installation procedures shall comply with manufacturer's instructions.
2. Detail B similar to Detail A except for anchorage devices.
3. For drainage control, see "Roadway Plans".
4. The contractor shall verify all controlled field dimensions before ordering or fabricating any materials.

NO SCALE
ALL DIMENSIONS ARE IN MILLIMETERS UNLESS OTHERWISE SHOWN

C-30

STANDARD DRAWING

RELEASE DATE 8/26/03	DESIGN	BY N ABDIN	CHECKED FELIX ALTAMIRANO	RELEASED BY
FILE NO. xs16-110-1	DETAILS	BY R YEE	CHECKED N ABDIN	OFFICE CHIEF
	SUBMITTED	BY N ABDIN	DRAWING DATE 8/99	

STRUCTURES STANDARD DRAWING SHEET (METRIC) (REV. 3/1/99)

STATE OF CALIFORNIA
DEPARTMENT OF TRANSPORTATION

DIVISION OF ENGINEERING SERVICES

CU 07276
EA 1218V1

BRIDGE NO. Var
KILOMETER POST Var

BARRIER - CONCRETE TYPE 60VF
VERTICAL FACE FOR SIDE OF ROAD

ORIGINAL SCALE IN MILLIMETERS FOR REDUCED PLANS 0 10 20 30 40 50 60 70 80 90 100

DISREGARD PRINTS BEARING EARLIER REVISION DATES

REVISION DATES (PRELIMINARY STAGE ONLY)

SHEET 1 OF 2

USERNAME => trrene

71218vga030.dgn

USERNAME => trrene DATE PLOTTED => 03-MAY-2010 TIME PLOTTED => 13:22

DIST	COUNTY	ROUTE	KILOMETER POST TOTAL PROJECT	SHEET No	TOTAL
07	LA	5	50.8/58.0	87	869

Caltrans Metric

REGISTERED CIVIL ENGINEER

5-3-10
PLANS APPROVAL DATE

REGISTERED PROFESSIONAL ENGINEER
KYLE M KUNITAKE
No. 63726
Exp. 9/30/10
CIVIL
STATE OF CALIFORNIA

The State of California or its officers or agents shall not be responsible for the accuracy or completeness of electronic copies of this plan sheet.

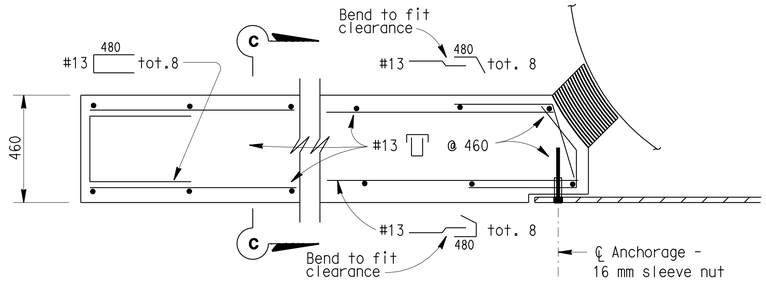

DETAIL C

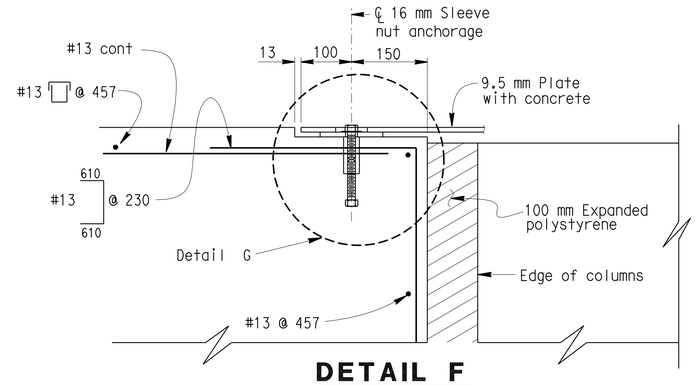

DETAIL F

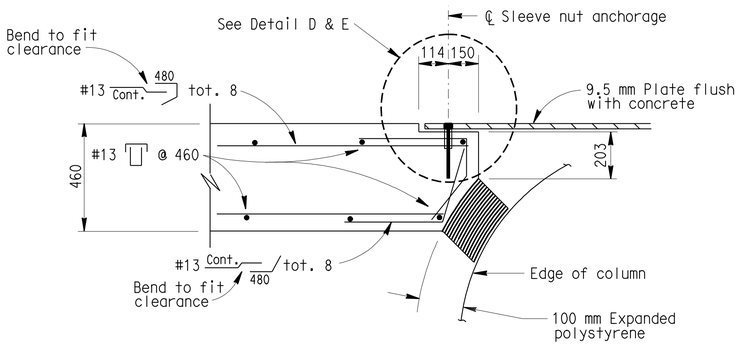

DETAIL D

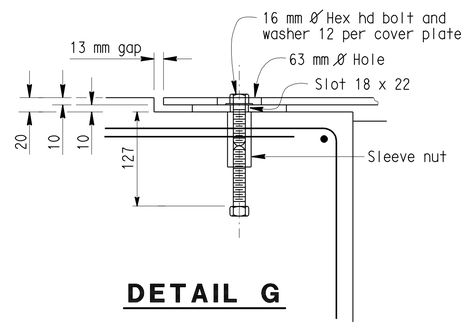

DETAIL G

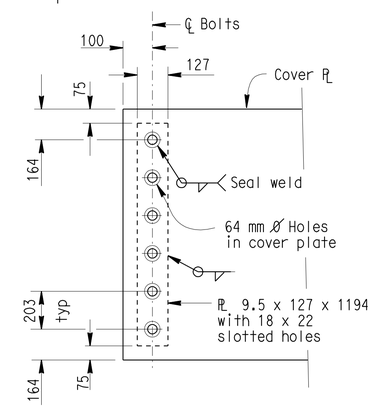

DETAIL H

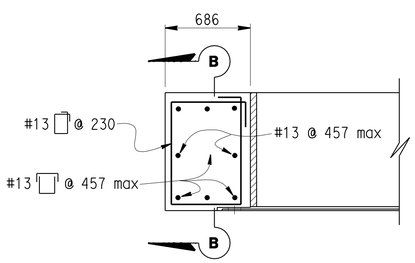

DETAIL E

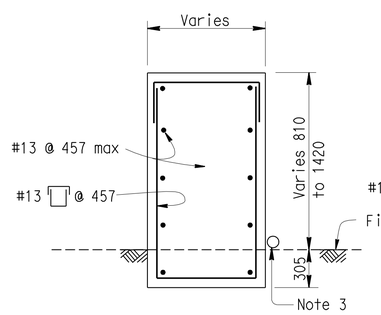

SECTION A-A

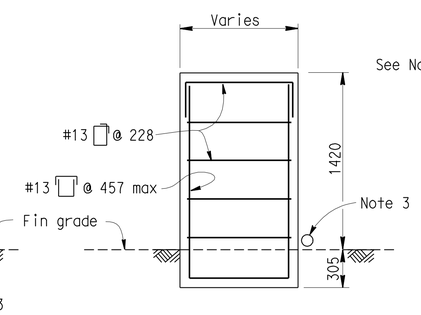

SECTION B-B

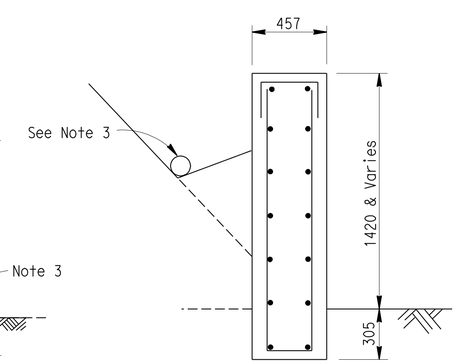

SECTION C-C

NO SCALE
ALL DIMENSIONS ARE IN MILLIMETERS UNLESS OTHERWISE SHOWN

C-31

STANDARD DRAWING

RELEASE DATE 8/26/03	DESIGN	BY N ABDIN	CHECKED FELIX ALTAMIRANO	RELEASED BY
	DETAILS	BY R YEE	CHECKED N ABDIN	
FILE NO. xs16-110-2	SUBMITTED	BY N ABDIN	DRAWING DATE 8/99	OFFICE CHIEF

STATE OF CALIFORNIA
DEPARTMENT OF TRANSPORTATION

DIVISION OF ENGINEERING SERVICES

BRIDGE NO. Var
KILOMETER POST Var

BARRIER - CONCRETE TYPE 60VF
VERTICAL FACE FOR SIDE OF ROAD

STRUCTURES STANDARD DRAWING SHEET (METRIC) (REV. 3/1/99)

ORIGINAL SCALE IN MILLIMETERS FOR REDUCED PLANS 0 10 20 30 40 50 60 70 80 90 100

CU 07276
EA 1218V1

DISREGARD PRINTS BEARING EARLIER REVISION DATES

REVISION DATES (PRELIMINARY STAGE ONLY)

SHEET 2 OF 2

USERNAME => trrene

71218vgo031.dgn

DATE PLOTTED => 03-MAY-2010 TIME PLOTTED => 13:22

DIST	COUNTY	ROUTE	KILOMETER POST TOTAL PROJECT	SHEET No	TOTAL
07	LA	5	50.8/58.0	88	869

REGISTERED CIVIL ENGINEER

5-3-10
PLANS APPROVAL DATE

REGISTERED PROFESSIONAL ENGINEER KYLE M KUNITAKE No. 63726 Exp. 9/30/10 CIVIL STATE OF CALIFORNIA

The State of California or its officers or agents shall not be responsible for the accuracy or completeness of electronic copies of this plan sheet.

(1) 16 mm Ø Sleeve nut anchorage (See Detail E) or Resin capsule anchorage (See Alternative Anchorage). A total of 8 anchorage units required per plate. All metal plates to be galvanized after fabrication. Hardware to be galvanized or non-corrosive

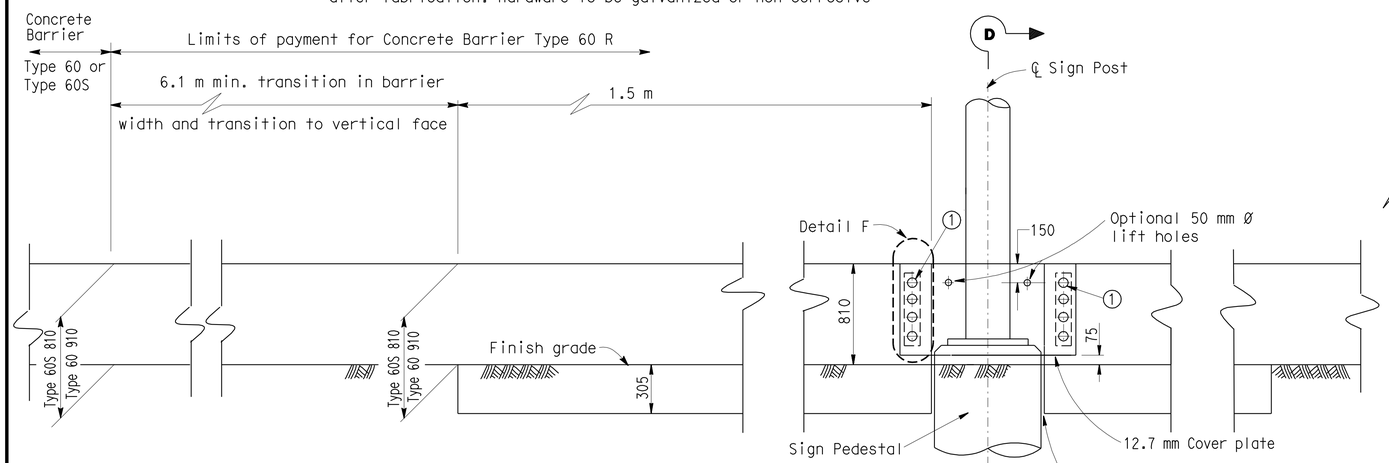

ELEVATION

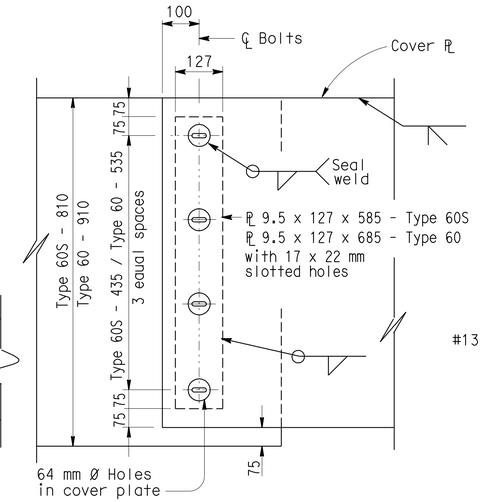

DETAIL F

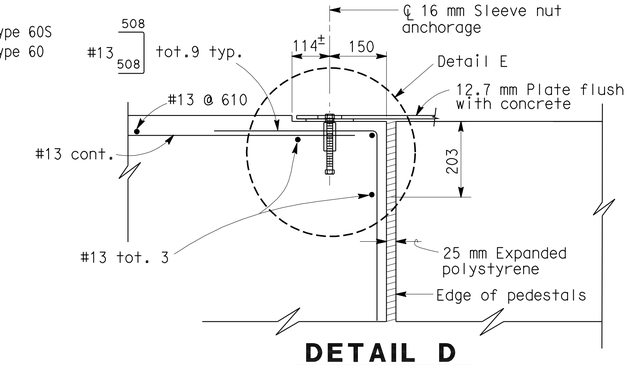

DETAIL D

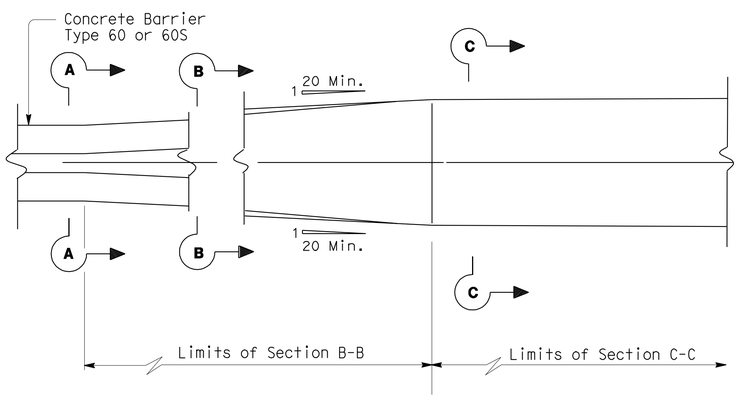

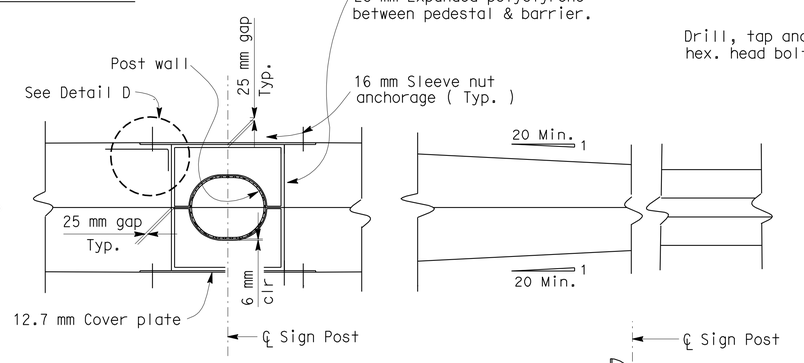

PLAN

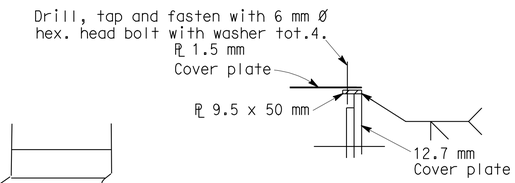

DETAIL G

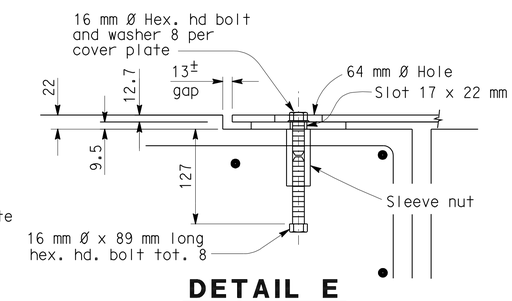

DETAIL E

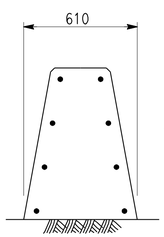

SECTION A-A

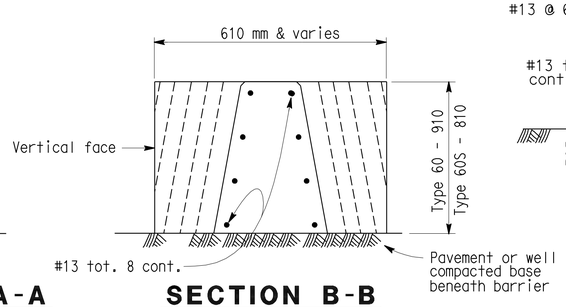

SECTION B-B

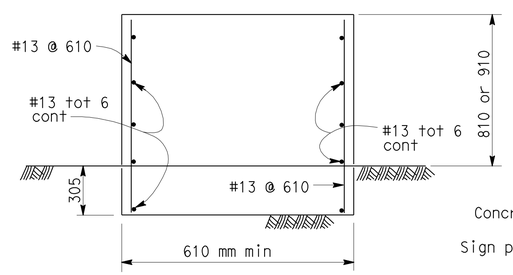

SECTION C-C

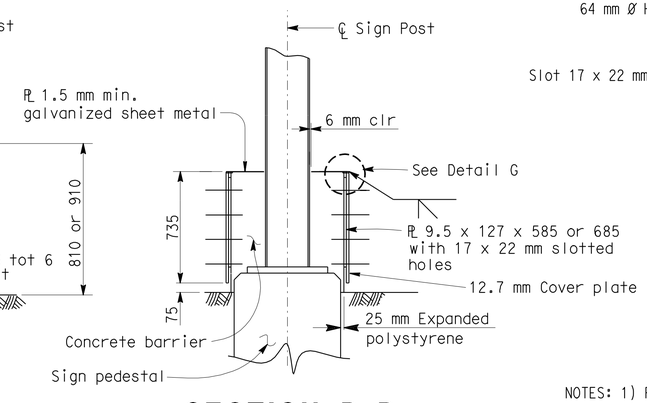

SECTION D-D

Note: Concrete Barrier Type 60 R is symmetrical about ℄ of sign post.

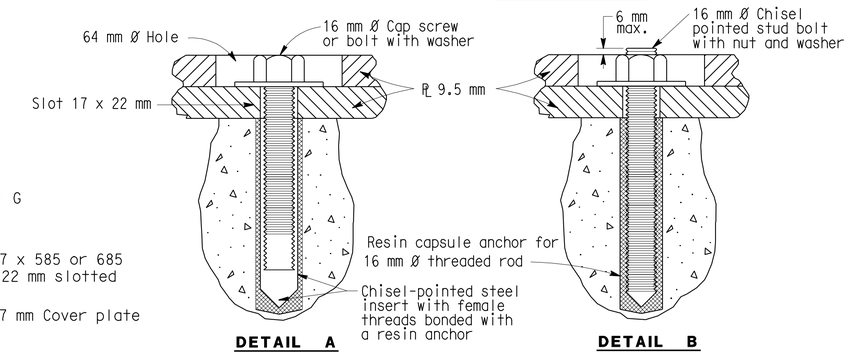

DETAIL A

DETAIL B

ALTERNATIVE ANCHORAGE

NOTES: 1) Resin capsule anchorage is subject to approval of the Engineer. Installation procedures shall comply with manufacturer's instructions.

2) Detail B similar to Detail A except for anchorage devices.

NO SCALE

ALL DIMENSIONS ARE IN MILLIMETERS UNLESS OTHERWISE SHOWN

C-32

STANDARD DRAWING					
RELEASE DATE 8/26/03	DESIGN	BY R. Bishop	CHECKED N ABDIN	RELEASED BY	
	DETAILS	BY Ben Matsuo	CHECKED N ABDIN		
FILE NO. xs16-080	SUBMITTED	BY R.C. Anderson	DRAWING DATE 6/99	OFFICE CHIEF	

STATE OF CALIFORNIA DEPARTMENT OF TRANSPORTATION

DIVISION OF ENGINEERING SERVICES

BRIDGE NO. Var

KILOMETER POST Var

BARRIER-CONCRETE TYPE 60 RS TRANSITION AT SIGN POST

DS OSD 2147A (METRIC) (REV. 2/25/97)

ORIGINAL SCALE IN MILLIMETERS FOR REDUCED PLANS 0 10 20 30 40 50 60 70 80 90 100

CU 07276
EA 1218V1

DISREGARD PRINTS BEARING EARLIER REVISION DATES

REVISION DATES (PRELIMINARY STAGE ONLY)

SHEET 1 OF 1

USERNAME => trrene

71218vga032.dgn

DATE PLOTTED => 03-MAY-2010 TIME PLOTTED => 13:22

Dist	COUNTY	ROUTE	KILOMETER POST TOTAL PROJECT	SHEET No.	TOTAL SHEETS
07	LA	5	50.8/58.0	89	869

REGISTERED CIVIL ENGINEER 7/02/08 DATE

5-3-10
PLANS APPROVAL DATE

REGISTERED PROFESSIONAL ENGINEER KYLE M KUNITAKE No. 63726 Exp. 9/30/10 CIVIL STATE OF CALIFORNIA

THE STATE OF CALIFORNIA OR ITS OFFICERS OR AGENTS SHALL NOT BE RESPONSIBLE FOR THE ACCURACY OR COMPLETENESS OF ELECTRONIC COPIES OF THIS PLAN SHEET.

Caltrans Metric

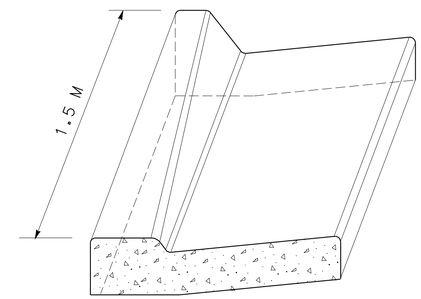

CONC CURB TRANSITION
(TYPE B4 MOD) TO (TYPE B4)

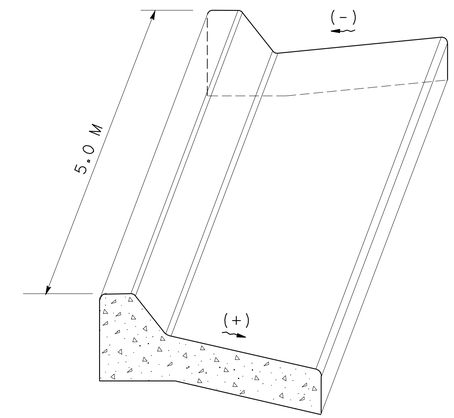

CONC CURB (TYPE B4 MOD)
SLOPE TRANSITION
FROM (+) SLOPE TO (-)

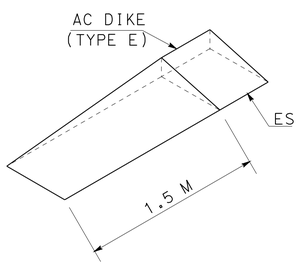

DIKE TRANSITION TYPE E
FROM 0 TO FULL HEIGHT

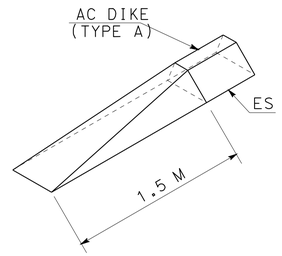

DIKE TRANSITION (TYPE A)
FROM 0 TO FULL HEIGHT

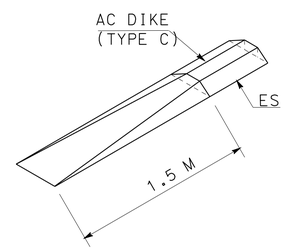

DIKE TRANSITION TYPE C FROM
0 TO FULL HEIGHT

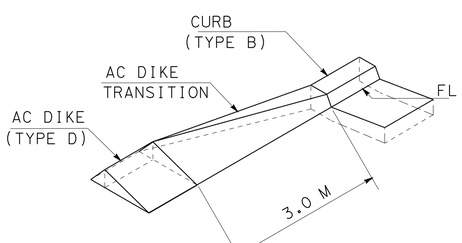

DIKE TRANSITION TO CONC CURB
(TYPE D) TO (TYPE B-4)

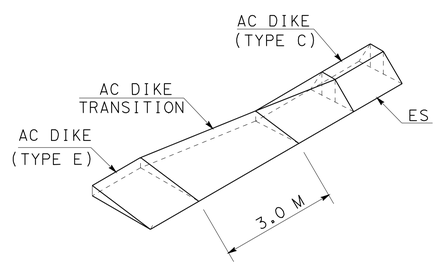

DIKE TRANSITION
(TYPE E) TO (TYPE C)

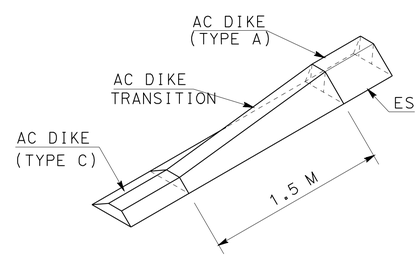

DIKE TRANSITION
(TYPE A) TO (TYPE C)

ALL DIMENSIONS ARE IN MILLIMETERS
UNLESS OTHERWISE SHOWN

CONSTRUCTION DETAILS

NO SCALE

C-33

STATE OF CALIFORNIA - DEPARTMENT OF TRANSPORTATION
Caltrans OFFICE OF DESIGN D

FUNCTIONAL SUPERVISOR: CELINA AVILES
CALCULATED-DESIGNED BY: JOSEPH KIBE
CHECKED BY: KYLE KUNITAKE
REVISED BY
DATE REVISED

LAST REVISION 00-00-00
DATE PLOTTED => 03-MAY-2010
TIME PLOTTED => 13:23

DIST	COUNTY	ROUTE	KILOMETER POST TOTAL PROJECT	SHEET No	TOTAL SHEETS
07	LA	5	50.8/58.0	90	869

Fritz Hoffman 7-10-08
REGISTERED CIVIL ENGINEER DATE

5-3-10
PLANS APPROVAL DATE

REGISTERED PROFESSIONAL ENGINEER F. H. HOFFMAN No. C 46401 Exp. 3-31-11 CIVIL STATE OF CALIFORNIA

The State of California or its officers or agents shall not be responsible for the accuracy or completeness of electronic copies of this plan sheet.

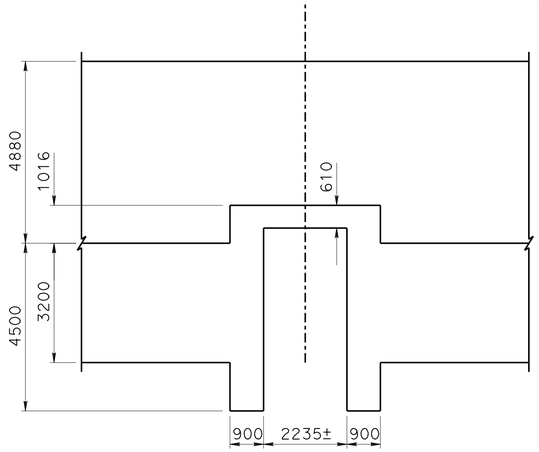

SW NO. 565
1:80
Station 566+62.15

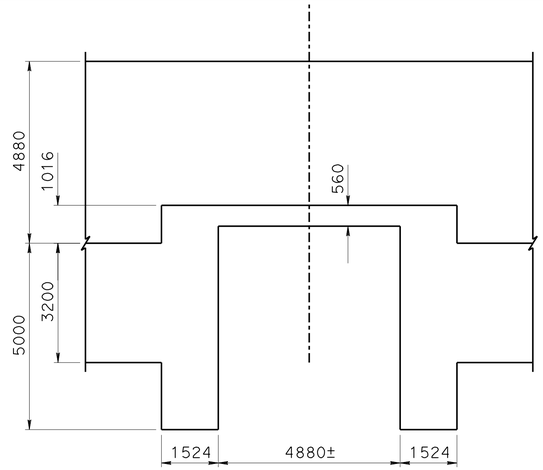

SW NO. 568
1:80
Station 569+61.58

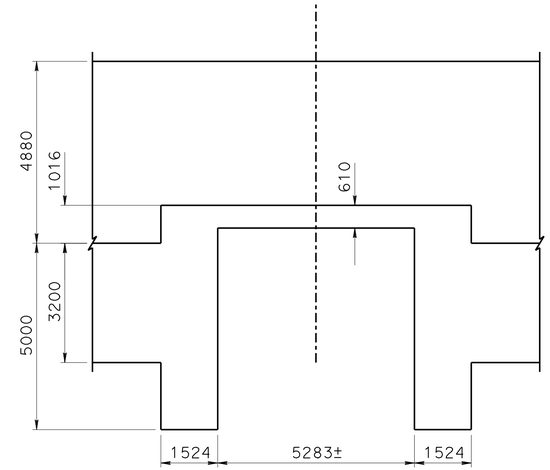

SW NO. 568
1:80
Station 572+52.00

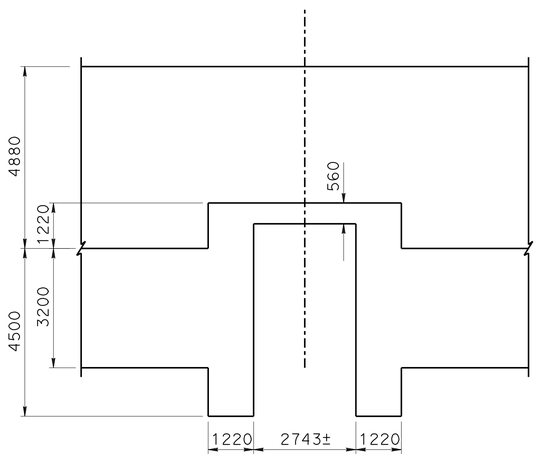

SW NO. 568
1:80
Station 573+32.83

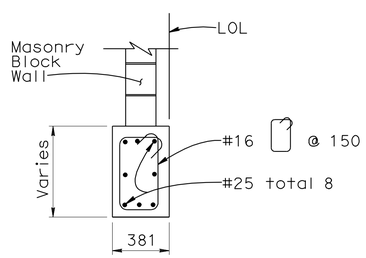

SECTION A-A
No scale

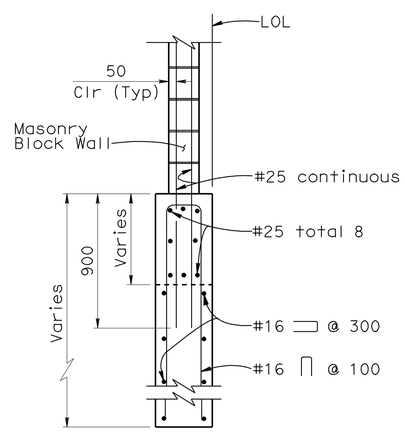

SECTION B-B
No scale

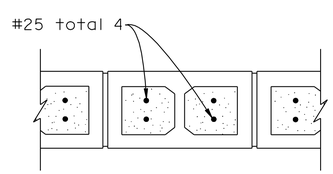

SECTION C-C
No scale

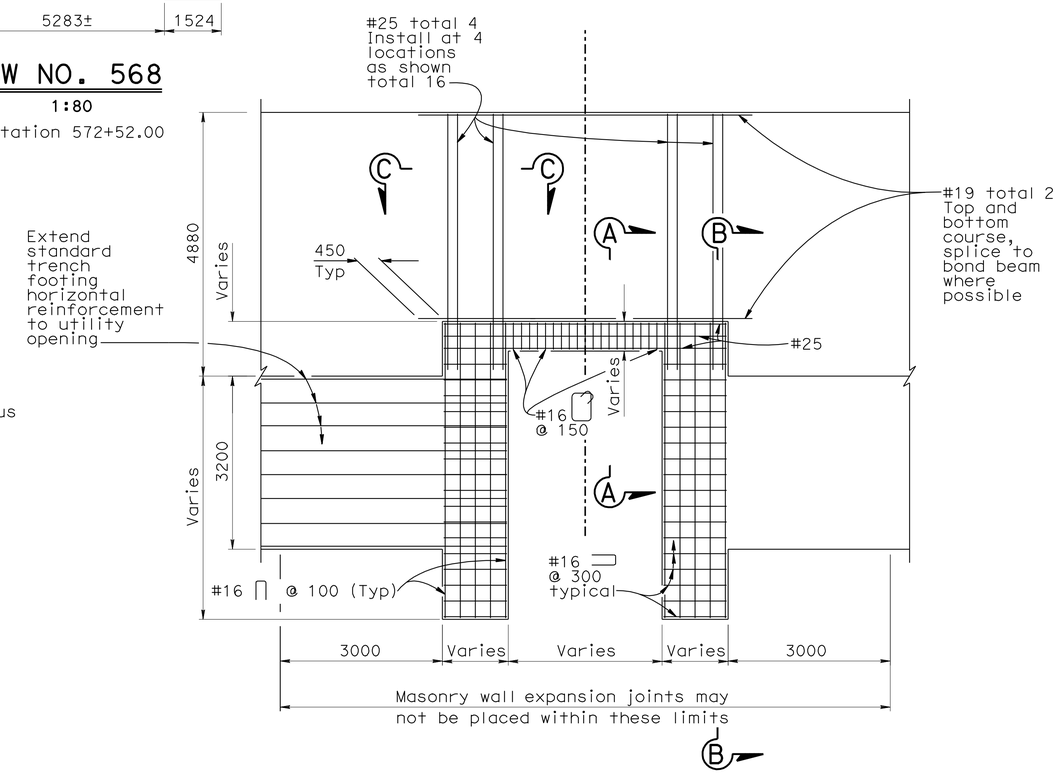

PART ELEVATION
SOUND WALL DRAINAGE OPENING DETAILS (SW NO. 565 AND 568)
No scale

NOTE:
Reinforcing steel shown is that required for drainage openings and is in addition to that required for masonry block wall. For standard reinforcment not shown, see B15-1 B15-2

NOTE:
THE CONTRACTOR SHALL VERIFY ALL CONTROLLING FIELD DIMENSIONS BEFORE ORDERING OR FABRICATING ANY MATERIAL.

C-34

DESIGN	BY Xiaodong Chen	CHECKED Fritz Hoffman	
DETAILS	BY Roelina Martinez	CHECKED Fritz Hoffman	
QUANTITIES	BY	CHECKED	

STATE OF CALIFORNIA
DEPARTMENT OF TRANSPORTATION

DIVISION OF ENGINEERING SERVICES
STRUCTURE DESIGN
DESIGN BRANCH 6

CU 07
EA 1218V1

BRIDGE NO.
KILOMETER POST Various

SOUNDWALL (VARIOUS)
DRAINAGE OPENINGS NO. 1

ALL DIMENSIONS ARE IN MILLIMETERS UNLESS OTHERWISE SHOWN

ORIGINAL SCALE IN MILLIMETERS FOR REDUCED PLANS 0 10 20 30 40 50 60 70 80 90 100

DISREGARD PRINTS BEARING EARLIER REVISION DATES

REVISION DATES: 7-8-08 7-10-08 9-25-08 9-30-08 10-14-08

SHEET OF

FILE => 71218vga034.dgn

STRUCTURES DESIGN DETAIL SHEET (METRIC) (REV.03-17-04)

USERNAME => trrene DATE PLOTTED => 03-MAY-2010 TIME PLOTTED => 13:23

DIST	COUNTY	ROUTE	KILOMETER POST TOTAL PROJECT	SHEET No	TOTAL SHEETS
07	LA	5	50.8/58.0	91	869

REGISTERED CIVIL ENGINEER — DATE 7-10-08

5-3-10
PLANS APPROVAL DATE

REGISTERED PROFESSIONAL ENGINEER — F. H. HOFFMAN — No. C 46401 — Exp. 3-31-11 — CIVIL — STATE OF CALIFORNIA

The State of California or its officers or agents shall not be responsible for the accuracy or completeness of electronic copies of this plan sheet.

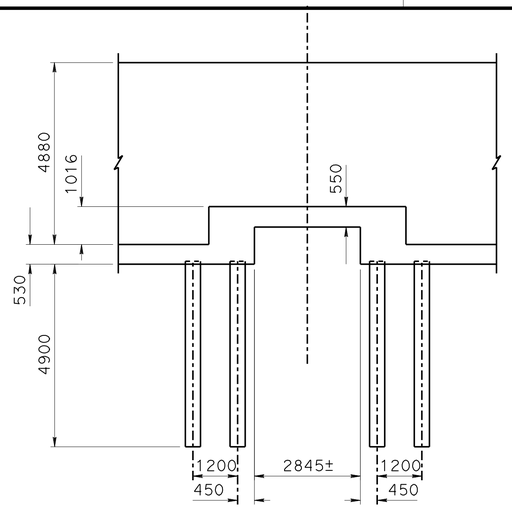

SW NO. 569

1:80

Station 573+95.37

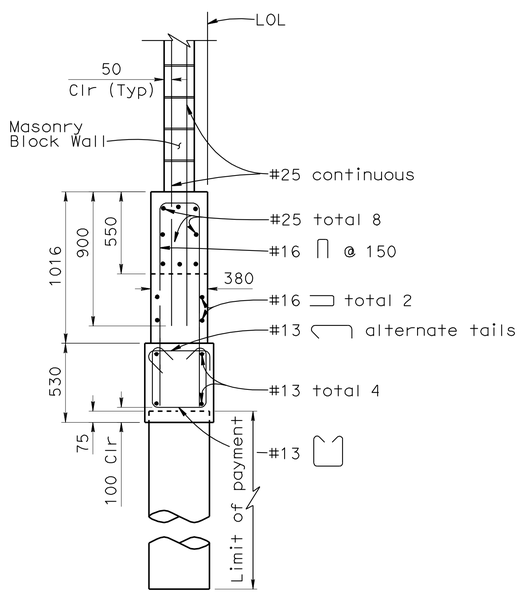

SECTION D-D

1:20

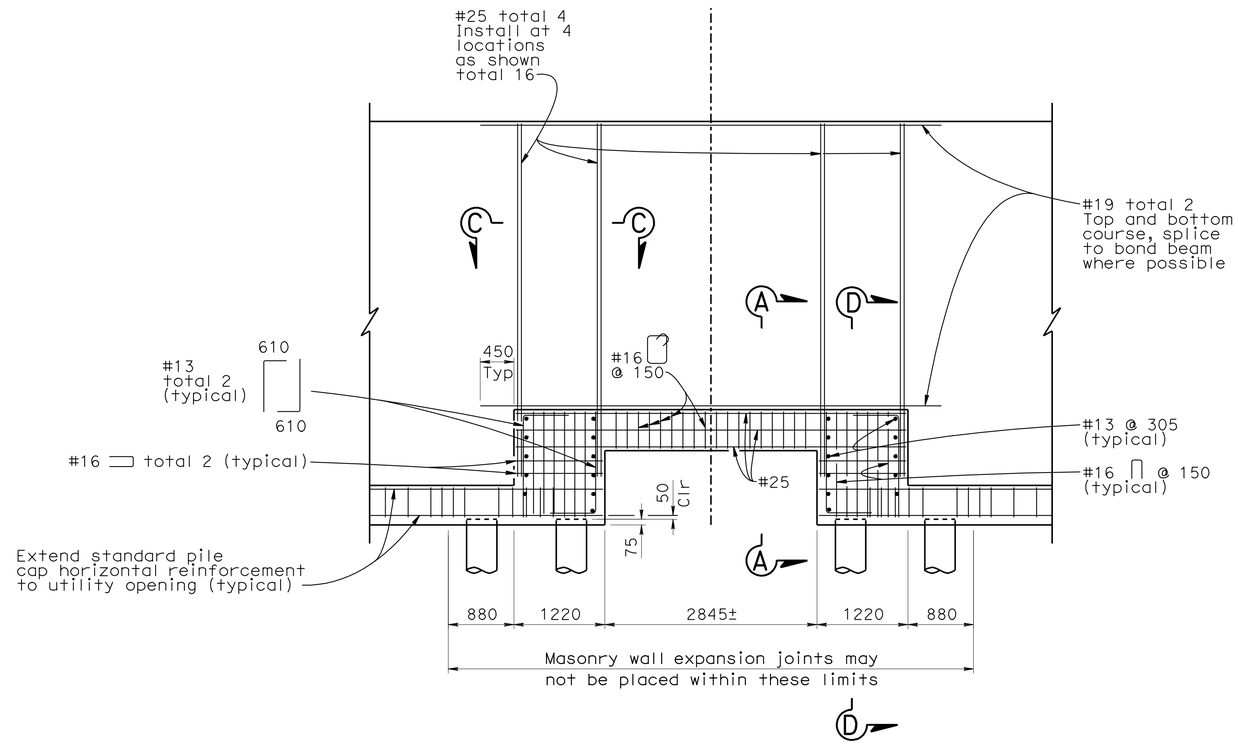

PART ELEVATION
SOUND WALL DRAINAGE OPENING DETAILS
(SW NO. 569)

1:40

NOTE:

1. Reinforcing steel shown is that required for drainage openings and is in addition to that required for masonry block wall and CIDH piles. For standard reinforcment not shown, see B15-3 B15-4 B15-5
2. For SECTION A-A and SECTION C-C, see "DRAINAGE OPENINGS NO. 1" sheet.
3. For piles and pile layout not shown, see "SW-35" sheet.

NOTE:
THE CONTRACTOR SHALL VERIFY ALL CONTROLLING FIELD DIMENSIONS BEFORE ORDERING OR FABRICATING ANY MATERIAL.

C-35

DESIGN	BY Xiaodong Chen	CHECKED Fritz Hoffman	
DETAILS	BY Roelina Martinez	CHECKED Fritz Hoffman	
QUANTITIES	BY	CHECKED	

STATE OF CALIFORNIA
DEPARTMENT OF TRANSPORTATION

DIVISION OF ENGINEERING SERVICES
STRUCTURE DESIGN
DESIGN BRANCH 6

BRIDGE NO.
KILOMETER POST Various

SOUNDWALL (VARIOUS)
DRAINAGE OPENINGS NO. 2

ALL DIMENSIONS ARE IN MILLIMETERS UNLESS OTHERWISE SHOWN

ORIGINAL SCALE IN MILLIMETERS FOR REDUCED PLANS 0 10 20 30 40 50 60 70 80 90 100

CU 07
EA 1218V1

DISREGARD PRINTS BEARING EARLIER REVISION DATES → 9-26-08 9-26-08 9-30-08 10-14-08

REVISION DATES — SHEET — OF

FILE => 71218vga035.dgn

STRUCTURES DESIGN DETAIL SHEET (METRIC) (REV.03-17-04)

USERNAME => trrene DATE PLOTTED => 03-MAY-2010 TIME PLOTTED => 13:23

Dist	COUNTY	ROUTE	KILOMETER POST TOTAL PROJECT	SHEET No.	TOTAL SHEETS
07	LA	5	50.8/58.0	92	869

REGISTERED CIVIL ENGINEER 10/21/08 DATE

5-3-10
PLANS APPROVAL DATE

REGISTERED PROFESSIONAL ENGINEER KYLE M KUNITAKE No. 63726 Exp. 9/30/10 CIVIL STATE OF CALIFORNIA

THE STATE OF CALIFORNIA OR ITS OFFICERS OR AGENTS SHALL NOT BE RESPONSIBLE FOR THE ACCURACY OR COMPLETENESS OF ELECTRONIC COPIES OF THIS PLAN SHEET.

Caltrans Metric

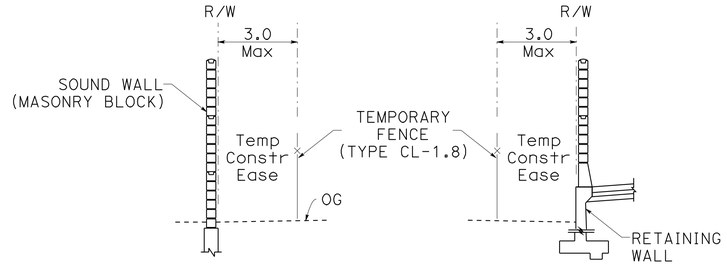

TYPICAL X-SECTIONS
TEMPORARY FENCE

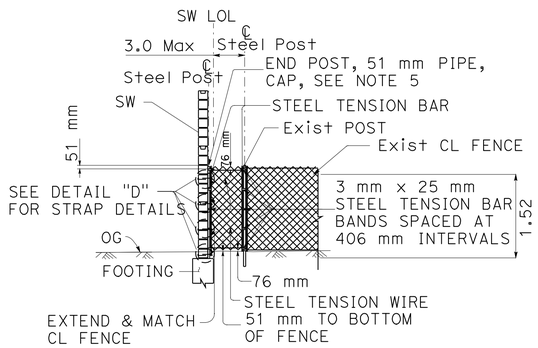

DETAIL "C"

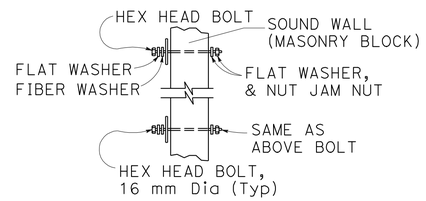

DETAIL "F"
STRAP ANCHOR

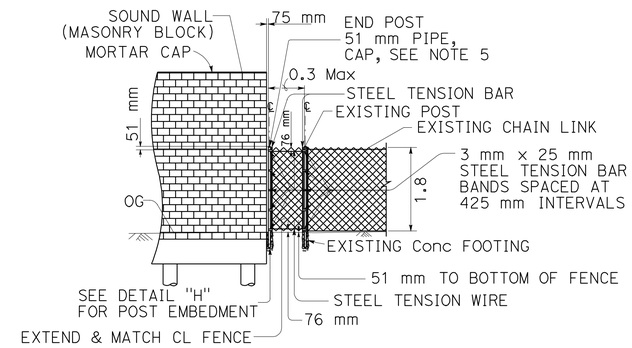

DETAIL "I"

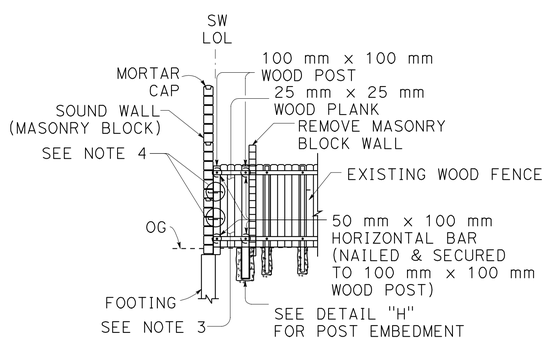

DETAIL "B"

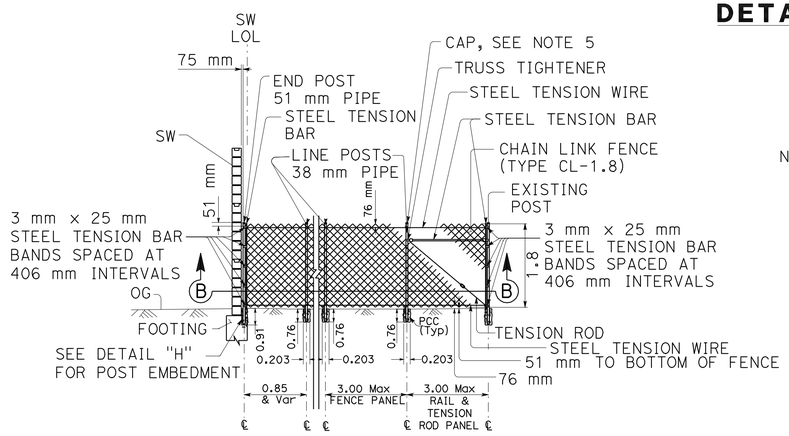

DETAIL "E"

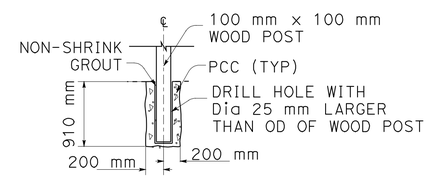

DETAIL "H"
POST EMBEDMENT

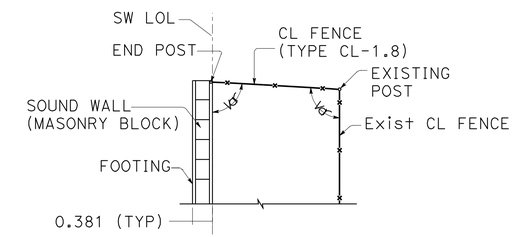

SECTION B-B

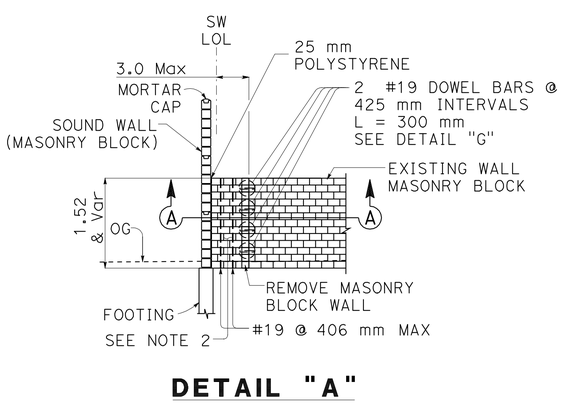

DETAIL "A"

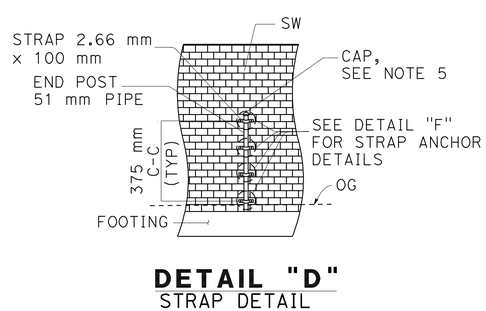

DETAIL "D"
STRAP DETAIL

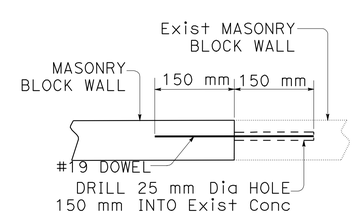

DETAIL "G"
DRILL AND GROUT DOWEL

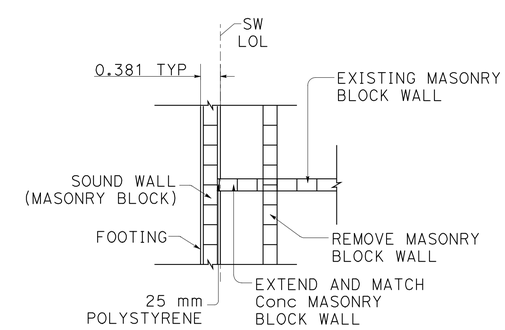

SECTION A-A

NOTES:

1. BLOCKS WHICH HAVE A CUT SURFACE SHALL HAVE CELLS FILLED WITH GROUT.
2. THE EXTENDED MASONRY BLOCK WALL SHALL MATCH THE EXISTING MASONRY BLOCK WALL IN MATERIAL, SIZE, AND COLOR.
3. THE EXTENDED WOOD FENCE SHALL MATCH THE EXISTING WOOD FENCE IN MATERIAL, COLOR AND DESIGN.
4. THE END POST OF THE WOOD FENCE OR END TUBE OF THE IRON FENCE SHALL BE SECURED TO THE NEW SOUND WALL (MASONRY BLOCK) WITH 10 mm Dia. STUDS WITH EXPANSION ANCHORS, 32 mm Dia. CUT WASHERS, LOCK WASHERS AND HEX. NUTS (TYP).
5. DRIVE FIT GALVANIZED CAP TO POST WITH 32 mm ROUND HEAD RIVET.

ALL DIMENSIONS ARE IN METERS UNLESS OTHERWISE SHOWN

CONSTRUCTION DETAILS
NO SCALE

C-36

REVISED BY | DATE REVISED
KYLE | AMIR
CALCULATED-DESIGNED BY | CHECKED BY
FUNCTIONAL SUPERVISOR
CELINA AVILES
STATE OF CALIFORNIA - DEPARTMENT OF TRANSPORTATION
Caltrans DESIGN

LAST REVISION 00-00-00 | DATE PLOTTED => 03-MAY-2010 | TIME PLOTTED => 13:23

Dist	COUNTY	ROUTE	KILOMETER POST TOTAL PROJECT	SHEET No.	TOTAL SHEETS
07	LA	5	50.8/58.0	93	869

REGISTERED CIVIL ENGINEER DATE 12/04/08

5-3-10
PLANS APPROVAL DATE

REGISTERED PROFESSIONAL ENGINEER KYLE M KUNITAKE No. 63726 Exp. 9/30/10 CIVIL STATE OF CALIFORNIA

THE STATE OF CALIFORNIA OR ITS OFFICERS OR AGENTS SHALL NOT BE RESPONSIBLE FOR THE ACCURACY OR COMPLETENESS OF ELECTRONIC COPIES OF THIS PLAN SHEET.

Caltrans Metric

RAMP TERMINUS PAVEMENT JOINT DETAIL

HOLLYWOOD WAY
SOUTHBOUND OFF-RAMP

ALL DIMENSIONS ARE IN METERS
UNLESS OTHERWISE SHOWN

CONSTRUCTION DETAIL

SCALE 1:50

C-37

STATE OF CALIFORNIA - DEPARTMENT OF TRANSPORTATION
Caltrans **DESIGN**

FUNCTIONAL SUPERVISOR: CELINA AVILES
CALCULATED-DESIGNED BY: KYLE KUNITAKE
CHECKED BY: AMIR ELSHARIEF
REVISED BY / DATE REVISED

LAST REVISION 00-00-00
DATE PLOTTED => 03-MAY-2010
TIME PLOTTED => 13:23

Dist	COUNTY	ROUTE	KILOMETER POST TOTAL PROJECT	SHEET No.	TOTAL SHEETS
07	LA	5	50.8/58.0	94	869

Caltrans Metric

REGISTERED CIVIL ENGINEER — DATE 5-5-09

5-3-10
PLANS APPROVAL DATE

REGISTERED PROFESSIONAL ENGINEER — PETER VAN DINH — No. C62666 — Exp. 6-30-10 — CIVIL — STATE OF CALIFORNIA

THE STATE OF CALIFORNIA OR ITS OFFICERS OR AGENTS SHALL NOT BE RESPONSIBLE FOR THE ACCURACY OR COMPLETENESS OF ELECTRONIC COPIES OF THIS PLAN SHEET.

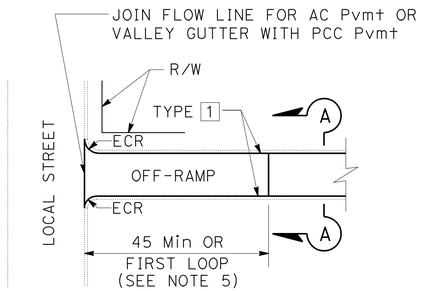

PCC RAMP TERMINUS

OFF-RAMP

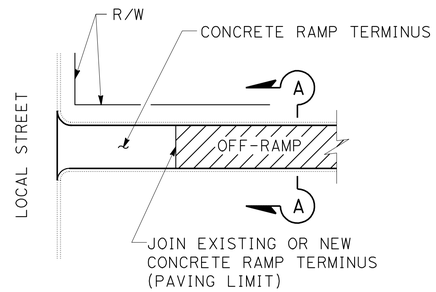

OFF-RAMP

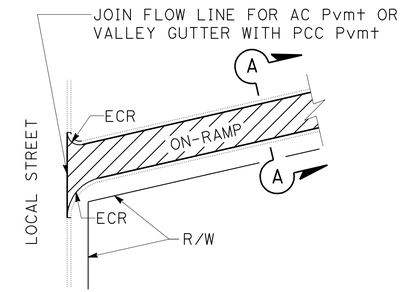

ON-RAMP

NOTES:

1. FOR COMPLETE R/W AND ACCURATE ACCESS DATA, SEE R/W RECORD MAPS AT DISTRICT OFFICE.
2. EXISTING UTILITY FACILITIES AND DRAINAGE INLETS HAVE NOT BEEN PLOTTED ON THESE PLANS.
3. EXACT PAVING LIMITS WILL BE DETERMINED BY THE ENGINEER.
4. OMIT COLD PLANING AND AC ON BRIDGE DECKS, PCC RAMP TERMINI AND PCC PAVEMENT.
5. 45m MINIMUM FOR UNSIGNALIZED INTERSECTION OR THE FIRST LOOP FOR SIGNALIZED INTERSECTION

ABBREVIATION:

RHMA-G - RUBBERIZED HOT MIX ASPHALT (GAP GRADED)

LEGEND:

60mm COLD PLANE AC PAVEMENT
60mm RHMA-G

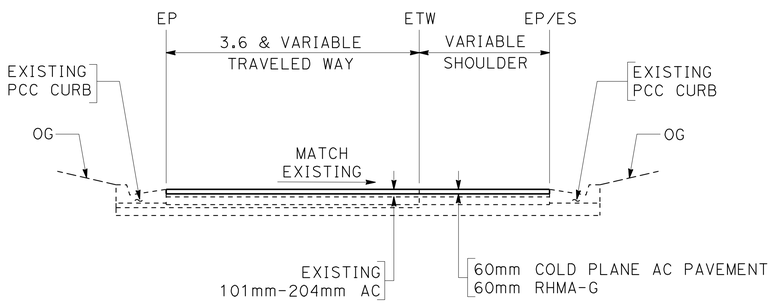

SECTION A-A

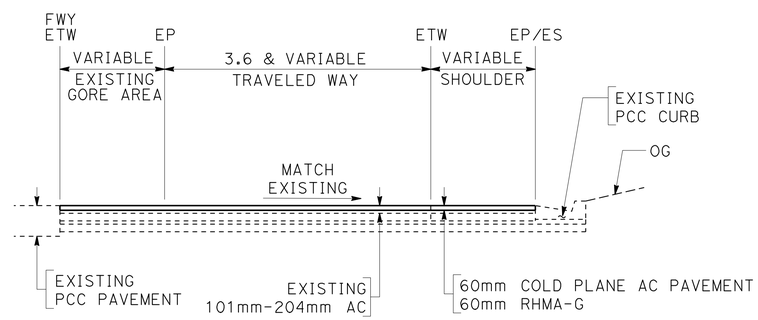

SECTION B-B

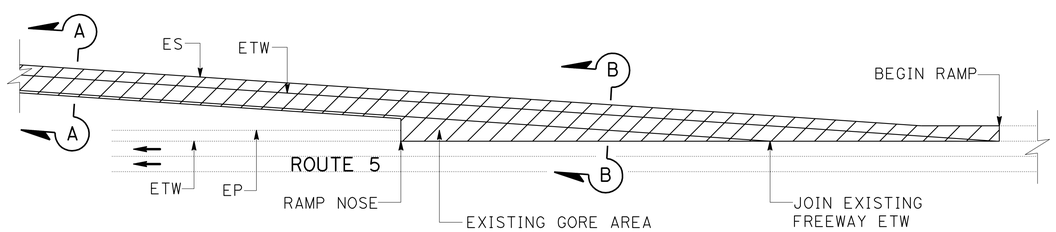

OFF-RAMP

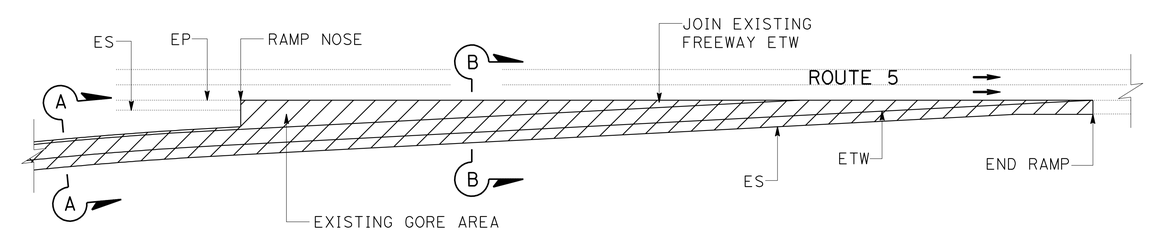

ON-RAMP

TYPICAL RAMP PAVING DETAILS

ALL DIMENSIONS ARE IN
METERS UNLESS OTHERWISE SHOWN

CONSTRUCTION DETAILS

NO SCALE

C-38

STATE OF CALIFORNIA - DEPARTMENT OF TRANSPORTATION
Caltrans MAINTENANCE ENGINEERING

FUNCTIONAL SUPERVISOR: PAUL CRISPI
CALCULATED-DESIGNED BY: PETER DINH
CHECKED BY: PAUL CRISPI
REVISED BY / DATE REVISED

LAST REVISION 00-00-00 | DATE PLOTTED => 03-MAY-2010 | TIME PLOTTED => 13:23

Dist	COUNTY	ROUTE	KILOMETER POST TOTAL PROJECT	SHEET No.	TOTAL SHEETS
07	LA	5	50.8/58.0	95	869

Caltrans Metric

REGISTERED CIVIL ENGINEER 5-5-09 DATE

5-3-10
PLANS APPROVAL DATE

REGISTERED PROFESSIONAL ENGINEER PETER VAN DINH No. C62666 Exp 6-30-10 CIVIL STATE OF CALIFORNIA

THE STATE OF CALIFORNIA OR ITS OFFICERS OR AGENTS SHALL NOT BE RESPONSIBLE FOR THE ACCURACY OR COMPLETENESS OF ELECTRONIC COPIES OF THIS PLAN SHEET.

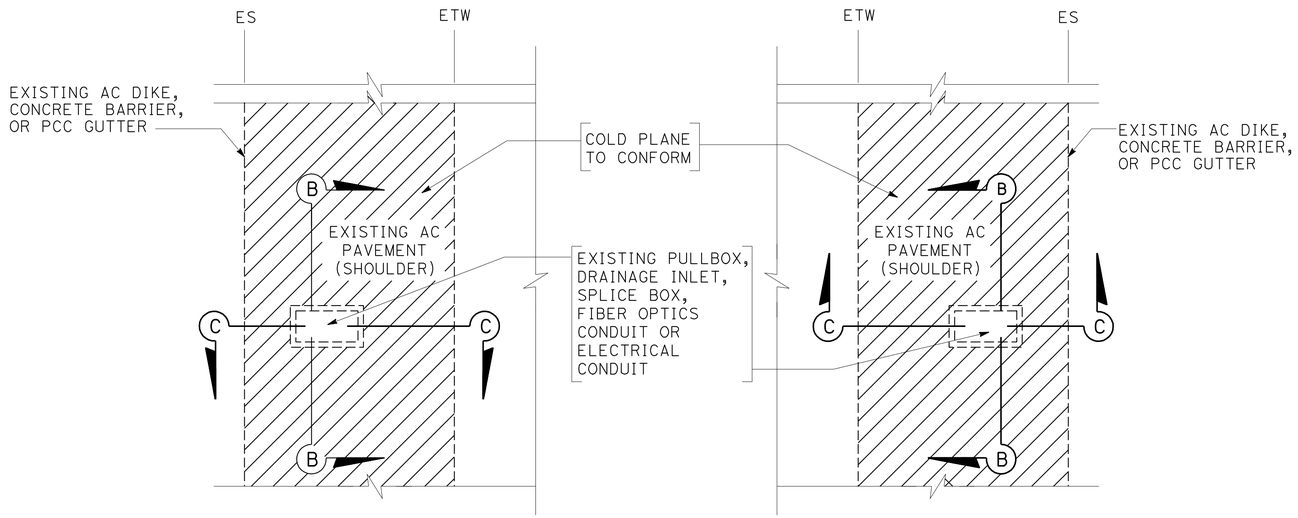

FIBER OPTIC PULLBOX, DRAINAGE INLET OR SPLICEBOX (VARIOUS LOCATIONS)

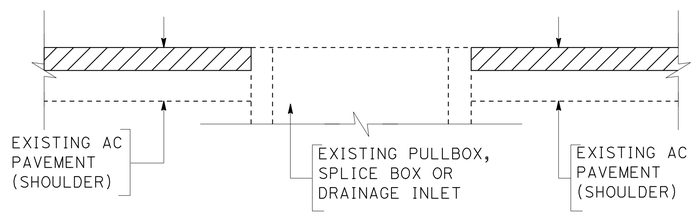

SECTION B-B

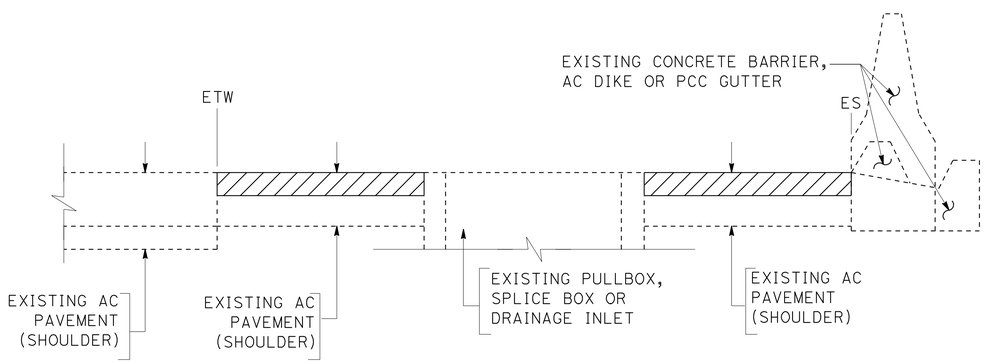

SECTION C-C

TYPICAL FIBER OPTIC PULLBOX, SPLICE BOX OR DRAINAGE INLET

NOTES:

1. COLD PLANE THE PLANNED THICKNESS OF EXISTING AC PAVEMENT.
2. REMOVE LOCALIZED FAILED AREAS AND PLACE WITH MINIMUM 60mm RHMA (GAP GRADED).
3. SEAL CRACKS GREATER THAN 6mm WITH HOT APPLIED CRACK SEALANT.
4. REPLACE AC SURFACING WITH THE PLANNED THICKNESS OF RHMA (GAP GRADED).

LEGEND:

60mm COLD PLANE AC PAVEMENT
60mm RHMA (GAP GRADED)

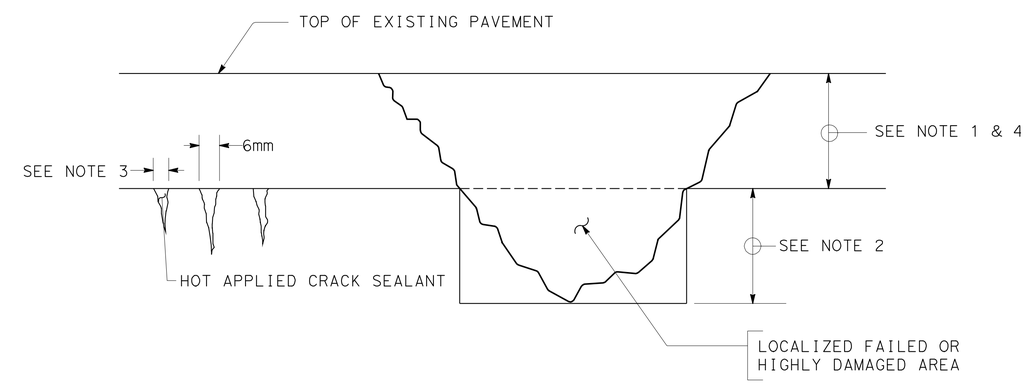

CRACK TREATMENT AND REPAIR FAILED AREAS

ALL DIMENSIONS ARE IN METERS UNLESS OTHERWISE SHOWN

CONSTRUCTION DETAILS

NO SCALE

C-39

REVISED BY	DATE REVISED

CALCULATED-DESIGNED BY: PETER DINH
CHECKED BY: PAUL CRISPI
FUNCTIONAL SUPERVISOR: PAUL CRISPI

STATE OF CALIFORNIA - DEPARTMENT OF TRANSPORTATION
Caltrans MAINTENANCE ENGINEERING

LAST REVISION 00-00-00 | DATE PLOTTED => 03-MAY-2010 | TIME PLOTTED => 13:24

Dist	COUNTY	ROUTE	KILOMETER POST TOTAL PROJECT	SHEET No.	TOTAL SHEETS
07	LA	5	50.8/58.0	96	869

Peter Vandinh 5-5-09
REGISTERED CIVIL ENGINEER DATE

5-3-10
PLANS APPROVAL DATE

REGISTERED PROFESSIONAL ENGINEER PETER VAN DINH No. C62666 Exp. 6-30-10 CIVIL STATE OF CALIFORNIA

THE STATE OF CALIFORNIA OR ITS OFFICERS OR AGENTS SHALL NOT BE RESPONSIBLE FOR THE ACCURACY OR COMPLETENESS OF ELECTRONIC COPIES OF THIS PLAN SHEET.

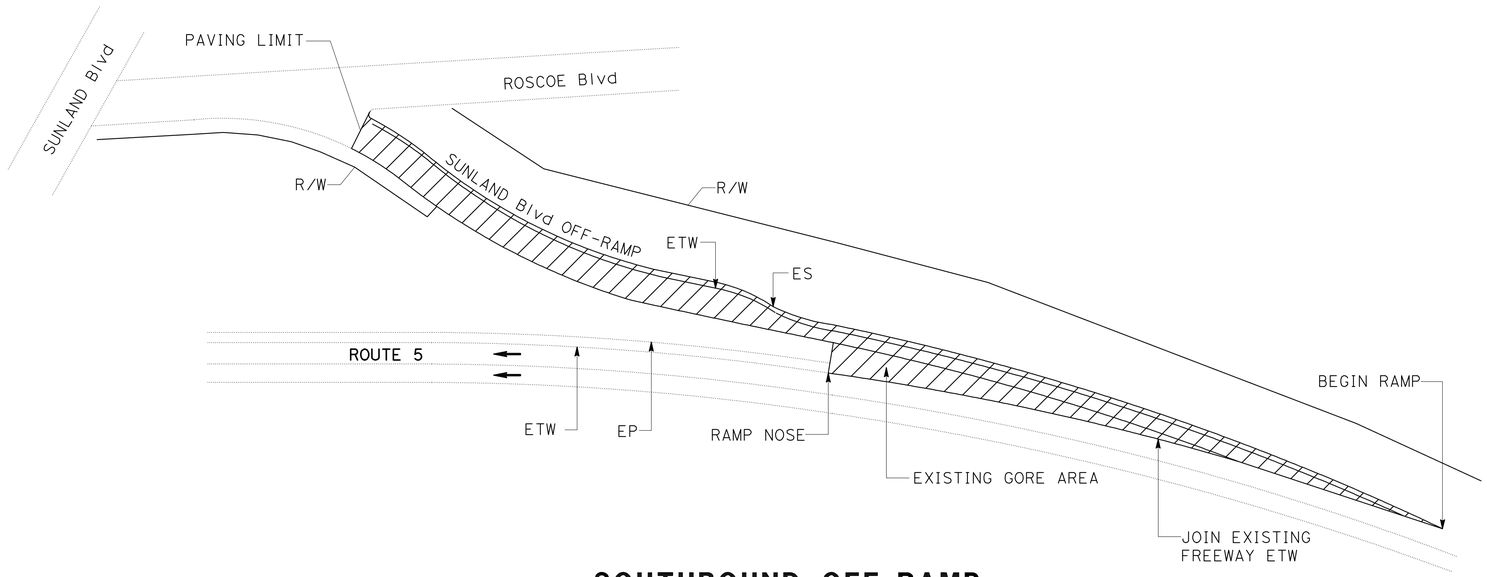

SOUTHBOUND OFF-RAMP TO SUNLAND BOULEVARD

NOTES:

1. SEE SHEET Q-1 FOR LOCATIONS AND QUANTITIES OF REPLACE CONCRETE PAVEMENT (RSC).
2. FOR COMPLETE R/W AND ACCURATE ACCESS DATA, SEE R/W RECORD MAPS AT DISTRICT OFFICE.
3. EXISTING UTILITY FACILITIES AND DRAINAGE INLETS HAVE NOT BEEN PLOTTED ON THESE PLANS.
4. EXACT LOCATIONS OF REPLACE CONCRETE PAVEMENT (RSC) WILL BE DETERMINED BY THE ENGINEER. SEE QUANTITY SHEET FOR LIMITS.
5. STANDARD PLAN P8 - NOTE 5 SHALL NOT APPLY.

LEGEND:

60mm COLD PLANE AC PAVEMENT
60mm RHMA (GAP GRADED)

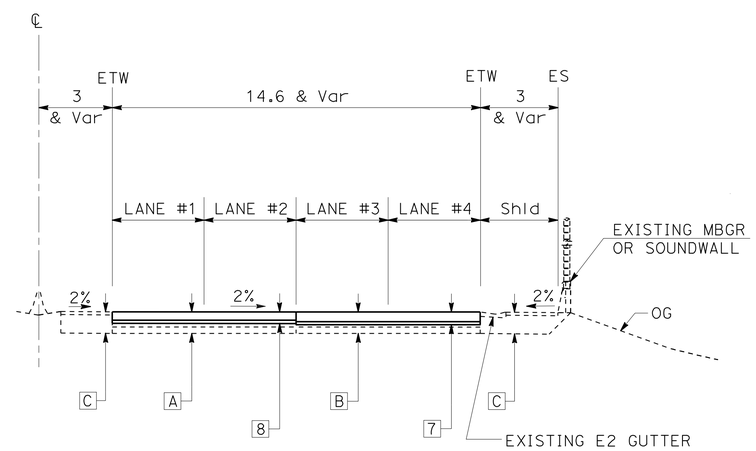

7 REPLACE IN VARIOUS LOCATIONS
230mm RAPID STRENGTH CONCRETE (RSC)
---------- BOND BREAKER
30mm - 76mm LEAN CONCRETE BASE (RAPID SETTING)

8 REPLACE IN VARIOUS LOCATIONS
200mm RAPID STRENGTH CONCRETE (RSC)
---------- BOND BREAKER
30mm - 76mm LEAN CONCRETE BASE (RAPID SETTING)

TYPICAL DETAIL FOR REPLACE CONCRETE PAVEMENT (RSC) WITH DAMAGED BASE

ALL DIMENSIONS ARE IN METERS UNLESS OTHERWISE SHOWN

CONSTRUCTION DETAILS

NO SCALE

C-40

STATE OF CALIFORNIA - DEPARTMENT OF TRANSPORTATION
Caltrans MAINTENANCE ENGINEERING

FUNCTIONAL SUPERVISOR: CELINA AVILES
CALCULATED-DESIGNED BY: KATHY PHAM
CHECKED BY: AMIR ELSHARIEF
REVISED BY
DATE REVISED

LAST REVISION 00-00-00
DATE PLOTTED => 03-MAY-2010
TIME PLOTTED => 13:24

Dist	COUNTY	ROUTE	KILOMETER POST TOTAL PROJECT	SHEET No.	TOTAL SHEETS
07	LA	5	50.8/58.0	97	869

REGISTERED CIVIL ENGINEER 4-17-09 DATE

5-3-10
PLANS APPROVAL DATE

REGISTERED PROFESSIONAL ENGINEER AMIR AWN ELSHARIEF No. 72560 Exp. 6-30-10 CIVIL STATE OF CALIFORNIA

THE STATE OF CALIFORNIA OR ITS OFFICERS OR AGENTS SHALL NOT BE RESPONSIBLE FOR THE ACCURACY OR COMPLETENESS OF ELECTRONIC COPIES OF THIS PLAN SHEET.

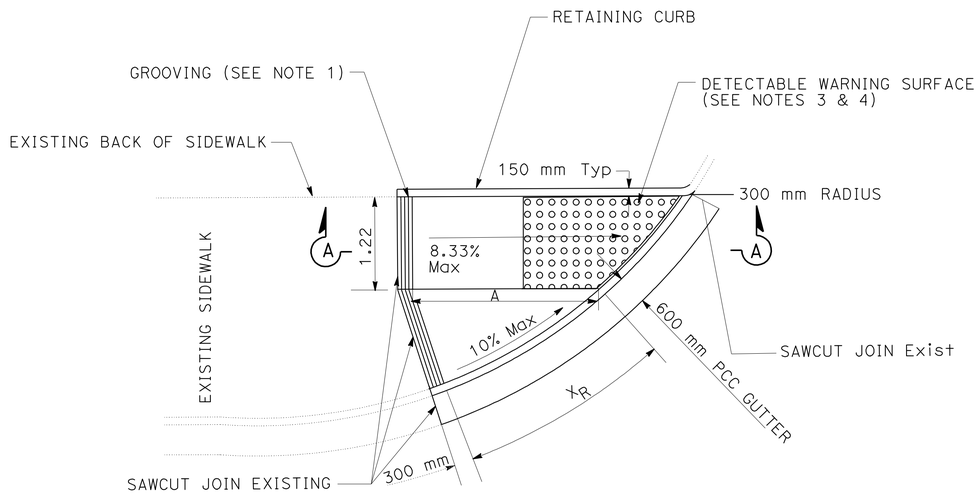

CURB RAMP CASE G (MOD)

NOTES:

1. THE CURB RAMP SHALL OUTLINED, AS SHOWN, WITH A 300 mm WIDE BORDER WITH 6 mm GROOVES APPROXIMATELY 19 mm ON CENTER. SEE GROOVING DETAIL.
2. MAXIMUM SLOPES OF ADJOINING GUTTERS, THE ROAD SURFACE IMMEDIATELY ADJACENT TO THE CURB RAMP OR ACCESSIBLE ROUTE SHALL NOT EXCEED 5 PERCENT WITHIN 1.22 OF THE TOP AND BOTTOM OF THE CURB RAMP.
3. CURB RAMPS SHALL HAVE A DETECTABLE WARNING SURFACE THAT EXTENDS THE FULL WIDTH AND 914 mm DEPTH OF THE RAMP.
4. THE EDGE OF THE DETECTABLE WARNING SURFACE NEAREST THE STREET SHALL BE BETWEEN 150 mm AND 205 mm FROM THE GUTTER FLOWLINE.

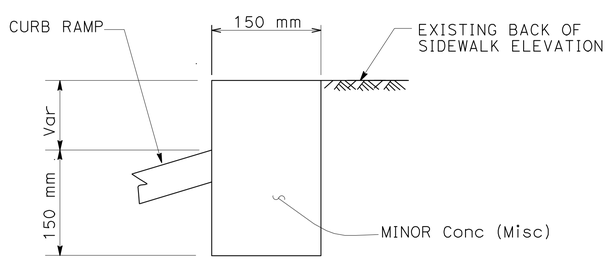

RETAINING CURB DETAIL

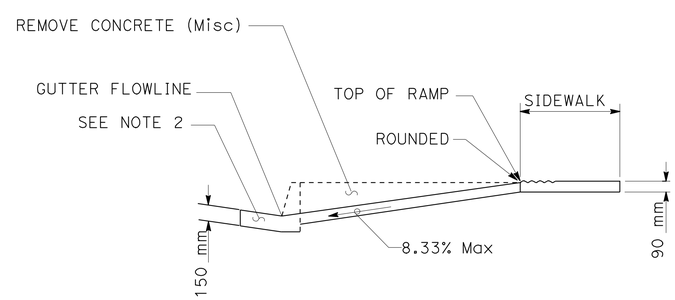

SECTION A-A

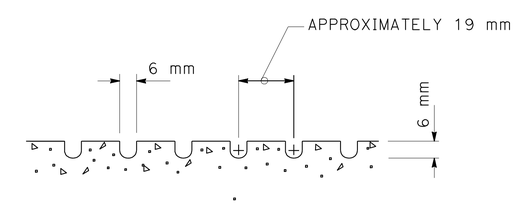

GROOVING DETAIL

ALL DIMENSIONS ARE IN METERS UNLESS OTHERWISE SHOWN

CONSTRUCTION DETAILS

NO SCALE

C-41

STATE OF CALIFORNIA - DEPARTMENT OF TRANSPORTATION
Caltrans MAINTENANCE ENGINEERING

FUNCTIONAL SUPERVISOR: CELINA AVILES
CALCULATED-DESIGNED BY: KATHY PHAM
CHECKED BY: AMIR ELSHARIEF
REVISED BY
DATE REVISED

LAST REVISION 00-00-00
DATE PLOTTED => 03-MAY-2010
TIME PLOTTED => 13:24

Dist	COUNTY	ROUTE	KILOMETER POST TOTAL PROJECT	SHEET No.	TOTAL SHEETS
07	LA	5	50.8/58.0	98	869

LICENSED LANDSCAPE ARCHITECT

5-3-10

PLANS APPROVAL DATE

LICENSED LANDSCAPE ARCHITECT JOSEPH MILLMAN No. 1837 STATE OF CALIFORNIA — EXPIRES 07/31/10 RENEWAL DATE 11/20/07 DATE

THE STATE OF CALIFORNIA OR ITS OFFICERS OR AGENTS SHALL NOT BE RESPONSIBLE FOR THE ACCURACY OR COMPLETENESS OF ELECTRONIC COPIES OF THIS PLAN SHEET.

Caltrans Metric

LEGEND

	SYMBOL	NOMINAL SIZE	TEXTURE	COLOR
Ⓐ		203 mm x 203 mm x 406 mm	4-SCORE SPLIT FACE REVERSE SIDE PRECISION BLOCK	TAN *
Ⓑ		203 mm x 203 mm x 406 mm	PRECISION FACE REVERSE SIDE 4-SCORE SPLIT FACE	TAN *

* MATCH ANGELES BLOCK COMPANY COLOR # 207 OR EQUAL

NOTES:
1. BOND (TYPE 1) STAKED BOND.
2. MORTAR COLOR TO MATCH BLOCK.
3. TOOLED JOINTS.
4. BLOCKS ON BRIDGE SHALL BE PRECISION BLOCK BOTH SIDES (MEDIUM WEIGHT).
5. PILASTER EFFECT (PRECISION SIDE TO FREEWAY) IS NOT TO BE USED ON END ADJACENT TO BRIDGE.
6. PLACE ELEVATION CHANGE AT EXPANSION JOINTS WHERE POSSIBLE

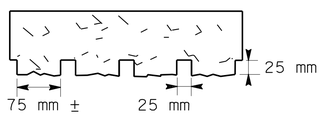

4 SCORE SPLIT FACE

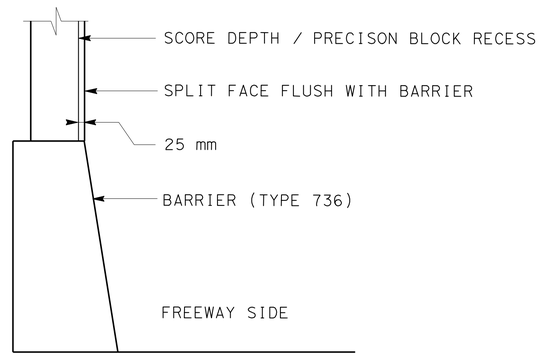

BARRIER SECTION

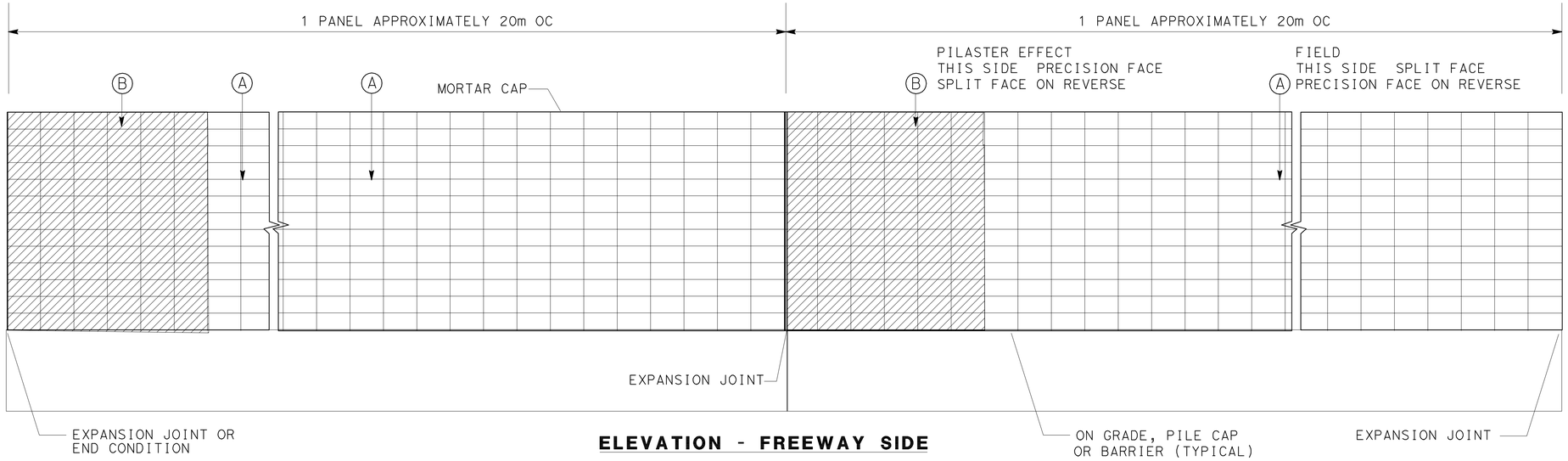

ELEVATION - FREEWAY SIDE

WALL PATTERN

AESTHETIC SOUNDWALL DETAILS

ALL DIMENSIONS ARE IN METERS UNLESS OTHERWISE SHOWN

CONSTRUCTION DETAILS

NO SCALE

THIS PLAN IS ACCURATE FOR AESTHETIC WORK ONLY

C-42

11/20/07	11/20/07
REVISED BY	DATE REVISED
J MILLMAN	D PERSOFF
CALCULATED-DESIGNED BY	CHECKED BY
SENIOR LANDSCAPE ARCHITECT	PATRICIA WATANABE

STATE OF CALIFORNIA - DEPARTMENT OF TRANSPORTATION
Caltrans LANDSCAPE ARCHITECTURE

LAST REVISION 10-14-08 DATE PLOTTED => 03-MAY-2010 TIME PLOTTED => 13:24

Dist	COUNTY	ROUTE	KILOMETER POST TOTAL PROJECT	SHEET No.	TOTAL SHEETS
07	LA	5	50.8/58.0	99	869

REGISTERED CIVIL ENGINEER 4/5/10 DATE

5-3-10
PLANS APPROVAL DATE

REGISTERED PROFESSIONAL ENGINEER KYLE M KUNITAKE No. 63726 Exp. 9-30-10 CIVIL STATE OF CALIFORNIA

THE STATE OF CALIFORNIA OR ITS OFFICERS OR AGENTS SHALL NOT BE RESPONSIBLE FOR THE ACCURACY OR COMPLETENESS OF ELECTRONIC COPIES OF THIS PLAN SHEET.

Caltrans Metric

NOTE:

1. WHERE LEAN CONCRETE BASE IS NOT USED AS BASE MATERIAL, THE JOINT FILLER MATERIAL USED FOR THE LONGITUDINAL ISOLATION JOINT SHALL ONLY EXTEND TO THE BOTTOM OF THE NEW CONCRETE SLAB.

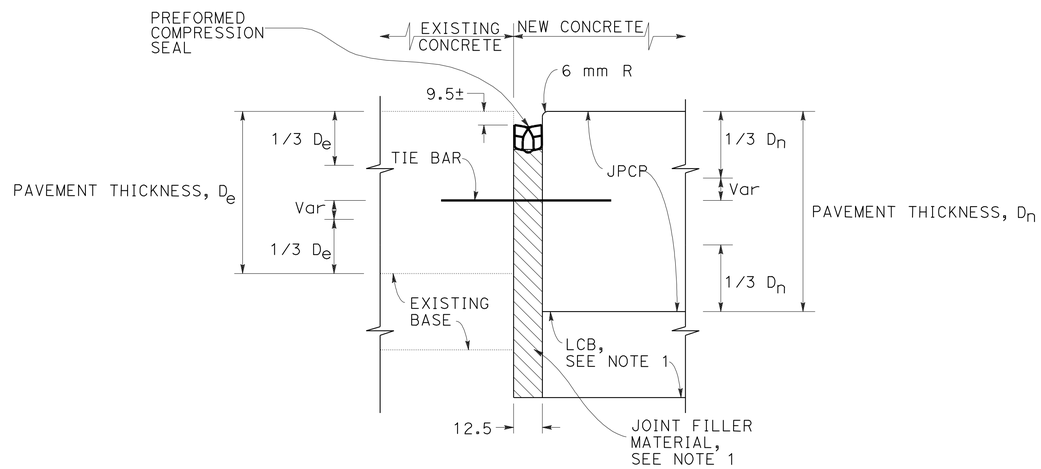

SEAL LONGITUDINAL ISOLATION WITH LOAD TRANSFER TIE BAR DETAIL

ALL DIMENSIONS ARE IN MILLIMETERS UNLESS OTHERWISE SHOWN.

CONSTRUCTION DETAILS

NO SCALE

C-43

STATE OF CALIFORNIA - DEPARTMENT OF TRANSPORTATION
Caltrans DESIGN

FUNCTIONAL SUPERVISOR CELINA AVILES
CALCULATED-DESIGNED BY KYLE KUNITAKE
CHECKED BY AMIR EL SHARIEF
REVISED BY
DATE REVISED

LAST REVISION 03-29-10 DATE PLOTTED => 03-MAY-2010 TIME PLOTTED => 13:24

Dist	COUNTY	ROUTE	KILOMETER POST TOTAL PROJECT	SHEET No.	TOTAL SHEETS
07	LA	5	50.8/58.0	100	869

REGISTERED CIVIL ENGINEER 10/21/08 DATE

5-3-10
PLANS APPROVAL DATE

REGISTERED PROFESSIONAL ENGINEER KYLE M KUNITAKE No. 63726 Exp. 9/30/10 CIVIL STATE OF CALIFORNIA

THE STATE OF CALIFORNIA OR ITS OFFICERS OR AGENTS SHALL NOT BE RESPONSIBLE FOR THE ACCURACY OR COMPLETENESS OF ELECTRONIC COPIES OF THIS PLAN SHEET.

Caltrans Metric

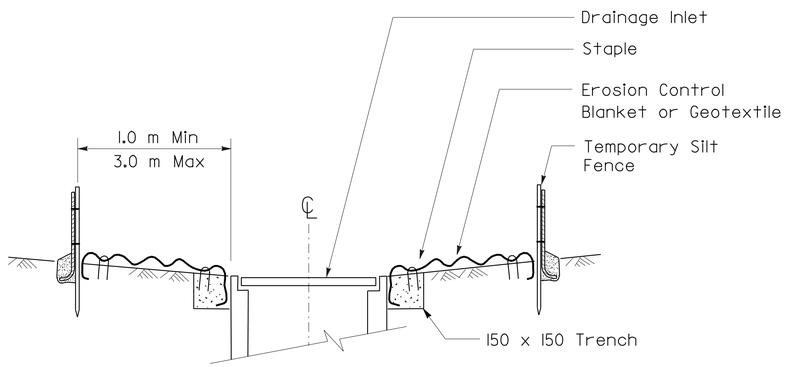

SECTION A-A

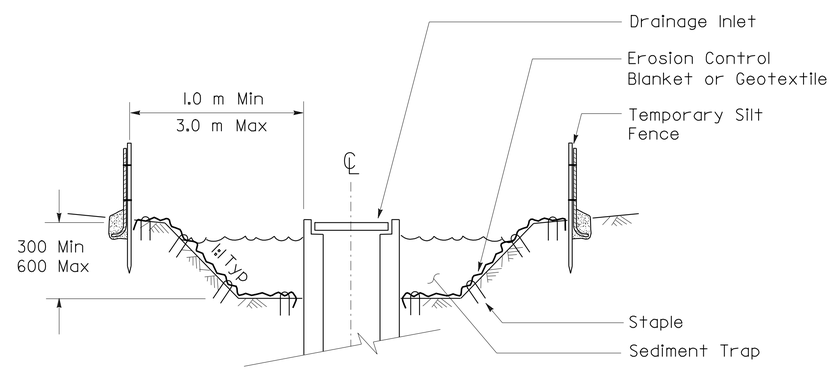

SECTION B-B

NOTES

1. See Std Plan T51 for Temporary Silt Fence.
2. Dimensions may vary to fit field conditions.

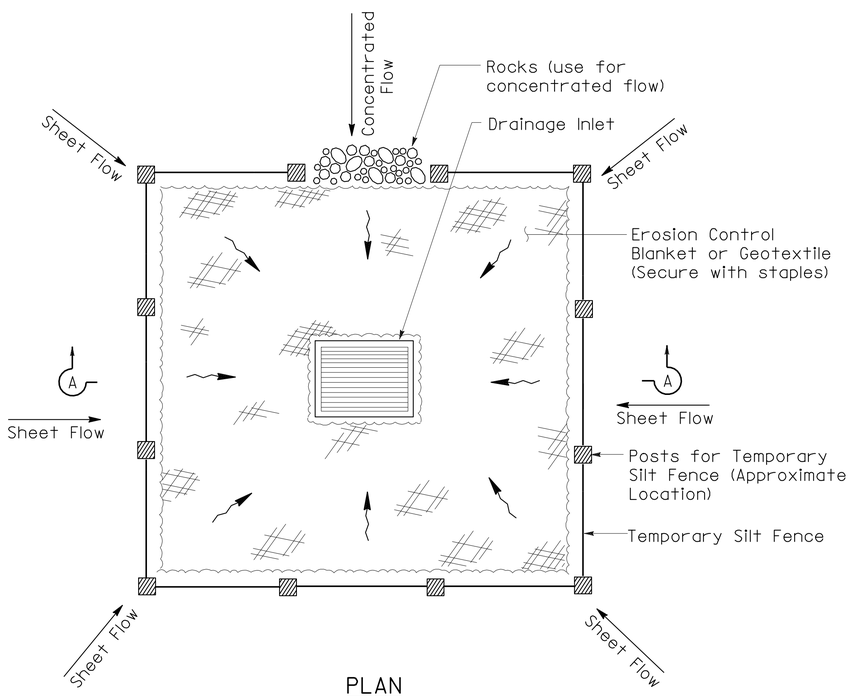

PLAN
TEMPORARY DRAINAGE INLET PROTECTION (TYPE 1) (TEMPORARY SILT FENCE)

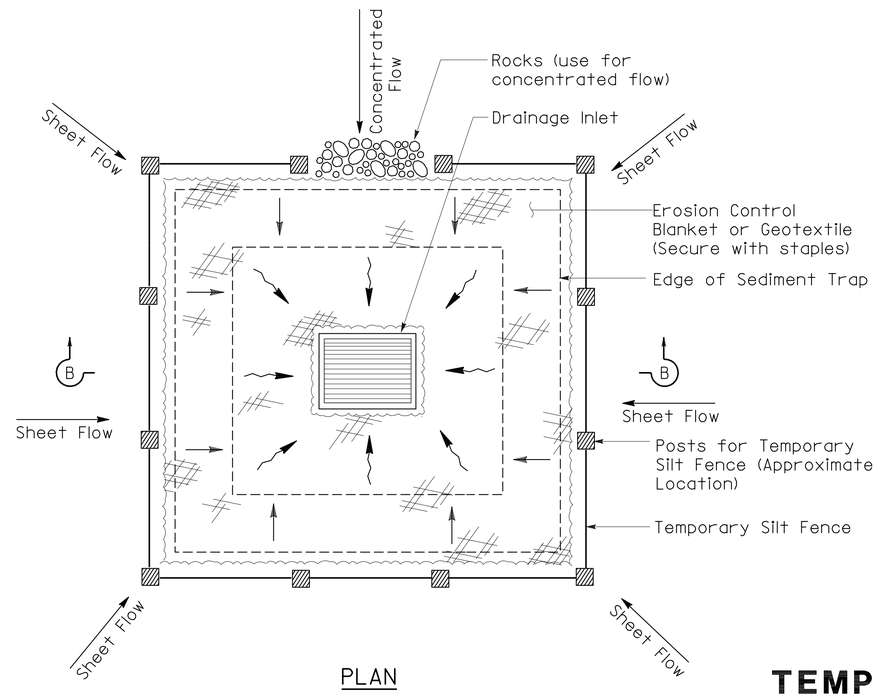

PLAN
TEMPORARY DRAINAGE INLET PROTECTION (TYPE 2) (EXCAVATED SEDIMENT TRAP)

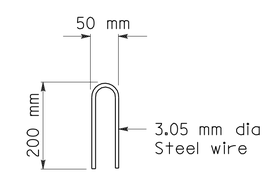

STAPLE DETAIL

ALL DIMENSIONS ARE IN MILLIMETERS UNLESS OTHERWISE SHOWN

TEMPORARY WATER POLLUTION CONTROL DETAILS (TEMPORARY DRAINAGE INLET PROTECTION)

NO SCALE

WPCD-1

DATE	REVISED BY	DATE REVISED

CALCULATED/DESIGNED BY
CHECKED BY

PROJECT ENGINEER CELINA AVILES

STATE OF CALIFORNIA - DEPARTMENT OF TRANSPORTATION
Caltrans DESIGN

LAST REVISION 00-00-00 | DATE PLOTTED => 03-MAY-2010 | TIME PLOTTED => 12:54