| DIST | COUNTY | ROUTE | KILOMETER POST TOTAL PROJECT | SHEET No | TOTAL SHEETS |
|---|---|---|---|---|---|
| 07 | LA | 5 | 42.8/47.3 | 601 | 1073 |

Andrew Rittenhouse 12-05-08
REGISTERED CIVIL ENGINEER DATE

6-8-09
PLANS APPROVAL DATE

REGISTERED PROFESSIONAL ENGINEER Andrew P. Rittenhouse No. 61006 Exp. 12-31-10 CIVIL STATE OF CALIFORNIA

The State of California or its officers or agents shall not be responsible for the accuracy or completeness of electronic copies of this plan sheet.

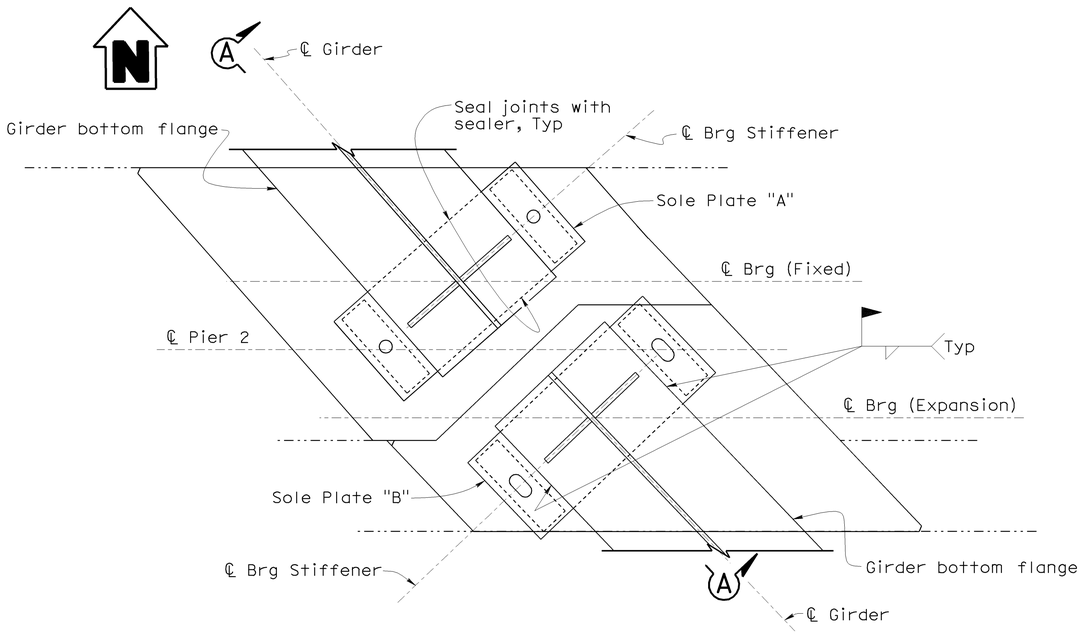


PLAN (PIER 2)

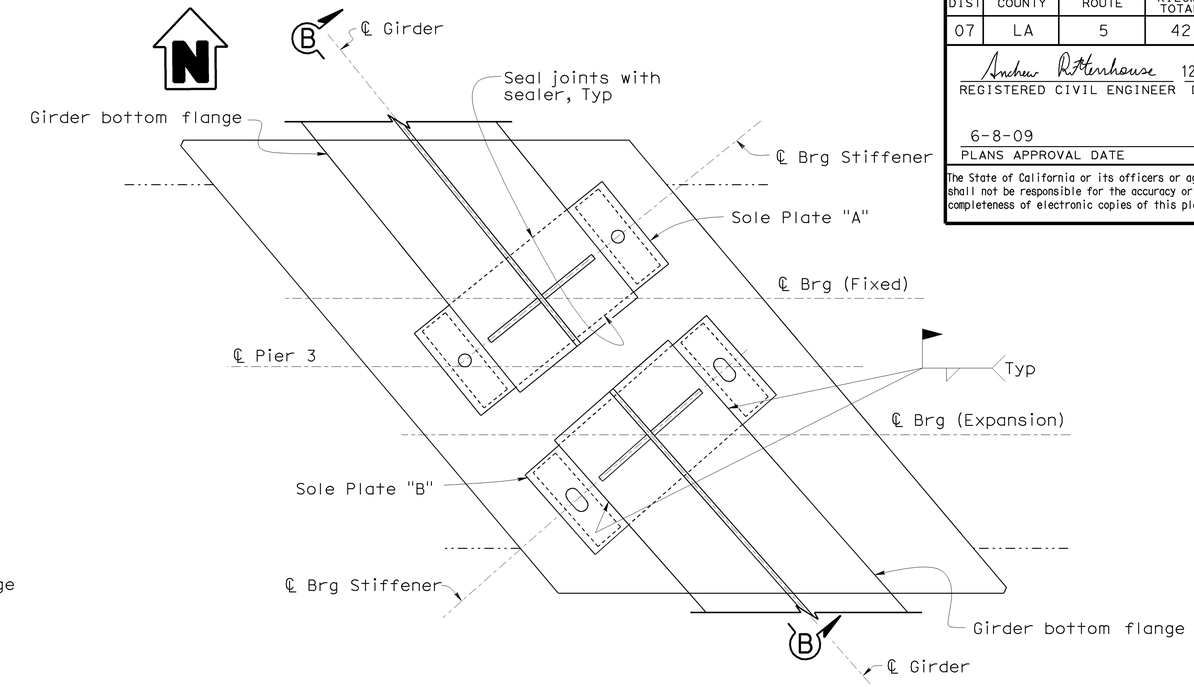


PLAN (PIER 3)

Note:
For Sole Plate "A" and "Sole Plate "B", see "MISCELLANEOUS PEDESTAL DETAILS NO. 3" sheet.

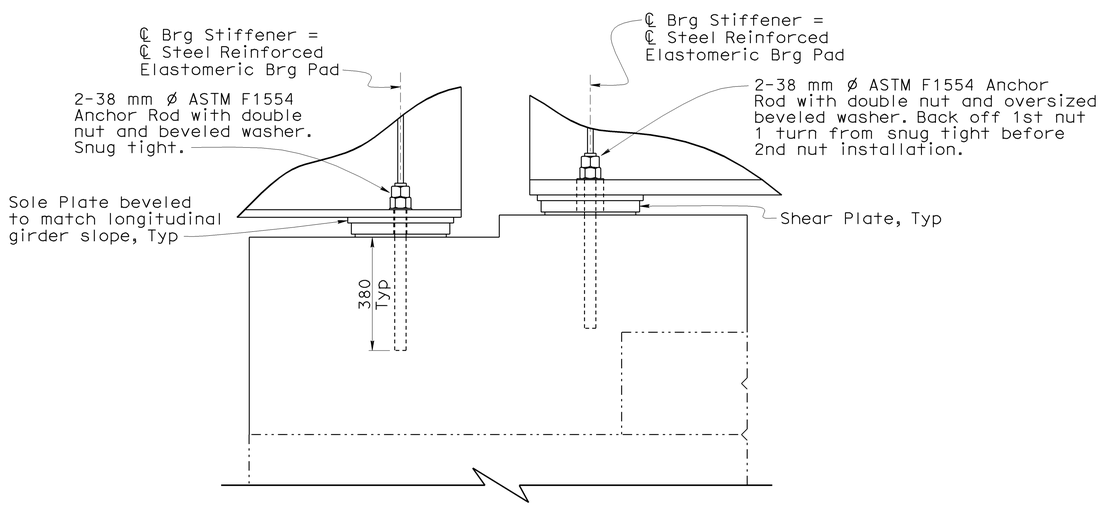


SECTION A-A

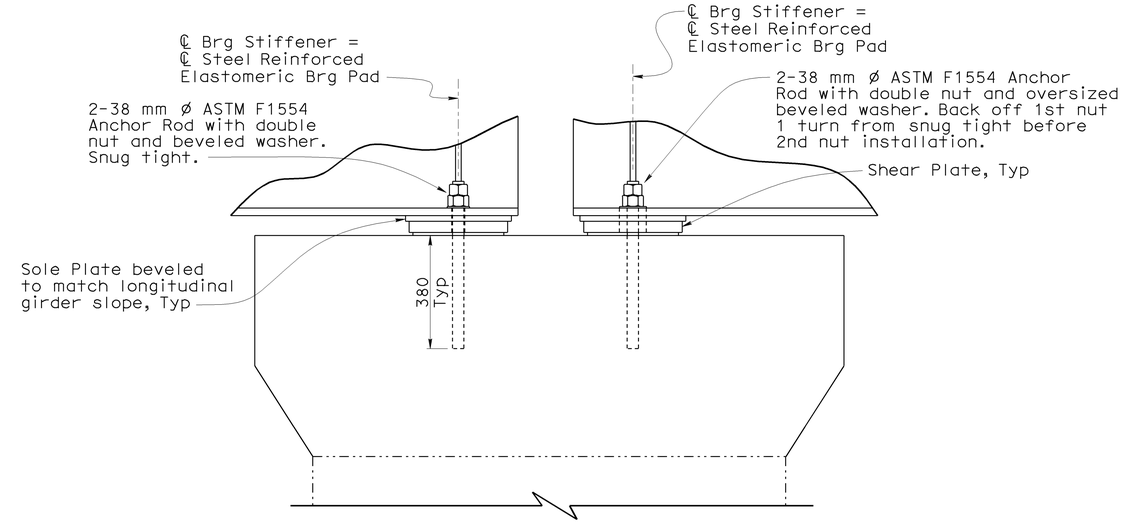


SECTION B-B

NOTE:
THE CONTRACTOR SHALL VERIFY ALL CONTROLLING FIELD DIMENSIONS BEFORE ORDERING OR FABRICATING ANY MATERIAL.

# PIER BEARING DETAILS

1:10

Caltrans Metric

ALL DIMENSIONS ARE IN MILLIMETERS UNLESS OTHERWISE SHOWN

ORIGINAL SCALE IN MILLIMETERS FOR REDUCED PLANS 0 10 20 30 40 50 60 70 80 90 100

| | BY | CHECKED |
|---|---|---|
| DESIGN | Shervin Pahlavan | Jose Higareda |
| DETAILS | Dale Kubochi | Jose Higareda |
| QUANTITIES | Jerry Han | Joel Ruiz |

STATE OF CALIFORNIA DEPARTMENT OF TRANSPORTATION

DIVISION OF ENGINEERING SERVICES STRUCTURE DESIGN
DESIGN BRANCH 15

CU 07
EA 121841

BRIDGE NO. 53-1075
KILOMETER POST 43.6

LOS ANGELES RIVER BRIDGE AND SEPARATION (WIDEN)

MISCELLANEOUS PEDESTAL DETAILS NO. 1

DISREGARD PRINTS BEARING EARLIER REVISION DATES

REVISION DATES 10-1-07 2-5-08 4-1-08 10-1-08 11-12-08 1-16-09

SHEET 28 OF 64

FILE => 53-1075ri-k-miscped01.dgn

STRUCTURES DESIGN DETAIL SHEET (METRIC) (REV.03-17-04)

USERNAME => trmikesl DATE PLOTTED => 12-JUN-2009 TIME PLOTTED => 07:15

| DIST | COUNTY | ROUTE | KILOMETER POST TOTAL PROJECT | SHEET No | TOTAL SHEETS |
|---|---|---|---|---|---|
| 07 | LA | 5 | 42.8/47.3 | 602 | 1073 |

Andrew Rittenhouse 12-05-08
REGISTERED CIVIL ENGINEER DATE

6-8-09
PLANS APPROVAL DATE

REGISTERED PROFESSIONAL ENGINEER Andrew P. Rittenhouse No. 61006 Exp. 12-31-10 CIVIL STATE OF CALIFORNIA

The State of California or its officers or agents shall not be responsible for the accuracy or completeness of electronic copies of this plan sheet.

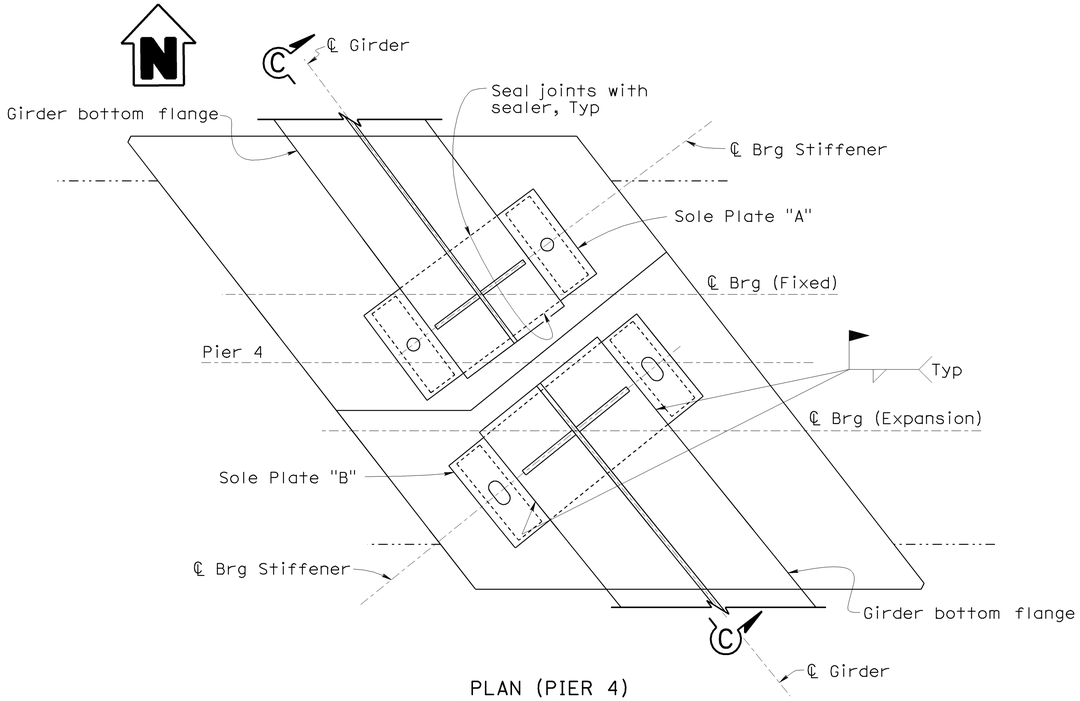


PLAN (PIER 4)

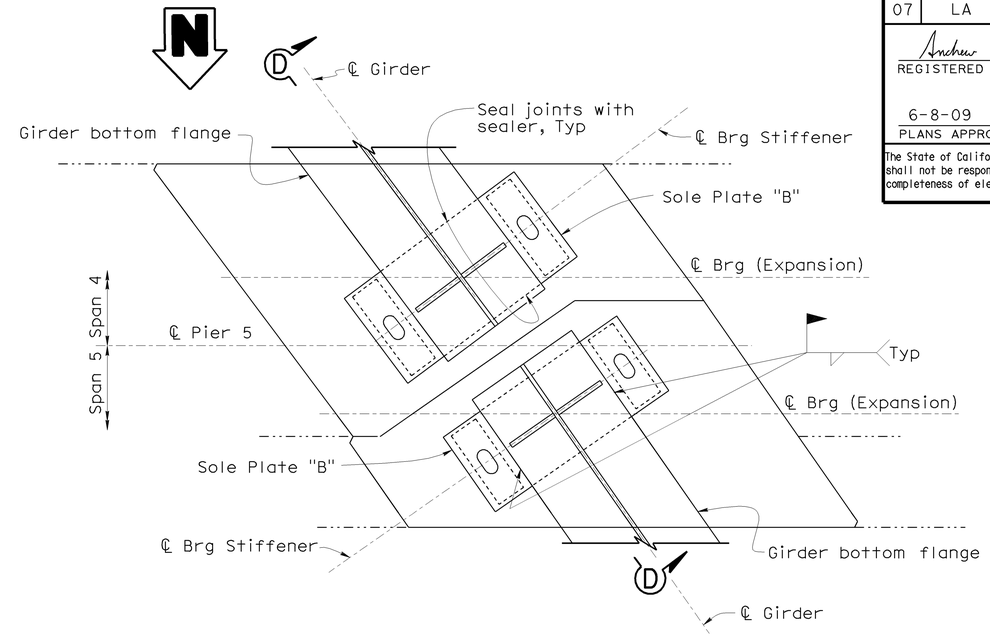


PLAN (PIER 5)

Note:
For Sole Plate "A" and "Sole Plate "B", see "MISCELLANEOUS PEDESTAL DETAILS NO. 3" sheet.

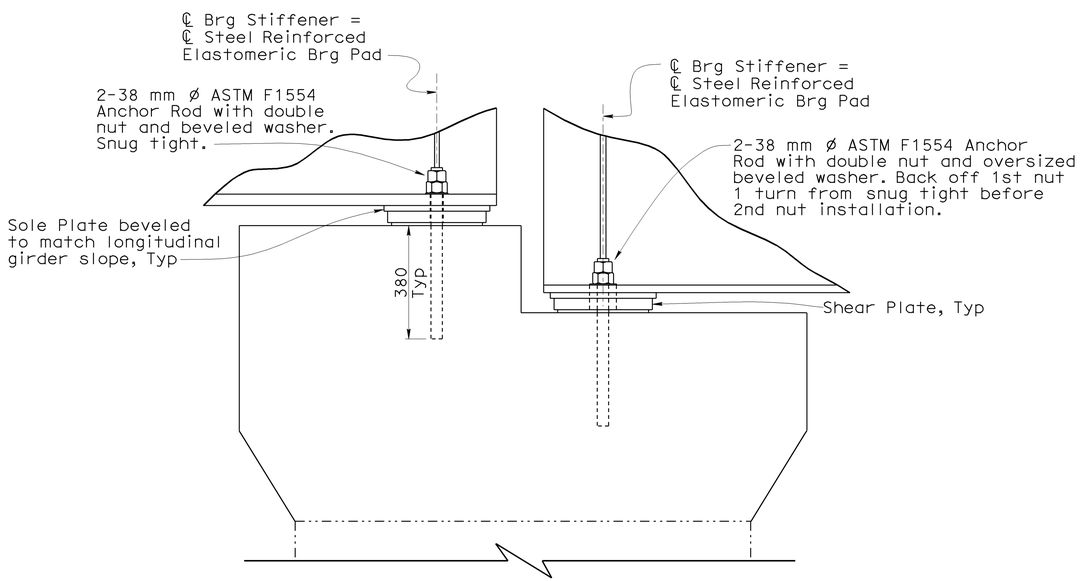


SECTION C-C

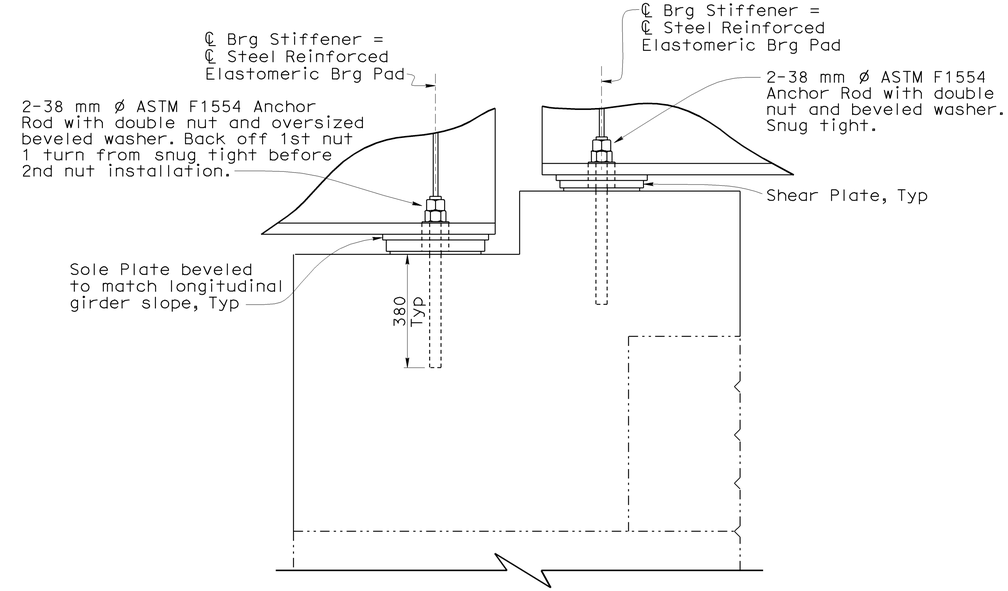


SECTION D-D

NOTE:
THE CONTRACTOR SHALL VERIFY ALL CONTROLLING FIELD DIMENSIONS BEFORE ORDERING OR FABRICATING ANY MATERIAL.

# PIER BEARING DETAILS

1:10

| | | | |
|---|---|---|---|
| DESIGN | BY Shervin Pahlavan | CHECKED Jose Higareda | |
| DETAILS | BY Dale Kubochi | CHECKED Jose Higareda | |
| QUANTITIES | BY Jerry Han | CHECKED Joel Ruiz | |

STATE OF CALIFORNIA DEPARTMENT OF TRANSPORTATION

DIVISION OF ENGINEERING SERVICES STRUCTURE DESIGN
DESIGN BRANCH 15

CU 07
EA 121841

BRIDGE NO. 53-1075
KILOMETER POST 43.6

LOS ANGELES RIVER BRIDGE AND SEPARATION (WIDEN)
MISCELLANEOUS PEDESTAL DETAILS NO. 2

ALL DIMENSIONS ARE IN MILLIMETERS UNLESS OTHERWISE SHOWN

ORIGINAL SCALE IN MILLIMETERS FOR REDUCED PLANS 0 10 20 30 40 50 60 70 80 90 100

DISREGARD PRINTS BEARING EARLIER REVISION DATES

REVISION DATES: 10-5-07 2-5-08 4-11-08 10-1-08 11-21-08 12-5-08 1-16-09

SHEET 29 OF 64

FILE => 53-1075ri-k-miscped02.dgn

STRUCTURES DESIGN DETAIL SHEET (METRIC) (REV.03-17-04)

USERNAME => trmikesl DATE PLOTTED => 12-JUN-2009 TIME PLOTTED => 07:15

| DIST | COUNTY | ROUTE | KILOMETER POST TOTAL PROJECT | SHEET No | TOTAL SHEETS |
|---|---|---|---|---|---|
| 07 | LA | 5 | 42.8/47.3 | 603 | 1073 |

Andrew Rittenhouse 12-05-08
REGISTERED CIVIL ENGINEER DATE

6-8-09
PLANS APPROVAL DATE

REGISTERED PROFESSIONAL ENGINEER Andrew P. Rittenhouse No. 61006 Exp. 12-31-10 CIVIL STATE OF CALIFORNIA

The State of California or its officers or agents shall not be responsible for the accuracy or completeness of electronic copies of this plan sheet.

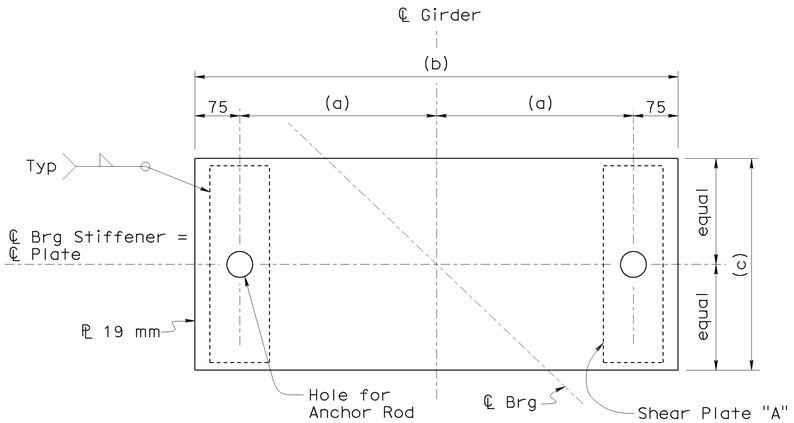


## SOLE PLATE "A"

1:5

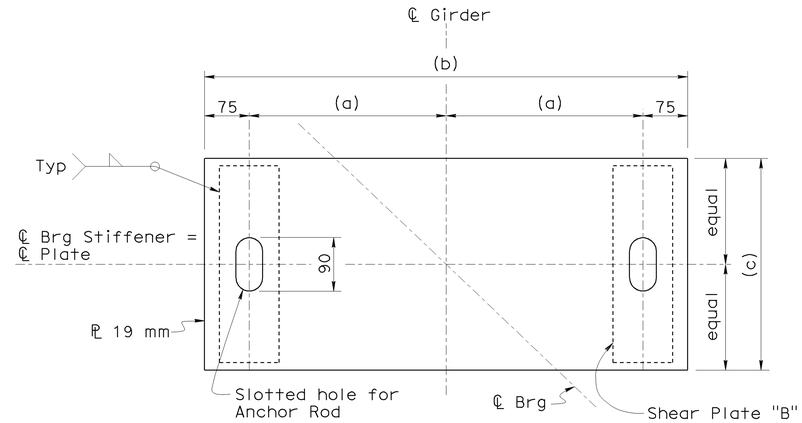


## SOLE PLATE "B"

1:5

| LOCATION | | SOLE PLATE | DIMENSION | | | SHEAR PLATE | DIMENSION | | PLATE THICKNESS |
|---|---|---|---|---|---|---|---|---|---|
| | | | (a) | (b) | (c) | | (d) | (e) | |
| Pier 2 | Span 1 | "B" | 330 | 810 | 355 | "B" | 165 | 330 | 38 |
| | Span 2 | "A" | 330 | 810 | 355 | "A" | 165 | 330 | 38 |
| Pier 3 | Span 2 | "B" | 330 | 810 | 355 | "B" | 165 | 330 | 38 |
| | Span 3 | "A" | 330 | 810 | 355 | "A" | 165 | 330 | 38 |
| Pier 4 | Span 3 | "B" | 330 | 810 | 355 | "B" | 165 | 330 | 38 |
| | Span 4 | "A" | 330 | 710 | 355 | "A" | 165 | 330 | 38 |
| Pier 5 | Span 4 | "B" | 330 | 710 | 355 | "B" | 165 | 330 | 38 |
| | Span 5 | "B" | 330 | 710 | 305 | "B" | 140 | 280 | 25 |

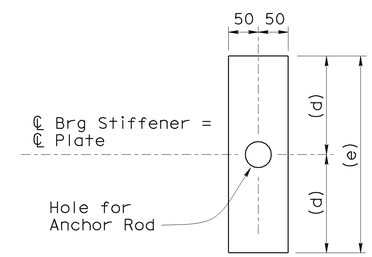


## SHEAR PLATE "A"

1:5

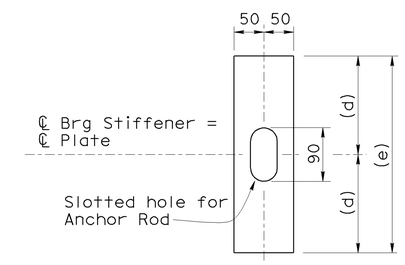


## SHEAR PLATE "B"

1:5

Note: See Table for Plate Thickness

NOTE:
THE CONTRACTOR SHALL VERIFY ALL CONTROLLING FIELD DIMENSIONS BEFORE ORDERING OR FABRICATING ANY MATERIAL.

Caltrans Metric

ALL DIMENSIONS ARE IN MILLIMETERS UNLESS OTHERWISE SHOWN

ORIGINAL SCALE IN MILLIMETERS FOR REDUCED PLANS 0 10 20 30 40 50 60 70 80 90 100

| | BY | CHECKED |
|---|---|---|
| DESIGN | Shervin Pahlavan | Jose Higareda |
| DETAILS | Dale Kubochi | Jose Higareda |
| QUANTITIES | Jerry Han | Joel Ruiz |

STATE OF CALIFORNIA
DEPARTMENT OF TRANSPORTATION

DIVISION OF ENGINEERING SERVICES
STRUCTURE DESIGN
DESIGN BRANCH 15

CU 07
EA 121841

BRIDGE NO. 53-1075
KILOMETER POST 43.6

LOS ANGELES RIVER BRIDGE AND SEPARATION (WIDEN)
MISCELLANEOUS PEDESTAL DETAILS NO. 3

DISREGARD PRINTS BEARING EARLIER REVISION DATES
REVISION DATES 10-11-07 4-15-08 10-14-08 11-17-08 12-22-08

SHEET 30 OF 64

FILE => 53-1075ri-k-miscped03.dgn

STRUCTURES DESIGN DETAIL SHEET (METRIC) (REV.03-17-04)

USERNAME => trmikesl DATE PLOTTED => 12-JUN-2009 TIME PLOTTED => 07:16

| DIST | COUNTY | ROUTE | KILOMETER POST TOTAL PROJECT | SHEET No | TOTAL SHEETS |
|---|---|---|---|---|---|
| 07 | LA | 5 | 42.8/47.3 | 604 | 1073 |

Andrew Rittenhouse 12-05-08
REGISTERED CIVIL ENGINEER DATE

6-8-09
PLANS APPROVAL DATE

REGISTERED PROFESSIONAL ENGINEER Andrew P. Rittenhouse No. 61006 Exp. 12-31-10 CIVIL STATE OF CALIFORNIA

The State of California or its officers or agents shall not be responsible for the accuracy or completeness of electronic copies of this plan sheet.

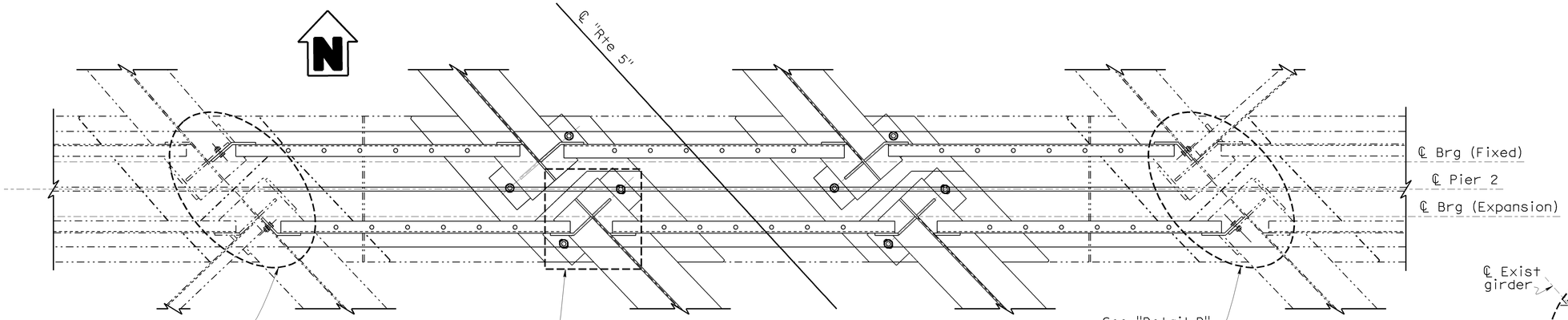


## PLAN (PIER 2)
1:20

Note:
Diaphragm reinforcement not shown for clarity.

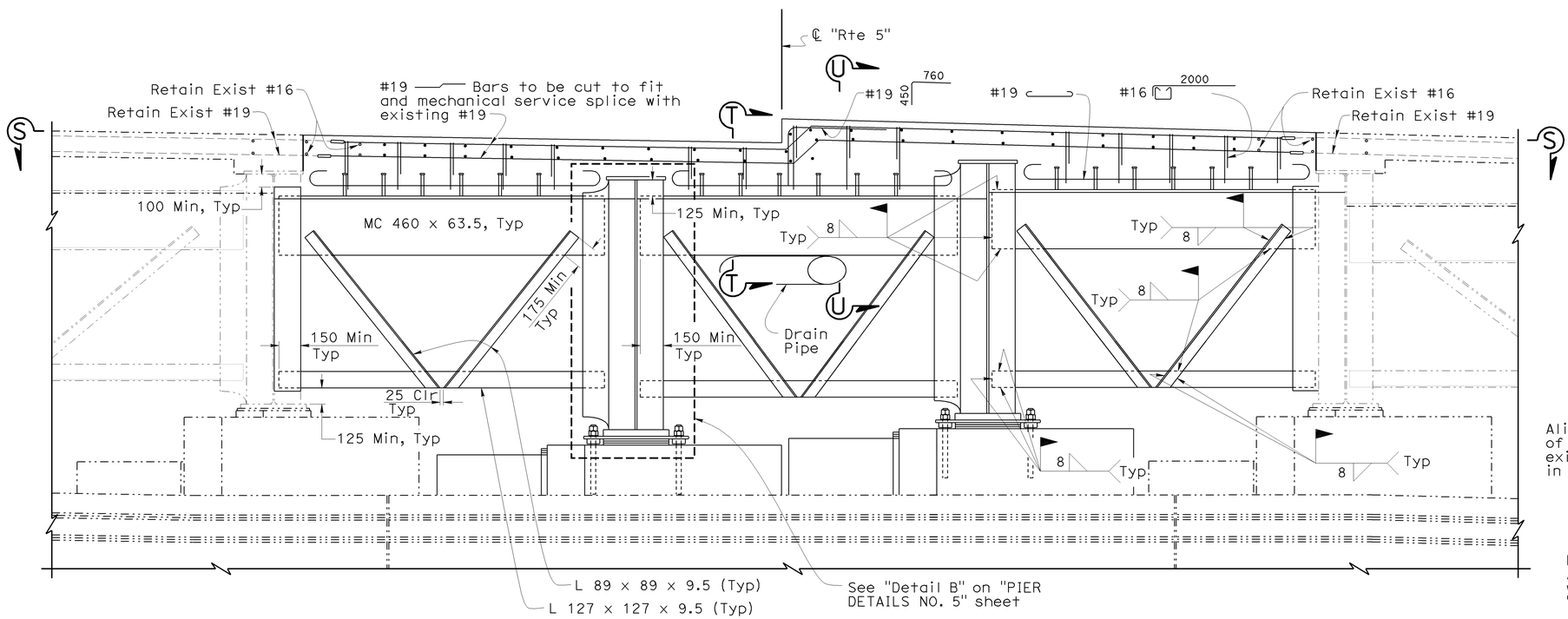


## ELEVATION (PIER 2)
1:20

Notes:
- For "View S-S", see "PIER DETAILS NO. 5" sheet.
- For "Section T-T" and "Section U-U", see "PIER DETAILS NO. 6" sheet.

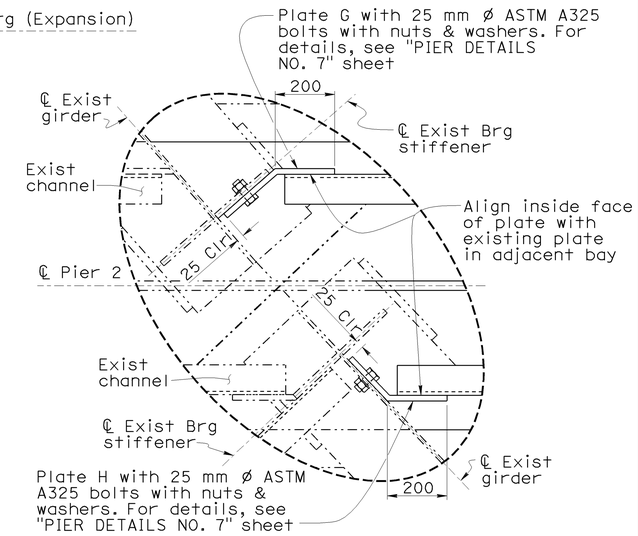


## DETAIL C
1:10

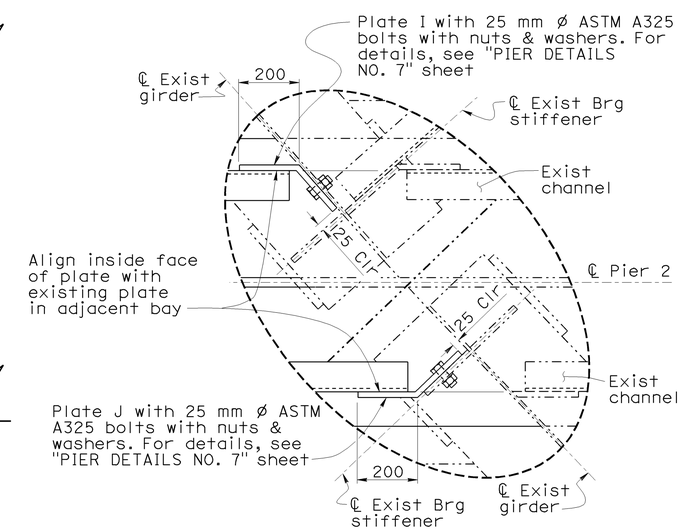


## DETAIL D
1:10

NOTE:
THE CONTRACTOR SHALL VERIFY ALL CONTROLLING FIELD DIMENSIONS BEFORE ORDERING OR FABRICATING ANY MATERIAL.

Caltrans Metric

ALL DIMENSIONS ARE IN MILLIMETERS UNLESS OTHERWISE SHOWN

ORIGINAL SCALE IN MILLIMETERS FOR REDUCED PLANS 0 10 20 30 40 50 60 70 80 90 100

| | BY | CHECKED |
|---|---|---|
| DESIGN | Shervin Pahlavan | Jose Higareda |
| DETAILS | Dale Kubochi | Jose Higareda |
| QUANTITIES | Jerry Han | Joel Ruiz |

STATE OF CALIFORNIA
DEPARTMENT OF TRANSPORTATION

DIVISION OF ENGINEERING SERVICES
STRUCTURE DESIGN
DESIGN BRANCH 15

CU 07
EA 121841

BRIDGE NO. 53-1075
KILOMETER POST 43.6

LOS ANGELES RIVER BRIDGE AND SEPARATION (WIDEN)

# PIER DETAILS NO. 1

DISREGARD PRINTS BEARING EARLIER REVISION DATES

REVISION DATES: 1-24-06 2-24-06 4-14-06 4-24-06 5-31-06 11-14-06 11-30-06 12-22-06 1-16-09

SHEET 31 OF 64

FILE => 53-1075r1-1-pierdet01.dgn

STRUCTURES DESIGN DETAIL SHEET (METRIC) (REV.03-17-04)

USERNAME => trmikesl DATE PLOTTED => 12-JUN-2009 TIME PLOTTED => 07:16

| DIST | COUNTY | ROUTE | KILOMETER POST TOTAL PROJECT | SHEET No | TOTAL SHEETS |
|---|---|---|---|---|---|
| 07 | LA | 5 | 42.8/47.3 | 605 | 1073 |

Andrew Rittenhouse 12-05-08
REGISTERED CIVIL ENGINEER DATE

6-8-09
PLANS APPROVAL DATE

REGISTERED PROFESSIONAL ENGINEER Andrew P. Rittenhouse No. 61006 Exp. 12-31-10 CIVIL STATE OF CALIFORNIA

The State of California or its officers or agents shall not be responsible for the accuracy or completeness of electronic copies of this plan sheet.

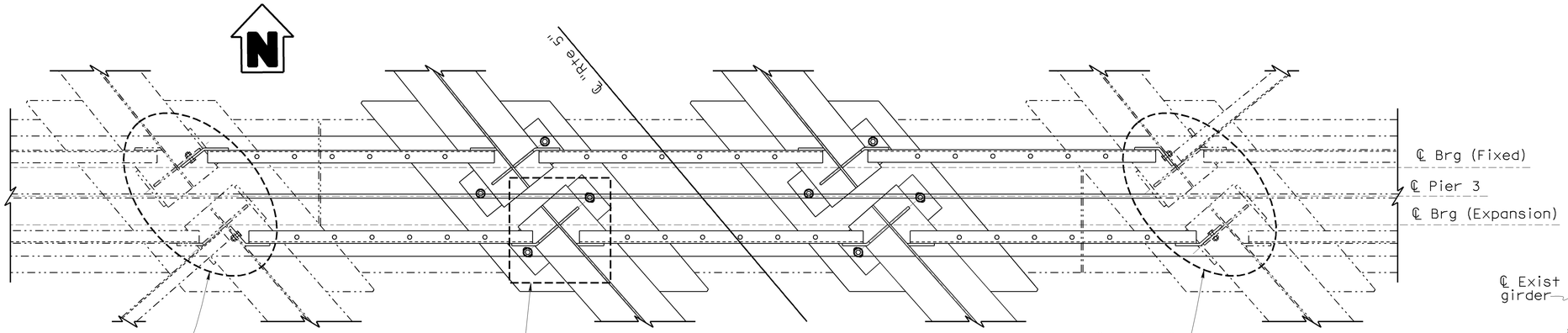


## PLAN (PIER 3)
1:20

Note:

Diaphragm reinforcement not shown for clarity

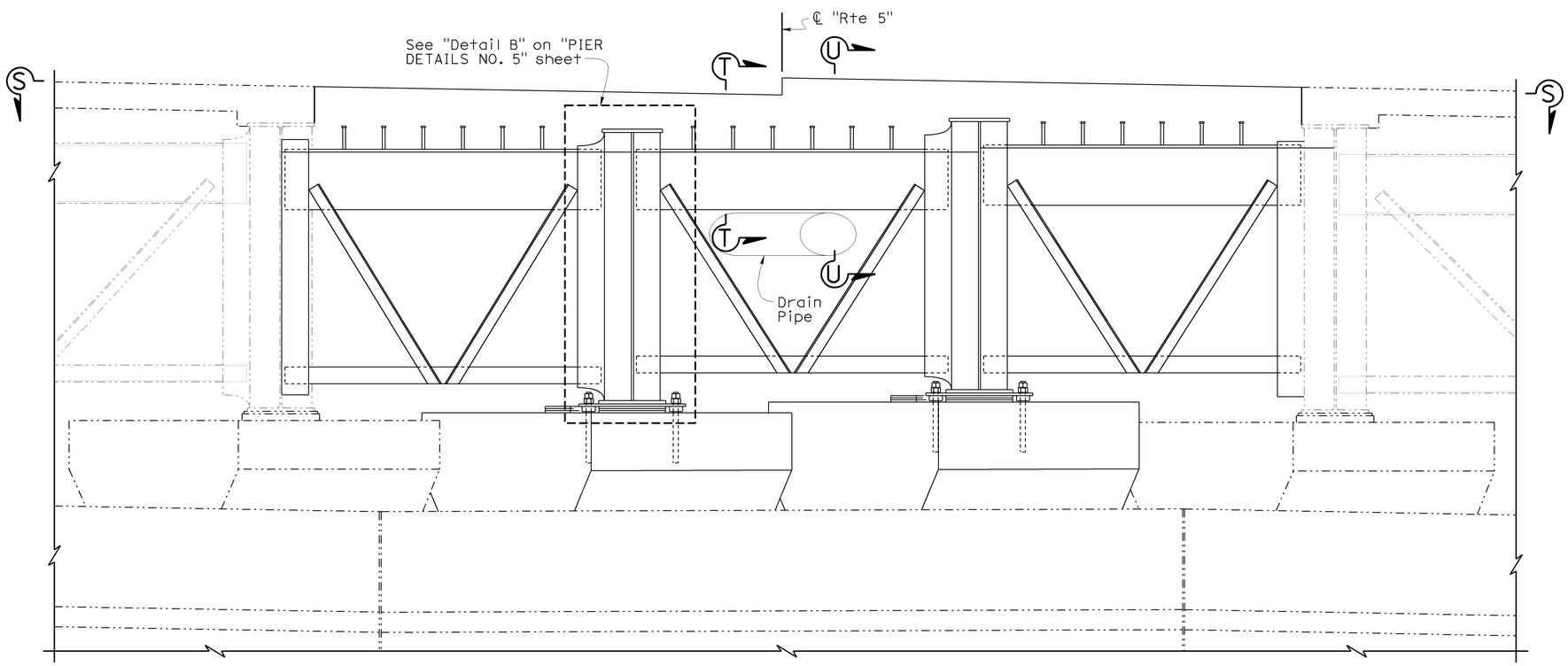


## ELEVATION (PIER 3)
1:20

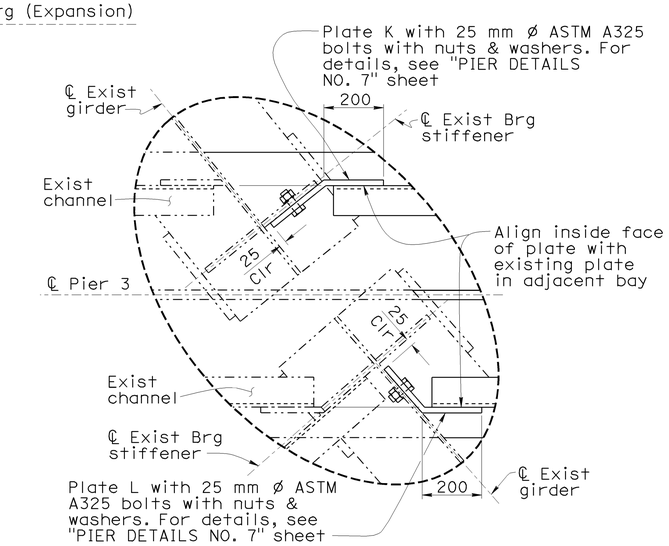


## DETAIL C
1:10

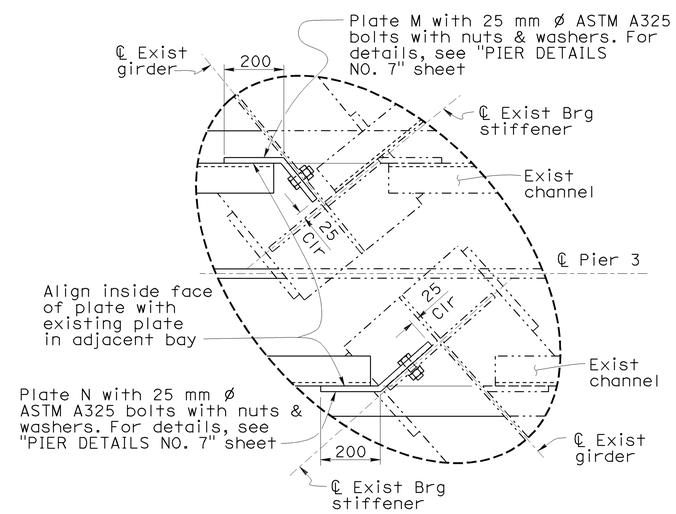


## DETAIL D
1:10

NOTE:
THE CONTRACTOR SHALL VERIFY ALL CONTROLLING FIELD DIMENSIONS BEFORE ORDERING OR FABRICATING ANY MATERIAL.

Notes:
- Pier 3 similar to Pier 2 except as shown.
- For "View S-S", see "PIER DETAILS NO. 5" sheet.
- For "Section T-T" and "Section U-U", see "PIER DETAILS NO. 6" sheet.

Caltrans Metric

| | BY | CHECKED |
|---|---|---|
| DESIGN | Shervin Pahlavan | Jose Higareda |
| DETAILS | Dale Kubochi | Jose Higareda |
| QUANTITIES | Jerry Han | Joel Ruiz |

STATE OF CALIFORNIA
DEPARTMENT OF TRANSPORTATION

DIVISION OF ENGINEERING SERVICES
STRUCTURE DESIGN
DESIGN BRANCH 15

BRIDGE NO. 53-1075
KILOMETER POST 43.6

LOS ANGELES RIVER BRIDGE AND SEPARATION (WIDEN)

PIER DETAILS NO. 2

ALL DIMENSIONS ARE IN MILLIMETERS UNLESS OTHERWISE SHOWN

ORIGINAL SCALE IN MILLIMETERS FOR REDUCED PLANS 0 10 20 30 40 50 60 70 80 90 100

CU 07
EA 121841

DISREGARD PRINTS BEARING EARLIER REVISION DATES

REVISION DATES: 3-15-08 1-16-08 4-1-08 4-29-08 11-5-08 11-21-08 12-5-08 1-16-09

SHEET 32 OF 64

FILE => 53-1075ri-1-pierdet02.dgn

STRUCTURES DESIGN DETAIL SHEET (METRIC) (REV.03-17-04)

USERNAME => trmikest DATE PLOTTED => 12-JUN-2009 TIME PLOTTED => 07:16

| DIST | COUNTY | ROUTE | KILOMETER POST TOTAL PROJECT | SHEET No | TOTAL SHEETS |
|---|---|---|---|---|---|
| 07 | LA | 5 | 42.8/47.3 | 606 | 1073 |

Andrew Rittenhouse 12-05-08
REGISTERED CIVIL ENGINEER DATE

6-8-09
PLANS APPROVAL DATE

REGISTERED PROFESSIONAL ENGINEER Andrew P. Rittenhouse No. 61006 Exp. 12-31-10 CIVIL STATE OF CALIFORNIA

The State of California or its officers or agents shall not be responsible for the accuracy or completeness of electronic copies of this plan sheet.

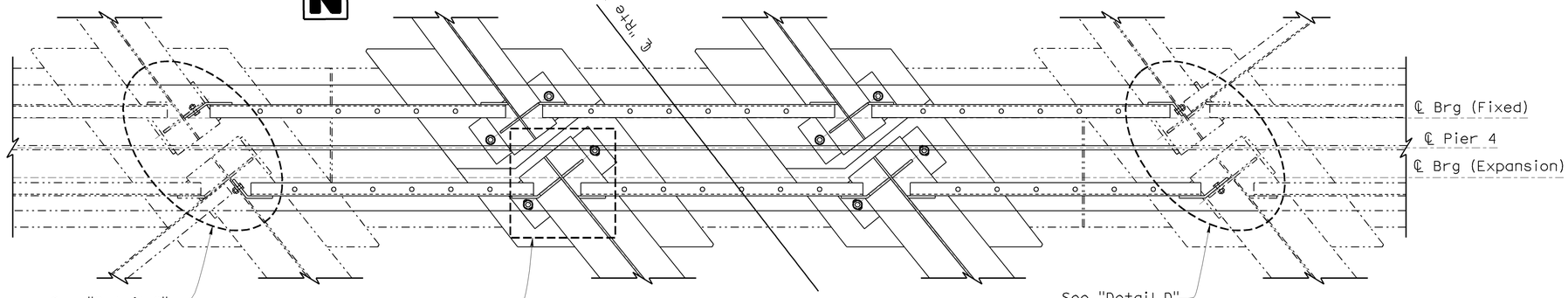


## PLAN (PIER 4)
1:20

Note:

Diaphragm reinforcement not shown for clarity

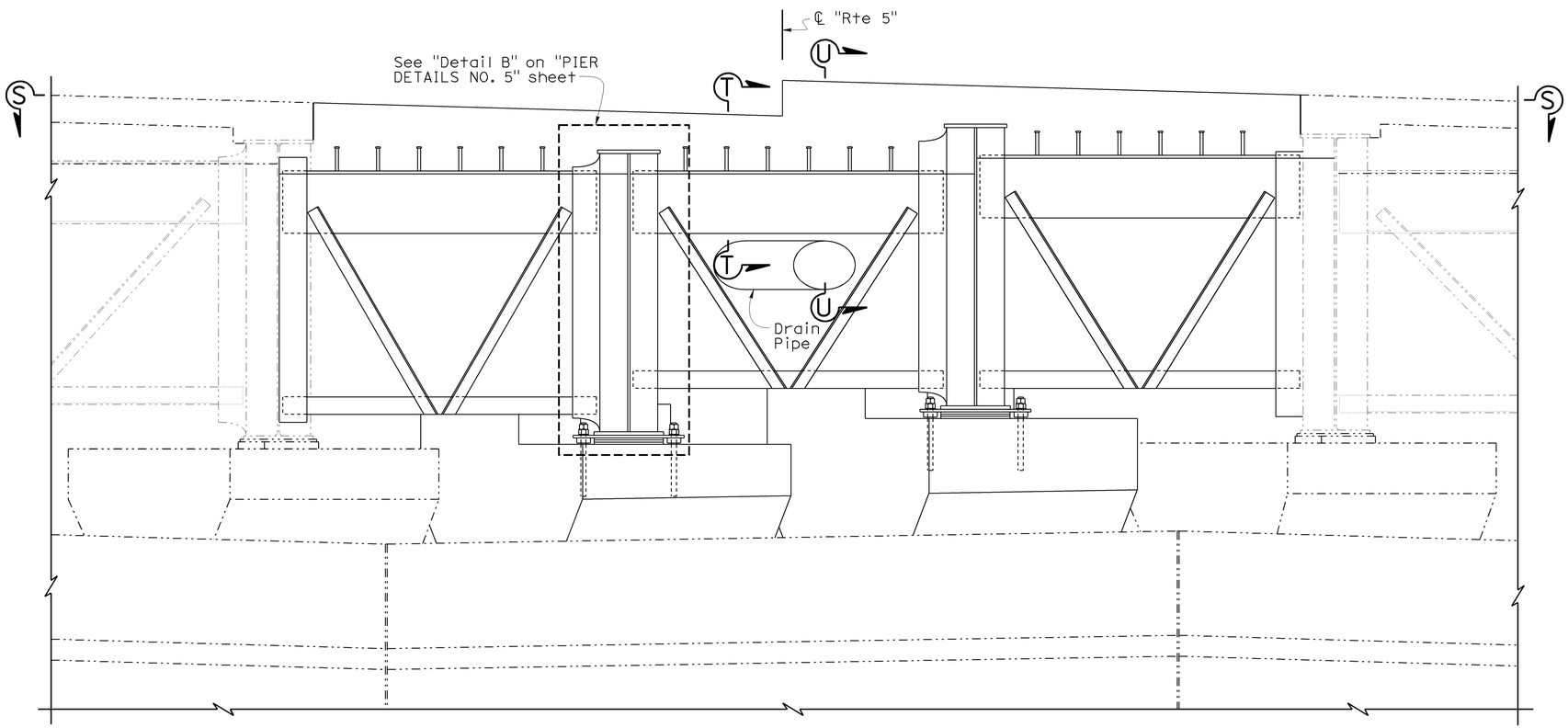


## ELEVATION (PIER 4)
1:20

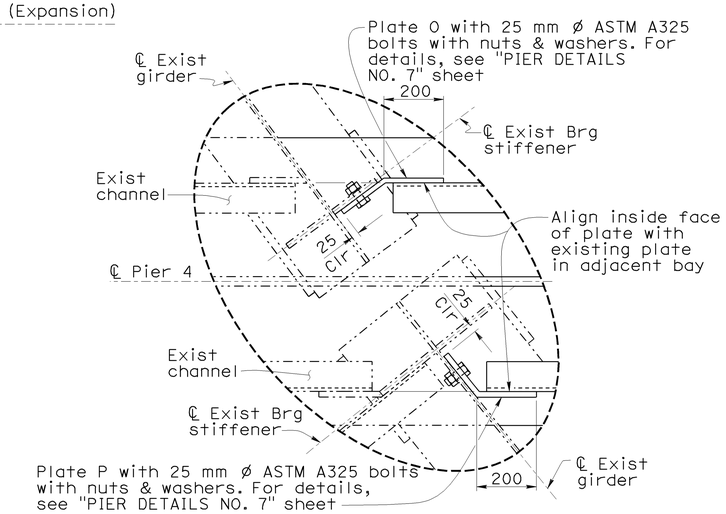


## DETAIL C
1:10

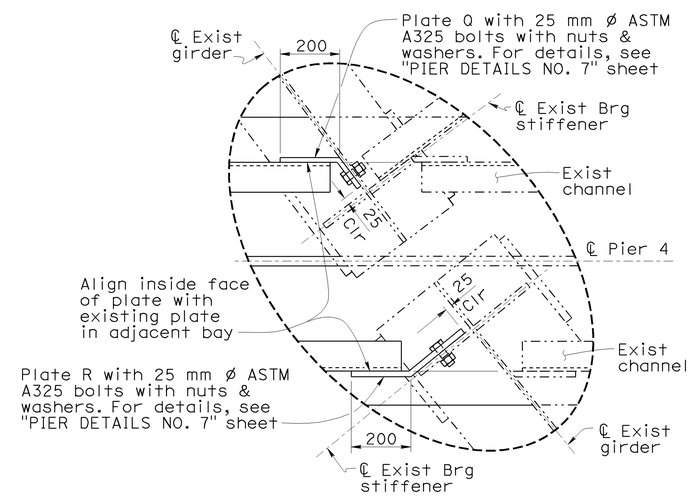


## DETAIL D
1:10

NOTE:
THE CONTRACTOR SHALL VERIFY ALL CONTROLLING FIELD DIMENSIONS BEFORE ORDERING OR FABRICATING ANY MATERIAL.

Notes:
- Pier 4 similar to Pier 2 except as shown.
- For "View S-S", see "PIER DETAILS NO. 5" sheet.
- For "Section T-T" and "Section U-U", see "PIER DETAILS NO. 6" sheet.

Caltrans Metric

| | BY | CHECKED |
|---|---|---|
| DESIGN | Shervin Pahlavan | Jose Higareda |
| DETAILS | Dale Kubochi | Jose Higareda |
| QUANTITIES | Jerry Han | Joel Ruiz |

STATE OF CALIFORNIA
DEPARTMENT OF TRANSPORTATION

DIVISION OF ENGINEERING SERVICES
STRUCTURE DESIGN
DESIGN BRANCH 15

BRIDGE NO. 53-1075
KILOMETER POST 43.6

LOS ANGELES RIVER BRIDGE AND SEPARATION (WIDEN)

PIER DETAILS NO. 3

ALL DIMENSIONS ARE IN MILLIMETERS UNLESS OTHERWISE SHOWN

ORIGINAL SCALE IN MILLIMETERS FOR REDUCED PLANS 0 10 20 30 40 50 60 70 80 90 100

CU 07
EA 121841

DISREGARD PRINTS BEARING EARLIER REVISION DATES

REVISION DATES: 3-17-08 3-17-08 4-17-08 4-17-08 11-17-08 11-17-08 12-22-08 1-16-09

SHEET 33 OF 64

FILE => 53-1075ri-1-pierdet03.dgn

STRUCTURES DESIGN DETAIL SHEET (METRIC) (REV.03-17-04)

USERNAME => rtmrikes| DATE PLOTTED => 12-JUN-2009 TIME PLOTTED => 07:16

| DIST | COUNTY | ROUTE | KILOMETER POST TOTAL PROJECT | SHEET No | TOTAL SHEETS |
|---|---|---|---|---|---|
| 07 | LA | 5 | 42.8/47.3 | 607 | 1073 |

Andrew Rittenhouse 12-05-08
REGISTERED CIVIL ENGINEER DATE

6-8-09
PLANS APPROVAL DATE

REGISTERED PROFESSIONAL ENGINEER Andrew P. Rittenhouse No. 61006 Exp. 12-31-10 CIVIL STATE OF CALIFORNIA

The State of California or its officers or agents shall not be responsible for the accuracy or completeness of electronic copies of this plan sheet.

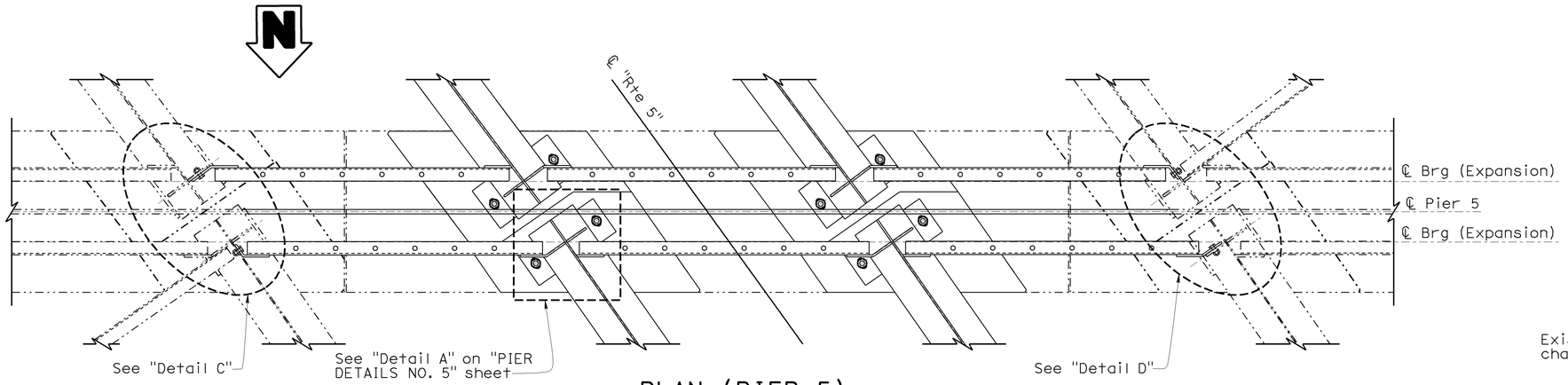


## PLAN (PIER 5)
1:20

Note:

Diaphragm reinforcement not shown for clarity

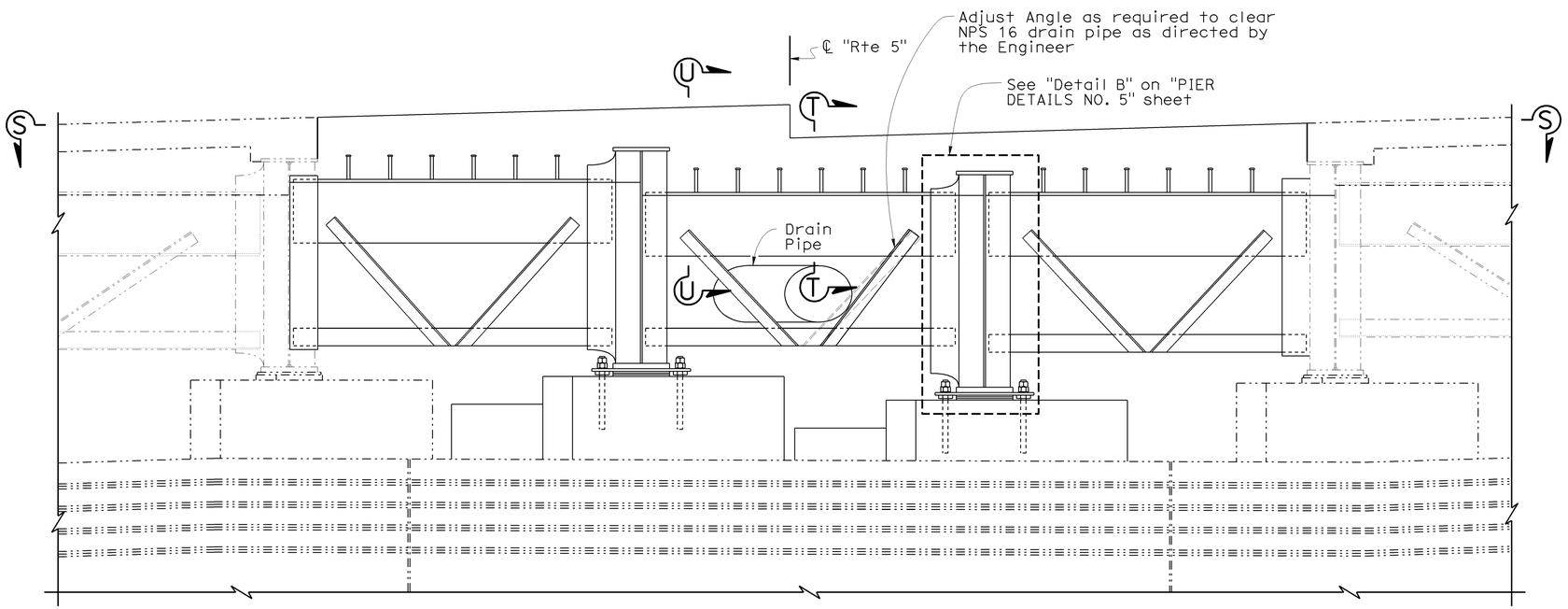


## ELEVATION (PIER 5)
1:20

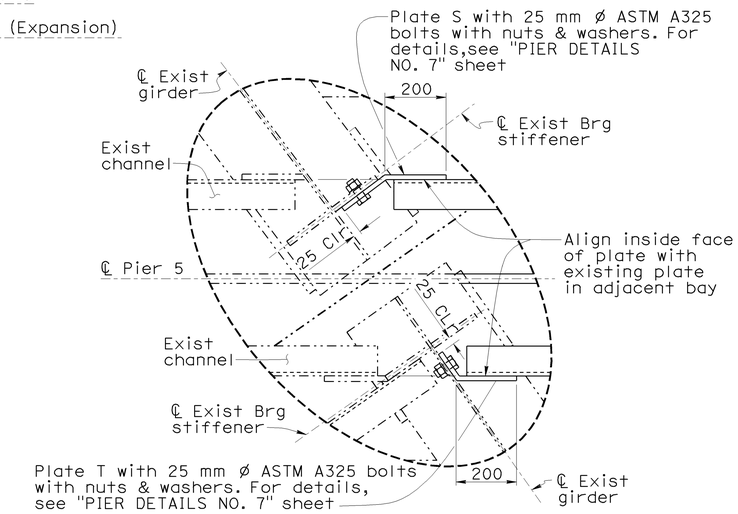


## DETAIL C
1:10

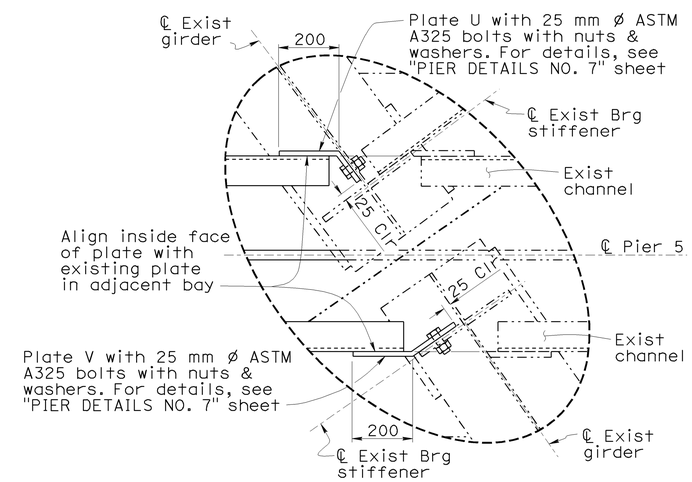


## DETAIL D
1:10

NOTE:
THE CONTRACTOR SHALL VERIFY ALL CONTROLLING FIELD DIMENSIONS BEFORE ORDERING OR FABRICATING ANY MATERIAL.

Notes:
- Elevation shown, looking towards back station
- Pier 5 similar to Pier 2 except as shown.
- For "View S-S", see "PIER DETAILS NO. 5" sheet.
- For "Section T-T" and "Section U-U", see "PIER DETAILS NO. 6" sheet.

Caltrans Metric

| | BY | CHECKED |
|---|---|---|
| DESIGN | Shervin Pahlavan | Jose Higareda |
| DETAILS | Dalel Kubochi | Jose Higareda |
| QUANTITIES | Jerry Han | Joel Ruiz |

STATE OF CALIFORNIA
DEPARTMENT OF TRANSPORTATION

DIVISION OF ENGINEERING SERVICES
STRUCTURE DESIGN
DESIGN BRANCH 15

BRIDGE NO. 53-1075
KILOMETER POST 43.6

LOS ANGELES RIVER BRIDGE AND SEPARATION (WIDEN)

PIER DETAILS NO. 4

ALL DIMENSIONS ARE IN MILLIMETERS UNLESS OTHERWISE SHOWN

ORIGINAL SCALE IN MILLIMETERS FOR REDUCED PLANS 0 10 20 30 40 50 60 70 80 90 100

CU 07
EA 121841

DISREGARD PRINTS BEARING EARLIER REVISION DATES

REVISION DATES: 3-11-08 1-21-08 4-14-08 4-25-08 5-1-08 11-14-08 11-25-08 12-22-08

SHEET 34 OF 64

FILE => 53-1075ri-1-pierdet04.dgn

STRUCTURES DESIGN DETAIL SHEET (METRIC) (REV.03-17-04)

USERNAME => rtmrikes| DATE PLOTTED => 12-JUN-2009 TIME PLOTTED => 07:16

| DIST | COUNTY | ROUTE | KILOMETER POST TOTAL PROJECT | SHEET No | TOTAL SHEETS |
|---|---|---|---|---|---|
| 07 | LA | 5 | 42.8/47.3 | 608 | 1073 |

Andrew Rittenhouse 12-05-08
REGISTERED CIVIL ENGINEER DATE

6-8-09
PLANS APPROVAL DATE

REGISTERED PROFESSIONAL ENGINEER
Andrew P. Rittenhouse
No. 61006
Exp. 12-31-10
CIVIL
STATE OF CALIFORNIA

The State of California or its officers or agents shall not be responsible for the accuracy or completeness of electronic copies of this plan sheet.

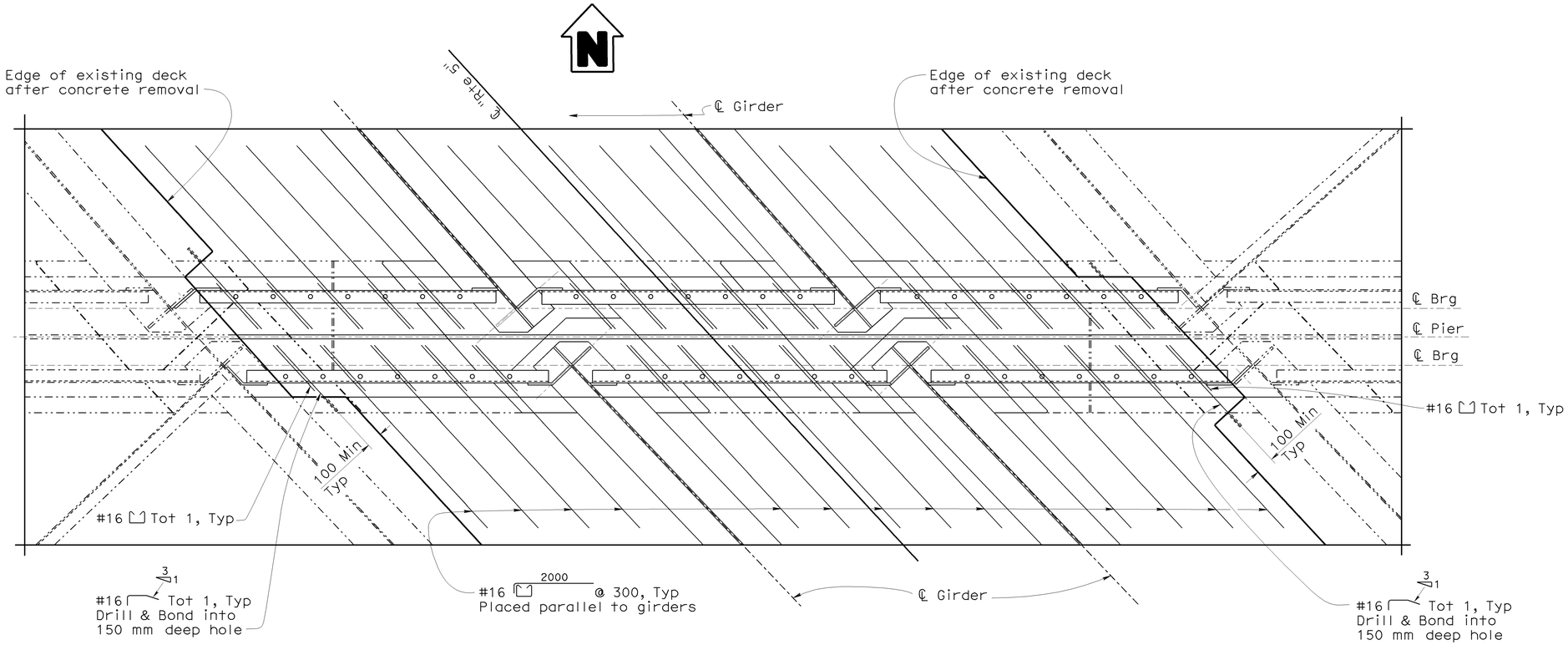


## VIEW S-S
1:20

Notes:
- Other reinforcement not shown for clarity.
- Pier 2 shown, all other piers are similar.

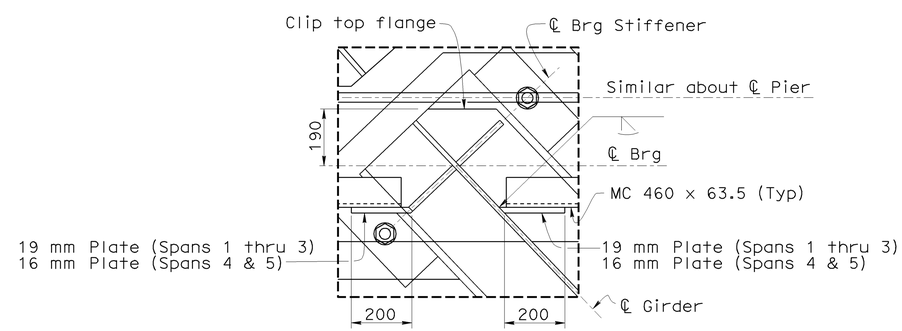


## DETAIL A
1:10

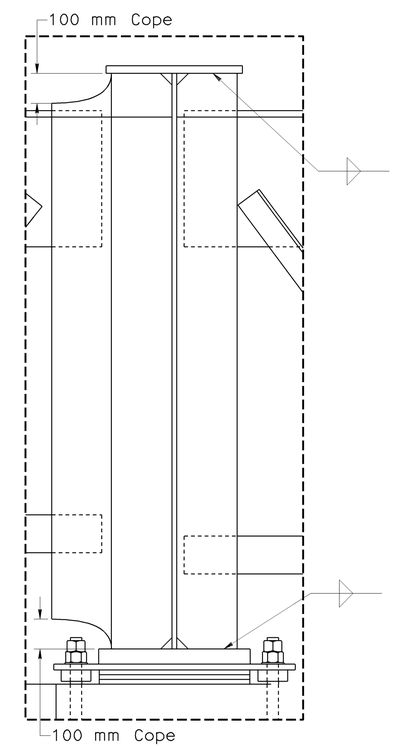


## DETAIL B
1:10

NOTE:
THE CONTRACTOR SHALL VERIFY ALL CONTROLLING FIELD DIMENSIONS BEFORE ORDERING OR FABRICATING ANY MATERIAL.

Caltrans Metric

| | BY | CHECKED |
|---|---|---|
| DESIGN | Shervin Pahlavan | Jose Higareda |
| DETAILS | Dale Kubochi | Jose Higareda |
| QUANTITIES | Jerry Han | Joel Ruiz |

STATE OF CALIFORNIA
DEPARTMENT OF TRANSPORTATION

DIVISION OF ENGINEERING SERVICES
STRUCTURE DESIGN
DESIGN BRANCH 15

BRIDGE NO. 53-1075
KILOMETER POST 43.6

LOS ANGELES RIVER BRIDGE AND SEPARATION (WIDEN)
PIER DETAILS NO. 5

ALL DIMENSIONS ARE IN MILLIMETERS UNLESS OTHERWISE SHOWN

ORIGINAL SCALE IN MILLIMETERS FOR REDUCED PLANS 0 10 20 30 40 50 60 70 80 90 100

CU 07
EA 121841

DISREGARD PRINTS BEARING EARLIER REVISION DATES

REVISION DATES: 4-15-08 11-14-08 11-21-10

SHEET 35 OF 64

FILE => 53-1075ri-1-pierdet05.dgn

STRUCTURES DESIGN DETAIL SHEET (METRIC) (REV.03-17-04)

USERNAME => rrmikesl DATE PLOTTED => 12-JUN-2009 TIME PLOTTED => 07:16

| DIST | COUNTY | ROUTE | KILOMETER POST TOTAL PROJECT | SHEET No | TOTAL SHEETS |
|---|---|---|---|---|---|
| 07 | LA | 5 | 42.8/47.3 | 609 | 1073 |

Andrew Rittenhouse 12-05-08
REGISTERED CIVIL ENGINEER DATE

6-8-09
PLANS APPROVAL DATE

REGISTERED PROFESSIONAL ENGINEER Andrew P. Rittenhouse No. 61006 Exp. 12-31-10 CIVIL STATE OF CALIFORNIA

The State of California or its officers or agents shall not be responsible for the accuracy or completeness of electronic copies of this plan sheet.

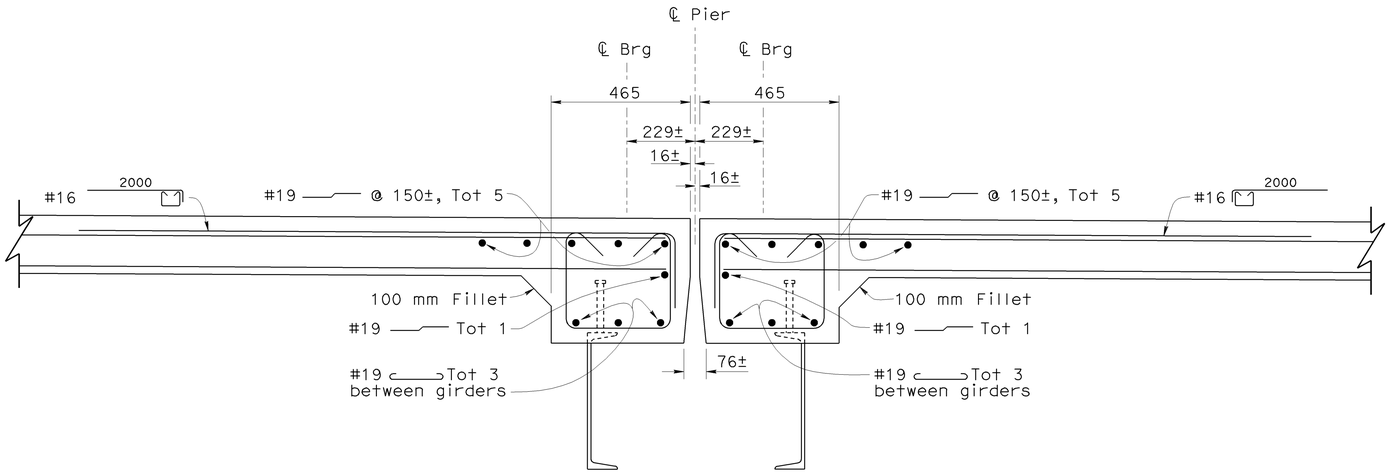


## SECTION T-T
1:10

Note: Joint opening of new construction to match that of existing.

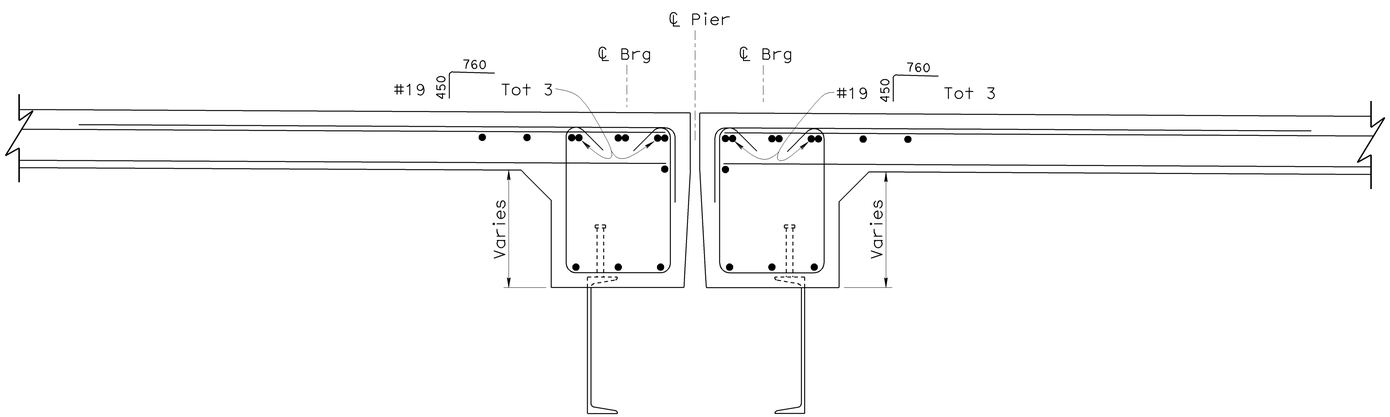


## SECTION U-U
1:10

Note: For details not noted, see "Section T-T"

| MINIMUM JOINT GAP AT PIER 5 | |
|---|---|
| TEMP Deg. (C) | (A)* Dimension |
| 4 | 59 |
| 13 | 49 |
| 22 | 39 |
| 30 | 29 |
| 39 | 19 |

*Interpolate values for temperatures not shown.

Notes:

1. The following notes apply to JOINT SEAL TYPE B:
2. Seal must satisfy both minimum Movement Rating (MR) and minimum "W1" requirements.
3. Minimum "W1" is the calculated maximum width of the joint based on field measurements. After the joints have been cleaned, minimum "W1" is to be recalculated by the Engineer.
4. "W1" shall be the smaller of the values determined as follows:
   A) 0.85 times the manufacturer's designed minimum uncompressed width of the seal.
   B) The width of the seal on the third successive test cycle of the pressure deflection test, when compressed to an average pressure of 20.68 kPa.
5. For details not shown see RSP B6-21

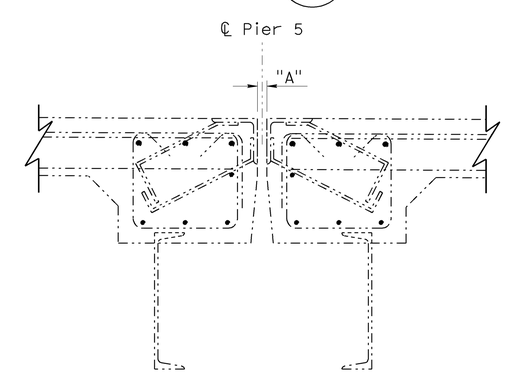


## EXISTING JOINT AT PIER 5
1:10

NOTE:
THE CONTRACTOR SHALL VERIFY ALL CONTROLLING FIELD DIMENSIONS BEFORE ORDERING OR FABRICATING ANY MATERIAL.

| JOINT SEAL TABLE | | | | | | |
|---|---|---|---|---|---|---|
| LOCATION | MINIMUM "MR" (mm) | MINIMUM "W1" (mm) | APPROXIMATE LENGTH EXISTING * (m) | APPROXIMATE LENGTH NEW (m) | EXISTING WATERSTOP | APPROXIMATE DEPTH TO CLEAN EXISTING EXPANSION JOINT * (mm) |
| PIER 2 | 25.0 | N/A | 60 | 8 | NO | 195 |
| PIER 3 | 25.0 | N/A | 58 | 7 | ↓ | 195 |
| PIER 4 | 25.0 | N/A | 56 | 7 | ↓ | 195 |
| PIER 5 | 40.0 | 58.0 | 55 | 7 | ↓ | 195 |

* All existing joints to be cleaned.

Caltrans Metric

ALL DIMENSIONS ARE IN MILLIMETERS UNLESS OTHERWISE SHOWN

ORIGINAL SCALE IN MILLIMETERS FOR REDUCED PLANS 0 10 20 30 40 50 60 70 80 90 100

| | BY | CHECKED |
|---|---|---|
| DESIGN | Shervin Pahlavan | Jose Higareda |
| DETAILS | Dale Kubochi | Jose Higareda |
| QUANTITIES | Jerry Han | Joel Ruiz |

STATE OF CALIFORNIA
DEPARTMENT OF TRANSPORTATION

DIVISION OF ENGINEERING SERVICES
STRUCTURE DESIGN
DESIGN BRANCH 15

CU 07
EA 121841

BRIDGE NO. 53-1075
KILOMETER POST 43.6

LOS ANGELES RIVER BRIDGE AND SEPARATION (WIDEN)

PIER DETAILS NO. 6

DISREGARD PRINTS BEARING EARLIER REVISION DATES

REVISION DATES: 4-18-08 4-18-08 4-24-08 4-24-08 11-14-08 11-14-08 1-27-09

SHEET 36 OF 64

FILE => 53-1075ri-l-pierdet06.dgn

STRUCTURES DESIGN DETAIL SHEET (METRIC) (REV.03-17-04)

USERNAME => trmikesl DATE PLOTTED => 12-JUN-2009 TIME PLOTTED => 07:16

| DIST | COUNTY | ROUTE | KILOMETER POST TOTAL PROJECT | SHEET No | TOTAL SHEETS |
|---|---|---|---|---|---|
| 07 | LA | 5 | 42.8/47.3 | 610 | 1073 |

Andrew Rittenhouse 12-05-08
REGISTERED CIVIL ENGINEER DATE

6-8-09
PLANS APPROVAL DATE

REGISTERED PROFESSIONAL ENGINEER
Andrew P. Rittenhouse
No. 61006
Exp. 12-31-10
CIVIL
STATE OF CALIFORNIA

The State of California or its officers or agents shall not be responsible for the accuracy or completeness of electronic copies of this plan sheet.

## PLATE TABLE

| PIER | PLATE | TYPE | DIMENSION (mm) a | b | c | NUMBER OF EQUAL SPACES | PLATE THICKNESS |
|---|---|---|---|---|---|---|---|
| 2 | G | III | 100 | 175 | 175 | 6 | 19 mm |
| | H | II | 90 | 175 | 175 | 5 | 19 mm |
| | I | II | 90 | 175 | 175 | 6 | 19 mm |
| | J | III | 90 | 175 | 175 | 5 | 19 mm |
| 3 | K | III | 100 | 175 | 175 | 6 | 19 mm |
| | L | II | 90 | 175 | 175 | 6 | 19 mm |
| | M | II | 90 | 175 | 175 | 6 | 19 mm |
| | N | III | 100 | 175 | 175 | 6 | 19 mm |
| 4 | O | III | 75 | 200 | 225 | 6 | 16 mm |
| | P | II | 75 | 200 | 200 | 6 | 19 mm |
| | Q | II | 50 | 200 | 225 | 6 | 16 mm |
| | R | III | 100 | 200 | 200 | 6 | 19 mm |
| 5 | S | III | 75 | 225 | 125 | 6 | 16 mm |
| | T | II | 50 | 225 | 125 | 4 | 16 mm |
| | U | II | 50 | 225 | 125 | 6 | 16 mm |
| | V | III | 75 | 225 | 125 | 4 | 16 mm |

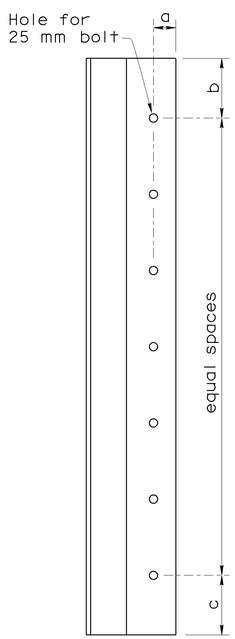


TYPE II
(plate)

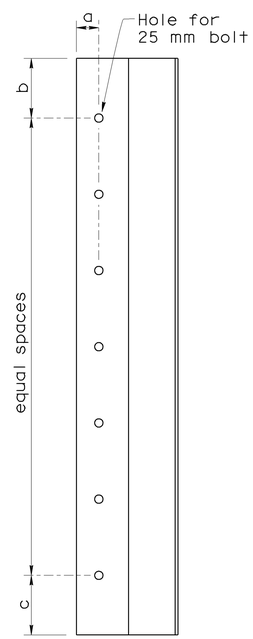


TYPE III
(plate)

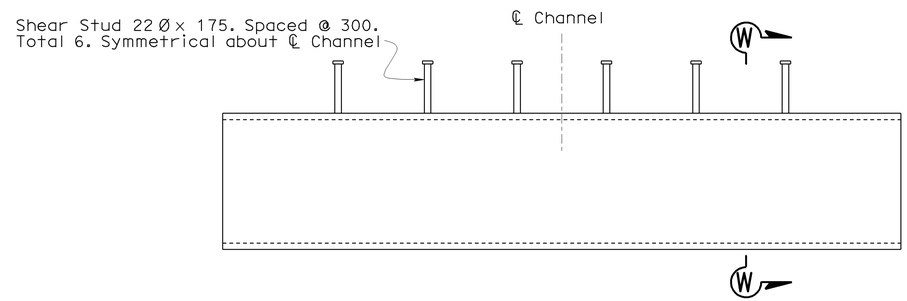


CHANNEL (MC 460 x 63.5)
1:10

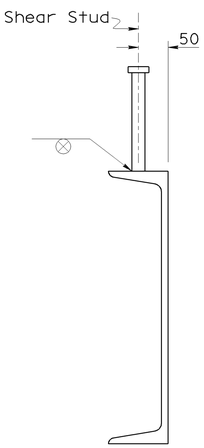


SECTION W-W
1:5

NOTE:
THE CONTRACTOR SHALL VERIFY ALL CONTROLLING FIELD DIMENSIONS BEFORE ORDERING OR FABRICATING ANY MATERIAL.

Caltrans Metric

ALL DIMENSIONS ARE IN MILLIMETERS UNLESS OTHERWISE SHOWN

ORIGINAL SCALE IN MILLIMETERS FOR REDUCED PLANS 0 10 20 30 40 50 60 70 80 90 100

| | BY | CHECKED |
|---|---|---|
| DESIGN | Shervin Pahlavan | Jose Higareda |
| DETAILS | Dale Kubochi | Jose Higareda |
| QUANTITIES | Jerry Han | Joel Ruiz |

STATE OF CALIFORNIA
DEPARTMENT OF TRANSPORTATION

DIVISION OF ENGINEERING SERVICES
STRUCTURE DESIGN
DESIGN BRANCH 15

CU 07
EA 121841

BRIDGE NO. 53-1075
KILOMETER POST 43.6

LOS ANGELES RIVER BRIDGE AND SEPARATION (WIDEN)

PIER DETAILS NO. 7

DISREGARD PRINTS BEARING EARLIER REVISION DATES

REVISION DATES 1-21-08 4-11-08 11-4-08 11-21-08

SHEET 37 OF 64

FILE => 53-1075r1-1-pierdet07.dgn

STRUCTURES DESIGN DETAIL SHEET (METRIC) (REV.03-17-04)

USERNAME => trmikest DATE PLOTTED => 12-JUN-2009 TIME PLOTTED => 07:16

| DIST | COUNTY | ROUTE | KILOMETER POST TOTAL PROJECT | SHEET No | TOTAL SHEETS |
|---|---|---|---|---|---|
| 07 | LA | 5 | 42.8/47.3 | 611 | 1073 |

Andrew Rittenhouse 12-05-08
REGISTERED CIVIL ENGINEER DATE

6-8-09
PLANS APPROVAL DATE

REGISTERED PROFESSIONAL ENGINEER
Andrew P. Rittenhouse
No. 61006
Exp. 12-31-10
CIVIL
STATE OF CALIFORNIA

The State of California or its officers or agents shall not be responsible for the accuracy or completeness of electronic copies of this plan sheet.

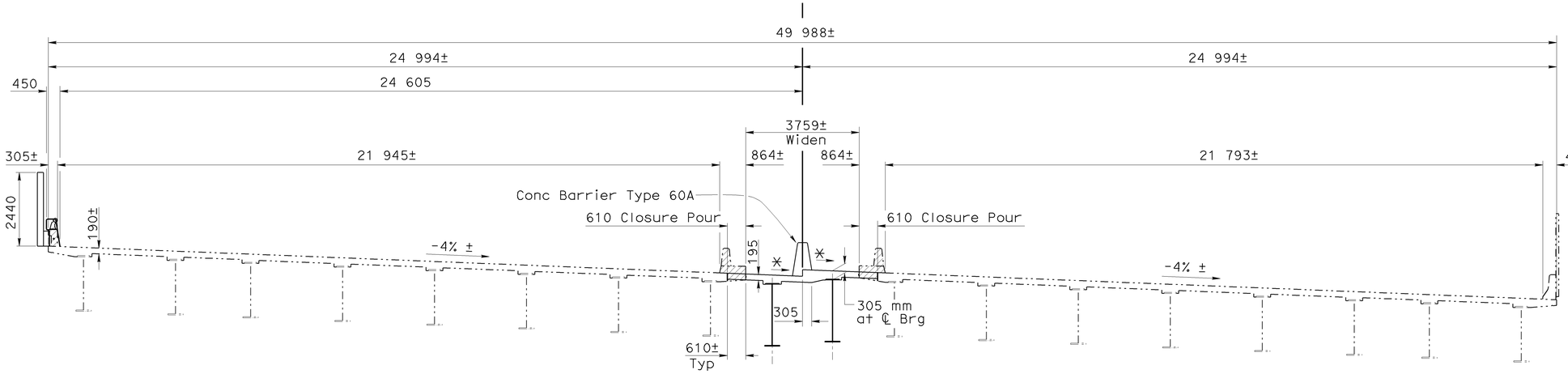


Notes:

1. Closure pour concrete shall not be placed until 7 days after adjacent deck pours are completed.
2. Utilities not shown for clarity.

## TYPICAL SECTION

1:80

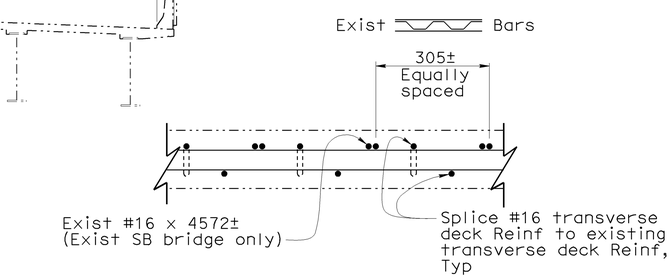


## MECHANICAL SERVICE SPLICE BAR LAYOUT

No Scale

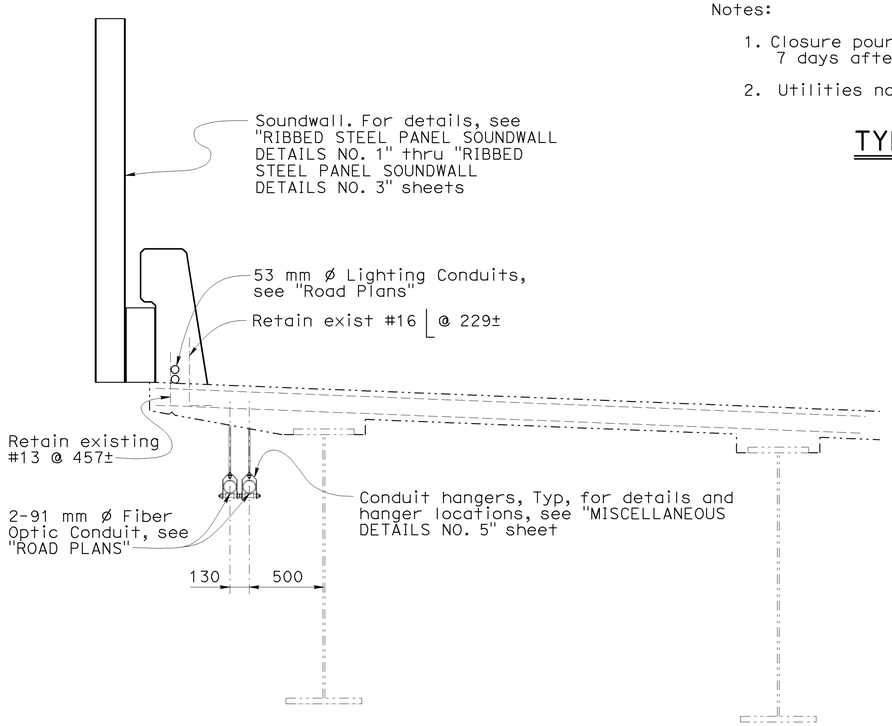


## PART TYPICAL BARRIER WITH SOUNDWALL

1:20

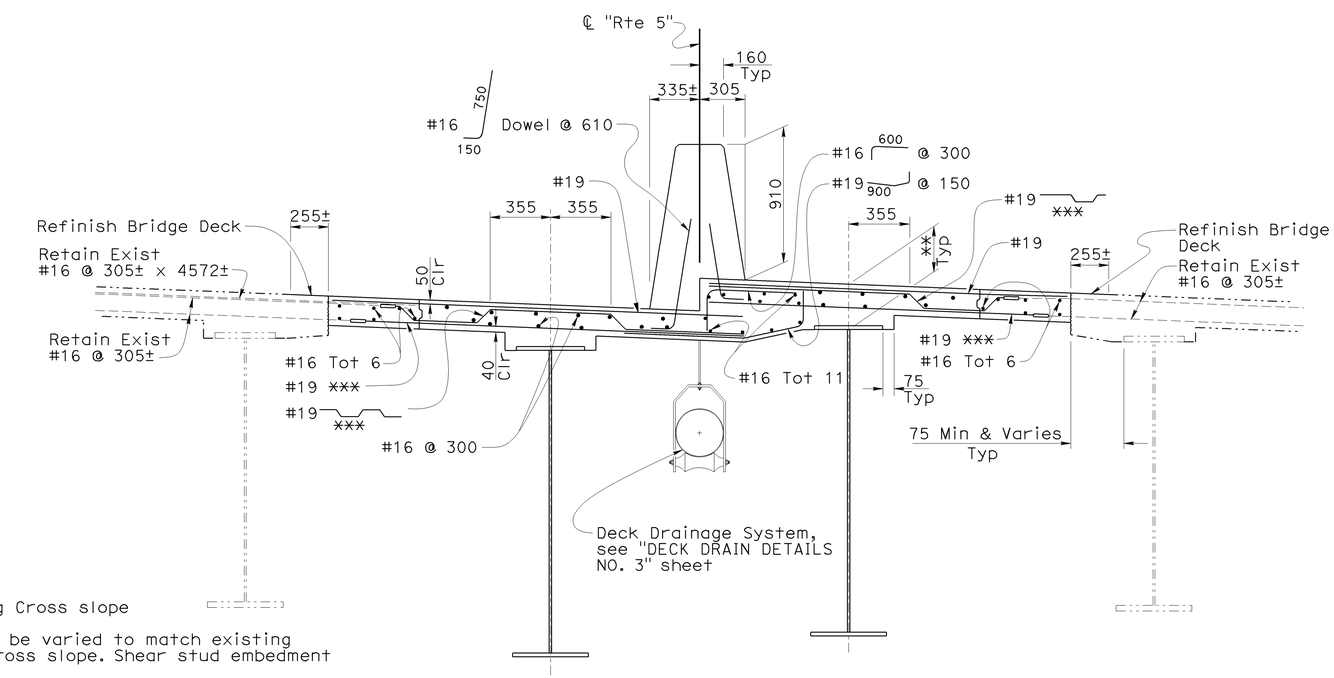


## PART TYPICAL CENTER WIDEN

1:20

Legend:

* Match Existing Cross slope

** Dimension may be varied to match existing profile and cross slope. Shear stud embedment must remain.

*** Place normal to and space along ℄ Route 5. Bars to be mechanical service spliced with existing #16 bars as shown. See "MECHANICAL SERVICE SPLICE BAR LAYOUT" detail.

NOTE:
THE CONTRACTOR SHALL VERIFY ALL CONTROLLING FIELD DIMENSIONS BEFORE ORDERING OR FABRICATING ANY MATERIAL.

Caltrans Metric

| | BY | CHECKED |
|---|---|---|
| DESIGN | Shervin Pahlavan | Jose Higareda |
| DETAILS | Dale Kubochi | Jose Higareda |
| QUANTITIES | Jerry Han | Joel Ruiz |

STATE OF CALIFORNIA
DEPARTMENT OF TRANSPORTATION

DIVISION OF ENGINEERING SERVICES
STRUCTURE DESIGN
DESIGN BRANCH 15

BRIDGE NO. 53-1075
KILOMETER POST 43.6

LOS ANGELES RIVER BRIDGE AND SEPARATION (WIDEN)

TYPICAL SECTION

ALL DIMENSIONS ARE IN MILLIMETERS UNLESS OTHERWISE SHOWN

ORIGINAL SCALE IN MILLIMETERS FOR REDUCED PLANS 0 10 20 30 40 50 60 70 80 90 100

CU 07
EA 121841

DISREGARD PRINTS BEARING EARLIER REVISION DATES

REVISION DATES: 6-8-09 | 4-14-08 | 8-18-08 | 11-14-08 | 11-17-08 | 12-12-08 | 1-16-09 | 1-28-09 | 5-21-09

SHEET 38 OF 64

FILE => 53-1075rl-m-typ.dgn

STRUCTURES DESIGN DETAIL SHEET (METRIC) (REV.03-17-04)

USERNAME => ttrmirkes| DATE PLOTTED => 15-JUN-2009 TIME PLOTTED => 13:19

| DIST | COUNTY | ROUTE | KILOMETER POST TOTAL PROJECT | SHEET No | TOTAL SHEETS |
|---|---|---|---|---|---|
| 07 | LA | 5 | 42.8/47.3 | 612 | 1073 |

Andrew Rittenhouse 12-05-08
REGISTERED CIVIL ENGINEER DATE

6-8-09
PLANS APPROVAL DATE

REGISTERED PROFESSIONAL ENGINEER Andrew P. Rittenhouse No. 61006 Exp. 12-31-10 CIVIL STATE OF CALIFORNIA

The State of California or its officers or agents shall not be responsible for the accuracy or completeness of electronic copies of this plan sheet.

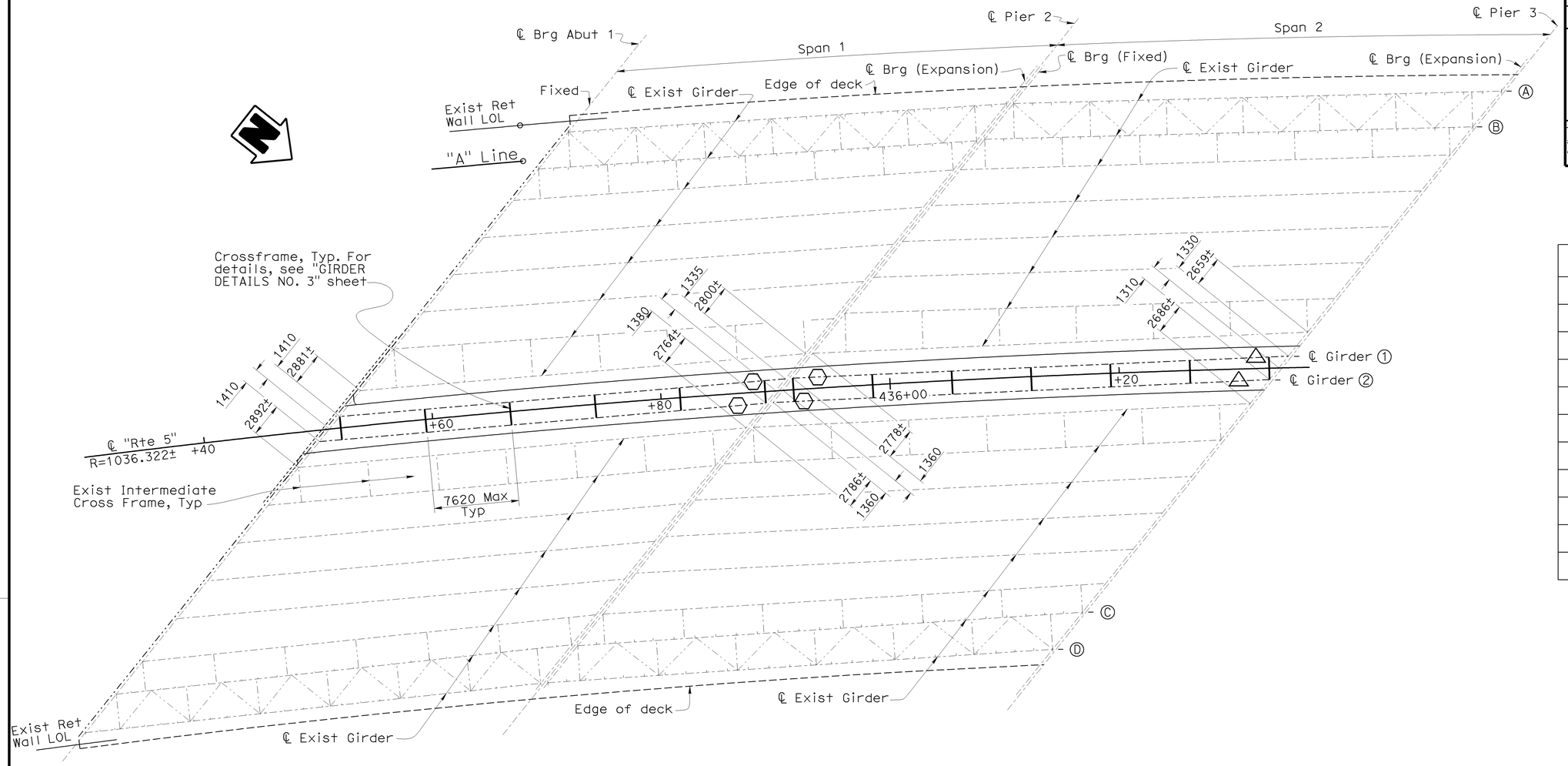


PLAN
1:200

| GIRDER TABLE | | |
|---|---|---|
| SPAN | GIRDER | BEARING ± |
| 1 | ① | N43°14′26″E |
| 1 | ② | N43°20′48″E |
| 2 | ① | N40°58′36″E |
| 2 | ② | N41°03′26″E |
| 3 | ① | N38°34′08″E |
| 3 | ② | N38°39′31″E |
| 4 | ① | N36°23′02″E |
| 4 | ② | N36°28′02″E |
| 5 | ① | N34°31′55″E |
| 5 | ② | N34°36′35″E |

Notes:

1. For girder lengths see "GIRDER DETAILS NO. 1" and "GIRDER DETAILS NO. 2" sheets.
2. For locations of fiber optic conduit hanger, see "MISCELLANEOUS DETAILS NO. 5" sheet.
3. For locations of deck drain pipe hanger, see "DECK DRAIN DETAILS NO. 2" sheet.

Legend:

⬡ Denotes "Restrainer Type B Bracket" for details see "MISCELLANEOUS DETAILS NO. 2" sheet.

△ Denotes "Restrainer Type A Bracket" for details see "MISCELLANEOUS DETAILS NO. 3" sheet.

NOTE:
THE CONTRACTOR SHALL VERIFY ALL CONTROLLING FIELD DIMENSIONS BEFORE ORDERING OR FABRICATING ANY MATERIAL.

Caltrans Metric

| | BY | CHECKED |
|---|---|---|
| DESIGN | Shervin Pahlavan | Jose Higareda |
| DETAILS | D. Kish/ D. Kubochi | Jose Higareda |
| QUANTITIES | Jerry Han | Joel Ruiz |

STATE OF CALIFORNIA
DEPARTMENT OF TRANSPORTATION

DIVISION OF ENGINEERING SERVICES
STRUCTURE DESIGN
DESIGN BRANCH 15

BRIDGE NO. 53-1075
KILOMETER POST 43.6

LOS ANGELES RIVER BRIDGE AND SEPARATION (WIDEN)
GIRDER LAYOUT NO. 1

ALL DIMENSIONS ARE IN MILLIMETERS UNLESS OTHERWISE SHOWN

ORIGINAL SCALE IN MILLIMETERS FOR REDUCED PLANS 0 10 20 30 40 50 60 70 80 90 100

CU 07
EA 121841

DISREGARD PRINTS BEARING EARLIER REVISION DATES

REVISION DATES: 6-13-08 6-30-08 11-14-08 11-17-08 12-12-08 1-22-09 1-29-09

SHEET 39 OF 64

FILE => 53-1075r1-n-gl001.dgn

STRUCTURES DESIGN DETAIL SHEET (METRIC) (REV.03-17-04)

USERNAME => rrmthest DATE PLOTTED => 12-JUN-2009 TIME PLOTTED => 07:23

| DIST | COUNTY | ROUTE | KILOMETER POST TOTAL PROJECT | SHEET No | TOTAL SHEETS |
|---|---|---|---|---|---|
| 07 | LA | 5 | 42.8/47.3 | 613 | 1073 |

Andrew Rittenhouse 12-05-08
REGISTERED CIVIL ENGINEER DATE

6-8-09
PLANS APPROVAL DATE

REGISTERED PROFESSIONAL ENGINEER
Andrew P. Rittenhouse
No. 61006
Exp. 12-31-10
CIVIL
STATE OF CALIFORNIA

The State of California or its officers or agents shall not be responsible for the accuracy or completeness of electronic copies of this plan sheet.

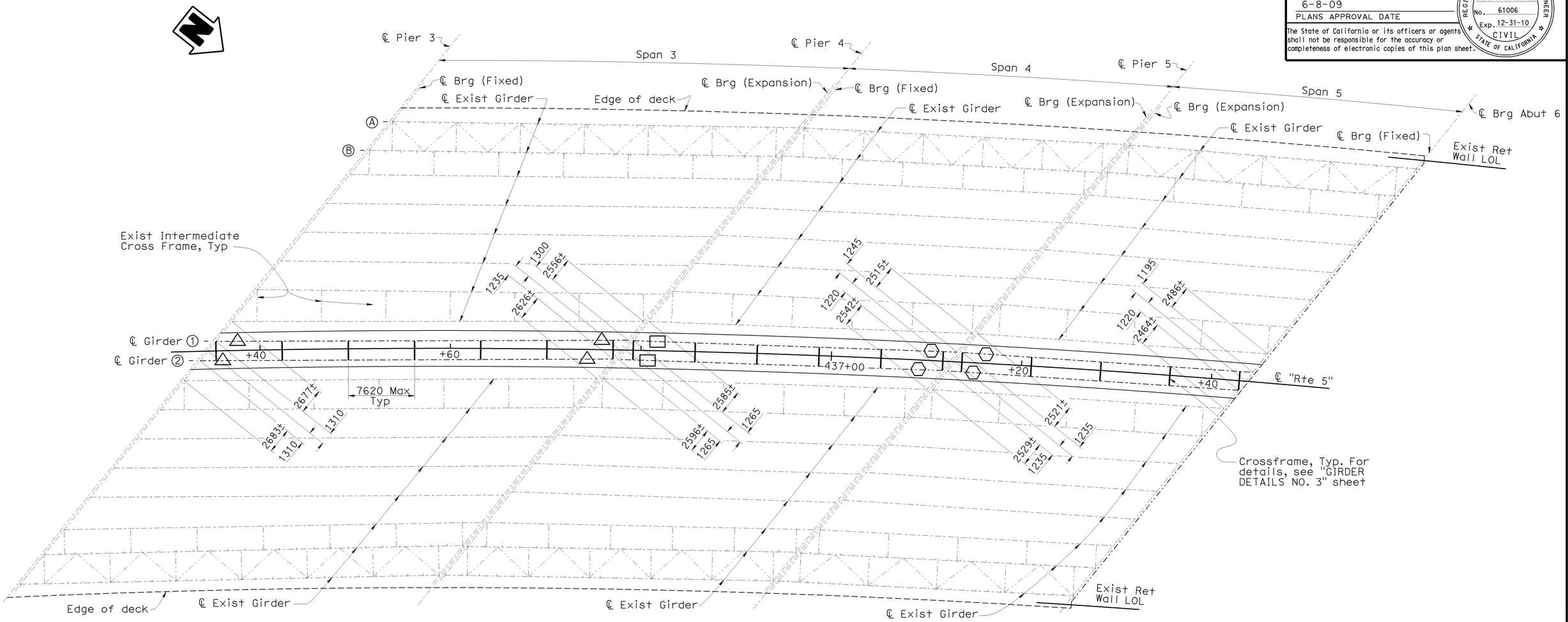


PLAN
1:200

Note:

For girder lengths see "GIRDER DETAILS NO. 1" and "GIRDER DETAILS NO. 2" sheets.

Legend:

⬡ Denotes "Restrainer Type B Bracket" for details see "MISCELLANEOUS DETAILS NO. 2" sheet.

△ Denotes "Restrainer Type A Bracket" for details see "MISCELLANEOUS DETAILS NO. 3" sheet.

▭ Denotes "Restrainer Type C Bracket" for details see "MISCELLANEOUS DETAILS NO. 4" sheet.

NOTE:
THE CONTRACTOR SHALL VERIFY ALL CONTROLLING FIELD DIMENSIONS BEFORE ORDERING OR FABRICATING ANY MATERIAL.

Caltrans Metric

ALL DIMENSIONS ARE IN MILLIMETERS UNLESS OTHERWISE SHOWN

ORIGINAL SCALE IN MILLIMETERS FOR REDUCED PLANS 0 10 20 30 40 50 60 70 80 90 100

| | BY | CHECKED |
|---|---|---|
| DESIGN | Shervin Pahlavan | Jose Higareda |
| DETAILS | D. Kish/D. Kubochi | Jose Higareda |
| QUANTITIES | Jerry Han | Joel Ruiz |

STATE OF CALIFORNIA
DEPARTMENT OF TRANSPORTATION

DIVISION OF ENGINEERING SERVICES
STRUCTURE DESIGN
DESIGN BRANCH 15

CU 07
EA 121841

BRIDGE NO. 53-1075
KILOMETER POST 43.6

LOS ANGELES RIVER BRIDGE AND SEPARATION (WIDEN)

GIRDER LAYOUT NO. 2

DISREGARD PRINTS BEARING EARLIER REVISION DATES

REVISION DATES: 9-11-07 4-15-08 6-30-08 11-14-08 11-21-08 12-5-08 1-27-09

SHEET 40 OF 64

FILE => 53-1075rl-n-glo02.dgn

STRUCTURES DESIGN DETAIL SHEET (METRIC) (REV.03-17-04)

USERNAME => trmikesl DATE PLOTTED => 12-JUN-2009 TIME PLOTTED => 07:23

| DIST | COUNTY | ROUTE | KILOMETER POST TOTAL PROJECT | SHEET No | TOTAL SHEETS |
|---|---|---|---|---|---|
| 07 | LA | 5 | 42.8/47.3 | 614 | 1073 |

Andrew Rittenhouse 12-05-08
REGISTERED CIVIL ENGINEER DATE

6-8-09
PLANS APPROVAL DATE

REGISTERED PROFESSIONAL ENGINEER Andrew P. Rittenhouse No. 61006 Exp. 12-31-10 CIVIL STATE OF CALIFORNIA

The State of California or its officers or agents shall not be responsible for the accuracy or completeness of electronic copies of this plan sheet.

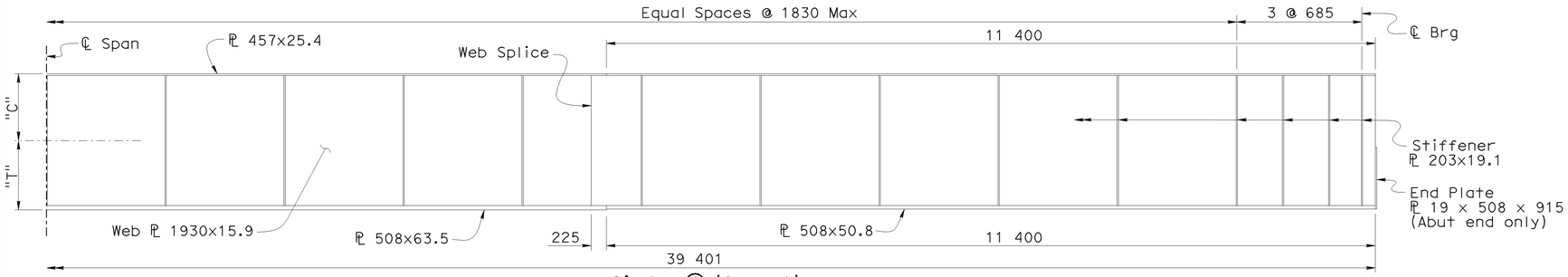


Girder ① (Span 1)

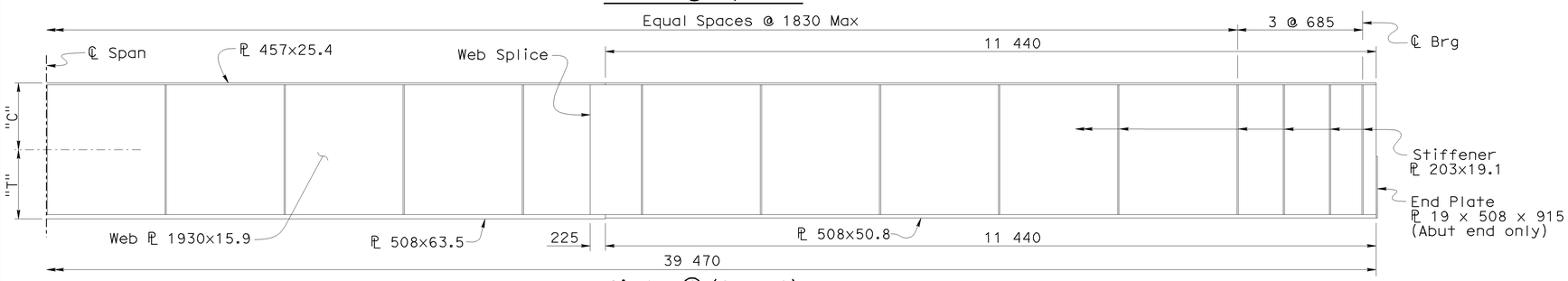


Girder ② (Span 1)

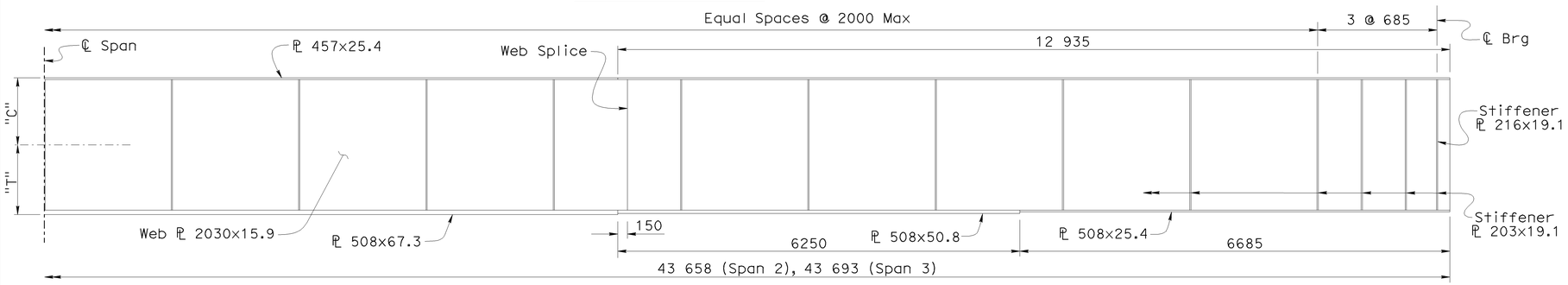


Girder ① (Spans 2 & 3)

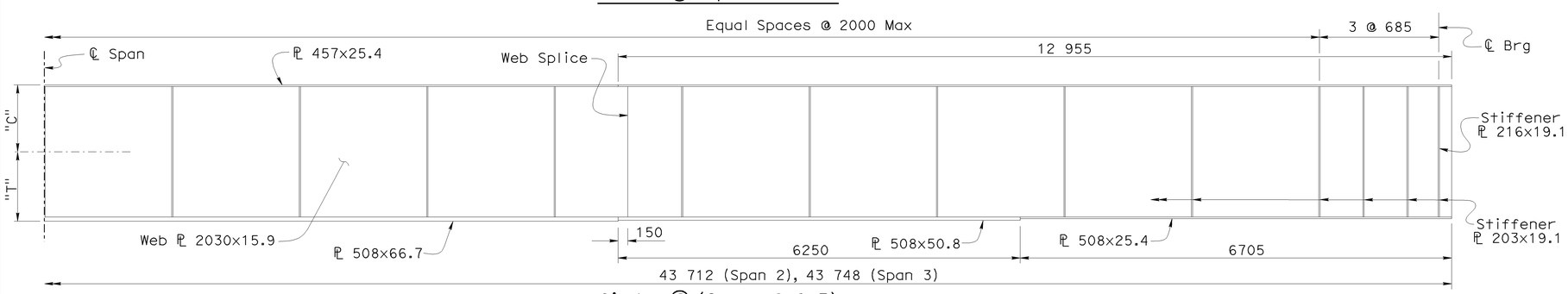


Girder ② (Spans 2 & 3)

## GIRDER ELEVATION

1:40

NOTE:
THE CONTRACTOR SHALL VERIFY ALL CONTROLLING FIELD DIMENSIONS BEFORE ORDERING OR FABRICATING ANY MATERIAL.

Notes:

1. Girders are symmetrical about ℄ Span.
2. Girder lengths are given as horizontal distances.
3. "C" zone is comprised of top flange of all girders and extends downward to the middle depth of web. "T" zone is comprised of bottom flange of all girders and extends upward to middle depth of web.
4. Primary Components of "Main Members" are: flanges, webs, transverse stiffeners and bearing stiffeners. All other components form part of "Secondary Members".

Legend:

"T" Denotes Main Tension Member (non-fracture critical member)

"C" Denotes Main Compression Member.

### CAMBER DIAGRAM TABLE (For Girders ① & ②)

| SPAN | CAMBER COMPONENT | ¼ SPAN | ½ SPAN | ¾ SPAN |
|---|---|---|---|---|
| 1 | Steel Girder Dead Load | 17 | 24 | 17 |
| | Deck Slab Dead Load | 42 | 59 | 43 |
| | Added Dead Load | 30 | 43 | 31 |
| | Total Camber | 89 | 125 | 91 |
| 2 & 3 | Steel Girder Dead Load | 19 | 26 | 19 |
| | Deck Slab Dead Load | 45 | 62 | 45 |
| | Added Dead Load | 12 | 17 | 12 |
| | Total Camber | 76 | 106 | 76 |
| 4 | Steel Girder Dead Load | 9 | 12 | 9 |
| | Deck Slab Dead Load | 28 | 38 | 27 |
| | Added Dead Load | 16 | 22 | 16 |
| | Total Camber | 53 | 73 | 52 |
| 5 | Steel Girder Dead Load | 10 | 14 | 10 |
| | Deck Slab Dead Load | 34 | 47 | 34 |
| | Added Dead Load | 18 | 26 | 19 |
| | Total Camber | 62 | 88 | 63 |

Caltrans Metric

| | BY | CHECKED |
|---|---|---|
| DESIGN | Shervin Pahlavan | Jose Higareda |
| DETAILS | D. Kish/ D. Kubochi | Jose Higareda |
| QUANTITIES | Jerry Han | Joel Ruiz |

STATE OF CALIFORNIA
DEPARTMENT OF TRANSPORTATION

DIVISION OF ENGINEERING SERVICES
STRUCTURE DESIGN
DESIGN BRANCH 15

BRIDGE NO. 53-1075
KILOMETER POST 43.6

LOS ANGELES RIVER BRIDGE AND SEPARATION (WIDEN)

GIRDER DETAILS NO. 1

ALL DIMENSIONS ARE IN MILLIMETERS UNLESS OTHERWISE SHOWN

ORIGINAL SCALE IN MILLIMETERS FOR REDUCED PLANS 0 10 20 30 40 50 60 70 80 90 100

CU 07
EA 121841

DISREGARD PRINTS BEARING EARLIER REVISION DATES

REVISION DATES 1-29-08 4-14-08 11-14-08 11-14-08 12-12-08 11-29-09 1-29-09

SHEET 41 OF 64

FILE => 53-1075rl-o-grd01.dgn

STRUCTURES DESIGN DETAIL SHEET (METRIC) (REV.03-17-04)

USERNAME => trmikesl DATE PLOTTED => 12-JUN-2009 TIME PLOTTED => 07:23

| DIST | COUNTY | ROUTE | KILOMETER POST TOTAL PROJECT | SHEET No | TOTAL SHEETS |
|---|---|---|---|---|---|
| 07 | LA | 5 | 42.8/47.3 | 615 | 1073 |

Andrew Rittenhouse 12-05-08
REGISTERED CIVIL ENGINEER DATE

6-8-09
PLANS APPROVAL DATE

REGISTERED PROFESSIONAL ENGINEER Andrew P. Rittenhouse No. 61006 Exp. 12-31-10 CIVIL STATE OF CALIFORNIA

The State of California or its officers or agents shall not be responsible for the accuracy or completeness of electronic copies of this plan sheet.

Note:

See Notes and Table on "GIRDER DETAILS NO. 1" sheet for additional information.

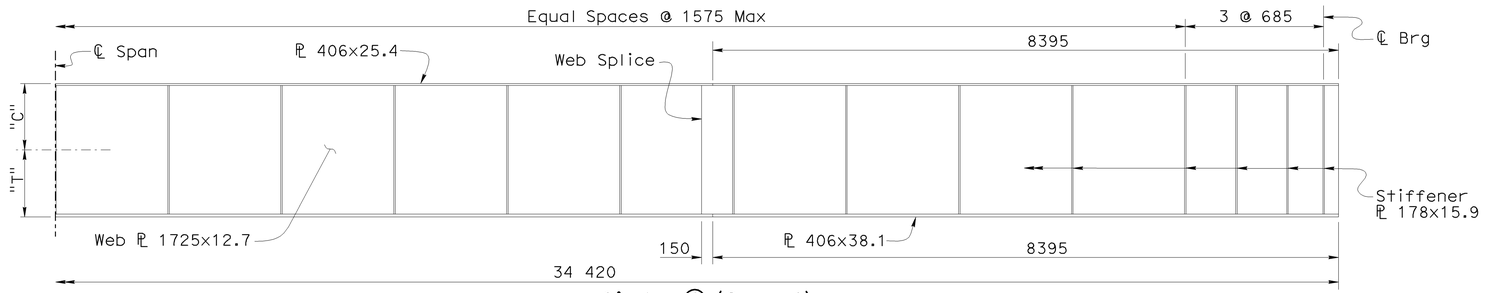


Girder ① (Span 4)

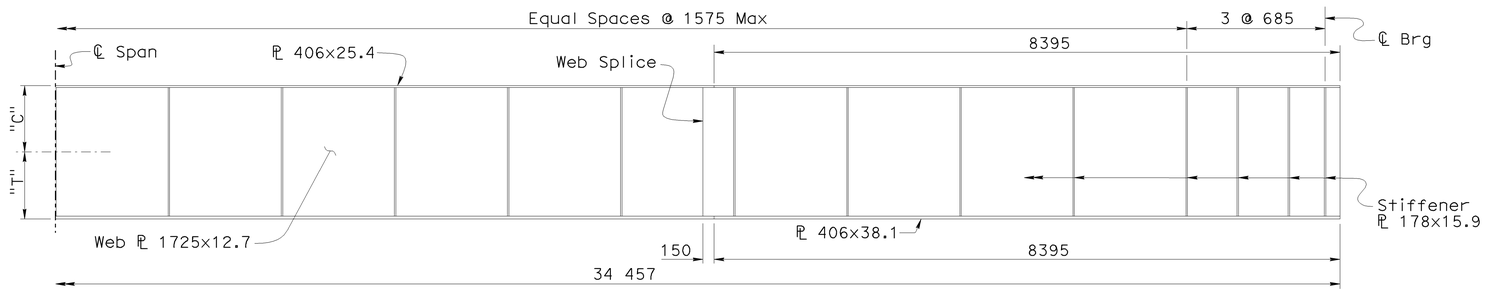


Girder ② (Span 4)

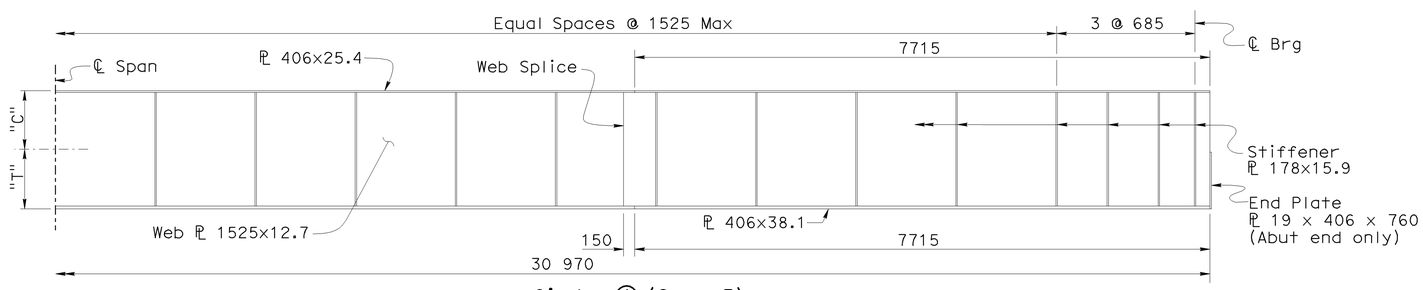


Girder ① (Span 5)

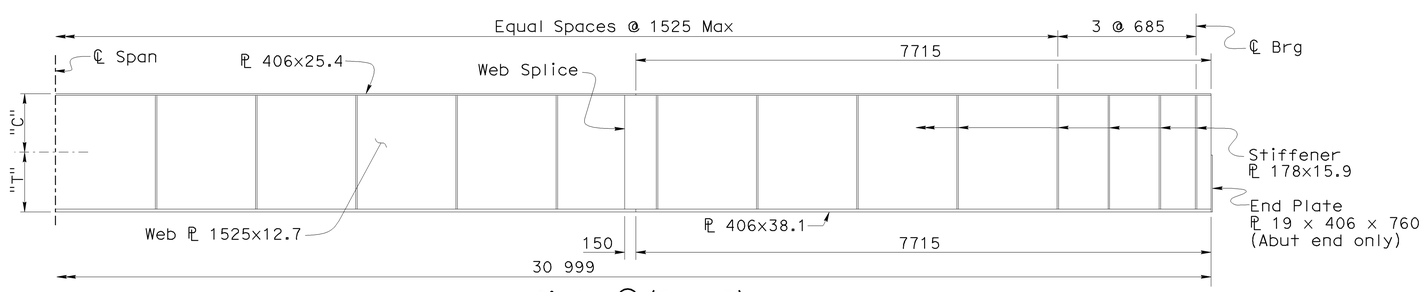


Girder ② (Span 5)

## GIRDER ELEVATION

1:40

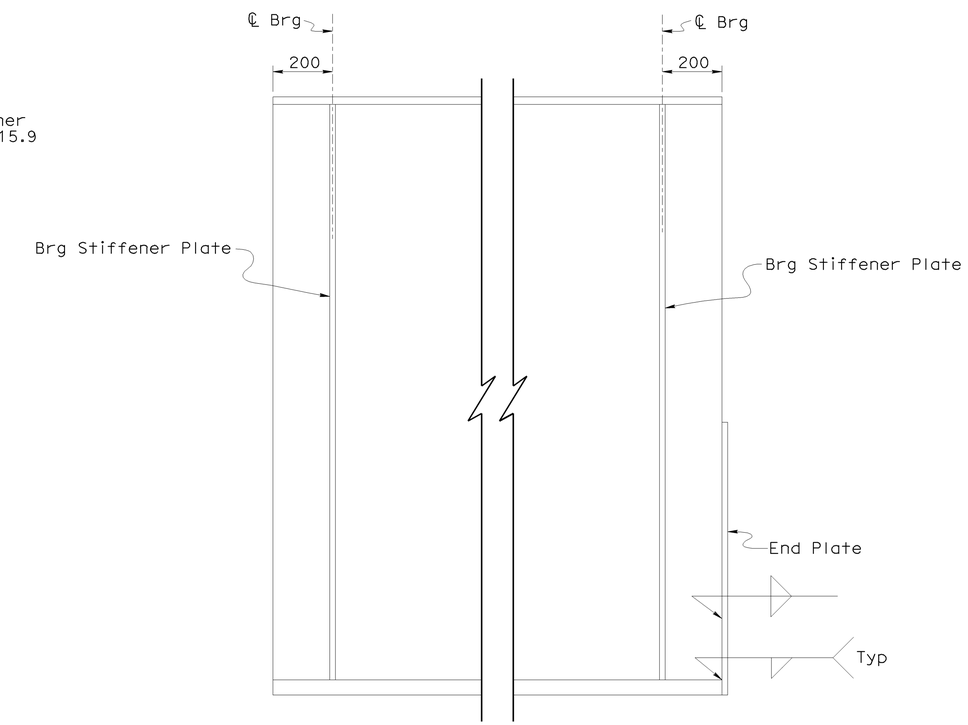


## GIRDER END DETAILS

1:10

NOTE:
THE CONTRACTOR SHALL VERIFY ALL CONTROLLING FIELD DIMENSIONS BEFORE ORDERING OR FABRICATING ANY MATERIAL.

Caltrans Metric

| | BY | CHECKED |
|---|---|---|
| DESIGN | Shervin Pahlavan | Jose Higareda |
| DETAILS | D. Kish/ D. Kubochi | Jose Higareda |
| QUANTITIES | Jerry Han | Joel Ruiz |

STATE OF CALIFORNIA
DEPARTMENT OF TRANSPORTATION

DIVISION OF ENGINEERING SERVICES
STRUCTURE DESIGN
DESIGN BRANCH 15

BRIDGE NO. 53-1075
KILOMETER POST 43.6

LOS ANGELES RIVER BRIDGE AND SEPARATION (WIDEN)

GIRDER DETAILS NO. 2

ALL DIMENSIONS ARE IN MILLIMETERS UNLESS OTHERWISE SHOWN

ORIGINAL SCALE IN MILLIMETERS FOR REDUCED PLANS 0 10 20 30 40 50 60 70 80 90 100

CU 07
EA 121841

DISREGARD PRINTS BEARING EARLIER REVISION DATES

REVISION DATES: 1-30-08 4-14-08 11-4-08 11-14-08 12-24-08 1-29-09

SHEET 42 OF 64

FILE => 53-1075r1-o-grd02.dgn

STRUCTURES DESIGN DETAIL SHEET (METRIC) (REV.03-17-04)

USERNAME => trmikesl DATE PLOTTED => 12-JUN-2009 TIME PLOTTED => 07:23

| DIST | COUNTY | ROUTE | KILOMETER POST TOTAL PROJECT | SHEET No | TOTAL SHEETS |
|---|---|---|---|---|---|
| 07 | LA | 5 | 42.8/47.3 | 616 | 1073 |

Andrew Rittenhouse 12-05-08
REGISTERED CIVIL ENGINEER DATE

6-8-09
PLANS APPROVAL DATE

REGISTERED PROFESSIONAL ENGINEER
Andrew P. Rittenhouse
No. 61006
Exp. 12-31-10
CIVIL
STATE OF CALIFORNIA

The State of California or its officers or agents shall not be responsible for the accuracy or completeness of electronic copies of this plan sheet.

Notes:

- "Crossframe Detail" shown looking back station
- For Stiffener Plate connection to girder detail, see "STEEL GIRDER DETAILS" sheet

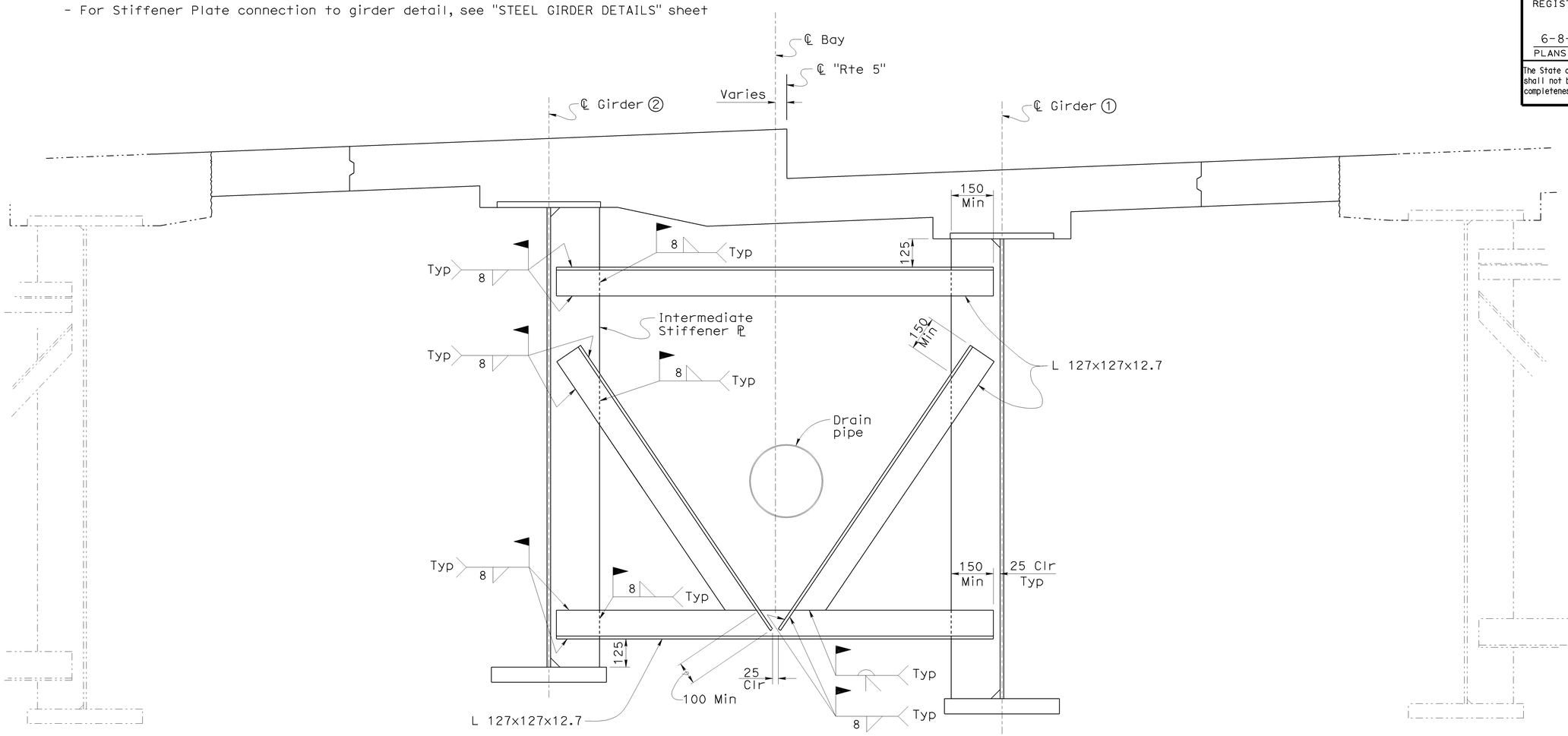


## CROSSFRAME DETAIL

1:10

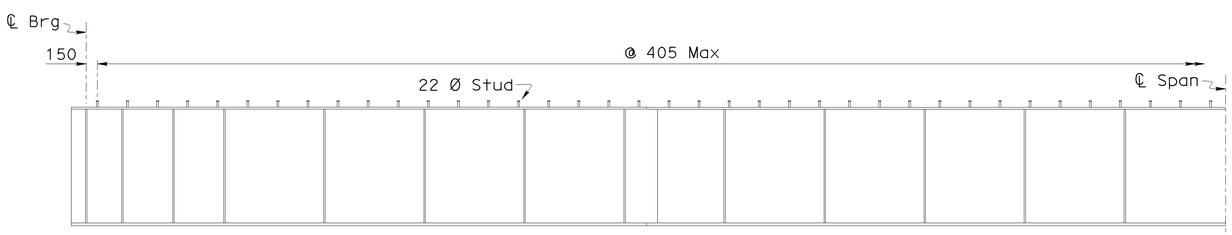


## SHEAR STUD CONNECTOR SPACING

1:40

Note: For other details, see "Stud Connector" on "STEEL GIRDER DETAILS" sheet.

NOTE:
THE CONTRACTOR SHALL VERIFY ALL CONTROLLING FIELD DIMENSIONS BEFORE ORDERING OR FABRICATING ANY MATERIAL.

Caltrans Metric

ALL DIMENSIONS ARE IN MILLIMETERS UNLESS OTHERWISE SHOWN

ORIGINAL SCALE IN MILLIMETERS FOR REDUCED PLANS 0 10 20 30 40 50 60 70 80 90 100

| | BY | CHECKED |
|---|---|---|
| DESIGN | Shervin Pahlavan | Jose Higareda |
| DETAILS | Dale Kubochi | Jose Higareda |
| QUANTITIES | Jerry Han | Joel Ruiz |

STATE OF CALIFORNIA
DEPARTMENT OF TRANSPORTATION

DIVISION OF ENGINEERING SERVICES
STRUCTURE DESIGN
DESIGN BRANCH 15

CU 07
EA 121841

BRIDGE NO. 53-1075
KILOMETER POST 43.6

LOS ANGELES RIVER BRIDGE AND SEPARATION (WIDEN)

# GIRDER DETAILS NO. 3

DISREGARD PRINTS BEARING EARLIER REVISION DATES

REVISION DATES: 10-1-07 4-1-08 11-1-08 11-14-08 12-12-08 1-29-09 5-21-09

SHEET 43 OF 64

FILE => 53-1075ri-o-grd03.dgn

STRUCTURES DESIGN DETAIL SHEET (METRIC) (REV.03-17-04)

USERNAME => trmikesl DATE PLOTTED => 15-JUN-2009 TIME PLOTTED => 13:19

| DIST | COUNTY | ROUTE | KILOMETER POST TOTAL PROJECT | SHEET No | TOTAL SHEETS |
|---|---|---|---|---|---|
| 07 | LA | 5 | 42.8/47.3 | 617 | 1073 |

Caltrans Metric

Andrew Rittenhouse 12-05-08
REGISTERED CIVIL ENGINEER

6-8-09
PLANS APPROVAL DATE

REGISTERED PROFESSIONAL ENGINEER Andrew P. Rittenhouse No. 61006 Exp. 12-31-10 CIVIL STATE OF CALIFORNIA

*The State of California or its officers or agents shall not be responsible for the accuracy or completeness of electronic copies of this plan sheet.*

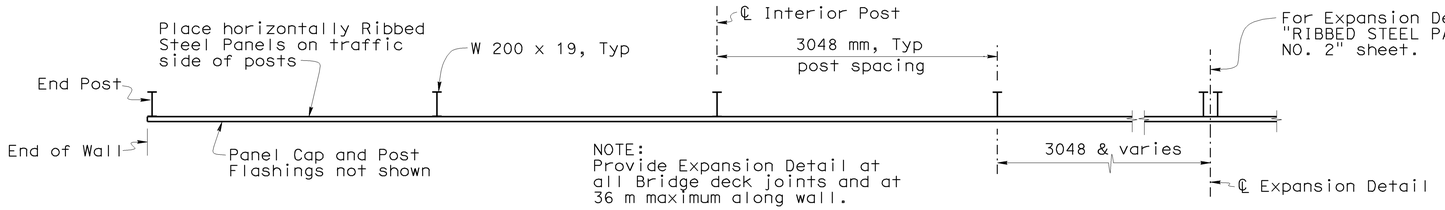


## PLAN

No Scale

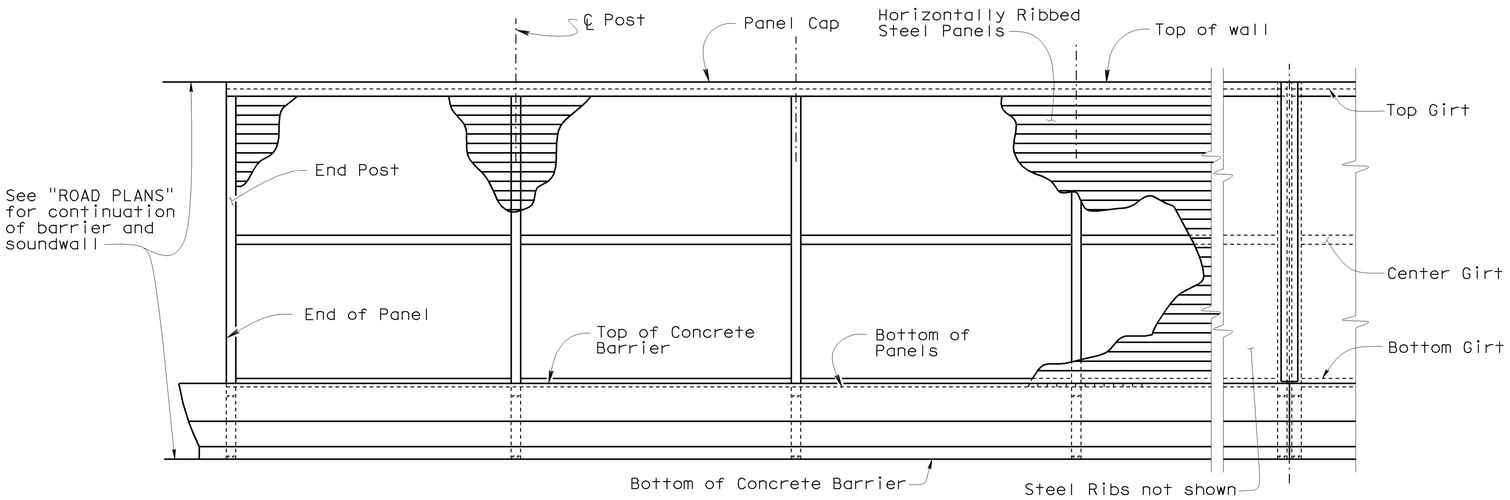


## ELEVATION

No Scale

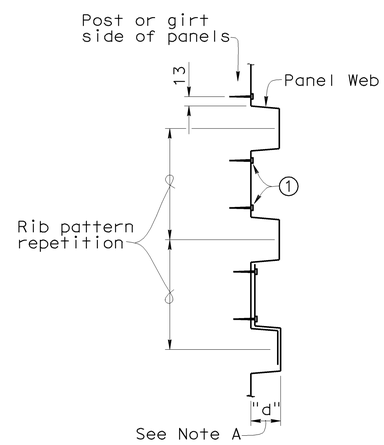


## RIBBED STEEL PANELS

No Scale

## DESIGN NOTES

DESIGN

AMERICAN INSTITUTE OF STEEL CONSTRUCTION - EIGHTH EDITION, AMERICAN IRON AND STEEL INSTITUTE - 1968 EDITION AND THE BRIDGE DESIGN SPECIFICATIONS.

DESIGN WIND LOAD
1772 Pa

DESIGN SEISMIC LOAD
EQD = 2g

STRUCTURAL STEEL
Fy = 248.2 MPa

COLD FORMED STEEL PANELS
Fy = 227.5 MPa

CONCRETE BARRIER
f'c = 22.4 MPa

LOAD FACTORS AND LOAD COMBINATIONS

GROUP A: $\beta$D + 1.7 E + 1.7 SC
GROUP B: $\beta$D + 1.7 E + 1.3 W
GROUP C: $\beta$D + 1.3 E + 1.3 EQE
GROUP D: $\beta$D + 1.3 E + 1.3 EQD
GROUP E: $\beta$D + 1.1 E + 1.1 (EQE + EQD)

WHERE:

$\beta$ = 1.0 OR 1.3, WHICHEVER CONTROLS IN DESIGN
D = DEAD LOAD
E = LATERAL EARTH PRESSURE
SC = LIVE LOAD SURCHARGE
W = WIND LOAD
EQE = SEISMIC EARTH LOAD
EQD = SEISMIC DEAD LOAD

RAILING LOAD:

240 kN TRAFFIC COLLISION LOAD (LFD), APPLIED LATERALLY AT THE TOP OF BARRIER AND DISTRIBUTED OVER A LONGITUDINAL DISTANCE OF 3.048 m.

STEEL PANELS DESIGNED BY THE WORKING STRESS METHOD.
POST DESIGNED BY ULTIMATE STRENGTH METHOD.

NOTES:

Note A: Panel depth "d" = 76 mm. The minimum section modulus and minimum moment of inertia values are per meter of panel width computed in accordance with the specifications of the American Iron and Steel Institute. Maximum allowable panel deflection limit : L/120.

Note B: The minimum nominal steel thickness required for sound attenuation shall be: 1.57 mm for "d" = 76 mm

Note C: For details not shown, see "RIBBED STEEL PANEL SW DETAILS NO. 2" and "RIBBED STEEL PANEL SW DETAILS NO. 3" sheets.

Note D: For mounting details, see "RIBBED STEEL PANEL SW DETAILS NO. 3" sheet.

NOTE:

① Panel fastening screws: No. M1224A x 32 mm long hex washer head structural self drilling screws. Place screws adjacent to panel webs in each rib that is in contact with a post or girt or as directed by the Engineer.

| Panel Depth "d" | Minimum Section Modulus | Minimum Moment Inertia (See Note A) | Panel Rib Pattern Repetition (See Note A) |
|---|---|---|---|
| 76 mm | 16,666 $mm^3/m$ | 846,665 $mm^4/m$ | 203 mm min to 406 mm max |

NOTE:
THE CONTRACTOR SHALL VERIFY ALL CONTROLLING FIELD DIMENSIONS BEFORE ORDERING OR FABRICATING ANY MATERIAL.

ALL DIMENSIONS ARE IN MILLIMETERS UNLESS OTHERWISE SHOWN

| | BY | CHECKED |
|---|---|---|
| DESIGN | Jose Higareda | Anthony Logus |
| DETAILS | F. Chen/D. Kubochi | Jose Higareda |
| QUANTITIES | Jose Higareda | Traci Menard |

STATE OF CALIFORNIA
DEPARTMENT OF TRANSPORTATION

DIVISION OF STRUCTURES
STRUCTURE DESIGN 15

BRIDGE NO. 53-1075
KILOMETER POST 43.6

LOS ANGELES RIVER BRIDGE AND SEPARATION (WIDEN)

RIBBED STEEL PANEL SW DETAILS NO. 1

STRUCTURES DESIGN DETAIL SHEET (METRIC) (REV. 4/20/00)

ORIGINAL SCALE IN MILLIMETERS FOR REDUCED PLANS 0 10 20 30 40 50 60 70 80 90 100

CU 07
EA 121841

DISREGARD PRINTS BEARING EARLIER REVISION DATES

REVISION DATES (PRELIMINARY STAGE ONLY) 1-15-02 4-14-06 4-28-06 11-1-08 11-21-08

SHEET 44 OF 64

FILE => 53-1075rl-t-ribwall01.dgn

USERNAME => trmikest DATE PLOTTED => 12-JUN-2009 TIME PLOTTED => 07:23

| DIST | COUNTY | ROUTE | KILOMETER POST TOTAL PROJECT | SHEET No | TOTAL SHEETS |
|---|---|---|---|---|---|
| 07 | LA | 5 | 42.8/47.3 | 618 | 1073 |

Caltrans Metric

Andrew Rittenhouse 12-05-08
REGISTERED CIVIL ENGINEER

6-8-09
PLANS APPROVAL DATE

REGISTERED PROFESSIONAL ENGINEER Andrew P. Rittenhouse No. 61006 Exp. 12-31-10 CIVIL STATE OF CALIFORNIA

*The State of California or its officers or agents shall not be responsible for the accuracy or completeness of electronic copies of this plan sheet.*

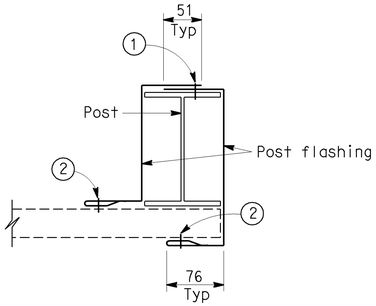


**END POST**

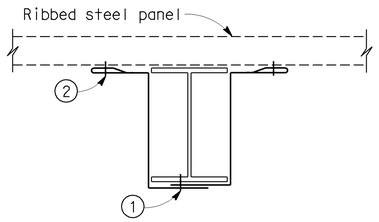


**INTERIOR POST**

## POST FLASHING

(1) 22 mm long No M1224A heavy duty hex washer head self drilling screws spaced at 457 mm ±.

(2) 19 mm long No M1016A hex head self drilling sealer screws with washers spaced at 457 mm ± except as noted.

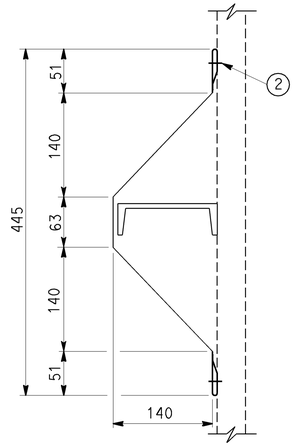


## CENTER GIRT FLASHING

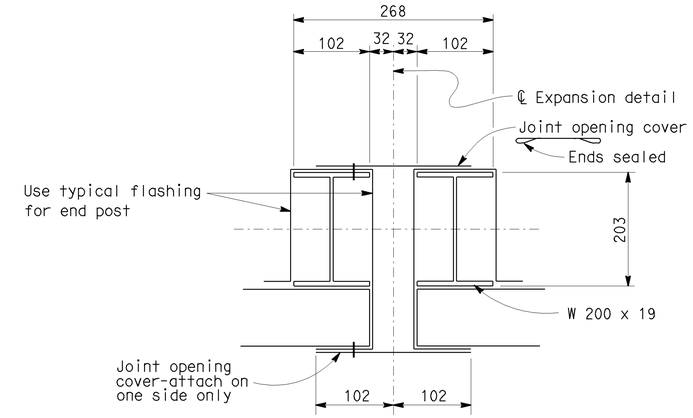


## EXPANSION DETAIL

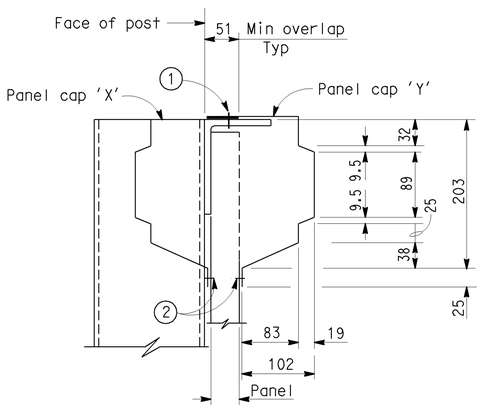


## PANEL CAP

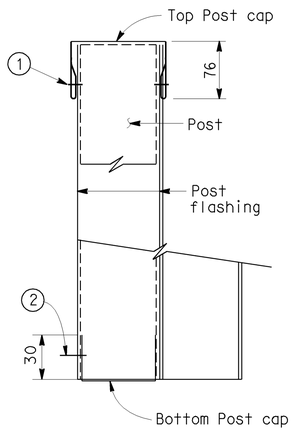


## POST CAP

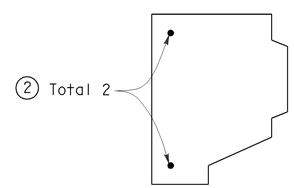


NOTE:
End closure required at all ends of panel cap at all end posts. Attach to post flashing.

## PANEL CAP END CLOSURE

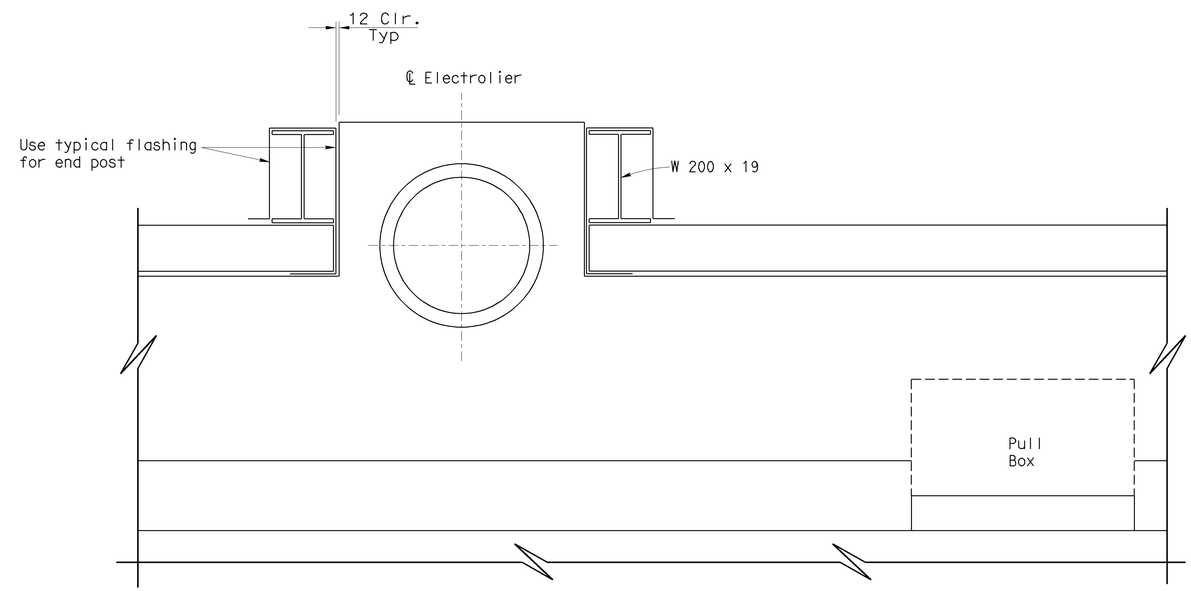


## WALL GAP FOR ELECTROLIER

NOTE:
THE CONTRACTOR SHALL VERIFY ALL CONTROLLING FIELD DIMENSIONS BEFORE ORDERING OR FABRICATING ANY MATERIAL.

**NO SCALE**

ALL DIMENSIONS ARE IN MILLIMETERS UNLESS OTHERWISE SHOWN

| | BY | CHECKED |
|---|---|---|
| DESIGN | Jose Higareda | Anthony Logus |
| DETAILS | F. Chen/D. Kubochi | Jose Higareda |
| QUANTITIES | Jose Higareda | Traci Menard |

STATE OF CALIFORNIA DEPARTMENT OF TRANSPORTATION

DIVISION OF STRUCTURES STRUCTURE DESIGN 15

BRIDGE NO. 53-1075
KILOMETER POST 43.6

LOS ANGELES RIVER BRIDGE AND SEPARATION (WIDEN)

RIBBED STEEL PANEL SW DETAILS NO. 2

STRUCTURES DESIGN DETAIL SHEET (METRIC) (REV. 4/20/00)

ORIGINAL SCALE IN MILLIMETERS FOR REDUCED PLANS 0 10 20 30 40 50 60 70 80 90 100

CU 07
EA 121841

DISREGARD PRINTS BEARING EARLIER REVISION DATES

REVISION DATES (PRELIMINARY STAGE ONLY) 4-11-08 4-22-08 11-14-08 11-24-08 1-23-09 02-19-09

SHEET 45 OF 64

FILE => 53-1075rl-t-ribwall02.dgn

USERNAME => trmikes1 DATE PLOTTED => 12-JUN-2009 TIME PLOTTED => 07:23

| DIST | COUNTY | ROUTE | KILOMETER POST TOTAL PROJECT | SHEET No | TOTAL SHEETS |
|---|---|---|---|---|---|
| 07 | LA | 5 | 42.8/47.3 | 619 | 1073 |

Caltrans Metric

Andrew Rittenhouse 12-05-08
REGISTERED CIVIL ENGINEER

6-8-09
PLANS APPROVAL DATE

REGISTERED PROFESSIONAL ENGINEER Andrew P. Rittenhouse No. 61006 Exp. 12-31-10 CIVIL STATE OF CALIFORNIA

*The State of California or its officers or agents shall not be responsible for the accuracy or completeness of electronic copies of this plan sheet.*

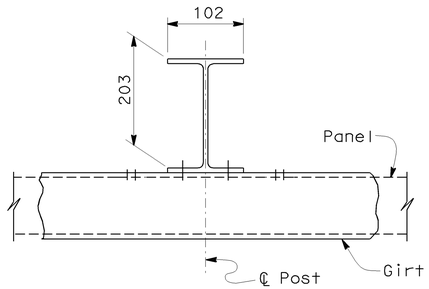


**PLAN**

## WALL LAYOUT

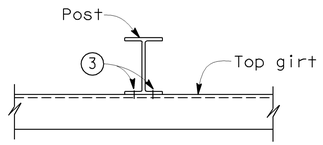


**SECTION G-G**

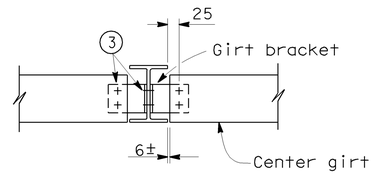


**SECTION H-H**

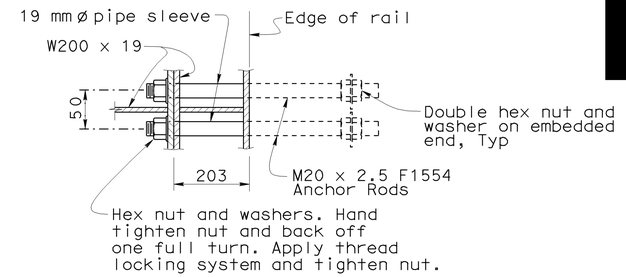


**SECTION J-J**

3 Girt and girt bracket fasteners: 10 mm Hex head A307 bolts with hex head nuts and flat washers. Use lock washer under nuts.

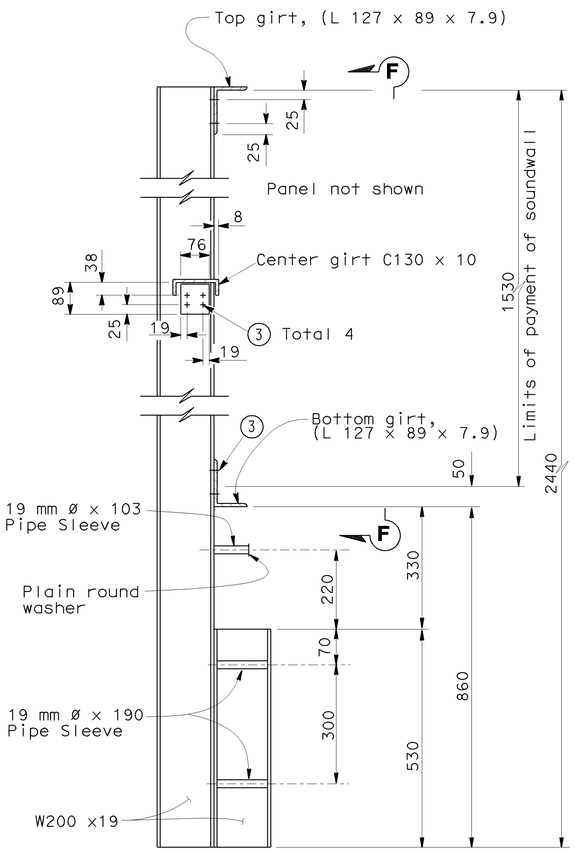


**PART SECTION**

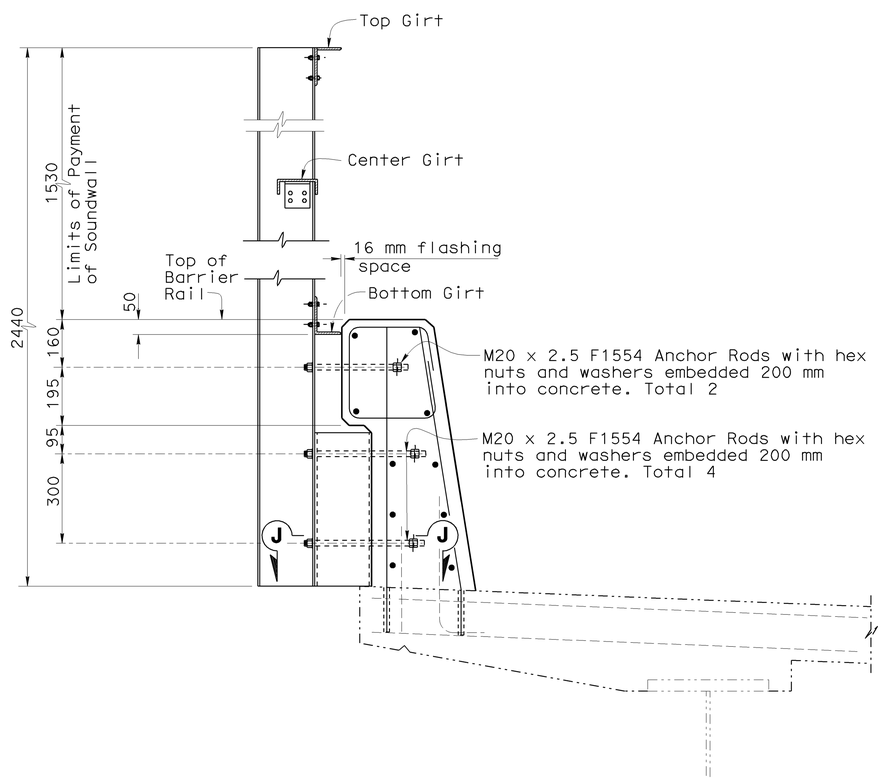


**BARRIER MOUNTING DETAIL**

No Scale

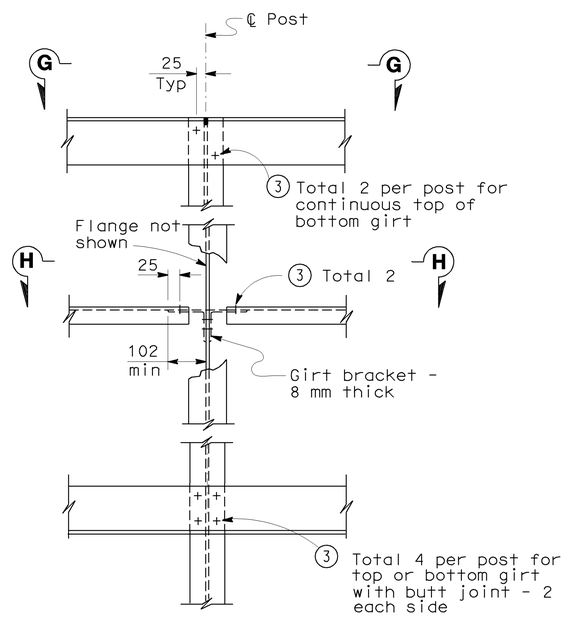


**ELEVATION F-F**

NOTE:
THE CONTRACTOR SHALL VERIFY ALL CONTROLLING FIELD DIMENSIONS BEFORE ORDERING OR FABRICATING ANY MATERIAL.

**NO SCALE**

ALL DIMENSIONS ARE IN MILLIMETERS UNLESS OTHERWISE SHOWN

| | BY | CHECKED |
|---|---|---|
| DESIGN | Jose Higareda | Anthony Logus |
| DETAILS | F. Chen/D. Kubochi | Jose Higareda |
| QUANTITIES | Jose Higareda | Traci Menard |

STATE OF CALIFORNIA
DEPARTMENT OF TRANSPORTATION

DIVISION OF STRUCTURES
STRUCTURE DESIGN 15

BRIDGE NO. 53-1075
KILOMETER POST 43.6

LOS ANGELES RIVER BRIDGE AND SEPARATION (WIDEN)

RIBBED STEEL PANEL SW DETAILS NO. 3

STRUCTURES DESIGN DETAIL SHEET (METRIC) (REV. 4/20/00)

ORIGINAL SCALE IN MILLIMETERS FOR REDUCED PLANS 0 10 20 30 40 50 60 70 80 90 100

CU 07
EA 121841

DISREGARD PRINTS BEARING EARLIER REVISION DATES

REVISION DATES (PRELIMINARY STAGE ONLY) 4-11-08 9-11-08 11-5-08 11-25-08 2-19-09

SHEET 46 OF 64

FILE => 53-1075ri-t-ribwall03.dgn

USERNAME => tfmikesl DATE PLOTTED => 12-JUN-2009 TIME PLOTTED => 07:23

| DIST | COUNTY | ROUTE | KILOMETER POST TOTAL PROJECT | SHEET No | TOTAL SHEETS |
|---|---|---|---|---|---|
| 07 | LA | 5 | 42.8/47.3 | 620 | 1073 |

Andrew Rittenhouse 12-05-08
REGISTERED CIVIL ENGINEER DATE

6-8-09
PLANS APPROVAL DATE

REGISTERED PROFESSIONAL ENGINEER
Andrew P. Rittenhouse
No. 61006
Exp. 12-31-10
CIVIL
STATE OF CALIFORNIA

The State of California or its officers or agents shall not be responsible for the accuracy or completeness of electronic copies of this plan sheet.

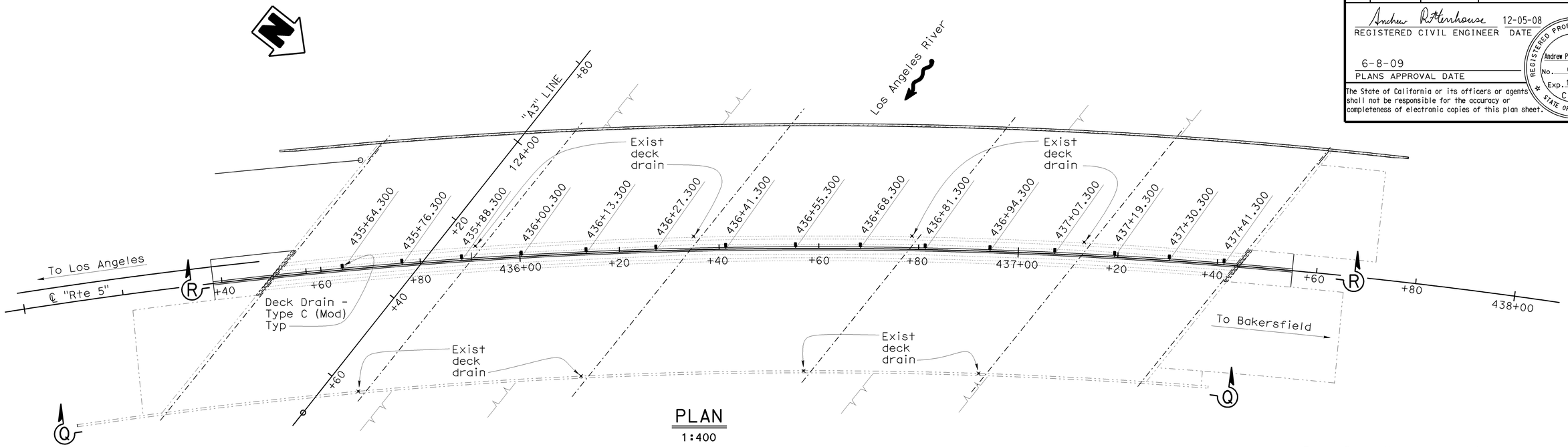


## PLAN
1:400

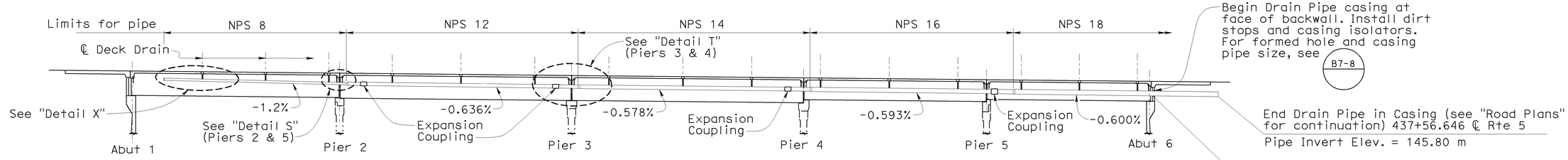


## SECTION R-R
No Scale

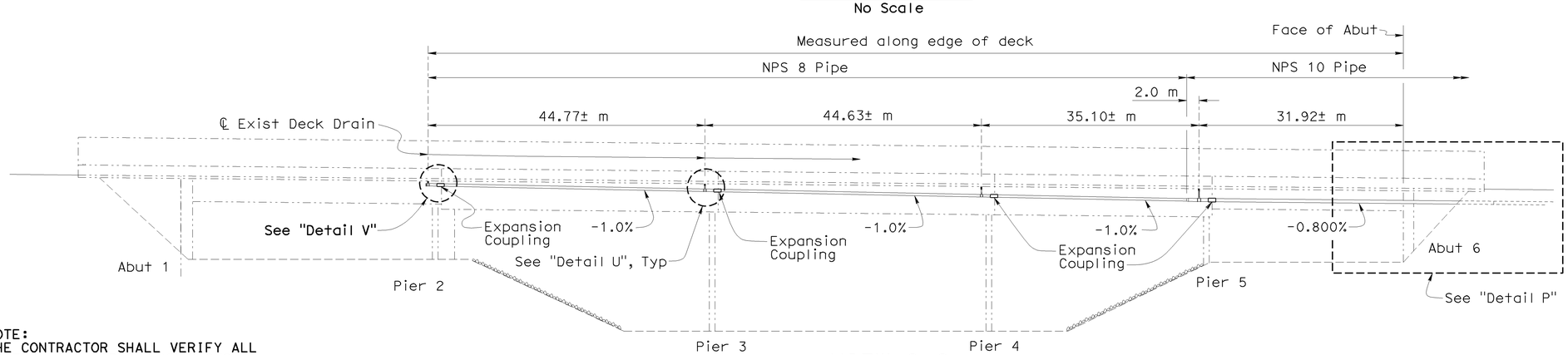


## VIEW Q-Q
No Scale

Notes:

- For "Detail P", see "DECK DRAIN DETAILS NO. 1" sheet
- For "Detail S" and "Detail T", see "DECK DRAIN DETAILS NO. 2" sheet
- For "Detail U" and "Detail V" see "DECK DRAIN DETAILS NO. 3" sheet
- For "Detail X" see "DECK DRAIN DETAILS NO.3" sheet
- For pipe wall thickness, see Table on "DECK DRAIN DETAILS NO. 3" sheet
- See "MISCELLANEOUS DETAILS NO. 5" sheet for Existing Deck drain removal on Southbound structure

NOTE:
THE CONTRACTOR SHALL VERIFY ALL CONTROLLING FIELD DIMENSIONS BEFORE ORDERING OR FABRICATING ANY MATERIAL.

Caltrans Metric

| | BY | CHECKED |
|---|---|---|
| DESIGN | Jose Higareda | Anthony Logus |
| DETAILS | Dale Kubochi | Jose Higareda |
| QUANTITIES | Jose Higareda | Anthony Logus |

STATE OF CALIFORNIA
DEPARTMENT OF TRANSPORTATION

DIVISION OF ENGINEERING SERVICES
STRUCTURE DESIGN
DESIGN BRANCH 15

BRIDGE NO. 53-1075
KILOMETER POST 43.6

LOS ANGELES RIVER BRIDGE AND SEPARATION (WIDEN)

# DECK DRAINAGE LAYOUT

ALL DIMENSIONS ARE IN MILLIMETERS UNLESS OTHERWISE SHOWN

ORIGINAL SCALE IN MILLIMETERS FOR REDUCED PLANS 0 10 20 30 40 50 60 70 80 90 100

CU 07
EA 121841

DISREGARD PRINTS BEARING EARLIER REVISION DATES

REVISION DATES: 4-15-08 4-23-08 4-30-08 11-7-08 11-21-08 12-12-08 02-18-09 5-21-09 6-10-09

SHEET 47 OF 64

FILE => 53-1075ri-u-drainlo.dgn

STRUCTURES DESIGN DETAIL SHEET (METRIC) (REV.03-17-04)

USERNAME => rtrmikes| DATE PLOTTED => 15-JUN-2009 TIME PLOTTED => 13:19

| DIST | COUNTY | ROUTE | KILOMETER POST TOTAL PROJECT | SHEET No | TOTAL SHEETS |
|---|---|---|---|---|---|
| 07 | LA | 5 | 42.8/47.3 | 621 | 1073 |

Andrew Rittenhouse 12-05-08
REGISTERED CIVIL ENGINEER DATE

6-8-09
PLANS APPROVAL DATE

REGISTERED PROFESSIONAL ENGINEER Andrew P. Rittenhouse No. 61006 Exp. 12-31-10 CIVIL STATE OF CALIFORNIA

The State of California or its officers or agents shall not be responsible for the accuracy or completeness of electronic copies of this plan sheet.

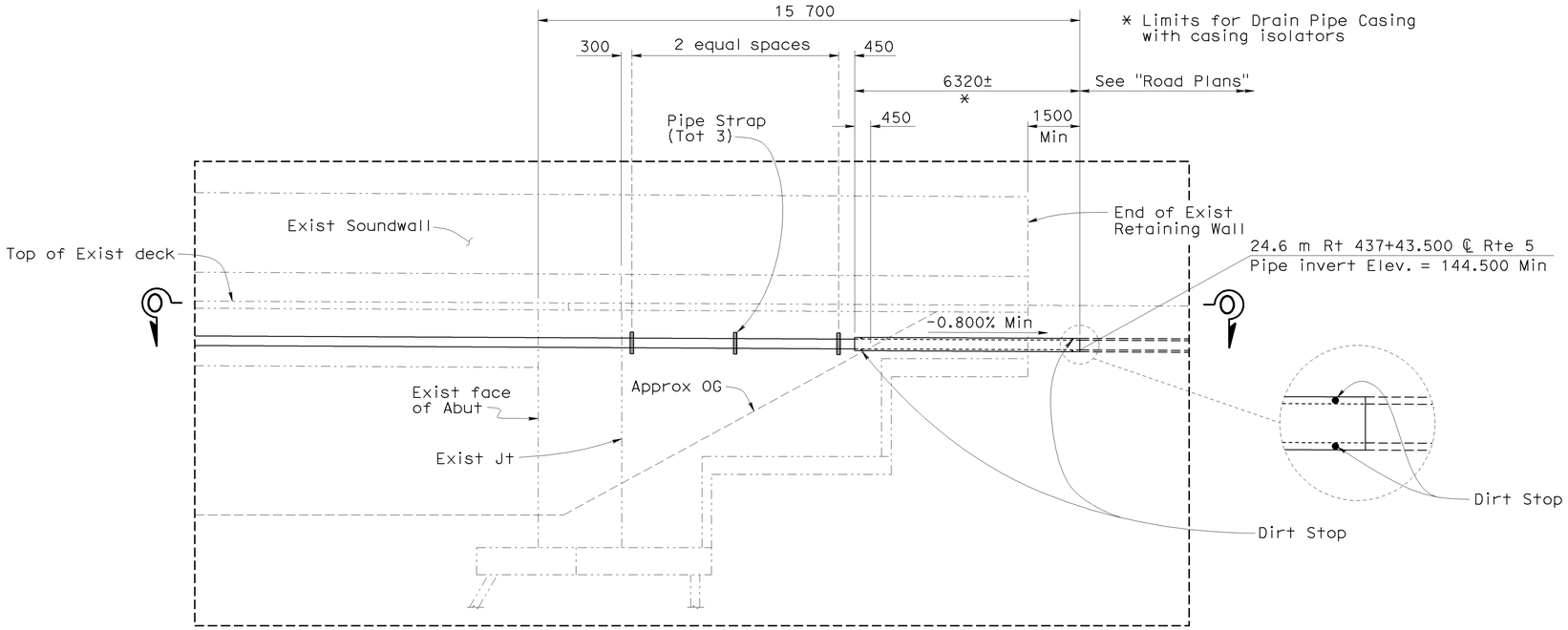


## DETAIL P
1:80

Note:
For Casing size see B7-8

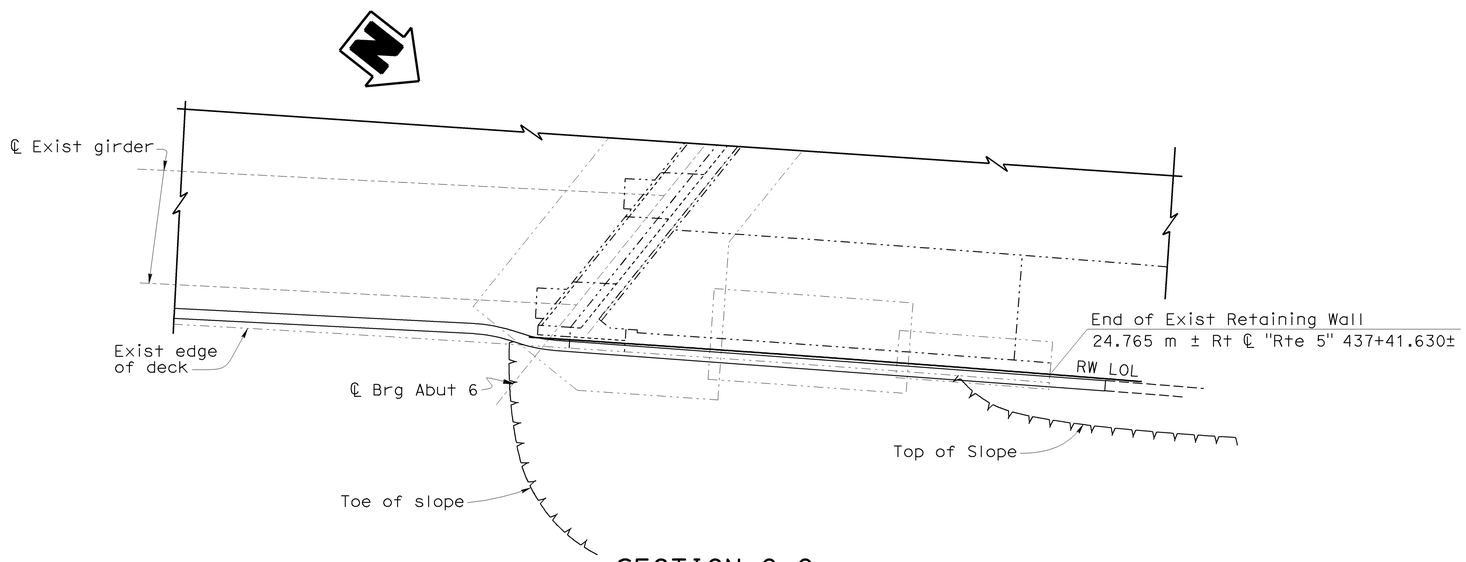


## SECTION O-O
1:80

NOTE:
THE CONTRACTOR SHALL VERIFY ALL CONTROLLING FIELD DIMENSIONS BEFORE ORDERING OR FABRICATING ANY MATERIAL.

Caltrans Metric

| | BY | CHECKED |
|---|---|---|
| DESIGN | Jose Higareda | Anthony Logus |
| DETAILS | Dale Kubochi | Jose Higareda |
| QUANTITIES | Jose Higareda | Anthony Logus |

STATE OF CALIFORNIA
DEPARTMENT OF TRANSPORTATION

DIVISION OF ENGINEERING SERVICES
STRUCTURE DESIGN
DESIGN BRANCH 15

BRIDGE NO. 53-1075
KILOMETER POST 43.6

LOS ANGELES RIVER BRIDGE AND SEPARATION (WIDEN)

# DECK DRAIN DETAILS NO. 1

ALL DIMENSIONS ARE IN MILLIMETERS UNLESS OTHERWISE SHOWN

ORIGINAL SCALE IN MILLIMETERS FOR REDUCED PLANS 0 10 20 30 40 50 60 70 80 90 100

CU 07
EA 121841

DISREGARD PRINTS BEARING EARLIER REVISION DATES

REVISION DATES: 4-11-08 4-30-08 11-14-08 11-17-08 12-12-08 1-16-09 5-22-09 6-5-09 6-10-09

SHEET 48 OF 64

FILE => 53-1075r1-u-drn01.dgn

STRUCTURES DESIGN DETAIL SHEET (METRIC) (REV.03-17-04)

USERNAME => trmthes1 DATE PLOTTED => 15-JUN-2009 TIME PLOTTED => 13:19

| DIST | COUNTY | ROUTE | KILOMETER POST TOTAL PROJECT | SHEET No | TOTAL SHEETS |
|---|---|---|---|---|---|
| 07 | LA | 5 | 42.8/47.3 | 622 | 1073 |

Andrew Rittenhouse 12-05-08
REGISTERED CIVIL ENGINEER DATE

6-8-09
PLANS APPROVAL DATE

REGISTERED PROFESSIONAL ENGINEER Andrew P. Rittenhouse No. 61006 Exp. 12-31-10 CIVIL STATE OF CALIFORNIA

The State of California or its officers or agents shall not be responsible for the accuracy or completeness of electronic copies of this plan sheet.

Legend:

1. Pipe roller hanger with lateral brace
2. Pipe roller hanger without lateral brace
3. Riser type pipe clamp with longitudinal brace

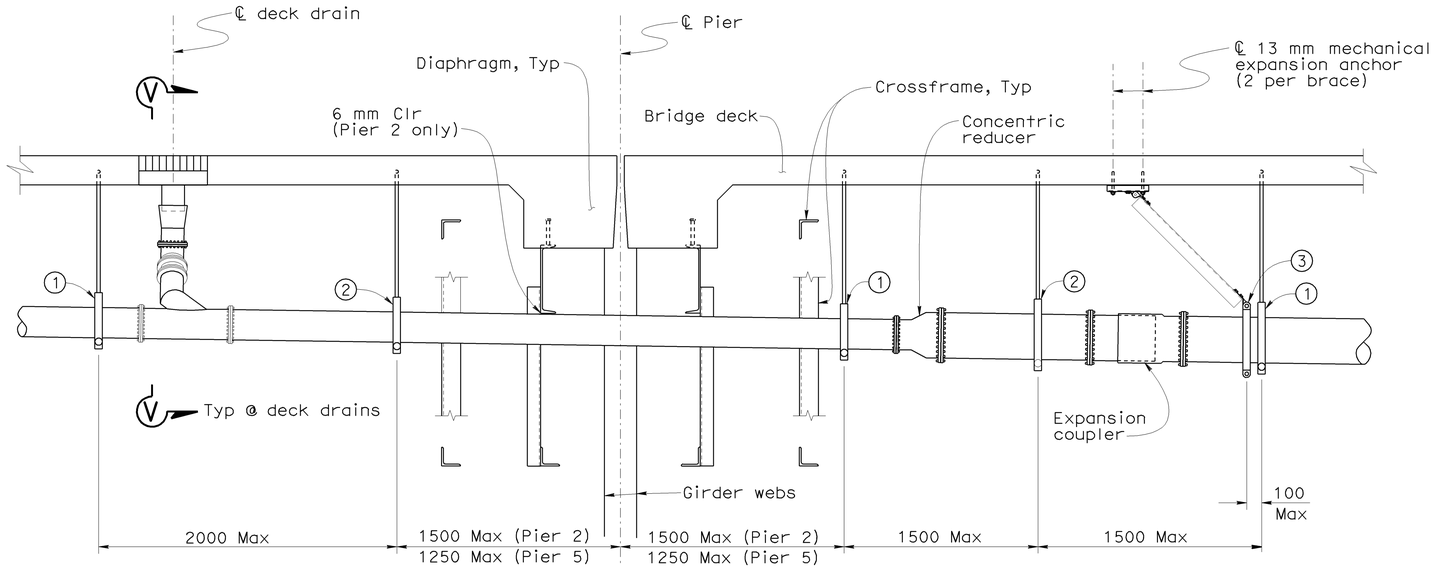


Note:
Pier 2 shown,
Pier 5 similar.

## DETAIL S
1:20

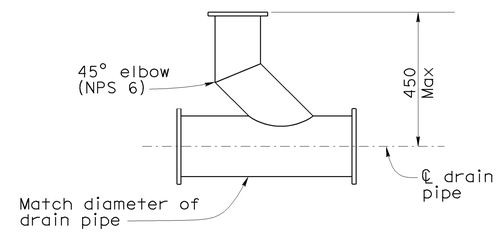


## REDUCING TEE-WYE CONNECTION
1:10

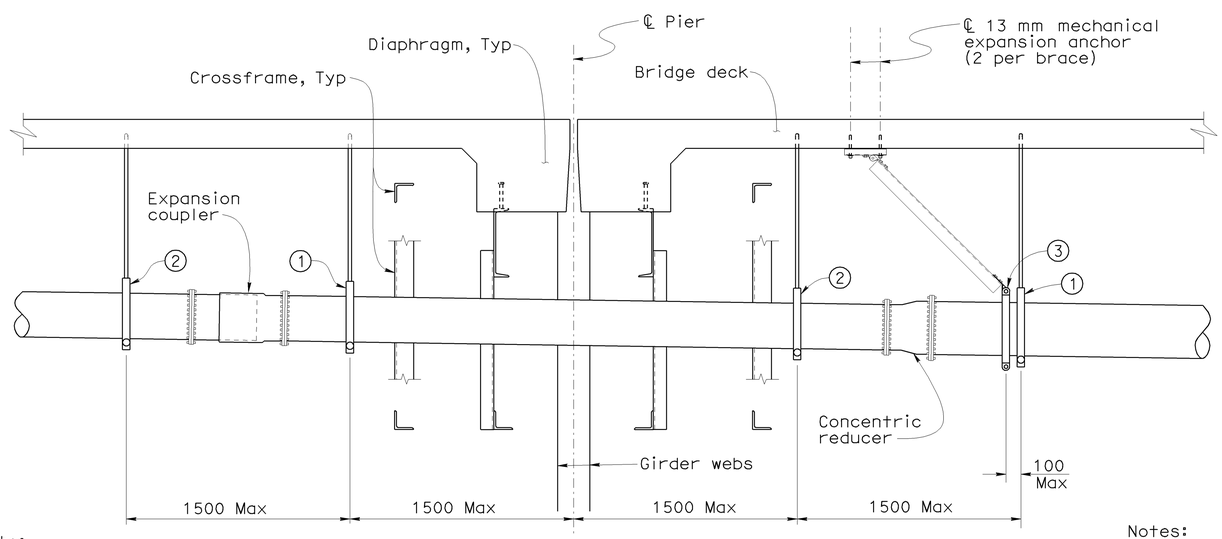


Note:
Pier 3 shown, Pier 4 similar.

## DETAIL T
1:20

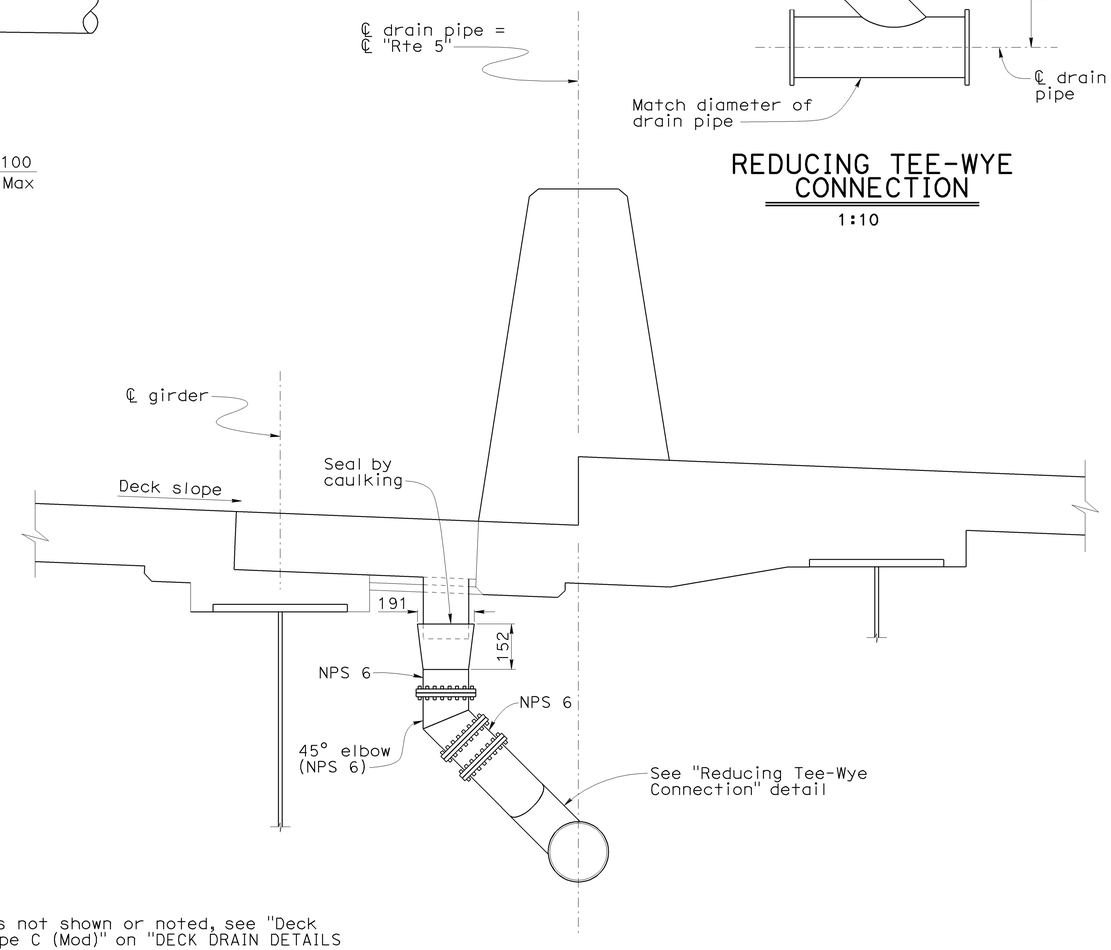


## SECTION V-V
1:10

Notes:
- For details not shown or noted, see "Deck Drain - Type C (Mod)" on "DECK DRAIN DETAILS NO. 4" sheet
- For "Pipe Roller Hangers" detail and other notes, see "DECK DRAIN DETAILS NO. 3" sheet.

NOTE:
THE CONTRACTOR SHALL VERIFY ALL CONTROLLING FIELD DIMENSIONS BEFORE ORDERING OR FABRICATING ANY MATERIAL.

Caltrans Metric

ALL DIMENSIONS ARE IN MILLIMETERS UNLESS OTHERWISE SHOWN

ORIGINAL SCALE IN MILLIMETERS FOR REDUCED PLANS 0 10 20 30 40 50 60 70 80 90 100

| | BY | CHECKED |
|---|---|---|
| DESIGN | Jose Higareda | Anthony Logus |
| DETAILS | Steven Schenck | Jose Higareda |
| QUANTITIES | Jose Higareda | Anthony Logus |

STATE OF CALIFORNIA
DEPARTMENT OF TRANSPORTATION

DIVISION OF ENGINEERING SERVICES
STRUCTURE DESIGN
DESIGN BRANCH 15

CU 07
EA 121841

BRIDGE NO. 53-1075
KILOMETER POST 43.6

LOS ANGELES RIVER BRIDGE AND SEPARATION (WIDEN)

DECK DRAIN DETAILS NO. 2

DISREGARD PRINTS BEARING EARLIER REVISION DATES

REVISION DATES: 4-25-08 4-29-08 4-30-08 11-7-08 11-21-08 12-4-08 02-18-09 5-28-09 6-5-09

SHEET 49 OF 64

STRUCTURES DESIGN DETAIL SHEET (METRIC) (REV.03-17-04)

FILE => 53-1075r1-u-drn02.dgn

USERNAME => rttmrkes1 DATE PLOTTED => 15-JUN-2009 TIME PLOTTED => 13:19

| DIST | COUNTY | ROUTE | KILOMETER POST TOTAL PROJECT | SHEET No | TOTAL SHEETS |
|---|---|---|---|---|---|
| 07 | LA | 5 | 42.8/47.3 | 623 | 1073 |

Andrew Rittenhouse 12-05-08
REGISTERED CIVIL ENGINEER DATE

6-8-09
PLANS APPROVAL DATE

REGISTERED PROFESSIONAL ENGINEER Andrew P. Rittenhouse No. 61006 Exp. 12-31-10 CIVIL STATE OF CALIFORNIA

The State of California or its officers or agents shall not be responsible for the accuracy or completeness of electronic copies of this plan sheet.

## PIPE TABLE

| PIPE SIZE | WALL THICKNESS (mm) | PIPE HANGER MAXIMUM SPACING (m) | PIPE HANGER MINIMUM ROD DIA. (mm) | HANGER ROD MINIMUM HOOK DEVELOPMENT (mm) |
|---|---|---|---|---|
| NPS 6 | 3.404 | 3.0 | 19 | 300 |
| NPS 8 | 3.759 | 3.0 | 22 | 300 |
| NPS 10 | 4.191 | 3.0 | 22 | 300 |
| NPS 12 | 4.572 | 3.0 | 22 | 300 |
| NPS 14 | 6.350 | 3.0 | 25 | 375 |
| NPS 16 | 6.350 | 2.5 | 25 | 375 |
| NPS 18 | 6.350 | 2.5 | 29 | 450 |

Legend:

1. Pipe roller hanger with lateral brace
2. Pipe roller hanger without lateral brace
3. Riser type pipe clamp with longitudinal brace
4. Connection Bracket (at lateral brace only)
5. Connection Angle (at lateral brace only)

Notes:

1. All drains, pipes, connections, fittings and hangers to be galvanized.
2. All joints or connections to be flanged and bolted and to be smooth throughout inside of pipe unless otherwise shown.
3. All pipes, flanges, braces, hanger yokes and fittings (except sliding parts of expansion couplers) to be painted after galvanizing (at Existing Bridge only).
4. All bends to be 450 mm minimum radius unless noted otherwise.
5. Lateral bracing to deck drain pipes to be located at every other hanger or 6 m max.

Note:
Width of bracket is 65 mm.

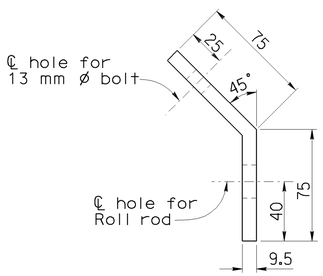


CONNECTION BRACKET
1:2

Note:
Length of angle is 65 mm.

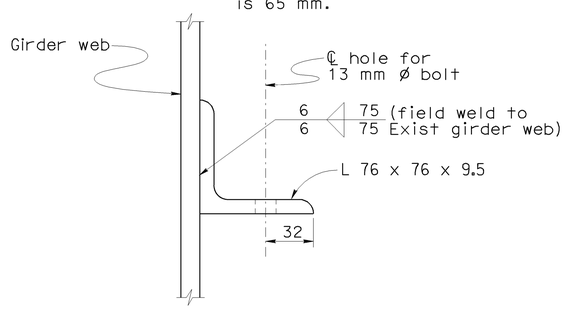


CONNECTION ANGLE
1:2

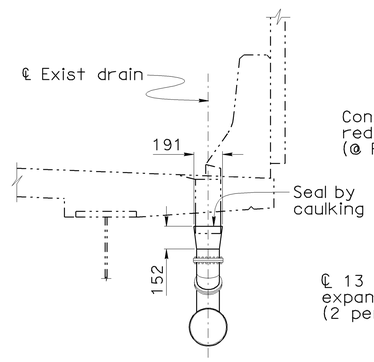


SECTION W-W
1:20

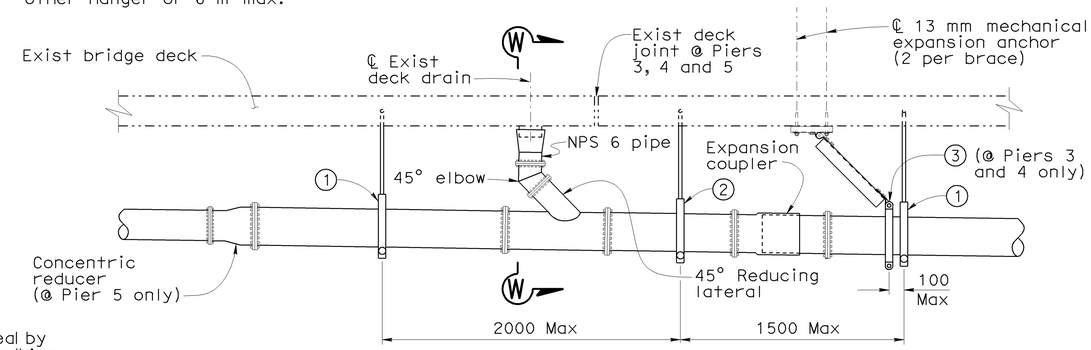


DETAIL U
1:20

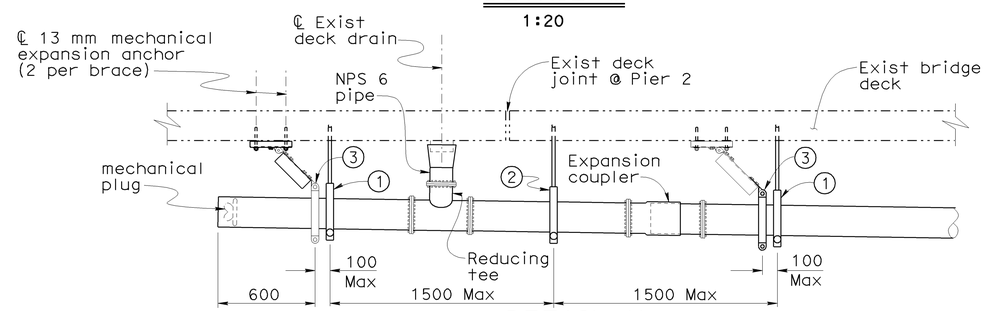


DETAIL V
1:20

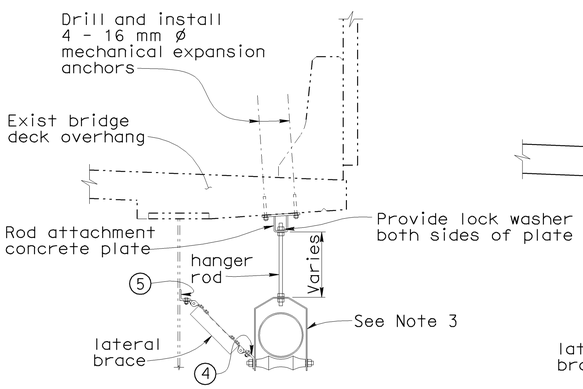


AT EXISTING BRIDGE

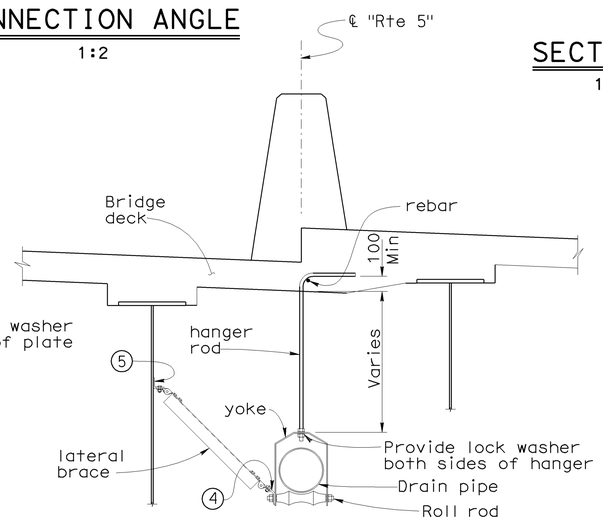


AT CENTER WIDEN

PIPE ROLLER HANGERS
1:20

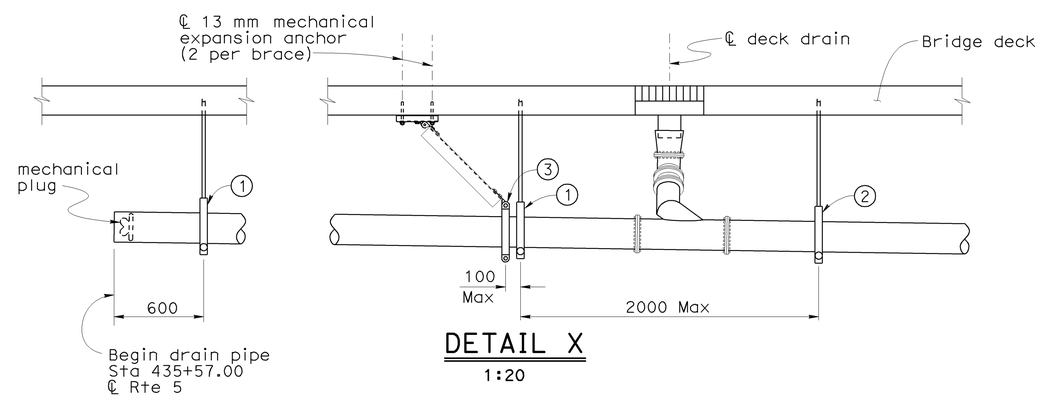


DETAIL X
1:20

NOTE:
THE CONTRACTOR SHALL VERIFY ALL CONTROLLING FIELD DIMENSIONS BEFORE ORDERING OR FABRICATING ANY MATERIAL.

| | BY | CHECKED |
|---|---|---|
| DESIGN | Jose Higareda | Anthony Logus |
| DETAILS | Steven Schenck | Jose Higareda |
| QUANTITIES | Jose Higareda | Anthony Logus |

STATE OF CALIFORNIA
DEPARTMENT OF TRANSPORTATION

DIVISION OF ENGINEERING SERVICES
STRUCTURE DESIGN
DESIGN BRANCH 15

BRIDGE NO. 53-1075
KILOMETER POST 43.6

LOS ANGELES RIVER BRIDGE AND SEPARATION (WIDEN)

DECK DRAIN DETAILS NO. 3

Caltrans Metric

ALL DIMENSIONS ARE IN MILLIMETERS UNLESS OTHERWISE SHOWN

ORIGINAL SCALE IN MILLIMETERS FOR REDUCED PLANS 0 10 20 30 40 50 60 70 80 90 100

CU 07
EA 121841

DISREGARD PRINTS BEARING EARLIER REVISION DATES

REVISION DATES: 4-23-08 11-14-08 11-24-08 12-5-08 12-12-08 1-12-09 1-15-09 1-22-09 6-3-09 6-5-09

SHEET 50 OF 64

FILE => 53-1075r1-u-drn03.dgn

STRUCTURES DESIGN DETAIL SHEET (METRIC) (REV.03-17-04)

USERNAME => trmthest DATE PLOTTED => 15-JUN-2009 TIME PLOTTED => 13:19

| DIST | COUNTY | ROUTE | KILOMETER POST TOTAL PROJECT | SHEET No | TOTAL SHEETS |
|---|---|---|---|---|---|
| 07 | LA | 5 | 42.8/47.3 | 624 | 1073 |

Andrew Rittenhouse 12-05-08
REGISTERED CIVIL ENGINEER DATE

6-8-09
PLANS APPROVAL DATE

REGISTERED PROFESSIONAL ENGINEER Andrew P. Rittenhouse No. 61006 Exp. 12-31-10 CIVIL STATE OF CALIFORNIA

The State of California or its officers or agents shall not be responsible for the accuracy or completeness of electronic copies of this plan sheet.

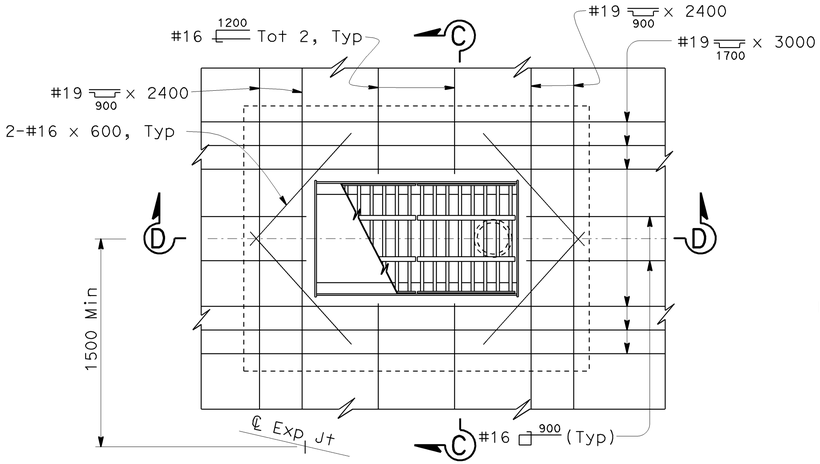


## PLAN - MEDIAN INSTALLATION

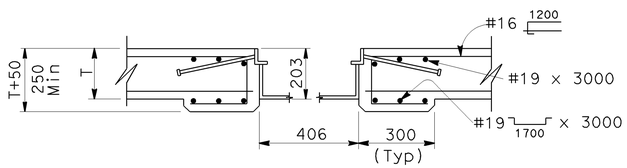


## SECTION C-C

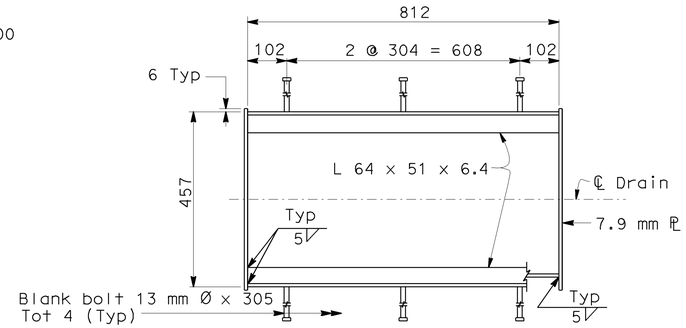


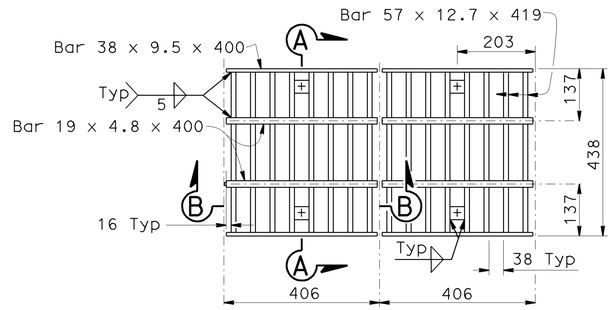


## PLAN - FRAME & GRATE

Note: Grating consists of 2 identical units except for Baffle plate. Baffle plate is required only for the grate over the 152 mm Ø pipe

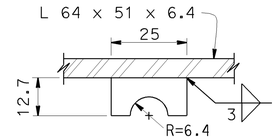


## LOCK BAR

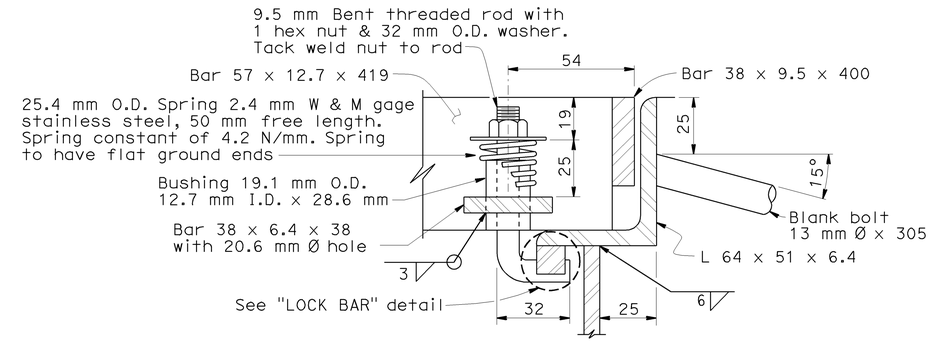


## DETAIL A

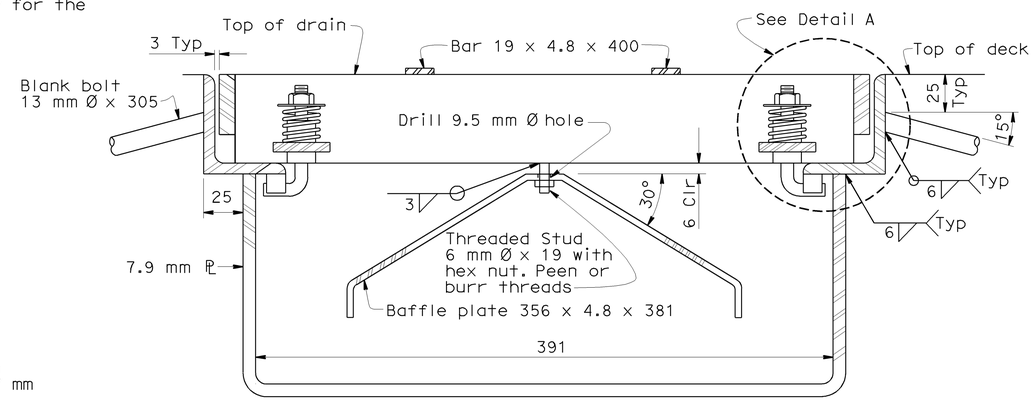


## SECTION A-A ( FRAME & GRATE )

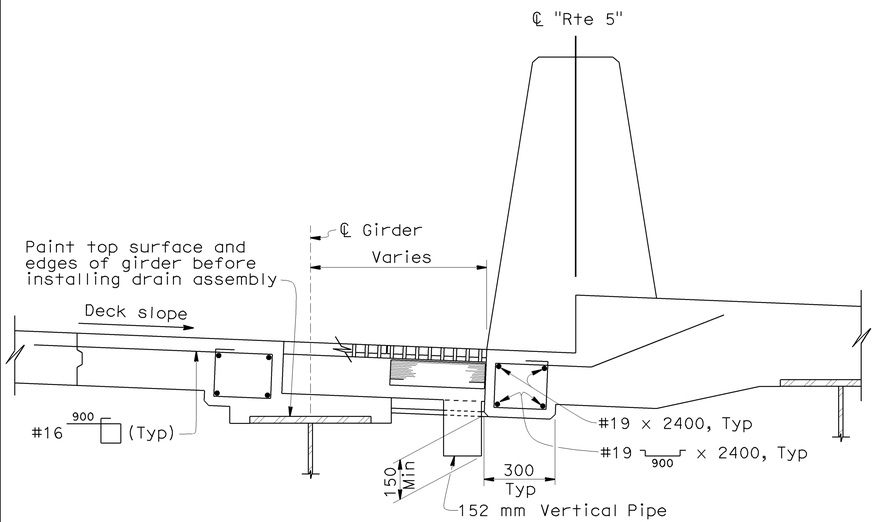


## SECTION D-D

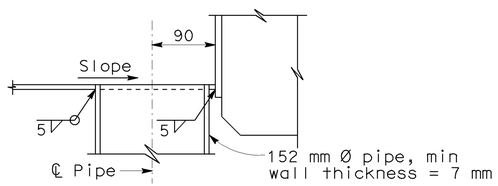


## PIPE SECTION

Note:
Galvanize deck drain assembly after fabrication. Reinforcement shown at drains is to be placed in addition to typical slab reinforcement. Typical slab reinforcement not shown

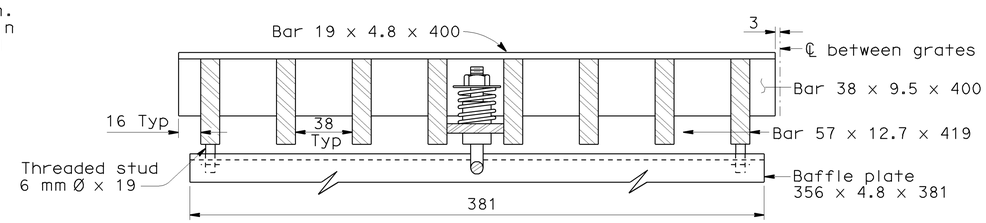


## SECTION B-B

NOTE:
THE CONTRACTOR SHALL VERIFY ALL CONTROLLING FIELD DIMENSIONS BEFORE ORDERING OR FABRICATING ANY MATERIAL.

# DECK DRAIN - TYPE C (MOD)

No Scale

Caltrans Metric

| | BY | CHECKED |
|---|---|---|
| DESIGN | Jose Higareda | Anthony Logus |
| DETAILS | Dale Kubochi | Jose Higareda |
| QUANTITIES | Jose Higareda | Anthony Logus |

STATE OF CALIFORNIA DEPARTMENT OF TRANSPORTATION

DIVISION OF ENGINEERING SERVICES STRUCTURE DESIGN
DESIGN BRANCH 15

BRIDGE NO. 53-1075
KILOMETER POST 43.6

LOS ANGELES RIVER BRIDGE AND SEPARATION (WIDEN)

DECK DRAIN DETAILS NO. 4

ALL DIMENSIONS ARE IN MILLIMETERS UNLESS OTHERWISE SHOWN

ORIGINAL SCALE IN MILLIMETERS FOR REDUCED PLANS 0 10 20 30 40 50 60 70 80 90 100

CU 07
EA 121841

DISREGARD PRINTS BEARING EARLIER REVISION DATES

REVISION DATES: 4-17-08 4-21-08 11-14-08 11-17-08 12-24-08 6-3-09

SHEET 51 OF 64

FILE => 53-1075ri-u-drn04.dgn

STRUCTURES DESIGN DETAIL SHEET (METRIC) (REV.03-17-04)

USERNAME => rtmrikes| DATE PLOTTED => 15-JUN-2009 TIME PLOTTED => 13:20

| DIST | COUNTY | ROUTE | KILOMETER POST TOTAL PROJECT | SHEET No | TOTAL SHEETS |
|---|---|---|---|---|---|
| 07 | LA | 5 | 42.8/47.3 | 625 | 1073 |

Andrew Rittenhouse 12-05-08
REGISTERED CIVIL ENGINEER DATE

6-8-09
PLANS APPROVAL DATE

REGISTERED PROFESSIONAL ENGINEER Andrew P. Rittenhouse No. 61006 Exp. 12-31-10 CIVIL STATE OF CALIFORNIA

The State of California or its officers or agents shall not be responsible for the accuracy or completeness of electronic copies of this plan sheet.

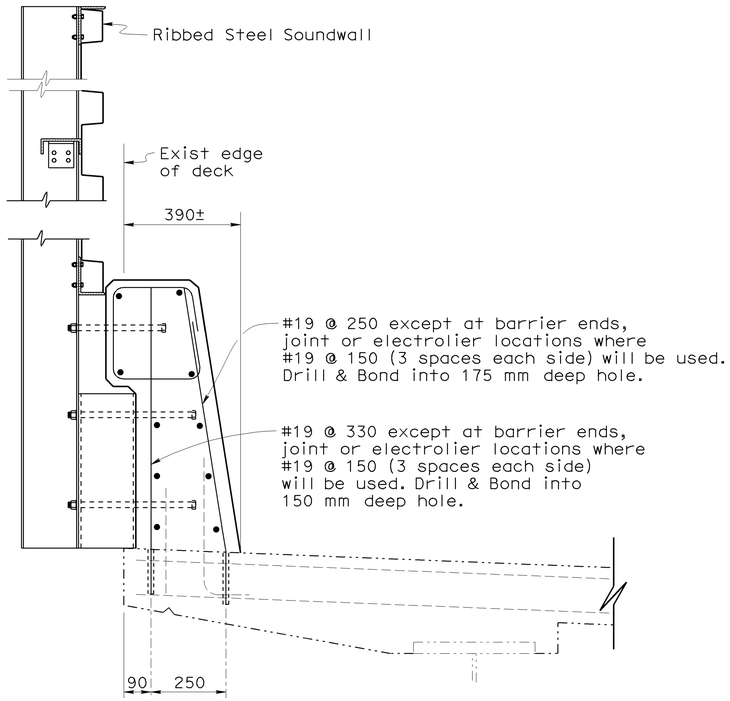


## CONCRETE BARRIER TYPE 736R (MOD)

1:10

Note: For reinforcement and details not noted or shown, see B11-56

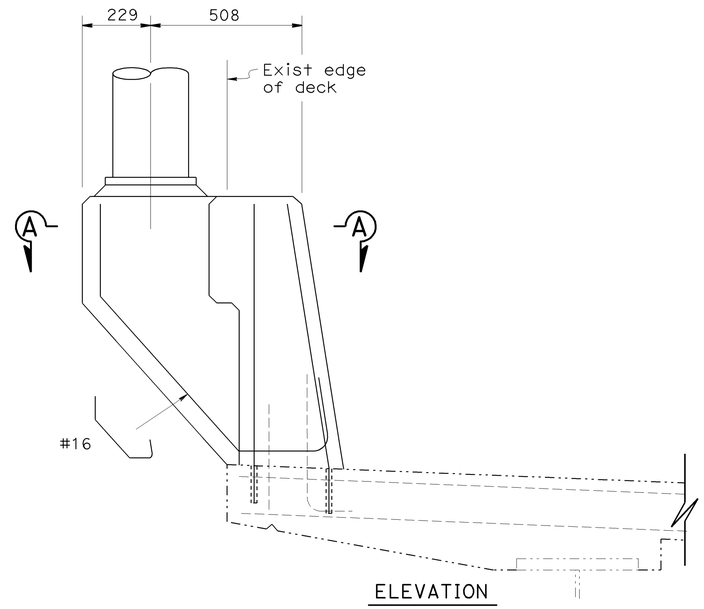


ELEVATION

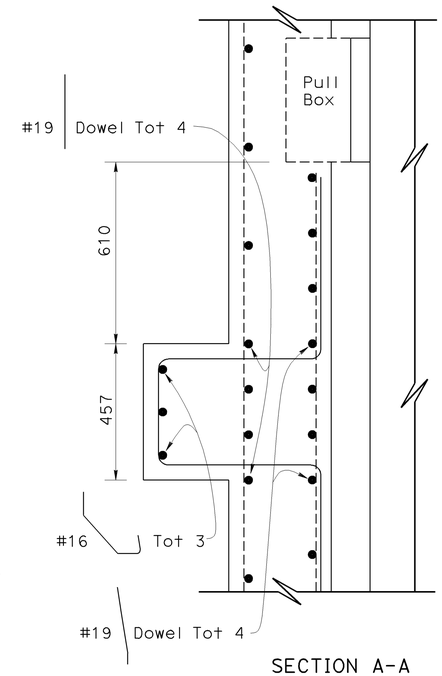


SECTION A-A

## ELECTROLIER PEDESTAL

1:10

Note: For reinforcement and details not noted or shown, see B11-56

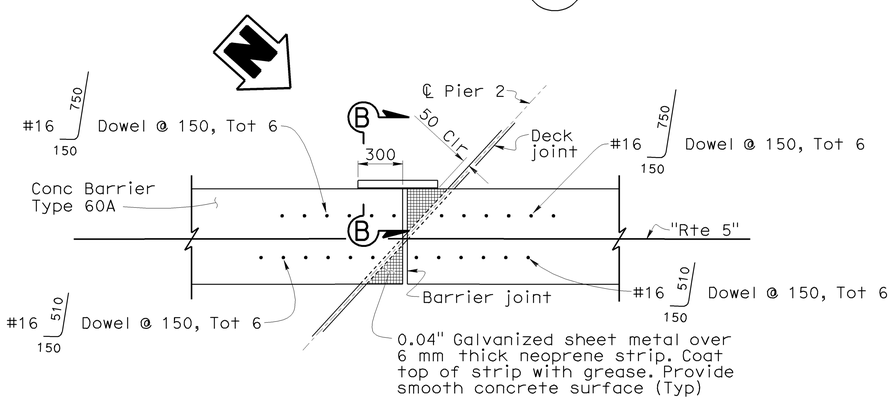


## CONNECTION TO STRUCTURE AT EXPANSION JOINTS

1:20

Notes:
- Joint at Pier 2 shown, other joints similar.
- For other reinforcement and details not shown, see B11-56

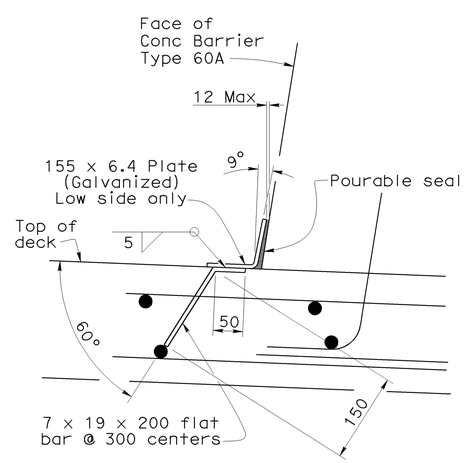


## SECTION B-B

1:5

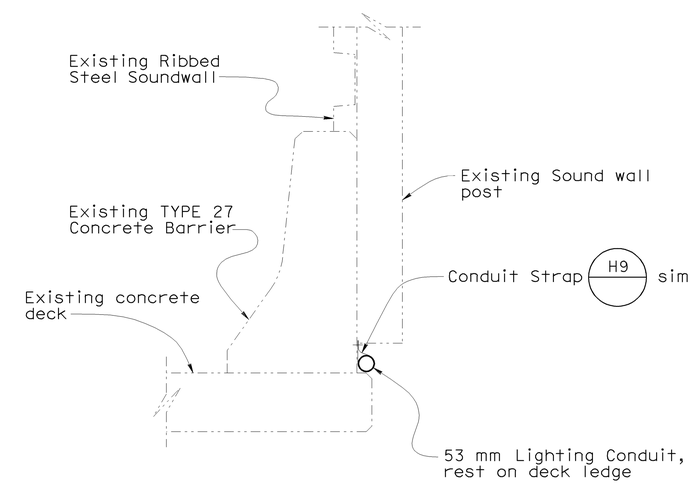


## 53 mm CONDUIT INSTALLATION ON EXISTING BARRIER RAIL

NO SCALE

NOTE:
THE CONTRACTOR SHALL VERIFY ALL CONTROLLING FIELD DIMENSIONS BEFORE ORDERING OR FABRICATING ANY MATERIAL.

Caltrans Metric

| | BY | CHECKED |
|---|---|---|
| DESIGN | Jose Higareda | Anthony Logus |
| DETAILS | Dale Kubochi | Jose Higareda |
| QUANTITIES | Jerry Han | Joel Ruiz |

STATE OF CALIFORNIA
DEPARTMENT OF TRANSPORTATION

DIVISION OF ENGINEERING SERVICES
STRUCTURE DESIGN
DESIGN BRANCH 15

BRIDGE NO. 53-1075
KILOMETER POST 43.6

LOS ANGELES RIVER BRIDGE AND SEPARATION (WIDEN)
MISCELLANEOUS DETAILS NO. 1

ALL DIMENSIONS ARE IN MILLIMETERS UNLESS OTHERWISE SHOWN

ORIGINAL SCALE IN MILLIMETERS FOR REDUCED PLANS 0 10 20 30 40 50 60 70 80 90 100

CU 07
EA 121841

DISREGARD PRINTS BEARING EARLIER REVISION DATES

REVISION DATES: 4-18-08 4-25-08 4-30-08 6-30-08 9-01-08 11-14-08 11-24-08 12-30-08 1-16-09

SHEET 52 OF 64

FILE => 53-1075r1-v-misc01.dgn

STRUCTURES DESIGN DETAIL SHEET (METRIC) (REV.03-17-04)

USERNAME => ttmirkes| DATE PLOTTED => 12-JUN-2009 TIME PLOTTED => 07:42

| DIST | COUNTY | ROUTE | KILOMETER POST TOTAL PROJECT | SHEET No | TOTAL SHEETS |
|---|---|---|---|---|---|
| 07 | LA | 5 | 42.8/47.3 | 626 | 1073 |

Andrew Rittenhouse 12-05-08
REGISTERED CIVIL ENGINEER DATE

6-8-09
PLANS APPROVAL DATE

REGISTERED PROFESSIONAL ENGINEER Andrew P. Rittenhouse No. 61006 Exp. 12-31-10 CIVIL STATE OF CALIFORNIA

The State of California or its officers or agents shall not be responsible for the accuracy or completeness of electronic copies of this plan sheet.

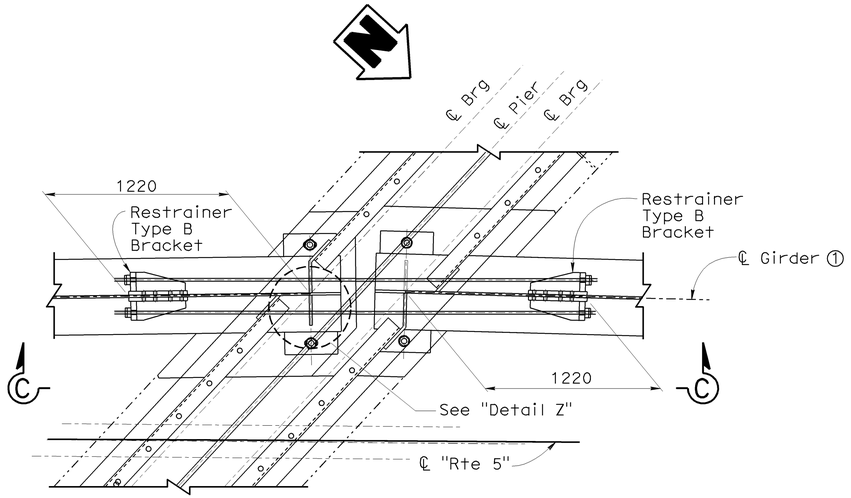


PART PLAN
1:20

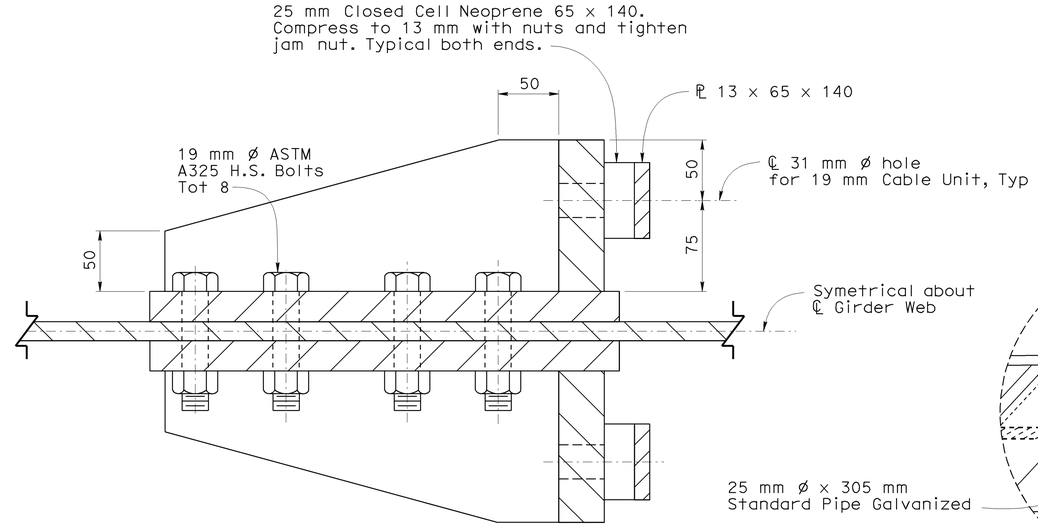


SECTION D-D

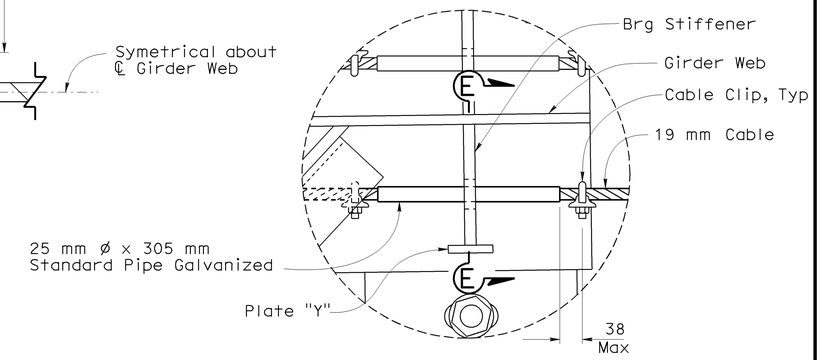


DETAIL Z
1:5

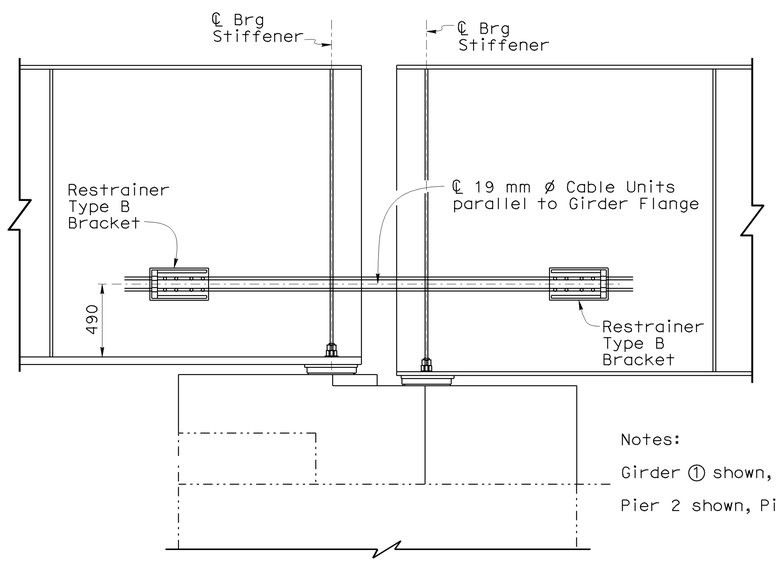


Notes:

Girder ① shown, Girder ② similar.

Pier 2 shown, Pier 5 similar.

ELEVATION C-C
1:20

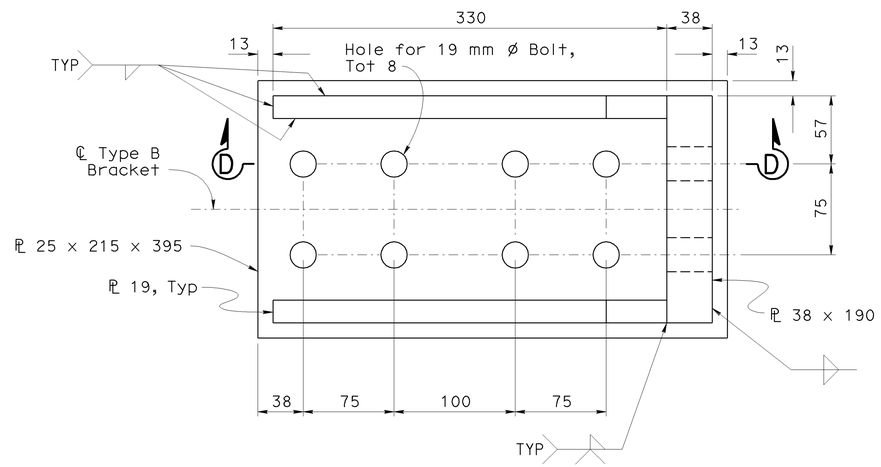


PLAN

RESTRAINER TYPE B BRACKET
1:2.5

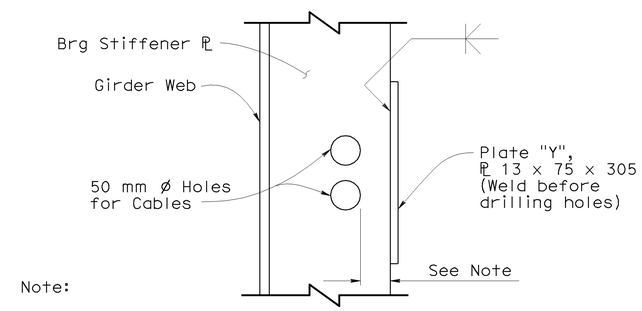


Note:

If 50 mm ø hole has less than 38 mm clear to free edge of Bearing Stiffener, or if Bearing Stiffener is less than 180 mm wide then Plate "Y" must be installed.

SECTION E-E
1:5

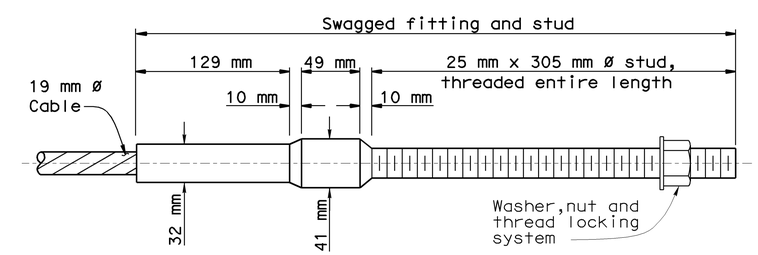


CABLE END ANCHORAGE
1:2.5

NOTE:
THE CONTRACTOR SHALL VERIFY ALL CONTROLLING FIELD DIMENSIONS BEFORE ORDERING OR FABRICATING ANY MATERIAL.

PIER 2 & PIER 5
RESTRAINER DETAILS

| | BY | CHECKED |
|---|---|---|
| DESIGN | Jose Higareda | Anthony Logus |
| DETAILS | Herman Mauroschadt | Jose Higareda |
| QUANTITIES | Traci Menard | Anthony Logus |

STATE OF CALIFORNIA
DEPARTMENT OF TRANSPORTATION

DIVISION OF ENGINEERING SERVICES
STRUCTURE DESIGN
DESIGN BRANCH 15

BRIDGE NO. 53-1075
KILOMETER POST 43.6

LOS ANGELES RIVER BRIDGE AND SEPARATION (WIDEN)
MISCELLANEOUS DETAILS NO. 2

Caltrans Metric

ALL DIMENSIONS ARE IN MILLIMETERS UNLESS OTHERWISE SHOWN

ORIGINAL SCALE IN MILLIMETERS FOR REDUCED PLANS 0 10 20 30 40 50 60 70 80 90 100

CU 07
EA 121841

DISREGARD PRINTS BEARING EARLIER REVISION DATES

REVISION DATES 6-16-08 11-14-08 11-14-08 12-12-08 1-16-09

SHEET 53 OF 64

FILE => 53-1075r1-v-misc02.dgn

STRUCTURES DESIGN DETAIL SHEET (METRIC) (REV.03-17-04)

USERNAME => ttmirkes| DATE PLOTTED => 12-JUN-2009 TIME PLOTTED => 07:42

| DIST | COUNTY | ROUTE | KILOMETER POST TOTAL PROJECT | SHEET No | TOTAL SHEETS |
|---|---|---|---|---|---|
| 07 | LA | 5 | 42.8/47.3 | 627 | 1073 |

Andrew Rittenhouse 12-05-08
REGISTERED CIVIL ENGINEER DATE

6-8-09
PLANS APPROVAL DATE

REGISTERED PROFESSIONAL ENGINEER Andrew P. Rittenhouse No. 61006 Exp. 12-31-10 CIVIL STATE OF CALIFORNIA

The State of California or its officers or agents shall not be responsible for the accuracy or completeness of electronic copies of this plan sheet.

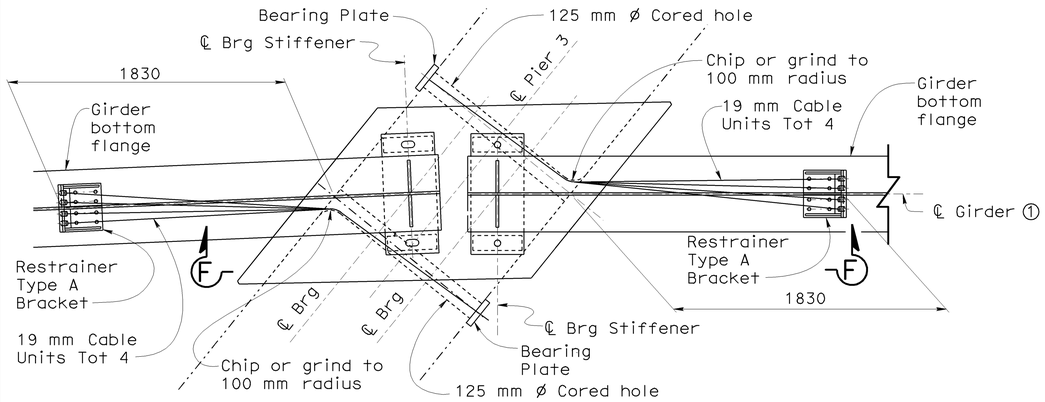


## PART PLAN
1:20

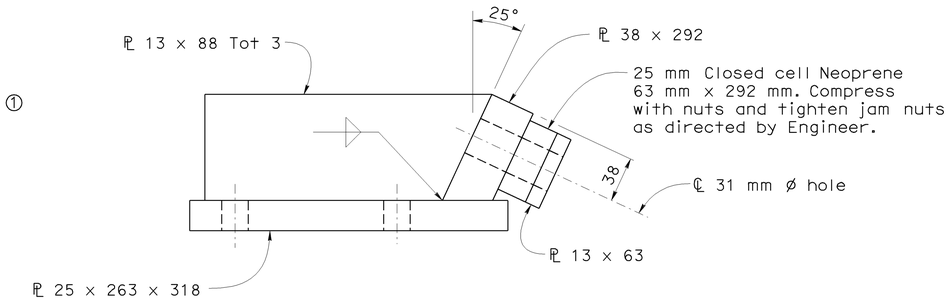


## ELEVATION

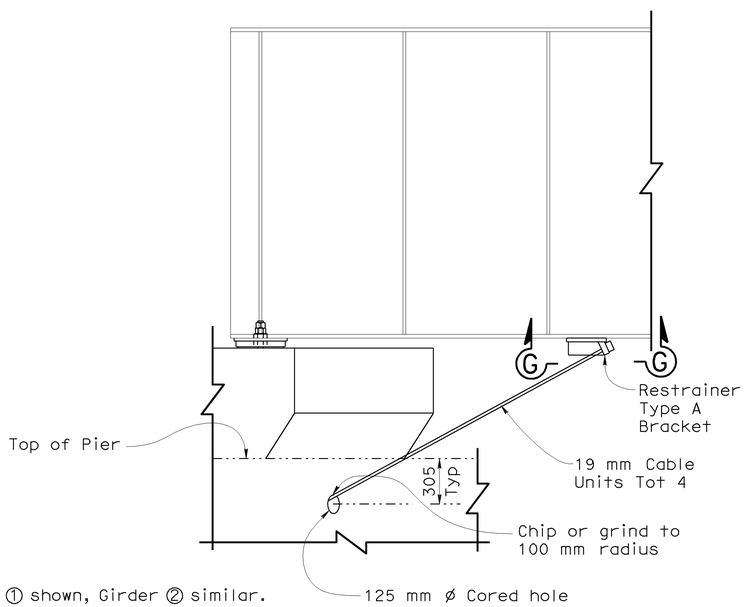


Notes:

Girder ① shown, Girder ② similar.

For "Cable End Anchorage" details see "MISCELLANEOUS DETAILS NO. 2" sheet.

## ELEVATION F-F
1:20

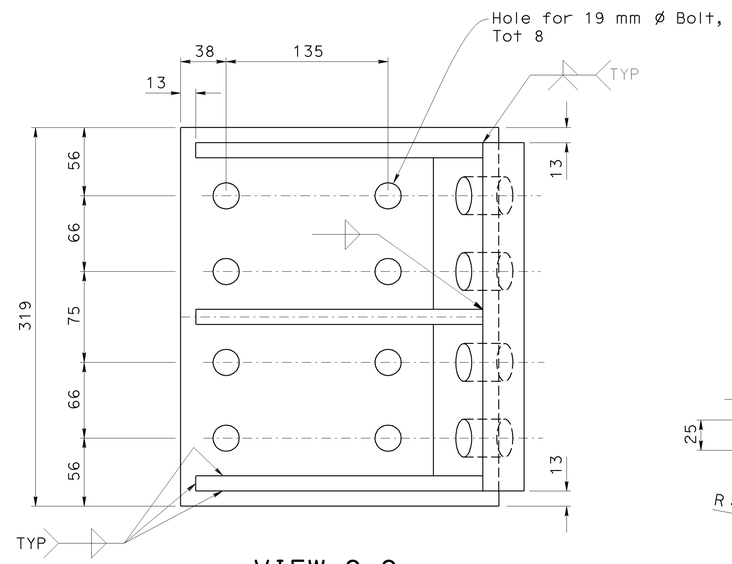


## VIEW G-G

## RESTRAINER TYPE A BRACKET
1:2.5

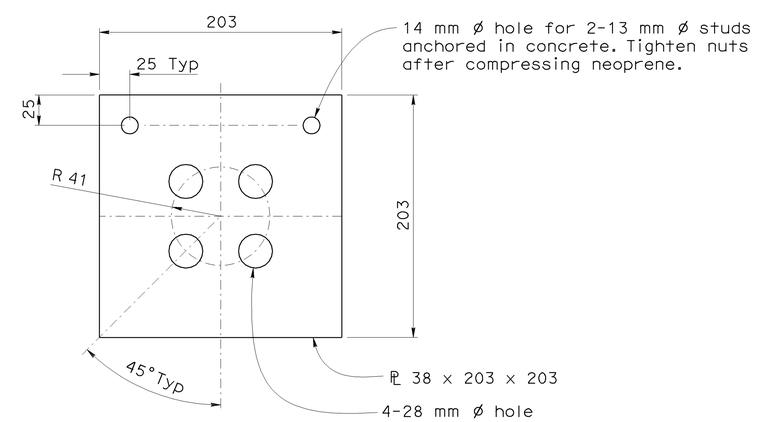


## BEARING PLATE
1:2.5

NOTE:
THE CONTRACTOR SHALL VERIFY ALL CONTROLLING FIELD DIMENSIONS BEFORE ORDERING OR FABRICATING ANY MATERIAL.

# PIER 3 RESTRAINER DETAILS

| | | | |
|---|---|---|---|
| DESIGN | BY Jose Higareda | CHECKED Anthony Logus | |
| DETAILS | BY Herman Mauroschadt | CHECKED Jose Higareda | |
| QUANTITIES | BY Traci Menard | CHECKED Anthony Logus | |

STATE OF CALIFORNIA DEPARTMENT OF TRANSPORTATION

DIVISION OF ENGINEERING SERVICES STRUCTURE DESIGN
DESIGN BRANCH 15

BRIDGE NO. 53-1075
KILOMETER POST 43.6

LOS ANGELES RIVER BRIDGE AND SEPARATION (WIDEN)
MISCELLANEOUS DETAILS NO. 3

Caltrans Metric

ALL DIMENSIONS ARE IN MILLIMETERS UNLESS OTHERWISE SHOWN

ORIGINAL SCALE IN MILLIMETERS FOR REDUCED PLANS 0 10 20 30 40 50 60 70 80 90 100

CU 07
EA 121841

DISREGARD PRINTS BEARING EARLIER REVISION DATES

REVISION DATES 8-18-08 11-14-08 11-21-08 12-24-08

SHEET 54 OF 64

FILE => 53-1075rl-v-misc03.dgn

STRUCTURES DESIGN DETAIL SHEET (METRIC) (REV.03-17-04)

USERNAME => trmikesl DATE PLOTTED => 12-JUN-2009 TIME PLOTTED => 07:42

| DIST | COUNTY | ROUTE | KILOMETER POST TOTAL PROJECT | SHEET No | TOTAL SHEETS |
|---|---|---|---|---|---|
| 07 | LA | 5 | 42.8/47.3 | 628 | 1073 |

Andrew Rittenhouse 12-05-08
REGISTERED CIVIL ENGINEER DATE

6-8-09
PLANS APPROVAL DATE

REGISTERED PROFESSIONAL ENGINEER
Andrew P. Rittenhouse
No. 61006
Exp. 12-31-10
CIVIL
STATE OF CALIFORNIA

The State of California or its officers or agents shall not be responsible for the accuracy or completeness of electronic copies of this plan sheet.

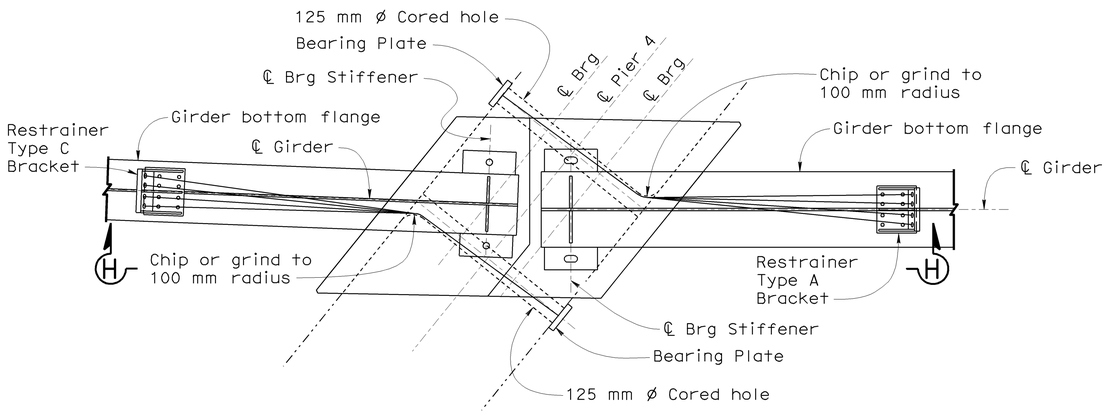


## PLAN
1:20

Notes:

1. For "Restrainer Type A Bracket" details see "MISCELLANEOUS DETAILS NO. 3" sheet.
2. For "Bearing Plate" details see "MISCELLANEOUS DETAILS NO. 3" sheet.
3. For "Cable End Anchorage" details see "MISCELLANEOUS DETAILS NO. 2" sheet.

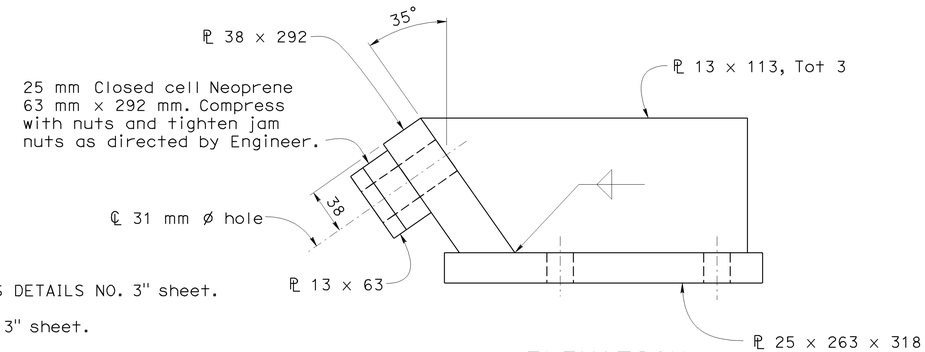


## ELEVATION

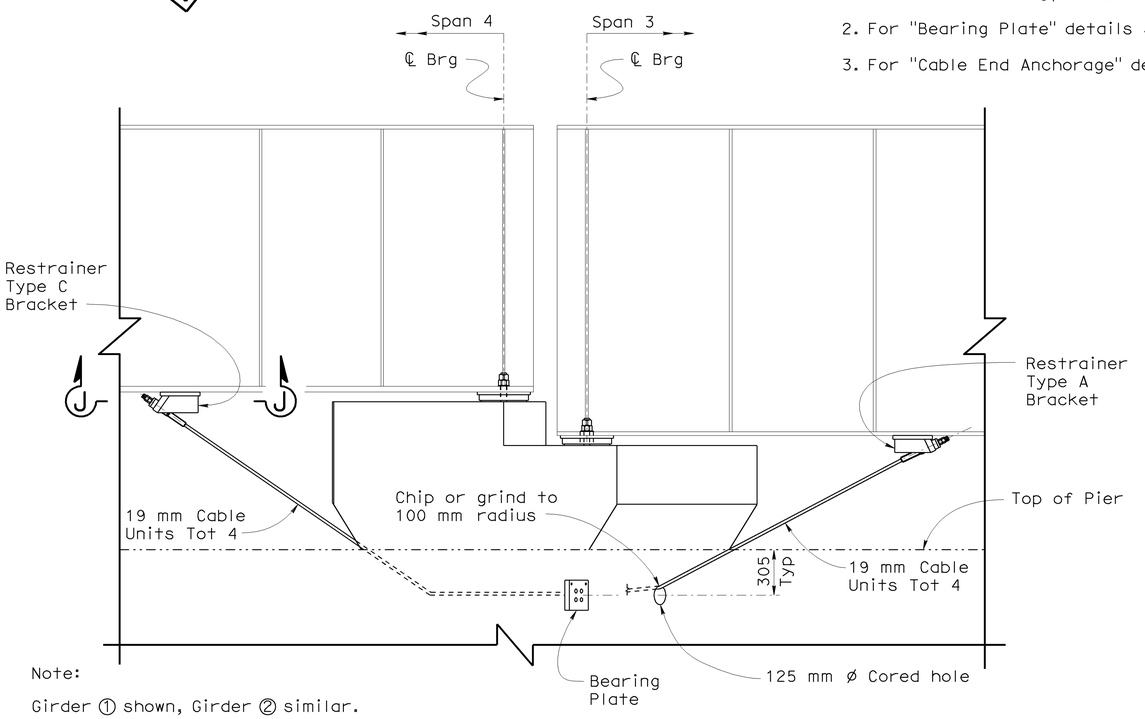


Note:

Girder ① shown, Girder ② similar.

## ELEVATION H-H
1:20

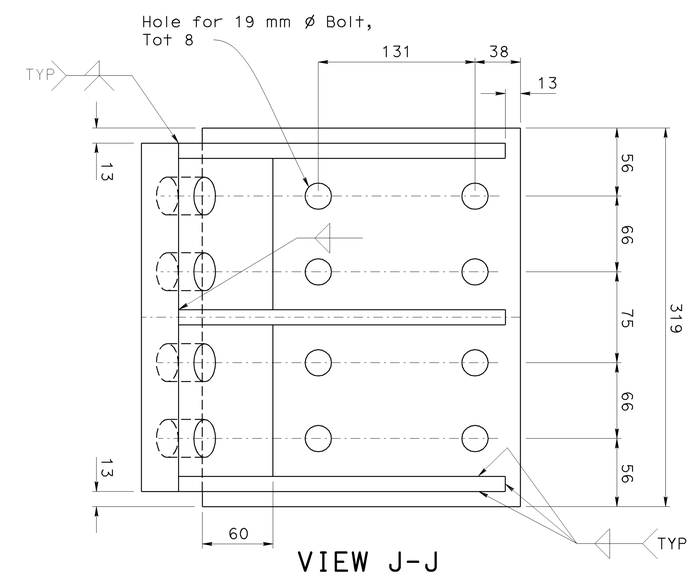


## VIEW J-J

NOTE:
THE CONTRACTOR SHALL VERIFY ALL CONTROLLING FIELD DIMENSIONS BEFORE ORDERING OR FABRICATING ANY MATERIAL.

# PIER 4 RESTRAINER DETAILS

# RESTRAINER TYPE C BRACKET
1:2.5

| | | | |
|---|---|---|---|
| DESIGN | BY Jose Higareda | CHECKED Anthony Logus | |
| DETAILS | BY Herman Mauroschadt | CHECKED Jose Higareda | |
| QUANTITIES | BY Traci Menard | CHECKED Anthony Logus | |

STATE OF CALIFORNIA
DEPARTMENT OF TRANSPORTATION

DIVISION OF ENGINEERING SERVICES
STRUCTURE DESIGN
DESIGN BRANCH 15

CU 07
EA 121841

BRIDGE NO. 53-1075
KILOMETER POST 43.6

LOS ANGELES RIVER BRIDGE AND SEPARATION (WIDEN)

MISCELLANEOUS DETAILS NO. 4

ALL DIMENSIONS ARE IN MILLIMETERS UNLESS OTHERWISE SHOWN

ORIGINAL SCALE IN MILLIMETERS FOR REDUCED PLANS 0 10 20 30 40 50 60 70 80 90 100

DISREGARD PRINTS BEARING EARLIER REVISION DATES

REVISION DATES 6-30-08 11-14-08 11-14-08 12-24-08

SHEET 55 OF 64

STRUCTURES DESIGN DETAIL SHEET (METRIC) (REV.03-17-04)

FILE => 53-1075rl-v-misc04.dgn

USERNAME => trmikest DATE PLOTTED => 12-JUN-2009 TIME PLOTTED => 07:42

| DIST | COUNTY | ROUTE | KILOMETER POST TOTAL PROJECT | SHEET No | TOTAL SHEETS |
|---|---|---|---|---|---|
| 07 | LA | 5 | 42.8/47.3 | 629 | 1073 |

Andrew Rittenhouse 12-05-08
REGISTERED CIVIL ENGINEER DATE

6-8-09
PLANS APPROVAL DATE

REGISTERED PROFESSIONAL ENGINEER Andrew P. Rittenhouse No. 61006 Exp. 12-31-10 CIVIL STATE OF CALIFORNIA

The State of California or its officers or agents shall not be responsible for the accuracy or completeness of electronic copies of this plan sheet.

Notes:

1. ℄ Pier 3 and ℄ Pier 4 shown
2. ℄ Pier 2 and ℄ Pier 5 similar
3. * Expansion fitting at pier 3 and 4 only
4. For Hanger details, see "DECK DRAIN DETAILS NO. 3" sheet

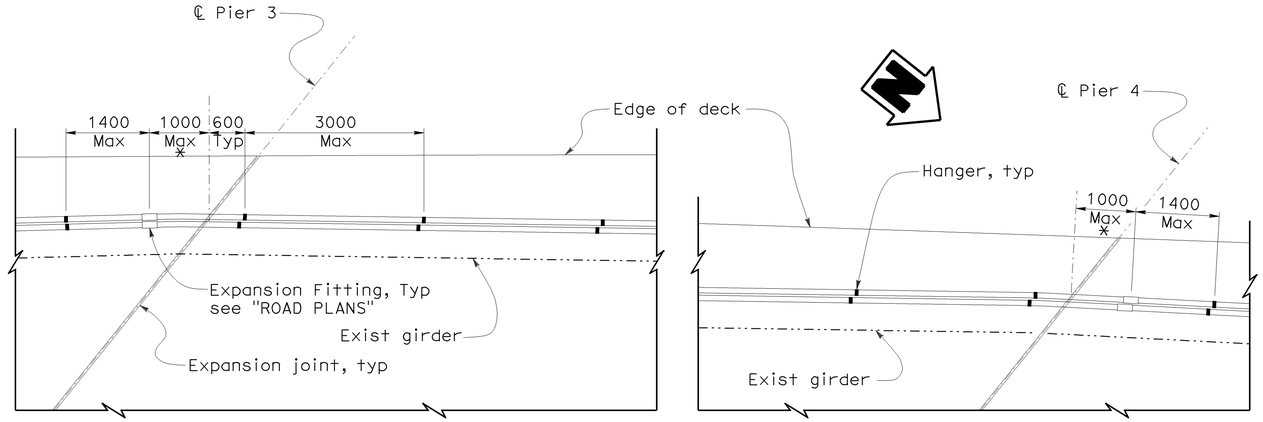


91 mm ø FIBER OPTIC CONDUIT
HANGER LOCATIONS

PLAN
No Scale

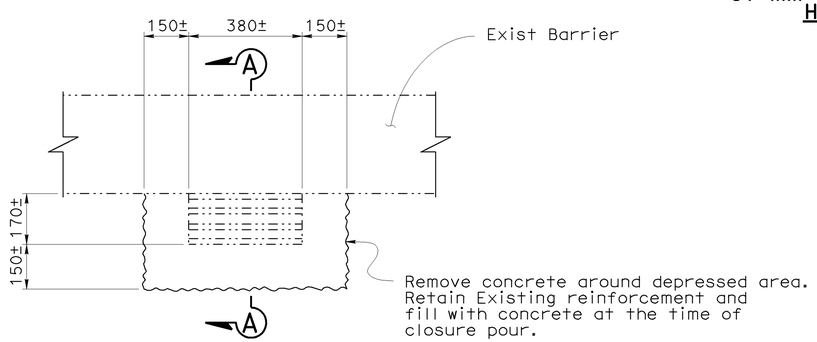


EXISTING DRAIN DETAIL AT SOUTHBOUND STRUCTURE

PLAN
No Scale

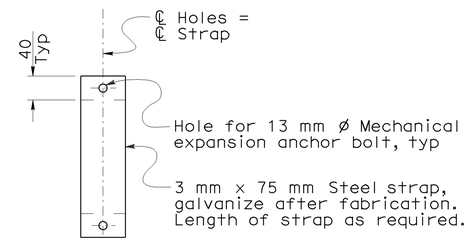


VIEW A-A
No Scale

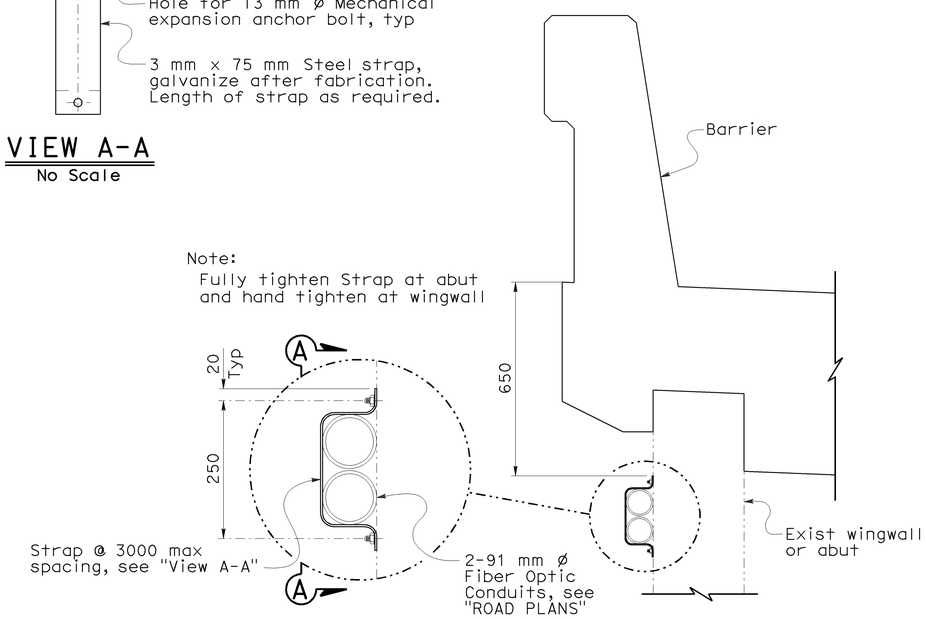


STRAP DETAIL
No Scale

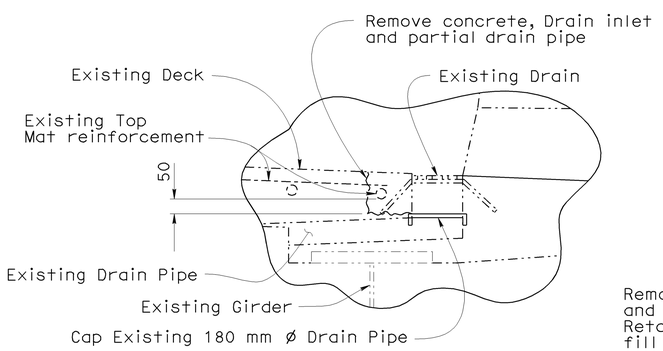


PIER 2

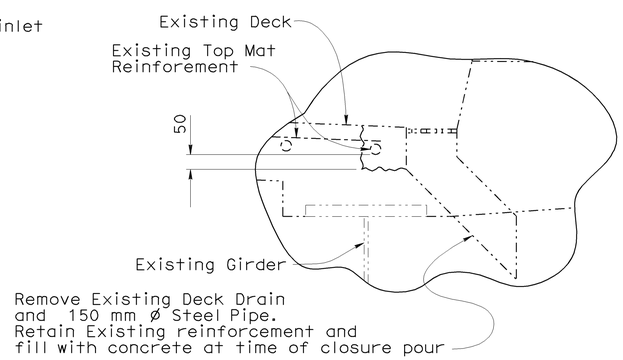


PIERS 3, 4 & 5

SECTION A-A
No Scale

NOTE:
THE CONTRACTOR SHALL VERIFY ALL CONTROLLING FIELD DIMENSIONS BEFORE ORDERING OR FABRICATING ANY MATERIAL.

Caltrans Metric

| | BY | CHECKED |
|---|---|---|
| DESIGN | Jose Higareda | Anthony Logus |
| DETAILS | Tim Trefz | Jose Higareda |
| QUANTITIES | Christine Chan | Fred Feng |

STATE OF CALIFORNIA
DEPARTMENT OF TRANSPORTATION

DIVISION OF ENGINEERING SERVICES
STRUCTURE DESIGN
DESIGN BRANCH 15

BRIDGE NO. 53-1075
KILOMETER POST 43.6

LOS ANGELES RIVER BRIDGE AND SEPARATION (WIDEN)
MISCELLANEOUS DETAILS NO. 5

ALL DIMENSIONS ARE IN MILLIMETERS UNLESS OTHERWISE SHOWN

ORIGINAL SCALE IN MILLIMETERS FOR REDUCED PLANS 0 10 20 30 40 50 60 70 80 90 100

CU 07
EA 121841

DISREGARD PRINTS BEARING EARLIER REVISION DATES

REVISION DATES: 11-1-08 11-21-08 12-1-08 12-29-08 1-16-09

SHEET 56 OF 64

FILE => 53-1075ri-v-misc05.dgn

STRUCTURES DESIGN DETAIL SHEET (METRIC) (REV.03-17-04)

USERNAME => trmitest DATE PLOTTED => 12-JUN-2009 TIME PLOTTED => 07:42

| DIST | COUNTY | ROUTE | KILOMETER POST TOTAL PROJECT | SHEET No | TOTAL SHEETS |
|---|---|---|---|---|---|
| 07 | LA | 5 | 42.8/47.3 | 630 | 1073 |

Andrew Rittenhouse 12-05-08
REGISTERED CIVIL ENGINEER DATE

6-8-09
PLANS APPROVAL DATE

REGISTERED PROFESSIONAL ENGINEER Andrew P. Rittenhouse No. 61006 Exp. 12-31-10 CIVIL STATE OF CALIFORNIA

The State of California or its officers or agents shall not be responsible for the accuracy or completeness of electronic copies of this plan sheet.

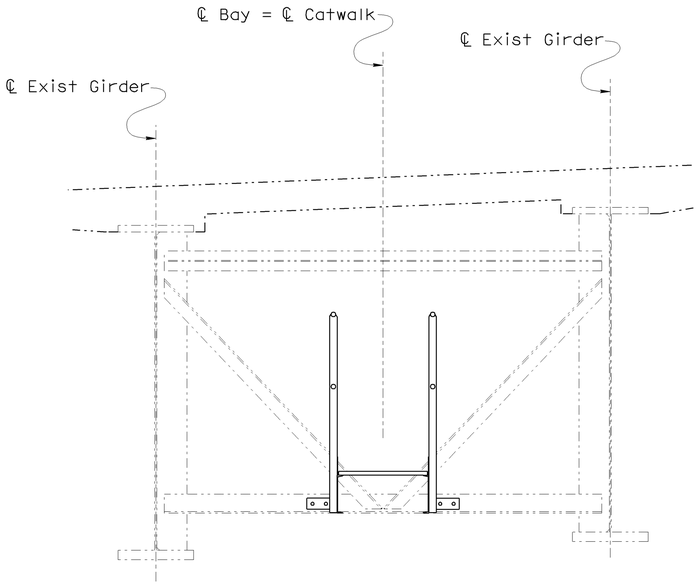


## SECTION AT EXIST CROSSFRAME

1:20

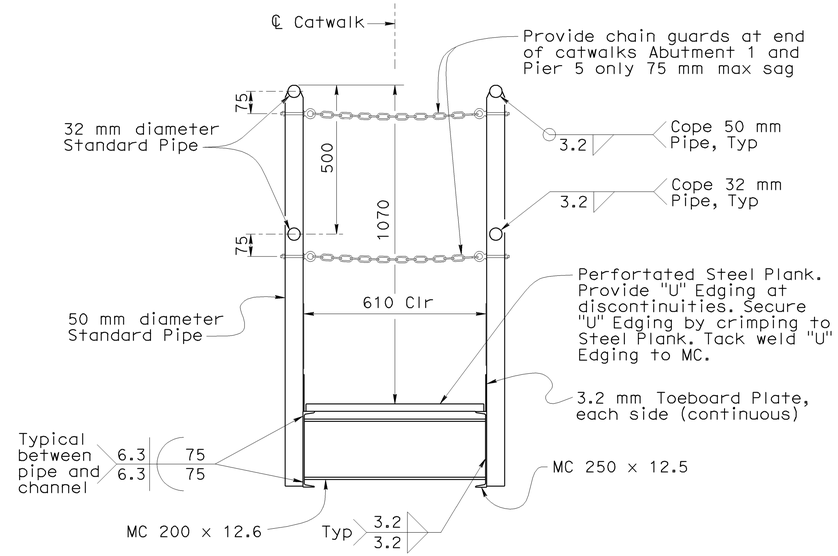


## CATWALK SECTION

1:10

NOTES FOR CATWALK:

1. See "Girder Layout" sheets for location of catwalks. Install in spans 1 thru 4 only.
2. Design: Uniform live load of 1915 Pa and a non-concurrent concentrated load of 1.33 kN.

   Guardrails designed for liveload of 0.292 kN/m applied either horizontally or vertically.

   Posts designed to resist 0.890 kN applied laterally at top of post.

   Max catwalk span = 7.62 m.
3. Structural Steel (Working Stress Design)

   fy = 345 Mpa (ASTM A709M Grade 345)

   Post and rails shall conform to ASTM A501

   Perforated non-serrated steel plank shall conform to ASTM A653M.
4. Bolts shall be 22 mm ASTM A325 (fy = 635 Mpa)
5. Railings shall have smooth edges. Seal all open ends of pipe sections.
6. Perforated steel plank may be manufactured integral with toeboard.
7. For additional details see "Catwalk Details No. 2" sheet

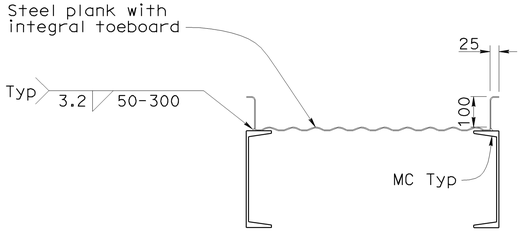


## ALTERNATE TOEBOARD DETAIL

NO SCALE

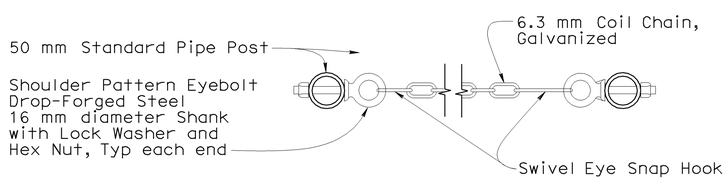


## CHAIN GUARD DETAIL

NO SCALE

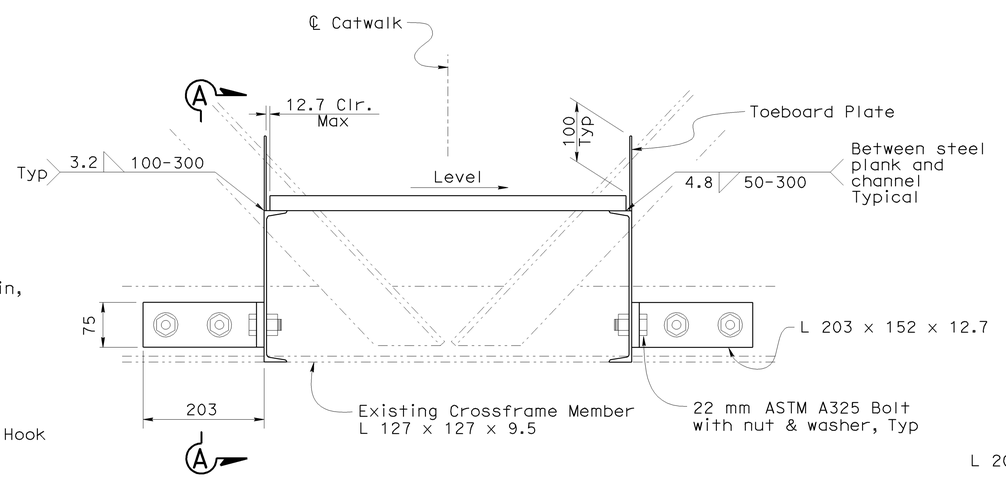


## PART CATWALK SECTION AT CROSSFRAME

1:5

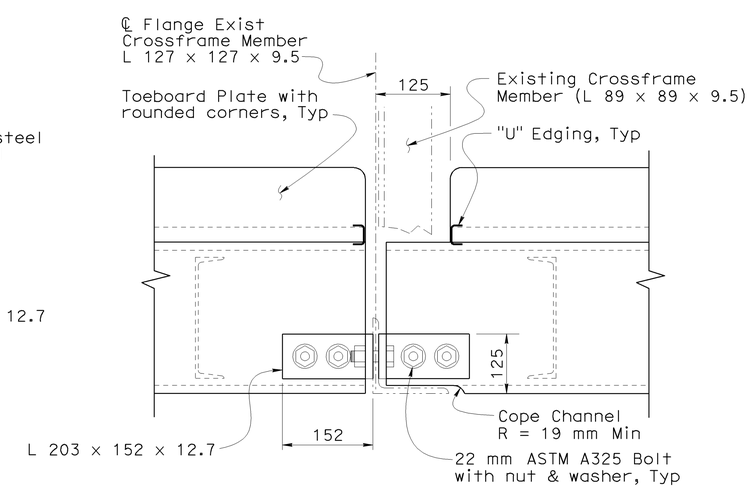


## SECTION A-A

1:5

| | | | |
|---|---|---|---|
| DESIGN | BY Chris Moulton | CHECKED Jose Higareda | |
| DETAILS | BY Tim Trefz | CHECKED Jose Higareda | |
| QUANTITIES | BY Hogni Setberg | CHECKED Ruslan Novik | |

STATE OF CALIFORNIA DEPARTMENT OF TRANSPORTATION

DIVISION OF ENGINEERING SERVICES STRUCTURE DESIGN DESIGN BRANCH 15

BRIDGE NO. 53-1075
KILOMETER POST 43.6

LOS ANGELES RIVER BRIDGE AND SEPARATION (WIDEN)

CATWALK DETAILS NO. 1

Caltrans Metric

ALL DIMENSIONS ARE IN MILLIMETERS UNLESS OTHERWISE SHOWN

ORIGINAL SCALE IN MILLIMETERS FOR REDUCED PLANS 0 10 20 30 40 50 60 70 80 90 100

CU 07
EA 121841

DISREGARD PRINTS BEARING EARLIER REVISION DATES 02-12-09 04-06-09 04-08-09 04-13-09

REVISION DATES

SHEET 57 OF 64

STRUCTURES DESIGN DETAIL SHEET (METRIC) (REV.03-17-04)

FILE => 53-1075r1-v-misc06.dgn

USERNAME => ttmirkes| DATE PLOTTED => 12-JUN-2009 TIME PLOTTED => 07:42

| DIST | COUNTY | ROUTE | KILOMETER POST TOTAL PROJECT | SHEET No | TOTAL SHEETS |
|---|---|---|---|---|---|
| 07 | LA | 5 | 42.8/47.3 | 631 | 1073 |

Andrew Rittenhouse 12-05-08
REGISTERED CIVIL ENGINEER DATE

6-8-09
PLANS APPROVAL DATE

REGISTERED PROFESSIONAL ENGINEER Andrew P. Rittenhouse No. 61006 Exp. 12-31-10 CIVIL STATE OF CALIFORNIA

The State of California or its officers or agents shall not be responsible for the accuracy or completeness of electronic copies of this plan sheet.

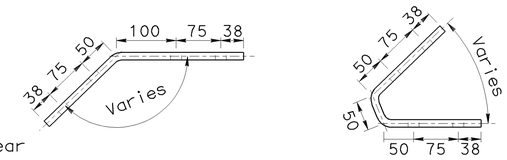


## BAR DETAILS
1:5

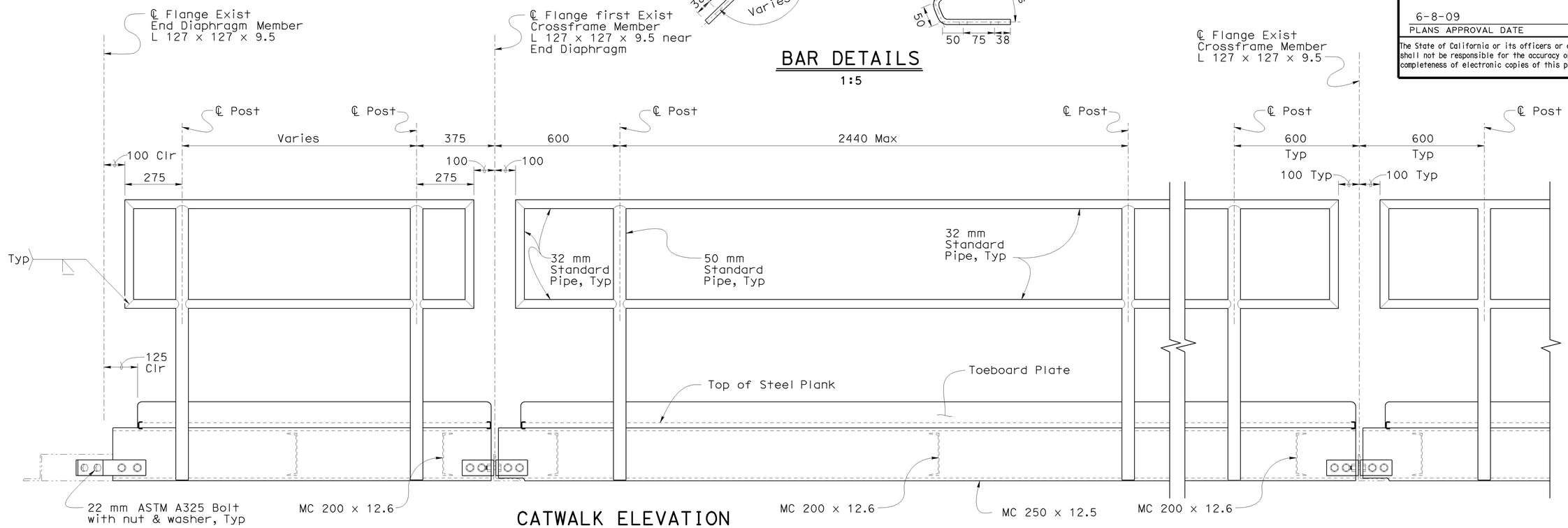


## CATWALK ELEVATION
1:10

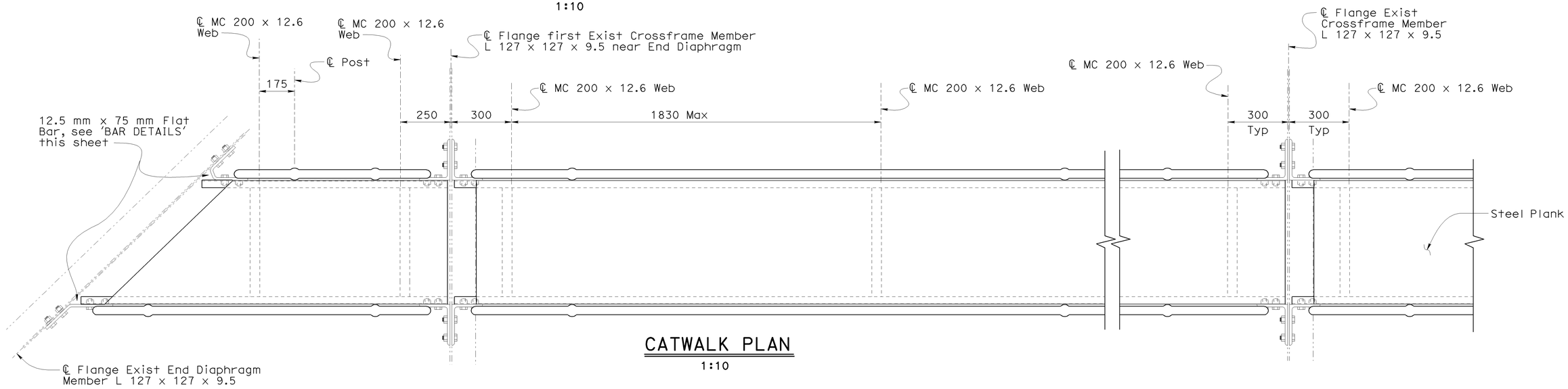


## CATWALK PLAN
1:10

| | | | | | |
|---|---|---|---|---|---|
| Caltrans Metric | DESIGN | BY Chris Moulton | CHECKED Jose Higareda | STATE OF CALIFORNIA DEPARTMENT OF TRANSPORTATION | DIVISION OF ENGINEERING SERVICES STRUCTURE DESIGN DESIGN BRANCH 15 |
| | DETAILS | BY Tim Trefz | CHECKED Jose Higareda | | |
| | QUANTITIES | BY Hogni Setberg | CHECKED Ruslan Novik | | |

BRIDGE NO. 53-1075
KILOMETER POST 43.6

LOS ANGELES RIVER BRIDGE AND SEPARATION (WIDEN)

# CATWALK DETAILS NO. 2

ALL DIMENSIONS ARE IN MILLIMETERS UNLESS OTHERWISE SHOWN

ORIGINAL SCALE IN MILLIMETERS FOR REDUCED PLANS 0 10 20 30 40 50 60 70 80 90 100

CU 07
EA 121841

DISREGARD PRINTS BEARING EARLIER REVISION DATES

REVISION DATES 02-05-09 04-06-09 04-08-09

SHEET 58 OF 64

FILE => 53-1075r1-v-misc07.dgn

STRUCTURES DESIGN DETAIL SHEET (METRIC) (REV.03-17-04)

USERNAME => ttmirkes1 DATE PLOTTED => 12-JUN-2009 TIME PLOTTED => 07:50

| DIST | COUNTY | ROUTE | KILOMETER POST TOTAL PROJECT | SHEET No | TOTAL SHEETS |
|---|---|---|---|---|---|
| 07 | LA | 5 | 42.8/47.3 | 632 | 1073 |

Andrew Rittenhouse 12-05-08
REGISTERED CIVIL ENGINEER DATE

6-8-09
PLANS APPROVAL DATE

REGISTERED PROFESSIONAL ENGINEER Andrew P. Rittenhouse No. 61006 Exp. 12-31-10 CIVIL STATE OF CALIFORNIA

The State of California or its officers or agents shall not be responsible for the accuracy or completeness of electronic copies of this plan sheet.

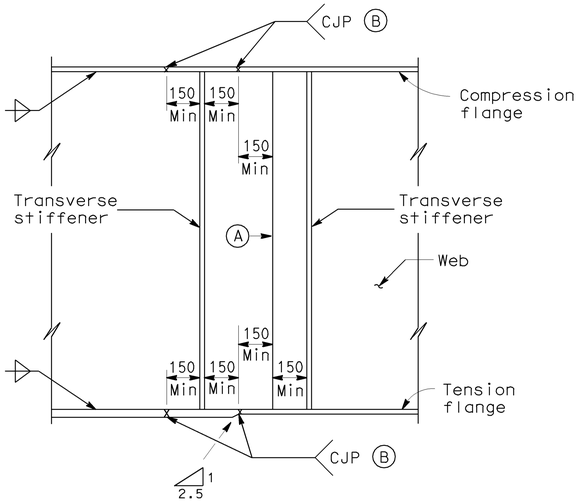


## GIRDER SHOP SPLICE

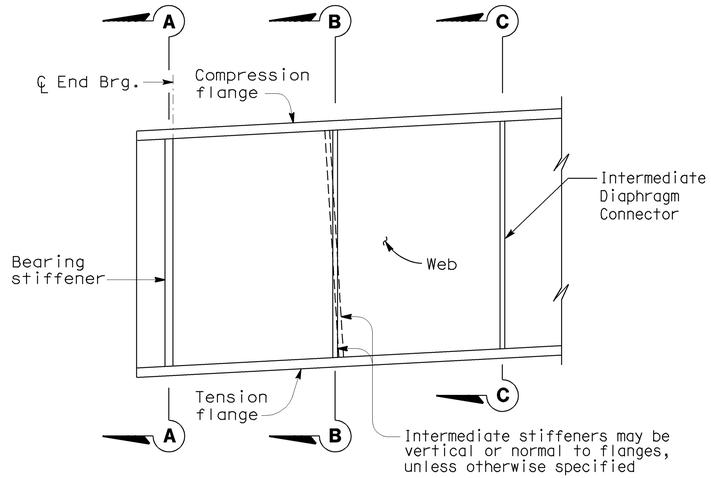


## TRANSVERSE STIFFENERS

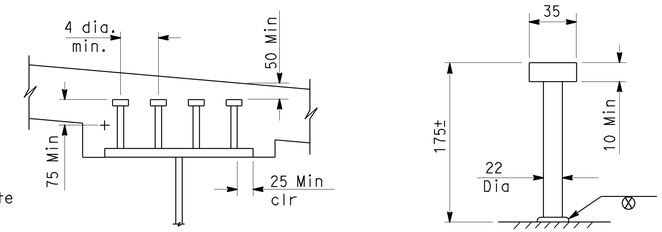


Lengths to be determined by the Contractor unless otherwise shown. Minimum length is 125 mm.
The top of deck is designed to be approximately parallel to the top of web for determining girder stud connector height. Alternative types of shear connectors will be permitted subject to approval by the Engineer.

## SHEAR CONNECTOR STUDS

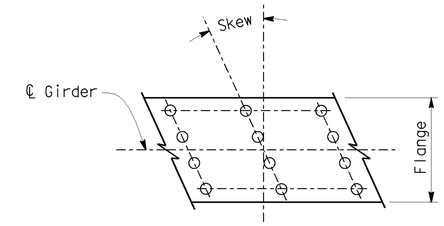


Place studs parallel to transverse deck reinf to minimize interference

## PLAN

No Scale

**NOTES:**

Alternative girder splices will be permitted subject to approval by the Engineer.

Under full dead load as shown on the camber diagram, girder ends and bearing stiffeners shall be vertical except they may be normal to grade for grades less than 2 percent.

(A) Web splice joints shall be complete joint penetration welds (CJP). All weld areas on the exterior face of exterior girders shall be ground flush.

(B) Grind all surfaces flush on tension flanges. Grind all surfaces flush on compression flanges when required for non-destructive testing (NDT).

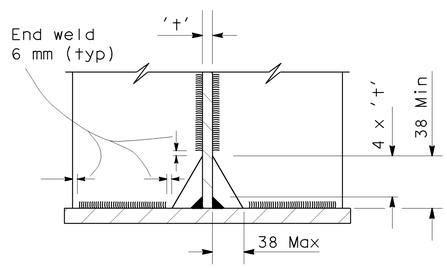


## DETAIL A

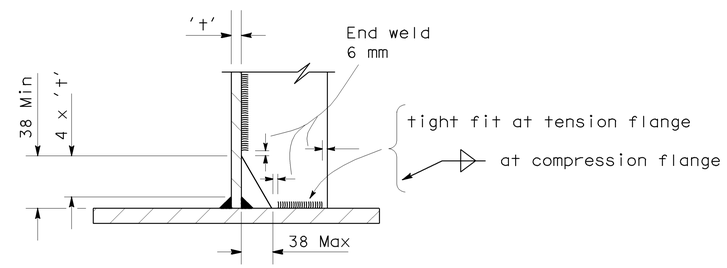


## DETAIL B

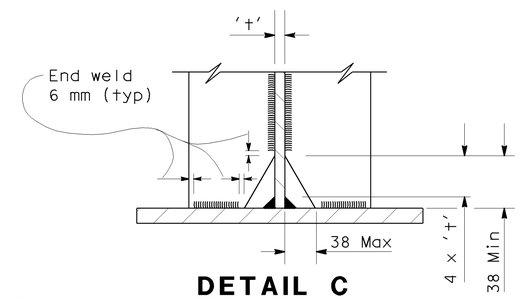


## DETAIL C

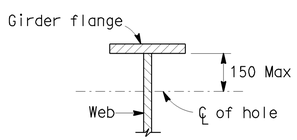


25 mm max diameter drilled hole at 1.2 m ± min spacing to be used for falsework support when specified by the Contractor. Contractor to determine location, size and spacing.

50 mm max diameter hole to be drilled where lighting conduit passes through girder web. For location and size of hole see ''Road Plans''.

## HOLES FOR CONDUIT AND FALSEWORK

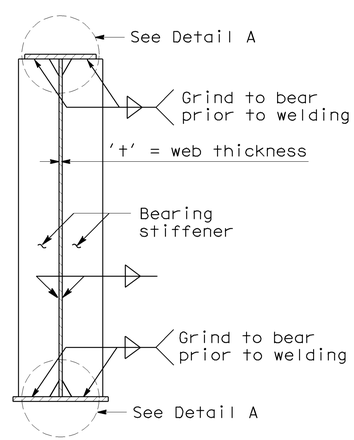


## SECTION A-A

(Bearing Stiffeners)

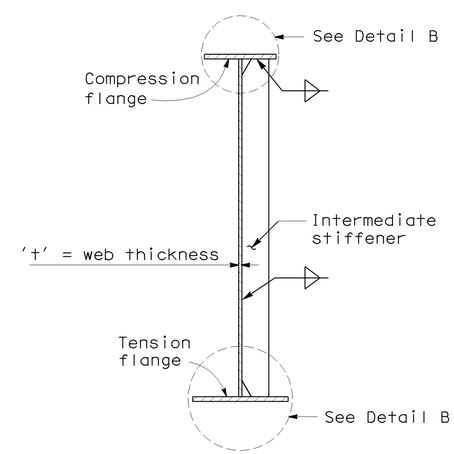


## SECTION B-B

(Intermediate Stiffeners)

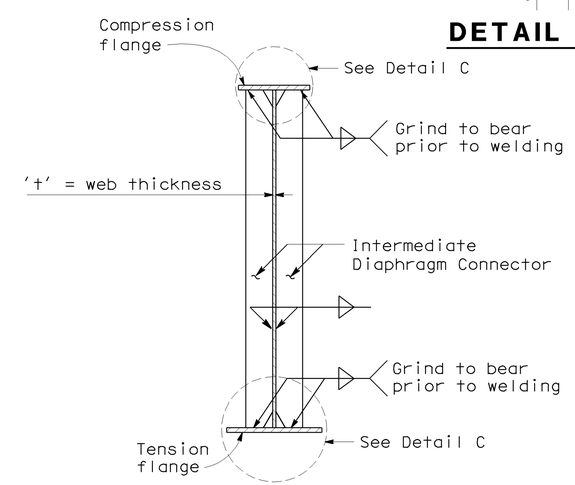


## SECTION C-C

(Intermediate Diaphragm Connectors)

NOTE:
THE CONTRACTOR SHALL VERIFY ALL CONTROLLING FIELD DIMENSIONS BEFORE ORDERING OR FABRICATING ANY MATERIAL.

| | BY | CHECKED |
|---|---|---|
| DESIGN | Shervin Pahlavan | Jose Higareda |
| DETAILS | Herman Mauroschadt | Richard Yates |
| QUANTITIES | Jenny Zhang | James Ralston |

STATE OF CALIFORNIA
DEPARTMENT OF TRANSPORTATION

DIVISION OF ENGINEERING SERVICES
STRUCTURE DESIGN
DESIGN BRANCH 15

BRIDGE NO. 53-1075
KILOMETER POST 43.6

LOS ANGELES RIVER BRIDGE AND SEPARATION (WIDEN)

STEEL GIRDER DETAILS

ALL DIMENSIONS ARE IN MILLIMETERS UNLESS OTHERWISE SHOWN

ORIGINAL SCALE IN MILLIMETERS FOR REDUCED PLANS 0 10 20 30 40 50 60 70 80 90 100

CU 07
EA 121841

DISREGARD PRINTS BEARING EARLIER REVISION DATES 2-23-07 11-21-08 11-21-08

REVISION DATES

SHEET 59 OF 64

FILE => 53-1075rl-w-stlgr_dt.dgn

STRUCTURES DESIGN DETAIL SHEET (METRIC) (REV.03-17-04)

USERNAME => trmikes1 DATE PLOTTED => 12-JUN-2009 TIME PLOTTED => 07:50

| DIST | COUNTY | ROUTE | KILOMETER POST TOTAL PROJECT | SHEET No | TOTAL SHEETS |
|---|---|---|---|---|---|
| 07 | LA | 5 | 42.8/47.3 | 633 | 1073 |

Caltrans Metric

Andrew P. Rittenhouse 12-05-08
REGISTERED CIVIL ENGINEER DATE

6-8-09
PLANS APPROVAL DATE

REGISTERED PROFESSIONAL ENGINEER Andrew P. Rittenhouse No. 61006 Exp. 12-31-10 CIVIL STATE OF CALIFORNIA

The State of California or its officers or agents shall not be responsible for the accuracy or completeness of electronic copies of this plan sheet.

**NOTES:**

1. For details not shown, see Structure Plans. For MR < 50 mm, adjust bar reinforcement to clear a sawcut for sealed joint, when required.
2. For drainage details, see "Structure Approach Drainage Details" sheet.
3. Longitudinal construction joints, when permitted by the Engineer, shall be located on lane lines.
4. End angle or plate at beginning of barrier transition, end of wingwall or end of structure approach as applicable.
5. For transverse contact joint with new PCC paving, refer to Standard Plan P10.
6. At the contractor's option, approach slab transverse reinforcement may be placed parallel to paving notch. Spacing of transverse reinforcement is measured along ℄ roadway.
7. When attaching to existing abutment, drill and bond into existing abutment backwall.

Remove all polystyrene.

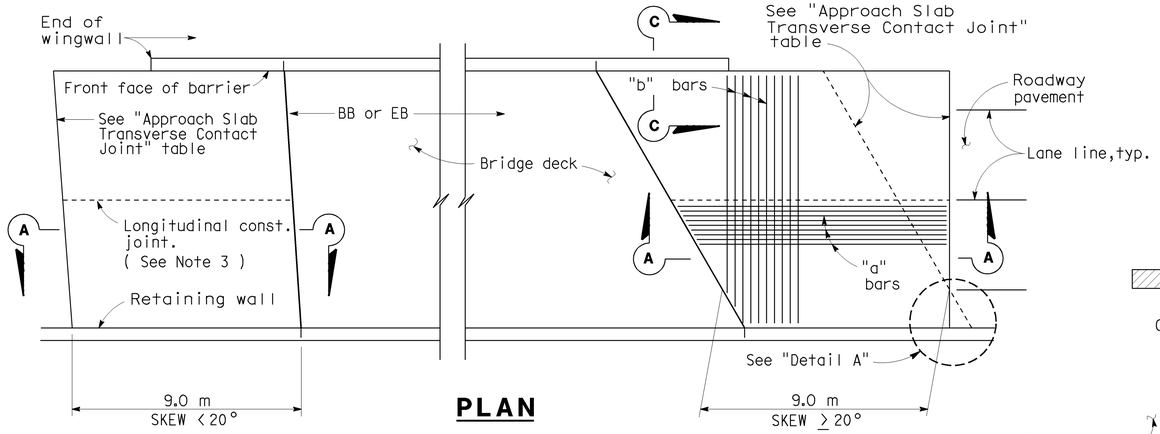


## PLAN

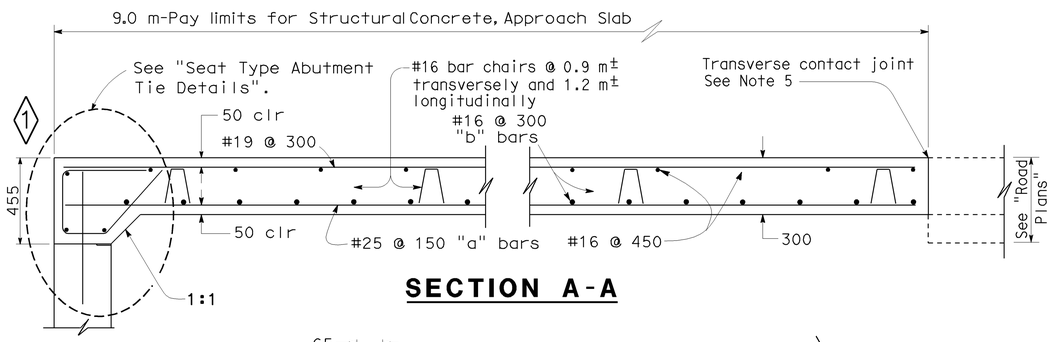


## SECTION A-A

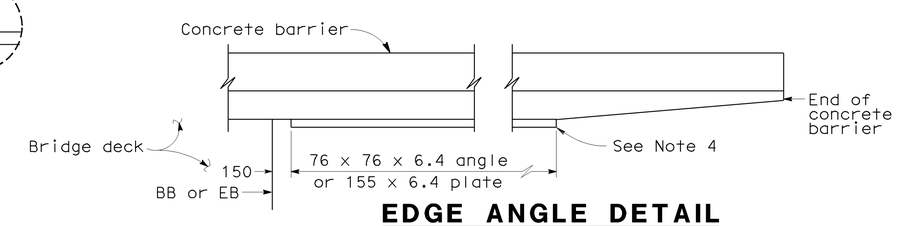


## EDGE ANGLE DETAIL

| APPROACH SLAB TRANSVERSE CONTACT JOINT | | |
|---|---|---|
| APPROACH SKEW | WITH AC ROADWAY PAVEMENT | WITH PCC ROADWAY PAVEMENT |
| < 20° | Parallel to face of paving notch | Parallel to face of paving notch |
| 20°- 45° | Parallel to face of P N use (Detail A) | Stagger lines 7.2 m to 10.8 m apart. |
| > 45° | Parallel to face of P N use (Detail A) | Stagger at each lane line. |

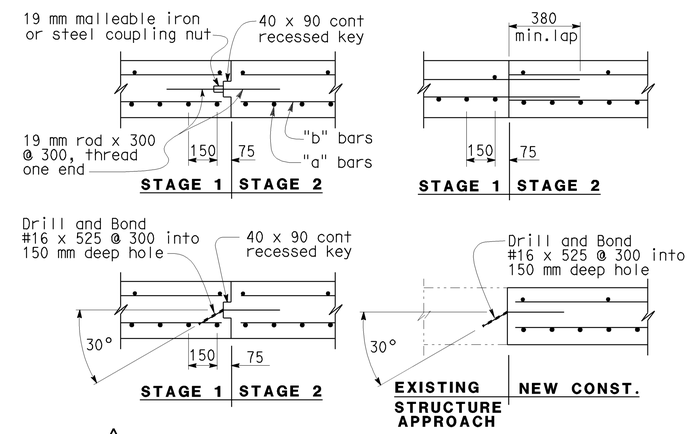


## ◇2 LONGITUDINAL CONSTRUCTION JOINT ALTERNATIVES

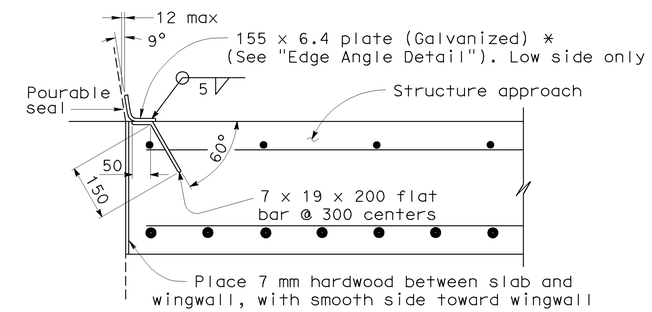


***(TO BE USED WITH TYPE 732 OR TYPE 736 CONCRETE BARRIER)**

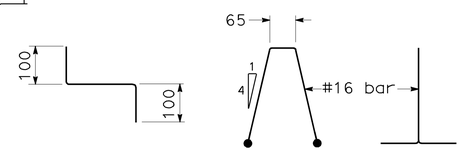


## BAR CHAIR DETAIL

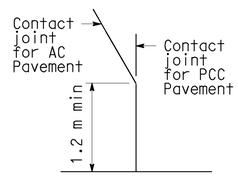


## DETAIL A

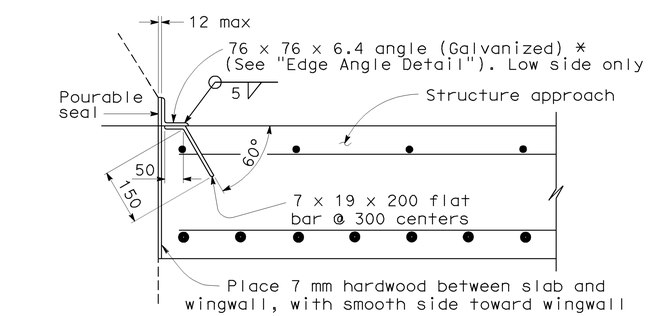


***(TO BE USED WITH TYPE 25 OR TYPE 27 CONCRETE BARRIER)**

## DETAIL B

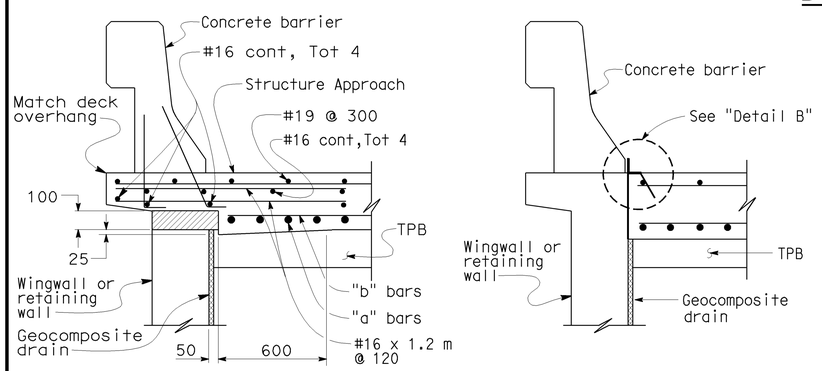


**TYPE E-1** **TYPE E-2**

## SECTION C-C

( Type E-1 to be used, unless otherwise shown on plans )

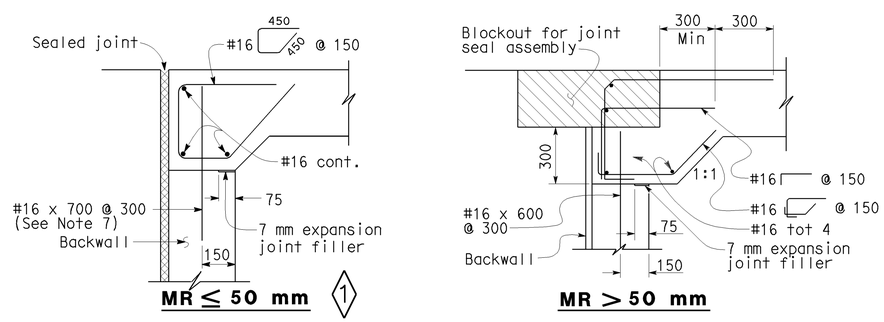


**MR ≤ 50 mm** ◇1 **MR > 50 mm**

## SEAT TYPE ABUTMENT TIE DETAILS ( SEE NOTE 1 )

NO SCALE
ALL DIMENSIONS ARE IN MILLIMETERS UNLESS OTHERWISE SHOWN

## SPECIAL DETAILS

| STANDARD DRAWING | | | | | |
|---|---|---|---|---|---|
| RELEASE DATE REVISED | DESIGN | BY M. TRAFFALIS | CHECKED E. THORKILDSEN | RELEASED BY | |
| FILE NO. xs3-120 | DETAILS | BY R. YEE | CHECKED E. THORKILDSEN | | |
| | SUBMITTED | BY M. HA | DRAWING DATE 4/98 | OFFICE CHIEF | |

◇1 MODIFIED DETAIL
◇2 ADDED DETAIL

STATE OF CALIFORNIA
DEPARTMENT OF TRANSPORTATION

DIVISION OF ENGINEERING SERVICES

BRIDGE NO. 53-1075
KILOMETER POST 43.6

LOS ANGELES RIVER BRIDGE AND SEP (WIDEN)
STRUCTURE APPROACH TYPE N(9S)

DS OSD 2147A (METRIC) (REV. 2/25/97)

ORIGINAL SCALE IN MILLIMETERS FOR REDUCED PLANS 0 10 20 30 40 50 60 70 80 90 100

CU 07
EA 121841

DISREGARD PRINTS BEARING EARLIER REVISION DATES

REVISION DATES (PRELIMINARY STAGE ONLY) 2-5-07 4-11-08 4-22-08 9-4-08 11-3-08 11-21-08

SHEET 58 OF 62

FILE => 53-1075r1-w-xs3-120.dgn

USERNAME => trinhnest DATE PLOTTED => 12-JUN-2009 TIME PLOTTED => 07:50

| DIST | COUNTY | ROUTE | KILOMETER POST TOTAL PROJECT | SHEET No | TOTAL SHEETS |
|---|---|---|---|---|---|
| 07 | LA | 5 | 42.8/47.3 | 634 | 1073 |

REGISTERED CIVIL ENGINEER 5-7-08

6-8-09
PLANS APPROVAL DATE

REGISTERED PROFESSIONAL ENGINEER
Qiang Huang
No. C055671
Exp. 12-31-08
CIVIL
STATE OF CALIFORNIA

The State of California or its officers or agents shall not be responsible for the accuracy or completeness of electronic copies of this plan sheet.

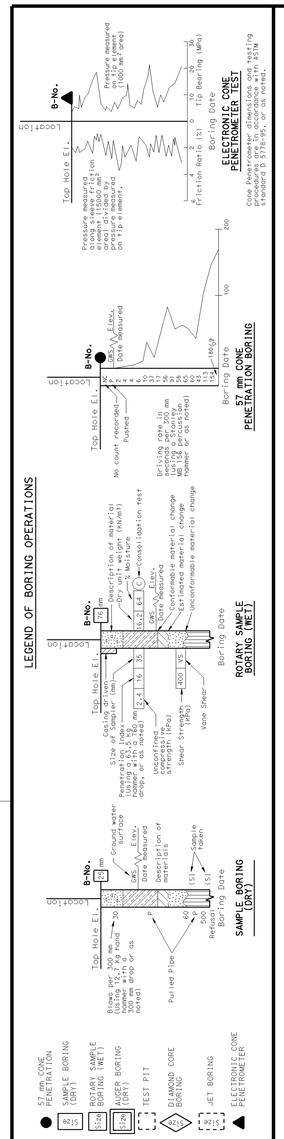


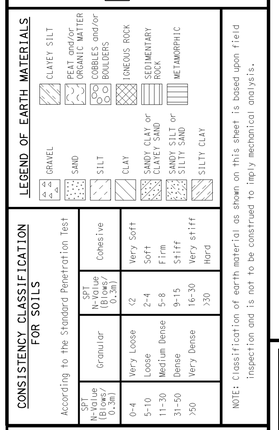


OGS CIVIL LOG OF TEST BORINGS SHEET (METRIC) (REV. 4/04)

## BENCH MARK

SURVEY CONTROL

PRHV1001
Fnd 0 SET POINT CONTROL POINT MAG
35.672 M Rt.℄ "CL1" LINE Rte 5
Sta. 435+56.730
N 572756.054
E 1973361.300
Elev. = 141.527

PRHV1178 (SHOWN ON PLAN NO.2)
Fnd 0 SET POINT CONTROL POINT MAG
54.394 M Lt.℄ "CL1" LINE Rte 5
Sta. 437+51.874
N 572854.124
E 1973168.738
Elev. = 142.565

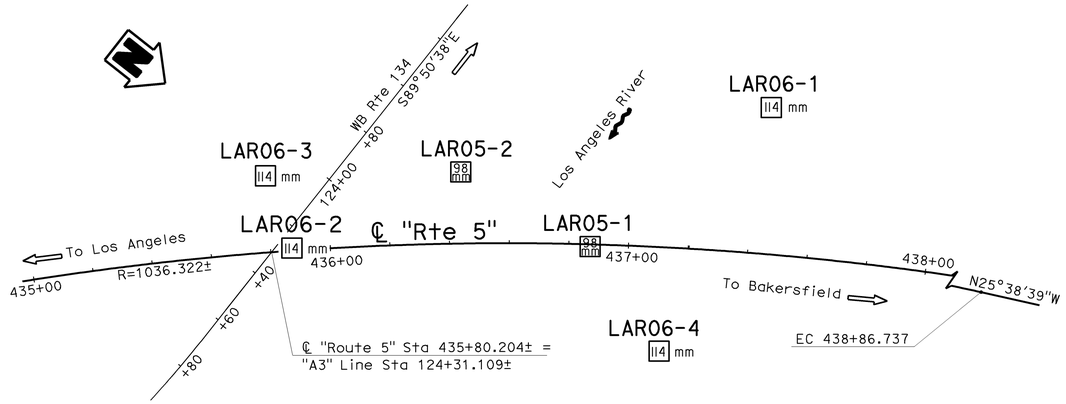


## PLAN
1:1000

Note: Groundwater not measured.

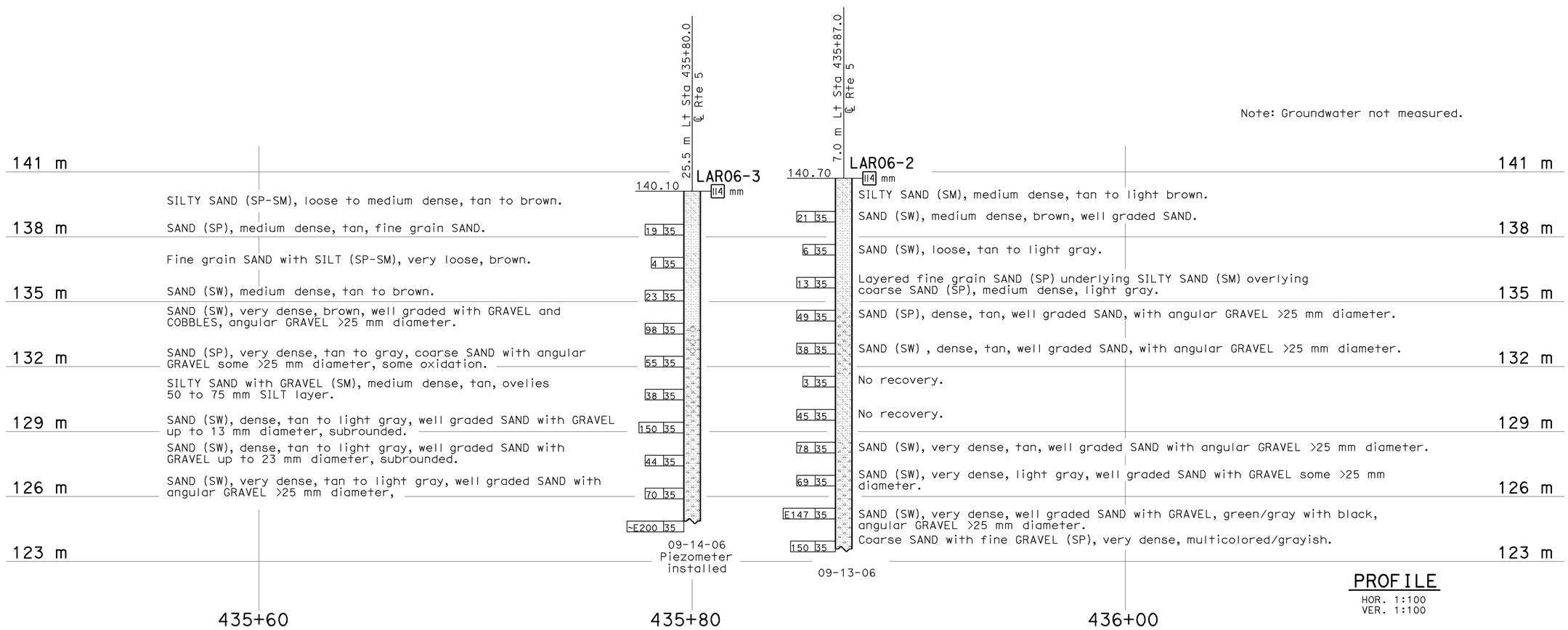


## PROFILE
HOR. 1:100
VER. 1:100

| ENGINEERING SERVICES | GEOTECHNICAL SERVICES |
|---|---|
| DRAWN BY | F. Nguyen 05/07 |
| CHECKED BY | B. Bertucci |

FIELD INVESTIGATION BY: C. Kark/B. Bertucci

STATE OF CALIFORNIA DEPARTMENT OF TRANSPORTATION

DIVISION OF ENGINEERING SERVICES STRUCTURE DESIGN
DESIGN BRANCH 15

BRIDGE NO. 53-1075
KILOMETER POST 43.6

LOS ANGELES RIVER BRIDGE AND SEPARATION (WIDEN)

LOG OF TEST BORINGS 1 OF 4

Caltrans Metric

ALL DIMENSIONS ARE IN METERS UNLESS OTHERWISE SHOWN

ORIGINAL SCALE IN MILLIMETERS FOR REDUCED PLANS 0 10 20 30 40 50 60 70 80 90 100

CU 07
EA 121841

DISREGARD PRINTS BEARING EARLIER REVISION DATES

REVISION DATES (PRELIMINARY STAGE ONLY) 05-29-07 04-29-08 11-4-08 11-21-08

SHEET 61 OF 64

FILE => 53-1075ri-z-lotb1.dgn

USERNAME => ttmikes1 DATE PLOTTED => 12-JUN-2009 TIME PLOTTED => 07:51

| DIST | COUNTY | ROUTE | KILOMETER POST TOTAL PROJECT | SHEET No | TOTAL SHEETS |
|---|---|---|---|---|---|
| 07 | LA | 5 | 42.8/47.3 | 635 | 1073 |

REGISTERED CIVIL ENGINEER 5-7-08

6-8-09
PLANS APPROVAL DATE

REGISTERED PROFESSIONAL ENGINEER
Qiang Huang
No. C055671
Exp. 12-31-08
CIVIL
STATE OF CALIFORNIA

The State of California or its officers or agents shall not be responsible for the accuracy or completeness of electronic copies of this plan sheet.

FOR PLAN VIEW, SEE
"LOG OF TEST BORINGS" 1 OF 4

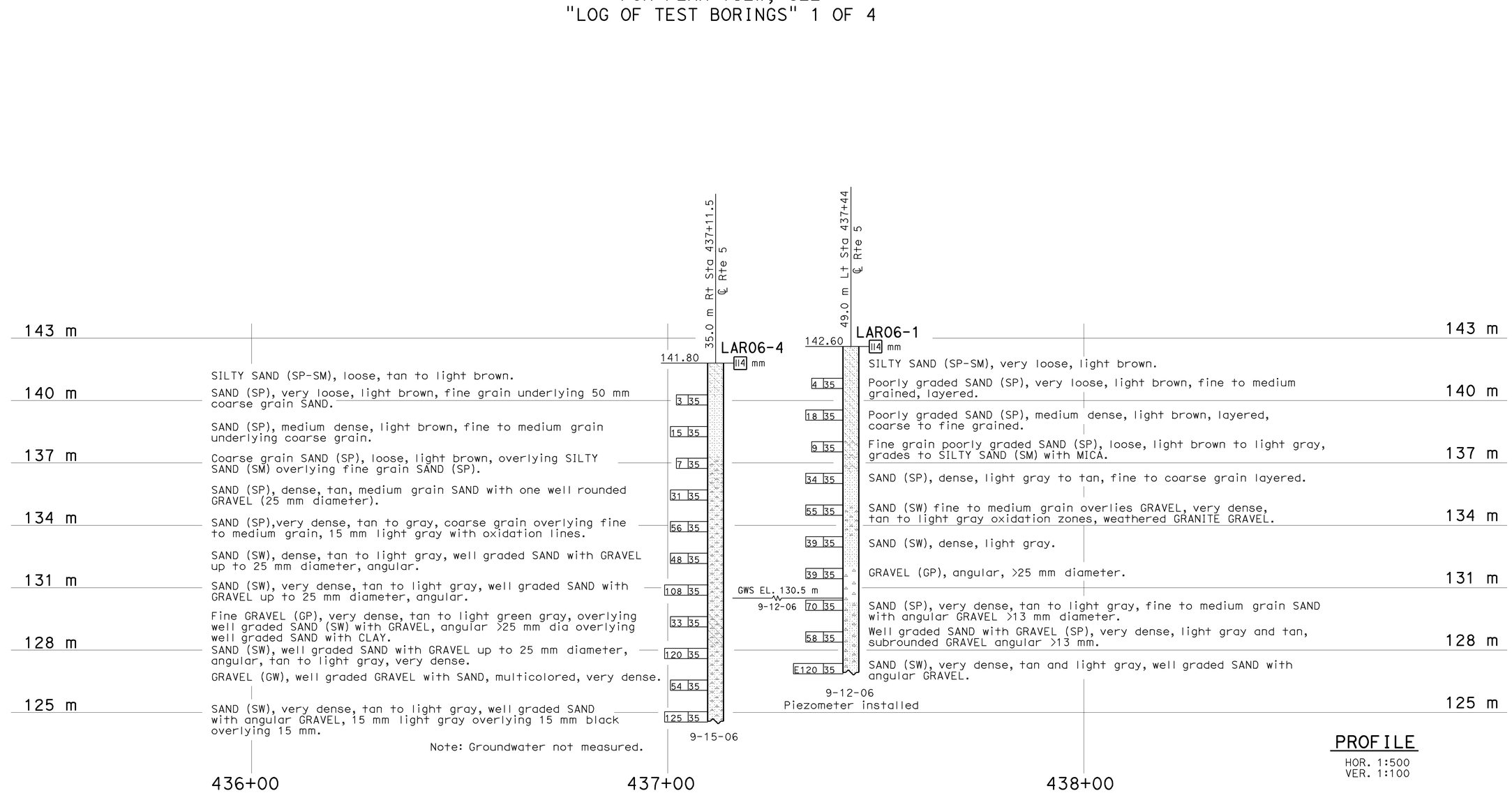


PROFILE
HOR. 1:500
VER. 1:100

LEGEND OF BORING OPERATIONS

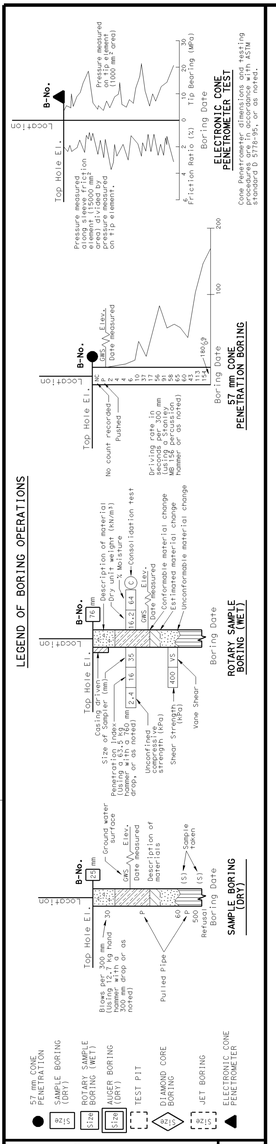


LEGEND OF EARTH MATERIALS

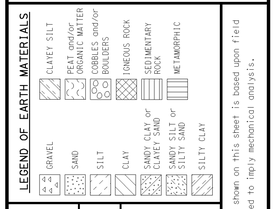


CONSISTENCY CLASSIFICATION FOR SOILS

According to the Standard Penetration Test

| SPT N-Value (Blows/0.3m) | Granular | SPT N-Value (Blows/0.3m) | Cohesive |
|---|---|---|---|
| 0-4 | Very Loose | <2 | Very Soft |
| 5-10 | Loose | 2-4 | Soft |
| 11-30 | Medium Dense | 5-8 | Firm |
| 31-50 | Dense | 9-15 | Stiff |
| >50 | Very Dense | 16-30 | Very stiff |
| | | >30 | Hard |

NOTE: Classification of earth material as shown on this sheet is based upon field inspection and is not to be construed to imply mechanical analysis.

OGS CIVIL LOG OF TEST BORINGS SHEET (METRIC) (REV. 4/04)

Caltrans Metric

| ENGINEERING SERVICES | GEOTECHNICAL SERVICES |
|---|---|
| DRAWN BY F. Nguyen 05/07 | |
| CHECKED BY B. Bertucci | |

FIELD INVESTIGATION BY: C. Kark/B. Bertucci

STATE OF CALIFORNIA DEPARTMENT OF TRANSPORTATION

DIVISION OF ENGINEERING SERVICES STRUCTURE DESIGN
DESIGN BRANCH 15

BRIDGE NO. 53-1075
KILOMETER POST 43.6

LOS ANGELES RIVER BRIDGE AND SEPARATION (WIDEN)
LOG OF TEST BORINGS 2 OF 4

ALL DIMENSIONS ARE IN METERS UNLESS OTHERWISE SHOWN

ORIGINAL SCALE IN MILLIMETERS FOR REDUCED PLANS 0 10 20 30 40 50 60 70 80 90 100

CU 07
EA 121841

DISREGARD PRINTS BEARING EARLIER REVISION DATES

REVISION DATES (PRELIMINARY STAGE ONLY) 06-22-07 04-29-08 11-3-08 11-21-08

SHEET 62 OF 64

FILE => 53-1075rl-z-lotb2.dgn

USERNAME => trmikesl DATE PLOTTED => 12-JUN-2009 TIME PLOTTED => 07:51

| DIST | COUNTY | ROUTE | KILOMETER POST TOTAL PROJECT | SHEET No | TOTAL SHEETS |
|---|---|---|---|---|---|
| 07 | LA | 5 | 42.8/47.3 | 636 | 1073 |

REGISTERED CIVIL ENGINEER 5-7-08

6-8-09
PLANS APPROVAL DATE

REGISTERED PROFESSIONAL ENGINEER Qiang Huang No. C055671 Exp. 12-31-08 CIVIL STATE OF CALIFORNIA

The State of California or its officers or agents shall not be responsible for the accuracy or completeness of electronic copies of this plan sheet.

NOTE:

The information presented on this drawing was not the result of any work developed, performed or completed this Department (Caltrans). The following party should account for all this information:

URS Corp.

It should be expressly understood that Caltrans assumes no responsibility whatsoever in respect to the sufficiency, accuracy, completeness, and interpretation set forth therein or any other aspect of the information shown or represented on this drawing.

FOR PLAN VIEW, SEE
"LOG OF TEST BORINGS" 1 OF 4

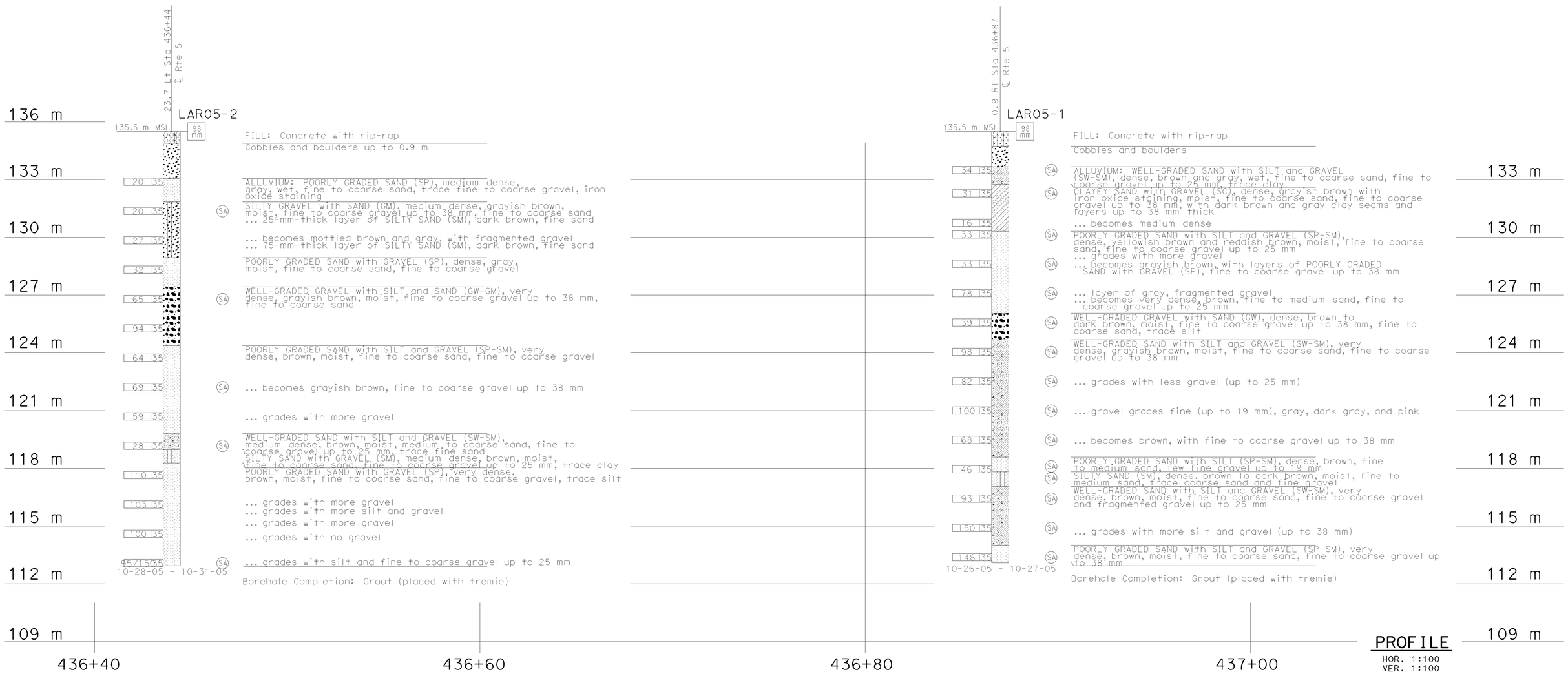


Caltrans Metric

| GEOTECHNICAL SERVICES | |
|---|---|
| PREPARED BY | I.G-Remmen 1/06 |
| CHECKED BY | B. Bertucci |

FIELD INVESTIGATION BY: URS CORP

STATE OF CALIFORNIA DEPARTMENT OF TRANSPORTATION

DIVISION OF ENGINEERING SERVICES STRUCTURE DESIGN
DESIGN BRANCH 15

BRIDGE NO. 53-1075
KILOMETER POST 43.6

LOS ANGELES RIVER BRIDGE AND SEPARATION (WIDEN)

LOG OF TEST BORINGS 3 OF 4

OGS CIVIL LOG OF TEST BORINGS SHEET (METRIC) (REV. 4/04)

ALL DIMENSIONS ARE IN METERS UNLESS OTHERWISE SHOWN

ORIGINAL SCALE IN MILLIMETERS FOR REDUCED PLANS 0 10 20 30 40 50 60 70 80 90 100

CU 07
EA 121841

DISREGARD PRINTS BEARING EARLIER REVISION DATES

REVISION DATES (PRELIMINARY STAGE ONLY) 04-29-08 11-14-08 11-21-08

SHEET 63 OF 64

FILE => 53-1075rl-z-lotb3.dgn

USERNAME => trmirkes1 DATE PLOTTED => 12-JUN-2009 TIME PLOTTED => 07:51

| DIST. | COUNTY | ROUTE | POSTMILE | SHEET NO. | TOTAL SHEETS |
|---|---|---|---|---|---|
| VII | LA | 4 | LA 6.4-8.1 | 30 | 32 |

AUGUST 23 1955

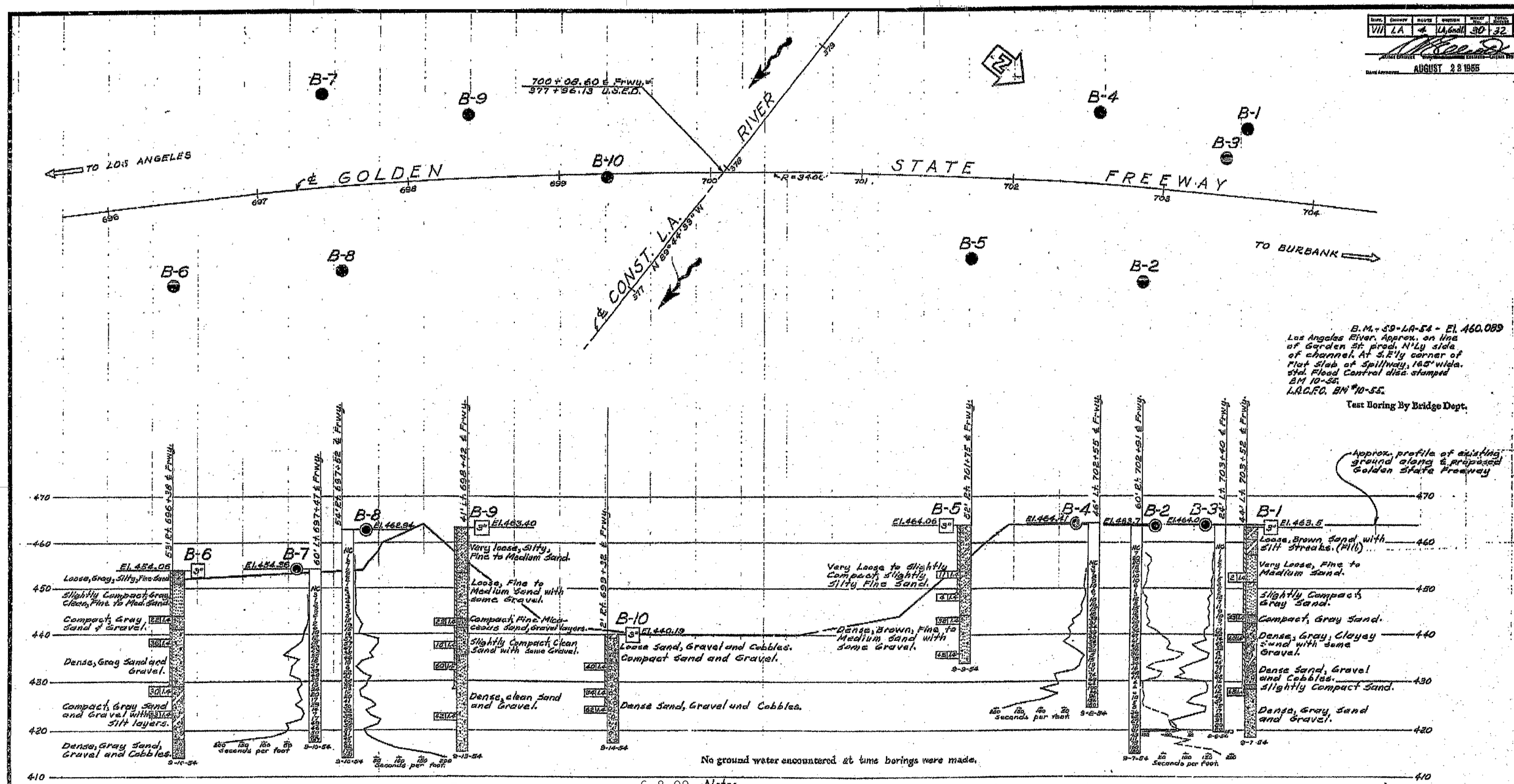


To accompany plans dated 6-8-09 **Note:** Ground water will correspond to water level in stream bed.

## Classification of Material Based on Standard Grade Size Limits

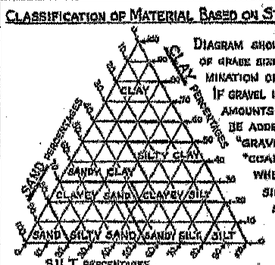


Diagram showing the basis for estimates of grade size distribution used in determination of class names.

If gravel is present in appreciable amounts the term "gravelly" may be added to the class name, viz. "gravelly sand". The terms "coarse", "medium" and "fine" when used to describe sand, silt and gravel, refer to standard grade size limits.

## Legend of Earth Materials

- Gravel
- Sand
- Silt
- Clay
- Sandy Clay or Clayey Sand
- Sandy Silt or Silty Sand
- Silty Clay or Clayey Silt
- Peat and/or Organic Matter
- Fill Material
- Igneous Rock
- Sedimentary Rock
- Metamorphic Rock

Plan of Ar
Penetrom
2¼" Cone
Sampler
Rotary
Auger B
Jet Bor
Core Br
Test Pi

DIVISION OF ENGINEERING SERVICES - GEOTECHNICAL SERVICES

The information represented on this drawing titled "ROSE HILLS OVERHEAD (SOUNDWALL AND WIDEN)" was not the result of any work developed, performed or completed by this Department (Caltrans). All such activity appears to be by those parties presented on this drawing who would bear all such responsibility. This drawing is available and presented only for the convenience of any bidder, contractor or interested party. It should be expressly understood that Caltrans assumes no responsibility whatsoever in respect to the sufficiency or accuracy, completeness, interpretation set forth therein or any other aspect of the information shown on or represented by this drawing.

| DIST. | COUNTY | ROUTE | POST MILES-TOTAL PROJECT | Sheet No. | Total Sheets |
|---|---|---|---|---|---|
| 07 | LA | 5 | 42.8/47.3 | 637 | 1073 |

Signed by: Date: 5-7-08

LOS ANGLES RIVER BRIDGE AND SEPERATION (WIDEN)

LOG OF TEST BORINGS 4 OF 4

The State of California or its officers or agents shall not be responsible for the accuracy or completeness of electronic copies of this plan sheet.

CU: 07
EA: 121841

BRIDGE No. 53-1075

Sheet 64 of 64

Revisions made to this Log of Test Borings from the original 1954 Log of Test Borings are the addition of the following table and notes:

REGISTERED PROFESSIONAL ENGINEER
Qiang Huang
No. C055671
Exp. 12-31-08
CIVIL
STATE OF CALIFORNIA

## OPERATIONS

| Boring | Station | Offset from ℄ Rte. 5 |
|---|---|---|
| B-1 | 437+65.9 | 65.9 m Left |
| B-2 | 437+46.3 | 46.3 m Right |
| B-3 | 437+61.9 | 61.9 m Left |
| B-4 | 437+35.7 | 35.7 m Left |
| B-5 | 437+10.0 | 10.0 m Right |
| B-6 | 435+45.0 | 45.0 m Right |
| B-7 | 435+79.6 | 79.6 m Left |
| B-8 | 435+81.1 | 81.1 m Right |
| B-9 | 436+07.0 | 07.0 m Left |
| B-10 | 436+34.8 | 34.8 m Right |

Notes:

1. See the General Plan and/or Foundation Plan for Metric Stationing.
2. The data are the metric locations for the As-Built Test Borings referenced to the proposed new structure location. This table is presented on the As-Built Log of Test Boring sheet for the convenience of any bidder, contractor or other interested party.

## NOTES

The contractor's attention is directed to Section 2, Article (c) of the Standard Specifications and to the Special Provisions accompanying this set of plans.

Classification of earth material as shown on this sheet is based upon field inspection and is not to be construed to imply mechanical analysis.

STATE OF CALIFORNIA
DEPARTMENT OF PUBLIC WORKS
DIVISION OF HIGHWAYS

# LOS ANGELES RIVER BRIDGE

## LOG OF TEST BORINGS

SCALE Horiz. 1"=30' Vert. 1"=10' | BRIDGE 53-1075 | FILE E-57 | DRAWING C-3767-30

53-1075rl-z-lotb4.tif

| DIST | COUNTY | ROUTE | KILOMETER POST TOTAL PROJECT | SHEET No | TOTAL SHEETS |
|---|---|---|---|---|---|
| 07 | LA | 5 | 42.8/47.3 | 638 | 1073 |

Andrew Rittenhouse 12-05-08
REGISTERED CIVIL ENGINEER DATE

6-8-09
PLANS APPROVAL DATE

REGISTERED PROFESSIONAL ENGINEER Andrew P. Rittenhouse No. C 61006 Exp. 12-31-10 CIVIL STATE OF CALIFORNIA

The State of California or its officers or agents shall not be responsible for the accuracy or completeness of electronic copies of this plan sheet.

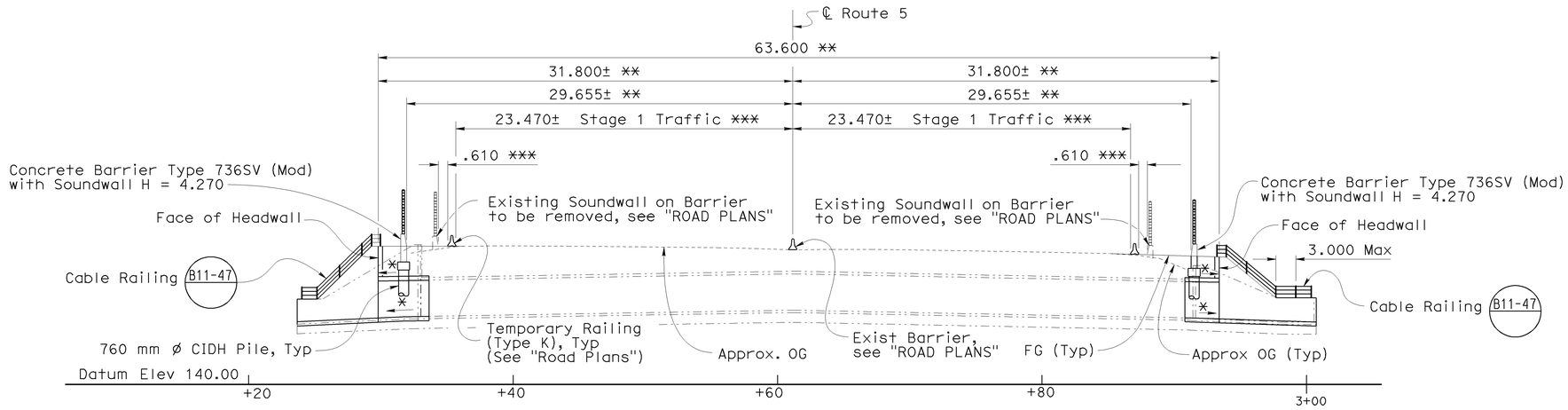


## ELEVATION A-A

1:200

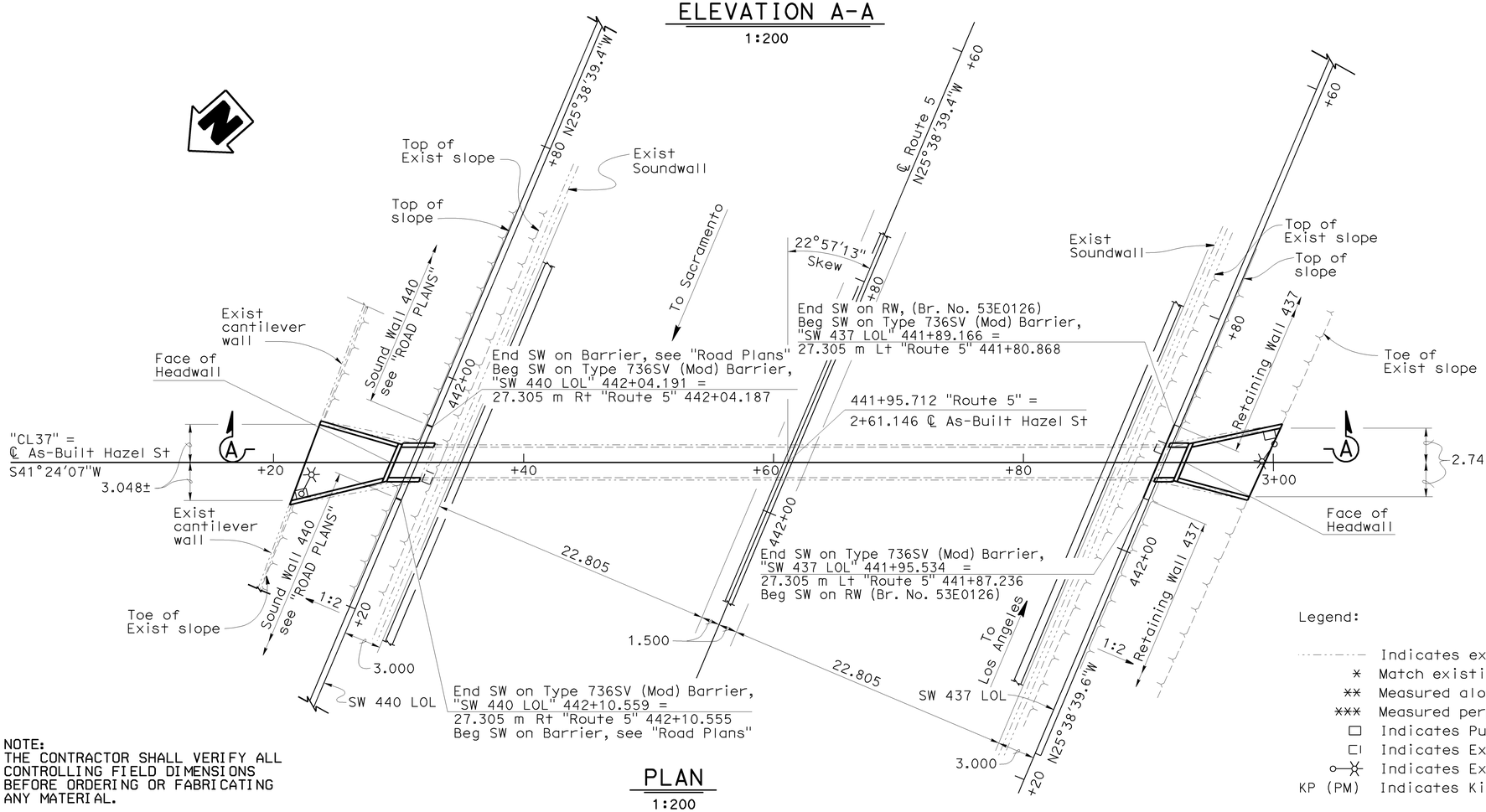


## PLAN

1:200

NOTE:
THE CONTRACTOR SHALL VERIFY ALL CONTROLLING FIELD DIMENSIONS BEFORE ORDERING OR FABRICATING ANY MATERIAL.

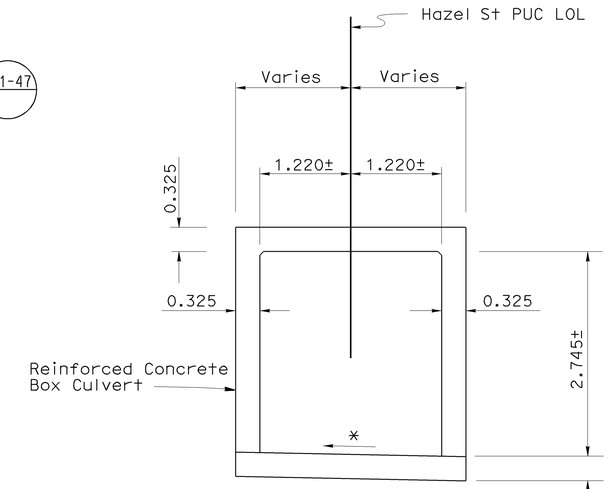


## TYPICAL SECTION

1:40

Note: Retaining wall and soundwall not shown for clarity.

QUANTITIES

| | LUMP | SUM |
|---|---|---|
| BRIDGE REMOVAL (PORTION), LOCATION B | | |
| 760 MM CAST-IN-DRILLED-HOLE CONCRETE PILING | 30 | m |
| CLASS 1 CONCRETE (BOX CULVERT) | 78 | $m^3$ |
| MINOR CONCRETE (PILE CAP) | 7 | $m^3$ |
| DRILL AND BOND DOWEL | 26 | m |
| SOUND WALL (MASONRY BLOCK) | 38 | $m^2$ |
| BAR REINFORCING STEEL (BRIDGE) | 900 | kg |
| BAR REINFORCING STEEL (BOX CULVERT) | 5 900 | kg |
| ASPHALT MEMBRANE WATERPROOFING | 79 | $m^2$ |
| CABLE RAILING | 77 | m |
| CONCRETE BARRIER (TYPE 736SV MODIFIED) | 12 | m |

Legend:

- Indicates existing structure
- * Match existing slope
- ** Measured along Hazel St PUC LOL
- *** Measured perpendicular to ℄ Route 5
- Indicates Pullbox, see "Road Plans"
- Indicates Exist Pullbox to be removed and replaced
- Indicates Existing Street Light, see "Road Plans"
- KP (PM) Indicates Kilometer Post (Post Mile)

Caltrans Metric

Traci Menard
DESIGN ENGINEER

| | BY | CHECKED | | | |
|---|---|---|---|---|---|
| DESIGN | S. Moradi | T. Menard | LOAD FACTOR DESIGN | LIVE LOADING: HS20-44 AND ALTERNATIVE AND PERMIT DESIGN LOAD | |
| DETAILS | D.Kish / H. Mauroschadt | T. Menard | LAYOUT | S. Moradi | T. Menard |
| QUANTITIES | S. Moradi | T. Menard | SPECIFICATIONS | T. Chen | PLANS AND SPECS COMPARED A. Rittenhouse |

ALL DIMENSIONS ARE IN METERS UNLESS OTHERWISE SHOWN

ORIGINAL SCALE IN MILLIMETERS FOR REDUCED PLANS 0 10 20 30 40 50 60 70 80 90 100

STATE OF CALIFORNIA
DEPARTMENT OF TRANSPORTATION

DIVISION OF ENGINEERING SERVICES
STRUCTURE DESIGN
DESIGN BRANCH 15

CU 07
EA 121841

BRIDGE NO. 53-1076
KP (PM) 44.2 (27.5)

DISREGARD PRINTS BEARING EARLIER REVISION DATES

REVISION DATES: 11-20-08 1-5-09 1-23-09 3-30-09 5-15-09 4-4-08 5-13-08 8-21-08 9-1-08 9-2-08

SHEET 1 OF 12

# HAZEL STREET PEDESTRIAN UC (MODIFY)

# GENERAL PLAN

FILE => 53-1076-a-gp01.dgn

STRUCTURES DESIGN GENERAL PLAN SHEET (METRIC) (REV.03-17-04)

USERNAME => trmikesl DATE PLOTTED => 15-JUN-2009 TIME PLOTTED => 13:20

| DIST | COUNTY | ROUTE | KILOMETER POST TOTAL PROJECT | SHEET No | TOTAL SHEETS |
|---|---|---|---|---|---|
| 07 | LA | 5 | 42.8/47.3 | 639 | 1073 |

Andrew Rittenhouse 12-05-08
REGISTERED CIVIL ENGINEER DATE

6-8-09
PLANS APPROVAL DATE

REGISTERED PROFESSIONAL ENGINEER Andrew P. Rittenhouse No. C 61006 Exp. 12-31-10 CIVIL STATE OF CALIFORNIA

The State of California or its officers or agents shall not be responsible for the accuracy or completeness of electronic copies of this plan sheet.

## INDEX TO PLANS


| Sheet No. | Title |
|---|---|
| 1 | GENERAL PLAN |
| 2 | INDEX TO PLANS |
| 3 | FOUNDATION PLAN |
| 4 | REMOVAL NO. 1 |
| 5 | REMOVAL NO. 2 |
| 6 | TYPICAL SECTION |
| 7 | EAST PORTAL DETAILS NO. 1 |
| 8 | EAST PORTAL DETAILS NO. 2 |
| 9 | WEST PORTAL DETAILS NO. 1 |
| 10 | WEST PORTAL DETAILS NO. 2 |
| 11 | MISCELLANEOUS DETAILS |
| 12 | LOG OF TEST BORINGS |


## GENERAL NOTES
## LOAD FACTOR DESIGN

DESIGN: BRIDGE DESIGN SPECIFICATIONS
(1996 AASHTO with Interims and Revisions by CALTRANS)

SEISMIC DESIGN: Caltrans Seismic Design Criteria (SDC), Version 1.4 June 2006

DEAD LOAD: Includes 1.675 KPa for future wearing surface

WIND LOAD: 1295 Pa

LIVE LOADING: HS20-44, Alternative Military and Permit design load

REINFORCED CONCRETE:

$f_y$ = 420 MPa

$f'_c$ = 25 MPa

n = 8

SOIL: ø = 35°

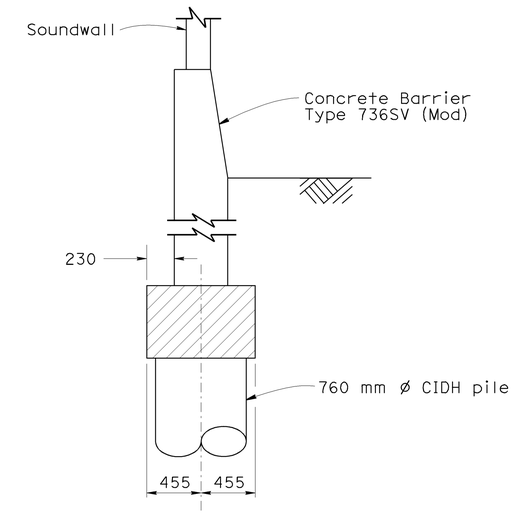


CONCRETE TYPE LIMITS (BARRIER)
1:25

## STANDARD PLANS DATED JULY 2004

| | | |
|---|---|---|
| | A10A | ABBREVIATIONS |
| | A10B | ABBREVIATIONS |
| | A62C | LIMITS OF PAYMENT FOR EXCAVATION AND BACKFILL-BRIDGE |
| | B0-3 | BRIDGE DETAILS |
| | B3-8 | RETAINING WALL DETAILS No. 1 |
| | B11-47 | CABLE RAILING |
| | B15-9 | SOUNDWALL MASONRY BLOCK MISCELLANEOUS DETAILS |
| | B15-15 | SOUNDWALL MASONRY BLOCK ON TYPE 736S / SV BARRIER ON PILE FOOTING FOR SPANNING UTILITIES |
| RSP | ES-7P | ELECTRICAL SYSTEMS (PEDESTRIAN BARRICADES) |

STANDARD PLAN SHEET NO.

DETAIL NO.

## PILE DATA TABLE

| LOCATION | PILE TYPE | DESIGN LOADING | NOMINAL RESISTANCE | | DESIGN TIP ELEVATION (m) | SPECIFIED TIP ELEVATION (m) |
|---|---|---|---|---|---|---|
| | | | COMPRESSION | TENSION | | |
| Soundwall 437 (Soundwall on Piles) | 760 mm CIDH | N/A | 400 kN | 0 | 142.5 (1)<br>140.5 (2) | 140.5 m |
| Soundwall 440 (Soundwall on Piles) | 760 mm CIDH | N/A | 400 kN | 0 | 143.5 (1)<br>141.5 (2) | 141.5 m |

Note:

Design tip elevations are controlled by the following demands:
(1) Compression (2) Lateral

Legend:

Indicates Minor Concrete (Pile Cap)

NOTE:
THE CONTRACTOR SHALL VERIFY ALL CONTROLLING FIELD DIMENSIONS BEFORE ORDERING OR FABRICATING ANY MATERIAL.

Caltrans Metric

ALL DIMENSIONS ARE IN MILLIMETERS UNLESS OTHERWISE SHOWN

ORIGINAL SCALE IN MILLIMETERS FOR REDUCED PLANS 0 10 20 30 40 50 60 70 80 90 100

| | BY | CHECKED |
|---|---|---|
| DESIGN | S. Moradi | T. Menard |
| DETAILS | D. Kish / H. Mauroschadt | T. Menard |
| QUANTITIES | S. Moradi | T. Menard |

STATE OF CALIFORNIA
DEPARTMENT OF TRANSPORTATION

DIVISION OF ENGINEERING SERVICES
STRUCTURE DESIGN
DESIGN BRANCH 15

CU 07
EA 121841

BRIDGE NO. 53-1076
KILOMETER POST 44.2

HAZEL STREET PEDESTRIAN UC (MODIFY)
INDEX TO PLANS

DISREGARD PRINTS BEARING EARLIER REVISION DATES

REVISION DATES: 9-2-08 11-20-08 1-5-09 1-22-09 3-30-09 5-18-08 6-10-08 8-22-08 9-1-08

SHEET 2 OF 12

STRUCTURES DESIGN DETAIL SHEET (METRIC) (REV.03-17-04)

FILE => 53-1076-b-itp.dgn

USERNAME => trmikesl DATE PLOTTED => 12-JUN-2009 TIME PLOTTED => 08:10

| DIST | COUNTY | ROUTE | KILOMETER POST TOTAL PROJECT | SHEET No | TOTAL SHEETS |
|---|---|---|---|---|---|
| 07 | LA | 5 | 42.8/47.3 | 640 | 1073 |

Caltrans Metric

Andrew Rittenhouse 12-05-08
REGISTERED CIVIL ENGINEER DATE

6-8-09
PLANS APPROVAL DATE

REGISTERED PROFESSIONAL ENGINEER
Andrew P. Rittenhouse
No. C 61006
Exp. 12-31-10
CIVIL
STATE OF CALIFORNIA

The State of California or its officers or agents shall not be responsible for the accuracy or completeness of electronic copies of this plan sheet.

(1) 442+00.999 SW 440 LOL = 2+33.938 ℄ OLD HAZEL St.

(2) 442+07.287 SW 440 LOL = 2+31.499 ℄ AS-BUILT HAZEL St.

(3) 441+89.424 ℄ RTE 5 = 2+63.585 ℄ OLD HAZEL St.

(4) 441+95.712 ℄ RTE 5 = 2+61.146 ℄ AS-BUILT HAZEL St.

(5) 441+86.158 SW 437 LOL = 2+93.238 ℄ OLD HAZEL St.

(6) 441+92.446 SW 437 LOL = 2+90.799 ℄ AS-BUILT HAZEL St.

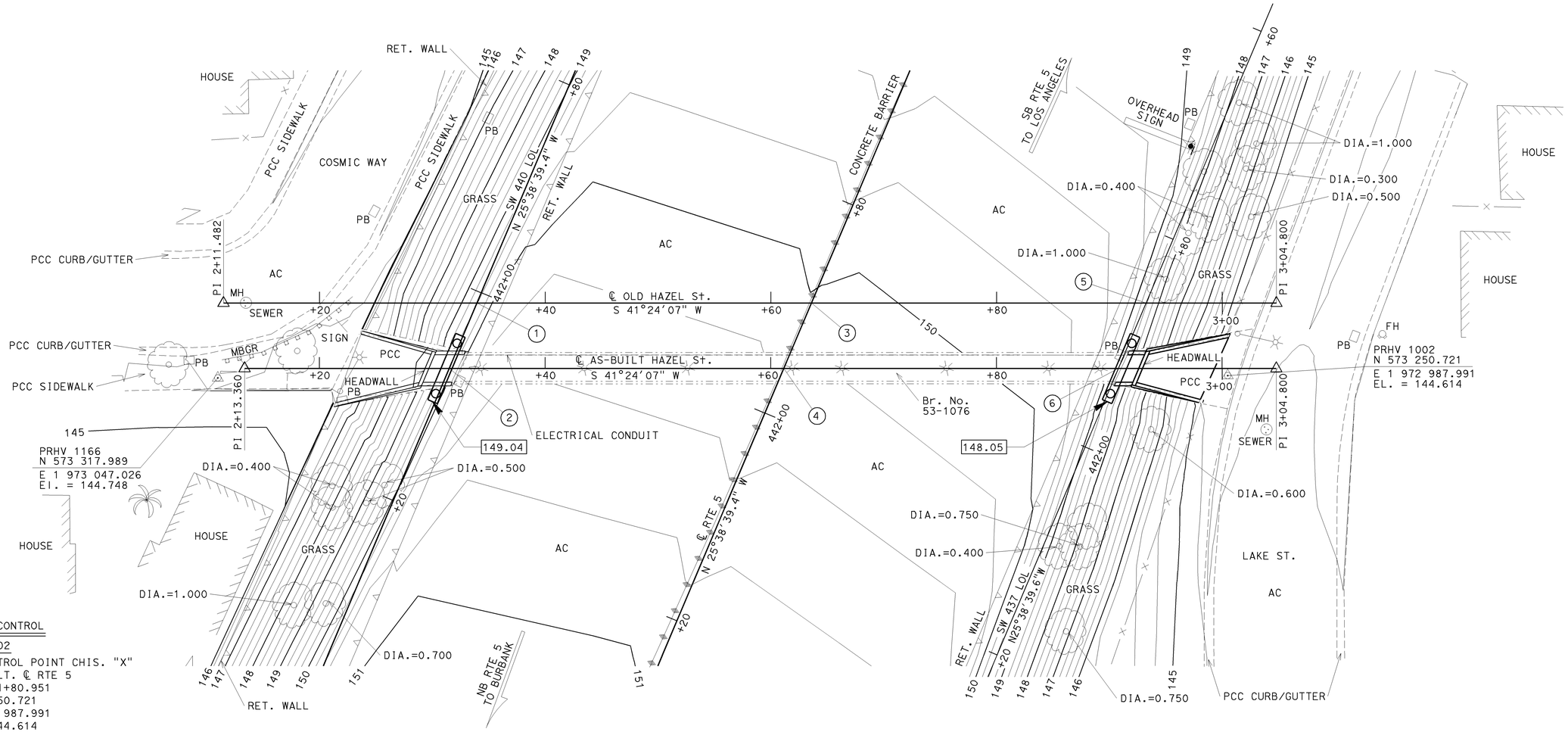


SURVEY CONTROL

PRHV 1002

FND CONTROL POINT CHIS. "X"
36.474 LT. ℄ RTE 5
STA. 441+80.951
N 573 250.721
E 1 972 987.991
EL. = 144.614

PRHV 1166

FND CONTROL POINT CHIS. "X"
45.858 RT. ℄ RTE 5
STA. 442+16.044
N 573 317.989
E 1 973 047.026
EL. = 144.748

NOTES:

1. NO EXIST. UNDERGROUND UTILITIES SHOWN
2. XXX.XX DENOTES BOTTOM OF PILE CAP ELEVATION

NOTE:
THE CONTRACTOR SHALL VERIFY ALL CONTROLLING FIELD DIMENSIONS BEFORE ORDERING OR FABRICATING ANY MATERIAL.

ALL DIMENSIONS ARE IN METERS UNLESS OTHERWISE SHOWN

PRELIMINARY INVESTIGATION SECTION

| SCALE | VERT. DATUM NAVD 88 | PHOTOGRAMMETRY AS OF: | | |
|---|---|---|---|---|
| 1:200 | HORZ. DATUM NAD 83 | SURVEYED BY H. REDERER 1/04 | DRAFTED BY G. GROUNDS 7/04 | |
| ALIGNMENT TIES DIST TRAVERSE SHEET | | FIELD CHECKED BY | CHECKED BY | |

| | BY | CHECKED |
|---|---|---|
| DESIGN | S. Moradi | T. Menard |
| DETAILS | H. Mauroschadt | T. Menard |
| QUANTITIES | S. Moradi | T. Menard |

STATE OF CALIFORNIA
DEPARTMENT OF TRANSPORTATION

DIVISION OF STRUCTURES
STRUCTURE DESIGN 15

BRIDGE NO. 53-1076
KILOMETER POST 44.2

# HAZEL STREET PEDESTRIAN UC (MODIFY)
# FOUNDATION PLAN

STRUCTURES FOUNDATION PLAN SHEET (METRIC) (REV.12-1-01)

ORIGINAL SCALE IN MILLIMETERS FOR REDUCED PLANS 0 10 20 30 40 50 60 70 80 90 100

CU 07
EA 121841

DISREGARD PRINTS BEARING EARLIER REVISION DATES

REVISION DATES (PRELIMINARY STAGE ONLY): 7-19-04 8-02-06 12-4-07 12-18-07 1-25-08 8-21-08 11-20-08 12-18-08 02-11-09

SHEET 3 OF 12

FILE => 53-1076-c-fp1.dgn

USERNAME => rtmirkes1 DATE PLOTTED => 12-JUN-2009 TIME PLOTTED => 08:10

| DIST | COUNTY | ROUTE | KILOMETER POST TOTAL PROJECT | SHEET No | TOTAL SHEETS |
|---|---|---|---|---|---|
| 07 | LA | 5 | 42.8/47.3 | 641 | 1073 |

Andrew Rittenhouse 12-05-08
REGISTERED CIVIL ENGINEER DATE

6-8-09
PLANS APPROVAL DATE

REGISTERED PROFESSIONAL ENGINEER
Andrew P. Rittenhouse
No. C 61006
Exp. 12-31-10
CIVIL
STATE OF CALIFORNIA

The State of California or its officers or agents shall not be responsible for the accuracy or completeness of electronic copies of this plan sheet.

ELEVATION

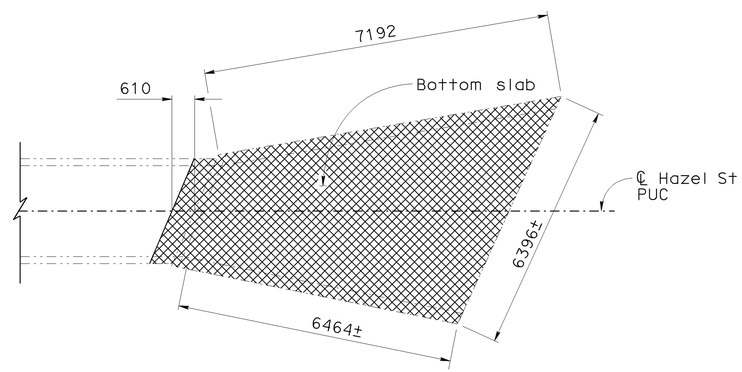


PLAN

Indicates Bridge Removal (Portion)

## LIMITS OF BRIDGE REMOVAL (WEST PORTAL)

No Scale

NOTE:
THE CONTRACTOR SHALL VERIFY ALL CONTROLLING FIELD DIMENSIONS BEFORE ORDERING OR FABRICATING ANY MATERIAL.

Caltrans Metric

| | BY | CHECKED |
|---|---|---|
| DESIGN | S. Moradi | T. Menard |
| DETAILS | S. Schenck / H. Mauroschadt | T. Menard |
| QUANTITIES | S. Moradi | T. Menard |

STATE OF CALIFORNIA
DEPARTMENT OF TRANSPORTATION

DIVISION OF ENGINEERING SERVICES
STRUCTURE DESIGN
DESIGN BRANCH 15

BRIDGE NO. 53-1076
KILOMETER POST 44.2

# HAZEL STREET PEDESTRIAN UC (MODIFY)
# REMOVAL NO. 1

ALL DIMENSIONS ARE IN MILLIMETERS UNLESS OTHERWISE SHOWN

ORIGINAL SCALE IN MILLIMETERS FOR REDUCED PLANS 0 10 20 30 40 50 60 70 80 90 100

CU 07
EA 121841

DISREGARD PRINTS BEARING EARLIER REVISION DATES

REVISION DATES: 1-5-09 3-30-09 1-24-08 3-5-08 4-2-08 5-13-08 6-24-08 9-3-08 11-28-08

SHEET 4 OF 12

FILE => 53-1076-d1-rem&earth.dgn

STRUCTURES DESIGN DETAIL SHEET (METRIC) (REV.03-17-04)

USERNAME => trmikhest DATE PLOTTED => 12-JUN-2009 TIME PLOTTED => 08:10

| DIST | COUNTY | ROUTE | KILOMETER POST TOTAL PROJECT | SHEET No | TOTAL SHEETS |
|---|---|---|---|---|---|
| 07 | LA | 5 | 42.8/47.3 | 642 | 1073 |

Andrew Rittenhouse 12-05-08
REGISTERED CIVIL ENGINEER DATE

6-8-09
PLANS APPROVAL DATE

REGISTERED PROFESSIONAL ENGINEER
Andrew P. Rittenhouse
No. C 61006
Exp. 12-31-10
CIVIL
STATE OF CALIFORNIA

The State of California or its officers or agents shall not be responsible for the accuracy or completeness of electronic copies of this plan sheet.

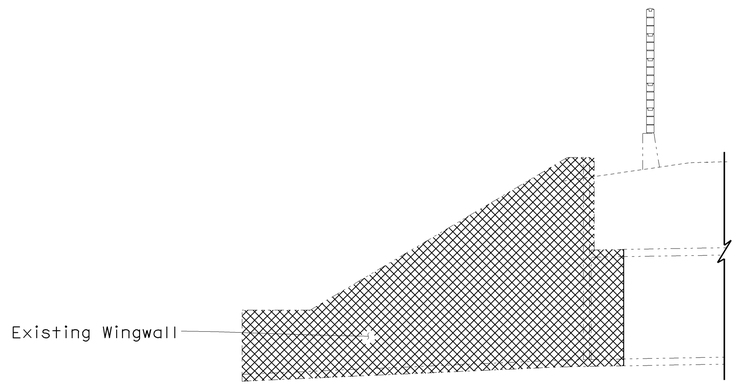


ELEVATION

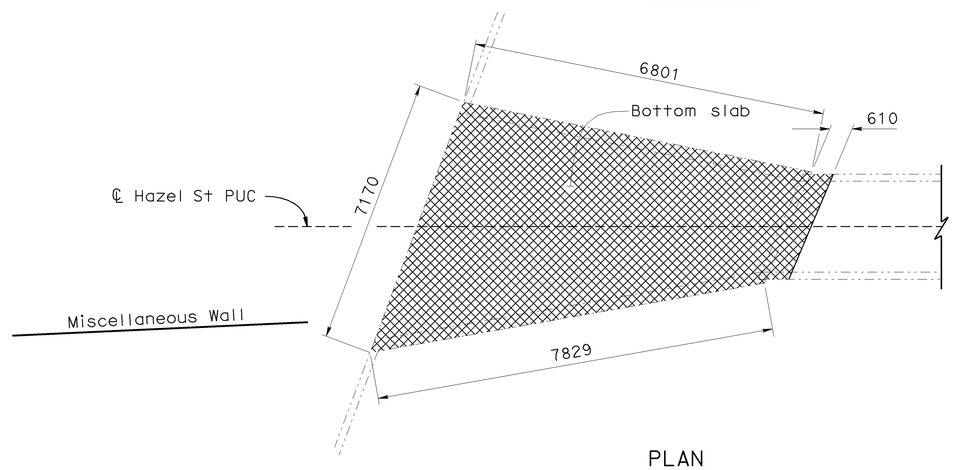


PLAN

Indicates Bridge Removal (Portion)

## LIMITS OF BRIDGE REMOVAL (EAST PORTAL)

No Scale

NOTE:
THE CONTRACTOR SHALL VERIFY ALL CONTROLLING FIELD DIMENSIONS BEFORE ORDERING OR FABRICATING ANY MATERIAL.

Caltrans Metric

| | BY | CHECKED |
|---|---|---|
| DESIGN | S. Moradi | T. Menard |
| DETAILS | S. Schenck / H. Mauroschadt | T. Menard |
| QUANTITIES | S. Moradi | T. Menard |

STATE OF CALIFORNIA
DEPARTMENT OF TRANSPORTATION

DIVISION OF ENGINEERING SERVICES
STRUCTURE DESIGN
DESIGN BRANCH 15

BRIDGE NO. 53-1076
KILOMETER POST 44.2

HAZEL STREET PEDESTRIAN UC (MODIFY)
REMOVAL NO. 2

ALL DIMENSIONS ARE IN MILLIMETERS UNLESS OTHERWISE SHOWN

ORIGINAL SCALE IN MILLIMETERS FOR REDUCED PLANS 0 10 20 30 40 50 60 70 80 90 100

CU 07
EA 121841

DISREGARD PRINTS BEARING EARLIER REVISION DATES

REVISION DATES: 8-30-06 | 12-15-07 | 1-24-08 | 3-5-08 | 4-2-08 | 5-13-08 | 9-1-08 | 11-20-08 | 3-30-09

SHEET 5 OF 12

FILE => 53-1076-d2-rem&earth.dgn

STRUCTURES DESIGN DETAIL SHEET (METRIC) (REV.03-17-04)

USERNAME => trmikesl DATE PLOTTED => 12-JUN-2009 TIME PLOTTED => 08:10

| DIST | COUNTY | ROUTE | KILOMETER POST TOTAL PROJECT | SHEET No | TOTAL SHEETS |
|---|---|---|---|---|---|
| 07 | LA | 5 | 42.8/47.3 | 643 | 1073 |

Andrew Rittenhouse 12-05-08
REGISTERED CIVIL ENGINEER DATE

6-8-09
PLANS APPROVAL DATE

REGISTERED PROFESSIONAL ENGINEER
Andrew P. Rittenhouse
No. C 61006
Exp. 12-31-10
CIVIL
STATE OF CALIFORNIA

The State of California or its officers or agents shall not be responsible for the accuracy or completeness of electronic copies of this plan sheet.

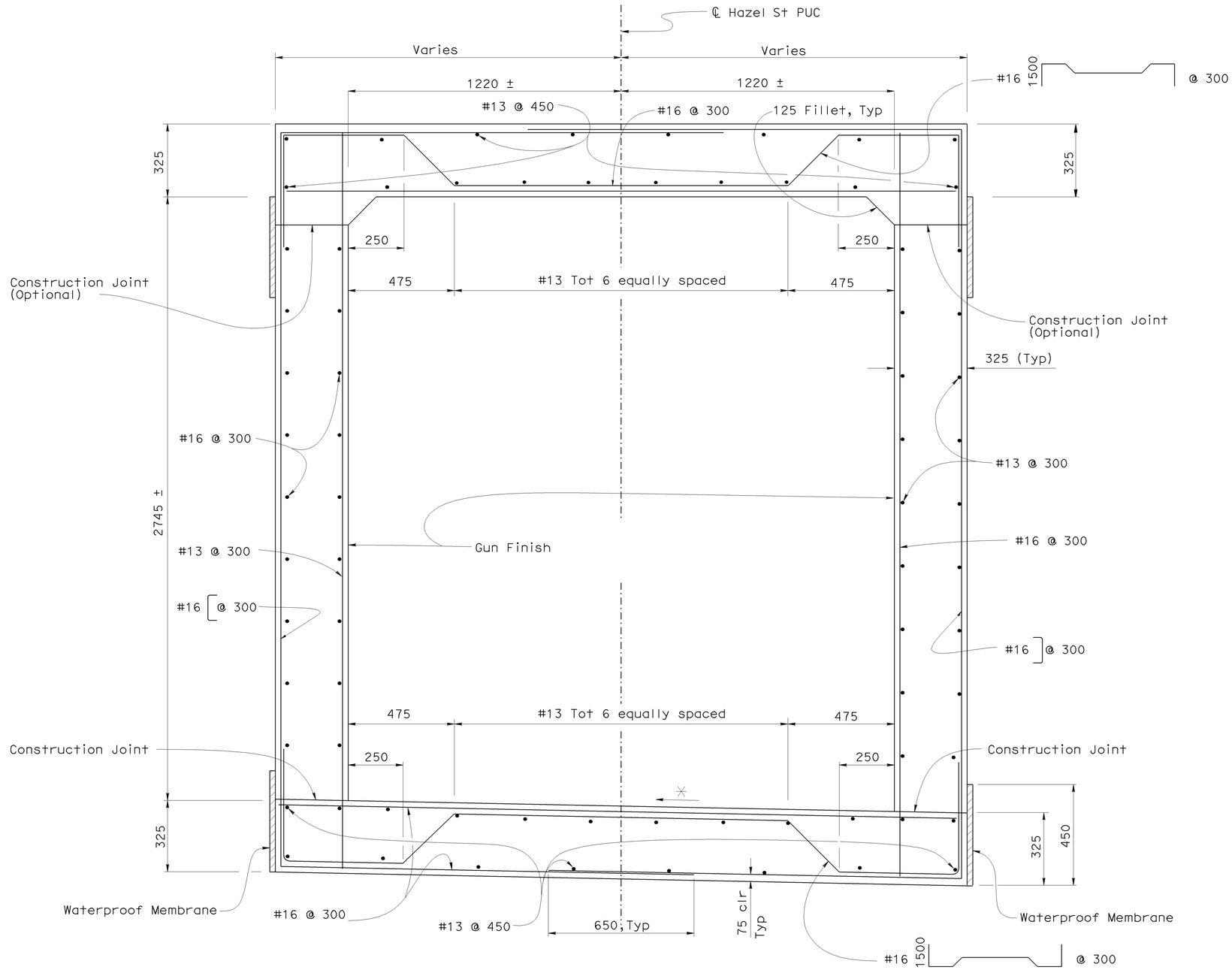


## TYPICAL SECTION

1:10

NOTE:
THE CONTRACTOR SHALL VERIFY ALL CONTROLLING FIELD DIMENSIONS BEFORE ORDERING OR FABRICATING ANY MATERIAL.

Notes:

Retaining wall and soundwall not shown for clarity.

✳ - Match existing cross slope

| | BY | CHECKED |
|---|---|---|
| DESIGN | S. Moradi | T. Menard |
| DETAILS | S. Schenck / H. Mauroschadt | T. Menard |
| QUANTITIES | S. Moradi | T. Menard |

STATE OF CALIFORNIA
DEPARTMENT OF TRANSPORTATION

DIVISION OF ENGINEERING SERVICES
STRUCTURE DESIGN
DESIGN BRANCH 15

BRIDGE NO. 53-1076
KILOMETER POST 44.2

# HAZEL STREET PEDESTRIAN UC (MODIFY)
# TYPICAL SECTION

Caltrans Metric

ALL DIMENSIONS ARE IN MILLIMETERS UNLESS OTHERWISE SHOWN

ORIGINAL SCALE IN MILLIMETERS FOR REDUCED PLANS 0 10 20 30 40 50 60 70 80 90 100

CU 07
EA 121841

DISREGARD PRINTS BEARING EARLIER REVISION DATES

REVISION DATES: 9-1-08 9-2-08 11-20-08 12-15-07 1-17-08 3-5-08 4-2-08 5-13-08 8-21-08

SHEET 6 OF 12

FILE => 53-1076-e-typ01.dgn

STRUCTURES DESIGN DETAIL SHEET (METRIC) (REV.03-17-04)

USERNAME => rtmrkes| DATE PLOTTED => 12-JUN-2009 TIME PLOTTED => 08:11

| DIST | COUNTY | ROUTE | KILOMETER POST TOTAL PROJECT | SHEET No | TOTAL SHEETS |
|---|---|---|---|---|---|
| 07 | LA | 5 | 42.8/47.3 | 644 | 1073 |

Andrew Rittenhouse 12-05-08
REGISTERED CIVIL ENGINEER DATE

6-8-09
PLANS APPROVAL DATE

REGISTERED PROFESSIONAL ENGINEER
Andrew P. Rittenhouse
No. C 61006
Exp. 12-31-10
CIVIL
STATE OF CALIFORNIA

The State of California or its officers or agents shall not be responsible for the accuracy or completeness of electronic copies of this plan sheet.

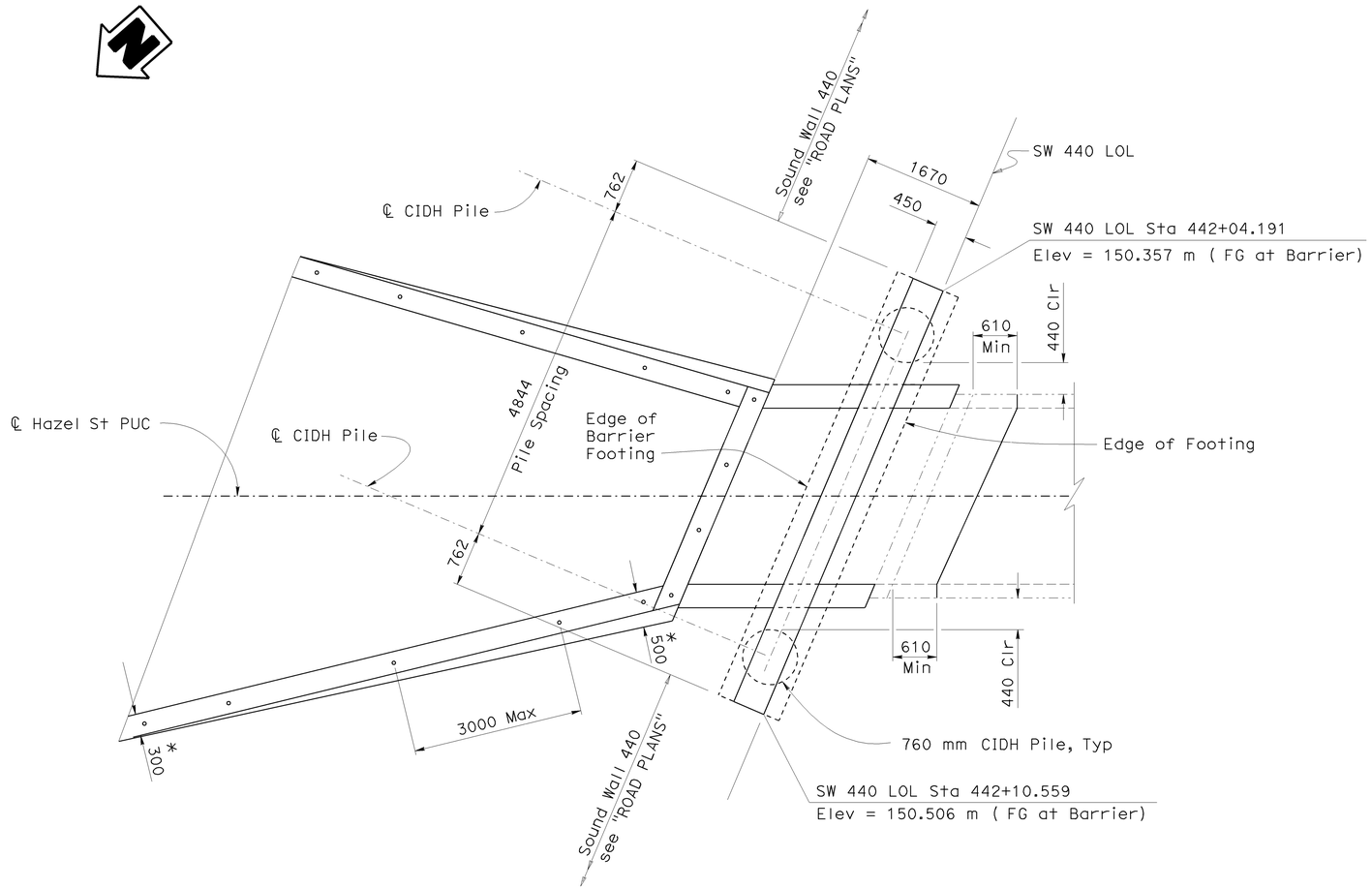


## PLAN
1:40

Notes:

* - Indicates bottom at wall thickness varies linearly between dimensions shown

∘ - Indicates Posts for Cable Railing B11-47

NOTE:
THE CONTRACTOR SHALL VERIFY ALL CONTROLLING FIELD DIMENSIONS BEFORE ORDERING OR FABRICATING ANY MATERIAL.

| | BY | CHECKED |
|---|---|---|
| DESIGN | S. Moradi | T. Menard |
| DETAILS | S. Schenck / H. Mauroschadt | T. Menard |
| QUANTITIES | S. Moradi | T. Menard |

Caltrans Metric

ALL DIMENSIONS ARE IN MILLIMETERS UNLESS OTHERWISE SHOWN

ORIGINAL SCALE IN MILLIMETERS FOR REDUCED PLANS 0 10 20 30 40 50 60 70 80 90 100

STATE OF CALIFORNIA
DEPARTMENT OF TRANSPORTATION

DIVISION OF ENGINEERING SERVICES
STRUCTURE DESIGN
DESIGN BRANCH 15

CU 07
EA 121841

BRIDGE NO. 53-1076
KILOMETER POST 44.2

# HAZEL STREET PEDESTRIAN UC (MODIFY)
# EAST PORTAL DETAILS NO. 1

DISREGARD PRINTS BEARING EARLIER REVISION DATES

REVISION DATES: 11-20-08 | 11-26-07 | 12-12-07 | 1-18-08 | 3-4-08 | 4-7-08 | 5-15-08 | 8-27-08 | 9-1-08

SHEET 7 OF 12

FILE => 53-1076-f-edet01.dgn

STRUCTURES DESIGN DETAIL SHEET (METRIC) (REV.03-17-04)

USERNAME => rrmikesl DATE PLOTTED => 12-JUN-2009 TIME PLOTTED => 08:11

| DIST | COUNTY | ROUTE | KILOMETER POST TOTAL PROJECT | SHEET No | TOTAL SHEETS |
|---|---|---|---|---|---|
| 07 | LA | 5 | 42.8/47.3 | 645 | 1073 |

Andrew Rittenhouse 12-05-08
REGISTERED CIVIL ENGINEER DATE

6-8-09
PLANS APPROVAL DATE

REGISTERED PROFESSIONAL ENGINEER Andrew P. Rittenhouse No. C 61006 Exp. 12-31-10 CIVIL STATE OF CALIFORNIA

The State of California or its officers or agents shall not be responsible for the accuracy or completeness of electronic copies of this plan sheet.

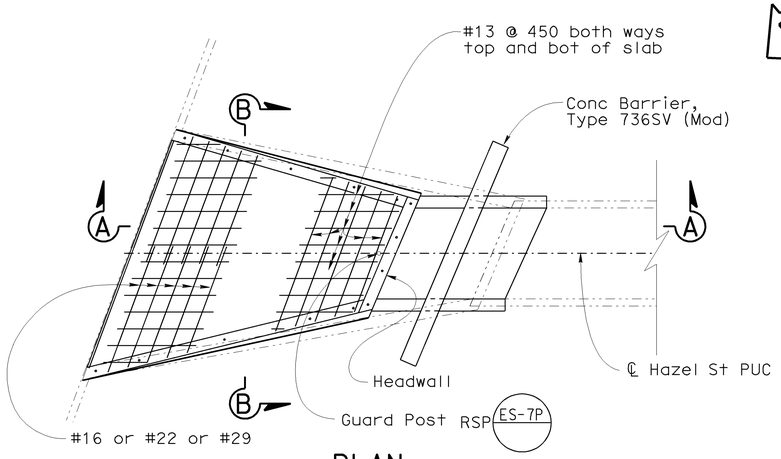


PLAN
1:80

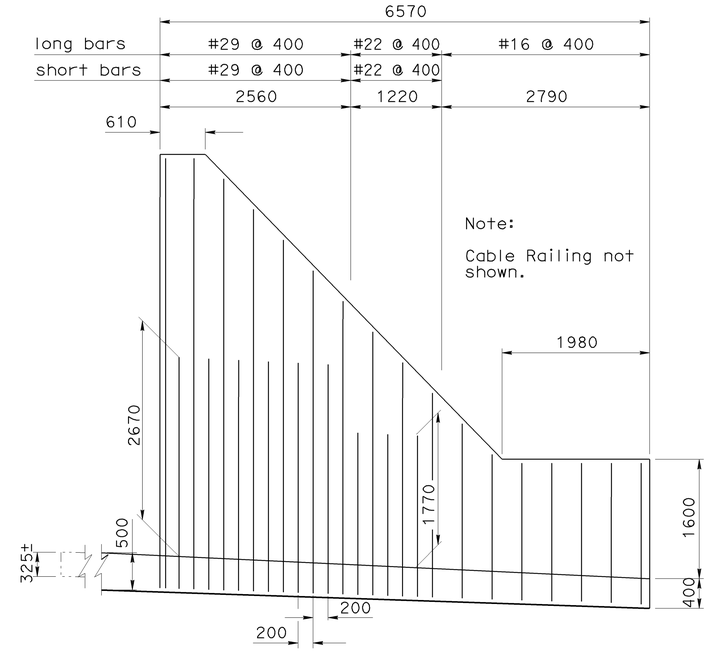


SOUTH SIDE EAST PORTAL ELEVATION
1:40

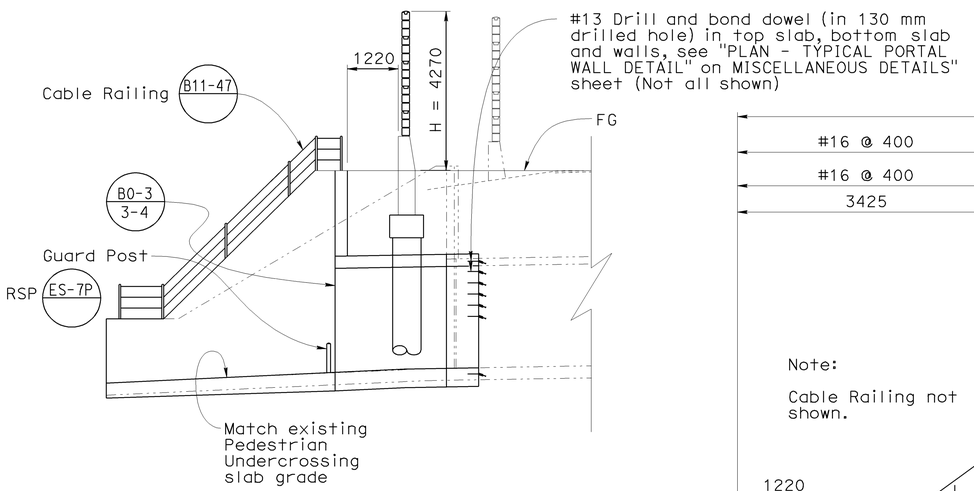


SECTION A-A
1:80

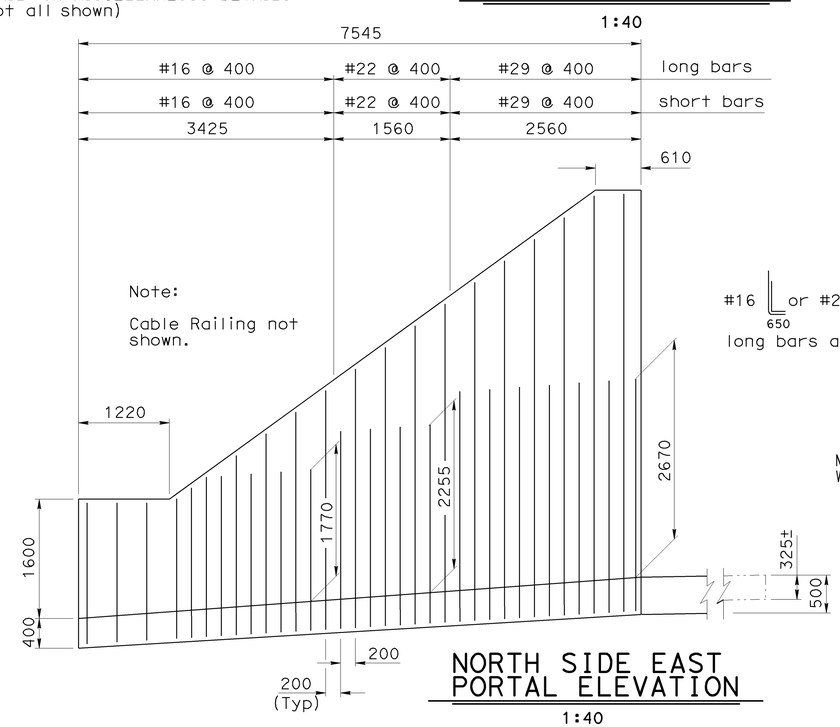


NORTH SIDE EAST PORTAL ELEVATION
1:40

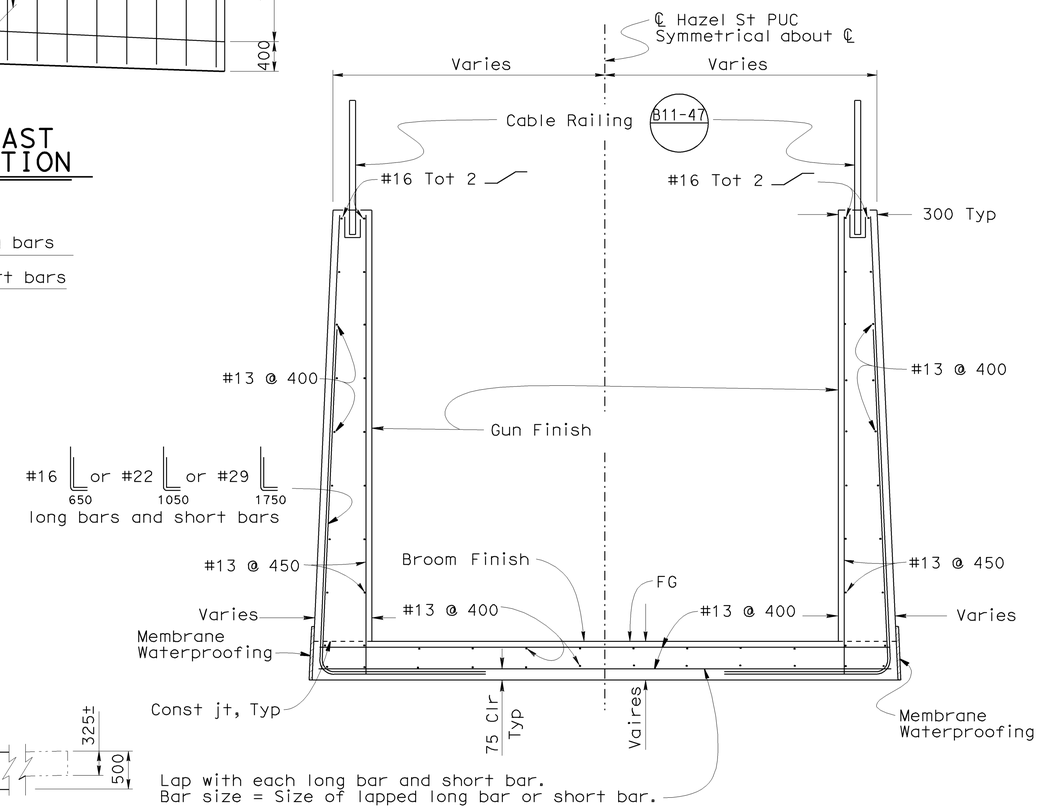


SECTION B-B
1:25

NOTE:
THE CONTRACTOR SHALL VERIFY ALL CONTROLLING FIELD DIMENSIONS BEFORE ORDERING OR FABRICATING ANY MATERIAL.

| | BY | CHECKED |
|---|---|---|
| DESIGN | S. Moradi | T. Menard |
| DETAILS | S. Schenck / H. Mauroschadt | T. Menard |
| QUANTITIES | S. Moradi | T. Menard |

STATE OF CALIFORNIA
DEPARTMENT OF TRANSPORTATION

DIVISION OF ENGINEERING SERVICES
STRUCTURE DESIGN
DESIGN BRANCH 15

BRIDGE NO. 53-1076
KILOMETER POST 44.2

# HAZEL STREET PEDESTRIAN UC (MODIFY)
# EAST PORTAL DETAILS NO. 2

ALL DIMENSIONS ARE IN MILLIMETERS UNLESS OTHERWISE SHOWN

ORIGINAL SCALE IN MILLIMETERS FOR REDUCED PLANS 0 10 20 30 40 50 60 70 80 90 100

CU 07
EA 121841

DISREGARD PRINTS BEARING EARLIER REVISION DATES

REVISION DATES: 9-2-08 11-20-08 12-18-07 1-22-08 3-5-08 4-1-08 5-13-08 8-24-08 9-1-08

SHEET 8 OF 12

FILE => 53-1076-f-edet02.dgn

STRUCTURES DESIGN DETAIL SHEET (METRIC) (REV.03-17-04)

USERNAME => trmikes1 DATE PLOTTED => 12-JUN-2009 TIME PLOTTED => 08:11

| DIST | COUNTY | ROUTE | KILOMETER POST TOTAL PROJECT | SHEET No | TOTAL SHEETS |
|---|---|---|---|---|---|
| 07 | LA | 5 | 42.8/47.3 | 646 | 1073 |

Andrew Rittenhouse 12-05-08
REGISTERED CIVIL ENGINEER DATE

6-8-09
PLANS APPROVAL DATE

REGISTERED PROFESSIONAL ENGINEER
Andrew P. Rittenhouse
No. C 61006
Exp. 12-31-10
CIVIL
STATE OF CALIFORNIA

The State of California or its officers or agents shall not be responsible for the accuracy or completeness of electronic copies of this plan sheet.

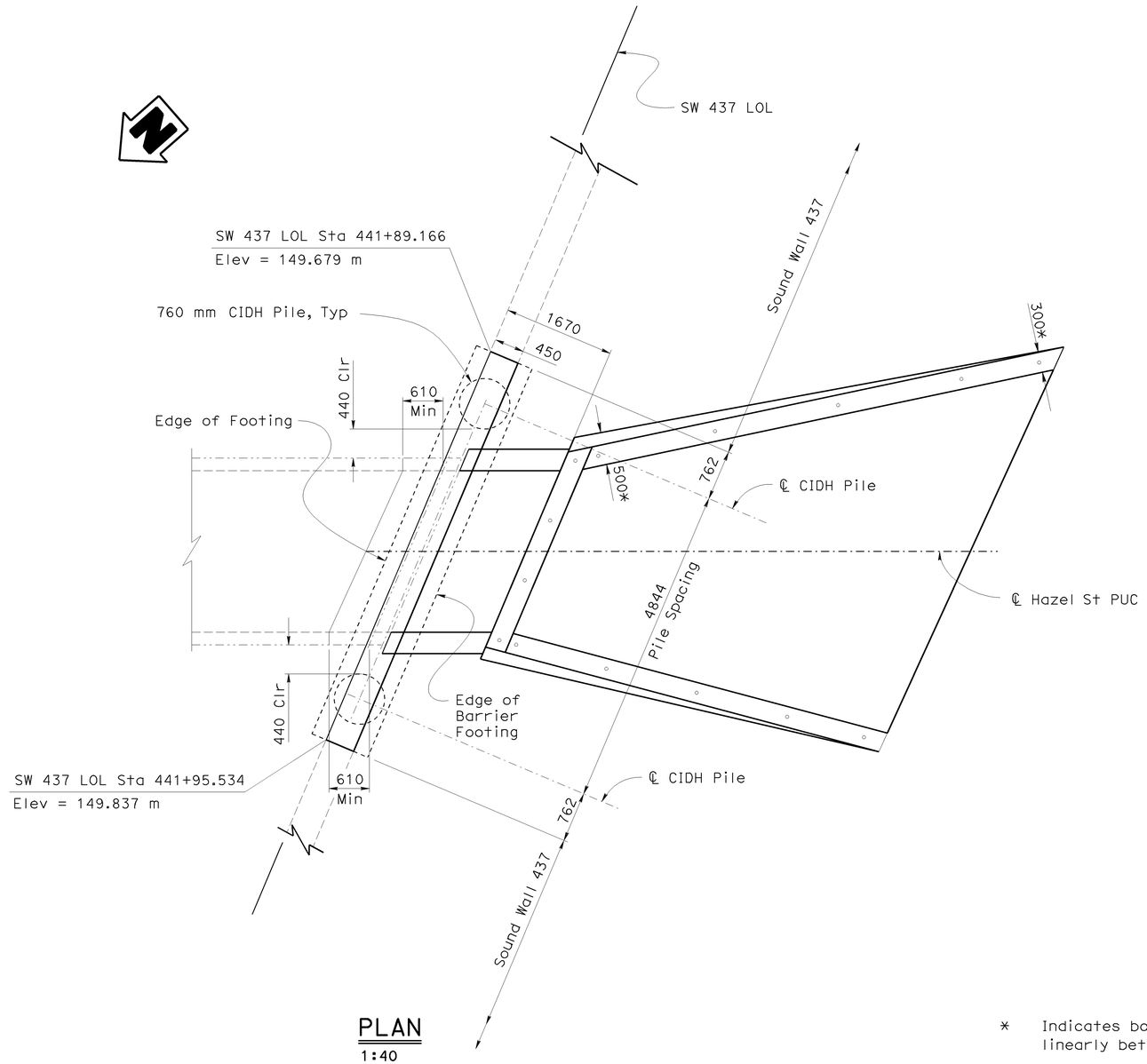


PLAN
1:40

* Indicates bottom of wall thickness, varies linearly between dimensions shown

∘ - Indicates Posts for Cable Railing B11-47

NOTE:
THE CONTRACTOR SHALL VERIFY ALL CONTROLLING FIELD DIMENSIONS BEFORE ORDERING OR FABRICATING ANY MATERIAL.

Caltrans Metric

| | BY | CHECKED |
|---|---|---|
| DESIGN | S. Moradi | T. Menard |
| DETAILS | S. Schenck / H. Mauroschadt | T. Menard |
| QUANTITIES | S. Moradi | T. Menard |

ALL DIMENSIONS ARE IN MILLIMETERS UNLESS OTHERWISE SHOWN

ORIGINAL SCALE IN MILLIMETERS FOR REDUCED PLANS 0 10 20 30 40 50 60 70 80 90 100

STATE OF CALIFORNIA
DEPARTMENT OF TRANSPORTATION

DIVISION OF ENGINEERING SERVICES
STRUCTURE DESIGN
DESIGN BRANCH 15

CU 07
EA 121841

BRIDGE NO. 53-1076
KILOMETER POST 44.2

# HAZEL STREET PEDESTRIAN UC (MODIFY)
# WEST PORTAL DETAILS NO. 1

DISREGARD PRINTS BEARING EARLIER REVISION DATES

REVISION DATES: 12-18-07 | 1-18-08 | 3-4-08 | 4-2-08 | 5-13-08 | 8-21-08 | 9-1-08 | 9-2-08 | 11-20-08

SHEET 9 OF 12

FILE => 53-1076-f-wdet01.dgn

STRUCTURES DESIGN DETAIL SHEET (METRIC) (REV.03-17-04)

USERNAME => rtmikes1 DATE PLOTTED => 12-JUN-2009 TIME PLOTTED => 08:11

| DIST | COUNTY | ROUTE | KILOMETER POST TOTAL PROJECT | SHEET No | TOTAL SHEETS |
|---|---|---|---|---|---|
| 07 | LA | 5 | 42.8/47.3 | 647 | 1073 |

Andrew P. Rittenhouse 12-05-08
REGISTERED CIVIL ENGINEER DATE

6-8-09
PLANS APPROVAL DATE

REGISTERED PROFESSIONAL ENGINEER Andrew P. Rittenhouse No. C 61006 Exp. 12-31-10 CIVIL STATE OF CALIFORNIA

The State of California or its officers or agents shall not be responsible for the accuracy or completeness of electronic copies of this plan sheet.

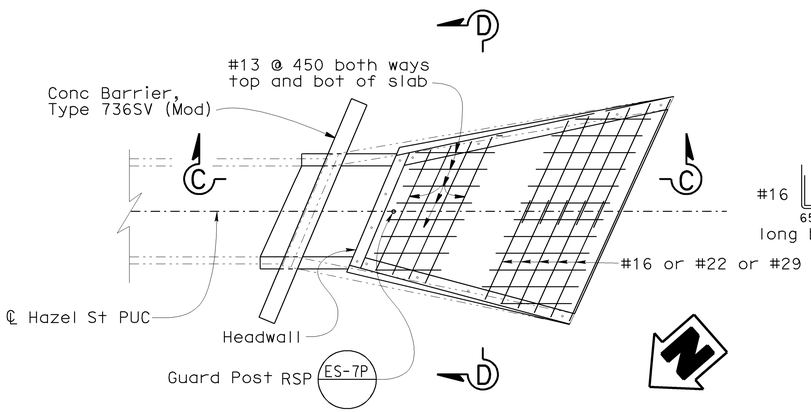


PLAN
1:80

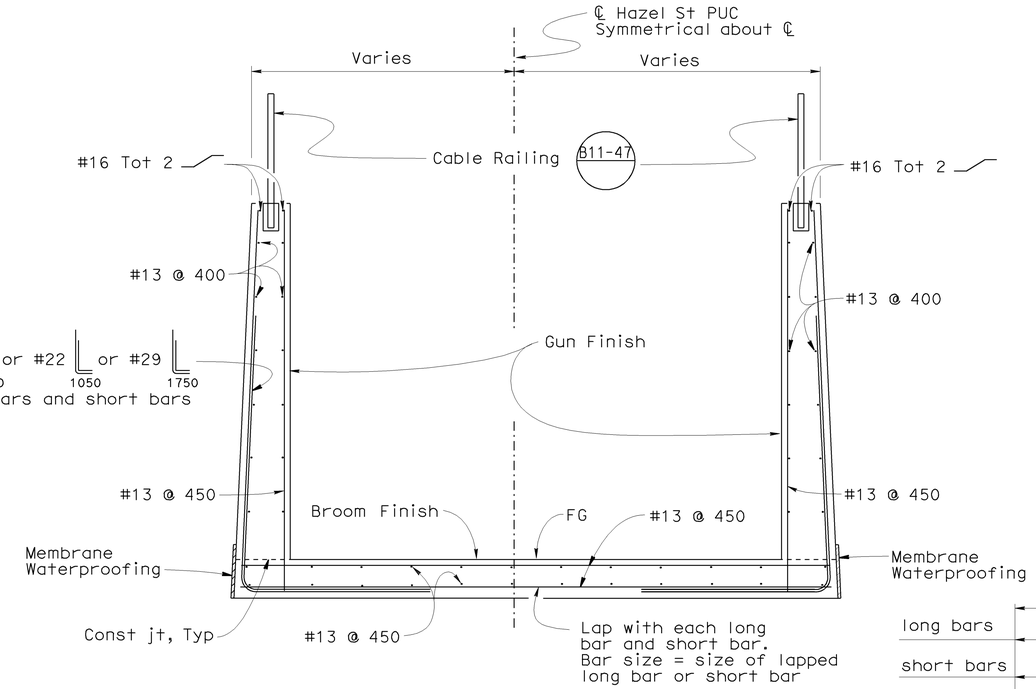


SECTION D-D
1:25

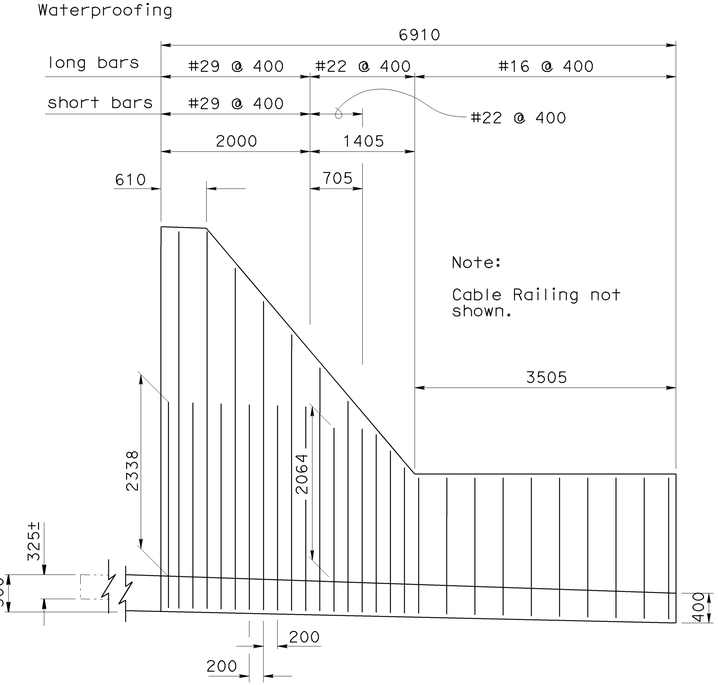


SOUTH SIDE WEST
PORTAL ELEVATION
1:40

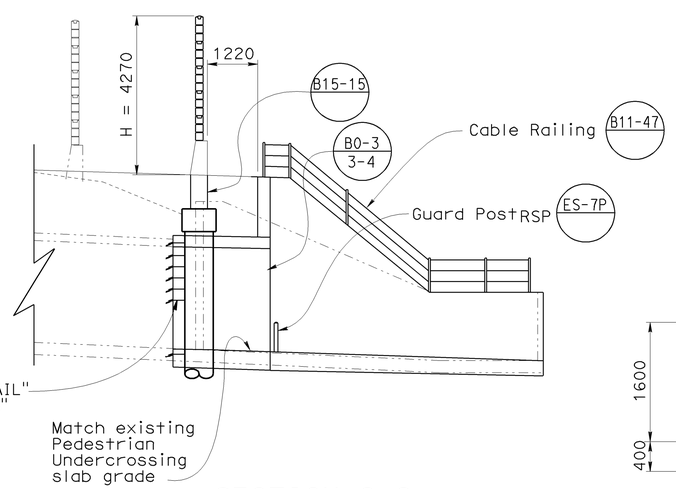


SECTION C-C
1:80

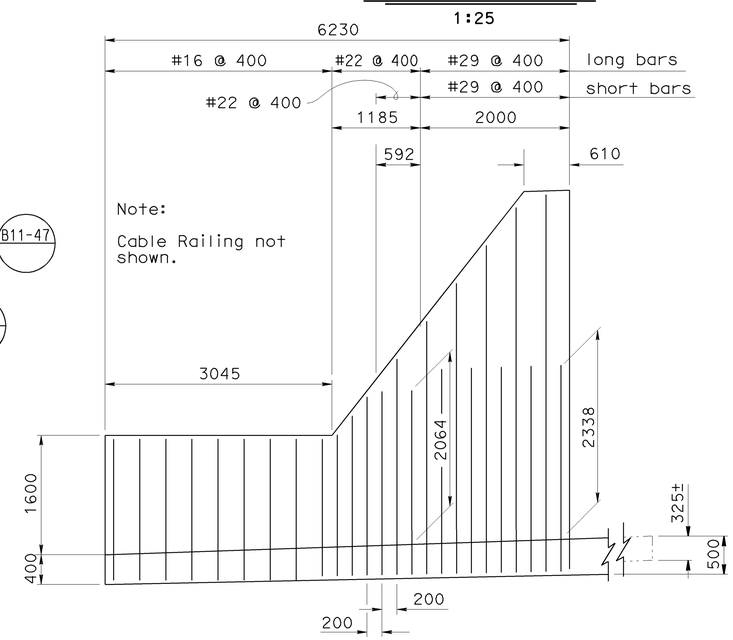


NORTH SIDE WEST
PORTAL ELEVATION
1:40

NOTE:
THE CONTRACTOR SHALL VERIFY ALL CONTROLLING FIELD DIMENSIONS BEFORE ORDERING OR FABRICATING ANY MATERIAL.

| | BY | CHECKED |
|---|---|---|
| DESIGN | S. Moradi | T. Menard |
| DETAILS | S. Schenck / H. Mauroschadt | T. Menard |
| QUANTITIES | S. Moradi | T. Menard |

STATE OF CALIFORNIA
DEPARTMENT OF TRANSPORTATION

DIVISION OF ENGINEERING SERVICES
STRUCTURE DESIGN
DESIGN BRANCH 15

BRIDGE NO. 53-1076
KILOMETER POST 44.2

# HAZEL STREET PEDESTRIAN UC (MODIFY)
# WEST PORTAL DETAILS NO. 2

ALL DIMENSIONS ARE IN MILLIMETERS UNLESS OTHERWISE SHOWN

ORIGINAL SCALE IN MILLIMETERS FOR REDUCED PLANS 0 10 20 30 40 50 60 70 80 90 100

CU 07
EA 121841

DISREGARD PRINTS BEARING EARLIER REVISION DATES

REVISION DATES: 9-2-08 11-20-08 12-19-07 1-23-08 3-5-08 4-2-08 5-13-08 8-24-08 9-1-08

SHEET 10 OF 12

FILE => 53-1076-f-wdet02.dgn

STRUCTURES DESIGN DETAIL SHEET (METRIC) (REV.03-17-04)

USERNAME => trmikesl DATE PLOTTED => 12-JUN-2009 TIME PLOTTED => 08:11

| DIST | COUNTY | ROUTE | KILOMETER POST TOTAL PROJECT | SHEET No | TOTAL SHEETS |
|---|---|---|---|---|---|
| 07 | LA | 5 | 42.8/47.3 | 648 | 1073 |

Andrew Rittenhouse 12-05-08
REGISTERED CIVIL ENGINEER DATE

6-8-09
PLANS APPROVAL DATE

REGISTERED PROFESSIONAL ENGINEER Andrew P. Rittenhouse No. C 61006 Exp. 12-31-10 CIVIL STATE OF CALIFORNIA

The State of California or its officers or agents shall not be responsible for the accuracy or completeness of electronic copies of this plan sheet.

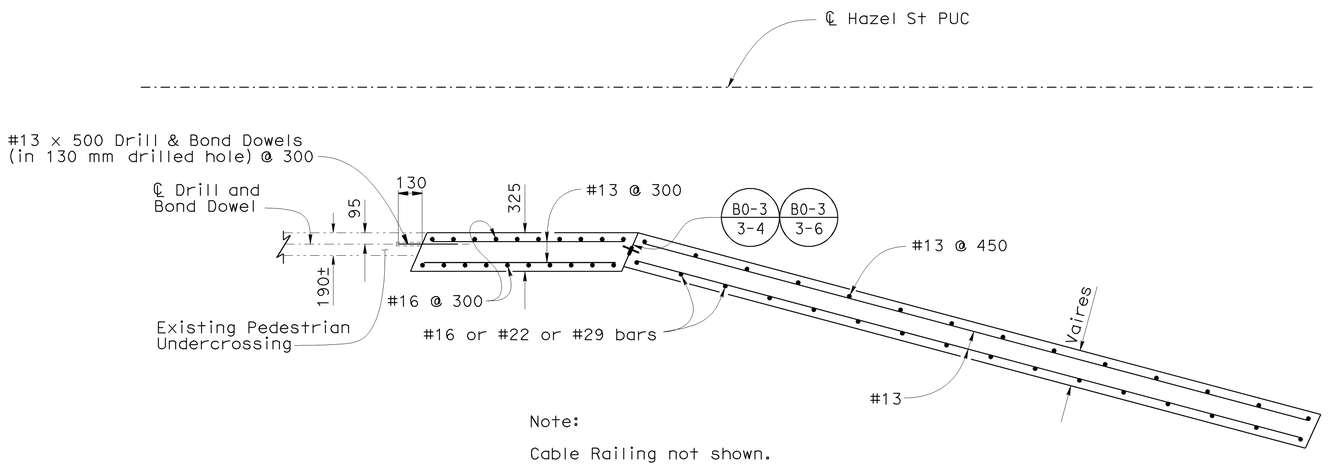


Note:

Cable Railing not shown.

## PLAN-TYPICAL PORTAL WALL DETAIL

Not to Scale

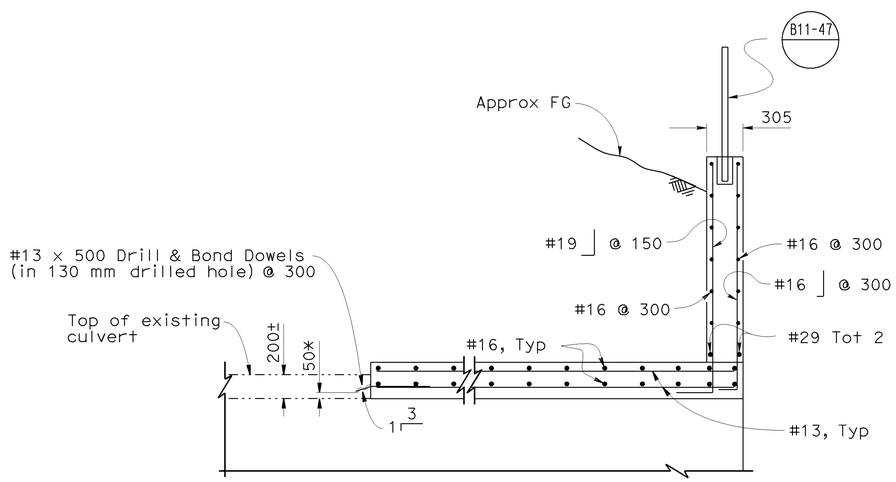


## SECTION E-E

Not to Scale

* Typ, top and bot of exist culvert

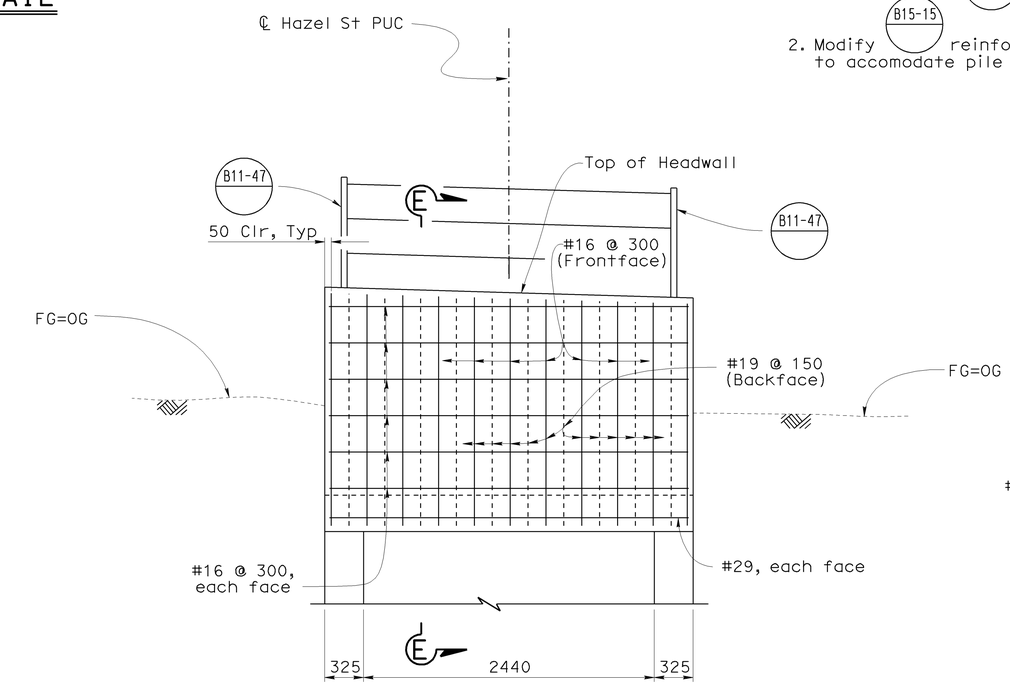


## TYPICAL ELEVATION HEADWALL

Not to Scale

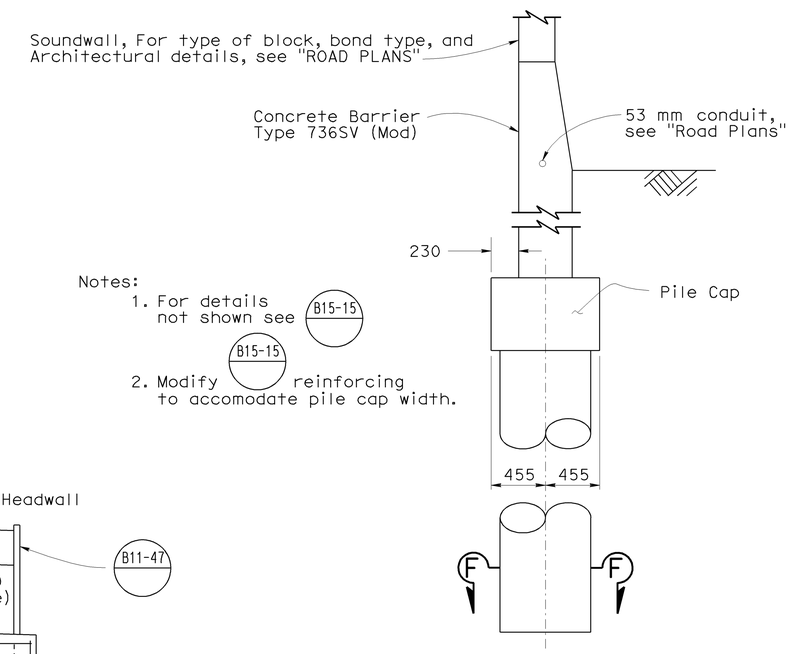


Notes:
1. For details not shown see B15-15
2. Modify B15-15 reinforcing to accomodate pile cap width.

## ELEVATION

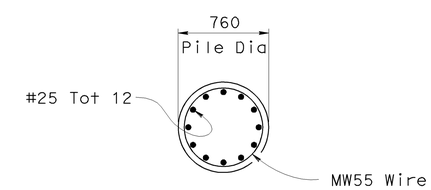


## SECTION F-F

## SOUNDWALL MASONRY - BLOCK ON TYPE 736SV (MOD) BARRIER

1:25

NOTE:
THE CONTRACTOR SHALL VERIFY ALL CONTROLLING FIELD DIMENSIONS BEFORE ORDERING OR FABRICATING ANY MATERIAL.

Caltrans Metric

| | BY | CHECKED |
|---|---|---|
| DESIGN | S. Moradi | T. Menard |
| DETAILS | S. Schenck / H. Mauroschadt | T. Menard |
| QUANTITIES | S. Moradi | T. Menard |

STATE OF CALIFORNIA
DEPARTMENT OF TRANSPORTATION

DIVISION OF ENGINEERING SERVICES
STRUCTURE DESIGN
DESIGN BRANCH 15

BRIDGE NO. 53-1076
KILOMETER POST 44.2

HAZEL STREET PEDESTRIAN UC (MODIFY)
MISCELLANEOUS DETAILS

ALL DIMENSIONS ARE IN MILLIMETERS UNLESS OTHERWISE SHOWN

ORIGINAL SCALE IN MILLIMETERS FOR REDUCED PLANS 0 10 20 30 40 50 60 70 80 90 100

CU 07
EA 121841

DISREGARD PRINTS BEARING EARLIER REVISION DATES

REVISION DATES: 11-20-08 1-5-09 2-13-09 4-28-09 4-2-08 5-13-08 8-21-08 9-1-08 9-2-08

SHEET 11 OF 12

FILE => 53-1076-g-miscd.dgn

STRUCTURES DESIGN DETAIL SHEET (METRIC) (REV.03-17-04)

USERNAME => trmikes1 DATE PLOTTED => 12-JUN-2009 TIME PLOTTED => 08:11

| DIST | COUNTY | ROUTE | KILOMETER POST TOTAL PROJECT | SHEET No | TOTAL SHEETS |
|---|---|---|---|---|---|
| 07 | LA | 5 | 42.8/47.3 | 649 | 1073 |

REGISTERED CIVIL ENGINEER 5-7-08

6-8-09
PLANS APPROVAL DATE

REGISTERED PROFESSIONAL ENGINEER
Qiang Huang
No. C055671
Exp. 12-31-08
CIVIL
STATE OF CALIFORNIA

The State of California or its officers or agents shall not be responsible for the accuracy or completeness of electronic copies of this plan sheet.

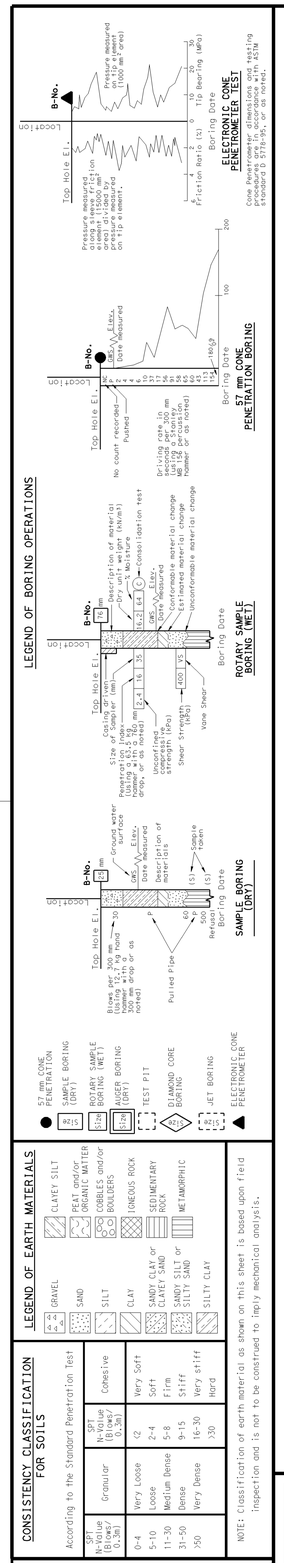


OGS CIVIL LOG OF TEST BORINGS SHEET (METRIC) (REV. 4/04)

## BENCH MARK

PRHV 208
Fnd PK & BATHEY at Alameda Ave
100.880 m Lt C/L "CL1" Line Rte 5
Sta 457+34.354
N 574303.881
E 1971893.821
Elev = 157.309

PRHV 212
Fnd PK & BATHEY at Alameda Ave
102.771 m Lt C/L "CL1" Line Rte 5
Sta 457+95.878
N 574347.178
E 1971843.146
Elev = 157.159

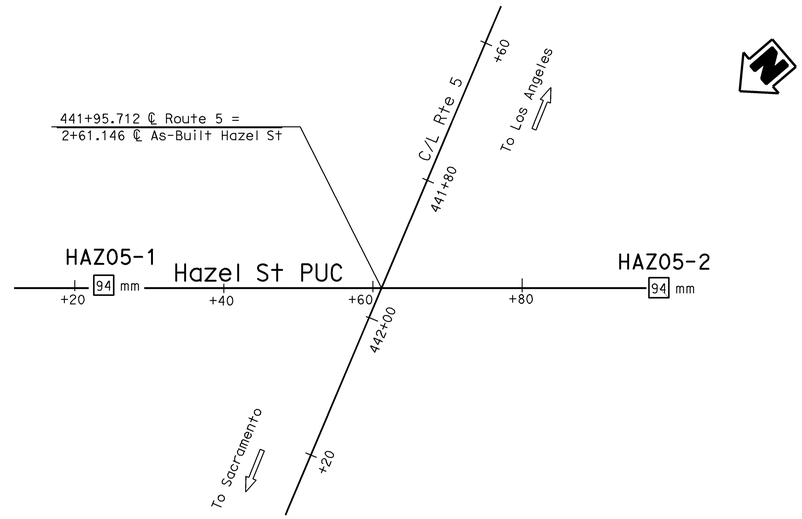


## PLAN
1:400

Note: Gound water was not measured.

## PROFILE
HOR. 1:200
VER. 1:100

Caltrans Metric

| GEOTECHNICAL SERVICES | |
|---|---|
| DRAWN BY | W. Tang 11/05 |
| CHECKED BY | W. Bertucci |

FIELD INVESTIGATION BY: W. Bertucci

STATE OF CALIFORNIA
DEPARTMENT OF TRANSPORTATION

DIVISION OF ENGINEERING SERVICES
STRUCTURE DESIGN
DESIGN BRANCH 15

BRIDGE NO. 53-1076
KILOMETER POST 44.2

# HAZEL STREET PEDESTRIAN UC (MODIFY)
# LOG OF TEST BORINGS

ALL DIMENSIONS ARE IN METERS UNLESS OTHERWISE SHOWN

ORIGINAL SCALE IN MILLIMETERS FOR REDUCED PLANS 0 10 20 30 40 50 60 70 80 90 100

CU 07
EA 121841

DISREGARD PRINTS BEARING EARLIER REVISION DATES

REVISION DATES (PRELIMINARY STAGE ONLY): 04-07-08 04-29-08 8-21-08 9-1-08

SHEET 12 OF 12

FILE => 53-1076-m-lotb.dgn

USERNAME => trmikesl DATE PLOTTED => 12-JUN-2009 TIME PLOTTED => 08:11

| DIST | COUNTY | ROUTE | KILOMETER POST TOTAL PROJECT | SHEET No | TOTAL SHEETS |
|---|---|---|---|---|---|
| 07 | LA | 5 | 42.8/47.3 | 650 | 1073 |

Andrew Rittenhouse 12-05-08
REGISTERED CIVIL ENGINEER DATE

6-8-09
PLANS APPROVAL DATE

REGISTERED PROFESSIONAL ENGINEER Andrew P. Rittenhouse No. 61006 Exp. 12-31-10 CIVIL STATE OF CALIFORNIA

The State of California or its officers or agents shall not be responsible for the accuracy or completeness of electronic copies of this plan sheet.

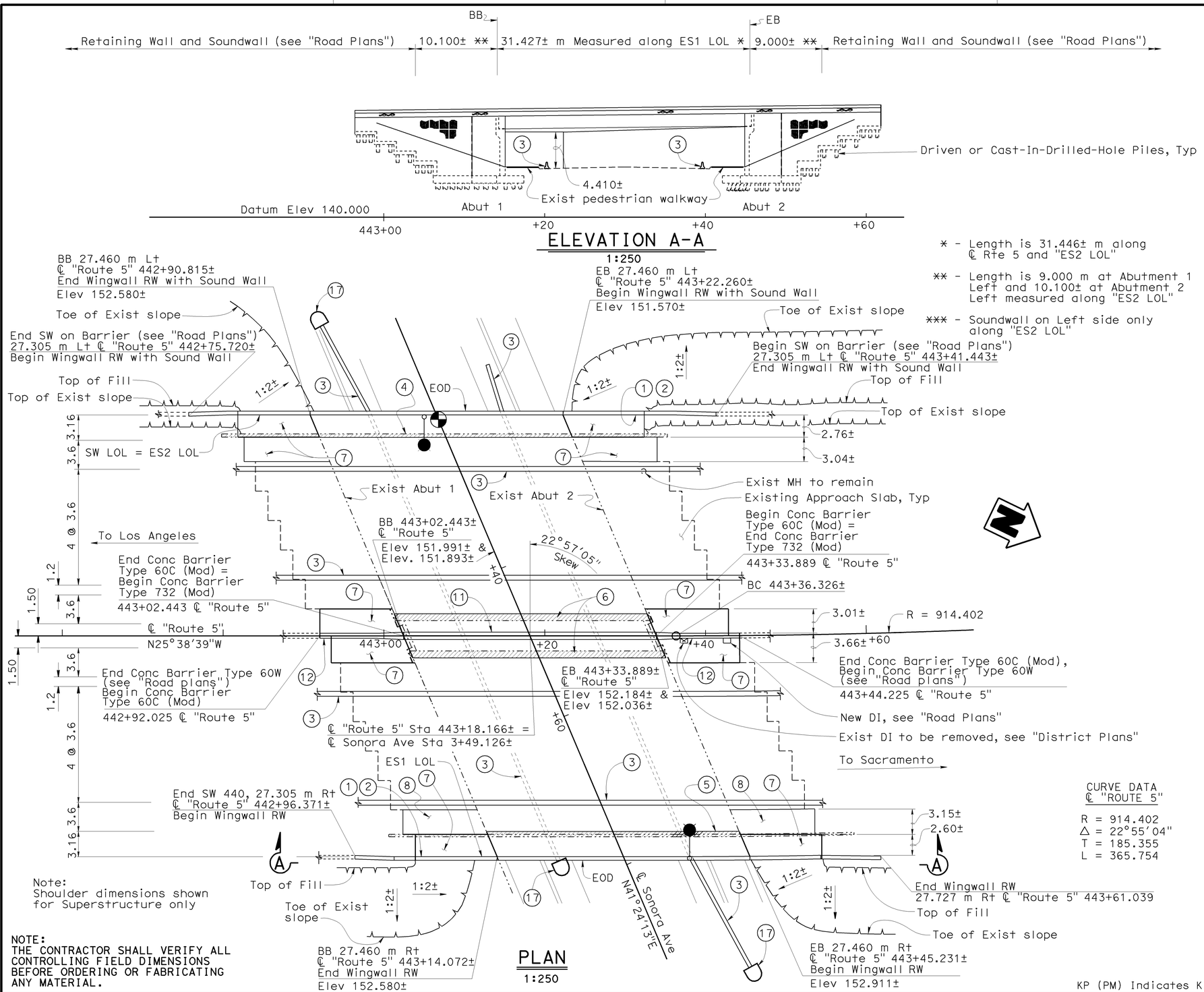


* - Length is 31.446± m along ℄ Rte 5 and "ES2 LOL"

** - Length is 9.000 m at Abutment 1 Left and 10.100± at Abutment 2 Left measured along "ES2 LOL"

*** - Soundwall on Left side only along "ES2 LOL"

Note:
Shoulder dimensions shown for Superstructure only

NOTE:
THE CONTRACTOR SHALL VERIFY ALL CONTROLLING FIELD DIMENSIONS BEFORE ORDERING OR FABRICATING ANY MATERIAL.

QUANTITIES

| | | |
|---|---|---|
| BRIDGE REMOVAL (PORTION), LOCATION C | LUMP | SUM |
| STRUCTURE EXCAVATION (BRIDGE) | 334 | $m^3$ |
| STRUCTURE EXCAVATION (RETAINING WALL) | 470 | $m^3$ |
| STRUCTURE EXCAVATION (TYPE Y-1) (AERIALLY DEPOSITED LEAD) | 91 | $m^3$ |
| STRUCTURE EXCAVATION (TYPE Y-2) (AERIALLY DEPOSITED LEAD) | 49 | $m^3$ |
| STRUCTURE BACKFILL (BRIDGE) | 270 | $m^3$ |
| STRUCTURE BACKFILL (RETAINING WALL) | 390 | $m^3$ |
| AGGREGATE BASE (APPROACH SLAB) | 2 | $m^3$ |
| 600 mm CAST-IN-DRILLED-HOLE CONCRETE PILING | 243 | m |
| FURNISH PILING (CLASS 400) (ALTERNATIVE W) | 2 203 | m |
| DRIVE PILE (CLASS 400) (ALTERNATIVE W) | 136 | EA |
| STRUCTURAL CONCRETE, BRIDGE FOOTING | 76 | $m^3$ |
| STRUCTURAL CONCRETE, BRIDGE | 176 | $m^3$ |
| STRUCTURAL CONCRETE, RETAINING WALL | 309 | $m^3$ |
| STRUCTURAL CONCRETE, APPROACH SLAB (TYPE N) | 89 | $m^3$ |
| STRUCTURAL CONCRETE, APPROACH SLAB (TYPE R) | 19 | $m^3$ |
| FRACTURED RIB TEXTURE | 265 | $m^2$ |
| DRILL AND BOND DOWEL | 290 | m |
| CORE CONCRETE (0 - 50 mm) | 5 | m |
| CORE CONCRETE (101 mm - 150 mm) | 3 | m |
| SOUND WALL (MASONRY BLOCK) | 162 | $m^2$ |
| JOINT SEAL (MR 13 mm) | 10 | m |
| JOINT SEAL (MR 25 mm) | 10 | m |
| BAR REINFORCING STEEL (BRIDGE) | 47 200 | kg |
| BAR REINFORCING STEEL (RETAINING WALL) | 24 200 | kg |
| FURNISH STRUCTURAL STEEL (BRIDGE) | 107 100 | kg |
| ERECT STRUCTURAL STEEL (BRIDGE) | 107 100 | kg |
| ABUTMENT LUMBER BLOCKING | 1 | $m^3$ |
| CLEAN AND PAINT STRUCTURAL STEEL | LUMP | SUM |
| SPOT BLAST CLEAN AND PAINT UNDERCOAT | 5 | $m^2$ |
| WORK AREA MONITORING | LUMP | SUM |
| MISCELLANEOUS METAL (BRIDGE) | 4 890 | kg |
| CONCRETE BARRIER (TYPE 60C MODIFIED) | 21 | m |
| CONCRETE BARRIER (TYPE 732 MODIFIED) | 99 | m |
| CONCRETE BARRIER (TYPE 736 MODIFIED) | 100 | m |

CURVE DATA
℄ "ROUTE 5"

R = 914.402
Δ = 22°55'04"
T = 185.355
L = 365.754

Note:
For information not shown see "GENERAL PLAN NO. 2" sheet.

Legend:

- Indicates existing structure
- Indicates Bridge Removal (Portion)
- Indicates Point of Minimum Vertical Clearance
- Indicates Electrolier Foundation and Pull Box location, see "Road Plans"

KP (PM) Indicates Kilometer Post (Post Mile)

Caltrans Metric

Traci Menard
DESIGN ENGINEER

| | BY | CHECKED |
|---|---|---|
| DESIGN | V.Lopez/H.Setberg | Gabriel Galo |
| DETAILS | D.Kubochi/H.Mauroschadt | Gabriel Galo |
| QUANTITIES | Gabriel Galo | Herman Mauroschadt |

| | | | |
|---|---|---|---|
| LOAD FACTOR DESIGN | LIVE LOADING: HS20-44 AND ALTERNATIVE AND PERMIT DESIGN LOAD | | |
| LAYOUT | BY H.Setberg | CHECKED Gabriel Galo | |
| SPECIFICATIONS | BY T. Chen | PLANS AND SPECS COMPARED T. Chen | |

STATE OF CALIFORNIA
DEPARTMENT OF TRANSPORTATION

DIVISION OF ENGINEERING SERVICES
STRUCTURE DESIGN
DESIGN BRANCH 15

BRIDGE NO. 53-1077
KP (PM) 44.32 (27.5)

# SONORA AVENUE UC WIDEN & RETROFIT
# GENERAL PLAN NO. 1

ALL DIMENSIONS ARE IN METERS UNLESS OTHERWISE SHOWN

ORIGINAL SCALE IN MILLIMETERS FOR REDUCED PLANS 0 10 20 30 40 50 60 70 80 90 100

CU 07
EA 121841

DISREGARD PRINTS BEARING EARLIER REVISION DATES

REVISION DATES: 5-13-09 | 2-1-09 | 2-2-09 | 02-12-09 | 2-26-09 | 3-2-09 | 3-5-09 | 4-13-09 | 5-01-09

SHEET 1 OF 59

FILE => 53-1077rl-a-gp1.dgn

STRUCTURES DESIGN GENERAL PLAN SHEET (METRIC) (REV.03-17-04)

USERNAME => trmikesl DATE PLOTTED => 15-JUN-2009 TIME PLOTTED => 13:20

| DIST | COUNTY | ROUTE | KILOMETER POST TOTAL PROJECT | SHEET No | TOTAL SHEETS |
|---|---|---|---|---|---|
| 07 | LA | 5 | 42.8/47.3 | 651 | 1073 |

Andrew Rittenhouse 12-05-08
REGISTERED CIVIL ENGINEER DATE

6-8-09
PLANS APPROVAL DATE

REGISTERED PROFESSIONAL ENGINEER Andrew P. Rittenhouse No. 61006 Exp. 12-31-10 CIVIL STATE OF CALIFORNIA

The State of California or its officers or agents shall not be responsible for the accuracy or completeness of electronic copies of this plan sheet.

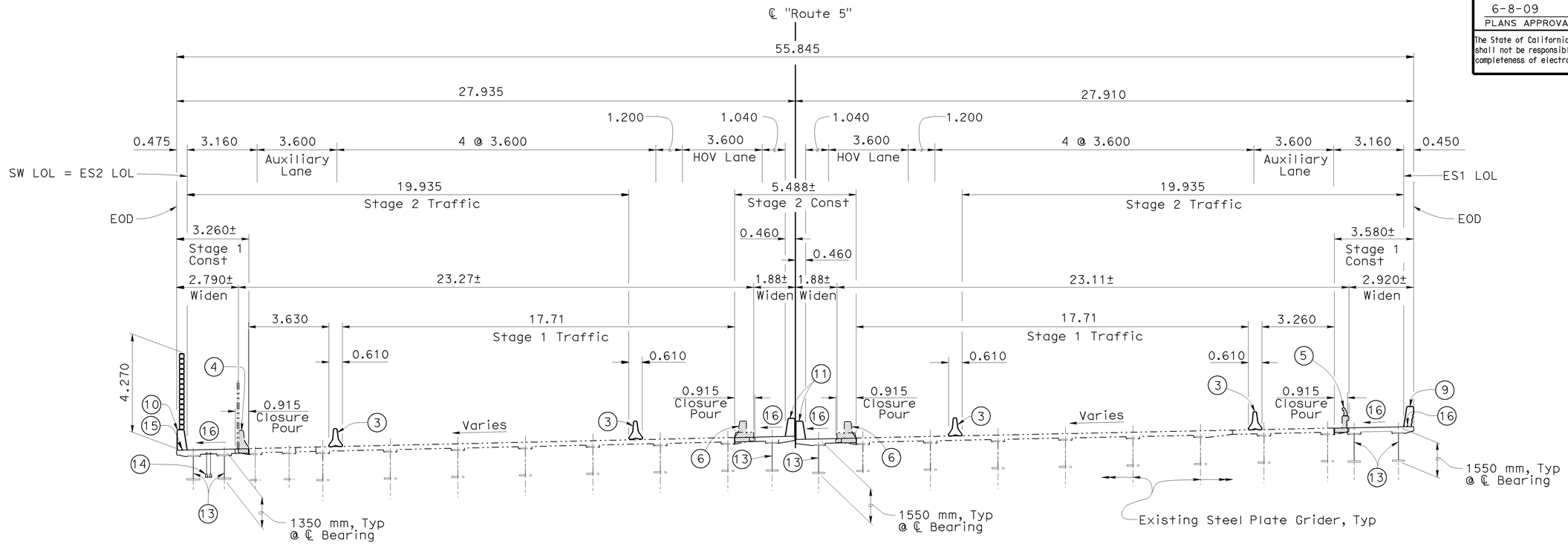


## TYPICAL SECTION

1:100

Notes:

1. Paint "Br. No. 53-1077"
2. Paint "Sonora Avenue UC"
3. Temporary Railing (Type K), See "Road Plans"
4. Remove Existing Concrete Barrier Type 27(Mod) with Ribbed Sheet Metal Soundwall and deck overhang
5. Remove Existing Concrete Barrier Type 1 and deck overhang
6. Remove Existing Concrete Barrier and deck overhang (Stage 2 Construction)
7. Structure Approach Type N(9S)
8. Structure Approach Type R(9S)
9. Concrete Barrier Type 736 (Mod-1)
10. Concrete Barrier Type 736 (Mod) with medium weight, high strength, reinforced Masonary Block Soundwall
11. Concrete Barrier Type 732 (Mod) (Stage 2 Construction)
12. Concrete Barrier Type 60C (Mod) (Stage 2 Construction)
13. Built Up Steel Girder Composite with Deck
14. 91 mm ø Fiber Optic Conduit, see "TYPICAL SECTION NO. 1" sheet
15. 53C Conduit in Barrier, see "Road Plans"
16. Match existing cross slope
17. Temporary Crash Cushion, see "Road Plans"

NOTE:
THE CONTRACTOR SHALL VERIFY ALL CONTROLLING FIELD DIMENSIONS BEFORE ORDERING OR FABRICATING ANY MATERIAL.

KP (PM) Indicates Kilometer Post (Post Mile)

Caltrans Metric

Traci Menard
DESIGN ENGINEER

| | BY | CHECKED |
|---|---|---|
| DESIGN | V.Lopez/H.Setberg | Gabriel Galo |
| DETAILS | D.Kubochi/H.Mauroschadt | Gabriel Galo |
| QUANTITIES | Gabriel Galo | Herman Mauroschadt |

LOAD FACTOR DESIGN — LIVE LOADING: HS20-44 AND ALTERNATIVE AND PERMIT DESIGN LOAD
LAYOUT — BY H.Setberg — CHECKED Gabriel Galo
SPECIFICATIONS — BY T.Chen — PLANS AND SPECS COMPARED T.Chen

STATE OF CALIFORNIA
DEPARTMENT OF TRANSPORTATION

DIVISION OF ENGINEERING SERVICES
STRUCTURE DESIGN
DESIGN BRANCH 15

BRIDGE NO. 53-1077
KP (PM) 44.32 (27.5)

SONORA AVENUE UC WIDEN & RETROFIT
GENERAL PLAN NO. 2

ALL DIMENSIONS ARE IN METERS UNLESS OTHERWISE SHOWN

ORIGINAL SCALE IN MILLIMETERS FOR REDUCED PLANS 0 10 20 30 40 50 60 70 80 90 100

CU 07
EA 121841

DISREGARD PRINTS BEARING EARLIER REVISION DATES

REVISION DATES: 2-26-09 4-27-09 11-14-08 12-12-08 1-14-09 1-22-09 2-12-09 2-18-09 1-30-08

SHEET 2 OF 59

FILE => 53-1077rl-a-gp2.dgn

STRUCTURES DESIGN GENERAL PLAN SHEET (METRIC) (REV.03-17-04)

USERNAME => ttmirkes1 DATE PLOTTED => 12-JUN-2009 TIME PLOTTED => 08:48

| DIST | COUNTY | ROUTE | KILOMETER POST TOTAL PROJECT | SHEET No | TOTAL SHEETS |
|---|---|---|---|---|---|
| 07 | LA | 5 | 42.8/47.3 | 652 | 1073 |

Andrew P. Rittenhouse 12-05-08
REGISTERED CIVIL ENGINEER DATE

6-8-09
PLANS APPROVAL DATE

REGISTERED PROFESSIONAL ENGINEER Andrew P. Rittenhouse No. 61006 Exp. 12-31-10 CIVIL STATE OF CALIFORNIA

The State of California or its officers or agents shall not be responsible for the accuracy or completeness of electronic copies of this plan sheet.

## INDEX TO PLANS


| SHEET NO. | TITLE |
|---|---|
| 1 | GENERAL PLAN NO. 1 |
| 2 | GENERAL PLAN NO. 2 |
| 3 | INDEX TO PLANS |
| 4 | EXCAVATION & BACKFILL |
| 5 | FOUNDATION PLAN |
| 6 | ABUTMENT 1 LAYOUT |
| 7 | ABUTMENT 2 LAYOUT |
| 8 | ABUTMENT DETAILS NO. 1 |
| 9 | ABUTMENT DETAILS NO. 2 |
| 10 | ABUTMENT DETAILS NO. 3 |
| 11 | ABUTMENT DETAILS NO. 4 |
| 12 | ABUTMENT DETAILS NO. 5 |
| 13 | ABUTMENT DETAILS NO. 6 |
| 14 | ABUTMENT DETAILS NO. 7 |
| 15 | ABUTMENT DETAILS NO. 8 |
| 16 | ABUTMENT DETAILS NO. 9 |
| 17 | ABUTMENT DETAILS NO. 10 |
| 18 | ABUTMENT DETAILS NO. 11 |
| 19 | ABUTMENT DETAILS NO. 12 |
| 20 | ABUTMENT DETAILS NO. 13 |
| 21 | ABUTMENT DETAILS NO. 14 |
| 22 | ABUTMENT DETAILS NO. 15 |
| 23 | ABUTMENT DETAILS NO. 16 |
| 24 | ABUTMENT DETAILS NO. 17 |
| 25 | ABUTMENT DETAILS NO. 18 |
| 26 | ABUTMENT DETAILS NO. 19 |
| 27 | ABUTMENT DETAILS NO. 20 |
| 28 | ABUTMENT DETAILS NO. 21 |
| 29 | ABUTMENT DETAILS NO. 22 |
| 30 | RETAINING WALL DETAILS NO. 1 |
| 31 | RETAINING WALL DETAILS NO. 2 |
| 32 | RETAINING WALL DETAILS NO. 3 |
| 33 | RETAINING WALL DETAILS NO. 4 |
| 34 | ABUTMENT RETROFIT DETAILS NO. 1 |
| 35 | ABUTMENT RETROFIT DETAILS NO. 2 |
| 36 | ABUTMENT RETROFIT DETAILS NO. 3 |
| 37 | TYPICAL SECTION NO. 1 |
| 38 | TYPICAL SECTION NO. 2 |
| 39 | GIRDER LAYOUT |
| 40 | GIRDER DETAILS NO. 1 |
| 41 | GIRDER DETAILS NO. 2 |
| 42 | GIRDER DETAILS NO. 3 |
| 43 | MISCELLANEOUS DETAILS NO. 1 |
| 44 | MISCELLANEOUS DETAILS NO. 2 |
| 45 | MISCELLANEOUS DETAILS NO. 3 |
| 46 | MISCELLANEOUS DETAILS NO. 4 |
| 47 | ARCHITECTURAL DETAILS |
| 48 | BARRIER TRANSITION DETAILS |
| 49 | RETAINING WALL TYPE 1SWBP - DETAILS NO. 1 |
| 50 | RETAINING WALL TYPE 1SWBP - DETAILS NO. 2 |
| 51 | SOUNDWALL WITH BARRIER ON RETAINING WALL - MASONRY BLOCK DETAILS NO. 1 |
| 52 | SOUNDWALL WITH BARRIER ON RETAINING WALL - MASONRY BLOCK DETAILS NO. 2 |
| 53 | SOUNDWALL - MASONRY BLOCK ON BRIDGE |
| 54 | SOUNDWALL MASONRY BLOCK MISCELLANEOUS DETAILS |
| 55 | STRUCTURE APPROACH DRAINAGE DETAILS |
| 56 | STRUCTURE APPROACH TYPE N(9S) |
| 57 | STRUCTURE APPROACH TYPE R(9S) |
| 58 | LOG OF TEST BORINGS 1 OF 2 |
| 59 | LOG OF TEST BORINGS 2 OF 2 |


NOTE:
THE CONTRACTOR SHALL VERIFY ALL CONTROLLING FIELD DIMENSIONS BEFORE ORDERING OR FABRICATING ANY MATERIAL.

## STANDARD PLANS DATED JULY 2004

| | | |
|---|---|---|
| | A10A | ACRONYMS AND ABBREVIATIONS (A-L) |
| | A10B | ACRONYMS AND ABBREVIATIONS (M-Z) |
| | A76A | CONCRETE BARRIER TYPE 60 |
| | T3 | TEMPORARY RAILING (TYPE K) |
| | B0-1 | BRIDGE DETAILS |
| | B0-3 | BRIDGE DETAILS |
| | B0-5 | BRIDGE DETAILS |
| | B2-3 | 400 mm AND 600 mm CAST-IN-DRILLED-HOLE CONCRETE PILE |
| | B2-5 | PILE DETAILS CLASS 400 AND CLASS 625 |
| | B3-1 | RETAINING WALL TYPE 1 H=1200 THROUGH 9100 mm |
| | B3-8 | RETAINING WALL DETAILS NO. 1 |
| | B6-10 | UTILITY OPENINGS T-BEAM |
| RSP | B6-21 | JOINT SEALS (MAXIMUM MOVEMENT RATING = 50 mm) |
| | B11-55 | CONCRETE BARRIER TYPE 732 |
| | B11-56 | CONCRETE BARRIER TYPE 736 |
| | B14-3 | COMMUNICATION AND SPRINKLER CONTROL CONDUITS (CONDUIT LESS THAN SIZE 103) |

STANDARD PLAN SHEET NO.

DETAIL NO.

## PILE DATA TABLE

| LOCATION | PILE TYPE | ALT | DESIGN LOADING | NOMINAL RESISTANCE COMPRESSION | NOMINAL RESISTANCE TENSION | DESIGN TIP ELEVATION | SPECIFIED TIP ELEVATION |
|---|---|---|---|---|---|---|---|
| Abutment 1 | Class 400 | W | 400 kN | 800 kN | 400 kN | 130.5 m (1)<br>134.5 m (2) | 130.5 m |
| Abutment 2 | Class 400 | W | 400 kN | 800 kN | 400 kN | 130.5 m (1)<br>134.1 m (2) | 130.5 m |
| Retaining Walls @ Abutment 1 | Class 400 | W | 400 kN | 800 kN | 400 kN | 130.5 m (1)<br>134.3 m (2) | 130.5 m |
| Retaining Walls @ Abutment 1 | 600 mm CIDH | N/A | N/A | 1800 kN | 900 kN | 125.7 m (1)<br>131.2 m (2) | 125.7 m |
| Retaining Walls @ Abutment 2 | Class 400 | W | 400 kN | 800 kN | 400 kN | 130.5 m (1)<br>134.1 m (2) | 130.5 m |

Design tip elevations are controlled by the following demands:
(1) Compression (2) Lateral

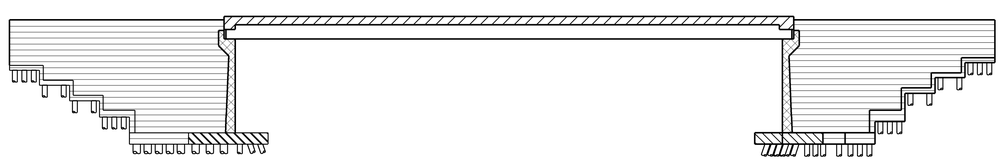

Structural Concrete, Retaining Wall
Structural Concrete, Bridge
Structural Concrete, Bridge Footing
Structural Concrete, Bridge 28 MPa @ 28 days
Structural Steel

## CONCRETE STRENGTH AND TYPE LIMITS

No Scale

## GENERAL NOTES
## LOAD FACTOR DESIGN

| | |
|---|---|
| DESIGN: | BRIDGE DESIGN SPECIFICATIONS (1996 AASHTO with Interims and Revisions by CALTRANS) |
| SEISMIC DESIGN: | Caltrans Seismic Design Criteria (SDC), Version 1.4 June 2006 |
| DEAD LOAD: | Includes 1.675 KPa for future wearing surface. The deck dead load between the girders has been increased by a factor of 10% to allow for the use of steel deck forms. |
| LIVE LOADING: | HS20-44, Alternative Military and Permit design load. |
| SEISMIC LOADING: | Site Specific Acceleration Response Spectra Curve |
| STRUCTURAL STEEL: | $f_y$ = 345 MPa (ASTM A709M Grade 345) |
| HS BOLTS: | All ASTM A490 Bolts shall be, ($f_y$ = 896 MPa), (With threads excluded from shear plane) |
| ANCHOR RODS: | All Anchor Rods shall be ASTM F1554, ($f_y$ = 725 MPa) |
| THREADED RODS: | All Threaded Rods shall be shall be ASTM 307, ($f_y$ = 250 MPa) |
| REINFORCED CONCRETE: | $f_y$ = 420 MPa<br>$f'_c$ = 25 MPa & 28 MPa<br>n = 8 |
| TRANSVERSE DECK: Slabs (Working Stress Design) | $f_s$ = 138 MPa<br>$f_c$ = 8.3 MPa<br>n = 10 |

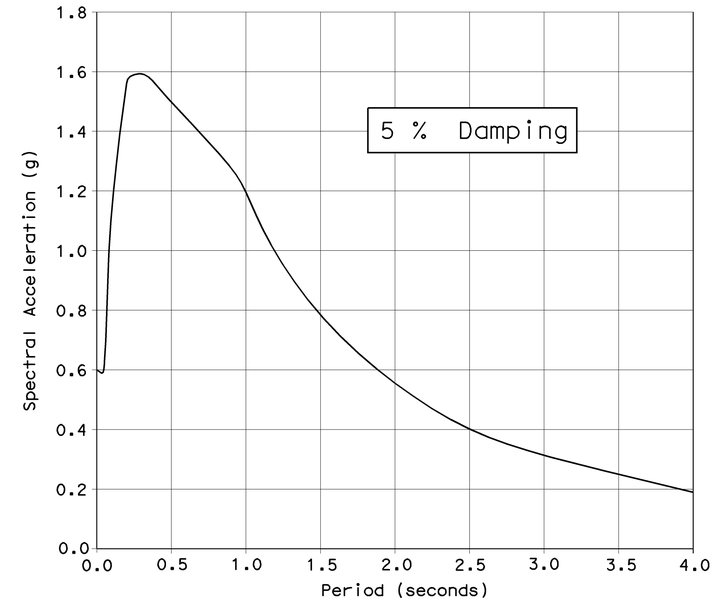


Caltrans Metric

| DESIGN | BY Hogni Setberg | CHECKED Gabriel Galo |
|---|---|---|
| DETAILS | BY Herman Mauroschadt | CHECKED Gabriel Galo |
| QUANTITIES | BY Gabriel Galo | CHECKED Herman Mauroschadt |

STATE OF CALIFORNIA
DEPARTMENT OF TRANSPORTATION

DIVISION OF ENGINEERING SERVICES
STRUCTURE DESIGN
DESIGN BRANCH 15

BRIDGE NO. 53-1077
KILOMETER POST 44.32

SONORA AVENUE UC WIDEN & RETROFIT
INDEX TO PLANS

ALL DIMENSIONS ARE IN MILLIMETERS UNLESS OTHERWISE SHOWN

ORIGINAL SCALE IN MILLIMETERS FOR REDUCED PLANS 0 10 20 30 40 50 60 70 80 90 100

CU 07
EA 121841

DISREGARD PRINTS BEARING EARLIER REVISION DATES

REVISION DATES 10-22-07 1-11-08 2-08 8-11-08 10-2-08 11-14-08 12-12-08 1-09-09 2-25-09

SHEET 3 OF 59

STRUCTURES DESIGN DETAIL SHEET (METRIC) (REV.03-17-04)

FILE => 53-1077ri-a-itp.dgn

USERNAME => rtmrkest DATE PLOTTED => 12-JUN-2009 TIME PLOTTED => 08:48

| DIST | COUNTY | ROUTE | KILOMETER POST TOTAL PROJECT | SHEET No | TOTAL SHEETS |
|---|---|---|---|---|---|
| 07 | LA | 5 | 42.8/47.3 | 653 | 1073 |

Andrew Rittenhouse 12-05-08
REGISTERED CIVIL ENGINEER DATE

6-8-09
PLANS APPROVAL DATE

REGISTERED PROFESSIONAL ENGINEER
Andrew P. Rittenhouse
No. 61006
Exp. 12-31-10
CIVIL
STATE OF CALIFORNIA

The State of California or its officers or agents shall not be responsible for the accuracy or completeness of electronic copies of this plan sheet.

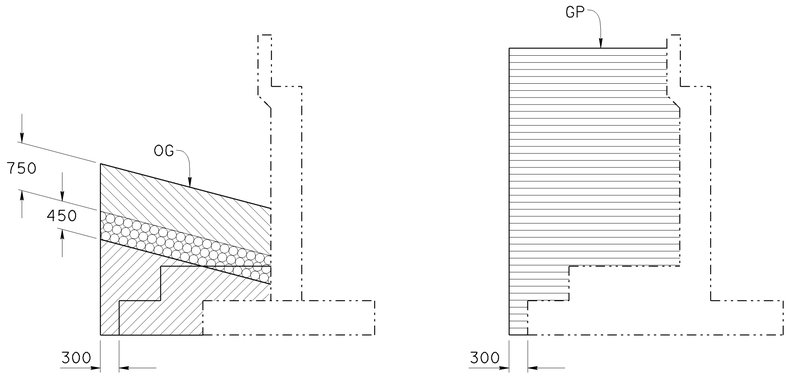


EXCAVATION BACKFILL

## EXIST ABUTMENT 1 & 2 (LEFT WIDEN RETROFIT)

No Scale

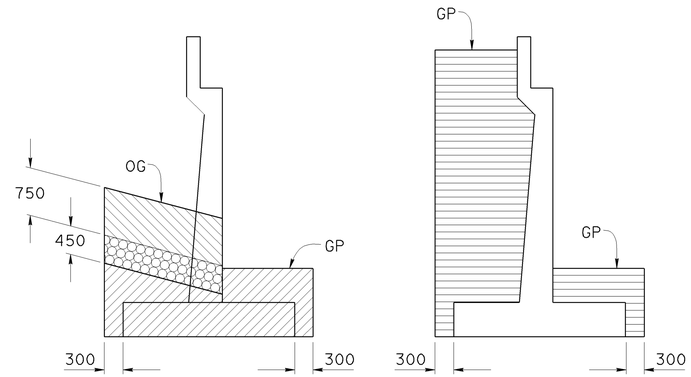


EXCAVATION BACKFILL

## ABUTMENT 1 & 2 (LEFT WIDEN)

No Scale

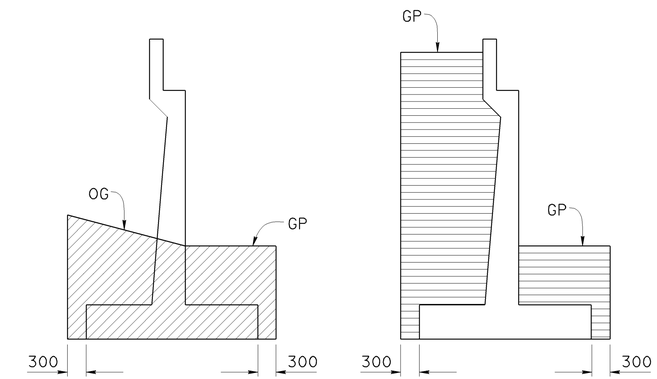


EXCAVATION BACKFILL

## ABUTMENT 2 (RIGHT WIDEN)

No Scale

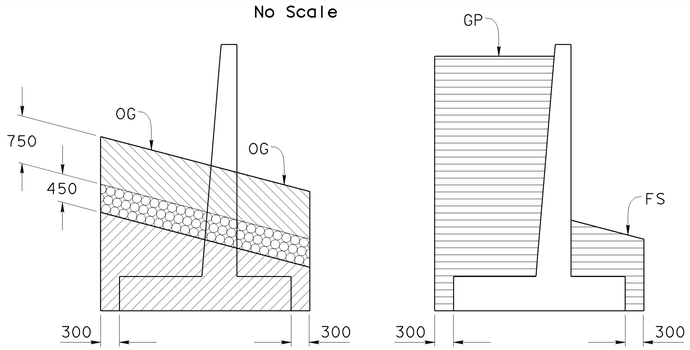


EXCAVATION BACKFILL

## RETAINING WALLS AT ABUTMENT 1 & 2 (LEFT WIDEN)

No Scale

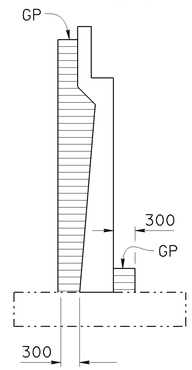


BACKFILL

## ABUTMENT 1 & 2 (CENTER WIDEN)

No Scale

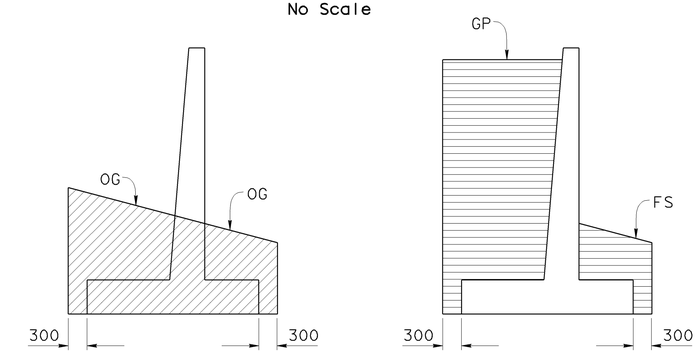


EXCAVATION BACKFILL

## RETAINING WALL AT ABUTMENT 2 (RIGHT WIDEN)

No Scale

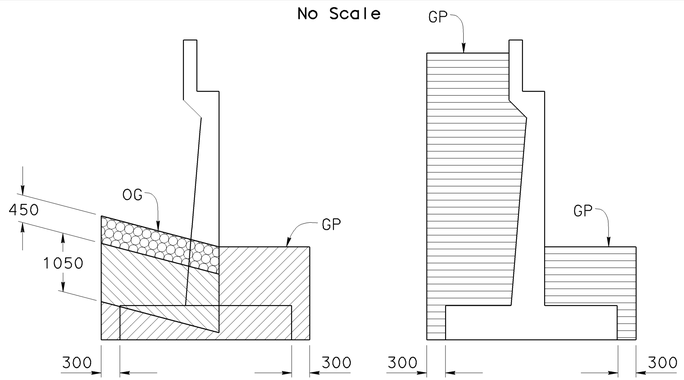


EXCAVATION BACKFILL

## ABUTMENT 1 (RIGHT WIDEN)

No Scale

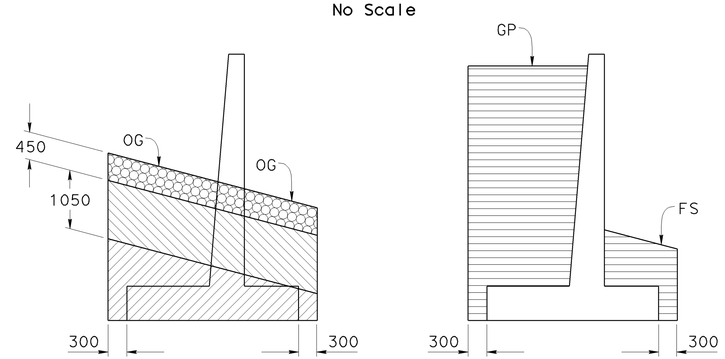


EXCAVATION BACKFILL

## RETAINING WALL AT ABUTMENT 1 (RIGHT WIDEN)

No Scale

Structure Excavation

Structure Backfill

Structure Excavation (Type Y-1) (Aerially Deposited Lead)

Structure Excavation (Type Y-2) (Aerially Deposited Lead)

NOTE:
THE CONTRACTOR SHALL VERIFY ALL CONTROLLING FIELD DIMENSIONS BEFORE ORDERING OR FABRICATING ANY MATERIAL.

Caltrans Metric

ALL DIMENSIONS ARE IN MILLIMETERS UNLESS OTHERWISE SHOWN

ORIGINAL SCALE IN MILLIMETERS FOR REDUCED PLANS 0 10 20 30 40 50 60 70 80 90 100

| | BY | CHECKED |
|---|---|---|
| DESIGN | Hogni Setberg | Gabriel Galo |
| DETAILS | Herman Mauroschadt | Gabriel Galo |
| QUANTITIES | Gabriel Galo | Herman Mauroschadt |

STATE OF CALIFORNIA
DEPARTMENT OF TRANSPORTATION

DIVISION OF ENGINEERING SERVICES
STRUCTURE DESIGN
DESIGN BRANCH 15

BRIDGE NO. 53-1077
KILOMETER POST 44.32

# SONORA AVENUE UC WIDEN & RETROFIT
# EXCAVATION & BACKFILL

CU 07
EA 121841

DISREGARD PRINTS BEARING EARLIER REVISION DATES

REVISION DATES 11-5-07 11-14-08 12-5-08 3-24-09

SHEET 4 OF 59

FILE => 53-1077rl-b-grd.dgn

STRUCTURES DESIGN DETAIL SHEET (METRIC) (REV.03-17-04)

USERNAME => trmikesl DATE PLOTTED => 12-JUN-2009 TIME PLOTTED => 08:48

| NO | R | Δ | T | L |
|---|---|---|---|---|
| (A) | 914.402 | 22°55'4" | 185.355 | 365.754 |

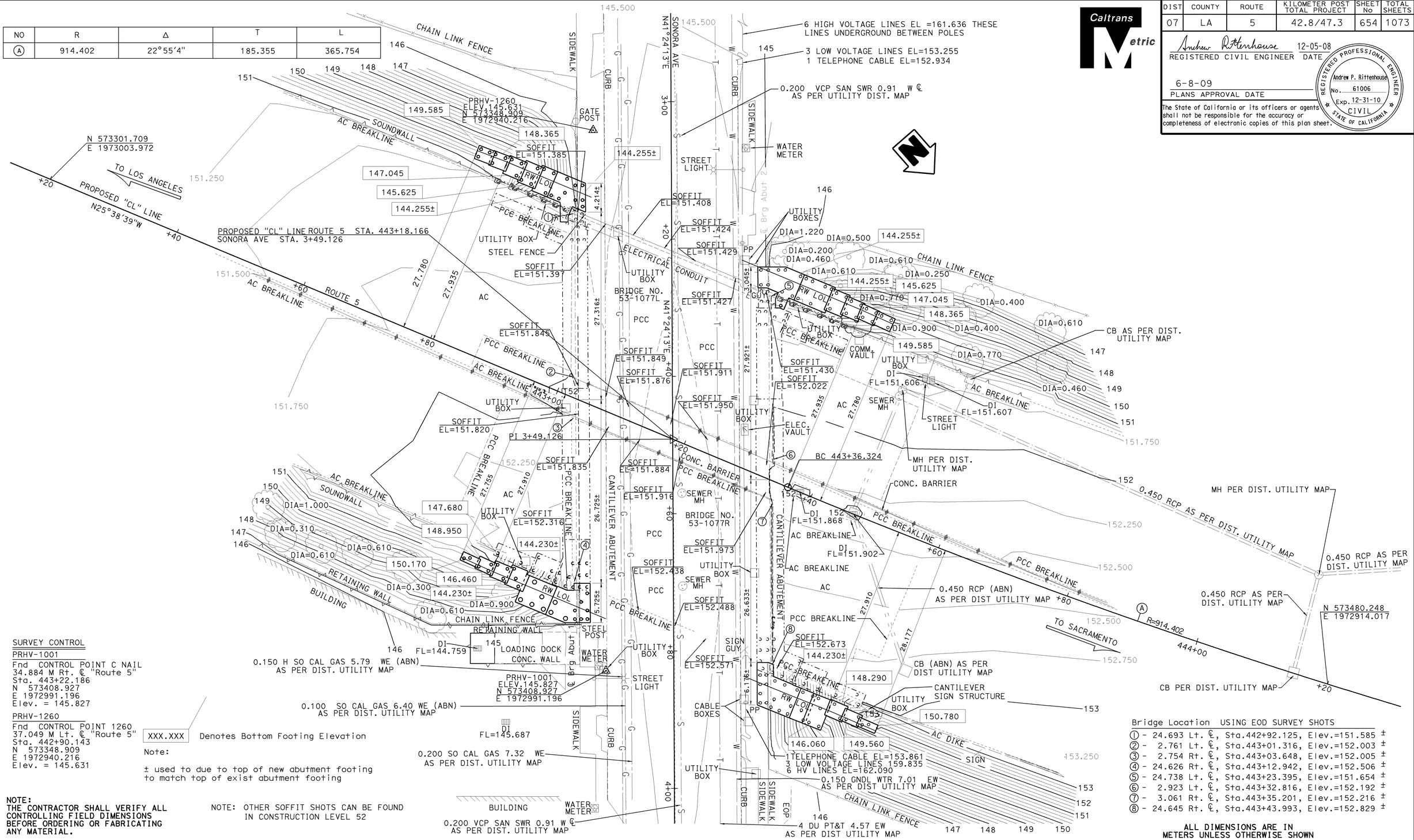


| DIST | COUNTY | ROUTE | KILOMETER POST TOTAL PROJECT | SHEET No | TOTAL SHEETS |
|---|---|---|---|---|---|
| 07 | LA | 5 | 42.8/47.3 | 654 | 1073 |

Caltrans Metric

Andrew P. Rittenhouse 12-05-08
REGISTERED CIVIL ENGINEER DATE

6-8-09
PLANS APPROVAL DATE

REGISTERED PROFESSIONAL ENGINEER Andrew P. Rittenhouse No. 61006 Exp. 12-31-10 CIVIL STATE OF CALIFORNIA

The State of California or its officers or agents shall not be responsible for the accuracy or completeness of electronic copies of this plan sheet.

SURVEY CONTROL

PRHV-1001
Fnd CONTROL POINT C NAIL
34.884 M Rt. ℄ "Route 5"
Sta. 443+22.186
N 573408.927
E 1972991.196
Elev. = 145.827

PRHV-1260
Fnd CONTROL POINT 1260
37.049 M Lt. ℄ "Route 5"
Sta. 442+90.143
N 573348.909
E 1972940.216
Elev. = 145.631

XXX.XXX Denotes Bottom Footing Elevation

Note:

± used to due to top of new abutment footing to match top of exist abutment footing

NOTE:
THE CONTRACTOR SHALL VERIFY ALL CONTROLLING FIELD DIMENSIONS BEFORE ORDERING OR FABRICATING ANY MATERIAL.

NOTE: OTHER SOFFIT SHOTS CAN BE FOUND IN CONSTRUCTION LEVEL 52

Bridge Location USING EOD SURVEY SHOTS

① - 24.693 Lt. ℄, Sta.442+92.125, Elev.=151.585 ±
② - 2.761 Lt. ℄, Sta.443+01.316, Elev.=152.003 ±
③ - 2.754 Rt. ℄, Sta.443+03.648, Elev.=152.005 ±
④ - 24.626 Rt. ℄, Sta.443+12.942, Elev.=152.506 ±
⑤ - 24.738 Lt. ℄, Sta.443+23.395, Elev.=151.654 ±
⑥ - 2.923 Lt. ℄, Sta.443+32.816, Elev.=152.192 ±
⑦ - 3.061 Rt. ℄, Sta.443+35.201, Elev.=152.216 ±
⑧ - 24.645 Rt. ℄, Sta.443+43.993, Elev.=152.829 ±

ALL DIMENSIONS ARE IN METERS UNLESS OTHERWISE SHOWN

PRELIMINARY INVESTIGATION SECTION

| SCALE | VERT. DATUM NAVD 88 | PHOTOGRAMMETRY AS OF: | | |
|---|---|---|---|---|
| 1:250 | HORZ. DATUM NAD 83 (1991.35) | SURVEYED | BY H. REDERER 2/04 | DRAFTED BY F. BANDA 9/04 |
| ALIGNMENT TIES DIST TRAVERSE SHEET | | FIELD CHECKED BY | | CHECKED BY T. ZOLNIKOVA 9/04 |

| | BY | CHECKED |
|---|---|---|
| DESIGN | Hogni Setberg | Gabriel Galo |
| DETAILS | Herman Mauroschadt | Gabriel Galo |
| QUANTITIES | Gabriel Galo | Herman Mauroschadt |

STATE OF CALIFORNIA
DEPARTMENT OF TRANSPORTATION

DIVISION OF STRUCTURES
STRUCTURE DESIGN 15

CU 07
EA 121841

BRIDGE NO. 53-1077
KILOMETER POST 44.32

# SONORA AVENUE UC WIDEN & RETROFIT

# FOUNDATION PLAN

DISREGARD PRINTS BEARING EARLIER REVISION DATES

REVISION DATES (PRELIMINARY STAGE ONLY): 11-15-07 12-14-07 2-29-08 8-8-08 11-14-08 11-24-08 12-12-08 2-26-09 3-5-09

SHEET 5 OF 59

ORIGINAL SCALE IN MILLIMETERS FOR REDUCED PLANS 0 10 20 30 40 50 60 70 80 90 100

STRUCTURES FOUNDATION PLAN SHEET (METRIC) (REV.12-1-01)

FILE => 53-1077ri-e-fdpl.dgn

USERNAME => rrmikesl DATE PLOTTED => 12-JUN-2009 TIME PLOTTED => 08:48

| DIST | COUNTY | ROUTE | KILOMETER POST TOTAL PROJECT | SHEET No | TOTAL SHEETS |
|---|---|---|---|---|---|
| 07 | LA | 5 | 42.8/47.3 | 655 | 1073 |

Andrew Rittenhouse 12-05-08
REGISTERED CIVIL ENGINEER DATE

6-8-09
PLANS APPROVAL DATE

REGISTERED PROFESSIONAL ENGINEER
Andrew P. Rittenhouse
No. 61006
Exp. 12-31-10
CIVIL
STATE OF CALIFORNIA

The State of California or its officers or agents shall not be responsible for the accuracy or completeness of electronic copies of this plan sheet.

Notes:

1. For "Detail A" see "ABUTMENT DETAILS NO. 7" sheet.
2. For "Detail B" see "ABUTMENT DETAILS NO. 8" sheet.
3. For "Detail C" see "ABUTMENT DETAILS NO. 9" sheet.
4. For "Detail G" see "ABUTMENT DETAILS NO. 12" sheet.
5. For "Detail I" see "ABUTMENT RETROFIT DETAILS NO. 2" sheet.
6. For "Detail J" see "ABUTMENT RETROFIT DETAILS NO. 2" sheet.
7. For Abutment Retrofit Details see "ABUTMENT RETROFIT DETAILS NO. 1", "ABUTMENT RETROFIT DETAILS NO. 2" and "ABUTMENT RETROFIT DETAILS NO. 3" sheets.
8. For End Diaphragm Details see "MISCELLANEOUS DETAILS NO. 1", "MISCELLANEOUS DETAILS NO. 2" and "MISCELLANEOUS DETAILS NO. 3" sheets.
9. For Utility Opening Details see "MISCELLANEOUS DETAILS NO. 3" sheet.

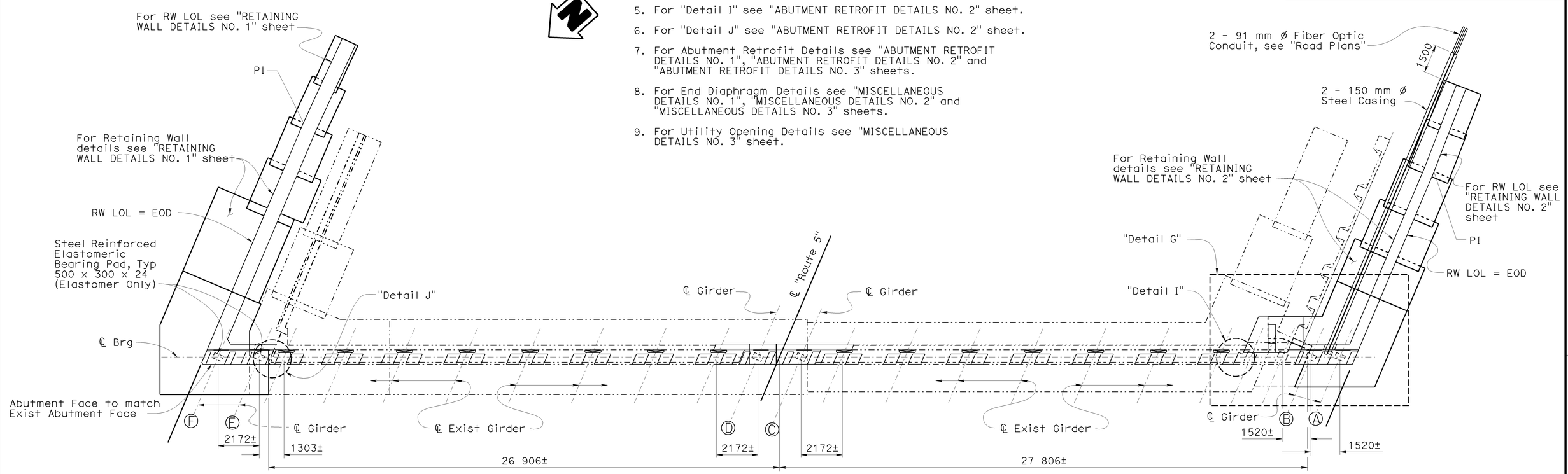


PLAN
1:100

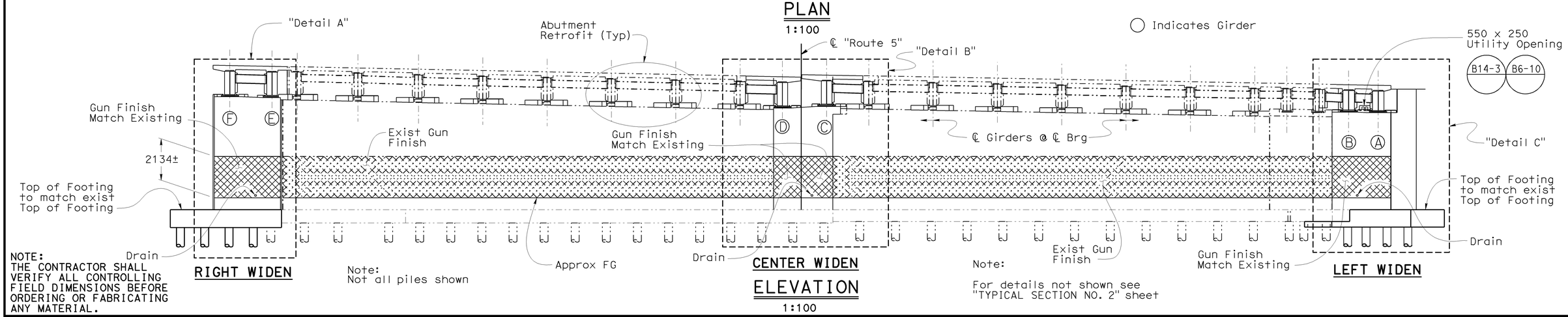


Note:
Not all piles shown

Note:
For details not shown see "TYPICAL SECTION NO. 2" sheet

ELEVATION
1:100

NOTE:
THE CONTRACTOR SHALL VERIFY ALL CONTROLLING FIELD DIMENSIONS BEFORE ORDERING OR FABRICATING ANY MATERIAL.

Caltrans Metric

| | BY | CHECKED |
|---|---|---|
| DESIGN | Hogni Setberg | Gabriel Galo |
| DETAILS | Herman Mauroschadt | Gabriel Galo |
| QUANTITIES | Gabriel Galo | Herman Mauroschadt |

STATE OF CALIFORNIA
DEPARTMENT OF TRANSPORTATION

DIVISION OF ENGINEERING SERVICES
STRUCTURE DESIGN
DESIGN BRANCH 15

CU 07
EA 121841

BRIDGE NO. 53-1077
KILOMETER POST 44.32

# SONORA AVENUE UC WIDEN & RETROFIT
# ABUTMENT 1 LAYOUT

ALL DIMENSIONS ARE IN MILLIMETERS UNLESS OTHERWISE SHOWN

ORIGINAL SCALE IN MILLIMETERS FOR REDUCED PLANS 0 10 20 30 40 50 60 70 80 90 100

DISREGARD PRINTS BEARING EARLIER REVISION DATES

REVISION DATES: 3-5-09 | 12-14-07 | 1-17-08 | 8-15-08 | 11-14-08 | 11-24-08 | 12-12-08 | 1-23-09 | 2-26-09

SHEET 6 OF 59

FILE => 53-1077ri-f-ab-lo1.dgn

STRUCTURES DESIGN DETAIL SHEET (METRIC) (REV.03-17-04)

USERNAME => trmikesl DATE PLOTTED => 12-JUN-2009 TIME PLOTTED => 08:49

| DIST | COUNTY | ROUTE | KILOMETER POST TOTAL PROJECT | SHEET No | TOTAL SHEETS |
|---|---|---|---|---|---|
| 07 | LA | 5 | 42.8/47.3 | 656 | 1073 |

Andrew Rittenhouse 12-05-08
REGISTERED CIVIL ENGINEER DATE

6-8-09
PLANS APPROVAL DATE

REGISTERED PROFESSIONAL ENGINEER
Andrew P. Rittenhouse
No. 61006
Exp. 12-31-10
CIVIL
STATE OF CALIFORNIA

The State of California or its officers or agents shall not be responsible for the accuracy or completeness of electronic copies of this plan sheet.

Notes:

1. For "Detail D" see "ABUTMENT DETAILS NO. 14" sheet.
2. For "Detail E" see "ABUTMENT DETAILS NO. 15" sheet.
3. For "Detail F" see "ABUTMENT DETAILS NO. 16" sheet.
4. For "Detail H" see "ABUTMENT DETAILS NO. 20" sheet.
5. For "Detail K" see "ABUTMENT RETROFIT DETAIL NO. 2" sheet.
6. For "Detail L" see "ABUTMENT RETROFIT DETAIL NO. 2" sheet.
7. For Abutment Retrofit Details see "ABUTMENT RETROFIT DETAILS NO. 1", "ABUTMENT RETROFIT DETAILS NO. 2" and "ABUTMENT RETROFIT DETAILS NO. 3" sheets.
8. For End Diaphragm Details see "MISCELLANEOUS DETAILS NO. 1", "MISCELLANEOUS DETAILS NO. 2" and "MISCELLANEOUS DETAILS NO. 3" sheets.
9. For Utility Opening Details see "MISCELLANEOUS DETAILS NO. 3" sheet.

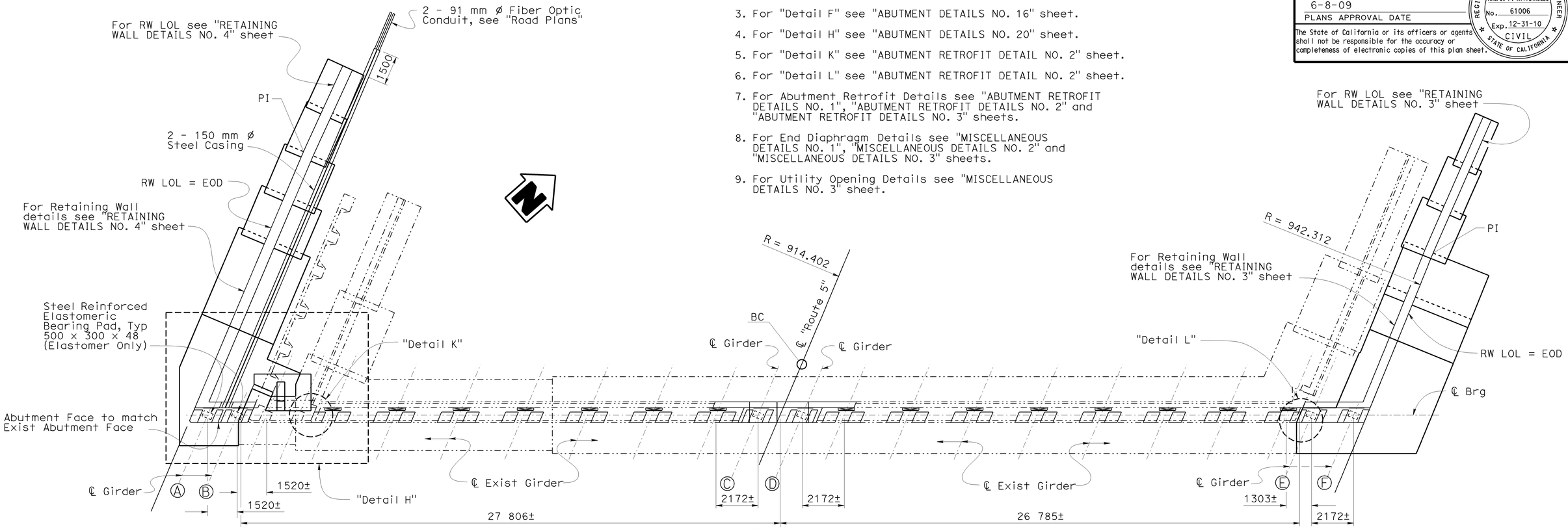


PLAN
1:100

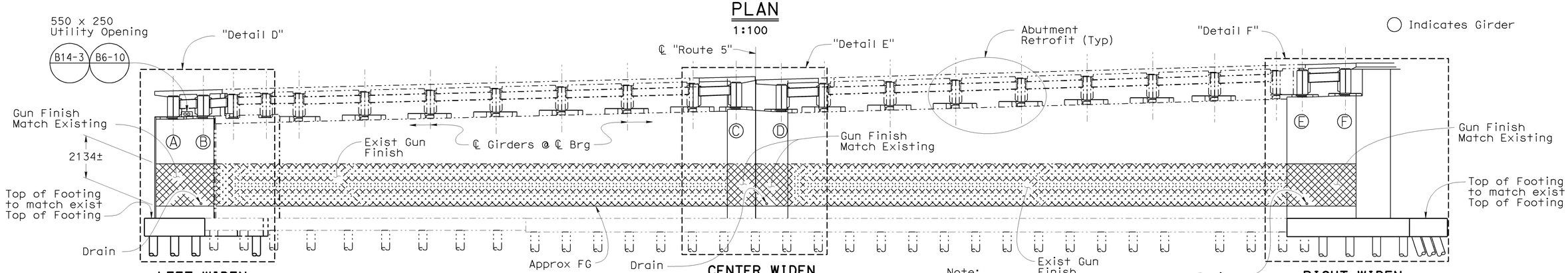


LEFT WIDEN

CENTER WIDEN

RIGHT WIDEN

ELEVATION
1:100

NOTE:
THE CONTRACTOR SHALL VERIFY ALL CONTROLLING FIELD DIMENSIONS BEFORE ORDERING OR FABRICATING ANY MATERIAL.

Note:
Not all piles shown

Note:
For details not shown see "TYPICAL SECTION NO. 2" sheet

| | BY | CHECKED |
|---|---|---|
| DESIGN | Hogni Setberg | Gabriel Galo |
| DETAILS | Herman Mauroschadt | Gabriel Galo |
| QUANTITIES | Gabriel Galo | Herman Mauroschadt |

STATE OF CALIFORNIA
DEPARTMENT OF TRANSPORTATION

DIVISION OF ENGINEERING SERVICES
STRUCTURE DESIGN
DESIGN BRANCH 15

BRIDGE NO. 53-1077
KILOMETER POST 44.32

# SONORA AVENUE UC WIDEN & RETROFIT
## ABUTMENT 2 LAYOUT

ALL DIMENSIONS ARE IN MILLIMETERS UNLESS OTHERWISE SHOWN

ORIGINAL SCALE IN MILLIMETERS FOR REDUCED PLANS 0 10 20 30 40 50 60 70 80 90 100

CU 07
EA 121841

DISREGARD PRINTS BEARING EARLIER REVISION DATES

REVISION DATES: 3-5-09 | 12-4-08 | 12-5-08 | 2-2-08 | 11-4-08 | 11-7-08 | 12-12-08 | 1-28-09 | 2-25-09

SHEET 7 OF 59

FILE => 53-1077r1-f-ab-1o2.dgn

STRUCTURES DESIGN DETAIL SHEET (METRIC) (REV.03-17-04)

USERNAME => trmikes1 DATE PLOTTED => 12-JUN-2009 TIME PLOTTED => 08:49

| DIST | COUNTY | ROUTE | KILOMETER POST TOTAL PROJECT | SHEET No | TOTAL SHEETS |
|---|---|---|---|---|---|
| 07 | LA | 5 | 42.8/47.3 | 657 | 1073 |

Andrew P. Rittenhouse 12-05-08
REGISTERED CIVIL ENGINEER DATE

6-8-09
PLANS APPROVAL DATE

REGISTERED PROFESSIONAL ENGINEER Andrew P. Rittenhouse No. 61006 Exp. 12-31-10 CIVIL STATE OF CALIFORNIA

The State of California or its officers or agents shall not be responsible for the accuracy or completeness of electronic copies of this plan sheet.

Notes:

All concrete around existing retained piles to be hand chipped to preserve the reinforcement and the integrity of the piles.

Existing retained piles to be hand chipped down to 75 mm above bottom of new footing as required

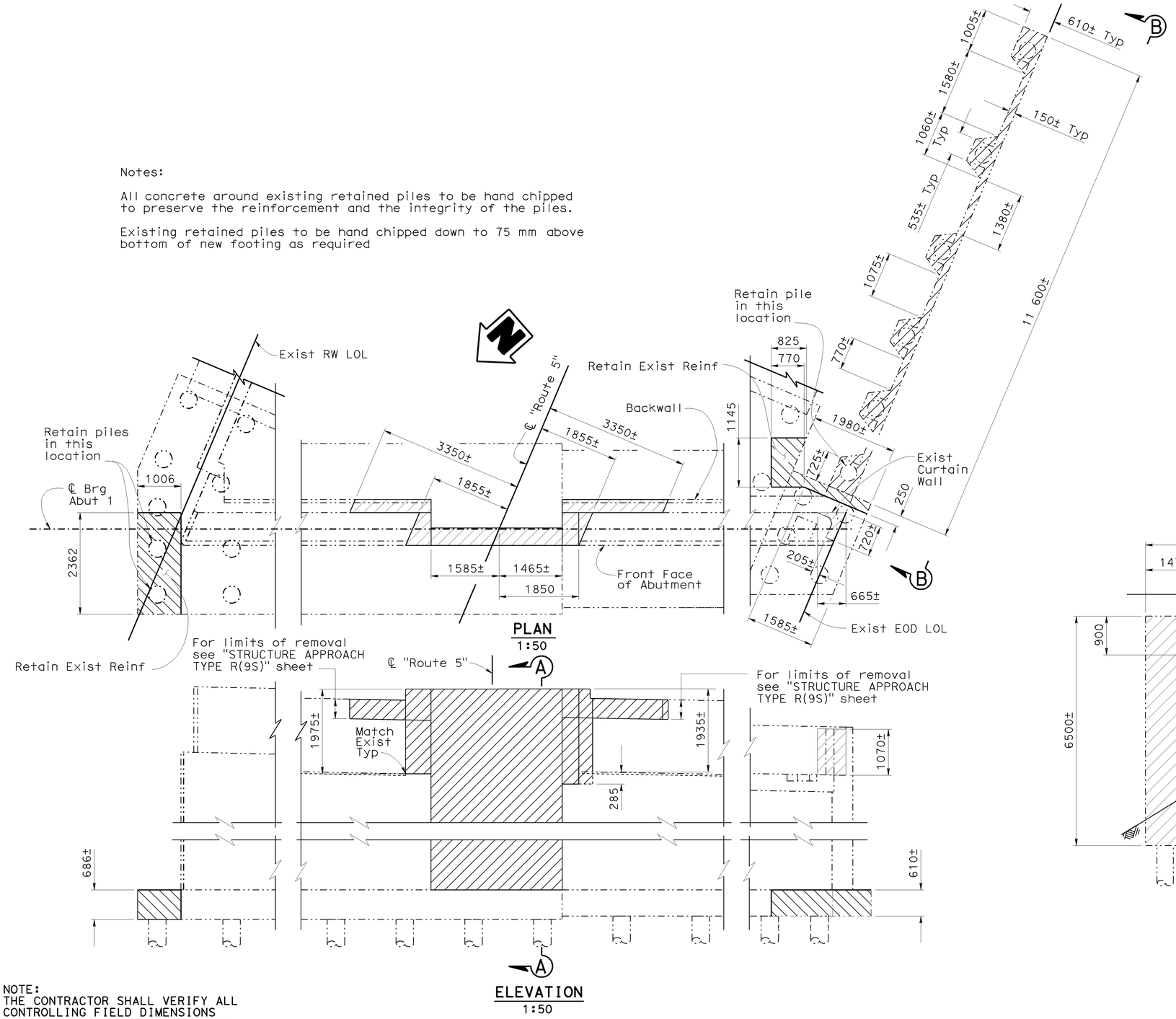


CONCRETE REMOVAL ABUTMENT 1

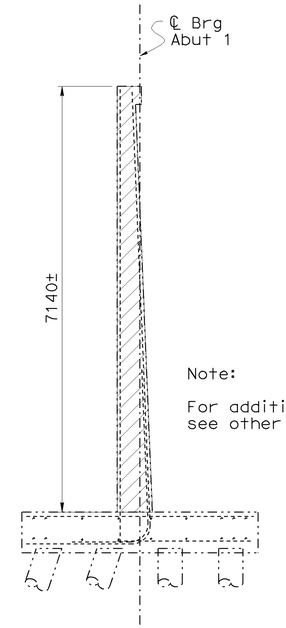


Note:

For additional existing reinforcement to be retained see other "Abutment Details" sheets.

SECTION A-A
1:50

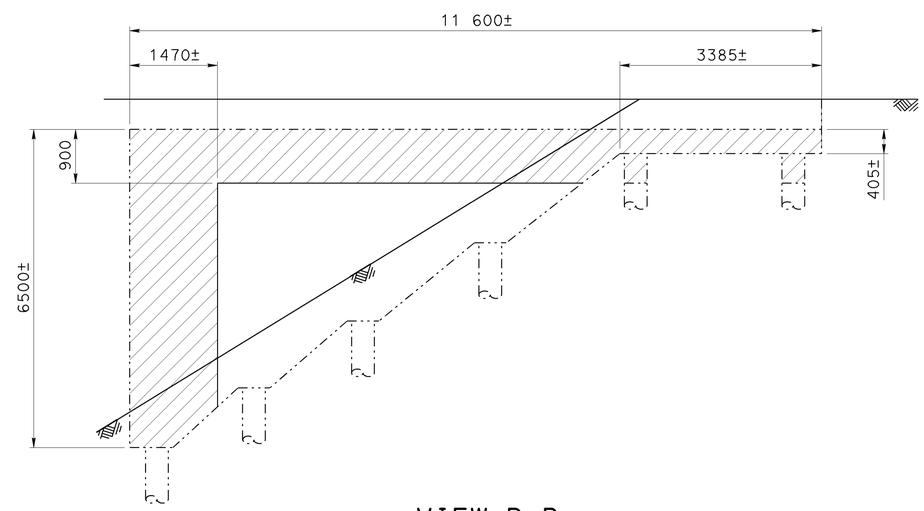


VIEW B-B
1:50

Indicates Abutment & Wingwall Concrete Removal

Indicates Footing Concrete Removal

NOTE:
THE CONTRACTOR SHALL VERIFY ALL CONTROLLING FIELD DIMENSIONS BEFORE ORDERING OR FABRICATING ANY MATERIAL.

| | | | |
|---|---|---|---|
| DESIGN | BY Hogni Setberg | CHECKED Gabriel Galo | |
| DETAILS | BY Herman Mauroschadt | CHECKED Gabriel Galo | |
| QUANTITIES | BY Gabriel Galo | CHECKED Herman Mauroschadt | |

STATE OF CALIFORNIA
DEPARTMENT OF TRANSPORTATION

DIVISION OF ENGINEERING SERVICES
STRUCTURE DESIGN
DESIGN BRANCH 15

BRIDGE NO. 53-1077
KILOMETER POST 44.32

SONORA AVENUE UC WIDEN & RETROFIT
ABUTMENT DETAILS NO. 1

Caltrans Metric

ALL DIMENSIONS ARE IN MILLIMETERS UNLESS OTHERWISE SHOWN

ORIGINAL SCALE IN MILLIMETERS FOR REDUCED PLANS 0 10 20 30 40 50 60 70 80 90 100

CU 07
EA 121841

DISREGARD PRINTS BEARING EARLIER REVISION DATES

REVISION DATES 1-29-08 11-24-08

SHEET 8 OF 59

FILE => 53-1077ri-h-a01.dgn

STRUCTURES DESIGN DETAIL SHEET (METRIC) (REV.03-17-04)

USERNAME => trmikesl DATE PLOTTED => 12-JUN-2009 TIME PLOTTED => 08:49

| DIST | COUNTY | ROUTE | KILOMETER POST TOTAL PROJECT | SHEET No | TOTAL SHEETS |
|---|---|---|---|---|---|
| 07 | LA | 5 | 42.8/47.3 | 658 | 1073 |

REGISTERED CIVIL ENGINEER — DATE 12-05-08

6-8-09
PLANS APPROVAL DATE

REGISTERED PROFESSIONAL ENGINEER — Andrew P. Rittenhouse — No. 61006 — Exp. 12-31-10 — CIVIL — STATE OF CALIFORNIA

The State of California or its officers or agents shall not be responsible for the accuracy or completeness of electronic copies of this plan sheet.

Notes:

All concrete around existing retained piles to be hand chipped to preserve the reinforcement and the integrity of the piles.

Existing retained piles to be hand chipped down to 75 mm above bottom of new footing as required

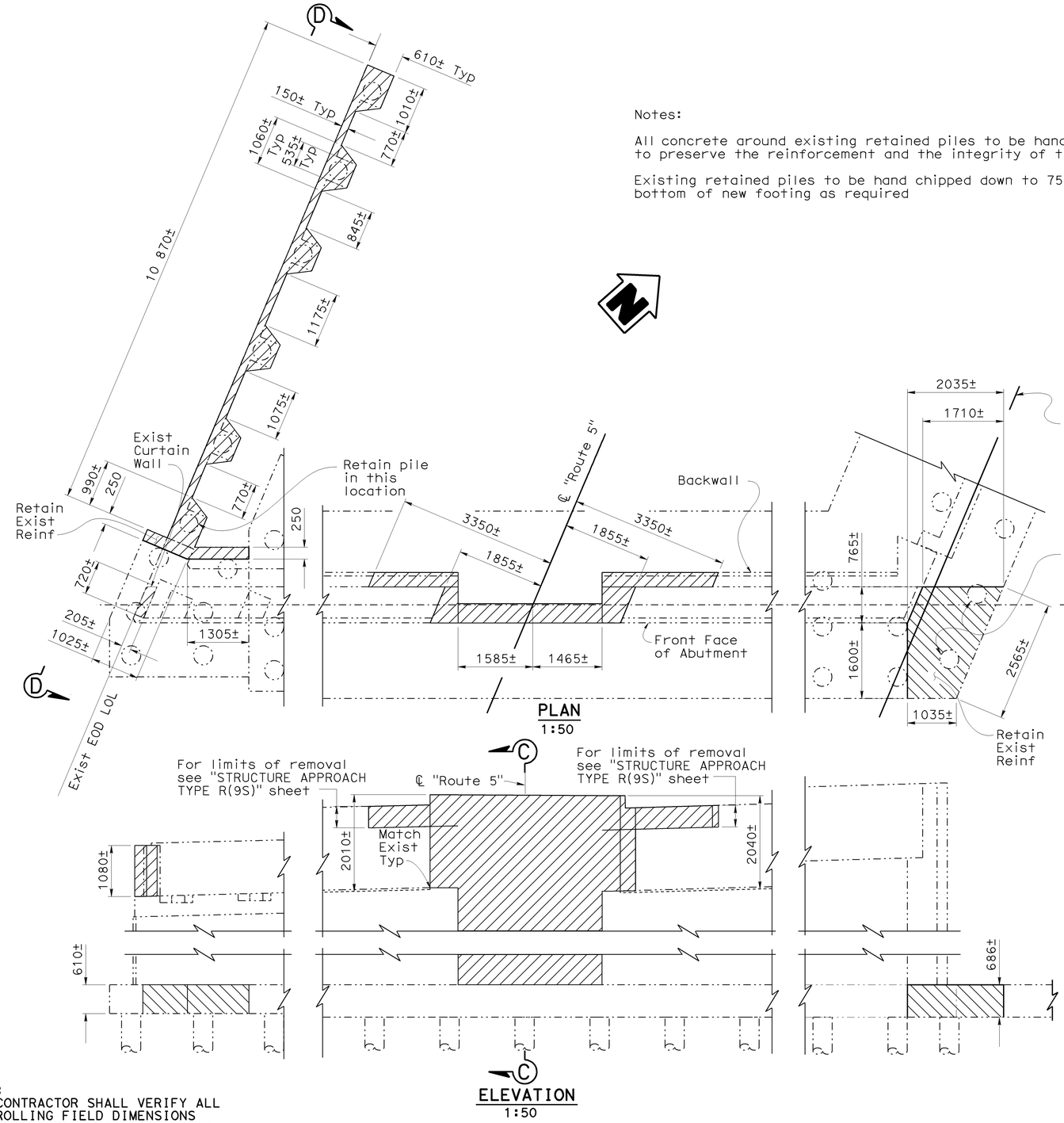


PLAN
1:50

ELEVATION
1:50

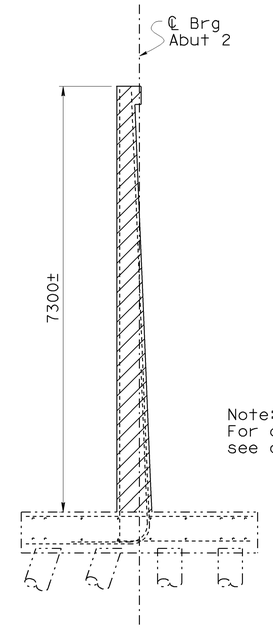


SECTION C-C
1:50

Note:
For additional existing reinforcement to be retained see other "Abutment Details" sheets.

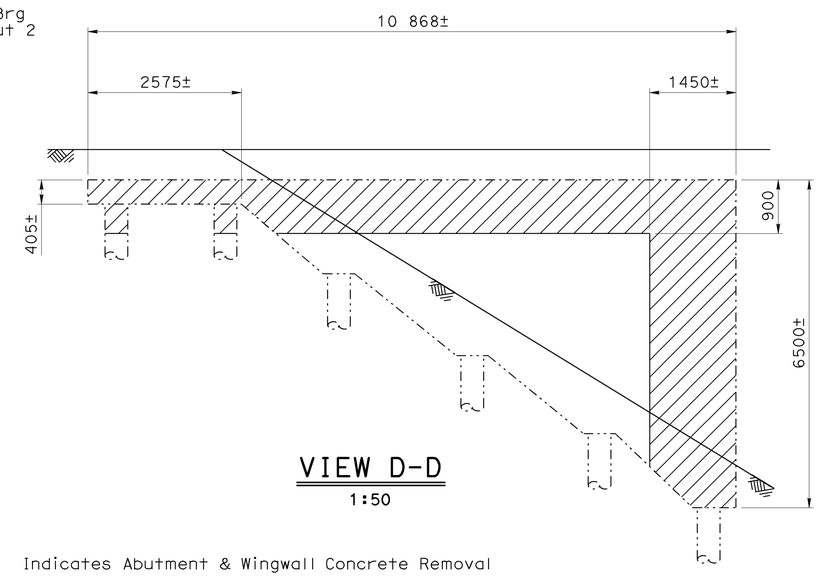


VIEW D-D
1:50

Indicates Abutment & Wingwall Concrete Removal

Indicates Footing Concrete Removal

NOTE:
THE CONTRACTOR SHALL VERIFY ALL CONTROLLING FIELD DIMENSIONS BEFORE ORDERING OR FABRICATING ANY MATERIAL.

CONCRETE REMOVAL ABUTMENT 2

Caltrans Metric

| | BY | CHECKED |
|---|---|---|
| DESIGN | Hogni Setberg | Gabriel Galo |
| DETAILS | Herman Mauroschadt | Gabriel Galo |
| QUANTITIES | Gabriel Galo | Herman Mauroschadt |

STATE OF CALIFORNIA
DEPARTMENT OF TRANSPORTATION

DIVISION OF ENGINEERING SERVICES
STRUCTURE DESIGN
DESIGN BRANCH 15

CU 07
EA 121841

BRIDGE NO. 53-1077
KILOMETER POST 44.32

SONORA AVENUE UC WIDEN & RETROFIT
ABUTMENT DETAILS NO. 2

ALL DIMENSIONS ARE IN MILLIMETERS UNLESS OTHERWISE SHOWN

ORIGINAL SCALE IN MILLIMETERS FOR REDUCED PLANS 0 10 20 30 40 50 60 70 80 90 100

DISREGARD PRINTS BEARING EARLIER REVISION DATES — REVISION DATES 5-09-07 11-21-08 11-24-08

SHEET 9 OF 59

FILE => 53-1077r1-h-a02.dgn

STRUCTURES DESIGN DETAIL SHEET (METRIC) (REV.03-17-04)

USERNAME => ttmirkes1 DATE PLOTTED => 12-JUN-2009 TIME PLOTTED => 08:49

| DIST | COUNTY | ROUTE | KILOMETER POST TOTAL PROJECT | SHEET No | TOTAL SHEETS |
|---|---|---|---|---|---|
| 07 | LA | 5 | 42.8/47.3 | 659 | 1073 |

Andrew Rittenhouse 12-05-08
REGISTERED CIVIL ENGINEER DATE

6-8-09
PLANS APPROVAL DATE

REGISTERED PROFESSIONAL ENGINEER
Andrew P. Rittenhouse
No. 61006
Exp. 12-31-10
CIVIL
STATE OF CALIFORNIA

The State of California or its officers or agents shall not be responsible for the accuracy or completeness of electronic copies of this plan sheet.

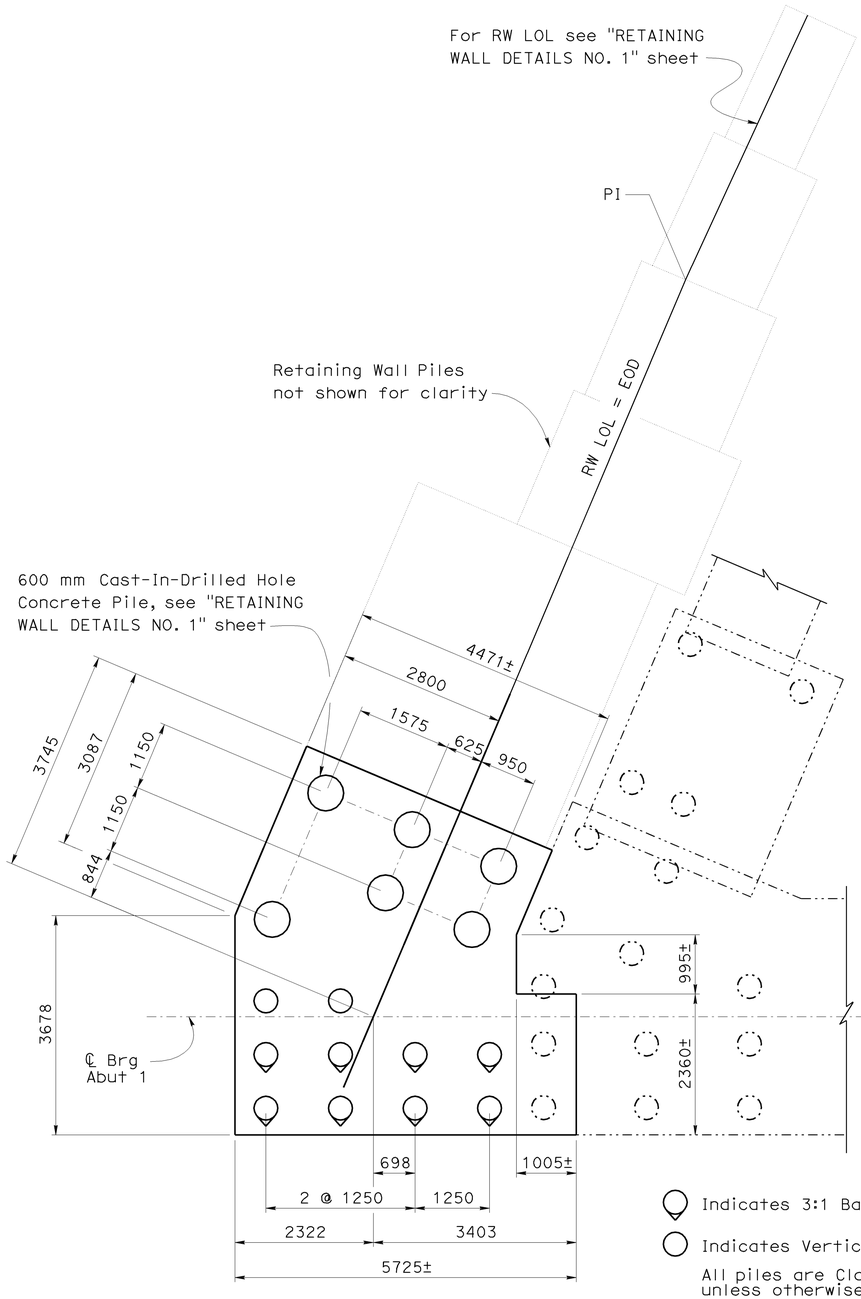


RIGHT WIDEN
1:50

Indicates 3:1 Battered Pile

Indicates Vertical Pile

All piles are Class 400 Alternative W unless otherwise shown.

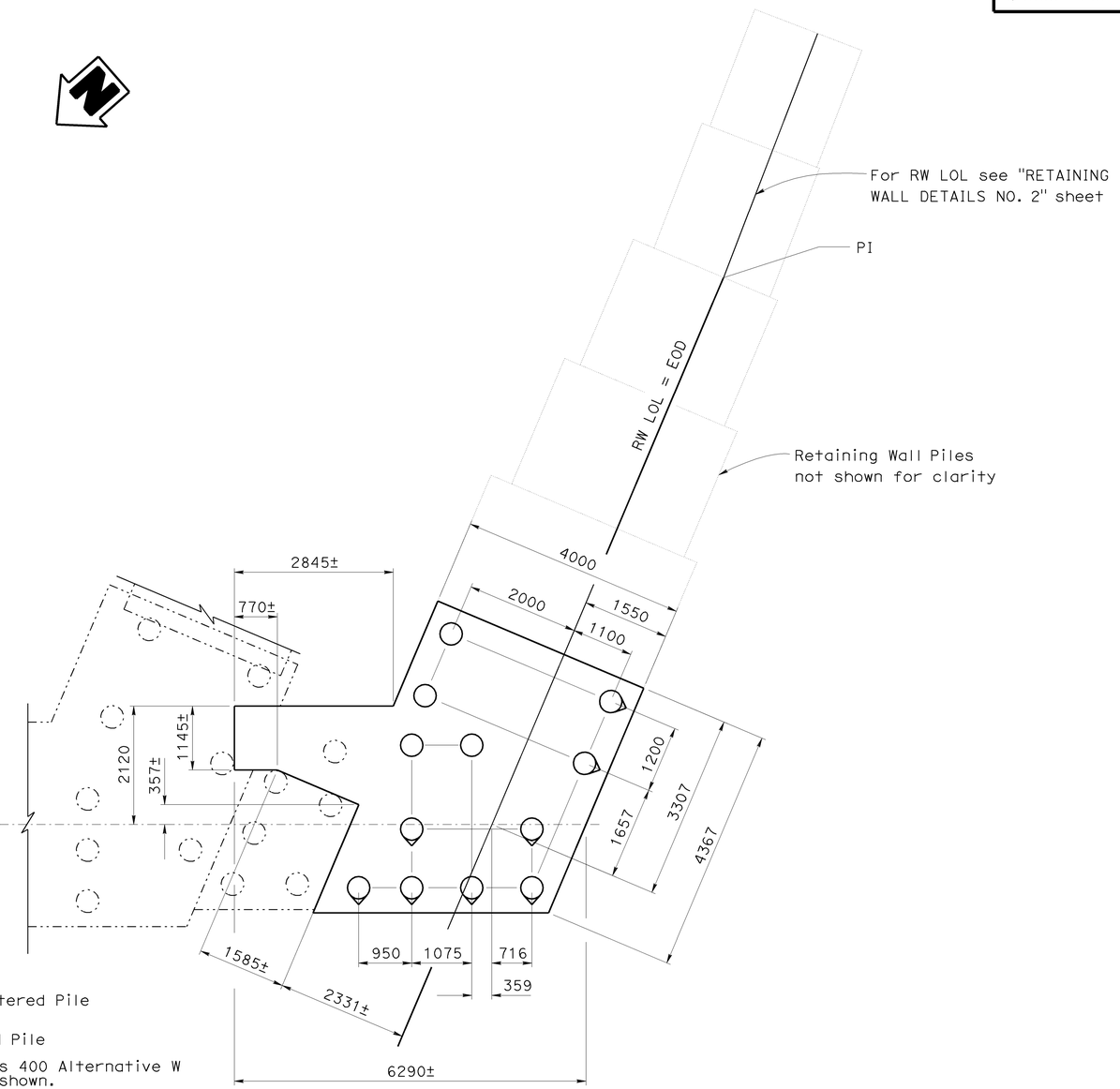


LEFT WIDEN
1:50

NOTE:
THE CONTRACTOR SHALL VERIFY ALL CONTROLLING FIELD DIMENSIONS BEFORE ORDERING OR FABRICATING ANY MATERIAL.

# ABUTMENT 1 FOOTING PLAN

Caltrans Metric

| | BY | CHECKED |
|---|---|---|
| DESIGN | Hogni Setberg | Gariel Galo |
| DETAILS | Herman Mauroschadt | Gariel Galo |
| QUANTITIES | Gariel Galo | Herman Mauroschadt |

STATE OF CALIFORNIA
DEPARTMENT OF TRANSPORTATION

DIVISION OF ENGINEERING SERVICES
STRUCTURE DESIGN
DESIGN BRANCH 15

BRIDGE NO. 53-1077
KILOMETER POST 44.32

SONORA AVENUE UC WIDEN & RETROFIT
ABUTMENT DETAILS NO. 3

ALL DIMENSIONS ARE IN MILLIMETERS UNLESS OTHERWISE SHOWN

ORIGINAL SCALE IN MILLIMETERS FOR REDUCED PLANS 0 10 20 30 40 50 60 70 80 90 100

CU 07
EA 121841

DISREGARD PRINTS BEARING EARLIER REVISION DATES

REVISION DATES: 8-17-07 11-16-07 12-11-07 2-15-08 8-1-08 11-24-08 1-15-09 2-24-09 3-5-09

SHEET 10 OF 59

FILE => 53-1077ri-h-a03.dgn

STRUCTURES DESIGN DETAIL SHEET (METRIC) (REV.03-17-04)

USERNAME => rtmirkes DATE PLOTTED => 12-JUN-2009 TIME PLOTTED => 08:49

| DIST | COUNTY | ROUTE | KILOMETER POST TOTAL PROJECT | SHEET No | TOTAL SHEETS |
|---|---|---|---|---|---|
| 07 | LA | 5 | 42.8/47.3 | 660 | 1073 |

Andrew Rittenhouse 12-05-08
REGISTERED CIVIL ENGINEER DATE

6-8-09
PLANS APPROVAL DATE

REGISTERED PROFESSIONAL ENGINEER Andrew P. Rittenhouse No. 61006 Exp. 12-31-10 CIVIL STATE OF CALIFORNIA

The State of California or its officers or agents shall not be responsible for the accuracy or completeness of electronic copies of this plan sheet.

Notes:

1. For information not shown, see "ABUTMENT DETAILS NO. 12" sheet
2. Top & Bottom refers to top and bottom of raised area

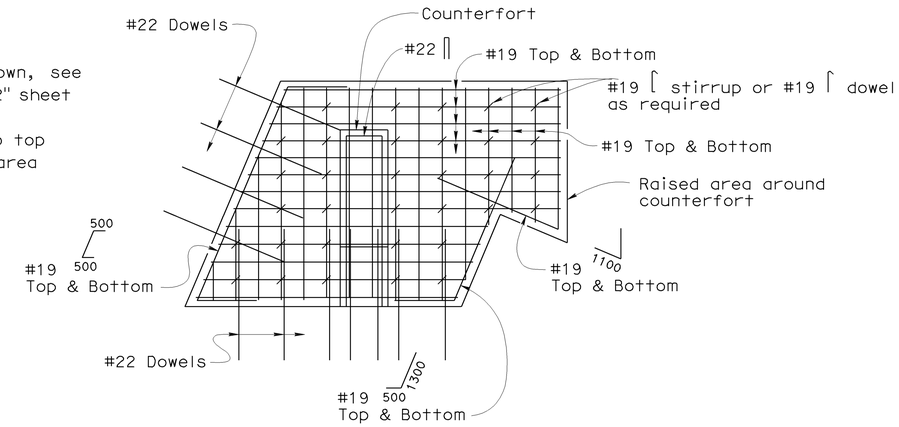


## RAISED AREA AROUND COUNTERFORT DETAIL

1:25

Note:

Top & Bottom refers to top and bottom of footing

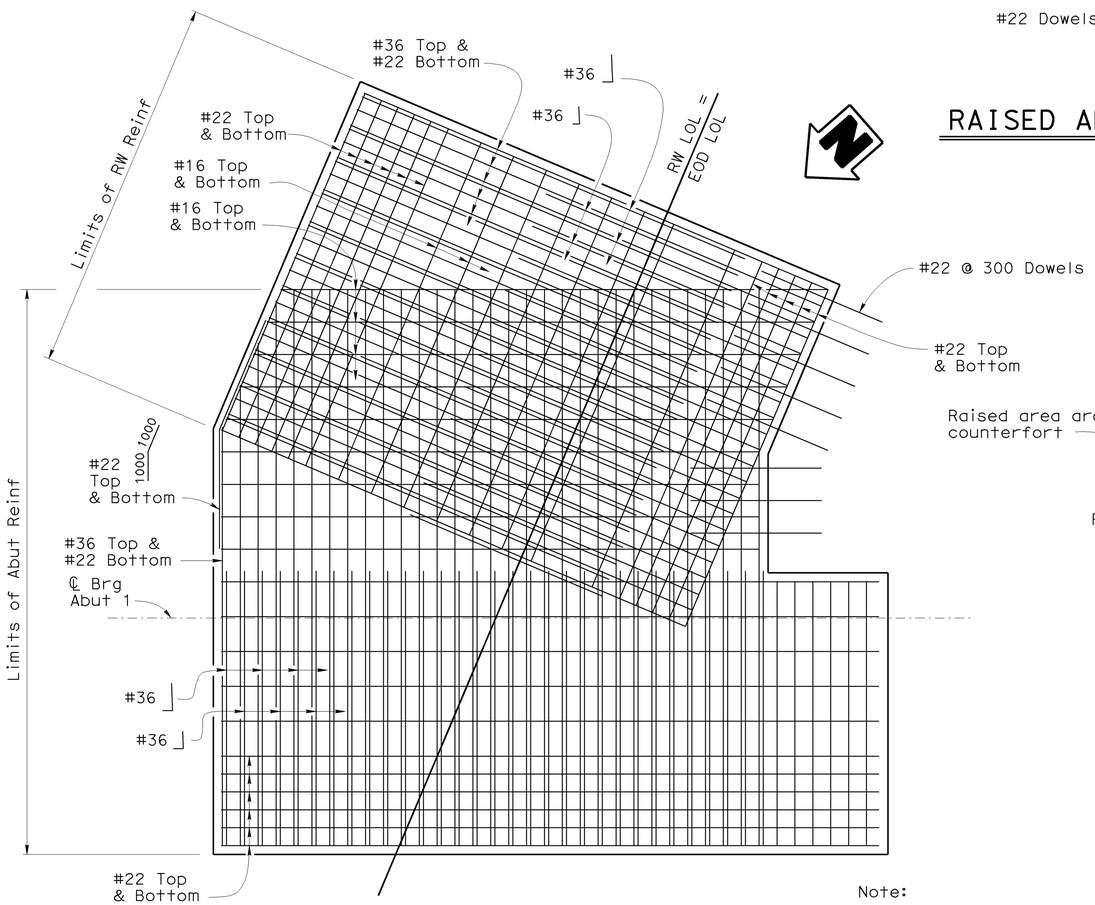


Note:

Not all existing retained reinforcement shown.

## RIGHT WIDEN FOOTING CORNER DETAIL

1:25

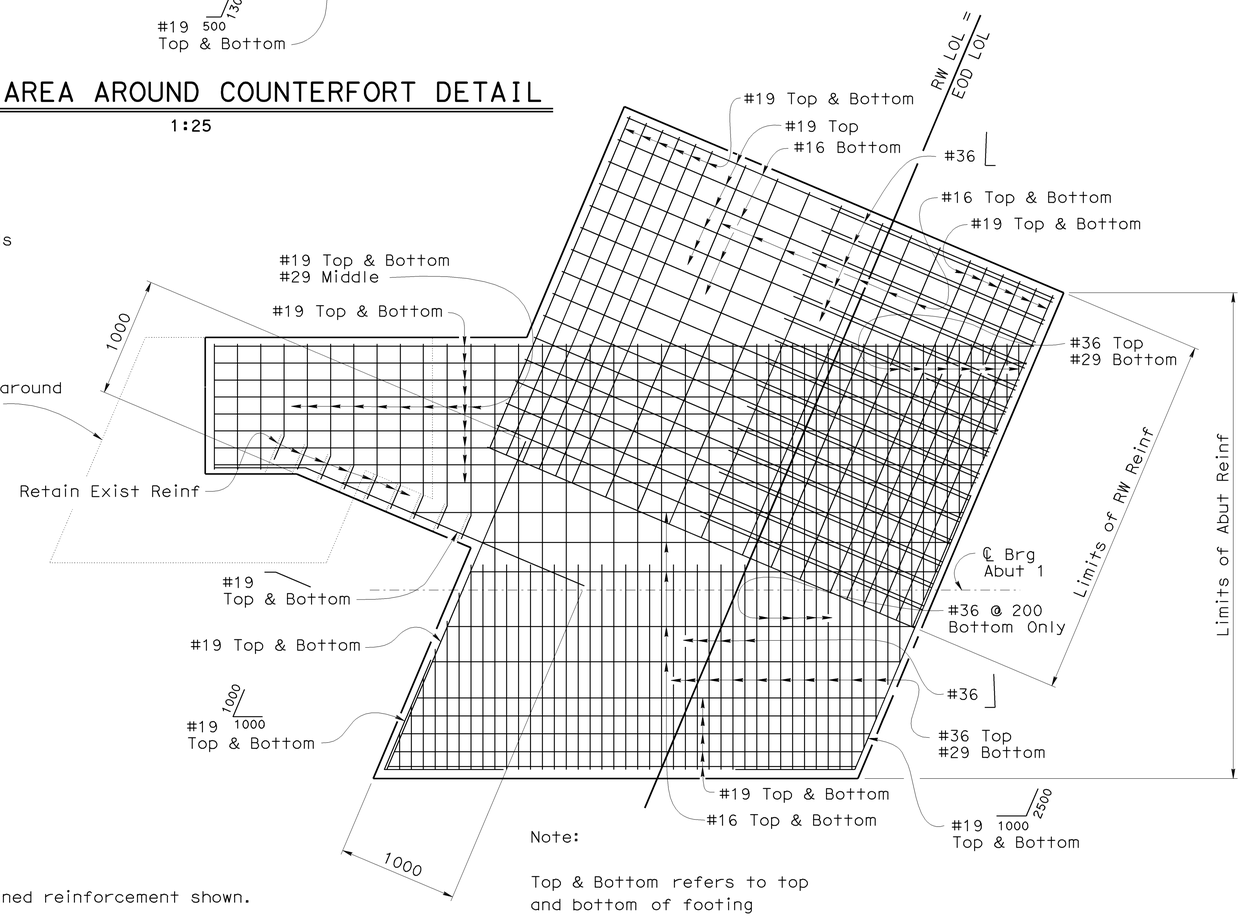


Note:

Top & Bottom refers to top and bottom of footing

## LEFT WIDEN FOOTING CORNER DETAIL

1:25

NOTE:
THE CONTRACTOR SHALL VERIFY ALL CONTROLLING FIELD DIMENSIONS BEFORE ORDERING OR FABRICATING ANY MATERIAL.

## ABUTMENT 1 FOOTING

| | | | |
|---|---|---|---|
| DESIGN | BY Hogni Setberg | CHECKED Gabriel Galo | |
| DETAILS | BY Herman Mauroschadt | CHECKED Gabriel Galo | |
| QUANTITIES | BY Gabriel Galo | CHECKED Herman Mauroschadt | |

STATE OF CALIFORNIA
DEPARTMENT OF TRANSPORTATION

DIVISION OF ENGINEERING SERVICES
STRUCTURE DESIGN
DESIGN BRANCH 15

BRIDGE NO. 53-1077
KILOMETER POST 44.32

SONORA AVENUE UC WIDEN & RETROFIT
ABUTMENT DETAILS NO. 4

Caltrans Metric

ALL DIMENSIONS ARE IN MILLIMETERS UNLESS OTHERWISE SHOWN

ORIGINAL SCALE IN MILLIMETERS FOR REDUCED PLANS 0 10 20 30 40 50 60 70 80 90 100

CU 07
EA 121841

DISREGARD PRINTS BEARING EARLIER REVISION DATES

REVISION DATES: 5-29-07 2-15-08 4-1-08 8-5-08 11-24-08

SHEET 11 OF 59

FILE => 53-1077ri-h-a04.dgn

STRUCTURES DESIGN DETAIL SHEET (METRIC) (REV.03-17-04)

USERNAME => trmikest DATE PLOTTED => 12-JUN-2009 TIME PLOTTED => 08:49

| DIST | COUNTY | ROUTE | KILOMETER POST TOTAL PROJECT | SHEET No | TOTAL SHEETS |
|---|---|---|---|---|---|
| 07 | LA | 5 | 42.8/47.3 | 661 | 1073 |

Andrew Rittenhouse 12-05-08
REGISTERED CIVIL ENGINEER DATE

6-8-09
PLANS APPROVAL DATE

REGISTERED PROFESSIONAL ENGINEER
Andrew P. Rittenhouse
No. 61006
Exp. 12-31-10
CIVIL
STATE OF CALIFORNIA

The State of California or its officers or agents shall not be responsible for the accuracy or completeness of electronic copies of this plan sheet.

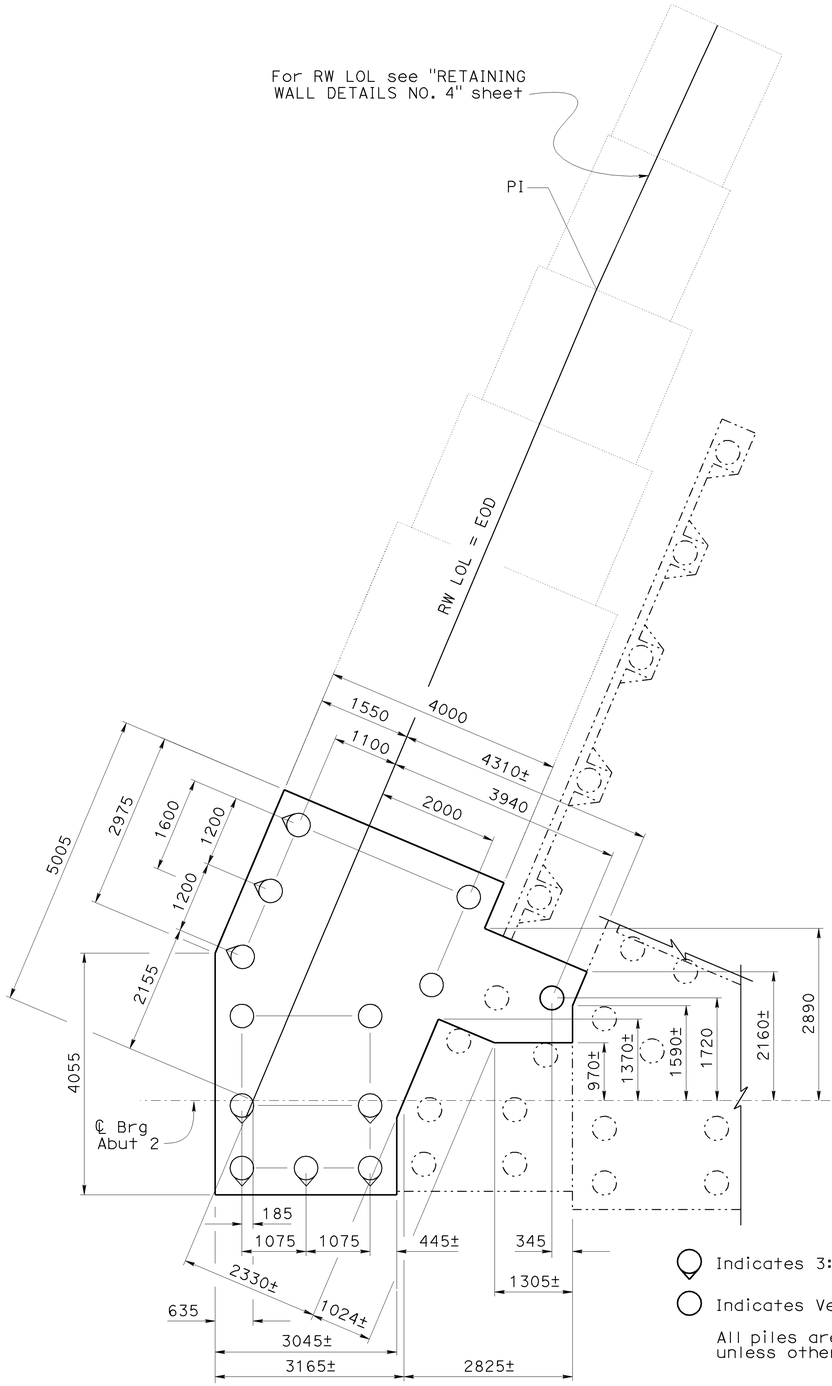


LEFT WIDEN
1:50

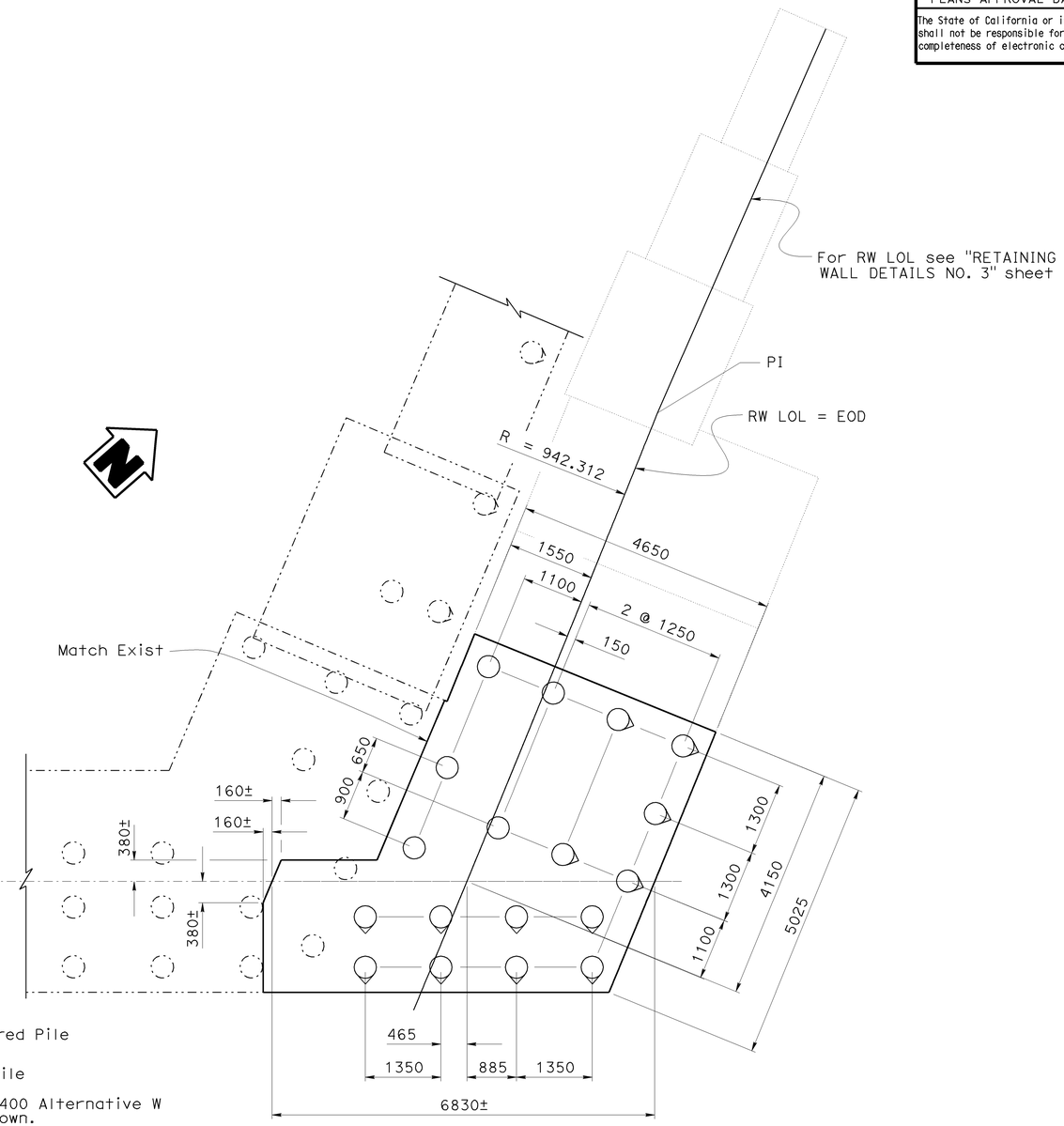


RIGHT WIDEN
1:50

Indicates 3:1 Battered Pile

Indicates Vertical Pile

All piles are Class 400 Alternative W unless otherwise shown.

## ABUTMENT 2 FOOTING PLAN

NOTE:
THE CONTRACTOR SHALL VERIFY ALL CONTROLLING FIELD DIMENSIONS BEFORE ORDERING OR FABRICATING ANY MATERIAL.

Caltrans Metric

ALL DIMENSIONS ARE IN MILLIMETERS UNLESS OTHERWISE SHOWN

ORIGINAL SCALE IN MILLIMETERS FOR REDUCED PLANS 0 10 20 30 40 50 60 70 80 90 100

| | BY | CHECKED |
|---|---|---|
| DESIGN | Hogni Setberg | Gabriel Galo |
| DETAILS | Herman Mauroschadt | Gabriel Galo |
| QUANTITIES | Gabriel Galo | Herman Mauroschadt |

STATE OF CALIFORNIA
DEPARTMENT OF TRANSPORTATION

DIVISION OF ENGINEERING SERVICES
STRUCTURE DESIGN
DESIGN BRANCH 15

CU 07
EA 121841

BRIDGE NO. 53-1077
KILOMETER POST 44.32

# SONORA AVENUE UC WIDEN & RETROFIT
# ABUTMENT DETAILS NO. 5

DISREGARD PRINTS BEARING EARLIER REVISION DATES

REVISION DATES: 11-16-07 12-14-07 2-14-08 11-5-08 11-24-08 1-16-09 3-5-09

SHEET 12 OF 59

FILE => 53-1077ri-h-a05.dgn

STRUCTURES DESIGN DETAIL SHEET (METRIC) (REV.03-17-04)

USERNAME => trmikesl DATE PLOTTED => 12-JUN-2009 TIME PLOTTED => 08:49

| DIST | COUNTY | ROUTE | KILOMETER POST TOTAL PROJECT | SHEET No | TOTAL SHEETS |
|---|---|---|---|---|---|
| 07 | LA | 5 | 42.8/47.3 | 662 | 1073 |

Andrew Rittenhouse 12-05-08
REGISTERED CIVIL ENGINEER DATE

6-8-09
PLANS APPROVAL DATE

REGISTERED PROFESSIONAL ENGINEER Andrew P. Rittenhouse No. 61006 Exp. 12-31-10 CIVIL STATE OF CALIFORNIA

The State of California or its officers or agents shall not be responsible for the accuracy or completeness of electronic copies of this plan sheet.

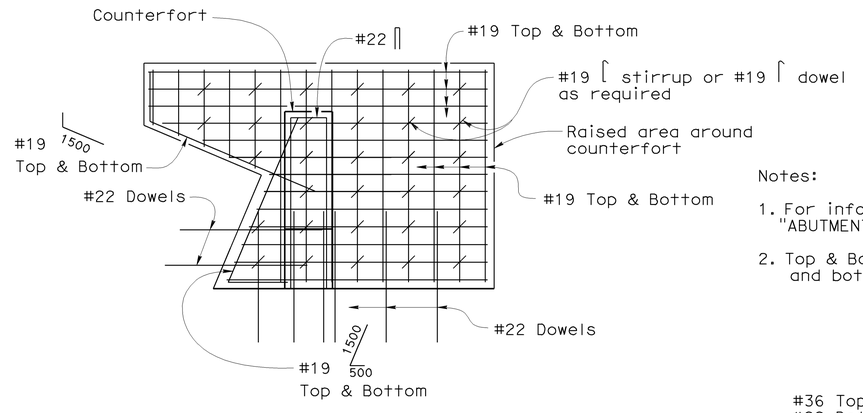


Notes:

1. For information not shown, see "ABUTMENT DETAILS NO. 20" sheet
2. Top & Bottom refers to top and bottom of raised area

## RAISED AREA AROUND COUNTERFORT DETAIL

1:25

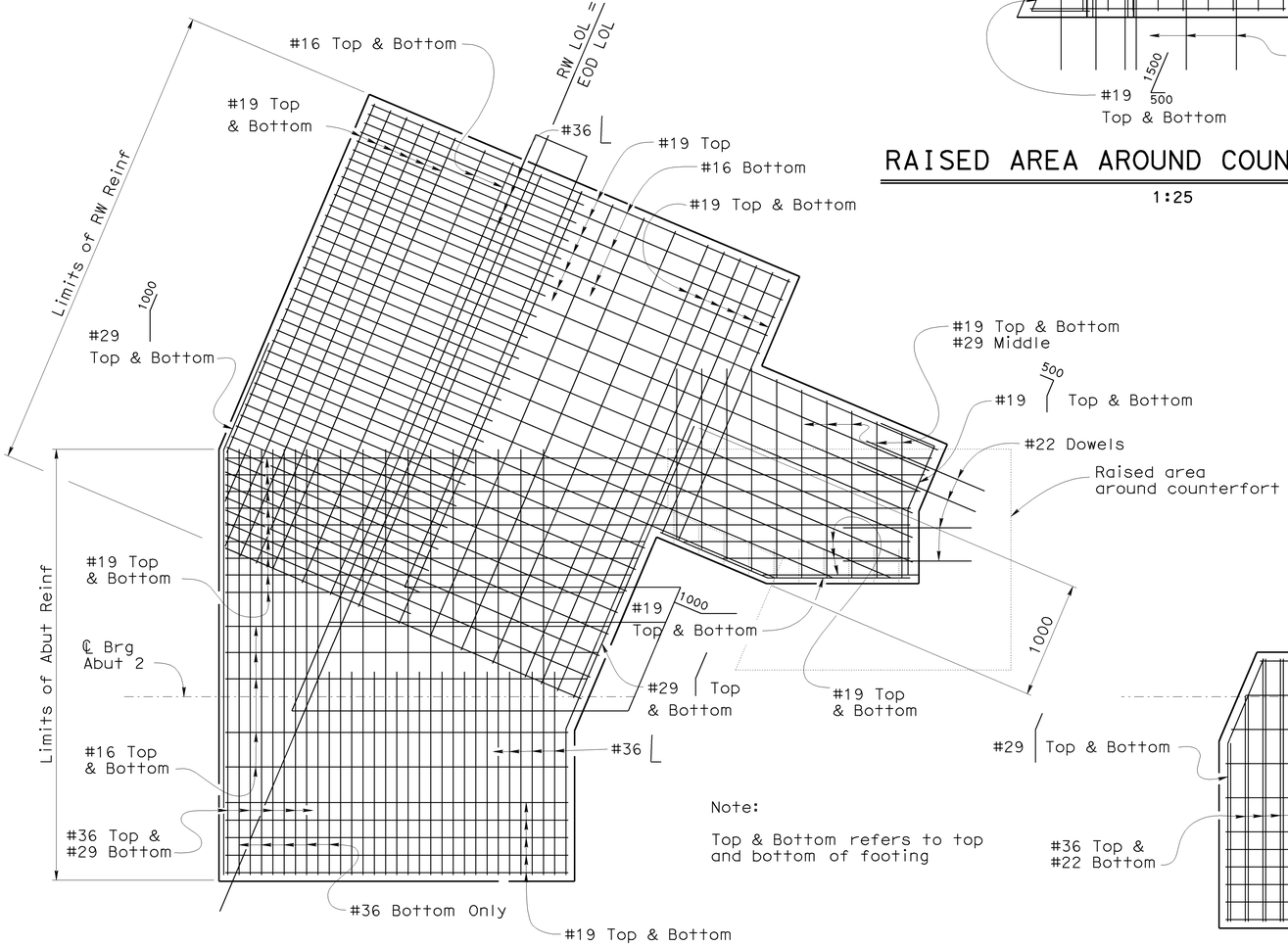


## LEFT WIDEN FOOTING CORNER DETAIL

1:25

Note:

Top & Bottom refers to top and bottom of footing

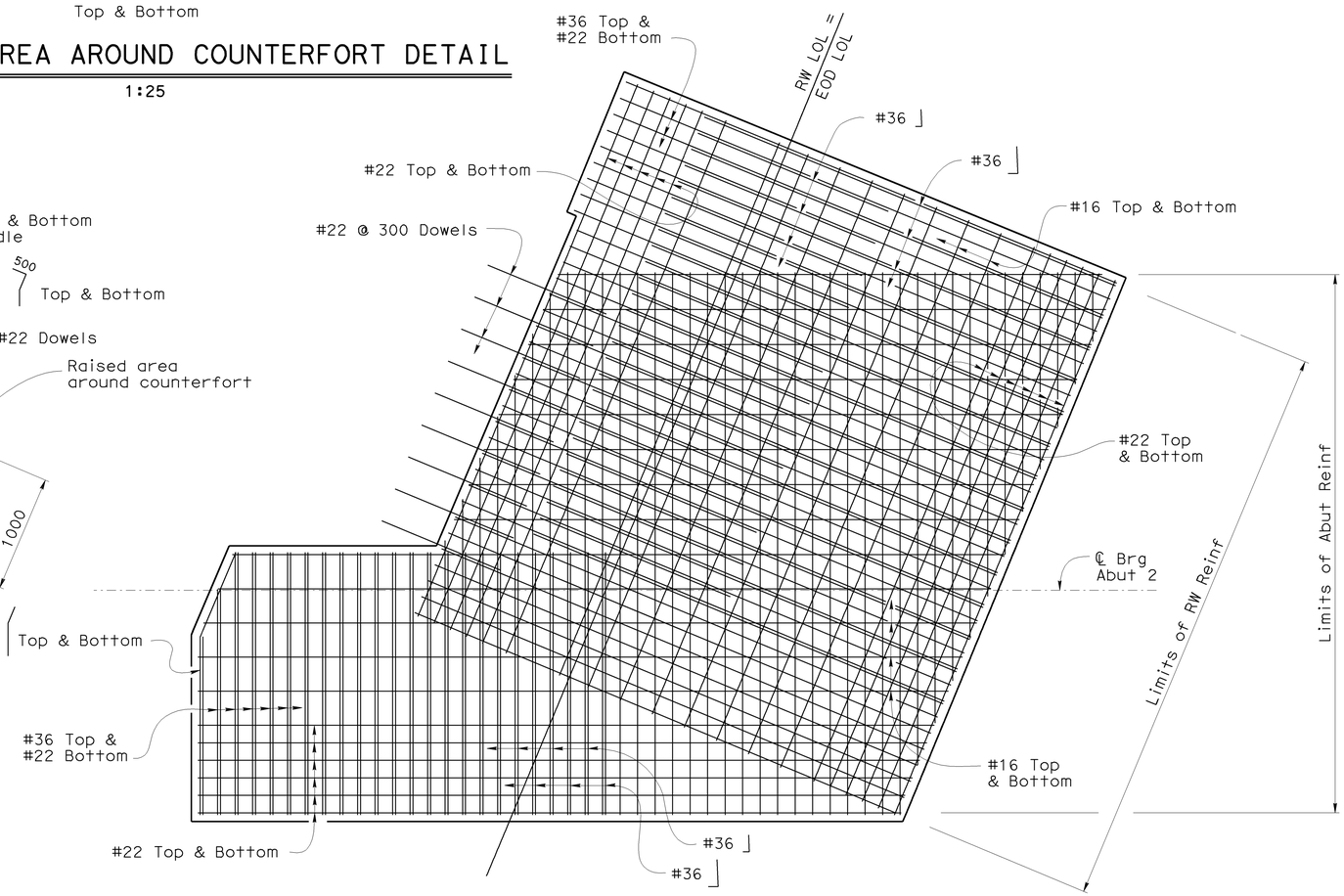


## RIGHT WIDEN FOOTING CORNER DETAIL

1:25

Note:

Top & Bottom refers to top and bottom of footing

Note:

Not all existing retained reinforcement shown.

## ABUTMENT 2 FOOTING

NOTE:
THE CONTRACTOR SHALL VERIFY ALL CONTROLLING FIELD DIMENSIONS BEFORE ORDERING OR FABRICATING ANY MATERIAL.

Caltrans Metric

| | BY | CHECKED |
|---|---|---|
| DESIGN | Hogni Setberg | Gabriel Galo |
| DETAILS | Herman Mauroschadt | Gabriel Galo |
| QUANTITIES | Gabriel Galo | Herman Mauroschadt |

STATE OF CALIFORNIA
DEPARTMENT OF TRANSPORTATION

DIVISION OF ENGINEERING SERVICES
STRUCTURE DESIGN
DESIGN BRANCH 15

CU 07
EA 121841

BRIDGE NO. 53-1077
KILOMETER POST 44.32

SONORA AVENUE UC WIDEN & RETROFIT
ABUTMENT DETAILS NO. 6

ALL DIMENSIONS ARE IN MILLIMETERS UNLESS OTHERWISE SHOWN

ORIGINAL SCALE IN MILLIMETERS FOR REDUCED PLANS 0 10 20 30 40 50 60 70 80 90 100

DISREGARD PRINTS BEARING EARLIER REVISION DATES

REVISION DATES: 5-29-07 2-15-08 2-26-08 4-3-08 11-24-08

SHEET 13 OF 59

FILE => 53-1077r1-h-a06.dgn

STRUCTURES DESIGN DETAIL SHEET (METRIC) (REV.03-17-04)

USERNAME => trmikesl DATE PLOTTED => 12-JUN-2009 TIME PLOTTED => 08:49

| DIST | COUNTY | ROUTE | KILOMETER POST TOTAL PROJECT | SHEET No | TOTAL SHEETS |
|---|---|---|---|---|---|
| 07 | LA | 5 | 42.8/47.3 | 663 | 1073 |

Andrew Rittenhouse 12-05-08
REGISTERED CIVIL ENGINEER DATE

6-8-09
PLANS APPROVAL DATE

REGISTERED PROFESSIONAL ENGINEER Andrew P. Rittenhouse No. 61006 Exp. 12-31-10 CIVIL STATE OF CALIFORNIA

The State of California or its officers or agents shall not be responsible for the accuracy or completeness of electronic copies of this plan sheet.

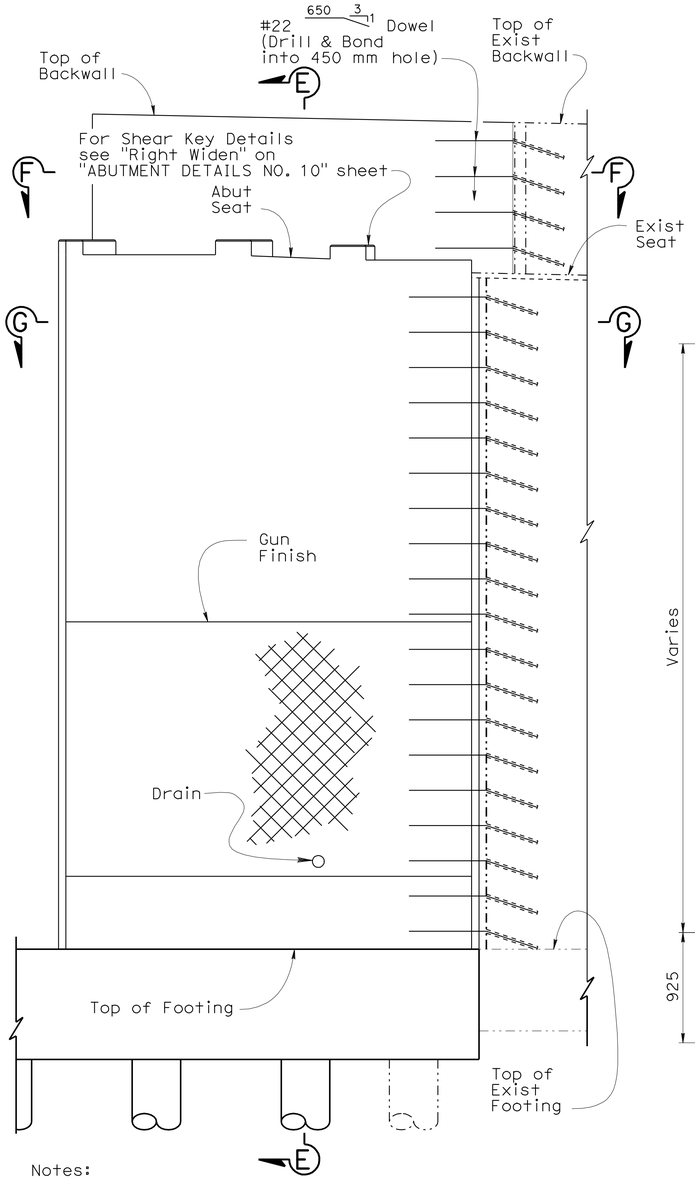


Notes:

For "Dowel Layout (Right Widen)" see "ABUTMENT DETAILS NO. 22" sheet.

For "Approximate Wall Offset Values" see B3-8

## DETAIL A

1:25

NOTE:
THE CONTRACTOR SHALL VERIFY ALL CONTROLLING FIELD DIMENSIONS BEFORE ORDERING OR FABRICATING ANY MATERIAL.

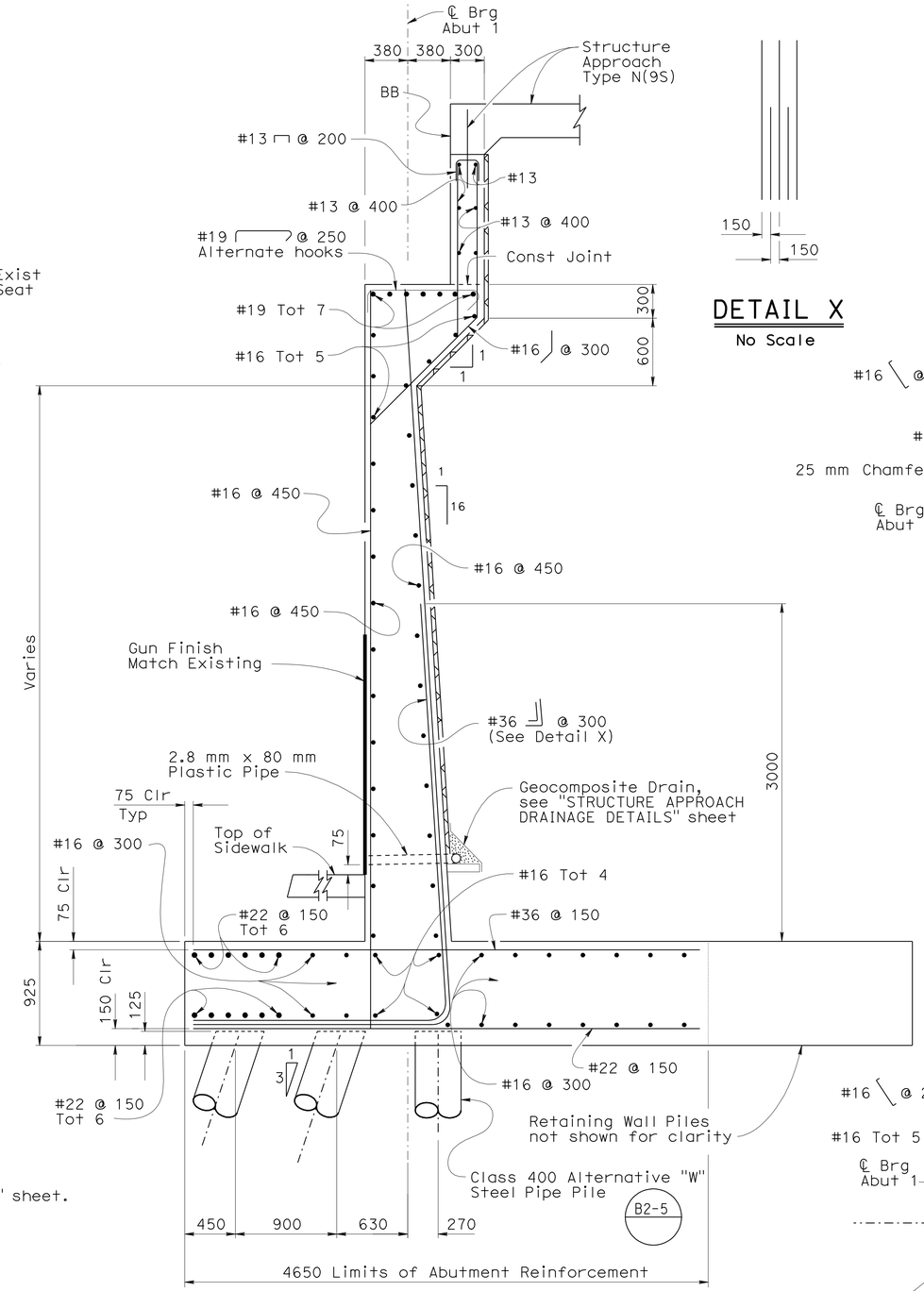


## SECTION E-E

1:25




## DETAIL X

No Scale

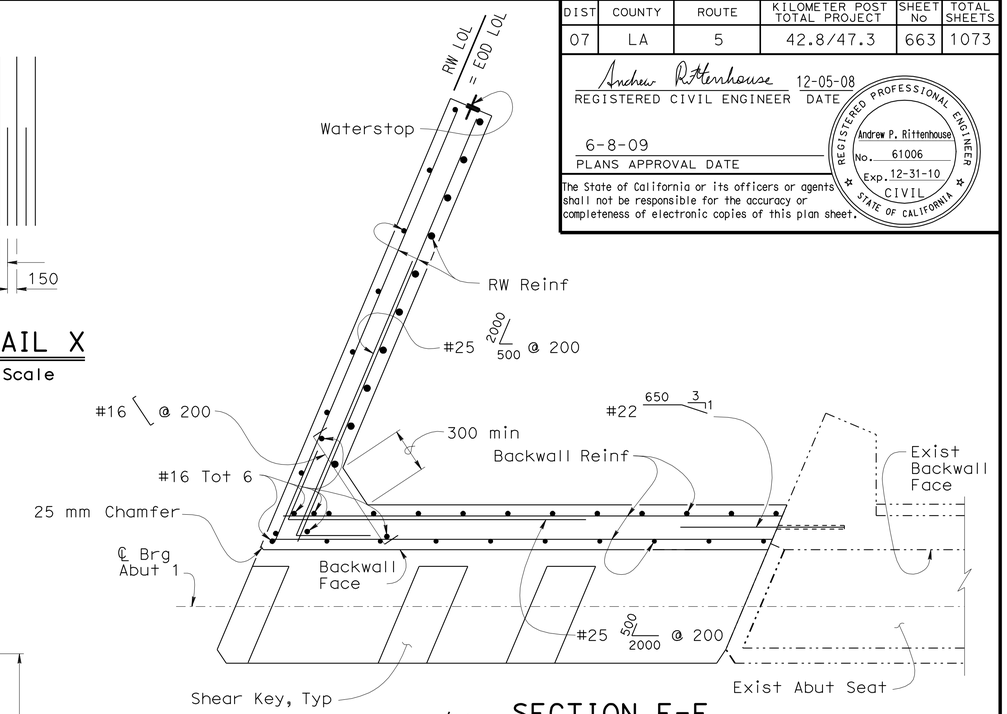


## SECTION F-F

1:20

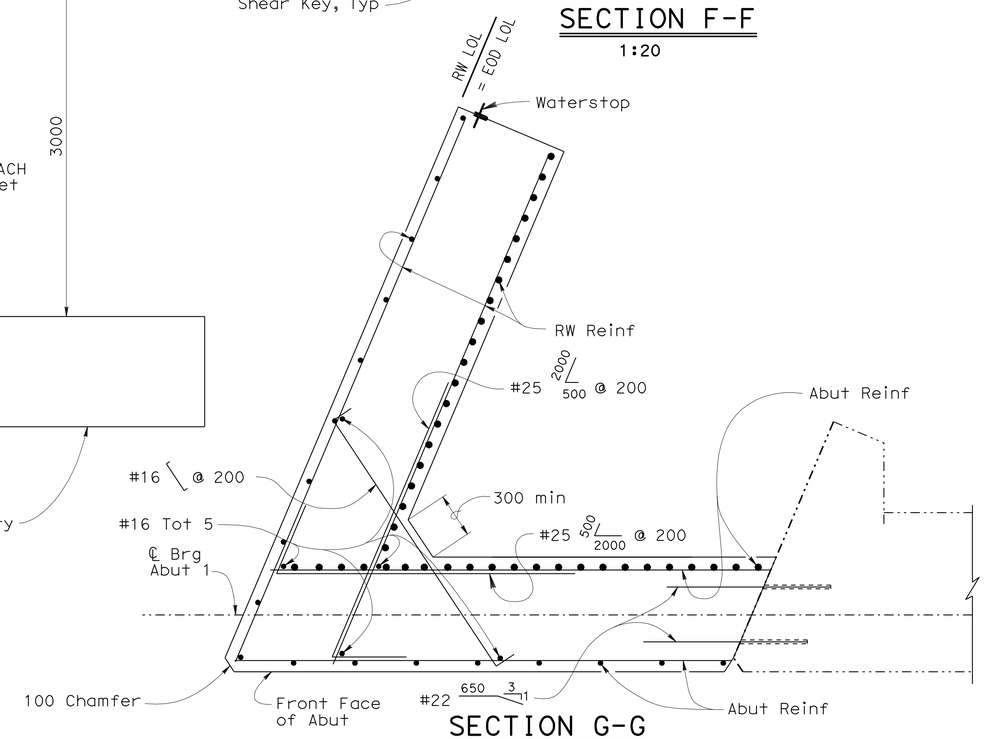


## SECTION G-G

1:20

| | | | |
|---|---|---|---|
| DESIGN | BY Hogni Setberg | CHECKED Gabriel Galo | |
| DETAILS | BY Herman Mauroschadt | CHECKED Gabriel Galo | |
| QUANTITIES | BY Gabriel Galo | CHECKED Herman Mauroschadt | |

STATE OF CALIFORNIA
DEPARTMENT OF TRANSPORTATION

DIVISION OF ENGINEERING SERVICES
STRUCTURE DESIGN
DESIGN BRANCH 15

BRIDGE NO. 53-1077
KILOMETER POST 44.32

# SONORA AVENUE UC WIDEN & RETROFIT
# ABUTMENT DETAILS NO. 7

ALL DIMENSIONS ARE IN MILLIMETERS UNLESS OTHERWISE SHOWN

ORIGINAL SCALE IN MILLIMETERS FOR REDUCED PLANS 0 10 20 30 40 50 60 70 80 90 100

CU 07
EA 121841

DISREGARD PRINTS BEARING EARLIER REVISION DATES

REVISION DATES: 5-29-07 1-31-08 11-24-08 12-12-08 1-13-09 2-25-09

SHEET 14 OF 59

FILE => 53-1077rl-h-a07.dgn

STRUCTURES DESIGN DETAIL SHEET (METRIC) (REV.03-17-04)

USERNAME => trmikest DATE PLOTTED => 06-MAY-2010 TIME PLOTTED => 14:01

| DIST | COUNTY | ROUTE | KILOMETER POST TOTAL PROJECT | SHEET No | TOTAL SHEETS |
|---|---|---|---|---|---|
| 07 | LA | 5 | 42.8/47.3 | 664 | 1073 |

Andrew Rittenhouse 12-05-08
REGISTERED CIVIL ENGINEER DATE

6-8-09
PLANS APPROVAL DATE

REGISTERED PROFESSIONAL ENGINEER Andrew P. Rittenhouse No. 61006 Exp. 12-31-10 CIVIL STATE OF CALIFORNIA

The State of California or its officers or agents shall not be responsible for the accuracy or completeness of electronic copies of this plan sheet.

Notes:

For "Dowel Layout (Center Widen)" see "ABUTMENT DETAILS NO. 22" sheet.

For "Approximate Wall Offset Values" see B3-8

Note:
For dimensions not shown see "ABUTMENT DETAILS NO. 1" sheet.

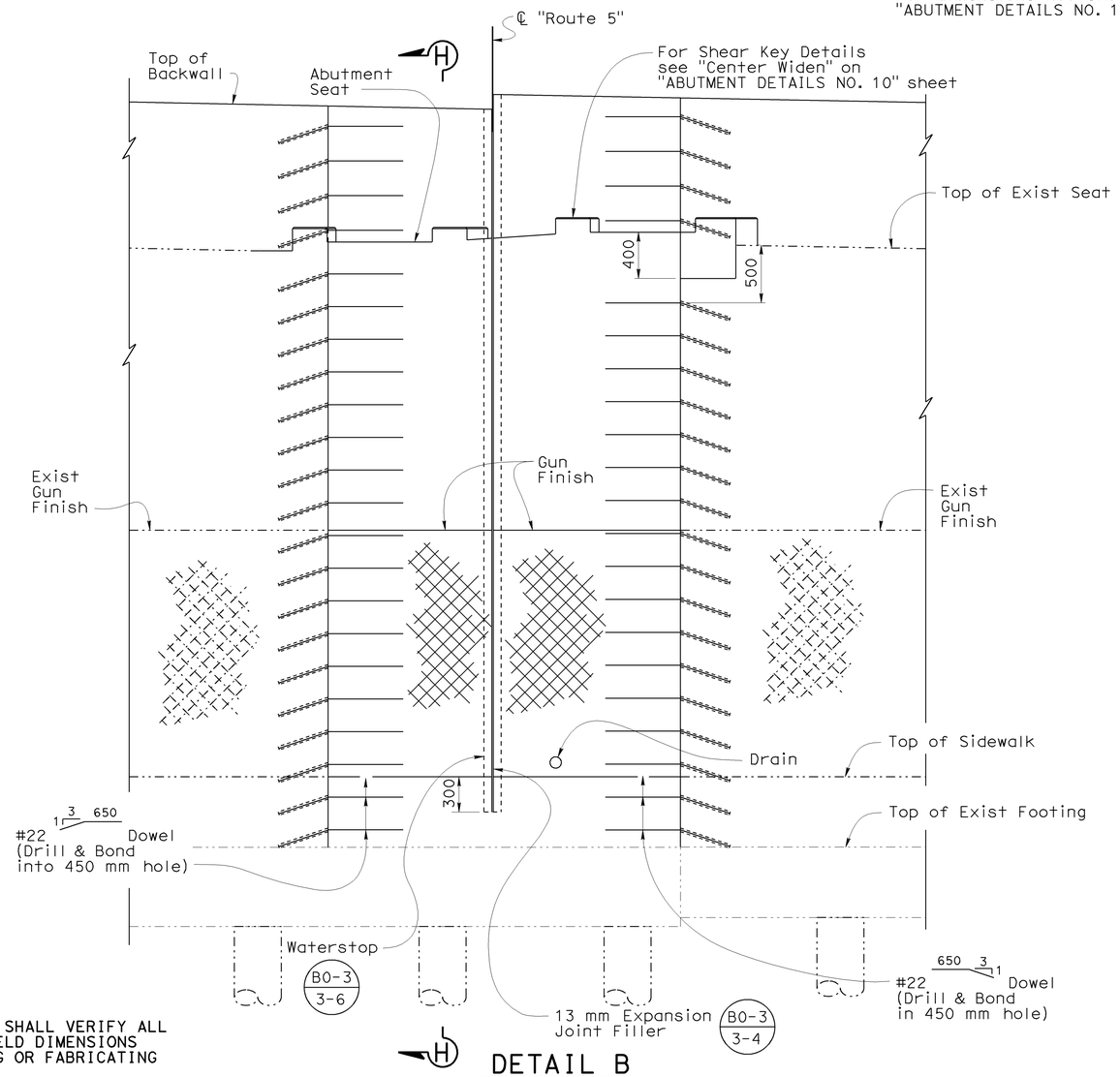


DETAIL B
1:25

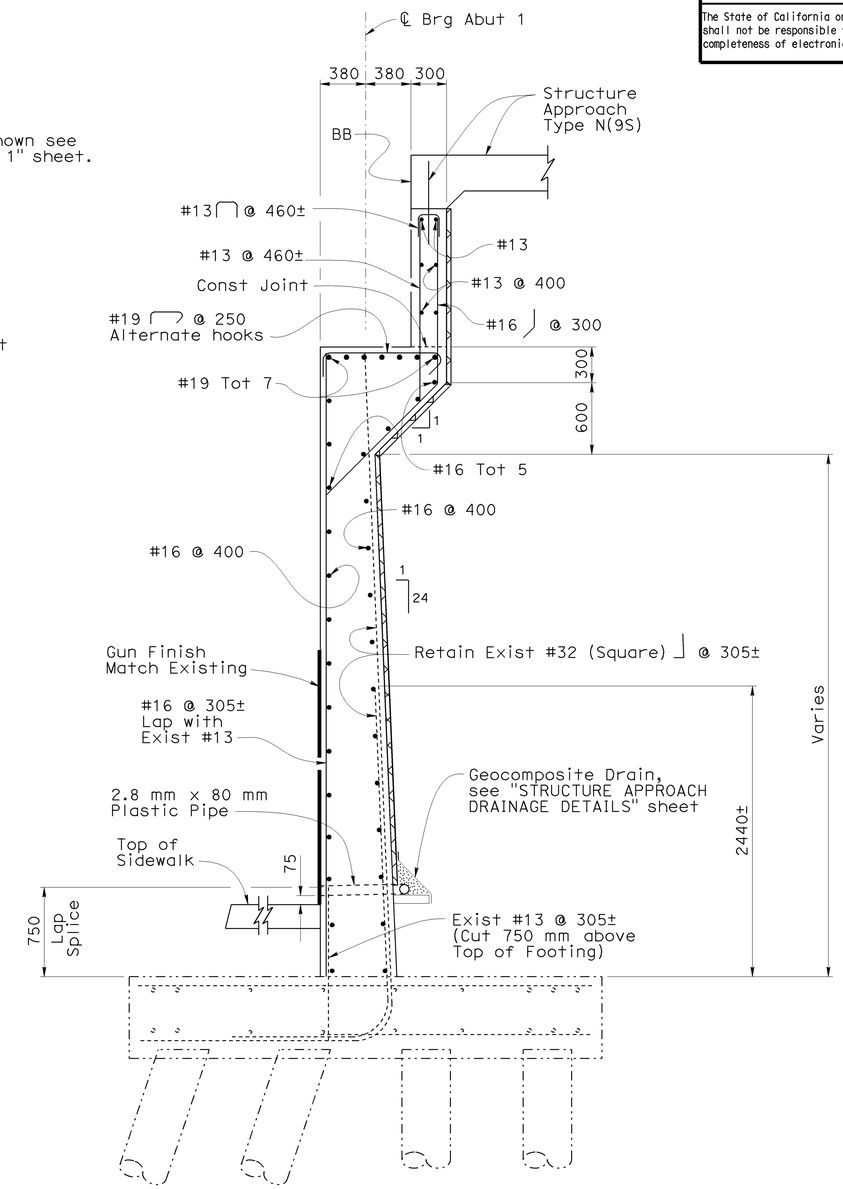


SECTION H-H
1:25

NOTE:
THE CONTRACTOR SHALL VERIFY ALL CONTROLLING FIELD DIMENSIONS BEFORE ORDERING OR FABRICATING ANY MATERIAL.

| | | |
|---|---|---|
| DESIGN | BY Hogni Setberg | CHECKED Gabriel Galo |
| DETAILS | BY Herman Mauroschadt | CHECKED Gabriel Galo |
| QUANTITIES | BY Gabriel Galo | CHECKED Herman Mauroschadt |

STATE OF CALIFORNIA
DEPARTMENT OF TRANSPORTATION

DIVISION OF ENGINEERING SERVICES
STRUCTURE DESIGN
DESIGN BRANCH 15

BRIDGE NO. 53-1077
KILOMETER POST 44.32

SONORA AVENUE UC WIDEN & RETROFIT
ABUTMENT DETAILS NO. 8

Caltrans Metric

ALL DIMENSIONS ARE IN MILLIMETERS UNLESS OTHERWISE SHOWN

ORIGINAL SCALE IN MILLIMETERS FOR REDUCED PLANS 0 10 20 30 40 50 60 70 80 90 100

CU 07
EA 121841

DISREGARD PRINTS BEARING EARLIER REVISION DATES

REVISION DATES: 5-29-07 2-1-08 9-1-08 11-14-08 12-12-08 1-12-09 2-25-09

SHEET 15 OF 59

FILE => 53-1077rl-h-a08.dgn

STRUCTURES DESIGN DETAIL SHEET (METRIC) (REV.03-17-04)

USERNAME => trmikest DATE PLOTTED => 12-JUN-2009 TIME PLOTTED => 08:50

| DIST | COUNTY | ROUTE | KILOMETER POST TOTAL PROJECT | SHEET No | TOTAL SHEETS |
|---|---|---|---|---|---|
| 07 | LA | 5 | 42.8/47.3 | 665 | 1073 |

Andrew Rittenhouse 12-05-08
REGISTERED CIVIL ENGINEER DATE

6-8-09
PLANS APPROVAL DATE

REGISTERED PROFESSIONAL ENGINEER Andrew P. Rittenhouse No. 61006 Exp. 12-31-10 CIVIL STATE OF CALIFORNIA

The State of California or its officers or agents shall not be responsible for the accuracy or completeness of electronic copies of this plan sheet.

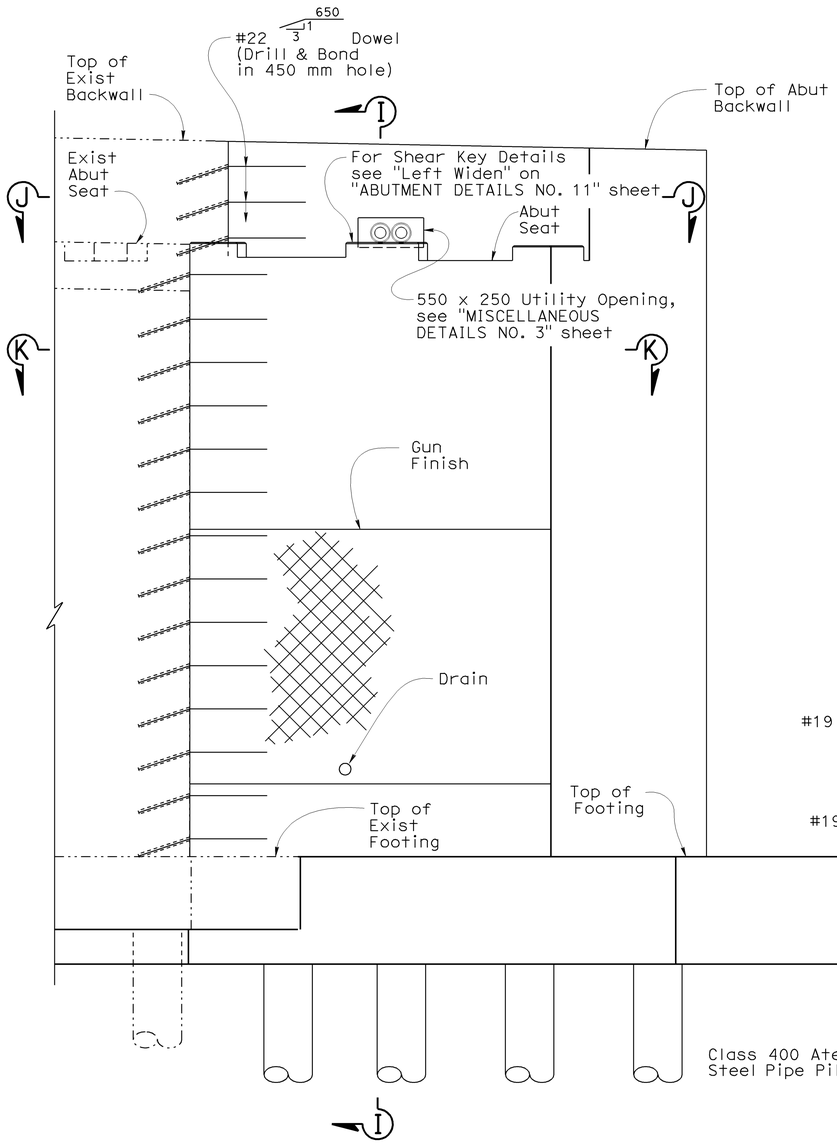


DETAIL C
1:25

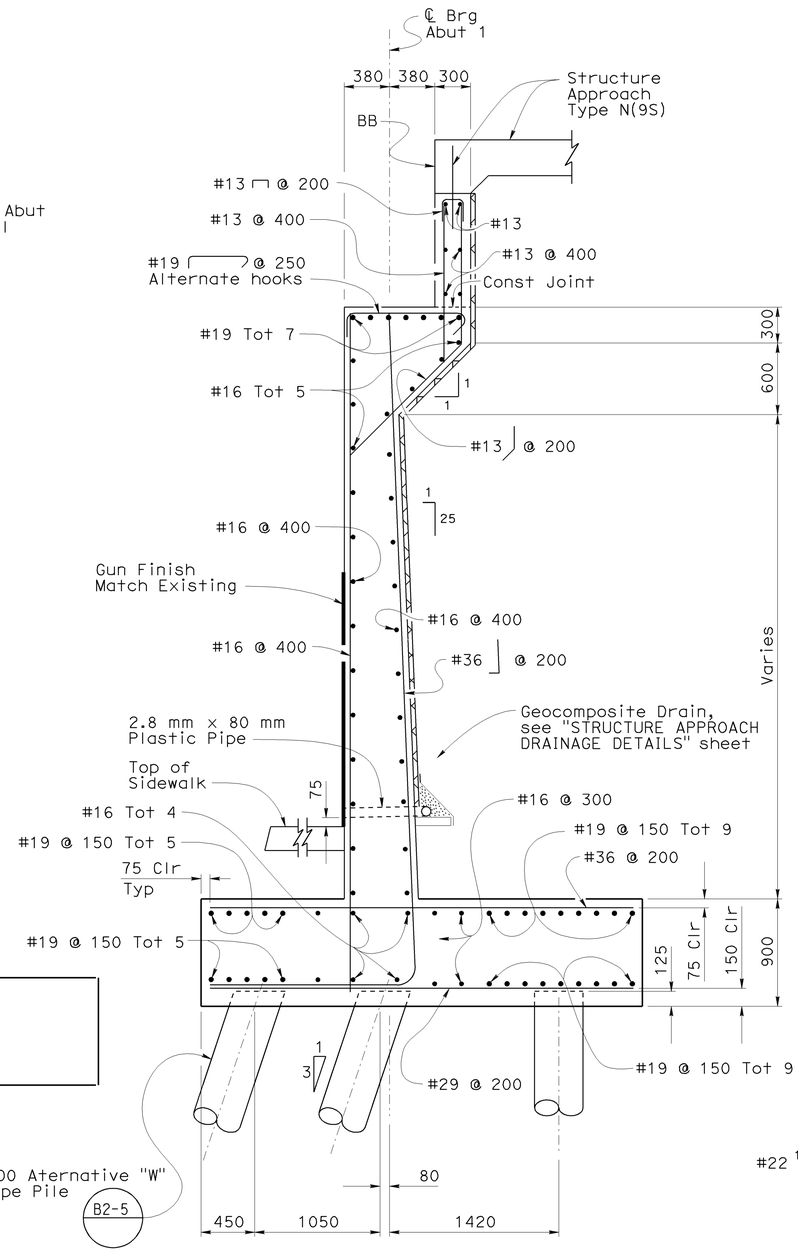


SECTION I-I
1:25

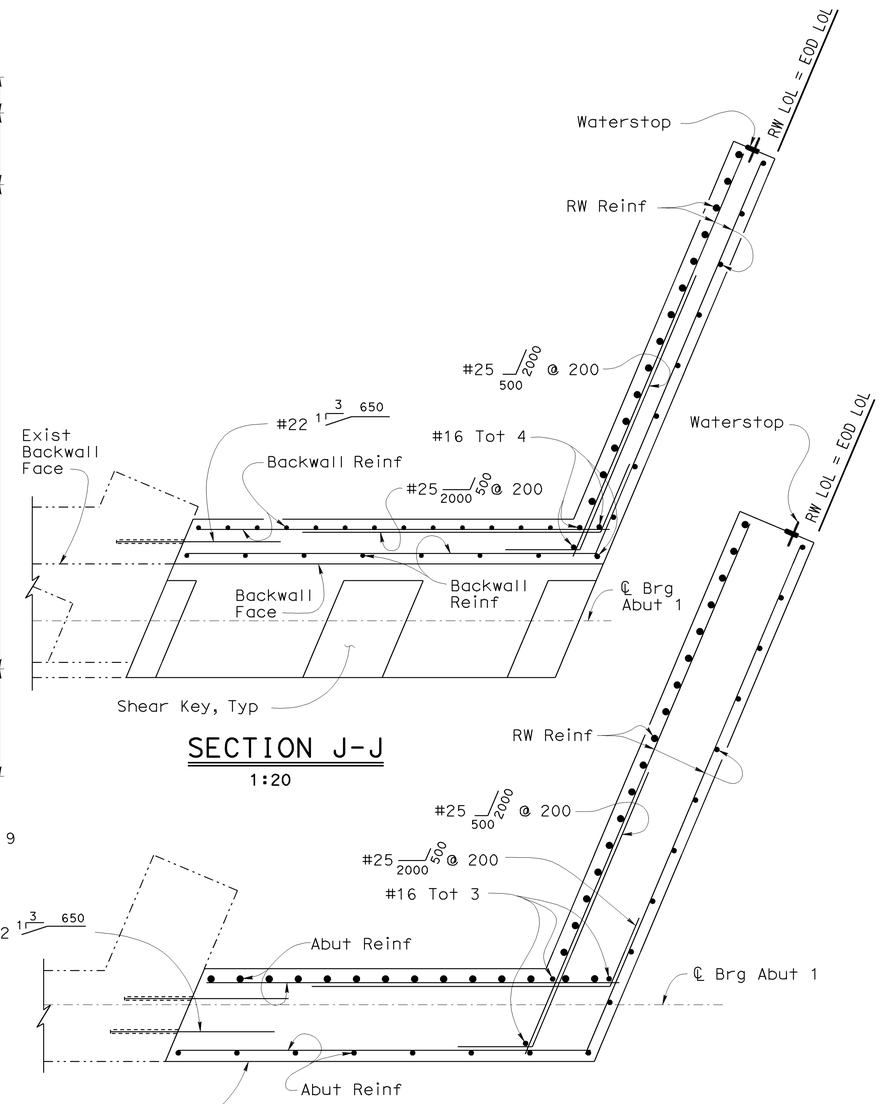


SECTION J-J
1:20

SECTION K-K
1:20

NOTE:
THE CONTRACTOR SHALL VERIFY ALL CONTROLLING FIELD DIMENSIONS BEFORE ORDERING OR FABRICATING ANY MATERIAL.

Notes:

For "Dowel Layout (Left Widen)" see "ABUTMENT DETAILS NO. 22" sheet.

For "Approximate Wall Offset Values" see B3-8

Caltrans Metric

| | BY | CHECKED |
|---|---|---|
| DESIGN | Hogni Setberg | Gabriel Galo |
| DETAILS | Herman Mauroschadt | Gabriel Galo |
| QUANTITIES | Gabriel Galo | Herman Mauroschadt |

STATE OF CALIFORNIA
DEPARTMENT OF TRANSPORTATION

DIVISION OF ENGINEERING SERVICES
STRUCTURE DESIGN
DESIGN BRANCH 15

BRIDGE NO. 53-1077
KILOMETER POST 44.32

# SONORA AVENUE UC WIDEN & RETROFIT
# ABUTMENT DETAILS NO. 9

ALL DIMENSIONS ARE IN MILLIMETERS UNLESS OTHERWISE SHOWN

ORIGINAL SCALE IN MILLIMETERS FOR REDUCED PLANS 0 10 20 30 40 50 60 70 80 90 100

CU 07
EA 121841

DISREGARD PRINTS BEARING EARLIER REVISION DATES

REVISION DATES: 6-13-07 2-11-08 8-11-08 9-2-08 11-5-08 11-24-08 12-12-08 1-13-09 2-25-09

SHEET 16 OF 59

FILE => 53-1077rl-h-a09.dgn

STRUCTURES DESIGN DETAIL SHEET (METRIC) (REV.03-17-04)

USERNAME => trmikest DATE PLOTTED => 12-JUN-2009 TIME PLOTTED => 08:50

| DIST | COUNTY | ROUTE | KILOMETER POST TOTAL PROJECT | SHEET No | TOTAL SHEETS |
|---|---|---|---|---|---|
| 07 | LA | 5 | 42.8/47.3 | 666 | 1073 |

Andrew Rittenhouse 12-05-08
REGISTERED CIVIL ENGINEER DATE

6-8-09
PLANS APPROVAL DATE

REGISTERED PROFESSIONAL ENGINEER
Andrew P. Rittenhouse
No. 61006
Exp. 12-31-10
CIVIL
STATE OF CALIFORNIA

The State of California or its officers or agents shall not be responsible for the accuracy or completeness of electronic copies of this plan sheet.

Note:

For "View L-L" and "Detail I" see "ABUTMENT DETAILS NO. 11" sheet.

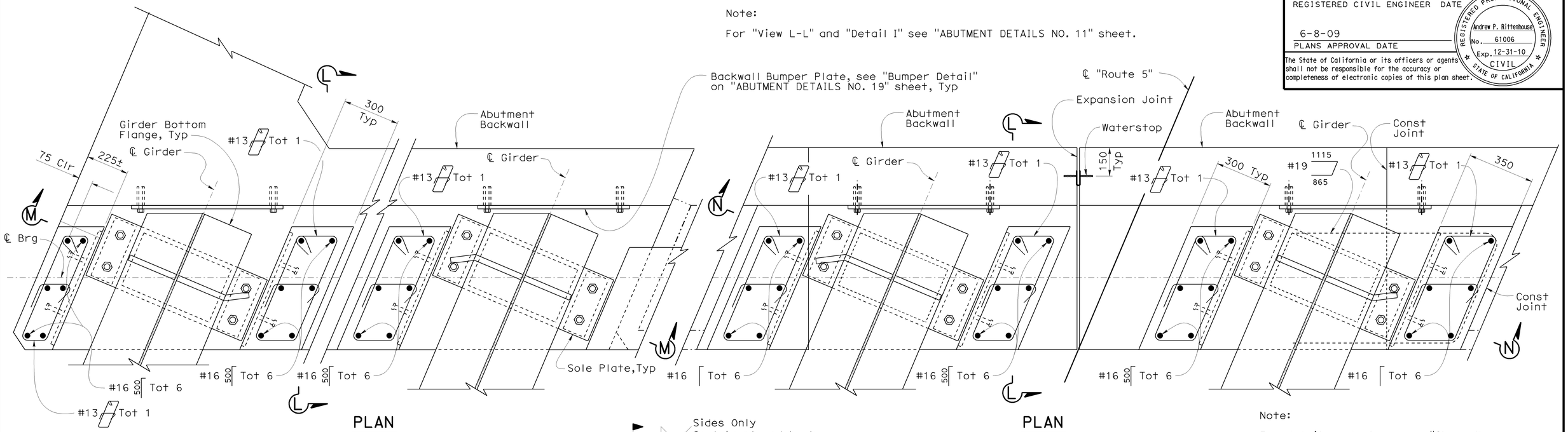


PLAN

PLAN

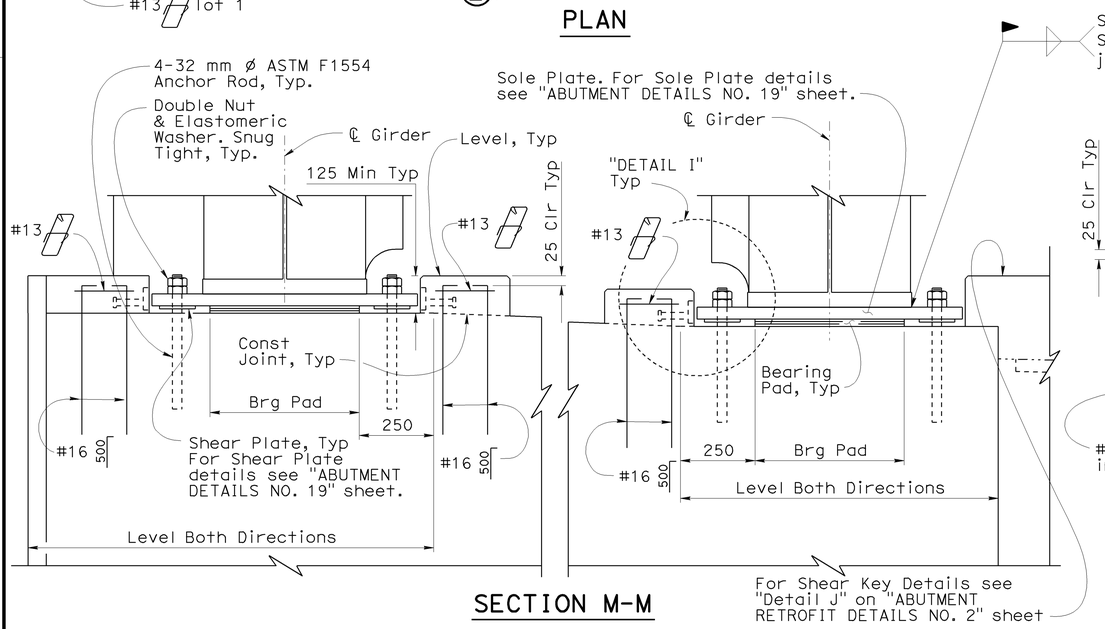


SECTION M-M

Sides Only
Seal front and back joints with sealer. Typ

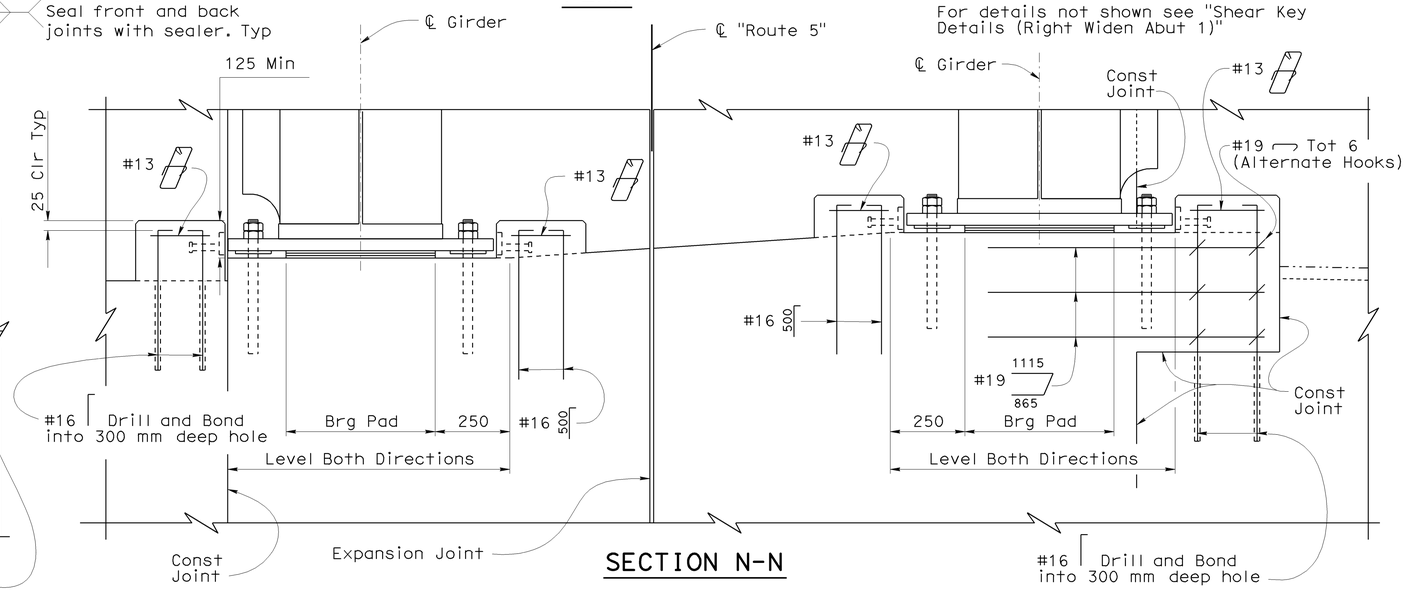


SECTION N-N

Note:

For details not shown see "Shear Key Details (Right Widen Abut 1)"

NOTE:
THE CONTRACTOR SHALL VERIFY ALL CONTROLLING FIELD DIMENSIONS BEFORE ORDERING OR FABRICATING ANY MATERIAL.

SHEAR KEY DETAILS (RIGHT WIDEN ABUT 1)

1:10

SHEAR KEY DETAILS (CENTER WIDEN ABUT 1)

1:10

| | | | |
|---|---|---|---|
| DESIGN | BY Hogni Setberg | CHECKED Gabriel Galo | |
| DETAILS | BY Herman Mauroschadt | CHECKED Gabriel Galo | |
| QUANTITIES | BY Gabriel Galo | CHECKED Herman Mauroschadt | |

STATE OF CALIFORNIA
DEPARTMENT OF TRANSPORTATION

DIVISION OF ENGINEERING SERVICES
STRUCTURE DESIGN
DESIGN BRANCH 15

BRIDGE NO. 53-1077
KILOMETER POST 44.32

SONORA AVENUE UC WIDEN & RETROFIT
ABUTMENT DETAILS NO. 10

ALL DIMENSIONS ARE IN MILLIMETERS UNLESS OTHERWISE SHOWN

ORIGINAL SCALE IN MILLIMETERS FOR REDUCED PLANS 0 10 20 30 40 50 60 70 80 90 100

CU 07
EA 121841

DISREGARD PRINTS BEARING EARLIER REVISION DATES

REVISION DATES: 2-28-07 | 2-1-08 | 4-4-08 | 11-4-08 | 1-16-09 | 1-23-09 | 2-25-09

SHEET 17 OF 59

FILE => 53-1077ri-h-a10.dgn

STRUCTURES DESIGN DETAIL SHEET (METRIC) (REV.03-17-04)

USERNAME => trmikesl DATE PLOTTED => 12-JUN-2009 TIME PLOTTED => 08:50

| DIST | COUNTY | ROUTE | KILOMETER POST TOTAL PROJECT | SHEET No | TOTAL SHEETS |
|---|---|---|---|---|---|
| 07 | LA | 5 | 42.8/47.3 | 667 | 1073 |

REGISTERED CIVIL ENGINEER 12-05-08 DATE

6-8-09
PLANS APPROVAL DATE

REGISTERED PROFESSIONAL ENGINEER Andrew P. Rittenhouse No. 61006 Exp. 12-31-10 CIVIL STATE OF CALIFORNIA

The State of California or its officers or agents shall not be responsible for the accuracy or completeness of electronic copies of this plan sheet.

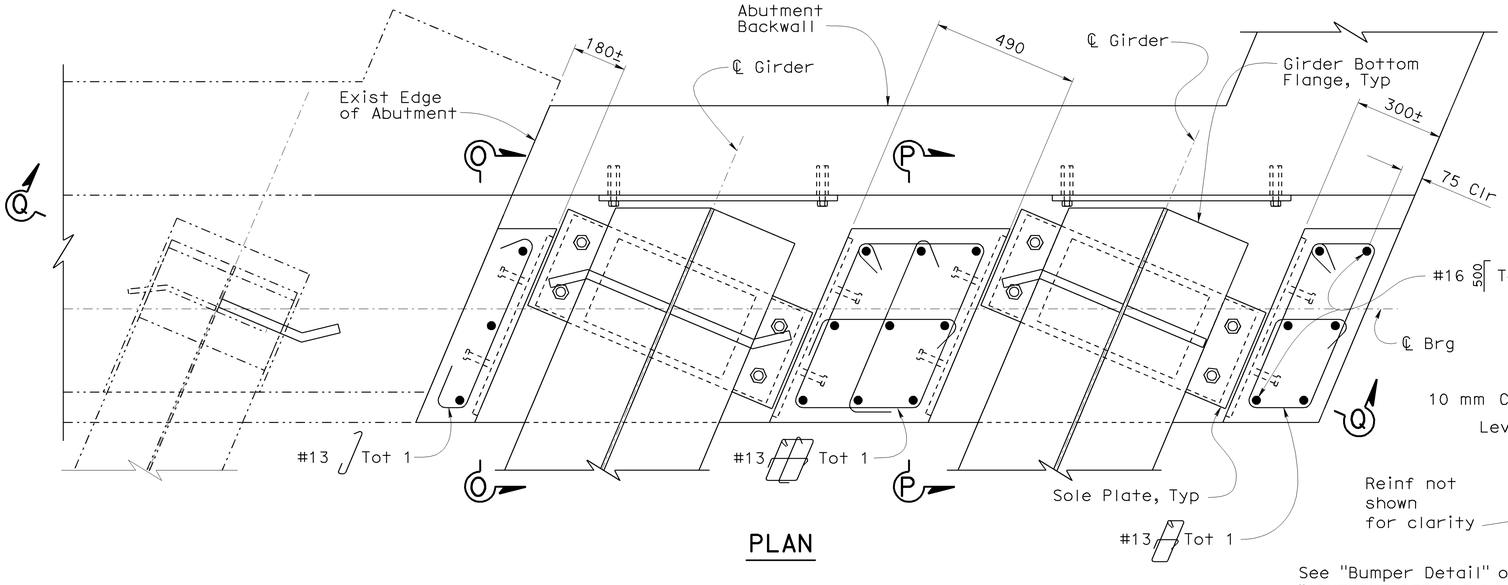


PLAN

Note:

For details not shown see "Shear Key Details (Right Widen)" on "ABUTMENT DETAILS NO. 10" sheet.

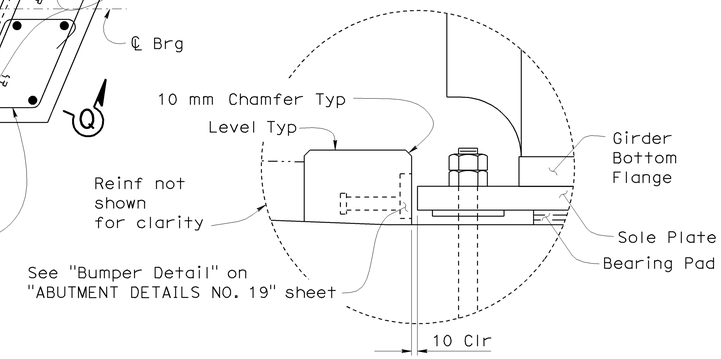


Abutment 1 shown, Abutment 2 similar except as shown.

DETAIL I

1:5

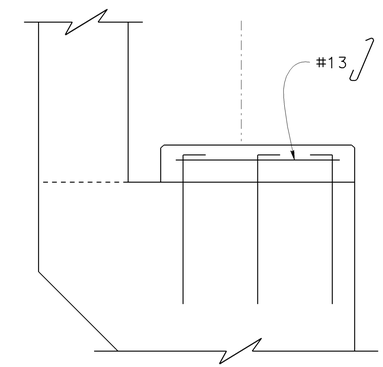


For details not noted see "View L-L"

SECTION O-O

1:10

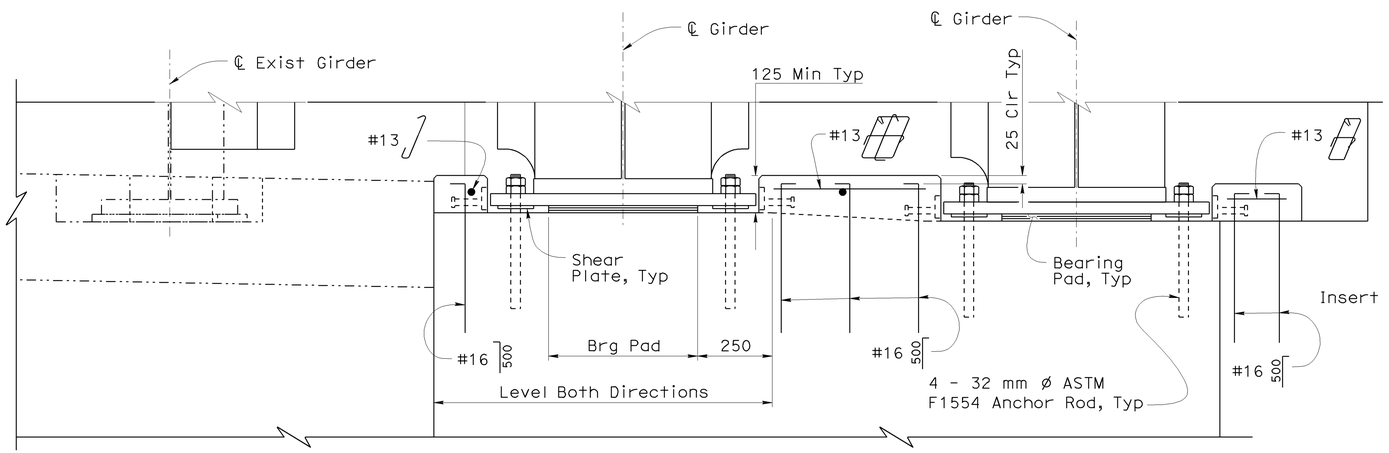


SECTION Q-Q

SHEAR KEY DETAILS (LEFT WIDEN ABUT 1)

1:10

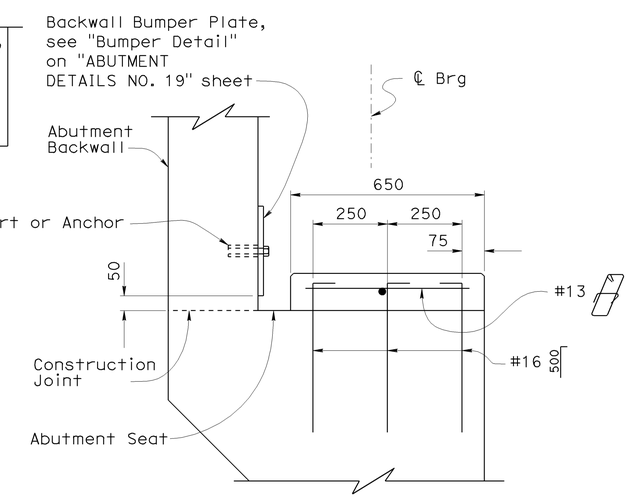


VIEW L-L

1:10

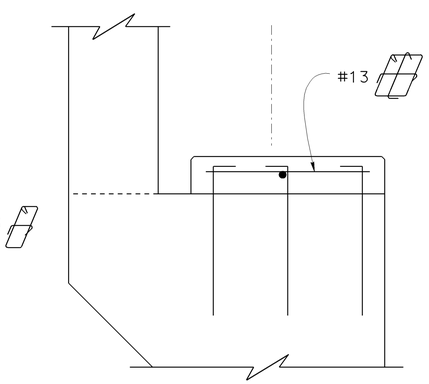


For details not noted see "View L-L"

SECTION P-P

1:10

NOTE:
THE CONTRACTOR SHALL VERIFY ALL CONTROLLING FIELD DIMENSIONS BEFORE ORDERING OR FABRICATING ANY MATERIAL.

| | BY | CHECKED |
|---|---|---|
| DESIGN | Hogni Setberg | Gabriel Galo |
| DETAILS | Herman Mauroschadt | Gabriel Galo |
| QUANTITIES | Gabriel Galo | Herman Mauroschadt |

STATE OF CALIFORNIA
DEPARTMENT OF TRANSPORTATION

DIVISION OF ENGINEERING SERVICES
STRUCTURE DESIGN
DESIGN BRANCH 15

BRIDGE NO. 53-1077
KILOMETER POST 44.32

SONORA AVENUE UC WIDEN & RETROFIT
ABUTMENT DETAILS NO. 11

ALL DIMENSIONS ARE IN MILLIMETERS UNLESS OTHERWISE SHOWN

ORIGINAL SCALE IN MILLIMETERS FOR REDUCED PLANS 0 10 20 30 40 50 60 70 80 90 100

CU 07
EA 121841

DISREGARD PRINTS BEARING EARLIER REVISION DATES

REVISION DATES: 2-26-07 2-1-08 4-4-08 11-14-08 1-16-09 1-30-09 2-25-09

SHEET 18 OF 59

FILE => 53-1077rl-h-a11.dgn

STRUCTURES DESIGN DETAIL SHEET (METRIC) (REV.03-17-04)

USERNAME => trmikes1 DATE PLOTTED => 12-JUN-2009 TIME PLOTTED => 08:50

| DIST | COUNTY | ROUTE | KILOMETER POST TOTAL PROJECT | SHEET No | TOTAL SHEETS |
|---|---|---|---|---|---|
| 07 | LA | 5 | 42.8/47.3 | 668 | 1073 |

Andrew Rittenhouse 12-05-08
REGISTERED CIVIL ENGINEER DATE

6-8-09
PLANS APPROVAL DATE

REGISTERED PROFESSIONAL ENGINEER
Andrew P. Rittenhouse
No. 61006
Exp. 12-31-10
CIVIL
STATE OF CALIFORNIA

The State of California or its officers or agents shall not be responsible for the accuracy or completeness of electronic copies of this plan sheet.

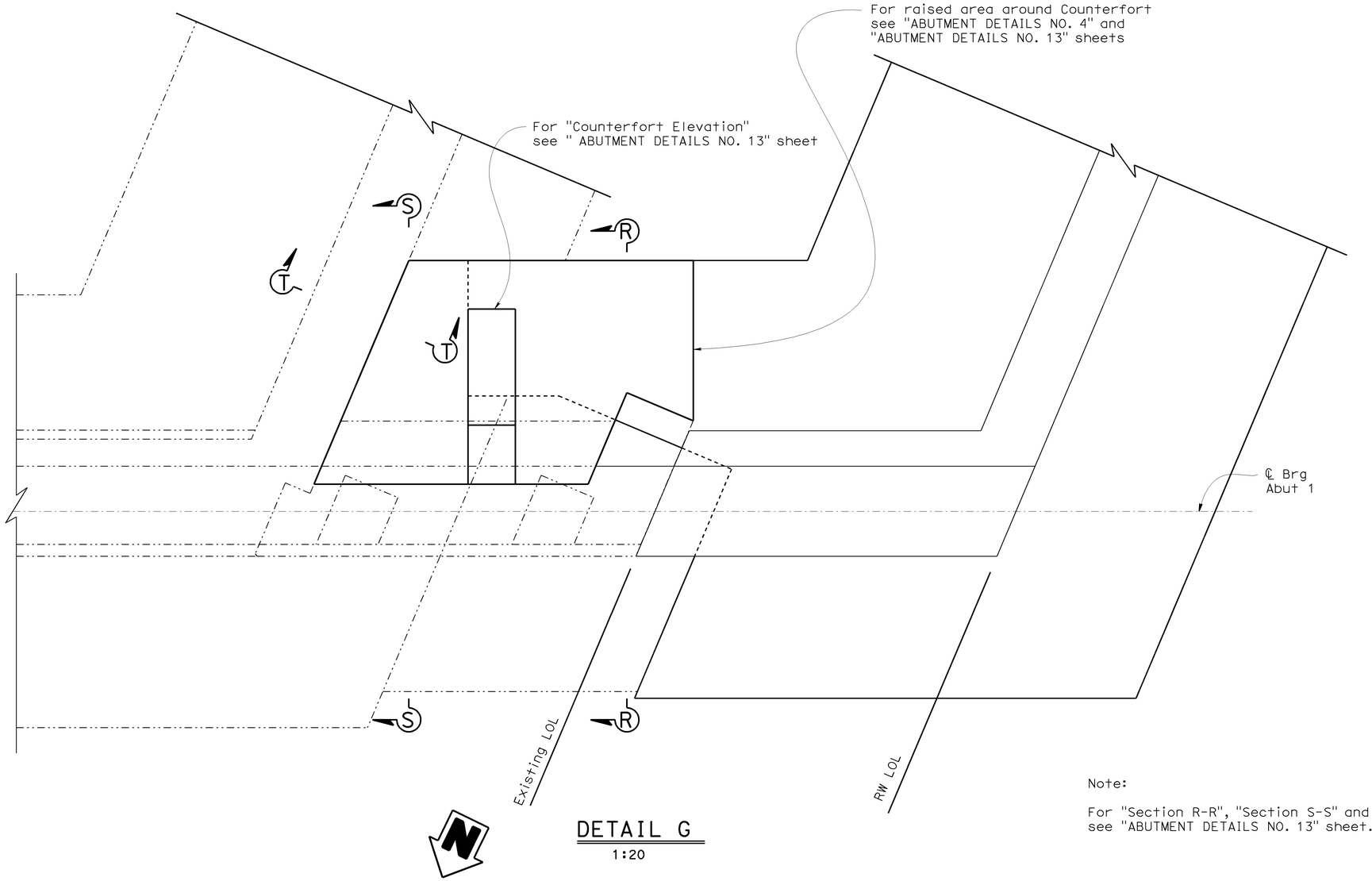


DETAIL G
1:20

Note:

For "Section R-R", "Section S-S" and "Section T-T" see "ABUTMENT DETAILS NO. 13" sheet.

NOTE:
THE CONTRACTOR SHALL VERIFY ALL CONTROLLING FIELD DIMENSIONS BEFORE ORDERING OR FABRICATING ANY MATERIAL.

Caltrans Metric

| | BY | CHECKED |
|---|---|---|
| DESIGN | Hogni Setberg | Gabriel Galo |
| DETAILS | Herman Mauroschadt | Gabriel Galo |
| QUANTITIES | Gabriel Galo | Herman Mauroschadt |

STATE OF CALIFORNIA
DEPARTMENT OF TRANSPORTATION

DIVISION OF ENGINEERING SERVICES
STRUCTURE DESIGN
DESIGN BRANCH 15

BRIDGE NO. 53-1077
KILOMETER POST 44.32

SONORA AVENUE UC WIDEN & RETROFIT
ABUTMENT DETAILS NO. 12

ALL DIMENSIONS ARE IN MILLIMETERS UNLESS OTHERWISE SHOWN

ORIGINAL SCALE IN MILLIMETERS FOR REDUCED PLANS 0 10 20 30 40 50 60 70 80 90 100

CU 07
EA 121841

DISREGARD PRINTS BEARING EARLIER REVISION DATES

REVISION DATES: 1-22-07 3-1-08 11-14-08 2-25-09

SHEET 19 OF 59

FILE => 53-1077r1-h-a12.dgn

STRUCTURES DESIGN DETAIL SHEET (METRIC) (REV.03-17-04)

USERNAME => trmikesl DATE PLOTTED => 12-JUN-2009 TIME PLOTTED => 08:50

| DIST | COUNTY | ROUTE | KILOMETER POST TOTAL PROJECT | SHEET No | TOTAL SHEETS |
|---|---|---|---|---|---|
| 07 | LA | 5 | 42.8/47.3 | 669 | 1073 |

Andrew Rittenhouse 12-05-08
REGISTERED CIVIL ENGINEER DATE

6-8-09
PLANS APPROVAL DATE

REGISTERED PROFESSIONAL ENGINEER
Andrew P. Rittenhouse
No. 61006
Exp. 12-31-10
CIVIL
STATE OF CALIFORNIA

The State of California or its officers or agents shall not be responsible for the accuracy or completeness of electronic copies of this plan sheet.

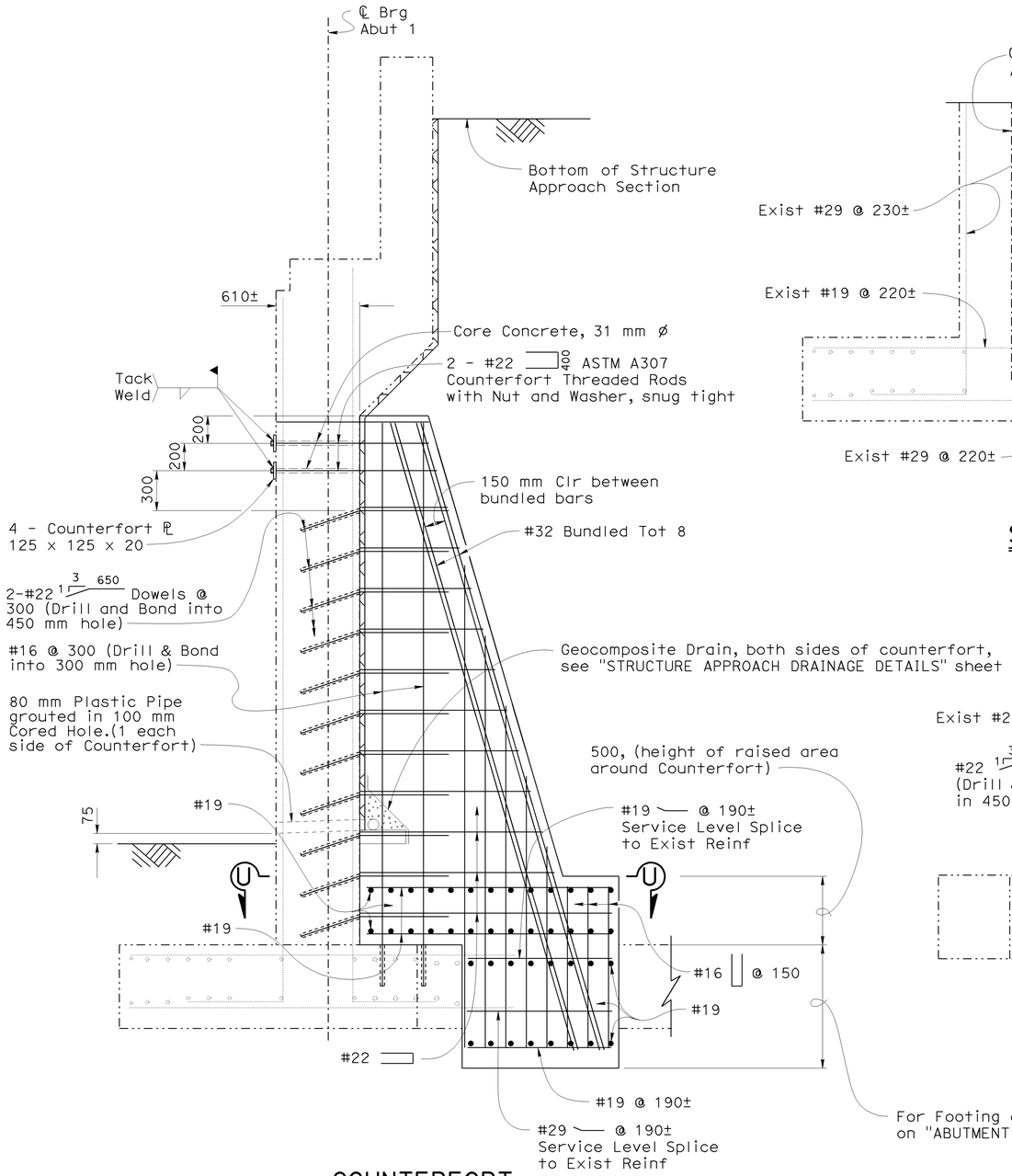


COUNTERFORT ELEVATION
1:20

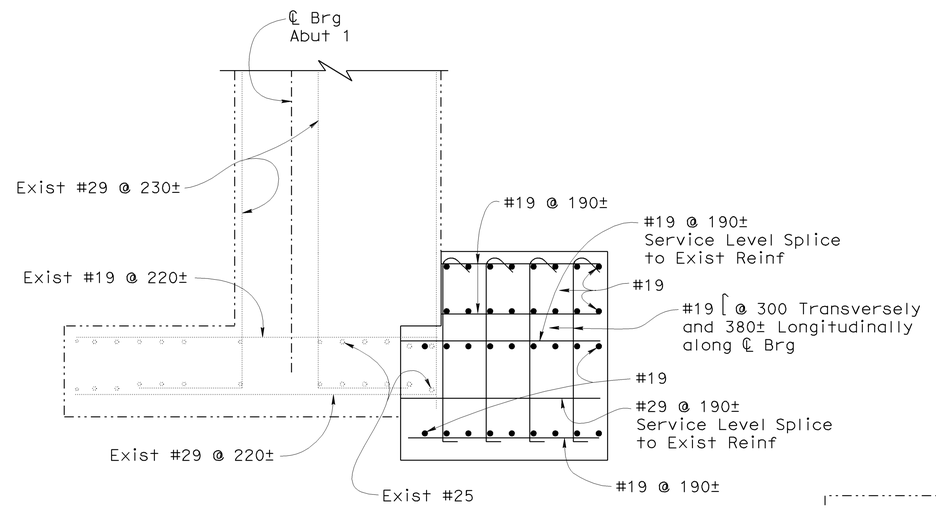


SECTION R-R
1:20

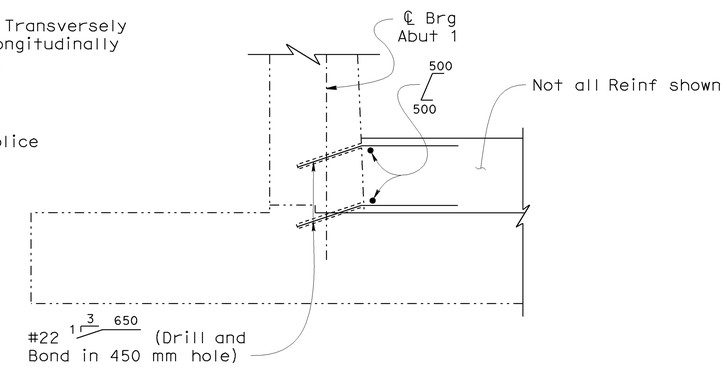


SECTION T-T
1:20

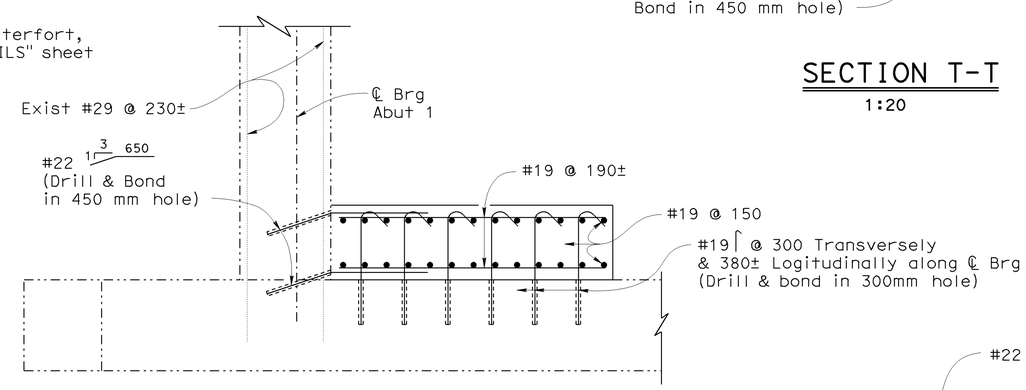


SECTION S-S
1:20

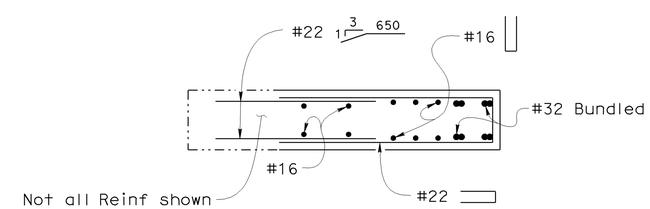


SECTION U-U
1:20

NOTE:
THE CONTRACTOR SHALL VERIFY ALL CONTROLLING FIELD DIMENSIONS BEFORE ORDERING OR FABRICATING ANY MATERIAL.

Caltrans Metric

| | BY | CHECKED |
|---|---|---|
| DESIGN | Hogni Setberg | Gabriel Galo |
| DETAILS | Herman Mauroschadt | Gabriel Galo |
| QUANTITIES | Gabriel Galo | Herman Mauroschadt |

STATE OF CALIFORNIA
DEPARTMENT OF TRANSPORTATION

DIVISION OF ENGINEERING SERVICES
STRUCTURE DESIGN
DESIGN BRANCH 15

BRIDGE NO. 53-1077
KILOMETER POST 44.32

SONORA AVENUE UC WIDEN & RETROFIT
ABUTMENT DETAILS NO. 13

ALL DIMENSIONS ARE IN MILLIMETERS UNLESS OTHERWISE SHOWN

ORIGINAL SCALE IN MILLIMETERS FOR REDUCED PLANS 0 10 20 30 40 50 60 70 80 90 100

CU 07
EA 121841

DISREGARD PRINTS BEARING EARLIER REVISION DATES

REVISION DATES: 2-15-07 2-15-08 11-14-08 1-13-09 1-28-09 2-13-09 2-25-09

SHEET 20 OF 59

FILE => 53-1077r1-h-a13.dgn

STRUCTURES DESIGN DETAIL SHEET (METRIC) (REV.03-17-04)

USERNAME => trmikesl DATE PLOTTED => 12-JUN-2009 TIME PLOTTED => 08:50

| DIST | COUNTY | ROUTE | KILOMETER POST TOTAL PROJECT | SHEET No | TOTAL SHEETS |
|---|---|---|---|---|---|
| 07 | LA | 5 | 42.8/47.3 | 670 | 1073 |

Andrew Rittenhouse 12-05-08
REGISTERED CIVIL ENGINEER DATE

6-8-09
PLANS APPROVAL DATE

REGISTERED PROFESSIONAL ENGINEER Andrew P. Rittenhouse No. 61006 Exp. 12-31-10 CIVIL STATE OF CALIFORNIA

The State of California or its officers or agents shall not be responsible for the accuracy or completeness of electronic copies of this plan sheet.

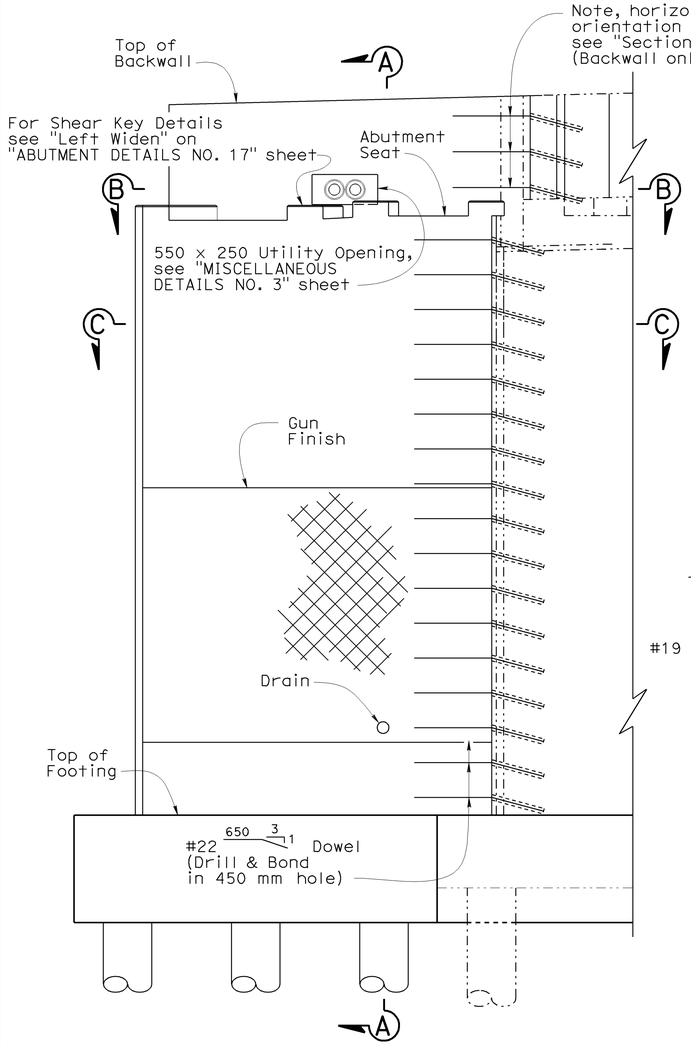


## DETAIL D

1:25

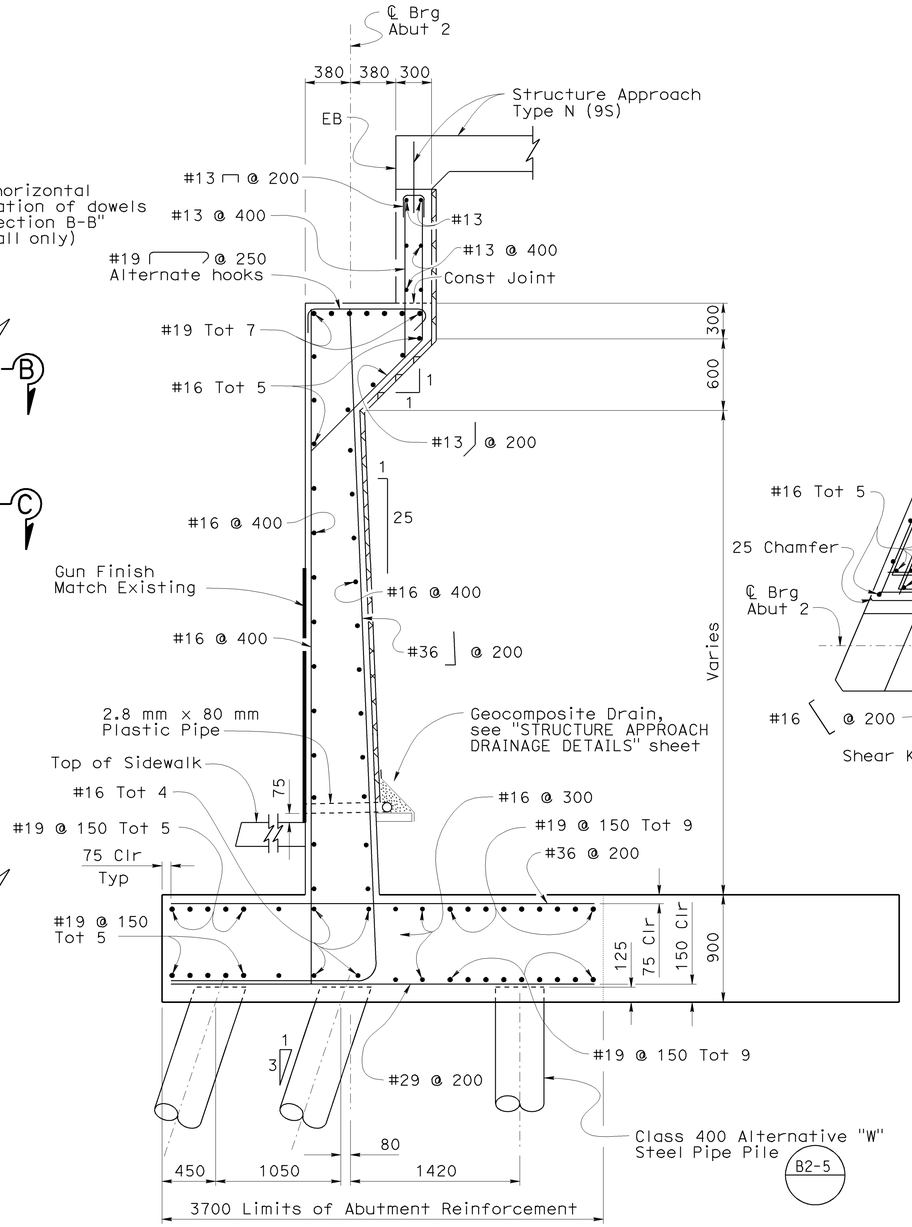


## SECTION A-A

1:25

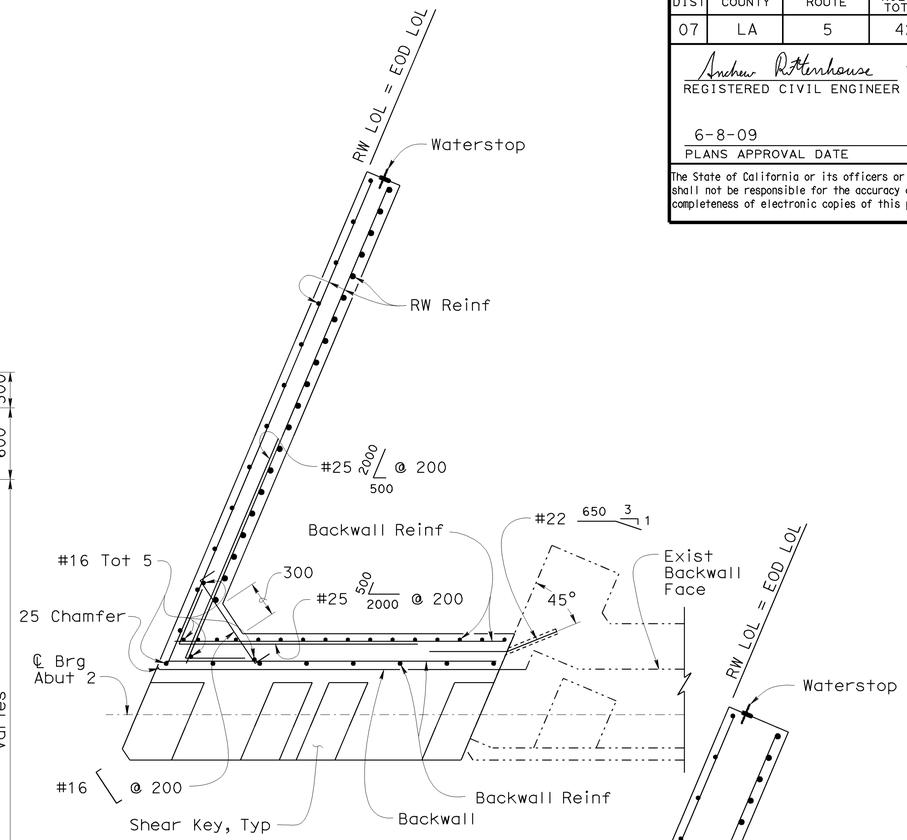


## SECTION B-B

1:25

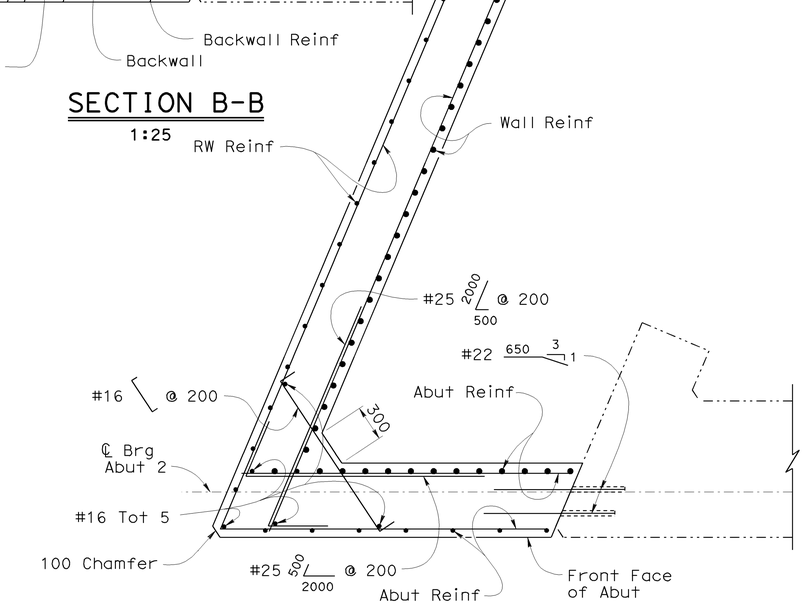


## SECTION C-C

1:25

NOTE:
THE CONTRACTOR SHALL VERIFY ALL CONTROLLING FIELD DIMENSIONS BEFORE ORDERING OR FABRICATING ANY MATERIAL.

Notes:

For "Dowel Layout (Left Widen)" see "ABUTMENT DETAILS NO. 22" sheet.

For "Approximate Wall Offset Values" see B3-8

| | BY | CHECKED |
|---|---|---|
| DESIGN | Hogni Setberg | Gabriel Galo |
| DETAILS | Herman Mauroschadt | Gabriel Galo |
| QUANTITIES | Gabriel Galo | Herman Mauroschadt |

STATE OF CALIFORNIA
DEPARTMENT OF TRANSPORTATION

DIVISION OF ENGINEERING SERVICES
STRUCTURE DESIGN
DESIGN BRANCH 15

BRIDGE NO. 53-1077
KILOMETER POST 44.32

# SONORA AVENUE UC WIDEN & RETROFIT
# ABUTMENT DETAILS NO. 14

ALL DIMENSIONS ARE IN MILLIMETERS UNLESS OTHERWISE SHOWN

ORIGINAL SCALE IN MILLIMETERS FOR REDUCED PLANS 0 10 20 30 40 50 60 70 80 90 100

CU 07
EA 121841

DISREGARD PRINTS BEARING EARLIER REVISION DATES

REVISION DATES: 5-29-07 2-5-08 8-11-08 9-2-08 11-14-08 11-21-08 12-12-08 1-13-09 2-25-09

SHEET 21 OF 59

FILE => 53-1077r1-h-a14.dgn

STRUCTURES DESIGN DETAIL SHEET (METRIC) (REV.03-17-04)

USERNAME => trmikest DATE PLOTTED => 12-JUN-2009 TIME PLOTTED => 08:50

| DIST | COUNTY | ROUTE | KILOMETER POST TOTAL PROJECT | SHEET No | TOTAL SHEETS |
|---|---|---|---|---|---|
| 07 | LA | 5 | 42.8/47.3 | 671 | 1073 |

Andrew Rittenhouse 12-05-08
REGISTERED CIVIL ENGINEER DATE

6-8-09
PLANS APPROVAL DATE

REGISTERED PROFESSIONAL ENGINEER Andrew P. Rittenhouse No. 61006 Exp. 12-31-10 CIVIL STATE OF CALIFORNIA

The State of California or its officers or agents shall not be responsible for the accuracy or completeness of electronic copies of this plan sheet.

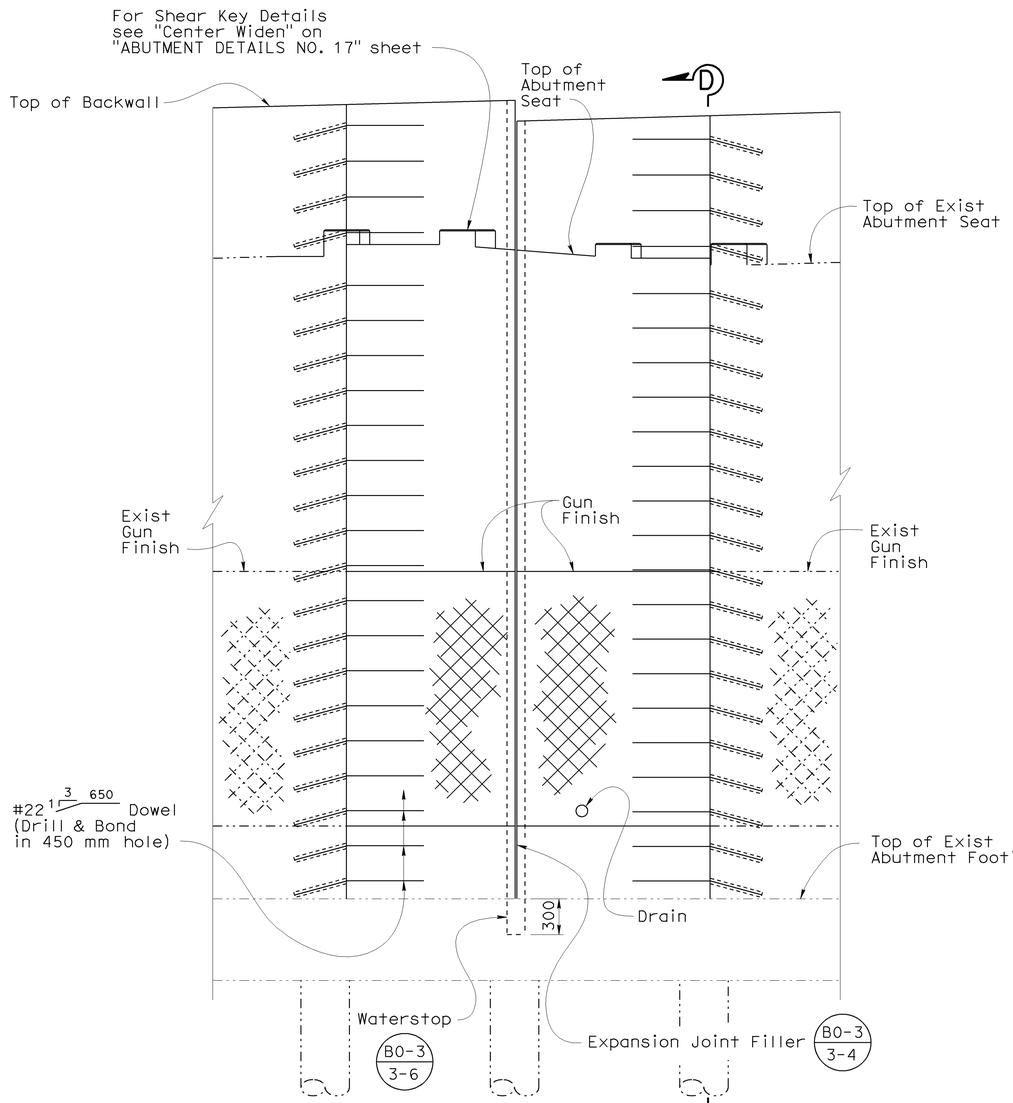


DETAIL E
1:25

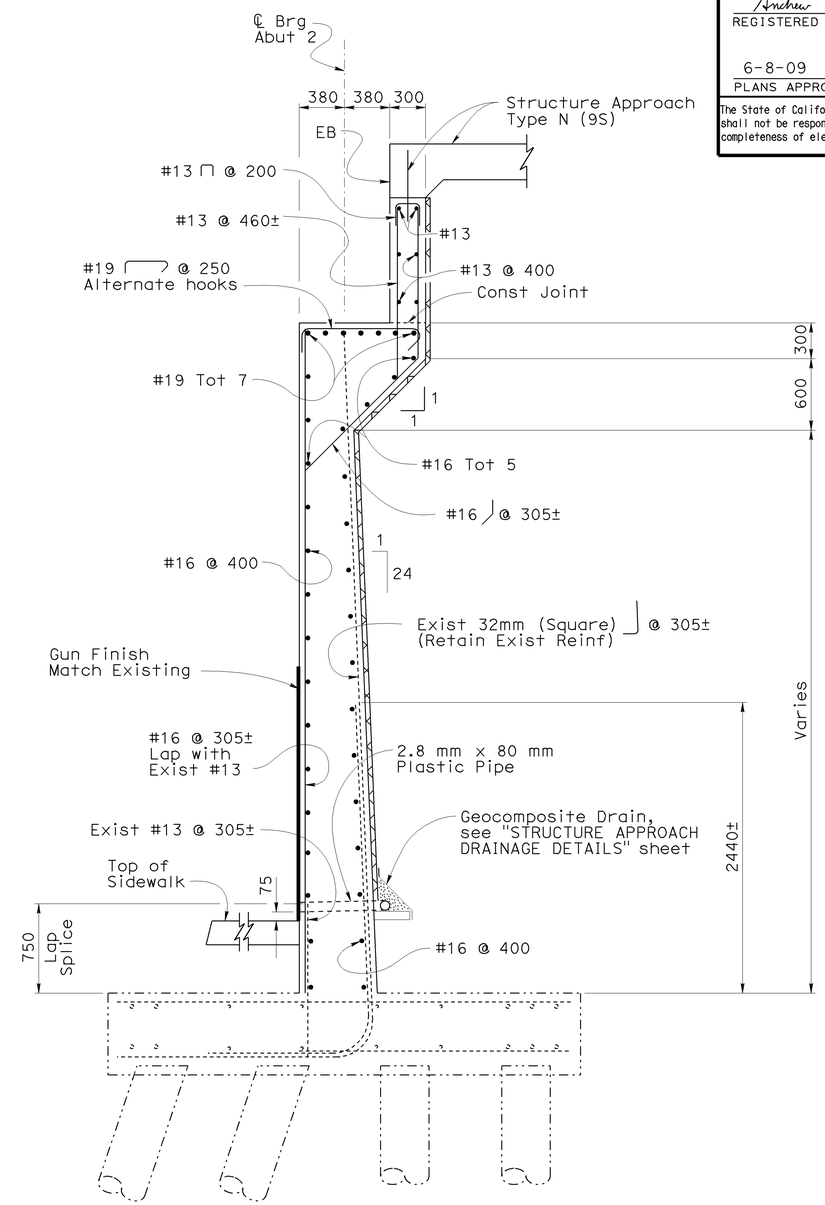


SECTION D-D
1:25

NOTE:
THE CONTRACTOR SHALL VERIFY ALL CONTROLLING FIELD DIMENSIONS BEFORE ORDERING OR FABRICATING ANY MATERIAL.

Notes:

For "Dowel Layout (Center Widen)" see "ABUTMENT DETAILS NO. 22" sheet.

For "Approximate Wall Offset Values" see B3-8

| | BY | CHECKED |
|---|---|---|
| DESIGN | Hogni Setberg | Gabriel Galo |
| DETAILS | Herman Mauroschadt | Gabriel Galo |
| QUANTITIES | Gabriel Galo | Herman Mauroschadt |

STATE OF CALIFORNIA
DEPARTMENT OF TRANSPORTATION

DIVISION OF ENGINEERING SERVICES
STRUCTURE DESIGN
DESIGN BRANCH 15

BRIDGE NO. 53-1077
KILOMETER POST 44.32

SONORA AVENUE UC WIDEN & RETROFIT
ABUTMENT DETAILS NO. 15

Caltrans Metric

ALL DIMENSIONS ARE IN MILLIMETERS UNLESS OTHERWISE SHOWN

ORIGINAL SCALE IN MILLIMETERS FOR REDUCED PLANS 0 10 20 30 40 50 60 70 80 90 100

CU 07
EA 121841

DISREGARD PRINTS BEARING EARLIER REVISION DATES

REVISION DATES: 2-28-07 2-1-08 9-2-08 11-14-08 12-12-08 1-13-09 2-25-09

SHEET 22 OF 59

FILE => 53-1077r1-h-a15.dgn

STRUCTURES DESIGN DETAIL SHEET (METRIC) (REV.03-17-04)

USERNAME => ttmirkes1 DATE PLOTTED => 12-JUN-2009 TIME PLOTTED => 09:15

| DIST | COUNTY | ROUTE | KILOMETER POST TOTAL PROJECT | SHEET No | TOTAL SHEETS |
|---|---|---|---|---|---|
| 07 | LA | 5 | 42.8/47.3 | 672 | 1073 |

Andrew Rittenhouse 12-05-08
REGISTERED CIVIL ENGINEER DATE

6-8-09
PLANS APPROVAL DATE

REGISTERED PROFESSIONAL ENGINEER Andrew P. Rittenhouse No. 61006 Exp. 12-31-10 CIVIL STATE OF CALIFORNIA

The State of California or its officers or agents shall not be responsible for the accuracy or completeness of electronic copies of this plan sheet.

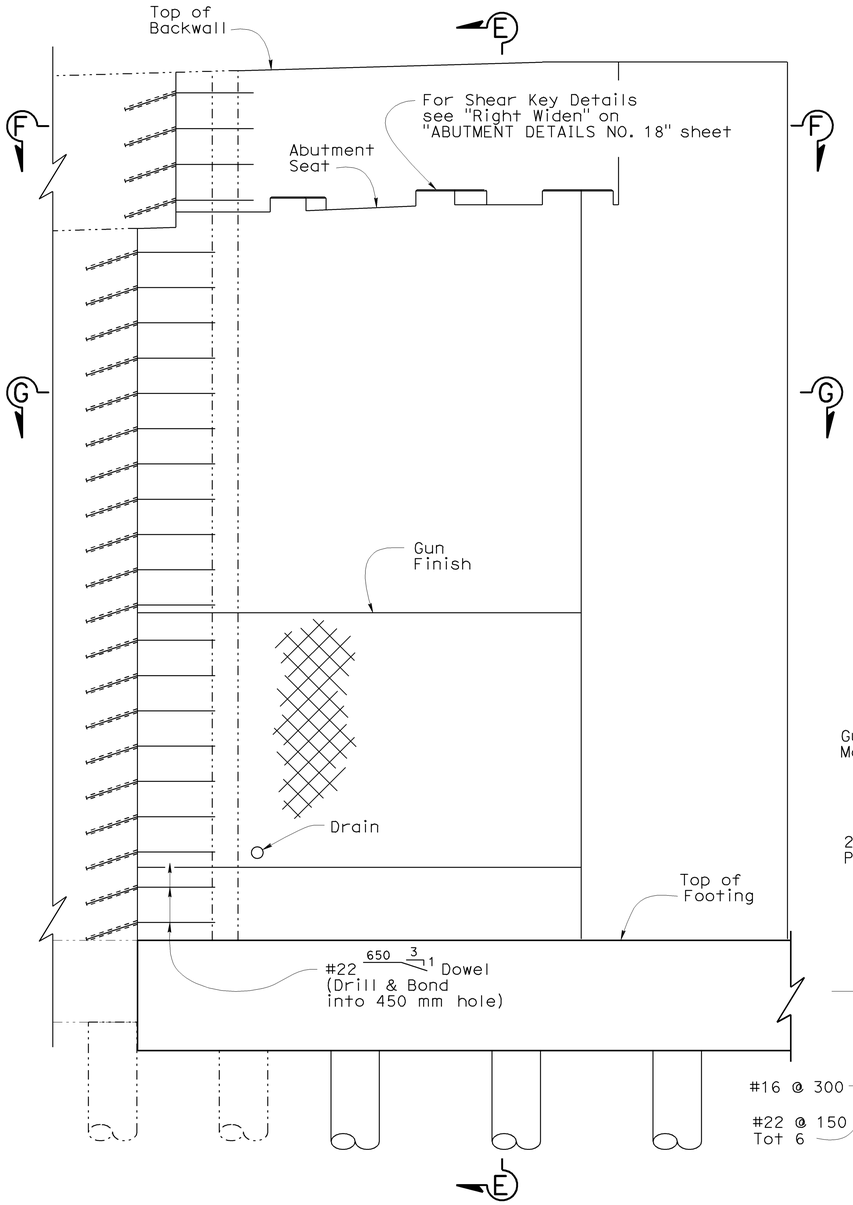


## DETAIL F
1:25

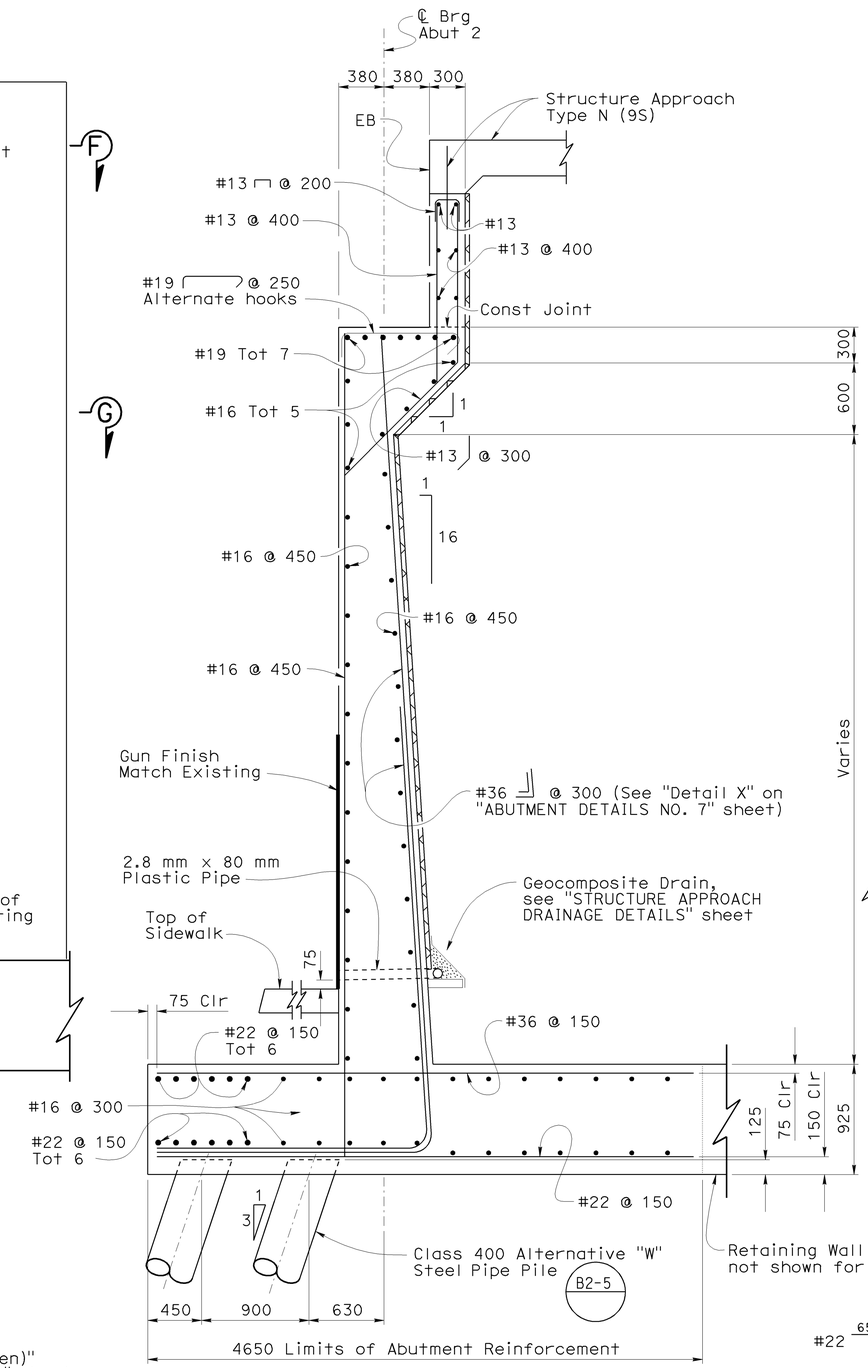


## SECTION E-E
1:25




## SECTION F-F
1:25

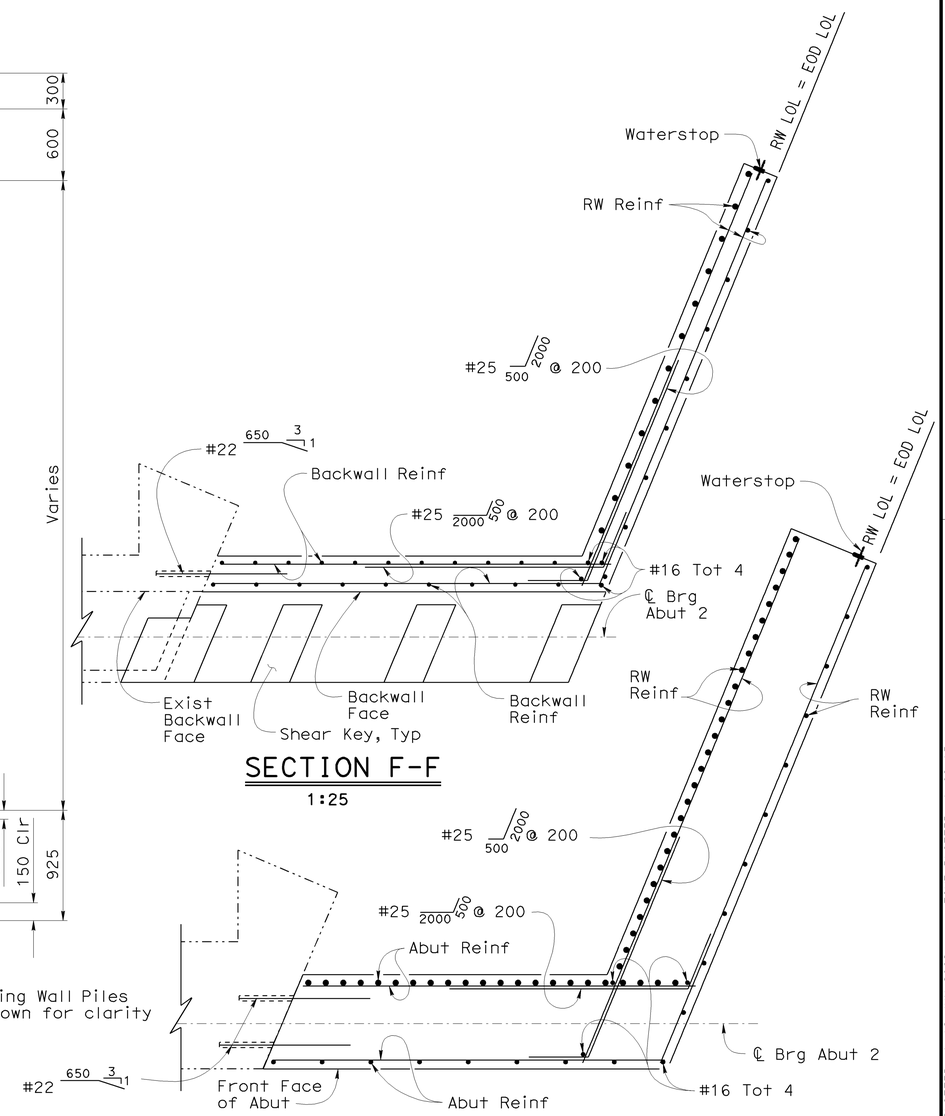


## SECTION G-G
1:25

NOTE:
THE CONTRACTOR SHALL VERIFY ALL CONTROLLING FIELD DIMENSIONS BEFORE ORDERING OR FABRICATING ANY MATERIAL.

Notes:

For "Dowel Layout (Right Widen)" see "ABUTMENT DETAILS NO. 22" sheet.

For "Approximate Wall Offset Values" see B3-8

| | BY | CHECKED |
|---|---|---|
| DESIGN | Hogni Setberg | Gabriel Galo |
| DETAILS | Herman Mauroschadt | Gabriel Galo |
| QUANTITIES | Gabriel Galo | Herman Mauroschadt |

STATE OF CALIFORNIA
DEPARTMENT OF TRANSPORTATION

DIVISION OF ENGINEERING SERVICES
STRUCTURE DESIGN
DESIGN BRANCH 15

BRIDGE NO. 53-1077
KILOMETER POST 44.32

SONORA AVENUE UC WIDEN & RETROFIT
ABUTMENT DETAILS NO. 16

ALL DIMENSIONS ARE IN MILLIMETERS UNLESS OTHERWISE SHOWN

ORIGINAL SCALE IN MILLIMETERS FOR REDUCED PLANS 0 10 20 30 40 50 60 70 80 90 100

CU 07
EA 121841

DISREGARD PRINTS BEARING EARLIER REVISION DATES

REVISION DATES: 5-29-07 2-1-08 8-11-08 9-2-08 11-21-08 12-12-08 1-13-09 2-25-09

SHEET 23 OF 59

FILE => 53-1077r1-h-a16.dgn

STRUCTURES DESIGN DETAIL SHEET (METRIC) (REV.03-17-04)

USERNAME => trmikest DATE PLOTTED => 12-JUN-2009 TIME PLOTTED => 09:15

| DIST | COUNTY | ROUTE | KILOMETER POST TOTAL PROJECT | SHEET No | TOTAL SHEETS |
|---|---|---|---|---|---|
| 07 | LA | 5 | 42.8/47.3 | 673 | 1073 |

Andrew P. Rittenhouse 12-05-08
REGISTERED CIVIL ENGINEER DATE

6-8-09
PLANS APPROVAL DATE

REGISTERED PROFESSIONAL ENGINEER Andrew P. Rittenhouse No. 61006 Exp. 12-31-10 CIVIL STATE OF CALIFORNIA

The State of California or its officers or agents shall not be responsible for the accuracy or completeness of electronic copies of this plan sheet.

Note:

For "View L-L" and "Detail I" see "ABUTMENT DETAILS NO. 11" sheet

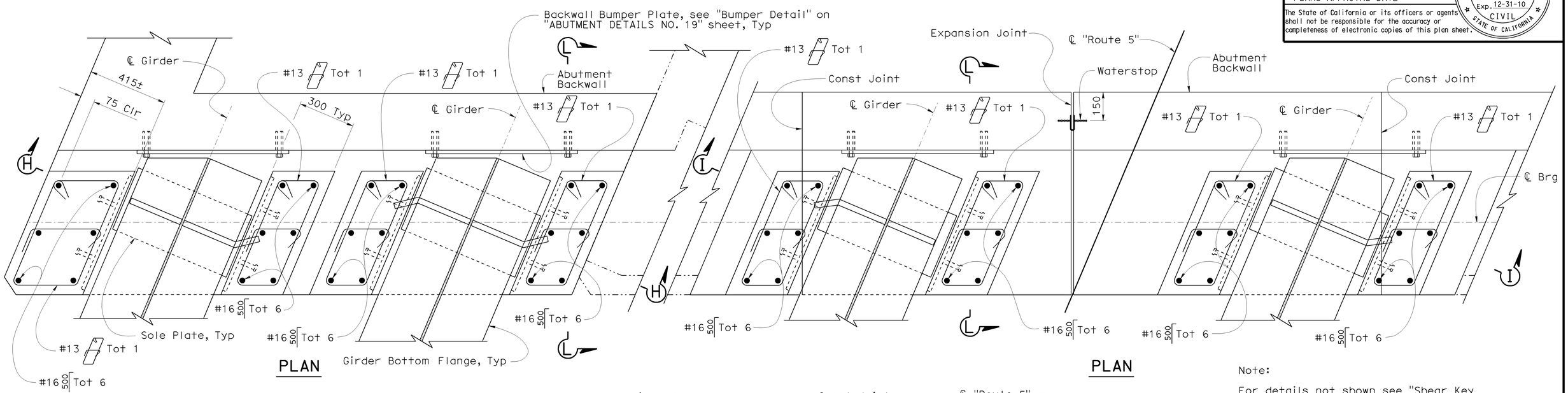


Note:

For details not shown see "Shear Key Details (Left Widen Abut 2)"

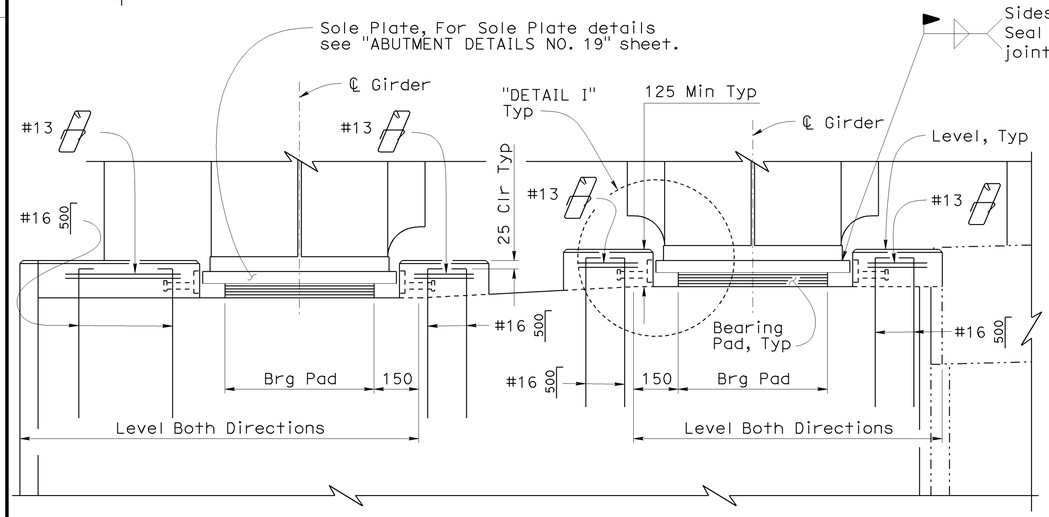


SECTION H-H

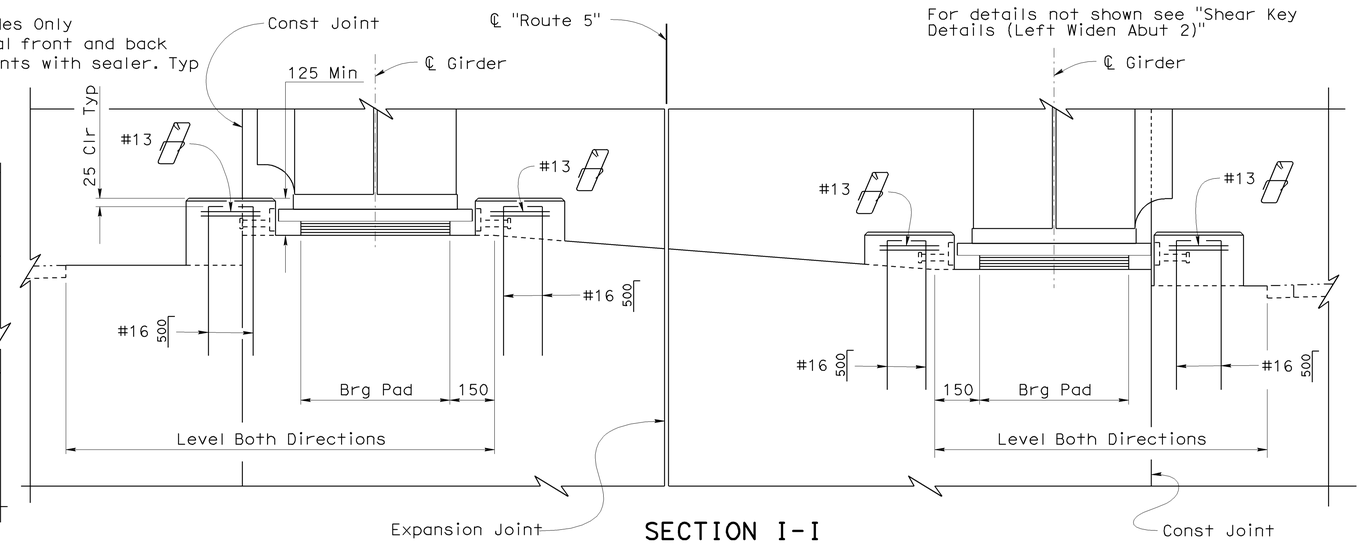


SECTION I-I

NOTE:
THE CONTRACTOR SHALL VERIFY ALL CONTROLLING FIELD DIMENSIONS BEFORE ORDERING OR FABRICATING ANY MATERIAL.

SHEAR KEY DETAILS (LEFT WIDEN ABUT 2)
1:10

SHEAR KEY DETAILS (CENTER WIDEN ABUT 2)
1:10

| | | | |
|---|---|---|---|
| DESIGN | BY Hogni Setberg | CHECKED Gabriel Galo | |
| DETAILS | BY Herman Mauroschadt | CHECKED Gabriel Galo | |
| QUANTITIES | BY Gabriel Galo | CHECKED Herman Mauroschadt | |

STATE OF CALIFORNIA
DEPARTMENT OF TRANSPORTATION

DIVISION OF ENGINEERING SERVICES
STRUCTURE DESIGN
DESIGN BRANCH 15

BRIDGE NO. 53-1077
KILOMETER POST 44.32

SONORA AVENUE UC WIDEN & RETROFIT
ABUTMENT DETAILS NO. 17

Caltrans Metric

ALL DIMENSIONS ARE IN MILLIMETERS UNLESS OTHERWISE SHOWN

ORIGINAL SCALE IN MILLIMETERS FOR REDUCED PLANS 0 10 20 30 40 50 60 70 80 90 100

CU 07
EA 121841

DISREGARD PRINTS BEARING EARLIER REVISION DATES

REVISION DATES 2-28-07 12-14-08 11-14-08 1-15-09 1-23-09 2-25-09

SHEET 24 OF 59

FILE => 53-1077rl-h-a17.dgn

STRUCTURES DESIGN DETAIL SHEET (METRIC) (REV.03-17-04)

USERNAME => trmikesl DATE PLOTTED => 12-JUN-2009 TIME PLOTTED => 09:15

| DIST | COUNTY | ROUTE | KILOMETER POST TOTAL PROJECT | SHEET No | TOTAL SHEETS |
|---|---|---|---|---|---|
| 07 | LA | 5 | 42.8/47.3 | 674 | 1073 |

Andrew Rittenhouse 12-05-08
REGISTERED CIVIL ENGINEER DATE

6-8-09
PLANS APPROVAL DATE

REGISTERED PROFESSIONAL ENGINEER
Andrew P. Rittenhouse
No. 61006
Exp. 12-31-10
CIVIL
STATE OF CALIFORNIA

The State of California or its officers or agents shall not be responsible for the accuracy or completeness of electronic copies of this plan sheet.

For "View L-L" see "ABUTMENT DETAILS NO. 11" sheet

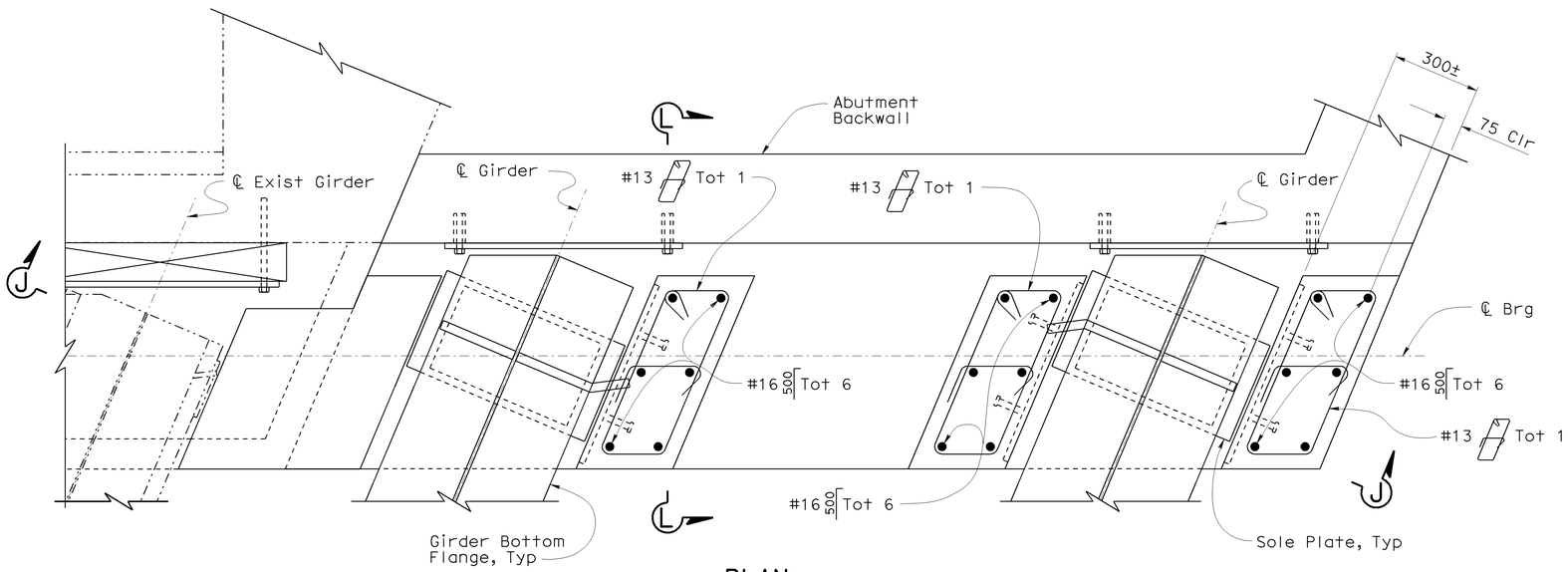


## PLAN

Note:

For details not shown see "Shear Key Details (Left Widen Abut 2)" on "ABUTMENT DETAILS NO. 17" sheet.

For Shear Key Details see "Detail L" on "ABUTMENT RETROFIT DETAILS NO. 2" sheet

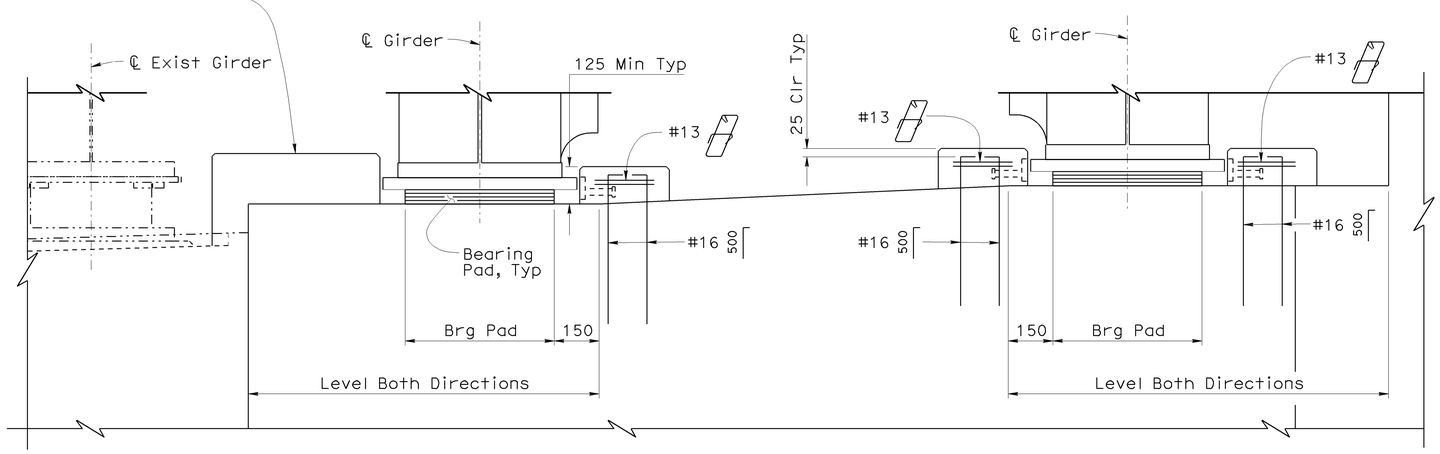


## SECTION J-J

## SHEAR KEY DETAILS (RIGHT WIDEN ABUT 2)

1:10

NOTE:
THE CONTRACTOR SHALL VERIFY ALL CONTROLLING FIELD DIMENSIONS BEFORE ORDERING OR FABRICATING ANY MATERIAL.

| | BY | CHECKED |
|---|---|---|
| DESIGN | Hogni Setberg | Gabriel Galo |
| DETAILS | Herman Mauroschadt | Gabriel Galo |
| QUANTITIES | Gabriel Galo | Herman Mauroschadt |

STATE OF CALIFORNIA
DEPARTMENT OF TRANSPORTATION

DIVISION OF ENGINEERING SERVICES
STRUCTURE DESIGN
DESIGN BRANCH 15

BRIDGE NO. 53-1077
KILOMETER POST 44.32

SONORA AVENUE UC WIDEN & RETROFIT
ABUTMENT DETAILS NO. 18

ALL DIMENSIONS ARE IN MILLIMETERS UNLESS OTHERWISE SHOWN

ORIGINAL SCALE IN MILLIMETERS FOR REDUCED PLANS 0 10 20 30 40 50 60 70 80 90 100

CU 07
EA 121841

DISREGARD PRINTS BEARING EARLIER REVISION DATES

REVISION DATES 2-25-07 2-25-08 11-14-08 2-25-09

SHEET 25 OF 59

FILE => 53-1077r1-h-a18.dgn

STRUCTURES DESIGN DETAIL SHEET (METRIC) (REV.03-17-04)

USERNAME => trmikesl DATE PLOTTED => 12-JUN-2009 TIME PLOTTED => 09:15

| DIST | COUNTY | ROUTE | KILOMETER POST TOTAL PROJECT | SHEET No | TOTAL SHEETS |
|---|---|---|---|---|---|
| 07 | LA | 5 | 42.8/47.3 | 675 | 1073 |

Andrew Rittenhouse 12-05-08
REGISTERED CIVIL ENGINEER DATE

6-8-09
PLANS APPROVAL DATE

REGISTERED PROFESSIONAL ENGINEER Andrew P. Rittenhouse No. 61006 Exp. 12-31-10 CIVIL STATE OF CALIFORNIA

The State of California or its officers or agents shall not be responsible for the accuracy or completeness of electronic copies of this plan sheet.

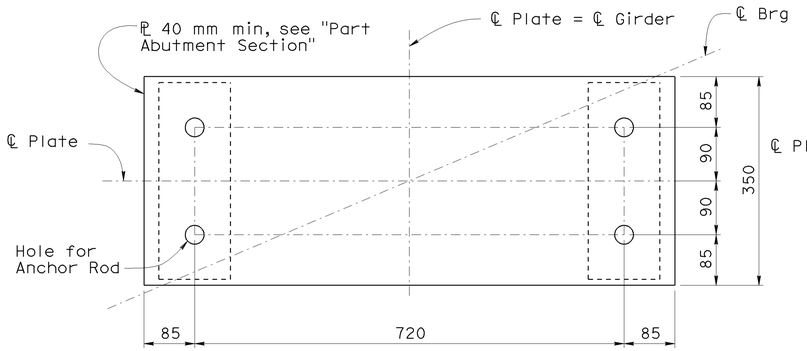


## SOLE PLATE (ABUT 1)

1:5

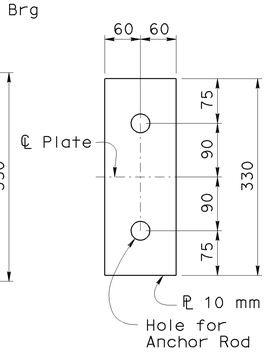


## SHEAR PLATE

1:5

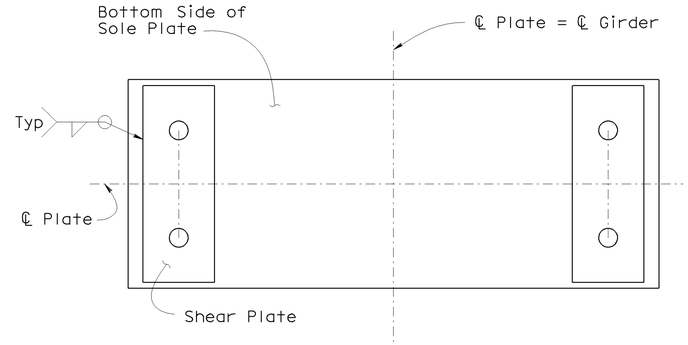


## SHEAR PLATE CONNECTION TO SOLE PLATE

1:5

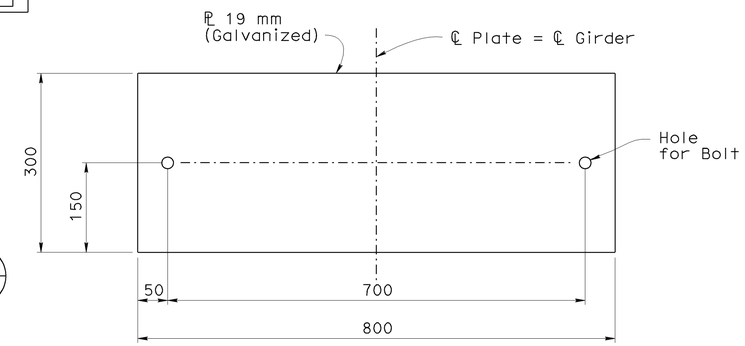


## BACKWALL BUMPER PLATE

1:5

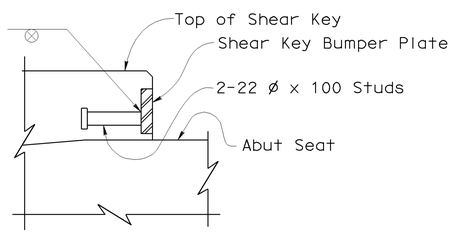


## SECTION K-K

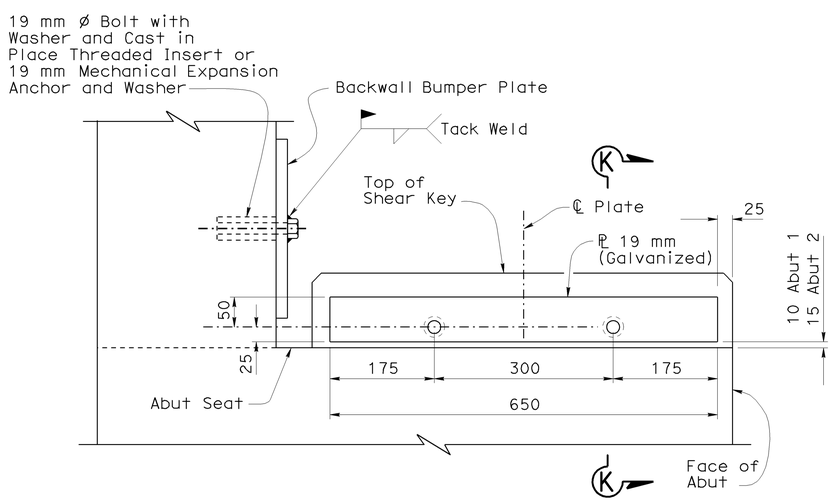


## ELEVATION

## BUMPER DETAIL

1:5

NOTE:
THE CONTRACTOR SHALL VERIFY ALL CONTROLLING FIELD DIMENSIONS BEFORE ORDERING OR FABRICATING ANY MATERIAL.

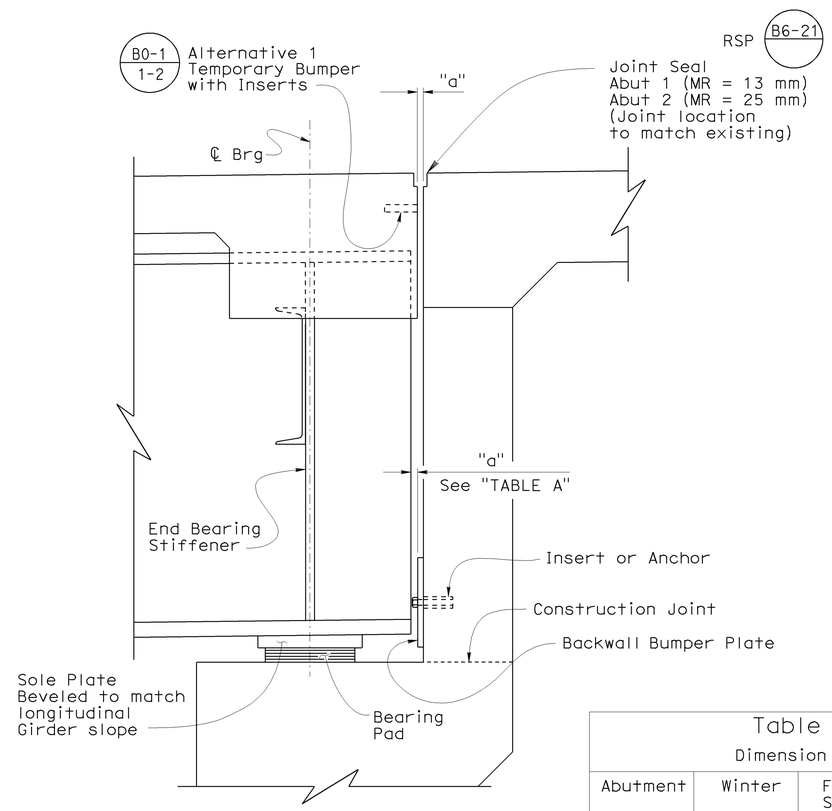


Abutment 2 shown, Abutment 1 similar

## PART ABUTMENT SECTION

1:10

Table A
Dimension "a"

| Abutment | Winter | Fall-Spring | Summer |
|---|---|---|---|
| Abut 1 | 20 | 20 | 13 |
| Abut 2 | 25 | 20 | 13 |

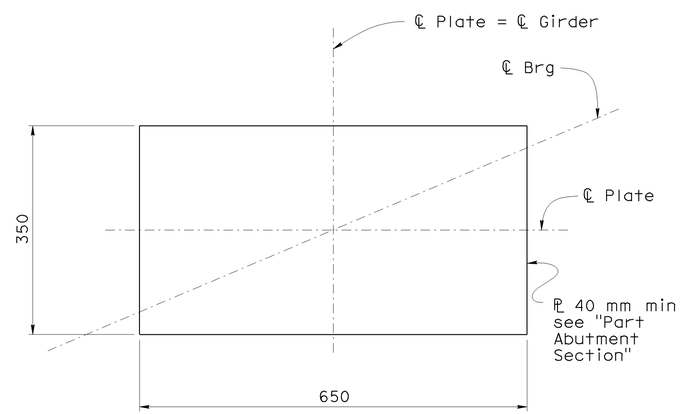


## SOLE PLATE (ABUT 2)

1:5

Caltrans Metric

| | BY | CHECKED |
|---|---|---|
| DESIGN | Hogni Setberg | Gabriel Galo |
| DETAILS | Herman Mauroschadt | Gabriel Galo |
| QUANTITIES | Gabriel Galo | Herman Mauroschadt |

STATE OF CALIFORNIA
DEPARTMENT OF TRANSPORTATION

DIVISION OF ENGINEERING SERVICES
STRUCTURE DESIGN
DESIGN BRANCH 15

BRIDGE NO. 53-1077
KILOMETER POST 44.32

SONORA AVENUE UC WIDEN & RETROFIT
ABUTMENT DETAILS NO. 19

ALL DIMENSIONS ARE IN MILLIMETERS UNLESS OTHERWISE SHOWN

ORIGINAL SCALE IN MILLIMETERS FOR REDUCED PLANS 0 10 20 30 40 50 60 70 80 90 100

CU 07
EA 121841

DISREGARD PRINTS BEARING EARLIER REVISION DATES

REVISION DATES: 2-28-07 2-15-08 7-7-08 11-14-08 1-16-09 1-29-09 1-30-09 2-18-09 2-25-09

SHEET 26 OF 59

FILE => 53-1077r1-h-a19.dgn

STRUCTURES DESIGN DETAIL SHEET (METRIC) (REV.03-17-04)

USERNAME => trmikesl DATE PLOTTED => 12-JUN-2009 TIME PLOTTED => 08:15

| DIST | COUNTY | ROUTE | KILOMETER POST TOTAL PROJECT | SHEET No | TOTAL SHEETS |
|---|---|---|---|---|---|
| 07 | LA | 5 | 42.8/47.3 | 676 | 1073 |

Andrew Rittenhouse 12-05-08
REGISTERED CIVIL ENGINEER DATE

6-8-09
PLANS APPROVAL DATE

REGISTERED PROFESSIONAL ENGINEER
Andrew P. Rittenhouse
No. 61006
Exp. 12-31-10
CIVIL
STATE OF CALIFORNIA

The State of California or its officers or agents shall not be responsible for the accuracy or completeness of electronic copies of this plan sheet.

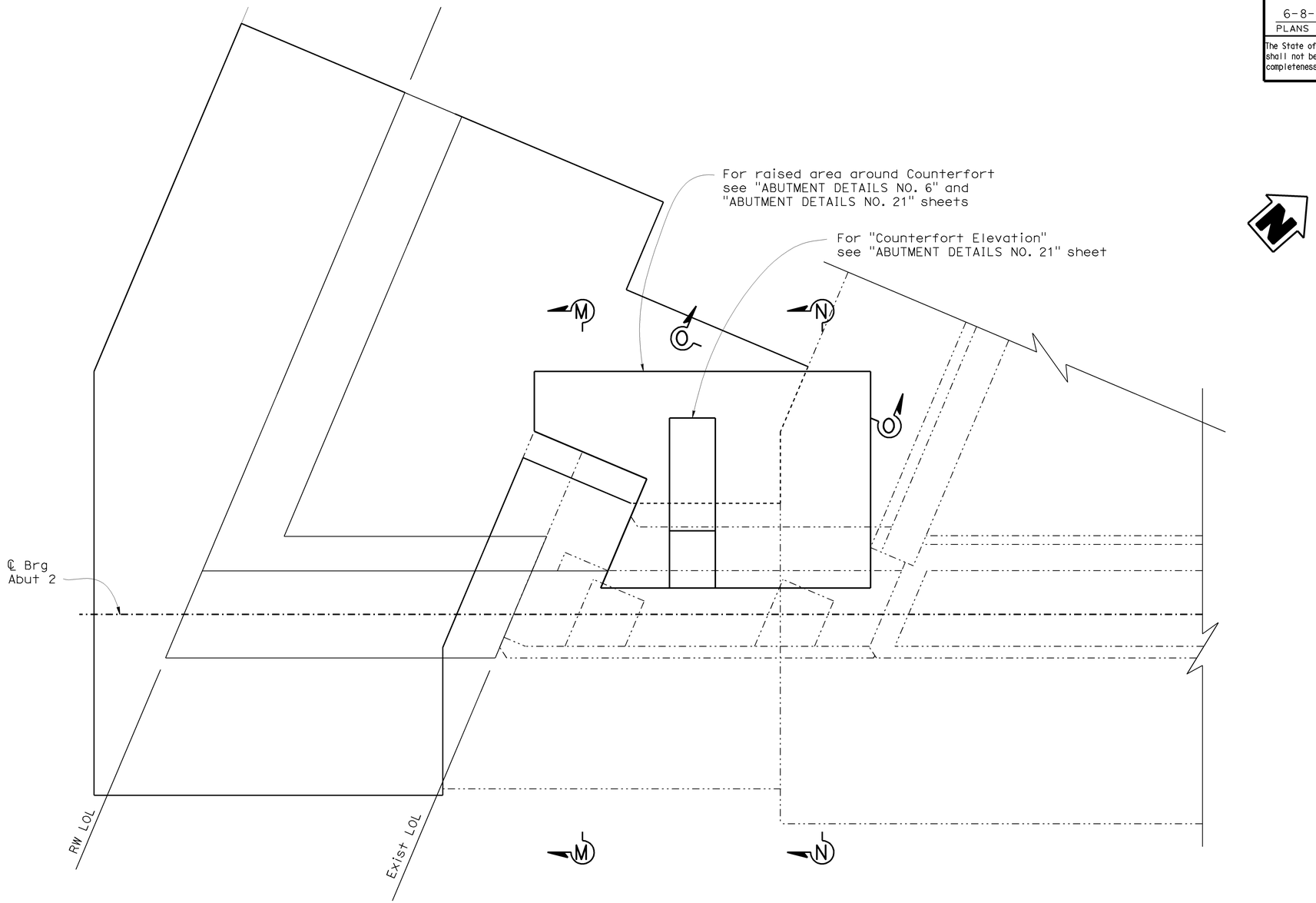


## DETAIL H

1:20

Note:

For "Section M-M", "Section N-N" and "Section O-O" see "ABUTMENT DETAILS NO. 21" sheet.

NOTE:
THE CONTRACTOR SHALL VERIFY ALL CONTROLLING FIELD DIMENSIONS BEFORE ORDERING OR FABRICATING ANY MATERIAL.

Caltrans Metric

ALL DIMENSIONS ARE IN MILLIMETERS UNLESS OTHERWISE SHOWN

ORIGINAL SCALE IN MILLIMETERS FOR REDUCED PLANS 0 10 20 30 40 50 60 70 80 90 100

| | BY | CHECKED |
|---|---|---|
| DESIGN | Hogni Setberg | Gabriel Galo |
| DETAILS | Herman Mauroschadt | Gabriel Galo |
| QUANTITIES | Gabriel Galo | Herman Mauroschadt |

STATE OF CALIFORNIA
DEPARTMENT OF TRANSPORTATION

DIVISION OF ENGINEERING SERVICES
STRUCTURE DESIGN
DESIGN BRANCH 15

CU 07
EA 121841

BRIDGE NO. 53-1077
KILOMETER POST 44.32

# SONORA AVENUE UC WIDEN & RETROFIT
# ABUTMENT DETAILS NO. 20

DISREGARD PRINTS BEARING EARLIER REVISION DATES

REVISION DATES: 1-31-07 2-1-08 1-4-08 11-14-08 2-25-09

SHEET 27 OF 59

FILE => 53-1077r1-h-a20.dgn

STRUCTURES DESIGN DETAIL SHEET (METRIC) (REV.03-17-04)

USERNAME => trmikes1 DATE PLOTTED => 12-JUN-2009 TIME PLOTTED => 09:15

| DIST | COUNTY | ROUTE | KILOMETER POST TOTAL PROJECT | SHEET No | TOTAL SHEETS |
|---|---|---|---|---|---|
| 07 | LA | 5 | 42.8/47.3 | 677 | 1073 |

Andrew Rittenhouse 12-05-08
REGISTERED CIVIL ENGINEER DATE

6-8-09
PLANS APPROVAL DATE

REGISTERED PROFESSIONAL ENGINEER Andrew P. Rittenhouse No. 61006 Exp. 12-31-10 CIVIL STATE OF CALIFORNIA

The State of California or its officers or agents shall not be responsible for the accuracy or completeness of electronic copies of this plan sheet.

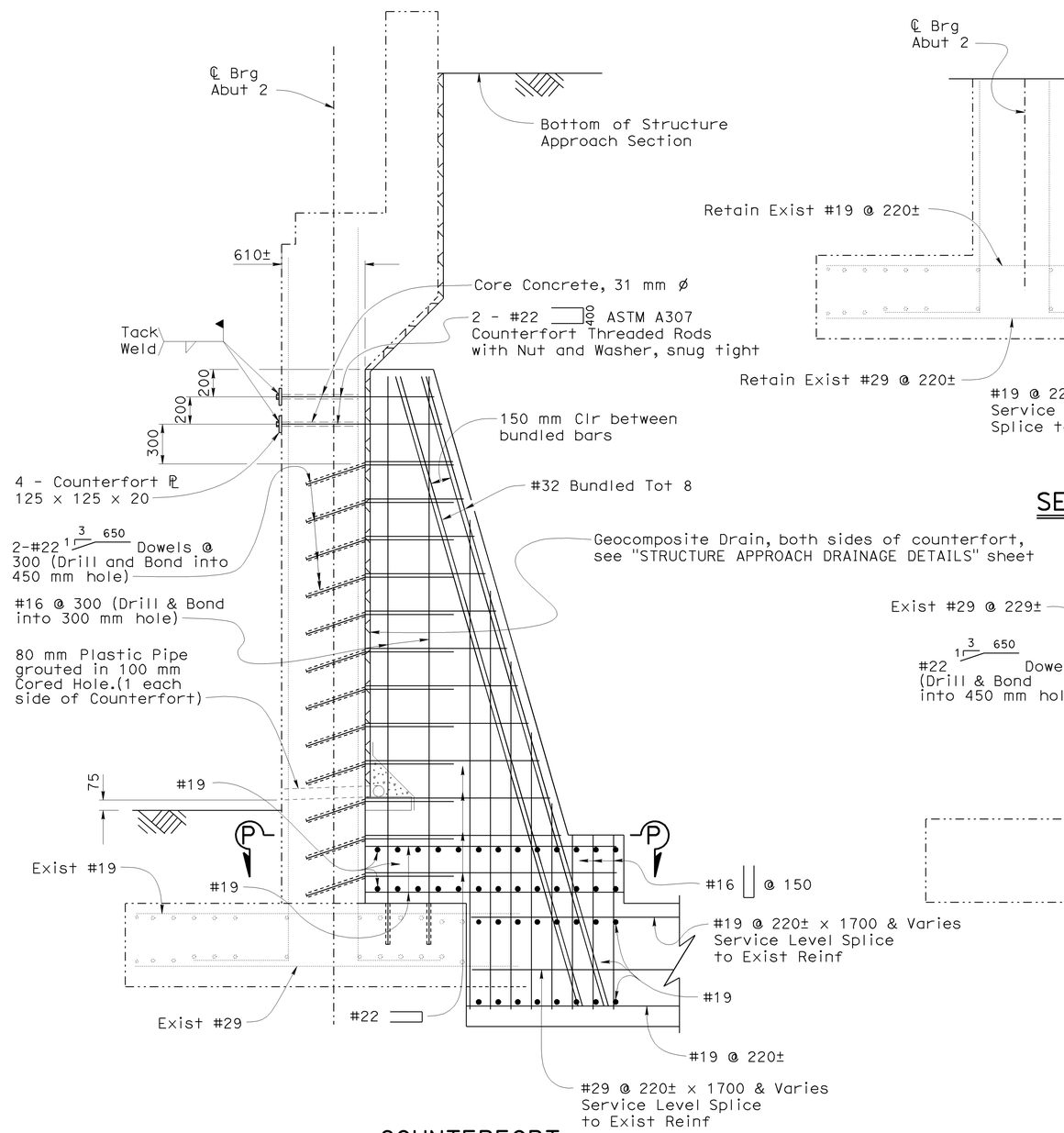


COUNTERFORT ELEVATION
1:20

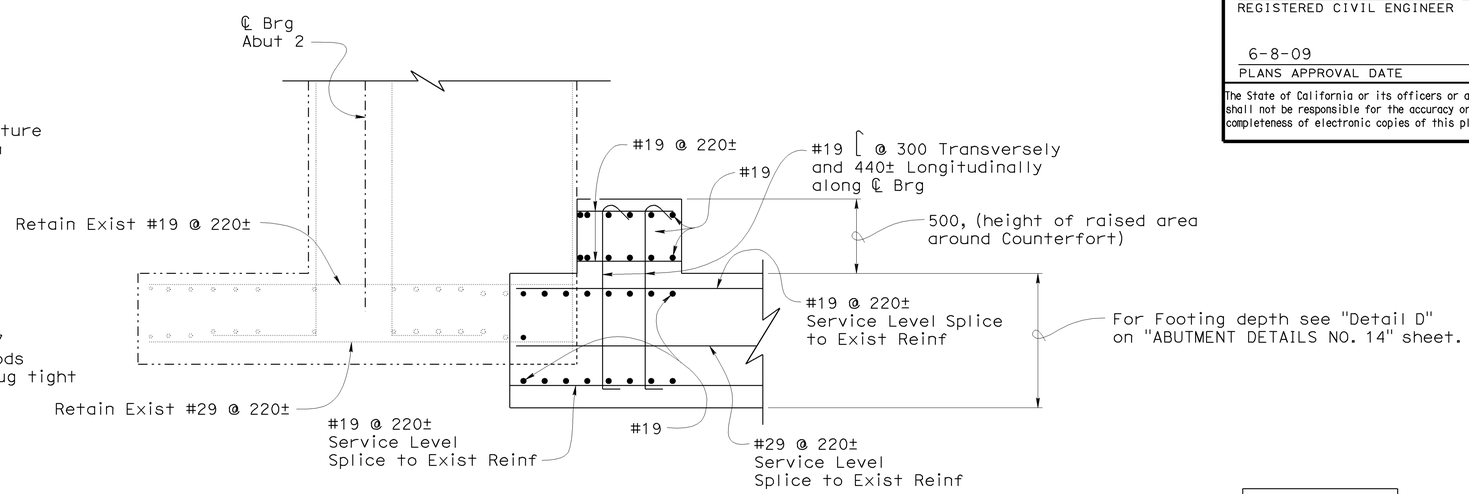


SECTION M-M
1:20

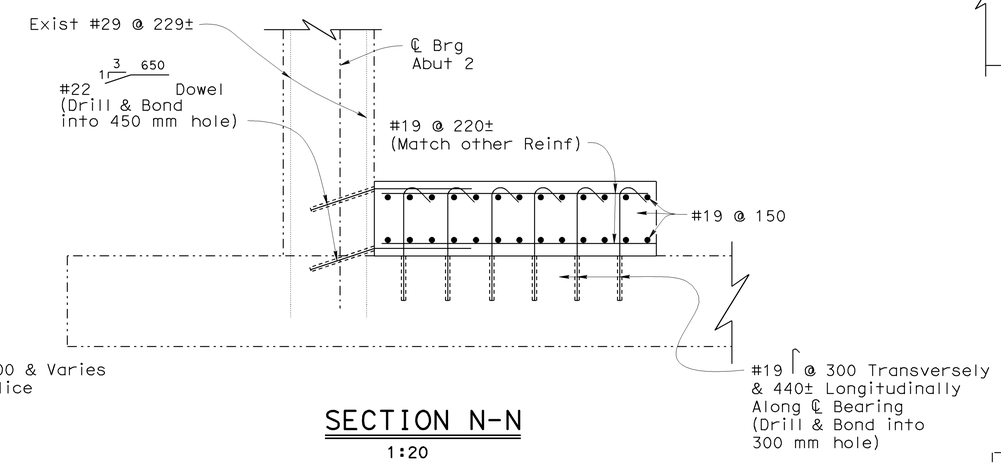


SECTION N-N
1:20

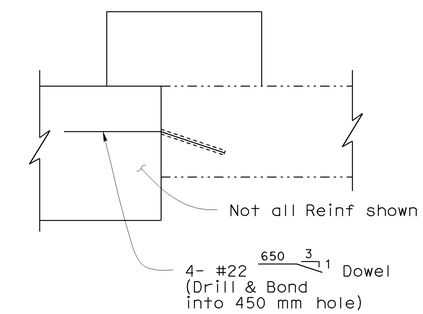


SECTION O-O
1:20

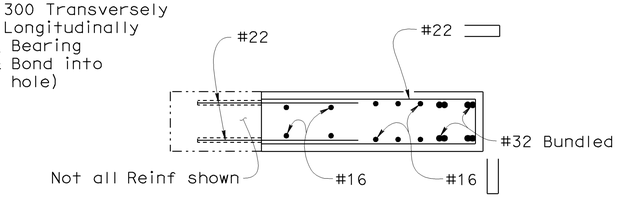


SECTION P-P
1:20

NOTE:
THE CONTRACTOR SHALL VERIFY ALL CONTROLLING FIELD DIMENSIONS BEFORE ORDERING OR FABRICATING ANY MATERIAL.

Caltrans Metric

| | BY | CHECKED |
|---|---|---|
| DESIGN | Hogni Setberg | Gabriel Galo |
| DETAILS | Herman Mauroschadt | Gabriel Galo |
| QUANTITIES | Gabriel Galo | Herman Mauroschadt |

STATE OF CALIFORNIA
DEPARTMENT OF TRANSPORTATION

DIVISION OF ENGINEERING SERVICES
STRUCTURE DESIGN
DESIGN BRANCH 15

BRIDGE NO. 53-1077
KILOMETER POST 44.32

SONORA AVENUE UC WIDEN & RETROFIT
ABUTMENT DETAILS NO. 21

ALL DIMENSIONS ARE IN MILLIMETERS UNLESS OTHERWISE SHOWN

ORIGINAL SCALE IN MILLIMETERS FOR REDUCED PLANS 0 10 20 30 40 50 60 70 80 90 100

CU 07
EA 121841

DISREGARD PRINTS BEARING EARLIER REVISION DATES

REVISION DATES: 1-15-07 2-5-08 1-7-08 11-14-08 1-15-09 1-23-09 2-13-09 2-25-09

SHEET 28 OF 59

FILE => 53-1077r1-h-a21.dgn

STRUCTURES DESIGN DETAIL SHEET (METRIC) (REV.03-17-04)

USERNAME => rtmrikes1 DATE PLOTTED => 12-JUN-2009 TIME PLOTTED => 09:15

| DIST | COUNTY | ROUTE | KILOMETER POST TOTAL PROJECT | SHEET No | TOTAL SHEETS |
|---|---|---|---|---|---|
| 07 | LA | 5 | 42.8/47.3 | 678 | 1073 |

Andrew Rittenhouse 12-05-08
REGISTERED CIVIL ENGINEER DATE

6-8-09
PLANS APPROVAL DATE

REGISTERED PROFESSIONAL ENGINEER
Andrew P. Rittenhouse
No. 61006
Exp. 12-31-10
CIVIL
STATE OF CALIFORNIA

The State of California or its officers or agents shall not be responsible for the accuracy or completeness of electronic copies of this plan sheet.

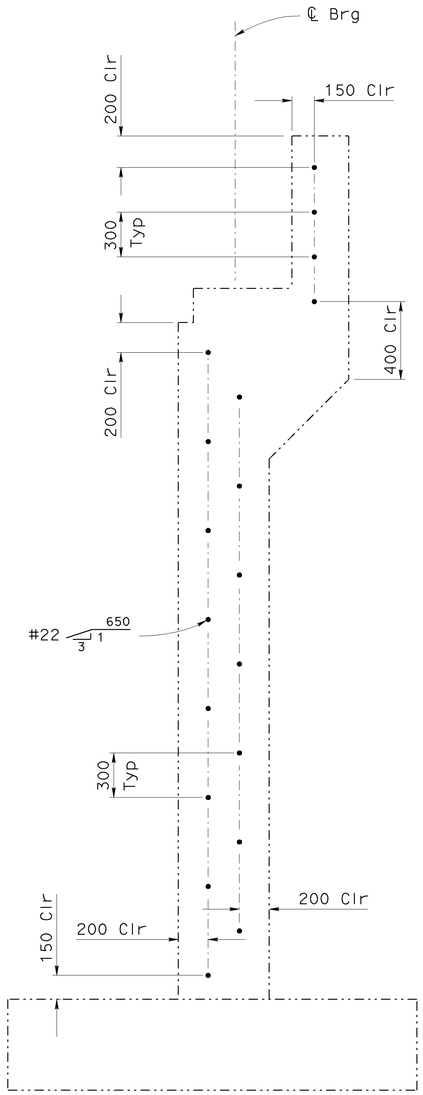


(LEFT WIDEN)

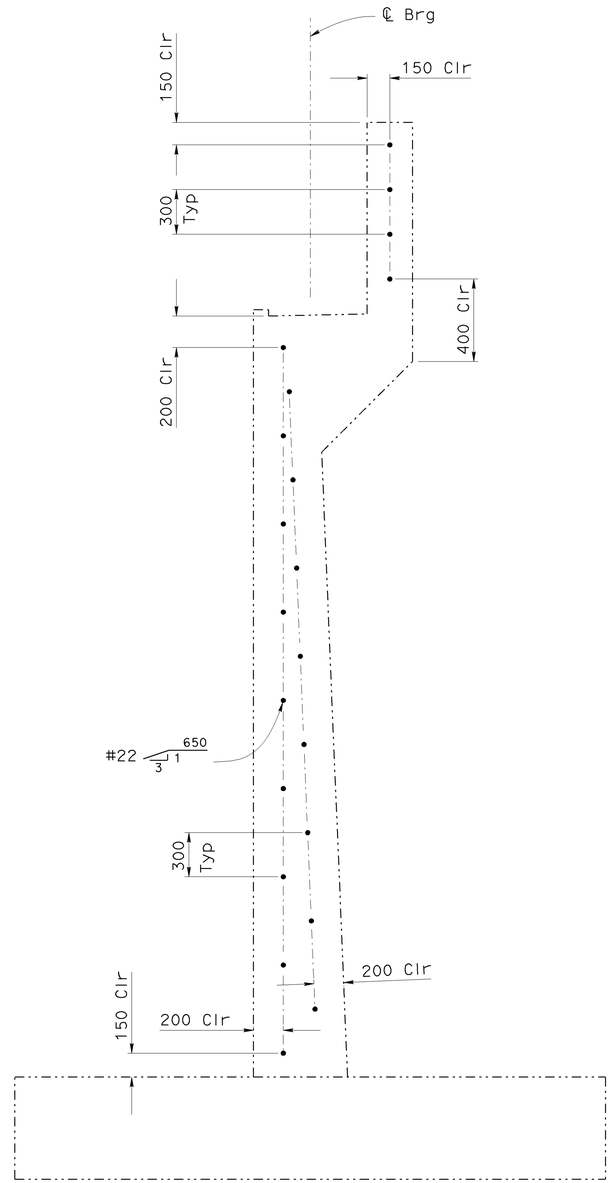


(CENTER WIDEN)

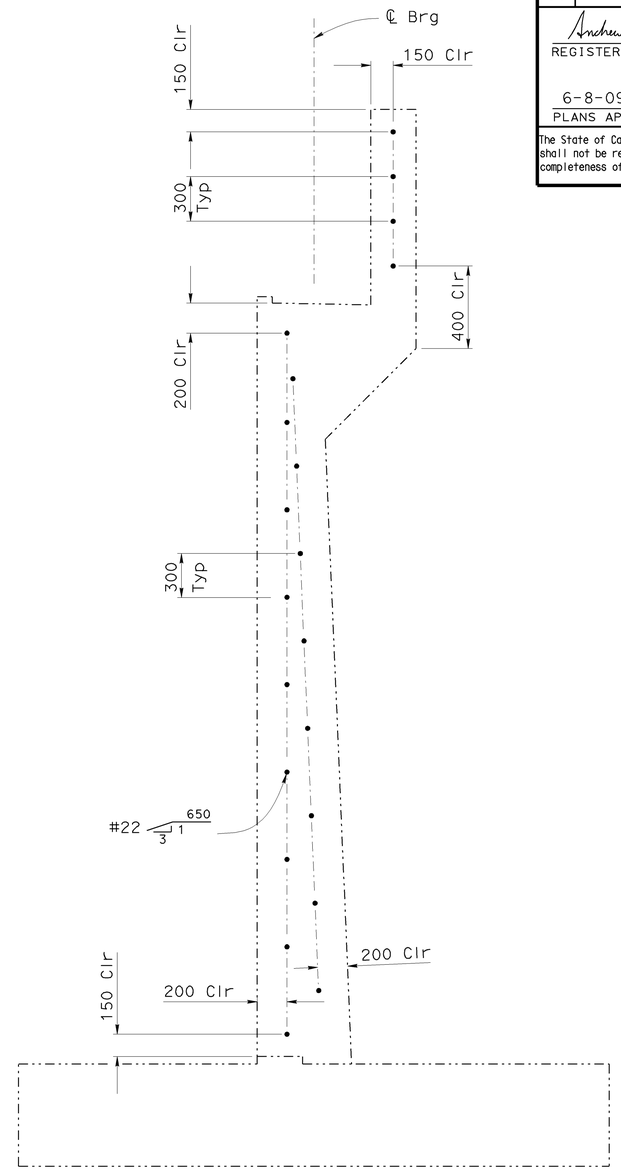


(RIGHT WIDEN)

NOTE:
THE CONTRACTOR SHALL VERIFY ALL CONTROLLING FIELD DIMENSIONS BEFORE ORDERING OR FABRICATING ANY MATERIAL.

## DOWEL LAYOUT

1:20

| | | |
|---|---|---|
| DESIGN | BY Hogni Setberg | CHECKED Gabriel Galo |
| DETAILS | BY Herman Mauroschadt | CHECKED Gabriel Galo |
| QUANTITIES | BY Gabriel Galo | CHECKED Herman Mauroschadt |

STATE OF CALIFORNIA
DEPARTMENT OF TRANSPORTATION

DIVISION OF ENGINEERING SERVICES
STRUCTURE DESIGN
DESIGN BRANCH 15

BRIDGE NO. 53-1077
KILOMETER POST 44.32

SONORA AVENUE UC WIDEN & RETROFIT
ABUTMENT DETAILS NO. 22

ALL DIMENSIONS ARE IN MILLIMETERS UNLESS OTHERWISE SHOWN

ORIGINAL SCALE IN MILLIMETERS FOR REDUCED PLANS 0 10 20 30 40 50 60 70 80 90 100

CU 07
EA 121841

DISREGARD PRINTS BEARING EARLIER REVISION DATES

REVISION DATES: 2-23-07 11-24-08

SHEET 29 OF 59

FILE => 53-1077rl-h-a22.dgn

STRUCTURES DESIGN DETAIL SHEET (METRIC) (REV.03-17-04)

USERNAME => trmirkes1 DATE PLOTTED => 12-JUN-2009 TIME PLOTTED => 09:15

| DIST | COUNTY | ROUTE | KILOMETER POST TOTAL PROJECT | SHEET No | TOTAL SHEETS |
|---|---|---|---|---|---|
| 07 | LA | 5 | 42.8/47.3 | 679 | 1073 |

Andrew Rittenhouse 12-05-08
REGISTERED CIVIL ENGINEER DATE

6-8-09
PLANS APPROVAL DATE

REGISTERED PROFESSIONAL ENGINEER Andrew P. Rittenhouse No. 61006 Exp. 12-31-10 CIVIL STATE OF CALIFORNIA

The State of California or its officers or agents shall not be responsible for the accuracy or completeness of electronic copies of this plan sheet.

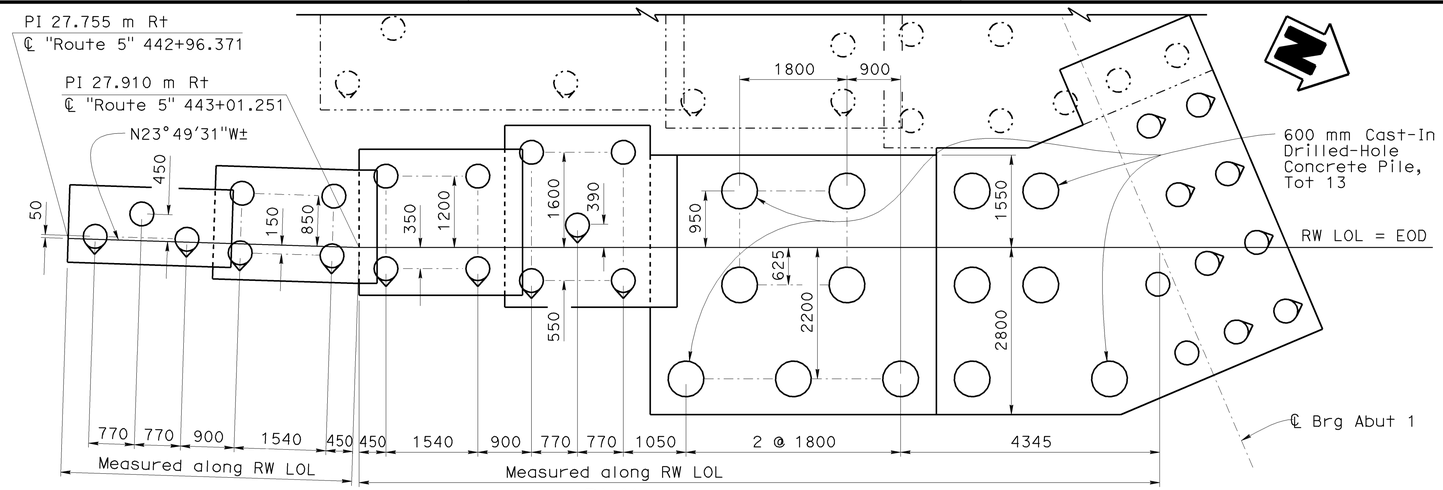


PLAN

Indicates 3:1 Battered Pile

Indicates Vertical Pile

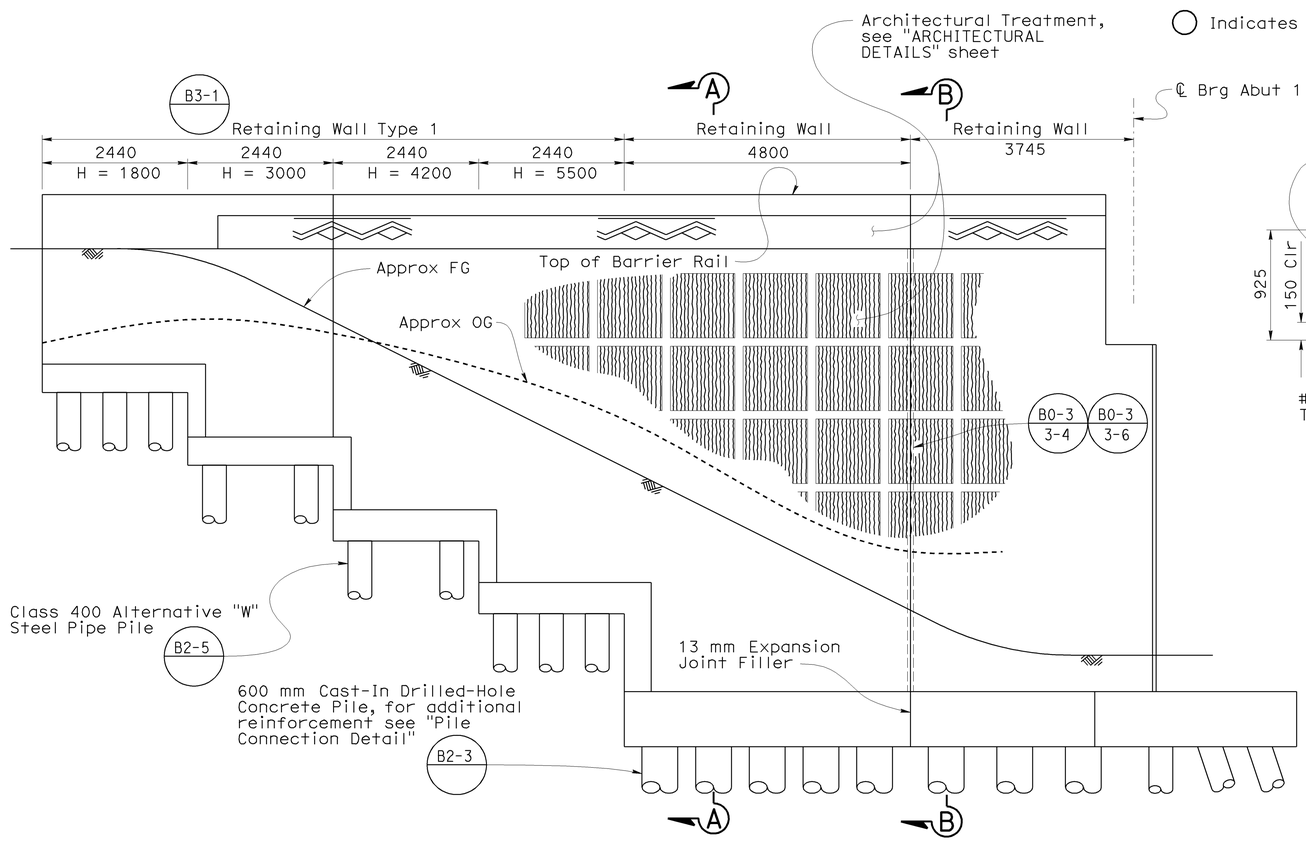


ELEVATION

ABUTMENT 1 WINGWALL (RIGHT WIDEN)

1:50

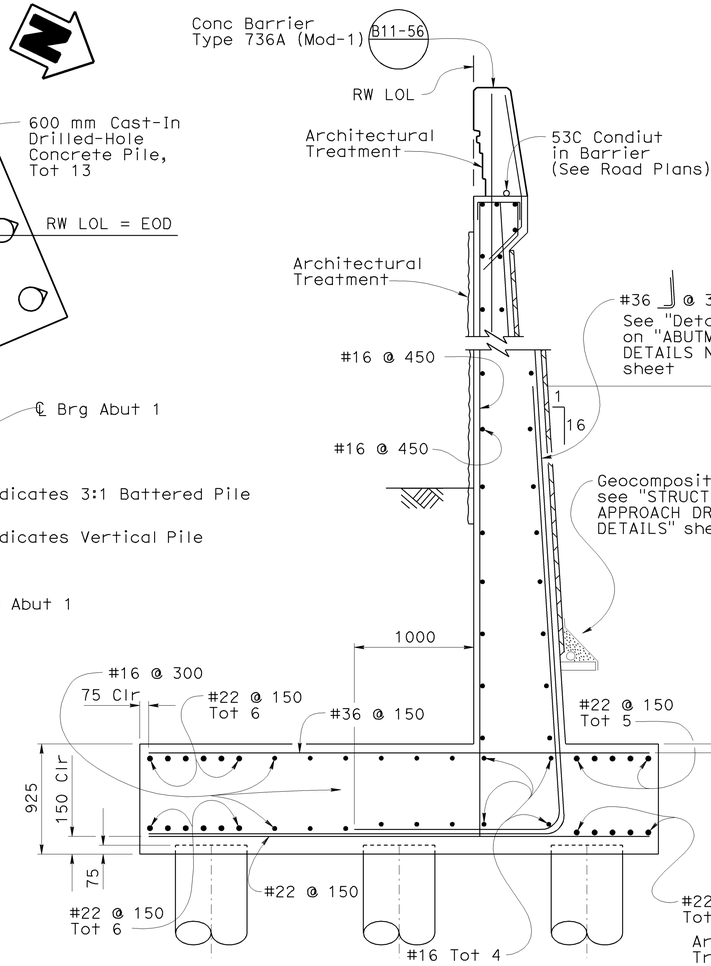


SECTION A-A

1:25

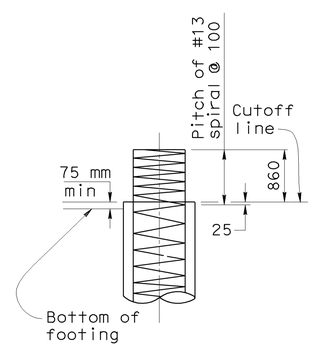


PILE CONNECTION DETAIL

1:25

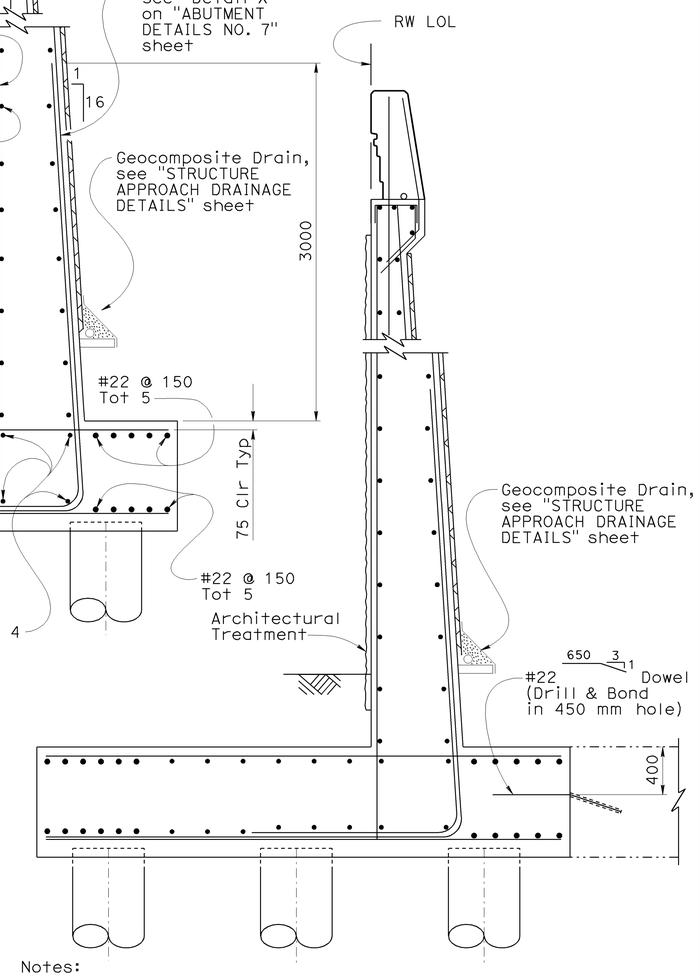


Notes:

For details and dimensions not noted see "Section A-A"

For Pile spacing see "ABUTMENT DETAILS NO. 3" sheet.

For Dowel spacing see "ABUTMENT DETAILS NO. 4" sheet.

SECTION B-B

1:25

NOTE:
THE CONTRACTOR SHALL VERIFY ALL CONTROLLING FIELD DIMENSIONS BEFORE ORDERING OR FABRICATING ANY MATERIAL.

B3-8

Caltrans Metric

| | BY | CHECKED |
|---|---|---|
| DESIGN | Hogni Setberg | Gabriel Galo |
| DETAILS | Herman Mauroschadt | Gabriel Galo |
| QUANTITIES | Gabriel Galo | Herman Mauroschadt |

STATE OF CALIFORNIA
DEPARTMENT OF TRANSPORTATION

DIVISION OF ENGINEERING SERVICES
STRUCTURE DESIGN
DESIGN BRANCH 15

BRIDGE NO. 53-1077
KILOMETER POST 44.32

SONORA AVENUE UC WIDEN & RETROFIT
RETAINING WALL DETAILS NO. 1

ALL DIMENSIONS ARE IN MILLIMETERS UNLESS OTHERWISE SHOWN

ORIGINAL SCALE IN MILLIMETERS FOR REDUCED PLANS 0 10 20 30 40 50 60 70 80 90 100

CU 07
EA 121841

DISREGARD PRINTS BEARING EARLIER REVISION DATES

REVISION DATES: 1-15-09 1-20-09 1-29-09 2-25-09 3-4-09 10-8-08 10-17-08 11-13-08 1-9-09

SHEET 30 OF 59

STRUCTURES DESIGN DETAIL SHEET (METRIC) (REV.03-17-04)

FILE => 53-1077ri-i-rwd1.dgn

USERNAME => rtmrikes; DATE PLOTTED => 12-JUN-2009 TIME PLOTTED => 09:15

| DIST | COUNTY | ROUTE | KILOMETER POST TOTAL PROJECT | SHEET No | TOTAL SHEETS |
|---|---|---|---|---|---|
| 07 | LA | 5 | 42.8/47.3 | 680 | 1073 |

Andrew Rittenhouse 12-05-08
REGISTERED CIVIL ENGINEER DATE

6-8-09
PLANS APPROVAL DATE

REGISTERED PROFESSIONAL ENGINEER Andrew P. Rittenhouse No. 61006 Exp. 12-31-10 CIVIL STATE OF CALIFORNIA

The State of California or its officers or agents shall not be responsible for the accuracy or completeness of electronic copies of this plan sheet.

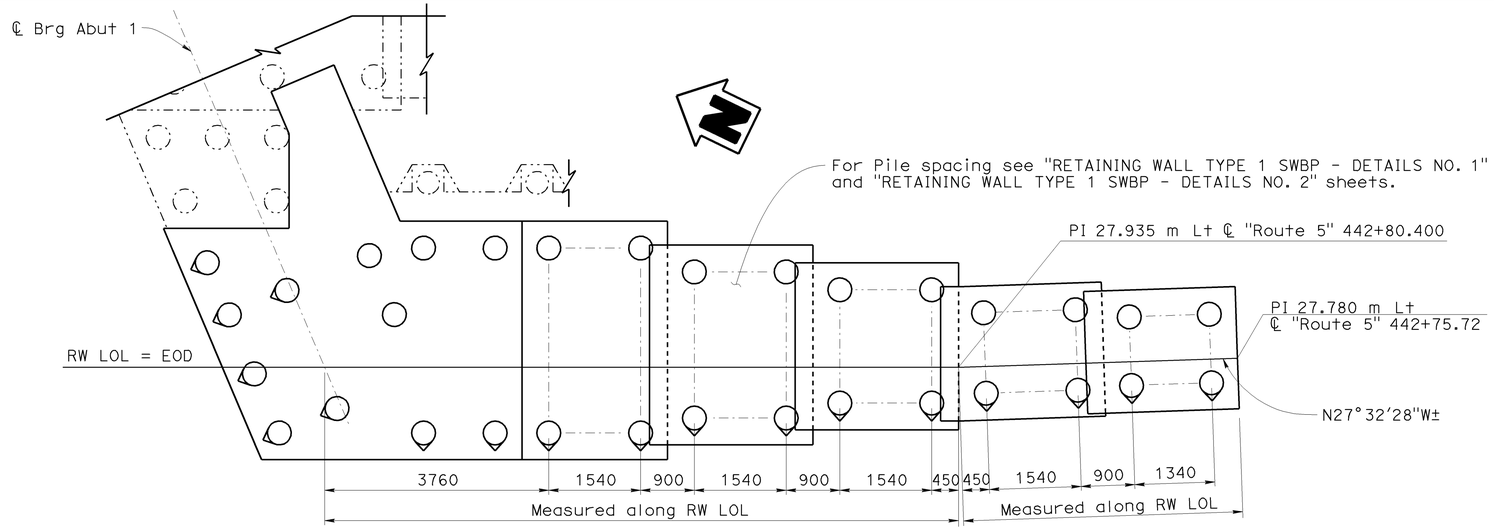


## PLAN

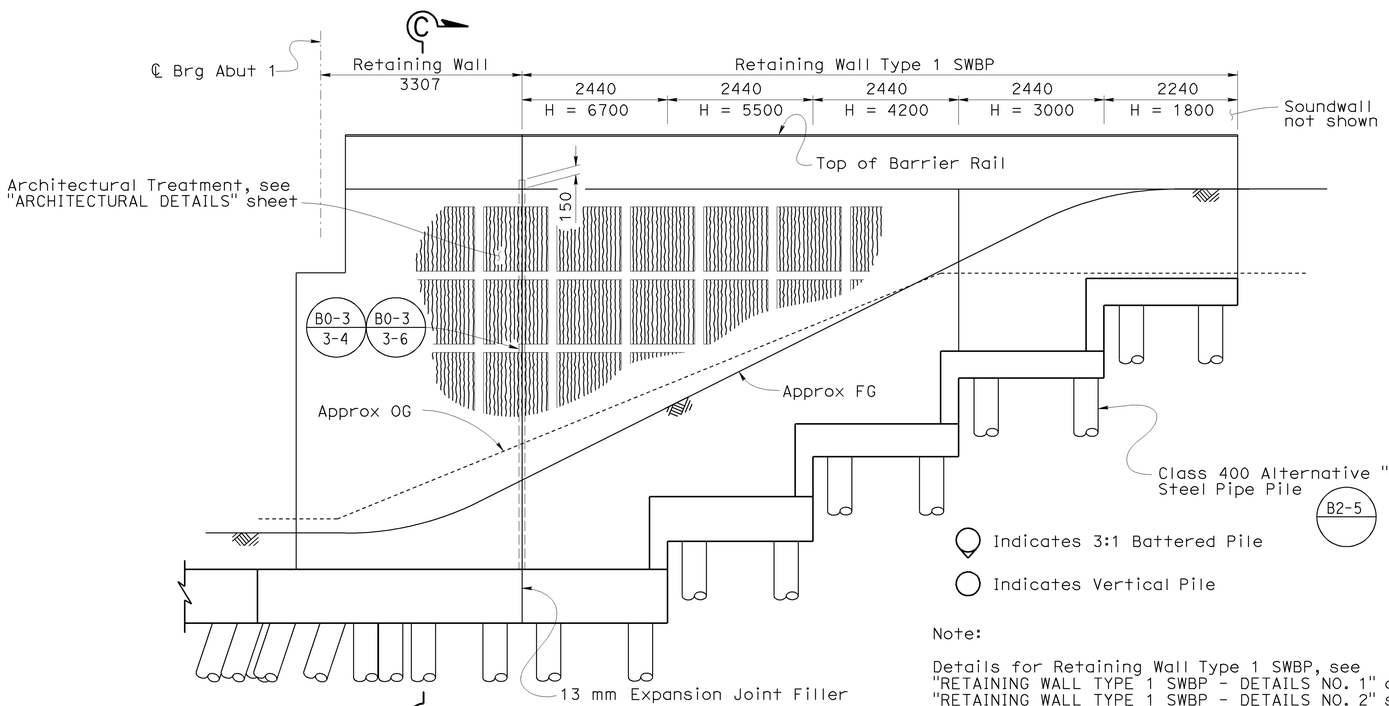


Note:

Details for Retaining Wall Type 1 SWBP, see "RETAINING WALL TYPE 1 SWBP - DETAILS NO. 1" and "RETAINING WALL TYPE 1 SWBP - DETAILS NO. 2" sheets.

NOTE:
THE CONTRACTOR SHALL VERIFY ALL CONTROLLING FIELD DIMENSIONS BEFORE ORDERING OR FABRICATING ANY MATERIAL.

## ELEVATION

## ABUTMENT 1 WINGWALL (LEFT WIDEN)

1:50

B3-8

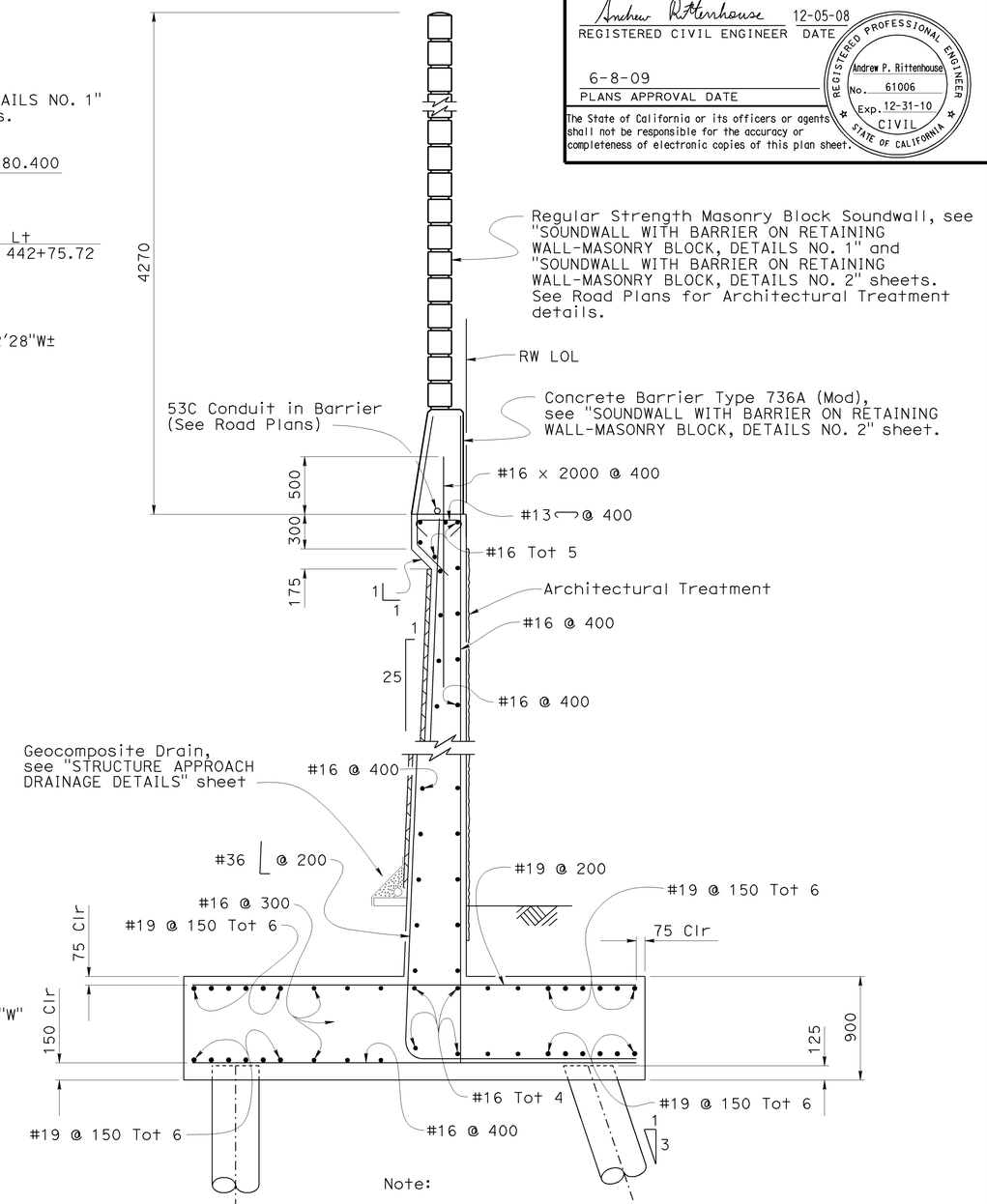


Note:

For Pile spacing see "ABUTMENT DETAILS NO. 3" sheet

## SECTION C-C

1:25

| | | | |
|---|---|---|---|
| DESIGN | BY Hogni Setberg | CHECKED Gabriel Galo | |
| DETAILS | BY Herman Mauroschadt | CHECKED Gabriel Galo | |
| QUANTITIES | BY Gabriel Galo | CHECKED Herman Mauroschadt | |

STATE OF CALIFORNIA
DEPARTMENT OF TRANSPORTATION

DIVISION OF ENGINEERING SERVICES
STRUCTURE DESIGN
DESIGN BRANCH 15

BRIDGE NO. 53-1077
KILOMETER POST 44.32

# SONORA AVENUE UC WIDEN & RETROFIT
# RETAINING WALL DETAILS NO. 2

ALL DIMENSIONS ARE IN MILLIMETERS UNLESS OTHERWISE SHOWN

ORIGINAL SCALE IN MILLIMETERS FOR REDUCED PLANS 0 10 20 30 40 50 60 70 80 90 100

CU 07
EA 121841

DISREGARD PRINTS BEARING EARLIER REVISION DATES

REVISION DATES: 10-12-07 2-4-08 8-11-08 10-31-08 11-14-08 1-9-09 1-20-09 1-23-09 2-26-09

SHEET 31 OF 59

STRUCTURES DESIGN DETAIL SHEET (METRIC) (REV.03-17-04)

FILE => 53-1077rl-i-rwd2.dgn

USERNAME => rtrmirkes1 DATE PLOTTED => 12-JUN-2009 TIME PLOTTED => 09:15

| DIST | COUNTY | ROUTE | KILOMETER POST TOTAL PROJECT | SHEET No | TOTAL SHEETS |
|---|---|---|---|---|---|
| 07 | LA | 5 | 42.8/47.3 | 681 | 1073 |

Andrew Rittenhouse 12-05-08
REGISTERED CIVIL ENGINEER DATE

6-8-09
PLANS APPROVAL DATE

REGISTERED PROFESSIONAL ENGINEER Andrew P. Rittenhouse No. 61006 Exp. 12-31-10 CIVIL STATE OF CALIFORNIA

The State of California or its officers or agents shall not be responsible for the accuracy or completeness of electronic copies of this plan sheet.

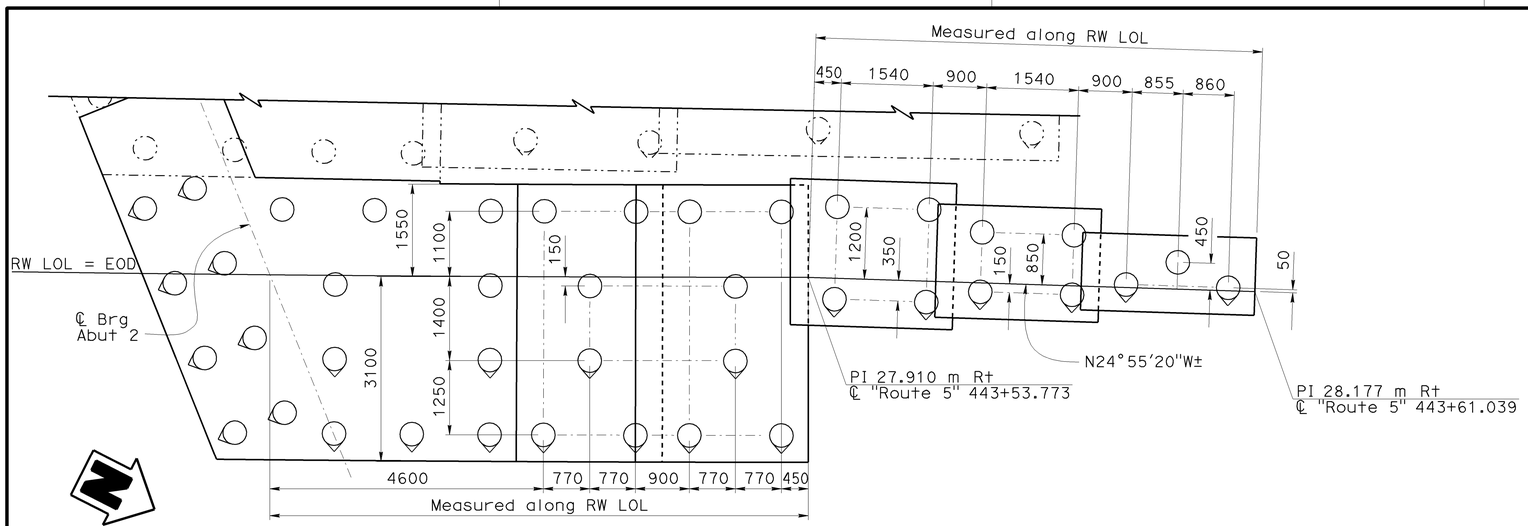


## PLAN

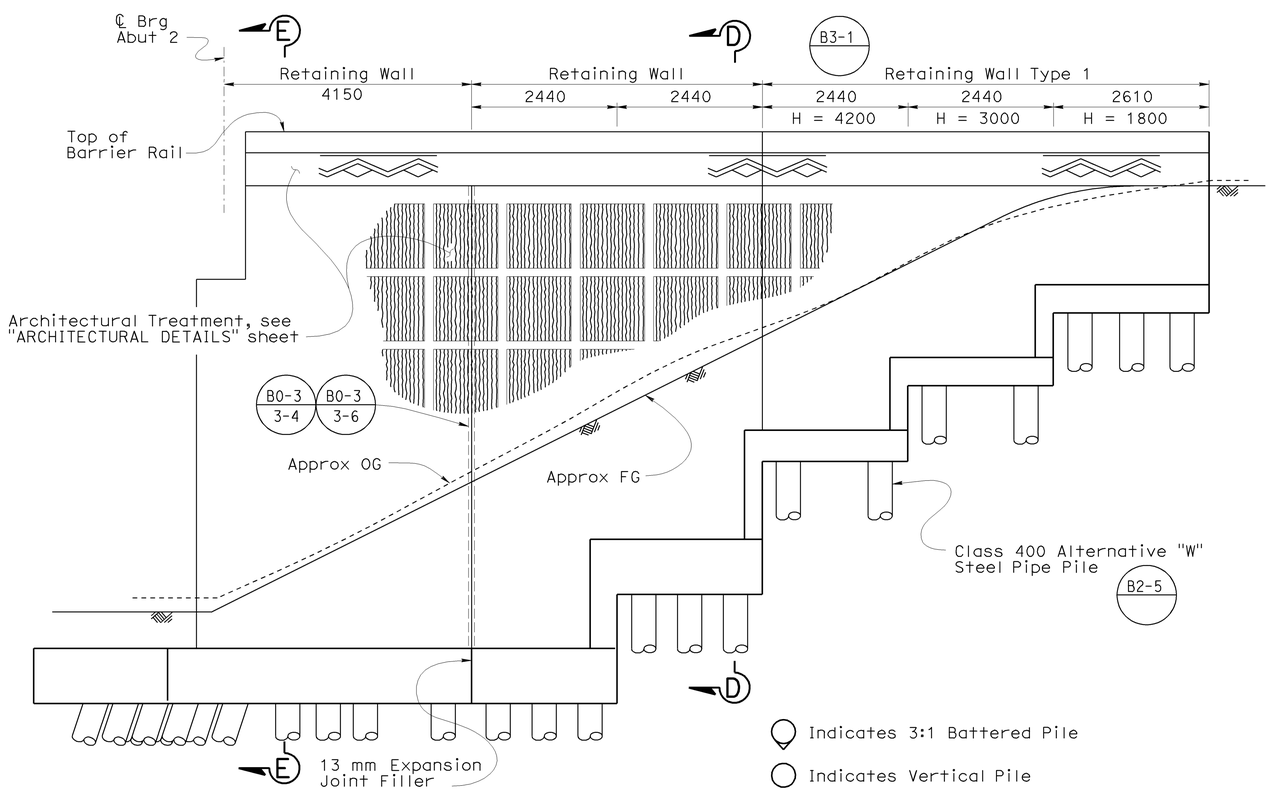


## ELEVATION

## ABUTMENT 2 RETAINING WALL (RIGHT WIDEN)

B3-8

1:50

NOTE:
THE CONTRACTOR SHALL VERIFY ALL CONTROLLING FIELD DIMENSIONS BEFORE ORDERING OR FABRICATING ANY MATERIAL.

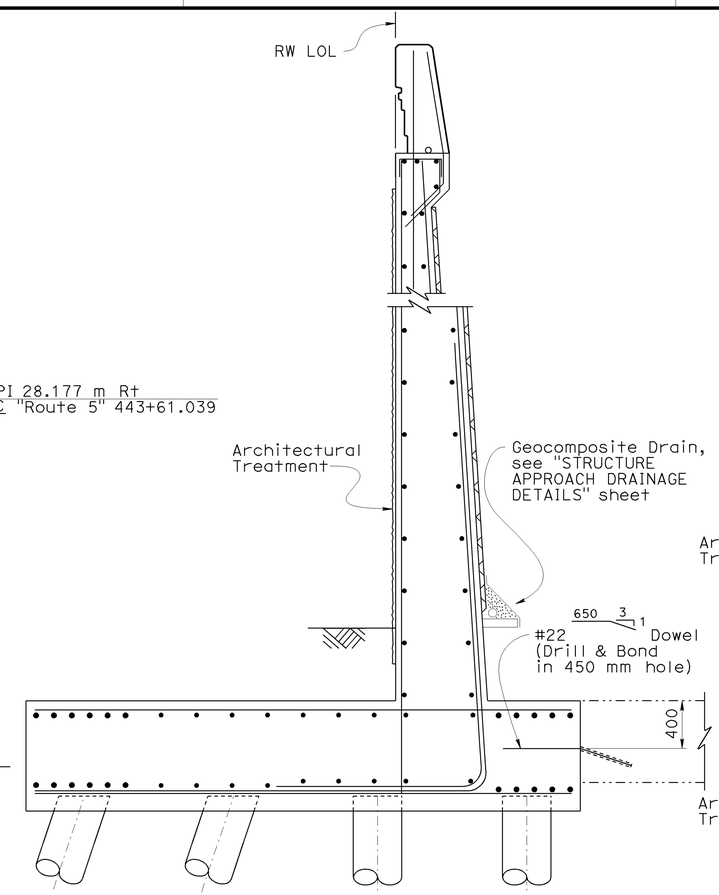


Notes:

For details and dimensions not noted see "Section D-D"

For Pile sapcing see "ABUTMENT DETAILS NO. 5" sheet.

For dowel spacing see "ABUTMENT DETAILS NO. 6" sheet.

## SECTION E-E

1:25

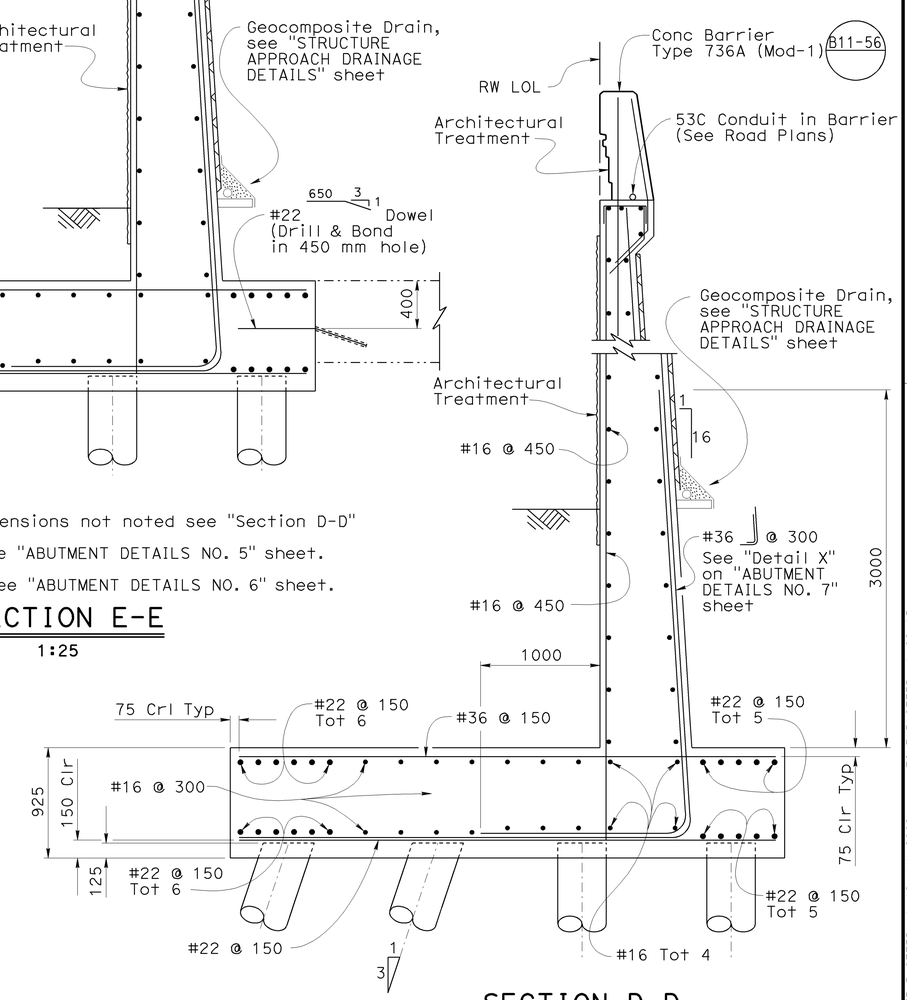


## SECTION D-D

1:25

| | | | |
|---|---|---|---|
| DESIGN | BY Hogni Setberg | CHECKED Gabriel Galo | |
| DETAILS | BY Herman Mauroschadt | CHECKED Gabriel Galo | |
| QUANTITIES | BY Gabriel Galo | CHECKED Herman Mauroschadt | |

STATE OF CALIFORNIA
DEPARTMENT OF TRANSPORTATION

DIVISION OF ENGINEERING SERVICES
STRUCTURE DESIGN
DESIGN BRANCH 15

BRIDGE NO. 53-1077
KILOMETER POST 44.32

# SONORA AVENUE UC WIDEN & RETROFIT
# RETAINING WALL DETAILS NO. 3

ALL DIMENSIONS ARE IN MILLIMETERS UNLESS OTHERWISE SHOWN

ORIGINAL SCALE IN MILLIMETERS FOR REDUCED PLANS 0 10 20 30 40 50 60 70 80 90 100

CU 07
EA 121841

DISREGARD PRINTS BEARING EARLIER REVISION DATES

REVISION DATES: 01-12-09 2-25-09 3-4-09 2-2-08 3-3-08 10-08 11-10-08 11-14-08 1-2-09

SHEET 32 OF 59

FILE => 53-1077rl-i-rwd3.dgn

STRUCTURES DESIGN DETAIL SHEET (METRIC) (REV.03-17-04)

USERNAME => trmikesl DATE PLOTTED => 12-JUN-2009 TIME PLOTTED => 09:15

| DIST | COUNTY | ROUTE | KILOMETER POST TOTAL PROJECT | SHEET No | TOTAL SHEETS |
|---|---|---|---|---|---|
| 07 | LA | 5 | 42.8/47.3 | 682 | 1073 |

Andrew Rittenhouse 12-05-08
REGISTERED CIVIL ENGINEER DATE

6-8-09
PLANS APPROVAL DATE

REGISTERED PROFESSIONAL ENGINEER Andrew P. Rittenhouse No. 61006 Exp. 12-31-10 CIVIL STATE OF CALIFORNIA

The State of California or its officers or agents shall not be responsible for the accuracy or completeness of electronic copies of this plan sheet.

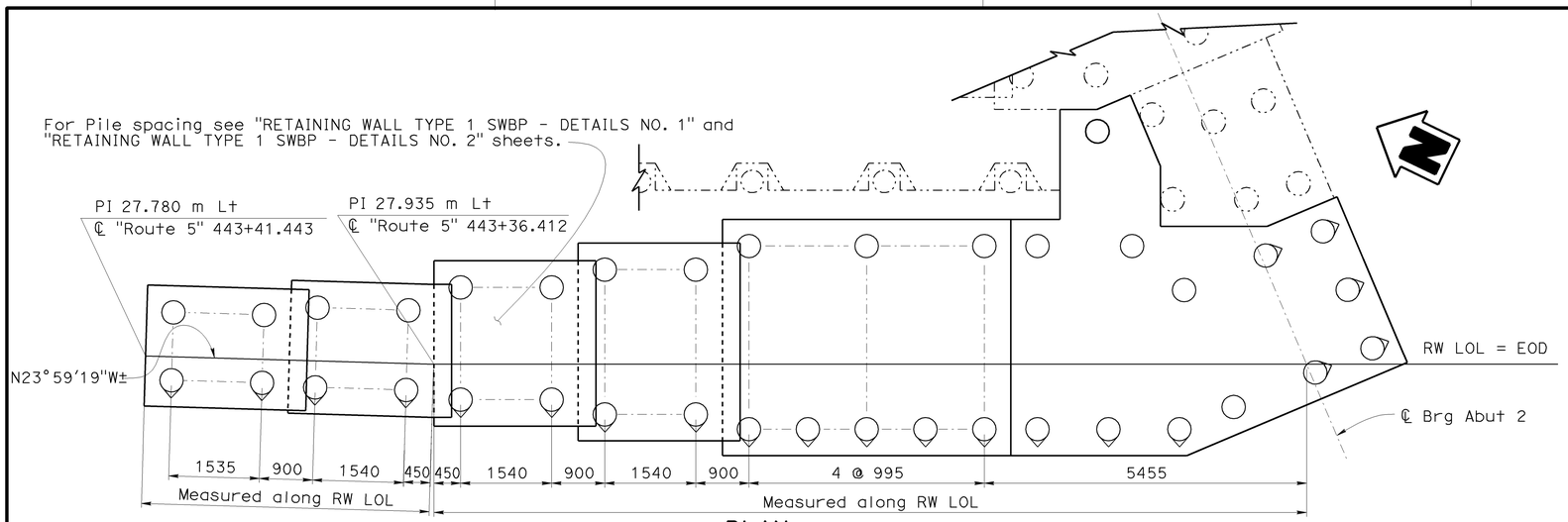


PLAN

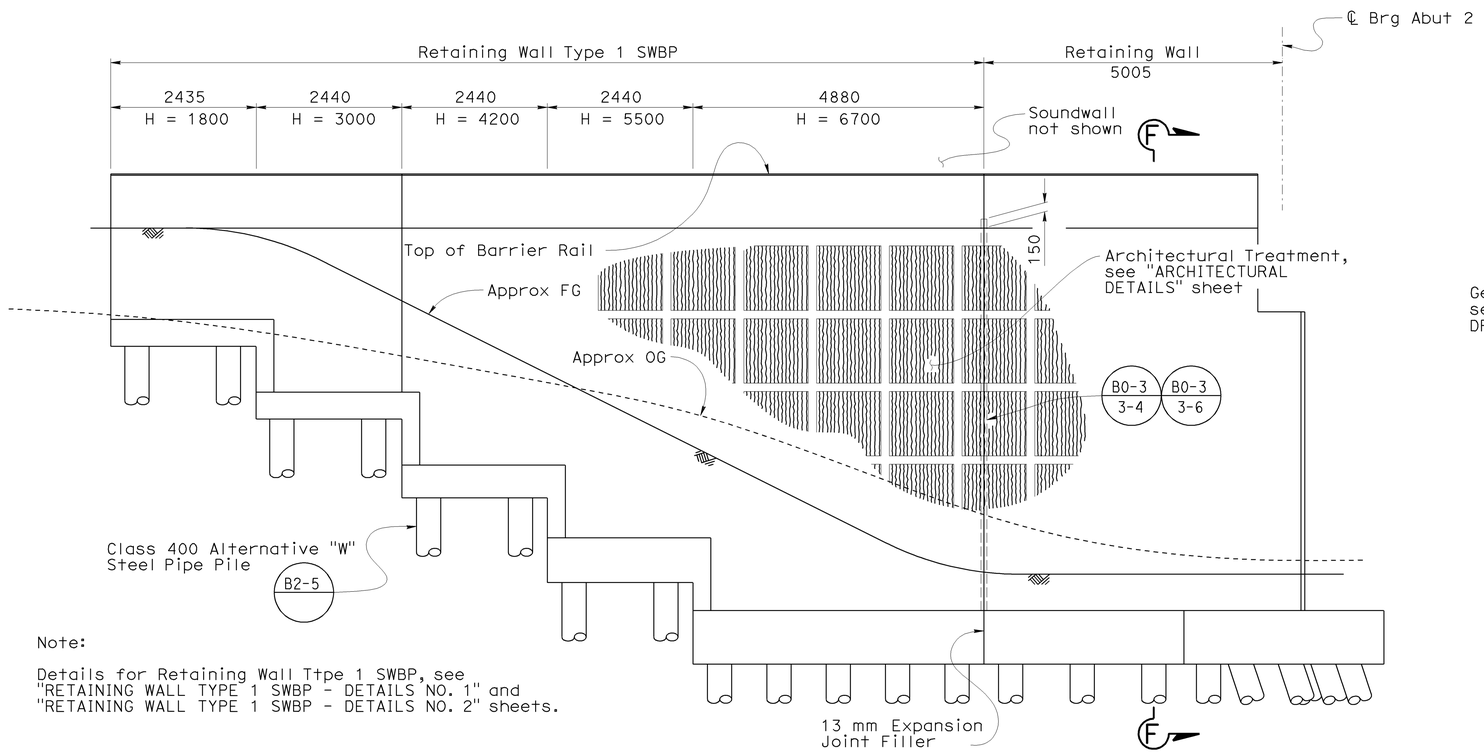


Note:

Details for Retaining Wall Ttpe 1 SWBP, see "RETAINING WALL TYPE 1 SWBP - DETAILS NO. 1" and "RETAINING WALL TYPE 1 SWBP - DETAILS NO. 2" sheets.

ELEVATION

ABUTMENT 2 RETAINING WALL (LEFT WIDEN) B3-8

1:50

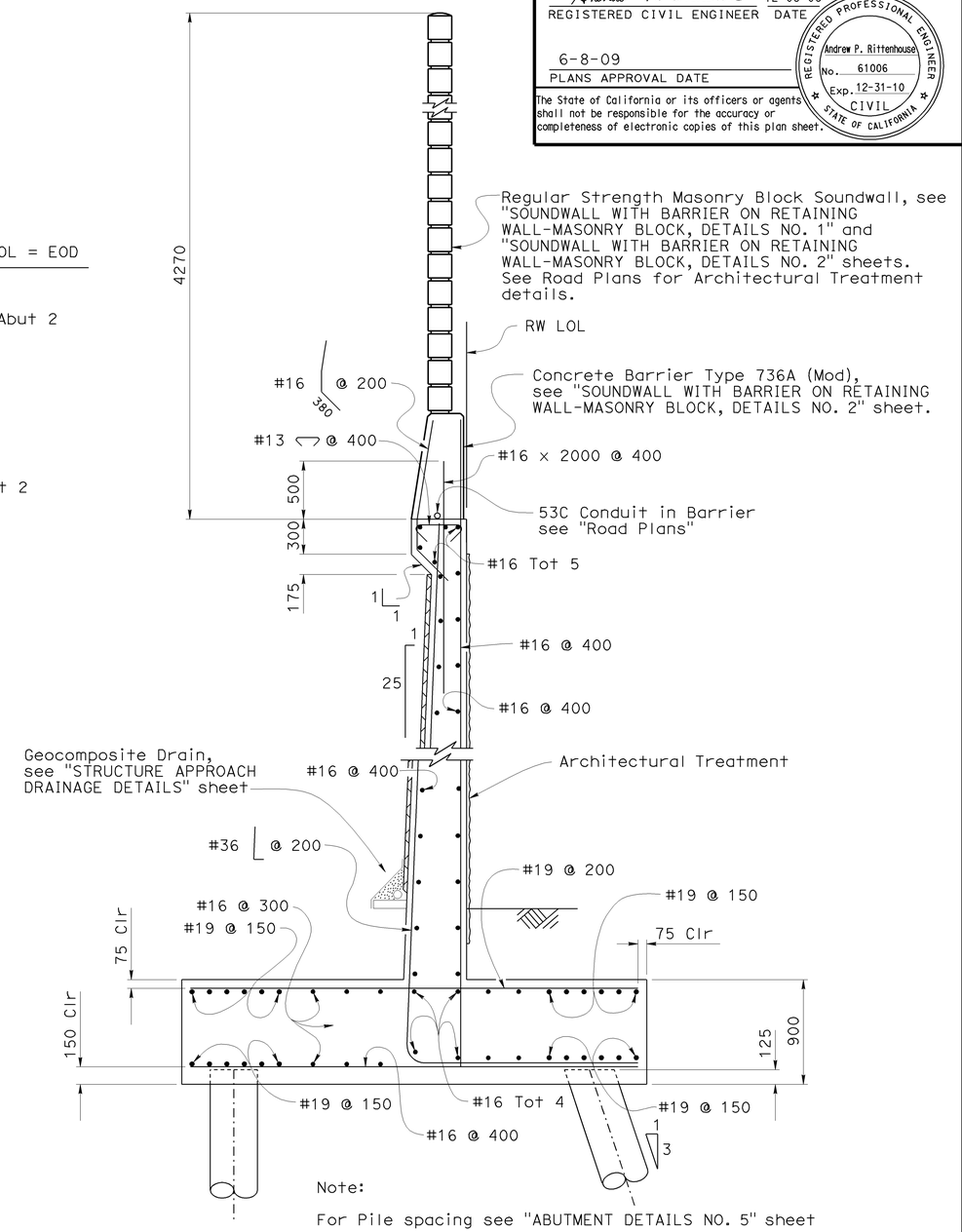


Note:

For Pile spacing see "ABUTMENT DETAILS NO. 5" sheet

SECTION F-F

1:25

NOTE:
THE CONTRACTOR SHALL VERIFY ALL CONTROLLING FIELD DIMENSIONS BEFORE ORDERING OR FABRICATING ANY MATERIAL.

Indicates 3:1 Battered Pile

Indicates Vertical Pile

| | | | |
|---|---|---|---|
| DESIGN | BY Hogni Setberg | CHECKED Gabriel Galo | |
| DETAILS | BY Herman Mauroschadt | CHECKED Gabriel Galo | |
| QUANTITIES | BY Gabriel Galo | CHECKED Herman Mauroschadt | |

STATE OF CALIFORNIA
DEPARTMENT OF TRANSPORTATION

DIVISION OF ENGINEERING SERVICES
STRUCTURE DESIGN
DESIGN BRANCH 15

BRIDGE NO. 53-1077
KILOMETER POST 44.32

SONORA AVENUE UC WIDEN & RETROFIT
RETAINING WALL DETAILS NO. 4

Caltrans Metric

ALL DIMENSIONS ARE IN MILLIMETERS UNLESS OTHERWISE SHOWN

ORIGINAL SCALE IN MILLIMETERS FOR REDUCED PLANS 0 10 20 30 40 50 60 70 80 90 100

CU 07
EA 121841

DISREGARD PRINTS BEARING EARLIER REVISION DATES

REVISION DATES 12-12-07 2-5-08 8-11-08 10-2-08 11-14-08 4-13-09 1-15-09 1-26-09 3-4-09

SHEET 33 OF 59

FILE => 53-1077rl-i-rwd4.dgn

STRUCTURES DESIGN DETAIL SHEET (METRIC) (REV.03-17-04)

USERNAME => trmikesl DATE PLOTTED => 12-JUN-2009 TIME PLOTTED => 09:16

| DIST | COUNTY | ROUTE | KILOMETER POST TOTAL PROJECT | SHEET No | TOTAL SHEETS |
|---|---|---|---|---|---|
| 07 | LA | 5 | 42.8/47.3 | 683 | 1073 |

Andrew Rittenhouse 12-05-08
REGISTERED CIVIL ENGINEER DATE

6-8-09
PLANS APPROVAL DATE

REGISTERED PROFESSIONAL ENGINEER Andrew P. Rittenhouse No. 61006 Exp. 12-31-10 CIVIL STATE OF CALIFORNIA

The State of California or its officers or agents shall not be responsible for the accuracy or completeness of electronic copies of this plan sheet.

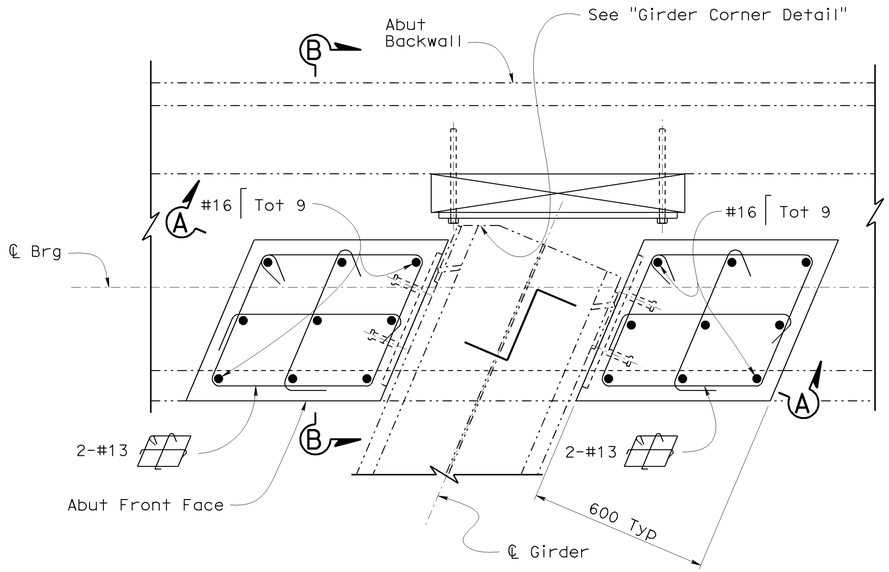


## PLAN-SHEAR KEYS (EXISTING ABUTS)

1:10

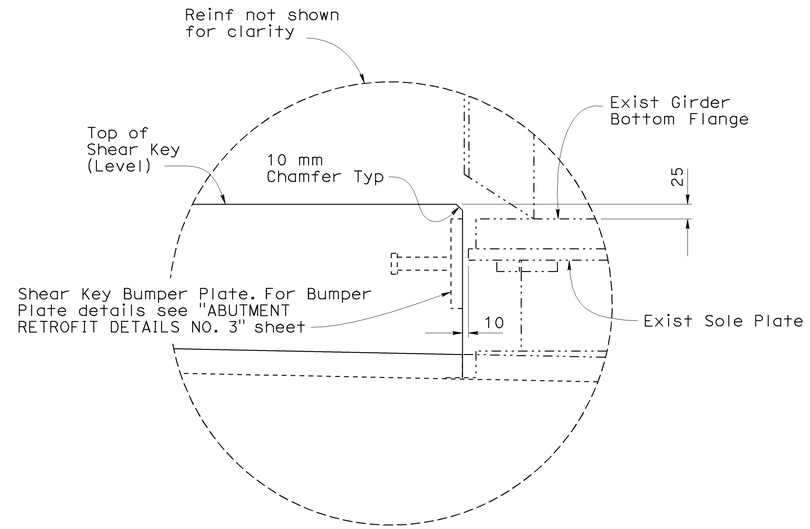


Note: Typical bearing, shear key, and shear key bumper plate shown.

## DETAIL A

1:5

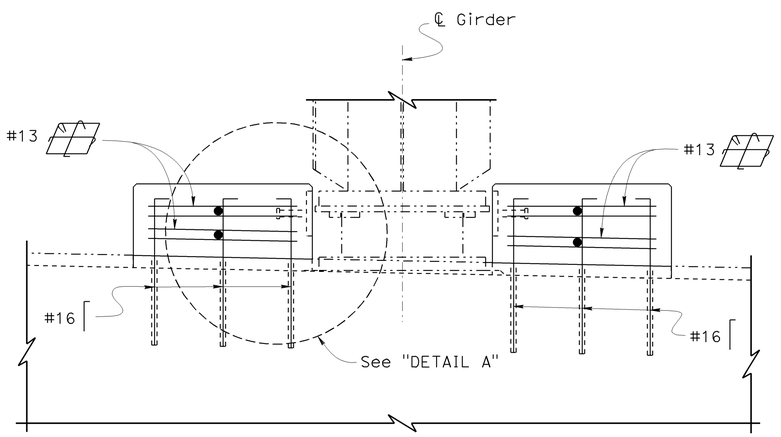


Note: Typical bearing and shear keys shown.

## SECTION A-A

1:10

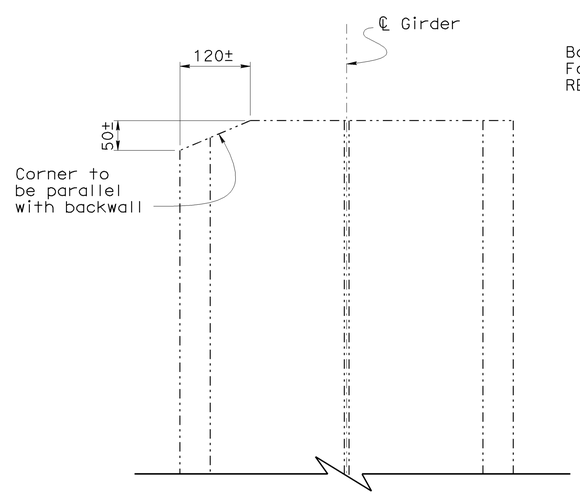


## GIRDER CORNER DETAIL

1:5

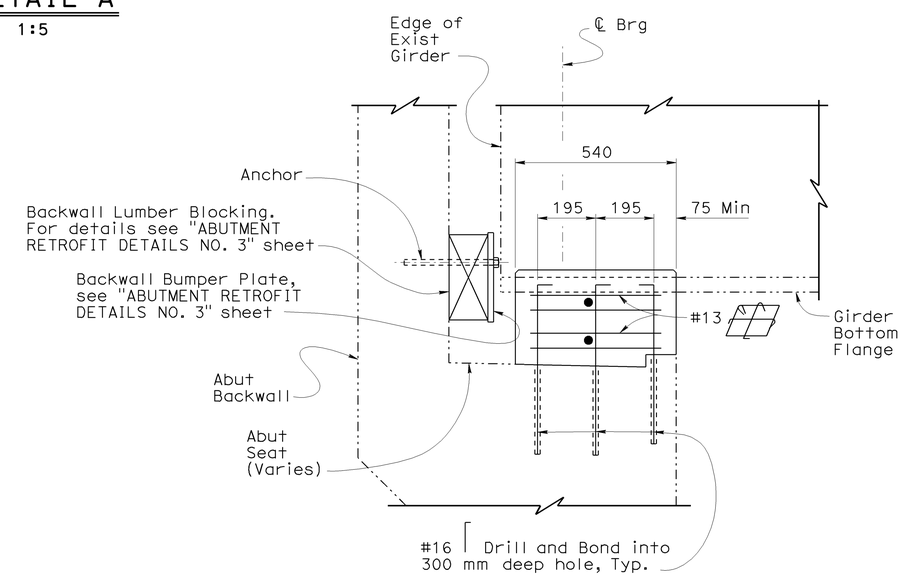


## SECTION B-B

1:10

NOTE:
THE CONTRACTOR SHALL VERIFY ALL CONTROLLING FIELD DIMENSIONS BEFORE ORDERING OR FABRICATING ANY MATERIAL.

Caltrans Metric

ALL DIMENSIONS ARE IN MILLIMETERS UNLESS OTHERWISE SHOWN

ORIGINAL SCALE IN MILLIMETERS FOR REDUCED PLANS 0 10 20 30 40 50 60 70 80 90 100

| | BY | CHECKED |
|---|---|---|
| DESIGN | Hogni Setberg | Gabriel Galo |
| DETAILS | Herman Mauroschadt | Gabriel Galo |
| QUANTITIES | Gabriel Galo | Herman Mauroschadt |

STATE OF CALIFORNIA
DEPARTMENT OF TRANSPORTATION

DIVISION OF ENGINEERING SERVICES
STRUCTURE DESIGN
DESIGN BRANCH 15

CU 07
EA 121841

BRIDGE NO. 53-1077
KILOMETER POST 44.32

# SONORA AVENUE UC WIDEN & RETROFIT
# ABUTMENT RETROFIT DETAILS NO. 1

DISREGARD PRINTS BEARING EARLIER REVISION DATES

REVISION DATES: 3-23-07 | 2-1-08 | 10-17-08 | 11-7-08 | 1-14-09 | 1-16-09 | 1-29-09 | 2-25-09

SHEET 34 OF 59

FILE => 53-1077rl-j-a1.dgn

STRUCTURES DESIGN DETAIL SHEET (METRIC) (REV.03-17-04)

USERNAME => trmikest DATE PLOTTED => 12-JUN-2009 TIME PLOTTED => 09:16

| DIST | COUNTY | ROUTE | KILOMETER POST TOTAL PROJECT | SHEET No | TOTAL SHEETS |
|---|---|---|---|---|---|
| 07 | LA | 5 | 42.8/47.3 | 684 | 1073 |

Andrew Rittenhouse 12-05-08
REGISTERED CIVIL ENGINEER DATE

6-8-09
PLANS APPROVAL DATE

The State of California or its officers or agents shall not be responsible for the accuracy or completeness of electronic copies of this plan sheet.

REGISTERED PROFESSIONAL ENGINEER
Andrew P. Rittenhouse
No. 61006
Exp. 12-31-10
CIVIL
STATE OF CALIFORNIA

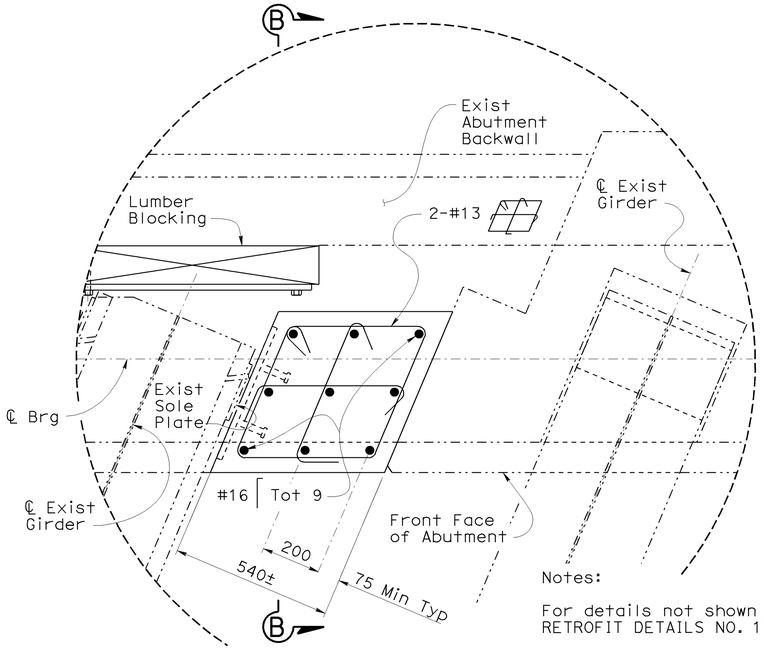


Notes:

For details not shown see "ABUTMENT RETROFIT DETAILS NO. 1" sheet.

For "Section B-B" see "ABUTMENT RETROFIT DETAILS NO. 1" sheet.

## DETAIL I
## (ABUTMENT 1)
1:10

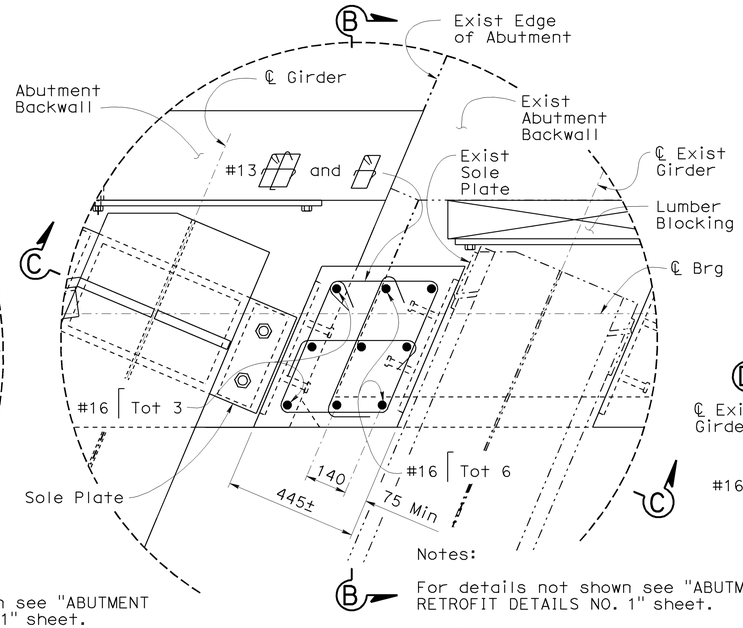


Notes:

For details not shown see "ABUTMENT RETROFIT DETAILS NO. 1" sheet.

For "Section B-B" see "ABUTMENT RETROFIT DETAILS NO. 1" sheet.

## DETAIL J
## (ABUTMENT 1)
1:10

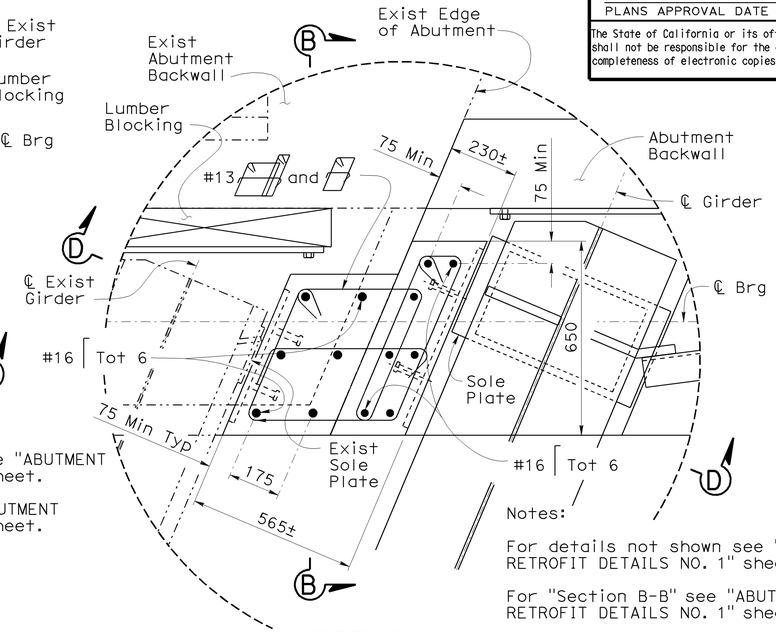


Notes:

For details not shown see "ABUTMENT RETROFIT DETAILS NO. 1" sheet.

For "Section B-B" see "ABUTMENT RETROFIT DETAILS NO. 1" sheet.

## DETAIL L
## (ABUTMENT 2)
1:10

Notes:

For location of "Detail I" and "Detail J" see "ABUTMENT 1 LAYOUT" sheet.

For location of "Detail K" and "Detail L" see "ABUTMENT 2 LAYOUT" sheet.

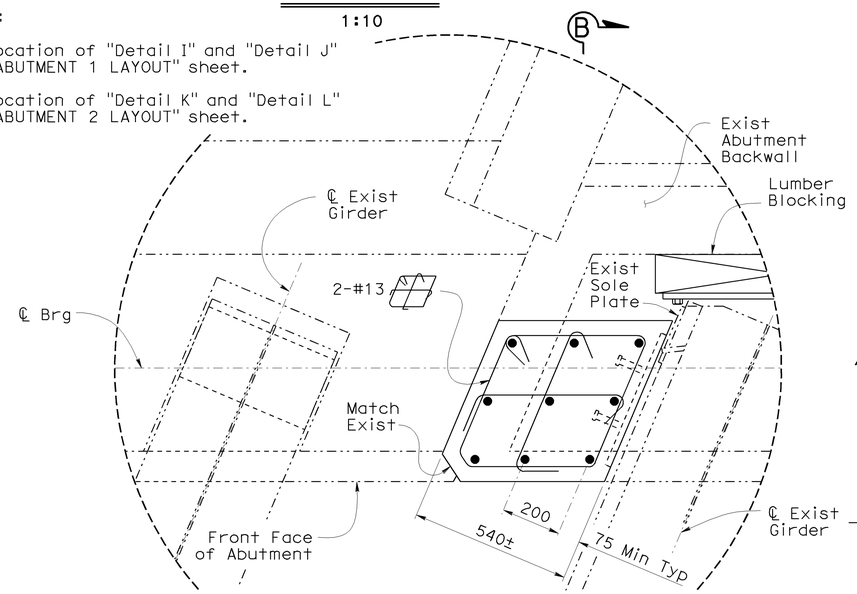


Notes:

For details not shown see "ABUTMENT RETROFIT DETAILS NO. 1" sheet.

For "SECTION B-B" see "ABUTMENT RETROFIT DETAILS NO. 1" sheet.

## DETAIL K
## (ABUTMENT 2)
1:10

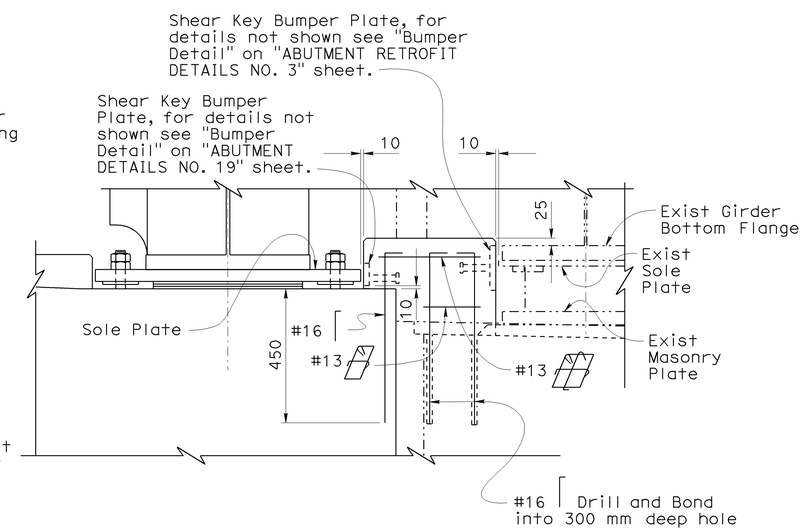


## SECTION C-C
1:10

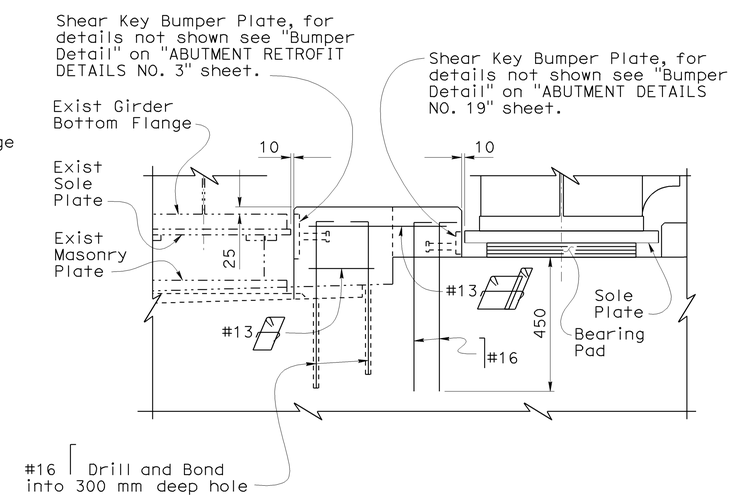


## SECTION D-D
1:10

NOTE:
THE CONTRACTOR SHALL VERIFY ALL CONTROLLING FIELD DIMENSIONS BEFORE ORDERING OR FABRICATING ANY MATERIAL.

Caltrans Metric

| | BY | CHECKED |
|---|---|---|
| DESIGN | Hogni Setberg | Gabriel Galo |
| DETAILS | Herman Mauroschadt | Gabriel Galo |
| QUANTITIES | Gabriel Galo | Herman Mauroschadt |

STATE OF CALIFORNIA
DEPARTMENT OF TRANSPORTATION

DIVISION OF ENGINEERING SERVICES
STRUCTURE DESIGN
DESIGN BRANCH 15

BRIDGE NO. 53-1077
KILOMETER POST 44.32

SONORA AVENUE UC WIDEN & RETROFIT
ABUTMENT RETROFIT DETAILS NO. 2

ALL DIMENSIONS ARE IN MILLIMETERS UNLESS OTHERWISE SHOWN

ORIGINAL SCALE IN MILLIMETERS FOR REDUCED PLANS 0 10 20 30 40 50 60 70 80 90 100

CU 07
EA 121841

DISREGARD PRINTS BEARING EARLIER REVISION DATES

REVISION DATES: 8-22-07 2-25-08 11-14-08 1-15-09 2-25-09

SHEET 35 OF 59

FILE => 53-1077r1-j-a2.dgn

STRUCTURES DESIGN DETAIL SHEET (METRIC) (REV.03-17-04)

USERNAME => trmikesl DATE PLOTTED => 12-JUN-2009 TIME PLOTTED => 09:16

| DIST | COUNTY | ROUTE | KILOMETER POST TOTAL PROJECT | SHEET No | TOTAL SHEETS |
|---|---|---|---|---|---|
| 07 | LA | 5 | 42.8/47.3 | 685 | 1073 |

Andrew Rittenhouse 12-05-08
REGISTERED CIVIL ENGINEER DATE

6-8-09
PLANS APPROVAL DATE

REGISTERED PROFESSIONAL ENGINEER Andrew P. Rittenhouse No. 61006 Exp. 12-31-10 CIVIL STATE OF CALIFORNIA

The State of California or its officers or agents shall not be responsible for the accuracy or completeness of electronic copies of this plan sheet.

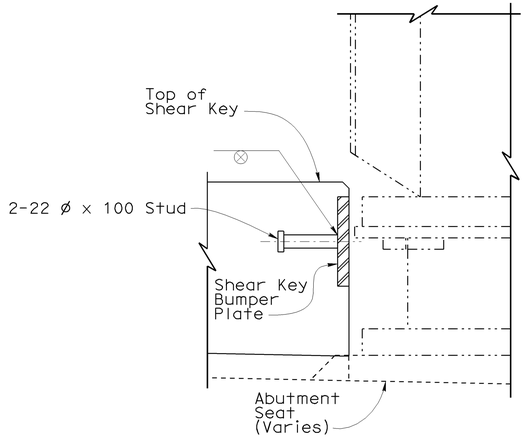


SECTION E-E

| Table A<br>Dimension "a" | | | |
|---|---|---|---|
| Abutment | Winter | Fall-Spring | Summer |
| Abut 1 | 20 | 20 | 13 |
| Abut 2 | 25 | 20 | 13 |

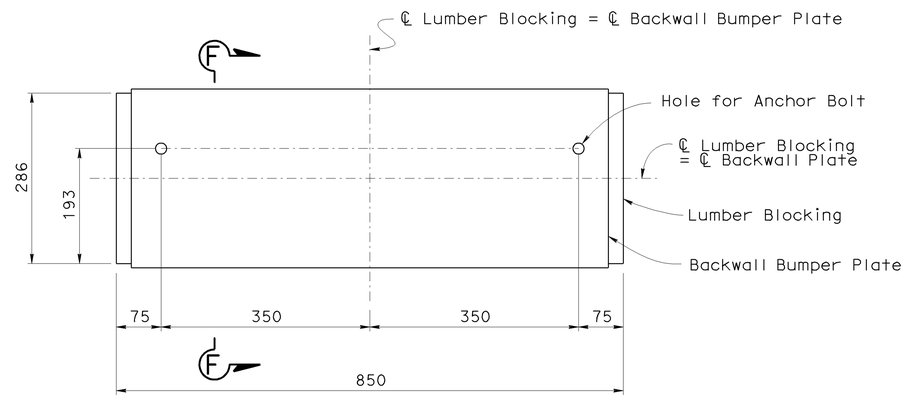


BACKWALL LUMBER BLOCKING

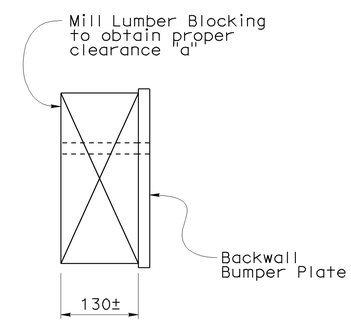


SECTION F-F

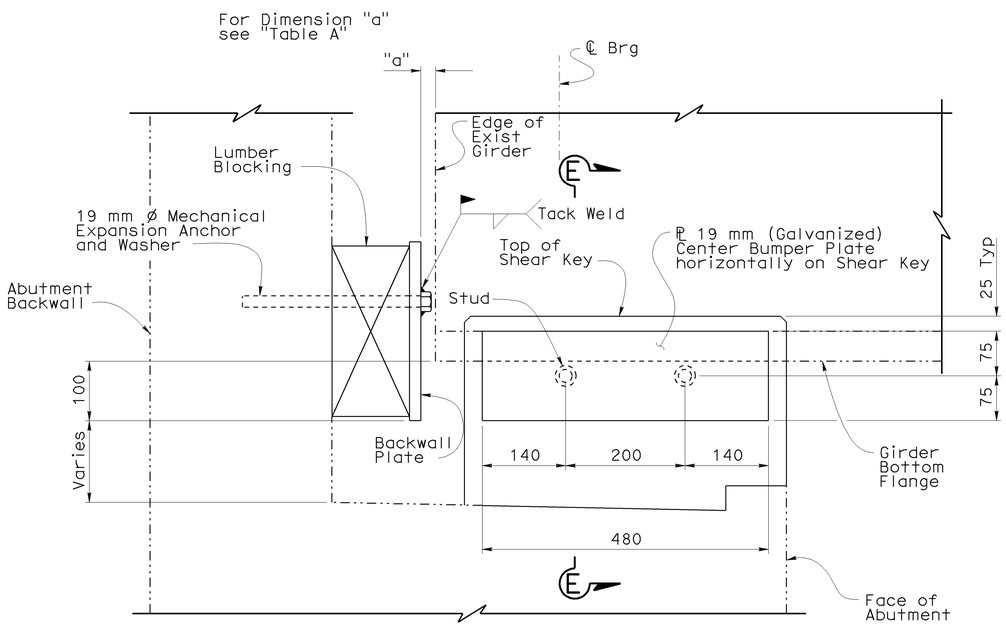


Note: Typical Bumper Detail shown

ELEVATION

BUMPER DETAIL

1:5

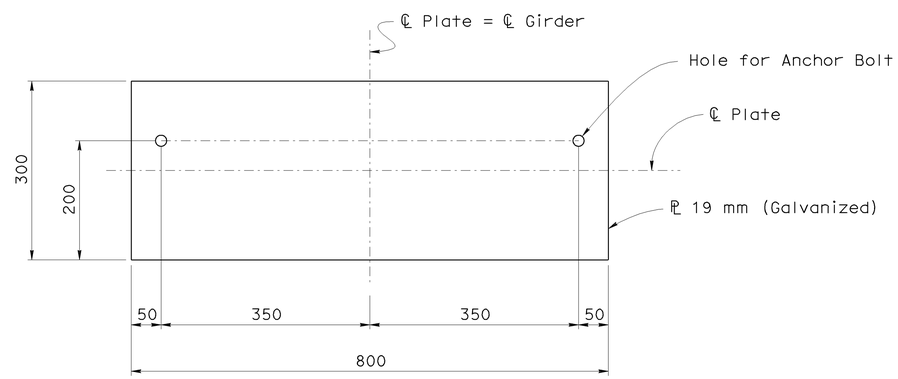


BACKWALL BUMPER PLATE

BACKWALL DETAIL

1:5

NOTE:
THE CONTRACTOR SHALL VERIFY ALL CONTROLLING FIELD DIMENSIONS BEFORE ORDERING OR FABRICATING ANY MATERIAL.

Caltrans Metric

| | BY | CHECKED |
|---|---|---|
| DESIGN | Hogni Setberg | Gabriel Galo |
| DETAILS | Herman Mauroschadt | Gabriel Galo |
| QUANTITIES | Gabriel Galo | Herman Mauroschadt |

STATE OF CALIFORNIA DEPARTMENT OF TRANSPORTATION

DIVISION OF ENGINEERING SERVICES STRUCTURE DESIGN
DESIGN BRANCH 15

BRIDGE NO. 53-1077
KILOMETER POST 44.32

SONORA AVENUE UC WIDEN & RETROFIT
ABUTMENT RETROFIT DETAILS NO. 3

ALL DIMENSIONS ARE IN MILLIMETERS UNLESS OTHERWISE SHOWN

ORIGINAL SCALE IN MILLIMETERS FOR REDUCED PLANS 0 10 20 30 40 50 60 70 80 90 100

CU 07
EA 121841

DISREGARD PRINTS BEARING EARLIER REVISION DATES

REVISION DATES: 2-1-08 4-4-08 7-1-08 10-20-08 11-14-08 1-15-09 1-15-09 2-13-09 2-25-09

SHEET 36 OF 59

FILE => 53-1077r1-j-a3.dgn

STRUCTURES DESIGN DETAIL SHEET (METRIC) (REV.03-17-04)

USERNAME => trmikest DATE PLOTTED => 12-JUN-2009 TIME PLOTTED => 09:16

| DIST | COUNTY | ROUTE | KILOMETER POST TOTAL PROJECT | SHEET No | TOTAL SHEETS |
|---|---|---|---|---|---|
| 07 | LA | 5 | 42.8/47.3 | 686 | 1073 |

Andrew Rittenhouse 12-05-08
REGISTERED CIVIL ENGINEER DATE

6-8-09
PLANS APPROVAL DATE

REGISTERED PROFESSIONAL ENGINEER
Andrew P. Rittenhouse
No. 61006
Exp. 12-31-10
CIVIL
STATE OF CALIFORNIA

The State of California or its officers or agents shall not be responsible for the accuracy or completeness of electronic copies of this plan sheet.

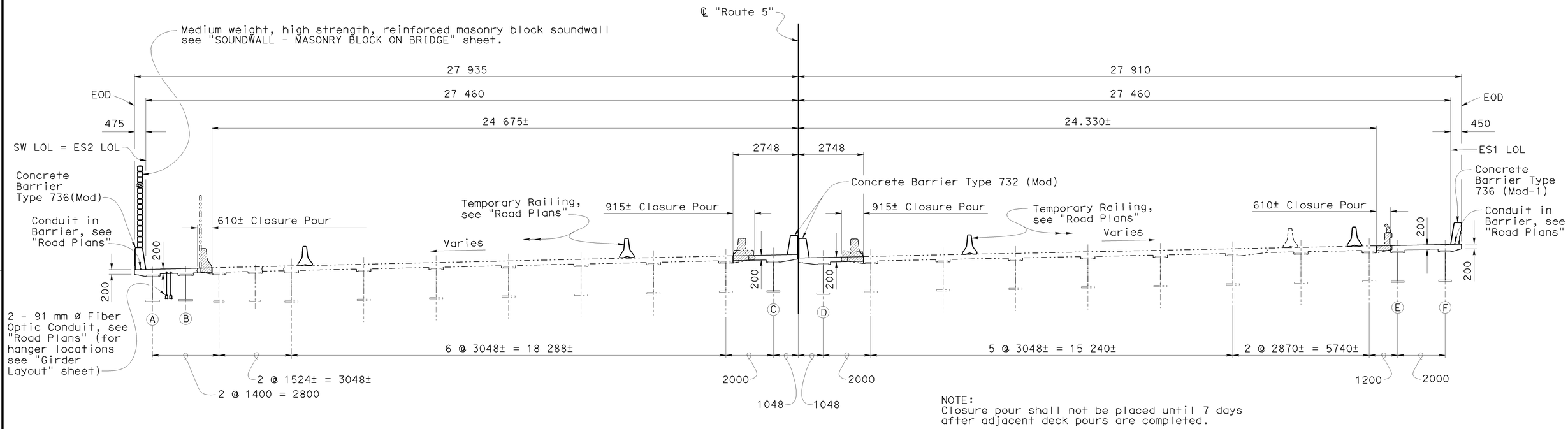


NOTE:
Closure pour shall not be placed until 7 days after adjacent deck pours are completed.

## TYPICAL SECTION
1:80

| | | | |
|---|---|---|---|
| DESIGN | BY Hogni Setberg | CHECKED Gabriel Galo | |
| DETAILS | BY D.Kubochi/H.Mauroschadt | CHECKED Gabriel Galo | |
| QUANTITIES | BY Gabriel Galo | CHECKED Herman Mauroschadt | |

STATE OF CALIFORNIA
DEPARTMENT OF TRANSPORTATION

DIVISION OF ENGINEERING SERVICES
STRUCTURE DESIGN
DESIGN BRANCH 15

BRIDGE NO. 53-1077
KILOMETER POST 44.32

# SONORA AVENUE UC WIDEN & RETROFIT
# TYPICAL SECTION NO. 1

Caltrans Metric

ALL DIMENSIONS ARE IN MILLIMETERS UNLESS OTHERWISE SHOWN

ORIGINAL SCALE IN MILLIMETERS FOR REDUCED PLANS 0 10 20 30 40 50 60 70 80 90 100

CU 07
EA 121841

DISREGARD PRINTS BEARING EARLIER REVISION DATES

REVISION DATES: 2-2-09 3-30-09 2-12-08 11-14-08 11-21-08 12-12-08 1-15-09 1-15-09 1-22-09

SHEET 37 OF 59

FILE => 53-1077ri-m-ts1.dgn

STRUCTURES DESIGN DETAIL SHEET (METRIC) (REV.03-17-04)

USERNAME => rrmikesl DATE PLOTTED => 12-JUN-2009 TIME PLOTTED => 09:16

| DIST | COUNTY | ROUTE | KILOMETER POST TOTAL PROJECT | SHEET No | TOTAL SHEETS |
|---|---|---|---|---|---|
| 07 | LA | 5 | 42.8/47.3 | 687 | 1073 |

Andrew Rittenhouse 12-05-08
REGISTERED CIVIL ENGINEER DATE

6-8-09
PLANS APPROVAL DATE

REGISTERED PROFESSIONAL ENGINEER Andrew P. Rittenhouse No. 61006 Exp. 12-31-10 CIVIL STATE OF CALIFORNIA

The State of California or its officers or agents shall not be responsible for the accuracy or completeness of electronic copies of this plan sheet.

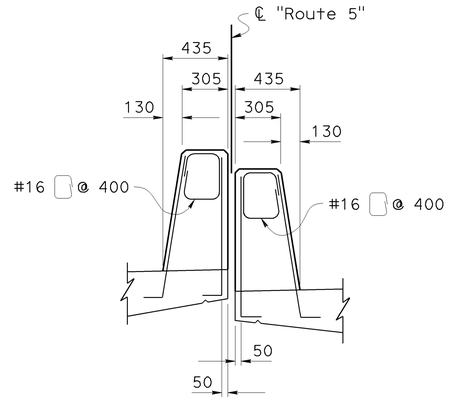


Notes:

For other details not shown, see B11-55

For Barrier transition see "BARRIER TRANSITION DETAILS" sheet.

## CONCRETE BARRIER TYPE 732 (Mod)

1:20

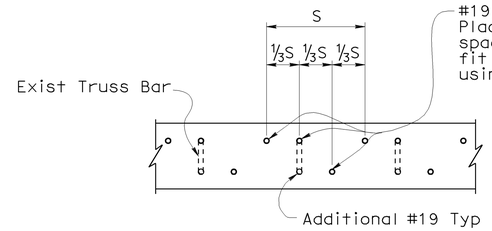


Note:

For other details not shown, see B0-5

## TRANSVERSE DECK REINFORCEMENT SPACING DIAGRAM

1:10

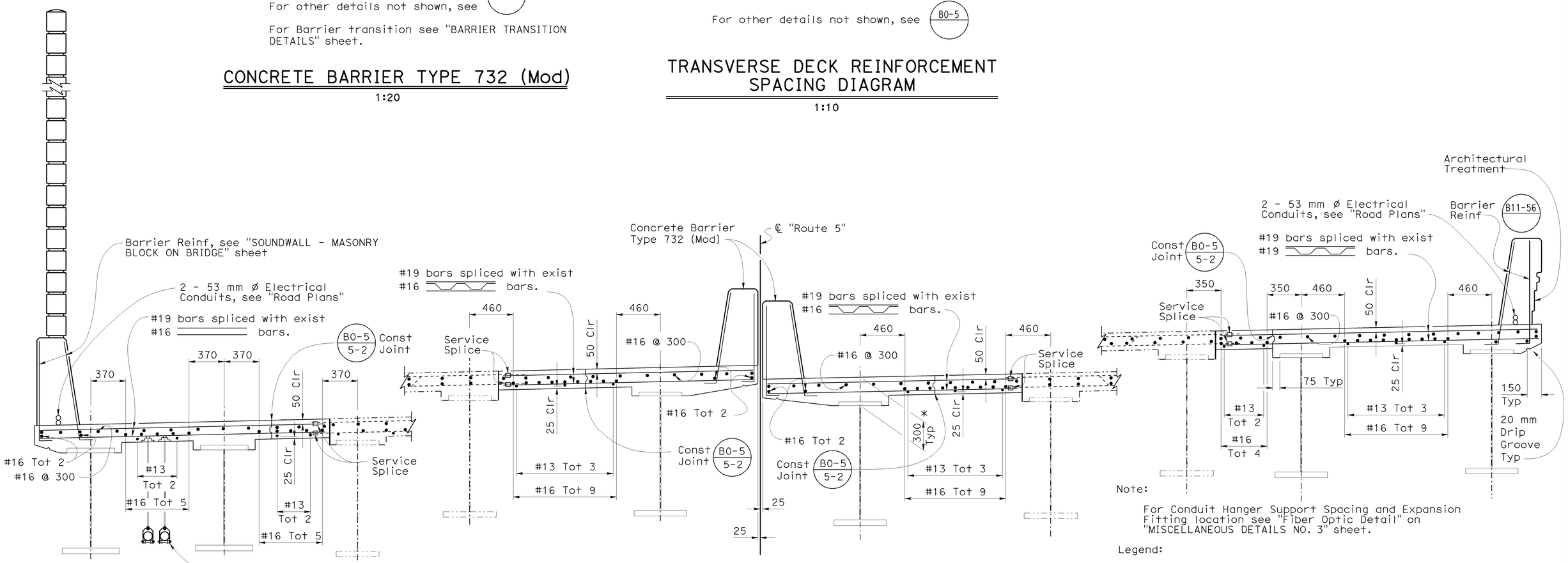


NOTE:
THE CONTRACTOR SHALL VERIFY ALL CONTROLLING FIELD DIMENSIONS BEFORE ORDERING OR FABRICATING ANY MATERIAL.

## PART TYPICAL SECTION

1:20

Note:

For Conduit Hanger Support Spacing and Expansion Fitting location see "Fiber Optic Detail" on "MISCELLANEOUS DETAILS NO. 3" sheet.

Legend:

* Dimension may be varied to match existing deck profile and cross slope. Shear stud embedment must remain within the allowable range, see "Shear Connector Studs" detail on "GIRDER DETAILS NO. 3" sheet.

Caltrans Metric

| | BY | CHECKED |
|---|---|---|
| DESIGN | Hogni Setberg | Gabriel Galo |
| DETAILS | Herman Mauroschadt | Gabriel Galo |
| QUANTITIES | Gabriel Galo | Herman Mauroschadt |

STATE OF CALIFORNIA
DEPARTMENT OF TRANSPORTATION

DIVISION OF ENGINEERING SERVICES
STRUCTURE DESIGN
DESIGN BRANCH 15

BRIDGE NO. 53-1077
KILOMETER POST 44.32

# SONORA AVENUE UC WIDEN & RETROFIT
# TYPICAL SECTION NO. 2

ALL DIMENSIONS ARE IN MILLIMETERS UNLESS OTHERWISE SHOWN

ORIGINAL SCALE IN MILLIMETERS FOR REDUCED PLANS 0 10 20 30 40 50 60 70 80 90 100

CU 07
EA 121841

DISREGARD PRINTS BEARING EARLIER REVISION DATES

REVISION DATES: 11-15-01 2-15-06 11-15-06 11-15-06 12-15-06 1-15-09 1-15-09 1-15-09 3-30-09

SHEET 38 OF 59

FILE => 53-1077r1-m-ts2.dgn

STRUCTURES DESIGN DETAIL SHEET (METRIC) (REV.03-17-04)

USERNAME => trmikesl DATE PLOTTED => 12-JUN-2009 TIME PLOTTED => 09:16

| DIST | COUNTY | ROUTE | KILOMETER POST TOTAL PROJECT | SHEET No | TOTAL SHEETS |
|---|---|---|---|---|---|
| 07 | LA | 5 | 42.8/47.3 | 688 | 1073 |

REGISTERED CIVIL ENGINEER — DATE 12-05-08

6-8-09
PLANS APPROVAL DATE

REGISTERED PROFESSIONAL ENGINEER — Andrew P. Rittenhouse — No. 61006 — Exp. 12-31-10 — CIVIL — STATE OF CALIFORNIA

The State of California or its officers or agents shall not be responsible for the accuracy or completeness of electronic copies of this plan sheet.

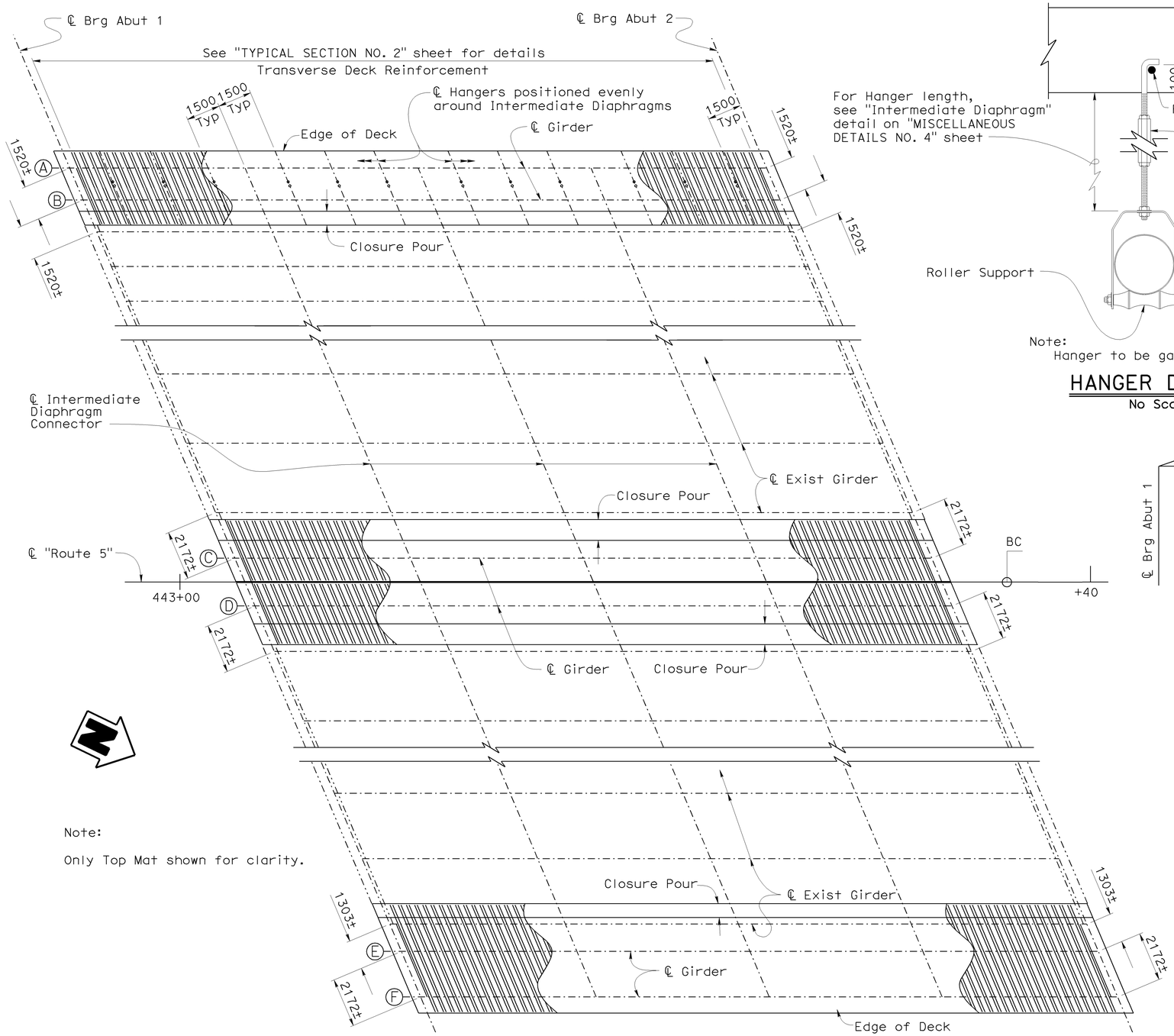


Note:

Only Top Mat shown for clarity.

NOTE:
THE CONTRACTOR SHALL VERIFY ALL CONTROLLING FIELD DIMENSIONS BEFORE ORDERING OR FABRICATING ANY MATERIAL.

## GIRDER LAYOUT

1:100

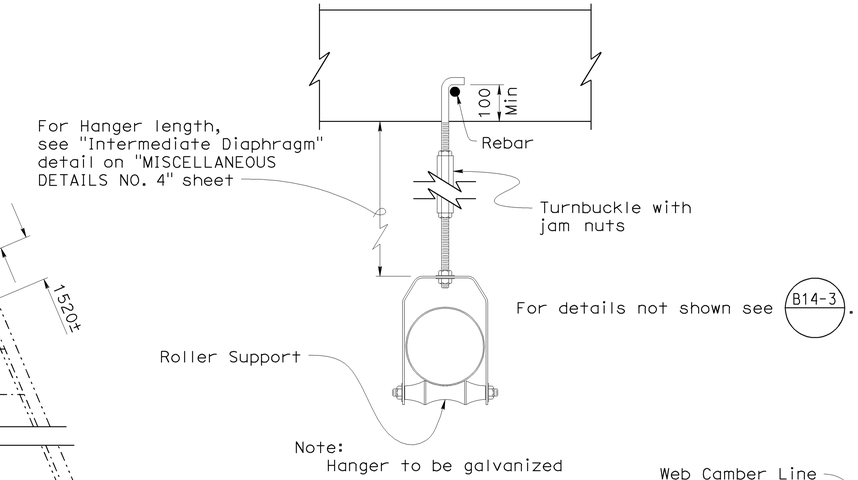


Note:
Hanger to be galvanized

## HANGER DETAIL

No Scale

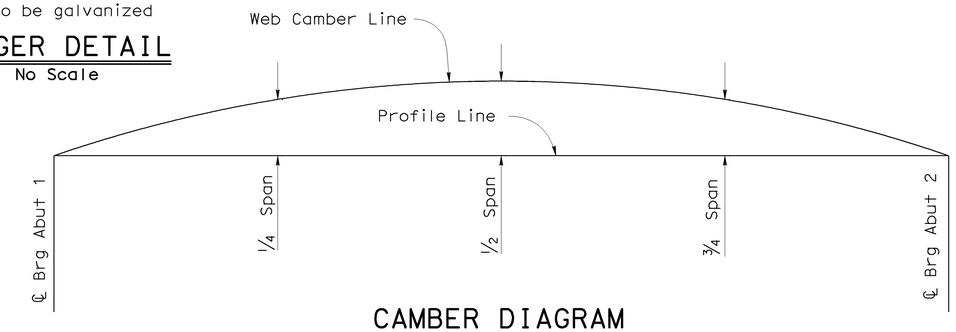


## CAMBER DIAGRAM

No Scale

| Camber Curve Value components in mm | Span | | | | |
|---|---|---|---|---|---|
| | ℄ Brg | 1/4 | 1/2 | 3/4 | ℄ Brg |
| Steel Girder Dead Load (mm) | 0 | 15 | 20 | 15 | 0 |
| Deck Slab Dead Load (mm) | 0 | 26 | 35 | 26 | 0 |
| Added Dead Load (mm) | 0 | 15 | 20 | 15 | 0 |
| Total Camber (mm) | 0 | 56 | 75 | 56 | 0 |

## GIRDERS Ⓐ & Ⓑ

| Camber Curve Value components in mm | Span | | | | |
|---|---|---|---|---|---|
| | ℄ Brg | 1/4 | 1/2 | 3/4 | ℄ Brg |
| Steel Girder Dead Load (mm) | 0 | 13 | 17 | 13 | 0 |
| Deck Slab Dead Load (mm) | 0 | 29 | 40 | 29 | 0 |
| Added Dead Load (mm) | 0 | 8 | 11 | 8 | 0 |
| Total Camber (mm) | 0 | 50 | 68 | 50 | 0 |

## GIRDERS ⒸⒹⒺ & Ⓕ

Note:

In addition to camber values shown, girder fabrication shall account for structure geometry including profile grade, superelevation, and changes in thickness of bottom flange.

Caltrans Metric

ALL DIMENSIONS ARE IN MILLIMETERS UNLESS OTHERWISE SHOWN

ORIGINAL SCALE IN MILLIMETERS FOR REDUCED PLANS 0 10 20 30 40 50 60 70 80 90 100

| | BY | CHECKED |
|---|---|---|
| DESIGN | Hogni Setberg | Gabriel Galo |
| DETAILS | Herman Mauroschadt | Gabriel Galo |
| QUANTITIES | Gabriel Galo | Herman Mauroschadt |

STATE OF CALIFORNIA
DEPARTMENT OF TRANSPORTATION

DIVISION OF ENGINEERING SERVICES
STRUCTURE DESIGN
DESIGN BRANCH 15

CU 07
EA 121841

BRIDGE NO. 53-1077
KILOMETER POST 44.32

SONORA AVENUE UC WIDEN & RETROFIT
GIRDER LAYOUT

DISREGARD PRINTS BEARING EARLIER REVISION DATES

REVISION DATES: 2-15-07 2-15-08 11-4-08 11-14-08 12-10-08 11-13-09 3-30-09

SHEET 39 OF 59

STRUCTURES DESIGN DETAIL SHEET (METRIC) (REV.03-17-04)

FILE => 53-1077r1-n-g-lo1.dgn

USERNAME => trmikes1 DATE PLOTTED => 12-JUN-2009 TIME PLOTTED => 09:16

| DIST | COUNTY | ROUTE | KILOMETER POST TOTAL PROJECT | SHEET No | TOTAL SHEETS |
|---|---|---|---|---|---|
| 07 | LA | 5 | 42.8/47.3 | 689 | 1073 |

Andrew Rittenhouse 12-05-08
REGISTERED CIVIL ENGINEER DATE

6-8-09
PLANS APPROVAL DATE

REGISTERED PROFESSIONAL ENGINEER Andrew P. Rittenhouse No. 61006 Exp. 12-31-10 CIVIL STATE OF CALIFORNIA

The State of California or its officers or agents shall not be responsible for the accuracy or completeness of electronic copies of this plan sheet.

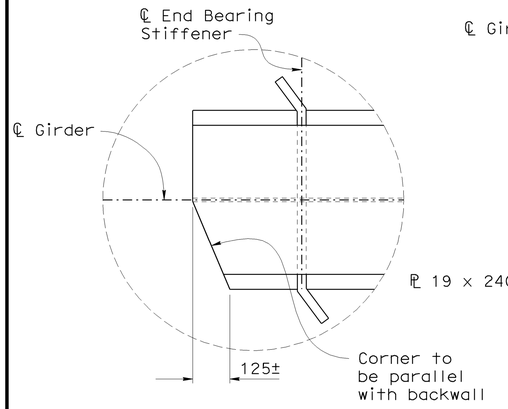


Abut 1 shown, Abut 2 similar.

## DETAIL A
1:10

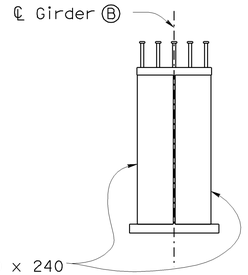


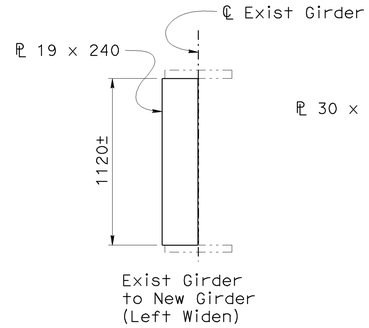


## INTERMEDIATE DIAPHRAGM CONNECTOR
1:20

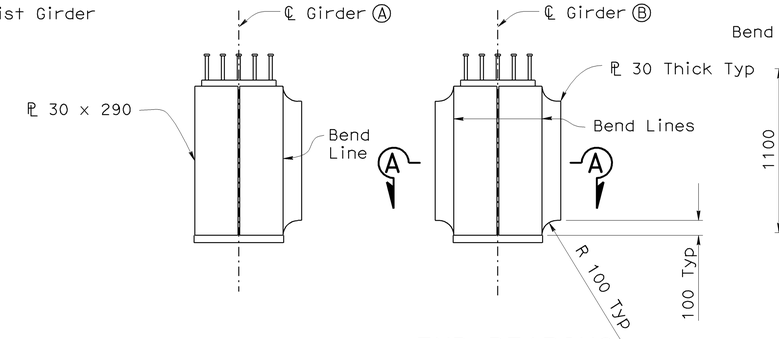


## END BEARING STIFFENER
1:20

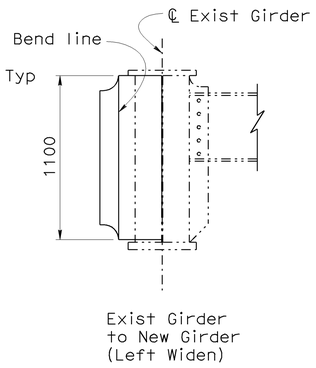


Notes:

1. Primary Components of Main Members are Flanges, Webs, Splice Plates and Cover Plates, Transverse and Longitudinal Stiffeners and Bearing Stiffeners
2. All members not designated as either Fracture Critical Members or Main Members are Secondary Members
3. "T" Denotes Main Tension Member (Non-Fracture Critical Member)
4. "C" Denotes Main Compression Member
5. "T" zone shown extends from Bottom Flange to middle depth of web
6. "C" zone shown extends from Top Flange to middle depth of web

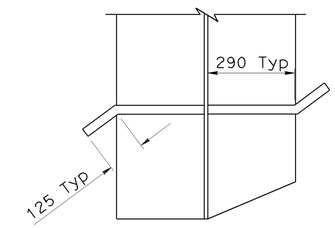


## SECTION A-A
1:10

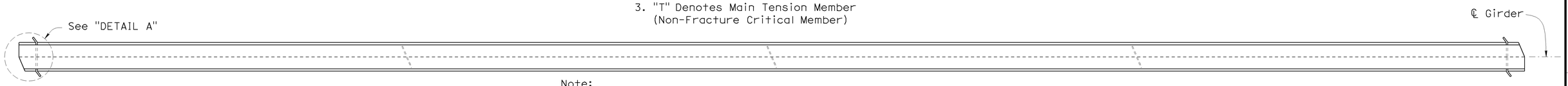


Note:

Girder Ⓑ shown. Girder Ⓐ similar except as shown on "MISCELLANEOUS DETAILS NO. 3" and "MISCELLANEOUS DETAILS NO. 4" sheets.

## GIRDER PLAN
1:40

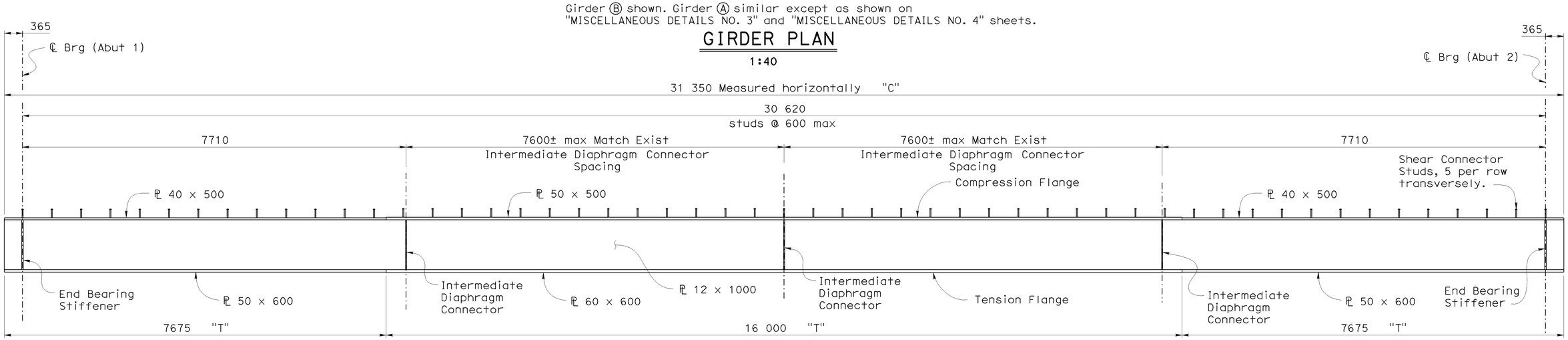


## GIRDER ELEVATION (GIRDERS Ⓐ & Ⓑ)
1:40

NOTE:
THE CONTRACTOR SHALL VERIFY ALL CONTROLLING FIELD DIMENSIONS BEFORE ORDERING OR FABRICATING ANY MATERIAL.

Caltrans Metric

ALL DIMENSIONS ARE IN MILLIMETERS UNLESS OTHERWISE SHOWN

ORIGINAL SCALE IN MILLIMETERS FOR REDUCED PLANS 0 10 20 30 40 50 60 70 80 90 100

| | BY | CHECKED |
|---|---|---|
| DESIGN | Hogni Setberg | Gabriel Galo |
| DETAILS | Herman Mauroschadt | Gabriel Galo |
| QUANTITIES | Gabriel Galo | Herman Mauroschadt |

STATE OF CALIFORNIA
DEPARTMENT OF TRANSPORTATION

DIVISION OF ENGINEERING SERVICES
STRUCTURE DESIGN
DESIGN BRANCH 15

CU 07
EA 121841

BRIDGE NO. 53-1077
KILOMETER POST 44.32

# SONORA AVENUE UC WIDEN & RETROFIT
# GIRDER DETAILS NO. 1

DISREGARD PRINTS BEARING EARLIER REVISION DATES

REVISION DATES: 4-17-07 6-13-08 4-1-08 11-24-08

SHEET 40 OF 59

FILE => 53-1077ri-o-gd1.dgn

STRUCTURES DESIGN DETAIL SHEET (METRIC) (REV.03-17-04)

USERNAME => trmikesl DATE PLOTTED => 12-JUN-2009 TIME PLOTTED => 09:16

| DIST | COUNTY | ROUTE | KILOMETER POST TOTAL PROJECT | SHEET No | TOTAL SHEETS |
|---|---|---|---|---|---|
| 07 | LA | 5 | 42.8/47.3 | 690 | 1073 |

Andrew Rittenhouse 12-05-08
REGISTERED CIVIL ENGINEER DATE

6-8-09
PLANS APPROVAL DATE

REGISTERED PROFESSIONAL ENGINEER Andrew P. Rittenhouse No. 61006 Exp. 12-31-10 CIVIL STATE OF CALIFORNIA

The State of California or its officers or agents shall not be responsible for the accuracy or completeness of electronic copies of this plan sheet.

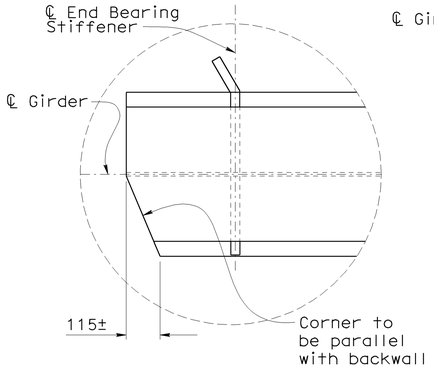


Abut 1 shown, Abut 2 similar.

## DETAIL B
1:10

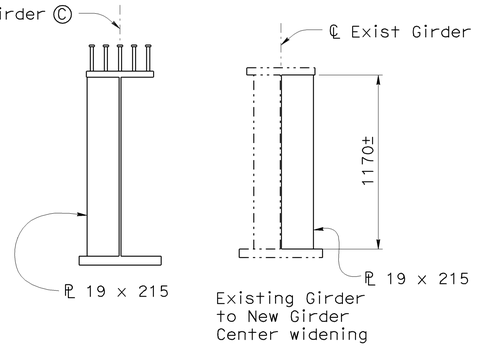


## INTERMEDIATE DIAPHRAGM CONNECTOR
1:20

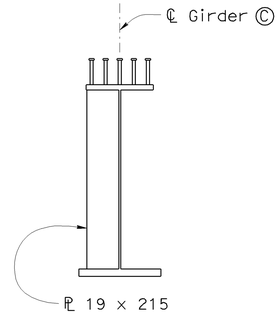


## INTERMEDIATE STIFFENER
1:20

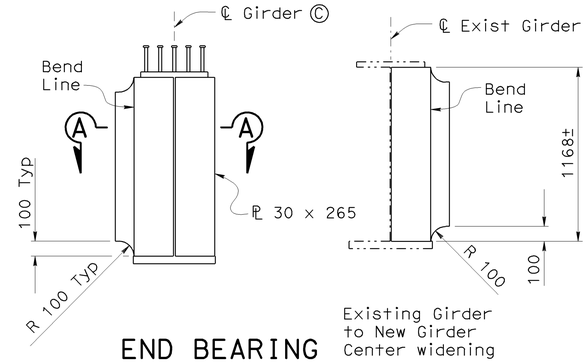


## END BEARING STIFFENER
1:20

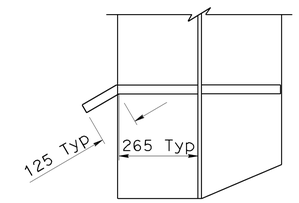


## SECTION A-A
1:10

Notes:

1. Place Intermediate Stiffeners on the left side of Girders Ⓒ Ⓓ & Ⓕ and on the right side of Girder Ⓓ looking up station.
2. Primary Components of Main Members are Flanges, Webs, Splice Plates and Cover Plates, Transverse and Longitudinal Stiffeners and Bearing Stiffeners
3. All members not designated as either Fracture Critical Members or Main Members are Secondary Members
4. "T" Denotes Main Tension Member (Non-Fracture Critical Member)
5. "C" Denotes Main Compression Member
6. "T" zone shown extends from Bottom Flange to middle depth of web
7. "C" zone shown extends from Top Flange to middle depth of web

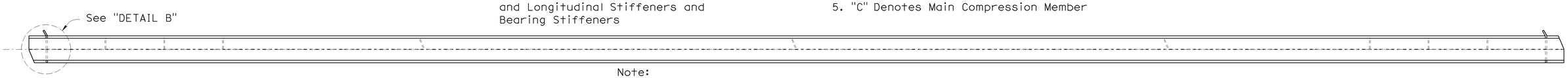


Note:

Girder Ⓒ shown. Girders Ⓓ Ⓔ and Ⓕ similar except as shown on "MISCELLANEOUS DETAILS NO. 1", MISCELLANEOUS DETAILS NO. 2" and "MISCELLANEOUS DETAILS NO. 4" sheets.

## GIRDER PLAN
1:40

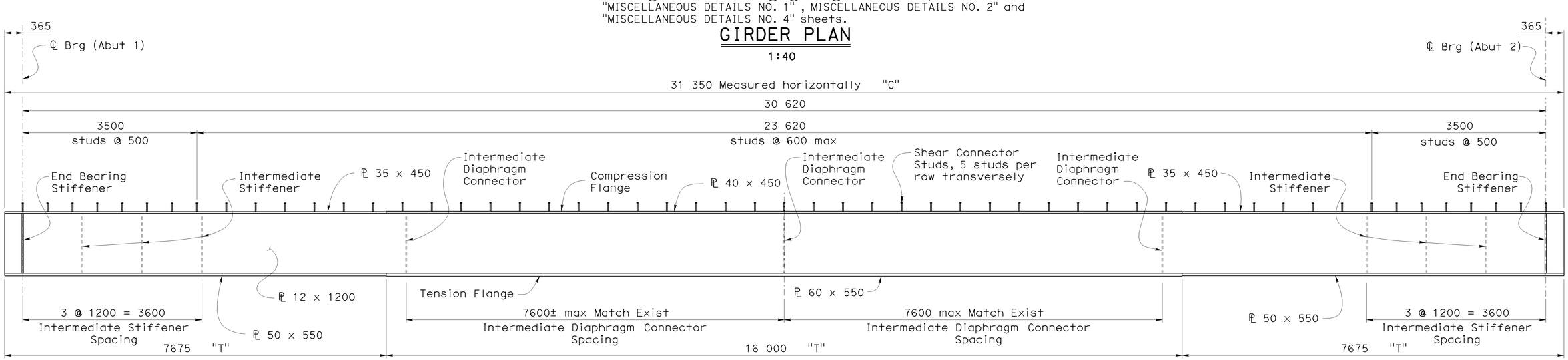


## GIRDER ELEVATION (GIRDERS ⒸⒹⒺ & Ⓕ)
1:40

NOTE:
THE CONTRACTOR SHALL VERIFY ALL CONTROLLING FIELD DIMENSIONS BEFORE ORDERING OR FABRICATING ANY MATERIAL.

| | BY | CHECKED |
|---|---|---|
| DESIGN | Hogni Setberg | Gabriel Galo |
| DETAILS | Herman Mauroschadt | Gabriel Galo |
| QUANTITIES | Gabriel Galo | Herman Mauroschadt |

STATE OF CALIFORNIA
DEPARTMENT OF TRANSPORTATION

DIVISION OF ENGINEERING SERVICES
STRUCTURE DESIGN
DESIGN BRANCH 15

BRIDGE NO. 53-1077
KILOMETER POST 44.32

# SONORA AVENUE UC WIDEN & RETROFIT
# GIRDER DETAILS NO. 2

ALL DIMENSIONS ARE IN MILLIMETERS UNLESS OTHERWISE SHOWN

ORIGINAL SCALE IN MILLIMETERS FOR REDUCED PLANS 0 10 20 30 40 50 60 70 80 90 100

CU 07
EA 121841

DISREGARD PRINTS BEARING EARLIER REVISION DATES

REVISION DATES: 5-1-07 2-21-08 4-4-08 11-24-08

SHEET 41 OF 59

FILE => 53-1077r1-o-gd2.dgn

STRUCTURES DESIGN DETAIL SHEET (METRIC) (REV.03-17-04)

USERNAME => trmikest DATE PLOTTED => 12-JUN-2009 TIME PLOTTED => 09:16

| DIST | COUNTY | ROUTE | KILOMETER POST TOTAL PROJECT | SHEET No | TOTAL SHEETS |
|---|---|---|---|---|---|
| 07 | LA | 5 | 42.8/47.3 | 691 | 1073 |

REGISTERED CIVIL ENGINEER — DATE 12-05-08

6-8-09
PLANS APPROVAL DATE

REGISTERED PROFESSIONAL ENGINEER — Andrew P. Rittenhouse — No. 61006 — Exp. 12-31-10 — CIVIL — STATE OF CALIFORNIA

The State of California or its officers or agents shall not be responsible for the accuracy or completeness of electronic copies of this plan sheet.

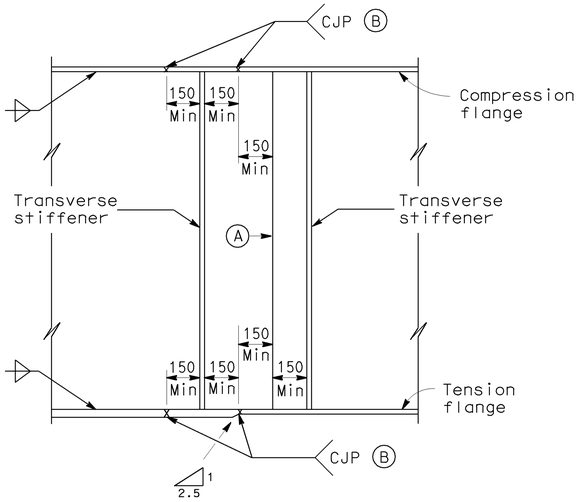


## GIRDER SHOP SPLICE

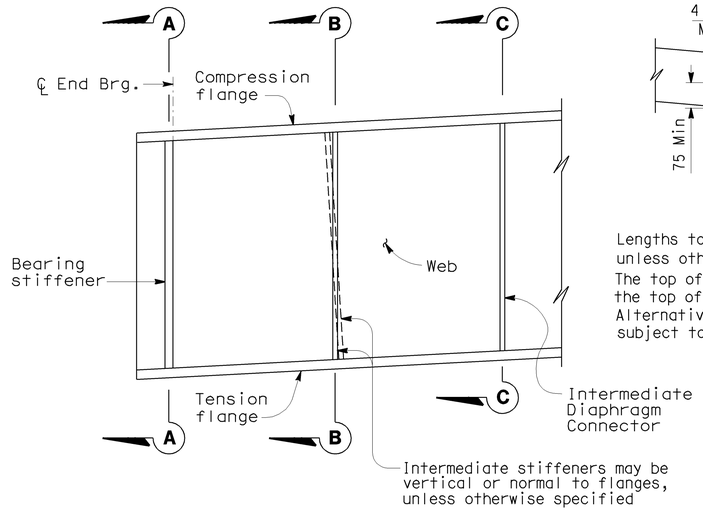


## TRANSVERSE STIFFENERS

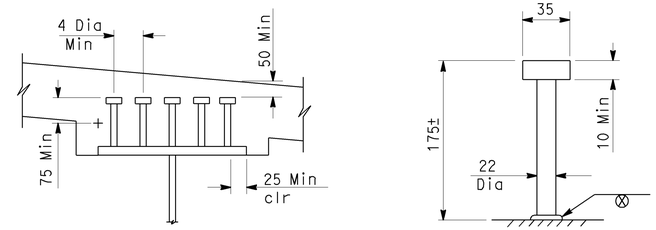


Lengths to be determined by the Contractor unless otherwise shown. Minimum length is 125 mm.
The top of deck is designed to be approximately parallel to the top of web for determining girder stud connector height.
Alternative types of shear connectors will be permitted subject to approval by the Engineer.

## SHEAR CONNECTOR STUDS

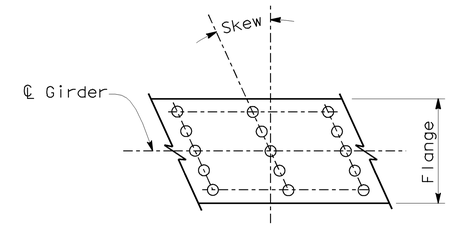


Place studs parallel to transverse deck reinf to minimize interference

## PLAN

No Scale

**NOTES:**

Alternative girder splices will be permitted subject to approval by the Engineer.

Under full dead load as shown on the camber diagram, girder ends and bearing stiffeners shall be vertical except they may be normal to grade for grades less than 2 percent.

(A) Web splice joints shall be complete joint penetration welds (CJP). All weld areas on the exterior face of exterior girders shall be ground flush.

(B) Grind all surfaces flush on tension flanges. Grind all surfaces flush on compression flanges when required for non-destructive testing (NDT).

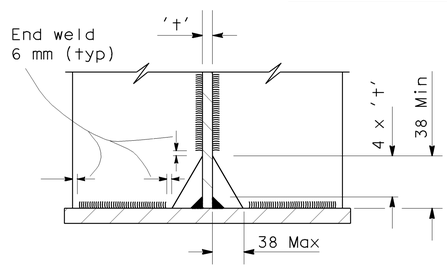


## DETAIL A

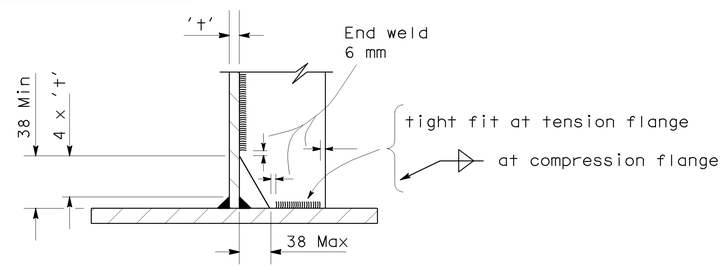


## DETAIL B

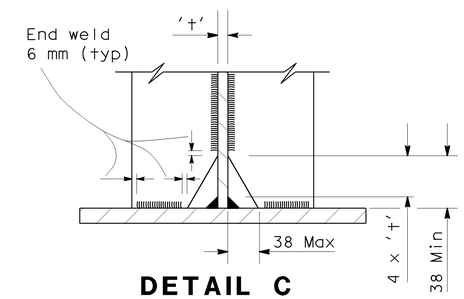


## DETAIL C

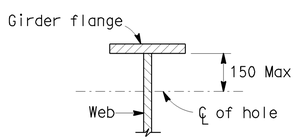


25 mm max diameter drilled hole at 1.2 m ± min spacing to be used for falsework support when specified by the Contractor. Contractor to determine location, size and spacing.

50 mm max diameter hole to be drilled where lighting conduit passes through girder web. For location and size of hole see ''Road Plans''.

## HOLES FOR CONDUIT AND FALSEWORK

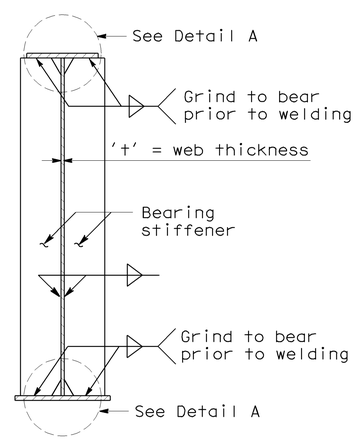


## SECTION A-A

(Bearing Stiffeners)

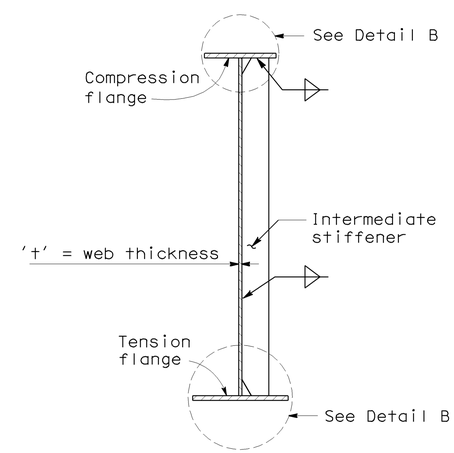


## SECTION B-B

(Intermediate Stiffeners)

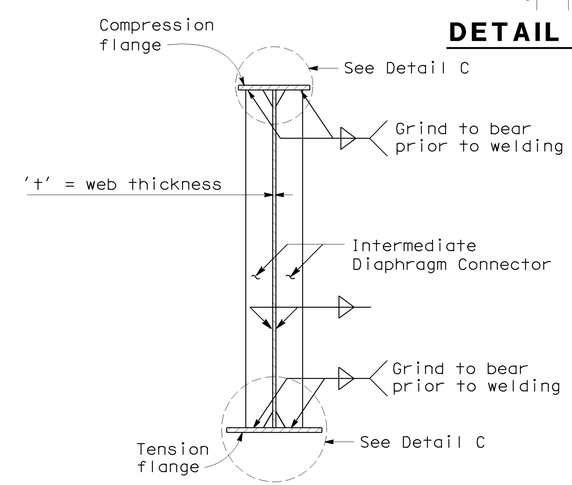


## SECTION C-C

(Intermediate Diaphragm Connectors)

NOTE:
THE CONTRACTOR SHALL VERIFY ALL CONTROLLING FIELD DIMENSIONS BEFORE ORDERING OR FABRICATING ANY MATERIAL.

Caltrans Metric

| | BY | CHECKED |
|---|---|---|
| DESIGN | Hogni Setberg | Gabriel Galo |
| DETAILS | Herman Mauroschadt | Gabriel Galo |
| QUANTITIES | Gabriel Galo | Herman Mauroschadt |

STATE OF CALIFORNIA
DEPARTMENT OF TRANSPORTATION

DIVISION OF ENGINEERING SERVICES
STRUCTURE DESIGN
DESIGN BRANCH 15

BRIDGE NO. 53-1077
KILOMETER POST 44.32

SONORA AVENUE UC WIDEN & RETROFIT
GIRDER DETAILS NO. 3

ALL DIMENSIONS ARE IN MILLIMETERS UNLESS OTHERWISE SHOWN

ORIGINAL SCALE IN MILLIMETERS FOR REDUCED PLANS 0 10 20 30 40 50 60 70 80 90 100

CU 07
EA 121841

DISREGARD PRINTS BEARING EARLIER REVISION DATES

REVISION DATES: 11-01-07 2-14-08 11-4-08 11-24-08

SHEET 42 OF 59

FILE => 53-1077r1-o-gd3.dgn

STRUCTURES DESIGN DETAIL SHEET (METRIC) (REV.03-17-04)

USERNAME => trmikest DATE PLOTTED => 12-JUN-2009 TIME PLOTTED => 09:16

| DIST | COUNTY | ROUTE | KILOMETER POST TOTAL PROJECT | SHEET No | TOTAL SHEETS |
|---|---|---|---|---|---|
| 07 | LA | 5 | 42.8/47.3 | 692 | 1073 |

Andrew Rittenhouse 12-05-08
REGISTERED CIVIL ENGINEER DATE

6-8-09
PLANS APPROVAL DATE

REGISTERED PROFESSIONAL ENGINEER Andrew P. Rittenhouse No. 61006 Exp. 12-31-10 CIVIL STATE OF CALIFORNIA

The State of California or its officers or agents shall not be responsible for the accuracy or completeness of electronic copies of this plan sheet.

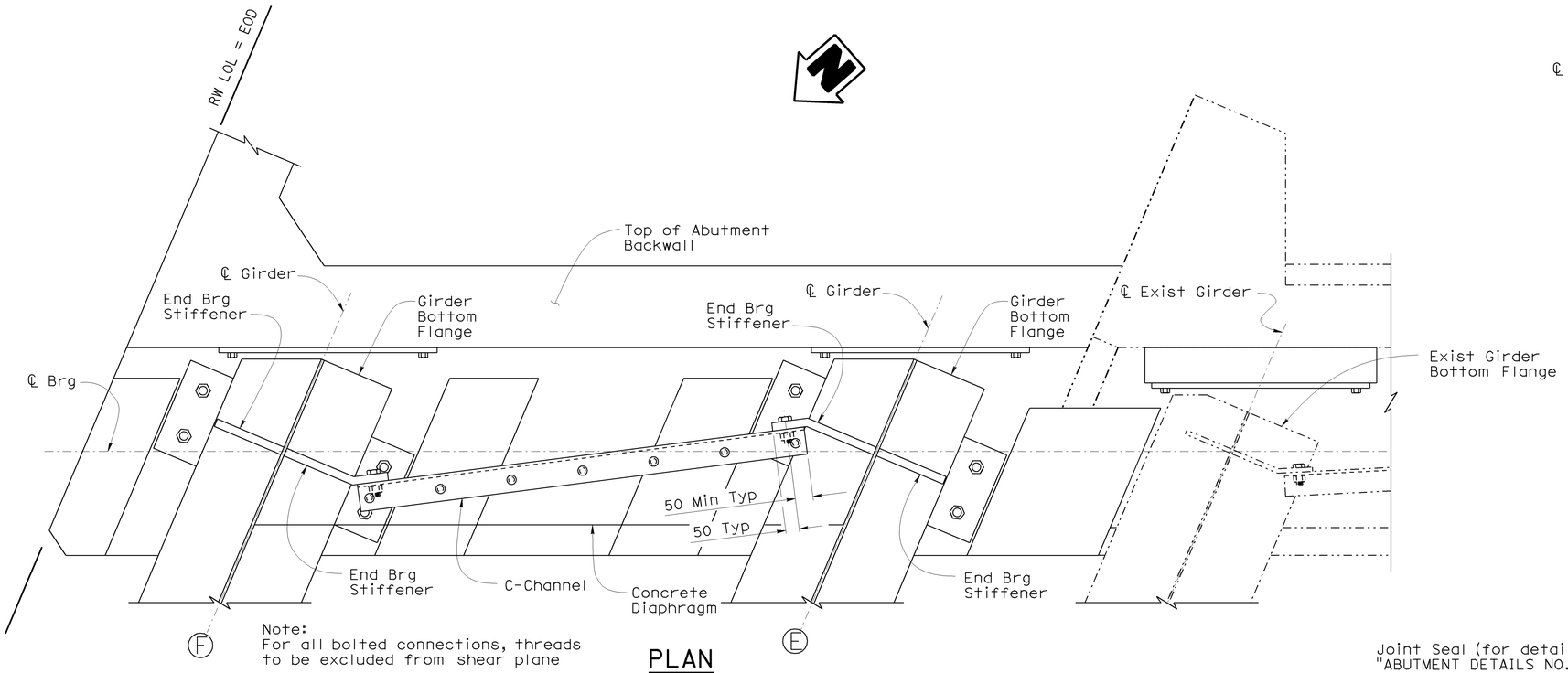


Note:
For all bolted connections, threads to be excluded from shear plane

## PLAN
1:10

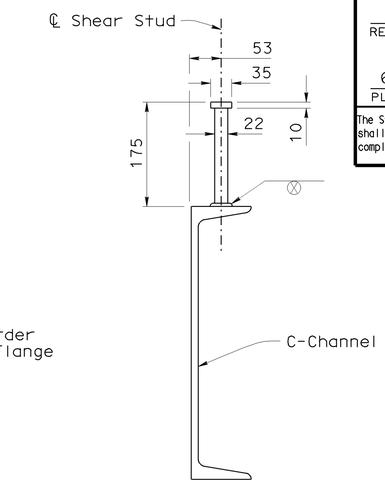


## SHEAR STUD CONNECTION
1:5

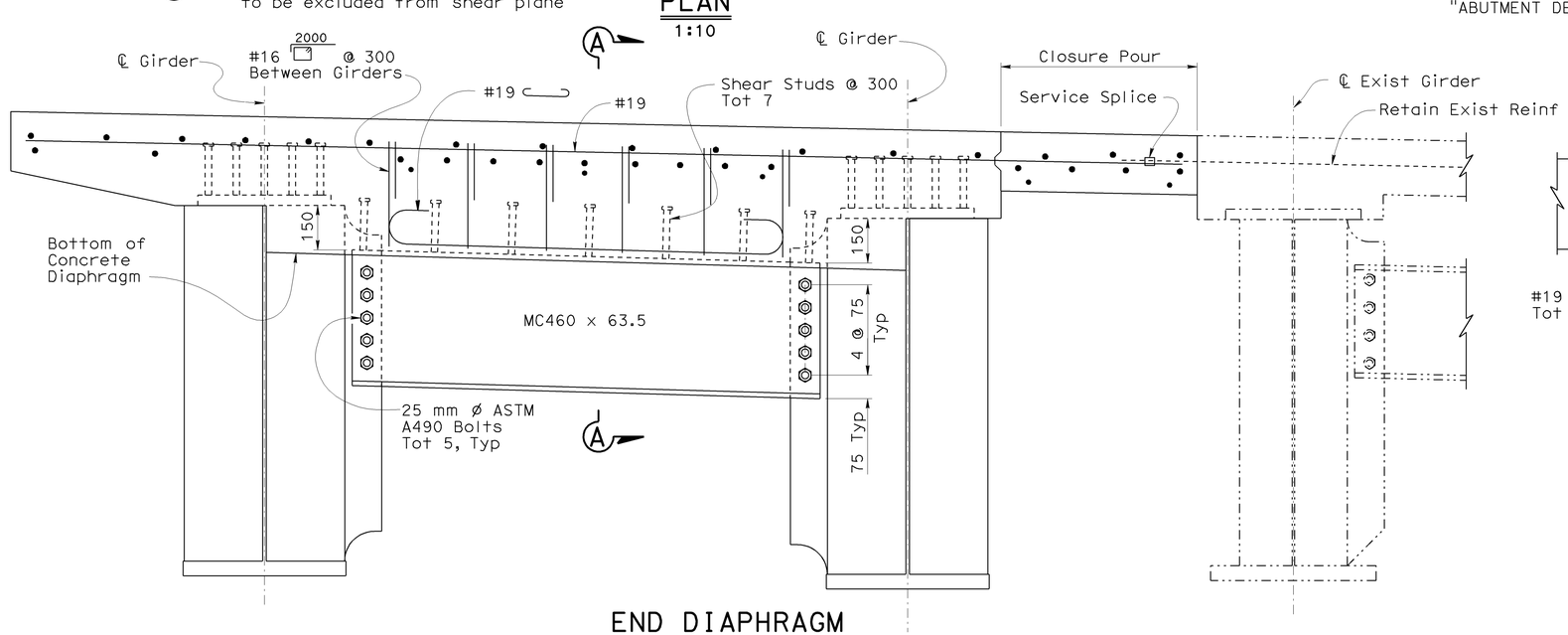


## END DIAPHRAGM ELEVATION (RIGHT WIDEN)
1:10

Abutment 1 shown, Abutment 2 similar

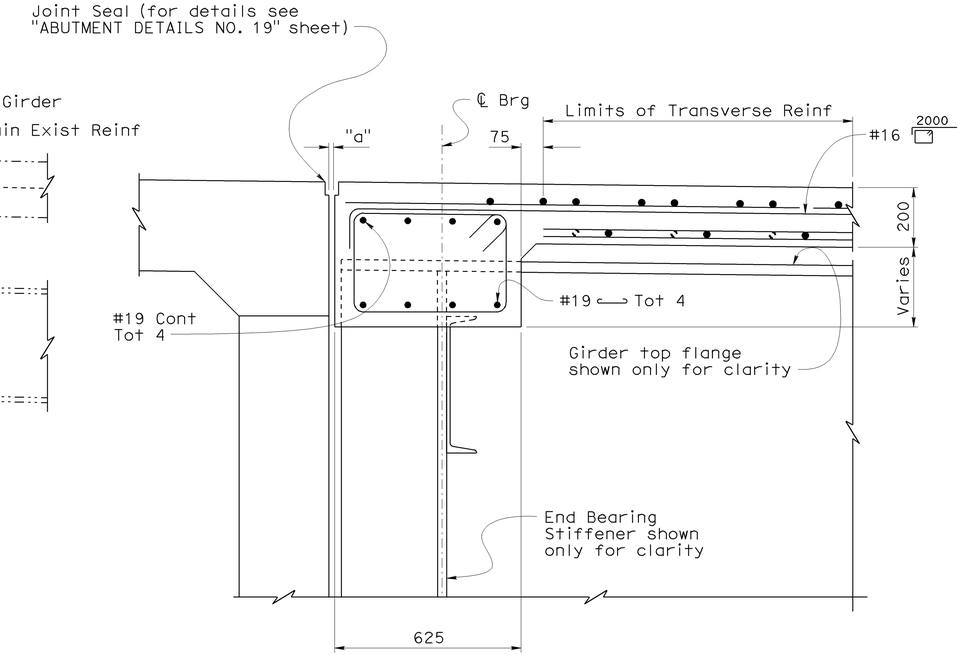


## SECTION A-A
1:10

NOTE:
THE CONTRACTOR SHALL VERIFY ALL CONTROLLING FIELD DIMENSIONS BEFORE ORDERING OR FABRICATING ANY MATERIAL.

Caltrans Metric

| | BY | CHECKED |
|---|---|---|
| DESIGN | Hogni Setberg | Gabriel Galo |
| DETAILS | Herman Mauroschadt | Gabriel Galo |
| QUANTITIES | Gabriel Galo | Herman Mauroschadt |

STATE OF CALIFORNIA
DEPARTMENT OF TRANSPORTATION

DIVISION OF ENGINEERING SERVICES
STRUCTURE DESIGN
DESIGN BRANCH 15

CU 07
EA 121841

BRIDGE NO. 53-1077
KILOMETER POST 44.32

SONORA AVENUE UC WIDEN & RETROFIT
MISCELLANEOUS DETAILS NO. 1

ALL DIMENSIONS ARE IN MILLIMETERS UNLESS OTHERWISE SHOWN

ORIGINAL SCALE IN MILLIMETERS FOR REDUCED PLANS 0 10 20 30 40 50 60 70 80 90 100

DISREGARD PRINTS BEARING EARLIER REVISION DATES

REVISION DATES: 2-22-07 2-15-08 11-14-08 1-29-09 2-25-09

SHEET 43 OF 59

FILE => 53-1077r1-p-miscd1.dgn

STRUCTURES DESIGN DETAIL SHEET (METRIC) (REV.03-17-04)

USERNAME => trmikesl DATE PLOTTED => 12-JUN-2009 TIME PLOTTED => 09:17

| DIST | COUNTY | ROUTE | KILOMETER POST TOTAL PROJECT | SHEET No | TOTAL SHEETS |
|---|---|---|---|---|---|
| 07 | LA | 5 | 42.8/47.3 | 693 | 1073 |

Andrew Rittenhouse 12-05-08
REGISTERED CIVIL ENGINEER DATE

6-8-09
PLANS APPROVAL DATE

REGISTERED PROFESSIONAL ENGINEER
Andrew P. Rittenhouse
No. 61006
Exp. 12-31-10
CIVIL
STATE OF CALIFORNIA

The State of California or its officers or agents shall not be responsible for the accuracy or completeness of electronic copies of this plan sheet.

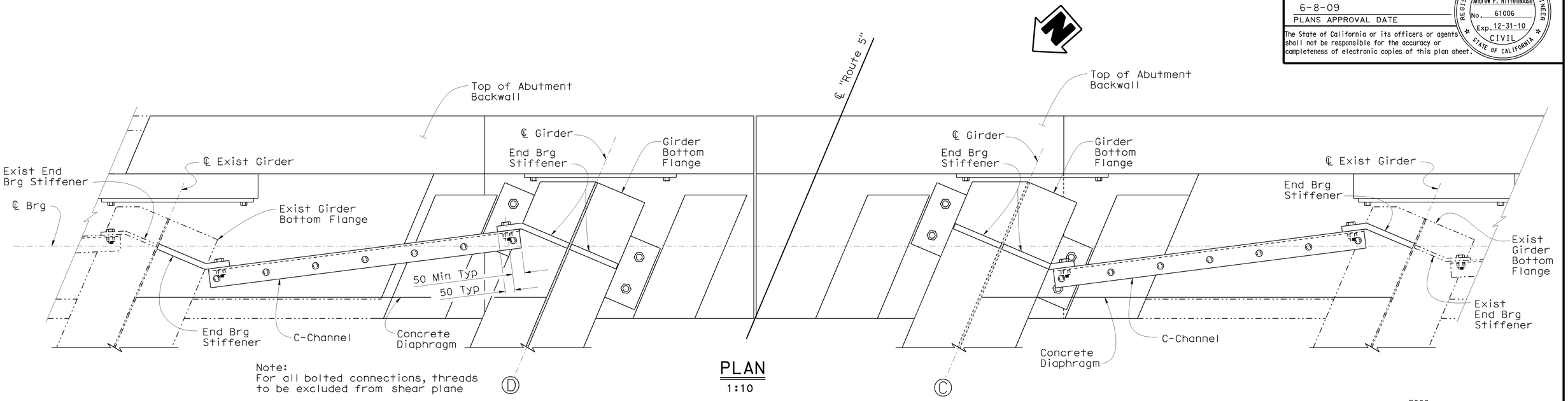


Note:
For all bolted connections, threads to be excluded from shear plane

## PLAN
1:10

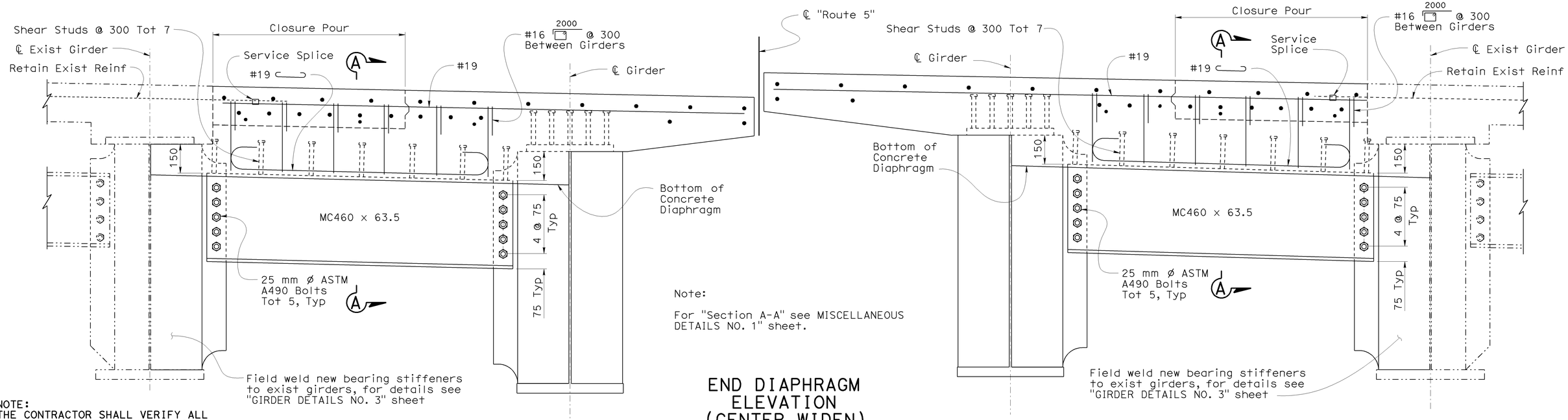


Note:

For "Section A-A" see MISCELLANEOUS DETAILS NO. 1" sheet.

NOTE:
THE CONTRACTOR SHALL VERIFY ALL CONTROLLING FIELD DIMENSIONS BEFORE ORDERING OR FABRICATING ANY MATERIAL.

## END DIAPHRAGM ELEVATION (CENTER WIDEN)
1:10

Abutment 1 shown, Abutment 2 similar

Caltrans Metric

| | BY | CHECKED |
|---|---|---|
| DESIGN | Hogni Setberg | Gabriel Galo |
| DETAILS | Herman Mauroschadt | Gabriel Galo |
| QUANTITIES | Gabriel Galo | Herman Mauroschadt |

STATE OF CALIFORNIA
DEPARTMENT OF TRANSPORTATION

DIVISION OF ENGINEERING SERVICES
STRUCTURE DESIGN
DESIGN BRANCH 15

CU 07
EA 121841

BRIDGE NO. 53-1077
KILOMETER POST 44.32

# SONORA AVENUE UC WIDEN & RETROFIT
# MISCELLANEOUS DETAILS NO. 2

ALL DIMENSIONS ARE IN MILLIMETERS UNLESS OTHERWISE SHOWN

ORIGINAL SCALE IN MILLIMETERS FOR REDUCED PLANS 0 10 20 30 40 50 60 70 80 90 100

DISREGARD PRINTS BEARING EARLIER REVISION DATES

REVISION DATES: 5-29-07 2-11-08 11-14-08 2-25-09

SHEET 44 OF 59

FILE => 53-1077ri-p-miscd2.dgn

STRUCTURES DESIGN DETAIL SHEET (METRIC) (REV.03-17-04)

USERNAME => trmikesl DATE PLOTTED => 12-JUN-2009 TIME PLOTTED => 09:17

| DIST | COUNTY | ROUTE | KILOMETER POST TOTAL PROJECT | SHEET No | TOTAL SHEETS |
|---|---|---|---|---|---|
| 07 | LA | 5 | 42.8/47.3 | 694 | 1073 |

Andrew Rittenhouse 12-05-08
REGISTERED CIVIL ENGINEER DATE

6-8-09
PLANS APPROVAL DATE

REGISTERED PROFESSIONAL ENGINEER Andrew P. Rittenhouse No. 61006 Exp. 12-31-10 CIVIL STATE OF CALIFORNIA

The State of California or its officers or agents shall not be responsible for the accuracy or completeness of electronic copies of this plan sheet.

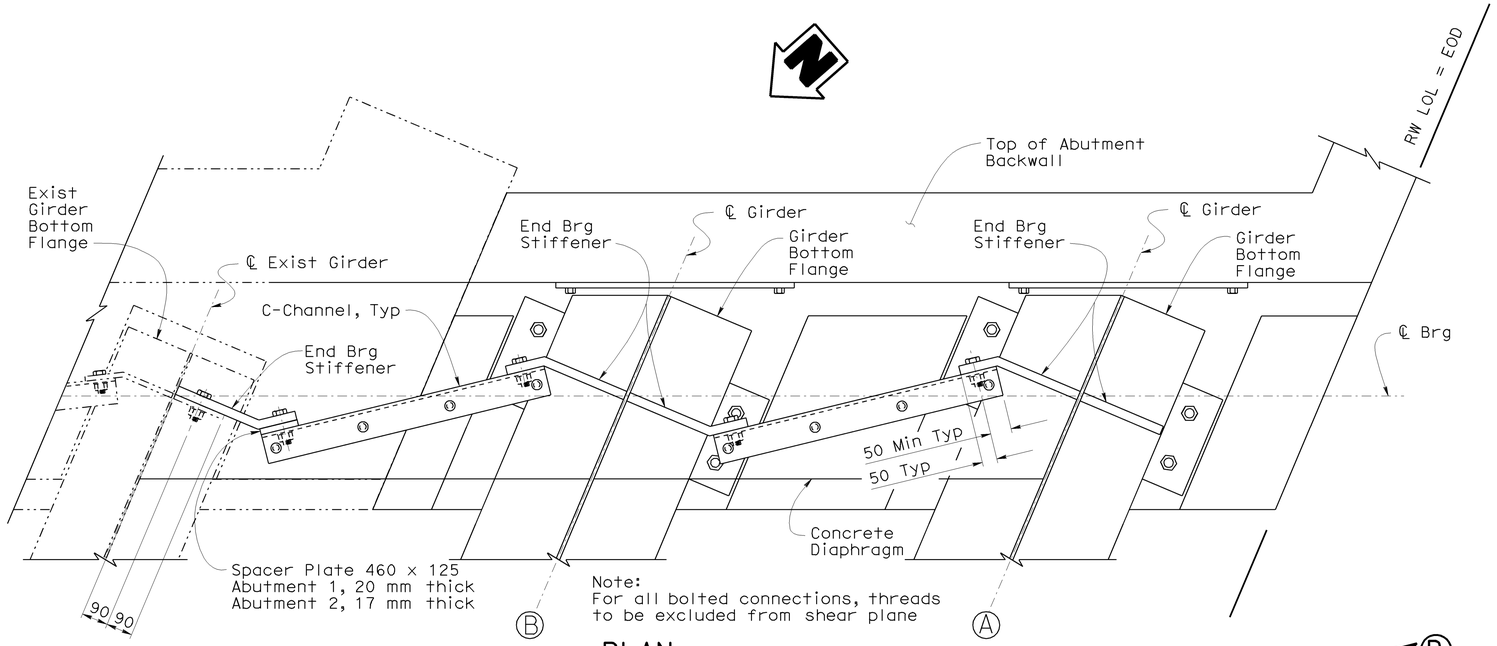


Note:
For all bolted connections, threads to be excluded from shear plane

## PLAN
1:10

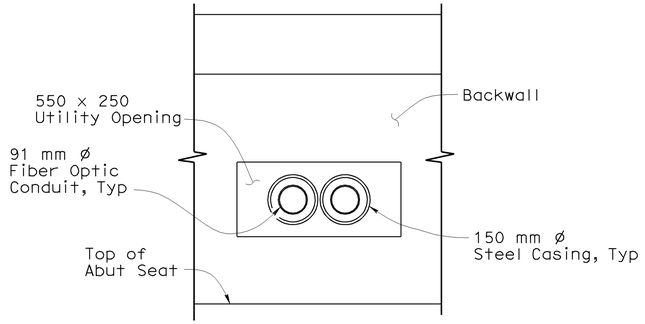


## SECTION B-B
No Scale

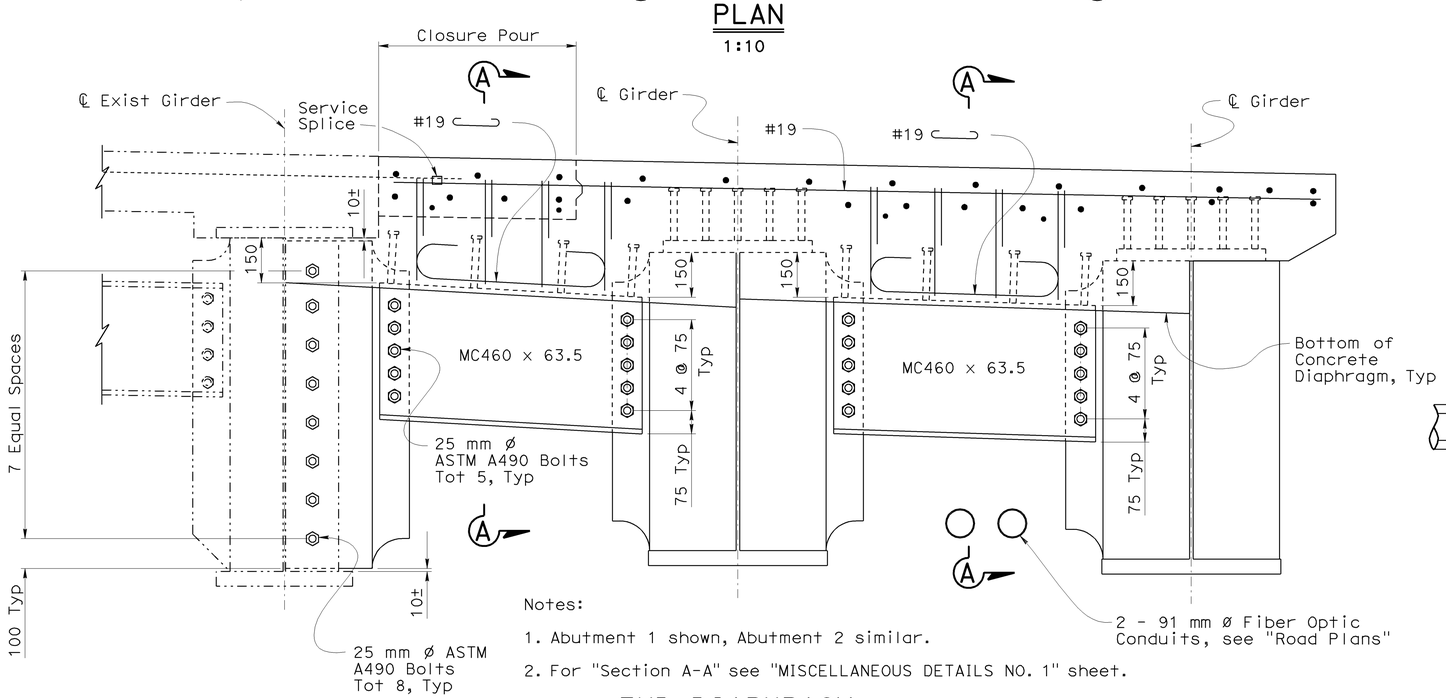


Notes:

1. Abutment 1 shown, Abutment 2 similar.
2. For "Section A-A" see "MISCELLANEOUS DETAILS NO. 1" sheet.

## END DIAPHRAGM ELEVATION (LEFT WIDEN)
1:10

NOTE:
THE CONTRACTOR SHALL VERIFY ALL CONTROLLING FIELD DIMENSIONS BEFORE ORDERING OR FABRICATING ANY MATERIAL.

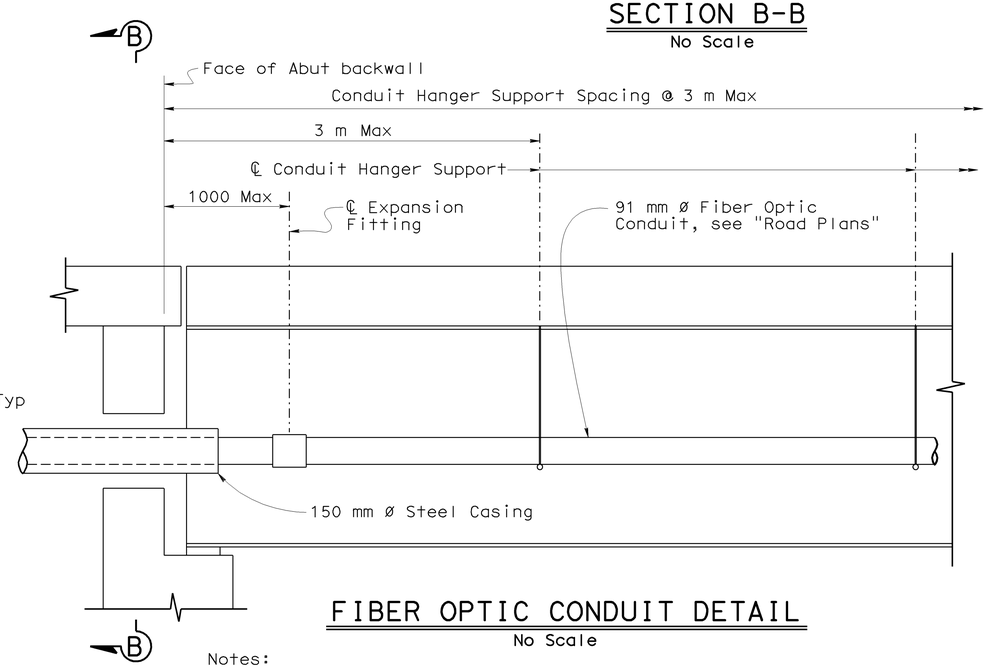


## FIBER OPTIC CONDUIT DETAIL
No Scale

Notes:

1. Expansion Fitting location for Abutment 1 shown, Abutment 2 similar.
2. Expansion Fitting, for details see "Road Plans".
3. For Hanger detail, see "GIRDER LAYOUT" sheet.
4. For details not shown see B6-10

| | | |
|---|---|---|
| DESIGN | BY Hogni Setberg | CHECKED Gabriel Galo |
| DETAILS | BY Herman Mauroschadt | CHECKED Gabriel Galo |
| QUANTITIES | BY Gabriel Galo | CHECKED Herman Mauroschadt |

STATE OF CALIFORNIA
DEPARTMENT OF TRANSPORTATION

DIVISION OF ENGINEERING SERVICES
STRUCTURE DESIGN
DESIGN BRANCH 15

BRIDGE NO. 53-1077
KILOMETER POST 44.32

SONORA AVENUE UC WIDEN & RETROFIT
MISCELLANEOUS DETAILS NO. 3

ALL DIMENSIONS ARE IN MILLIMETERS UNLESS OTHERWISE SHOWN

ORIGINAL SCALE IN MILLIMETERS FOR REDUCED PLANS 0 10 20 30 40 50 60 70 80 90 100

CU 07
EA 121841

DISREGARD PRINTS BEARING EARLIER REVISION DATES

REVISION DATES: 5-29-01 2-14-08 11-7-08 11-14-08 12-11-08 1-14-09 1-30-09 1-23-09 2-25-09

SHEET 45 OF 59

FILE => 53-1077rl-p-miscd3.dgn

STRUCTURES DESIGN DETAIL SHEET (METRIC) (REV.03-17-04)

USERNAME => trmikest DATE PLOTTED => 12-JUN-2009 TIME PLOTTED => 09:17

| DIST | COUNTY | ROUTE | KILOMETER POST TOTAL PROJECT | SHEET No | TOTAL SHEETS |
|---|---|---|---|---|---|
| 07 | LA | 5 | 42.8/47.3 | 695 | 1073 |

Andrew Rittenhouse 12-05-08
REGISTERED CIVIL ENGINEER DATE

6-8-09
PLANS APPROVAL DATE

REGISTERED PROFESSIONAL ENGINEER Andrew P. Rittenhouse No. 61006 Exp. 12-31-10 CIVIL STATE OF CALIFORNIA

The State of California or its officers or agents shall not be responsible for the accuracy or completeness of electronic copies of this plan sheet.

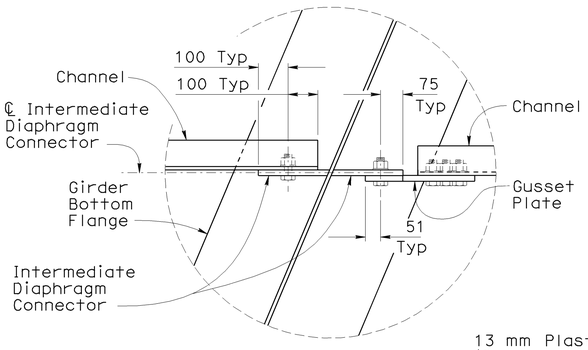


DETAIL A
1:10

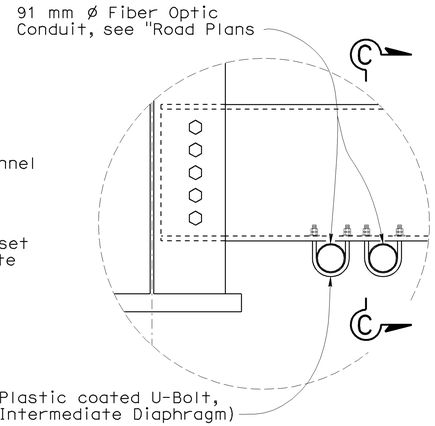


DETAIL B
1:10

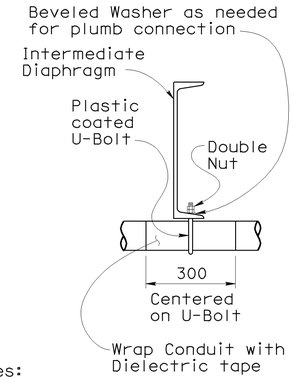


Notes:

1. Typical U-Bolt Installation shown
2. Size components to allow free longitudinal conduit movement, except as midspan diaphragm, where snug fit will be required.

SECTION C-C
1:10

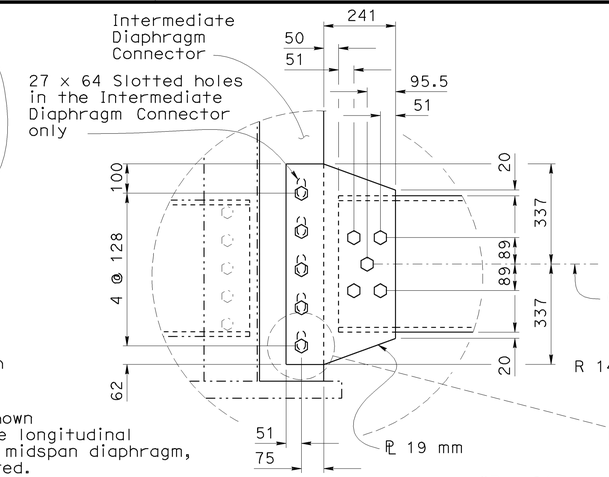


DETAIL C
1:10

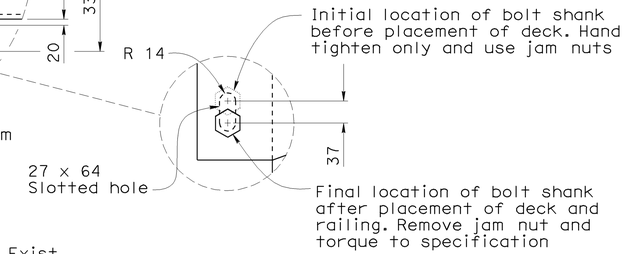


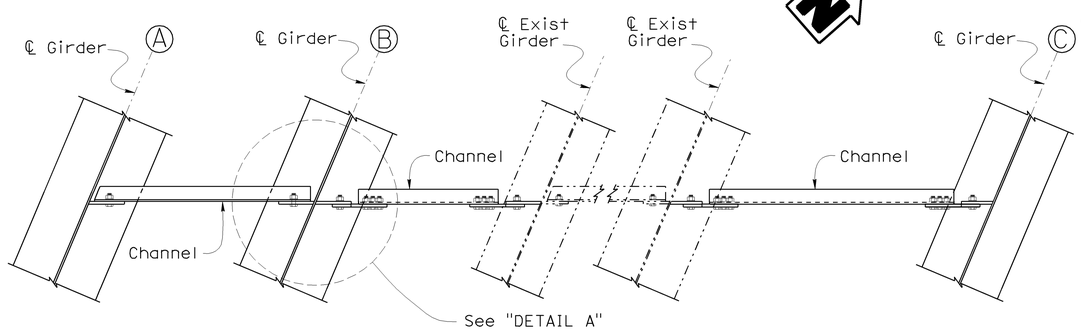


PLAN (LEFT WIDEN)

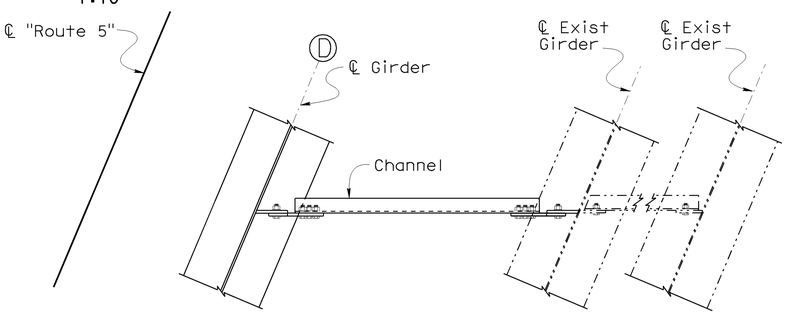


PLAN (CENTER WIDEN)

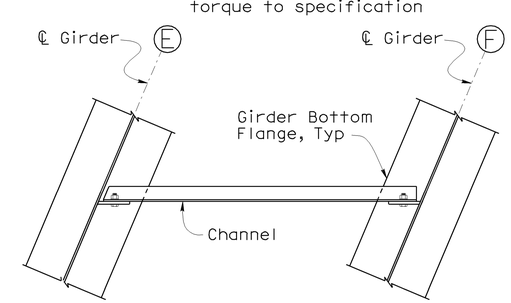


PLAN (RIGHT WIDEN)

Note:
For details not shown see "GIRDER DETAILS NO. 1" and "GIRDER DETAILS NO. 2" sheets.

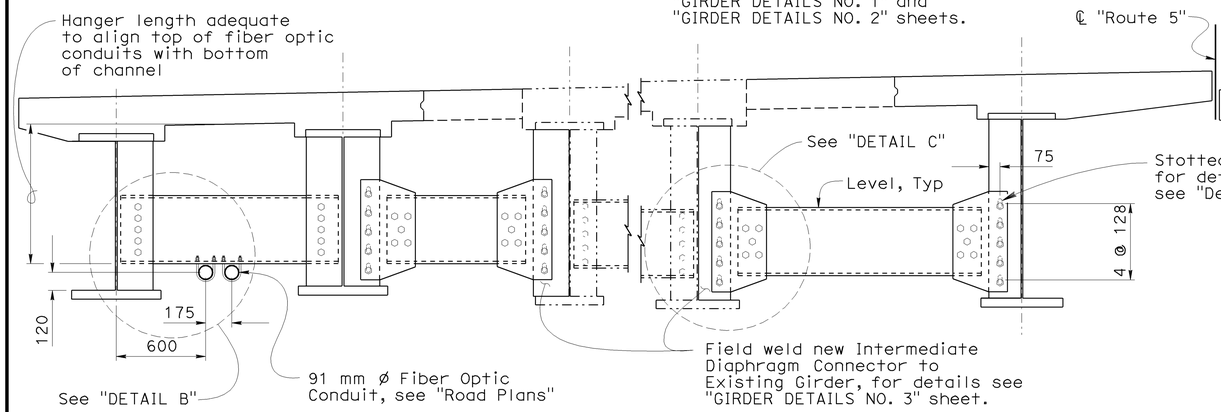


ELEVATION (LEFT WIDEN)

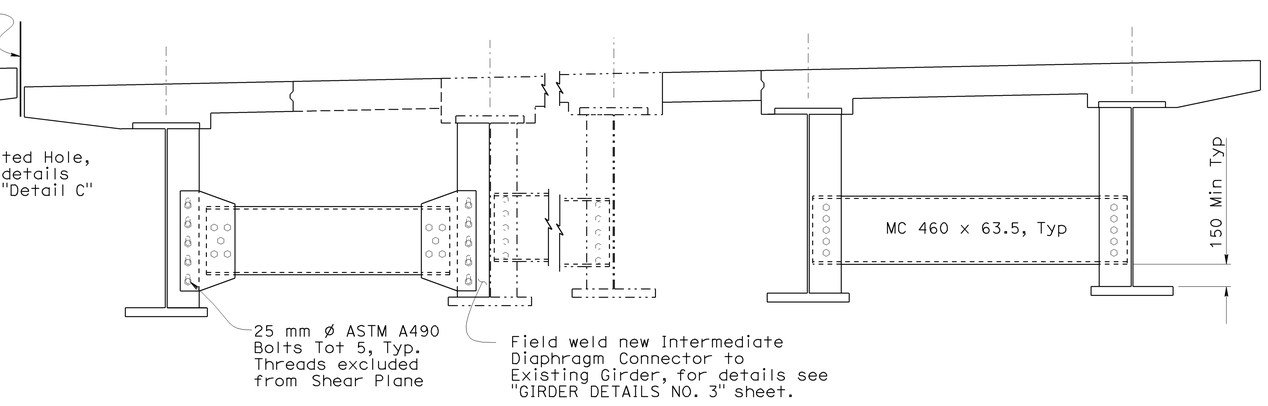


ELEVATION (CENTER WIDEN)

ELEVATION (RIGHT WIDEN)

NOTE:
THE CONTRACTOR SHALL VERIFY ALL CONTROLLING FIELD DIMENSIONS BEFORE ORDERING OR FABRICATING ANY MATERIAL.

INTERMEDIATE DIAPHRAGM
1:20

Caltrans Metric

| | BY | CHECKED |
|---|---|---|
| DESIGN | Hogni Setberg | Gabriel Galo |
| DETAILS | Herman Mauroschadt | Gabriel Galo |
| QUANTITIES | Gabriel Galo | Herman Mauroschadt |

STATE OF CALIFORNIA
DEPARTMENT OF TRANSPORTATION

DIVISION OF ENGINEERING SERVICES
STRUCTURE DESIGN
DESIGN BRANCH 15

BRIDGE NO. 53-1077
KILOMETER POST 44.32

SONORA AVENUE UC WIDEN & RETROFIT
MISCELLANEOUS DETAILS NO. 4

ALL DIMENSIONS ARE IN MILLIMETERS UNLESS OTHERWISE SHOWN

ORIGINAL SCALE IN MILLIMETERS FOR REDUCED PLANS 0 10 20 30 40 50 60 70 80 90 100

CU 07
EA 121841

DISREGARD PRINTS BEARING EARLIER REVISION DATES

REVISION DATES: 10-1-07 11-30-08 11-14-08 12-12-08 1-30-09 3-30-09

SHEET 46 OF 59

FILE => 53-1077r1-p-miscd4.dgn

STRUCTURES DESIGN DETAIL SHEET (METRIC) (REV.03-17-04)

USERNAME => rtmirkes1 DATE PLOTTED => 12-JUN-2009 TIME PLOTTED => 09:17

| DIST | COUNTY | ROUTE | KILOMETER POST TOTAL PROJECT | SHEET No | TOTAL SHEETS |
|---|---|---|---|---|---|
| 07 | LA | 5 | 42.8/47.3 | 696 | 1073 |

Andrew Rittenhouse 12-05-08
REGISTERED CIVIL ENGINEER DATE

6-8-09
PLANS APPROVAL DATE

REGISTERED PROFESSIONAL ENGINEER
Andrew P. Rittenhouse
No. 61006
Exp. 12-31-10
CIVIL
STATE OF CALIFORNIA

The State of California or its officers or agents shall not be responsible for the accuracy or completeness of electronic copies of this plan sheet.

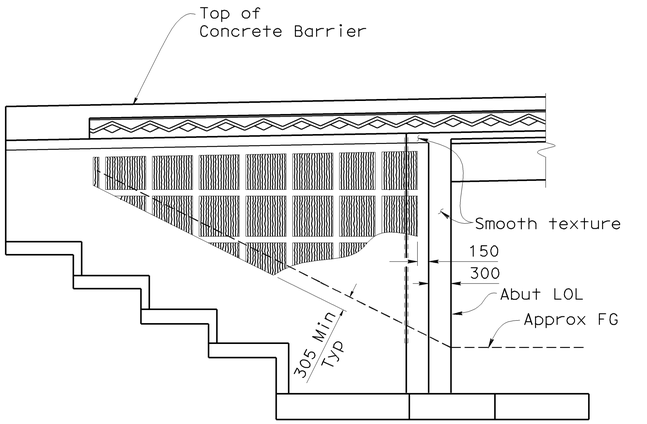


Abut 1 Retaining Wall Rt side shown,
Lt side similar.

## ELEVATION
No scale

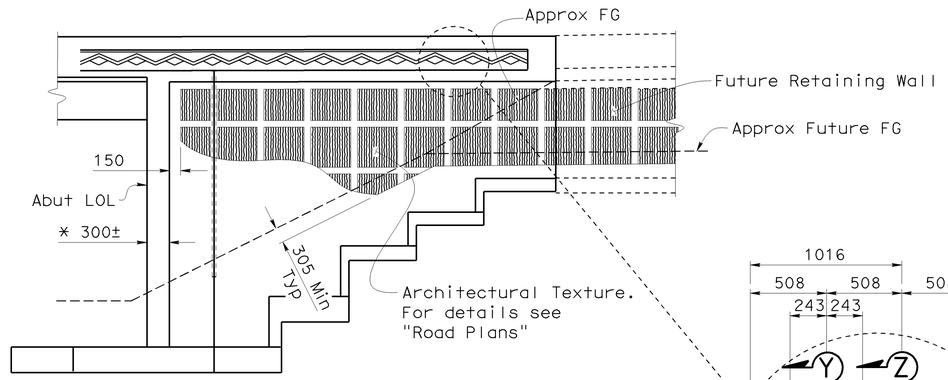


Note:

Abut 2 Retaining Wall Rt side shown,
Lt side similar.

* - vary as needed to accomodate Architectural pattern

## ELEVATION
No scale

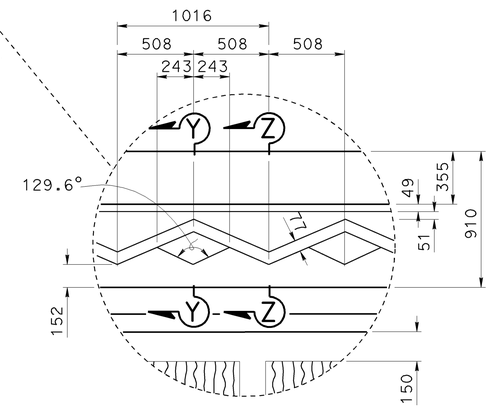


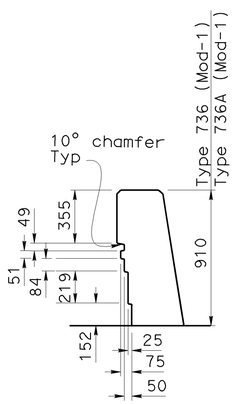


## SECTION Y-Y
1:20

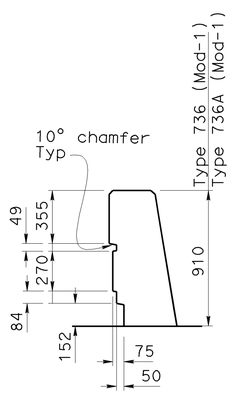


## SECTION Z-Z
1:20

# CONCRETE BARRIER TYPE 736 (MOD-1) AND TYPE 736A (MOD-1)

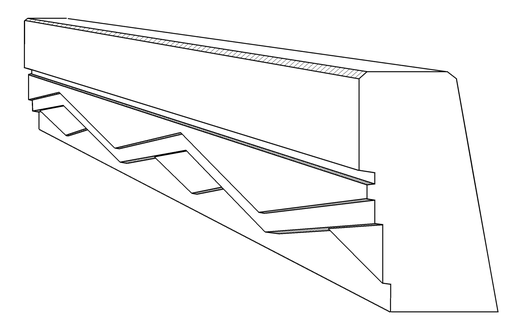

## PERSPECTIVE VIEW
No Scale

NOTE:
THE CONTRACTOR SHALL VERIFY ALL CONTROLLING FIELD DIMENSIONS BEFORE ORDERING OR FABRICATING ANY MATERIAL.

Caltrans Metric

| | BY | CHECKED |
|---|---|---|
| DESIGN | Hogni Setberg | Gabriel Galo |
| DETAILS | Herman Mauroschadt | Gabriel Galo |
| QUANTITIES | Gabriel Galo | Herman Mauroschadt |

STATE OF CALIFORNIA
DEPARTMENT OF TRANSPORTATION

DIVISION OF ENGINEERING SERVICES
STRUCTURE DESIGN
DESIGN BRANCH 15

BRIDGE NO. 53-1077
KILOMETER POST 44.32

SONORA AVENUE UC WIDEN & RETROFIT
ARCHITECTURAL DETAILS

ALL DIMENSIONS ARE IN MILLIMETERS UNLESS OTHERWISE SHOWN

ORIGINAL SCALE IN MILLIMETERS FOR REDUCED PLANS 0 10 20 30 40 50 60 70 80 90 100

CU 07
EA 121841

DISREGARD PRINTS BEARING EARLIER REVISION DATES

REVISION DATES: 11-16-07 | 3-17-08 | 6-6-08 | 9-2-08 | 11-14-08 | 12-12-08 | 1-12-09 | 2-23-09 | 3-19-09

SHEET 47 OF 59

FILE => 53-1077rl-u-arch-det.dgn

STRUCTURES DESIGN DETAIL SHEET (METRIC) (REV.03-17-04)

USERNAME => trmikesl DATE PLOTTED => 12-JUN-2009 TIME PLOTTED => 09:17

| DIST | COUNTY | ROUTE | KILOMETER POST TOTAL PROJECT | SHEET No | TOTAL SHEETS |
|---|---|---|---|---|---|
| 07 | LA | 5 | 42.8/47.3 | 697 | 1073 |

Andrew Rittenhouse 12-05-08
REGISTERED CIVIL ENGINEER DATE

6-8-09
PLANS APPROVAL DATE

REGISTERED PROFESSIONAL ENGINEER Andrew P. Rittenhouse No. 61006 Exp. 12-31-10 CIVIL STATE OF CALIFORNIA

The State of California or its officers or agents shall not be responsible for the accuracy or completeness of electronic copies of this plan sheet.

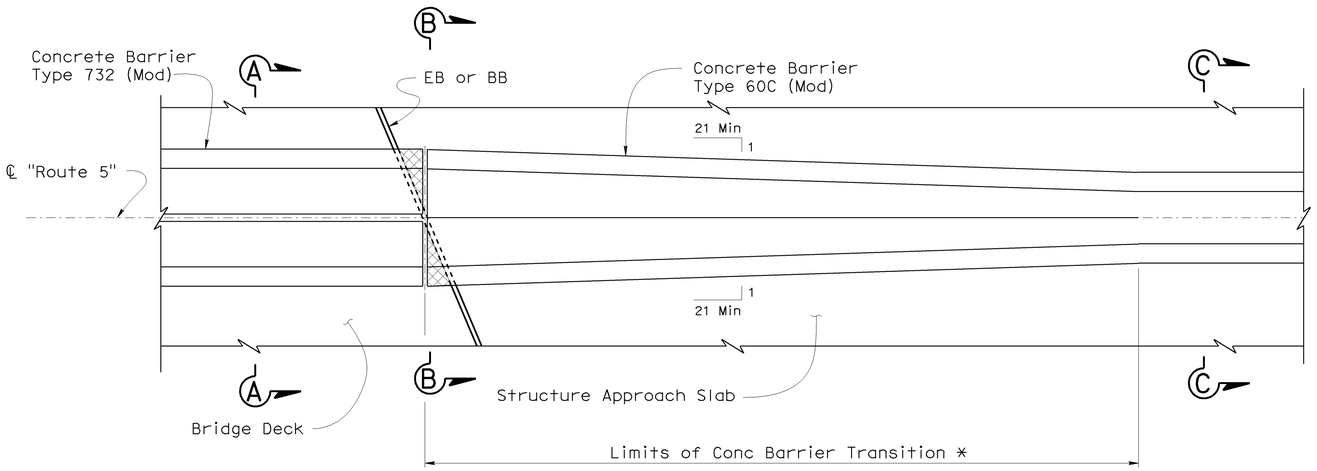


## PLAN
1:20

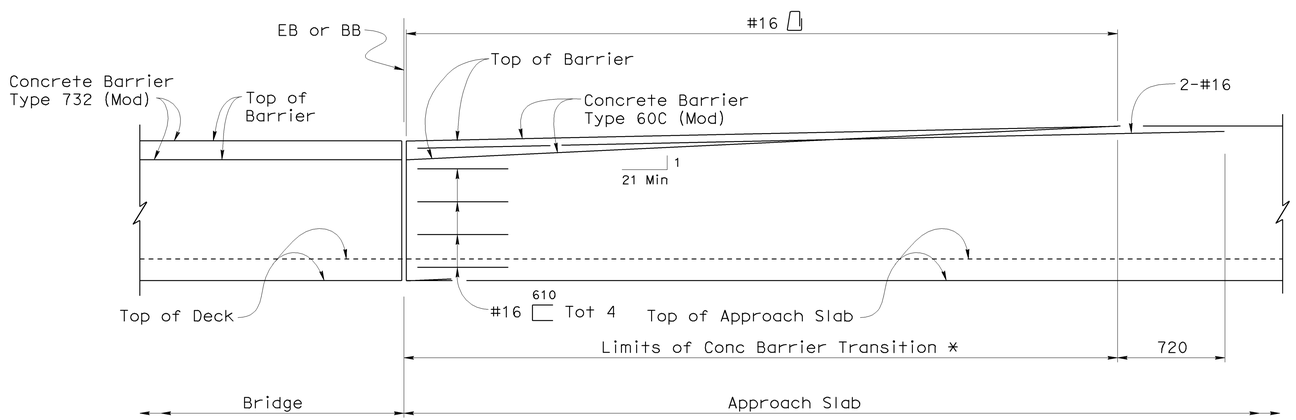


## ELEVATION
1:20

* Vertical and Horizontal Conc Barrier Transition to end at same location

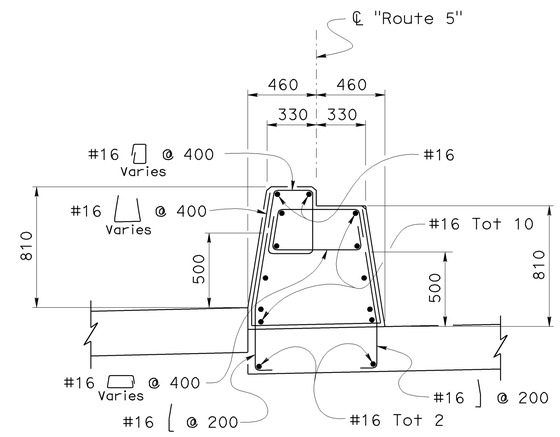


## SECTION B-B
1:20

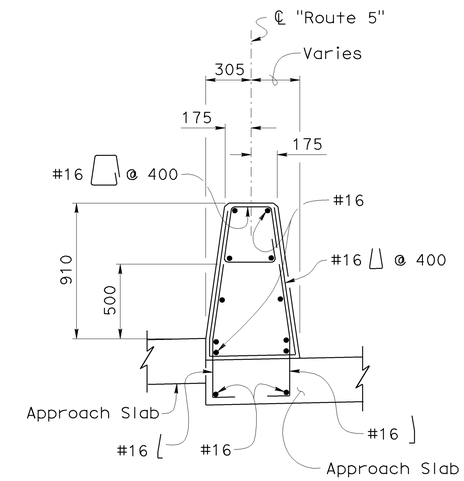


## SECTION C-C
1:20

## CONCRETE BARRIER TYPE 60C (Mod)

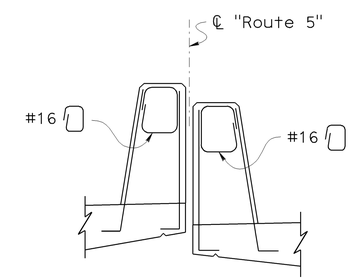


## SECTION A-A
1:20

Note:
For other details not shown see A76A and "TYPICAL SECTION NO. 2" sheet

Clearance to reinforcing steel in barrier to be 25 mm, except as noted.

Indicates 3 mm Bond Breaker

NOTE:
THE CONTRACTOR SHALL VERIFY ALL CONTROLLING FIELD DIMENSIONS BEFORE ORDERING OR FABRICATING ANY MATERIAL.

Caltrans Metric

| | BY | CHECKED |
|---|---|---|
| DESIGN | Hogni Setberg | Andrew Rittenhouse |
| DETAILS | Herman Mauroschadt | Andrew Rittenhouse |
| QUANTITIES | Gabriel Galo | Herman Mauroschadt |

STATE OF CALIFORNIA
DEPARTMENT OF TRANSPORTATION

DIVISION OF ENGINEERING SERVICES
STRUCTURE DESIGN
DESIGN BRANCH 15

CU 07
EA 121841

BRIDGE NO. 53-1077
KILOMETER POST 44.32

SONORA AVENUE UC WIDEN & RETROFIT
BARRIER TRANSITION DETAILS

ALL DIMENSIONS ARE IN MILLIMETERS UNLESS OTHERWISE SHOWN

ORIGINAL SCALE IN MILLIMETERS FOR REDUCED PLANS 0 10 20 30 40 50 60 70 80 90 100

DISREGARD PRINTS BEARING EARLIER REVISION DATES

REVISION DATES: 5-29-07 2-11-08 9-4-08 11-14-08 12-12-08 2-26-09 5-01-09

SHEET 48 OF 59

FILE => 53-1077r1-u-btdet.dgn

STRUCTURES DESIGN DETAIL SHEET (METRIC) (REV.03-17-04)

USERNAME => trmikesl DATE PLOTTED => 12-JUN-2009 TIME PLOTTED => 09:17

| DIST | COUNTY | ROUTE | KILOMETER POST TOTAL PROJECT | SHEET No | TOTAL SHEETS |
|---|---|---|---|---|---|
| 07 | LA | 5 | 42.8/47.3 | 698 | 1073 |

Caltrans Metric

Andrew Rittenhouse 12-05-08
REGISTERED CIVIL ENGINEER DATE

6-8-09
PLANS APPROVAL DATE

REGISTERED PROFESSIONAL ENGINEER Andrew P. Rittenhouse No. 61006 Exp. 12-31-10 CIVIL STATE OF CALIFORNIA

The State of California or its officers or agents shall not be responsible for the accuracy or completeness of electronic copies of this plan sheet.

**TABLE OF PILE SPACING: CLASS 400 - CONCRETE PILES**

| Design H | 1800 | 2400 | 3000 | 3600 | 4200 | 4800 | 5500 | 6100 | 6700 | 7300 | 7900 | 8500 | 9100 | 9800 |
|---|---|---|---|---|---|---|---|---|---|---|---|---|---|---|
| W | 2050 | 2150 | 2250 | 2500 | 2800 | 3100 | 3350 | 3650 | 4000 | 4350 | 4950 | 5100 | 5500 | 6250 |
| C | 850 | 850 | 900 | 1000 | 1050 | 1200 | 1300 | 1450 | 1550 | 1700 | 1900 | 2050 | 2200 | 2350 |
| B | 1200 | 1300 | 1350 | 1500 | 1750 | 1900 | 2050 | 2200 | 2450 | 2650 | 3050 | 3050 | 3300 | 3900 |
| F | 450 | 450 | 450 | 550 | 550 | 600 | 750 | 850 | 900 | 900 | 1000 | 1050 | 1150 | 1200 |
| M | 400 | 400 | 450 | 550 | 600 | 750 | 850 | 1000 | 1100 | 1250 | 1450 | 1600 | 1750 | 1900 |
| N | 750 | 850 | 900 | 1050 | 1300 | 1450 | 1600 | 1750 | 2000 | 2200 | 2600 | 2600 | 2850 | 3450 |
| Row 1 | 4800 | 4200 | 3600 | 3000 | 2400 | 1950 | 1650 | 1350 | 1200 | 1200 | 1200 | 1200 | 1200 | 1200 |
| Row 2 | 7200 | 6300 | 5400 | 4500 | 4200 | 3900 | 3300 | 2700 | 2400 | 3600 | 3000 | 1800 | 1200 | 1200 |
| Row 3 | | | | | | | | | | 2400 | 1500 | 1200 | 1200 | 1800 |
| Row 4 | | | | | | | | | | | | | | 1800 |
| Configuration | I | I | I | I | I | I | I | I | I | II | II | II | II | III |

**ALTERNATIVE A: (CONSTANT TOP OF WALL THICKNESS) TABLE OF REINFORCING STEEL DIMENSIONS AND DATA**

| | Stem With Haunch | | | | | | | | | | | | | |
|---|---|---|---|---|---|---|---|---|---|---|---|---|---|---|
| Design H | 1800 | 2400 | 3000 | 3600 | 4200 | 4800 | 5500 | 6100 | 6700 | 7300 | 7900 | 8500 | 9100 | 9800 |
| Stem Batter | 0 | 100:4 | 100:4 | 100:4 | 100:4 | 100:4 | 100:4 | 100:4 | 100:4 | 100:5 | 100:6 | 100:7 | 100:8 | 100:8 |
| Stem Thickness @ Haunch | 305 | 305 | 305 | 305 | 305 | 305 | 305 | 305 | 305 | 305 | 305 | 305 | 305 | 305 |
| (a) Bars | | | | #19 @ 450 XX | #22 @ 450 XX | #25 @ 450 XX | #29 @ 450 XX | #32 @ 450 XX | #25 @ 225 X | #25 @ 225 X | #22 @ 150 X | #32 @ 300 XX | #29 @ 225 X | #36 @ 300 XX |
| X | | | | Cont | Cont | Cont | Cont | Cont | Cont | Cont | Cont | Cont | Cont | Cont |
| Y | | | | 2400 | 1950 | 2250 | 2600 | 2900 | 2900 | 3350 | 3500 | 3950 | 4250 | 4700 |
| (b) Bars | #16 @ 300 | #16 @ 300 | #16 @ 225 | #19 @ 450 XX | #22 @ 450 XX | #25 @ 450 XX | #29 @ 450 XX | #32 @ 450 XX | #25 @ 225 X | #25 @ 225 X | #22 @ 150 X | #32 @ 300 XX | #29 @ 225 X | #36 @ 300 XX |
| X | Cont | Cont | Cont | Cont | Cont | Cont | Cont | Cont | Cont | Cont | Cont | Cont | Cont | Cont |
| Y | Cont | Cont | Cont | Cont | 3200 | 4000 | 4600 | 5350 | 5950 | 6400 | 5650 | 5800 | 7800 | 7200 |
| (c) Bars | | | | | #19 @ 450 | #19 @ 450 | #19 @ 450 | #19 @ 450 | #19 @ 450 | #19 @ 450 | #19 @ 300 | #22 @ 300 | #22 @ 450 | #22 @ 300 |
| (d) Bars | #16 @ 300 | #16 @ 300 | #16 @ 300 | #16 @ 300 | #16 @ 300 | #16 @ 300 | #16 @ 225 | #16 @ 225 | #19 @ 225 | #16 @ 150 | #22 @ 225 | #22 @ 225 | #19 @ 150 | #22 @ 150 |
| Total (e) Bars | 6 #16 | 6 #16 | 6 #16 | 6 #16 | 8 #16 | 8 #16 | 10 #16 | 10 #16 | 10 #16 | 10 #16 | 12 #16 | 12 #16 | 12 #16 | 14 #16 |
| Total (f) Bars | 6 #16 | 6 #16 | 6 #16 | 6 #16 | 6 #16 | 8 #16 | 8 #16 | 8 #16 | 8 #16 | 10 #16 | 10 #16 | 10 #16 | 12 #16 | 12 #16 |

**ALTERNATIVE B: (VARIABLE TOP OF WALL THICKNESS) TABLE OF REINFORCING STEEL DIMENSIONS AND DATA**

| | Stem With Haunch | | | | | | | Stem Without Haunch | | | | | | |
|---|---|---|---|---|---|---|---|---|---|---|---|---|---|---|
| Design H | 1800 | 2400 | 3000 | 3600 | 4200 | 4800 | 5500 | 6100 | 6700 | 7300 | 7900 | 8500 | 9100 | 9800 |
| Stem Batter | 0 | 0 | 0 | 0 | 0 | 0 | 0 | 0 | 0 | 0 | 100:2 | 100:4 | 100:4 | 100:4 |
| Stem Thickness @ Top | | | | | | | | 475 | 610 | 610 | 610 | 610 | 610 | 610 |
| Stem Thickness @ Haunch | 305 | 305 | 305 | 305 | 305 | 380 | 380 | | | | | | | |
| (a) Bars | | | | #19 @ 300 XX | #16 @ 150 X | #29 @ 450 XX | #29 @ 300 XX | #29 @ 300 XX | #29 @ 300 XX | #22 @ 150 X | #22 @ 150 X | #22 @ 150 X | #29 @ 225 X | #36 @ 300 XX |
| X | | | | Cont | Cont | Cont | Cont | Cont | Cont | Cont | Cont | Cont | Cont | Cont |
| Y | | | | 1700 | 1700 | 2600 | 2600 | 2600 | 2600 | 2900 | 3350 | 3800 | 4100 | 4400 |
| (b) Bars | #16 @ 300 | #16 @ 225 | #19 @ 225 | #19 @ 300 XX | #16 @ 150 X | #29 @ 450 XX | #29 @ 300 XX | #29 @ 300 XX | #29 @ 300 XX | #22 @ 150 X | #22 @ 150 X | #22 @ 150 X | #29 @ 225 X | #36 @ 300 XX |
| X | Cont | Cont | Cont | Cont | Cont | Cont | Cont | Cont | Cont | Cont | Cont | Cont | Cont | Cont |
| Y | Cont | Cont | Cont | Cont | Cont | 3500 | 3500 | 3700 | 3700 | 5350 | 6100 | 6550 | 7300 | 7300 |
| (c) Bars | | | | | | #22 @ 300 | #22 @ 300 | #22 @ 300 | #22 @ 300 | #19 @ 300 | #19 @ 300 | #19 @ 300 | #22 @ 450 | #22 @ 300 |
| (d) Bars | #16 @ 300 | #16 @ 300 | #16 @ 300 | #16 @ 300 | #16 @ 300 | #16 @ 300 | #16 @ 225 | #16 @ 225 | #19 @ 225 | #16 @ 150 | #22 @ 225 | #22 @ 225 | #19 @ 150 | #22 @ 150 |
| Total (e) Bars | 6 #16 | 6 #16 | 6 #16 | 6 #16 | 8 #16 | 8 #16 | 10 #16 | 10 #16 | 10 #16 | 10 #16 | 12 #16 | 12 #16 | 12 #16 | 14 #16 |
| Total (f) Bars | 6 #16 | 6 #16 | 6 #16 | 6 #16 | 6 #16 | 8 #16 | 8 #16 | 8 #16 | 8 #16 | 10 #16 | 10 #16 | 10 #16 | 12 #16 | 12 #16 |

## DESIGN DATA

**DESIGN:** Load Factor Design (LFD)

**CONCRETE:** Reinforced Concrete, f'c = 25 MPa
fy = 420 MPa

**LOADING CASE:**
Level ground with 11.5 KPa Live Load Surcharge and 4875 mm Soundwall

Seismic Load = 0.3 Dead Load
Wind Load = 1435 Pa
Dead Load of Soundwall = 20.6 kN/m
Dead Load of Barrier = 5.4 kN/m

**SEISMIC LOAD: SOIL**
Kh = 0.3g
Kv = 0.0
Kae : Mononobe-Okabe Method

**SOIL:** $\emptyset = 34°$ $\gamma = 19$ kN/m$^3$
Equivalent fluid pressure:
= 5.6 KPa/m for determination of toe pressure
= 4.2 KPa/m for determination of heel pressure

**LOAD COMBINATIONS:**
Group A : $\beta$D + 1.7 E + 1.7 SC
Group B : $\beta$D + 1.7 E + 1.3 W
Group C (stem) : 1.0 D + 1.0 E + 1.0 EQD + 1.0 EQE
Group C (footing) : D + PYM

Where : $\beta$ = 1.0 or 1.3 whichever controls design
D = Dead Load
E = Lateral Earth Pressure
SC = Live Load Surcharge
W = Wind Load
EQD = Seismic Dead Load
EQE = Seismic Lateral Earth Pressure
PYM = Probable Yield Moment (1.3 x Nominal Yield Moment of Stem)

**STRENGTH REDUCTION FACTORS:**
Groups A & B : $\emptyset$ = 0.75
Group C : $\emptyset$ = 1.0

1 **LATERAL RESISTANCE OF EACH PILE:**
Groups A & B : = 130 kN
Group C : = 175 kN

## GENERAL NOTES

1. Class 400 kN-concrete piles were used for the design.
2. Pile batter shown are 1:3.
3. Minimum distance between center pile and edge of footing is 450 mm. 1
4. Maximum spacing between piles is shown in the table. Reduce to suit the length of footing.
5. Minimum distance between any two piles is 900 mm.

**SPECIAL DETAILS**

ALL DIMENSIONS ARE IN MILLIMETERS UNLESS OTHERWISE SHOWN

1 Modified note

STANDARD DRAWING

| RELEASE DATE | REVISED | DESIGN | BY Madon Sah | CHECKED Overcomer Hor | RELEASED BY |
|---|---|---|---|---|---|
| | | DETAILS | BY A R Dudsak | CHECKED Neelima Patil | |
| FILE NO. | xs14-320-1 | SUBMITTED | BY Overcomer Hor | DRAWING DATE 3/01 | OFFICE CHIEF |

STATE OF CALIFORNIA
DEPARTMENT OF TRANSPORTATION

DIVISION OF ENGINEERING SERVICES

BRIDGE NO. 53-1077
KILOMETER POST 44.32

SONORA AVENUE UC WIDEN & RETROFIT
RETAINING WALL TYPE 1 SWBP - DETAILS NO. 1

DS OSD 2147A (METRIC) (REV. X/XX/XX)

ORIGINAL SCALE IN MILLIMETERS FOR REDUCED PLANS 0 10 20 30 40 50 60 70 80 90 100

CU 07
EA 121841

DISREGARD PRINTS BEARING EARLIER REVISION DATES

REVISION DATES (PRELIMINARY STAGE ONLY) 10-22-07 11-24-08

SHEET 49 OF 59

FILE => 53-1077rl-xs14-320-1.dgn

USERNAME => trmikes1 DATE PLOTTED => 12-JUN-2009 TIME PLOTTED => 09:17

| DIST | COUNTY | ROUTE | KILOMETER POST TOTAL PROJECT | SHEET No | TOTAL SHEETS |
|---|---|---|---|---|---|
| 07 | LA | 5 | 42.8/47.3 | 699 | 1073 |

Caltrans Metric

Andrew Rittenhouse 12-05-08
REGISTERED CIVIL ENGINEER DATE

6-8-09
PLANS APPROVAL DATE

REGISTERED PROFESSIONAL ENGINEER Andrew P. Rittenhouse No. 61006 Exp. 12-31-10 CIVIL STATE OF CALIFORNIA

The State of California or its officers or agents shall not be responsible for the accuracy or completeness of electronic copies of this plan sheet.

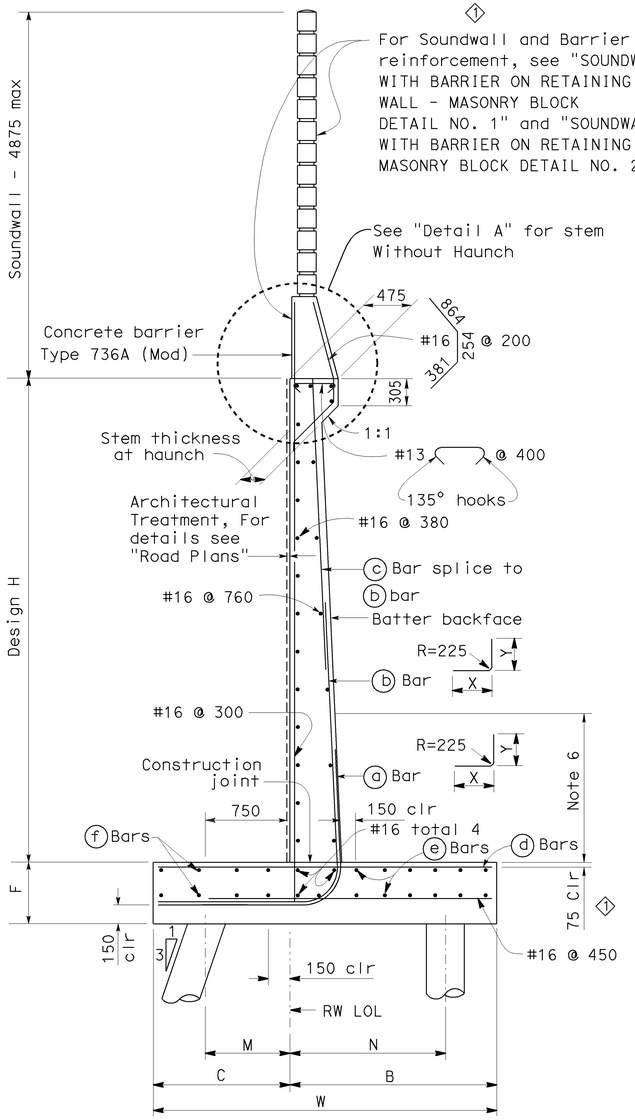


## 400 kN PILE FOOTING SECTION

NO SCALE

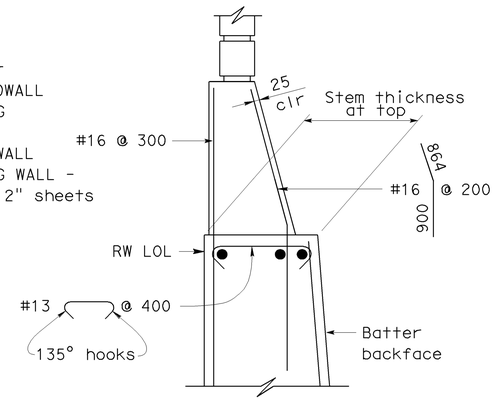


## DETAIL A WITHOUT HAUNCH

NO SCALE

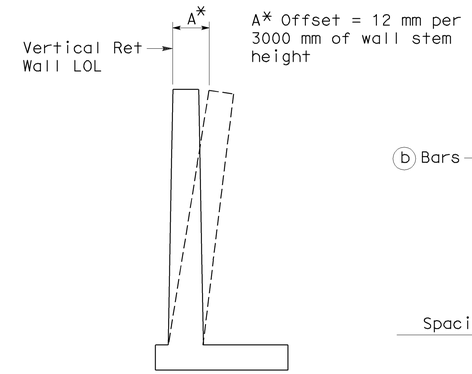


A* Offset = 12 mm per 3000 mm of wall stem height

## WALL OFFSET

NO SCALE

Values for offsetting forms to be determined by engineer

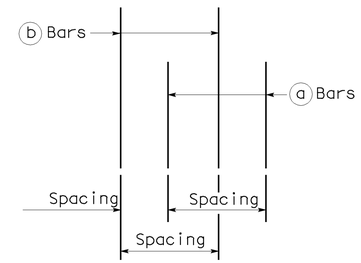


## DETAIL B

NO SCALE

## GENERAL NOTES

6. Limit of no splicing for rebars = H/3
7. For soundwall and retaining wall architectural treatment, see details elsewhere in project plans.
8. For details not shown and drainage notes, see B3-8
9. For drainage details see "STRUCTURE APPROACH DRAINAGE DETAILS" sheet
10. Footing cover, 450 mm minimum.
11. Increasing stem thickness not permitted.

* = a and b bars are bundled together.

** = Alternate a and b bars as shown in "DETAIL A".

Cont = Continuous

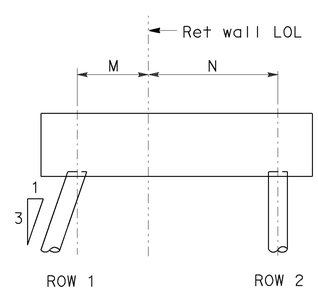


## CONFIGURATION I

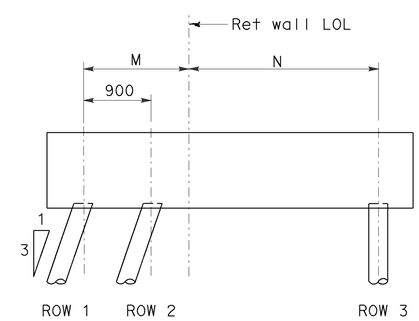


## CONFIGURATION II

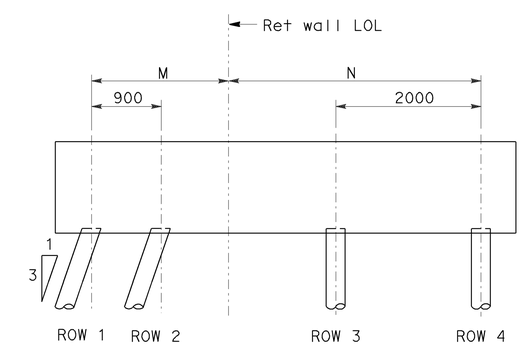


## CONFIGURATION III

## SPECIAL DETAILS

ALL DIMENSIONS ARE IN MILLIMETERS UNLESS OTHERWISE SHOWN

| STANDARD DRAWING | | | | |
|---|---|---|---|---|
| RELEASE DATE REVISED | DESIGN | BY Madon Sah | CHECKED Overcomer Hor | RELEASED BY |
| FILE NO. xs14-320-2 | DETAILS | BY A R Dudsak | CHECKED J C Moese | OFFICE CHIEF |
| | SUBMITTED | BY Overcomer Hor | DRAWING DATE 3/01 | |

DS OSD 2147A (METRIC) (REV. X/XX/XX)

1. Modified detail
2. Changed Note numbers
3. Modified note

STATE OF CALIFORNIA DEPARTMENT OF TRANSPORTATION

DIVISION OF ENGINEERING SERVICES

CU 07
EA 121841

BRIDGE NO. 53-1077
KILOMETER POST 44.32

SONORA AVENUE UC WIDEN & RETROFIT
RETAINING WALL TYPE 1 SWBP - DETAILS NO. 2

ORIGINAL SCALE IN MILLIMETERS FOR REDUCED PLANS 0 10 20 30 40 50 60 70 80 90 100

DISREGARD PRINTS BEARING EARLIER REVISION DATES

REVISION DATES (PRELIMINARY STAGE ONLY) 10-25-07 2-14-08 10-14-08 11-14-08 1-14-09 1-28-09 2-25-09

SHEET 50 OF 59

FILE => 53-1077rl-xs14-320-2.dgn

USERNAME => rrmitres; DATE PLOTTED => 12-JUN-2009 TIME PLOTTED => 09:17

| DIST | COUNTY | ROUTE | KILOMETER POST TOTAL PROJECT | SHEET No | TOTAL SHEETS |
|---|---|---|---|---|---|
| 07 | LA | 5 | 42.8/47.3 | 700 | 1073 |

Caltrans Metric

Andrew Rittenhouse 12-05-08
REGISTERED CIVIL ENGINEER DATE

6-8-09
PLANS APPROVAL DATE

REGISTERED PROFESSIONAL ENGINEER Andrew P. Rittenhouse No. 61006 Exp. 12-31-10 CIVIL STATE OF CALIFORNIA

The State of California or its officers or agents shall not be responsible for the accuracy or completeness of electronic copies of this plan sheet.

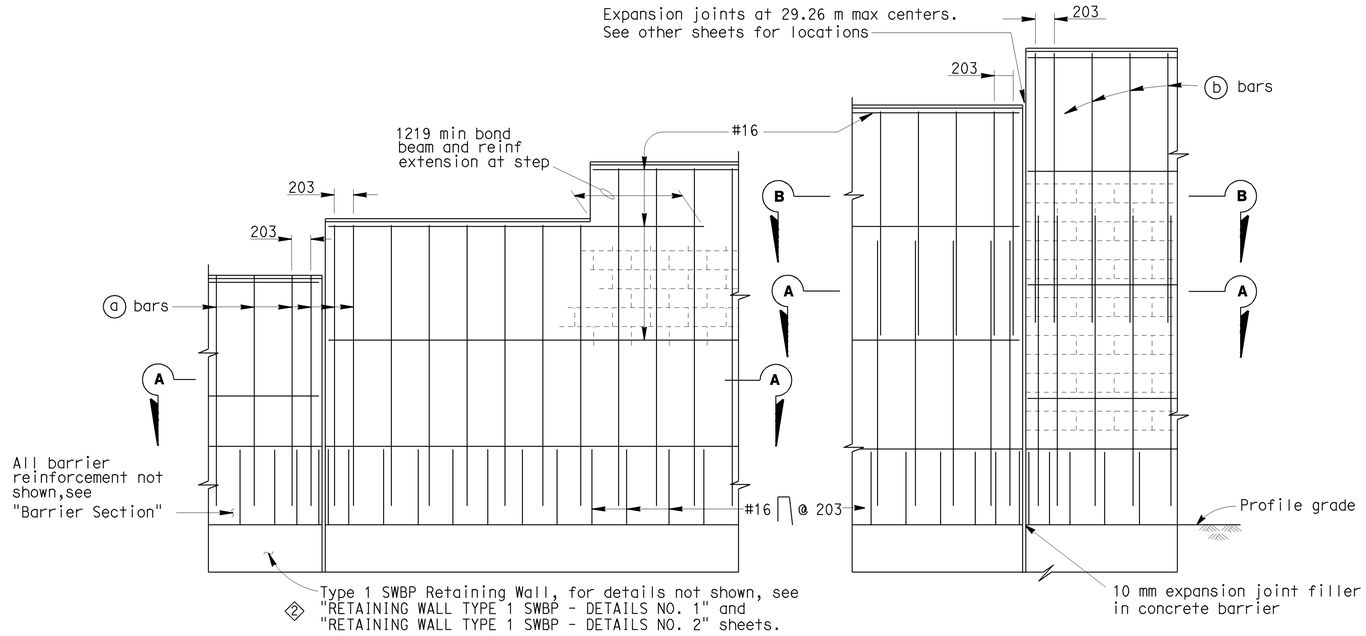


## PART ELEVATIONS

## SOUNDWALL REINFORCEMENT TABLE

| Maximum H | ⓐ bars @ 406 max | ⓑ bars @ 406 max | "y" | f'm ( MPa ) | Compressive Strength of CMU ( MPa ) | Maximum H |
|---|---|---|---|---|---|---|
| 1930 | #13 | ——— | ——— | 10.34 | 13.1 | 1930 |
| 2540 | #13 | ——— | ——— | 10.34 | 13.1 | 2540 |
| 3150 | #13 | ——— | ——— | 10.34 | 13.1 | 3150 |
| 3759 | #16 | #13 | 1524 | 10.34 | 13.1 | 3759 |
| 4369 | #19 | #13 | 2134 | 10.34 | 13.1 | 4369 |
| 4978 | #19 | #13 | 2743 | 17.24 | 25.6 | 4978 |

Note I : For details not shown,see "SOUNDWALL WITH BARRIER ON RETAINING WALL - MASONRY BLOCK DETAILS NO. 2" sheet.

Note II : Slope ground at traffic side of barrier to drain. Maximum slope ±10%.

Note III: See "SOUNDWALL MASONRY BLOCK - MISCELLANEOUS DETAILS" sheet for other details.

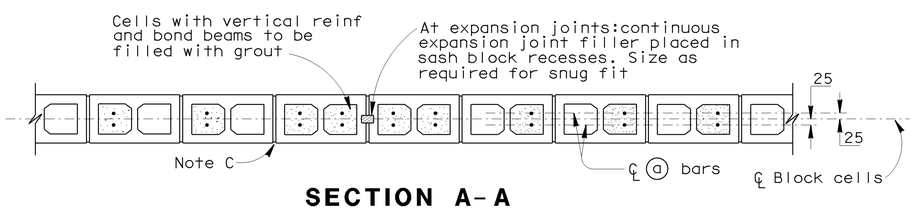


## SECTION A-A

For details not shown,see other details

**H=1930 THRU H=3150**

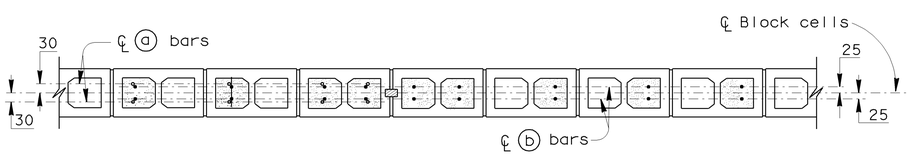


## SECTION A-A

## SECTION B-B

For details not shown,see other details

**H=3759 THRU H=4978**

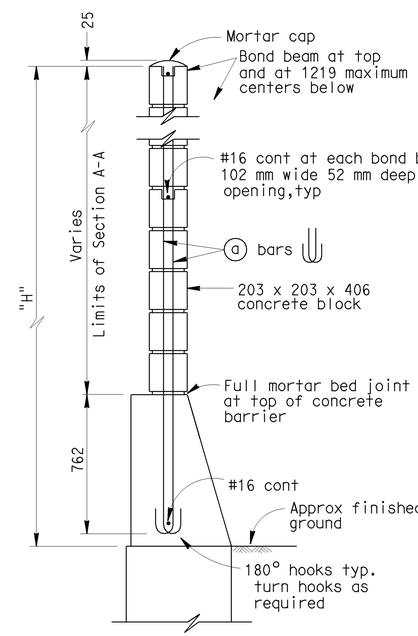


**H=1930 THRU H=3150**

For details not shown,see H=3759 thru H=4978

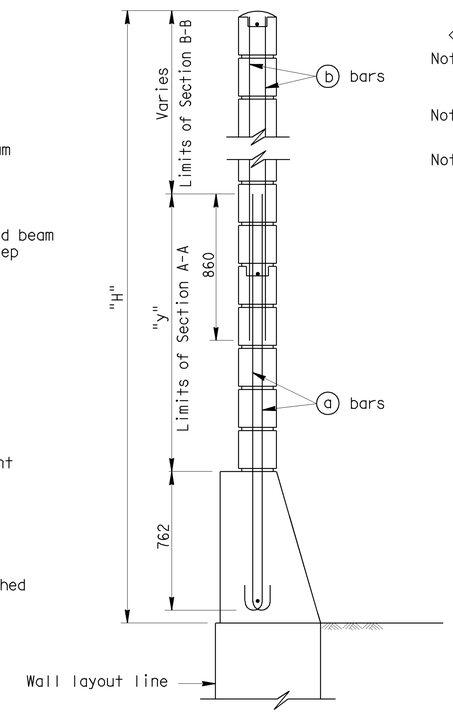


**H=3759 THRU H=4978**

For details not shown,see H=1930 thru H=3150

## TYPICAL SECTIONS

## GENERAL NOTES

Note A: For type of block and joint finish, see other sheets.

Note B: When blocks are laid in stacked bond, ladder type, galvanized joint reinforcement shall be provided. A minimum of 2-3.76 mm wire continuous at 1219 mm maximum to be used. Locate reinforcement in joints that are at the approximate midpoint between bond beams.

Note C: Horizontal joints shall be tooled concave or may be weathered.
Vertical joints shall be tooled concave or may be raked.

Note D: For intermediate wall heights that are between the "H's" given. Use the tabular information for the next higher "H".

Note E: Masonry strengths are listed in "Soundwall Reinforcement Table".

Note F: Class 2 concrete to be used for the barrier.

## SPECIAL DETAILS

NO SCALE

ALL DIMENSIONS ARE IN MILLIMETERS UNLESS OTHERWISE SHOWN

| STANDARD DRAWING | | | | |
|---|---|---|---|---|
| RELEASE DATE REVISED | DESIGN | BY D. DUNRUD | CHECKED W.C. WALKER | RELEASED BY |
| FILE NO. xs15-130-1 | DETAILS | BY R. YEE | CHECKED W.C. WALKER | OFFICE CHIEF |
| | SUBMITTED | BY D. DUNRUD | DRAWING DATE 11/94 | |

1 Modified Title
2 Modified note

STATE OF CALIFORNIA
DEPARTMENT OF TRANSPORTATION

DIVISION OF ENGINEERING SERVICES

BRIDGE NO. 53-1077
KILOMETER POST 44.32

SONORA AVENUE UC WIDEN & RETROFIT
1 SOUNDWALL WITH BARRIER ON RETAINING WALL - MASONRY BLOCK DETAILS NO. 1

DS OSD 2147A (METRIC) (REV. 2/25/97)

ORIGINAL SCALE IN MILLIMETERS FOR REDUCED PLANS 0 10 20 30 40 50 60 70 80 90 100

CU 07
EA 121841

DISREGARD PRINTS BEARING EARLIER REVISION DATES

REVISION DATES (PRELIMINARY STAGE ONLY) 10-25-07 2-11-08 11-14-08 2-25-09

SHEET 51 OF 59

FILE => 53-1077rl-xs15-130-1.dgn

USERNAME => rtmikest DATE PLOTTED => 12-JUN-2009 TIME PLOTTED => 10:04