DIST	COUNTY	ROUTE	POST MILES TOTAL PROJECT	SHEET No.	TOTAL SHEETS
07	LA	10	37.2/42.4	2201	2313

REGISTERED CIVIL ENGINEER 10-1-14 DATE

6-1-15
PLANS APPROVAL DATE

REGISTERED PROFESSIONAL ENGINEER Gabriel J. Galo No. 52288 Exp. 12-31-14 CIVIL STATE OF CALIFORNIA

The State of California or its officers or agents shall not be responsible for the accuracy or completeness of scanned copies of this plan sheet.

INDEX TO PLANS

SHEET NO.	TITLE
1.	GENERAL PLAN NO. 1
2.	GENERAL PLAN NO. 2
3.	GENERAL PLAN NO. 3
4.	INDEX TO PLANS
5.	FOUNDATION PLAN NO. 1
6.	FOUNDATION PLAN NO. 2
7.	FOUNDATION PLAN NO. 3
8.	FOUNDATION PLAN NO. 4
9.	STRUCTURE PLAN NO. 1
10.	STRUCTURE PLAN NO. 2
11.	STRUCTURE PLAN NO. 3
12.	STRUCTURE PLAN NO. 4
13.	STRUCTURE PLAN NO. 5
14.	STRUCTURE PLAN NO. 6
15.	STRUCTURE PLAN NO. 7
16.	STRUCTURE PLAN NO. 8
17.	STRUCTURE PLAN NO. 9
18.	SOIL NAIL DETAILS NO. 1
19.	SOIL NAIL DETAILS NO. 2
20.	SOIL NAIL DETAILS NO. 3
21.	SOIL NAIL DETAILS NO. 4
22.	SOIL NAIL DETAILS NO. 5
23.	SOIL NAIL DETAILS NO. 6
24.	SOIL NAIL DETAILS NO. 7
25.	SOIL NAIL DETAILS NO. 8
26.	SOIL NAIL DETAILS NO. 9
27.	SOIL NAIL DETAILS NO. 10
28.	SOIL NAIL DETAILS NO. 11
29.	SOIL NAIL DETAILS NO. 12
30.	SOIL NAIL DETAILS NO. 13
31.	SOIL NAIL DETAILS NO. 14
32.	DRAINAGE DETAILS NO. 1
33.	DRAINAGE DETAILS NO. 2
34.	ARCHITECTURAL DETAILS NO. 1
35.	ARCHITECTURAL DETAILS NO. 2
36.	ARCHITECTURAL DETAILS NO. 3
37.	ARCHITECTURAL DETAILS NO. 4
38.	ARCHITECTURAL DETAILS NO. 5
39.	ARCHITECTURAL DETAILS NO. 6
40.	ARCHITECTURAL DETAILS NO. 7
41.	ARCHITECTURAL DETAILS NO. 8
42.	ARCHITECTURAL DETAILS NO. 9
43.	ARCHITECTURAL DETAILS NO. 10
44.	LOG OF TEST BORINGS 1 OF 1

STANDARD PLANS DATED 2010

A10A	ABBREVIATIONS (SHEET 1 OF 2)
RSP A10B	ABBREVIATIONS (SHEET 2 OF 2)
A10C	LINES AND SYMBOLS (SHEET 1 OF 3)
A10D	LINES AND SYMBOLS (SHEET 2 OF 3)
A10E	LINES AND SYMBOLS (SHEET 3 OF 3)
A10F	LEGEND-SOIL (SHEET 1 OF 2)
A10G	LEGEND-SOIL (SHEET 2 OF 2)
A10H	LEGEND - ROCK
A76A	CONCRETE BARRIER TYPE 60
A85	CHAIN LINK FENCE
RSP B11-47	CABLE RAILING
B15-6	SOUND WALL MASONRY BLOCK ON TYPE 736S/SV BARRIER DETAILS (1)

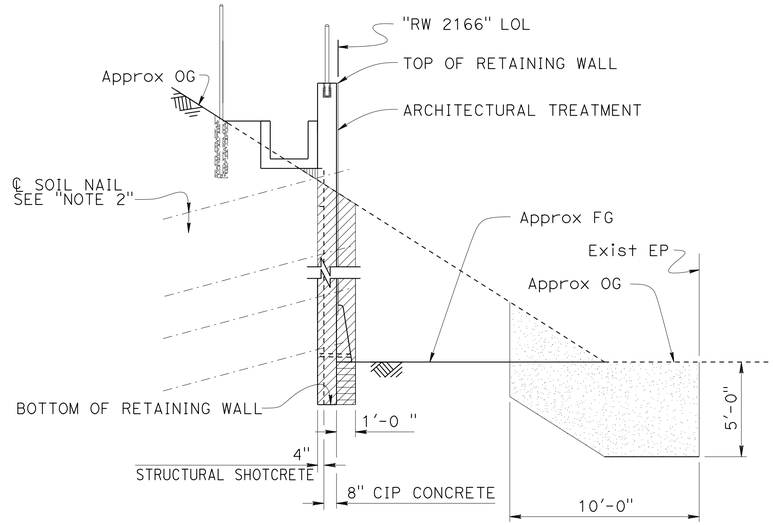

TYPICAL SECTION PAY LIMITS FOR STRUCTURE EXCAVATION AND BACKFILL

NO SCALE

Legend:

- Denotes Structure Excavation (Soil Nail Wall) unless otherwise noted below
- Denotes Structure Backfill (Soil Nail Wall)
- Denotes Structure Backfill (Slurry Cement)

Note:
Any Structure Excavation (Soil Nail Wall) indicated by shall be considered Structure Excavation (Type Y-1) (Aerially Deposited Lead) when it is located within the zone designated by

STANDARD PLAN SHEET No.

DETAIL No.

GENERAL NOTES

DESIGN:

Bridge Design Specifications - April 2000 (1996 AASHTO with Revisions by CALTRANS)
Federal Highway Administration Publication Geotechnical Engineering Circular No. 7
Soil Nail Walls, Publication No. FHWA-IF-03-017

LIVE LOADING:
No Live Loading

REINFORCED CONCRETE:
fy = 60 ksi (Yield Strength of Reinforcement)
f'c = 4.0 ksi (Compressive Strength at 28 days)

STRUCTURAL SHOTCRETE:
f'c = 3.6 ksi
fy = 65 ksi (ASTM A185 plain welded wire reinforcement)
fy = 60 ksi (ASTM A706 waler bar reinforcement)

STRUCTURAL PLATE:
ASTM Designation: A36/A 36M, fy = 36 ksi

CONCRETE ANCHORS ON BEARING PLATES:
ASTM Designation: A307, fy = 60 ksi

SOIL NAILS:
ASTM Designation: A615/A615M, fy = 75 ksi

SOIL PARAMETERS - REFER TO ASSOCIATED GEOTECHNICAL REPORT

TABLE - COMPONENTS

		Punching Shear (kips)		Max Nail Spacing (ft) x (ft)	Pullout (lb/ft)	(ft)	Shotcrete (Initial Facing) (in)		Waler Bars		C-I-P Concrete (Final Facing) (in)	Bar Reinforcement		Bearing Plate
Wall Station	Nail Size	Static	Seismic	Vertical x Horizontal	Resistance	Minimum Length	t	Wire Mesh (wwr)	Horizontal	Vertical	t	Horizontal	Vertical	1" x size (in)
65+38.78 to 66+00.00	#8	30	38	4 x 4	2950	15	4	4x4-w4.0xw4.0	#4	#4	8	#8@18	#7@18	12 x 12
66+00.00 to 67+00.00	#8	30	38	4 x 4	2950	25	4	4x4-w4.0xw4.0	#4	#4	8	#8@18	#7@18	12 x 12
67+00.00 to 69+50.00	#9	30	38	4 x 4	3620	40	4	4x4-w4.0xw4.0	#4	#4	8	#8@18	#7@18	12 x 12
69+50.00 to 71+00.00	#10	30	38	4 x 4	4200	50	4	4x4-w4.0xw4.0	#4	#4	8	#8@18	#7@18	12 x 12
71+00.00 to 73+00.00	#10	30	38	4 x 4	4200	50	4	4x4-w4.0xw4.0	#4	#4	8	#8@18	#7@18	12 x 12
73+00.00 to 75+70.78	#10	30	38	4 x 4	4200	50	4	4x4-w4.0xw4.0	#4	#4	8	#8@18	#7@18	12 x 12
75+70.78 to 77+20.00	#10	30	38	4 x 3	4200	50	4	4x4-w4.0xw4.0	#4	#4	8	#8@18	#7@18	12 x 12
77+20.00 to 78+65.00	#9	30	38	3 x 3	4200	30	4	4x4-w4.0xw4.0	#4	#4	8	#8@18	#7@18	12 x 12
78+65.00 to 79+54.78	#9	30	38	3 x 3	4200	25	4	4x4-w4.0xw4.0	#4	#4	8	#8@18	#7@18	12 x 12
79+54.78 to 84+89.67	#9	30	38	4 x 4 & VARIES ***	3200	20 & VARIES **	4	4x4-w4.0xw4.0	#4* #5*	#4* #5*	8	#8@18	#7@18	12 x 12

Note:
1. Pullout resistance of the Soil Nail must be tested before soil nails can be accepted through verification and proof test in accordance with the test procedures of the Special Provisions.
2. Inclination angle of nails is 15 degrees, measured from horizontal.

* For Waler Bars location, see "SOIL NAIL DETAILS NO. 14" sheet.
** For additional length, see "STRUCTURE PLAN NO. 9" sheet.
*** For additional spacing, see "SOIL NAIL DETAILS NO. 5" sheet.

	BY	CHECKED
DESIGN	Fred Feng	R. Novik\J. Higareda
DETAILS	H. Mauroschadt\S. Cholda	R. Novik\J. Higareda
QUANTITIES	Fred Feng	Ruslan Novik

STATE OF CALIFORNIA
DEPARTMENT OF TRANSPORTATION

DIVISION OF ENGINEERING SERVICES
STRUCTURE DESIGN
DESIGN BRANCH 15

BRIDGE NO. 53E0315
POST MILE 41.01

RETAINING WALL NO. 2166
INDEX TO PLANS

STRUCTURES DESIGN DETAIL SHEET (ENGLISH) (REV. 09-01-10)

ORIGINAL SCALE IN INCHES FOR REDUCED PLANS 0 1 2 3

UNIT: 3604
PROJECT NUMBER & PHASE: 0713000007
CONTRACT NO.: 07-1193U1

DISREGARD PRINTS BEARING EARLIER REVISION DATES

REVISION DATES 02-06-13 9-11-14 02-06-15 02-10-15

SHEET 4 OF 44

FILE => 53e0315-a-itp01.dgn

USERNAME => s125624 DATE PLOTTED => 18-MAY-2015 TIME PLOTTED => 16:36

DIST	COUNTY	ROUTE	POST MILES TOTAL PROJECT	SHEET No.	TOTAL SHEETS
07	LA	10	37.2/42.4	2202	2313

REGISTERED CIVIL ENGINEER 10-1-14 DATE

6-1-15
PLANS APPROVAL DATE

REGISTERED PROFESSIONAL ENGINEER
Gabriel J. Galo
No. 52288
Exp. 12-31-14
CIVIL
STATE OF CALIFORNIA

The State of California or its officers or agents shall not be responsible for the accuracy or completeness of electronic copies of this plan sheet.

CURVE DATA

No.	R	Δ	T	L
Ⓐ	4200.00	15°37′59.62"	576.57	1145.98
Ⓑ	3000.00	30°05′29.5"	806.42	1575.59
Ⓒ	4294.89	01°40′01"	62.48	124.95
Ⓓ	2898.22	26°56′58"	694.45	1363.19

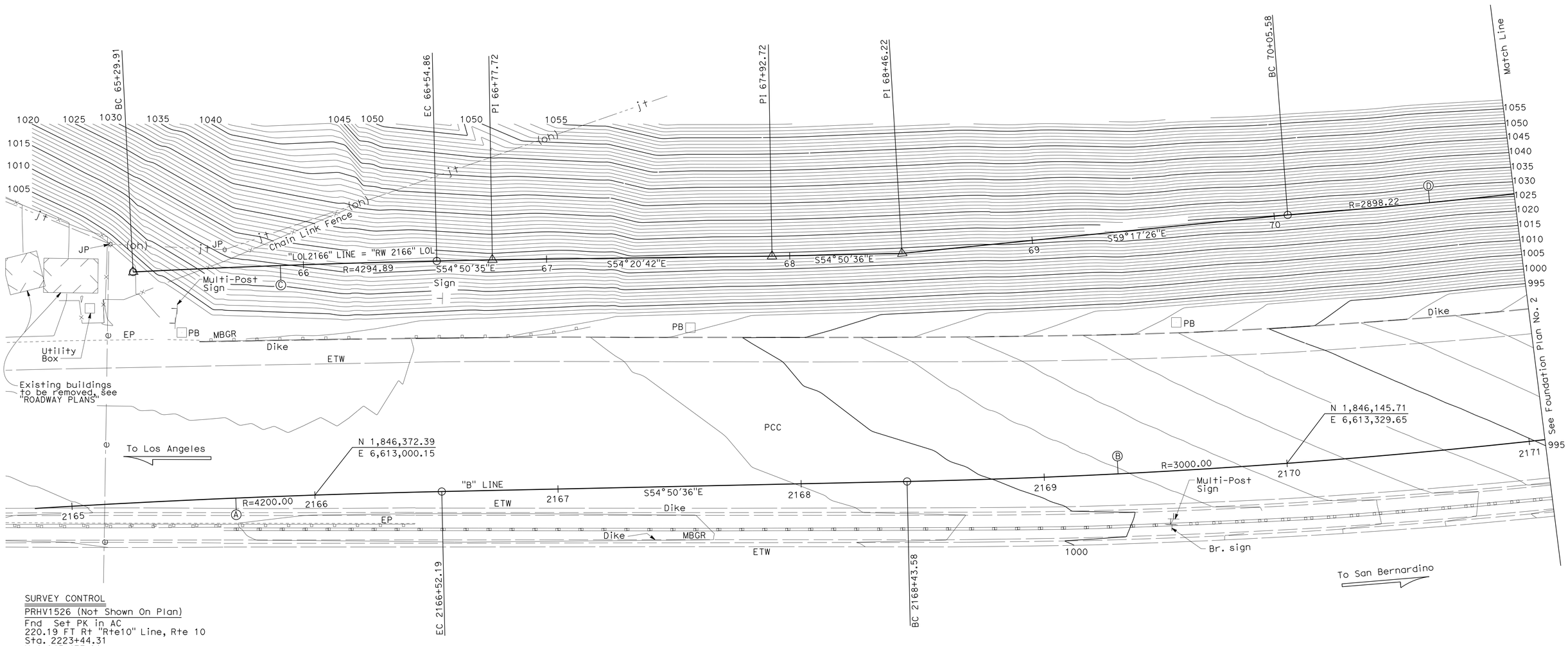

SURVEY CONTROL

PRHV1526 (Not Shown On Plan)
Fnd Set PK in AC
220.19 FT Rt "Rte10" Line, Rte 10
Sta. 2223+44.31
N 1,845,473.91
E 6,618,604.71
Elev = 738.25

PRHV1527 (Not Shown On Plan)
Fnd L&T in TC
170.05 FT Lt "Rte10" Line, Rte 10
Sta. 2223+76.72
N 1,845,865.25
E 6,618,590.63
Elev = 748.86

Note:
Utility Lines Are Per District Utility Plan

PRELIMINARY INVESTIGATION SECTION

SCALE	VERT.DATUM NAVD88	PHOTOGRAMMETRY AS OF: 02/2008			
1"=20′	HORZ.DATUM NAD83	SURVEYED	BY District 04/2008	CHECKED	BY C.Fassett 05/2011
ALIGNMENT TIES Dist. Traverse Sheet		DRAFTED	BY S. Zheng 05/2011	CHECKED	BY T.Schmalz 05/2011

DESIGN	BY F. Feng	CHECKED	R. Novik\J. Higareda
DETAILS	BY S. Cholda	CHECKED	R. Novik\J. Higareda
QUANTITIES	BY F. Feng	CHECKED	R. Novik

STATE OF CALIFORNIA
DEPARTMENT OF TRANSPORTATION

DIVISION OF ENGINEERING SERVICES
STRUCTURE DESIGN
DESIGN BRANCH 15

BRIDGE NO. 53E0315
POST MILE 40.99

RETAINING WALL NO. 2166
FOUNDATION PLAN NO. 1

STRUCTURES FOUNDATION PLAN SHEET (ENGLISH) (REV. 09-01-10)

ORIGINAL SCALE IN INCHES FOR REDUCED PLANS 0 1 2 3

UNIT: 3646
PROJECT NUMBER & PHASE: 0713000007 1
CONTRACT NO.: 07-1193U1

DISREGARD PRINTS BEARING EARLIER REVISION DATES

REVISION DATES: 5/31/2001 01/28/14 02/05/14 03-04-14

SHEET 5 OF 44

FILE => 53e0315-b-fpl01_1193u.dgn

USERNAME => s125624 DATE PLOTTED => 18-MAY-2015 TIME PLOTTED => 16:36

DIST	COUNTY	ROUTE	POST MILES TOTAL PROJECT	SHEET No.	TOTAL SHEETS
07	LA	10	37.2/42.4	2203	2313

REGISTERED CIVIL ENGINEER 10-1-14 DATE

6-1-15
PLANS APPROVAL DATE

REGISTERED PROFESSIONAL ENGINEER
Gabriel J. Galo
No. 52288
Exp. 12-31-14
CIVIL
STATE OF CALIFORNIA

The State of California or its officers or agents shall not be responsible for the accuracy or completeness of electronic copies of this plan sheet.

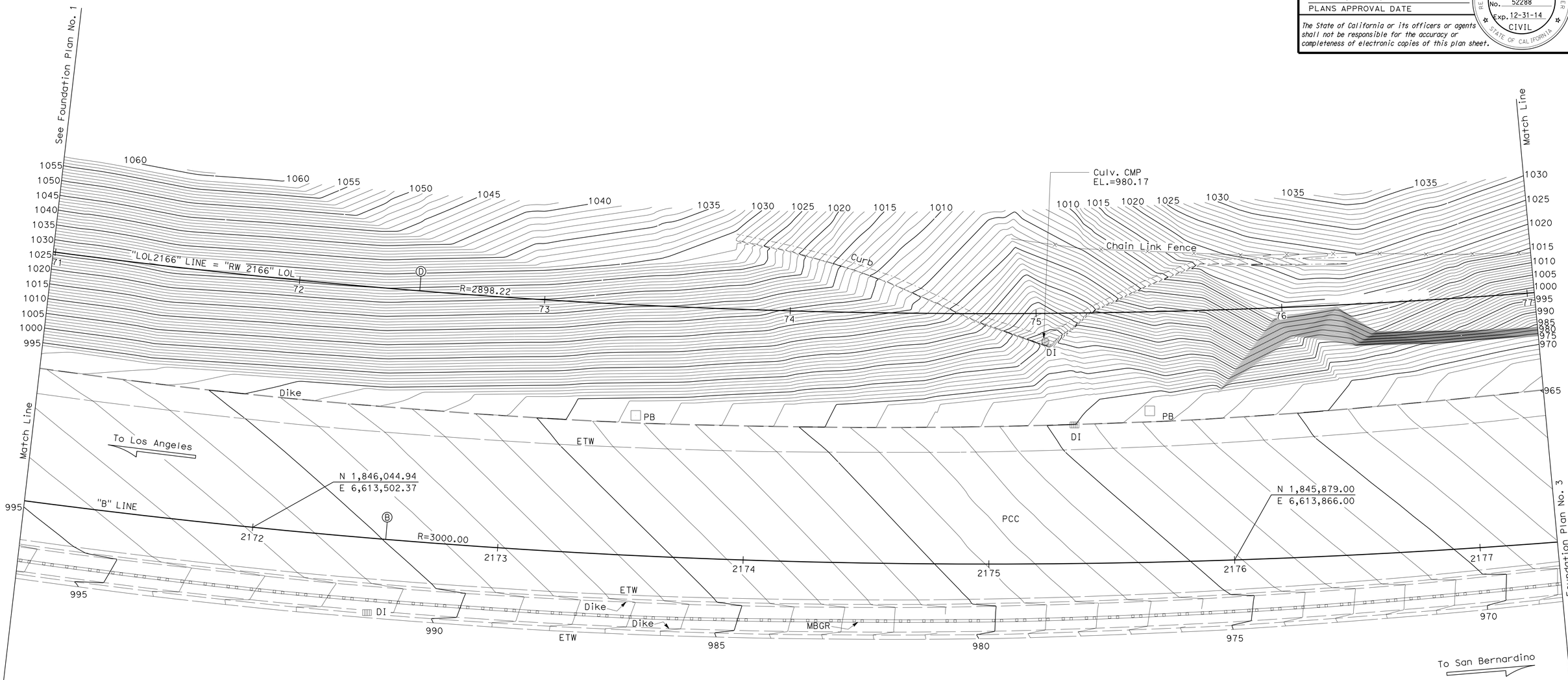

PRELIMINARY INVESTIGATION SECTION							
SCALE 1"=20'	VERT.DATUM NAVD88	PHOTOGRAMMETRY AS OF: 02/2008					
	HORZ.DATUM NAD83	SURVEYED	BY District	04/2008	CHECKED	BY C.Fassett	05/2011
ALIGNMENT TIES Dist. Traverse Sheet		DRAFTED	BY S. Zheng	05/2011	CHECKED	BY T.Schmalz	05/2011

STRUCTURES FOUNDATION PLAN SHEET (ENGLISH) (REV. 09-01-10)

DESIGN	BY F. Feng	CHECKED R. Novik\J. Higareda
DETAILS	BY S. Cholda	CHECKED R. Novik\J. Higareda
QUANTITIES	BY F. Feng	CHECKED R. Novik

ORIGINAL SCALE IN INCHES FOR REDUCED PLANS 0 1 2 3

STATE OF CALIFORNIA
DEPARTMENT OF TRANSPORTATION

DIVISION OF ENGINEERING SERVICES
STRUCTURE DESIGN
DESIGN BRANCH 15

BRIDGE NO. 53E0315
POST MILE 40.99

RETAINING WALL NO. 2166
FOUNDATION PLAN NO. 2

UNIT: 3646
PROJECT NUMBER & PHASE: 0713000007 1 CONTRACT NO.: 07-1193U1

DISREGARD PRINTS BEARING EARLIER REVISION DATES

REVISION DATES: 5/31/2011 01/28/14 02-05-14 02-21-14

SHEET 6 OF 44

FILE => 53e0315-b-fp102_1193u.dgn

USERNAME => s128624 DATE PLOTTED => 18-MAY-2015 TIME PLOTTED => 16:36

DIST	COUNTY	ROUTE	POST MILES TOTAL PROJECT	SHEET No.	TOTAL SHEETS
07	LA	10	37.2/42.4	2204	2313

REGISTERED CIVIL ENGINEER — DATE 10-1-14

6-1-15
PLANS APPROVAL DATE

REGISTERED PROFESSIONAL ENGINEER — Gabriel J. Galo — No. 52288 — Exp. 12-31-14 — CIVIL — STATE OF CALIFORNIA

The State of California or its officers or agents shall not be responsible for the accuracy or completeness of electronic copies of this plan sheet.

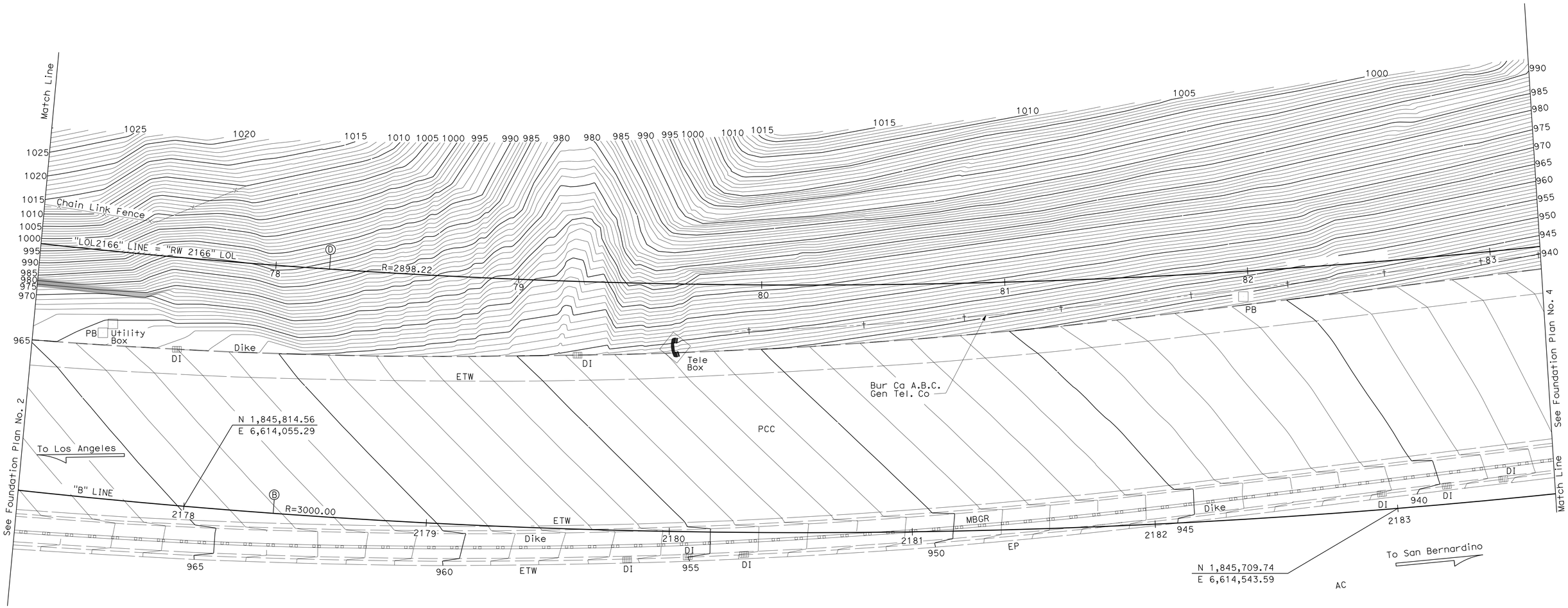

PRELIMINARY INVESTIGATION SECTION									
SCALE 1"=20'	VERT.DATUM NAVD88	PHOTOGRAMMETRY AS OF: 02/2008							
	HORZ.DATUM NAD83	SURVEYED	BY District	04/2008	CHECKED	BY C.Fassett	05/2011		
ALIGNMENT TIES Dist. Traverse Sheet		DRAFTED	BY S. Zheng	05/2011	CHECKED	BY T.Schmalz	05/2011		

DESIGN	BY F. Feng	CHECKED R. Novik\J. Higareda
DETAILS	BY S. Cholda	CHECKED R. Novik\J. Higareda
QUANTITIES	BY F. Feng	CHECKED R. Novik

STATE OF CALIFORNIA
DEPARTMENT OF TRANSPORTATION

DIVISION OF ENGINEERING SERVICES
STRUCTURE DESIGN
DESIGN BRANCH 15

BRIDGE NO. 53E0315
POST MILE 40.99

RETAINING WALL NO. 2166
FOUNDATION PLAN NO. 3

STRUCTURES FOUNDATION PLAN SHEET (ENGLISH) (REV. 09-01-10)

ORIGINAL SCALE IN INCHES FOR REDUCED PLANS 0 1 2 3

UNIT: 3646
PROJECT NUMBER & PHASE: 0713000007 1
CONTRACT NO.: 07-1193U1

DISREGARD PRINTS BEARING EARLIER REVISION DATES

REVISION DATES: 5/31/2011 01/28/14 02-05-14 02-25-14

SHEET 7 OF 44

FILE => 53e0315-b-fp103_1193u.dgn

USERNAME => s125624 DATE PLOTTED => 18-MAY-2015 TIME PLOTTED => 16:36

DIST	COUNTY	ROUTE	POST MILES TOTAL PROJECT	SHEET No.	TOTAL SHEETS
7	LA	10	37.2/42.4	2205	2313

REGISTERED CIVIL ENGINEER 10-1-14 DATE

6-1-15
PLANS APPROVAL DATE

REGISTERED PROFESSIONAL ENGINEER
Gabriel J. Galo
No. 52288
Exp. 12-31-14
CIVIL
STATE OF CALIFORNIA

The State of California or its officers or agents shall not be responsible for the accuracy or completeness of electronic copies of this plan sheet.

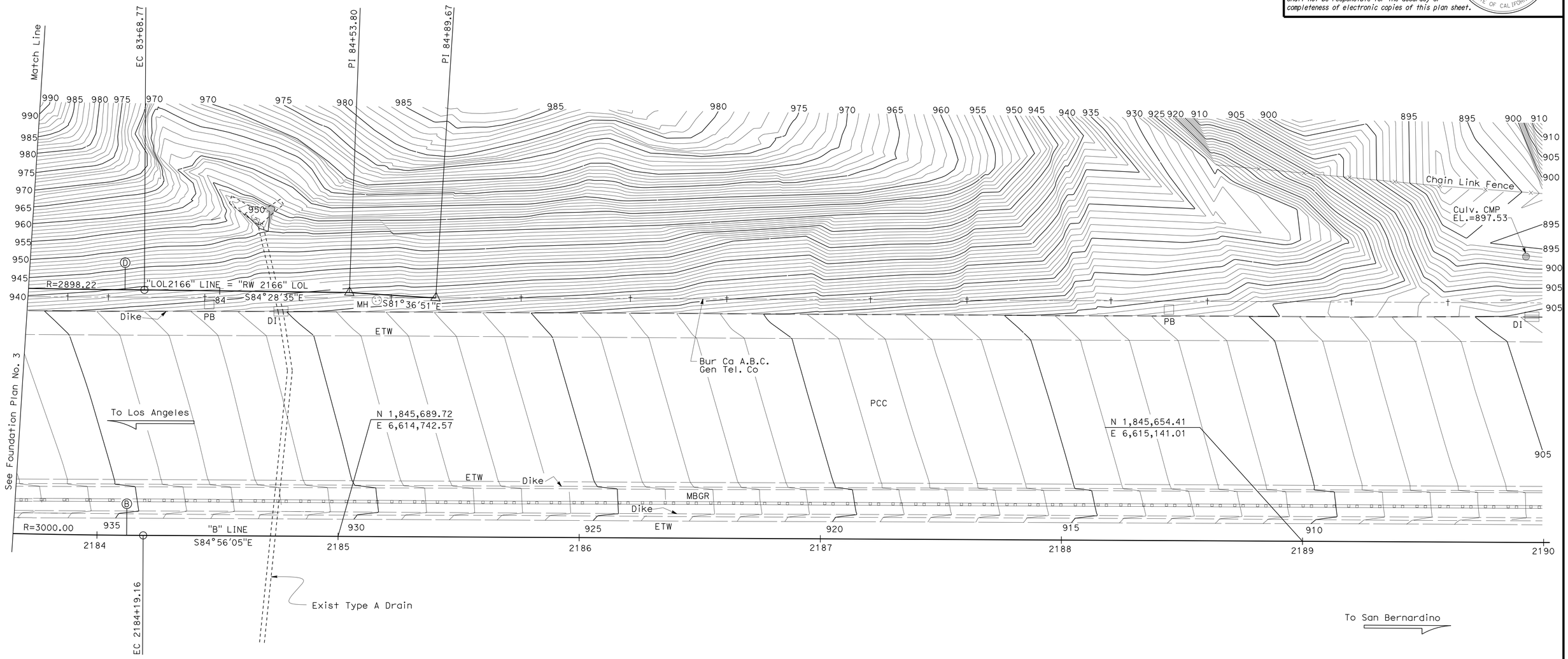

PRELIMINARY INVESTIGATION SECTION									
SCALE 1"=20'	VERT.DATUM NAVD88	PHOTOGRAMMETRY AS OF: 02/2008							
	HORZ.DATUM NAD83	SURVEYED	BY District	04/2008	CHECKED	BY C.Fassett	05/2011		
	ALIGNMENT TIES Dist. Traverse Sheet	DRAFTED	BY S. Zheng	05/2011	CHECKED	BY T.Schmalz	05/2011		

	BY	CHECKED
DESIGN	F. Feng	R. Novik\J. Higareda
DETAILS	S. Cholda	R. Novik\J. Higareda
QUANTITIES	F. Feng	R. Novik

STATE OF CALIFORNIA
DEPARTMENT OF TRANSPORTATION

DIVISION OF ENGINEERING SERVICES
STRUCTURE DESIGN
DESIGN BRANCH 15

BRIDGE NO. 53E0315
POST MILE 40.99

RETAINING WALL NO. 2166
FOUNDATION PLAN NO. 4

STRUCTURES FOUNDATION PLAN SHEET (ENGLISH) (REV. 09-01-10)

ORIGINAL SCALE IN INCHES FOR REDUCED PLANS 0 1 2 3

UNIT: 3646
PROJECT NUMBER & PHASE: 0713000007 1
CONTRACT NO.: 07-1193U1

DISREGARD PRINTS BEARING EARLIER REVISION DATES

REVISION DATES: 5/31/201 06/17/14 02-05-14 02-25-14

SHEET 8 OF 44

FILE => 53e0315-b-fp104_1193u.dgn

DIST	COUNTY	ROUTE	POST MILES TOTAL PROJECT	SHEET No.	TOTAL SHEETS
07	LA	10	37.2/42.4	2206	2313

REGISTERED CIVIL ENGINEER 10-1-14 DATE

6-1-15
PLANS APPROVAL DATE

REGISTERED PROFESSIONAL ENGINEER Gabriel J. Galo No. 52288 Exp. 12-31-14 CIVIL STATE OF CALIFORNIA

The State of California or its officers or agents shall not be responsible for the accuracy or completeness of scanned copies of this plan sheet.

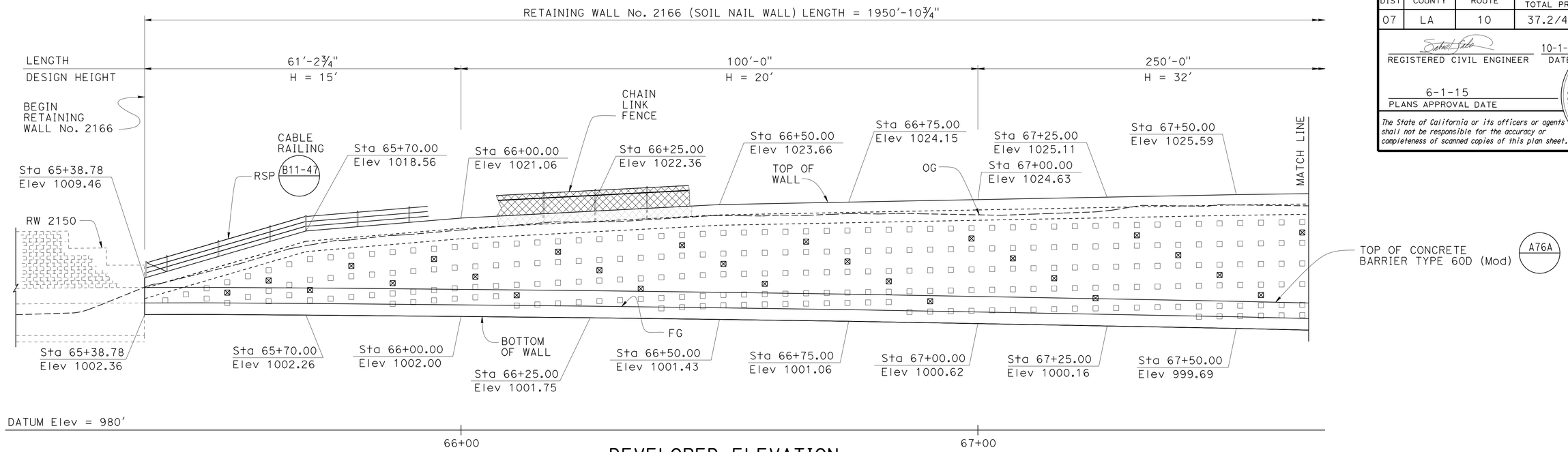

DEVELOPED ELEVATION

1" = 10'-0"

Legend:

- □ Indicates location of Soil Nail Assembly
- ⊠ Indicates location of Proof Test Nail, Tot 27 this page

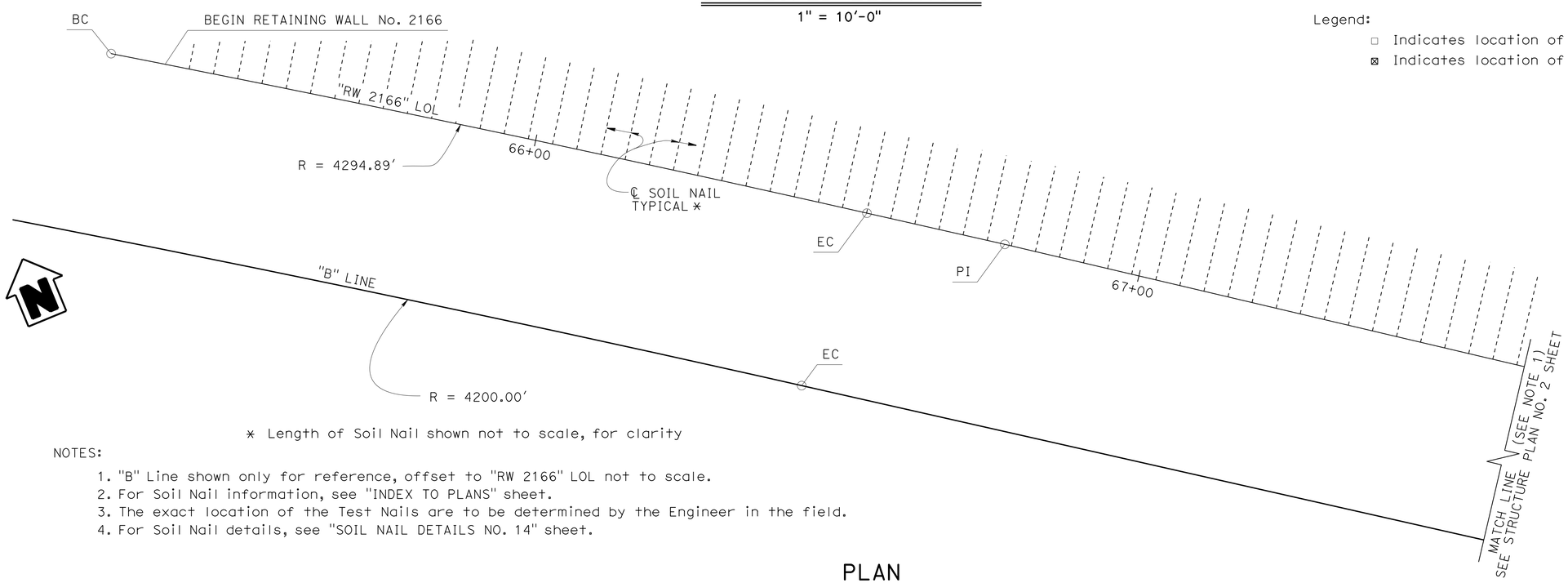

* Length of Soil Nail shown not to scale, for clarity

NOTES:

1. "B" Line shown only for reference, offset to "RW 2166" LOL not to scale.
2. For Soil Nail information, see "INDEX TO PLANS" sheet.
3. The exact location of the Test Nails are to be determined by the Engineer in the field.
4. For Soil Nail details, see "SOIL NAIL DETAILS NO. 14" sheet.

PLAN

1" = 10'-0"

	BY	CHECKED
DESIGN	Fred Feng	R. Novik\J. Higareda
DETAILS	H. Mauroschadt\S. Cholda	R. Novik\J. Higareda
QUANTITIES	Fred Feng	Ruslan Novik

STATE OF CALIFORNIA
DEPARTMENT OF TRANSPORTATION

DIVISION OF ENGINEERING SERVICES
STRUCTURE DESIGN
DESIGN BRANCH 15

BRIDGE NO. 53E0315
POST MILE 41.01

RETAINING WALL NO. 2166
STRUCTURE PLAN NO. 1

STRUCTURES DESIGN DETAIL SHEET (ENGLISH) (REV. 09-01-10)

ORIGINAL SCALE IN INCHES FOR REDUCED PLANS 0 1 2 3

UNIT: 3604
PROJECT NUMBER & PHASE: 0713000007
CONTRACT NO.: 07-1193U1

DISREGARD PRINTS BEARING EARLIER REVISION DATES

REVISION DATES 01-31-13 05-14-13 10-25-13 02-28-14

SHEET 9 OF 44

FILE => 53e0315-c-sp01.dgn

USERNAME => s125624 DATE PLOTTED => 18-MAY-2015 TIME PLOTTED => 16:36

DIST	COUNTY	ROUTE	POST MILES TOTAL PROJECT	SHEET No.	TOTAL SHEETS
07	LA	10	337.2/42.4	2207	2313

REGISTERED CIVIL ENGINEER 10-1-14 DATE

6-1-15
PLANS APPROVAL DATE

REGISTERED PROFESSIONAL ENGINEER Gabriel J. Galo No. 52288 Exp. 12-31-14 CIVIL STATE OF CALIFORNIA

The State of California or its officers or agents shall not be responsible for the accuracy or completeness of scanned copies of this plan sheet.

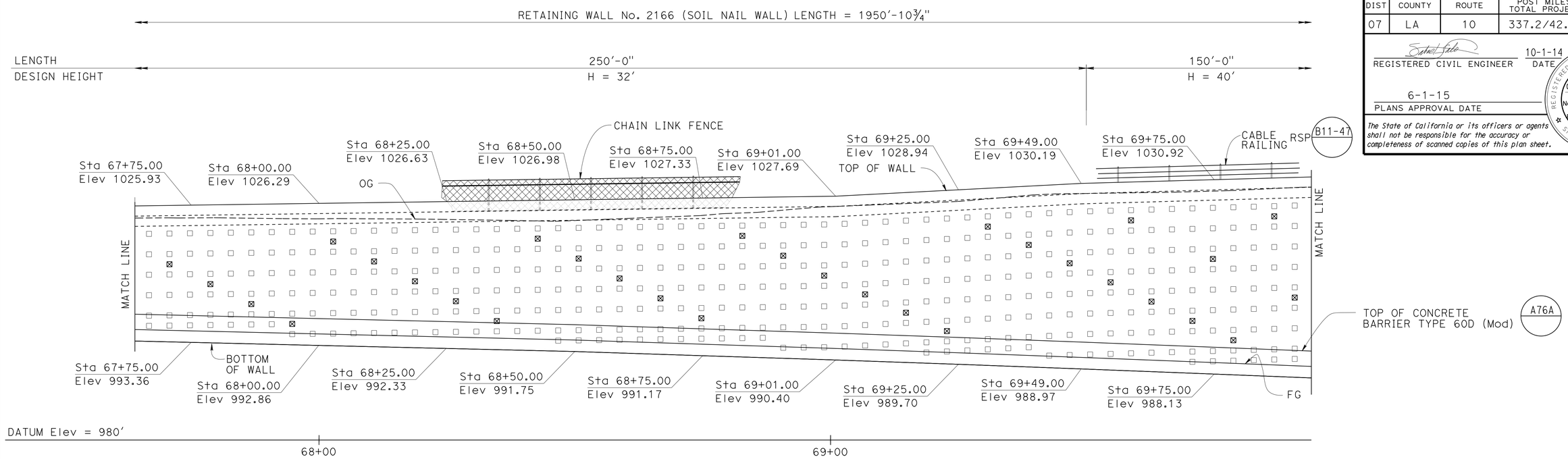

DEVELOPED ELEVATION

1" = 10'-0"

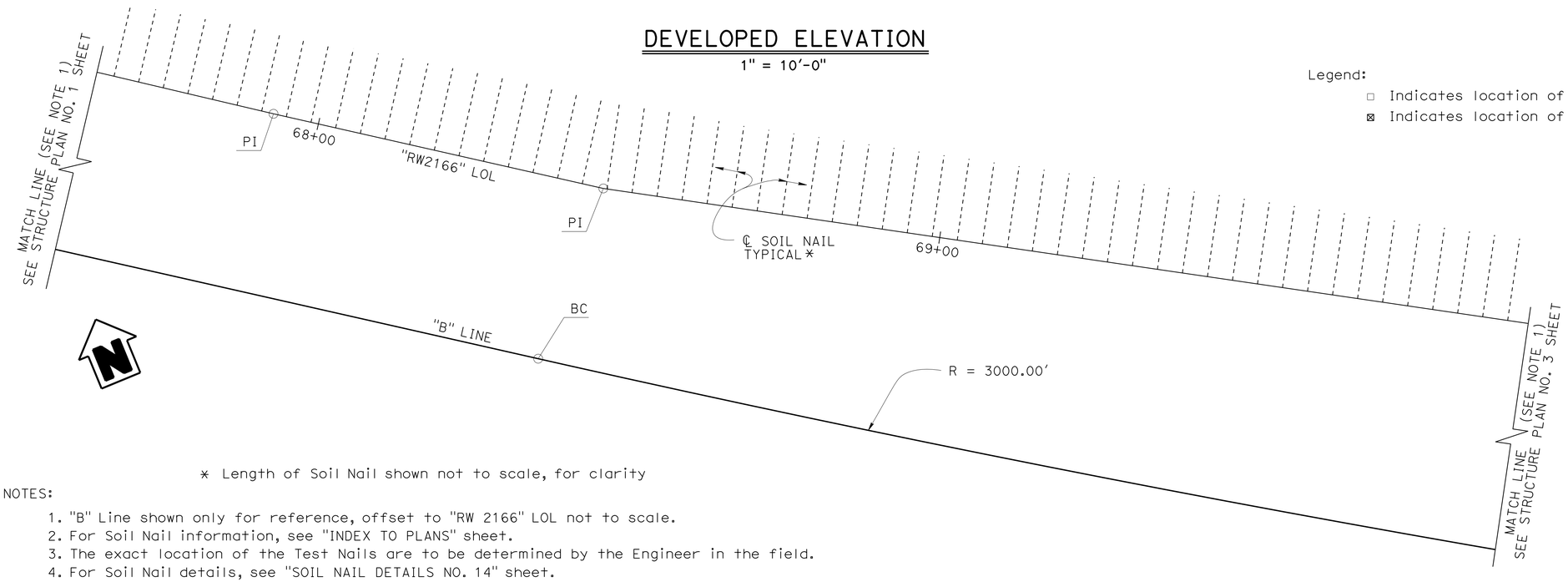

Legend:

- □ Indicates location of Soil Nail Assembly
- ⊠ Indicates location of Proof Test Nail, Tot 31 this page

* Length of Soil Nail shown not to scale, for clarity

NOTES:

1. "B" Line shown only for reference, offset to "RW 2166" LOL not to scale.
2. For Soil Nail information, see "INDEX TO PLANS" sheet.
3. The exact location of the Test Nails are to be determined by the Engineer in the field.
4. For Soil Nail details, see "SOIL NAIL DETAILS NO. 14" sheet.

PLAN

1" = 10''-0"

	BY	CHECKED
DESIGN	Fred Feng	R. Novik\J. Higareda
DETAILS	H. Mauroschadt\S. Cholda	R. Novik\J. Higareda
QUANTITIES	Fred Feng	Ruslan Novik

STATE OF CALIFORNIA
DEPARTMENT OF TRANSPORTATION

DIVISION OF ENGINEERING SERVICES
STRUCTURE DESIGN
DESIGN BRANCH 15

BRIDGE NO. 53E0315
POST MILE 41.01

RETAINING WALL NO. 2166
STRUCTURE PLAN NO. 2

STRUCTURES DESIGN DETAIL SHEET (ENGLISH) (REV. 09-01-10)

ORIGINAL SCALE IN INCHES FOR REDUCED PLANS 0 1 2 3

UNIT: 3604
PROJECT NUMBER & PHASE: 0713000007
CONTRACT NO.: 07-1193U1

DISREGARD PRINTS BEARING EARLIER REVISION DATES

REVISION DATES 02-01-13 05-15-13 10-25-13

SHEET 10 OF 44

FILE => 53e0315-c-sp02.dgn

USERNAME => s125624 DATE PLOTTED => 18-MAY-2015 TIME PLOTTED => 16:36

DIST	COUNTY	ROUTE	POST MILES TOTAL PROJECT	SHEET No.	TOTAL SHEETS
07	LA	10	37.2/42.4	2208	2313

REGISTERED CIVIL ENGINEER — DATE 10-1-14

6-1-15
PLANS APPROVAL DATE

REGISTERED PROFESSIONAL ENGINEER — Gabriel J. Galo — No. 52288 — Exp. 12-31-14 — CIVIL — STATE OF CALIFORNIA

The State of California or its officers or agents shall not be responsible for the accuracy or completeness of scanned copies of this plan sheet.

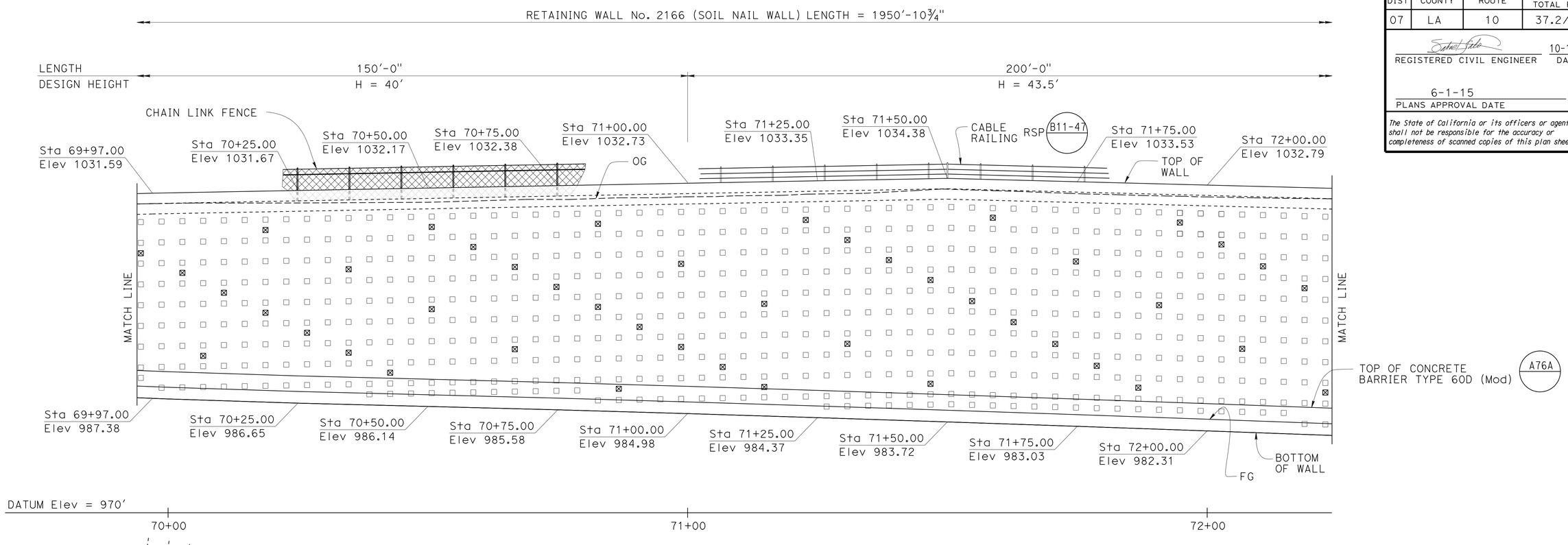

DEVELOPED ELEVATION

1" = 10'-0"

Legend:

- □ Indicates location of Soil Nail Assembly
- ⊠ Indicates location of Proof Test Nail, Tot 45 this page

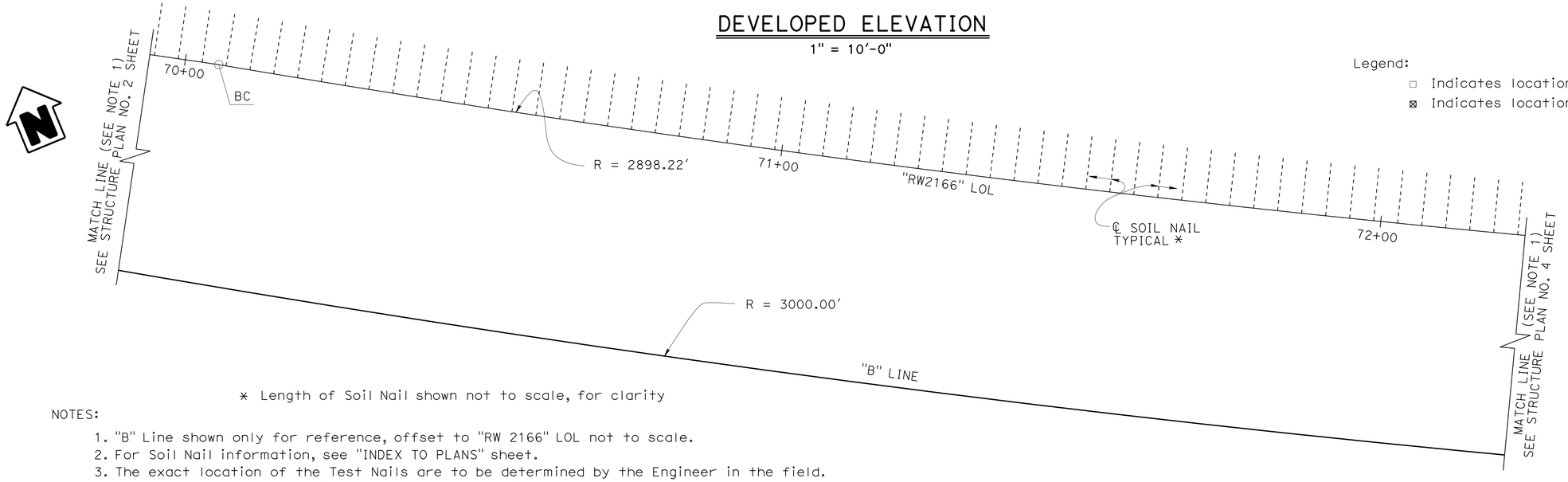

* Length of Soil Nail shown not to scale, for clarity

NOTES:

1. "B" Line shown only for reference, offset to "RW 2166" LOL not to scale.
2. For Soil Nail information, see "INDEX TO PLANS" sheet.
3. The exact location of the Test Nails are to be determined by the Engineer in the field.
4. For Soil Nail details, see "SOIL NAIL DETAILS NO. 14" sheet.

PLAN

1" = 10'-0"

	BY	CHECKED
DESIGN	Fred Feng	R. Novik\J. Higareda
DETAILS	H. Mauroschadt\S. Cholda	R. Novik\J. Higareda
QUANTITIES	Fred Feng	Ruslan Novik

STATE OF CALIFORNIA
DEPARTMENT OF TRANSPORTATION

DIVISION OF ENGINEERING SERVICES
STRUCTURE DESIGN
DESIGN BRANCH 15

BRIDGE NO. 53E0315
POST MILE 41.01

RETAINING WALL NO. 2166
STRUCTURE PLAN NO. 3

STRUCTURES DESIGN DETAIL SHEET (ENGLISH) (REV. 09-01-10)

ORIGINAL SCALE IN INCHES FOR REDUCED PLANS 0 1 2 3

UNIT: 3604
PROJECT NUMBER & PHASE: 0713000007
CONTRACT NO.: 07-1193U1

DISREGARD PRINTS BEARING EARLIER REVISION DATES

REVISION DATES: 6-14-13 10-25-13 02-25-14

SHEET 11 OF 44

FILE => 53e0315-c-sp03.dgn

USERNAME => s125624 DATE PLOTTED => 18-MAY-2015 TIME PLOTTED => 16:36

DIST	COUNTY	ROUTE	POST MILES TOTAL PROJECT	SHEET No.	TOTAL SHEETS
07	LA	10	37.2/42.4	2209	2313

REGISTERED CIVIL ENGINEER — DATE 10-1-14

6-1-15
PLANS APPROVAL DATE

REGISTERED PROFESSIONAL ENGINEER — Gabriel J. Galo — No. 52288 — Exp. 12-31-14 — CIVIL — STATE OF CALIFORNIA

The State of California or its officers or agents shall not be responsible for the accuracy or completeness of scanned copies of this plan sheet.

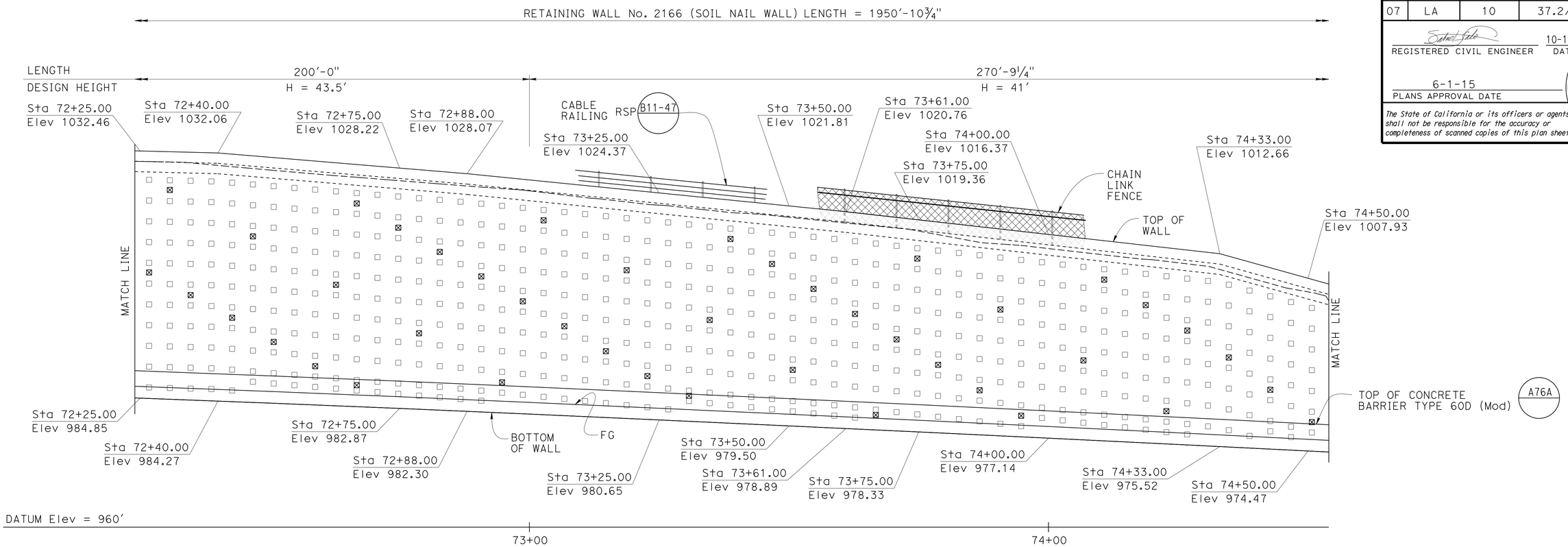

DEVELOPED ELEVATION

1" = 10'-0"

Legend:

- □ Indicates location of Soil Nail Assembly
- ⊠ Indicates location of Proof Test Nail, Tot 43 this page

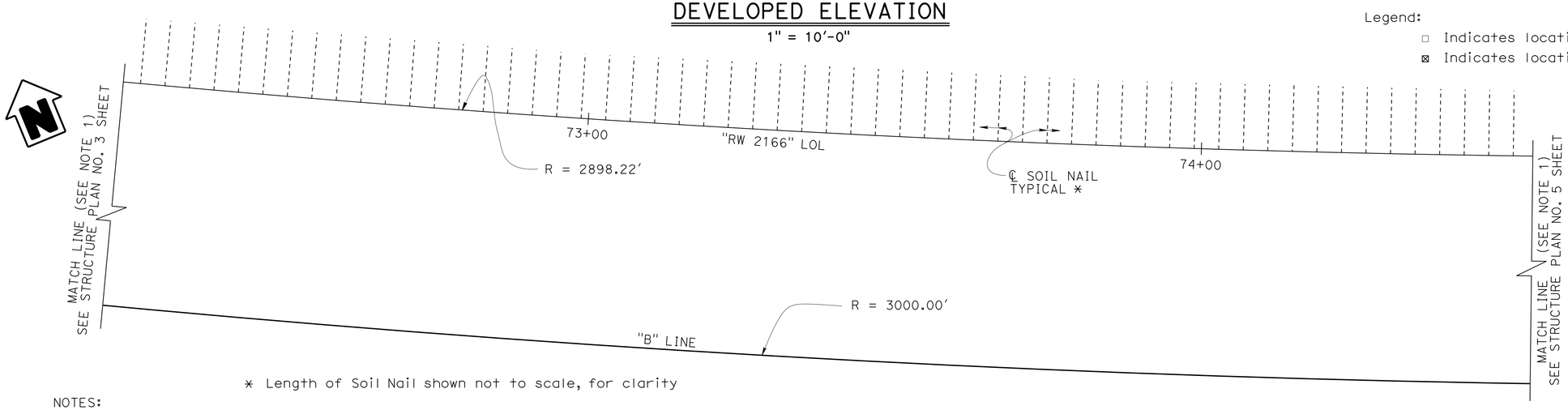

* Length of Soil Nail shown not to scale, for clarity

NOTES:

1. "B" Line shown only for reference, offset to "RW 2166" LOL not to scale.
2. For Soil Nail information, see "INDEX TO PLANS" sheet.
3. The exact location of the Test Nails are to be determined by the Engineer in the field.
4. For Soil Nail details, see "SOIL NAIL DETAILS NO. 14" sheet.

PLAN

1" = 10'-0"

	BY	CHECKED
DESIGN	Fred Feng	R. Novik\J. Higareda
DETAILS	H. Mauroschadt\S. Cholda	R. Novik\J. Higareda
QUANTITIES	Fred Feng	Ruslan Novik

STATE OF CALIFORNIA
DEPARTMENT OF TRANSPORTATION

DIVISION OF ENGINEERING SERVICES
STRUCTURE DESIGN
DESIGN BRANCH 15

BRIDGE NO. 53E0315
POST MILE 41.01

RETAINING WALL NO. 2166
STRUCTURE PLAN NO. 4

STRUCTURES DESIGN DETAIL SHEET (ENGLISH) (REV. 09-01-10)

ORIGINAL SCALE IN INCHES FOR REDUCED PLANS 0 1 2 3

UNIT: 3604
PROJECT NUMBER & PHASE: 0713000007
CONTRACT NO.: 07-1193U1

DISREGARD PRINTS BEARING EARLIER REVISION DATES

REVISION DATES: 02-01-13 05-15-13 10-25-13 03-04-14

SHEET 12 OF 44

FILE => 53e0315-c-sp04.dgn

USERNAME => s125624 DATE PLOTTED => 18-MAY-2015 TIME PLOTTED => 16:36

DIST	COUNTY	ROUTE	POST MILES TOTAL PROJECT	SHEET No.	TOTAL SHEETS
07	LA	10	37.2/42.4	2210	2313

REGISTERED CIVIL ENGINEER 10-1-14 DATE

6-1-15
PLANS APPROVAL DATE

REGISTERED PROFESSIONAL ENGINEER Gabriel J. Galo No. 52288 Exp. 12-31-14 CIVIL STATE OF CALIFORNIA

The State of California or its officers or agents shall not be responsible for the accuracy or completeness of scanned copies of this plan sheet.

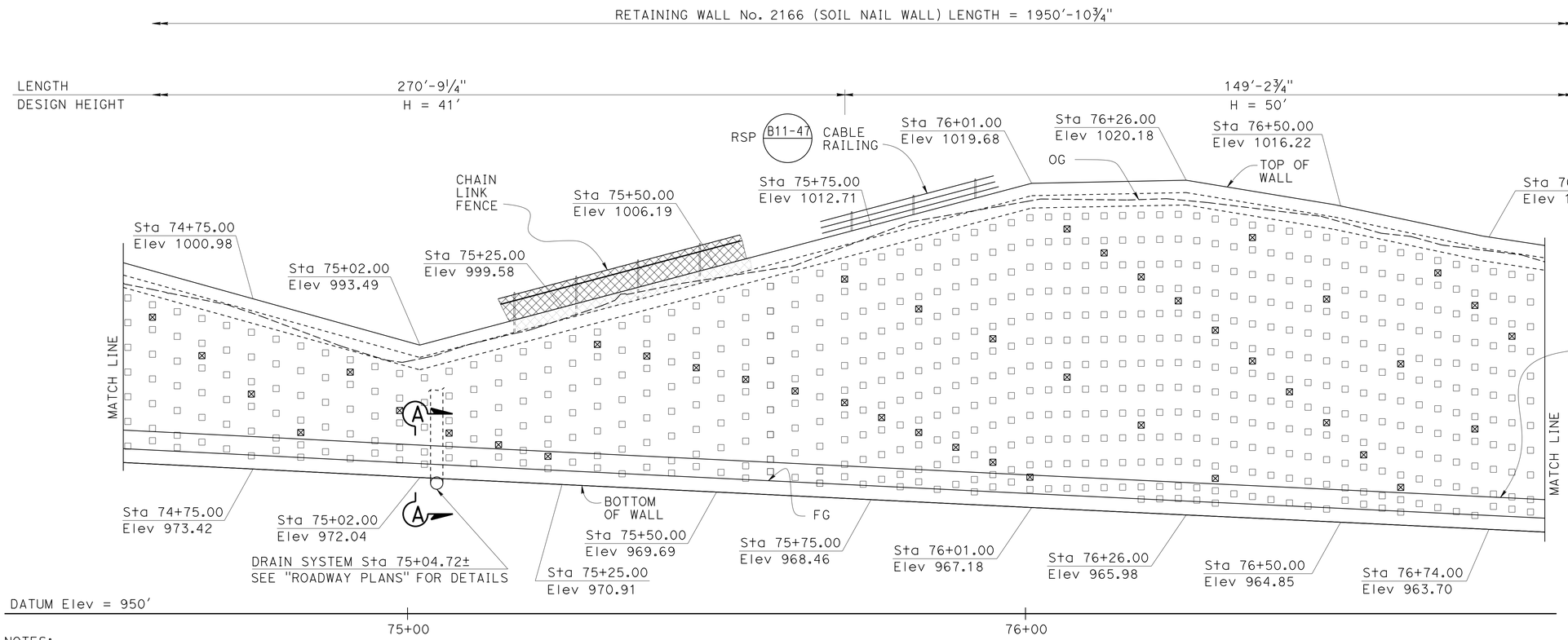

DEVELOPED ELEVATION

1" = 10'-0"

NOTES:

1. "B" Line shown only for reference, offset to "RW 2166" LOL not to scale.
2. For Soil Nail information, see "INDEX TO PLANS" sheet.
3. The exact location of the Test Nails are to be determined by the Engineer in the field.
4. For Soil Nail details, see "SOIL NAIL DETAILS NO. 14" sheet.
5. Adjust nail locations as necessary to clear down drains by 6" minimum.

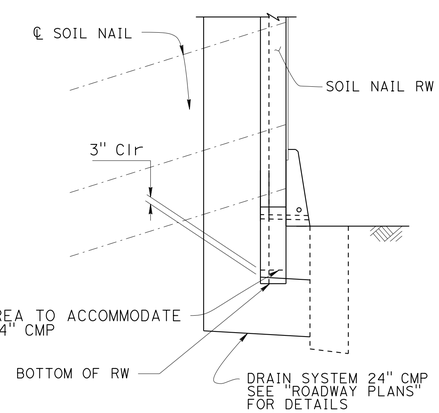

SECTION A-A

⅜" = 1'-0"

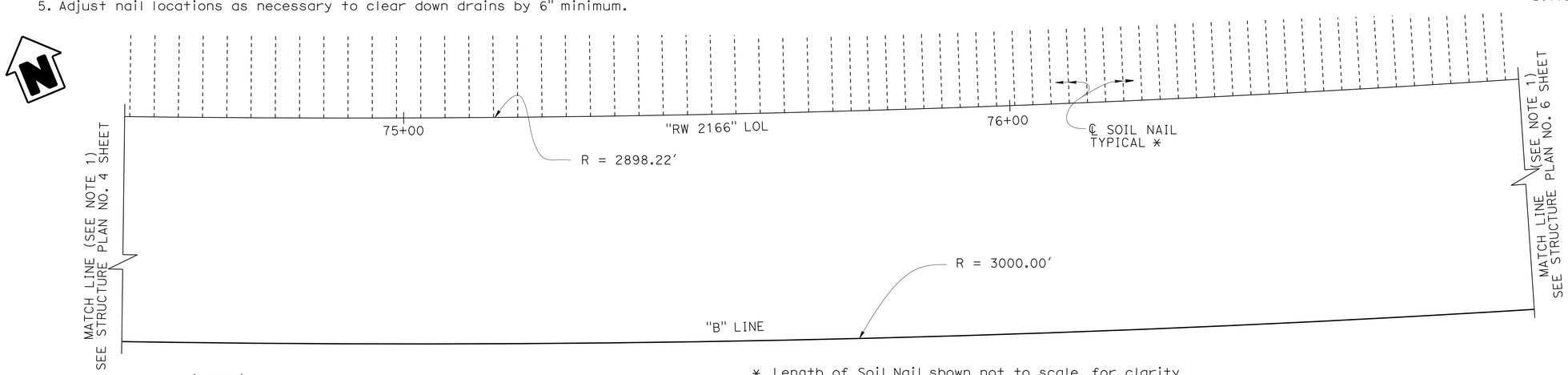

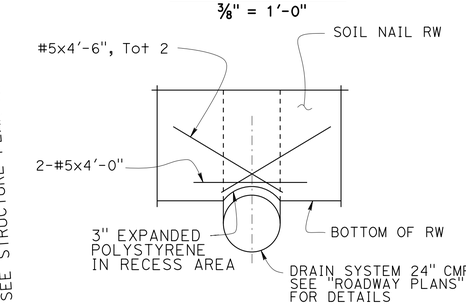

PART ELEVATION

⅜" = 1'-0"

Legend:

□ Indicates location of Soil Nail Assembly

⊠ Indicates location of Proof Test Nail, Tot 43 this page

* Length of Soil Nail shown not to scale, for clarity

PLAN

1" = 10'-0"

RW RECESS AROUND 24" CMP DRAIN SYSTEM

	BY	CHECKED
DESIGN	Fred Feng	R. Novik\J. Higareda
DETAILS	H. Mauroschadt\S. Cholda	R. Novik\J. Higareda
QUANTITIES	Fred Feng	Ruslan Novik

STATE OF CALIFORNIA
DEPARTMENT OF TRANSPORTATION

DIVISION OF ENGINEERING SERVICES
STRUCTURE DESIGN
DESIGN BRANCH 15

BRIDGE NO. 53E0315
POST MILE 41.01

RETAINING WALL NO. 2166
STRUCTURE PLAN NO. 5

STRUCTURES DESIGN DETAIL SHEET (ENGLISH) (REV. 09-01-10)

ORIGINAL SCALE IN INCHES FOR REDUCED PLANS 0 1 2 3

UNIT: 3604
PROJECT NUMBER & PHASE: 0713000007
CONTRACT NO.: 07-1193U1

DISREGARD PRINTS BEARING EARLIER REVISION DATES

REVISION DATES 02-01-13 07-01-14 07-08-14 03-04-14

SHEET 13 OF 44

FILE => 53e0315-c-sp05.dgn

USERNAME => s125624 DATE PLOTTED => 18-MAY-2015 TIME PLOTTED => 16:36

DIST	COUNTY	ROUTE	POST MILES TOTAL PROJECT	SHEET No.	TOTAL SHEETS
07	LA	10	37.2/42.4	2211	2313

REGISTERED CIVIL ENGINEER 10-1-14 DATE

6-1-15
PLANS APPROVAL DATE

REGISTERED PROFESSIONAL ENGINEER Gabriel J. Galo No. 52288 Exp. 12-31-14 CIVIL STATE OF CALIFORNIA

The State of California or its officers or agents shall not be responsible for the accuracy or completeness of scanned copies of this plan sheet.

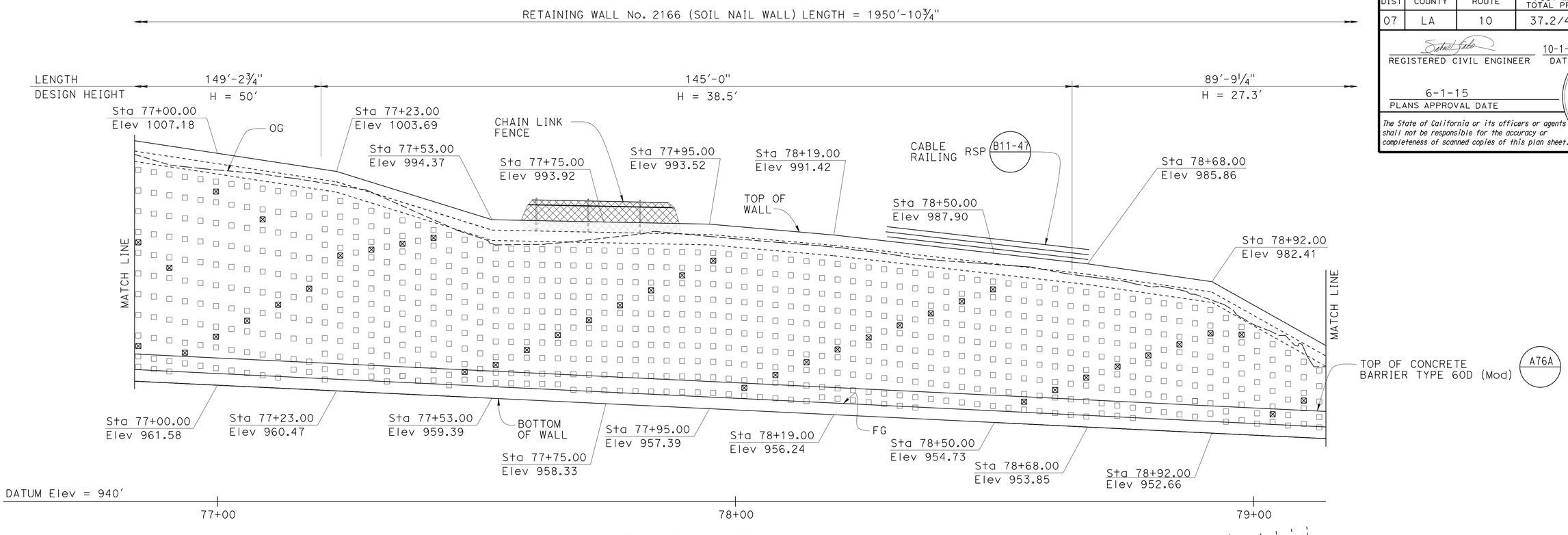

DEVELOPED ELEVATION

1" = 10'-0"

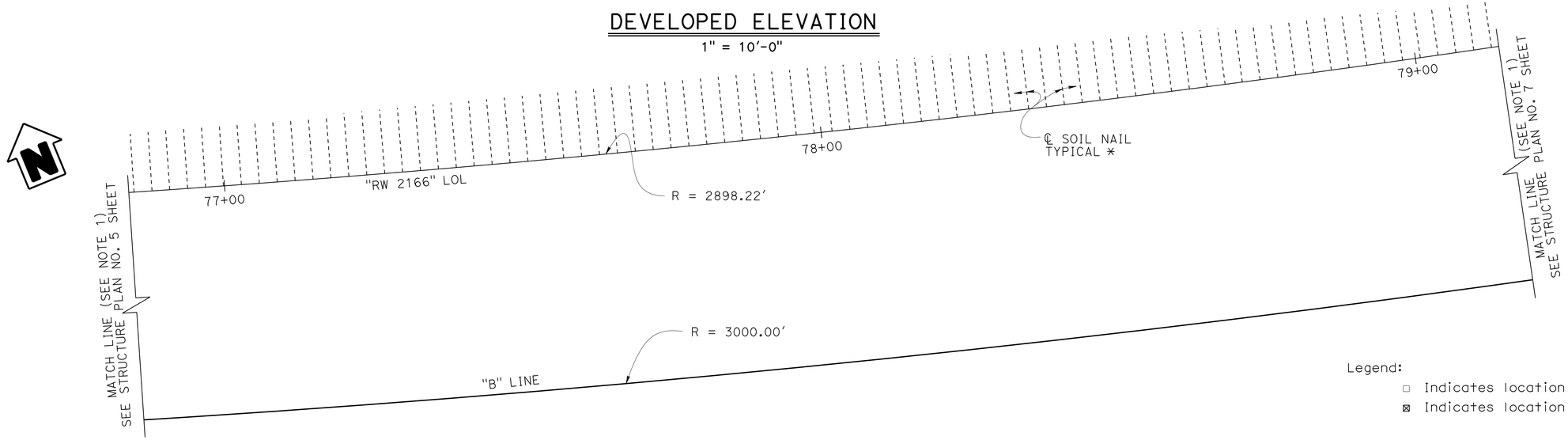

Legend:

- □ Indicates location of Soil Nail Assembly
- ⊠ Indicates location of Proof Test Nail, Tot 42 this page

* Length of Soil Nail shown not to scale, for clarity

NOTES:

1. "B" Line shown only for reference, offset to "RW 2166" LOL not to scale.
2. For Soil Nail information, see "INDEX TO PLANS" sheet.
3. The exact location of the Test Nails are to be determined by the Engineer in the field.
4. For Soil Nail details, see "SOIL NAIL DETAILS NO. 14" sheet.

PLAN

1" = 10

	BY	CHECKED
DESIGN	Fred Feng	R. Novik\J. Higareda
DETAILS	H. Mauroschadt\S. Cholda	R. Novik\J. Higareda
QUANTITIES	Fred Feng	Ruslan Novik

STATE OF CALIFORNIA
DEPARTMENT OF TRANSPORTATION

DIVISION OF ENGINEERING SERVICES
STRUCTURE DESIGN
DESIGN BRANCH 15

BRIDGE NO. 53E0315
POST MILE 41.01

RETAINING WALL NO. 2166
STRUCTURE PLAN NO. 6

STRUCTURES DESIGN DETAIL SHEET (ENGLISH) (REV. 09-01-10)

ORIGINAL SCALE IN INCHES FOR REDUCED PLANS 0 1 2 3

UNIT: 3604
PROJECT NUMBER & PHASE: 0713000007
CONTRACT NO.: 07-1193U1

DISREGARD PRINTS BEARING EARLIER REVISION DATES

REVISION DATES 02-01-13 05-15-13 10-25-13 02-25-14

SHEET 14 OF 44

FILE => 53e0315-c-sp06.dgn

USERNAME => s125624 DATE PLOTTED => 18-MAY-2015 TIME PLOTTED => 16:36

DIST	COUNTY	ROUTE	POST MILES TOTAL PROJECT	SHEET No.	TOTAL SHEETS
07	LA	10	37.2/42.4	2212	2313

REGISTERED CIVIL ENGINEER 10-1-14 DATE

6-1-15
PLANS APPROVAL DATE

REGISTERED PROFESSIONAL ENGINEER Gabriel J. Galo No. 52288 Exp. 12-31-14 CIVIL STATE OF CALIFORNIA

The State of California or its officers or agents shall not be responsible for the accuracy or completeness of scanned copies of this plan sheet.

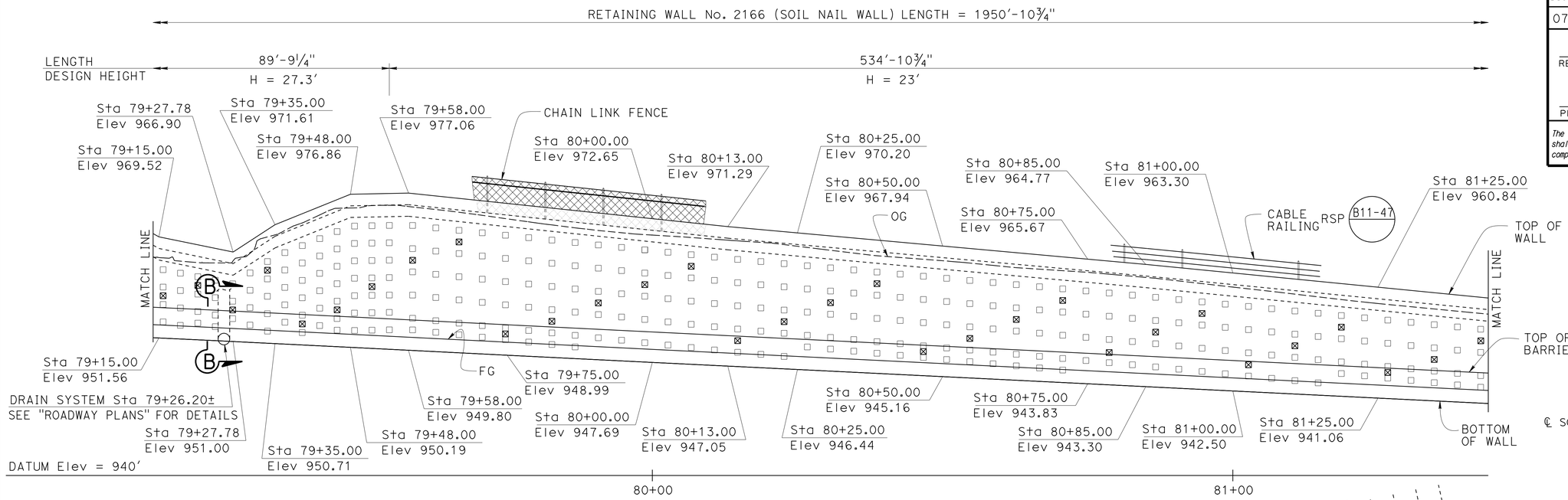

DEVELOPED ELEVATION

1" = 10'-0"

NOTES:

1. "B" Line shown only for reference, offset to "RW 2166" LOL not to scale.
2. For Soil Nail information, see "INDEX TO PLANS" sheet.
3. The exact location of the Test Nails are to be determined by the Engineer in the field.
4. For Soil Nail details, see "SOIL NAIL DETAILS NO. 14" sheet.
5. Adjust nail locations as necessary to clear down drains by 6" minimum.

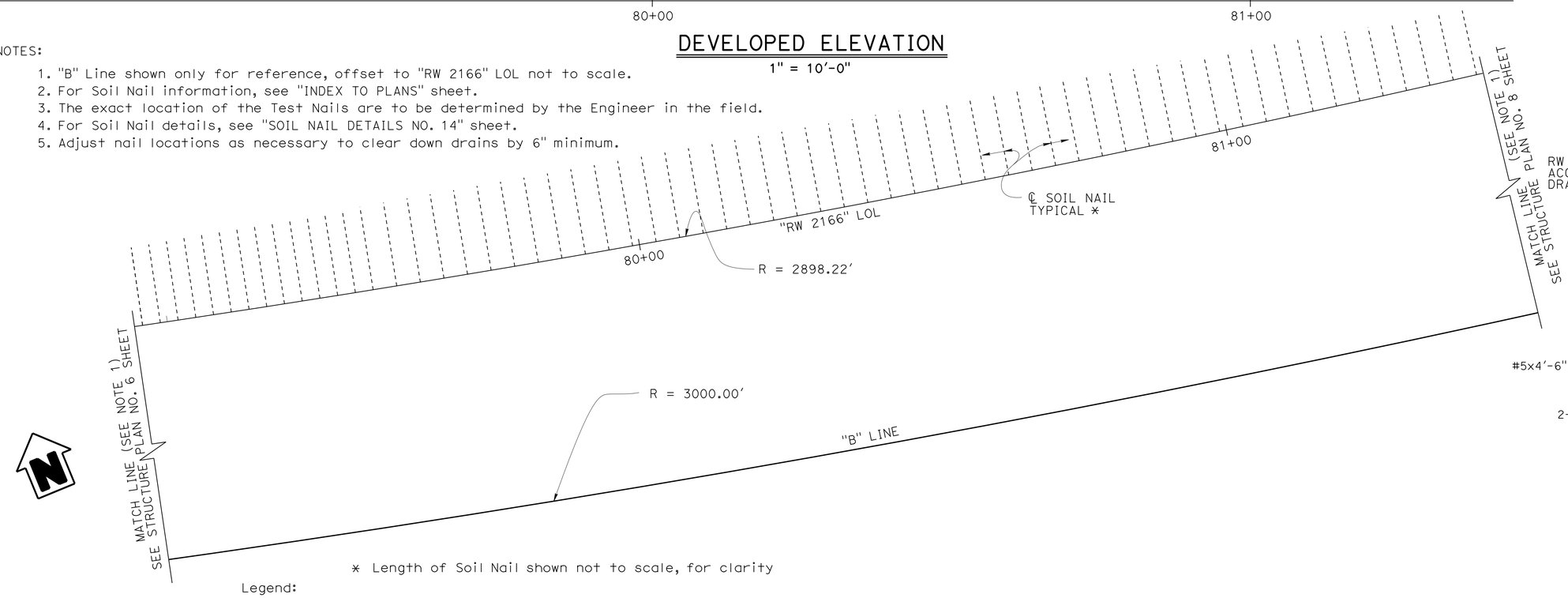

* Length of Soil Nail shown not to scale, for clarity

Legend:

- □ Indicates location of Soil Nail Assembly
- ⊠ Indicates location of Proof Test Nail, Tot 31 this page

PLAN

1" = 10'-0"

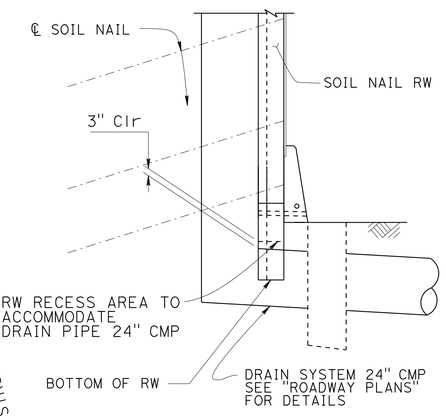

SECTION B-B

⅜" = 1'-0"

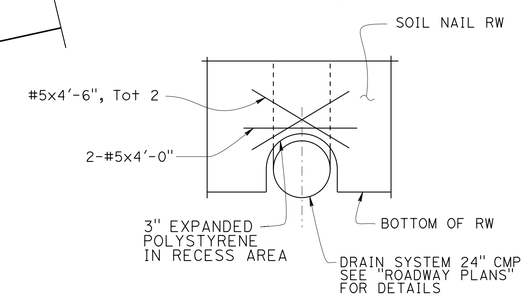

PART ELEVATION

⅜" = 1'-0"

RW RECESS AROUND 24" CMP DRAIN SYSTEM

	BY	CHECKED
DESIGN	Fred Feng	R. Novik\J. Higareda
DETAILS	H. Mauroschadt\S. Cholda	R. Novik\J. Higareda
QUANTITIES	Fred Feng	Ruslan Novik

STATE OF CALIFORNIA
DEPARTMENT OF TRANSPORTATION

DIVISION OF ENGINEERING SERVICES
STRUCTURE DESIGN
DESIGN BRANCH 15

BRIDGE NO. 53E0315
POST MILE 41.01

RETAINING WALL NO. 2166
STRUCTURE PLAN NO. 7

STRUCTURES DESIGN DETAIL SHEET (ENGLISH) (REV. 09-01-10)

ORIGINAL SCALE IN INCHES FOR REDUCED PLANS 0 1 2 3

UNIT: 3604
PROJECT NUMBER & PHASE: 0713000007
CONTRACT NO.: 07-1193U1

DISREGARD PRINTS BEARING EARLIER REVISION DATES

REVISION DATES: 02-01-13 07-08-14 03-04-14 07-01-14

SHEET 15 OF 44

FILE => 53e0315-c-sp07.dgn

USERNAME => s125624 DATE PLOTTED => 18-MAY-2015 TIME PLOTTED => 16:36

DIST	COUNTY	ROUTE	POST MILES TOTAL PROJECT	SHEET No.	TOTAL SHEETS
07	LA	10	37.2/42.4	2213	2313

REGISTERED CIVIL ENGINEER 10-1-14 DATE

6-1-15
APPROVAL DATE

REGISTERED PROFESSIONAL ENGINEER Gabriel J. Galo No. 52288 Exp. 12-31-14 CIVIL STATE OF CALIFORNIA

The State of California or its officers or agents shall not be responsible for the accuracy or completeness of scanned copies of this plan sheet.

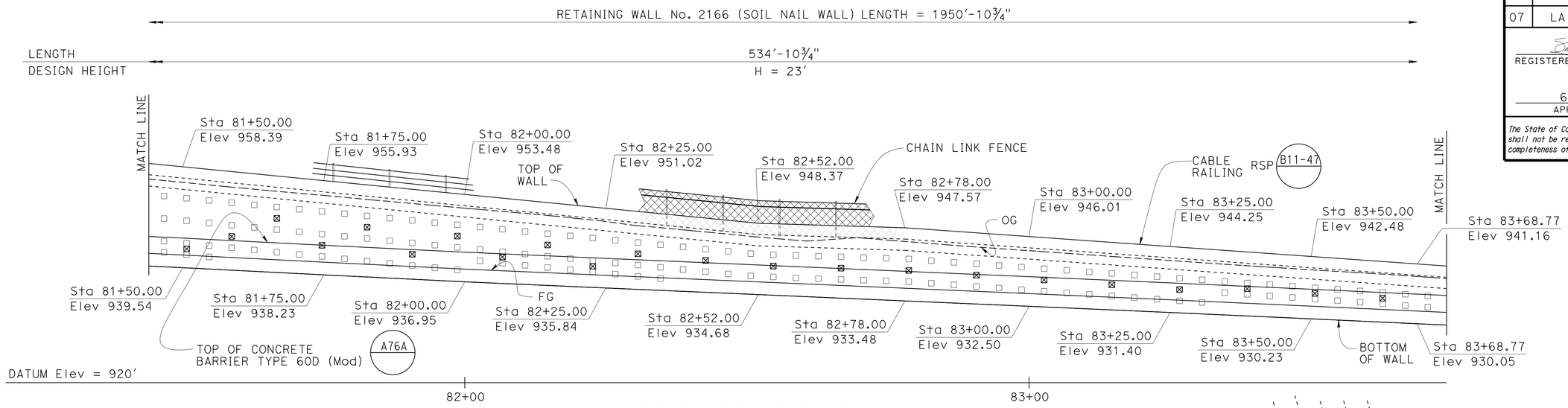

DEVELOPED ELEVATION

1" = 10'-0"

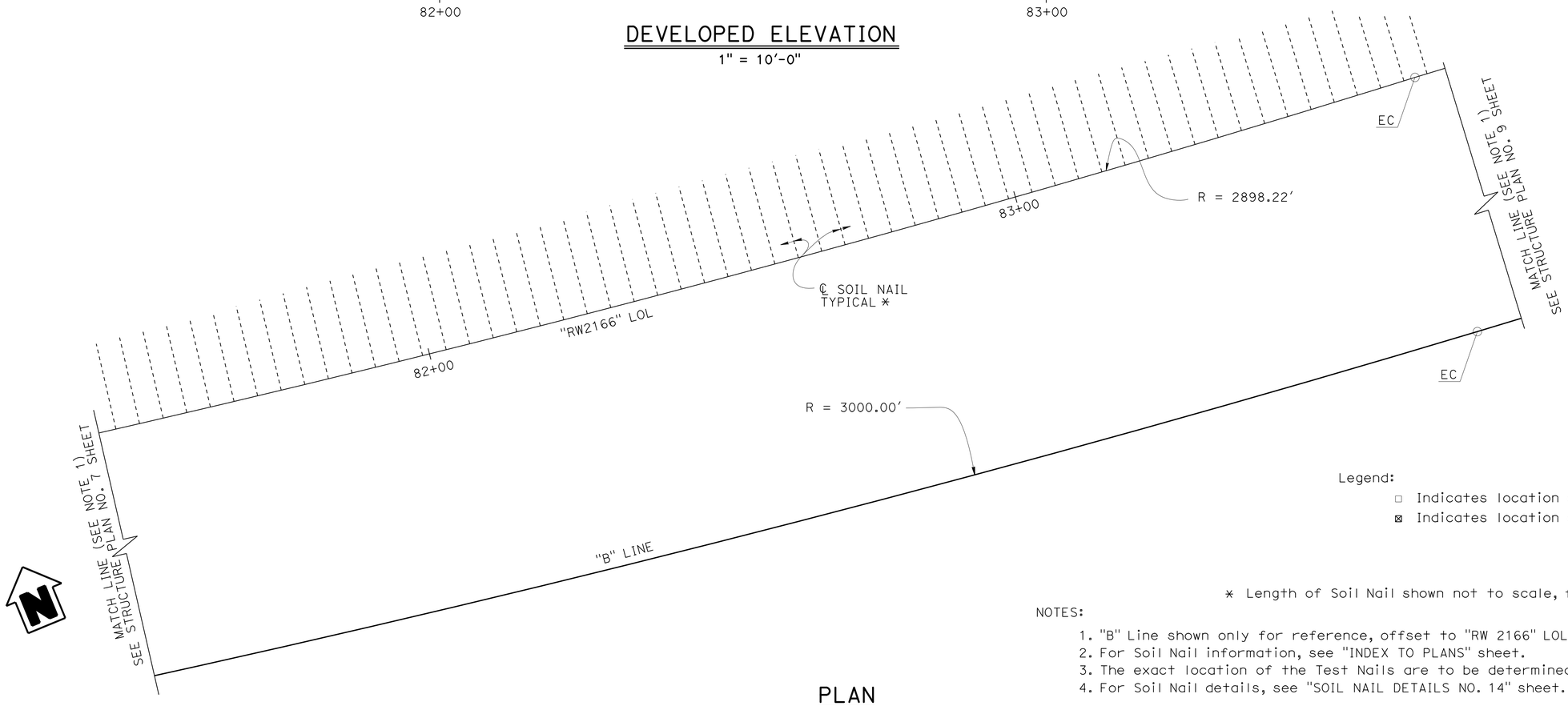

PLAN

1" = 10'-0"

Legend:

- □ Indicates location of Soil Nail Assembly
- ⊠ Indicates location of Proof Test Nail, Tot 22 this page

* Length of Soil Nail shown not to scale, for clarity

NOTES:

1. "B" Line shown only for reference, offset to "RW 2166" LOL not to scale.
2. For Soil Nail information, see "INDEX TO PLANS" sheet.
3. The exact location of the Test Nails are to be determined by the Engineer in the field.
4. For Soil Nail details, see "SOIL NAIL DETAILS NO. 14" sheet.

	BY	CHECKED
DESIGN	Fred Feng	R. Novik\J. Higareda
DETAILS	H. Mauroschadt\S. Cholda	R. Novik\J. Higareda
QUANTITIES	Fred Feng	Ruslan Novik

STATE OF CALIFORNIA
DEPARTMENT OF TRANSPORTATION

DIVISION OF ENGINEERING SERVICES
STRUCTURE DESIGN
DESIGN BRANCH 15

BRIDGE NO. 53E0315
POST MILE 41.01

RETAINING WALL NO. 2166
STRUCTURE PLAN NO. 8

STRUCTURES DESIGN DETAIL SHEET (ENGLISH) (REV. 09-01-10)

ORIGINAL SCALE IN INCHES FOR REDUCED PLANS 0 1 2 3

UNIT: 3604
PROJECT NUMBER & PHASE: 0713000007
CONTRACT NO.: 07-1193U1

DISREGARD PRINTS BEARING EARLIER REVISION DATES

REVISION DATES 10-25-13 03-04-14 02-25-14 06-17-14

SHEET 16 OF 44

FILE => 53e0315-c-sp08.dgn

USERNAME => s125624 DATE PLOTTED => 18-MAY-2015 TIME PLOTTED => 16:36

DIST	COUNTY	ROUTE	POST MILES TOTAL PROJECT	SHEET No.	TOTAL SHEETS
07	LA	10	37.2/42.4	2214	2313

REGISTERED CIVIL ENGINEER — DATE 10-1-14

PLANS APPROVAL DATE 6-1-15

REGISTERED PROFESSIONAL ENGINEER — Gabriel J. Galo — No. 52288 — Exp. 12-31-14 — CIVIL — STATE OF CALIFORNIA

The State of California or its officers or agents shall not be responsible for the accuracy or completeness of scanned copies of this plan sheet.

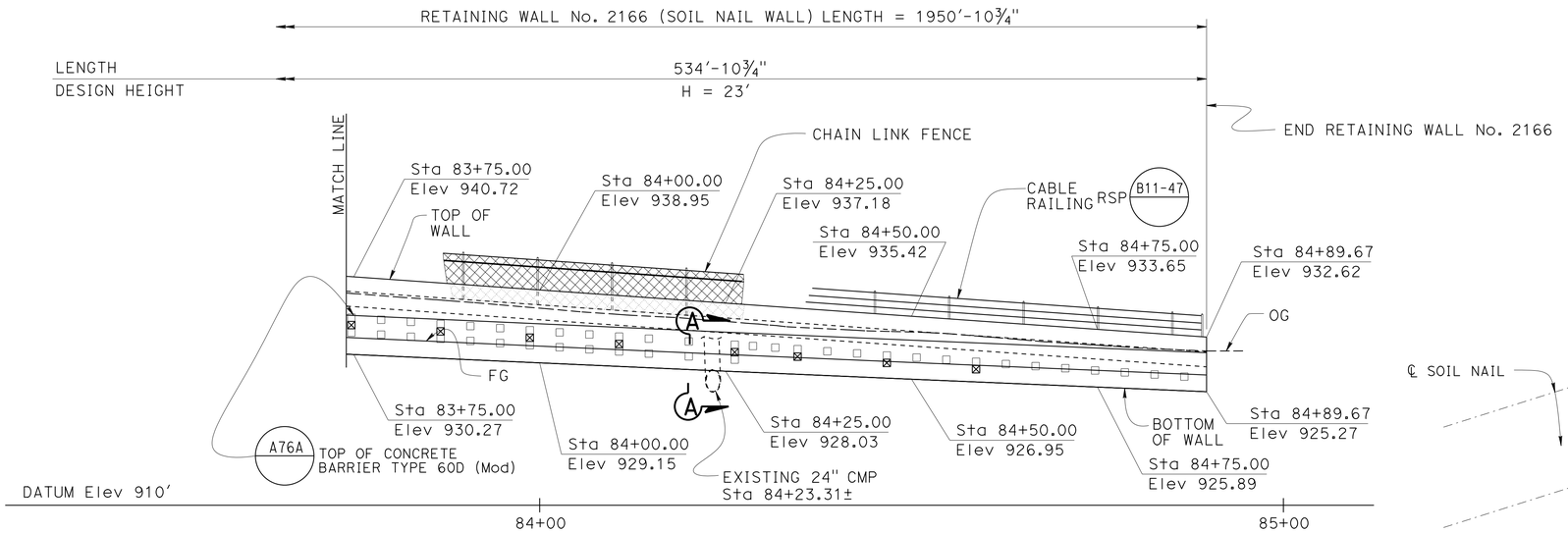

DEVELOPED ELEVATION

1" = 10'-0"

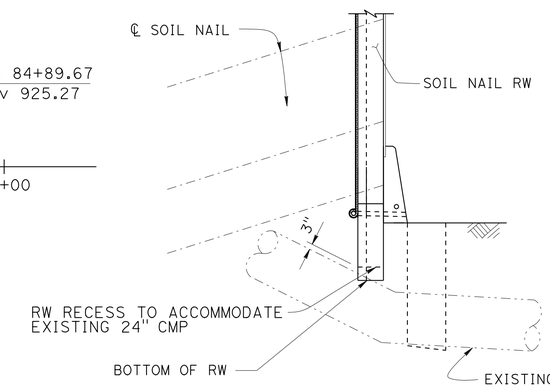

SECTION A-A

⅜" = 1'-0"

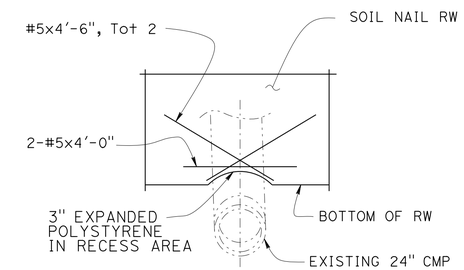

PART ELEVATION

⅜" = 1'-0"

RW RECESS AROUND EXISTING 24" CMP DETAIL

1" = 10'-0"

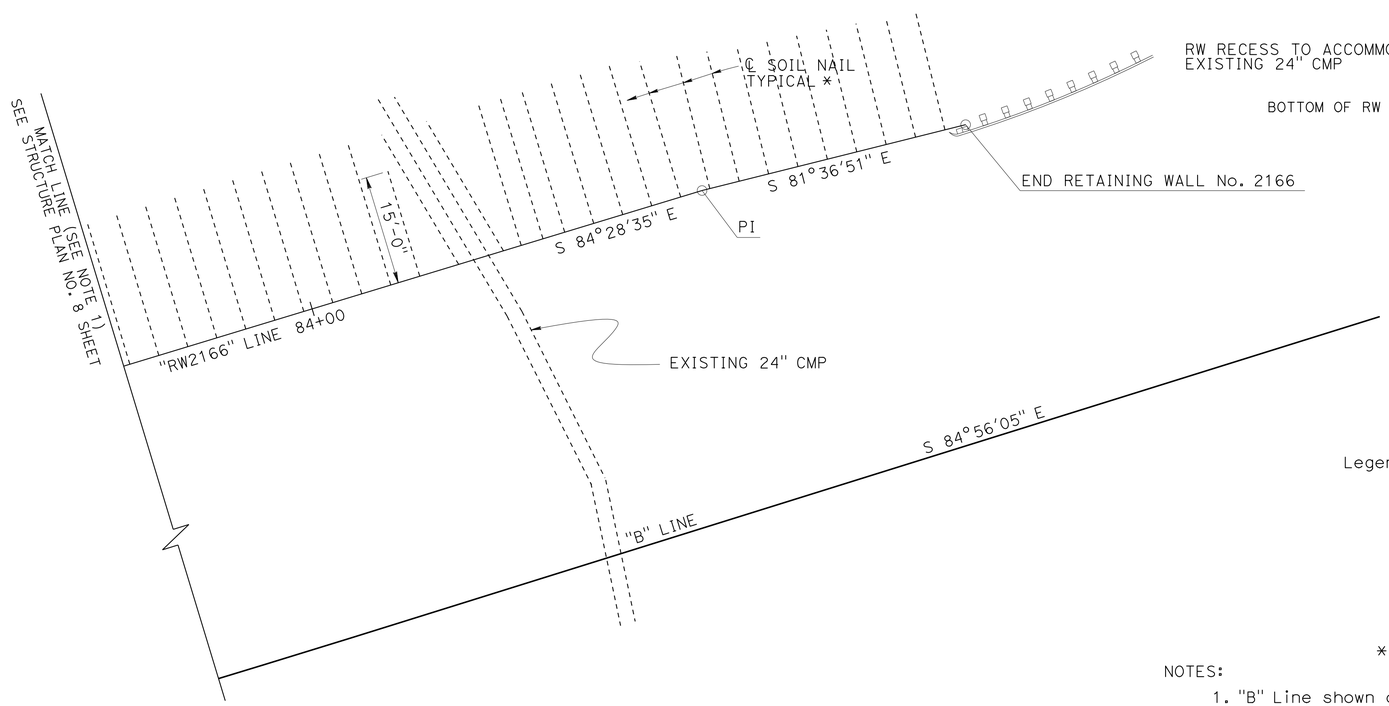

PLAN

1" = 10'-0"

Legend:

- ▫ Indicates location of Soil Nail Assembly
- ⊠ Indicates location of Proof Test Nail, Tot 8 this page

* Length of Soil Nail shown not to scale, for clarity

NOTES:

1. "B" Line shown only for reference, offset to "RW 2166" LOL not to scale.
2. For Soil Nail information, see "INDEX TO PLANS" sheet.
3. The exact location of the Test Nails are to be determined by the Engineer in the field.
4. For Soil Nail details, see "SOIL NAIL DETAILS NO. 14" sheet.

	BY	CHECKED
DESIGN	Fred Feng	R. Novik\J. Higareda
DETAILS	H. Mauroschadt\S. Choldo	R. Novik\J. Higareda
QUANTITIES	Fred Feng	Ruslan Novik

STATE OF CALIFORNIA DEPARTMENT OF TRANSPORTATION

DIVISION OF ENGINEERING SERVICES STRUCTURE DESIGN — DESIGN BRANCH 15

BRIDGE NO. 53E0315 — POST MILE 41.01

RETAINING WALL NO. 2166
STRUCTURE PLAN NO. 9

STRUCTURES DESIGN DETAIL SHEET (ENGLISH) (REV. 09-01-10)

ORIGINAL SCALE IN INCHES FOR REDUCED PLANS 0 1 2 3

UNIT: 3604
PROJECT NUMBER & PHASE: 0713000007
CONTRACT NO.: 07-1193U1

DISREGARD PRINTS BEARING EARLIER REVISION DATES

REVISION DATES: 10-25-13 07-07-14 07-08-14 02-27-14

SHEET 17 OF 44

FILE => 53e0315-c-sp09.dgn

USERNAME => s125624 DATE PLOTTED => 18-MAY-2015 TIME PLOTTED => 16:36

DIST	COUNTY	ROUTE	POST MILES TOTAL PROJECT	SHEET No.	TOTAL SHEETS
07	LA	10	37.2/42.4	2215	2313

REGISTERED CIVIL ENGINEER 10-1-14 DATE

6-1-15
PLANS APPROVAL DATE

REGISTERED PROFESSIONAL ENGINEER Gabriel J. Galo No. 52288 Exp. 12-31-14 CIVIL STATE OF CALIFORNIA

The State of California or its officers or agents shall not be responsible for the accuracy or completeness of scanned copies of this plan sheet.

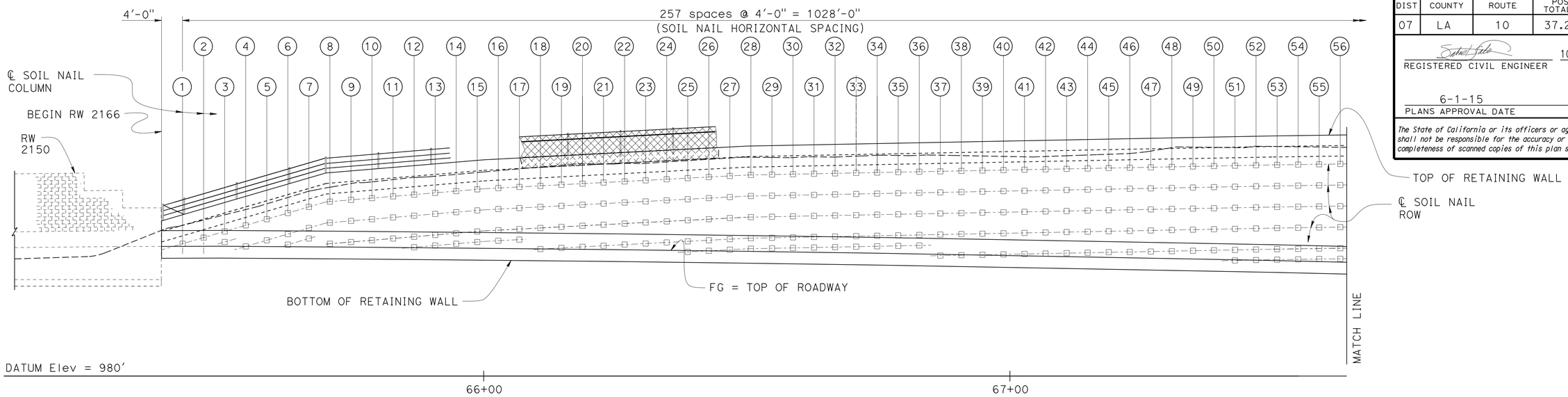

DEVELOPED ELEVATION

1" = 10'-0"

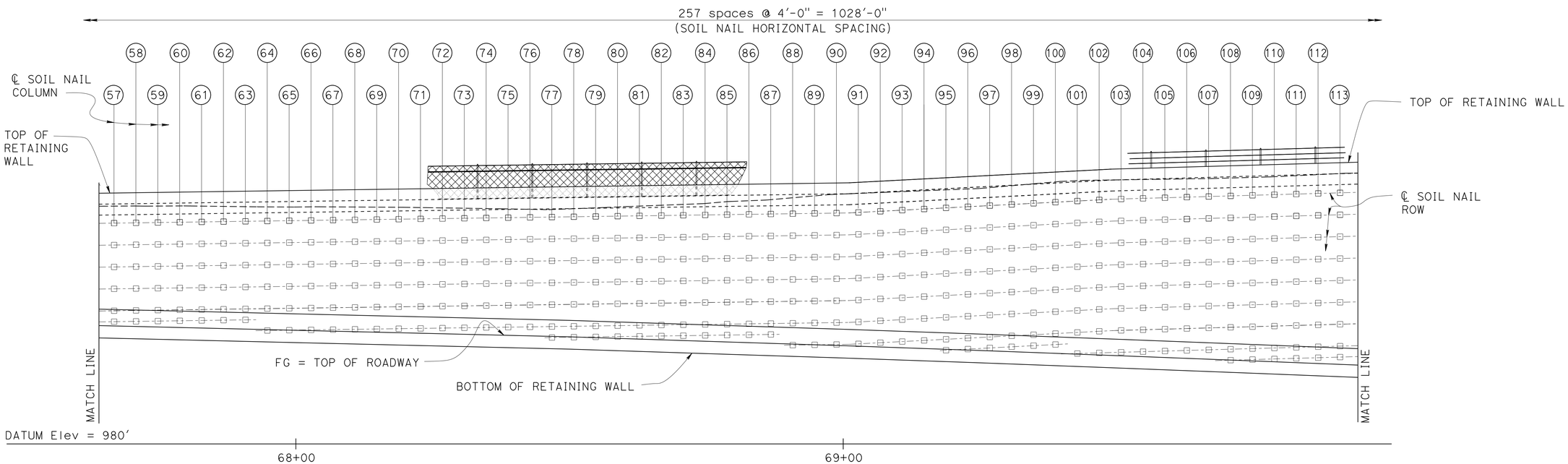

DEVELOPED ELEVATION

1" = 10'-0"

SOIL NAILS LAYOUT

Legend:

(XX) - Indicates Soil Nail Column number

□ - Indicates location of Soil Nail Assembly

Notes:

1. For Soil Nail location , see "SOIL NAIL DETAILS NO. 6" through "SOIL NAIL DETAILS NO. 12" sheets.
2. For Test Nail location, see "STRUCTURE PLAN NO. 1" and "STRUCTURE PLAN NO. 2" sheets.

	BY	CHECKED
DESIGN	Fred Feng	R. Novik\J. Higareda
DETAILS	H. Mauroschadt\S. Cholda	R. Novik\J. Higareda
QUANTITIES	Fred Feng	Ruslan Novik

STATE OF CALIFORNIA
DEPARTMENT OF TRANSPORTATION

DIVISION OF ENGINEERING SERVICES
STRUCTURE DESIGN
DESIGN BRANCH 15

BRIDGE NO. 53E0315
POST MILE 41.01

RETAINING WALL NO. 2166
SOIL NAIL DETAILS NO. 1

STRUCTURES DESIGN DETAIL SHEET (ENGLISH) (REV. 09-01-10)

ORIGINAL SCALE IN INCHES FOR REDUCED PLANS 0 1 2 3

UNIT: 3604
PROJECT NUMBER & PHASE: 0713000007
CONTRACT NO.: 07-1193U1

DISREGARD PRINTS BEARING EARLIER REVISION DATES

REVISION DATES 6-12-13 03-04-14 12-12-13 02-25-14

SHEET 18 OF 44

FILE => 53e0315-q-snd-01.dgn

USERNAME => s125624 DATE PLOTTED => 18-MAY-2015 TIME PLOTTED => 16:36

DIST	COUNTY	ROUTE	POST MILES TOTAL PROJECT	SHEET No.	TOTAL SHEETS
07	LA	10	37.2/42.4	2216	2313

REGISTERED CIVIL ENGINEER 10-1-14 DATE

6-1-15
PLANS APPROVAL DATE

REGISTERED PROFESSIONAL ENGINEER Gabriel J. Galo No. 52288 Exp. 12-31-14 CIVIL STATE OF CALIFORNIA

The State of California or its officers or agents shall not be responsible for the accuracy or completeness of scanned copies of this plan sheet.

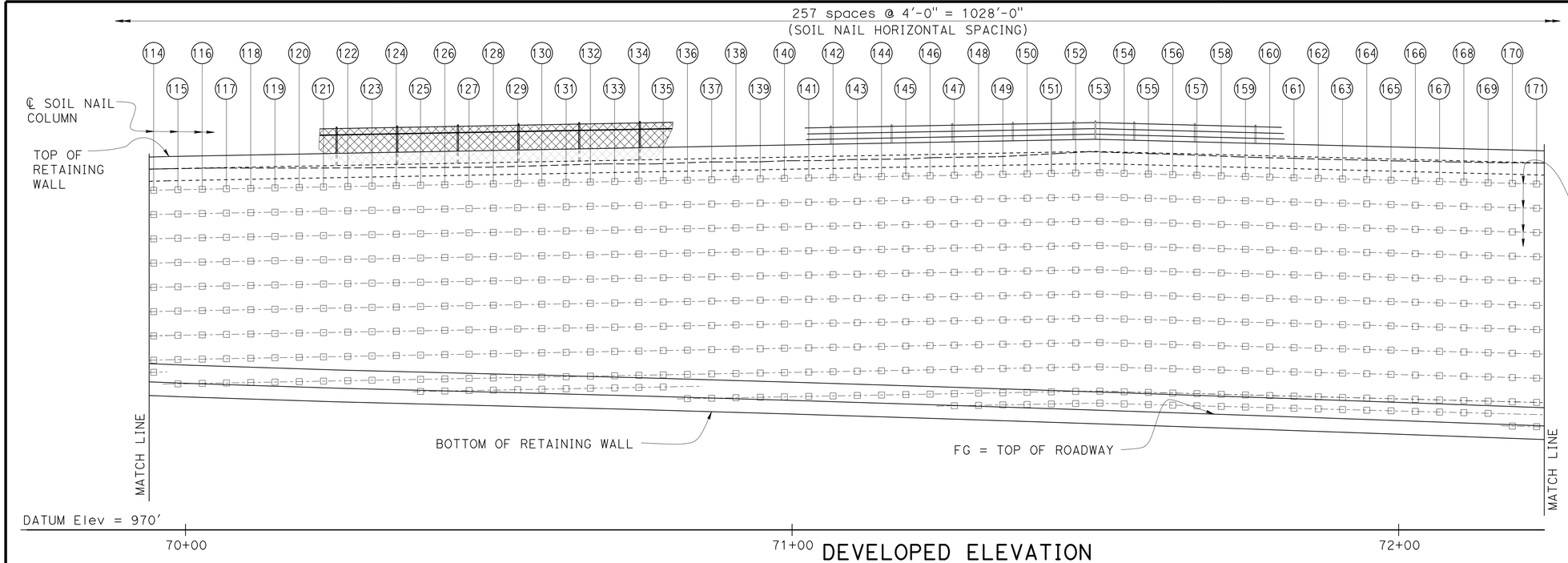

DEVELOPED ELEVATION

1" = 10'-0"

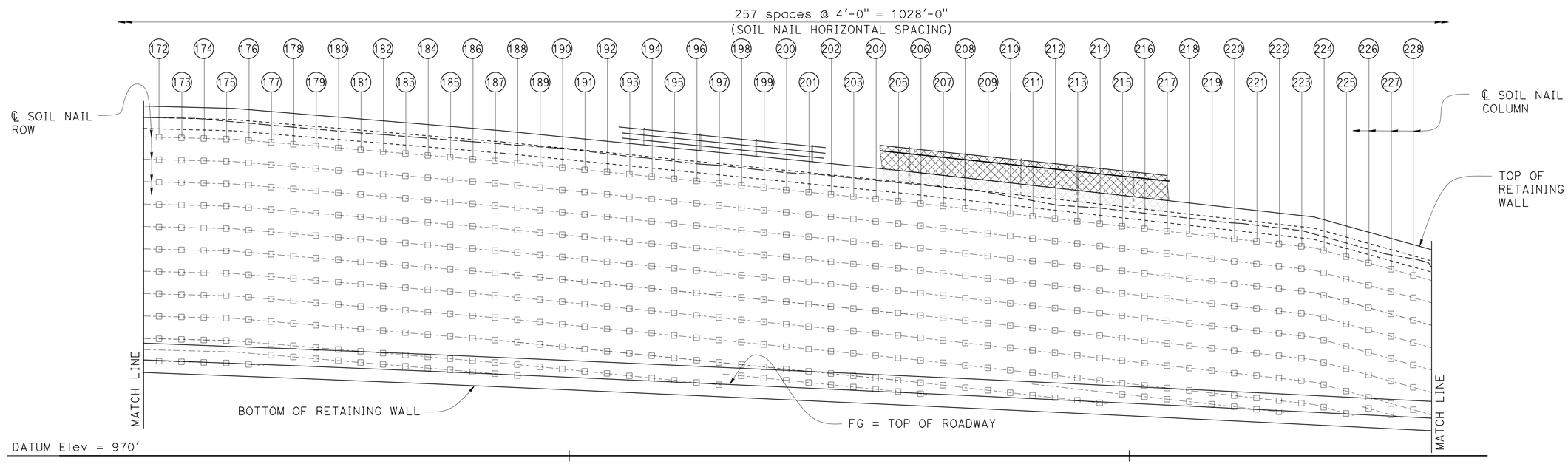

DEVELOPED ELEVATION

1" = 10'-0"

SOIL NAILS LAYOUT

Legend:

(XX) - Indicates Soil Nail Column number

□ - Indicates location of Soil Nail Assembly

Notes:

1. For Soil Nail location , see "SOIL NAIL DETAILS NO. 6" through "SOIL NAIL DETAILS NO. 12" sheets.
2. For Test Nail location, see "STRUCTURE PLAN NO. 3" and "STRUCTURE PLAN NO. 4" sheets.

	BY	CHECKED
DESIGN	Fred Feng	R. Novik\J. Higareda
DETAILS	H. Mauroschadt\S. Cholda	R. Novik\J. Higareda
QUANTITIES	Fred Feng	Ruslan Novik

STATE OF CALIFORNIA
DEPARTMENT OF TRANSPORTATION

DIVISION OF ENGINEERING SERVICES
STRUCTURE DESIGN
DESIGN BRANCH 15

BRIDGE NO. 53E0315
POST MILE 41.01

RETAINING WALL NO. 2166
SOIL NAIL DETAILS NO. 2

STRUCTURES DESIGN DETAIL SHEET (ENGLISH) (REV. 09-01-10)

ORIGINAL SCALE IN INCHES FOR REDUCED PLANS 0 1 2 3

UNIT: 3604
PROJECT NUMBER & PHASE: 0713000007
CONTRACT NO.: 07-1193U1

DISREGARD PRINTS BEARING EARLIER REVISION DATES

REVISION DATES: 6-12-13 02-28-14 03-04-14 02-25-15

SHEET 19 OF 44

FILE => 53e0315-q-snd-02.dgn

USERNAME => s125624 DATE PLOTTED => 18-MAY-2015 TIME PLOTTED => 16:36

DIST	COUNTY	ROUTE	POST MILES TOTAL PROJECT	SHEET No.	TOTAL SHEETS
07	LA	10	37.2/42.4	2217	2313

REGISTERED CIVIL ENGINEER 10-1-14 DATE

6-1-15
PLANS APPROVAL DATE

REGISTERED PROFESSIONAL ENGINEER Gabriel J. Galo No. 52288 Exp. 12-31-14 CIVIL STATE OF CALIFORNIA

The State of California or its officers or agents shall not be responsible for the accuracy or completeness of scanned copies of this plan sheet.

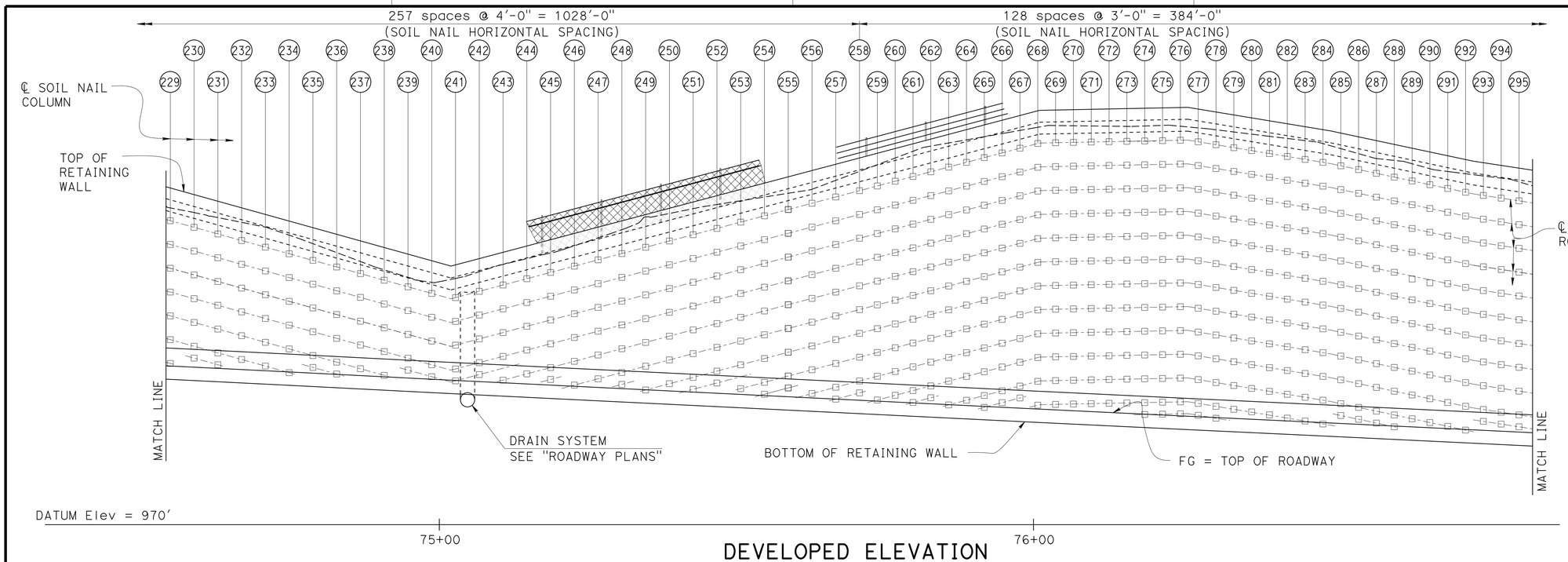

DEVELOPED ELEVATION

1" = 10'-0"

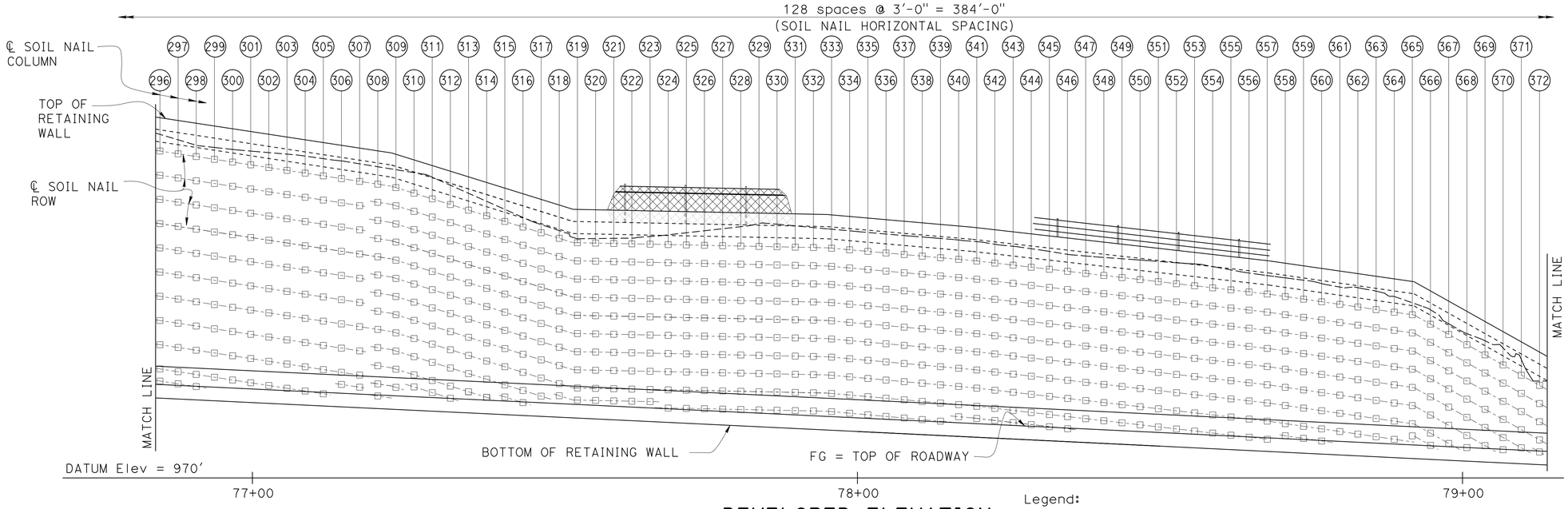

DEVELOPED ELEVATION

1" = 10'-0"

SOIL NAILS LAYOUT

Legend:

(XX) - Indicates Soil Nail Column number

□ - Indicates location of Soil Nail Assembly

Notes:

1. For Soil Nail location , see "SOIL NAIL DETAILS NO. 6" through "SOIL NAIL DETAILS NO. 12" sheets.
2. For Test Nail location, see "STRUCTURE PLAN NO.5" and "STRUCTURE PLAN NO. 6" sheets.

	BY	CHECKED
DESIGN	Fred Feng	R. Novik\J. Higareda
DETAILS	H. Mauroschadt\S. Cholda	R. Novik\J. Higareda
QUANTITIES	Fred Feng	Ruslan Novik

STATE OF CALIFORNIA
DEPARTMENT OF TRANSPORTATION

DIVISION OF ENGINEERING SERVICES
STRUCTURE DESIGN
DESIGN BRANCH 15

BRIDGE NO. 53E0315
POST MILE 41.01

RETAINING WALL NO. 2166
SOIL NAILS DETAILS NO. 3

STRUCTURES DESIGN DETAIL SHEET (ENGLISH) (REV. 09-01-10)

ORIGINAL SCALE IN INCHES FOR REDUCED PLANS 0 1 2 3

UNIT: 3604
PROJECT NUMBER & PHASE: 0713000007
CONTRACT NO.: 07-1193U1

DISREGARD PRINTS BEARING EARLIER REVISION DATES

REVISION DATES 6-12-13 07-08-14 03-04-14 07-07-14

SHEET 20 OF 44

FILE => 53e0315-q-snd-03.dgn

USERNAME => s125624 DATE PLOTTED => 18-MAY-2015 TIME PLOTTED => 16:36

DIST	COUNTY	ROUTE	POST MILES TOTAL PROJECT	SHEET No.	TOTAL SHEETS
07	LA	10	37.2/42.4	2218	2313

REGISTERED CIVIL ENGINEER 10-1-14 DATE

6-1-15
PLANS APPROVAL DATE

REGISTERED PROFESSIONAL ENGINEER
Gabriel J. Galo
No. 52288
Exp. 12-31-14
CIVIL
STATE OF CALIFORNIA

The State of California or its officers or agents shall not be responsible for the accuracy or completeness of scanned copies of this plan sheet.

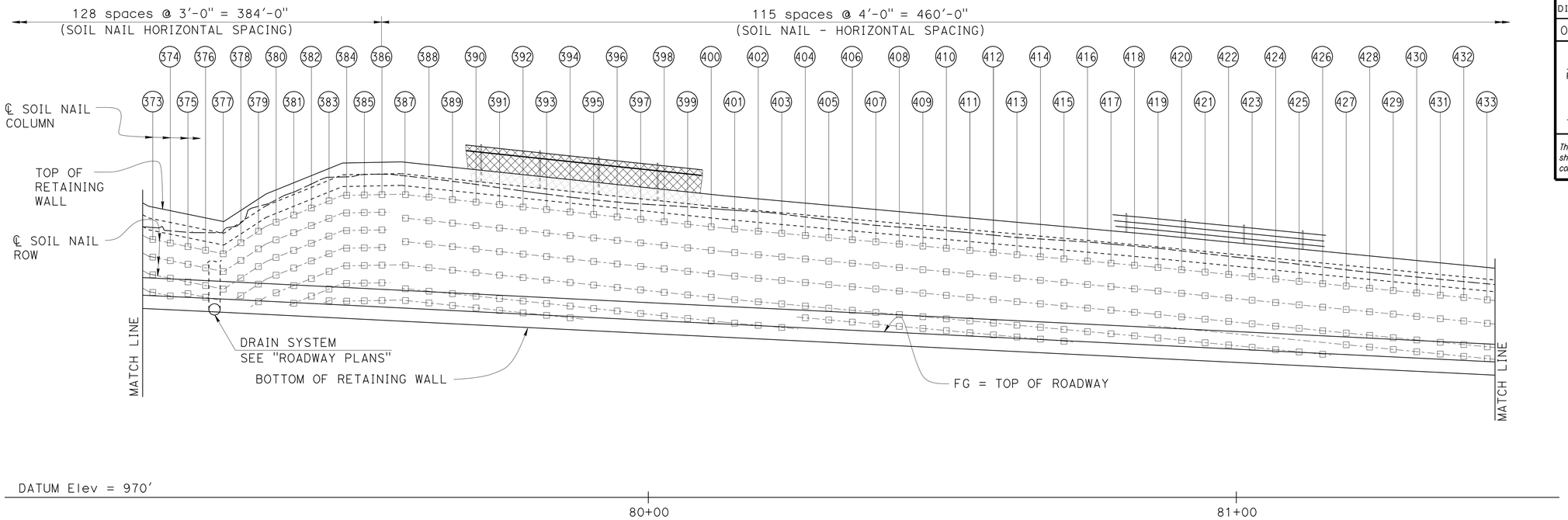

DEVELOPED ELEVATION

1" = 10'-0"

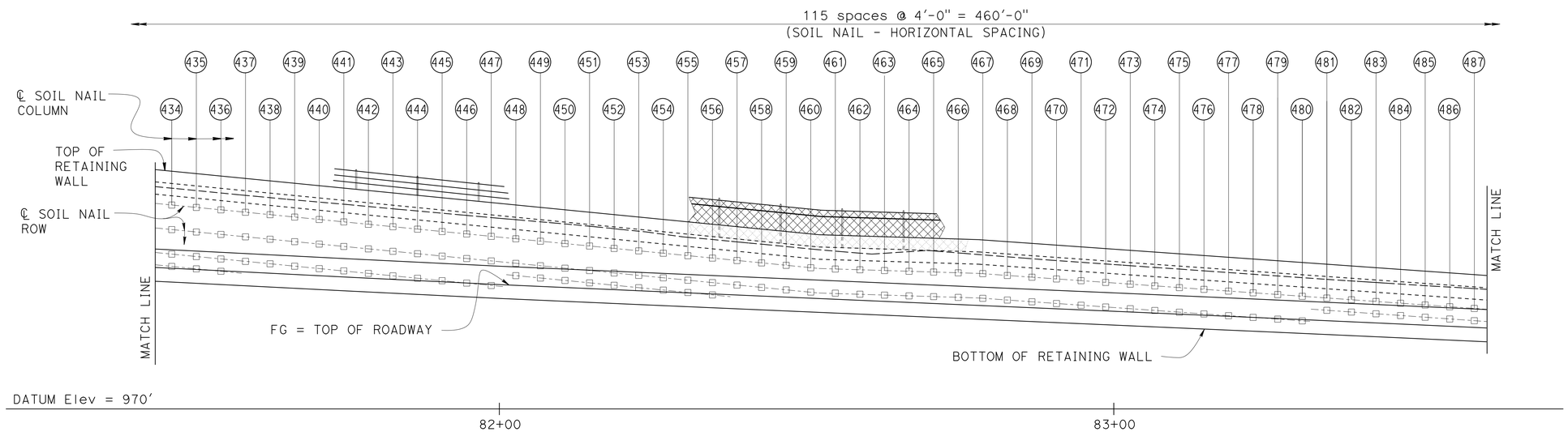

DEVELOPED ELEVATION

1" = 10'-0"

SOIL NAILS LAYOUT

Legend:

(XX) - Indicates Soil Nail Column number

□ - Indicates location of Soil Nail Assembly

Notes:

1. For Soil Nail location , see "SOIL NAIL DETAILS NO. 6" through "SOIL NAIL DETAILS NO. 12" sheets.
2. For Test Nail location, see "STRUCTURE PLAN NO. 7" and "STRUCTURE PLAN NO. 8" sheets.

	BY	CHECKED
DESIGN	Fred Feng	R. Novik\J. Higareda
DETAILS	H. Mauroschadt\S. Cholda	R. Novik\J. Higareda
QUANTITIES	Fred Feng	Ruslan Novik

STATE OF CALIFORNIA
DEPARTMENT OF TRANSPORTATION

DIVISION OF ENGINEERING SERVICES
STRUCTURE DESIGN
DESIGN BRANCH 15

BRIDGE NO. 53E0315
POST MILE 41.01

RETAINING WALL NO. 2166
SOIL NAILS DETAILS NO. 4

STRUCTURES DESIGN DETAIL SHEET (ENGLISH) (REV. 09-01-10)

ORIGINAL SCALE IN INCHES FOR REDUCED PLANS 0 1 2 3

UNIT: 3604
PROJECT NUMBER & PHASE: 0713000007
CONTRACT NO.: 07-1193U1

DISREGARD PRINTS BEARING EARLIER REVISION DATES

REVISION DATES: 6-06-13 03-04-14 07-07-14 02-25-15

SHEET 21 OF 44

FILE => 53e0315-q-snd-04.dgn

USERNAME => s125624 DATE PLOTTED => 18-MAY-2015 TIME PLOTTED => 16:36

DIST	COUNTY	ROUTE	POST MILES TOTAL PROJECT	SHEET No.	TOTAL SHEETS
07	LA	10	37.2/42.4	2219	2313

REGISTERED CIVIL ENGINEER 10-1-14 DATE

6-1-15
PLANS APPROVAL DATE

REGISTERED PROFESSIONAL ENGINEER
Gabriel J. Galo
No. 52288
Exp. 12-31-14
CIVIL
STATE OF CALIFORNIA

The State of California or its officers or agents shall not be responsible for the accuracy or completeness of scanned copies of this plan sheet.

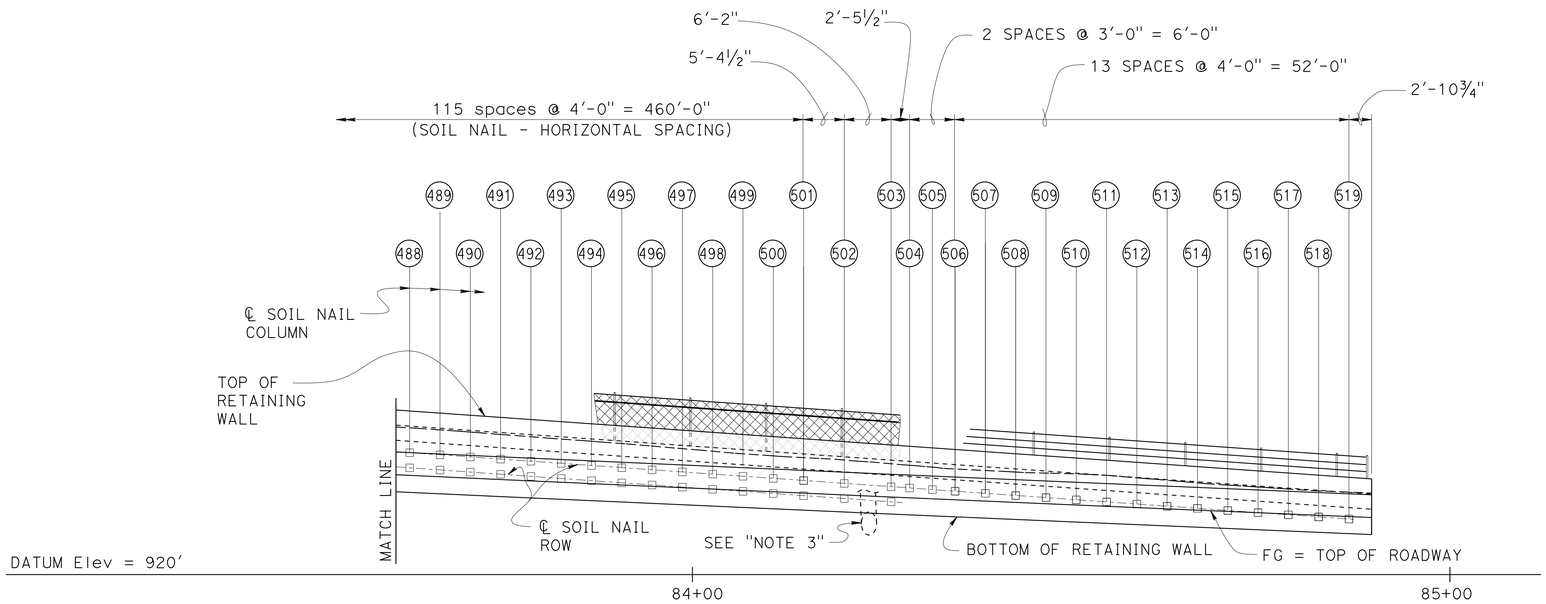

DEVELOPED ELEVATION

1" = 10'-0"

SOIL NAILS LAYOUT

Legend:

(XX) - Indicates Soil Nail Column number

□ - Indicates location of Soil Nail Assembly

Notes:

1. For Soil Nail location , see "SOIL NAIL DETAILS NO. 6" through "SOIL NAIL DETAILS NO. 12" sheets.
2. For Test Nail location, see "STRUCTURE PLAN NO. 9" sheet.
3. To protect the Existing 24" CMP, see "STUCTURE PLAN NO. 9" sheet.

	BY	CHECKED
DESIGN	Fred Feng	R. Novik\J. Higareda
DETAILS	H. Mauroschadt\S. Cholda	R. Novik\J. Higareda
QUANTITIES	Fred Feng	Ruslan Novik

STATE OF CALIFORNIA
DEPARTMENT OF TRANSPORTATION

DIVISION OF ENGINEERING SERVICES
STRUCTURE DESIGN
DESIGN BRANCH 15

BRIDGE NO. 53E2166
POST MILE 41.01

RETAINING WALL NO. 2166
SOIL NAIL DETAILS NO. 5

STRUCTURES DESIGN DETAIL SHEET (ENGLISH) (REV. 09-01-10)

ORIGINAL SCALE IN INCHES FOR REDUCED PLANS 0 1 2 3

UNIT: 3604
PROJECT NUMBER & PHASE: 0713000007
CONTRACT NO.: 07-1193U1

DISREGARD PRINTS BEARING EARLIER REVISION DATES

REVISION DATES 10-16-13 01-31-14 03-04-14 12-12-13

SHEET 22 OF 44

FILE => 53e0315-q-snd-05.dgn

USERNAME => s125624 DATE PLOTTED => 18-MAY-2015 TIME PLOTTED => 16:36

DIST	COUNTY	ROUTE	POST MILES TOTAL PROJECT	SHEET No.	TOTAL SHEETS
07	LA	10	37.2/42.4	2220	2313

REGISTERED CIVIL ENGINEER 10-1-14 DATE

6-1-15
PLANS APPROVAL DATE

REGISTERED PROFESSIONAL ENGINEER Gabriel J. Galo No. 52288 Exp. 12-31-14 CIVIL STATE OF CALIFORNIA

The State of California or its officers or agents shall not be responsible for the accuracy or completeness of scanned copies of this plan sheet.

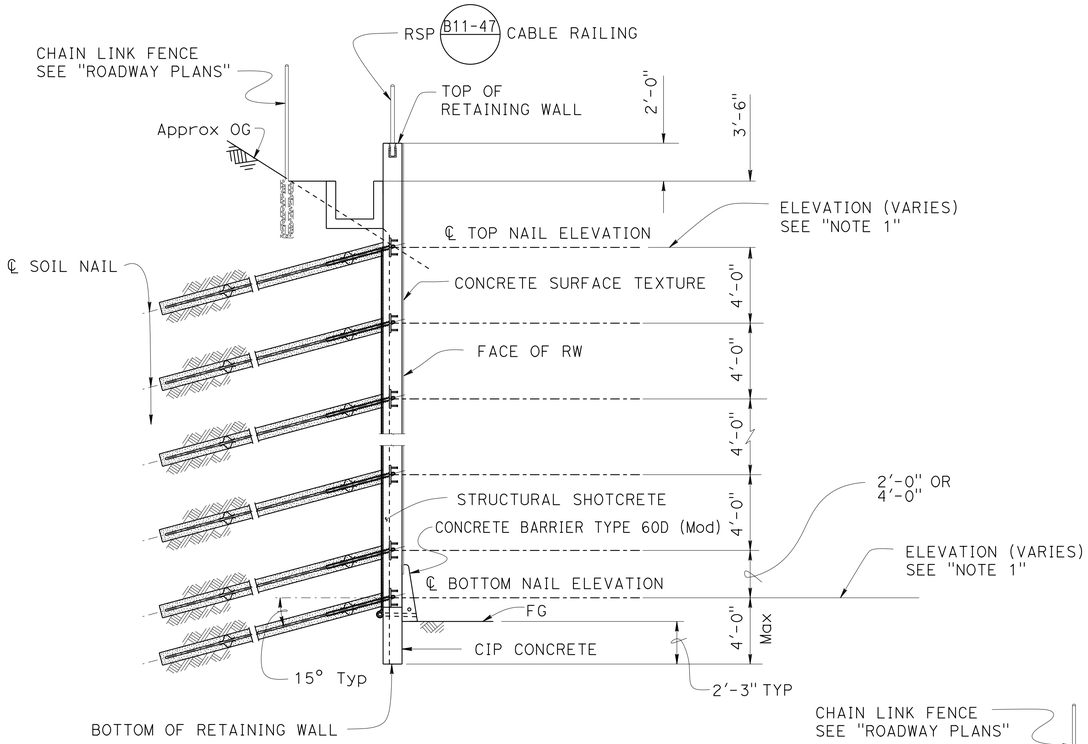

TYPICAL SECTION

1/4" = 1'-0"

SOIL NAIL - CROSS SECTION

BETWEEN NAIL COLUMN 1 AND NAIL COLUMN 307 AND
BETWEEN NAIL COLUMN 387 AND NAIL COLUMN 519

Notes:

1. For Soil Nail elevation, see "SOIL NAIL DETAILS NO. 7" through "SOIL NAIL DETAILS NO. 12" sheets.
2. For Soil Nail details, see "SOIL NAIL DETAILS NO. 14" sheet.

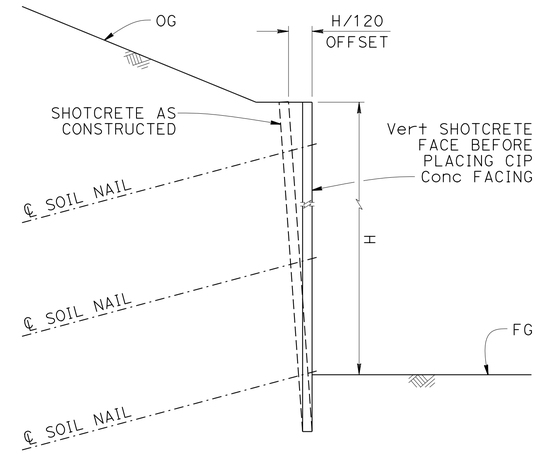

SOIL NAIL WALL OFFSET DETAIL

NO SCALE

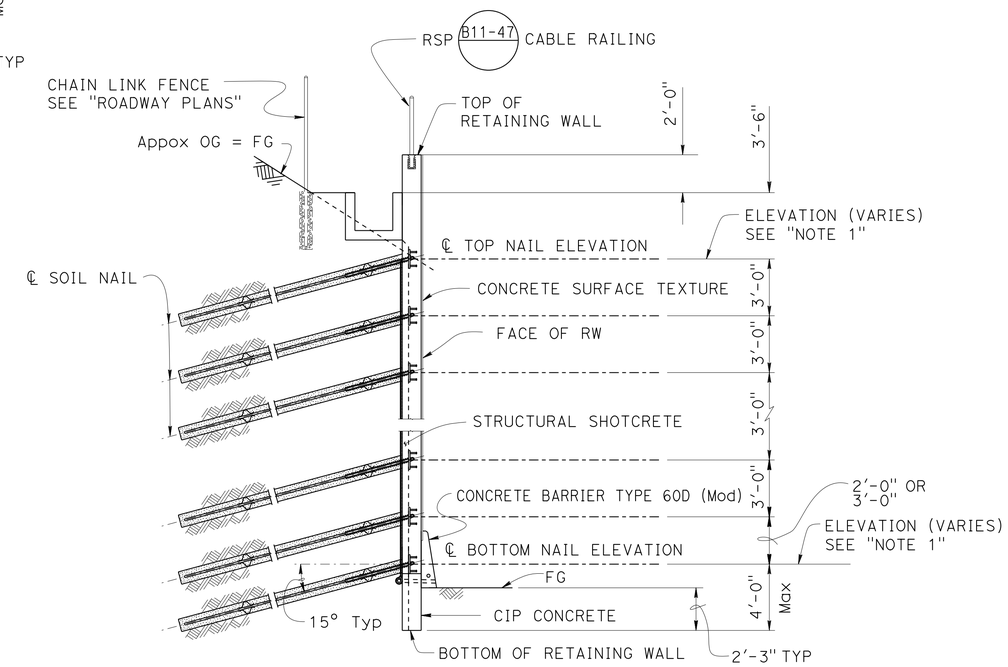

TYPICAL SECTION

1/4" = 1'-0"

SOIL NAIL - CROSS SECTION

BETWEEN NAIL COLUMN 308 AND NAIL COLUMN 386

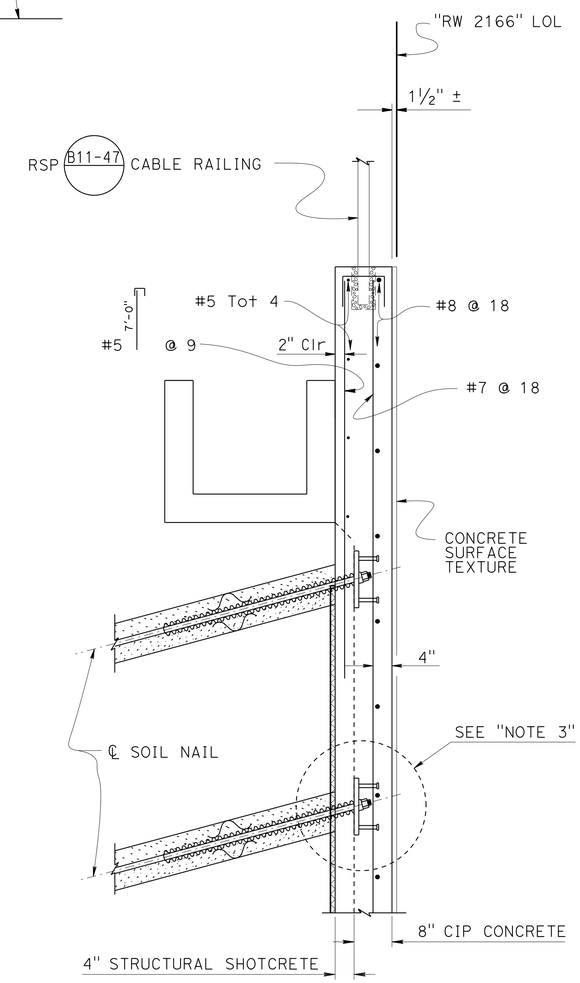

PART TYPICAL SECTION

3/4" = 1'-0"

DESIGN	BY Fred Feng	CHECKED R. Novik\J. Higareda	
DETAILS	BY Stan Cholda	CHECKED R. Novik\J. Higareda	
QUANTITIES	BY Fred Feng	CHECKED Ruslan Novik	

STATE OF CALIFORNIA
DEPARTMENT OF TRANSPORTATION

DIVISION OF ENGINEERING SERVICES
STRUCTURE DESIGN
DESIGN BRANCH 15

BRIDGE NO. 53E0315
POST MILE 41.01

RETAINING WALL NO. 2166
SOIL NAILS DETAILS NO. 6

STRUCTURES DESIGN DETAIL SHEET (ENGLISH) (REV. 09-01-10)

ORIGINAL SCALE IN INCHES FOR REDUCED PLANS 0 1 2 3

UNIT: 3604
PROJECT NUMBER & PHASE: 0713000007
CONTRACT NO.: 07-1193U1

DISREGARD PRINTS BEARING EARLIER REVISION DATES

REVISION DATES 6-12-13 02-04-14 02-28-14 03-04-14

SHEET 23 OF 44

FILE => 53e0315-q-snd-06.dgn

USERNAME => s125624 DATE PLOTTED => 18-MAY-2015 TIME PLOTTED => 16:36

DIST	COUNTY	ROUTE	POST MILES TOTAL PROJECT	SHEET No.	TOTAL SHEETS
07	LA	10	37.2/42.4	2221	2313

REGISTERED CIVIL ENGINEER 10-1-14 DATE

6-1-15
PLANS APPROVAL DATE

REGISTERED PROFESSIONAL ENGINEER
Gabriel J. Galo
No. 52288
Exp. 12-31-14
CIVIL
STATE OF CALIFORNIA

The State of California or its officers or agents shall not be responsible for the accuracy or completeness of scanned copies of this plan sheet.

SOIL NAIL TABLE

LOCATION	1	2	3	4	5	6	7	8	9	10	11	12	13	14	15	16	17	18	19	20	21
TOP NAIL ELELVATION	1005.13	1006.29	1007.46	1008.62	1009.79	1010.95	1012.12	1013.12	1013.45	1013.79	1014.12	1014.45	1014.79	1015.12	1015.45	1015.70	1015.91	1016.12	1016.33	1016.54	1016.74
BOTTOM NAIL ELEVATION			1005.46	1004.62	1005.79	1004.95	1006.12	1005.12	1005.45	1005.79	1006.12	1004.45	1004.79	1005.12	1005.45	1005.70	1005.91	1004.12	1004.33	1004.54	1004.74
SOIL NAILS QUANTITY	1	1	2	2	2	3	3	3	3	3	3	4	4	4	4	4	4	4	4	4	4

SOIL NAIL TABLE

LOCATION	22	23	24	25	26	27	28	29	30	31	32	33	34	35	36	37	38	39	40	41	42	43	44
TOP NAIL ELEVATION	1016.95	1017.16	1017.37	1017.58	1017.79	1018.00	1018.18	1018.26	1018.33	1018.41	1018.49	1018.56	1018.64	1018.72	1018.80	1018.87	1018.95	1019.03	1019.10	1019.18	1019.26	1019.34	1019.41
BOTTOM NAIL ELEVATION	1004.95	1005.16	1005.37	1003.58	1003.79	1004.00	1004.18	1004.26	1004.33	1004.41	1004.49	1004.56	1004.64	1004.72	1004.80	1002.87	1002.95	1003.03	1003.10	1003.18	1003.26	1003.34	1003.41
SOIL NAILS QUANTITY	4	4	4	5	5	5	5	5	5	5	5	5	5	5	5	5	5	5	5	5	5	5	5

SOIL NAIL TABLE

LOCATION	45	46	47	48	49	50	51	52	53	54	55	56	57	58	59	60	61	62	63	64	65	66	67
TOP NAIL ELEVATION	1019.49	1019.57	1019.64	1019.72	1019.80	1019.87	1019.95	1020.03	1020.10	1020.16	1020.21	1020.27	1020.32	1020.38	1020.44	1020.49	1020.55	1020.60	1020.66	1020.71	1020.77	1020.82	1020.88
BOTTOM NAIL ELEVATION	1003.49	1003.57	1003.64	1003.72	1003.80	1003.87	1001.95	1002.03	1002.10	1002.16	1002.21	1002.27	1002.32	1002.38	1002.44	1002.49	1002.55	1002.60	1000.66	1000.71	1000.77	1000.82	1000.88
SOIL NAILS QUANTITY	5	5	5	5	5	5	6	6	6	6	6	6	6	6	6	6	6	6	6	6	6	6	6

SOIL NAIL TABLE

LOCATION	68	69	70	71	72	73	74	75	76	77	78	79	80	81	82	83	84	85	86	87	88	89	90
TOP NAIL ELEVATION	1020.94	1020.99	1021.05	1021.10	1021.16	1021.21	1021.27	1021.32	1021.38	1021.43	1021.49	1021.55	1021.60	1021.66	1021.71	1021.77	1021.82	1021.88	1021.93	1021.99	1022.05	1022.10	1022.16
BOTTOM NAIL ELEVATION	1000.94	1000.99	1001.05	1001.10	1001.16	1001.21	1001.27	1001.32	1001.38	999.43	999.49	999.55	999.60	999.66	999.71	999.77	999.82	999.88	999.93	999.99	998.05	998.10	998.16
SOIL NAILS QUANTITY	6	6	6	6	6	6	6	6	6	7	7	7	7	7	7	7	7	7	7	7	7	7	7

	BY	CHECKED
DESIGN	Fred Feng	R. Novik\J. Higareda
DETAILS	H. Mauroschadt\S. Cholda	R. Novik\J. Higareda
QUANTITIES	Fred Feng	Ruslan Novik

STATE OF CALIFORNIA
DEPARTMENT OF TRANSPORTATION

DIVISION OF ENGINEERING SERVICES
STRUCTURE DESIGN
DESIGN BRANCH 15

BRIDGE NO. 53E0315
POST MILE 41.01

RETAINING WALL NO. 2166
SOIL NAIL DETAILS NO. 7

STRUCTURES DESIGN DETAIL SHEET (ENGLISH) (REV. 09-01-10)

ORIGINAL SCALE IN INCHES FOR REDUCED PLANS 0 1 2 3

UNIT: 3604
PROJECT NUMBER & PHASE: 0713000007
CONTRACT NO.: 07-1193U1

DISREGARD PRINTS BEARING EARLIER REVISION DATES

REVISION DATES: 2-13-13 10-30-13 11-22-13 12-13-13

SHEET 24 OF 44

FILE => 53e0315-q-snd-07.dgn

USERNAME => s125624 DATE PLOTTED => 18-MAY-2015 TIME PLOTTED => 16:37

DIST	COUNTY	ROUTE	POST MILES TOTAL PROJECT	SHEET No.	TOTAL SHEETS
07	LA	10	37.2/42.4	2222	2313

REGISTERED CIVIL ENGINEER 10-1-14 DATE

6-1-15
PLANS APPROVAL DATE

REGISTERED PROFESSIONAL ENGINEER
Gabriel J. Galo
No. 52288
Exp. 12-31-14
CIVIL
STATE OF CALIFORNIA

The State of California or its officers or agents shall not be responsible for the accuracy or completeness of scanned copies of this plan sheet.

SOIL NAIL TABLE

LOCATION	91	92	93	94	95	96	97	98	99	100	101	102	103	104	105	106	107	108	109	110	111	112	113
TOP NAIL ELEVATION	1022.28	1022.49	1022.70	1022.90	1023.11	1023.32	1023.53	1023.74	1023.95	1024.15	1024.36	1024.57	1024.74	1024.85	1024.96	1025.08	1025.19	1025.30	1025.41	1025.52	1025.64	1025.75	1025.87
BOTTOM NAIL ELEVATION	998.28	998.49	998.70	998.90	997.11	997.32	997.53	997.74	997.95	998.15	996.36	996.57	996.74	996.85	996.96	997.08	997.19	995.30	995.41	995.52	995.64	995.75	995.87
SOIL NAILS QUANTITY	7	7	7	7	8	8	8	8	8	8	8	8	8	8	8	8	8	9	9	9	9	9	9

SOIL NAIL TABLE

LOCATION	114	115	116	117	118	119	120	121	122	123	124	125	126	127	128	129	130	131	132	133	134	135	136
TOP NAIL ELEVATION	1025.98	1026.07	1026.14	1026.22	1026.29	1026.37	1026.44	1026.51	1026.59	1026.66	1026.74	1026.81	1026.89	1026.96	1027.03	1027.11	1027.18	1027.26	1027.33	1027.40	1027.48	1027.55	1027.62
BOTTOM NAIL ELEVATION	995.98	994.07	994.14	994.22	994.29	994.37	994.44	994.51	994.59	994.66	994.74	992.81	992.89	992.96	993.03	993.11	993.18	993.26	993.33	993.40	993.48	993.55	991.62
SOIL NAILS QUANTITY	9	9	9	9	9	9	9	9	9	9	9	10	10	10	10	10	10	10	10	10	10	10	10

SOIL NAIL TABLE

LOCATION	137	138	139	140	141	142	143	144	145	146	147	148	149	150	151	152	153	154	155	156	157	158	159
TOP NAIL ELEVATION	1027.70	1027.78	1027.85	1027.93	1028.00	1028.07	1028.15	1028.22	1028.30	1028.37	1028.45	1028.52	1028.60	1028.67	1028.75	1028.82	1028.86	1028.76	1028.66	1028.55	1028.45	1028.35	1028.24
BOTTOM NAIL ELEVATION	991.70	991.78	991.85	991.93	992.00	992.07	992.15	992.22	992.30	992.37	990.45	990.52	990.60	990.67	990.75	990.82	990.86	990.76	990.66	990.55	990.45	990.35	990.24
SOIL NAILS QUANTITY	10	10	10	10	10	10	10	10	10	10	11	11	11	11	11	11	11	11	11	11	11	11	11

SOIL NAIL TABLE

LOCATION	160	161	162	163	164	165	166	167	168	169	170	171	172	173	174	175	176	177	178	179	180	181	182
TOP NAIL ELEVATION	1028.14	1028.04	1027.94	1027.83	1027.73	1027.63	1027.52	1027.42	1027.32	1027.21	1027.11	1027.01	1026.90	1026.80	1026.70	1026.60	1026.33	1026.00	1025.67	1025.34	1025.00	1024.67	1024.34
BOTTOM NAIL ELEVATION	990.14	990.04	989.94	989.83	989.73	989.63	989.52	989.42	989.32	989.21	987.11	987.01	986.90	986.80	986.70	986.60	986.33	988.00	987.67	987.34	987.00	986.67	986.34
SOIL NAILS QUANTITY	11	11	11	11	11	11	11	11	11	11	11	11	11	11	11	11	11	11	11	11	11	11	11

DESIGN	BY Fred Feng	CHECKED R. Novik\J. Higareda	
DETAILS	BY H. Mauroschadt\S. Cholda	CHECKED R. Novik\J. Higareda	
QUANTITIES	BY Fred Feng	CHECKED Ruslan Novik	

STATE OF CALIFORNIA
DEPARTMENT OF TRANSPORTATION

DIVISION OF ENGINEERING SERVICES
STRUCTURE DESIGN
DESIGN BRANCH 15

BRIDGE NO. 53E0315
POST MILE 41.01

RETAINING WALL NO. 2166
SOIL NAIL DETAILS NO. 8

STRUCTURES DESIGN DETAIL SHEET (ENGLISH) (REV. 09-01-10)

ORIGINAL SCALE IN INCHES FOR REDUCED PLANS 0 1 2 3

UNIT: 3604
PROJECT NUMBER & PHASE: 0713000007
CONTRACT NO.: 07-1193U1

DISREGARD PRINTS BEARING EARLIER REVISION DATES

REVISION DATES: 2-14-13 10-30-13 11-22-13 12-13-13

SHEET 25 OF 44

FILE => 53e0315-q-snd-08.dgn

USERNAME => s125624 DATE PLOTTED => 18-MAY-2015 TIME PLOTTED => 16:37

DIST	COUNTY	ROUTE	POST MILES TOTAL PROJECT	SHEET No.	TOTAL SHEETS
07	LA	10	37.2/42.4	2223	2313

REGISTERED CIVIL ENGINEER 10-1-14 DATE

6-1-15
PLANS APPROVAL DATE

REGISTERED PROFESSIONAL ENGINEER
Gabriel J. Galo
No. 52288
Exp. 12-31-14
CIVIL
STATE OF CALIFORNIA

The State of California or its officers or agents shall not be responsible for the accuracy or completeness of scanned copies of this plan sheet.

SOIL NAIL TABLE

LOCATION	183	184	185	186	187	188	189	190	191	192	193	194	195	196	197	198	199	200	201	202	203	204	205
TOP NAIL ELEVATION	1024.00	1023.67	1023.34	1023.00	1022.67	1022.30	1021.90	1021.50	1021.10	1020.70	1020.30	1019.90	1019.50	1019.10	1018.70	1018.30	1017.90	1017.50	1017.10	1016.70	1016.30	1015.89	1015.49
BOTTOM NAIL ELEVATION	986.00	985.67	985.34	985.00	984.67	984.30	985.90	985.50	985.10	984.70	984.30	983.90	983.50	983.10	982.70	984.30	983.90	983.50	983.10	982.70	982.30	981.89	981.49
SOIL NAILS QUANTITY	11	11	11	11	11	11	10	10	10	10	10	10	10	10	10	10	10	10	10	10	10	10	10

SOIL NAIL TABLE

LOCATION	206	207	208	209	210	211	212	213	214	215	216	217	218	219	220	221	222	223	224	225	226	227	228
TOP NAIL ELEVATION	1015.07	1014.62	1014.17	1013.72	1013.27	1012.82	1012.37	1011.92	1011.47	1011.02	1010.57	1010.12	1009.67	1009.22	1008.77	1008.32	1007.87	1007.42	1006.68	1005.57	1004.46	1003.35	1002.23
BOTTOM NAIL ELEVATION	981.07	982.62	982.17	981.72	981.27	980.82	980.37	979.92	979.47	981.02	980.57	980.12	279.67	979.22	978.77	978.32	977.87	979.42	978.68	977.57	978.46	977.35	978.23
SOIL NAILS QUANTITY	10	9	9	9	9	9	9	9	9	9	9	9	9	9	9	9	9	8	8	8	8	8	7

SOIL NAIL TABLE

LOCATION	229	230	231	232	233	234	235	236	237	238	239	240	241	242	243	244	245	246	247	248	249	250	251
TOP NAIL ELEVATION	1001.12	1000.01	998.90	997.79	996.67	995.56	994.45	993.34	992.23	991.11	990.00	988.89	988.19	989.25	990.31	991.36	992.42	993.48	994.54	995.60	996.65	997.71	998.77
BOTTOM NAIL ELEVATION	977.12	978.01	976.90	977.79	976.67	975.56	976.45	975.34	976.23	975.11	976.00	974.89	974.19	975.25	974.31	975.36	974.42	973.48	974.54	973.60	972.65	973.71	972.77
SOIL NAILS QUANTITY	7	7	7	6	6	6	6	6	5	5	5	5	5	5	5	5	6	6	6	7	7	7	8

SOIL NAIL TABLE

LOCATION	252	253	254	255	256	257	258	259	260	261	262	263	264	265	266	267	268	269	270	271	272	273	274
TOP NAIL ELEVATION	999.83	1000.88	1001.94	1003.00	1004.05	1005.11	1006.17	1006.96	1007.76	1008.55	1009.34	1010.14	1010.93	1011.72	1012.52	1013.31	1014.10	1014.23	1014.29	1014.35	1014.41	1014.47	1014.53
BOTTOM NAIL ELEVATION	973.83	972.88	971.94	973.00	972.05	971.11	972.17	970.96	971.76	970.55	971.34	970.14	970.93	969.72	970.52	971.31	970.10	970.23	970.29	970.35	970.41	970.47	968.53
SOIL NAILS QUANTITY	8	8	9	9	9	10	10	10	10	11	11	11	11	12	12	12	12	12	12	12	12	12	13

	BY	CHECKED
DESIGN	Fred Feng	R. Novik\J. Higareda
DETAILS	H. Mauroschadt\S. Cholda	R. Novik\J. Higareda
QUANTITIES	Fred Feng	Ruslan Novik

STATE OF CALIFORNIA
DEPARTMENT OF TRANSPORTATION

DIVISION OF ENGINEERING SERVICES
STRUCTURE DESIGN
DESIGN BRANCH 15

BRIDGE NO. 53E0315
POST MILE 41.01

RETAINING WALL NO. 2166
SOIL NAIL DETAILS NO. 9

STRUCTURES DESIGN DETAIL SHEET (ENGLISH) (REV. 09-01-10)

ORIGINAL SCALE IN INCHES FOR REDUCED PLANS 0 1 2 3

UNIT: 3604
PROJECT NUMBER & PHASE: 0713000007
CONTRACT NO.: 07-1193U1

DISREGARD PRINTS BEARING EARLIER REVISION DATES

REVISION DATES: 2-13-13 10-30-13 11-22-13 12-13-13

SHEET 26 OF 44

FILE => 53e0315-q-snd-09.dgn

USERNAME => s125624 DATE PLOTTED => 18-MAY-2015 TIME PLOTTED => 16:37

DIST	COUNTY	ROUTE	POST MILES TOTAL PROJECT	SHEET No.	TOTAL SHEETS
07	LA	10	37.2/42.4	2224	2313

REGISTERED CIVIL ENGINEER 10-1-14 DATE

6-1-15
PLANS APPROVAL 988.02

REGISTERED PROFESSIONAL ENGINEER
Gabriel J. Galo
No. 52288
Exp. 12-31-14
CIVIL
STATE OF CALIFORNIA

The State of California or its officers or agents shall not be responsible for the accuracy or completeness of scanned copies of this plan sheet.

SOIL NAIL TABLE

LOCATION	275	276	277	278	279	280	281	282	283	284	285	286	287	288	289	290	291	292	293	294	295	296	297
TOP NAIL ELEVATION	1014.59	1014.65	1014.39	1013.90	1013.40	1012.91	1012.42	1011.92	1011.43	1010.93	1010.36	1009.72	1009.08	1008.45	1007.81	1007.18	1006.54	1005.91	1005.37	1004.92	1004.46	1004.00	1003.55
BOTTOM NAIL ELEVATION	968.59	968.65	968.39	967.90	969.40	968.91	968.42	967.92	967.43	966.93	968.36	967.72	967.08	966.45	967.81	967.18	966.54	965.91	967.37	966.92	966.46	966.00	965.55
SOIL NAILS QUANTITY	13	13	13	13	12	12	12	12	12	12	12	12	12	12	11	11	11	11	11	11	11	11	11

SOIL NAIL TABLE

LOCATION	298	299	300	301	302	303	304	305	306	307	308	309	310	311	312	313	314	315	316	317	318	319	320
TOP NAIL ELEVATION	1003.09	1002.64	1002.18	1001.72	1001.27	1000.81	1000.36	999.90	999.45	998.99	998.53	997.96	997.03	996.10	995.17	994.24	993.31	992.37	991.44	990.51	989.58	988.86	988.80
BOTTOM NAIL ELEVATION	965.09	966.64	966.18	965.72	965.27	964.81	964.36	963.90	965.45	964.99	963.53	964.96	965.03	964.10	963.17	964.24	963.31	963.37	962.44	963.51	963.58	962.86	962.80
SOIL NAILS QUANTITY	11	10	10	10	10	10	10	10	10	10	13	12	12	12	12	11	11	11	11	10	10	10	10

SOIL NAIL TABLE

LOCATION	321	322	323	324	325	326	327	328	329	330	331	332	333	334	335	336	337	338	339	340	341	342	343
TOP NAIL ELEVATION	988.73	988.67	988.61	988.55	988.49	988.43	988.37	988.31	988.25	988.18	988.12	988.06	987.95	987.69	987.43	987.17	986.90	986.64	986.38	986.12	985.84	985.50	985.16
BOTTOM NAIL ELEVATION	962.73	962.67	962.61	961.55	961.49	961.43	961.37	961.31	961.25	961.18	961.12	961.06	960.95	960.69	960.43	960.17	959.90	959.64	959.38	960.12	959.84	959.50	959.16
SOIL NAILS QUANTITY	10	10	10	10	10	10	10	10	10	10	10	10	10	10	10	10	10	10	10	10	10	10	10

SOIL NAIL TABLE

LOCATION	344	345	346	347	348	349	350	351	352	353	354	355	356	357	358	359	360	361	362	363	364	365	366
TOP NAIL ELEVATION	984.82	984.48	984.13	983.79	983.45	983.11	982.78	982.43	982.09	981.75	981.41	981.07	980.73	980.39	979.97	979.54	979.11	978.68	978.25	977.81	977.38	976.96	975.40
BOTTOM NAIL ELEVATION	958.82	958.48	958.13	959.79	959.45	959.11	958.78	958.43	958.09	957.75	957.41	957.07	956.73	956.39	956.97	956.54	956.11	957.68	957.25	956.81	956.38	956.96	955.40
SOIL NAILS QUANTITY	10	10	10	9	9	9	9	9	9	9	9	9	9	9	9	9	9	8	8	8	8	8	8

DESIGN	BY Fred Feng	CHECKED R. Novik\J. Higareda	
DETAILS	BY H. Mauroschadt\S. Cholda	CHECKED R. Novik\J. Higareda	
QUANTITIES	BY Fred Feng	CHECKED Ruslan Novik	

STATE OF CALIFORNIA
DEPARTMENT OF TRANSPORTATION

DIVISION OF ENGINEERING SERVICES
STRUCTURE DESIGN
DESIGN BRANCH 15

BRIDGE NO. 53E0315
POST MILE 41.01

RETAINING WALL NO. 2166
SOIL NAIL DETAILS NO. 10

STRUCTURES DESIGN DETAIL SHEET (ENGLISH) (REV. 09-01-10)

ORIGINAL SCALE IN INCHES FOR REDUCED PLANS 0 1 2 3

UNIT: 3604
PROJECT NUMBER & PHASE: 0713000007
CONTRACT NO.: 07-1193U1

DISREGARD PRINTS BEARING EARLIER REVISION DATES

REVISION DATES: 2-13-13 10-30-13 12-13-13 10-16-13

SHEET 27 OF 44

FILE => 53e0315-q-snd-10.dgn

USERNAME => s125624 DATE PLOTTED => 18-MAY-2015 TIME PLOTTED => 16:37

DIST	COUNTY	ROUTE	POST MILES TOTAL PROJECT	SHEET No.	TOTAL SHEETS
07	LA	10	37.2/42.4	2225	2313

REGISTERED CIVIL ENGINEER 10-1-14 DATE

6-1-15
PLANS APPROVAL DATE

REGISTERED PROFESSIONAL ENGINEER
Gabriel J. Galo
No. 52288
Exp. 12-31-14
CIVIL
STATE OF CALIFORNIA

The State of California or its officers or agents shall not be responsible for the accuracy or completeness of scanned copies of this plan sheet.

SOIL NAIL TABLE

LOCATION	367	368	369	370	371	372	373	374	375	376	377	378	379	380	381	382	383	384	385	386	387	388	389
TOP NAIL ELEVATION	973.70	972.02	970.34	968.67	966.98	965.30	963.87	963.26	962.65	962.04	961.42	963.31	965.27	966.80	968.01	969.22	970.44	971.38	971.44	971.50	971.49	971.07	970.65
BOTTOM NAIL ELEVATION	955.70	955.02	955.34	954.67	954.98	954.30	954.87	954.26	954.65	954.04	955.42	954.31	953.27	954.80	953.01	954.22	953.44	953.38	953.44	953.50	953.49	953.07	952.65
SOIL NAILS QUANTITY	7	7	6	6	5	5	4	4	4	4	3	4	5	5	6	6	7	7	7	7	6	6	6

SOIL NAIL TABLE

LOCATION	390	391	392	393	394	395	396	397	398	399	400	401	402	403	404	405	406	407	408	409	410	411	412
TOP NAIL ELEVATION	970.23	969.81	969.39	968.97	968.55	968.13	967.71	967.29	966.87	966.45	966.03	965.63	965.27	964.91	964.55	964.18	963.82	963.46	963.10	962.73	962.37	962.01	961.65
BOTTOM NAIL ELEVATION	952.23	951.81	951.39	950.97	950.55	952.13	951.71	951.29	950.87	950.45	950.03	949.63	949.27	948.91	950.55	950.18	949.82	949.46	949.10	948.73	948.37	948.01	947.65
SOIL NAILS QUANTITY	6	6	6	6	6	5	5	5	5	5	5	5	5	5	5	5	5	5	5	5	5	5	5

SOIL NAIL TABLE

LOCATION	413	414	415	416	417	418	419	420	421	422	423	424	425	426	427	428	429	430	431	432	433	434	435
TOP NAIL ELEVATION	961.29	960.92	960.56	960.20	959.84	959.48	959.10	958.71	958.31	957.92	957.53	957.14	956.74	956.35	955.96	955.56	955.17	954.78	954.39	954.00	953.60	953.21	952.82
BOTTOM NAIL ELEVATION	947.29	946.92	946.56	948.20	947.84	947.48	947.10	946.71	946.31	945.92	945.53	945.14	944.74	944.35	945.96	945.56	945.17	944.78	944.39	944.00	943.60	943.21	942.82
SOIL NAILS QUANTITY	5	5	5	4	4	4	4	4	4	4	4	4	4	4	4	4	4	4	4	4	4	4	4

SOIL NAIL TABLE

LOCATION	436	437	438	439	440	441	442	443	444	445	446	447	448	449	450	451	452	453	454	455	456	457	458
TOP NAIL ELEVATION	952.42	952.03	951.64	951.24	950.85	950.46	950.07	949.68	949.28	948.89	948.50	948.10	947.71	947.32	946.93	946.53	946.14	945.75	945.35	944.96	944.57	944.18	943.78
BOTTOM NAIL ELEVATION	942.42	944.03	943.64	943.24	942.85	942.46	942.07	941.68	941.28	940.89	940.50	940.10	941.71	941.32	940.93	940.53	940.14	939.75	939.35	938.96	938.57	940.18	939.78
SOIL NAILS QUANTITY	4	3	3	3	3	3	3	3	3	3	3	3	3	3	3	3	3	3	3	3	3	2	2

DESIGN	BY Fred Feng	CHECKED R. Novik\J. Higareda	
DETAILS	BY H. Mauroschadt\S. Cholda	CHECKED R. Novik\J. Higareda	
QUANTITIES	BY Fred Feng	CHECKED Ruslan Novik	

STATE OF CALIFORNIA
DEPARTMENT OF TRANSPORTATION

DIVISION OF ENGINEERING SERVICES
STRUCTURE DESIGN
DESIGN BRANCH 15

BRIDGE NO. 53E0315
POST MILE 41.01

RETAINING WALL NO. 2166
SOIL NAIL DETAILS NO. 11

STRUCTURES DESIGN DETAIL SHEET (ENGLISH) (REV. 09-01-10)

ORIGINAL SCALE IN INCHES FOR REDUCED PLANS 0 1 2 3

UNIT: 3604
PROJECT NUMBER & PHASE: 0713000007
CONTRACT NO.: 07-1193U1

DISREGARD PRINTS BEARING EARLIER REVISION DATES

REVISION DATES: 2-14-13 6-17-14 12-19-13 10-10-13

SHEET 28 OF 44

FILE => 53e0315-q-snd-11.dgn

USERNAME => s123624 DATE PLOTTED => 18-MAY-2015 TIME PLOTTED => 16:37

DIST	COUNTY	ROUTE	POST MILES TOTAL PROJECT	SHEET No.	TOTAL SHEETS
07	LA	10	37.2/42.4	2226	2313

REGISTERED CIVIL ENGINEER 10-1-14 DATE

6-1-15
PLANS APPROVAL DATE

REGISTERED PROFESSIONAL ENGINEER
Gabriel J. Galo
No. 52288
Exp. 12-31-14
CIVIL
STATE OF CALIFORNIA

The State of California or its officers or agents shall not be responsible for the accuracy or completeness of scanned copies of this plan sheet.

SOIL NAIL TABLE

LOCATION	459	460	461	462	463	464	465	466	467	468	469	470	471	472	473	474	475	476	477	478	479	480	481
TOP NAIL ELEVATION	943.39	942.99	942.79	942.67	942.54	942.42	942.29	942.17	942.02	941.74	941.46	941.17	940.89	940.61	940.33	940.05	939.76	939.48	939.20	938.91	938.63	938.35	938.06
BOTTOM NAIL ELEVATION	939.39	938.99	938.79	938.67	938.54	938.42	938.29	938.17	938.02	937.74	937.46	937.17	936.89	936.61	936.33	936.05	935.76	935.48	835.20	934.91	934.63	934.35	936.06
SOIL NAILS QUANTITY	2	2	2	2	2	2	2	2	2	2	2	2	2	2	2	2	2	2	2	2	2	2	2

SOIL NAIL TABLE

LOCATION	482	483	484	485	486	487	488	489	490	491	492	493	494	495	496	497	498	499	500	501	502	503	504
TOP NAIL ELEVATION	937.78	937.50	937.22	936.93	936.65	936.37	936.09	935.80	935.52	935.24	934.96	934.67	934.39	934.11	933.83	933.54	933.26	932.98	932.70	932.42	932.04	931.61	931.44
BOTTOM NAIL ELEVATION	935.78	935.50	935.22	934.93	934.65	934.37	934.09	933.80	933.52	933.24	932.96	932.67	932.39	932.11	931.83	931.54	931.26	930.98	930.70	930.42	930.04	929.61	
SOIL NAILS QUANTITY	2	2	2	2	2	2	2	2	2	2	2	2	2	2	2	2	2	2	2	2	2	2	1

SOIL NAIL TABLE

LOCATION	505	506	507	508	509	510	511	512	513	514	515	516	517	518	519
TOP NAIL ELEVATION	931.22	931.00	930.72	930.44	930.15	929.87	929.59	929.31	929.02	928.74	928.46	928.18	927.89	927.61	927.33
BOTTOM NAIL ELEVATION															
SOIL NAILS QUANTITY	1	1	1	1	1	1	1	1	1	1	1	1	1	1	1

DESIGN	BY Fred Feng	CHECKED R. Novik\J. Higareda	
DETAILS	BY H. Mauroschadt\S. Cholda	CHECKED R. Novik\J. Higareda	
QUANTITIES	BY Fred Feng	CHECKED Ruslan Novik	

STATE OF CALIFORNIA
DEPARTMENT OF TRANSPORTATION

DIVISION OF ENGINEERING SERVICES
STRUCTURE DESIGN
DESIGN BRANCH 15

BRIDGE NO. 53E0315
POST MILE 41.01

RETAINING WALL NO. 2166
SOIL NAIL DETAILS NO. 12

STRUCTURES DESIGN DETAIL SHEET (ENGLISH) (REV. 09-01-10)

ORIGINAL SCALE IN INCHES FOR REDUCED PLANS 0 1 2 3

UNIT: 3604
PROJECT NUMBER & PHASE: 0713000007
CONTRACT NO.: 07-1193U1

DISREGARD PRINTS BEARING EARLIER REVISION DATES

REVISION DATES: 11-22-13 01-31-14 03-04-14

SHEET 29 OF 44

FILE => 53e0315-q-snd-12.dgn

USERNAME => s125624 DATE PLOTTED => 18-MAY-2015 TIME PLOTTED => 16:37

DIST	COUNTY	ROUTE	POST MILES TOTAL PROJECT	SHEET No.	TOTAL SHEETS
07	LA	10	37.2/42.4	2227	2313

REGISTERED CIVIL ENGINEER — DATE 10-1-14

6-1-15
PLANS APPROVAL DATE

REGISTERED PROFESSIONAL ENGINEER — Gabriel J. Galo — No. 52288 — Exp. 12-31-14 — CIVIL — STATE OF CALIFORNIA

The State of California or its officers or agents shall not be responsible for the accuracy or completeness of scanned copies of this plan sheet.

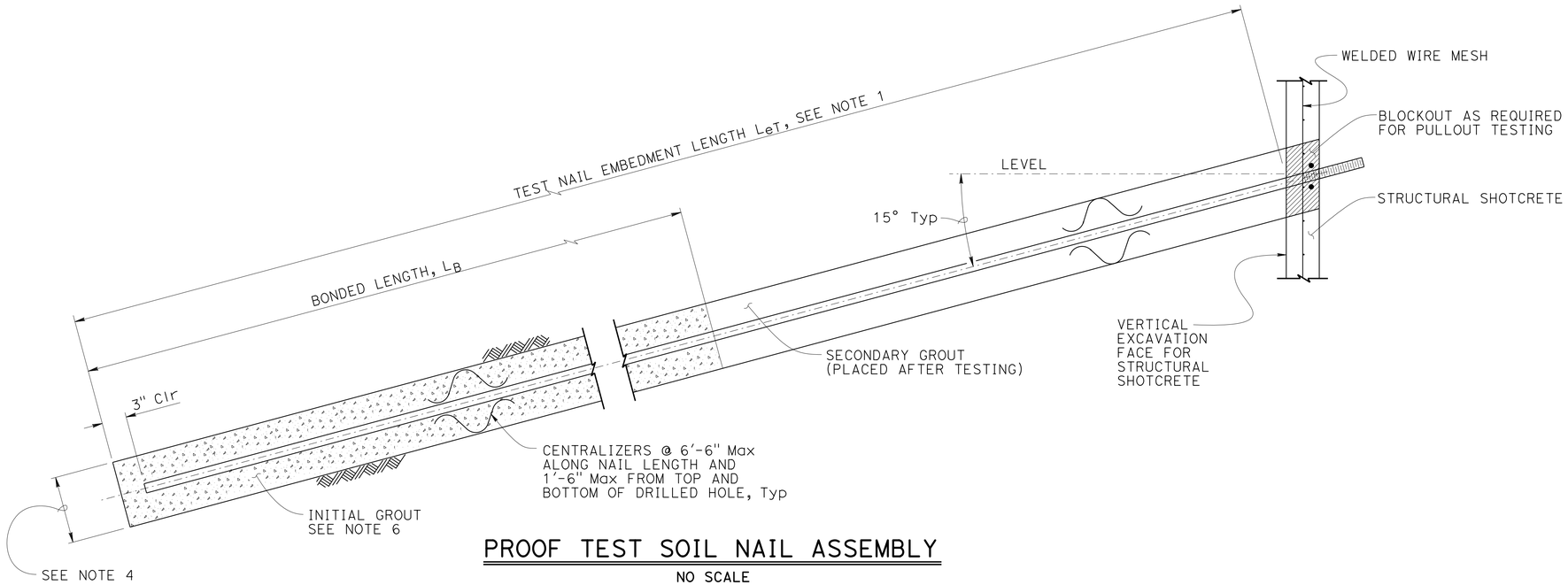

PROOF TEST SOIL NAIL ASSEMBLY

NO SCALE

NOTES:

1. The L_{eT}, embedment length, of Proof Test Nails must be equal to 2/3 of the embedment length, L_e of adjacent soil nail assemblies, but not less than 12'-0".
2. Total length of Proof Test Soil Nail Assembly equals the embedment length plus the length required for jacking equipment.
3. For location of Proof Test Soil Nail Assemblies, see "STRUCTURE PLAN" sheets. Additional Proof Test Soil Nails must be installed and tested per Special Provisions.
4. The diameter of drilled hole to be determined by Contractor
5. For bonded length L_B , see Special Provisions
6. Finish grout surface to be normal to the bar.

	BY	CHECKED
DESIGN	Fred Feng	R. Novik\J. Higareda
DETAILS	H. Mouroschadt\S. Cholda	R. Novik\J. Higareda
QUANTITIES	Fred Feng	Ruslan Novik

STATE OF CALIFORNIA
DEPARTMENT OF TRANSPORTATION

DIVISION OF ENGINEERING SERVICES
STRUCTURE DESIGN
DESIGN BRANCH 15

BRIDGE NO. 53E0315
POST MILE 41.01

RETAINING WALL NO. 2166
SOIL NAIL DETAILS NO. 13

STRUCTURES DESIGN DETAIL SHEET (ENGLISH) (REV. 09-01-10)

ORIGINAL SCALE IN INCHES FOR REDUCED PLANS 0 1 2 3

UNIT: 3604
PROJECT NUMBER & PHASE: 0713000007
CONTRACT NO.: 07-1193U1

DISREGARD PRINTS BEARING EARLIER REVISION DATES → 2-13-13 02-28-14 9-11-14 06-06-14

SHEET 30 OF 44

FILE => 53e0315-q-snd-13.dgn

USERNAME => s125624 DATE PLOTTED => 18-MAY-2015 TIME PLOTTED => 16:37

DIST	COUNTY	ROUTE	POST MILES TOTAL PROJECT	SHEET No.	TOTAL SHEETS
07	LA	10	37.2/42.4	2228	2313

REGISTERED CIVIL ENGINEER 10-1-14 DATE

6-1-15
PLANS APPROVAL DATE

REGISTERED PROFESSIONAL ENGINEER Gabriel J. Galo No. 52288 Exp. 12-31-14 CIVIL STATE OF CALIFORNIA

The State of California or its officers or agents shall not be responsible for the accuracy or completeness of scanned copies of this plan sheet.

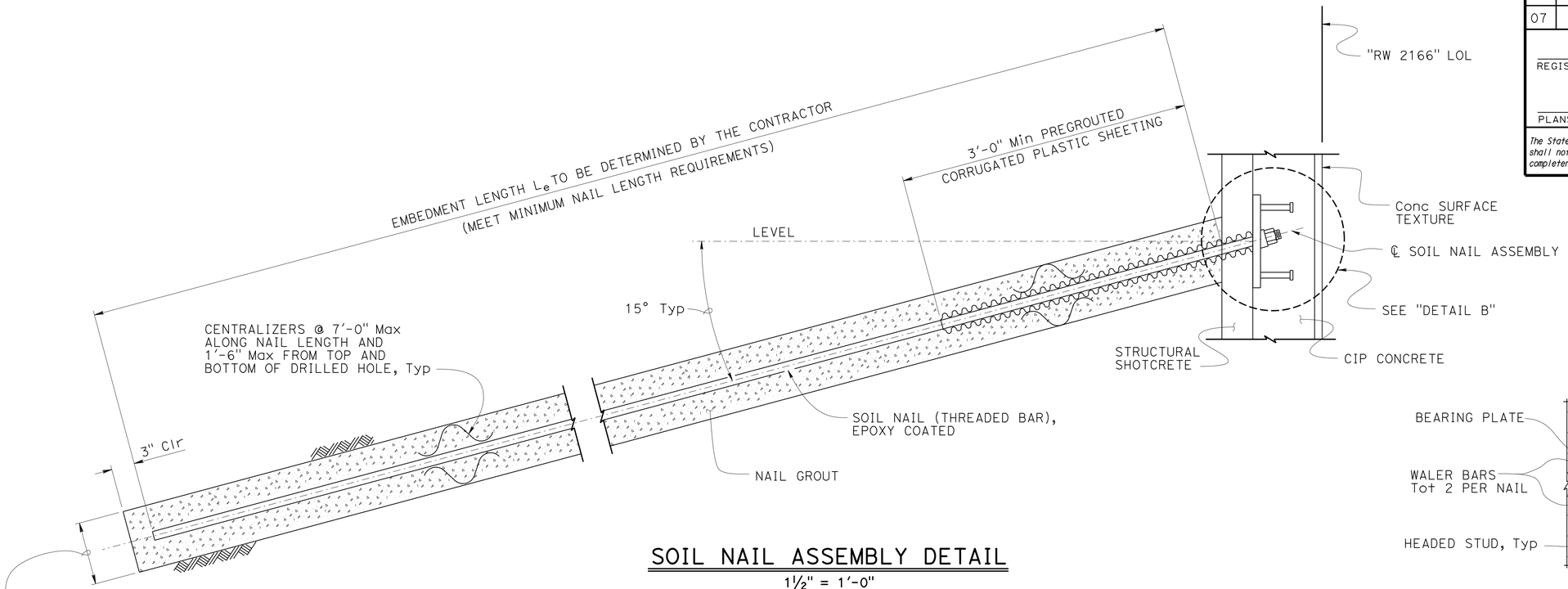

SOIL NAIL ASSEMBLY DETAIL

1½" = 1'-0"

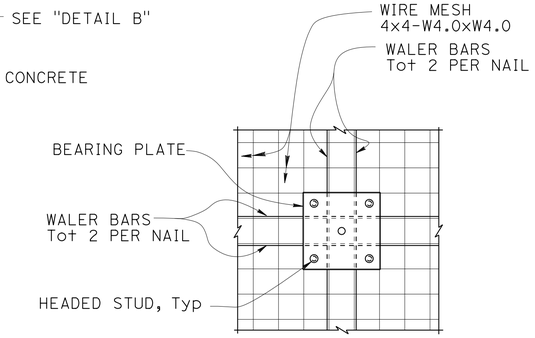

SECTION A-A

1" = 1'-0"

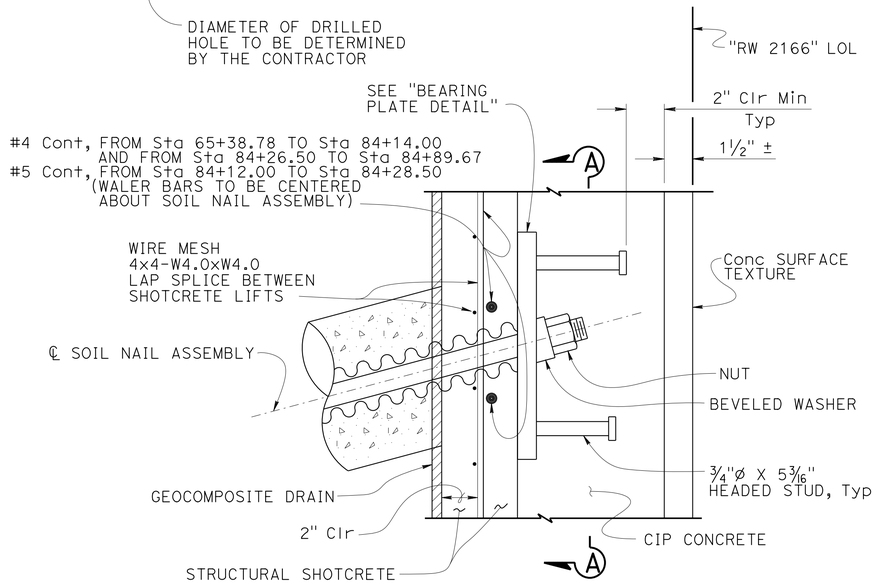

Note:

Other reinforcement not shown for clarity.

DETAIL B

3" = 1'-0"

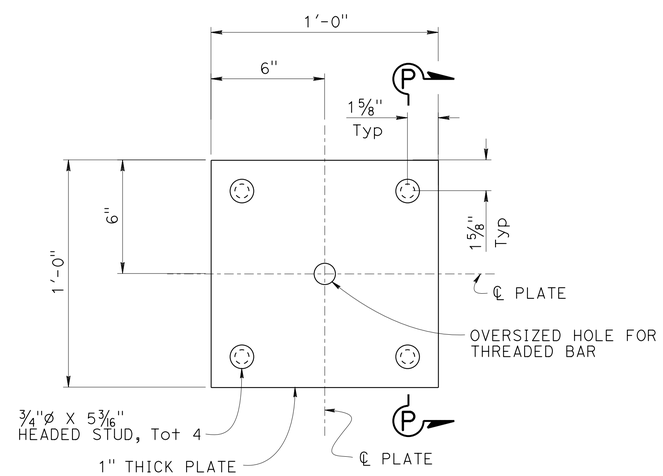

FRONT VIEW

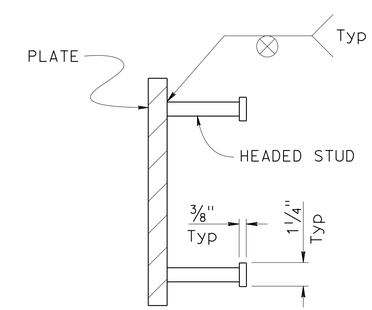

SECTION P-P

BEARING PLATE DETAIL

3" = 1'-0"

DESIGN	BY Fred Feng	CHECKED R. Novik\J. Higareda	
DETAILS	BY H. Mauroschadt\S. Cholda	CHECKED R. Novik\J. Higareda	
QUANTITIES	BY Fred Feng	CHECKED Ruslan Novik	

STATE OF CALIFORNIA
DEPARTMENT OF TRANSPORTATION

DIVISION OF ENGINEERING SERVICES
STRUCTURE DESIGN
DESIGN BRANCH 15

BRIDGE NO. 53E0315
POST MILE 41.01

RETAINING WALL NO. 2166
SOIL NAIL DETAILS NO. 14

STRUCTURES DESIGN DETAIL SHEET (ENGLISH) (REV. 09-01-10)

ORIGINAL SCALE IN INCHES FOR REDUCED PLANS 0 1 2 3

UNIT: 3604
PROJECT NUMBER & PHASE: 0713000007
CONTRACT NO.: 07-1193U1

DISREGARD PRINTS BEARING EARLIER REVISION DATES

REVISION DATES 2-13-13 02-28-14 10-30-13 02-01-14

SHEET 31 OF 44

FILE => 53e0315-q-snd-14.dgn

USERNAME => s125624 DATE PLOTTED => 18-MAY-2015 TIME PLOTTED => 16:37

DIST	COUNTY	ROUTE	POST MILES TOTAL PROJECT	SHEET No.	TOTAL SHEETS
07	LA	10	37.2/42.4	2229	2313

REGISTERED CIVIL ENGINEER 10-1-14 DATE

6-1-15
PLANS APPROVAL DATE

REGISTERED PROFESSIONAL ENGINEER Gabriel J. Galo No. 52288 Exp. 12-31-14 CIVIL STATE OF CALIFORNIA

The State of California or its officers or agents shall not be responsible for the accuracy or completeness of scanned copies of this plan sheet.

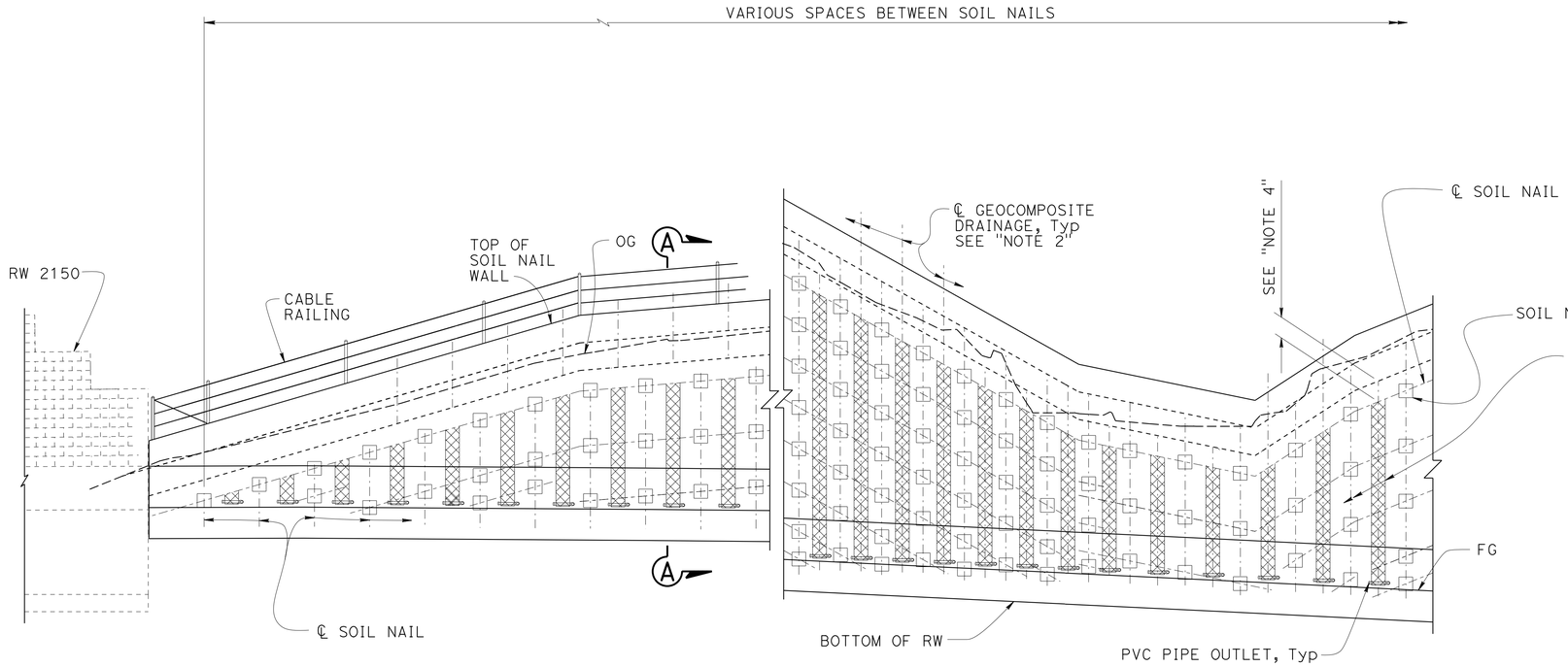

SOIL NAIL WALL - DEVELOPED PART ELEVATION

3/16" = 1'-0"

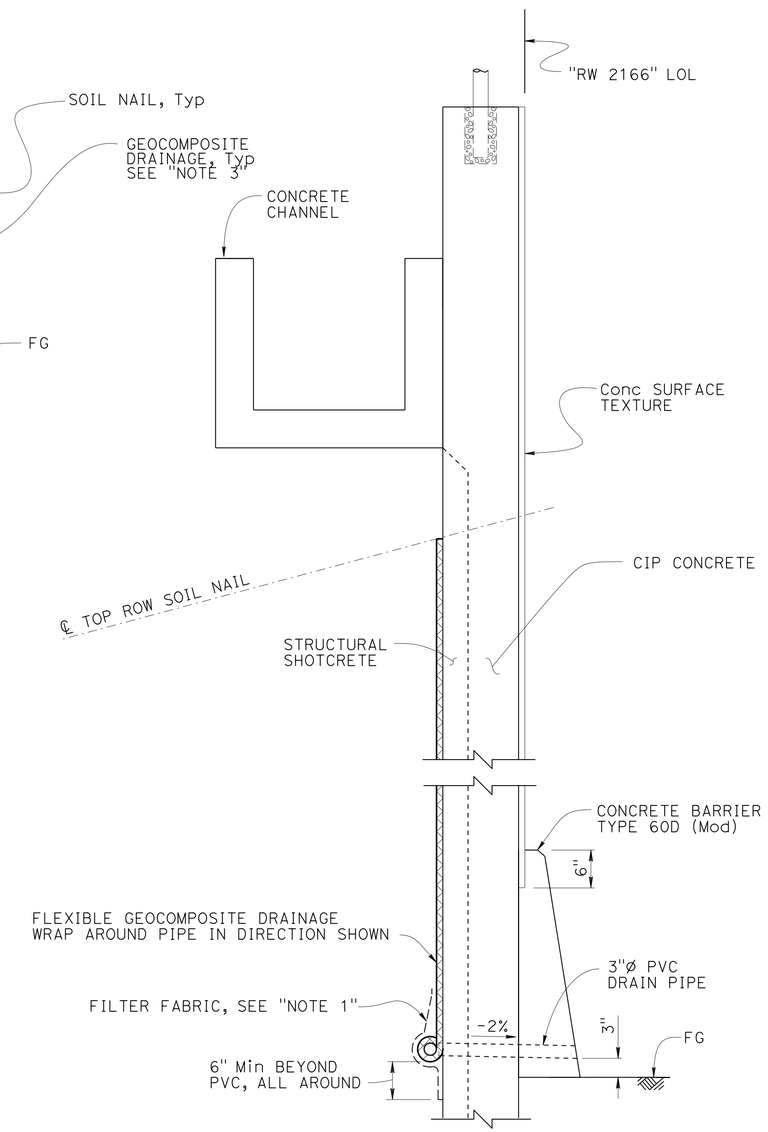

SECTION A-A

1" = 1'-0"

Notes:

1. Provide filter fabric where necessary to prevent soil from entering drain.
2. Center Geocomposite Drains between Soil Nail columns.
3. Geocomposite Drains must have filter fabric on soil side and wrapped around top and side edges.
4. Begin Geocomposite Drain at center line of top Soil Nail row.

	BY	CHECKED
DESIGN	Fred Feng	R. Novik\J. Higareda
DETAILS	H. Mauroschadt\S. Cholda	R. Novik\J. Higareda
QUANTITIES	Fred Feng	Ruslan Novik

STATE OF CALIFORNIA
DEPARTMENT OF TRANSPORTATION

DIVISION OF ENGINEERING SERVICES
STRUCTURE DESIGN
DESIGN BRANCH 15

BRIDGE NO. 53E0315
POST MILE 41.01

RETAINING WALL NO. 2166
DRAINAGE DETAILS NO. 1

STRUCTURES DESIGN DETAIL SHEET (ENGLISH) (REV. 09-01-10)

ORIGINAL SCALE IN INCHES FOR REDUCED PLANS 0 1 2 3

UNIT: 3604
PROJECT NUMBER & PHASE: 0713000007
CONTRACT NO.: 07-1193U1

DISREGARD PRINTS BEARING EARLIER REVISION DATES

REVISION DATES 2-18-13 02-26-14 10-16-13 06-06-14

SHEET 32 OF 44

FILE => 53e0315-r-dd-01.dgn

USERNAME => s125624 DATE PLOTTED => 18-MAY-2015 TIME PLOTTED => 16:37

DIST	COUNTY	ROUTE	POST MILES TOTAL PROJECT	SHEET No.	TOTAL SHEETS
07	LA	10	37.2/42.4	2230	2313

REGISTERED CIVIL ENGINEER 10-1-14 DATE

6-1-15
PLANS APPROVAL DATE

REGISTERED PROFESSIONAL ENGINEER Gabriel J. Galo No. 52288 Exp. 12-31-14 CIVIL STATE OF CALIFORNIA

The State of California or its officers or agents shall not be responsible for the accuracy or completeness of scanned copies of this plan sheet.

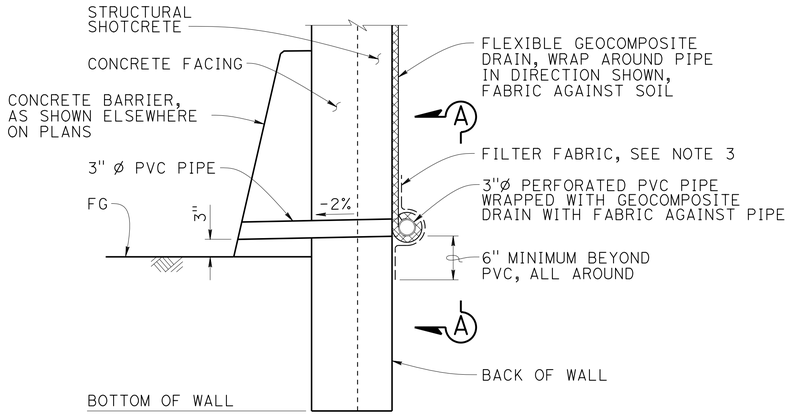

WALL DRAIN DETAIL AT WEEPHOLE OPTION A

No scale

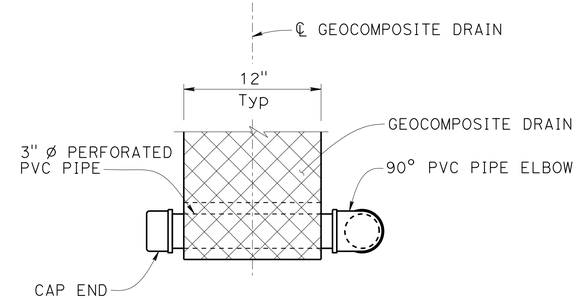

VIEW A-A

No scale

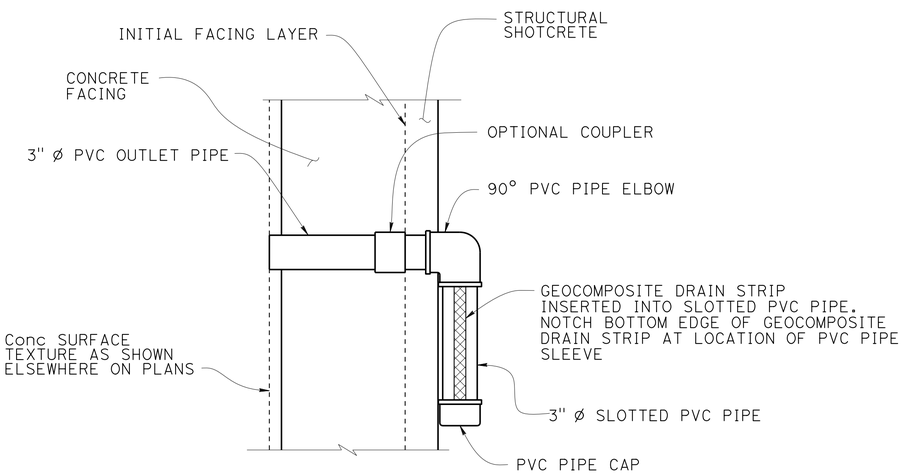

SECTION B-B

No Scale

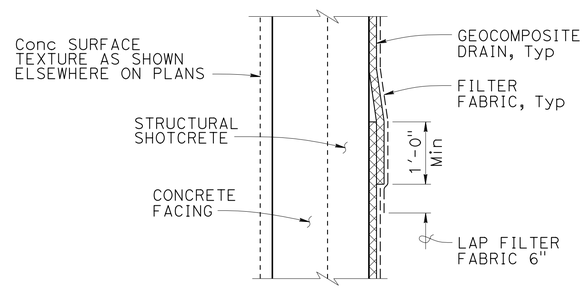

DRAIN SPLICE

NO SCALE

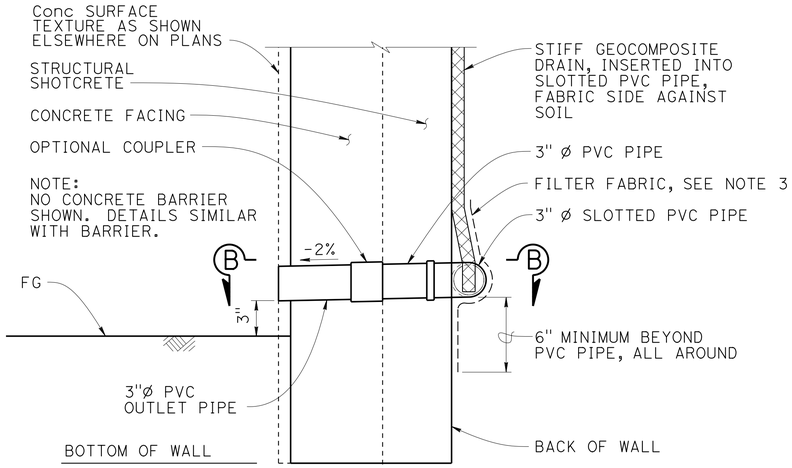

WALL DRAIN DETAIL AT WEEPHOLE OPTION B

No scale

NOTES:

1. Geocomposite Drain is per Section 88 Geosynthetics of the Standard Specifications.
2. Center Geocomposite Drains between soil nail columns.
3. Provide filter fabric where necessary to prevent soil from entering drain.
4. Alternative drain outlet details may be submitted for Engineer's approval.

DESIGN	BY Fred Feng	CHECKED R. Novik\J. Higareda	
DETAILS	BY H. Mauroschadt\S. Cholda	CHECKED R. Novik\J. Higareda	
QUANTITIES	BY Fred Feng	CHECKED Ruslan Novik	

STATE OF CALIFORNIA DEPARTMENT OF TRANSPORTATION

DIVISION OF ENGINEERING SERVICES STRUCTURE DESIGN DESIGN BRANCH 15

BRIDGE NO. 53E0315
POST MILE 41.01

RETAINING WALL NO. 2166
DRAINAGE DETAILS NO. 2

STRUCTURES DESIGN DETAIL SHEET (ENGLISH) (REV. 09-01-10)

ORIGINAL SCALE IN INCHES FOR REDUCED PLANS 0 1 2 3

UNIT: 3604
PROJECT NUMBER & PHASE: 0713000007
CONTRACT NO.: 07-1193U1

DISREGARD PRINTS BEARING EARLIER REVISION DATES

REVISION DATES 02-25-14 05-05-14 6-17-14

SHEET 33 OF 44

FILE => 53e0315-r-dd-02.dgn

USERNAME => s125624 DATE PLOTTED => 18-MAY-2015 TIME PLOTTED => 16:37

DIST	COUNTY	ROUTE	POST MILES TOTAL PROJECT	SHEET No.	TOTAL SHEETS
07	LA	10	37.2/42.4	2231	2313

REGISTERED CIVIL ENGINEER 10-1-14 DATE

6-1-15
PLANS APPROVAL DATE

REGISTERED PROFESSIONAL ENGINEER
Gabriel J. Galo
No. 52288
Exp. 12-31-14
CIVIL
STATE OF CALIFORNIA

The State of California or its officers or agents shall not be responsible for the accuracy or completeness of scanned copies of this plan sheet.

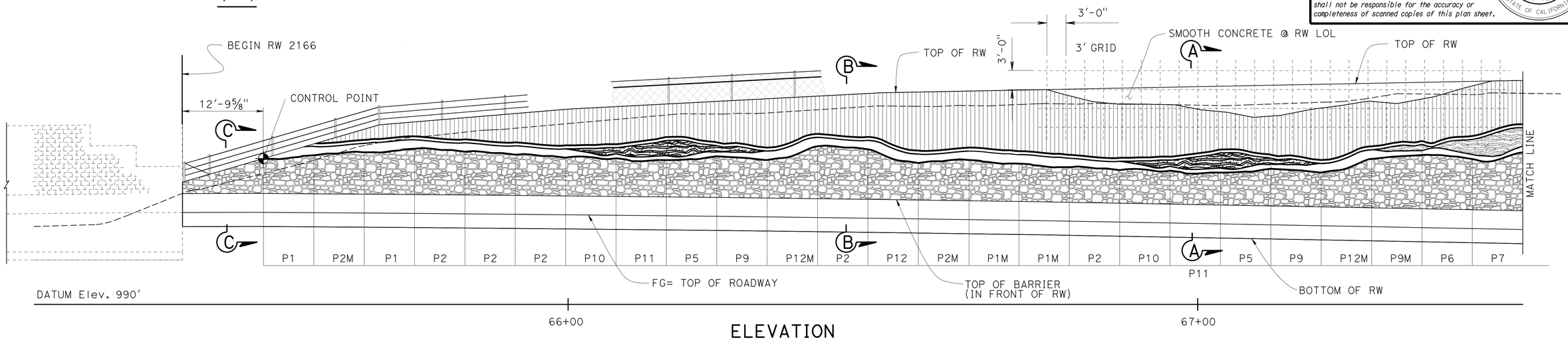

ELEVATION

⅛" = 1'-0"

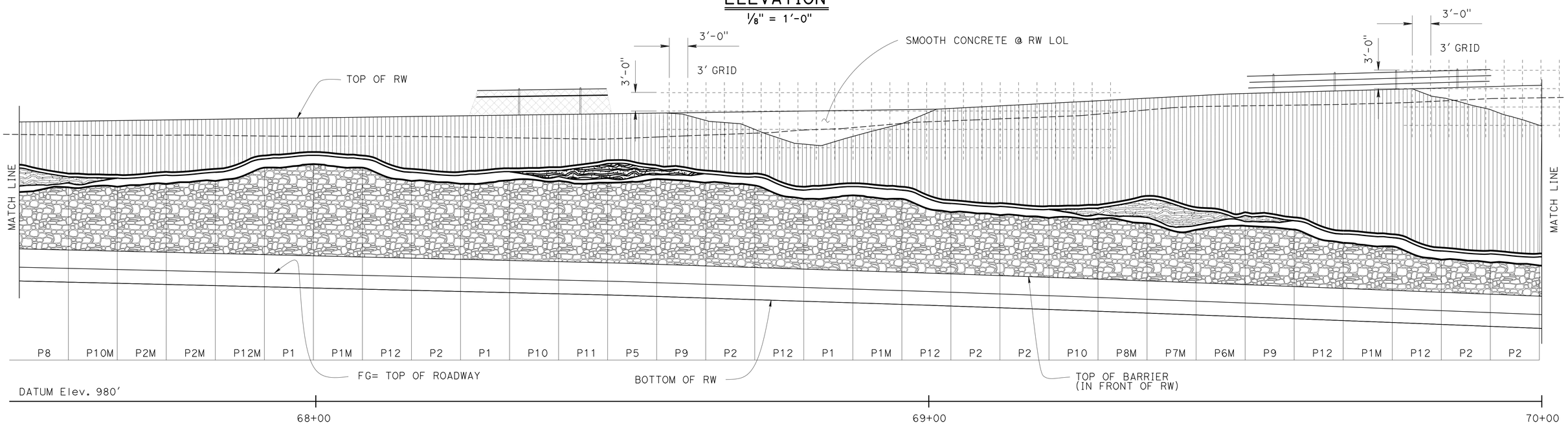

ELEVATION

⅛" = 1'-0"

DESIGN	BY Valerie Moore	CHECKED R. Novik\J. Higareda	
DETAILS	BY Stan Cholda	CHECKED R. Novik\J. Higareda	
QUANTITIES	BY Fred Feng	CHECKED R. Novik	

STATE OF CALIFORNIA
DEPARTMENT OF TRANSPORTATION

DIVISION OF ENGINEERING SERVICES
STRUCTURE DESIGN
DESIGN BRANCH 15

BRIDGE NO. 53E0315
POST MILE 41.01

RETAINING WALL NO. 2166
ARCHITECTURAL DETAILS NO. 1

STRUCTURES DESIGN DETAIL SHEET (ENGLISH) (REV. 09-01-10)

ORIGINAL SCALE IN INCHES FOR REDUCED PLANS 0 1 2 3

UNIT: 3604
PROJECT NUMBER & PHASE: 0713000007
CONTRACT NO.: 07-1193U1

DISREGARD PRINTS BEARING EARLIER REVISION DATES

REVISION DATES: 02-10-14 02-18-14

SHEET 34 OF 44

FILE => 53e0315-s-archdet01.dgn

USERNAME => s125624 DATE PLOTTED => 18-MAY-2015 TIME PLOTTED => 16:37

DIST	COUNTY	ROUTE	POST MILES TOTAL PROJECT	SHEET No.	TOTAL SHEETS
07	LA	10	37.2/42.4	2232	2313

REGISTERED CIVIL ENGINEER — DATE 10-1-14

6-1-15
PLANS APPROVAL DATE

REGISTERED PROFESSIONAL ENGINEER — Gabriel J. Galo — No. 52288 — Exp. 12-31-14 — CIVIL — STATE OF CALIFORNIA

The State of California or its officers or agents shall not be responsible for the accuracy or completeness of scanned copies of this plan sheet.

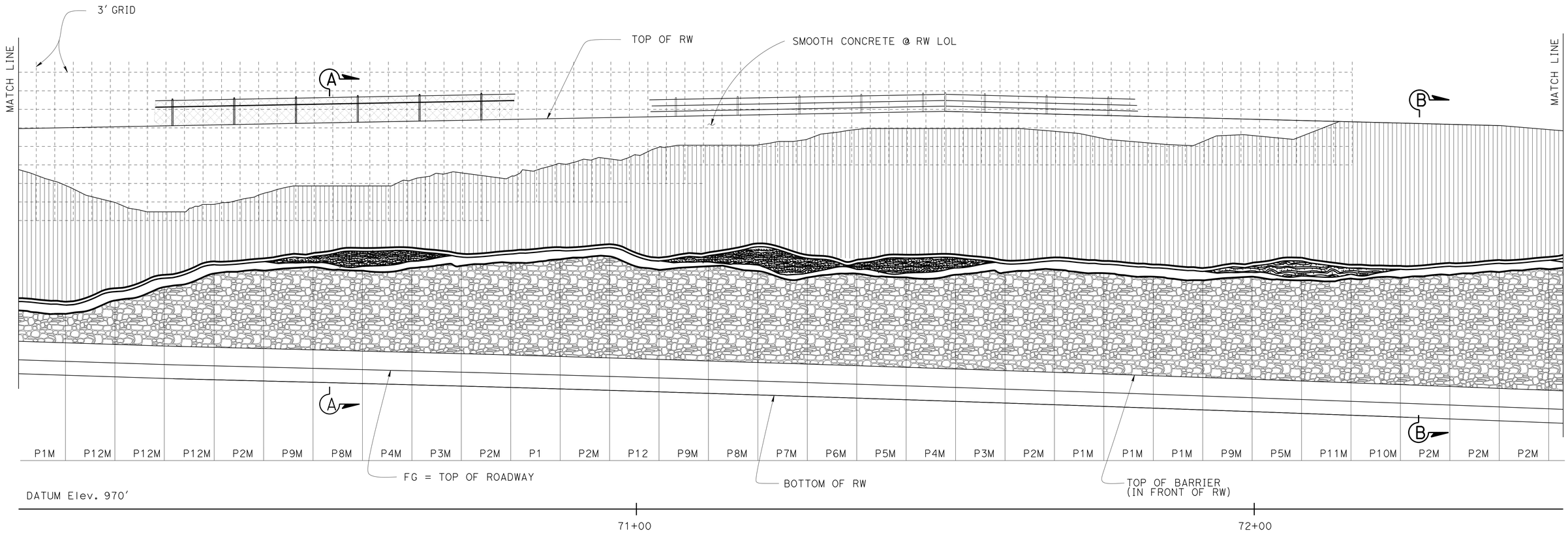

ELEVATION

1/8" = 1'-0"

DESIGN	BY Valerie Moore	CHECKED R. Novik\J. Higareda	
DETAILS	BY Stan Cholda	CHECKED R. Novik\J. Higareda	
QUANTITIES	BY Fred Feng	CHECKED R. Novik	

STATE OF CALIFORNIA
DEPARTMENT OF TRANSPORTATION

DIVISION OF ENGINEERING SERVICES
STRUCTURE DESIGN
DESIGN BRANCH 15

BRIDGE NO. 53E0315
POST MILE 41.01

RETAINING WALL NO. 2166
ARCHITECTURAL DETAILS NO. 2

STRUCTURES DESIGN DETAIL SHEET (ENGLISH) (REV. 09-01-10)

ORIGINAL SCALE IN INCHES FOR REDUCED PLANS 0 1 2 3

UNIT: 3604
PROJECT NUMBER & PHASE: 0713000007
CONTRACT NO.: 07-1193U1

DISREGARD PRINTS BEARING EARLIER REVISION DATES

REVISION DATES: ~~02-06-14~~ 02-18-14

SHEET 35 OF 44

FILE => 53e0315-s-archdet02.dgn

USERNAME => s125624 DATE PLOTTED => 18-MAY-2015 TIME PLOTTED => 16:37

DIST	COUNTY	ROUTE	POST MILES TOTAL PROJECT	SHEET No.	TOTAL SHEETS
07	LA	10	37.2/42.4	2233	2313

REGISTERED CIVIL ENGINEER 10-1-14 DATE

6-1-15
PLANS APPROVAL DATE

REGISTERED PROFESSIONAL ENGINEER
Gabriel J. Galo
No. 52288
Exp. 12-31-14
CIVIL
STATE OF CALIFORNIA

The State of California or its officers or agents shall not be responsible for the accuracy or completeness of scanned copies of this plan sheet.

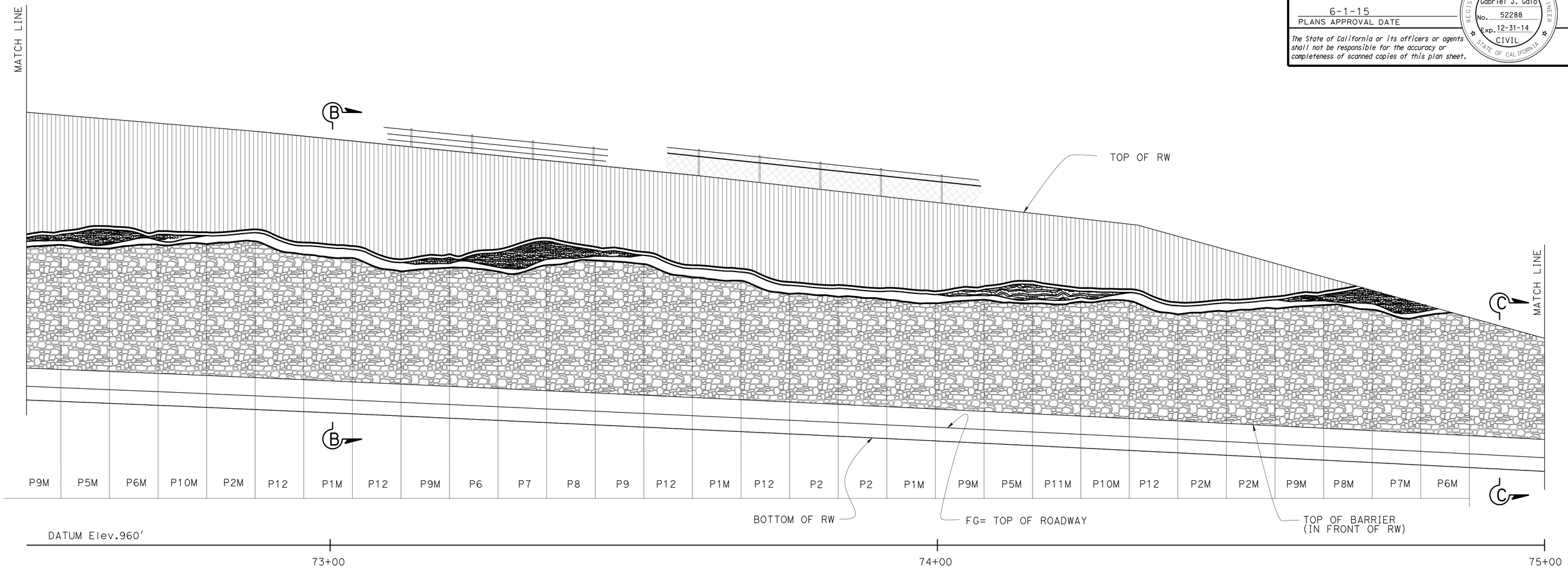

ELEVATION

1/8" = 1'-0"

DESIGN	BY Valerie Moore	CHECKED R. Novik\J. Higareda	
DETAILS	BY Stan Cholda	CHECKED R. Novik\J. Higareda	
QUANTITIES	BY Fred Feng	CHECKED R. Novik	

STATE OF CALIFORNIA
DEPARTMENT OF TRANSPORTATION

DIVISION OF ENGINEERING SERVICES
STRUCTURE DESIGN
DESIGN BRANCH 15

BRIDGE NO. 53E0315
POST MILE 41.01

RETAINING WALL NO. 2166
ARCHITECTURAL DETAILS NO. 3

STRUCTURES DESIGN DETAIL SHEET (ENGLISH) (REV. 09-01-10)

ORIGINAL SCALE IN INCHES FOR REDUCED PLANS 0 1 2 3

UNIT: 3604
PROJECT NUMBER & PHASE: 0713000007
CONTRACT NO.: 07-1193U1

DISREGARD PRINTS BEARING EARLIER REVISION DATES

REVISION DATES: 02-07-14 01-18-14

SHEET 36 OF 44

FILE => 53e0315-s-archdet03.dgn

USERNAME => s125624 DATE PLOTTED => 18-MAY-2015 TIME PLOTTED => 16:37

DIST	COUNTY	ROUTE	POST MILES TOTAL PROJECT	SHEET No.	TOTAL SHEETS
07	LA	10	37.2/42.4	2234	2313

REGISTERED CIVIL ENGINEER 10-1-14 DATE

6-1-15
PLANS APPROVAL DATE

REGISTERED PROFESSIONAL ENGINEER
Gabriel J. Galo
No. 52288
Exp. 12-31-14
CIVIL
STATE OF CALIFORNIA

The State of California or its officers or agents shall not be responsible for the accuracy or completeness of scanned copies of this plan sheet.

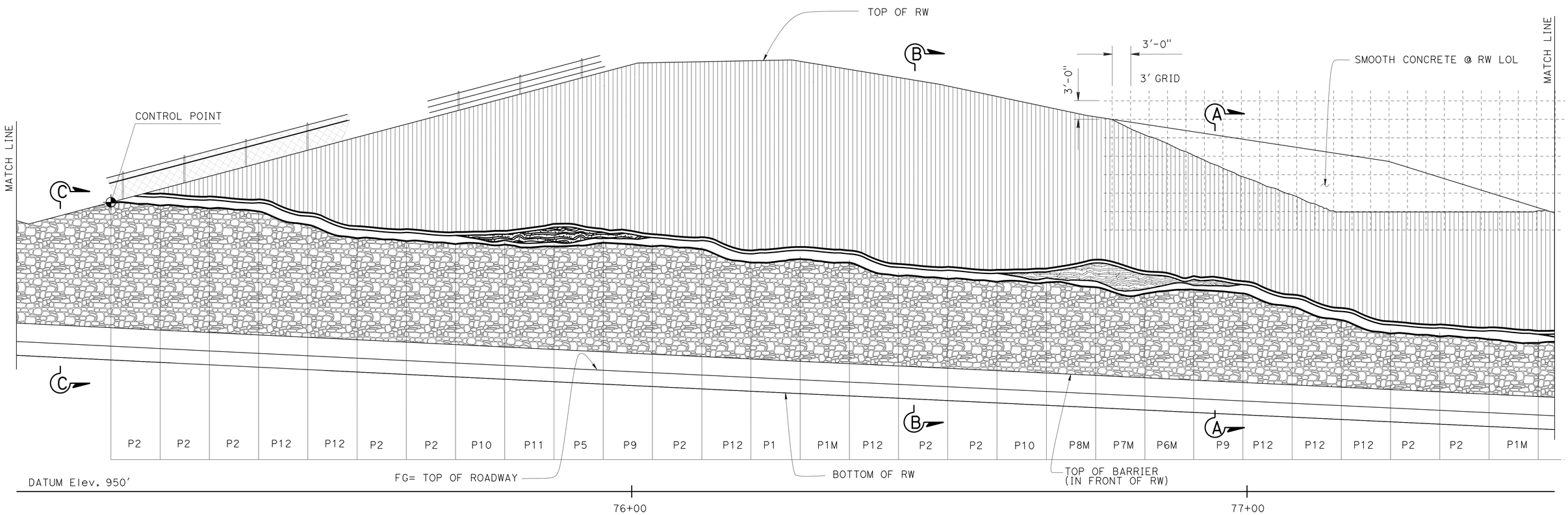

ELEVATION

1/8" = 1'-0"

DESIGN	BY Valerie Moore	CHECKED R. Novik\J. Higareda	
DETAILS	BY Stan Cholda	CHECKED R. Novik\J. Higareda	
QUANTITIES	BY Fred Feng	CHECKED R. Novik	

STATE OF CALIFORNIA
DEPARTMENT OF TRANSPORTATION

DIVISION OF ENGINEERING SERVICES
STRUCTURE DESIGN
DESIGN BRANCH 15

BRIDGE NO. 53E0315
POST MILE 41.01

RETAINING WALL NO. 2166
ARCHITECTURAL DETAILS NO. 4

STRUCTURES DESIGN DETAIL SHEET (ENGLISH) (REV. 09-01-10)

ORIGINAL SCALE IN INCHES FOR REDUCED PLANS 0 1 2 3

UNIT: 3604
PROJECT NUMBER & PHASE: 0713000007
CONTRACT NO.: 07-1193U1

DISREGARD PRINTS BEARING EARLIER REVISION DATES

REVISION DATES: 02-06-14 02-14-14

SHEET 37 OF 44

FILE => 53e0315-s-archdet04.dgn

USERNAME => s125624 DATE PLOTTED => 18-MAY-2015 TIME PLOTTED => 16:37

DIST	COUNTY	ROUTE	POST MILES TOTAL PROJECT	SHEET No.	TOTAL SHEETS
07	LA	10	37.2/42.4	2235	2313

REGISTERED CIVIL ENGINEER — DATE 10-1-14

PLANS APPROVAL DATE 6-1-15

REGISTERED PROFESSIONAL ENGINEER — Gabriel J. Galo — No. 52288 — Exp. 12-31-14 — CIVIL — STATE OF CALIFORNIA

The State of California or its officers or agents shall not be responsible for the accuracy or completeness of scanned copies of this plan sheet.

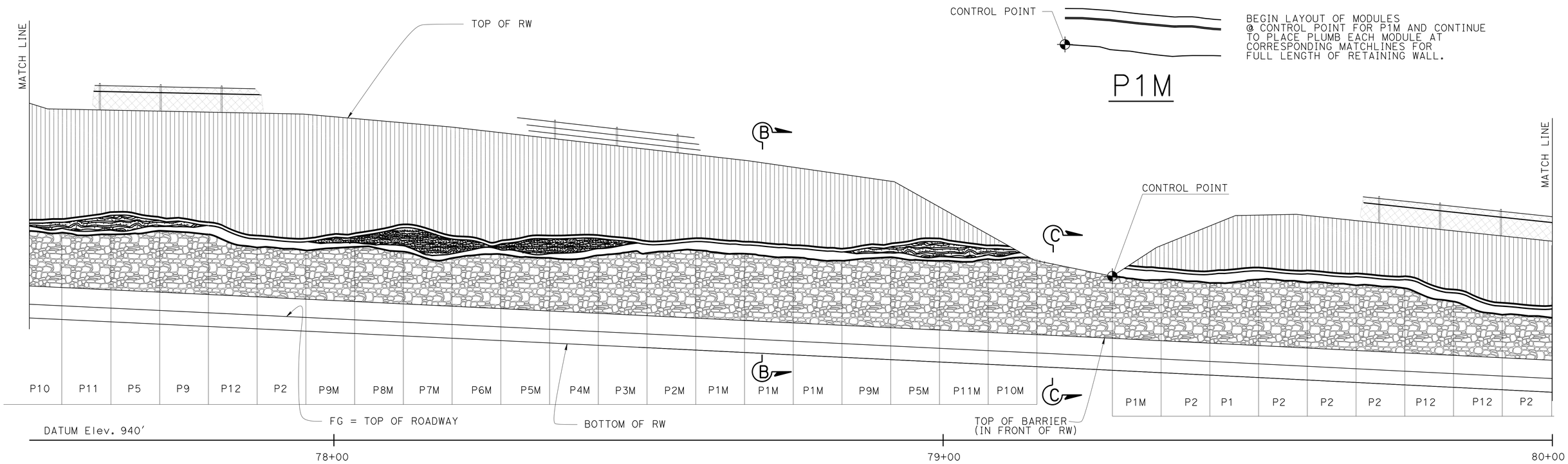

ELEVATION

1/8" = 1'-0"

DESIGN	BY Valerie Moore	CHECKED R. Novik\J. Higareda	
DETAILS	BY Stan Cholda	CHECKED R. Novik\J. Higareda	
QUANTITIES	BY Fred Feng	CHECKED R. Novik	

STATE OF CALIFORNIA
DEPARTMENT OF TRANSPORTATION

DIVISION OF ENGINEERING SERVICES
STRUCTURE DESIGN
DESIGN BRANCH 15

BRIDGE NO. 53E0315
POST MILE 41.01

RETAINING WALL NO. 2166
ARCHITECTURAL DETAILS NO. 5

STRUCTURES DESIGN DETAIL SHEET (ENGLISH) (REV. 09-01-10)

ORIGINAL SCALE IN INCHES FOR REDUCED PLANS 0 1 2 3

UNIT: 3604
PROJECT NUMBER & PHASE: 0713000007
CONTRACT NO.: 07-1193U1

DISREGARD PRINTS BEARING EARLIER REVISION DATES

REVISION DATES: 02-06-14 02-14-14 02-18-14

SHEET 38 OF 44

FILE => 53e0315-s-archdet05.dgn

USERNAME => s125624 DATE PLOTTED => 18-MAY-2015 TIME PLOTTED => 16:37

DIST	COUNTY	ROUTE	POST MILES TOTAL PROJECT	SHEET No.	TOTAL SHEETS
07	LA	10	37.2/42.4	2236	2313

REGISTERED CIVIL ENGINEER 10-1-14 DATE

6-1-15
PLANS APPROVAL DATE

REGISTERED PROFESSIONAL ENGINEER
Gabriel J. Galo
No. 52288
Exp. 12-31-14
CIVIL
STATE OF CALIFORNIA

The State of California or its officers or agents shall not be responsible for the accuracy or completeness of scanned copies of this plan sheet.

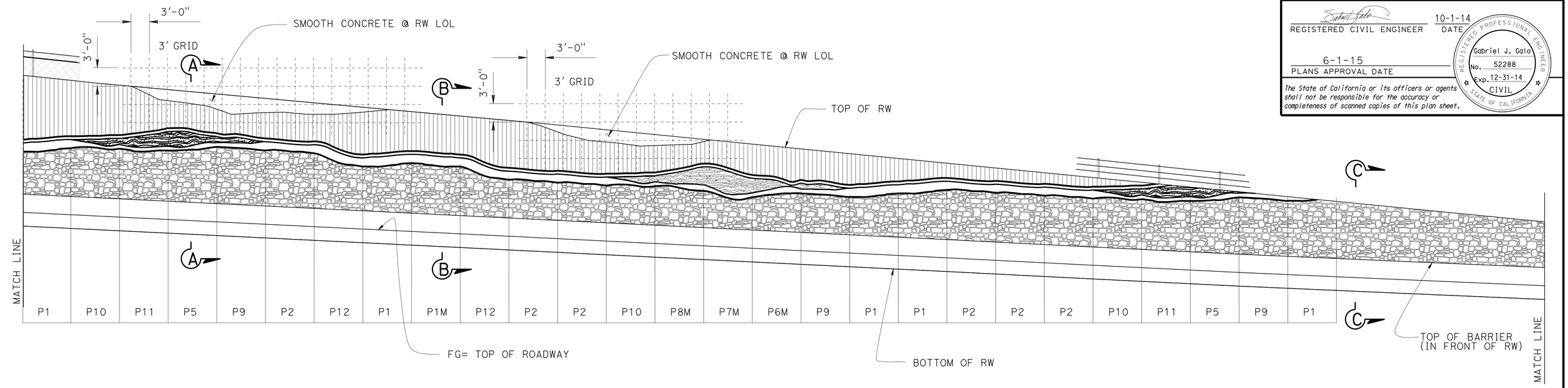

DATUM Elev. 910'

80+00 81+00 82+00

ELEVATION

1/8" = 1'-0"

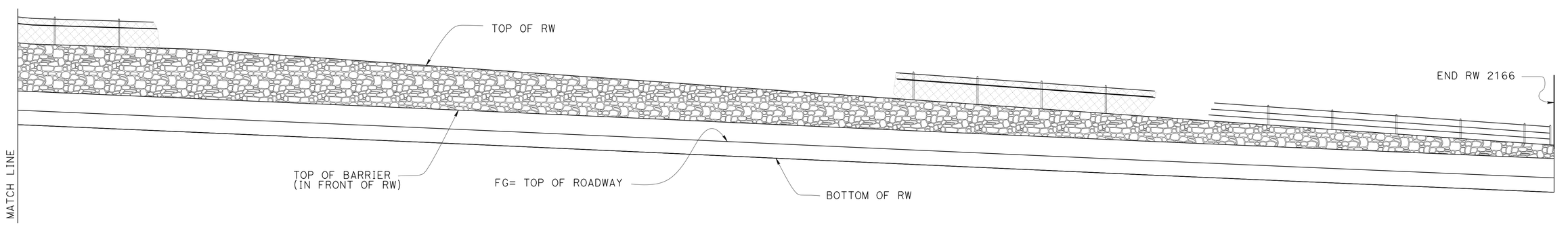

DATUM Elev. 910'

83+00 84+00

ELEVATION

1/8" = 1'-0"

DESIGN	BY Valerie Moore	CHECKED R. Novik\J. Higareda	
DETAILS	BY Stan Cholda	CHECKED R. Novik\J. Higareda	
QUANTITIES	BY Fred Feng	CHECKED R. Novik	

STATE OF CALIFORNIA
DEPARTMENT OF TRANSPORTATION

DIVISION OF ENGINEERING SERVICES
STRUCTURE DESIGN
DESIGN BRANCH 15

BRIDGE NO. 53E0315
POST MILE 41.01

RETAINING WALL NO. 2166
ARCHITECTURAL DETAILS NO. 6

STRUCTURES DESIGN DETAIL SHEET (ENGLISH) (REV. 09-01-10)

ORIGINAL SCALE IN INCHES FOR REDUCED PLANS 0 1 2 3

UNIT: 3604
PROJECT NUMBER & PHASE: 0713000007
CONTRACT NO.: 07-1193U1

DISREGARD PRINTS BEARING EARLIER REVISION DATES

REVISION DATES 02-07-14 02-14-14

SHEET 39 OF 44

FILE => 53e0315-s-archdet06.dgn

USERNAME => s125624 DATE PLOTTED => 18-MAY-2015 TIME PLOTTED => 16:37

DIST	COUNTY	ROUTE	POST MILES TOTAL PROJECT	SHEET No.	TOTAL SHEETS
07	LA	10	37.2/42.4	2237	2313

REGISTERED CIVIL ENGINEER — DATE 10-1-14

6-1-15
PLANS APPROVAL DATE

REGISTERED PROFESSIONAL ENGINEER — Gabriel J. Galo — No. 52288 — Exp. 12-31-14 — CIVIL — STATE OF CALIFORNIA

The State of California or its officers or agents shall not be responsible for the accuracy or completeness of scanned copies of this plan sheet.

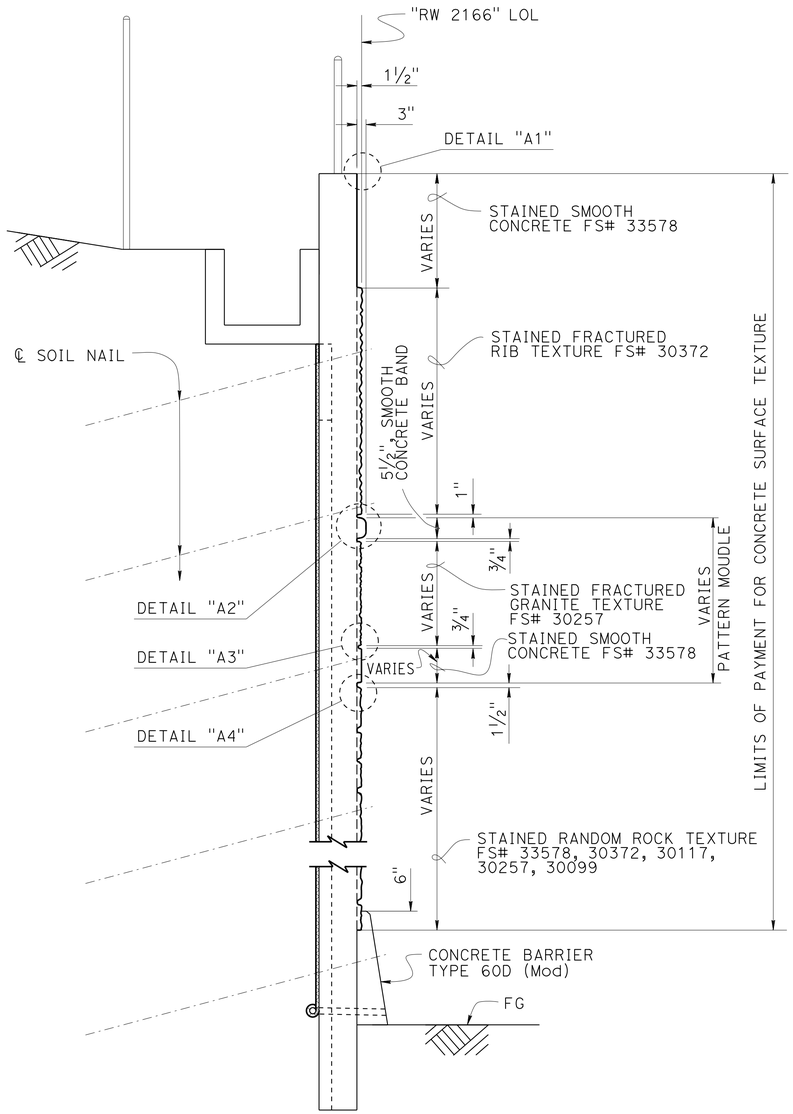

SECTION A-A

NO SCALE

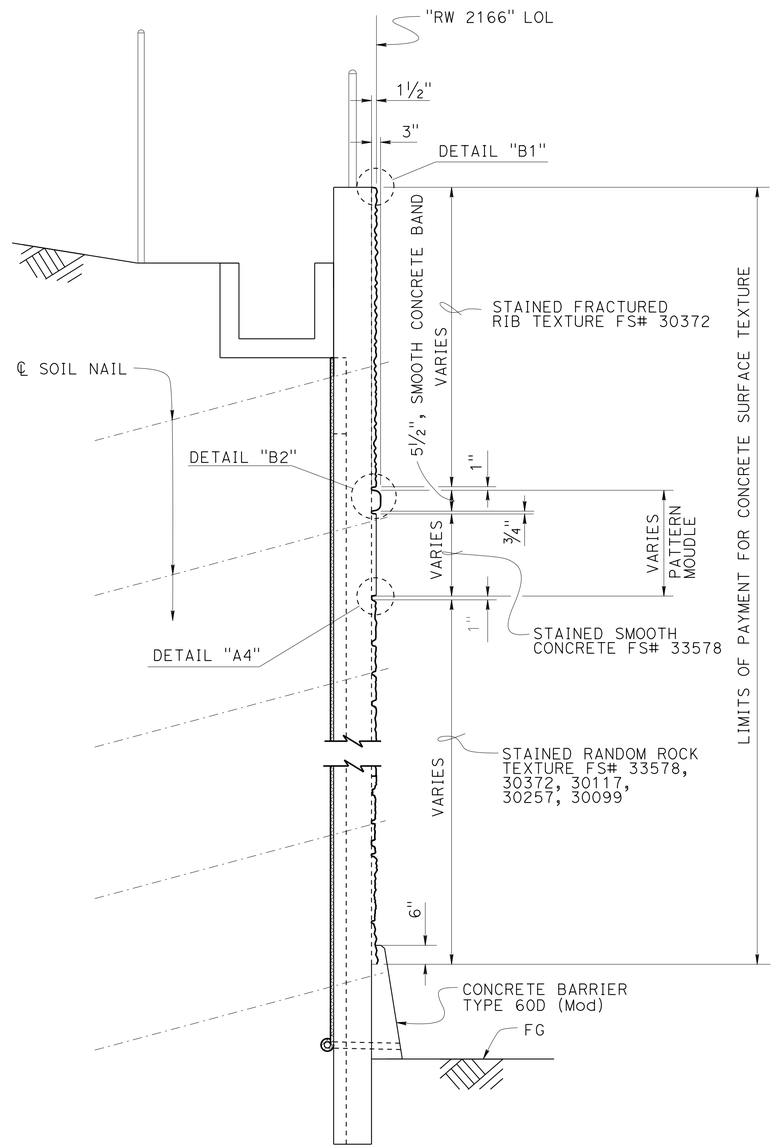

SECTION B-B

NO SCALE

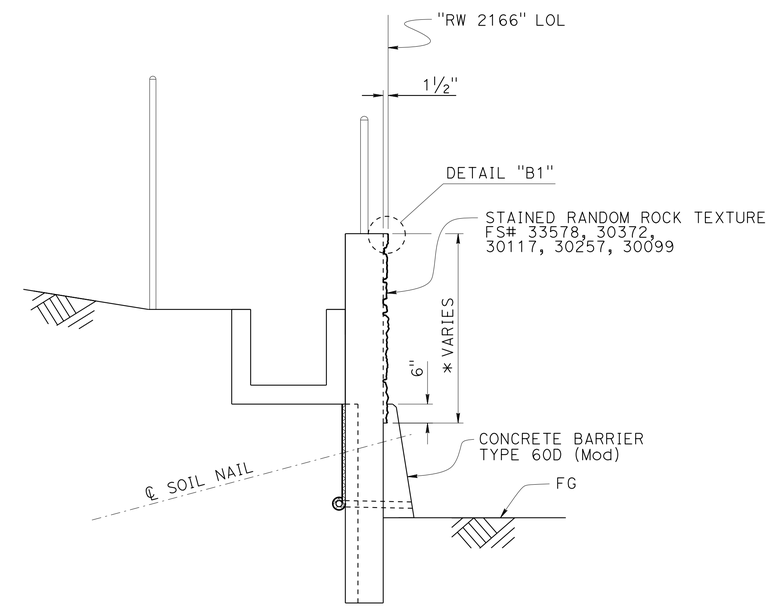

* Indicates limits of Payment for Concrete Surface Texture

SECTION C-C

NO SCALE

Notes:

1. For "DETAIL A1", "DETAIL A2", "DETAIL A3", "DETAIL A4", "DETAIL B1" and "DETAIL B2", see "ARCHITECTURAL DETAILS NO. 8" sheet.
2. "FS#" is Federal Standard color number.

	BY	CHECKED
DESIGN	Valerie Moore	R. Novik\J. Higareda
DETAILS	Stan Cholda	R. Novik\J. Higareda
QUANTITIES	Fred Feng	R. Novik

STATE OF CALIFORNIA
DEPARTMENT OF TRANSPORTATION

DIVISION OF ENGINEERING SERVICES
STRUCTURE DESIGN
DESIGN BRANCH 15

BRIDGE NO. 53E0315
POST MILE 41.01

RETAINING WALL NO. 2166
ARCHITECTURAL DETAILS NO. 7

STRUCTURES DESIGN DETAIL SHEET (ENGLISH) (REV. 09-01-10)

ORIGINAL SCALE IN INCHES FOR REDUCED PLANS 0 1 2 3

UNIT: 3604
PROJECT NUMBER & PHASE: 0713000007
CONTRACT NO.: 07-1193U1

DISREGARD PRINTS BEARING EARLIER REVISION DATES

REVISION DATES: 02-13-14 02-14-14 02-18-14 03-03-14

SHEET 40 OF 44

FILE => 53e0315-s-archdet07.dgn

USERNAME => s125624 DATE PLOTTED => 18-MAY-2015 TIME PLOTTED => 16:37

DIST	COUNTY	ROUTE	POST MILES TOTAL PROJECT	SHEET No.	TOTAL SHEETS
07	LA	10	37.2/42.4	2238	2313

REGISTERED CIVIL ENGINEER 10-1-14 DATE

6-1-15
PLANS APPROVAL DATE

REGISTERED PROFESSIONAL ENGINEER
Gabriel J. Galo
No. 52288
Exp. 12-31-14
CIVIL
STATE OF CALIFORNIA

The State of California or its officers or agents shall not be responsible for the accuracy or completeness of scanned copies of this plan sheet.

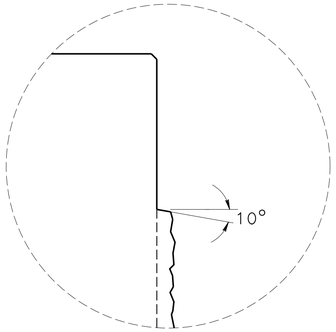

DETAIL A1
NO SCALE

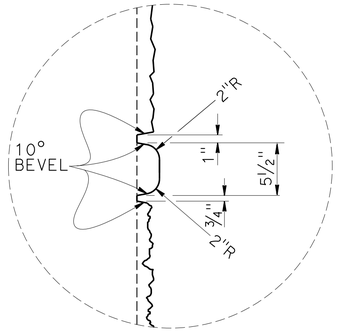

DETAIL A2
NO SCALE

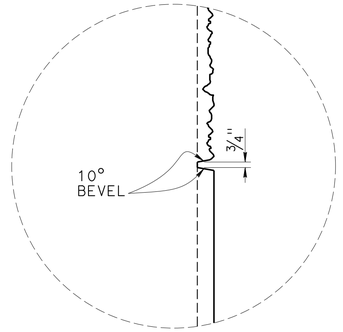

DETAIL A3
NO SCALE

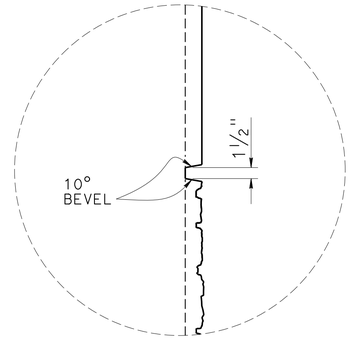

DETAIL A4
NO SCALE

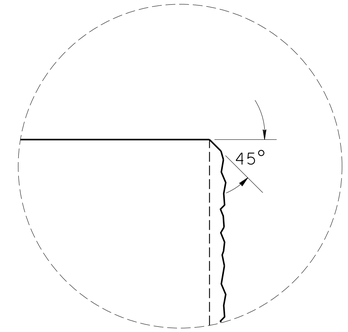

DETAIL B1
NO SCALE

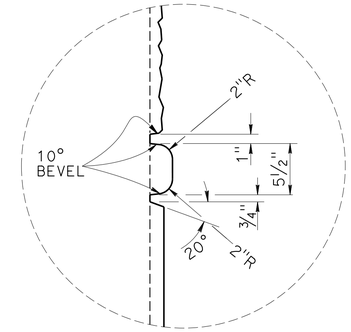

DETAIL B2
NO SCALE

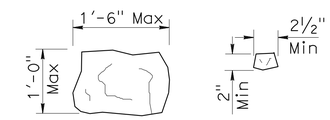

ROCK SIZE

NOTE:
Seamless Random Rock pattern to have a minimum of 2 to a maximum of 4 match points (denoted by "M") for each side (top to bottom and side to side).

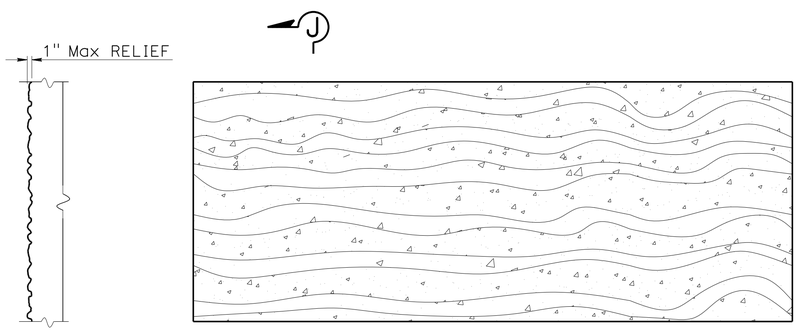

SECTION J-J

ELEVATION

FRACTURED GRANITE TEXTURE
NO SCALE

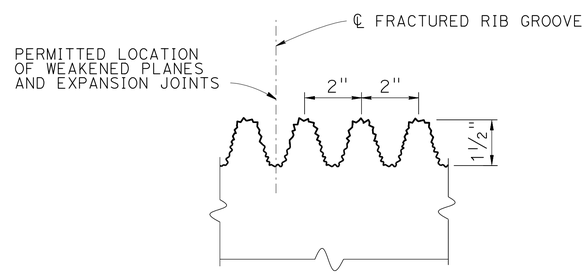

FRACTURED RIB TEXTURE - SECTION
NO SCALE

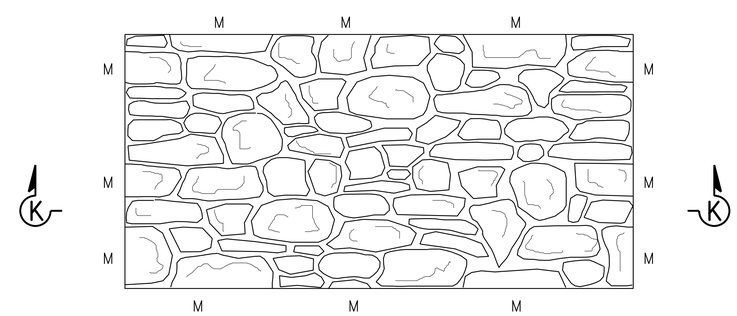

ELEVATION

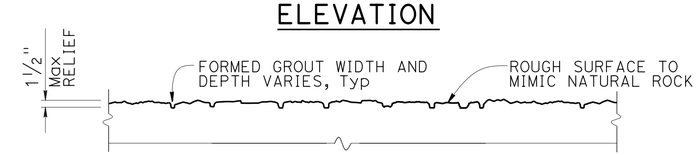

SECTION K-K

RANDOM ROCK TEXTURE
NO SCALE

DESIGN	BY Valerie Moore	CHECKED R. Novik\J. Higareda	
DETAILS	BY Stan Cholda	CHECKED R. Novik\J. Higareda	
QUANTITIES	BY Fred Feng	CHECKED R. Novik	

STATE OF CALIFORNIA
DEPARTMENT OF TRANSPORTATION

DIVISION OF ENGINEERING SERVICES
STRUCTURE DESIGN
DESIGN BRANCH 15

BRIDGE NO. 53E0315
POST MILE 41.01

RETAINING WALL NO. 2166
ARCHITECTURAL DETAILS NO. 8

STRUCTURES DESIGN DETAIL SHEET (ENGLISH) (REV. 09-01-10)

ORIGINAL SCALE IN INCHES FOR REDUCED PLANS 0 1 2 3

UNIT: 3604
PROJECT NUMBER & PHASE: 0713000007
CONTRACT NO.: 07-1193U1

DISREGARD PRINTS BEARING EARLIER REVISION DATES

REVISION DATES 02-07-14

SHEET 41 OF 44

FILE => 53e0315-s-archdet08.dgn

USERNAME => s125624 DATE PLOTTED => 18-MAY-2015 TIME PLOTTED => 16:37

DIST	COUNTY	ROUTE	POST MILES TOTAL PROJECT	SHEET No.	TOTAL SHEETS
07	LA	10	37.2/42.4	2239	2313

REGISTERED CIVIL ENGINEER 10-1-14 DATE

6-1-15
PLANS APPROVAL DATE

REGISTERED PROFESSIONAL ENGINEER Gabriel J. Galo No. 52288 Exp. 12-31-14 CIVIL STATE OF CALIFORNIA

The State of California or its officers or agents shall not be responsible for the accuracy or completeness of scanned copies of this plan sheet.

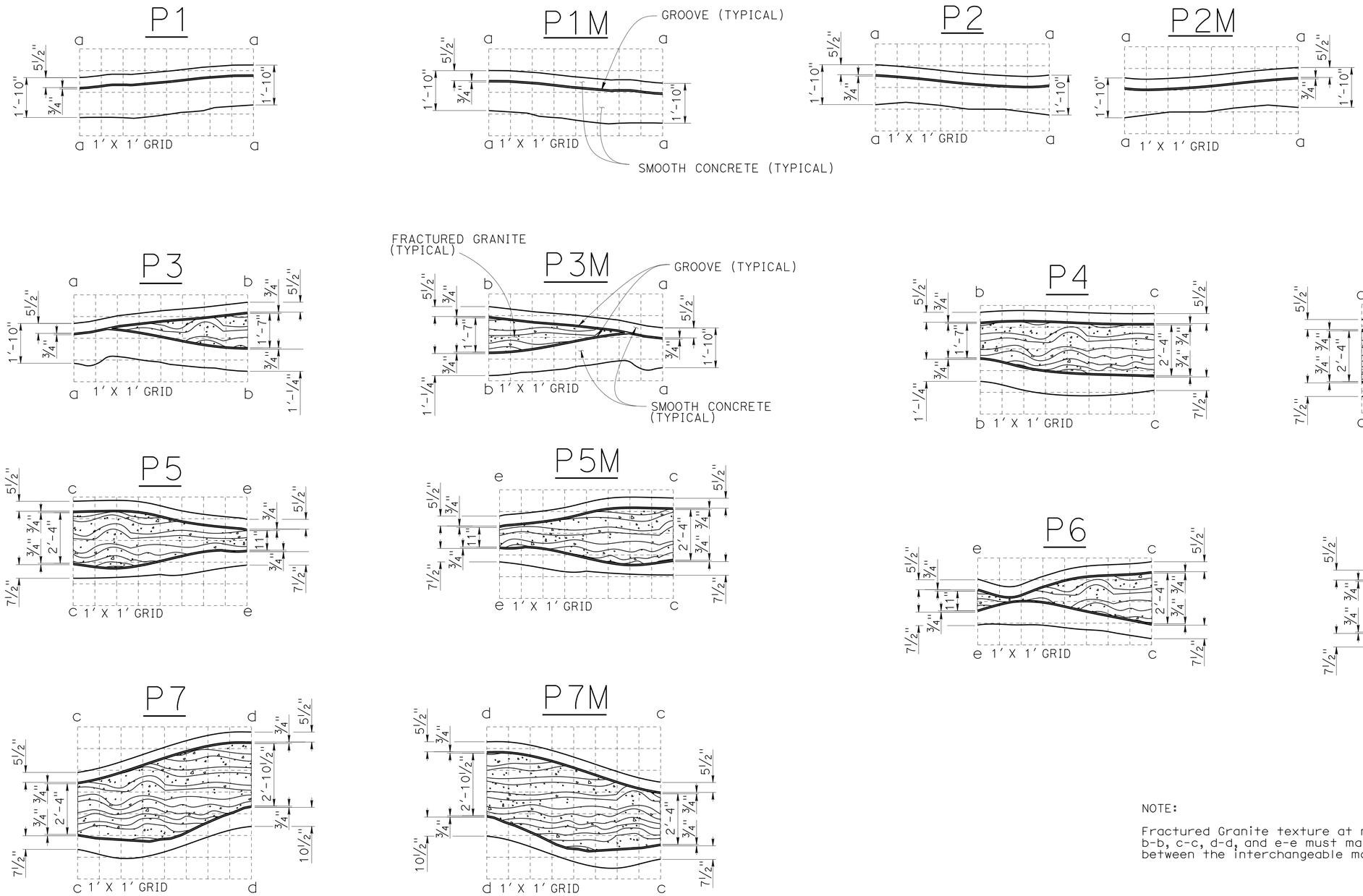

NOTE:

Fractured Granite texture at match lines a-a, b-b, c-c, d-d, and e-e must match seamlessly between the interchangeable modules.

INTERCHANGEABLE PATTERN MOTIF MODULES

NO SCALE

DESIGN	BY Valerie Moore	CHECKED R. Novik\J. Higareda	
DETAILS	BY Stan Cholda	CHECKED R. Novik\J. Higareda	
QUANTITIES	BY Fred Feng	CHECKED R. Novik	

STATE OF CALIFORNIA
DEPARTMENT OF TRANSPORTATION

DIVISION OF ENGINEERING SERVICES
STRUCTURE DESIGN
DESIGN BRANCH 15

BRIDGE NO. 53E0315
POST MILE 41.01

RETAINING WALL NO. 2166
ARCHITECTURAL DETAILS NO. 9

STRUCTURES DESIGN DETAIL SHEET (ENGLISH) (REV. 09-01-10)

ORIGINAL SCALE IN INCHES FOR REDUCED PLANS 0 1 2 3

UNIT: 3604
PROJECT NUMBER & PHASE: 0713000007
CONTRACT NO.: 07-1193U1

DISREGARD PRINTS BEARING EARLIER REVISION DATES

REVISION DATES 02-07-14

SHEET 42 OF 44

FILE => 53e0315-s-archdet09.dgn

USERNAME => s125624 DATE PLOTTED => 18-MAY-2015 TIME PLOTTED => 16:37

DIST	COUNTY	ROUTE	POST MILES TOTAL PROJECT	SHEET No.	TOTAL SHEETS
07	LA	10	37.2/42.4	2240	2313

REGISTERED CIVIL ENGINEER 10-1-14 DATE

6-1-15
PLANS APPROVAL DATE

REGISTERED PROFESSIONAL ENGINEER
Gabriel J. Galo
No. 52288
Exp. 12-31-14
CIVIL
STATE OF CALIFORNIA

The State of California or its officers or agents shall not be responsible for the accuracy or completeness of scanned copies of this plan sheet.

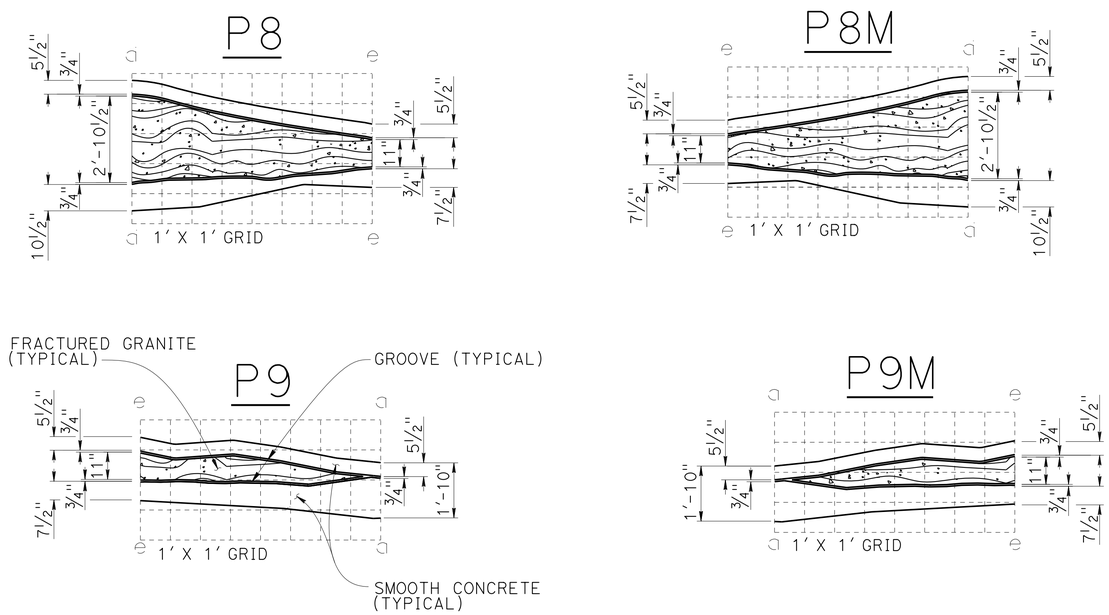

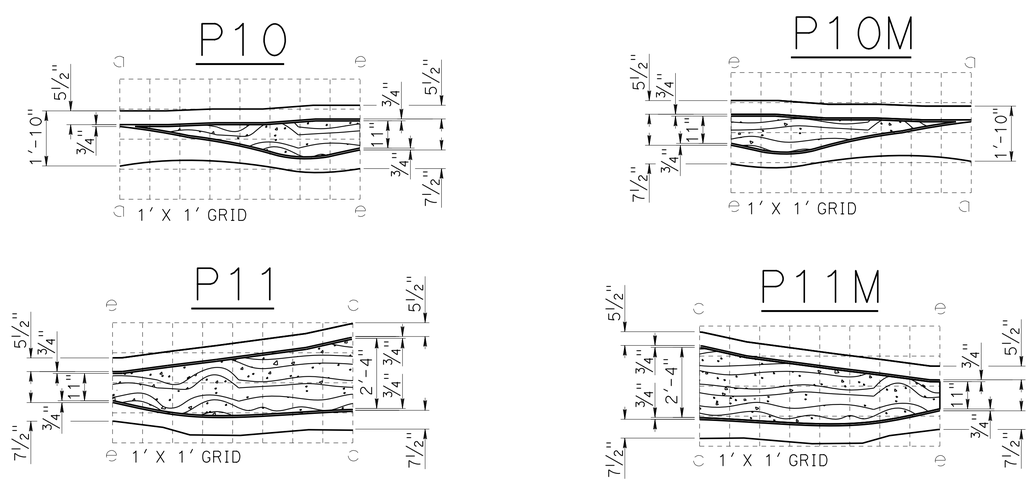

NOTE:

Fractured Granite texture at match lines a-a, b-b, c-c, d-d, and e-e must match seamlessly between the interchangeable modules.

INTERCHANGEABLE PATTERN MOTIF MODULES

NO SCALE

DESIGN	BY Valerie Moore	CHECKED R. Novik\J. Higareda	
DETAILS	BY Stan Cholda	CHECKED R. Novik\J. Higareda	
QUANTITIES	BY Fred Feng	CHECKED R. Novik	

STATE OF CALIFORNIA
DEPARTMENT OF TRANSPORTATION

DIVISION OF ENGINEERING SERVICES
STRUCTURE DESIGN
DESIGN BRANCH 15

BRIDGE NO. 53E0315
POST MILE 41.01

RETAINING WALL NO. 2166
ARCHITECTURAL DETAILS NO. 10

STRUCTURES DESIGN DETAIL SHEET (ENGLISH) (REV. 09-01-10)

ORIGINAL SCALE IN INCHES FOR REDUCED PLANS 0 1 2 3

UNIT: 3604
PROJECT NUMBER & PHASE: 0713000007
CONTRACT NO.: 07-1193U1

DISREGARD PRINTS BEARING EARLIER REVISION DATES

REVISION DATES 02-12-14

SHEET 43 OF 44

FILE => 53e0315-s-archdet10.dgn

USERNAME => s125624 DATE PLOTTED => 18-MAY-2015 TIME PLOTTED => 16:37

DIST	COUNTY	ROUTE	POST MILES TOTAL PROJECT	SHEET No	TOTAL SHEETS
07	LA	10	37.2/42.4	2241	2313

CERTIFIED ENGINEERING GEOLOGIST 3-03-14

PROFESSIONAL GEOLOGIST Michael A. Salisbury No. 2462 Exp. 2-28-15 CERTIFIED ENGINEERING GEOLOGIST STATE OF CALIFORNIA

6-1-15
PLANS APPROVAL DATE

The State of California or its officers or agents shall not be responsible for the accuracy or completeness of electronic copies of this plan sheet.

This LOTB sheet was prepared in accordance with the Caltrans Soil & Rock Logging, Classification, & Presentation Manual (2010 Edition).

See 2010 Standard Plans A10F and A10G for Soil Legend, and A10H for Rock Legend.

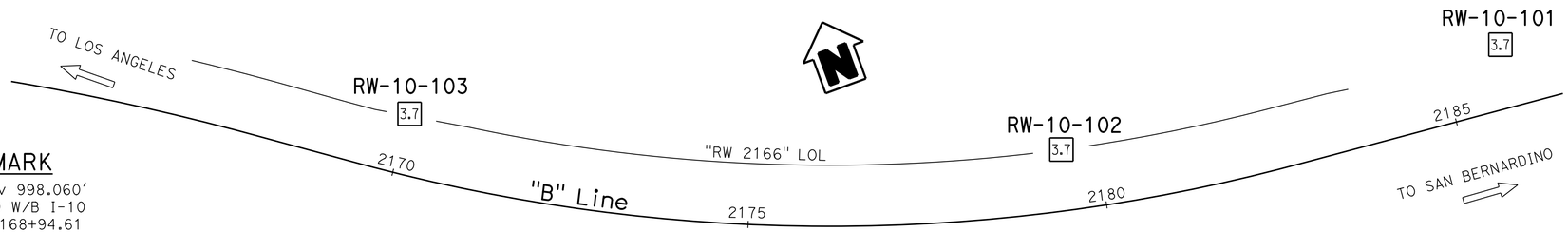

BENCH MARK

SUHV 1608 Elev 998.060′
Fd. PK N in TOD W/B I-10
85.09′ Lt Sta 2168+94.61
"B" Line
NAVD88

PLAN

1" = 100′

Note: No ground water encountered during field investigation.

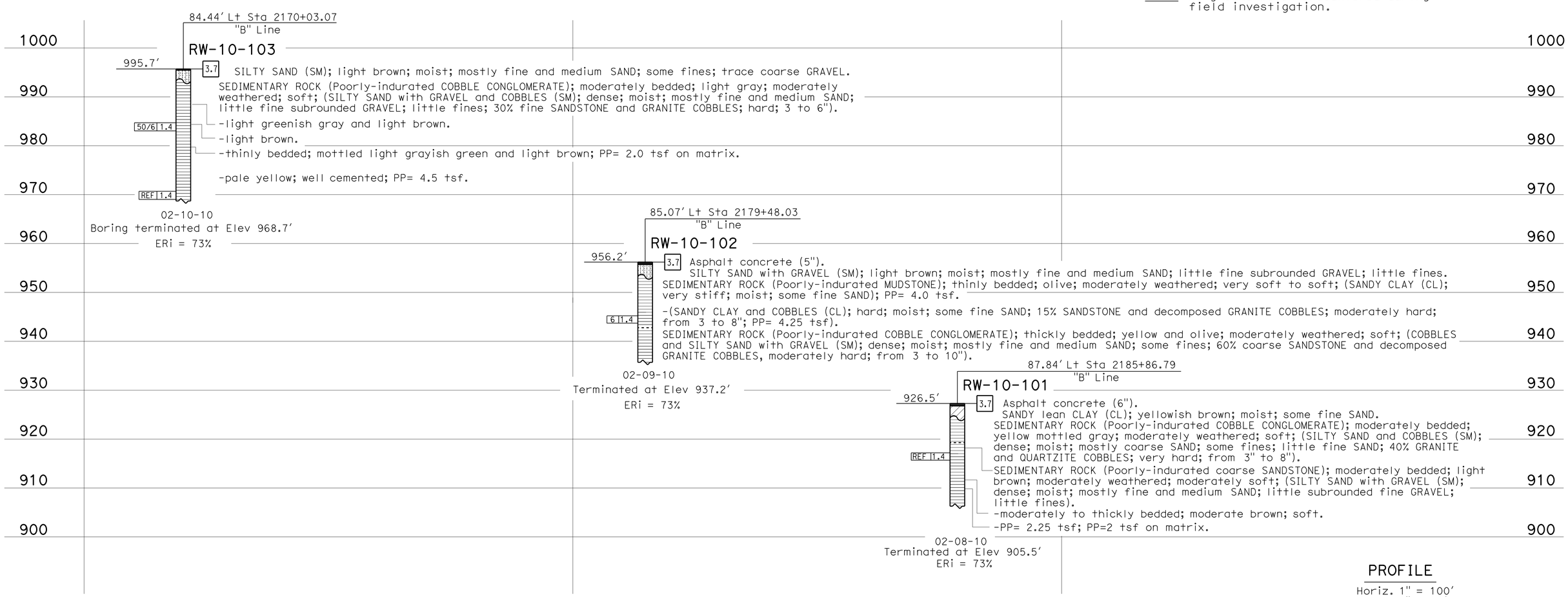

PROFILE

Horiz. 1" = 100′
Vert. 1" = 10′

ENGINEERING SERVICES	MATERIALS AND GEOTECHNICAL SERVICES	STATE OF CALIFORNIA DEPARTMENT OF TRANSPORTATION	DIVISION OF ENGINEERING SERVICES STRUCTURE DESIGN DESIGN BRANCH 15	BRIDGE NO. 53E0315 POST MILE 41.1/41.4	RETAINING WALL NO. 2166 LOG OF TEST BORINGS
FUNCTIONAL SUPERVISOR NAME: D-J. Jang	DRAWN BY: F. Nguyen CHECKED BY: H. Liu	FIELD INVESTIGATION BY: M. Salisbury			

OGS CIVIL LOG OF TEST BORINGS SHEET

ORIGINAL SCALE IN INCHES FOR REDUCED PLANS 0 1 2 3

UNIT: 3643
PROJECT NUMBER & PHASE: 07130000071
CONTRACT NO.: 07-1193U1

DISREGARD PRINTS BEARING EARLIER REVISION DATES

REVISION DATES 07-12-11 03-03-14 07-15-11 01-15-14

SHEET 44 OF 44

FILE => 53e0315-z-ltb01.dgn

USERNAME => s125624 DATE PLOTTED => 18-MAY-2015 TIME PLOTTED => 16:13

DIST	COUNTY	ROUTE	POST MILES TOTAL PROJECT	SHEET No.	TOTAL SHEETS
07	LA	10	37.2/42.4	2242	2313

REGISTERED CIVIL ENGINEER 10/01/14 DATE

6-1-15
PLANS APPROVAL DATE

REGISTERED PROFESSIONAL ENGINEER Dawit T Worku No. C60711 Exp. 12-31-14 CIVIL STATE OF CALIFORNIA

The State of California or its officers or agents shall not be responsible for the accuracy or completeness of electronic copies of this plan sheet.

NOTES:

(A) Paint "Br No. 53-E0144"
(B) Concrete Barrier Type 736A (Mod 4)
(C) For exact location of steps, see "LAYOUT" sheets

LEGEND:

⇨ Indicates direction of traffic

QUANTITIES

REMOVE RETAINING WALL (PORTION) (LS)	LUMP SUM	
STRUCTURE EXCAVATION (RETAINING WALL)	21,202	CY
STRUCTURE EXCAVATION (SOIL NAIL WALL)	198	CY
STRUCTURE EXCAVATION (TYPE Y-1) (AERIALLY DEPOSITED LEAD)	729	CY
STRUCTURE BACKFILL (RETAINING WALL)	29,463	CY
PERVIOUS BACKFILL MATERIAL (RETAINING WALL)	1,676	CY
SOIL NAIL	102,820	LF
FURNISH STEEL PILING (HP 10 X 42)	82,970	LF
DRIVE STEEL PILE (HP 10 X 42)	2,137	EA
STRUCTURAL CONCRETE, RETAINING WALL	9,870	CY
CONCRETE SURFACE TEXTURE	53,839	SQFT
BAR REINFORCING STEEL (RETAINING WALL)	1,621,245	LB
PREPARE AND STAIN CONCRETE	56,562	SQFT
CONCRETE BARRIER (TYPE 736 MODIFIED)	3,282	LF

CURVE DATA

(1)	(6)
R = 3102′	R = 2500.0′
Δ = 06°05′44"	Δ = 31°19′55.3"
L = 165.15′	L = 1367.117′
T = 330′	T = 701.118′

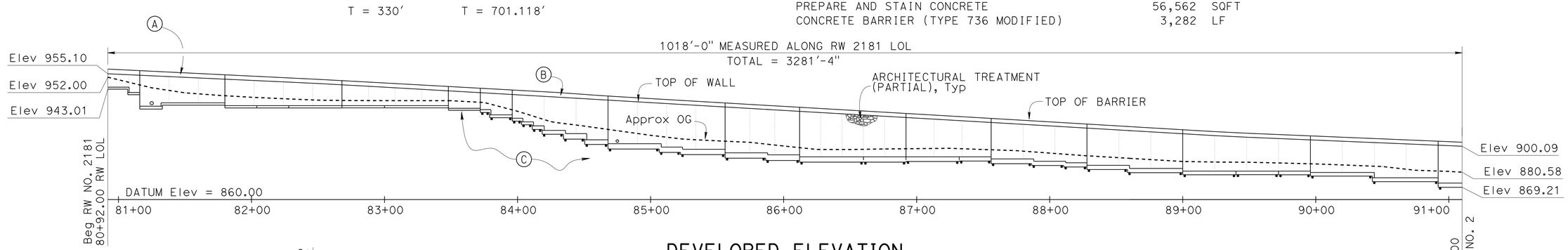

DEVELOPED ELEVATION

1" = 40′-0"

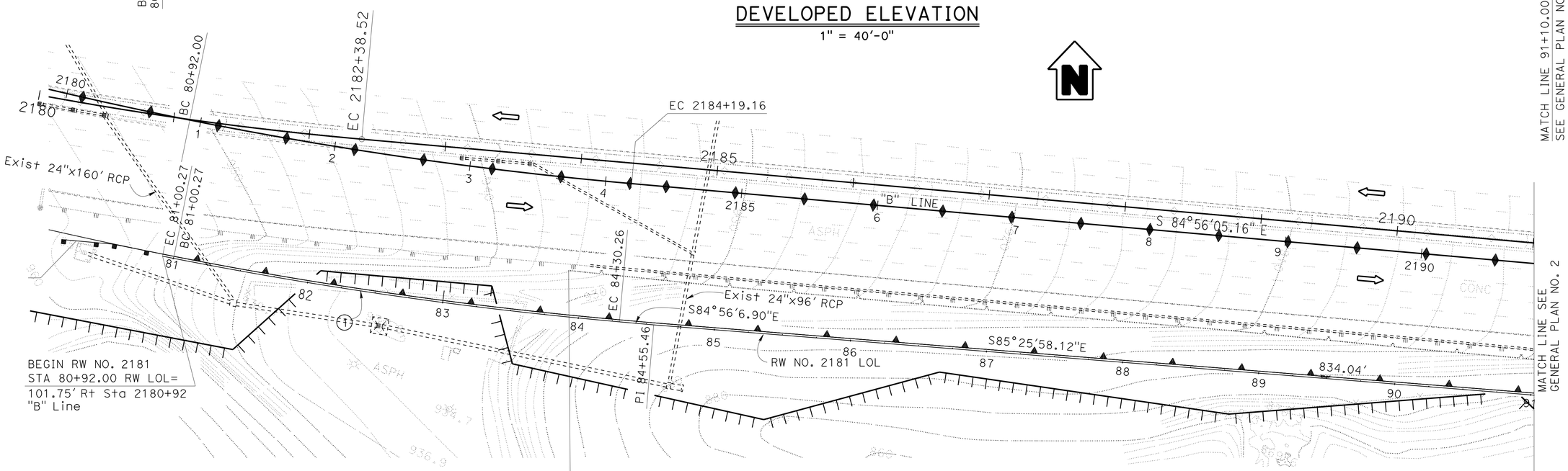

NOTE:
THE CONTRACTOR SHALL VERIFY ALL CONTROLLING FIELD DIMENSIONS BEFORE ORDERING OR FABRICATING ANY MATERIAL.

Beg REMOVE STEEL CRIB WALL (PORTION)
Beg REMOVE CABLE RAILING
Sta 83+70± RW LOL

PLAN

1" = 40′

HOWARD NG	DESIGN	BY MOHAMMAD MUQTADIR	CHECKED DAWIT WORKU	LOAD & RESISTANCE FACTOR DESIGN	LIVE LOADING: HL93 W/"LOW-BOY": PERMIT DESIGN VEHICLE
DESIGN ENGINEER	DETAILS	BY K. FARAHZADI/A. ONG	CHECKED DAWIT WORKU	LAYOUT: BY MOHAMMAD MUQTADIR	CHECKED DAWIT WORKU
	QUANTITIES	BY MOHAMMAD MUQTADIR	CHECKED EDDY SCOTT	SPECIFICATIONS: BY XIAODONG CHEN	PLANS AND SPECS COMPARED XIAODONG CHEN

ORIGINAL SCALE IN INCHES FOR REDUCED PLANS 0 1 2 3

STATE OF CALIFORNIA
DEPARTMENT OF TRANSPORTATION

DIVISION OF ENGINEERING SERVICES
STRUCTURE DESIGN
DESIGN BRANCH 20

BRIDGE NO. 53-E0144
POST MILE 41.80

RETAINING WALL NO. 2181
GENERAL PLAN 1 OF 3

UNIT: 3622
PROJECT NUMBER & PHASE: 0713000007-4 CONTRACT NO.: 1193U1

DISREGARD PRINTS BEARING EARLIER REVISION DATES

REVISION DATES: 01/26/15 02/03/15 09/09/14

SHEET 1 OF 53

USERNAME => s125624 DATE PLOTTED => 18-MAY-2015 TIME PLOTTED => 16:37

STRUCTURES DESIGN GENERAL PLAN SHEET (ENGLISH) (REV.09-01-10)

FILE => 53-E0144-a-gp01.dgn

DIST	COUNTY	ROUTE	POST MILES TOTAL PROJECT	SHEET No.	TOTAL SHEETS
07	LA	10	37.2/42.4	2243	2313

REGISTERED CIVIL ENGINEER 10/01/14 DATE

6-1-15
PLANS APPROVAL DATE

REGISTERED PROFESSIONAL ENGINEER — Dawit T Worku — No. C60711 — Exp. 12-31-14 — CIVIL — STATE OF CALIFORNIA

The State of California or its officers or agents shall not be responsible for the accuracy or completeness of electronic copies of this plan sheet.

NOTES:

(A) Paint "Br No. 53-E0144"
(B) Concrete Barrier Type 736A (Mod 4)
(C) For exact location of steps, see "LAYOUT" sheets

LEGEND:

⇨ Indicates direction of traffic

CURVE DATA

(2)	(7)
R = 10110′	R = 10015.0′
Δ = 08°10′25"	Δ = 08°10′24.9"
L = 722.32′	L = 1428.7′
T = 1442.18′	T = 701.118′

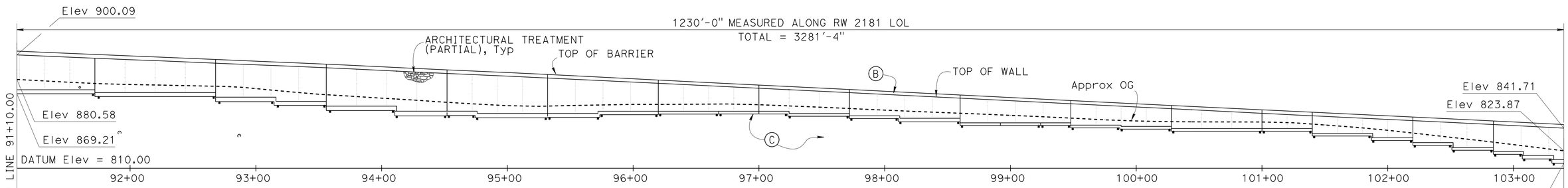

DEVELOPED ELEVATION

1" = 40′-0"

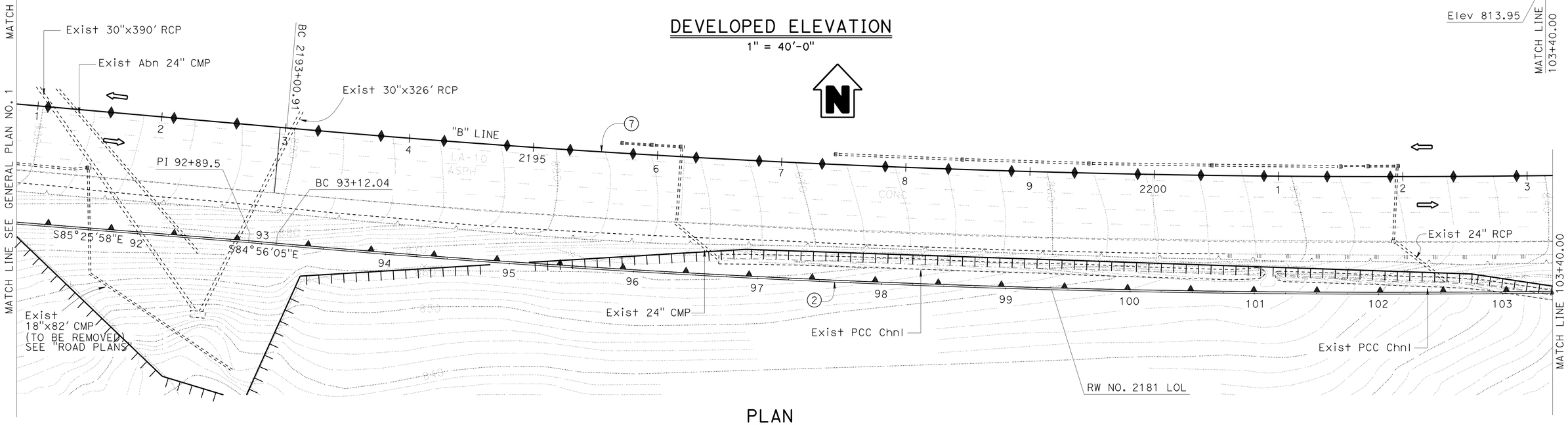

PLAN

1" = 40′

NOTE:
THE CONTRACTOR SHALL VERIFY ALL CONTROLLING FIELD DIMENSIONS BEFORE ORDERING OR FABRICATING

HOWARD NG DESIGN ENGINEER	DESIGN	BY MOHAMMAD MUQTADIR	CHECKED DAWIT WORKU	LOAD & RESISTANCE FACTOR DESIGN	LIVE LOADING: HL93 W/"LOW-BOY": PERMIT DESIGN VEHICLE	
	DETAILS	BY K. FARAHZADI/A. ONG	CHECKED DAWIT WORKU	LAYOUT	BY MOHAMMAD MUQTADIR	CHECKED DAWIT WORKU
	QUANTITIES	BY MOHAMMAD MUQTADIR	CHECKED EDDY SCOTT	SPECIFICATIONS	BY XIAODONG CHEN	PLANS AND SPECS COMPARED XIAODONG CHEN

ORIGINAL SCALE IN INCHES FOR REDUCED PLANS 0 1 2 3

STATE OF CALIFORNIA
DEPARTMENT OF TRANSPORTATION

DIVISION OF ENGINEERING SERVICES
STRUCTURE DESIGN
DESIGN BRANCH 20

BRIDGE NO. 53-E0144
POST MILE 41.80

RETAINING WALL NO. 2181
GENERAL PLAN 2 OF 3

UNIT: 3622
PROJECT NUMBER & PHASE: 0713000007-4
CONTRACT NO.: 1193U1

DISREGARD PRINTS BEARING EARLIER REVISION DATES

REVISION DATES: 06/03/14 05/19/14 05/20/14

SHEET 2 OF 53

USERNAME => s125624

STRUCTURES DESIGN GENERAL PLAN SHEET (ENGLISH) (REV.09-01-10)

FILE => 53-E0144-a-gp02.dgn

DIST	COUNTY	ROUTE	POST MILES TOTAL PROJECT	SHEET No.	TOTAL SHEETS
07	LA	10	37.2/42.4	2244	2313

REGISTERED CIVIL ENGINEER — DATE 10/01/14

6-1-15
PLANS APPROVAL DATE

REGISTERED PROFESSIONAL ENGINEER — Dawit T Worku — No. C60711 — Exp. 12-31-14 — CIVIL — STATE OF CALIFORNIA

The State of California or its officers or agents shall not be responsible for the accuracy or completeness of electronic copies of this plan sheet.

NOTES:

(A) Paint "Br No. 53-E0144"
(B) Concrete Barrier Type 736A (Mod 4)
(C) For exact location of steps, see "LAYOUT" sheets

LEGEND:

⇨ Indicates direction of traffic

CURVE DATA

(2)	(7)
R = 10110′	R = 10015.0′
Δ = 08°10′25"	Δ = 08°10′24.9"
L = 722.32′	L = 1428.7′
T = 1442.18′	T = 701.118′

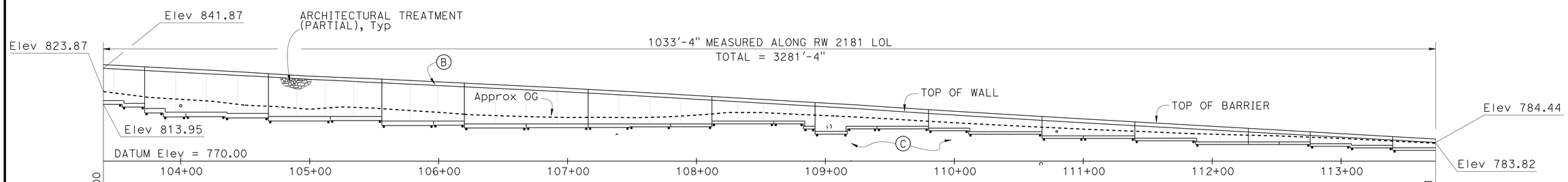

DEVELOPED ELEVATION

1" = 40′-0"

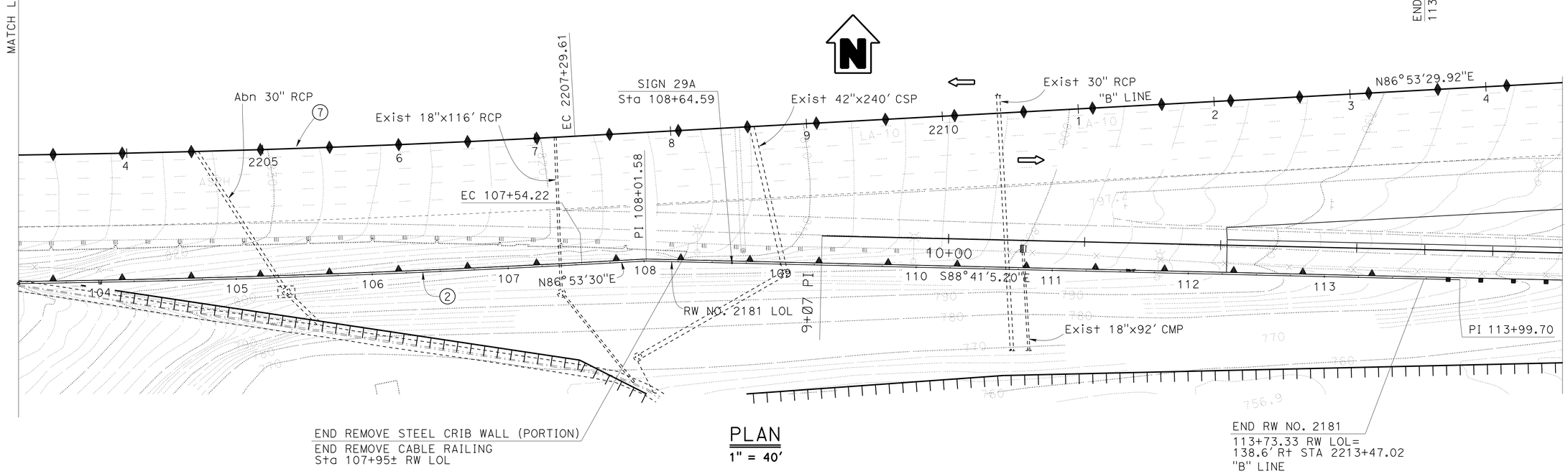

PLAN

1" = 40′

NOTE:
THE CONTRACTOR SHALL VERIFY ALL CONTROLLING FIELD DIMENSIONS BEFORE ORDERING OR FABRICATING ANY MATERIAL.

HOWARD NG
DESIGN ENGINEER

	BY	CHECKED
DESIGN	MOHAMMAD MUQTADIR	DAWIT WORKU
DETAILS	K. FARAHZADI/A. ONG	DAWIT WORKU
QUANTITIES	MOHAMMAD MUQTADIR	EDDY SCOTT

LOAD & RESISTANCE FACTOR DESIGN — LIVE LOADING: HL93 W/"LOW-BOY": PERMIT DESIGN VEHICLE
LAYOUT — BY MOHAMMAD MUQTADIR — CHECKED DAWIT WORKU
SPECIFICATIONS — BY XIAODONG CHEN — PLANS AND SPECS COMPARED XIAODONG CHEN

ORIGINAL SCALE IN INCHES FOR REDUCED PLANS 0 1 2 3

STATE OF CALIFORNIA
DEPARTMENT OF TRANSPORTATION

DIVISION OF ENGINEERING SERVICES
STRUCTURE DESIGN
DESIGN BRANCH 20

BRIDGE NO. 53-E0144
POST MILE 41.80

RETAINING WALL NO. 2181
GENERAL PLAN 3 OF 3

UNIT: 3622
PROJECT NUMBER & PHASE: 0713000007-1
CONTRACT NO.: 1193U1

DISREGARD PRINTS BEARING EARLIER REVISION DATES
REVISION DATES: 05/20/14 06/03/14 03/03/14
SHEET 3 OF 53

USERNAME => s125624 DATE PLOTTED => 18-MAY-2015 TIME PLOTTED => 16:37

DIST	COUNTY	ROUTE	POST MILES TOTAL PROJECT	SHEET No.	TOTAL SHEETS
07	LA	10	37.2/42.4	2245	2313

REGISTERED CIVIL ENGINEER 10/01/14 DATE

6-1-15
PLANS APPROVAL DATE

REGISTERED PROFESSIONAL ENGINEER Dawit T Worku No. C60711 Exp. 12-31-14 CIVIL STATE OF CALIFORNIA

The State of California or its officers or agents shall not be responsible for the accuracy or completeness of electronic copies of this plan sheet.

INDEX TO PLANS

SHEET NO.	TITLE
1.	GENERAL PLAN NO. 1
2.	GENERAL PLAN NO. 2
3.	GENERAL PLAN NO. 3
4.	INDEX TO PLAN
5.	PILE DATA TABLE NO. 1
6.	PILE DATA TABLE NO. 2
7.	FOUNDATION PLAN NO. 1
8.	FOUNDATION PLAN NO. 2
9.	FOUNDATION PLAN NO. 3
10.	FOUNDATION PLAN NO. 4
11.	FOUNDATION PLAN NO. 5
12.	FOUNDATION PLAN NO. 6
13.	FOUNDATION PLAN NO. 7
14.	LAYOUT NO. 1
15.	LAYOUT NO. 2
16.	LAYOUT NO. 3
17.	LAYOUT NO. 4
18.	LAYOUT NO. 5
19.	LAYOUT NO. 6
20.	LAYOUT NO. 7
21.	LAYOUT NO. 8
22.	LAYOUT NO. 9
23.	LAYOUT NO. 10
24.	LAYOUT NO. 11
25.	LAYOUT NO. 12
26.	RETAINING WALL TYPE 1 (MOD) DETAILS NO. 1
27.	RETAINING WALL TYPE 1 (MOD) DETAILS NO. 2
28.	SOIL NAIL LAYOUT NO. 1
29.	SOIL NAIL LAYOUT NO. 2
30.	SOIL NAIL TYPICAL SECTION
31.	SOIL NAIL DETAILS
32.	SOIL NAIL ELEVATION NO. 1
33.	SOIL NAIL ELEVATION NO. 2
34.	SOIL NAIL ELEVATION NO. 3
35.	ARCHITECTURAL TREATMENT
36.	ARCHITECTURAL TREATMENT DETAILS
37.	LOG OF TEST BORINGS 1 OF 17
38.	LOG OF TEST BORINGS 2 OF 17
39.	LOG OF TEST BORINGS 3 OF 17
40.	LOG OF TEST BORINGS 4 OF 17
41.	LOG OF TEST BORINGS 5 OF 17
42.	LOG OF TEST BORINGS 6 OF 17
43.	LOG OF TEST BORINGS 7 OF 17
44.	LOG OF TEST BORINGS 8 OF 17
45.	LOG OF TEST BORINGS 9 OF 17
46.	LOG OF TEST BORINGS 10 OF 17
47.	LOG OF TEST BORINGS 11 OF 17
48.	LOG OF TEST BORINGS 12 OF 17
49.	LOG OF TEST BORINGS 13 OF 17
50.	LOG OF TEST BORINGS 14 OF 17
51.	LOG OF TEST BORINGS 15 OF 17
52.	LOG OF TEST BORINGS 16 OF 17
53.	LOG OF TEST BORINGS 17 OF 17

STANDARD PLAN SHEET NO.

DETAIL NO.

STANDARD PLANS Dated 2010

A10A	ACRONYMS AND ABBREVIATIONS (SHEET 1 OF 2)
RSP A10B	ACRONYMS AND ABBREVIATIONS (SHEET 2 OF 2)
A10C	LINES AND SYMBOLS (SHEET 1 OF 3)
A10D	LINES AND SYMBOLS (SHEET 2 OF 3)
A10E	LINES AND SYMBOLS (SHEET 3 OF 3)
A10F	LEGEND - SOIL (SHEET 1 OF 2)
A10G	LEGEND - SOIL (SHEET 2 OF 2)
A10H	LEGEND - ROCK
A62B	LIMITS OF PAYMENT FOR EXCAVATION AND BACKFILL BRIDGE SURCHARGE AND WALL
A62C	LIMITS OF PAYMENT FOR EXCAVATION AND BACKFILL BRIDGE
RSP B3-1A	RETAINING WALL TYPE 1 (CASE 1)
B3-5	RETAINING WALL DETAILS NO. 1
B3-6	RETAINING WALL DETAILS NO. 2
RSP B11-56	CONCRETE BARRIER TYPE 736
RSP B11-47	CABLE RAILING
C8A	STEEL CRIB WALL CONSTRUCTION DETAILS

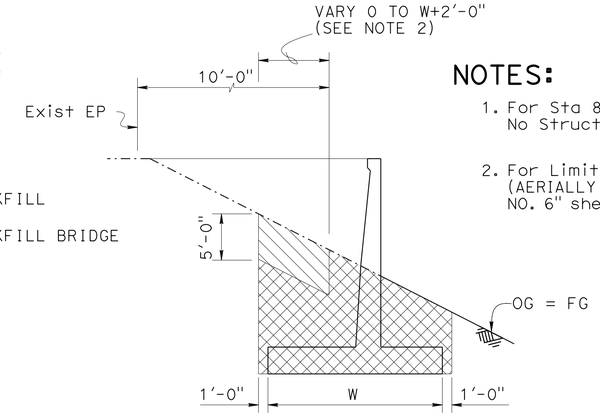

W = Width of RW footing
Sta 107+16 to Sta 113+73.33

LIMIT OF STRUCTURE EXCAVATION

NO SCALE

NOTES:

1. For Sta 80+92.00 to Sta 107+16 No Structure Excavation (Type Y-1), use A62B
2. For Limits of Structure Excavation (Type Y-1) (AERIALLY DEPOSITED LEAD), see "FOUNDATION PLAN NO. 6" sheet and "FOUNDATION PLAN NO. 7" sheet

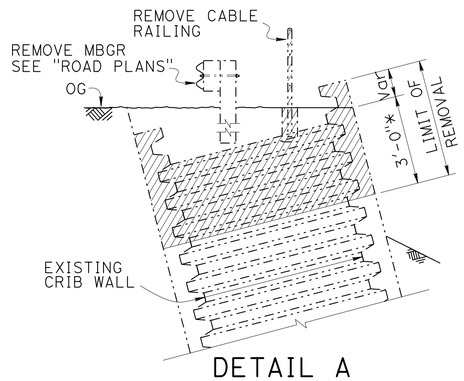

DETAIL A

NO SCALE

CRIB WALL REMOVAL

Station 83+70 to Station 107+95

LEGEND:

- Remove Retaining Wall (Portion)
- Structure Excavation (Type Y-1) (Aerially Deposited Lead)
- Structure Excavation (Retaining Wall)
- * Measured from OG

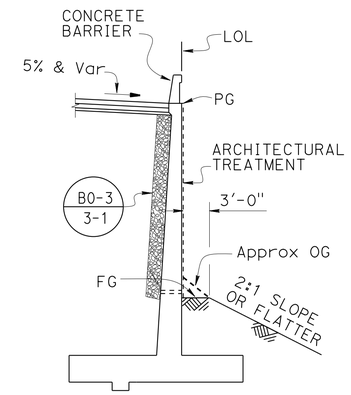

RETAINING WALL TYPE 1

TYPICAL SECTION

NO SCALE

Station 80+92 to Station 93+00 RSP B3-1A

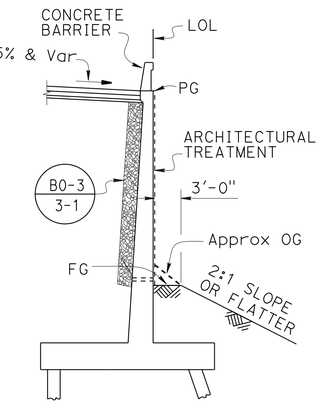

RETAINING WALL TYPE 1 (MOD)

TYPICAL SECTION

NO SCALE

Station 100+28 to Station 101+88
Station 108+12 to Station 113+73.33

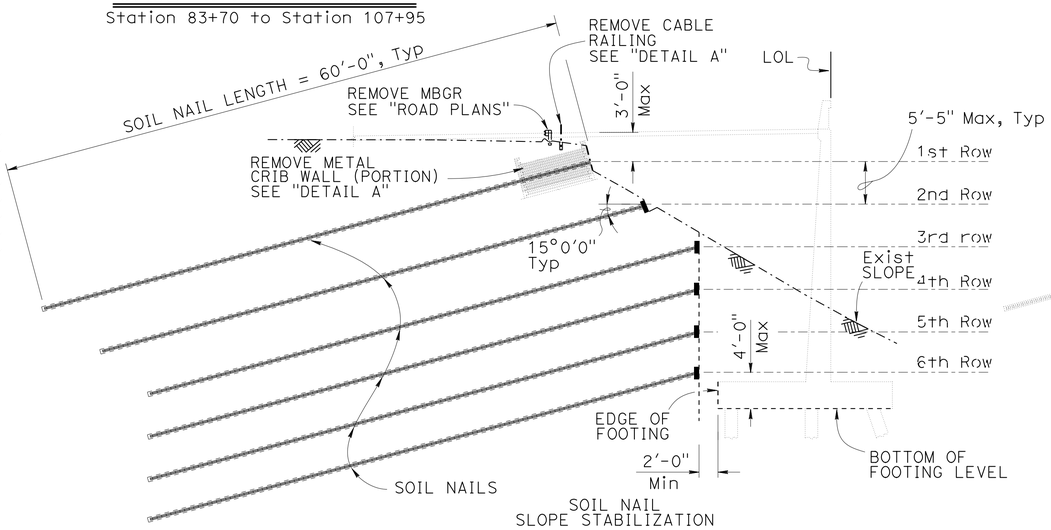

SOIL NAIL SLOPE STABILIZATION

TYPICAL SECTION-STAGE 1

1/8" = 1'-0"

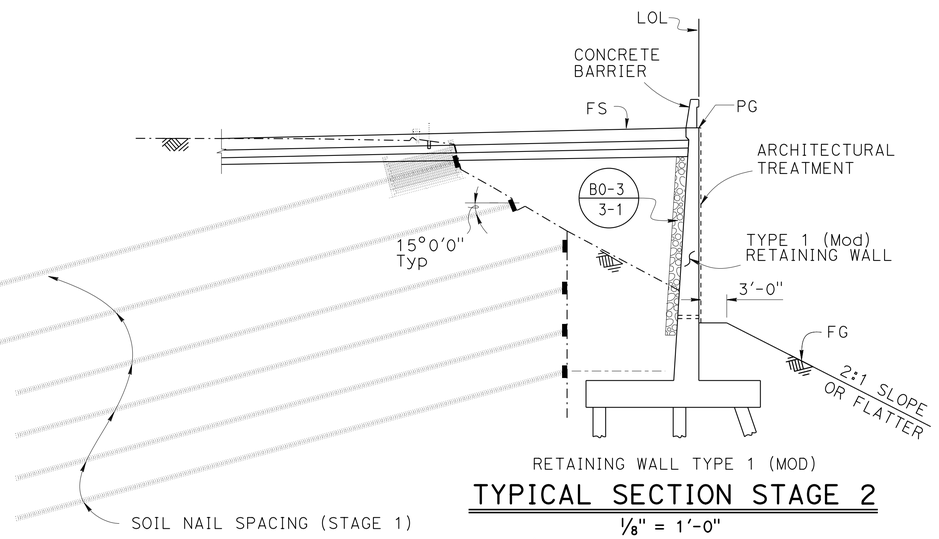

RETAINING WALL TYPE 1 (MOD)

TYPICAL SECTION STAGE 2

1/8" = 1'-0"

Station 93+00 to Station 100+28 and
Station 101+88 to Station 108+12

GENERAL NOTES:

SEE "DESIGN NOTES" ON "RETAINING WALL TYPE 1 (MOD) DETAILS NO. 1" AND "SOIL NAIL TYPICAL SECTION" SHEETS

NOTE:
THE CONTRACTOR SHALL VERIFY ALL CONTROLLING FIELD DIMENSIONS BEFORE ORDERING OR FABRICATING ANY MATERIAL.

	BY	CHECKED
DESIGN	MOHAMMAD MUQTADIR	DAWIT WORKU
DETAILS	ANTONETTE L. ONG	DAWIT WORKU
QUANTITIES	MOHAMMAD MUQTADIR	EDDY SCOTT

STATE OF CALIFORNIA
DEPARTMENT OF TRANSPORTATION

DIVISION OF ENGINEERING SERVICES
STRUCTURE DESIGN
DESIGN BRANCH 20

BRIDGE NO. 53-E0144
POST MILE 41.80

RETAINING WALL NO. 2181

INDEX TO PLANS

STRUCTURES DESIGN DETAIL SHEET (ENGLISH) (REV. 09-01-10)

ORIGINAL SCALE IN INCHES FOR REDUCED PLANS 0 1 2 3

UNIT: 3622
PROJECT NUMBER & PHASE: 0713000007-4 CONTRACT NO.: 1193U1

DISREGARD PRINTS BEARING EARLIER REVISION DATES

REVISION DATES 06/03/14 02/03/15 05/20/14

SHEET 4 OF 53

FILE => 53-E0144-a-itp.dgn

USERNAME => s125624 DATE PLOTTED => 18-MAY-2015 TIME PLOTTED => 16:37

DIST	COUNTY	ROUTE	POST MILES TOTAL PROJECT	SHEET No.	TOTAL SHEETS
07	LA	10	37.2/42.4	2246	2313

REGISTERED CIVIL ENGINEER 10/01/14 DATE

6-1-15
PLANS APPROVAL DATE

REGISTERED PROFESSIONAL ENGINEER Dawit T Worku No. C60711 Exp. 12-31-14 CIVIL STATE OF CALIFORNIA

The State of California or its officers or agents shall not be responsible for the accuracy or completeness of electronic copies of this plan sheet.

PILE DATA TABLE

LOCATION		FOOTING ELEVATION	PILE CUT OFF ELEVATION	STEEL HP-PILE TYPE	NOMINAL RESISTANCE		SPECIFIED PILE TIP ELEVATION					REQRD. NOMNL. DRIVING RESISTANCE
Beg Station	End Station	(Ft)			COMPRESSION (Kip)	TENSION (Kip)	ROW 1	ROW 2	ROW 3	ROW 4	ROW 5	
83+72.00	83+80.00	925.45	925.87	HP-10X42	180	0	875.5	883.7	--	--	--	180
83+80.00	83+96.00	921.53	921.95	HP-10X42	180	0	874.6	882.9	--	--	--	180
83+96.00	84+04.00	918.98	919.40	HP-10X42	180	0	874.3	875.6	882.6	--	--	180
84+04.00	84+12.00	916.23	916.65	HP-10X42	180	0	874.1	875.3	882.2	--	--	180
84+12.00	84+20.00	912.69	913.11	HP-10X42	180	0	873.6	874.8	882.1	--	--	180
84+20.00	84+36.00	909.1	909.52	HP-10X42	180	0	872.8	874.1	881.3	--	--	180
84+36.00	84+52.00	905.44	905.86	HP-10X42	180	0	871.1	872.4	878	879.8	--	180
84+52.00	84+68.00	901.44	901.86	HP-10X42	180	0	868.4	869.7	870.9	875.9	877.4	180
84+68.00	84+84.00	898.00	898.42	HP-10X42	180	0	865.7	867	868.2	873.5	875.2	180
84+84.00	84+96.00	898.00	898.42	HP-10X42	180	0	863.5	864.7	866	871.5	873.2	180
84+96.00	85+08.00	898.00	898.42	HP-10X42	180	0	861.1	862.3	863.6	869.4	871.1	180
85+08.00	85+24.00	895.45	895.87	HP-10X42	180	0	858.6	859.9	861.1	867.1	869.1	180
85+24.00	85+56.00	893.8	894.22	HP-10X42	180	0	858.9	860.1	861.4	867.1	869.1	180
85+56.00	85+88.00	891.12	891.54	HP-10X42	180	0	859.2	860.5	861.7	867.1	869.1	180
85+88.00	86+12.00	889.38	889.80	HP-10X42	180	0	862	863.2	864.5	869.3	871.3	180
86+12.00	86+36.00	888.13	888.55	HP-10X42	180	0	864	865.2	866.5	870.9	872.9	180
86+36.00	86+60.00	888.13	888.55	HP-10X42	180	0	865.9	867.2	868.4	872.6	872.6	180
86+60.00	86+92.00	888.38	888.80	HP-10X42	180	0	867.8	869.1	870.3	873.4	873.4	180
86+92.00	87+32.00	888.63	889.05	HP-10X42	180	0	869.9	871.1	872.4	873.6	873.6	180
87+32.00	87+56.00	888.97	889.39	HP-10X42	180	0	870.4	871.7	874	874	--	180
87+56.00	87+88.00	886.98	887.40	HP-10X42	180	0	868.4	869.7	872	872	--	180
87+88.00	88+12.00	885.63	886.05	HP-10X42	180	0	867.1	868.3	870.6	870.6	--	180
88+12.00	88+28.00	884.5	884.92	HP-10X42	180	0	865.9	867.2	869.5	869.5	--	180
88+28.00	88+60.00	882.58	883.00	HP-10X42	180	0	864	865.3	867.6	867.6	--	180
88+60.00	89+00.00	880.22	880.64	HP-10X42	180	0	861.7	862.9	865.2	865.2	--	180
89+00.00	89+40.00	878.64	879.06	HP-10X42	180	0	860.1	861.3	863.6	863.6	--	180
89+40.00	89+56.00	878.72	879.14	HP-10X42	180	0	855.5	856.7	862.4	--	--	180
89+56.00	89+72.00	878.72	879.14	HP-10X42	180	0	852.7	853.9	859.9	--	--	180
89+72.00	89+84.00	878.64	879.06	HP-10X42	180	0	850.6	851.9	857.8	--	--	180
89+84.00	89+96.00	878.64	879.06	HP-10X42	180	0	848.5	849.7	855.9	--	--	180
89+96.00	90+16.00	877.63	878.05	HP-10X42	180	0	848.6	849.9	855.9	--	--	180
90+16.00	90+28.00	877.63	878.05	HP-10X42	180	0	847.1	848.4	854.6	--	--	180
90+28.00	90+44.00	877.63	878.05	HP-10X42	180	0	845.2	846.4	852.9	--	--	180
90+44.00	90+60.00	873.46	873.88	HP-10X42	180	0	843.8	845.1	851.5	--	--	180
90+60.00	90+76.00	873.46	873.88	HP-10X42	180	0	841.9	843.1	849.8	--	--	180
90+76.00	90+92.00	873.46	873.88	HP-10X42	180	0	840	841.2	848.1	--	--	180
90+92.00	91+08.00	869.21	869.63	HP-10X42	180	0	838.5	839.7	844.9	846.7	--	180
91+08.00	91+24.00	869.21	869.63	HP-10X42	180	0	836.5	837.8	843.2	845	--	180
91+24.00	91+40.00	869.21	869.63	HP-10X42	180	0	834.6	835.8	841.5	843.3	--	180
91+40.00	91+56.00	869.21	869.63	HP-10X42	180	0	832.7	833.9	839.8	841.6	--	180
91+56.00	91+72.00	869.21	869.63	HP-10X42	180	0	830.7	832	838.1	839.9	--	180
91+72.00	91+88.00	866.96	867.38	HP-10X42	180	0	829	830.2	836.3	838.1	--	180
91+88.00	92+04.00	866.96	867.38	HP-10X42	180	0	826.8	828.1	834.4	836.2	--	180
92+04.00	92+20.00	866.96	867.38	HP-10X42	180	0	824.8	826	832.6	834.4	--	180
92+20.00	92+36.00	866.96	867.38	HP-10X42	180	0	822.7	824	830.8	832.6	--	180
92+36.00	92+52.00	866.96	867.38	HP-10X42	180	0	820.7	821.9	829	830.8	--	180
92+52.00	92+68.00	866.96	867.38	HP-10X42	180	0	818.6	819.9	827.2	829	--	180
92+68.00	92+84.00	862.92	863.34	HP-10X42	180	0	820.1	821.3	828	829.8	--	180
92+84.00	93+00.00	862.92	863.34	HP-10X42	180	0	818.3	819.5	826.4	828.2	--	180
93+00.00	93+16.00	862.92	863.34	HP-10X42	180	0	816.5	817.7	824.8	826.6	--	180
93+16.00	93+32.00	859.98	860.40	HP-10X42	180	0	815	816.3	823.2	825	--	180
93+32.00	93+44.00	859.98	860.40	HP-10X42	180	0	813.7	814.9	822	823.8	--	180
93+44.00	93+56.00	859.98	860.40	HP-10X42	180	0	812.3	813.6	820.8	822.6	--	180
93+56.00	93+72.00	855.85	856.27	HP-10X42	180	0	810.9	812.1	813.3	819.8	821.3	180
93+72.00	93+88.00	855.85	856.27	HP-10X42	180	0	809	810.3	811.5	818.2	819.7	180
93+88.00	94+00.00	855.85	856.27	HP-10X42	180	0	807.7	808.9	810.2	817	818.5	180
94+00.00	94+12.00	855.85	856.27	HP-10X42	180	0	806.4	807.7	808.9	815.9	817.4	180
94+12.00	94+28.00	851.6	852.02	HP-10X42	180	0	805.0	806.2	807.5	814.5	816.2	180
94+28.00	94+40.00	851.6	852.02	HP-10X42	180	0	803.6	804.9	806.1	813.3	815	180

NOTE:
THE CONTRACTOR SHALL VERIFY ALL CONTROLLING FIELD DIMENSIONS BEFORE ORDERING OR FABRICATING ANY MATERIAL.

	BY	CHECKED
DESIGN	MOHAMMAD MUQTADIR	DAWIT WORKU
DETAILS	LAN T TRAN	DAWIT WORKU
QUANTITIES	MOHAMMAD MUQTADIR	EDDY SCOTT

STATE OF CALIFORNIA
DEPARTMENT OF TRANSPORTATION

DIVISION OF ENGINEERING SERVICES
STRUCTURE DESIGN
DESIGN BRANCH 20

BRIDGE NO. 53-E0144
POST MILE 41.80

RETAINING WALL NO. 2181
PILE DATA TABLE 1

STRUCTURES DESIGN DETAIL SHEET (ENGLISH) (REV. 09-01-10)

ORIGINAL SCALE IN INCHES FOR REDUCED PLANS 0 1 2 3

UNIT: 3622
PROJECT NUMBER & PHASE: 0713000007-1 CONTRACT NO.: 1193U1

DISREGARD PRINTS BEARING EARLIER REVISION DATES

REVISION DATES 10/30/13 1/28/14 10/28/15

SHEET 5 OF 53

FILE => 53-E0144-b-pdt01.dgn

USERNAME => s125624 DATE PLOTTED => 18-MAY-2015 TIME PLOTTED => 16:37

DIST	COUNTY	ROUTE	POST MILES TOTAL PROJECT	SHEET No.	TOTAL SHEETS
07	LA	10	37.2/42.4	2247	2313

Dawit Tadelle Gebre 10/01/14
REGISTERED CIVIL ENGINEER DATE

6-1-15
PLANS APPROVAL DATE

REGISTERED PROFESSIONAL ENGINEER
Dawit T Worku
No. C60711
Exp. 12-31-14
CIVIL
STATE OF CALIFORNIA

The State of California or its officers or agents shall not be responsible for the accuracy or completeness of electronic copies of this plan sheet.

PILE DATA TABLE (CONTINUE)

LOCATION		FOOTING ELEVATION (Ft)	PILE CUT OFF ELEVATION	STEEL HP-PILE TYPE	NOMINAL RESISTANCE		SPECIFIED PILE TIP ELEVATION					REQRD. NOMNL. DRIVING RESISTANCE
Beg Station	End Station				COMPRESSION (Kip)	TENSION (Kip)	ROW 1	ROW 2	ROW 3	ROW 4	ROW 5	
94+40.00	94+52.00	851.6	852.02	HP-10X42	180	0	802.2	803.5	804.7	812.1	813.8	180
94+52.00	94+76.00	851.85	852.27	HP-10X42	180	0	799.7	800.9	802.2	809.5	811	180
94+76.00	94+92.00	850.09	850.51	HP-10X42	180	0	798.1	799.4	800.6	807.9	809.4	180
94+92.00	95+08.00	850.09	850.51	HP-10X42	180	0	796.3	797.5	798.8	806.3	807.8	180
95+08.00	95+32.00	850.09	850.51	HP-10X42	180	0	793.6	794.8	796.0	803.9	805.4	180
95+32.00	95+72.00	850.42	850.84	HP-10X42	180	0	801.4	801.4	801.4	801.4	801.4	180
95+72.00	96+20.00	852.55	852.97	HP-10X42	180	0	806.1	806.1	806.1	806.1	806.1	180
96+20.00	96+68.00	853.05	853.47	HP-10X42	180	0	807.1	807.1	807.1	807.1	807.1	180
96+68.00	97+00.00	853.13	853.55	HP-10X42	180	0	808.1	808.1	808.1	--	--	180
97+00.00	97+24.00	853.13	853.55	HP-10X42	180	0	809.1	809.1	809.1	--	--	180
97+24.00	97+72.00	851.3	851.72	HP-10X42	180	0	807.3	807.3	807.3	--	--	180
97+72.00	98+12.00	849.5	849.92	HP-10X42	180	0	805.5	805.5	805.5	--	--	180
98+12.00	98+60.00	846.87	847.29	HP-10X42	180	0	802.9	802.9	802.9	--	--	180
98+60.00	98+92.00	843.93	844.35	HP-10X42	180	0	798.9	798.9	798.9	--	--	180
98+92.00	99+24.00	843.93	844.35	HP-10X42	180	0	799.9	799.9	799.9	--	--	180
99+24.00	99+48.00	843.94	844.36	HP-10X42	180	0	800.4	800.4	--	--	--	180
99+48.00	99+88.00	842.09	842.51	HP-10X42	180	0	798.6	798.6	--	--	--	180
99+88.00	100+28.00	841.07	841.49	HP-10X42	180	0	797.6	797.6	--	--	--	180
100+28.00	100+44.00	839.42	839.84	HP-10X42	180	0	796.4	796.4	--	--	--	180
100+44.00	101+00.00	839.42	839.84	HP-10X42	180	0	796.4	796.4	--	--	--	180
101+00.00	101+40.00	839.58	840.00	HP-10X42	180	0	796.6	796.6	--	--	--	180
101+40.00	101+88.00	835.62	836.04	HP-10X42	180	0	792.6	792.6	--	--	--	180
101+88.00	102+20.00	832.04	832.46	HP-10X42	180	0	788.5	788.5	--	--	--	180
102+20.00	102+52.00	828.21	828.63	HP-10X42	180	0	784.2	784.2	784.2	--	--	180
102+52.00	102+84.00	824.28	824.70	HP-10X42	180	0	779.3	779.3	779.3	--	--	180
102+84.00	103+08.00	821.04	821.46	HP-10X42	180	0	775.0	775.0	775.0	--	--	180
103+08.00	103+32.00	817.39	817.81	HP-10X42	180	0	770.9	770.9	770.9	--	--	180
103+32.00	103+56.00	813.95	814.37	HP-10X42	180	0	766.5	766.5	766.5	766.5	766.5	180
103+56.00	103+72.00	811.86	812.28	HP-10X42	180	0	764.4	764.4	764.4	--	--	180
103+72.00	103+88.00	807.27	807.69	HP-10X42	180	0	757.8	757.8	757.8	--	--	180
103+88.00	104+04.00	804.19	804.61	HP-10X42	180	0	753.2	753.2	753.2	753.2	753.2	180
104+04.00	104+36.00	804.44	804.86	HP-10X42	180	0	754.9	754.9	754.9	754.9	754.9	180
104+36.00	104+68.00	803.44	803.86	HP-10X42	180	0	753.9	753.9	753.9	753.9	753.9	180
104+68.00	105+16.00	801.08	801.50	HP-10X42	180	0	751.6	751.6	751.6	751.6	751.6	180
105+16.00	105+56.00	801.42	801.84	HP-10X42	180	0	752.4	752.4	752.4	752.4	--	180
105+56.00	105+96.00	797.53	797.95	HP-10X42	180	0	748.0	748.0	748.0	748.0	748.0	180
105+96.00	106+20.00	797.87	798.29	HP-10X42	180	0	748.9	748.9	748.9	748.9	--	180
106+20.00	106+68.00	795.63	796.05	HP-10X42	180	0	746.6	746.6	746.6	746.6	--	180
106+68.00	107+16.00	795.88	796.30	HP-10X42	180	0	748.4	748.4	748.4	--	--	180
107+16.00	107+48.00	796.05	796.47	HP-10X42	180	0	749.6	749.6	749.6	--	--	180
107+48.00	107+80.00	796.55	796.97	HP-10X42	180	0	750.6	750.6	750.6	--	--	180
107+80.00	108+12.00	796.62	797.04	HP-10X42	180	0	751.6	751.6	751.6	--	--	180
108+12.00	108+60.00	798.85	799.27	HP-10X42	180	0	755.4	755.4	--	--	--	180
108+60.00	108+84.00	798.85	799.27	HP-10X42	180	0	755.4	755.4	--	--	--	180
108+84.00	108+92.00	794.85	795.27	HP-10X42	180	0	751.4	751.4	--	--	--	180
108+92.00	109+16.00	790.83	791.25	HP-10X42	180	0	745.8	745.8	745.8	--	--	180
109+16.00	109+40.00	794.83	795.25	HP-10X42	180	0	751.3	751.3	--	--	--	180
109+40.00	109+80.00	795.00	795.42	HP-10X42	180	0	752.0	752.0	--	--	--	180
109+80.00	110+12.00	793.52	793.94	HP-10X42	180	0	750.5	750.5	--	--	--	180
110+12.00	110+68.00	790.78	791.20	HP-10X42	180	0	747.8	747.8	--	--	--	180
110+68.00	111+00.00	787.56	788.98	HP-10X42	180	0	744.6	744.6	--	--	--	180
111+00.00	111+40.00	787.56	788.98	HP-10X42	180	0	744.6	744.6	--	--	--	180
111+40.00	111+88.00	785.72	786.14	HP-10X42	180	0	742.7	742.7	--	--	--	180
111+88.00	112+28.00	782.90	783.32	HP-10X42	180	0	739.9	739.9	--	--	--	180
112+28.00	112+52.00	782.90	783.32	HP-10X42	180	0	739.9	739.9	--	--	--	180
112+52.00	112+76.00	782.90	783.32	HP-10X42	180	0	739.9	739.9	--	--	--	180
112+76.00	113+08.00	781.47	781.89	HP-10X42	180	0	738.5	738.5	--	--	--	180
113+08.00	113+40.00	780.23	780.65	HP-10X42	180	0	737.2	737.2	--	--	--	180
113+40.00	113+73.33	778.32	778.74	HP-10X42	180	0	735.3	735.3	--	--	--	180

NOTE:
THE CONTRACTOR SHALL VERIFY ALL CONTROLLING FIELD DIMENSIONS BEFORE ORDERING OR FABRICATING ANY MATERIAL.

	BY	CHECKED
DESIGN	MOHAMMAD MUQTADIR	DAWIT WORKU
DETAILS	LAN T TRAN	DAWIT WORKU
QUANTITIES	MOHAMMAD MUQTADIR	EDDY SCOTT

STATE OF CALIFORNIA
DEPARTMENT OF TRANSPORTATION

DIVISION OF ENGINEERING SERVICES
STRUCTURE DESIGN
DESIGN BRANCH 20

BRIDGE NO. 53-E0144
POST MILE 41.80

RETAINING WALL NO. 2181
PILE DATA TABLE NO. 2

STRUCTURES DESIGN DETAIL SHEET (ENGLISH) (REV. 09-01-10)

ORIGINAL SCALE IN INCHES FOR REDUCED PLANS 0 1 2 3

UNIT: 3622
PROJECT NUMBER & PHASE: 0713000007-1
CONTRACT NO.: 1193U1

DISREGARD PRINTS BEARING EARLIER REVISION DATES

REVISION DATES 10/30/13 1/28/14 02/27/18

SHEET 6 OF 53

FILE => 53-E0144-b-pdt02.dgn

USERNAME => s125624 DATE PLOTTED => 18-MAY-2015 TIME PLOTTED => 16:37

DIST	COUNTY	ROUTE	POST MILES TOTAL PROJECT	SHEET No.	TOTAL SHEETS
07	LA	10	37.2/42.4	2248	2313

Dawit Tadelle Worku 10/01/14
REGISTERED CIVIL ENGINEER DATE

6-1-15
PLANS APPROVAL DATE

REGISTERED PROFESSIONAL ENGINEER
Dawit T Worku
No. C60711
Exp. 12-31-14
CIVIL
STATE OF CALIFORNIA

The State of California or its officers or agents shall not be responsible for the accuracy or completeness of electronic copies of this plan sheet.

CURVE DATA

No.	R	Δ	T	L
Ⓐ	2499.96	31°19′57"	701.12	1367.12
Ⓑ	3000.00	30°05′30"	806.42	1575.59
Ⓒ	3101.76	00°09′10"	4.14	8.27
Ⓓ	3101.74	06°05′44"	165.15	329.99

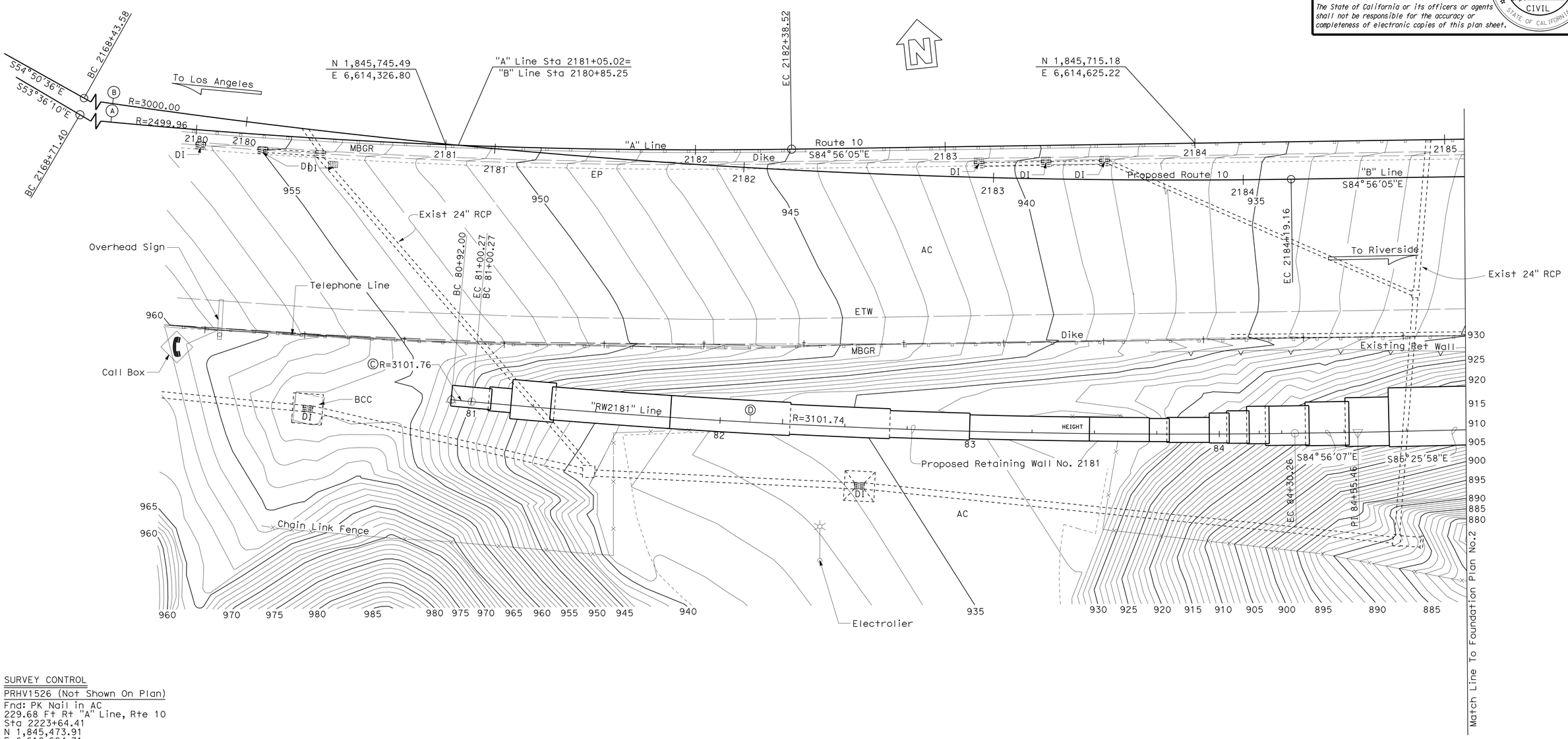

SURVEY CONTROL

PRHV1526 (Not Shown On Plan)
Fnd: PK Nail in AC
229.68 Ft Rt "A" Line, Rte 10
Sta 2223+64.41
N 1,845,473.91
E 6,618,604.71
Elev= 738.25

PRHV1527 (Not Shown On Plan)
Fnd: L&T in TC
161.06 Ft Lt "A" Line, Rte 10
Sta 2223+90.12
N 1,845,865.25
E 6,618,590.63
Elev= 748.86

PRELIMINARY INVESTIGATION SECTION

SCALE	VERT.DATUM NAVD88	PHOTOGRAMMETRY AS OF: 02/2008				
1"=20′	HORZ.DATUM NAD83	SURVEYED	BY District 04/2008	CHECKED	BY C.Fassett 02/2013	
ALIGNMENT TIES Dist. Traverse Sheet		DRAFTED	BY T.Zolnikov 02/2013	CHECKED	BY S.Sou 02/2013	

DESIGN	BY MOHAMMAD MUQTADIR	CHECKED	DAWIT WORKU
DETAILS	BY ANTONETTE L. ONG	CHECKED	DAWIT WORKU
QUANTITIES	BY MOHAMMAD MUQTADIR	CHECKED	EDDY SCOTT

STATE OF CALIFORNIA
DEPARTMENT OF TRANSPORTATION

DIVISION OF ENGINEERING SERVICES
STRUCTURE DESIGN
DESIGN BRANCH 20

BRIDGE NO. 53-E0144
POST MILE 41.80

RETAINING WALL NO. 2181
FOUNDATION PLAN NO. 1

STRUCTURES FOUNDATION PLAN SHEET (ENGLISH) (REV. 09-01-10)

ORIGINAL SCALE IN INCHES FOR REDUCED PLANS 0 1 2 3

UNIT: 3622
PROJECT NUMBER & PHASE: 0713000007-1
CONTRACT NO.: 1193U1

DISREGARD PRINTS BEARING EARLIER REVISION DATES

REVISION DATES 02/20/14 02/27/14 01/23/18

SHEET 7 OF 53

FILE => 53-E0144-e-fdpl01.dgn

DIST	COUNTY	ROUTE	POST MILES TOTAL PROJECT	SHEET No.	TOTAL SHEETS
07	LA	10	37.2/42.4	2249	2313

REGISTERED CIVIL ENGINEER 10/01/14 DATE

6-1-15
PLANS APPROVAL DATE

REGISTERED PROFESSIONAL ENGINEER Dawit T Worku No. C60711 Exp. 12-31-14 CIVIL STATE OF CALIFORNIA

The State of California or its officers or agents shall not be responsible for the accuracy or completeness of electronic copies of this plan sheet.

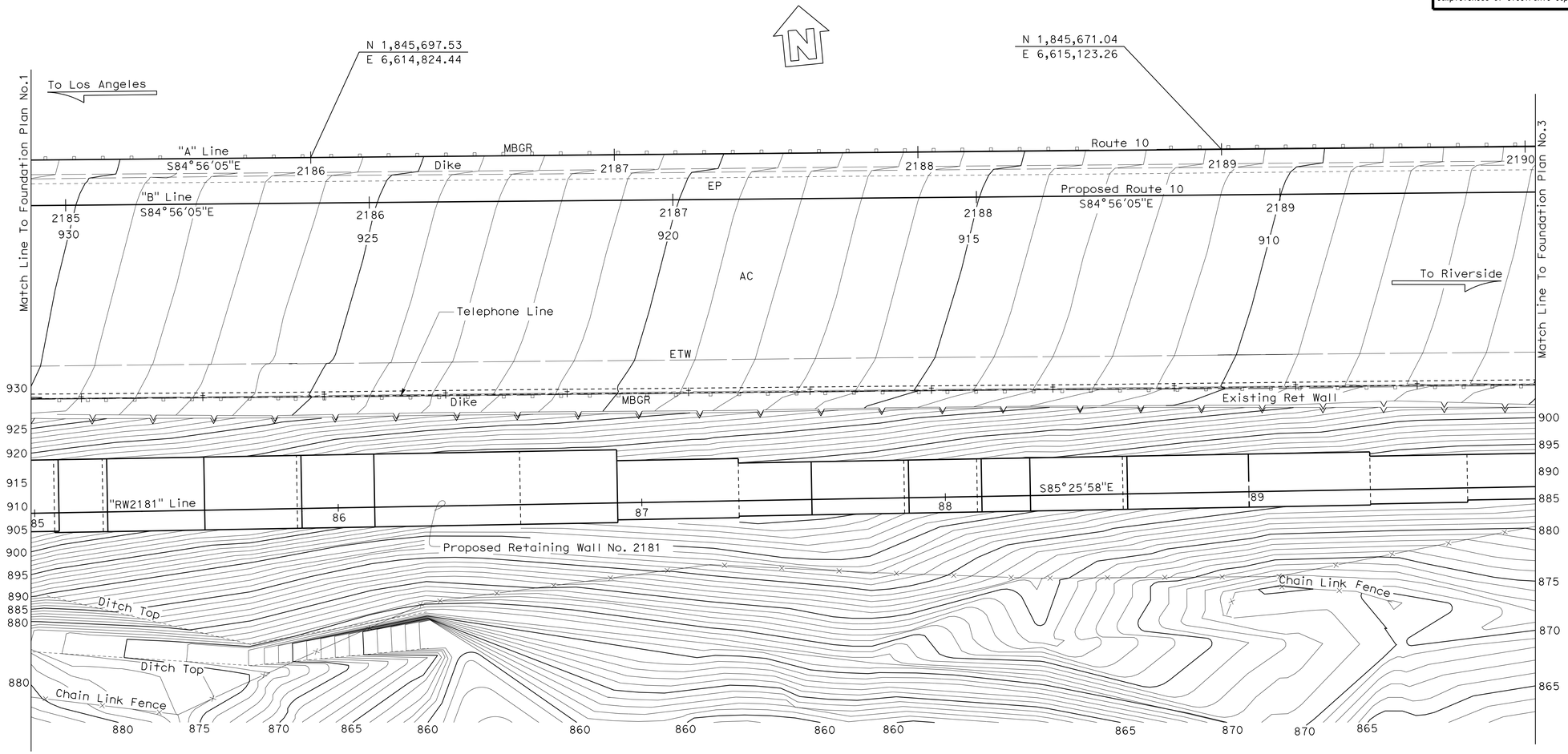

For District Controls See Foundation Plan No.1

PRELIMINARY INVESTIGATION SECTION					
SCALE 1"=20'	VERT.DATUM NAVD88	PHOTOGRAMMETRY AS OF: 02/2008			
	HORZ.DATUM NAD83	SURVEYED	BY District 04/2008	CHECKED	BY C.Fassett 02/2013
	ALIGNMENT TIES Dist. Traverse Sheet	DRAFTED	BY T.Zolnikov 02/2013	CHECKED	BY S.Sou 02/2013

DESIGN	BY MOHAMMAD MUQTADIR	CHECKED	DAWIT WORKU
DETAILS	BY ANTONETTE L. ONG	CHECKED	DAWIT WORKU
QUANTITIES	BY MOHAMMAD MUQTADIR	CHECKED	EDDY SCOTT

STATE OF CALIFORNIA
DEPARTMENT OF TRANSPORTATION

DIVISION OF ENGINEERING SERVICES
STRUCTURE DESIGN
DESIGN BRANCH 20

BRIDGE NO. 53-E0144
POST MILE 41.80

RETAINING WALL NO. 2181
FOUNDATION PLAN NO. 2

STRUCTURES FOUNDATION PLAN SHEET (ENGLISH) (REV. 09-01-10)

ORIGINAL SCALE IN INCHES FOR REDUCED PLANS 0 1 2 3

UNIT: 3622
PROJECT NUMBER & PHASE: 0713000007-1 CONTRACT NO.: 1193U1

DISREGARD PRINTS BEARING EARLIER REVISION DATES → 02/27/14 01/23/14 02/10/14

SHEET 8 OF 53

FILE => 53-E0144-e-fdp102.dgn

DIST	COUNTY	ROUTE	POST MILES TOTAL PROJECT	SHEET No.	TOTAL SHEETS
07	LA	10	37.2/42.4	2250	2313

Dawit Tadelle Worku 10/01/14
REGISTERED CIVIL ENGINEER DATE

6-1-15
PLANS APPROVAL DATE

REGISTERED PROFESSIONAL ENGINEER Dawit T Worku No. C60711 Exp. 12-31-14 CIVIL STATE OF CALIFORNIA

The State of California or its officers or agents shall not be responsible for the accuracy or completeness of electronic copies of this plan sheet.

CURVE DATA

No.	R	Δ	T	L
Ⓔ	10000.07	08°10′25"	714.50	1426.57
Ⓕ	10015.00	08°10′25"	715.56	1428.70
Ⓖ	10109.51	08°10′25"	722.32	1442.18

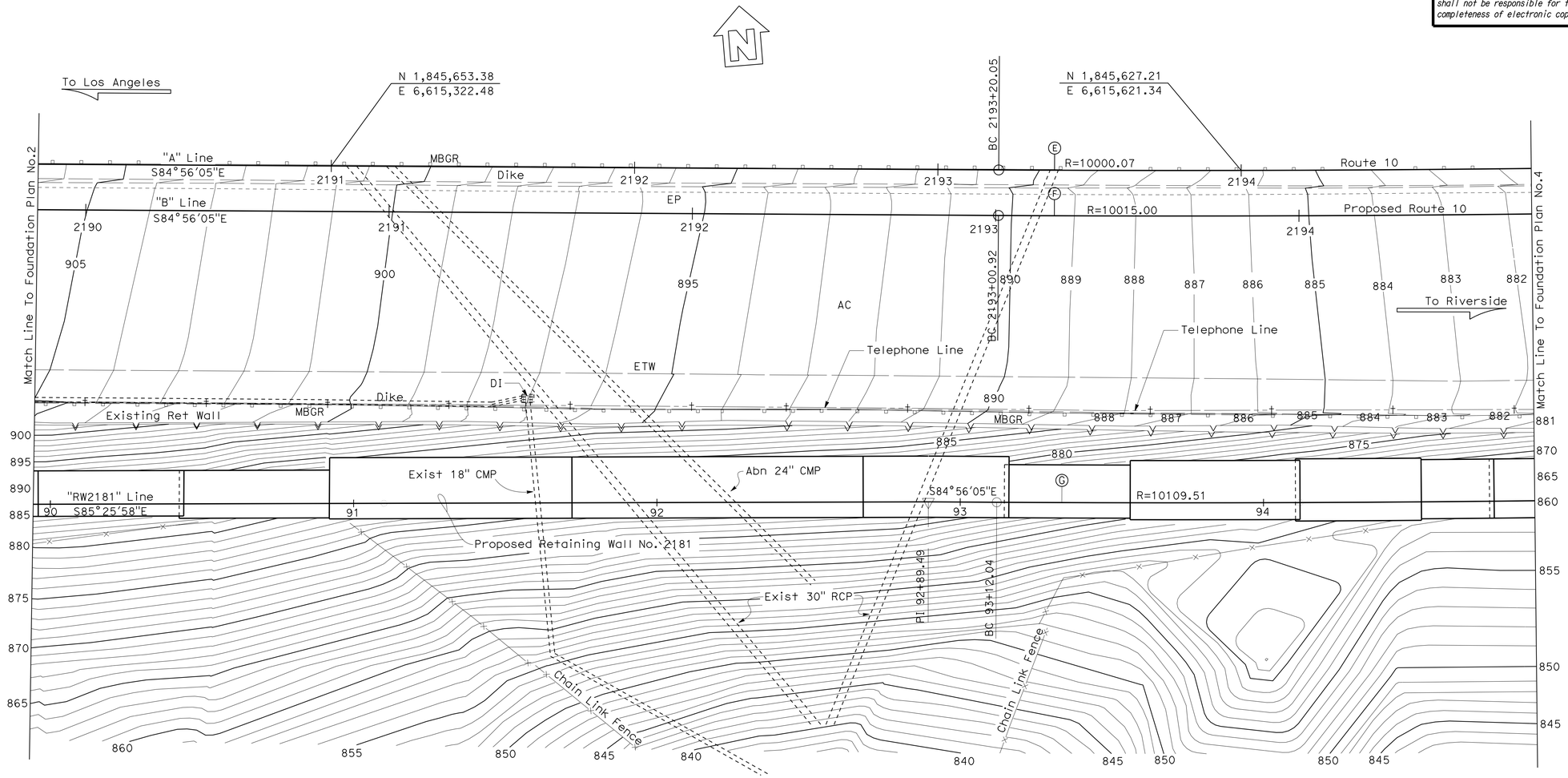

For District Controls See Foundation Plan No.1

PRELIMINARY INVESTIGATION SECTION							
SCALE 1"=20′	VERT.DATUM NAVD88	PHOTOGRAMMETRY AS OF: 02/2008					
	HORZ.DATUM NAD83	SURVEYED	BY District 04/2008	CHECKED	BY C.Fassett 02/2013		
	ALIGNMENT TIES Dist. Traverse Sheet	DRAFTED	BY T.Zolnikov 02/2013	CHECKED	BY S.Sou 02/2013		

DESIGN	BY MOHAMMAD MUQTADIR	CHECKED	DAWIT WORKU
DETAILS	BY ANTONETTE L. ONG	CHECKED	DAWIT WORKU
QUANTITIES	BY MOHAMMAD MUQTADIR	CHECKED	EDDY SCOTT

STATE OF CALIFORNIA
DEPARTMENT OF TRANSPORTATION

DIVISION OF ENGINEERING SERVICES
STRUCTURE DESIGN
DESIGN BRANCH 20

BRIDGE NO. 53-E0144
POST MILE 41.80

RETAINING WALL NO. 2181
FOUNDATION PLAN NO. 3

STRUCTURES FOUNDATION PLAN SHEET (ENGLISH) (REV. 09-01-10)

ORIGINAL SCALE IN INCHES FOR REDUCED PLANS 0 1 2 3

UNIT: 3622
PROJECT NUMBER & PHASE: 0713000007-1 CONTRACT NO.: 1193U1

DISREGARD PRINTS BEARING EARLIER REVISION DATES

REVISION DATES 01/28/14 02/27/14 01/23/18

SHEET 9 OF 53

FILE => 53-E0144-e-fdp103.dgn

DIST	COUNTY	ROUTE	POST MILES TOTAL PROJECT	SHEET No.	TOTAL SHEETS
07	LA	10	37.2/42.4	2251	2313

REGISTERED CIVIL ENGINEER 10/01/14 DATE

6-1-15
PLANS APPROVAL DATE

REGISTERED PROFESSIONAL ENGINEER
Dawit T Worku
No. C60711
Exp. 12-31-14
CIVIL
STATE OF CALIFORNIA

The State of California or its officers or agents shall not be responsible for the accuracy or completeness of electronic copies of this plan sheet.

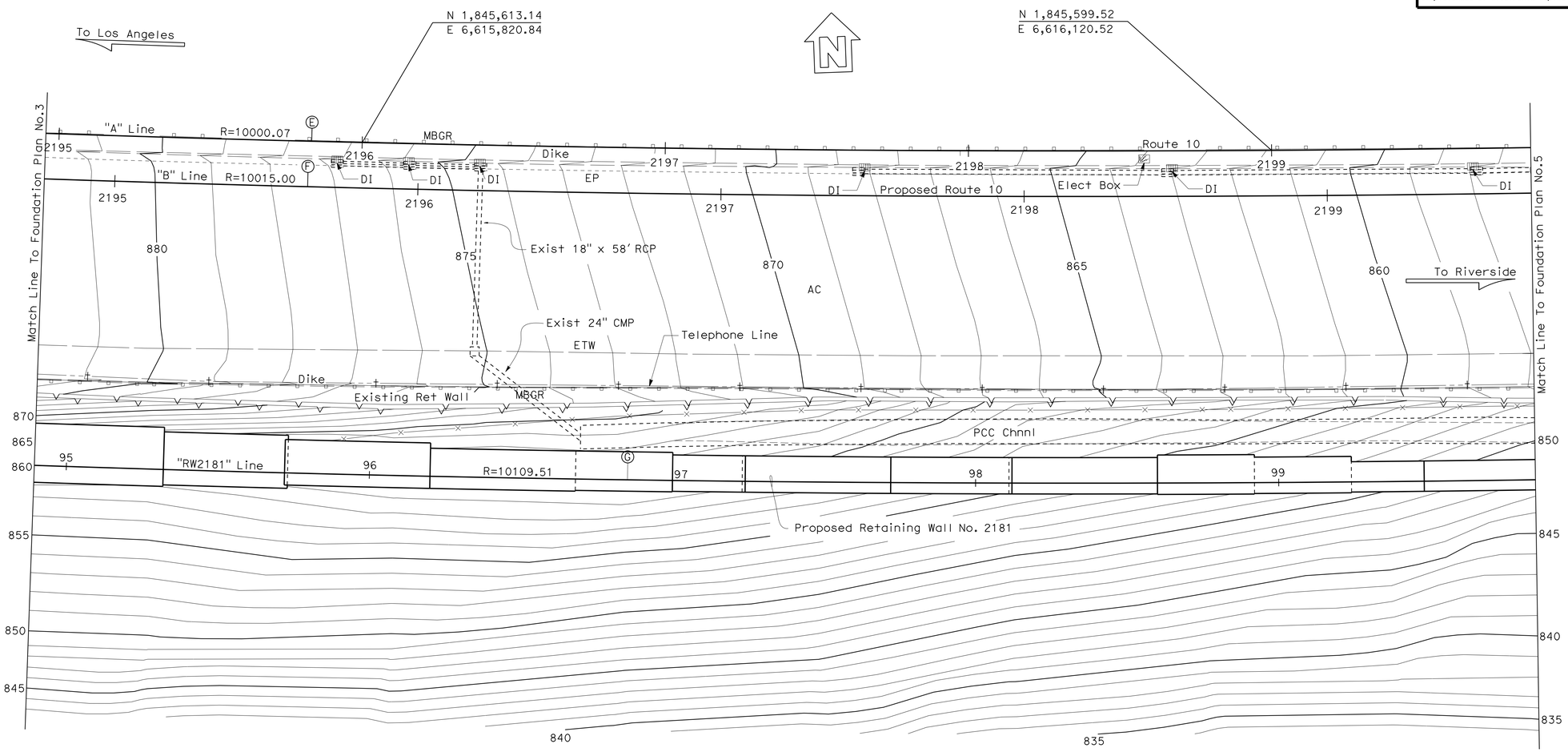

For District Controls See Foundation Plan No.1

PRELIMINARY INVESTIGATION SECTION							
SCALE 1"=20'	VERT.DATUM NAVD88	PHOTOGRAMMETRY AS OF: 02/2008					
	HORZ.DATUM NAD83	SURVEYED	BY District	04/2008	CHECKED	BY C.Fassett	02/2013
ALIGNMENT TIES Dist. Traverse Sheet		DRAFTED	BY T.Zolnikov	02/2013	CHECKED	BY S.Sou	02/2013

DESIGN	BY MOHAMMAD MUQTADIR	CHECKED	DAWIT WORKU
DETAILS	BY ANTONETTE L. ONG	CHECKED	DAWIT WORKU
QUANTITIES	BY MOHAMMAD MUQTADIR	CHECKED	EDDY SCOTT

STATE OF CALIFORNIA
DEPARTMENT OF TRANSPORTATION

DIVISION OF ENGINEERING SERVICES
STRUCTURE DESIGN
DESIGN BRANCH 20

BRIDGE NO. 53-E0144
POST MILE 41.80

RETAINING WALL NO. 2181
FOUNDATION PLAN NO. 4

STRUCTURES FOUNDATION PLAN SHEET (ENGLISH) (REV. 09-01-10)

ORIGINAL SCALE IN INCHES FOR REDUCED PLANS 0 1 2 3

UNIT: 3622
PROJECT NUMBER & PHASE: 0713000007-4
CONTRACT NO.: 1193U1

DISREGARD PRINTS BEARING EARLIER REVISION DATES

REVISION DATES: 02/27/14 07/23/14 01/28/14

SHEET 10 OF 53

FILE => 53-E0144-e-fdpl04.dgn

DIST	COUNTY	ROUTE	POST MILES TOTAL PROJECT	SHEET No.	TOTAL SHEETS
07	LA	10	37.2/42.4	2251	2313

REGISTERED CIVIL ENGINEER 10/01/14 DATE

6-1-15
PLANS APPROVAL DATE

REGISTERED PROFESSIONAL ENGINEER Dawit T Worku No. C60711 Exp. 12-31-14 CIVIL STATE OF CALIFORNIA

The State of California or its officers or agents shall not be responsible for the accuracy or completeness of electronic copies of this plan sheet.

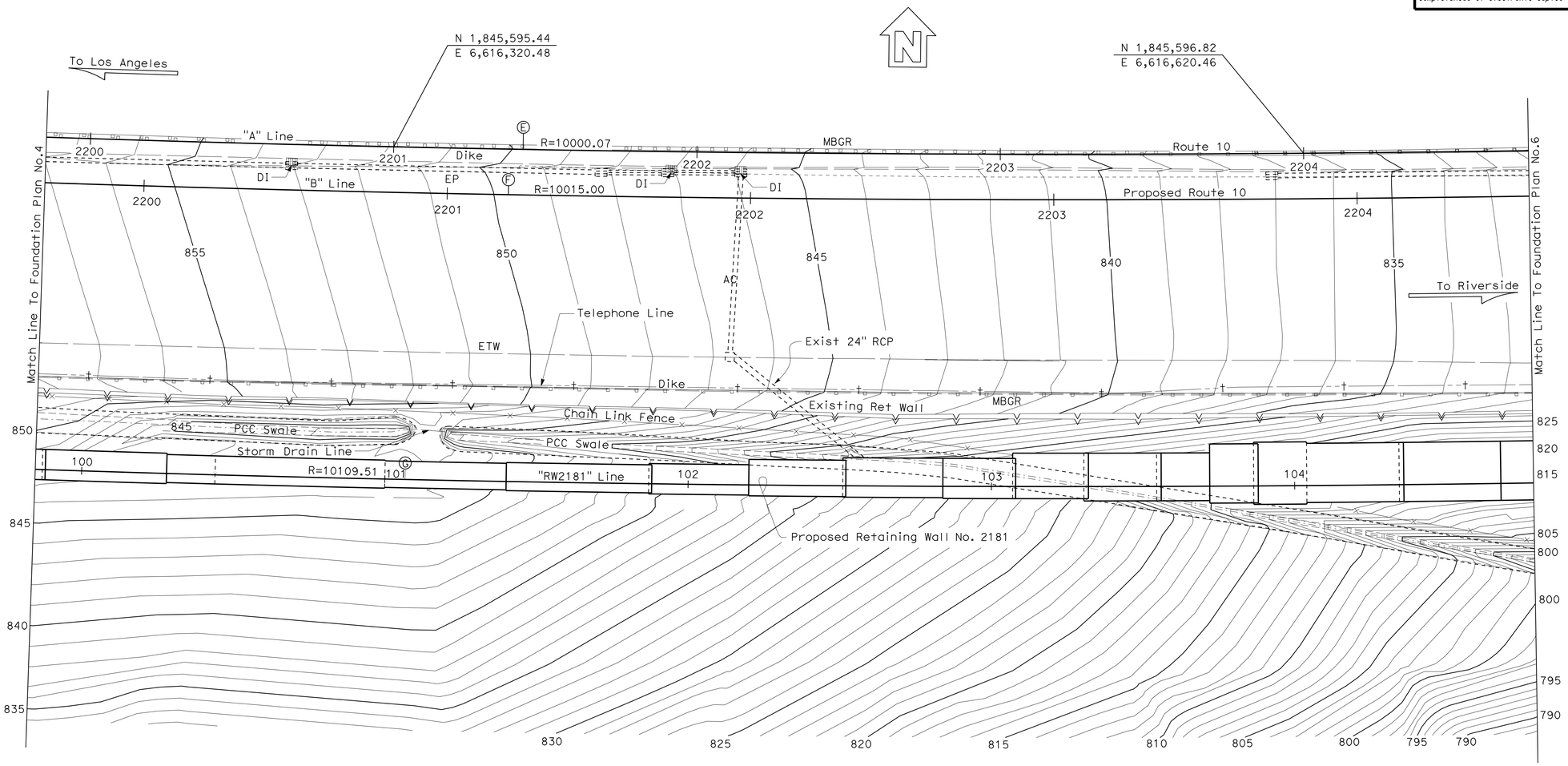

For District Controls See Foundation Plan No.1

PRELIMINARY INVESTIGATION SECTION							
SCALE 1"=20'	VERT.DATUM NAVD88	PHOTOGRAMMETRY AS OF: 02/2008					
	HORZ.DATUM NAD83	SURVEYED	BY District 04/2008	CHECKED	BY C.Fassett 02/2013		
	ALIGNMENT TIES Dist. Traverse Sheet	DRAFTED	BY T.Zolnikov 02/2013	CHECKED	BY S.Sou 02/2013		

DESIGN	BY MOHAMMAD MUQTADIR	CHECKED	DAWIT WORKU
DETAILS	BY ANTONETTE L. ONG	CHECKED	DAWIT WORKU
QUANTITIES	BY MOHAMMAD MUQTADIR	CHECKED	EDDY SCOTT

STATE OF CALIFORNIA
DEPARTMENT OF TRANSPORTATION

DIVISION OF ENGINEERING SERVICES
STRUCTURE DESIGN
DESIGN BRANCH 20

BRIDGE NO. 53-E0144
POST MILE 41.80

RETAINING WALL NO. 2181
FOUNDATION PLAN NO. 5

STRUCTURES FOUNDATION PLAN SHEET (ENGLISH) (REV. 09-01-10)

ORIGINAL SCALE IN INCHES FOR REDUCED PLANS 0 1 2 3

UNIT: 3622
PROJECT NUMBER & PHASE: 0713000007-4 CONTRACT NO.: 1193U1

DISREGARD PRINTS BEARING EARLIER REVISION DATES

REVISION DATES 02/21/14 10/04/13 01/28/14

SHEET 11 OF 53

FILE => 53-E0144-e-fdp105.dgn

DIST	COUNTY	ROUTE	POST MILES TOTAL PROJECT	SHEET No.	TOTAL SHEETS
07	LA	10	37.2/42.4	2253	2313

REGISTERED CIVIL ENGINEER — DATE 10/01/14

6-1-15
PLANS APPROVAL DATE

REGISTERED PROFESSIONAL ENGINEER — Dawit T Worku — No. C60711 — Exp. 12-31-14 — CIVIL — STATE OF CALIFORNIA

The State of California or its officers or agents shall not be responsible for the accuracy or completeness of electronic copies of this plan sheet.

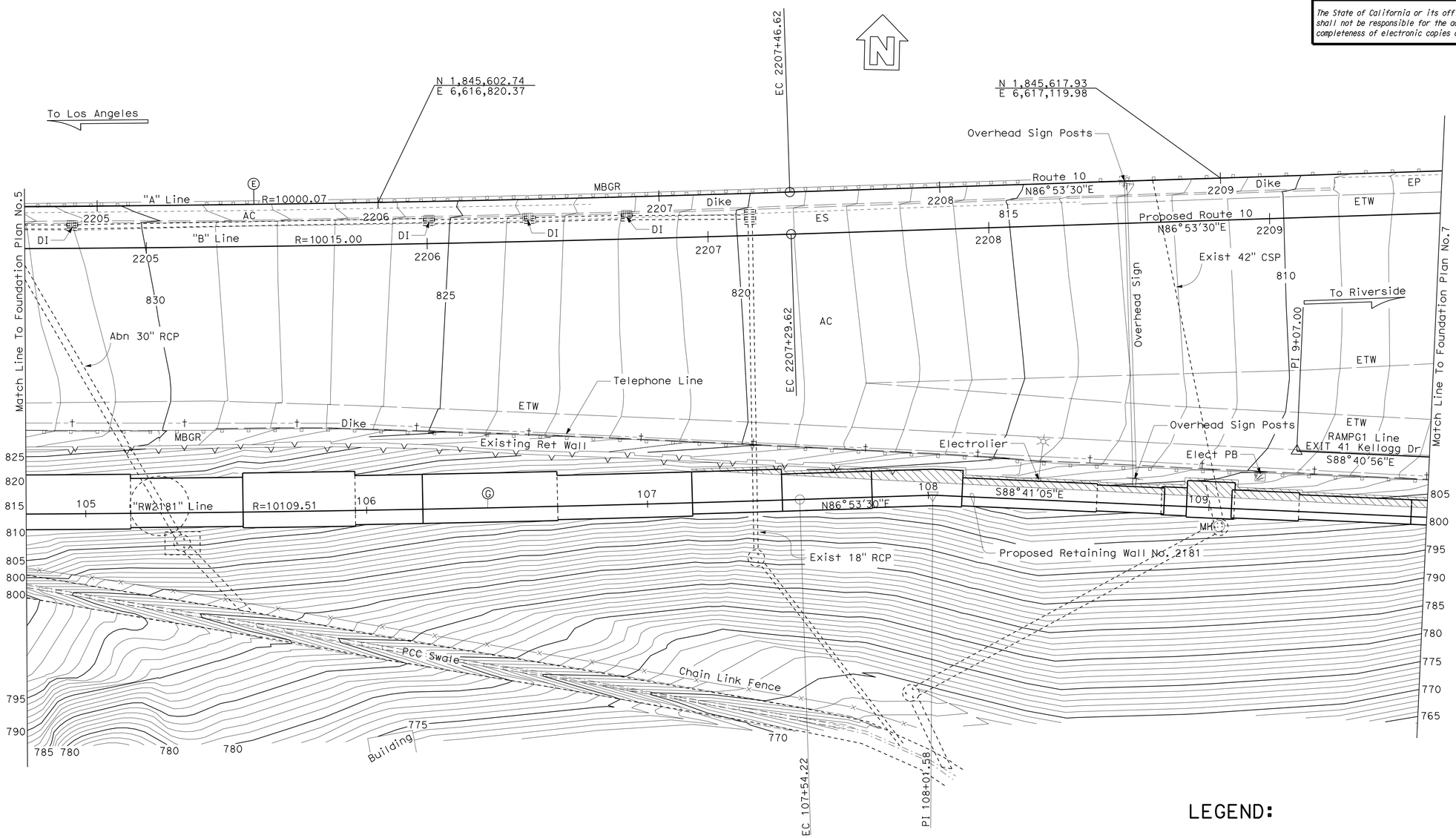

LEGEND:

Limit of Structure Excavation (Type Y-1) (Areally Deposited Lead)

For District Controls See Foundation Plan No.1

PRELIMINARY INVESTIGATION SECTION							
SCALE 1"=20'	VERT.DATUM NAVD88	PHOTOGRAMMETRY AS OF: 02/2008					
	HORZ.DATUM NAD83	SURVEYED	BY District 04/2008	CHECKED	BY C.Fassett 02/2013		
ALIGNMENT TIES Dist. Traverse Sheet		DRAFTED	BY T. Zolnikov 02/2013	CHECKED	BY S. Sou 02/2013		

DESIGN	BY MOHAMMAD MUQTADIR	CHECKED	DAWIT WORKU
DETAILS	BY ANTONETTE L. ONG	CHECKED	DAWIT WORKU
QUANTITIES	BY MOHAMMAD MUQTADIR	CHECKED	EDDY SCOTT

STATE OF CALIFORNIA
DEPARTMENT OF TRANSPORTATION

DIVISION OF ENGINEERING SERVICES
STRUCTURE DESIGN
DESIGN BRANCH 20

BRIDGE NO. 53-E0144
POST MILE 41.80

RETAINING WALL NO. 2181
FOUNDATION PLAN NO. 6

STRUCTURES FOUNDATION PLAN SHEET (ENGLISH) (REV. 09-01-10)

ORIGINAL SCALE IN INCHES FOR REDUCED PLANS 0 1 2 3

UNIT: 3622
PROJECT NUMBER & PHASE: 0713000007-4 CONTRACT NO.: 1193U1

DISREGARD PRINTS BEARING EARLIER REVISION DATES

REVISION DATES: 02/03/15 01/23/14 01/27/15

SHEET 12 OF 53

FILE => 53-E0144-e-fdp106.dgn

DIST	COUNTY	ROUTE	POST MILES TOTAL PROJECT	SHEET No.	TOTAL SHEETS
7	LA	10	37.2/42.4	2254	2313

REGISTERED CIVIL ENGINEER 10/01/14 DATE

6-1-15
PLANS APPROVAL DATE

REGISTERED PROFESSIONAL ENGINEER
Dawit T Worku
No. C60711
Exp. 12-31-14
CIVIL
STATE OF CALIFORNIA

The State of California or its officers or agents shall not be responsible for the accuracy or completeness of electronic copies of this plan sheet.

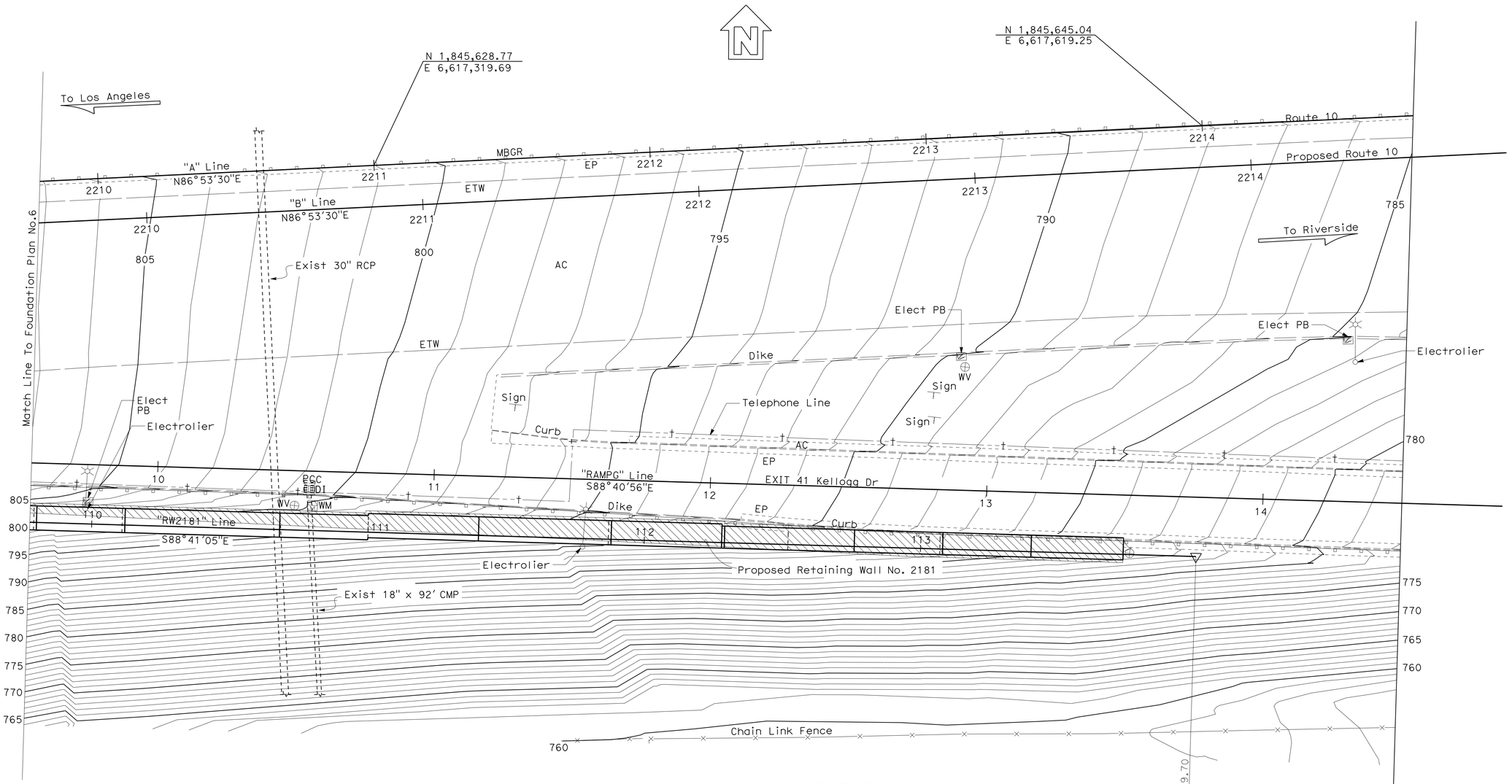

LEGEND:

Limit of Structure Excavation (Type Y-1)
(Areally Deposited Lead)

For District Controls See Foundation plan No.1

PRELIMINARY INVESTIGATION SECTION							
SCALE 1"=20'	VERT.DATUM NAVD88	PHOTOGRAMMETRY AS OF: 02/2008					
	HORZ.DATUM NAD83	SURVEYED	BY District	04/2008	CHECKED	BY C.Fassett	02/2013
ALIGNMENT TIES Dist. Traverse Sheet		DRAFTED	BY T. Zolnikov	02/2013	CHECKED	BY S.Sou	02/2013

DESIGN	BY MOHAMMAD MUQTADIR	CHECKED	DAWIT WORKU
DETAILS	BY ANTONETTE L. ONG	CHECKED	DAWIT WORKU
QUANTITIES	BY MOHAMMAD MUQTADIR	CHECKED	EDDY SCOTT

STATE OF CALIFORNIA
DEPARTMENT OF TRANSPORTATION

DIVISION OF ENGINEERING SERVICES
STRUCTURE DESIGN
DESIGN BRANCH 20

BRIDGE NO. 53-E0144
POST MILE 41.80

RETAINING WALL NO. 2181
FOUNDATION PLAN NO. 7

STRUCTURES FOUNDATION PLAN SHEET (ENGLISH) (REV. 09-01-10)

ORIGINAL SCALE IN INCHES FOR REDUCED PLANS 0 1 2 3

UNIT: 3622
PROJECT NUMBER & PHASE: 0713000007-4 CONTRACT NO.: 1193U1

DISREGARD PRINTS BEARING EARLIER REVISION DATES

REVISION DATES: 02/03/15 07/22/14 01/27/15

SHEET 13 OF 53

FILE => 53-E0144-e-fdpl07.dgn

DIST	COUNTY	ROUTE	POST MILES TOTAL PROJECT	SHEET No.	TOTAL SHEETS
07	LA	10	37.2/42.4	2255	2313

REGISTERED CIVIL ENGINEER 10/01/14 DATE

6-1-15
PLANS APPROVAL DATE

REGISTERED PROFESSIONAL ENGINEER
Dawit T Worku
No. C60711
Exp. 12-31-14
CIVIL
STATE OF CALIFORNIA

The State of California or its officers or agents shall not be responsible for the accuracy or completeness of electronic copies of this plan sheet.

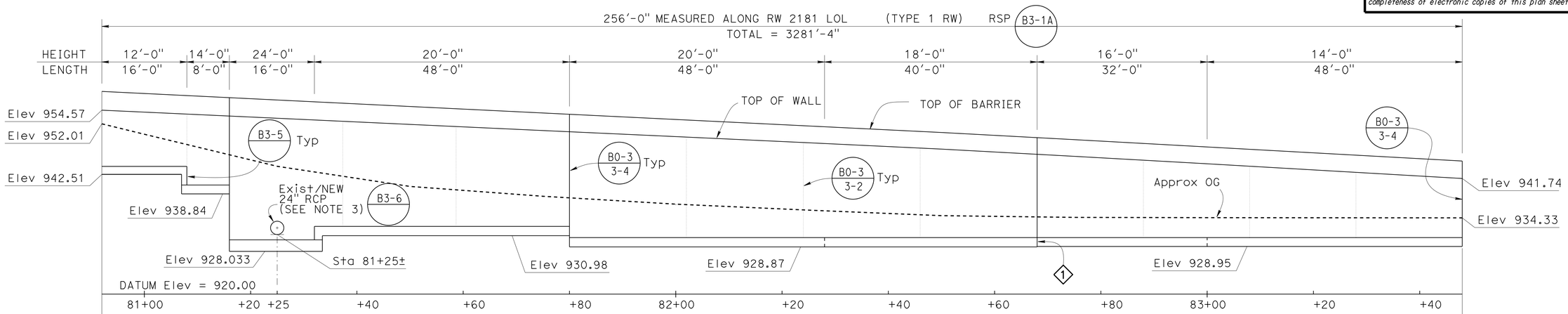

DEVELOPED ELEVATION

1" = 10'-0"

STATION	TOP OF WALL ELEVATION (Ft)
80+92	954.57
81+00	954.21
81+20	953.29
81+40	952.36
81+60	951.44
81+80	950.52
82+00	949.61
82+20	948.68

82+40	947.74
82+60	946.72
82+80	945.62
83+00	944.50
83+20	943.35
83+40	942.20

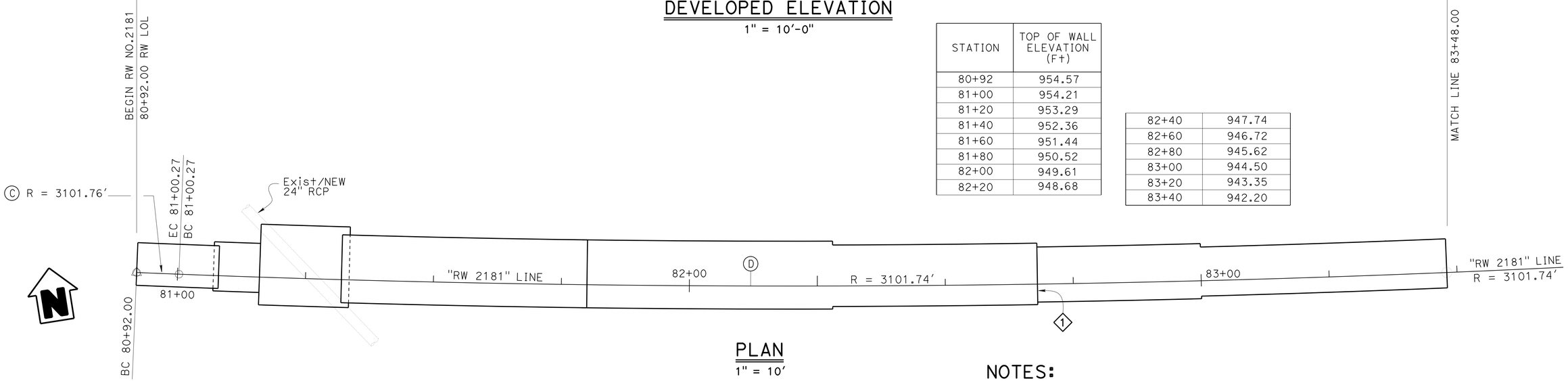

PLAN

1" = 10'

NOTE:
THE CONTRACTOR SHALL VERIFY ALL CONTROLLING FIELD DIMENSIONS BEFORE ORDERING OR FABRICATING ANY MATERIAL.

NOTES:

1. Provide 2" gap between adjacent footings
2. Locations and elevations of existing Drainage Systems are approximate. Contractor shall verify all as built locations and elevations on the field
3. For additional information on existing and new Drainage Systems, see "ROAD PLANS"

	BY	CHECKED
DESIGN	MOHAMMAD MUQTADIR	DAWIT WORKU
DETAILS	K. FARAHZADI/A. ONG	DAWIT WORKU
QUANTITIES	MOHAMMAD MUQTADIR	EDDY SCOTT

STATE OF CALIFORNIA
DEPARTMENT OF TRANSPORTATION

DIVISION OF ENGINEERING SERVICES
STRUCTURE DESIGN
DESIGN BRANCH 20

BRIDGE NO. 53-E0144
POST MILE 41.80

RETAINING WALL NO. 2181
LAYOUT NO. 1

STRUCTURES DESIGN DETAIL SHEET (ENGLISH) (REV. 09-01-10)

ORIGINAL SCALE IN INCHES FOR REDUCED PLANS 0 1 2 3

UNIT: 3622
PROJECT NUMBER & PHASE: 0713000007-1 CONTRACT NO.: 1193U1

DISREGARD PRINTS BEARING EARLIER REVISION DATES

REVISION DATES 02/27/14 02/28/14 07/23/14

SHEET 14 OF 53

FILE => 53-E0144-g-lo01.dgn

USERNAME => s125624 DATE PLOTTED => 18-MAY-2015 TIME PLOTTED => 16:37

DIST	COUNTY	ROUTE	POST MILES TOTAL PROJECT	SHEET No.	TOTAL SHEETS
07	LA	10	37.2/42.4	2256	2313

REGISTERED CIVIL ENGINEER 10/01/14 DATE

6-1-15
PLANS APPROVAL DATE

REGISTERED PROFESSIONAL ENGINEER Dawit T Worku No. C60711 Exp. 12-31-14 CIVIL STATE OF CALIFORNIA

The State of California or its officers or agents shall not be responsible for the accuracy or completeness of electronic copies of this plan sheet.

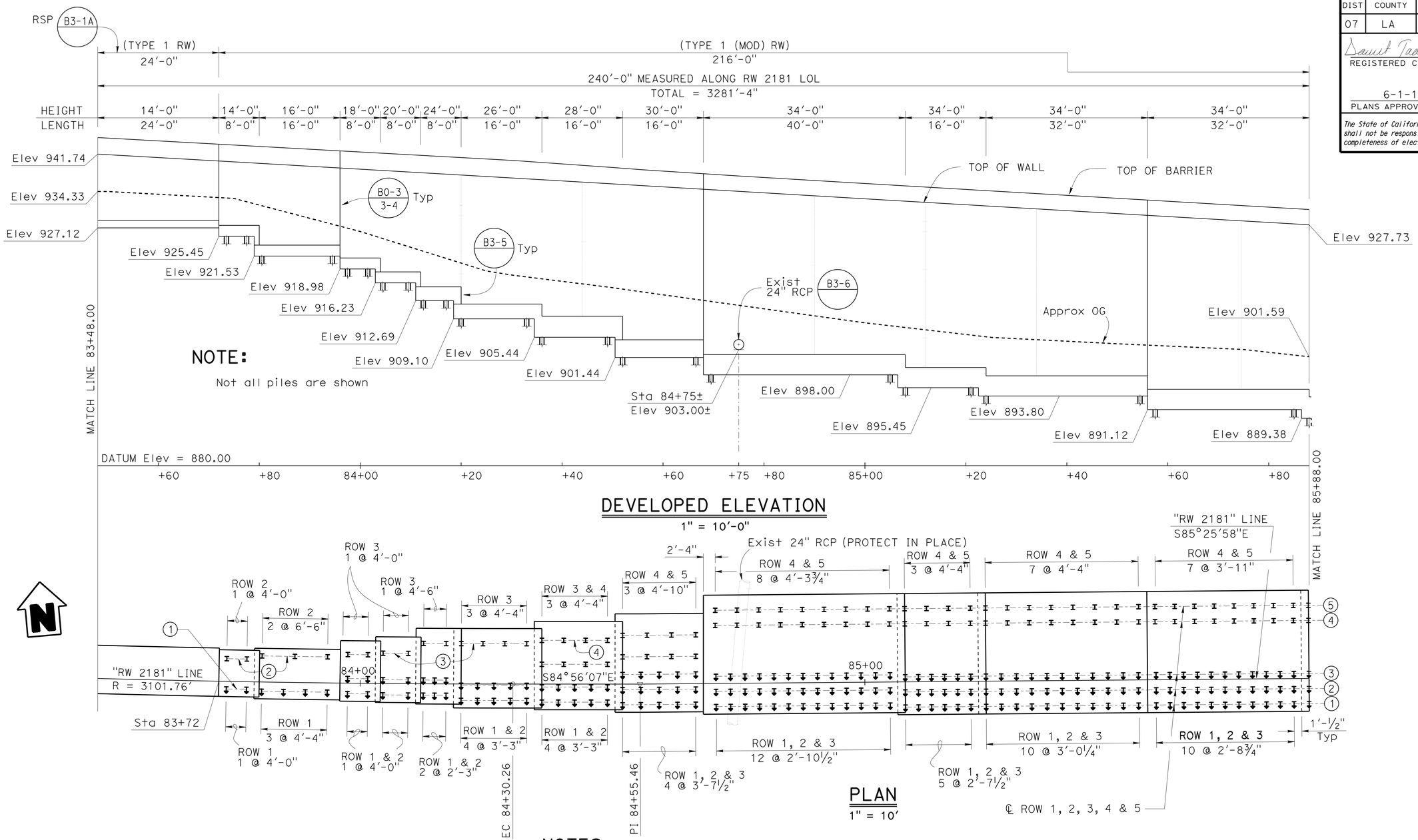

NOTE:
Not all piles are shown

DEVELOPED ELEVATION
1" = 10'-0"

PLAN
1" = 10'

STATION	TOP OF WALL ELEVATION (ft)
83+60	941.05
83+80	939.31
84+00	938.75
84+20	937.59
84+40	936.42
84+60	935.25
84+80	934.06
85+00	932.88
85+20	931.70
85+40	930.53
85+60	929.37
85+80	928.20

NOTES:

1. Pile spacing may be adjusted to clear all utilities and drainage
2. Locations and elevations of existing Drainage Systems are approximate. Contractor shall verify all as built locations and elevations on the field
3. For additional information on existing and new Drainage Systems, see "ROAD PLANS"
4. For transverse spacing of Piles, see "RETAINING WALL TYPE 1 (Mod) DETAILS No. 2" SHEET

NOTE:
THE CONTRACTOR SHALL VERIFY ALL CONTROLLING FIELD DIMENSIONS BEFORE ORDERING OR FABRICATING ANY MATERIAL.

LEGEND:

I Vertical Piles

Battered (1:3) Piles

Y @ X'-XX"
No. of Spaces — Pile Spacing

	BY	CHECKED
DESIGN	MOHAMMAD MUQTADIR	DAWIT WORKU
DETAILS	ANTONETTE L. ONG	DAWIT WORKU
QUANTITIES	MOHAMMAD MUQTADIR	EDDY SCOTT

STATE OF CALIFORNIA
DEPARTMENT OF TRANSPORTATION

DIVISION OF ENGINEERING SERVICES
STRUCTURE DESIGN
DESIGN BRANCH 20

BRIDGE NO. 53-E0144
POST MILE 41.80

RETAINING WALL NO. 2181
LAYOUT PLAN NO. 2

STRUCTURES DESIGN DETAIL SHEET (ENGLISH) (REV. 09-01-10)

ORIGINAL SCALE IN INCHES FOR REDUCED PLANS 0 1 2 3

UNIT: 3622
PROJECT NUMBER & PHASE: 0713000007-1
CONTRACT NO.: 1193U1

DISREGARD PRINTS BEARING EARLIER REVISION DATES

REVISION DATES 02/26/14 05/20/14 09/09/14

SHEET 15 OF 53

FILE => 53-E0144-g-lo02.dgn

USERNAME => s125624 DATE PLOTTED => 28-MAY-2015 TIME PLOTTED => 11:38

DIST	COUNTY	ROUTE	POST MILES TOTAL PROJECT	SHEET No.	TOTAL SHEETS
07	LA	10	37.2/42.4	2257	2313

REGISTERED CIVIL ENGINEER 10/01/14 DATE

6-1-15
PLANS APPROVAL DATE

REGISTERED PROFESSIONAL ENGINEER Dawit T Worku No. C60711 Exp. 12-31-14 CIVIL STATE OF CALIFORNIA

The State of California or its officers or agents shall not be responsible for the accuracy or completeness of electronic copies of this plan sheet.

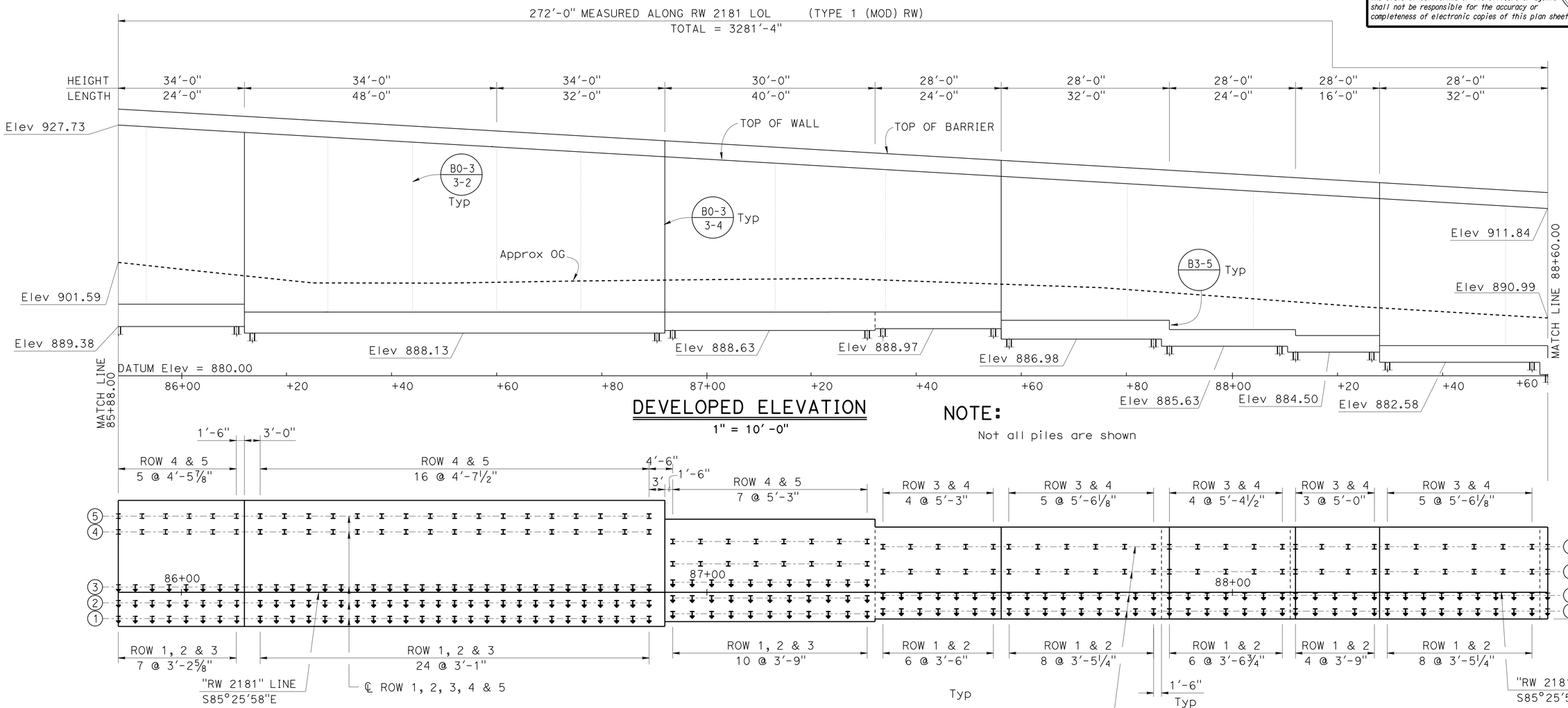

DEVELOPED ELEVATION

1" = 10' -0"

NOTE:

Not all piles are shown

PLAN

1" = 10'

N

NOTES:

1. Pile spacing may be adjusted to clear all utilities and drainage
2. Locations and elevations of existing Drainage Systems are approximate. Contractor shall verify all as built locations and elevations on the field
3. For additional information on existing and new Drainage Systems, see "ROAD PLANS"
4. For transverse spacing of Piles, see "RETAINING WALL TYPE 1 (Mod) DETAILS No. 2" SHEET

NOTE:
THE CONTRACTOR SHALL VERIFY ALL CONTROLLING FIELD DIMENSIONS BEFORE ORDERING OR FABRICATING ANY MATERIAL.

LEGEND:

I Vertical Piles

Battered (1:3) Piles

Y @ X'-XX"
No. of Spaces — Pile Spacing

STATION	TOP OF WALL ELEVATION (ft)
86+00	927.03
86+20	925.87
86+40	924.71
86+60	923.55
86+80	922.39
87+00	921.23
87+20	920.06

87+40	918.90
87+60	917.74
87+80	916.57
88+00	915.39
88+20	914.21
88+40	913.02
88+60	911.84

	BY	CHECKED
DESIGN	MOHAMMAD MUQTADIR	DAWIT WORKU
DETAILS	ANTONETTE L. ONG	DAWIT WORKU
QUANTITIES	MOHAMMAD MUQTADIR	EDDY SCOTT

STATE OF CALIFORNIA
DEPARTMENT OF TRANSPORTATION

DIVISION OF ENGINEERING SERVICES
STRUCTURE DESIGN
DESIGN BRANCH 20

BRIDGE NO. 53-E0144
POST MILE 41.80

RETAINING WALL NO. 2181
LAYOUT NO. 3

STRUCTURES DESIGN DETAIL SHEET (ENGLISH) (REV. 09-01-10)

ORIGINAL SCALE IN INCHES FOR REDUCED PLANS 0 1 2 3

UNIT: 3622
PROJECT NUMBER & PHASE: 0713000007-1
CONTRACT NO.: 1193U1

DISREGARD PRINTS BEARING EARLIER REVISION DATES

REVISION DATES 09/09/14 02/26/14 05/27/14

SHEET 16 OF 53

FILE => 53-E0144-g-lo03.dgn

USERNAME => s125624 DATE PLOTTED => 18-MAY-2015 TIME PLOTTED => 16:37

DIST	COUNTY	ROUTE	POST MILES TOTAL PROJECT	SHEET No.	TOTAL SHEETS
07	LA	10	37.2/42.4	2258	2313

REGISTERED CIVIL ENGINEER 10/01/14 DATE

6-1-15
PLANS APPROVAL DATE

REGISTERED PROFESSIONAL ENGINEER Dawit T Worku No. C60711 Exp. 12-31-14 CIVIL STATE OF CALIFORNIA

The State of California or its officers or agents shall not be responsible for the accuracy or completeness of electronic copies of this plan sheet.

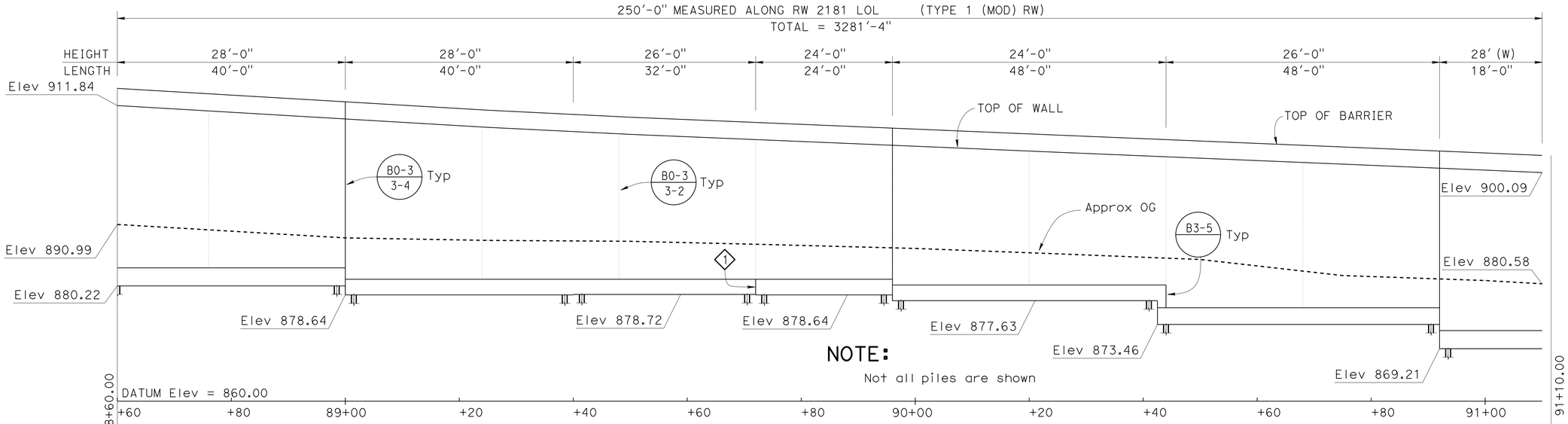

NOTE:
Not all piles are shown

DEVELOPED ELEVATION
1" = 10'-0"

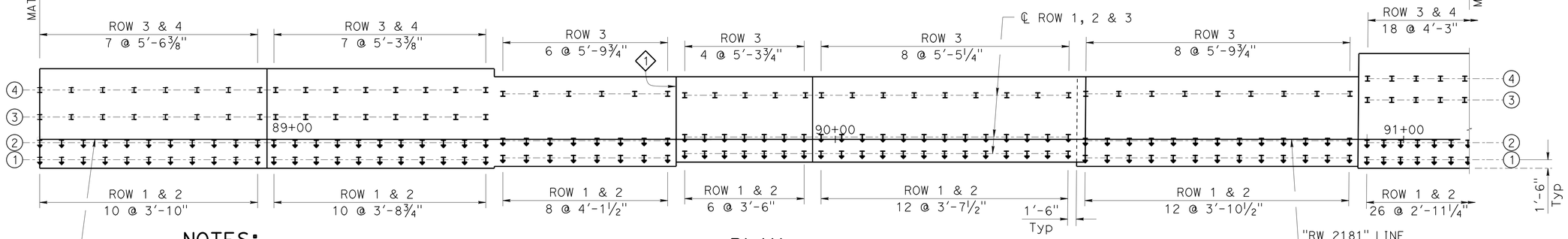

PLAN
1" = 10'

NOTES:

1. Provide 2" gap between adjacent footings
2. Pile spacing may be adjusted to clear all utilities and drainage
3. Locations and elevations of existing Drainage Systems are approximate. Contractor shall verify all as built locations and elevations on the field
4. For additional information on existing and new Drainage Systems, see "ROAD PLANS"
5. For transverse spacing of Piles, see "RETAINING WALL TYPE 1 (Mod) DETAILS No. 2" SHEET

NOTE:
THE CONTRACTOR SHALL VERIFY ALL CONTROLLING FIELD DIMENSIONS BEFORE ORDERING OR FABRICATING ANY MATERIAL.

LEGEND:

Vertical Piles

Battered (1:3) Piles

Y @ X'-XX"
No. of Spaces — Pile Spacing

STATION	TOP OF WALL ELEVATION (ft)
88+60	911.84
88+80	910.67
89+00	909.49
89+20	908.31
89+40	907.28
89+60	906.37
89+80	905.54

90+00	904.71
90+20	903.86
90+40	903.03
90+60	902.19
90+80	901.36
91+00	900.52

	BY	CHECKED
DESIGN	MOHAMMAD MUQTADIR	DAWIT WORKU
DETAILS	K. FARAHZADI/A. ONG	DAWIT WORKU
QUANTITIES	MOHAMMAD MUQTADIR	EDDY SCOTT

STATE OF CALIFORNIA
DEPARTMENT OF TRANSPORTATION

DIVISION OF ENGINEERING SERVICES
STRUCTURE DESIGN
DESIGN BRANCH 20

BRIDGE NO. 53-E0144
POST MILE 41.80

RETAINING WALL NO. 2181
LAYOUT NO. 4

STRUCTURES DESIGN DETAIL SHEET (ENGLISH) (REV. 09-01-10)

ORIGINAL SCALE IN INCHES FOR REDUCED PLANS 0 1 2 3

UNIT: 3622
PROJECT NUMBER & PHASE: 0713000007-1
CONTRACT NO.: 1193U1

DISREGARD PRINTS BEARING EARLIER REVISION DATES

REVISION DATES 09/09/14 02/28/14 05/21/14

SHEET 17 OF 53

FILE => 53-E0144-g-lo04.dgn

USERNAME => s125624 DATE PLOTTED => 18-MAY-2015 TIME PLOTTED => 16:37

DIST	COUNTY	ROUTE	POST MILES TOTAL PROJECT	SHEET No.	TOTAL SHEETS
07	LA	10	37.2/42.4	2259	2313

REGISTERED CIVIL ENGINEER 10/01/14 DATE

6-1-15
PLANS APPROVAL DATE

The State of California or its officers or agents shall not be responsible for the accuracy or completeness of electronic copies of this plan sheet.

REGISTERED PROFESSIONAL ENGINEER — Dawit T Worku — No. C60711 — Exp. 12-31-14 — CIVIL — STATE OF CALIFORNIA

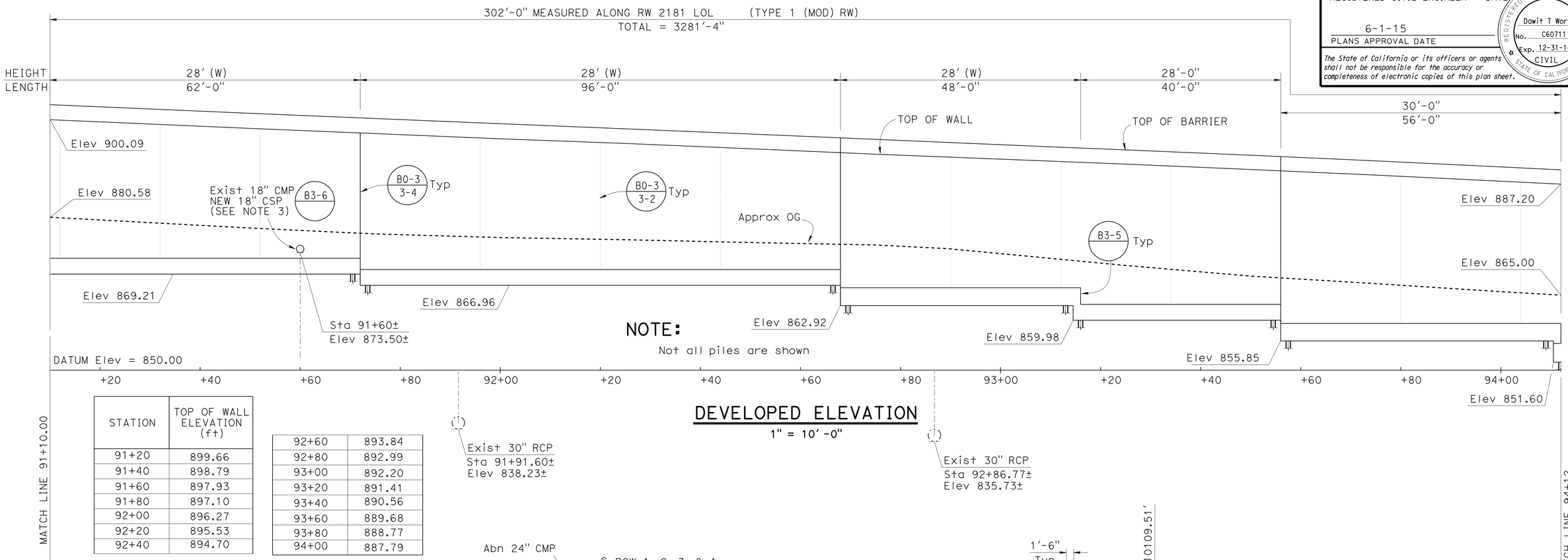

DEVELOPED ELEVATION

1" = 10' -0"

NOTE:
Not all piles are shown

STATION	TOP OF WALL ELEVATION (ft)
91+20	899.66
91+40	898.79
91+60	897.93
91+80	897.10
92+00	896.27
92+20	895.53
92+40	894.70

92+60	893.84
92+80	892.99
93+00	892.20
93+20	891.41
93+40	890.56
93+60	889.68
93+80	888.77
94+00	887.79

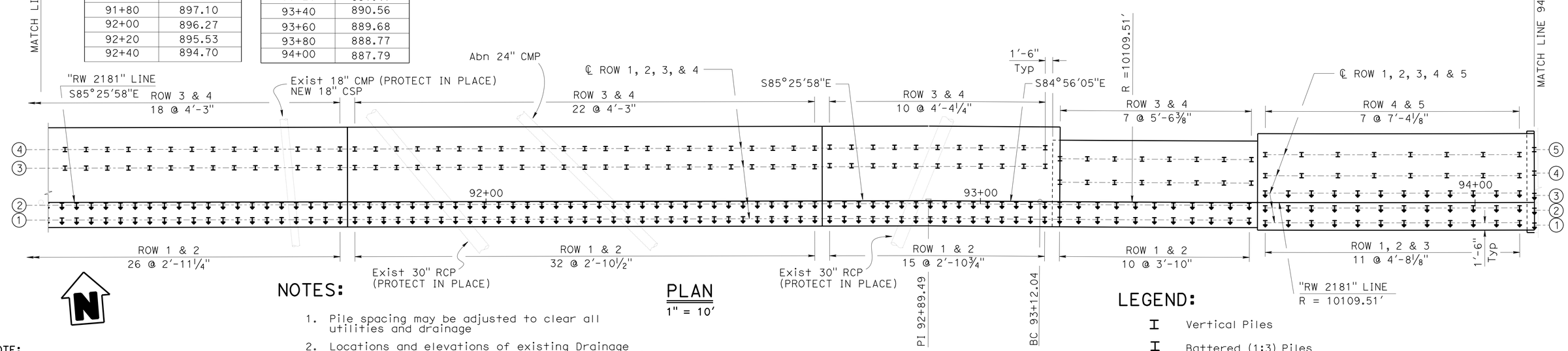

PLAN

1" = 10'

NOTES:

1. Pile spacing may be adjusted to clear all utilities and drainage
2. Locations and elevations of existing Drainage Systems are approximate. Contractor shall verify all as built locations and elevations on the field
3. For additional information on existing and new Drainage Systems, see "ROAD PLANS"
4. For transverse spacing of Piles, see "RETAINING WALL TYPE 1 (Mod) DETAILS No. 2" SHEET

LEGEND:

I Vertical Piles

Battered (1:3) Piles

Y @ X'-XX"
No. of Spaces — Pile Spacing

NOTE:
THE CONTRACTOR SHALL VERIFY ALL CONTROLLING FIELD DIMENSIONS BEFORE ORDERING OR FABRICATING ANY MATERIAL.

	BY	CHECKED
DESIGN	MOHAMMAD MUQTADIR	DAWIT WORKU
DETAILS	K. FARAHZADI/A. ONG	DAWIT WORKU
QUANTITIES	MOHAMMAD MUQTADIR	EDDY SCOTT

STATE OF CALIFORNIA
DEPARTMENT OF TRANSPORTATION

DIVISION OF ENGINEERING SERVICES
STRUCTURE DESIGN
DESIGN BRANCH 20

BRIDGE NO. 53-E0144
POST MILE 41.80

RETAINING WALL NO. 2181
LAYOUT NO. 5

STRUCTURES DESIGN DETAIL SHEET (ENGLISH) (REV. 09-01-10)

ORIGINAL SCALE IN INCHES FOR REDUCED PLANS 0 1 2 3

UNIT: 3622
PROJECT NUMBER & PHASE: 0713000007-1
CONTRACT NO.: 1193U1

DISREGARD PRINTS BEARING EARLIER REVISION DATES

REVISION DATES: 02/28/14 05/21/14 07/23/14 09/09/14

SHEET 18 OF 53

FILE => 53-E0144-g-la05.dgn

USERNAME => s125624 DATE PLOTTED => 18-MAY-2015 TIME PLOTTED => 16:37

DIST	COUNTY	ROUTE	POST MILES TOTAL PROJECT	SHEET No.	TOTAL SHEETS
07	LA	10	37.2/42.4	2260	2313

REGISTERED CIVIL ENGINEER 10/01/14 DATE

6-1-15
PLANS APPROVAL DATE

REGISTERED PROFESSIONAL ENGINEER Dawit T Worku No. C60711 Exp. 12-31-14 CIVIL STATE OF CALIFORNIA

The State of California or its officers or agents shall not be responsible for the accuracy or completeness of electronic copies of this plan sheet.

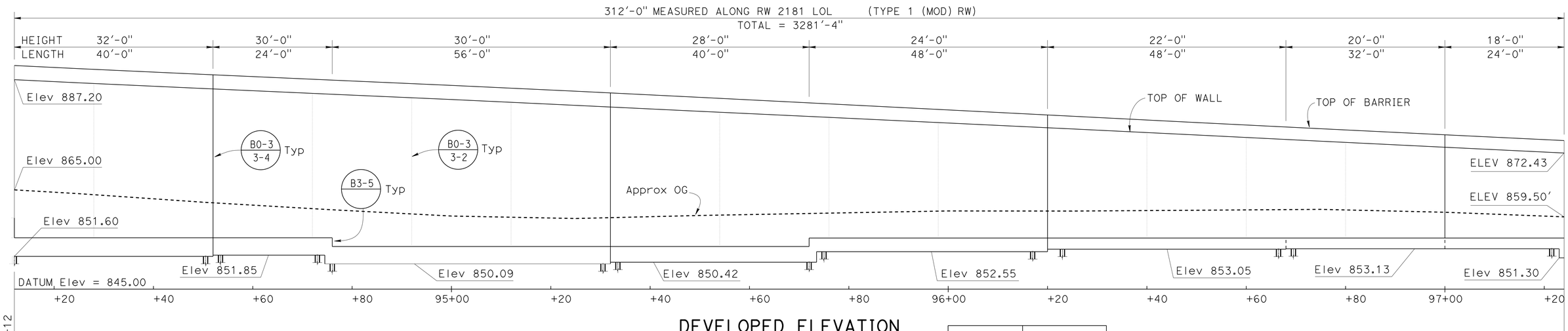

DEVELOPED ELEVATION

1" = 10'-0"

NOTE:

Not all piles are shown

STATION	TOP OF WALL ELEVATION (ft)
94+20	886.81
94+40	885.89
94+60	884.98
94+80	884.09

95+00	883.21
95+20	882.27
95+40	881.31
95+60	880.36
95+80	879.42
96+00	878.47

96+20	877.52
96+40	876.55
96+60	875.56
96+80	874.57
97+00	873.59
97+20	872.62

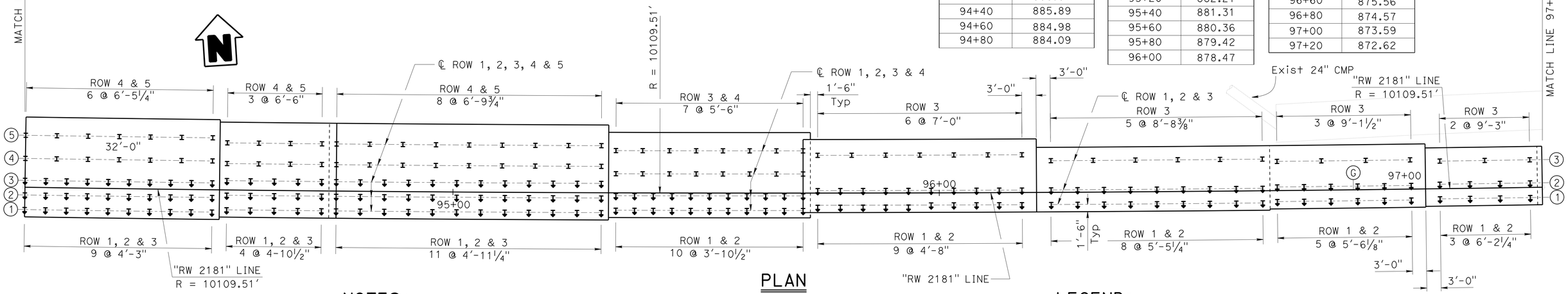

PLAN

1" = 10'

NOTES:

1. Pile spacing may be adjusted to clear all utilities and drainage
2. Locations and elevations of existing Drainage Systems are approximate. Contractor shall verify all as built locations and elevations on the field
3. For additional information on existing and new Drainage Systems, see "ROAD PLANS"
4. For transverse spacing of Piles, see "RETAINING WALL TYPE 1 (Mod) DETAILS No. 2" SHEET

LEGEND:

I Vertical Piles

Battered (1:3) Piles

Y @ X'-XX"
No. of Spaces — Pile Spacing

NOTE:
THE CONTRACTOR SHALL VERIFY ALL CONTROLLING FIELD DIMENSIONS BEFORE ORDERING OR FABRICATING ANY MATERIAL.

	BY	CHECKED
DESIGN	MOHAMMAD MUQTADIR	DAWIT WORKU
DETAILS	K. FARAHZADI/A. ONG	DAWIT WORKU
QUANTITIES	MOHAMMAD MUQTADIR	EDDY SCOTT

STATE OF CALIFORNIA
DEPARTMENT OF TRANSPORTATION

DIVISION OF ENGINEERING SERVICES
STRUCTURE DESIGN
DESIGN BRANCH 20

BRIDGE NO. 53-E0144
POST MILE 41.80

RETAINING WALL NO. 2181
LAYOUT NO. 6

STRUCTURES DESIGN DETAIL SHEET (ENGLISH) (REV. 09-01-10)

ORIGINAL SCALE IN INCHES FOR REDUCED PLANS 0 1 2 3

UNIT: 3622
PROJECT NUMBER & PHASE: 0713000007-1 CONTRACT NO.: 1193U1

DISREGARD PRINTS BEARING EARLIER REVISION DATES → 09/09/14 05/27/14 01/23/14

SHEET 19 OF 53

FILE => 53-E0144-g-lo06.dgn

USERNAME => s125624 DATE PLOTTED => 18-MAY-2015 TIME PLOTTED => 16:37

DIST	COUNTY	ROUTE	POST MILES TOTAL PROJECT	SHEET No.	TOTAL SHEETS
07	LA	10	37.2/42.4	2261	2313

REGISTERED CIVIL ENGINEER 10/01/14 DATE

6-1-15
PLANS APPROVAL DATE

REGISTERED PROFESSIONAL ENGINEER Dawit T Worku No. C60711 Exp. 12-31-14 CIVIL STATE OF CALIFORNIA

The State of California or its officers or agents shall not be responsible for the accuracy or completeness of electronic copies of this plan sheet.

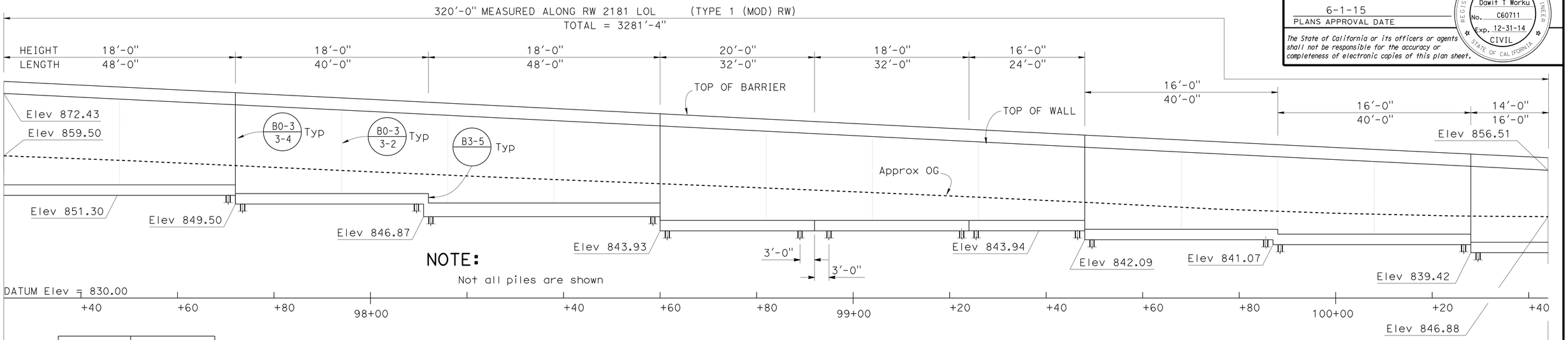

NOTE:
Not all piles are shown

DEVELOPED ELEVATION
1" = 10'-0"

MATCH LINE 97+24

STATION	TOP OF WALL ELEVATION (ft)
97+40	871.65
97+60	870.67
97+80	869.69
98+00	868.70

98+20	867.70
98+40	866.71
98+60	865.71
98+80	864.70
99+00	863.70
99+20	862.69

99+40	861.68
99+60	860.68
99+80	859.69
100+00	858.71
100+20	857.73
100+40	856.71

MATCH LINE 100+44.00

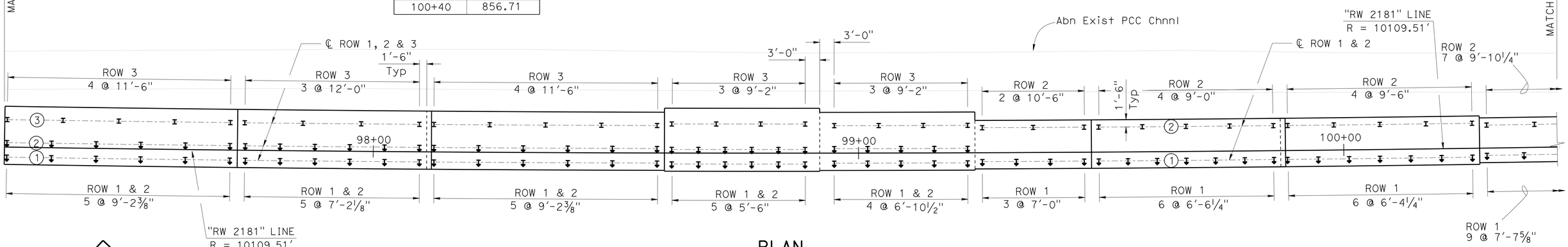

PLAN
1" = 10'

NOTE:
THE CONTRACTOR SHALL VERIFY ALL CONTROLLING FIELD DIMENSIONS BEFORE ORDERING OR FABRICATING ANY MATERIAL.

NOTES:

1. Pile spacing may be adjusted to clear all utilities and drainage
2. Locations and elevations of existing Drainage Systems are approximate. Contractor shall verify all as built locations and elevations on the field
3. For additional information on existing and new Drainage Systems, see "ROAD PLANS"
4. For transverse spacing of Piles, see "RETAINING WALL TYPE 1 (Mod) DETAILS No. 2" SHEET

LEGEND:

- Vertical Piles
- Battered (1:3) Piles
- Y @ X'-XX" (No. of Spaces — Pile Spacing)

	BY	CHECKED
DESIGN	MOHAMMAD MUQTADIR	DAWIT WORKU
DETAILS	K. FARAHZADI/A. ONG	DAWIT WORKU
QUANTITIES	MOHAMMAD MUQTADIR	EDDY SCOTT

STATE OF CALIFORNIA
DEPARTMENT OF TRANSPORTATION

DIVISION OF ENGINEERING SERVICES
STRUCTURE DESIGN
DESIGN BRANCH 20

BRIDGE NO. 53-E0144
POST MILE 41.80

RETAINING WALL NO. 2181
LAYOUT NO. 7

STRUCTURES DESIGN DETAIL SHEET (ENGLISH) (REV. 09-01-10)

ORIGINAL SCALE IN INCHES FOR REDUCED PLANS 0 1 2 3

UNIT: 3622
PROJECT NUMBER & PHASE: 0713000007-1 CONTRACT NO.: 1193U1

DISREGARD PRINTS BEARING EARLIER REVISION DATES

REVISION DATES 07/24/14 09/09/14 05/21/15

SHEET 20 OF 53

FILE => 53-E0144-g-1o07.dgn

USERNAME => 8125624 DATE PLOTTED => 18-MAY-2015 TIME PLOTTED => 16:37

DIST	COUNTY	ROUTE	POST MILES TOTAL PROJECT	SHEET No.	TOTAL SHEETS
07	LA	10	37.2/42.4	2262	2313

REGISTERED CIVIL ENGINEER 10/01/14 DATE

6-1-15
PLANS APPROVAL DATE

REGISTERED PROFESSIONAL ENGINEER
Dawit T Worku
No. C60711
Exp. 12-31-14
CIVIL
STATE OF CALIFORNIA

The State of California or its officers or agents shall not be responsible for the accuracy or completeness of electronic copies of this plan sheet.

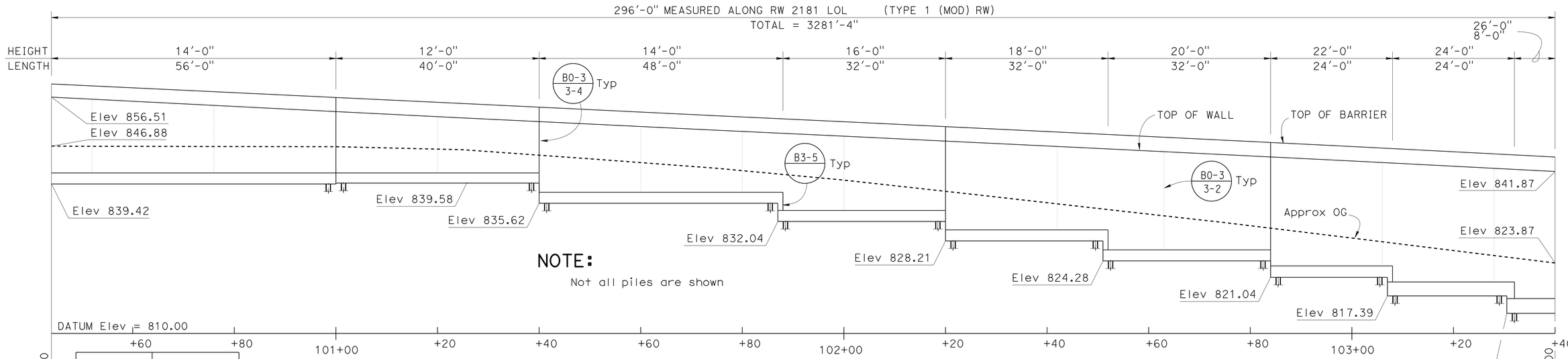

DEVELOPED ELEVATION

1" = 10'-0"

STATION	TOP OF WALL ELEVATION (ft)
100+60	855.69
100+80	854.68
101+00	853.66
101+20	852.66
101+40	851.69

101+60	850.72
101+80	849.76
102+00	848.82
102+20	847.85
102+40	846.89

102+60	845.92
102+80	844.93
103+00	843.94
103+20	842.91
103+40	841.87

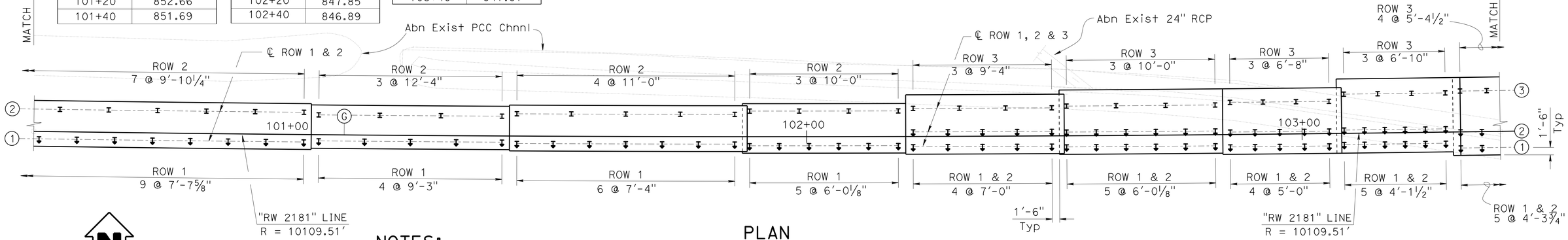

PLAN

1" = 10'

NOTE:
THE CONTRACTOR SHALL VERIFY ALL CONTROLLING FIELD DIMENSIONS BEFORE ORDERING OR FABRICATING ANY MATERIAL.

NOTES:

1. Pile spacing may be adjusted to clear all utilities and drainage
2. Locations and elevations of existing Drainage Systems are approximate. Contractor shall verify all as built locations and elevations on the field
3. For additional information on existing and new Drainage Systems, see "ROAD PLANS"
4. For transverse spacing of Piles, see "RETAINING WALL TYPE 1 (Mod) DETAILS No. 2" SHEET

LEGEND:

I Vertical Piles

Battered (1:3) Piles

Y @ X'-XX"
No. of Spaces — Pile Spacing

DESIGN	BY MOHAMMAD MUQTADIR	CHECKED DAWIT WORKU	
DETAILS	BY K. FARAHZADI/A. ONG	CHECKED DAWIT WORKU	
QUANTITIES	BY MOHAMMAD MUQTADIR	CHECKED EDDY SCOTT	

STATE OF CALIFORNIA
DEPARTMENT OF TRANSPORTATION

DIVISION OF ENGINEERING SERVICES
STRUCTURE DESIGN
DESIGN BRANCH 20

BRIDGE NO. 53-E0144
POST MILE 41.80

RETAINING WALL NO. 2181
LAYOUT NO. 8

STRUCTURES DESIGN DETAIL SHEET (ENGLISH) (REV. 09-01-10)

ORIGINAL SCALE IN INCHES FOR REDUCED PLANS 0 1 2 3

UNIT: 3622
PROJECT NUMBER & PHASE: 0713000007-1
CONTRACT NO.: 1193U1

DISREGARD PRINTS BEARING EARLIER REVISION DATES

REVISION DATES 03/03/14 05/23/14 07/24/14 09/09/14

SHEET 21 OF 53

FILE => 53-E0144-g-1008.dgn

USERNAME => s125624 DATE PLOTTED => 08-11-2015 TIME PLOTTED => 13:31

DIST	COUNTY	ROUTE	POST MILES TOTAL PROJECT	SHEET No.	TOTAL SHEETS
07	LA	10	37.2/42.4	2263	2313

REGISTERED CIVIL ENGINEER 10/01/14 DATE

6-1-15
PLANS APPROVAL DATE

REGISTERED PROFESSIONAL ENGINEER Dawit T Worku No. C60711 Exp. 12-31-14 CIVIL STATE OF CALIFORNIA

The State of California or its officers or agents shall not be responsible for the accuracy or completeness of electronic copies of this plan sheet.

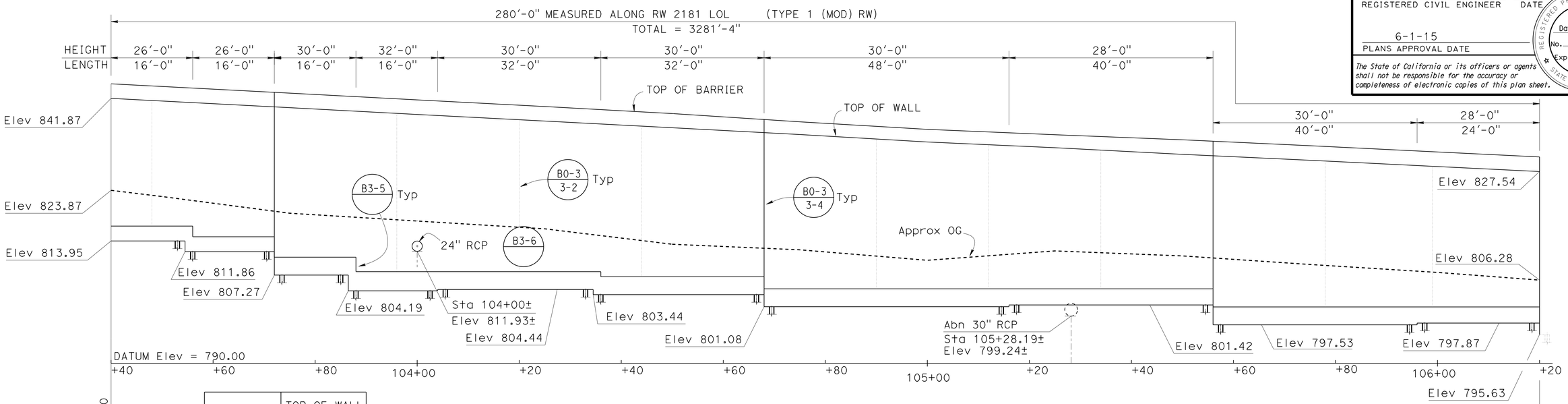

DEVELOPED ELEVATION

1" = 10'-0"

STATION	TOP OF WALL ELEVATION (ft)
103+60	840.83
103+80	839.78
104+00	838.72
104+20	837.69

104+40	836.64
104+60	835.59
104+80	834.50
105+00	833.33
105+20	832.43

105+40	831.43
105+60	830.45
105+80	829.50
106+00	828.52
106+20	827.54

NOTE:

Not all piles are shown

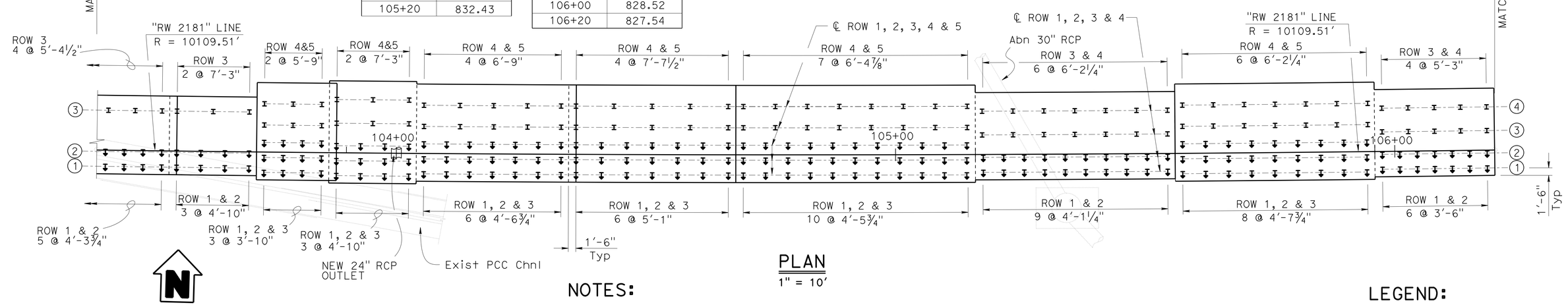

PLAN

1" = 10'

NOTES:

1. Pile spacing may be adjusted to clear all utilities and drainage
2. Locations and elevations of existing Drainage Systems are approximate. Contractor shall verify all as built locations and elevations on the field
3. For additional information on existing and new Drainage Systems, see "ROAD PLANS"
4. For transverse spacing of Piles, see "RETAINING WALL TYPE 1 (Mod) DETAILS No. 2" SHEET

LEGEND:

I Vertical Piles

Battered (1:3) Piles

Y @ X'-XX"
No. of Spaces — Pile Spacing

NOTE:
THE CONTRACTOR SHALL VERIFY ALL CONTROLLING FIELD DIMENSIONS BEFORE ORDERING OR FABRICATING ANY MATERIAL.

DESIGN	BY MOHAMMAD MUQTADIR	CHECKED DAWIT WORKU	
DETAILS	BY K. FARAHZADI/A. ONG	CHECKED DAWIT WORKU	
QUANTITIES	BY MOHAMMAD MUQTADIR	CHECKED EDDY SCOTT	

STATE OF CALIFORNIA
DEPARTMENT OF TRANSPORTATION

DIVISION OF ENGINEERING SERVICES
STRUCTURE DESIGN
DESIGN BRANCH 20

BRIDGE NO. 53-E0144
POST MILE 41.80

RETAINING WALL NO. 2181
LAYOUT NO. 9

STRUCTURES DESIGN DETAIL SHEET (ENGLISH) (REV. 09-01-10)

ORIGINAL SCALE IN INCHES FOR REDUCED PLANS 0 1 2 3

UNIT: 3622
PROJECT NUMBER & PHASE: 0713000007-1
CONTRACT NO.: 1193U1

DISREGARD PRINTS BEARING EARLIER REVISION DATES

REVISION DATES: 05/21/14 09/09/14 03/03/14

SHEET 22 OF 53

FILE => 53-E0144-g-1a09.dgn

USERNAME => s125624 DATE PLOTTED => 28-MAY-2015 TIME PLOTTED => 11:40

DIST	COUNTY	ROUTE	POST MILES TOTAL PROJECT	SHEET No.	TOTAL SHEETS
07	LA	10	37.2/42.4	2264	2313

REGISTERED CIVIL ENGINEER 10/01/14 DATE

6-1-15
PLANS APPROVAL DATE

REGISTERED PROFESSIONAL ENGINEER Dawit T Worku No. C60711 Exp. 12-31-14 CIVIL STATE OF CALIFORNIA

The State of California or its officers or agents shall not be responsible for the accuracy or completeness of electronic copies of this plan sheet.

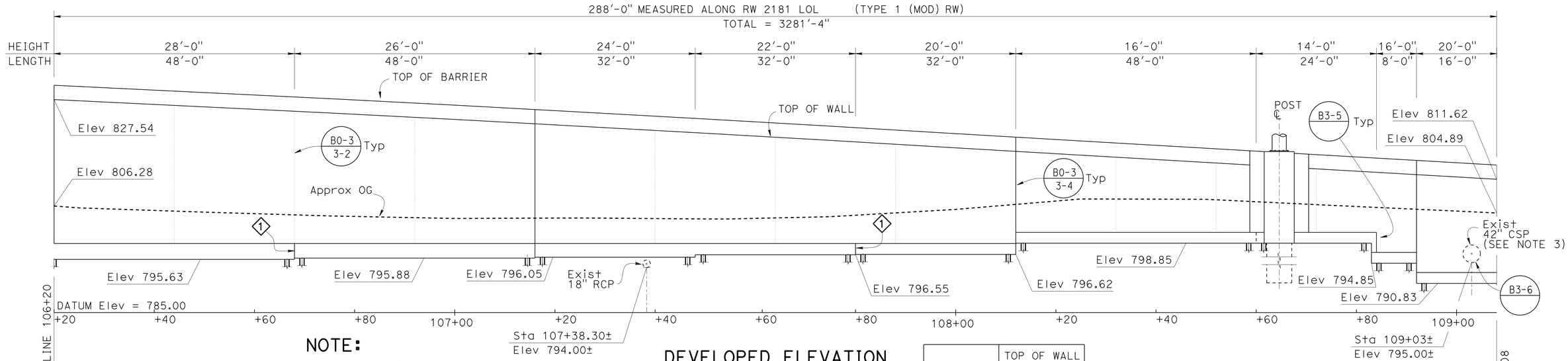

NOTE:

Not all piles are shown

DEVELOPED ELEVATION

1" = 10'-0"

STATION	TOP OF WALL ELEVATION (ft)
106+40	826.57
106+60	825.60
106+80	824.61
107+00	823.58

107+20	822.48
107+40	821.38
107+60	820.25
107+80	819.09
108+00	817.90

108+20	816.73
108+40	815.57
108+60	814.41
108+80	813.24
109+00	812.09

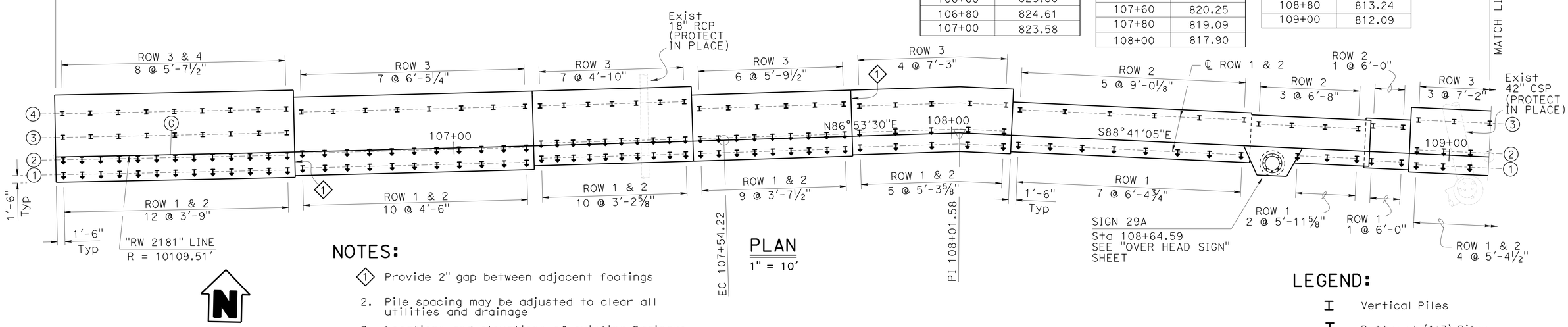

PLAN

1" = 10'

NOTES:

1. Provide 2" gap between adjacent footings
2. Pile spacing may be adjusted to clear all utilities and drainage
3. Locations and elevations of existing Drainage Systems are approximate. Contractor shall verify all as built locations and elevations on the field
4. For additional information on existing and new Drainage Systems, see "ROAD PLANS"
5. For transverse spacing of Piles, see "RETAINING WALL TYPE 1 (Mod) DETAILS No. 2" SHEET

LEGEND:

- Vertical Piles
- Battered (1:3) Piles
- Y @ X'-XX" (Y: No. of Spaces; X'-XX": Pile Spacing)

NOTE:
THE CONTRACTOR SHALL VERIFY ALL CONTROLLING FIELD DIMENSIONS BEFORE ORDERING OR FABRICATING ANY MATERIAL.

	BY	CHECKED
DESIGN	MOHAMMAD MUQTADIR	DAWIT WORKU
DETAILS	K. FARAHZADI/A. ONG	DAWIT WORKU
QUANTITIES	MOHAMMAD MUQTADIR	EDDY SCOTT

STATE OF CALIFORNIA
DEPARTMENT OF TRANSPORTATION

DIVISION OF ENGINEERING SERVICES
STRUCTURE DESIGN
DESIGN BRANCH 20

BRIDGE NO. 53-E0144
POST MILE 41.80

RETAINING WALL NO. 2181
LAYOUT NO. 10

STRUCTURES DESIGN DETAIL SHEET (ENGLISH) (REV. 09-01-10)

ORIGINAL SCALE IN INCHES FOR REDUCED PLANS 0 1 2 3

UNIT: 3622
PROJECT NUMBER & PHASE: 0713000007-1
CONTRACT NO.: 1193U1

DISREGARD PRINTS BEARING EARLIER REVISION DATES → 01/24/14 09/09/14 05/21/14

SHEET 23 OF 53

FILE => 53-E0144-g-lo10.dgn

USERNAME => s129824 DATE PLOTTED => 18-MAY-2015 TIME PLOTTED => 16:38

DIST	COUNTY	ROUTE	POST MILES TOTAL PROJECT	SHEET No.	TOTAL SHEETS
07	LA	10	37.2/42.4	2265	2313

REGISTERED CIVIL ENGINEER 10/01/14 DATE

6-1-15
PLANS APPROVAL DATE

REGISTERED PROFESSIONAL ENGINEER Dawit T Worku No. C60711 Exp. 12-31-14 CIVIL STATE OF CALIFORNIA

The State of California or its officers or agents shall not be responsible for the accuracy or completeness of electronic copies of this plan sheet.

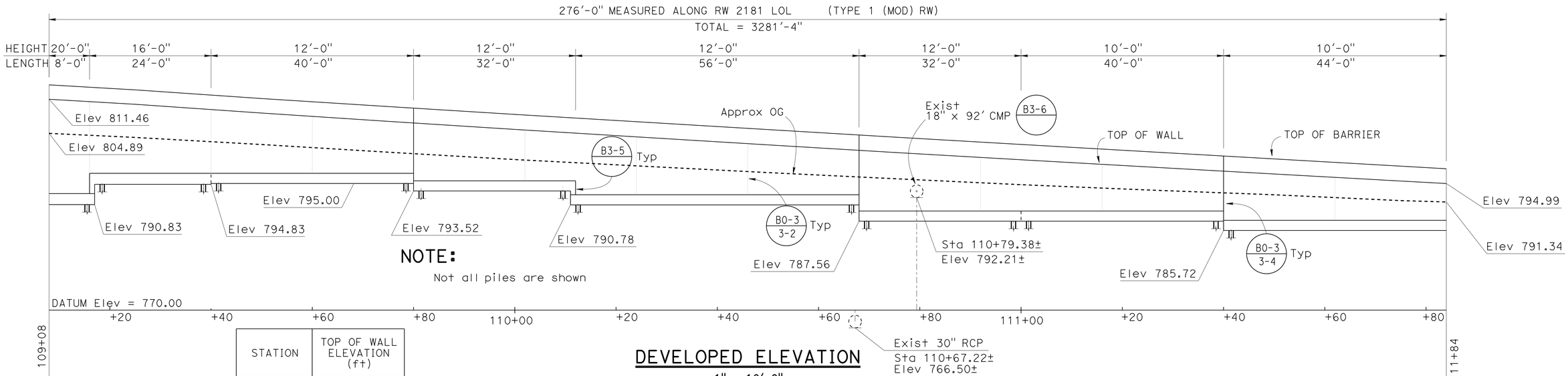

DEVELOPED ELEVATION

1" = 10'-0"

STATION	TOP OF WALL ELEVATION (ft)
109+20	810.92
109+40	809.59
109+60	808.24
109+80	806.94
110+00	805.67
110+20	804.45
110+40	803.23'

110+60	802.02
110+80	800.83
111+00	799.68
111+20	798.55
111+40	797.43
111+60	796.31
111+80	795.21

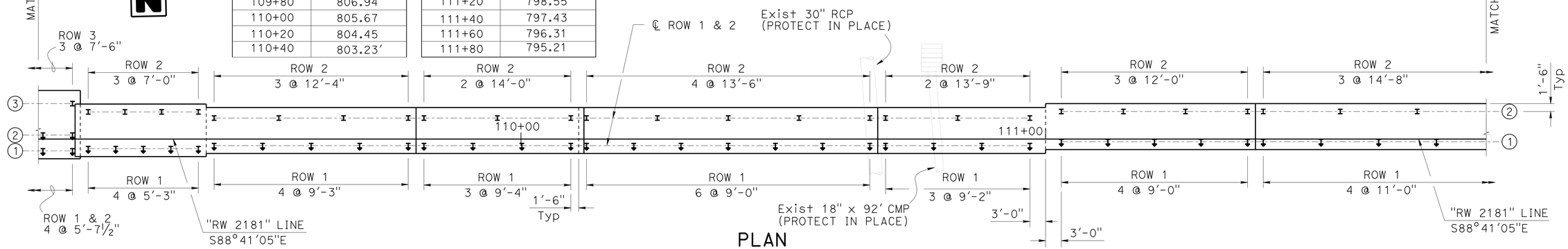

PLAN

1" = 10'

NOTES:

1. Pile spacing may be adjusted to clear all utilities and drainage
2. Locations and elevations of existing Drainage Systems are approximate. Contractor shall verify all as built locations and elevations on the field
3. For additional information on existing and new Drainage Systems, see "ROAD PLANS"
4. For transverse spacing of Piles, see "RETAINING WALL TYPE 1 (Mod) DETAILS No. 2" SHEET

NOTE:
THE CONTRACTOR SHALL VERIFY ALL CONTROLLING FIELD DIMENSIONS BEFORE ORDERING OR FABRICATING ANY MATERIAL.

LEGEND:

I Vertical Piles

Battered (1:3) Piles

Y @ X'-XX"
No. of Spaces — Pile Spacing

	BY	CHECKED
DESIGN	MOHAMMAD MUQTADIR	DAWIT WORKU
DETAILS	K. FARAHZADI/A. ONG	DAWIT WORKU
QUANTITIES	MOHAMMAD MUQTADIR	EDDY SCOTT

STATE OF CALIFORNIA
DEPARTMENT OF TRANSPORTATION

DIVISION OF ENGINEERING SERVICES
STRUCTURE DESIGN
DESIGN BRANCH 20

BRIDGE NO. 53-E0144
POST MILE 41.80

RETAINING WALL NO. 2181
LAYOUT NO. 11

STRUCTURES DESIGN DETAIL SHEET (ENGLISH) (REV. 09-01-10)

ORIGINAL SCALE IN INCHES FOR REDUCED PLANS 0 1 2 3

UNIT: 3622
PROJECT NUMBER & PHASE: 0713000007-1
CONTRACT NO.: 1193U1

DISREGARD PRINTS BEARING EARLIER REVISION DATES

REVISION DATES 09/09/14 03/03/14 05/23/14

SHEET 24 OF 53

FILE => 53-E0144-g-lo11.dgn

USERNAME => s125624 DATE PLOTTED => 18-MAY-2015 TIME PLOTTED => 16:38

DIST	COUNTY	ROUTE	POST MILES TOTAL PROJECT	SHEET No.	TOTAL SHEETS
07	LA	10	37.2/42.4	2266	2313

REGISTERED CIVIL ENGINEER 10/01/14 DATE

6-1-15
PLANS APPROVAL DATE

REGISTERED PROFESSIONAL ENGINEER
Dawit T Worku
No. C60711
Exp. 12-31-14
CIVIL
STATE OF CALIFORNIA

The State of California or its officers or agents shall not be responsible for the accuracy or completeness of electronic copies of this plan sheet.

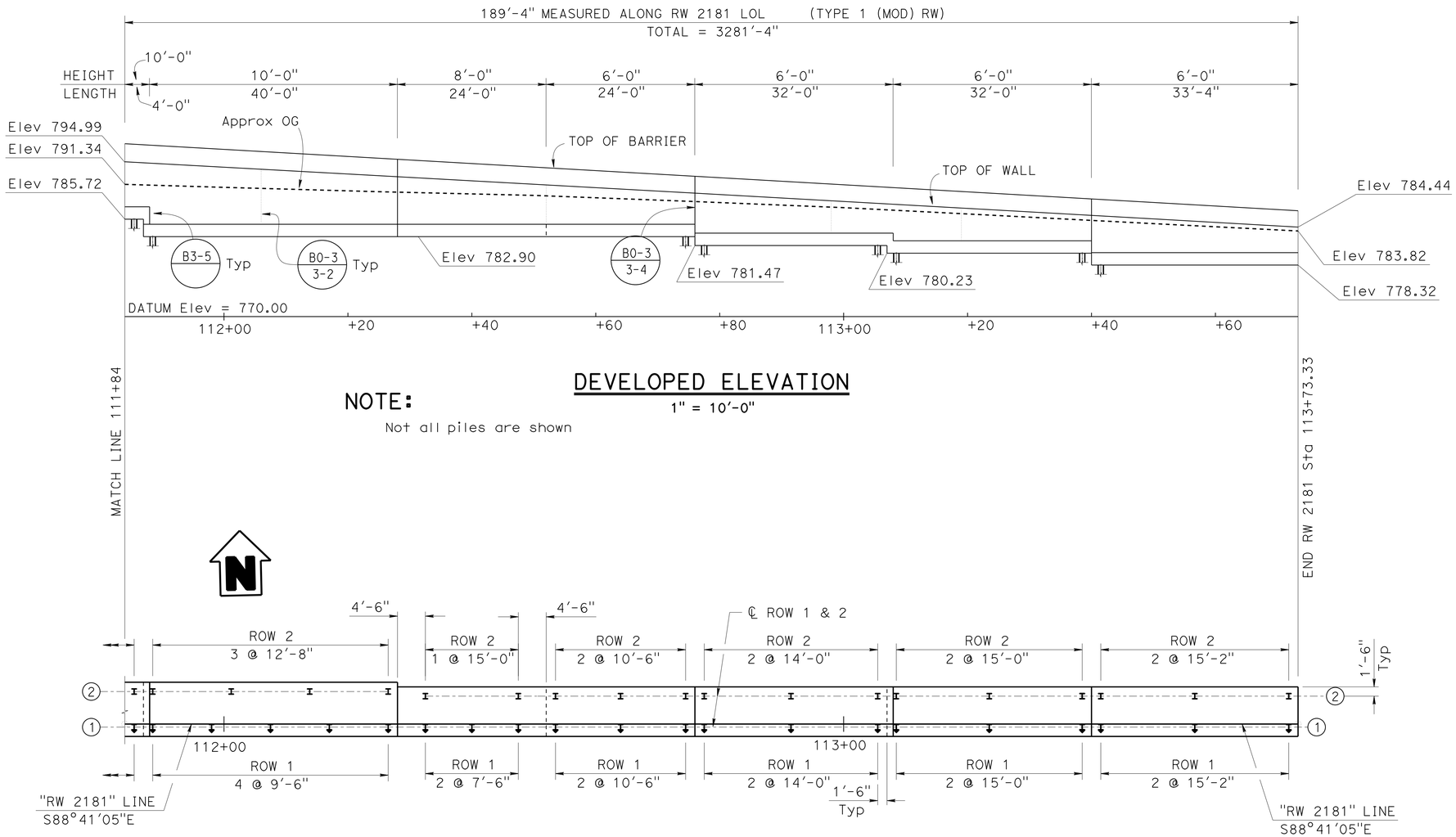

DEVELOPED ELEVATION

1" = 10'-0"

NOTE:

Not all piles are shown

STATION	TOP OF WALL ELEVATION (ft)
112+00	794.11
112+20	793.01
112+40	791.91
112+60	790.81
112+80	789.70
113+00	788.58
113+20	787.46
113+40	786.33
113+60	785.20

PLAN

1" = 10'

NOTES:

1. Pile spacing may be adjusted to clear all utilities and drainage
2. Locations and elevations of existing Drainage Systems are approximate. Contractor shall verify all as built locations and elevations on the field
3. For additional information on existing and new Drainage Systems, see "ROAD PLANS"
4. For transverse spacing of Piles, see "RETAINING WALL TYPE 1 (Mod) DETAILS No. 2" SHEET

LEGEND:

I Vertical Piles

Battered (1:3) Piles

Y @ X'-XX"
No. of Spaces — Pile Spacing

NOTE:
THE CONTRACTOR SHALL VERIFY ALL CONTROLLING FIELD DIMENSIONS BEFORE ORDERING OR FABRICATING ANY MATERIAL.

	BY	CHECKED
DESIGN	MOHAMMAD MUQTADIR	DAWIT WORKU
DETAILS	K. FARAHZADI/A. ONG	DAWIT WORKU
QUANTITIES	MOHAMMAD MUQTADIR	EDDY SCOTT

STATE OF CALIFORNIA
DEPARTMENT OF TRANSPORTATION

DIVISION OF ENGINEERING SERVICES
STRUCTURE DESIGN
DESIGN BRANCH 20

BRIDGE NO. 53-E0144
POST MILE 41.80

RETAINING WALL NO. 2181
LAYOUT NO. 12

STRUCTURES DESIGN DETAIL SHEET (ENGLISH) (REV. 09-01-10)

ORIGINAL SCALE IN INCHES FOR REDUCED PLANS 0 1 2 3

UNIT: 3622
PROJECT NUMBER & PHASE: 0713000007-1
CONTRACT NO.: 1193U1

DISREGARD PRINTS BEARING EARLIER REVISION DATES

REVISION DATES: 02/14/14 03/28/14 05/28/14 09/09/14

SHEET 25 OF 53

FILE => 53-E0144-g-lo12.dgn

USERNAME => s125624 DATE PLOTTED => 18-MAY-2015 TIME PLOTTED => 16:38

DIST	COUNTY	ROUTE	POST MILES TOTAL PROJECT	SHEET No.	TOTAL SHEETS
07	LA	10	37.2/42.4	2267	2313

REGISTERED CIVIL ENGINEER 10/01/14 DATE

6-1-15
PLANS APPROVAL DATE

REGISTERED PROFESSIONAL ENGINEER Dawit T Worku No. C60711 Exp. 12-31-14 CIVIL STATE OF CALIFORNIA

The State of California or its officers or agents shall not be responsible for the accuracy or completeness of electronic copies of this plan sheet.

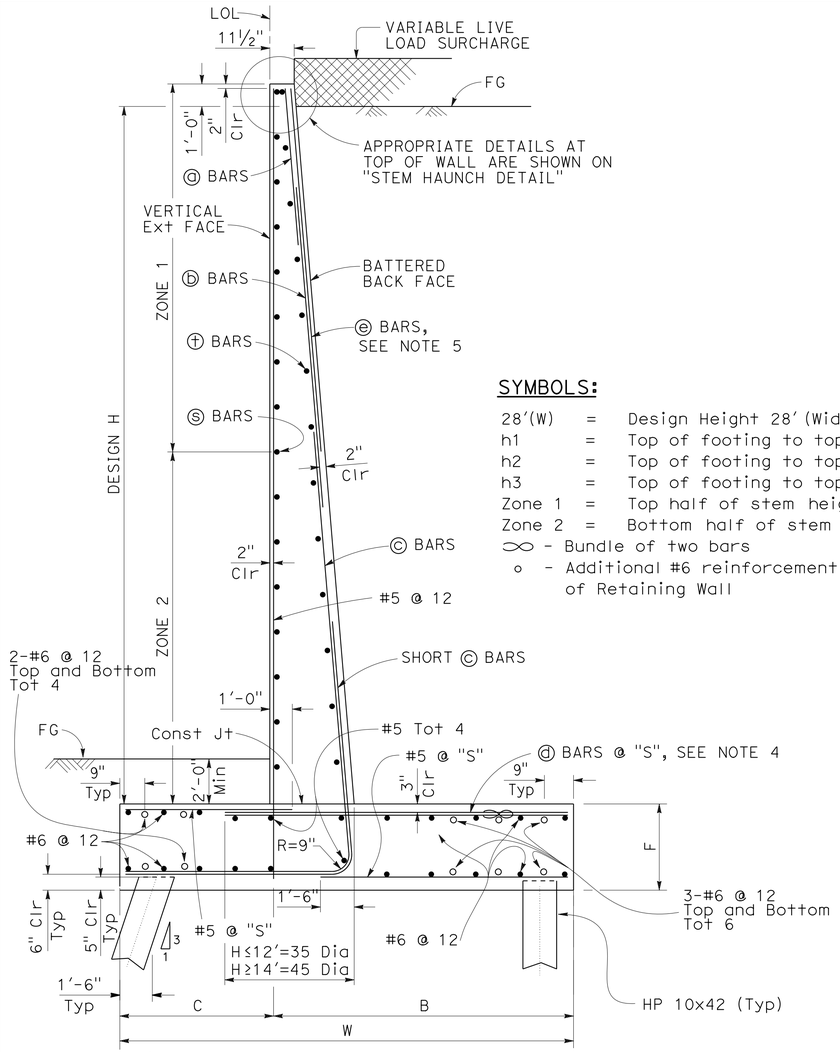

90 Kip STEEL PILE FOOTING SECTION

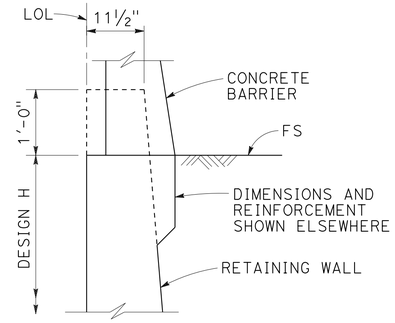

STEM HAUNCH DETAIL

DESIGN CONDITIONS:

Design H may be exceeded by 6" before going to the next size. Special footing design is required where foundation material is incapable of supporting bearing stress listed in the table.

SYMBOLS:

28'(W)	=	Design Height 28' (Wide footing)
h1	=	Top of footing to top of short ⓒ bar
h2	=	Top of footing to top of ⓒ bar
h3	=	Top of footing to top of ⓑ bar
Zone 1	=	Top half of stem height
Zone 2	=	Bottom half of stem height

∞ - Bundle of two bars
∘ - Additional #6 reinforcement @ the edge of Retaining Wall

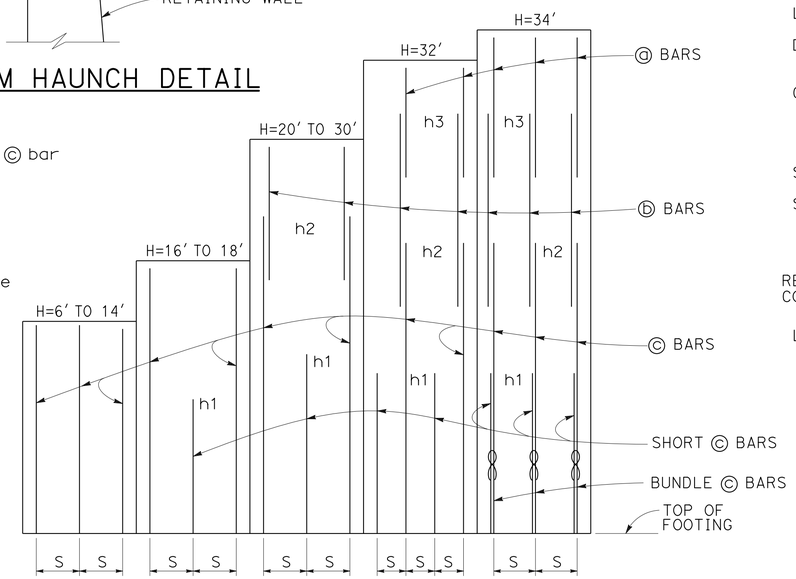

ELEVATION

DESIGN NOTES:

DESIGN: AASHTO LRFD Bridge Design Specifications, 4th Edition with California Amendments

LS: Varied surcharge on level ground surface

DC: Stem Architectural Treatment of thickness up to 6" of concrete (75 psf) considered

CT: 54 kip transverse force applied at He = 32", distributed over 10 feet at the top of wall and 1 : 1 distribution down and outward. Distribution below footing taken no less than 40'

SEISMIC: PGA = 0.68g, k_h = GPA/3 = 0.23, k_v = 0.0

SOIL:
ø = 21°, for H=28' (W)
ø = 24°, for H=34'
ø = 28°, for H=24'
ø = 29°, for H=6' to H=16', H=20'
ø = 32°, for H=18', H=26' to H=32'
ø = 34°, for H=22'

REINFORCED CONCRETE: γ = 120 pcf
f'c = 3,600 psi
fy = 60,000 psi

LOAD COMBINATIONS AND LIMIT STATES:

Service I	Q = 1.00DC+1.00EV+1.00EH+1.00LS
Strength I	Q = αDC+βEV+ηEH+1.75LS
Extreme I	Q = 1.00DC+1.00EV+1.00EH+1.00EQD+1.00EQE
Extreme II	Q = 1.00DC+1.00EV+1.00EH+1.00CT+0.5LS

Where:

Q:	Force Effects
α:	1.25 or 0.90, Whichever Controls Design
β:	1.35 or 1.00, Whichever Controls Design
η:	1.50 or 0.90, Whichever Controls Design
DC:	Dead Load of Structure Components
EH:	Horizontal Earth Fill Pressure
EV:	Vertical Earth Pressure from Earth Fill Weight
LS:	Live Load Surcharge
EQE:	Seismic Earth Pressure
EQD:	Soil and Structural and Nonstructural Components Inertia
CT:	Vehicular Collision Force

TABLE OF REINFORCING STEEL, DIMENSIONS AND DATA

DESIGN H	6'	8'	10'	12'	14'	16'	18'	20'	22'	24'	26'	28'	28' (W)	30'	32'	34'
W	8'-0"	8'-0"	8'-9"	8'-9"	9'-3"	10'-0"	12'-0"	13'-0"	13'-3"	15'-0"	15'-9"	17'-6"	20'-2"	19'-6"	20'-6"	24'-0"
C	2'-0"	2'-0"	2'-0"	2'-9"	3'-0"	3'-4"	3'-7"	3'-9"	4'-0"	4'-0"	4'-9"	5'-1"	5'-1"	5'-7"	6'-1"	6'-5"
B	6'-0"	6'-0"	6'-9"	6'-0"	6'-3"	6'-8"	8'-5"	9'-3"	9'-3"	11'-0"	11'-0"	12'-5"	15'-1"	13'-11"	14'-5"	17'-7"
F	2'-0"	2'-0"	2'-0"	2'-0"	2'-2"	2'-2"	2'-2"	2'-2"	2'-3"	2'-9"	2'-11"	3'-2"	3'-2"	3'-6"	3'-9"	4'-0"
BATTER	½: 12	½: 12	½: 12	½: 12	½: 12	½: 12	½: 12	½: 12	½: 12	⅝: 12	⅝: 12	¾: 12	¾: 12	⅞: 12	1 : 12	1 : 12
SPACING "S"	9"	9"	9"	8"	7"	6"	5"	5"	5"	5"	5"	5"	5"	5"	5"	8"
ⓐ BARS	-	-	-	-	-	-	-	-	-	-	-	-	-	-	#7	#7
ⓑ BARS	-	-	-	-	-	-	-	#7	#7	#7	#7	#7	#7	#7	#9	#9
ⓒ BARS	#6	#6	#6	#6	#6	#7	#7	#8	#9	#9	#10	#10	#10	#10	#11	#11
ⓓ BARS	#5	#6	#6	#6	#6	#9	#8	#8	#9	#9	#10	#10	#10	#10	#11	#11
h1	-	-	-	-	-	5'-9"	5'-10"	8'-0"	9'-0"	10'-1"	11'-0"	12'-1"	12'-1"	13'-0"	13'-0"	12'-7"
h2	-	-	-	-	-	-	-	10'-5"	13'-0"	14'-7"	17'-6"	19'-0"	19'-0"	20'-5"	19'-0"	18'-0"
h3	-	-	-	-	-	-	-	-	-	-	-	-	-	-	21'-2"	21'-10"
ZONE 1 ⓢ BARS	#5 @ 18	#5 @ 18	#5 @ 18	#5 @ 18	#5 @ 18	#5 @ 18	#5 @ 18	#5 @ 18	#5 @ 18	#5 @ 12	#5 @ 12	#5 @ 12	#5 @ 12	#5 @ 12	#5 @ 12	#5 @ 12
ZONE 2 ⓢ BARS	#5 @ 18	#5 @ 18	#5 @ 18	#5 @ 18	#5 @ 18	#5 @ 12	#5 @ 12	#5 @ 12	#5 @ 12	#5 @ 12	#5 @ 12	#6 @ 12	#6 @ 12	#6 @ 12	#6 @ 12	#7 @ 12
ZONE 1 ⓣ BARS	#4 @ 18	#4 @ 18	#4 @ 18	#4 @ 18	#4 @ 18	#4 @ 18	#4 @ 18	#4 @ 18	#4 @ 18	#4 @ 12	#4 @ 12	#4 @ 18	#4 @ 18	#4 @ 12	#4 @ 12	#4 @ 12
ZONE 2 ⓣ BARS	#4 @ 18	#4 @ 18	#4 @ 18	#4 @ 18	#4 @ 18	#4 @ 18	#4 @ 18	#4 @ 18	#4 @ 18	#4 @ 12	#4 @ 12	#4 @ 12	#4 @ 12	#4 @ 12	#5 @ 12	#5 @ 12

NOTES:

1. For details not shown and drainage notes see RSP B3-5
2. For wall stem joint details see BO-3 3-3 and BO-3 3-4
3. At ⓒ bars:
   H = 6', no splices are allowed within 1'-8" above the top of footing.
   H > 6', no splices are allowed within H/4 above the top of footing.
4. Bundle ⓓ bars for H = 34'
5. Provide #6 @ 8" x 15'-0" ⓔ bars over a distance of 8'-0" measured from all expansion joints, begin wall and end wall locations. For H ≤ 14', hook ⓔ bar into footing and reduce bar length as needed to maintain Min Clr cover.
6. Not all piles are shown, see Pile Layout on "LAYOUT SHEETS"
7. Lateral resistance of each pile
   13 kips for service limit state
   29 kip for strength limit state
   40 kip for extreme limit state

	BY	CHECKED
DESIGN	MOHAMMAD MUQTADIR	DAWIT WORKU
DETAILS	LAN T TRAN	DAWIT WORKU
QUANTITIES	MOHAMMAD MUQTADIR	EDDY SCOTT

STATE OF CALIFORNIA
DEPARTMENT OF TRANSPORTATION

DIVISION OF ENGINEERING SERVICES
STRUCTURE DESIGN
DESIGN BRANCH 20

BRIDGE NO. 53-E0144
POST MILE 41.80

RETAINING WALL NO. 2181
RETAINING WALL TYPE 1 (MOD) DETAILS NO. 1

STRUCTURES DESIGN DETAIL SHEET (ENGLISH) (REV. 09-01-10)

ORIGINAL SCALE IN INCHES FOR REDUCED PLANS 0 1 2 3

UNIT: 3622
PROJECT NUMBER & PHASE: 0713000007-4
CONTRACT NO.: 1193U1

DISREGARD PRINTS BEARING EARLIER REVISION DATES

REVISION DATES 05/14/14 09/08/14 9-16-14

SHEET 26 OF 53

FILE => 53-E0144-g-rwt01(mod)_dt01.dgn

USERNAME => s125624 DATE PLOTTED => 18-MAY-2015 TIME PLOTTED => 16:38

DIST	COUNTY	ROUTE	POST MILES TOTAL PROJECT	SHEET No.	TOTAL SHEETS
07	LA	10	37.2/42.4	2268	2313

REGISTERED CIVIL ENGINEER 10/01/14 DATE

6-1-15
PLANS APPROVAL DATE

REGISTERED PROFESSIONAL ENGINEER Dawit T Worku No. C60711 Exp. 12-31-14 CIVIL STATE OF CALIFORNIA

The State of California or its officers or agents shall not be responsible for the accuracy or completeness of electronic copies of this plan sheet.

NOTE:

"a" = 1'-6" for H≤ 22'-0"
"a" = 2'-0" for H> 22'-0"

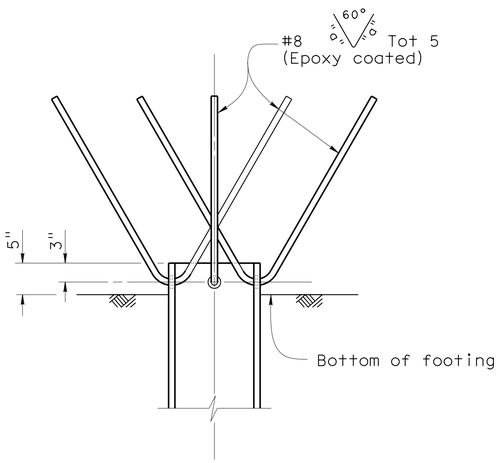

ELEVATION

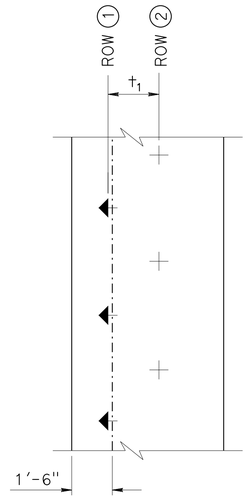

H	t_1
6	5'-0"

PLAN
TYPE I
NO SCALE

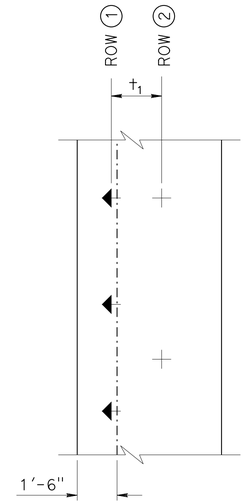

H	t_1
8	5'-0"
10	5'-9"
12	5'-3"
14	6'-0"
16	7'-0"

PLAN
TYPE II
NO SCALE

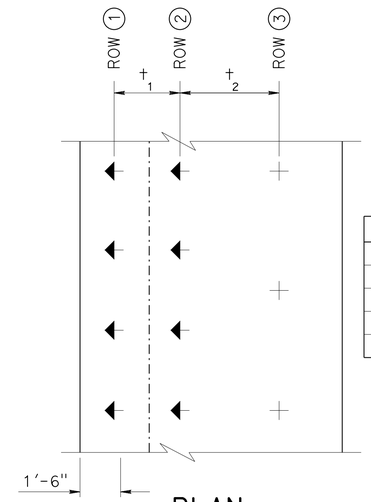

H	t_1	t_2
18	3'-0"	4'-9"
20	3'-0"	5'-3"
22	3'-0"	6'-0"
24	3'-0"	7'-3"
26	3'-0"	8'-3"

PLAN
TYPE III
NO SCALE

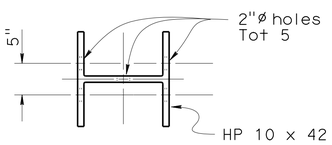

PLAN
STEEL PILE ANCHOR
NO SCALE

H	t_1	t_2	t_3
28	3'-0"	4'-6"	4'-9"
28W	3'-0"	7'-6"	3'-9"

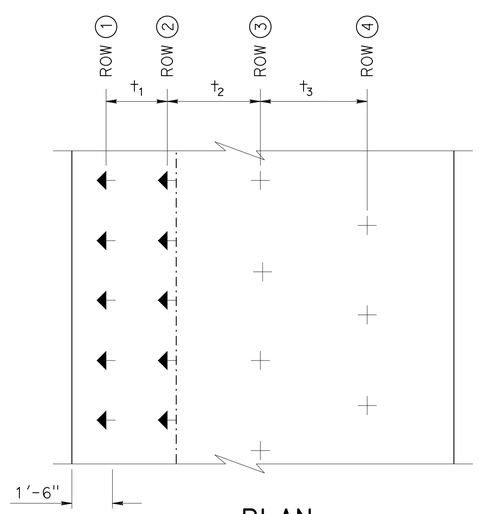

PLAN
TYPE IV
NO SCALE

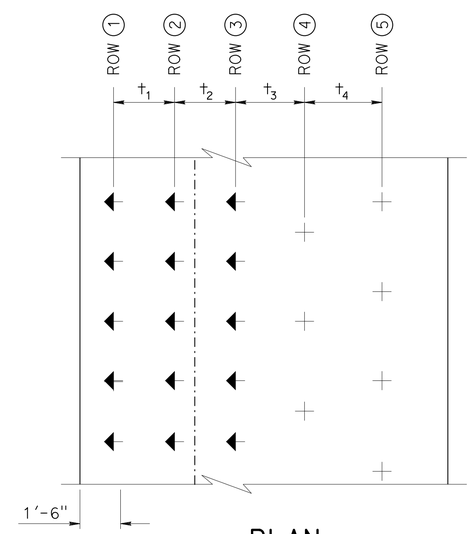

PLAN
TYPE V
NO SCALE

H	t_1	t_2	t_3	t_4
30	3'-0"	3'-0"	3'-6"	4'-3"
32	3'-0"	3'-0"	4'-6"	4'-9"
34	3'-0"	3'-0"	10'-6"	3'-0"

NOTE:

For longitudinal spacing of Piles, see "PILE LAYOUT" sheet

LEGEND:

+ Vertical Piles
◀ Batterred (1:3) Piles

NOTE:
THE CONTRACTOR SHALL VERIFY ALL CONTROLLING FIELD DIMENSIONS BEFORE ORDERING OR FABRICATING ANY MATERIAL.

DESIGN	BY MOHAMMAD MUQTADIR	CHECKED DAWIT WORKU	
DETAILS	BY LAN T TRAN	CHECKED DAWIT WORKU	
QUANTITIES	BY MOHAMMAD MUQTADIR	CHECKED EDDY SCOTT	

STATE OF CALIFORNIA
DEPARTMENT OF TRANSPORTATION

DIVISION OF ENGINEERING SERVICES
STRUCTURE DESIGN
DESIGN BRANCH 20

BRIDGE NO. 53-E0144
POST MILE 41.80

RETAINING WALL NO. 2181
RETAINING WALL TYPE 1 (MOD) DETAILS NO. 2

STRUCTURES DESIGN DETAIL SHEET (ENGLISH) (REV. 09-01-10)

ORIGINAL SCALE IN INCHES FOR REDUCED PLANS 0 1 2 3

UNIT: 3622
PROJECT NUMBER & PHASE: 0713000007-1
CONTRACT NO.: 1193U1

DISREGARD PRINTS BEARING EARLIER REVISION DATES

REVISION DATES 10/16/13 12/17/13 02/11/14

SHEET 27 OF 53

FILE => 53-E0144-g-rwt02(mod)_dt02.dgn

USERNAME => s125624 DATE PLOTTED => 18-MAY-2015 TIME PLOTTED => 16:38

DIST	COUNTY	ROUTE	POST MILES TOTAL PROJECT	SHEET No.	TOTAL SHEETS
07	LA	10	37.2/42.4	2269	2313

REGISTERED CIVIL ENGINEER 10/01/14 DATE

6-1-15
PLANS APPROVAL DATE

REGISTERED PROFESSIONAL ENGINEER
Dawit T Worku
No. C60711
Exp. 12-31-14
CIVIL
STATE OF CALIFORNIA

The State of California or its officers or agents shall not be responsible for the accuracy or completeness of electronic copies of this plan sheet.

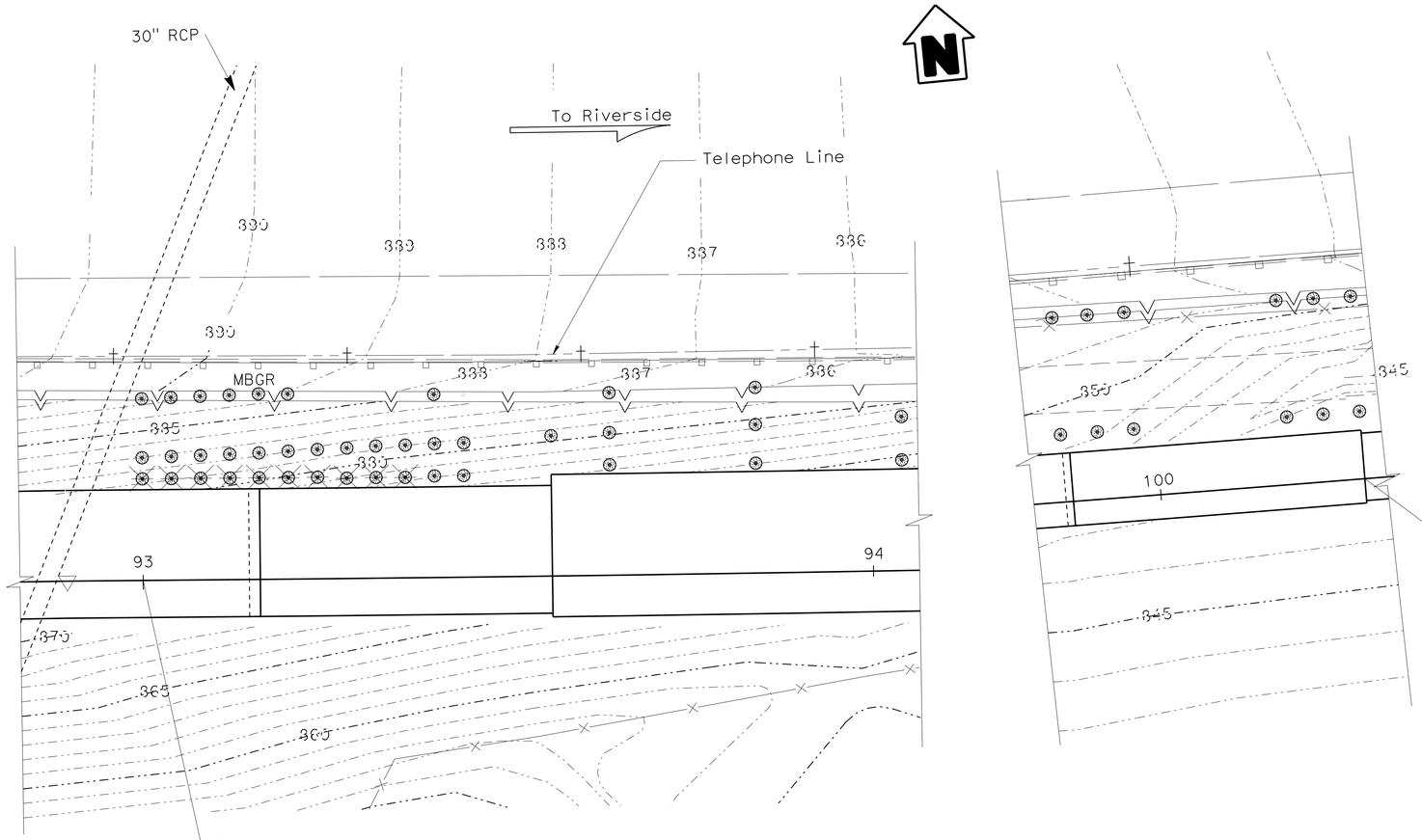

SOIL NAIL
SLOPE STABILIZATION
LOCATION 1

PART PLAN

1" = 10'-0"

LEGEND:

- Indicates Soil Nail with typical length
- Indicates location which has reduced Soil Nail length, see Note 1
- Indicates Retaining Wall footing boundary

NOTES:

1. Soil Nail length is 50'-0" for row 5 and row 6 between station 93+00.00 and 93+40.00
2. Not all Soil Nails are shown
3. For Soil Nail spacing and number of rows, see Soil Nail table on "SOIL NAIL TYPICAL SECTION" sheet
4. Soil Nail angle may be adjusted by a maximum of 10° horizontally and vertically to clear all utilities and/or drainage pipes by a minimumn of 2'-0" from the edge of utility or drainage system

NOTE:
THE CONTRACTOR SHALL VERIFY ALL CONTROLLING FIELD DIMENSIONS BEFORE ORDERING OR FABRICATING ANY MATERIAL.

	BY	CHECKED
DESIGN	MOHAMMAD MUQTADIR	DAWIT WORKU
DETAILS	ANTONETTE L. ONG	DAWIT WORKU
QUANTITIES	MOHAMMAD MUQTADIR	EDDY SCOTT

STATE OF CALIFORNIA
DEPARTMENT OF TRANSPORTATION

DIVISION OF ENGINEERING SERVICES
STRUCTURE DESIGN
DESIGN BRANCH 20

BRIDGE NO. 53-E0144
POST MILE 41.80

RETAINING WALL NO. 2181
SOIL NAIL LAYOUT NO. 1

STRUCTURES DESIGN DETAIL SHEET (ENGLISH) (REV. 09-01-10)

ORIGINAL SCALE IN INCHES FOR REDUCED PLANS 0 1 2 3

UNIT: 3622
PROJECT NUMBER & PHASE: 0713000007-1 CONTRACT NO.: 1193U1

DISREGARD PRINTS BEARING EARLIER REVISION DATES

REVISION DATES: 10/26/13 01/28/14 09/22/15

SHEET 28 OF 53

FILE => 53-E0144-n-sn01_lo01.dgn

USERNAME => s125624 DATE PLOTTED => 18-MAY-2015 TIME PLOTTED => 16:38

DIST	COUNTY	ROUTE	POST MILES TOTAL PROJECT	SHEET No.	TOTAL SHEETS
07	LA	10	37.2/42.4	2270	2313

REGISTERED CIVIL ENGINEER 10/01/14 DATE

6-1-15
PLANS APPROVAL DATE

REGISTERED PROFESSIONAL ENGINEER
Dawit T Worku
No. C60711
Exp. 12-31-14
CIVIL
STATE OF CALIFORNIA

The State of California or its officers or agents shall not be responsible for the accuracy or completeness of electronic copies of this plan sheet.

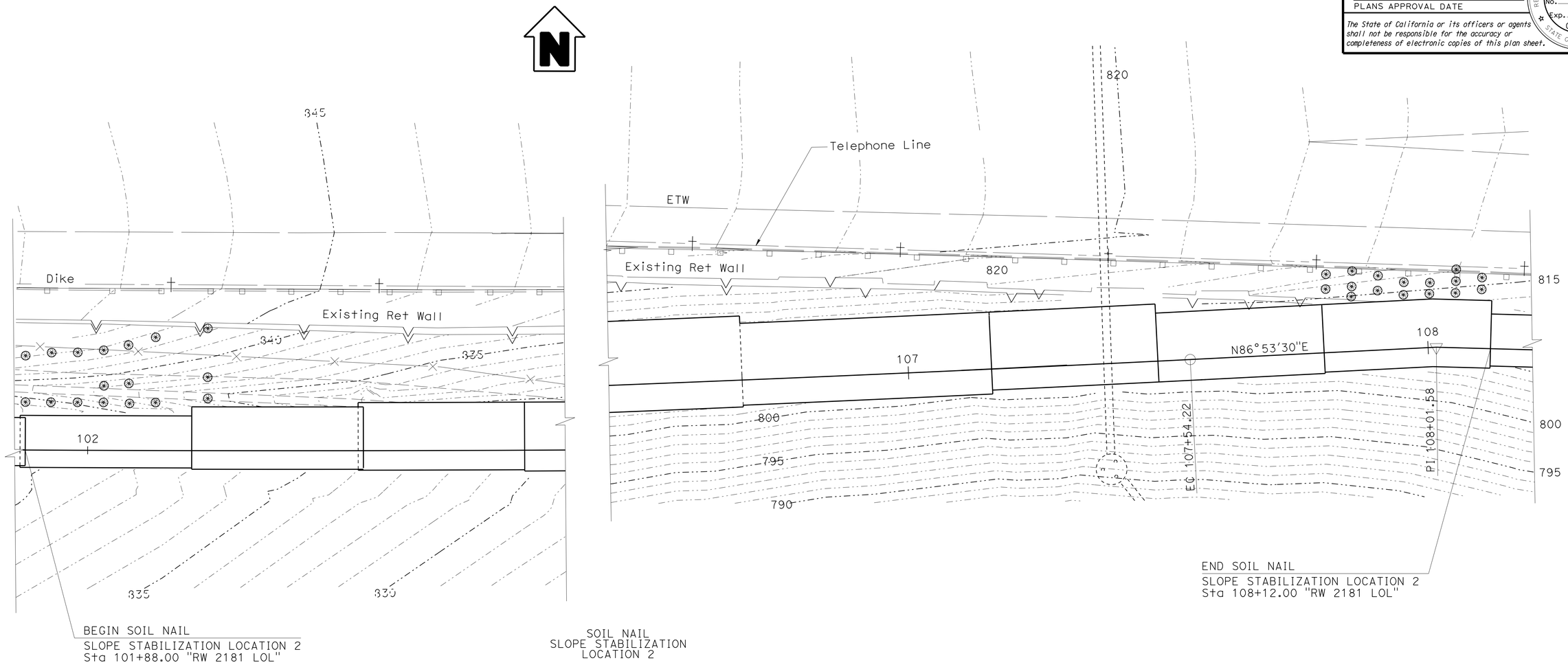

PART PLAN

1" = 10'-0"

NOTE:
THE CONTRACTOR SHALL VERIFY ALL CONTROLLING FIELD DIMENSIONS BEFORE ORDERING OR FABRICATING ANY MATERIAL.

NOTES:

1. Not all Soil Nails are shown
2. For Soil Nail spacing and number of rows, see Soil Nail table on "SOIL NAIL TYPICAL SECTION" sheet
3. Soil Nail angle may be adjusted by a maximum of 10° horizontally and vertically to clear all utilities and/or drainage pipes by a minimumn of 2'-0" from the edge of utility or drainage system

LEGEND:

Indicates Soil Nail with typical length

Indicates Retaining Wall footing boundary

	BY	CHECKED
DESIGN	MOHAMMAD MUQTADIR	DAWIT WORKU
DETAILS	ANTONETTE L. ONG	DAWIT WORKU
QUANTITIES	MOHAMMAD MUQTADIR	EDDY SCOTT

STATE OF CALIFORNIA
DEPARTMENT OF TRANSPORTATION

DIVISION OF ENGINEERING SERVICES
STRUCTURE DESIGN
DESIGN BRANCH 20

BRIDGE NO. 53-E0144
POST MILE 41.80

RETAINING WALL NO. 2181
SOIL NAIL LAYOUT NO. 2

STRUCTURES DESIGN DETAIL SHEET (ENGLISH) (REV. 09-01-10)

ORIGINAL SCALE IN INCHES FOR REDUCED PLANS 0 1 2 3

UNIT: 3622
PROJECT NUMBER & PHASE: 0713000007-1
CONTRACT NO.: 1193U1

DISREGARD PRINTS BEARING EARLIER REVISION DATES → 10/26/13 12/17/13 01/28/14

SHEET 29 OF 53

FILE => 53-E0144-n-sn02_lo02.dgn

USERNAME => s125624 DATE PLOTTED => 18-MAY-2015 TIME PLOTTED => 16:38

DIST	COUNTY	ROUTE	POST MILES TOTAL PROJECT	SHEET No.	TOTAL SHEETS
07	LA	10	37.2/42.4	2271	2313

REGISTERED CIVIL ENGINEER 10/01/14 DATE

6-1-15
PLANS APPROVAL DATE

REGISTERED PROFESSIONAL ENGINEER Dawit T Worku No. C60711 Exp. 12-31-14 CIVIL STATE OF CALIFORNIA

The State of California or its officers or agents shall not be responsible for the accuracy or completeness of electronic copies of this plan sheet.

GENERAL NOTES

LOAD AND RESISTANCE FACTOR DESIGN

DESIGN: AASHTO LRFD BRIDGE DESIGN SPECIFICATIONS, 4th Edition dated with the Caltrans Amendments, preface dated November 2011

STRUCTURAL STEEL DESIGN: ASTM Designation A709, Grade 60 fy = 60 ksi

REINFORCED CONCRETE: fy = 60 Ksi
f'_c = 3.6 ksi
n = 8

SOIL NAILS: ASTM Designation: A615, Grade 75, fy = 75 ksi

CONCRETE GROUT: f'_c = 3.6 ksi

SOIL DESIGN PARAMETERS

For Soil Design parameters, see Geotechnical Design Report for Retaining Wall No. 2181

Pull out Resistance Q_d = 2630 lb/ft (Sta 93+00 to 100+28) (ZONE 1)
(Sta 101+88 to 104+68) (ZONE 2)
= 3283 lb/ft (Sta 104+68 to 108+12) (ZONE 3)

LOCATION	BEGIN STATION	END STATION	NUMBER OF ROWS	HORIZONTAL SPACING MEASURED ALONG LOL (Ft)	TOTAL NO. OF SOIL NAILS	SOIL NAIL LENGTH (Ft)	** NO. OF PROOF TEST NAILS (SEE NOTES)
1	93+00	95+72	6	4.00	414	60*	35
	95+72	96+20	5	4.00	60	60	5
	96+20	97+00	4	4.00	80	60	6
	97+00	99+24	4	5.00	180	60	14
	99+24	100+28	4	5.00	84	60	7
2	101+88	102+20	3	5.00	18	60	1
	102+20	103+08	4	5.00	72	60	6
	103+08	103+72	5	5.00	65	60	5
	103+72	104+36	6	5.00	78	60	6
	104+36	105+16	6	4.00	120	60	10
	105+16	106+68	6	4.00	228	60	18
	106+68	107+32	5	4.00	80	60	6
	107+32	107+48	5	4.00	15	60	2
	107+48	107+56	5	4.00	10	60	1
	107+56	108+12	4	4.00	56	60	4
				TOTAL	1560	TOTAL	126

NOTE:
THE CONTRACTOR SHALL VERIFY ALL CONTROLLING FIELD DIMENSIONS BEFORE ORDERING OR FABRICATING ANY MATERIAL.

* Soil Nail length is 50'-0" for Row 5 and Row 6 between 93+00 TO 93+40, see "SOIL NAIL ELEVATION" sheets

** Proof Test Nails shown on plans

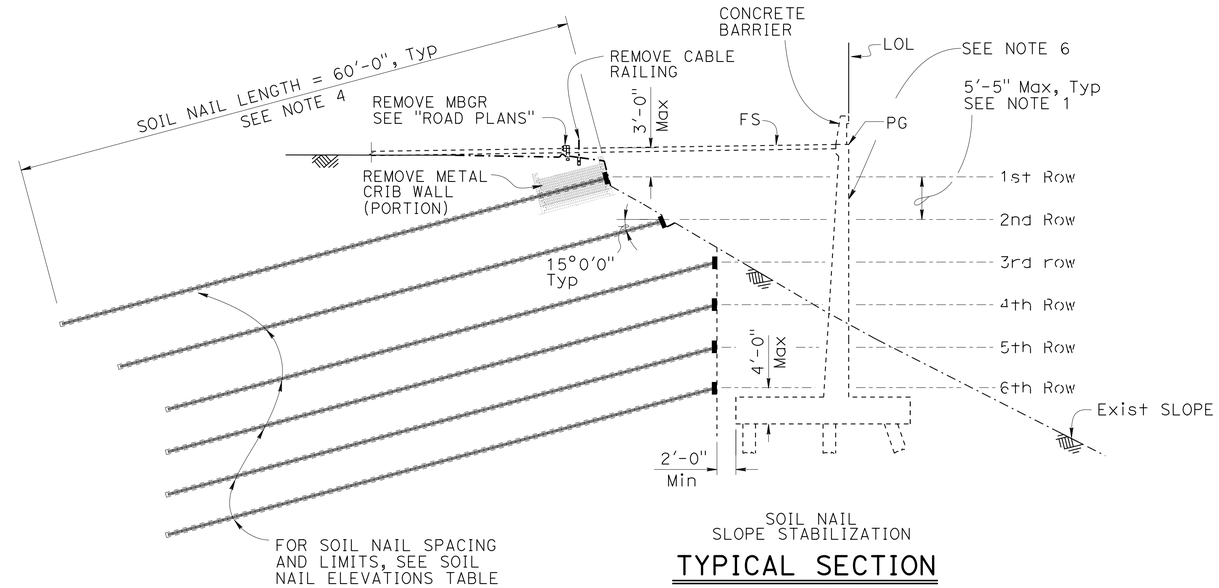

SOIL NAIL
SLOPE STABILIZATION

TYPICAL SECTION

1/8" = 1'-0"

NOTES:

1. Soil Nail angle may be adjusted by a maximum of 10° horizontally and vertically to clear all utilities and/or drainage pipes by a minimum of 2'-0" from the edge of utility or drainage system
2. All Soil Nail to be constructed at equal vertical spacing between the first and the last rows. Vertical spacing not to exceed 5'-5"
3. For Soil Nail details, see "SOIL NAIL DETAILS" sheet
4. Length of Soil Nail is 60'-0" except shown on the "SOIL NAIL LAYOUT 1" and "SOIL NAIL ELEVATION NO. 1" sheets
5. Locations of proof test to be evenly distributed within the station limit as shown on "SOIL NAIL ELEVATION" sheets
6. Retaining Wall and roadway pavment shall be constructed after Slope Stabilization Soil Nail been installed.

DESIGN	BY MOHAMMAD MUQTADIR	CHECKED DAWIT WORKU	
DETAILS	BY ANTONETTE L. ONG	CHECKED DAWIT WORKU	
QUANTITIES	BY MOHAMMAD MUQTADIR	CHECKED EDDY SCOTT	

STATE OF CALIFORNIA
DEPARTMENT OF TRANSPORTATION

DIVISION OF ENGINEERING SERVICES
STRUCTURE DESIGN
DESIGN BRANCH 20

BRIDGE NO. 53-E0144
POST MILE 41.80

RETAINING WALL NO. 2181
SOIL NAIL TYPICAL SECTION

STRUCTURES DESIGN DETAIL SHEET (ENGLISH) (REV. 09-01-10)

ORIGINAL SCALE IN INCHES FOR REDUCED PLANS 0 1 2 3

UNIT: 3622
PROJECT NUMBER & PHASE: 0713000007-1
CONTRACT NO.: 1193U1

DISREGARD PRINTS BEARING EARLIER REVISION DATES

REVISION DATES 02/27/14 03/03/14 05/14/14

SHEET 30 OF 53

FILE => 53-E0144-1-sn01_ts01.dgn

USERNAME => s125624 DATE PLOTTED => 18-MAY-2015 TIME PLOTTED => 16:38

DIST	COUNTY	ROUTE	POST MILES TOTAL PROJECT	SHEET No.	TOTAL SHEETS
07	LA	10	37.2/42.4	2272	2313

REGISTERED CIVIL ENGINEER 10/01/14 DATE

6-1-15
PLANS APPROVAL DATE

REGISTERED PROFESSIONAL ENGINEER Dawit T Worku No. C60711 Exp. 12-31-14 CIVIL STATE OF CALIFORNIA

The State of California or its officers or agents shall not be responsible for the accuracy or completeness of electronic copies of this plan sheet.

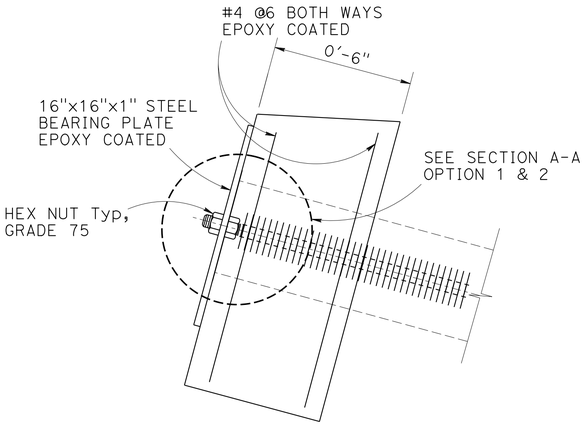

VIEW A-A
NO SCALE

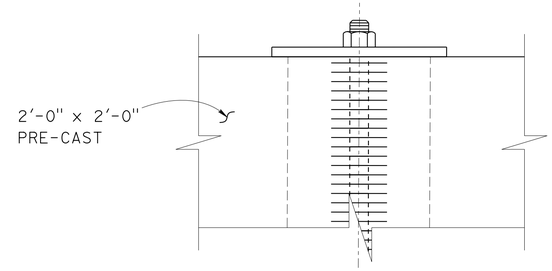

VIEW A-A
OPTION 1
NO SCALE

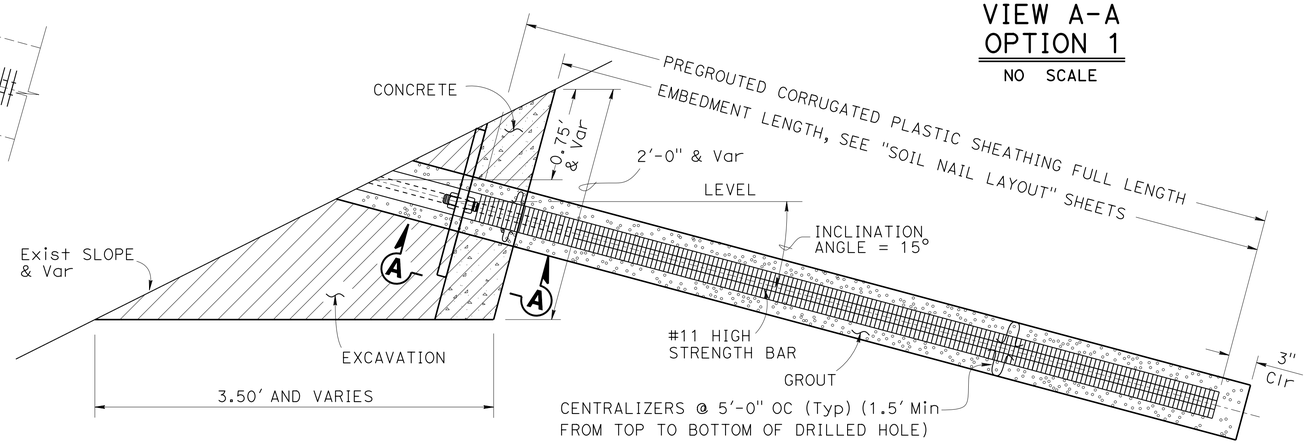

SOIL NAIL ASSEMBLY
3" = 1-0'

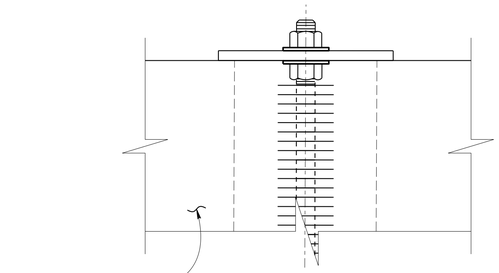

VIEW A-A
OPTION 2
NO SCALE

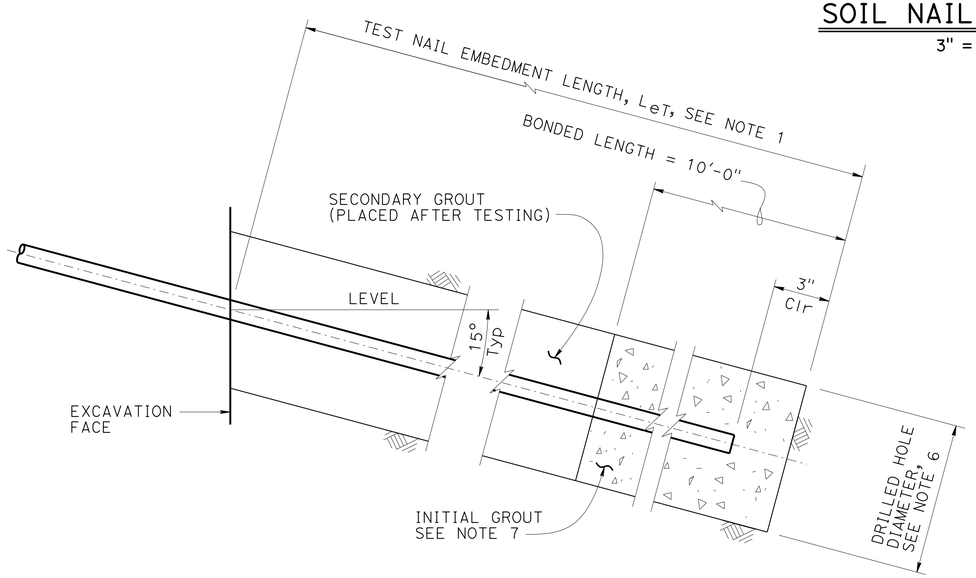

TEST SOIL NAIL ASSEMBLY
3" = 1-0'

NOTES:

1. Embedment length of Proof Test Soil Nail equals 2/3 of the embedment length of adjacent production nail assemblies, but not less than 12 Ft
2. Total length of Test Soil Nails equals embedment length plus the length required for jacking equipment
3. Inclination of Test Soil Nail assembly to be the same as adjacent Soil Nail assembly
4. Rebars can be adjusted to prevent interfere with high strength bars
5. Minimum 3" clearance is needed for concrete cover
6. Contractor to determine drilled hole diameter
7. Finished grout surface to be normal to the bar

LEGEND:

Structure Excavation (Soil Nail Wall)

Structure Concrete (Retaining Wall) f'_c = 3.6 ksi

NOTE:
THE CONTRACTOR SHALL VERIFY ALL CONTROLLING FIELD DIMENSIONS BEFORE ORDERING OR FABRICATING ANY MATERIAL.

	BY	CHECKED
DESIGN	MOHAMMAD MUQTADIR	DAWIT WORKU
DETAILS	K. FARAHZADI/A. ONG	DAWIT WORKU
QUANTITIES	MOHAMMAD MUQTADIR	EDDY SCOTT

STATE OF CALIFORNIA
DEPARTMENT OF TRANSPORTATION

DIVISION OF ENGINEERING SERVICES
STRUCTURE DESIGN
DESIGN BRANCH 20

BRIDGE NO. 53-E0144
POST MILE 41.80

RETAINING WALL NO. 2181
SLOPE STABILIZATION
SOIL NAIL DETAILS

STRUCTURES DESIGN DETAIL SHEET (ENGLISH) (REV. 09-01-10)

ORIGINAL SCALE IN INCHES FOR REDUCED PLANS 0 1 2 3

UNIT: 3622
PROJECT NUMBER & PHASE: 0713000007-1
CONTRACT NO.: 1193U1

DISREGARD PRINTS BEARING EARLIER REVISION DATES

REVISION DATES 12/17/13 03/05/14 05/14/14

SHEET 31 OF 53

FILE => 53-E0144-1-sn01dt01.dgn

USERNAME => s125624 DATE PLOTTED => 18-MAY-2015 TIME PLOTTED => 16:38

DIST	COUNTY	ROUTE	POST MILES TOTAL PROJECT	SHEET No.	TOTAL SHEETS
07	LA	10	37.2/42.4	2273	2313

REGISTERED CIVIL ENGINEER 10/01/14 DATE

6-1-15
PLANS APPROVAL DATE

REGISTERED PROFESSIONAL ENGINEER
Dawit T Worku
No. C60711
Exp. 12-31-14
CIVIL
STATE OF CALIFORNIA

The State of California or its officers or agents shall not be responsible for the accuracy or completeness of electronic copies of this plan sheet.

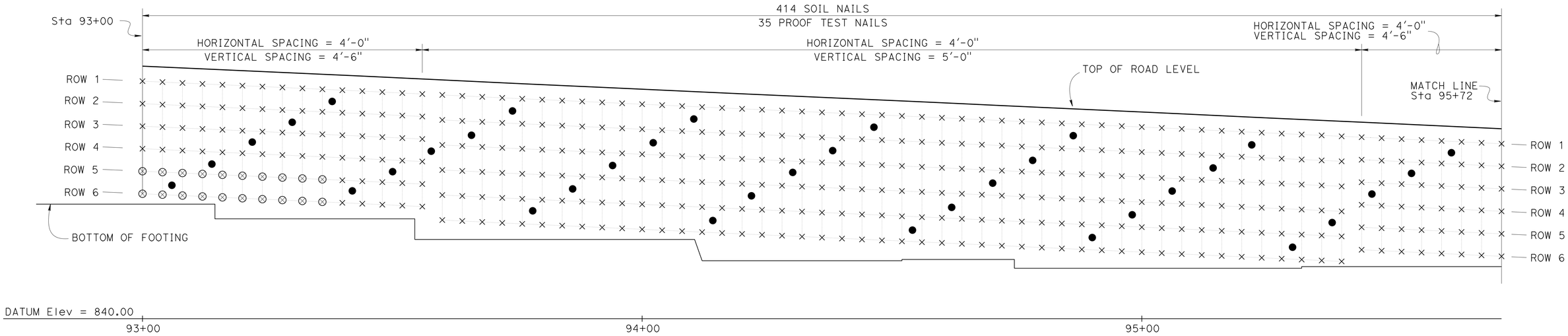

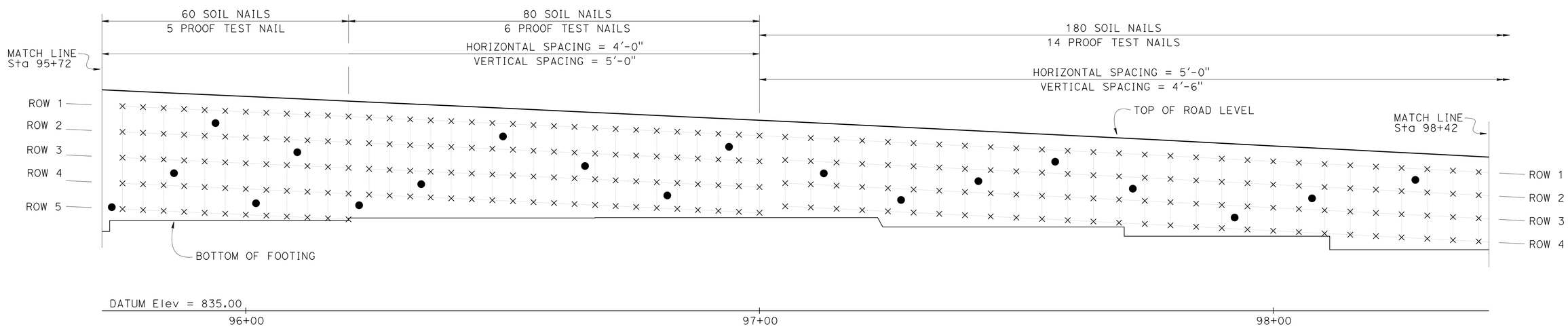

NOTE:
THE CONTRACTOR SHALL VERIFY ALL CONTROLLING FIELD DIMENSIONS BEFORE ORDERING OR FABRICATING ANY MATERIAL.

SOIL NAIL ELEVATION VIEW

1" = 10'-0"

LEGEND:

- ⊗ Indicates Soil Nail with length of 50'-0"
- × Indicates Soil Nail location with typical length of 60'-0"
- ● Indicates Proof test Nail location

	BY	CHECKED
DESIGN	MOHAMMAD MUQTADIR	DAWIT WORKU
DETAILS	K. FARAHZADI/A. ONG	DAWIT WORKU
QUANTITIES	MOHAMMAD MUQTADIR	EDDY SCOTT

STATE OF CALIFORNIA
DEPARTMENT OF TRANSPORTATION

DIVISION OF ENGINEERING SERVICES
STRUCTURE DESIGN
DESIGN BRANCH 20

BRIDGE NO. 53-E0144
POST MILE 41.80

RETAINING WALL NO. 2181
SOIL NAIL ELEVATION NO. 1

STRUCTURES DESIGN DETAIL SHEET (ENGLISH) (REV. 09-01-10)

ORIGINAL SCALE IN INCHES FOR REDUCED PLANS 0 1 2 3

UNIT: 3622
PROJECT NUMBER & PHASE: 0713000007-1
CONTRACT NO.: 1193U1

DISREGARD PRINTS BEARING EARLIER REVISION DATES

REVISION DATES 12/10/13

SHEET 32 OF 53

FILE => 53-E0144-j-sn_elev01.dgn

USERNAME => s125624 DATE PLOTTED => 18-MAY-2015 TIME PLOTTED => 16:38

DIST	COUNTY	ROUTE	POST MILES TOTAL PROJECT	SHEET No.	TOTAL SHEETS
07	LA	10	37.2/42.4	2274	2313

REGISTERED CIVIL ENGINEER 10/01/14 DATE

6-1-15
PLANS APPROVAL DATE

REGISTERED PROFESSIONAL ENGINEER
Dawit T Worku
No. C60711
Exp. 12-31-14
CIVIL
STATE OF CALIFORNIA

The State of California or its officers or agents shall not be responsible for the accuracy or completeness of electronic copies of this plan sheet.

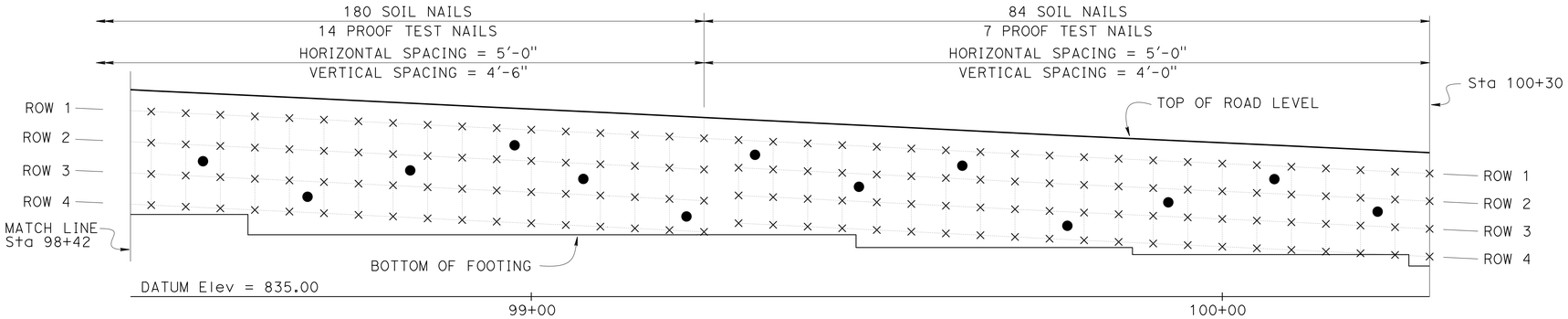

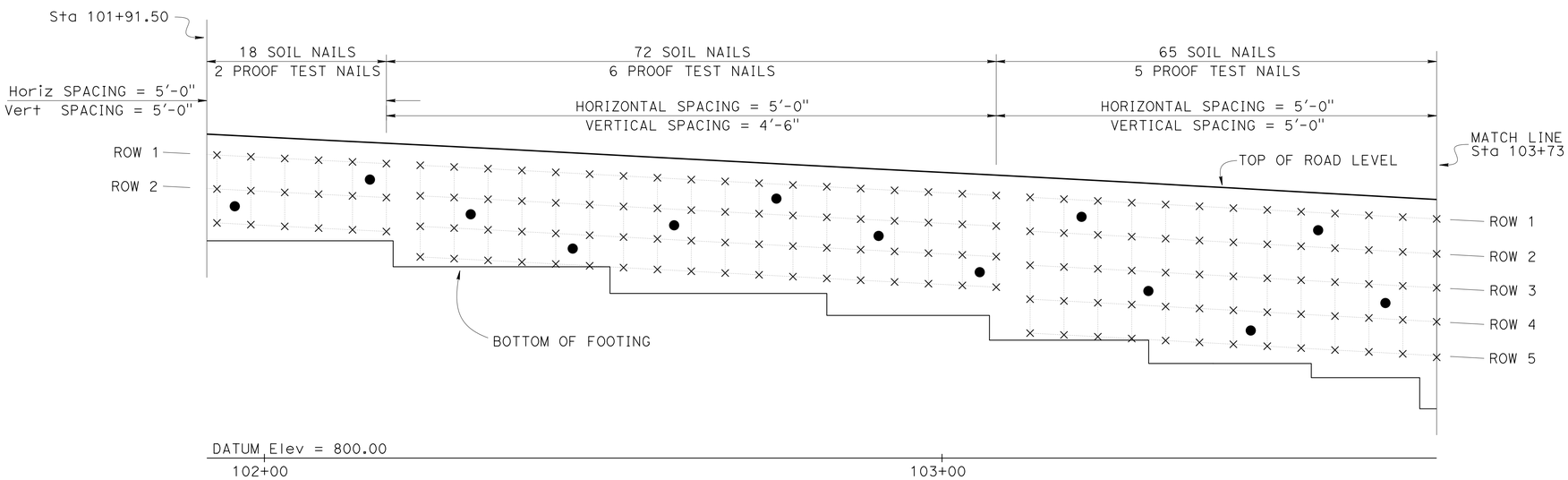

SOIL NAIL ELEVATION VIEW

1" = 10'-0"

NOTE:
THE CONTRACTOR SHALL VERIFY ALL CONTROLLING FIELD DIMENSIONS BEFORE ORDERING OR FABRICATING ANY MATERIAL.

LEGEND:

× Indicates Soil Nail location with length of 60'-0"

● Indicates Proof test Nail location

	BY	CHECKED
DESIGN	MOHAMMAD MUQTADIR	DAWIT WORKU
DETAILS	K. FARAHZADI/A. ONG	DAWIT WORKU
QUANTITIES	MOHAMMAD MUQTADIR	EDDY SCOTT

STATE OF CALIFORNIA
DEPARTMENT OF TRANSPORTATION

DIVISION OF ENGINEERING SERVICES
STRUCTURE DESIGN
DESIGN BRANCH 20

BRIDGE NO. 53-E0144
POST MILE 41.80

RETAINING WALL NO. 2181
SOIL NAIL ELEVATION NO. 2

STRUCTURES DESIGN DETAIL SHEET (ENGLISH) (REV. 09-01-10)

ORIGINAL SCALE IN INCHES FOR REDUCED PLANS 0 1 2 3

UNIT: 3622
PROJECT NUMBER & PHASE: 0713000007-1
CONTRACT NO.: 1193U1

DISREGARD PRINTS BEARING EARLIER REVISION DATES 12/10/13

REVISION DATES | SHEET 33 | OF 53

FILE => 53-E0144-j-sn_elev02.dgn

USERNAME => s125624 DATE PLOTTED => 18-MAY-2015 TIME PLOTTED => 16:38

DIST	COUNTY	ROUTE	POST MILES TOTAL PROJECT	SHEET No.	TOTAL SHEETS
07	LA	10	37.2/42.4	2275	2313

REGISTERED CIVIL ENGINEER 10/01/14 DATE

6-1-15
PLANS APPROVAL DATE

REGISTERED PROFESSIONAL ENGINEER Dawit T Worku No. C60711 Exp. 12-31-14 CIVIL STATE OF CALIFORNIA

The State of California or its officers or agents shall not be responsible for the accuracy or completeness of electronic copies of this plan sheet.

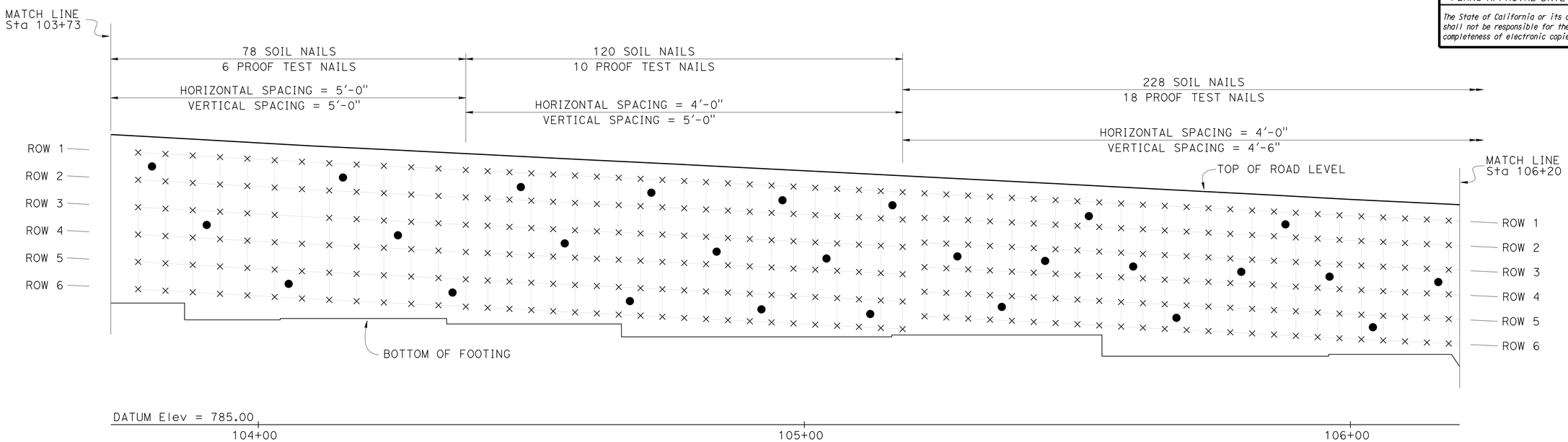

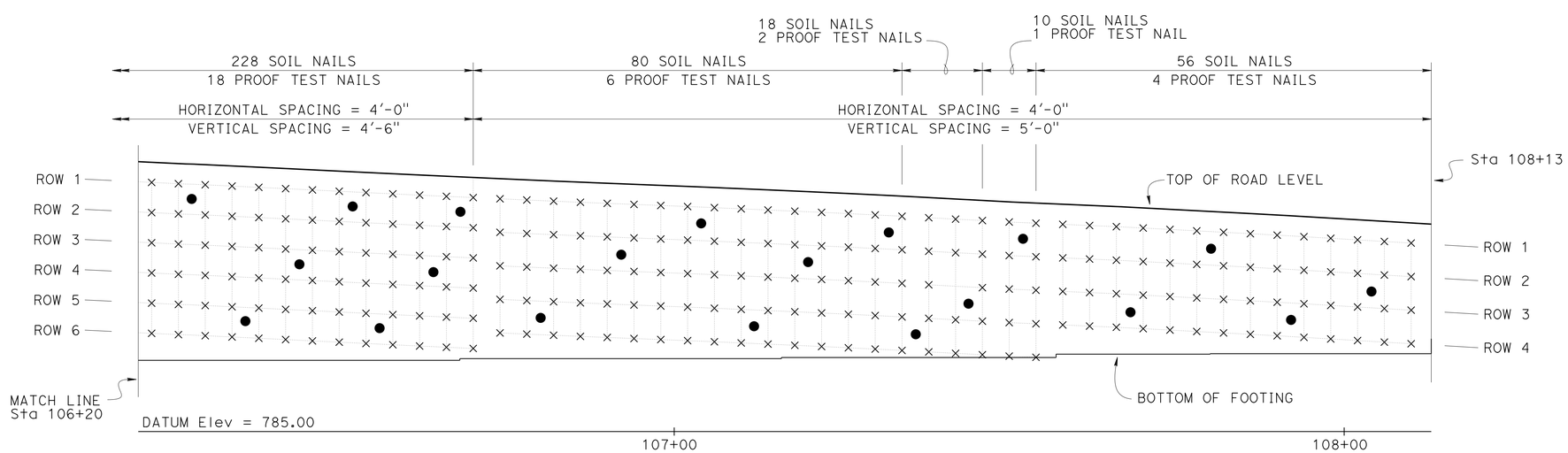

SOIL NAIL ELEVATION VIEW

1" = 10'-0"

NOTE:
THE CONTRACTOR SHALL VERIFY ALL CONTROLLING FIELD DIMENSIONS BEFORE ORDERING OR FABRICATING ANY MATERIAL.

LEGEND:

× Indicates Soil Nail location with length of 60'-0"

● Indicates Proof test Nail location

DESIGN	BY MOHAMMAD MUQTADIR	CHECKED DAWIT WORKU	
DETAILS	BY K. FARAHZADI/A. ONG	CHECKED DAWIT WORKU	
QUANTITIES	BY MOHAMMAD MUQTADIR	CHECKED EDDY SCOTT	

STATE OF CALIFORNIA
DEPARTMENT OF TRANSPORTATION

DIVISION OF ENGINEERING SERVICES
STRUCTURE DESIGN
DESIGN BRANCH 20

BRIDGE NO. 53-E0144
POST MILE 41.80

RETAINING WALL NO. 2181
SOIL NAIL ELEVATION NO. 3

STRUCTURES DESIGN DETAIL SHEET (ENGLISH) (REV. 09-01-10)

ORIGINAL SCALE IN INCHES FOR REDUCED PLANS 0 1 2 3

UNIT: 3622
PROJECT NUMBER & PHASE: 0713000007-1
CONTRACT NO.: 1193U1

DISREGARD PRINTS BEARING EARLIER REVISION DATES

REVISION DATES 12/10/13 02/27/14

SHEET 34 OF 53

FILE => 53-E0144-j-sn_elev03.dgn

USERNAME => s125624 DATE PLOTTED => 18-MAY-2015 TIME PLOTTED => 16:38

DIST	COUNTY	ROUTE	POST MILES TOTAL PROJECT	SHEET No.	TOTAL SHEETS
07	LA	10	37.2/42.4	2276	2313

REGISTERED CIVIL ENGINEER 10/01/14 DATE

6-1-15
PLANS APPROVAL DATE

REGISTERED PROFESSIONAL ENGINEER
Dawit T Worku
No. C60711
Exp. 12-31-14
CIVIL
STATE OF CALIFORNIA

The State of California or its officers or agents shall not be responsible for the accuracy or completeness of electronic copies of this plan sheet.

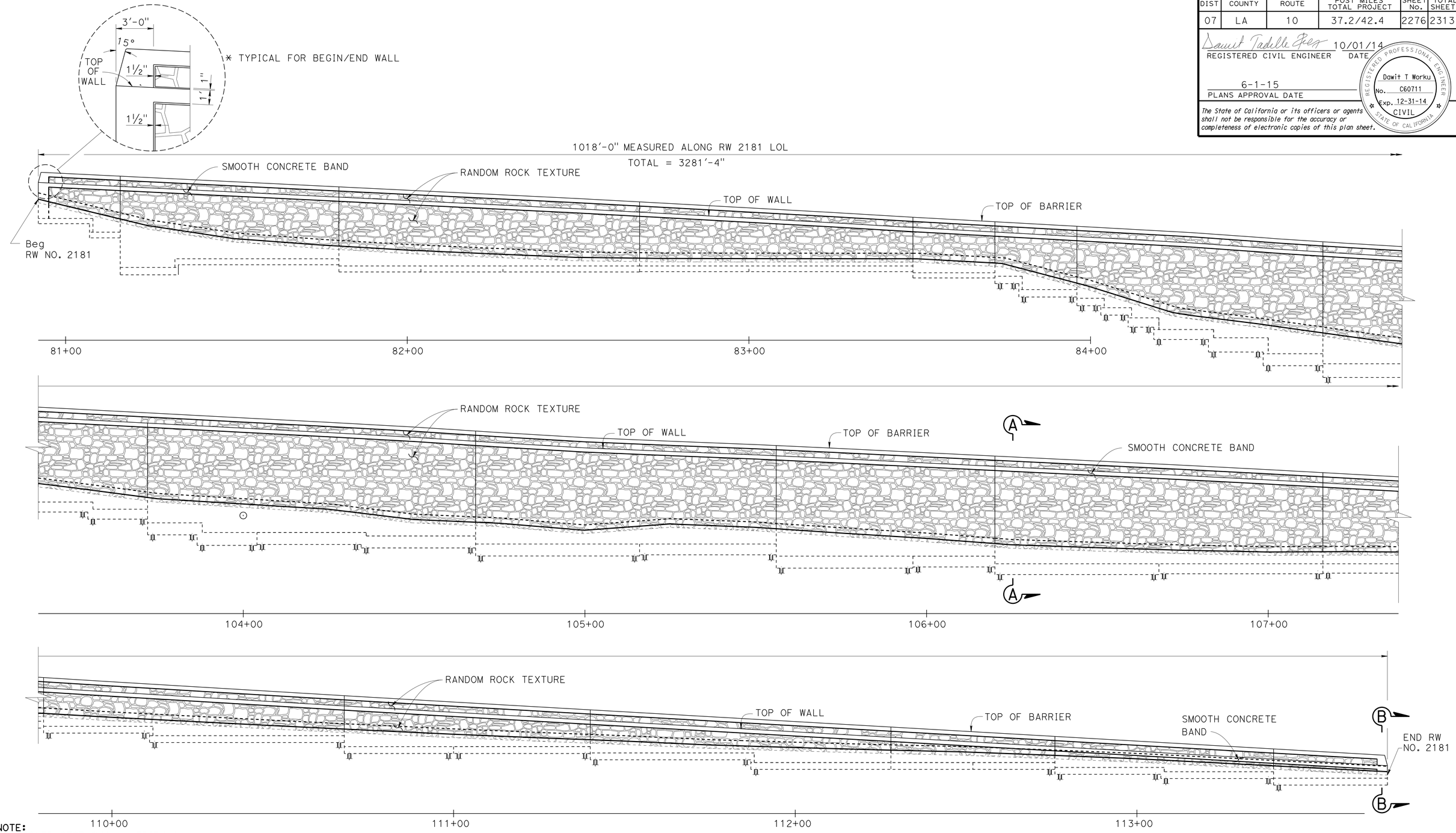

NOTE:
THE CONTRACTOR SHALL VERIFY ALL CONTROLLING FIELD DIMENSIONS BEFORE ORDERING OR FABRICATING ANY MATERIAL.

DEVELOPED PARTIAL ELEVATION

NO SCALE

	BY	CHECKED
DESIGN	VALERIE MOORE	DAWIT WORKU
DETAILS	ANTONETTE L. ONG	DAWIT WORKU
QUANTITIES	MOHAMMAD MUQTADIR	EDDY SCOTT

STATE OF CALIFORNIA
DEPARTMENT OF TRANSPORTATION

DIVISION OF ENGINEERING SERVICES
STRUCTURE DESIGN
DESIGN BRANCH 20

BRIDGE NO. 53-E0144
POST MILE 41.80

RETAINING WALL NO. 2181
ARCHITECTURAL TREATMENT

STRUCTURES DESIGN DETAIL SHEET (ENGLISH) (REV. 09-01-10)

ORIGINAL SCALE IN INCHES FOR REDUCED PLANS 0 1 2 3

UNIT: 3622
PROJECT NUMBER & PHASE: 0713000007-1
CONTRACT NO.: 1193U1

DISREGARD PRINTS BEARING EARLIER REVISION DATES

REVISION DATES 07/26/13 12/12/13 02/11/14

SHEET 35 OF 53

FILE => 53-E0144-u_archt_elev01.dgn

USERNAME => s125624 DATE PLOTTED => 18-MAY-2015 TIME PLOTTED => 16:38

DIST	COUNTY	ROUTE	POST MILES TOTAL PROJECT	SHEET No.	TOTAL SHEETS
07	LA	10	37.2/42.4	2277	2313

REGISTERED CIVIL ENGINEER 10/01/14 DATE

6-1-15
PLANS APPROVAL DATE

REGISTERED PROFESSIONAL ENGINEER
Dawit T Worku
No. C60711
Exp. 12-31-14
CIVIL
STATE OF CALIFORNIA

The State of California or its officers or agents shall not be responsible for the accuracy or completeness of electronic copies of this plan sheet.

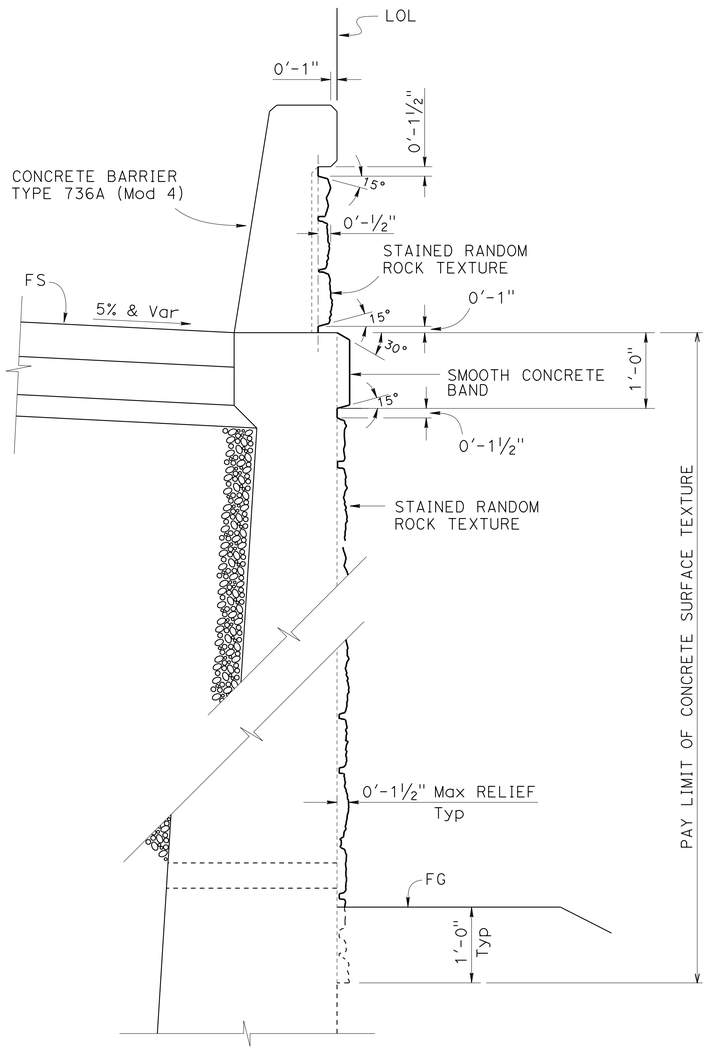

TYPICAL SECTION A-A

1" = 1'-0"

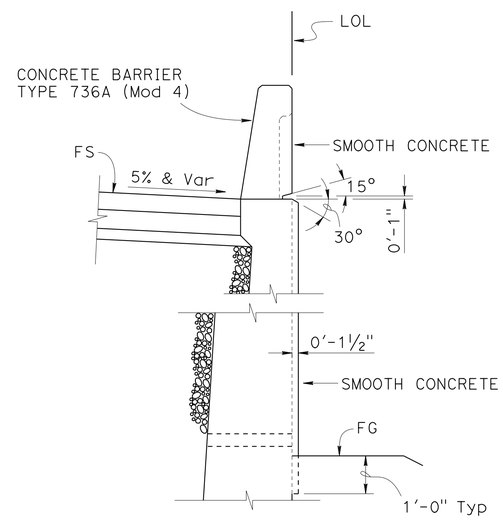

TYPICAL SECTION B-B

1" = ½'-0"

NOTE:

Seamless Random Rock pattern to have a minimum of 2 to maximum of 4 match points (denoted by "M") for each side (top to bottom and side to side).

* STAINED RANDOM ROCK
FS# 33578, 30372, 30257, 30117, 30099
FS (denotes Federal Standard Color)

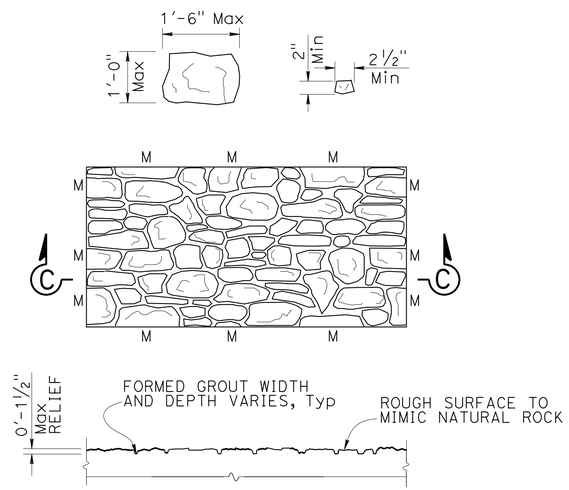

SECTION C-C

RANDOM ROCK TEXTURE

NO SCALE

Limit of staining equals the area of the Random Rock Texture

NOTE:
THE CONTRACTOR SHALL VERIFY ALL CONTROLLING FIELD DIMENSIONS BEFORE ORDERING OR FABRICATING ANY MATERIAL.

	BY	CHECKED
DESIGN	VALERIE MOORE	DAWIT WORKU
DETAILS	ANTONETTE L. ONG	DAWIT WORKU
QUANTITIES	MOHAMMAD MUQTADIR	EDDY SCOTT

STATE OF CALIFORNIA
DEPARTMENT OF TRANSPORTATION

DIVISION OF ENGINEERING SERVICES
STRUCTURE DESIGN
DESIGN BRANCH 20

BRIDGE NO. 53-E0144
POST MILE 40.46

RETAINING WALL NO. 2181
ARCHITECTURAL TREATMENT DETAILS

STRUCTURES DESIGN DETAIL SHEET (ENGLISH) (REV. 09-01-10)

ORIGINAL SCALE IN INCHES FOR REDUCED PLANS 0 1 2 3

UNIT: 3622
PROJECT NUMBER & PHASE: 0713000007-1
CONTRACT NO.: 1193U1

DISREGARD PRINTS BEARING EARLIER REVISION DATES

REVISION DATES: 02/03/14 03/03/14 01/28/15

SHEET 36 OF 53

FILE => 53-E0144-w_archt_dt01.dgn

USERNAME => s125624 DATE PLOTTED => 18-MAY-2015 TIME PLOTTED => 16:38

DIST	COUNTY	ROUTE	POST MILES TOTAL PROJECT	SHEET No.	TOTAL SHEETS
07	LA	10	37.2/42.4	2278	2313

CERTIFIED ENGINEERING GEOLOGIST 2-18-14 DATE

6-1-15
PLANS APPROVAL DATE

PROFESSIONAL GEOLOGIST Michael A. Salisbury No. 2462 Exp. 2-28-15 CERTIFIED ENGINEERING GEOLOGIST STATE OF CALIFORNIA

The State of California or its officers or agents shall not be responsible for the accuracy or completeness of electronic copies of this plan sheet.

This LOTB sheet was prepared in accordance with the Caltrans Soil & Rock Logging, Classification, & Presentation Manual (2010 Edition).

See 2010 Standard Plans A10F and A10G for Soil Legend, and A10H for Rock Legend.

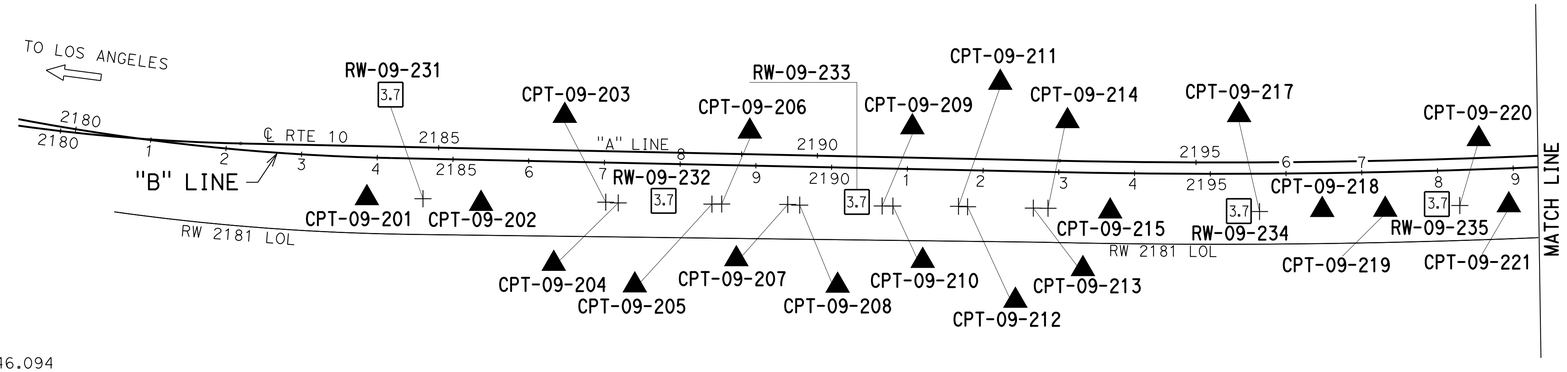

RW-10-201
3.7

BENCH MARKS

SUHV 3008 Elev 946.094
Fd Spk&W E/B I-10 Shldr
61.12′ Rt Sta 2182+45.12 "B" Line
N 1845653.727
E 6614457.785
NAVD 88

SUHV 10539 Elev 821.120
Fd PK N. E/B I-10 Shldr
W of Kellogg Dr Off Gore
61.29′ Rt Sta 2207+10.65 "B" Line
N 1845521.755
E 6616925.861
NAVD 88

SUHV 10538 Elev 775.162
Fd 2x2&T S of R/W CLF E/B
I-10 W of Kellogg Dr.
155.77′ Rt Sta2206+86.36 "B" Line
N 1845426.401
E 6616905.898
NAVD 88

SUHV 1525 Elev 797.898
Fd PK N. in AC Gore area
E/B I-10 W of Kellogg Dr.
73.03′ Rt Sta 2211+41.66 "B" Line
N 1845535.980
E 6617357.570
NAVD 88

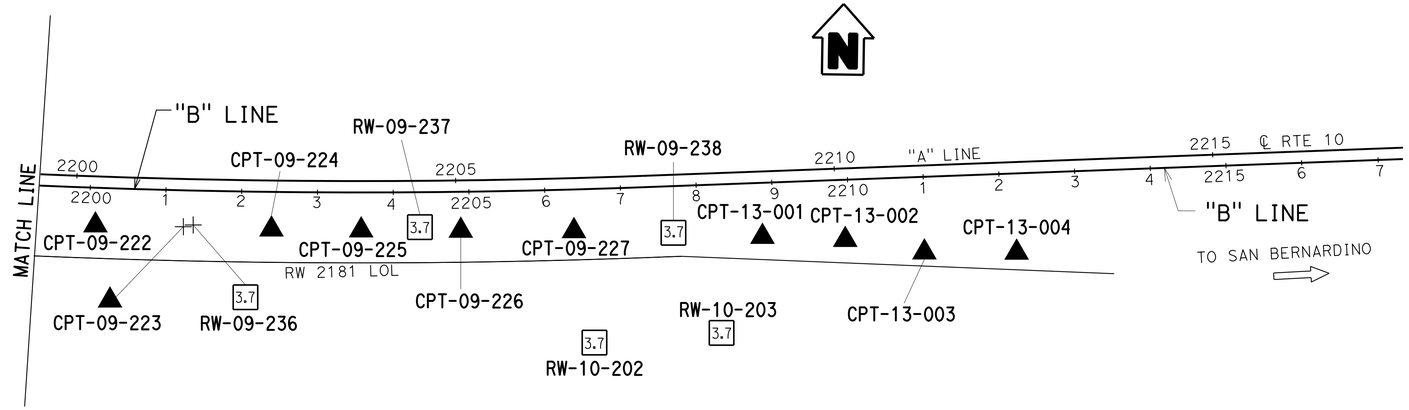

PLAN
1" = 100′

ENGINEERING SERVICES	MATERIALS AND GEOTECHNICAL SERVICES	STATE OF CALIFORNIA DEPARTMENT OF TRANSPORTATION	DIVISION OF ENGINEERING SERVICES STRUCTURE DESIGN DESIGN BRANCH 20	BRIDGE NO. 53-E0144 POST MILE 41.3/41.9	RETAINING WALL NO. 2181
FUNCTIONAL SUPERVISOR NAME: D. Jang	DRAWN BY: I. G-Remmen CHECKED BY: H. Liu	FIELD INVESTIGATION BY: M. Salisbury			LOG OF TEST BORINGS 1 OF 17

OGS CIVIL LOG OF TEST BORINGS SHEET

ORIGINAL SCALE IN INCHES FOR REDUCED PLANS 0 1 2 3

UNIT: 3643
PROJECT NUMBER & PHASE: 07130000071-1 CONTRACT NO.: 07-1193U1

DISREGARD PRINTS BEARING EARLIER REVISION DATES → REVISION DATES 01/26/13 02/18/14 12/19/13 SHEET 37 OF 53

FILE => 53-E0144-z-ltb01.dgn

USERNAME => s125624 DATE PLOTTED => 18-MAY-2015 TIME PLOTTED => 16:38

DIST	COUNTY	ROUTE	POST MILES TOTAL PROJECT	SHEET No.	TOTAL SHEETS
07	LA	10	37.2/42.4	2279	2313

CERTIFIED ENGINEERING GEOLOGIST 2-18-14 DATE

6-1-15
PLANS APPROVAL DATE

PROFESSIONAL GEOLOGIST Michael A. Salisbury No. 2462 Exp. 2-28-15 CERTIFIED ENGINEERING GEOLOGIST STATE OF CALIFORNIA

The State of California or its officers or agents shall not be responsible for the accuracy or completeness of electronic copies of this plan sheet.

FOR PLAN VIEW, SEE
"LOG OF TEST BORINGS 1 OF 17"

Note: No ground water encountered during field investigation.

This LOTB sheet was prepared in accordance with the Caltrans Soil & Rock Logging, Classification, & Presentation Manual (2010 Edition).

See 2010 Standard Plans A10F and A10G for Soil Legend, and A10H for Rock Legend.

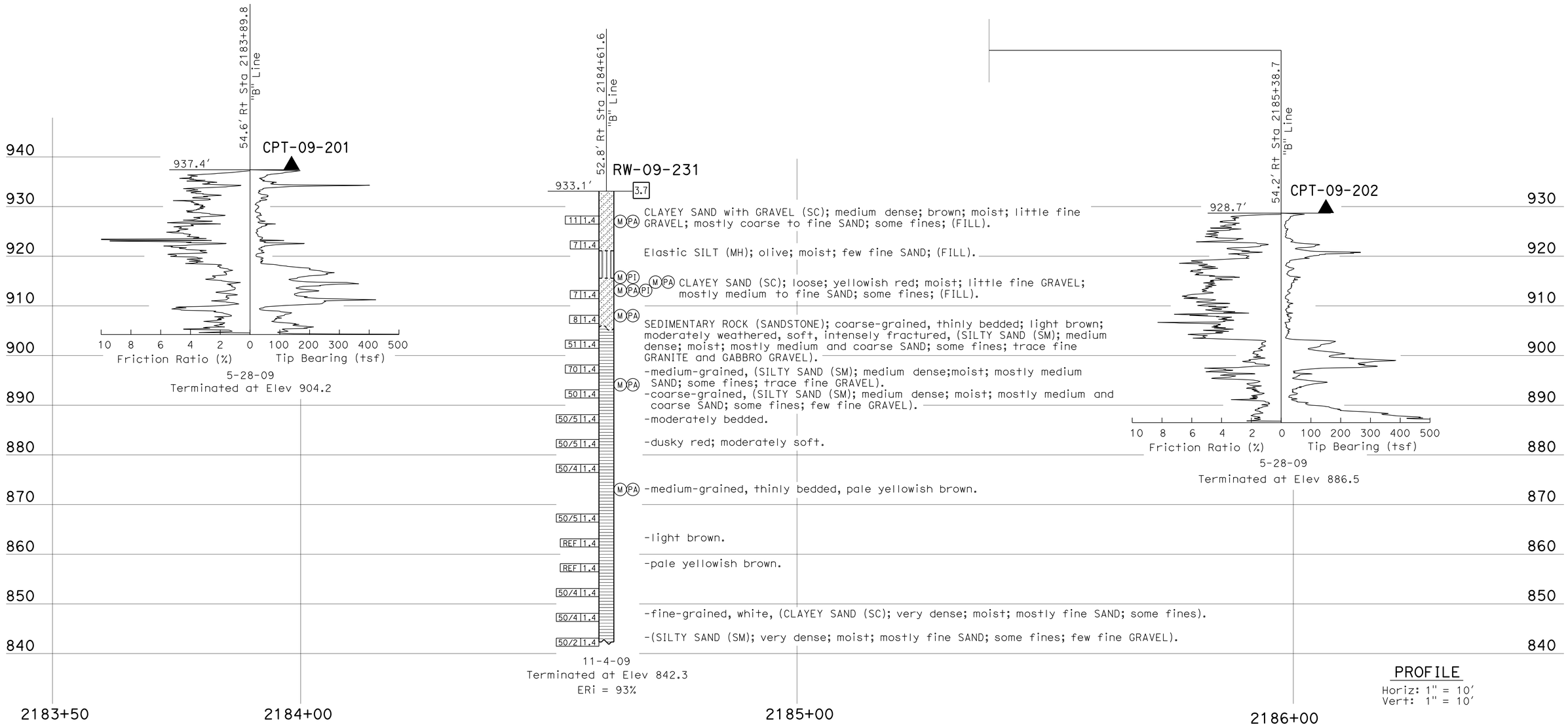

PROFILE
Horiz: 1" = 10'
Vert: 1" = 10'

ENGINEERING SERVICES	MATERIALS AND GEOTECHNICAL SERVICES	STATE OF CALIFORNIA DEPARTMENT OF TRANSPORTATION	DIVISION OF ENGINEERING SERVICES STRUCTURE DESIGN DESIGN BRANCH 20	BRIDGE NO. 53-E0144 POST MILE 41.3/41.9	RETAINING WALL NO. 2181
FUNCTIONAL SUPERVISOR NAME: D. Jang	DRAWN BY: I. G-Remmen CHECKED BY: H. Liu	FIELD INVESTIGATION BY: M. Salisbury			LOG OF TEST BORINGS 2 OF 17

OGS CIVIL LOG OF TEST BORINGS SHEET

ORIGINAL SCALE IN INCHES FOR REDUCED PLANS 0 1 2 3

UNIT: 3643
PROJECT NUMBER & PHASE: 07130000071-1 CONTRACT NO.: 07-1193U1

DISREGARD PRINTS BEARING EARLIER REVISION DATES

REVISION DATES 01/26/13 02/18/14 12/19/13 SHEET 38 OF 53

FILE => 53-E0144-z-ltb02.dgn

USERNAME => s125624 DATE PLOTTED => 18-MAY-2015 TIME PLOTTED => 16:38

DIST	COUNTY	ROUTE	POST MILES TOTAL PROJECT	SHEET No.	TOTAL SHEETS
07	LA	10	37.2/42.4	2280	2313

CERTIFIED ENGINEERING GEOLOGIST 2-18-14 DATE

6-1-15
PLANS APPROVAL DATE

PROFESSIONAL GEOLOGIST Michael A. Salisbury No. 2462 Exp. 2-28-15 CERTIFIED ENGINEERING GEOLOGIST STATE OF CALIFORNIA

The State of California or its officers or agents shall not be responsible for the accuracy or completeness of electronic copies of this plan sheet.

This LOTB sheet was prepared in accordance with the Caltrans Soil & Rock Logging, Classification, & Presentation Manual (2010 Edition).

See 2010 Standard Plans A10F and A10G for Soil Legend, and A10H for Rock Legend.

FOR PLAN VIEW, SEE
"LOG OF TEST BORINGS 1 OF 17"

Note: No ground water encountered during field investigation.

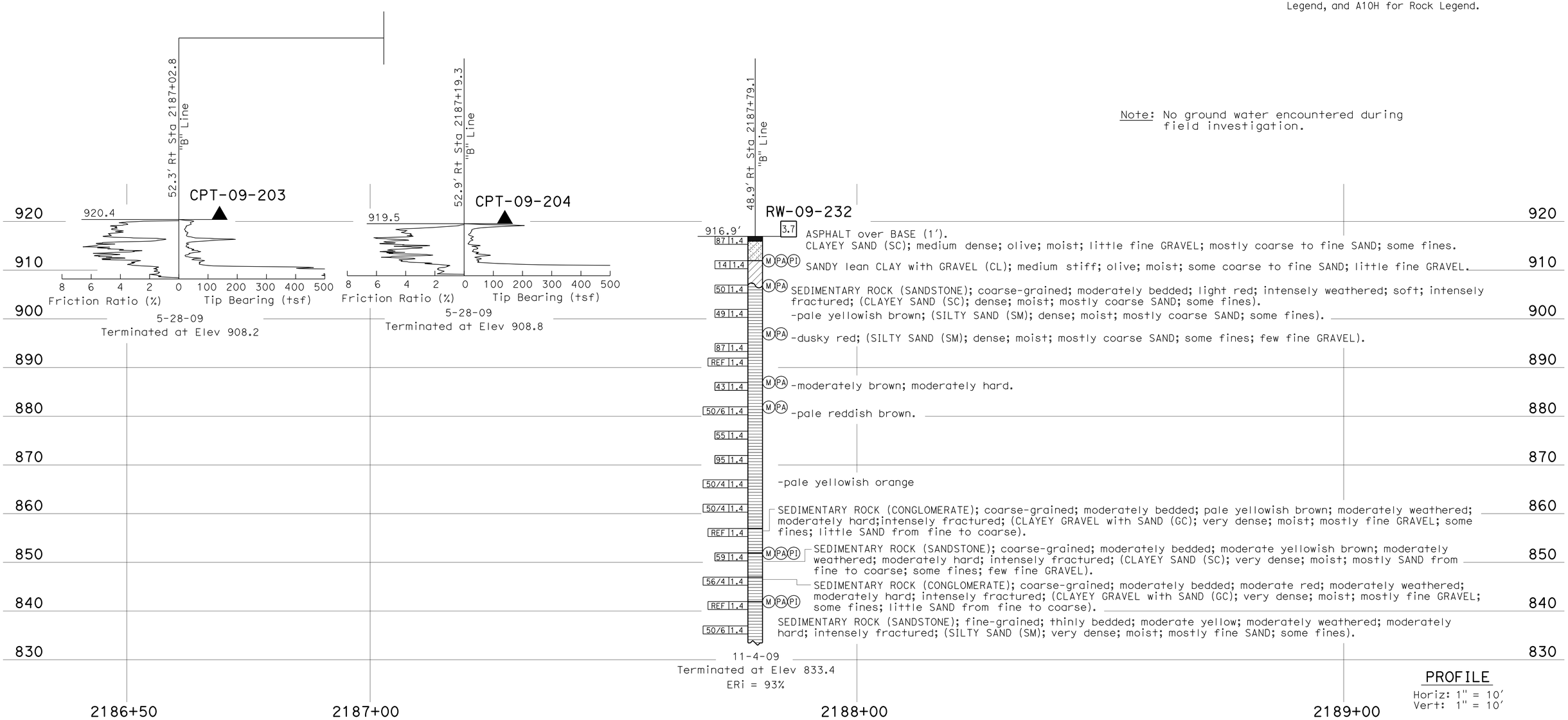

PROFILE
Horiz: 1" = 10'
Vert: 1" = 10'

ENGINEERING SERVICES	MATERIALS AND GEOTECHNICAL SERVICES	STATE OF CALIFORNIA DEPARTMENT OF TRANSPORTATION	DIVISION OF ENGINEERING SERVICES STRUCTURE DESIGN DESIGN BRANCH 20	BRIDGE NO. 53-E0144 POST MILE 41.3/41.9	RETAINING WALL NO. 2181
FUNCTIONAL SUPERVISOR NAME: D. Jang	DRAWN BY: I. G-Remmen CHECKED BY: H. Liu	FIELD INVESTIGATION BY: M. Salisbury			LOG OF TEST BORINGS 3 OF 17

OGS CIVIL LOG OF TEST BORINGS SHEET

ORIGINAL SCALE IN INCHES FOR REDUCED PLANS 0 1 2 3

UNIT: 3643
PROJECT NUMBER & PHASE: 07130000071-1 CONTRACT NO.: 07-1193U1

DISREGARD PRINTS BEARING EARLIER REVISION DATES → REVISION DATES 01/26/13 02/18/14 12/19/13 SHEET 39 OF 53

FILE => 53-E0144-z-ltb03.dgn

USERNAME => s125624 DATE PLOTTED => 18-MAY-2015 TIME PLOTTED => 16:38

DIST	COUNTY	ROUTE	POST MILES TOTAL PROJECT	SHEET No.	TOTAL SHEETS
07	LA	10	37.2/42.4	2281	2313

CERTIFIED ENGINEERING GEOLOGIST — DATE 2-18-14

PROFESSIONAL GEOLOGIST — Michael A. Salisbury — No. 2462 — Exp. 2-28-15 — CERTIFIED ENGINEERING GEOLOGIST — STATE OF CALIFORNIA

6-1-15
PLANS APPROVAL DATE

The State of California or its officers or agents shall not be responsible for the accuracy or completeness of electronic copies of this plan sheet.

This LOTB sheet was prepared in accordance with the Caltrans Soil & Rock Logging, Classification, & Presentation Manual (2010 Edition).

See 2010 Standard Plans A10F and A10G for Soil Legend, and A10H for Rock Legend.

FOR PLAN VIEW, SEE
"LOG OF TEST BORINGS 1 OF 17"

Note: No ground water encountered during field investigation.

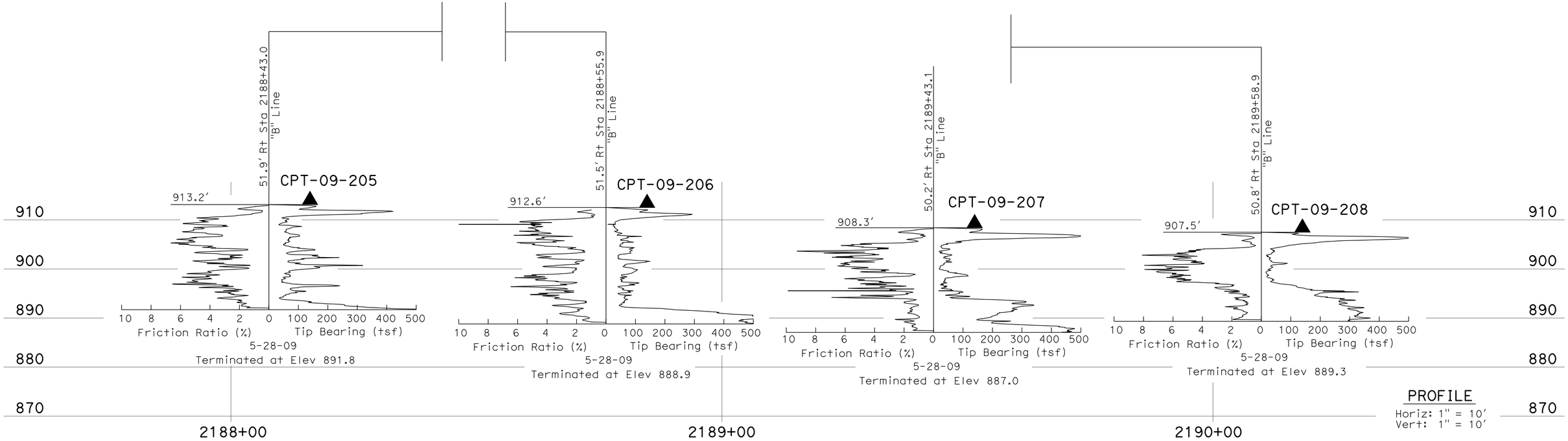

PROFILE
Horiz: 1" = 10'
Vert: 1" = 10'

ENGINEERING SERVICES	MATERIALS AND GEOTECHNICAL SERVICES	STATE OF CALIFORNIA DEPARTMENT OF TRANSPORTATION	DIVISION OF ENGINEERING SERVICES STRUCTURE DESIGN DESIGN BRANCH 20	BRIDGE NO. 53-E0144 POST MILE 41.3/41.9	RETAINING WALL NO. 2181
FUNCTIONAL SUPERVISOR NAME: D. Jang	DRAWN BY: W. Tang, I. G-Remmen CHECKED BY: H. Liu	FIELD INVESTIGATION BY: M. Salisbury			LOG OF TEST BORINGS 4 OF 17

OGS CIVIL LOG OF TEST BORINGS SHEET

ORIGINAL SCALE IN INCHES FOR REDUCED PLANS 0 1 2 3

UNIT: 3643
PROJECT NUMBER & PHASE: 07130000071-1 CONTRACT NO.: 07-1193U1

DISREGARD PRINTS BEARING EARLIER REVISION DATES → REVISION DATES 01/26/13 02/18/14 12/19/13 SHEET 40 OF 53

FILE => 53-E0144-z-ltb04.dgn

USERNAME => s125624 DATE PLOTTED => 18-MAY-2015 TIME PLOTTED => 16:38

DIST	COUNTY	ROUTE	POST MILES TOTAL PROJECT	SHEET No.	TOTAL SHEETS
07	LA	10	37.2/42.4	2282	2313

CERTIFIED ENGINEERING GEOLOGIST — DATE 2-18-14

PROFESSIONAL GEOLOGIST — Michael A. Salisbury — No. 2462 — Exp. 2-28-15 — CERTIFIED ENGINEERING GEOLOGIST — STATE OF CALIFORNIA

6-1-15
PLANS APPROVAL DATE

The State of California or its officers or agents shall not be responsible for the accuracy or completeness of electronic copies of this plan sheet.

This LOTB sheet was prepared in accordance with the Caltrans Soil & Rock Logging; Classification; & Presentation Manual (2010 Edition).

See 2010 Standard Plans A10F and A10G for Soil Legend; and A10H for Rock Legend.

FOR PLAN VIEW, SEE
"LOG OF TEST BORINGS 1 OF 17"

Note: No ground water encountered during field investigation.

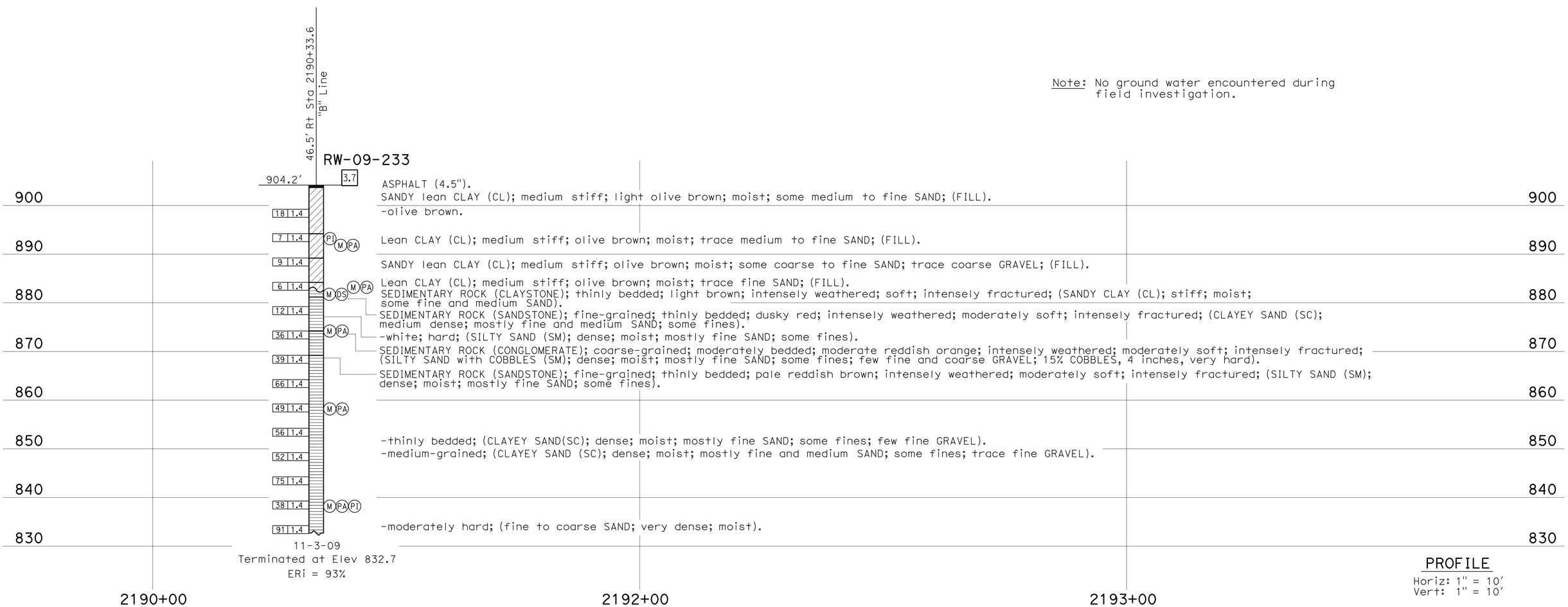

PROFILE
Horiz: 1" = 10'
Vert: 1" = 10'

ENGINEERING SERVICES	MATERIALS AND GEOTECHNICAL SERVICES	STATE OF CALIFORNIA DEPARTMENT OF TRANSPORTATION	DIVISION OF ENGINEERING SERVICES STRUCTURE DESIGN DESIGN BRANCH 20	BRIDGE NO. 53-E0144 POST MILE 41.3/41.9	RETAINING WALL NO. 2181
FUNCTIONAL SUPERVISOR NAME: D. Jang	DRAWN BY: I. G-Remmen CHECKED BY: H. Liu	FIELD INVESTIGATION BY: M. Salisbury			LOG OF TEST BORINGS 5 OF 17

OGS CIVIL LOG OF TEST BORINGS SHEET

ORIGINAL SCALE IN INCHES FOR REDUCED PLANS 0 1 2 3

UNIT: 3643
PROJECT NUMBER & PHASE: 07130000071-1 CONTRACT NO.: 07-1193U1

DISREGARD PRINTS BEARING EARLIER REVISION DATES → 01/26/13 02/18/14 12/19/13

SHEET 41 OF 53

FILE => 53-E0144-z-ltb05.dgn

USERNAME => s125624 DATE PLOTTED => 18-MAY-2015 TIME PLOTTED => 16:38

DIST	COUNTY	ROUTE	POST MILES TOTAL PROJECT	SHEET No.	TOTAL SHEETS
07	LA	10	37.2/42.4	2283	2313

CERTIFIED ENGINEERING GEOLOGIST 2-18-14 DATE

6-1-15
PLANS APPROVAL DATE

PROFESSIONAL GEOLOGIST
Michael A. Salisbury
No. 2462
Exp. 2-28-15
CERTIFIED ENGINEERING GEOLOGIST
STATE OF CALIFORNIA

The State of California or its officers or agents shall not be responsible for the accuracy or completeness of electronic copies of this plan sheet.

This LOTB sheet was prepared in accordance with the Caltrans Soil & Rock Logging, Classification, & Presentation Manual (2010 Edition).

See 2010 Standard Plans A10F and A10G for Soil Legend, and A10H for Rock Legend.

FOR PLAN VIEW, SEE
"LOG OF TEST BORINGS 1 OF 17"

Note: No ground water encountered during field investigation.

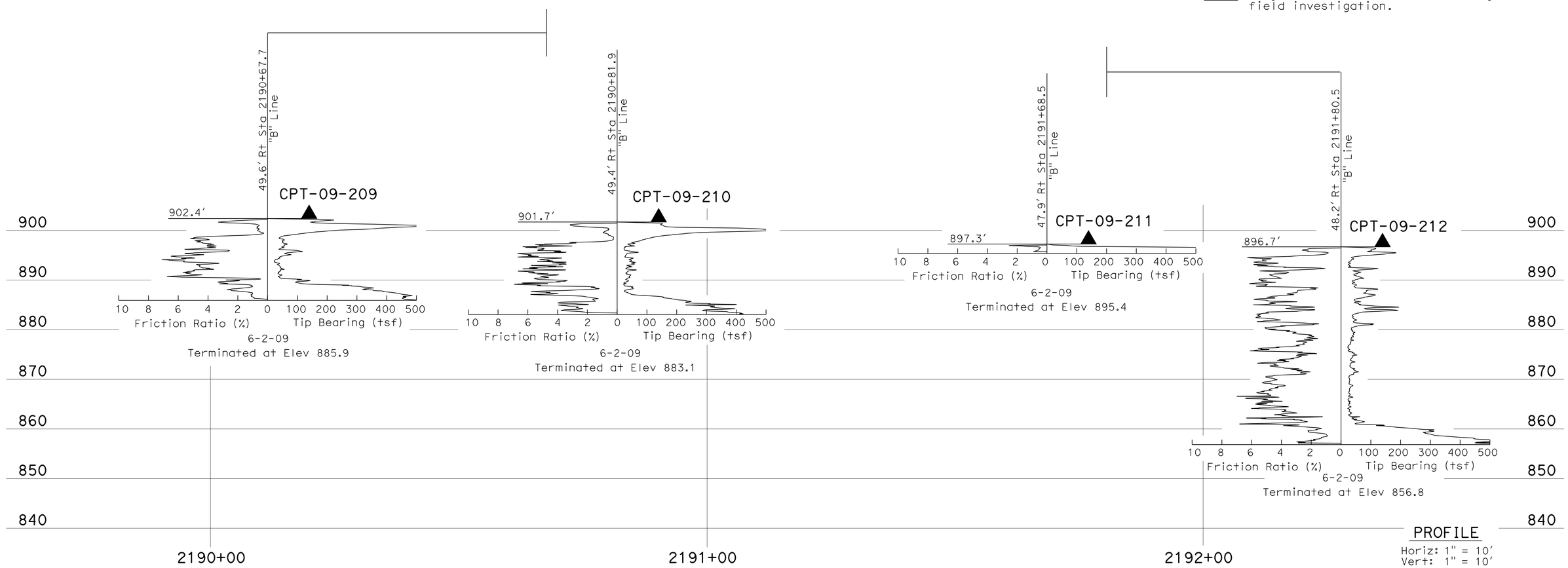

ENGINEERING SERVICES	MATERIALS AND GEOTECHNICAL SERVICES	STATE OF CALIFORNIA DEPARTMENT OF TRANSPORTATION	DIVISION OF ENGINEERING SERVICES STRUCTURE DESIGN DESIGN BRANCH 20	BRIDGE NO. 53-E0144 POST MILE 41.3/41.9	RETAINING WALL NO. 2181
FUNCTIONAL SUPERVISOR NAME: D. Jang	DRAWN BY: W. Tang, I. G-Remmen CHECKED BY: H. Liu	FIELD INVESTIGATION BY: M. Salisbury			LOG OF TEST BORINGS 6 OF 17

OGS CIVIL LOG OF TEST BORINGS SHEET

ORIGINAL SCALE IN INCHES FOR REDUCED PLANS 0 1 2 3

UNIT: 3643
PROJECT NUMBER & PHASE: 07130000071-1 CONTRACT NO.: 07-1193U1

DISREGARD PRINTS BEARING EARLIER REVISION DATES

REVISION DATES 07/26/13 02/18/14 12/19/13

SHEET 42 OF 53

FILE => 53-E0144-z-ltb06.dgn

USERNAME => s125624 DATE PLOTTED => 18-MAY-2015 TIME PLOTTED => 16:38

DIST	COUNTY	ROUTE	POST MILES TOTAL PROJECT	SHEET No.	TOTAL SHEETS
07	LA	10	37.2/42.4	2284	2313

CERTIFIED ENGINEERING GEOLOGIST 2-18-14 DATE

6-1-15
PLANS APPROVAL DATE

PROFESSIONAL GEOLOGIST Michael A. Salisbury No. 2462 Exp. 2-28-15 CERTIFIED ENGINEERING GEOLOGIST STATE OF CALIFORNIA

The State of California or its officers or agents shall not be responsible for the accuracy or completeness of electronic copies of this plan sheet.

This LOTB sheet was prepared in accordance with the Caltrans Soil & Rock Logging, Classification, & Presentation Manual (2010 Edition).

See 2010 Standard Plans A10F and A10G for Soil Legend, and A10H for Rock Legend.

FOR PLAN VIEW, SEE
"LOG OF TEST BORINGS 1 OF 17"

Note: No ground water encountered during field investigation.

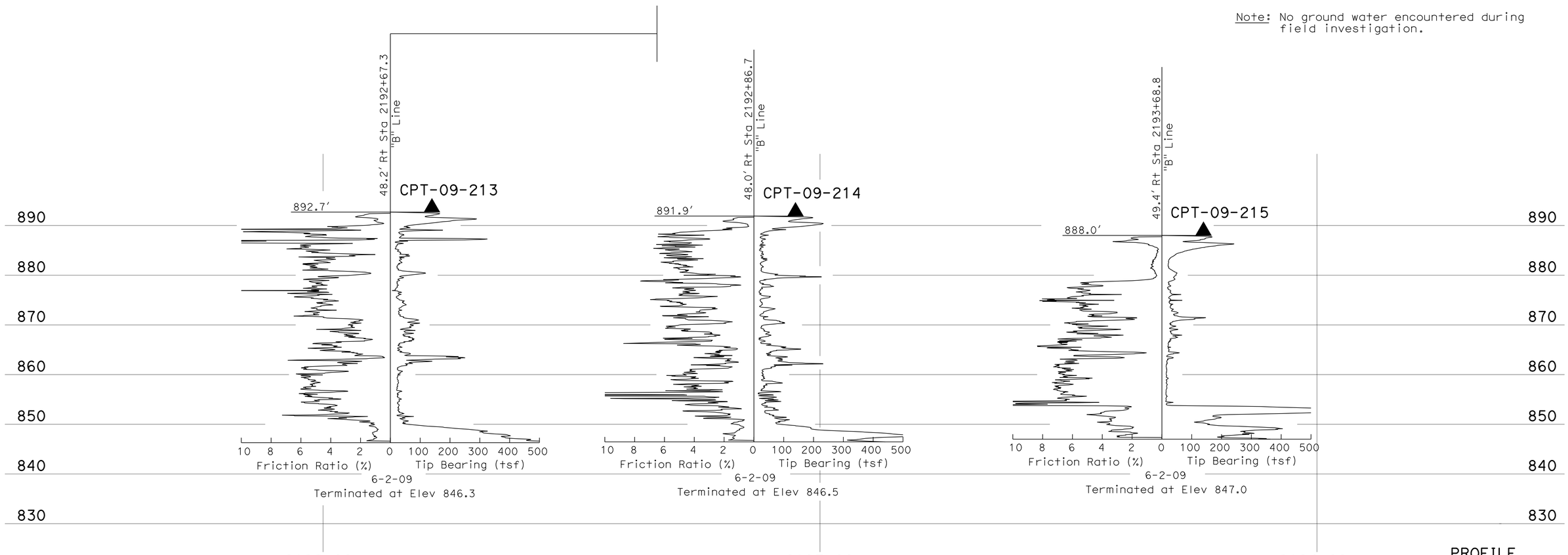

PROFILE
Horiz: 1" = 10'
Vert: 1" = 10'

ENGINEERING SERVICES	MATERIALS AND GEOTECHNICAL SERVICES	STATE OF CALIFORNIA DEPARTMENT OF TRANSPORTATION	DIVISION OF ENGINEERING SERVICES STRUCTURE DESIGN DESIGN BRANCH 20	BRIDGE NO. 53-E0144 POST MILE 41.3/41.9	RETAINING WALL NO. 2181
FUNCTIONAL SUPERVISOR	DRAWN BY: W. Tang, I. G-Remmen	FIELD INVESTIGATION BY:			LOG OF TEST BORINGS 7 OF 17
NAME: D. Jang	CHECKED BY: H. Liu	M. Salisbury			

OGS CIVIL LOG OF TEST BORINGS SHEET

ORIGINAL SCALE IN INCHES FOR REDUCED PLANS 0 1 2 3

UNIT: 3643
PROJECT NUMBER & PHASE: 07130000071-1 CONTRACT NO.: 07-1193U1

DISREGARD PRINTS BEARING EARLIER REVISION DATES

REVISION DATES 07/26/13 02/18/14 12/24/13 SHEET 43 OF 53

FILE => 53-E0144-z-ltb07.dgn

USERNAME => s125624 DATE PLOTTED => 18-MAY-2015 TIME PLOTTED => 16:38

DIST	COUNTY	ROUTE	POST MILES TOTAL PROJECT	SHEET No.	TOTAL SHEETS
07	LA	10	37.2/42.4	2285	2313

CERTIFIED ENGINEERING GEOLOGIST 2-18-14 DATE

6-1-15
PLANS APPROVAL DATE

PROFESSIONAL GEOLOGIST Michael A. Salisbury No. 2462 Exp. 2-28-15 CERTIFIED ENGINEERING GEOLOGIST STATE OF CALIFORNIA

The State of California or its officers or agents shall not be responsible for the accuracy or completeness of electronic copies of this plan sheet.

This LOTB sheet was prepared in accordance with the Caltrans Soil & Rock Logging; Classification; & Presentation Manual (2010 Edition).

See 2010 Standard Plans A10F and A10G for Soil Legend; and A10H for Rock Legend.

FOR PLAN VIEW, SEE
"LOG OF TEST BORINGS 1 OF 17"

Note: No ground water encountered during field investigation.

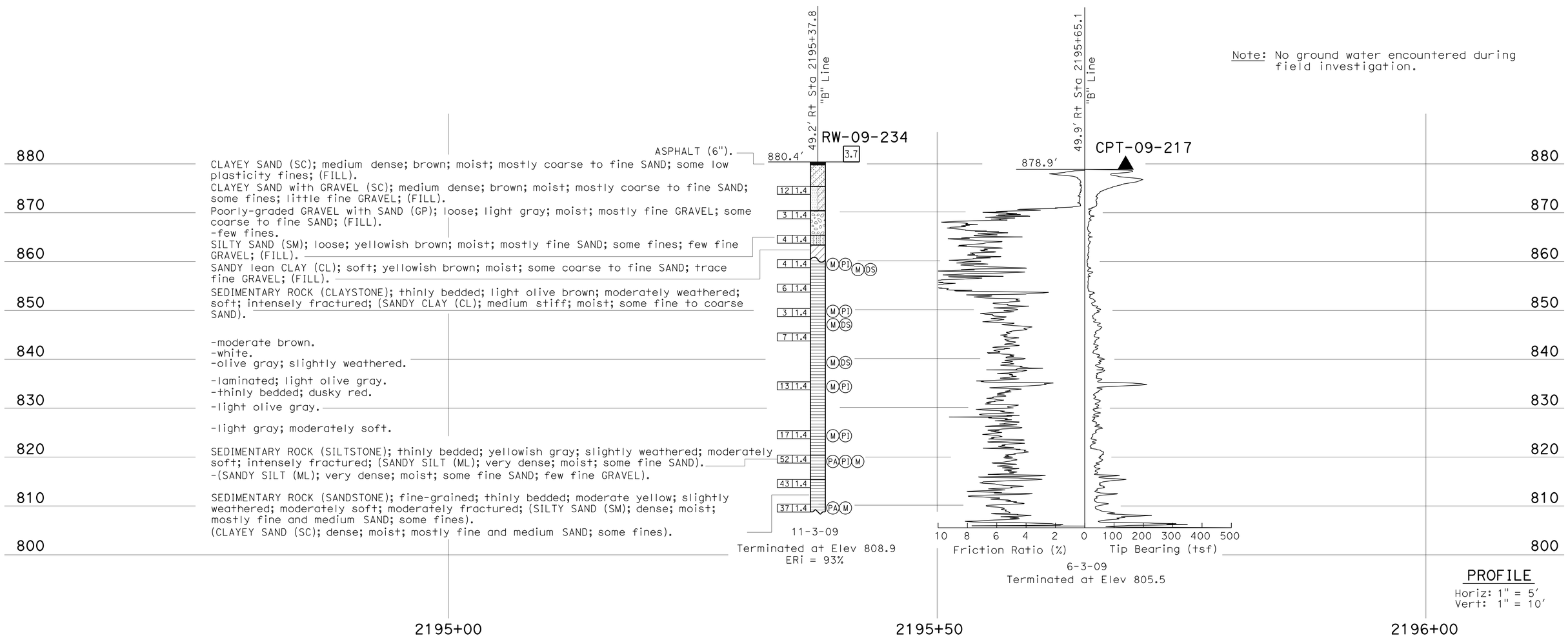

ENGINEERING SERVICES	MATERIALS AND GEOTECHNICAL SERVICES	STATE OF CALIFORNIA DEPARTMENT OF TRANSPORTATION	DIVISION OF ENGINEERING SERVICES STRUCTURE DESIGN DESIGN BRANCH 20	BRIDGE NO. 53-E0144 POST MILE 41.3/41.9	RETAINING WALL NO. 2181
FUNCTIONAL SUPERVISOR NAME: D. Jang	DRAWN BY: W. Tang, I. G-Remmen CHECKED BY: H. Liu	FIELD INVESTIGATION BY: M. Salisbury			LOG OF TEST BORINGS 8 OF 17

OGS CIVIL LOG OF TEST BORINGS SHEET

ORIGINAL SCALE IN INCHES FOR REDUCED PLANS 0 1 2 3

UNIT: 3643
PROJECT NUMBER & PHASE: 07130000071-1 CONTRACT NO.: 07-1193U1

DISREGARD PRINTS BEARING EARLIER REVISION DATES

REVISION DATES 07/26/13 02/18/14 12/19/13 SHEET 44 OF 53

FILE => 53-E0144-z-ltb08.dgn

USERNAME => s125624 DATE PLOTTED => 18-MAY-2015 TIME PLOTTED => 16:38

DIST	COUNTY	ROUTE	POST MILES TOTAL PROJECT	SHEET No.	TOTAL SHEETS
07	LA	10	37.2/42.4	2286	2313

CERTIFIED ENGINEERING GEOLOGIST 2-18-14 DATE

6-1-15
PLANS APPROVAL DATE

PROFESSIONAL GEOLOGIST Michael A. Salisbury No. 2462 Exp. 2-28-15 CERTIFIED ENGINEERING GEOLOGIST STATE OF CALIFORNIA

The State of California or its officers or agents shall not be responsible for the accuracy or completeness of electronic copies of this plan sheet.

This LOTB sheet was prepared in accordance with the Caltrans Soil & Rock Logging; Classification; & Presentation Manual (2010 Edition).

See 2010 Standard Plans A10F and A10G for Soil Legend; and A10H for Rock Legend.

FOR PLAN VIEW, SEE
"LOG OF TEST BORINGS 1 OF 17"

Note: No ground water encountered during field investigation.

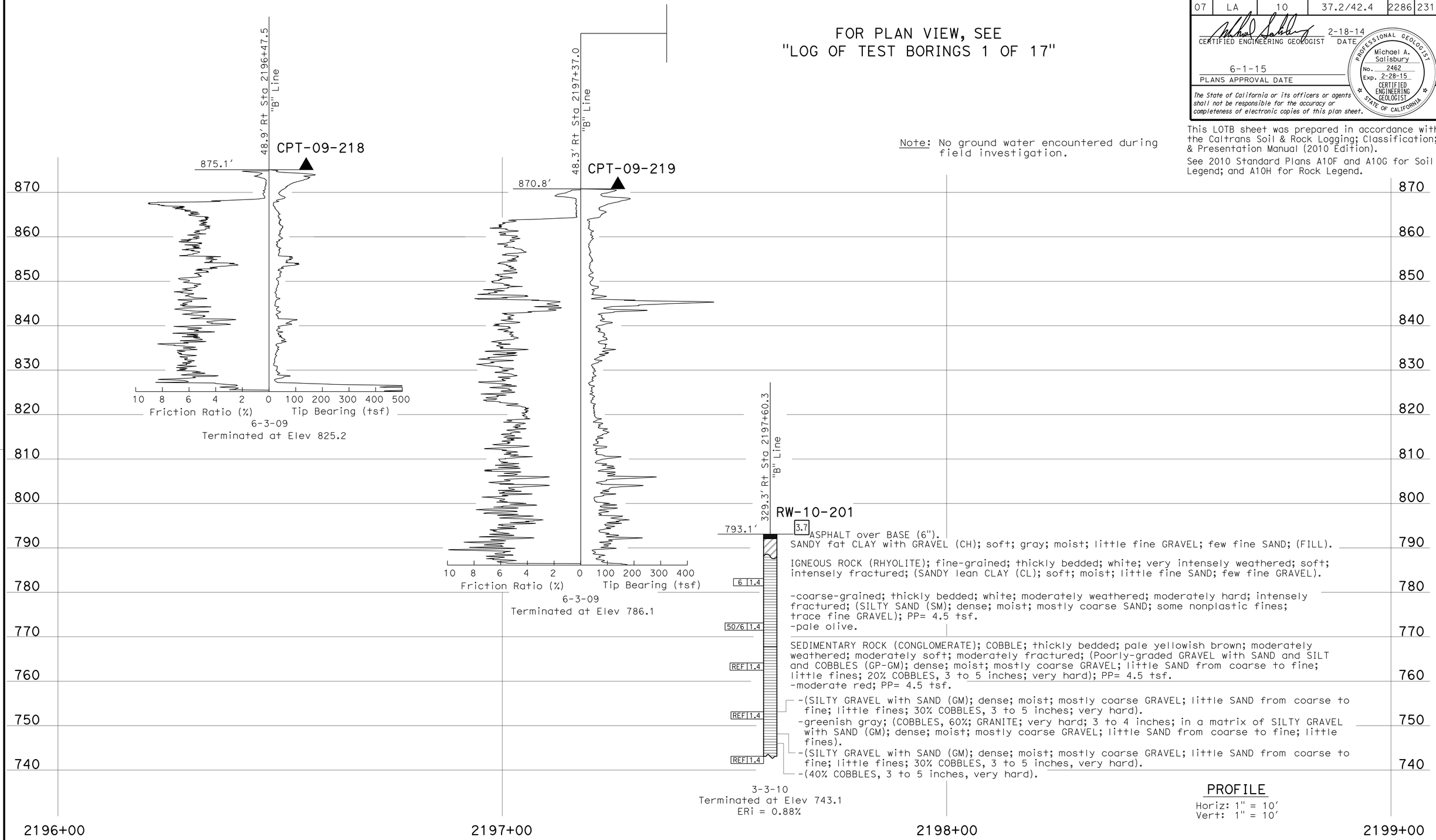

PROFILE
Horiz: 1" = 10'
Vert: 1" = 10'

ENGINEERING SERVICES	MATERIALS AND GEOTECHNICAL SERVICES	STATE OF CALIFORNIA DEPARTMENT OF TRANSPORTATION	DIVISION OF ENGINEERING SERVICES STRUCTURE DESIGN DESIGN BRANCH 20	BRIDGE NO. 53-E0144 POST MILE 41.3/41.9	RETAINING WALL NO. 2181
FUNCTIONAL SUPERVISOR NAME: D. Jang	DRAWN BY: I. G-Remmen CHECKED BY: H. Liu	FIELD INVESTIGATION BY: M. Salisbury			LOG OF TEST BORINGS 9 OF 17

OGS CIVIL LOG OF TEST BORINGS SHEET

ORIGINAL SCALE IN INCHES FOR REDUCED PLANS 0 1 2 3

UNIT: 3643
PROJECT NUMBER & PHASE: 07130000071-1 CONTRACT NO.: 07-1193U1

DISREGARD PRINTS BEARING EARLIER REVISION DATES

REVISION DATES 07/26/13 02/18/14 12/19/13 SHEET 45 OF 53

FILE => 53-E0144-z-ltb09.dgn

USERNAME => s125624 DATE PLOTTED => 18-MAY-2015 TIME PLOTTED => 16:38

DIST	COUNTY	ROUTE	POST MILES TOTAL PROJECT	SHEET No.	TOTAL SHEETS
07	LA	10	37.2/42.4	2287	2313

CERTIFIED ENGINEERING GEOLOGIST — DATE 2-18-14

PROFESSIONAL GEOLOGIST — Michael A. Salisbury — No. 2462 — Exp. 2-28-15 — CERTIFIED ENGINEERING GEOLOGIST — STATE OF CALIFORNIA

6-1-15
PLANS APPROVAL DATE

The State of California or its officers or agents shall not be responsible for the accuracy or completeness of electronic copies of this plan sheet.

This LOTB sheet was prepared in accordance with the Caltrans Soil & Rock Logging; Classification; & Presentation Manual (2010 Edition).
See 2010 Standard Plans A10F and A10G for Soil Legend; and A10H for Rock Legend.

FOR PLAN VIEW, SEE
"LOG OF TEST BORINGS 1 OF 17"

NOTE: Boring RW-09-235 was converted to Piezometer. Groundwater was measured at Elev 807.5′ on 1- 07-2013.

PROFILE
Horiz: 1" = 10′
Vert: 1" = 10′

ENGINEERING SERVICES	MATERIALS AND GEOTECHNICAL SERVICES	STATE OF CALIFORNIA DEPARTMENT OF TRANSPORTATION	DIVISION OF ENGINEERING SERVICES STRUCTURE DESIGN DESIGN BRANCH 20	BRIDGE NO. 53-E0144 POST MILE 41.3/41.9	RETAINING WALL NO. 2181
FUNCTIONAL SUPERVISOR NAME: D. Jang	DRAWN BY: I. G-Remmen CHECKED BY: H. Liu	FIELD INVESTIGATION BY: M. Salisbury			LOG OF TEST BORINGS 10 OF 17

OGS CIVIL LOG OF TEST BORINGS SHEET — ORIGINAL SCALE IN INCHES FOR REDUCED PLANS 0 1 2 3

UNIT: 3643
PROJECT NUMBER & PHASE: 07130000071-1 CONTRACT NO.: 07-1193U1

DISREGARD PRINTS BEARING EARLIER REVISION DATES → REVISION DATES 07/26/13 02/18/14 12/19/13 — SHEET 46 OF 53

FILE => 53-E0144-z-ltb10.dgn

USERNAME => s125624 DATE PLOTTED => 18-MAY-2015 TIME PLOTTED => 16:38

DIST	COUNTY	ROUTE	POST MILES TOTAL PROJECT	SHEET No.	TOTAL SHEETS
07	LA	10	37.2/42.4	2288	2313

CERTIFIED ENGINEERING GEOLOGIST 2-18-14 DATE

6-1-15
PLANS APPROVAL DATE

PROFESSIONAL GEOLOGIST Michael A. Salisbury No. 2462 Exp. 2-28-15 CERTIFIED ENGINEERING GEOLOGIST STATE OF CALIFORNIA

The State of California or its officers or agents shall not be responsible for the accuracy or completeness of electronic copies of this plan sheet.

This LOTB sheet was prepared in accordance with the Caltrans Soil & Rock Logging; Classification; & Presentation Manual (2010 Edition).

See 2010 Standard Plans A10F and A10G for Soil Legend; and A10H for Rock Legend.

FOR PLAN VIEW, SEE
"LOG OF TEST BORINGS 1 OF 17"

Note: No ground water encountered during field investigation.

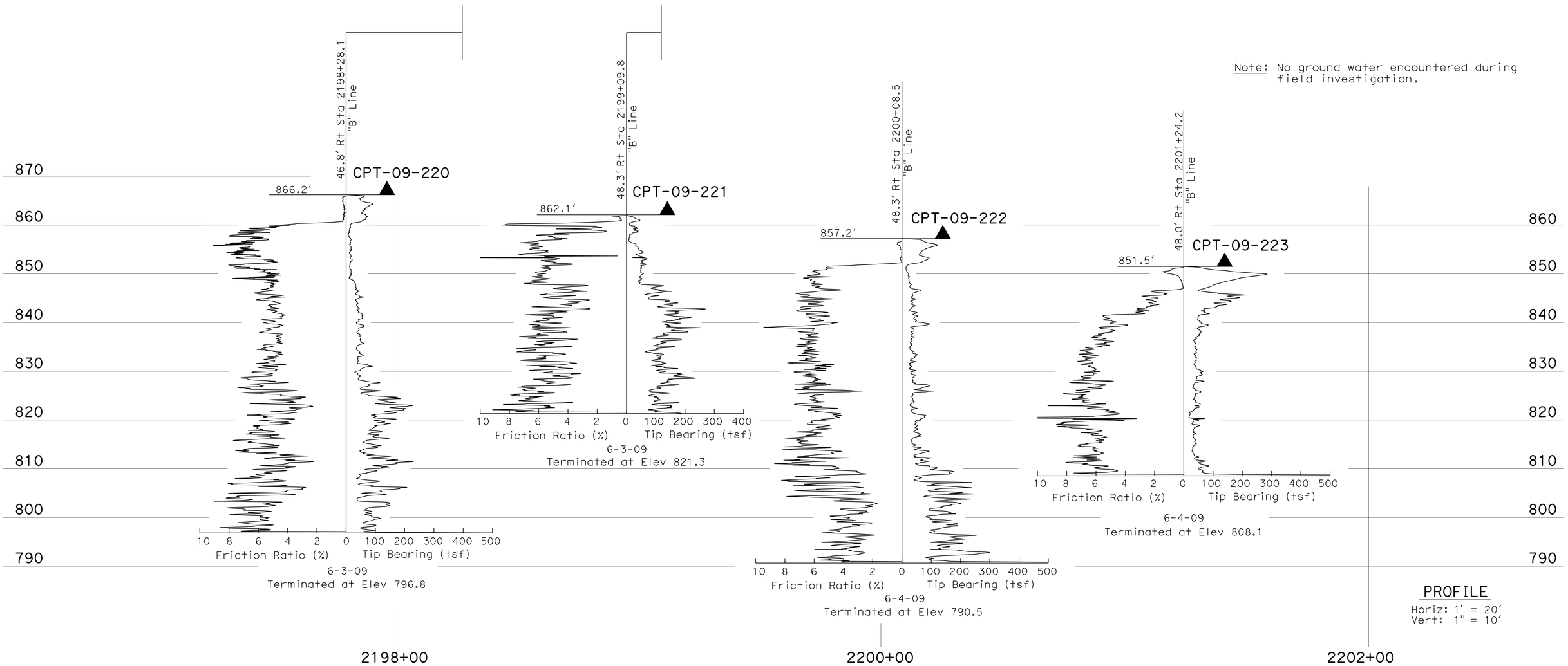

PROFILE
Horiz: 1" = 20'
Vert: 1" = 10'

ENGINEERING SERVICES	MATERIALS AND GEOTECHNICAL SERVICES	STATE OF CALIFORNIA DEPARTMENT OF TRANSPORTATION	DIVISION OF ENGINEERING SERVICES STRUCTURE DESIGN DESIGN BRANCH 20	BRIDGE NO. 53-E0144 POST MILE 41.3/41.9	RETAINING WALL NO. 2181 LOG OF TEST BORINGS 11 OF 17
FUNCTIONAL SUPERVISOR NAME: D. Jang	DRAWN BY: W. Tang, I. G-Remmen CHECKED BY: H. Liu	FIELD INVESTIGATION BY: M. Salisbury			
OGS CIVIL LOG OF TEST BORINGS SHEET	ORIGINAL SCALE IN INCHES FOR REDUCED PLANS 0 1 2 3	UNIT: 3643 PROJECT NUMBER & PHASE: 07130000071-1 CONTRACT NO.: 07-1193U1	DISREGARD PRINTS BEARING EARLIER REVISION DATES	REVISION DATES 07/26/13 02/18/14 12/23/13	SHEET 47 OF 53

FILE => 53-E0144-z-ltb11.dgn

USERNAME => s125624 DATE PLOTTED => 18-MAY-2015 TIME PLOTTED => 16:38

DIST	COUNTY	ROUTE	POST MILES TOTAL PROJECT	SHEET No.	TOTAL SHEETS
07	LA	10	37.2/42.4	2289	2313

CERTIFIED ENGINEERING GEOLOGIST 2-18-14 DATE

6-1-15
PLANS APPROVAL DATE

PROFESSIONAL GEOLOGIST Michael A. Salisbury No. 2462 Exp. 2-28-15 CERTIFIED ENGINEERING GEOLOGIST STATE OF CALIFORNIA

The State of California or its officers or agents shall not be responsible for the accuracy or completeness of electronic copies of this plan sheet.

This LOTB sheet was prepared in accordance with the Caltrans Soil & Rock Logging; Classification; & Presentation Manual (2010 Edition).

See 2010 Standard Plans A10F and A10G for Soil Legend; and A10H for Rock Legend.

FOR PLAN VIEW, SEE
"LOG OF TEST BORINGS 1 OF 17"

Note: No ground water encountered during field investigation.

45.4' Rt Sta 2201+37.1 "B" Line

RW-09-236

850.8'

3.7 ASPHALT (6").

SILTY SAND (SM); loose; light brown; moist; mostly coarse to fine SAND; some fines; (FILL).

8 1.4 SANDY SILT (ML); loose; white; moist; some fine SAND; (FILL).

M SEDIMENTARY ROCK (SILTSTONE); moderately bedded; medium gray; intensely weathered; soft; intensely fractured; (SANDY SILT (ML); very stiff; moist; some fine SAND).

9 1.4

M CU -thinly bedded; moderately weathered.

15 1.4 PI M

-white; (SANDY SILT (ML); very stiff; moist; some fine SAND; few coarse GRAVEL).

11 1.4 -greenish gray; (SILT with SAND (ML); very stiff; moist; little fine SAND).

PI M DS SEDIMENTARY ROCK (CLAYSTONE); thinly bedded; greenish gray; moderately weathered; moderately soft; moderately fractured; (Lean CLAY with SAND (CL); very stiff; moist; little fine SAND).

14 1.4 PI M SEDIMENTARY ROCK (SILTSTONE); thinly bedded; light brown; moderately weathered; soft; moderately fractured; (SILT with SAND (ML); very stiff; moist; little fine SAND).

M -thinly bedded, dipping 47°; moderately soft.

18 1.4

M CU SEDIMENTARY ROCK (SHALE); thinly bedded; dark gray; slightly weathered; moderately soft; moderately fractured; (Lean CLAY with SAND (CL); very stiff; moist; little fine SAND); PP= 3.75 tsf.

27 1.4 M PI

SEDIMENTARY ROCK (SILTSTONE); thinly bedded; dark gray; slightly weathered; moderately soft; moderately fractured; (SILT with SAND (ML); hard; moist; little fine SAND); PP= 4.5 tsf.

48 1.4 M PI SEDIMENTARY ROCK (SHALE); thinly bedded; dark gray; slightly weathered; moderately soft; moderately fractured; (Lean CLAY with SAND (CL); very stiff; moist; little fine SAND); PP= 3.75 tsf.

M SEDIMENTARY ROCK (SILTSTONE); thinly bedded; dark gray; slightly weathered; moderately soft; slightly fractured; (SILT with SAND (ML); hard; moist; little fine SAND); PP= 4.5 tsf.

62 1.4 PI M

-moderately bedded; greenish gray; (SILT with SAND (ML); very stiff; moist; few fine SAND).

47 1.4

59 1.4 (SANDY SILT (ML); very stiff; moist; some fine SAND).

12-15-09
Terminated at Elev 744.2
ERi = 93%

48.3' Rt Sta 2202+40.0 "B" Line

CPT-09-224

845.7'

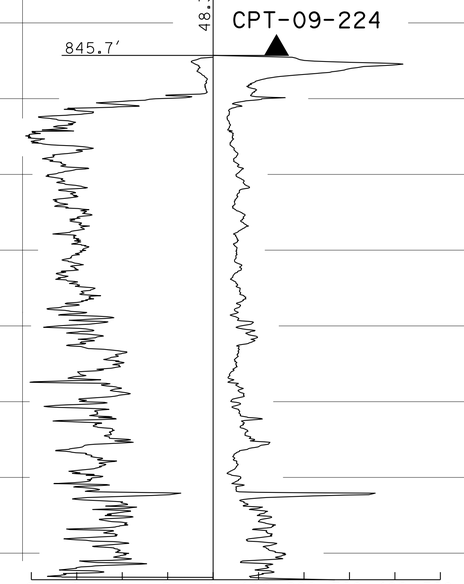

6-4-09
Terminated at Elev 776.5

850 840 830 820 810 800 790 780 770 760 750 740

2201+00 2202+00 2203+00

PROFILE
Horiz: 1" = 10'
Vert: 1" = 10'

ENGINEERING SERVICES	MATERIALS AND GEOTECHNICAL SERVICES	STATE OF CALIFORNIA DEPARTMENT OF TRANSPORTATION	DIVISION OF ENGINEERING SERVICES STRUCTURE DESIGN DESIGN BRANCH 20	BRIDGE NO. 53-E0144 POST MILE 41.3/41.9	RETAINING WALL NO. 2181 LOG OF TEST BORINGS 12 OF 17
FUNCTIONAL SUPERVISOR NAME: D. Jang	DRAWN BY: I. G-Remmen CHECKED BY: H. Liu	FIELD INVESTIGATION BY: M. Salisbury			

OGS CIVIL LOG OF TEST BORINGS SHEET

ORIGINAL SCALE IN INCHES FOR REDUCED PLANS 0 1 2 3

UNIT: 3643
PROJECT NUMBER & PHASE: 07130000071-1 CONTRACT NO.: 07-1193U1

DISREGARD PRINTS BEARING EARLIER REVISION DATES → REVISION DATES 01/26/13 02/18/14 12/19/13 SHEET 48 OF 53

FILE => 53-E0144-z-ltb12.dgn

USERNAME => s125624 DATE PLOTTED => 18-MAY-2015 TIME PLOTTED => 16:38

DIST	COUNTY	ROUTE	POST MILES TOTAL PROJECT	SHEET No.	TOTAL SHEETS
07	LA	10	37.2/42.4	2290	2313

CERTIFIED ENGINEERING GEOLOGIST — DATE 2-18-14

6-1-15
PLANS APPROVAL DATE

PROFESSIONAL GEOLOGIST — Michael A. Salisbury — No. 2462 — Exp. 2-28-15 — CERTIFIED ENGINEERING GEOLOGIST — STATE OF CALIFORNIA

The State of California or its officers or agents shall not be responsible for the accuracy or completeness of electronic copies of this plan sheet.

This LOTB sheet was prepared in accordance with the Caltrans Soil & Rock Logging; Classification; & Presentation Manual (2010 Edition).
See 2010 Standard Plans A10F and A10G for Soil Legend; and A10H for Rock Legend.

FOR PLAN VIEW, SEE
"LOG OF TEST BORINGS 1 OF 17"

Note: Groundwater was not encountered during field investigation.

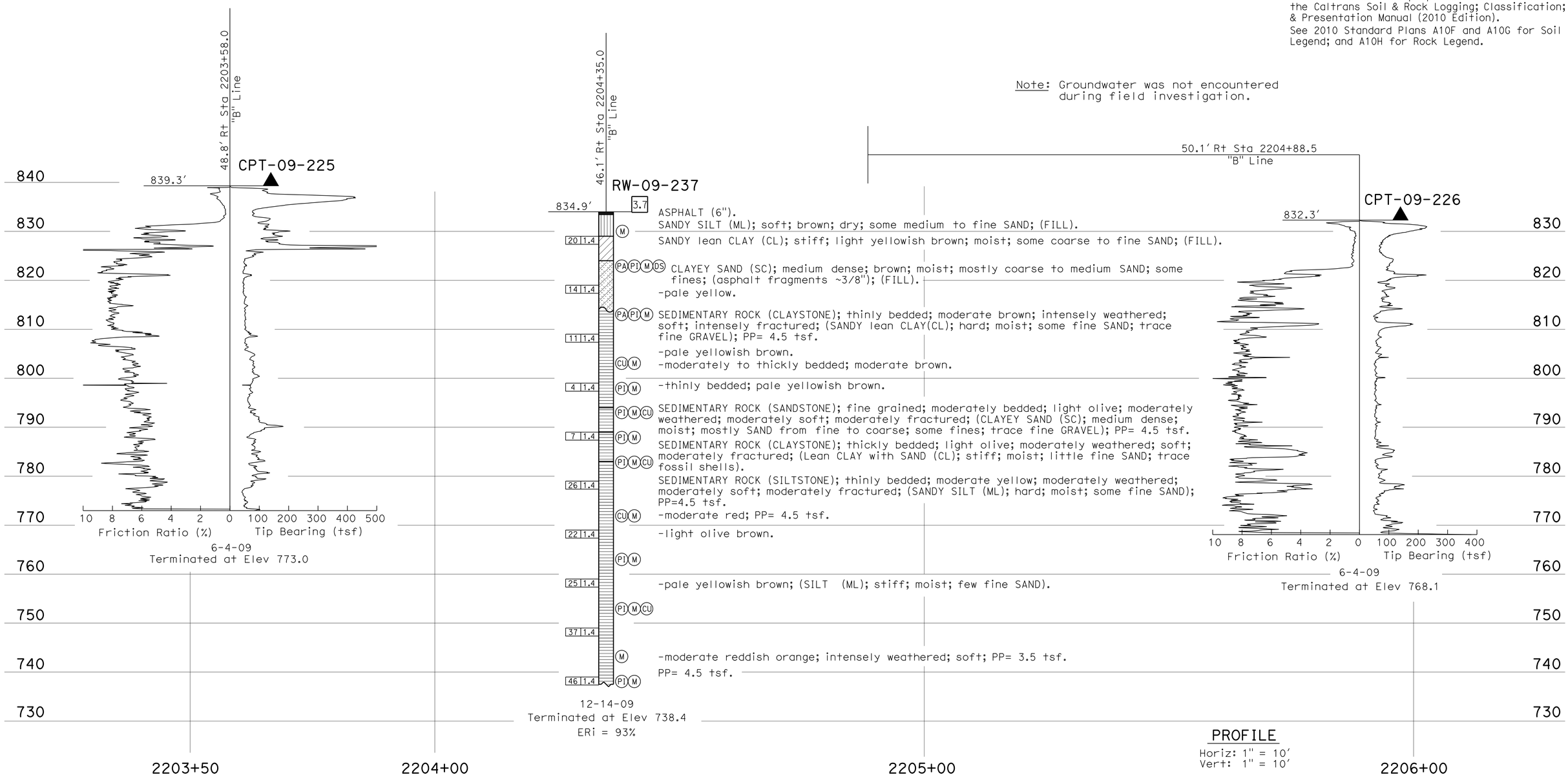

PROFILE
Horiz: 1" = 10'
Vert: 1" = 10'

ENGINEERING SERVICES	MATERIALS AND GEOTECHNICAL SERVICES	STATE OF CALIFORNIA DEPARTMENT OF TRANSPORTATION	DIVISION OF ENGINEERING SERVICES STRUCTURE DESIGN DESIGN BRANCH 20	BRIDGE NO. 53-E0144 POST MILE 41.3/41.9	RETAINING WALL 2181
FUNCTIONAL SUPERVISOR NAME: D. Jang	DRAWN BY: I. G-Remmen CHECKED BY: H. Liu	FIELD INVESTIGATION BY: M. Salisbury			LOG OF TEST BORINGS 13 OF 17

OGS CIVIL LOG OF TEST BORINGS SHEET

ORIGINAL SCALE IN INCHES FOR REDUCED PLANS 0 1 2 3

UNIT: 3643
PROJECT NUMBER & PHASE: 07130000071-1 CONTRACT NO.: 07-1193U1

DISREGARD PRINTS BEARING EARLIER REVISION DATES → REVISION DATES 07/26/13 02/18/14 12/19/13

SHEET 49 OF 53

FILE => 53-E0144-z-ltb13.dgn

USERNAME => s125624 DATE PLOTTED => 28-MAY-2015 TIME PLOTTED => 11:41

DIST	COUNTY	ROUTE	POST MILES TOTAL PROJECT	SHEET No.	TOTAL SHEETS
07	LA	10	37.2/42.4	2291	2313

CERTIFIED ENGINEERING GEOLOGIST — DATE 2-18-14

PROFESSIONAL GEOLOGIST — Michael A. Salisbury — No. 2462 — Exp. 2-28-15 — CERTIFIED ENGINEERING GEOLOGIST — STATE OF CALIFORNIA

6-1-15
PLANS APPROVAL DATE

The State of California or its officers or agents shall not be responsible for the accuracy or completeness of electronic copies of this plan sheet.

This LOTB sheet was prepared in accordance with the Caltrans Soil & Rock Logging; Classification; & Presentation Manual (2010 Edition).

See 2010 Standard Plans A10F and A10G for Soil Legend; and A10H for Rock Legend.

FOR PLAN VIEW; SEE
"LOG OF TEST BORINGS 1 OF 17"

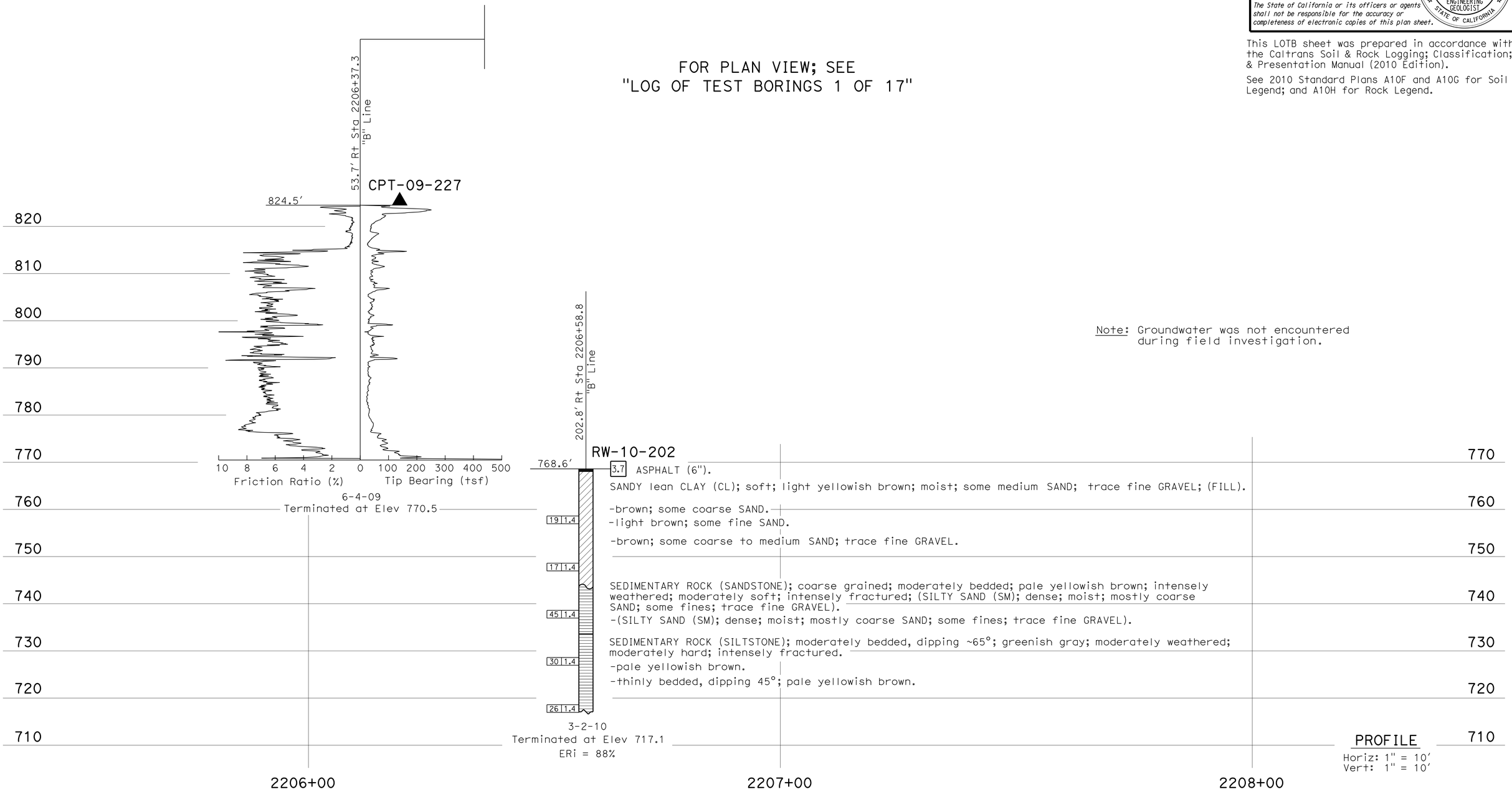

Note: Groundwater was not encountered during field investigation.

ENGINEERING SERVICES	MATERIALS AND GEOTECHNICAL SERVICES	STATE OF CALIFORNIA DEPARTMENT OF TRANSPORTATION	DIVISION OF ENGINEERING SERVICES STRUCTURE DESIGN DESIGN BRANCH 20	BRIDGE NO. 53-E0144 POST MILE 41.3/41.9	RETAINING WALL NO. 2181
FUNCTIONAL SUPERVISOR NAME: D. Jang	DRAWN BY: I. G-Remmen CHECKED BY: H. Liu	FIELD INVESTIGATION BY: M. Salisbury			LOG OF TEST BORINGS 14 OF 17

OGS CIVIL LOG OF TEST BORINGS SHEET

ORIGINAL SCALE IN INCHES FOR REDUCED PLANS 0 1 2 3

UNIT: 3643
PROJECT NUMBER & PHASE: 07130000071-1 CONTRACT NO.: 07-1193U1

DISREGARD PRINTS BEARING EARLIER REVISION DATES → REVISION DATES 01/26/13 02/18/14 12/19/13 SHEET 50 OF 53

FILE => 53-E0144-z-ltb14.dgn

USERNAME => s125624 DATE PLOTTED => 18-MAY-2015 TIME PLOTTED => 16:38

DIST	COUNTY	ROUTE	POST MILES TOTAL PROJECT	SHEET No.	TOTAL SHEETS
07	LA	10	37.2/42.4	2292	2313

CERTIFIED ENGINEERING GEOLOGIST 2-18-14 DATE

6-1-15
PLANS APPROVAL DATE

PROFESSIONAL GEOLOGIST Michael A. Salisbury No. 2462 Exp. 2-28-15 CERTIFIED ENGINEERING GEOLOGIST STATE OF CALIFORNIA

The State of California or its officers or agents shall not be responsible for the accuracy or completeness of electronic copies of this plan sheet.

This LOTB sheet was prepared in accordance with the Caltrans Soil & Rock Logging; Classification; & Presentation Manual (2010 Edition).

See 2010 Standard Plans A10F and A10G for Soil Legend; and A10H for Rock Legend.

FOR PLAN VIEW; SEE
"LOG OF TEST BORINGS 1 OF 17"

Note: Groundwater was not encountered during field investigation.

PROFILE
Horiz: 1" = 20'
Vert: 1" = 10'

ENGINEERING SERVICES	MATERIALS AND GEOTECHNICAL SERVICES	STATE OF CALIFORNIA DEPARTMENT OF TRANSPORTATION	DIVISION OF ENGINEERING SERVICES STRUCTURE DESIGN DESIGN BRANCH 20	BRIDGE NO. 53-E0144 POST MILE 41.3/41.9	RETAINING WALL 2181
FUNCTIONAL SUPERVISOR NAME: D. Jang	DRAWN BY: I. G-Remmen CHECKED BY: H. Liu	FIELD INVESTIGATION BY: M. Salisbury			LOG OF TEST BORINGS 15 OF 17

OGS CIVIL LOG OF TEST BORINGS SHEET

ORIGINAL SCALE IN INCHES FOR REDUCED PLANS 0 1 2 3

UNIT: 3643
PROJECT NUMBER & PHASE: 07130000071-1 CONTRACT NO.: 07-1193U1

DISREGARD PRINTS BEARING EARLIER REVISION DATES

REVISION DATES 07/26/13 02/18/14 12/19/13 SHEET 51 OF 53

FILE => 53-E0144-z-ltb15.dgn

USERNAME => s125624 DATE PLOTTED => 18-MAY-2015 TIME PLOTTED => 16:38

DIST	COUNTY	ROUTE	POST MILES TOTAL PROJECT	SHEET No.	TOTAL SHEETS
07	LA	10	37.2/42.4	2293	2313

CERTIFIED ENGINEERING GEOLOGIST — DATE 2-18-14

PROFESSIONAL GEOLOGIST — Michael A. Salisbury — No. 2462 — Exp. 2-28-15 — CERTIFIED ENGINEERING GEOLOGIST — STATE OF CALIFORNIA

6-1-15
PLANS APPROVAL DATE

The State of California or its officers or agents shall not be responsible for the accuracy or completeness of electronic copies of this plan sheet.

This LOTB sheet was prepared in accordance with the Caltrans Soil & Rock Logging; Classification; & Presentation Manual (2010 Edition).

See 2010 Standard Plans A10F and A10G for Soil Legend; and A10H for Rock Legend.

FOR PLAN VIEW; SEE
"LOG OF TEST BORINGS 1 OF 17"

Note: Groundwater was not encountered during field investigation.

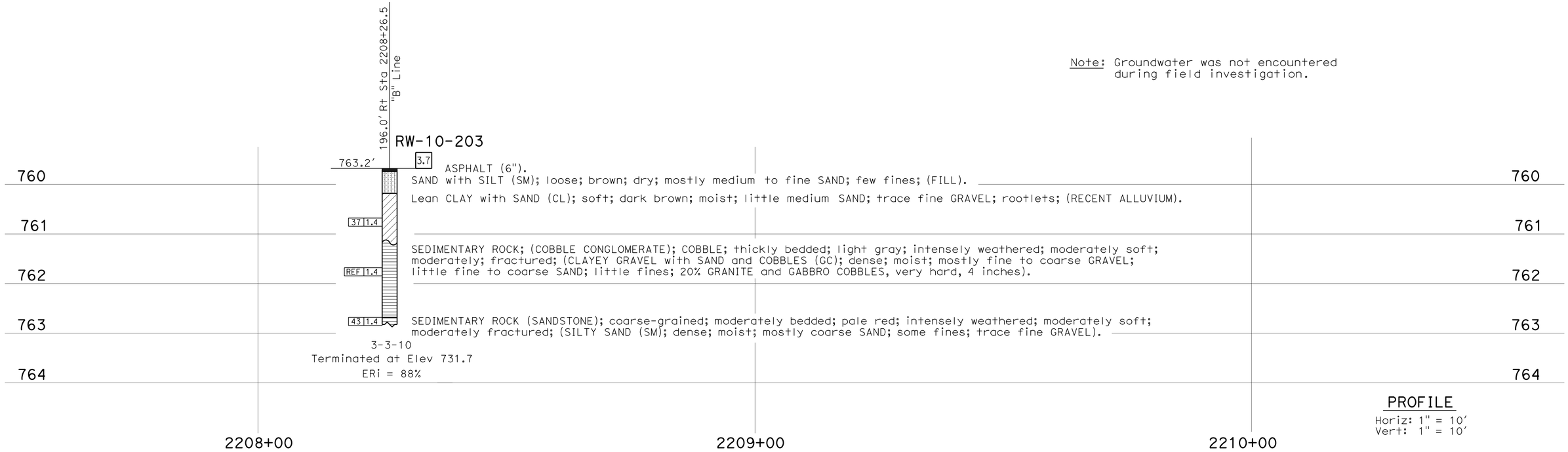

PROFILE
Horiz: 1" = 10'
Vert: 1" = 10'

ENGINEERING SERVICES	MATERIALS AND GEOTECHNICAL SERVICES	STATE OF CALIFORNIA DEPARTMENT OF TRANSPORTATION	DIVISION OF ENGINEERING SERVICES STRUCTURE DESIGN DESIGN BRANCH 20	BRIDGE NO. 53-E0144 POST MILE 41.3/41.9	RETAINING WALL 2181 LOG OF TEST BORINGS 16 OF 17
FUNCTIONAL SUPERVISOR NAME: D. Jang	DRAWN BY: I. G-Remmen CHECKED BY: H. Liu	FIELD INVESTIGATION BY: M. Salisbury			

OGS CIVIL LOG OF TEST BORINGS SHEET — ORIGINAL SCALE IN INCHES FOR REDUCED PLANS 0 1 2 3

UNIT: 3643
PROJECT NUMBER & PHASE: 07130000071-1 CONTRACT NO.: 07-1193U1

DISREGARD PRINTS BEARING EARLIER REVISION DATES → REVISION DATES 01/26/13 02/18/14 12/19/13 — SHEET 52 OF 53

FILE => 53-E0144-z-ltb16.dgn

USERNAME => s125624 DATE PLOTTED => 18-MAY-2015 TIME PLOTTED => 16:38

DIST	COUNTY	ROUTE	POST MILES TOTAL PROJECT	SHEET No.	TOTAL SHEETS
07	LA	10	37.2/42.4	2294	2313

CERTIFIED ENGINEERING GEOLOGIST — DATE 2-18-14

PROFESSIONAL GEOLOGIST — Michael A. Salisbury — No. 2462 — Exp. 2-28-15 — CERTIFIED ENGINEERING GEOLOGIST — STATE OF CALIFORNIA

6-1-15
PLANS APPROVAL DATE

The State of California or its officers or agents shall not be responsible for the accuracy or completeness of electronic copies of this plan sheet.

This LOTB sheet was prepared in accordance with the Caltrans Soil & Rock Logging; Classification; & Presentation Manual (2010 Edition).

See 2010 Standard Plans A10F and A10G for Soil Legend; and A10H for Rock Legend.

FOR PLAN VIEW; SEE
"LOG OF TEST BORINGS 1 OF 17"

Note: Groundwater was not encountered during field investigation.

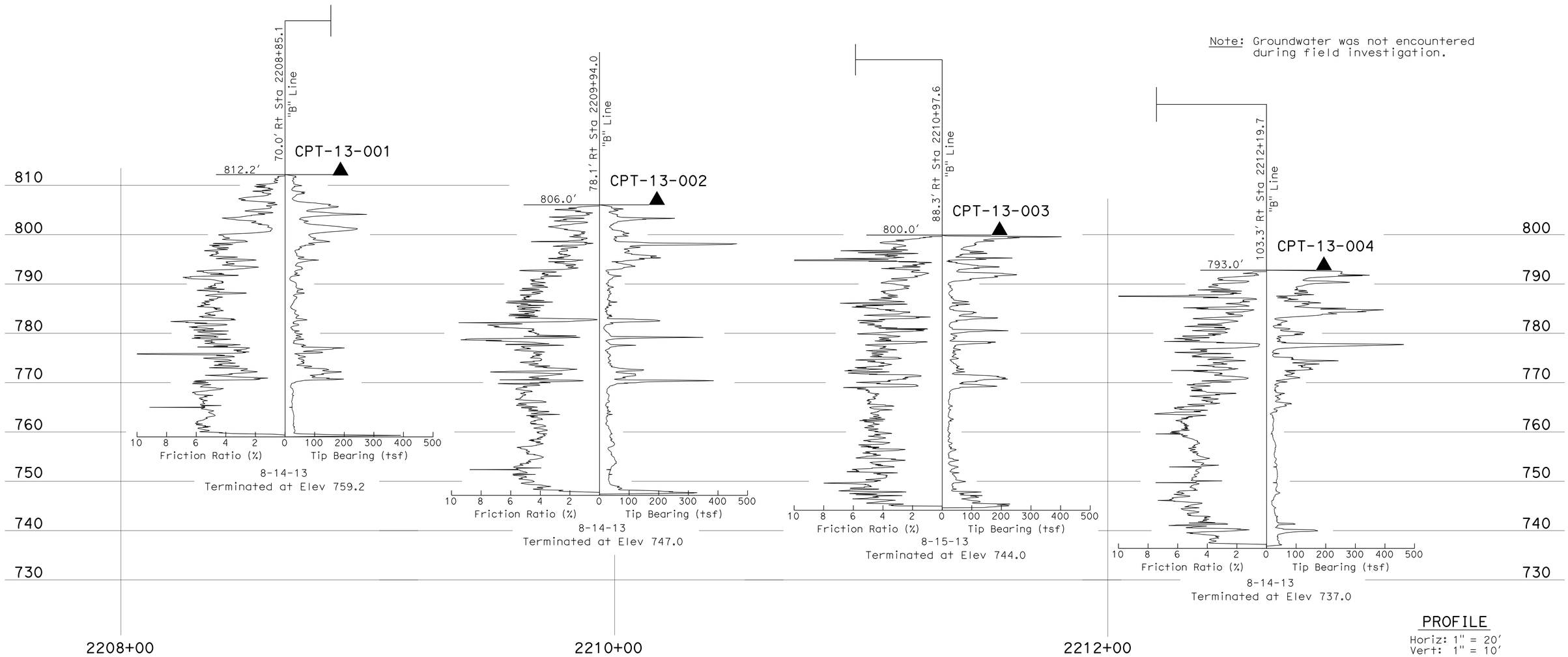

PROFILE
Horiz: 1" = 20'
Vert: 1" = 10'

ENGINEERING SERVICES	MATERIALS AND GEOTECHNICAL SERVICES	STATE OF CALIFORNIA DEPARTMENT OF TRANSPORTATION	DIVISION OF ENGINEERING SERVICES STRUCTURE DESIGN DESIGN BRANCH 20	BRIDGE NO. 53-E0144 POST MILE 41.3/41.9	RETAINING WALL 2181 LOG OF TEST BORINGS 17 OF 17
FUNCTIONAL SUPERVISOR NAME: D. Jang	DRAWN BY: I. G-Remmen CHECKED BY: H. Liu	FIELD INVESTIGATION BY: M. Salisbury			

OGS CIVIL LOG OF TEST BORINGS SHEET — ORIGINAL SCALE IN INCHES FOR REDUCED PLANS 0 1 2 3

UNIT: 3643
PROJECT NUMBER & PHASE: 07130000071-1 CONTRACT NO.: 07-1193U1

DISREGARD PRINTS BEARING EARLIER REVISION DATES → REVISION DATES 10/08/13 02/18/14 12/19/13 — SHEET 53 OF 53

FILE => 53-E0144-z-ltb17.dgn

USERNAME => s125624 DATE PLOTTED => 18-MAY-2015 TIME PLOTTED => 16:38

DIST	COUNTY	ROUTE	POST MILES TOTAL PROJECT	SHEET No.	TOTAL SHEETS
07	LA	10	37.2/42.4	2295	2313

REGISTERED CIVIL ENGINEER — DATE 10/01/14

6-1-15
PLANS APPROVAL DATE

REGISTERED PROFESSIONAL ENGINEER — RICHARD E. SCHENDEL — No. C 64259 — Exp. 06/30/15 — CIVIL — STATE OF CALIFORNIA

The State of California or its officers or agents shall not be responsible for the accuracy or completeness of electronic copies of this plan sheet.

INDEX TO PLANS

SHEET NO.	TITLE
1	GENERAL PLAN
2	FOUNDATION PLAN
3	STRUCTURE PLAN
4	ARCHITECTURAL DETAILS
5	LOG OF TEST BORINGS 1 OF 2
6	LOG OF TEST BORINGS 2 OF 2

LEGEND:

STANDARD PLANS DATED 2010

SHEET NO.	TITLE
A10A	ABBREVIATIONS (SHEET 1 OF 2)
RSP A10B	ABBREVIATIONS (SHEET 2 OF 2)
A10C	LINES AND SYMBOLS (SHEET 1 OF 3)
A10D	LINES AND SYMBOLS (SHEET 2 OF 3)
A10E	LINES AND SYMBOLS (SHEET 3 OF 3)
A10F	LEGEND - SOIL (SHEET 1 OF 2)
A10G	LEGEND - SOIL (SHEET 2 OF 2)
A10H	LEGEND - ROCK
A62B	LIMITS OF PAYMENT FOR EXCAVATION AND BACKFILL - BRIDGE SURCHARGE AND WALL
B0-3	BRIDGE DETAILS
RSP B3-1B	RETAINING WALL TYPE 1 (CASE 2)
RSP B3-5	RETAINING WALL DETAILS No. 1
B3-6	RETAINING WALL DETAILS No. 2
RSP B11-47	CABLE RAILING

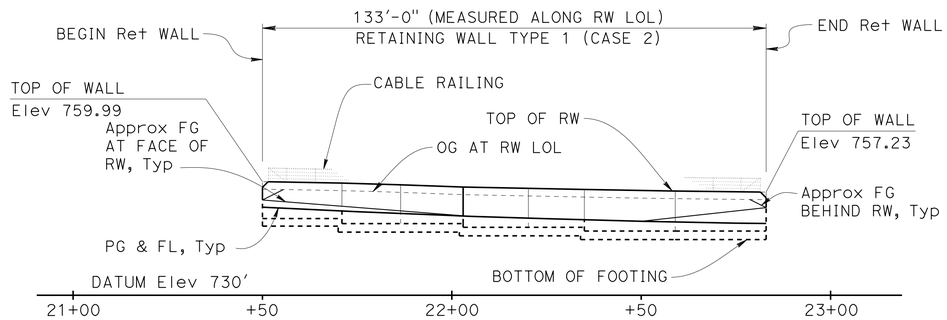

ELEVATION

1" = 20'

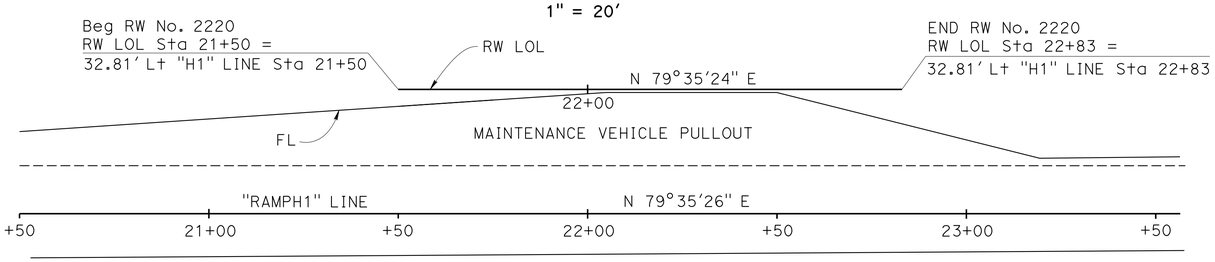

QUANTITIES

STRUCTURE EXCAVATION (RETAINING WALL)	1,675 CY
STRUCTURE BACKFILL (RETAINING WALL)	1,393 CY
PERVIOUS BACKFILL MATERIAL (RETAINING WALL)	21 CY
STRUCTURAL CONCRETE, RETAINING WALL	194 CY
CONCRETE SURFACE TEXTURE	1,096 SQFT
BAR REINFORCING STEEL (RETAINING WALL)	15,723 LB
PREPARE AND STAIN CONCRETE	956 SQFT
CABLE RAILING	133 LF

CURVE DATA

No.	R	Δ	T	L
1	5439.14'	15°01'06"	716.96'	1425.71'

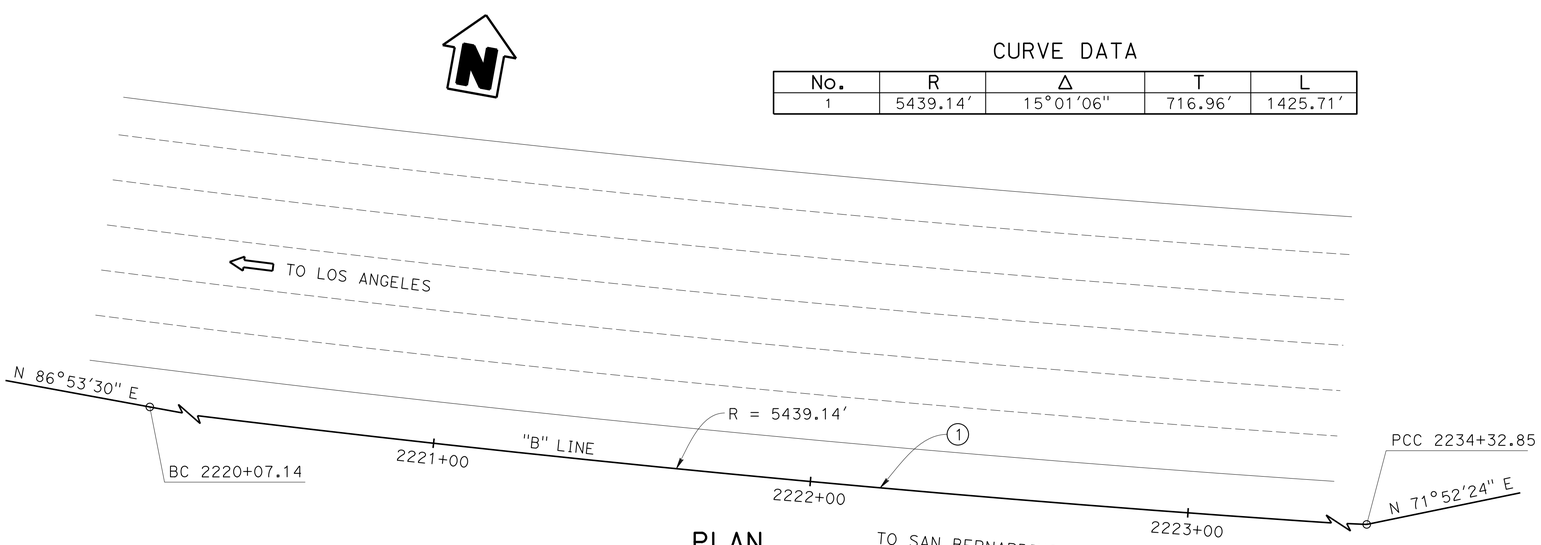

PLAN

1" = 20'

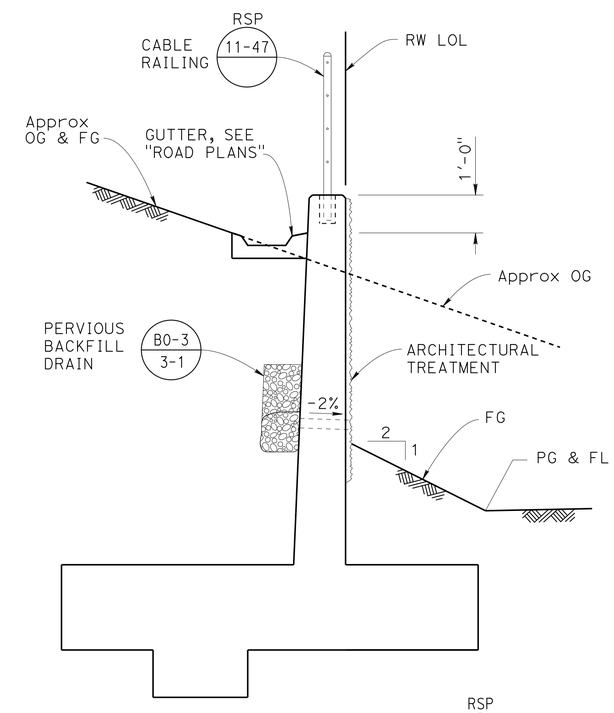

TYPICAL SECTION

½" = 1'-0"

RSP B3-1B

MICHAEL POPE DESIGN ENGINEER	DESIGN	BY R. Padre	CHECKED Michael Pope	LOAD & RESISTANCE FACTOR DESIGN	LIVE LOADING: HL93 W/"LOW-BOY"; PERMIT DESIGN VEHICLE
	DETAILS	BY R. Padre	CHECKED Prem Rimal	LAYOUT BY R. Padre	CHECKED Michael Pope
	QUANTITIES	BY Michael Pope	CHECKED Prem Rimal	SPECIFICATIONS BY Xiaodong Chen	PLANS AND SPECS COMPARED Xiaodong Chen

ORIGINAL SCALE IN INCHES FOR REDUCED PLANS 0 1 2 3

STATE OF CALIFORNIA
DEPARTMENT OF TRANSPORTATION

DIVISION OF ENGINEERING SERVICES
STRUCTURE DESIGN
DESIGN BRANCH 18

BRIDGE NO. N/A
POST MILE 42.07

RETAINING WALL NO. 2220
GENERAL PLAN

UNIT: 3603
PROJECT NUMBER & PHASE: 0713000007-1
CONTRACT NO.: 07-1193U1

DISREGARD PRINTS BEARING EARLIER REVISION DATES

REVISION DATES 03-04-14 01-16-14 02-07-14

SHEET 1 OF 6

USERNAME => s125624 DATE PLOTTED => 18-MAY-2015 TIME PLOTTED => 16:38

STRUCTURES DESIGN GENERAL PLAN SHEET (ENGLISH) (REV.09-01-10)

FILE => 53e-rw2220-a-gp.dgn

DIST	COUNTY	ROUTE	POST MILES TOTAL PROJECT	SHEET No.	TOTAL SHEETS
07	LA	10	37.2/42.4	2296	2313

REGISTERED CIVIL ENGINEER 10/01/14 DATE

6-1-15
PLANS APPROVAL DATE

REGISTERED PROFESSIONAL ENGINEER RICHARD E. SCHENDEL No. C 64259 Exp. 06/30/15 CIVIL STATE OF CALIFORNIA

The State of California or its officers or agents shall not be responsible for the accuracy or completeness of electronic copies of this plan sheet.

CURVE DATA

No. Ⓗ	R	Δ	T	L
Ⓐ	5439.14	15°01′06"	716.96	1425.71

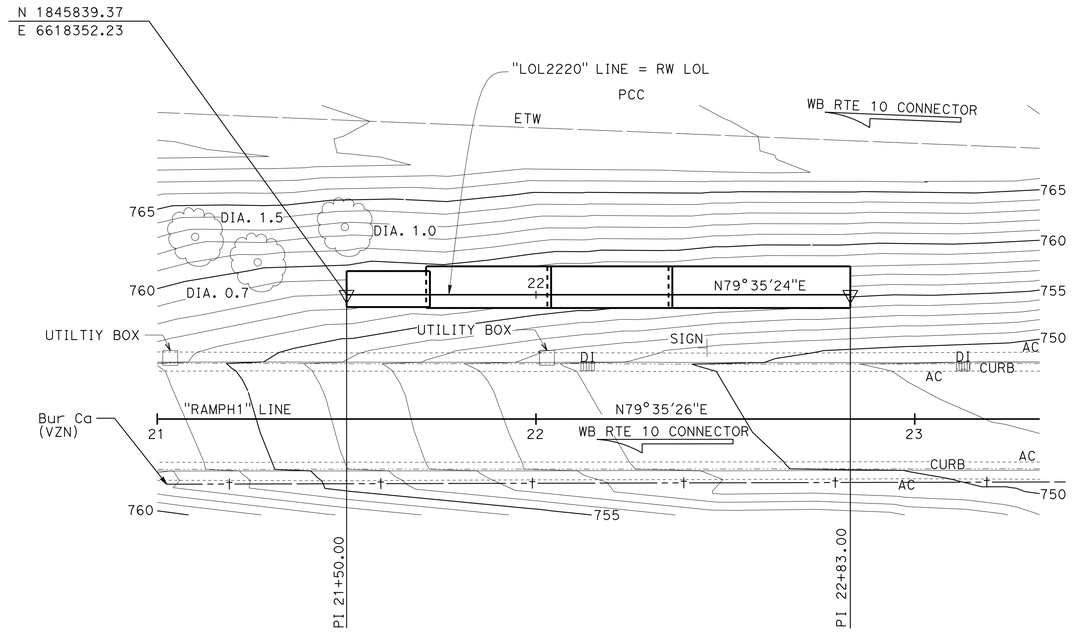

NOTE:
For bottom of footing elevations, see "STRUCTURE PLAN" sheet.

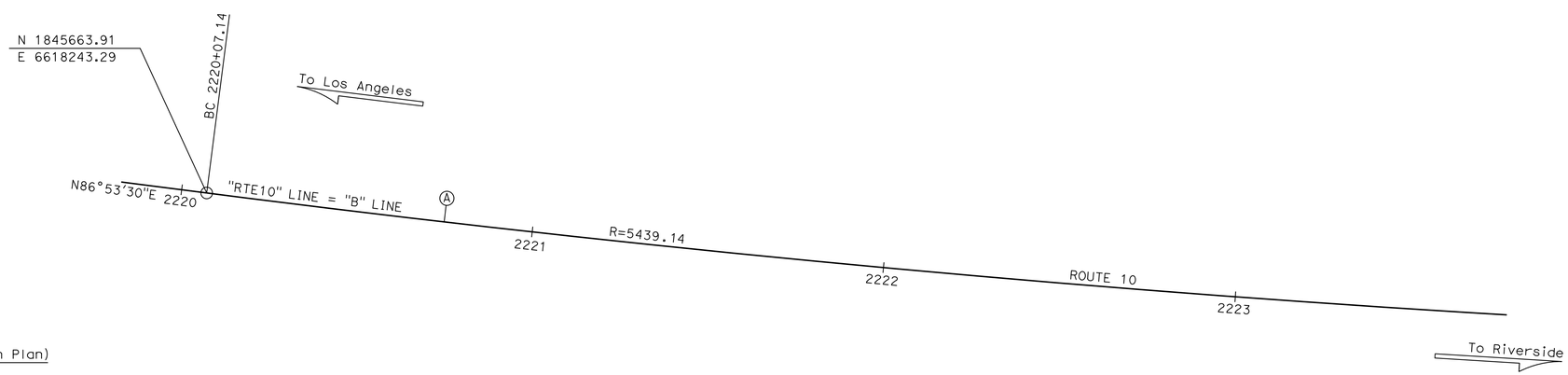

SURVEY CONTROL

PRHV1526 (Not Shown On Plan)
Fnd Set PK in AC
220.19 FT Rt. "RTE10" Line, Rte 10
Sta. 2223+44.31
N 1,845,473.91
E 6,618,604.71
Elev. = 738.25

PRHV1527 (Not Shown On Plan)
Fnd L&T in TC
170.05 FT Lt. "RTE10" Line, Rte 10
Sta. 2223+76.72
N 1,845,865.25
E 6,618,590.63
Elev. = 748.86

PRELIMINARY INVESTIGATION SECTION

SCALE	VERT.DATUM NAVD88	PHOTOGRAMMETRY AS OF: 2/2008					
1"=20′	HORZ.DATUM NAD83	SURVEYED	BY District	04/2008	CHECKED	BY C.Fassett	02/2011
ALIGNMENT TIES Dist. Traverse Sheet		DRAFTED	BY C. Fassett	02/2011	CHECKED	BY T.Schmalz	02/2011

DESIGN	BY R. Padre	CHECKED Michael Pope
DETAILS	BY Minh Tran	CHECKED Prem Rimal
QUANTITIES	BY Michael Pope	CHECKED Prem Rimal

STATE OF CALIFORNIA
DEPARTMENT OF TRANSPORTATION

DIVISION OF ENGINEERING SERVICES
STRUCTURE DESIGN
DESIGN BRANCH 18

BRIDGE NO. N/A
POST MILE 42.07

RETAINING WALL NO. 2220
FOUNDATION PLAN

STRUCTURES FOUNDATION PLAN SHEET (ENGLISH) (REV. 09-01-10)

ORIGINAL SCALE IN INCHES FOR REDUCED PLANS 0 1 2 3

UNIT: 07
PROJECT NUMBER & PHASE: 0713000007 1
CONTRACT NO.: 1193U1

DISREGARD PRINTS BEARING EARLIER REVISION DATES

REVISION DATES: ~~12/19/13~~ 01/16/14

SHEET 2 OF 6

FILE => 53e-rw2220-b-fpl.dgn

DIST	COUNTY	ROUTE	POST MILES TOTAL PROJECT	SHEET No.	TOTAL SHEETS
07	LA	10	37.2/42.4	2297	2313

REGISTERED CIVIL ENGINEER — DATE 10/01/14

6-1-15
PLANS APPROVAL DATE

REGISTERED PROFESSIONAL ENGINEER — RICHARD E. SCHENDEL — No. C 64259 — Exp. 06/30/15 — CIVIL — STATE OF CALIFORNIA

The State of California or its officers or agents shall not be responsible for the accuracy or completeness of scanned copies of this plan sheet.

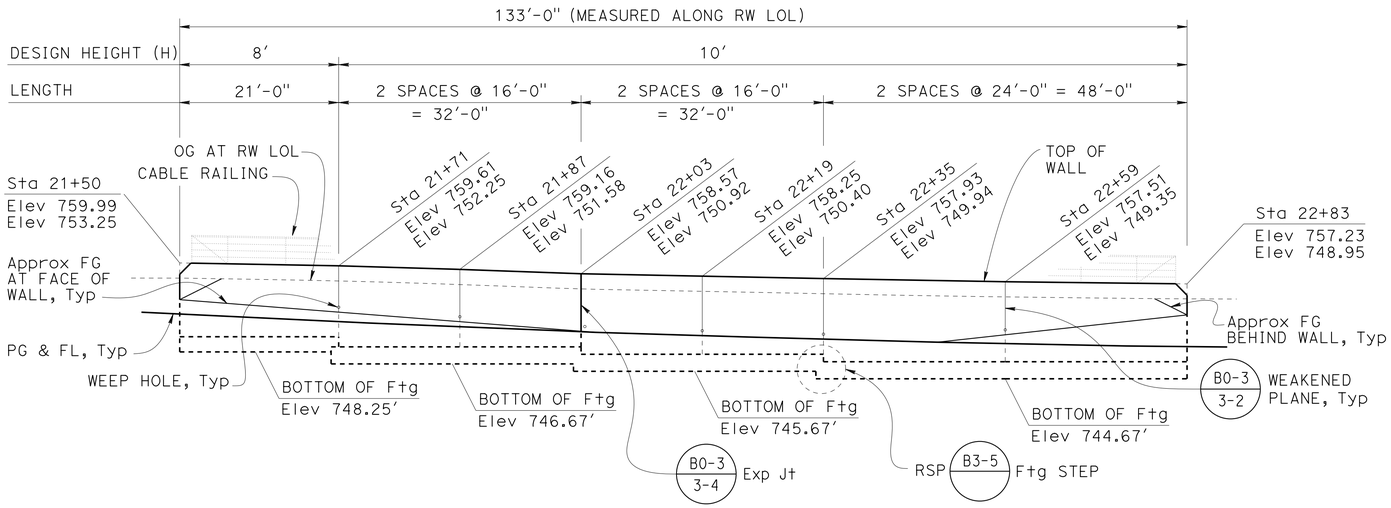

ELEVATION

1" = 10'

B0-3 | RSP B3-1B | RSP B3-5

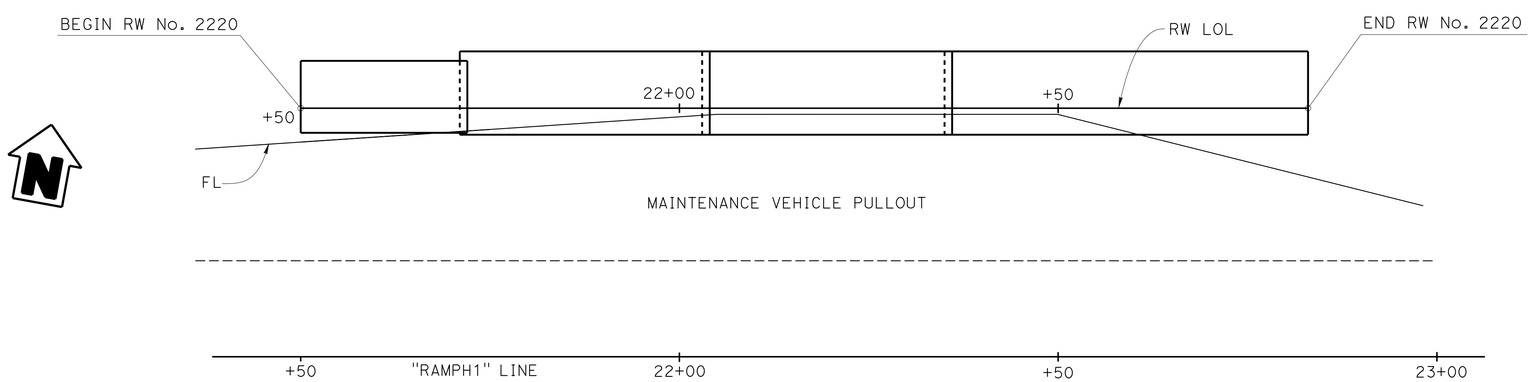

FOOTING PLAN

1" = 10'

RSP B3-1B | RSP B3-5

LEGEND:

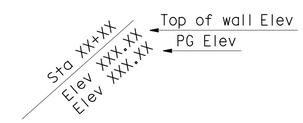

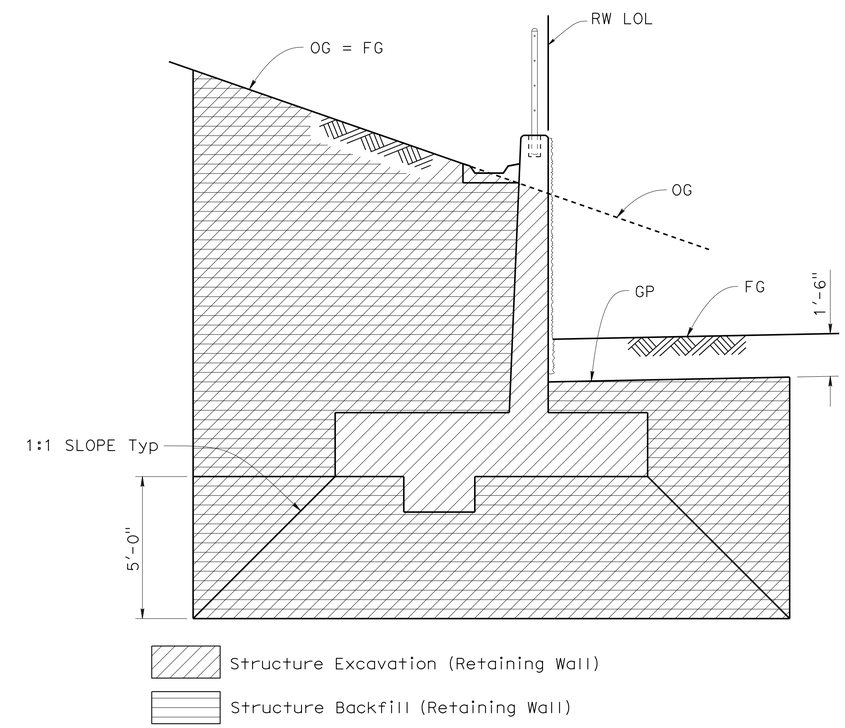

OVER EXCAVATION LIMITS

NO SCALE

	BY	CHECKED
DESIGN	R. Padre	Michael Pope
DETAILS	Michael Pope	Prem Rimal
QUANTITIES	Michael Pope	Prem Rimal

STATE OF CALIFORNIA
DEPARTMENT OF TRANSPORTATION

DIVISION OF ENGINEERING SERVICES
STRUCTURE DESIGN
DESIGN BRANCH 18

BRIDGE NO. N/A
POST MILE 42.07

RETAINING WALL NO. 2220
STRUCTURE PLAN

STRUCTURES DESIGN DETAIL SHEET (ENGLISH) (REV. 09-01-10)

ORIGINAL SCALE IN INCHES FOR REDUCED PLANS 0 1 2 3

UNIT: 3603
PROJECT NUMBER & PHASE: 0713000007 1
CONTRACT NO.: 07-1193U1

DISREGARD PRINTS BEARING EARLIER REVISION DATES

REVISION DATES: 10-21-13 10-31-13 01-16-14 02-07-18

SHEET 3 OF 6

FILE => 53e-rw2220-c-sp.dgn

USERNAME => s125624 DATE PLOTTED => 18-MAY-2015 TIME PLOTTED => 16:38

DIST	COUNTY	ROUTE	POST MILES TOTAL PROJECT	SHEET No.	TOTAL SHEETS
07	LA	10	37.2/42.4	2298	2313

REGISTERED CIVIL ENGINEER — DATE 10/01/14

6-1-15
PLANS APPROVAL DATE

REGISTERED PROFESSIONAL ENGINEER — RICHARD E. SCHENDEL — No. C64259 — Exp. 6-30-15 — CIVIL — STATE OF CALIFORNIA

The State of California or its officers or agents shall not be responsible for the accuracy or completeness of scanned copies of this plan sheet.

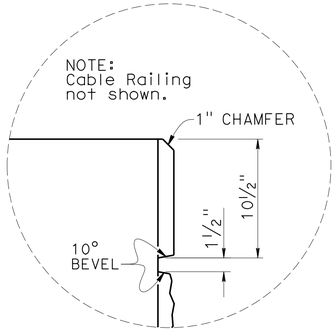

DETAIL B1

NO SCALE

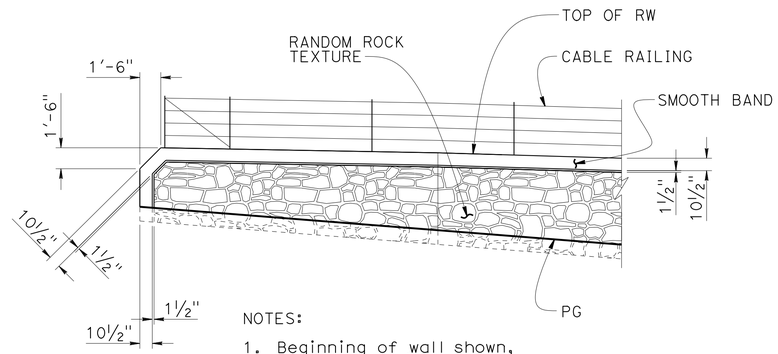

NOTES:

1. Beginning of wall shown, end of wall similar.
2. Wall Footing not shown.

PART ELEVATION

NO SCALE

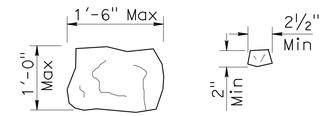

ROCK SIZE

NOTE:
Seamless Random Rock pattern to have a minimum of 2 to a maximum of 4 match points (denoted by "M") for each side (top to bottom and side to side).

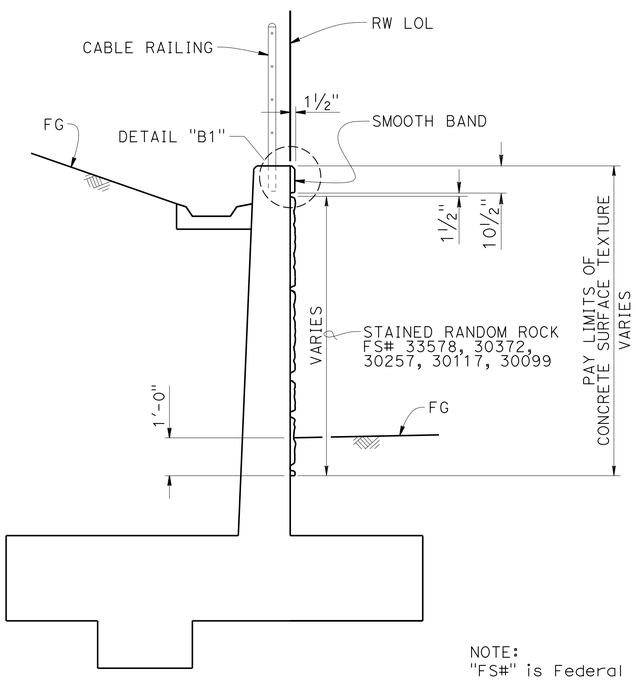

NOTE:
"FS#" is Federal
Standard Color Number.

TYPICAL SECTION

NO SCALE

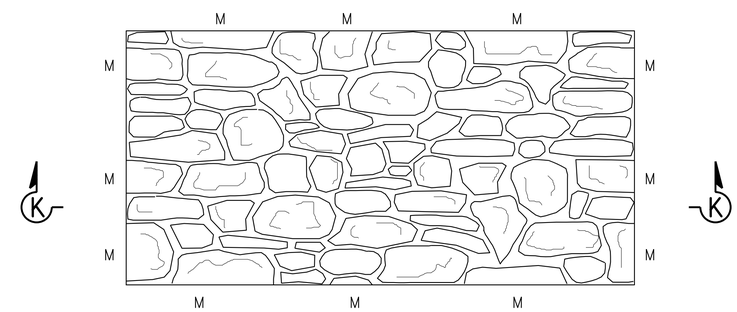

ELEVATION

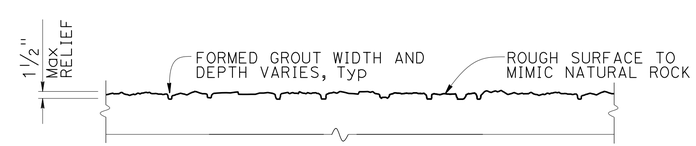

SECTION K-K

RANDOM ROCK TEXTURE

NO SCALE

	BY	CHECKED
DESIGN	Valerie Moore	Michael Pope
DETAILS	Farideh Hosseinioun	Michael Pope
QUANTITIES	Michael Pope	Prem Rimal

STATE OF CALIFORNIA
DEPARTMENT OF TRANSPORTATION

DIVISION OF ENGINEERING SERVICES
STRUCTURE DESIGN
DESIGN BRANCH 18

BRIDGE NO. N/A
POST MILE 42.07

RETAINING WALL NO. 2220
ARCHITECTURAL DETAILS

STRUCTURES DESIGN DETAIL SHEET (ENGLISH) (REV. 09-01-10)

ORIGINAL SCALE IN INCHES FOR REDUCED PLANS 0 1 2 3

UNIT: 3603
PROJECT NUMBER & PHASE: 07 1300 0007 1 CONTRACT NO.: 07-1193U1

DISREGARD PRINTS BEARING EARLIER REVISION DATES → 07/06/14 07/31/14 03/04/14

SHEET 4 OF 6

FILE => 53e-rw2220-u-archdt01.dgn

USERNAME => s125624 DATE PLOTTED => 18-MAY-2015 TIME PLOTTED => 16:38

DIST	COUNTY	ROUTE	POST MILES TOTAL PROJECT	SHEET No	TOTAL SHEETS
07	LA	10	37.2/42.4	2299	2313

CERTIFIED ENGINEERING GEOLOGIST 1-15-14

PROFESSIONAL GEOLOGIST Michael A. Salisbury No. 2462 Exp. 2-28-15 CERTIFIED ENGINEERING GEOLOGIST STATE OF CALIFORNIA

6-1-15
PLANS APPROVAL DATE

The State of California or its officers or agents shall not be responsible for the accuracy or completeness of electronic copies of this plan sheet.

This LOTB sheet was prepared in accordance with the Caltrans Soil & Rock Logging, Classification, & Presentation Manual (2010 Edition).

See 2010 Standard Plans A10F and A10G for Soil Legend, and A10H for Rock Legend.

BENCH MARK

PRHV 1527 Elev 748.762′
Fd L&T in TC
169.81′ Lt Sta 2224+03.08 "B" Line
NAVD 88

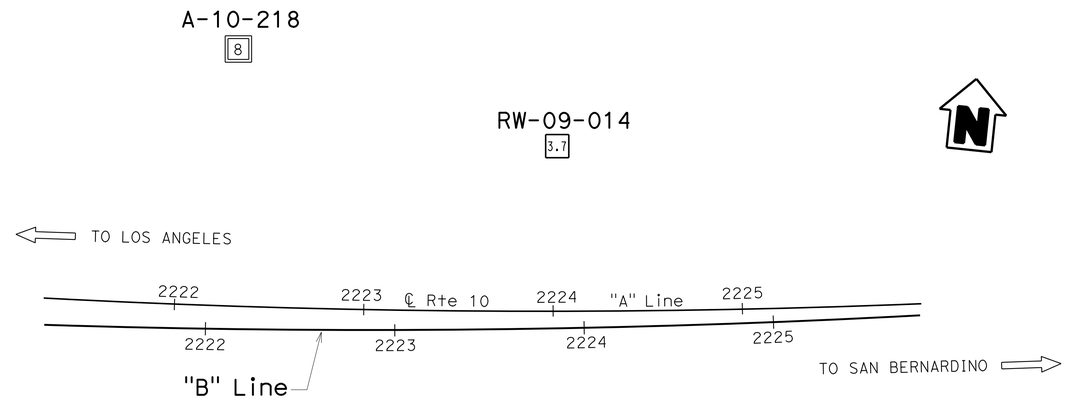

PLAN
1" = 40′

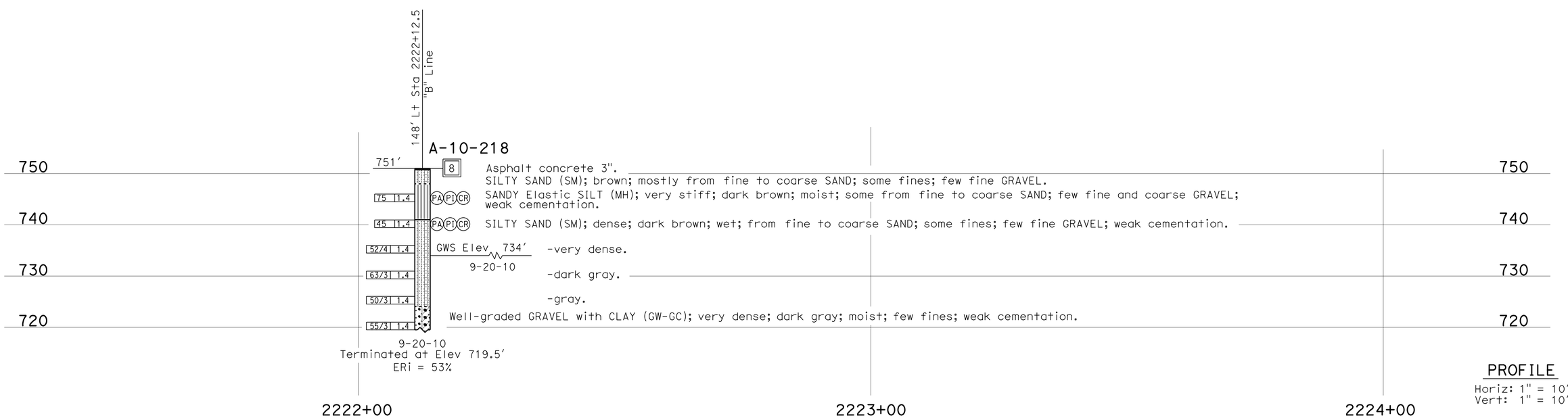

PROFILE
Horiz: 1" = 10′
Vert: 1" = 10′

ENGINEERING SERVICES	MATERIALS AND GEOTECHNICAL SERVICES	STATE OF CALIFORNIA DEPARTMENT OF TRANSPORTATION	DIVISION OF ENGINEERING SERVICES STRUCTURE DESIGN DESIGN BRANCH 18	BRIDGE NO. N/A POST MILE 42.07	RETAINING WALL NO. 2220 LOG OF TEST BORINGS 1 OF 2
FUNCTIONAL SUPERVISOR NAME: D. Jang	DRAWN BY: F. Nguyen, I. G-Remmen CHECKED BY: H. Liu	FIELD INVESTIGATION BY: C. Bugarin			

OGS CIVIL LOG OF TEST BORINGS SHEET

ORIGINAL SCALE IN INCHES FOR REDUCED PLANS 0 1 2 3

UNIT: 3643
PROJECT NUMBER & PHASE: 07130000071 CONTRACT NO.: 07-1193U1

DISREGARD PRINTS BEARING EARLIER REVISION DATES

REVISION DATES: 05-16-12 07-19-12 12-13-13 01-15-14 SHEET 5 OF 6

FILE => 53e-rw2220-z-ltb1of2.dgn

USERNAME => s125624 DATE PLOTTED => 18-MAY-2015 TIME PLOTTED => 16:38

DIST	COUNTY	ROUTE	POST MILES TOTAL PROJECT	SHEET No	TOTAL SHEETS
07	LA	10	37.2/42.4	2300	2313

CERTIFIED ENGINEERING GEOLOGIST 1-15-14

6-1-15
PLANS APPROVAL DATE

PROFESSIONAL GEOLOGIST Michael A. Salisbury No. 2462 Exp. 2-28-15 CERTIFIED ENGINEERING GEOLOGIST STATE OF CALIFORNIA

The State of California or its officers or agents shall not be responsible for the accuracy or completeness of electronic copies of this plan sheet.

This LOTB sheet was prepared in accordance with the Caltrans Soil & Rock Logging, Classification, & Presentation Manual (2010 Edition).

See 2010 Standard Plans A10F and A10G for Soil Legend, and A10H for Rock Legend.

FOR PLAN VIEW, SEE
"LOG OF TEST BORINGS 1 OF 2"

Note: Ground water not encountered in Boring RW-09-014.

96.1' Lt Sta 2223+82.4 "B" Line

RW-09-014

746.7'

4 Asphalt Concrete (6") and Aggregate Base (8")

Lean CLAY with SAND (CL); soft; light brown; moist; some fine SAND; trace fine GRAVEL.

SEDIMENTARY ROCK (SILTSTONE); very thinly bedded; pale olive; moderately weathered; very soft; PP> 4.5 tsf. (Bedding dipping generally from 18° to 22°)

SEDIMENTARY ROCK (CLAYSTONE); thinly bedded; pale olive; moderately weathered; very soft; PP= 3.0 tsf.

-black; PP= 2.0 tsf.

-olive.

-brown.

SEDIMENTARY ROCK (SILTSTONE); very thinly bedded; dark gray, slightly weathered; very soft; PP= 2.5 tsf.

-light gray; PP> 4.5 tsf.

SEDIMENTARY ROCK (Poorly-indurated fine SANDSTONE); thinly bedded; light gray, slightly weathered; very soft; (Poorly-graded SAND with SILT (SP-SM); dense; moist; mostly fine SAND; little fines; few fine GRAVEL).

-dark gray.

-light gray.

SEDIMENTARY ROCK (Poorly-indurated fine GRAVEL CONGLOMERATE); thinly bedded; light gray, slightly weathered; very soft; PP= 4.0 tsf (CLAYEY GRAVEL with SAND (GC); very dense; moist; mostly fine GRAVEL; little fines; little fine SAND)

SEDIMENTARY ROCK (Poorly-indurated fine SANDSTONE); very thinly bedded; light gray, slightly weathered; very soft; (Poorly-graded SAND with SILT (SP-SM); very dense; moist; mostly fine SAND; little fines; few fine GRAVEL).

-indurated; soft.

SEDIMENTARY ROCK (SILTSTONE); thinly bedded; dark gray, slightly weathered; very soft; PP= 3.5 tsf.

50/5	1.4
P	2.0
27	1.4
41	1.4
P	2.0
42	1.4
78	2.0
22	1.4
50/3	1.4
58	1.4
37	1.4
66	1.4
REF	1.4
REF	1.4
29	1.4
50/3	1.4
50/2	1.4
REF	1.4

DS

8-11-09
Terminated at Elev 656.2'
ERi = 93%

750 740 730 720 710 700 690 680 670 660 650

2223+00 2224+00 2225+00

PROFILE
Horiz: 1" = 10'
Vert: 1" = 10'

ENGINEERING SERVICES	MATERIALS AND GEOTECHNICAL SERVICES	STATE OF CALIFORNIA DEPARTMENT OF TRANSPORTATION	DIVISION OF ENGINEERING SERVICES STRUCTURE DESIGN DESIGN BRANCH 18	BRIDGE NO. N/A	RETAINING WALL NO. 2220
FUNCTIONAL SUPERVISOR NAME: D. Jang	DRAWN BY: F. Nguyen CHECKED BY: H. Liu	FIELD INVESTIGATION BY: M. Salisbury		POST MILE 42.07	LOG OF TEST BORINGS 2 OF 2

OGS CIVIL LOG OF TEST BORINGS SHEET

ORIGINAL SCALE IN INCHES FOR REDUCED PLANS 0 1 2 3

UNIT: 3643
PROJECT NUMBER & PHASE: 07130000071 CONTRACT NO.: 07-1193U1

DISREGARD PRINTS BEARING EARLIER REVISION DATES

REVISION DATES: 10-15-13 11-21-13 12-13-13 01-15-14

SHEET 6 OF 6

FILE => 53e-rw2220-z-ltb2of2.dgn

USERNAME => s125624 DATE PLOTTED => 18-MAY-2015 TIME PLOTTED => 16:38