Dist	COUNTY	ROUTE	POST MILES TOTAL PROJECT	SHEET No.	TOTAL SHEETS
06	Mad	99	R6.9/R8.2	23	526

AKM Rahman 9-2-11
REGISTERED CIVIL ENGINEER DATE

6-4-12
PLANS APPROVAL DATE

REGISTERED PROFESSIONAL ENGINEER AKM F. RAHMAN No. 74163 Exp. 6/30/13 CIVIL STATE OF CALIFORNIA

THE STATE OF CALIFORNIA OR ITS OFFICERS OR AGENTS SHALL NOT BE RESPONSIBLE FOR THE ACCURACY OR COMPLETENESS OF SCANNED COPIES OF THIS PLAN SHEET.

NOTES:

1. FOR ACCURATE RIGHT OF WAY DATA, CONTACT RIGHT OF WAY ENGINEERING AT THE DISTRICT OFFICE.
2. SEE CONSTRUCTION DETAIL SHEET C-3.

CURVE DATA

No. (X)	R	Δ	T	L
3	20000.00′	3°24′17"	594.39′	1188.43′
43	20000.00′	1°22′52"	241.07′	482.12′
44	700.00′	36°41′51"	232.16′	448.35′
82	244.00′	20°49′16"	44.83′	88.67′

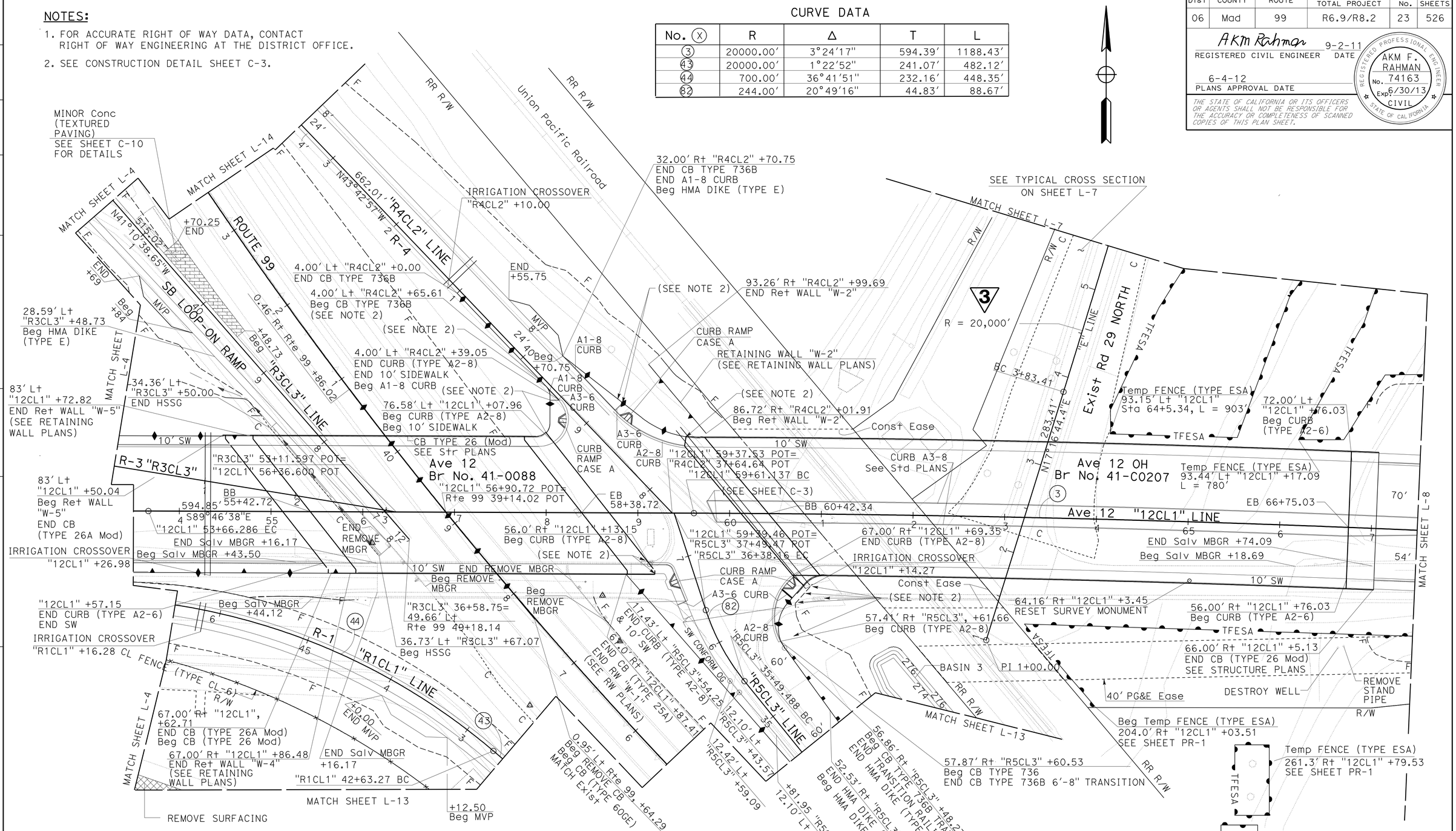

LAYOUT

SCALE: 1" = 50′

L-6

3 REVISED PER ADDENDUM No. 3 DATED OCTOBER 15, 2012

STATE OF CALIFORNIA - DEPARTMENT OF TRANSPORTATION
DESIGN
FUNCTIONAL SUPERVISOR: GETACHEW ESHETE
CALCULATED-DESIGNED BY: AKM RAHMAN
CHECKED BY: TRIET LY
REVISED BY / DATE REVISED

LAST REVISION 04-06-12 | DATE PLOTTED => 11-OCT-2012 | TIME PLOTTED => 14:25

BORDER LAST REVISED 7/2/2010 | USERNAME => s121614 | DGN FILE => 647100ea006.dgn | RELATIVE BORDER SCALE IS IN INCHES 0 1 2 3 | UNIT 1475 | PROJECT NUMBER & PHASE 06000004631

Dist	COUNTY	ROUTE	POST MILES TOTAL PROJECT	SHEET No.	TOTAL SHEETS
06	Mad	99	R6.9/R8.2	24	526

AKM Rahman 9-2-11
REGISTERED CIVIL ENGINEER DATE

6-4-12
PLANS APPROVAL DATE

REGISTERED PROFESSIONAL ENGINEER AKM F. RAHMAN No. 74163 Exp. 6/30/13 CIVIL STATE OF CALIFORNIA

THE STATE OF CALIFORNIA OR ITS OFFICERS OR AGENTS SHALL NOT BE RESPONSIBLE FOR THE ACCURACY OR COMPLETENESS OF SCANNED COPIES OF THIS PLAN SHEET.

NOTE:

FOR ACCURATE RIGHT OF WAY DATA, CONTACT RIGHT OF WAY ENGINEERING AT THE DISTRICT OFFICE.

CURVE DATA

No. (X)	R	Δ	T	L
12	76.00′	99°7′57″	89.19′	131.49′
13	1450.00′	7°56′03″	100.56′	200.79′

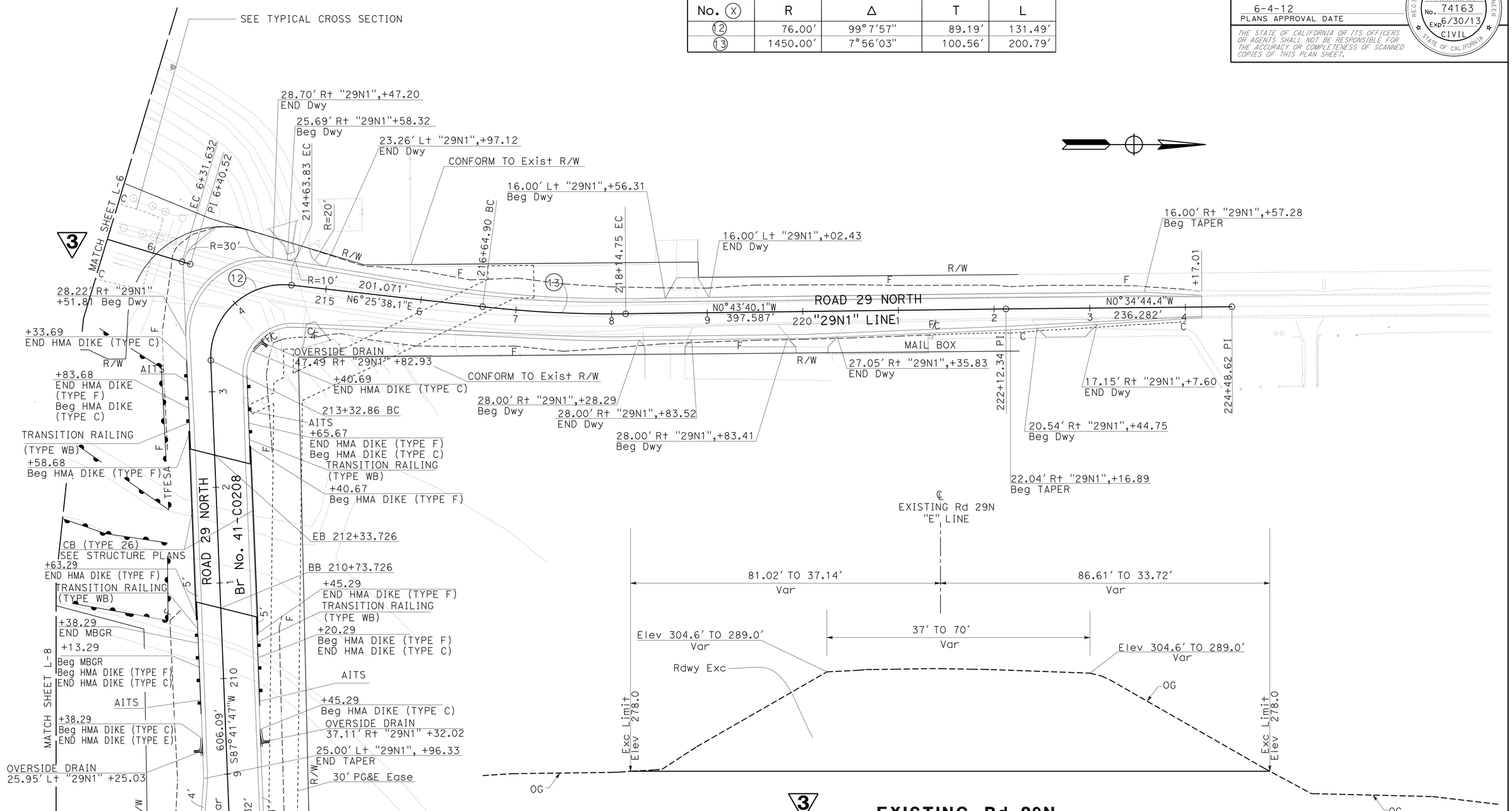

EXISTING Rd 29N
TYPICAL CROSS SECTION
Sta 2+20.00 TO Sta 6+00.00

LAYOUT
SCALE: 1" = 50′

REVISED PER ADDENDUM No. 3 DATED OCTOBER 15, 2012

L-7

STATE OF CALIFORNIA - DEPARTMENT OF TRANSPORTATION
Caltrans DESIGN
FUNCTIONAL SUPERVISOR: GETACHEW ESHETE
CALCULATED-DESIGNED BY: AKM RAHMAN
CHECKED BY: TRIET LY
REVISED BY
DATE REVISED

LAST REVISION DATE PLOTTED => 11-OCT-2012
04-06-12 TIME PLOTTED => 14:26

Dist	COUNTY	ROUTE	POST MILES TOTAL PROJECT	SHEET No.	TOTAL SHEETS
06	Mad	99	R6.9/R8.2	69A	526

AKM Rahman 9-2-11
REGISTERED CIVIL ENGINEER DATE

6-4-12
PLANS APPROVAL DATE

REGISTERED PROFESSIONAL ENGINEER AKM F. RAHMAN No. 74163 Exp. 6/30/13 CIVIL STATE OF CALIFORNIA

THE STATE OF CALIFORNIA OR ITS OFFICERS OR AGENTS SHALL NOT BE RESPONSIBLE FOR THE ACCURACY OR COMPLETENESS OF SCANNED COPIES OF THIS PLAN SHEET.

3

NOTE:

FOR ACCURATE RIGHT OF WAY DATA, CONTACT RIGHT OF WAY ENGINEERING AT THE DISTRICT OFFICE.

LEGEND:

PARCELS WHERE CONTRACTOR HAS TO WORK AROUND.

PARCEL NUMBER

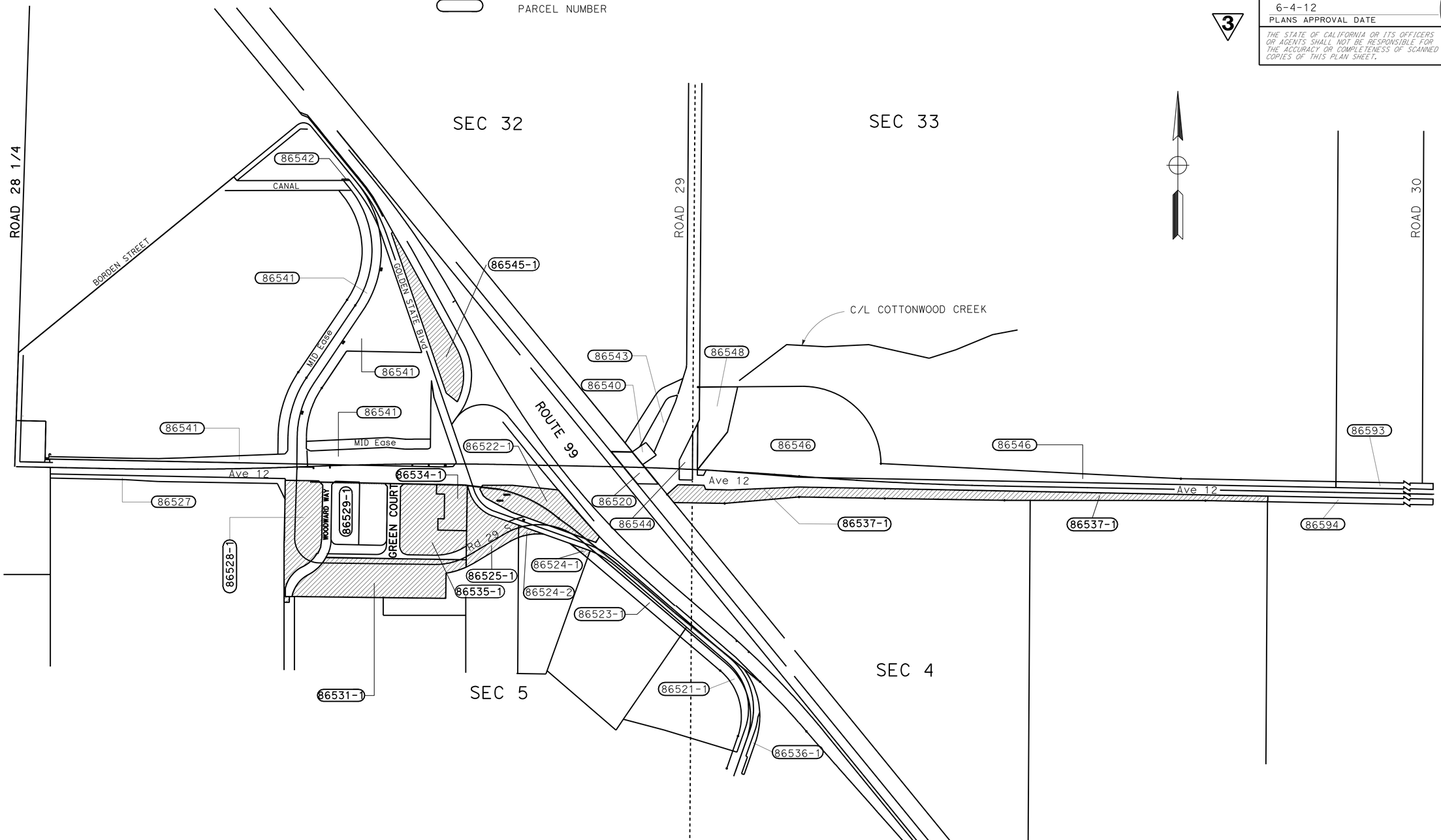

3 **ADDED PER ADDENDUM No. 3 DATED OCTOBER 15, 2012**

CONSTRUCTION DETAILS
(PARCELS TO WORK AROUND)

NO SCALE

C-14A

STATE OF CALIFORNIA - DEPARTMENT OF TRANSPORTATION
Caltrans
DESIGN

FUNCTIONAL SUPERVISOR: GETACHEW ESHETE
CALCULATED-DESIGNED BY: AKM RAHMAN
CHECKED BY: TRIET LY
REVISED BY
DATE REVISED

LAST REVISION 12-6-11
DATE PLOTTED => 11-OCT-2012
TIME PLOTTED => 14:26

Dist	COUNTY	ROUTE	POST MILES TOTAL PROJECT	SHEET No.	TOTAL SHEETS
06	Mad	99	R6.9/R8.2	141	526

AKM Rahman 9-2-11
REGISTERED CIVIL ENGINEER DATE

6-4-12
PLANS APPROVAL DATE

REGISTERED PROFESSIONAL ENGINEER AKM F. RAHMAN No. 74163 Exp. 6/30/13 CIVIL STATE OF CALIFORNIA

THE STATE OF CALIFORNIA OR ITS OFFICERS OR AGENTS SHALL NOT BE RESPONSIBLE FOR THE ACCURACY OR COMPLETENESS OF SCANNED COPIES OF THIS PLAN SHEET.

1

NOTES:

1. "D" REPRESENTS THE OUTSIDE DIAMETER OF THE PIPE CONNECTED TO THE FLARED-END SECTION.
2. "W" REPRESENTS THE WIDTH OF FLARED END SECTION OPENING AS SHOWN ON STANDARD PLAN.

ABBREVIATIONS

TOS	TOP OF SLAB
BOS	BOTTOM OF SLAB
TOP	TOP OF PIPE
MID	MADERA IRRIGATION DISTRICT

LEDGEND:

- STRUCTURE EXCAVATION
- STRUCTURE BACKFILL
- ROADWAY EMBANKMENT

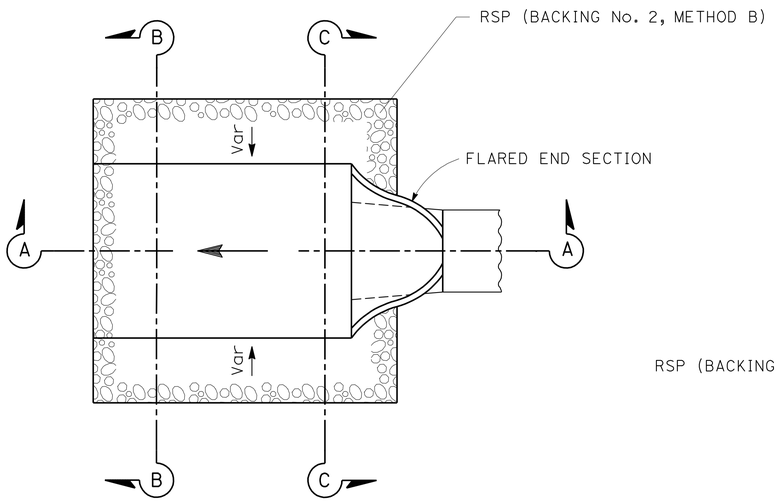

PLAN

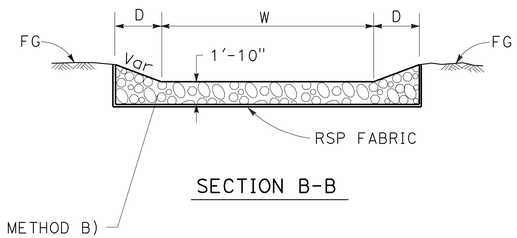

SECTION B-B

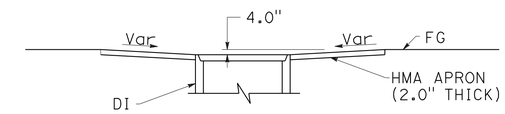

SECTION A-A

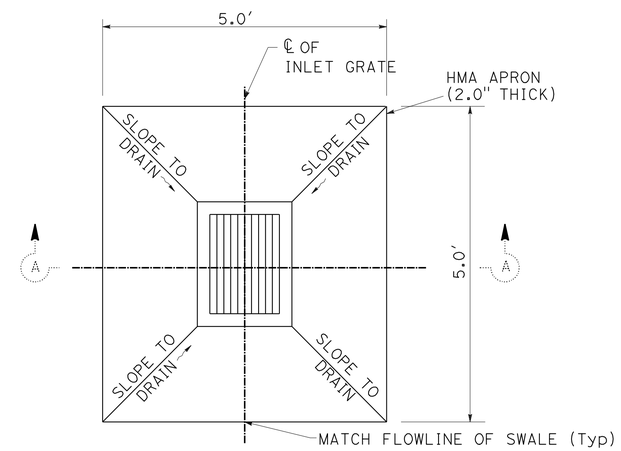

INLET DEPRESSION IN DIRT AREAS
~~INLET IN DIRT AREAS~~
WITH HMA APRON

3

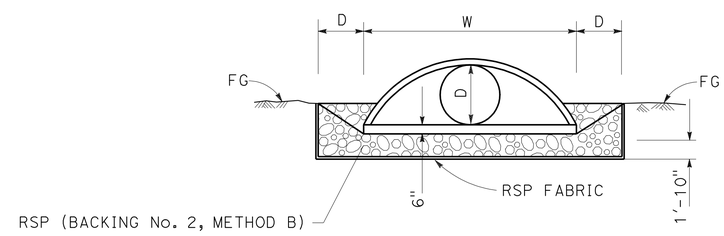

SECTION C-C

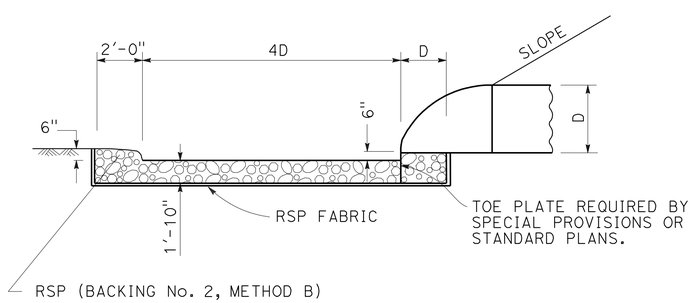

SECTION A-A

ROCK ENERGY DISSIPATOR

3 **REVISED PER ADDENDUM No. 3 DATED OCTOBER 15, 2012**

1 **REVISED PER ADDENDUM No. 1 DATED SEPTEMBER 20, 2012**

DRAINAGE DETAILS

NO SCALE

DD-1

STATE OF CALIFORNIA - DEPARTMENT OF TRANSPORTATION
Caltrans® DESIGN

FUNCTIONAL SUPERVISOR: GETACHEW ESHETE
CALCULATED-DESIGNED BY: BILL LEE
CHECKED BY: AKM RAHMAN
REVISED BY: WRL
DATE REVISED: 08-22-12

LAST REVISION 11-20-11
DATE PLOTTED => 11-OCT-2012
TIME PLOTTED => 14:21

Dist	COUNTY	ROUTE	POST MILES TOTAL PROJECT	SHEET No.	TOTAL SHEETS
06	Mad	99	R6.9/R8.2	161	526

AKM Rahman 9-2-11
REGISTERED CIVIL ENGINEER DATE

6-4-12
PLANS APPROVAL DATE

REGISTERED PROFESSIONAL ENGINEER AKM F. RAHMAN No. 74163 Exp. 6/30/13 CIVIL STATE OF CALIFORNIA

THE STATE OF CALIFORNIA OR ITS OFFICERS OR AGENTS SHALL NOT BE RESPONSIBLE FOR THE ACCURACY OR COMPLETENESS OF SCANNED COPIES OF THIS PLAN SHEET.

NOTE:
1. ALTERNATIVE PIPE CULVERT (APC) MATERIALS ALLOWED:
   a. PLASTIC PIPE OR.
   b. REINFORCED CONCRETE PIPE (RCP).
2. FLOW LINES AT GRATE ARE UNDEPRESSED ELEVATIONS.
3. ALL GRATES SHALL BE DEPRESSED AS PER THE STANDARD PLANS.

1

3

DRAINAGE QUANTITIES

DRAINAGE SHEET No.	DRAINAGE SYSTEM No. ⬡	DRAINAGE UNIT ○	ABANDON CULVERT	SAND BACKFILL	REMOVE INLET	MINOR CONCRETE (MINOR STRUCTURE)	DESIGN H (N)	MISCELLANEOUS IRON AND STEEL	GRATE TYPE 24-12X (N)	GRATE TYPE 24-12 (N)	INLET DEPRESSION	8" CORRUGATED STEEL PIPE (0.064" THICK)	MINOR CONCRETE BACKFILL	RSP FABRIC (CLASS 8)	ROCK SLOPE PROTECTION (No. 2, METHOD B)	18" STEEL FES	18" CORRUGATED STEEL PIPE (.079" THICK)	24" STEEL FES	24" CORRUGATED STEEL PIPE (.079" THICK)	36" CORRUGATED STEEL PIPE INLET (.079" THICK)	MANHOLE TYPE A	MANHOLE TYPE B	HEIGHT OF COVER (N)	24" ALTERNATIVE FES	24" ALTERNATIVE PIPE CULVERT	CONCRETE FES			REINFORCED CONCRETE PIPE			DESCRIPTION	STATION	DRAINAGE SHEET No.	DRAINAGE SYSTEM No. ⬡	DRAINAGE UNIT ○
																										18"	24"	36"	18"	24"	36"					
			EA	CY	EA	CY	LF	LB	EA	EA	EA	LF	CY	SQYD	CY	EA	LF	EA	LF	LF	EA	EA	LF	EA	LF	EA	EA	EA	LF	LF	LF					
D-2	1	a				1.57	4.35	239	1		1																					DI TYPE GO	"12CL1" 42+20.00	D-2	1	a
D-2	1	b																							110.0							24" APC		D-2	1	b
D-3	2	a				1.74	5.02	239	1		1																					DI TYPE GO	"12CL1" 43+50.00	D-3	2	a
D-3	2	b																							110.0							24" APC		D-3	2	b
D-3	3	a				1.86	5.52	239	1		1																					DI TYPE GO	"12CL1" 45+49.90	D-3	3	a
D-3	3	b																							110.0							24" APC		D-3	3	b
D-3	4	a				1.83	5.22	239	1		1																					DI TYPE GO	"12CL1" 47+50.00	D-3	4	a
D-3	4	b																							108.5							24" APC		D-3	4	b
D-3	5	a				1.73	5.00	239	1		1																					DI TYPE GO	"12CL1" 49+67.28	D-3	5	a
		b																							99.5							24" APC				b
		c				3.63	8.69	239	1		1																					DI TYPE GO	"12CL1" 50+70.00			c
		d																							100.5							24" APC				d
		e				3.82	9.24	239	1		1																					DI TYPE GO	"12CL1" 50+70.00			e
D-3	5	f																							55.5							24" APC		D-3	5	f
D-3	6	a				1.76	5.13	239	1		1																					DI TYPE GO	"12CL1" 53+00.00	D-3	6	a
		b																							123.5							24" APC				b
		c				1.84	5.44	239	1		1																					DI TYPE GO	"12CL1" 52+82.00			c
		d																	46.6													24" CSP				d
		e																	13.4													24" CSP				e
		f																1														24" STEEL FES	"R3CL3" 49+31.81			f
D-3	6	g												20.0	8																	RSP		D-3	6	g
D-5	7	a				1.73	5.00	239	1		1																					DI TYPE GO	"12CL1" 55+50.00	D-5	7	a
		b																							157.0							24" APC				b
		c				1.73	5.00	239	1		1																					DI TYPE GO	"12CL1" 54+50.00			c
D-3,5	7	d																							144.8							24" APC		D-3,5	7	d
D-2	8	a				1.53	4.18	239	1		1																					DI TYPE GO	"12CL1" 42+20.00	D-2	8	a
D-2,3	8	b																							127.5							24" APC		D-2,3	8	b
		c				1.71	4.91	239	1		1																					DI TYPE GO	"12CL1" 43+50.00			c
		d																							198.0							24" APC				d
		e				1.99	6.06	239	1		1																					DI TYPE GO	"12CL1" 45+50.00			e
D-3	8	f																							198.0							24" APC		D-3	8	f
SHEET TOTAL						28.47		3346			14			20.0	8			1	60.0						1642.8											

1 REVISED PER ADDENDUM No. 1 DATED SEPTEMBER 20, 2012

3 REVISED PER ADDENDUM No. 3 DATED OCTOBER 15, 2012

DRAINAGE QUANTITIES
DQ-1

STATE OF CALIFORNIA - DEPARTMENT OF TRANSPORTATION
Caltrans® DESIGN

FUNCTIONAL SUPERVISOR: GETACHEW ESHETE
CALCULATED-DESIGNED BY: TRIET LY
CHECKED BY: MAHESH MONGA
REVISED BY: WRL
DATE REVISED: 09-12-12

LAST REVISION 11-20-11
DATE PLOTTED => 11-OCT-2012
TIME PLOTTED => 14:21

Dist	COUNTY	ROUTE	POST MILES TOTAL PROJECT	SHEET No.	TOTAL SHEETS
06	Mad	99	R6.9/R8.2	162	526

AKM Rahman 9-2-11
REGISTERED CIVIL ENGINEER DATE

6-4-12
PLANS APPROVAL DATE

REGISTERED PROFESSIONAL ENGINEER AKM F. RAHMAN No. 74163 Exp. 6/30/13 CIVIL STATE OF CALIFORNIA

THE STATE OF CALIFORNIA OR ITS OFFICERS OR AGENTS SHALL NOT BE RESPONSIBLE FOR THE ACCURACY OR COMPLETENESS OF SCANNED COPIES OF THIS PLAN SHEET.

1

3

DRAINAGE QUANTITIES

DRAINAGE SHEET No.	DRAINAGE SYSTEM No. ⬡	DRAINAGE UNIT ○	ABANDON CULVERT	SAND BACKFILL	REMOVE INLET	MINOR CONCRETE (MINOR STRUCTURE)	DESIGN H (N)	MISCELLANEOUS IRON AND STEEL	GRATE TYPE 24-12X (N)	GRATE TYPE 24-12 (N)	INLET DEPRESSION	8" CORRUGATED STEEL PIPE (0.064" THICK)	MINOR CONCRETE BACKFILL	RSP FABRIC (CLASS 8)	ROCK SLOPE PROTECTION (No. 2, METHOD B)	18" STEEL FES	18" CORRUGATED STEEL PIPE (.079" THICK)	24" STEEL FES	24" CORRUGATED STEEL PIPE (.079" THICK)	36" CORRUGATED STEEL PIPE INLET (.079" THICK)	MANHOLE TYPE A	MANHOLE TYPE B	HEIGHT OF COVER (N)	24" ALTERNATIVE FES	24" ALTERNATIVE PIPE CULVERT	CONCRETE FES			REINFORCED CONCRETE PIPE			DESCRIPTION	STATION	DRAINAGE SHEET No.	DRAINAGE SYSTEM No. ⬡	DRAINAGE UNIT ○
																										18"	24"	36"	18"	24"	36"					
			EA	CY	EA	CY	LF	LB	EA	EA	EA	LF	CY	SQYD	CY	EA	LF	EA	LF	LF	EA	EA	LF	EA	LF	EA	EA	EA	LF	LF	LF					
D-3	8	g				2.34	7.50	239	1		1																					DI TYPE GO	"12CL1" 47+50.00	D-3	8	g
		h																							132.5							24" APC				h
		i				3.97	9.69	239	1		1																					DI TYPE GO	"12CL1" 48+85.00			i
		j																							160.0							24" APC				j
		k				4.76	11.52	326		1	1																					DI TYPE G2	"12CL1" 47+18.09			k
		l																							137.0							24" APC				l
		m																						1								24" AFES	"R3CL3" 47+37.01			m
D-3	8	n												20.0	8																	RSP		D-3	8	n
D-5	9	a												25.0	10																	RSP		D-5	9	a
		b																									1					24" FES	"R1CL1" 45+76.10			b
		c																												292.6		24" RCP				c
		d																									1					24" FES	"R1CL1" 53+74.95			d
D-5	9	e												25.0	10																	RSP		D-5	9	e
D-9	10	a				1.42	5.12	326		1	1																					DI TYPE G1	"R1CL1" 31+66.96	D-9	10	a
		b																							42.8							24" APC				b
		c																						1								24" AFES	"R1CL1" 31+67.87			c
D-9	10	d												20.0	8																	RSP		D-9	10	d
D-9	11	a				1.39	5.00	326		1	1																					DI TYPE G1	"R1CL1" 33+57.80	D-9	11	a
		b																							35.0							24" APC				b
		c				1.39	5.00	326		1	1																					DI TYPE G1	"R1CL1" 33+50.00			c
		d																							8.9							24" APC				d
		e																						1								24" AFES	"R1CL1" 33+50.00			e
D-9	11	f												20.0	8																	RSP		D-9	11	f
D-5	12	a												20.0	8																	RSP		D-5	12	a
		b																						1								24" AFES	"R1CL1" 44+00.00			b
		c																							59.4							24" APC				c
		d																						1								24" AFES	"R1CL1" 44+00.00			d
D-5	12	e												20.0	8																	RSP		D-5	12	e
D-3	13	a				1.39	5.00	326		1	1																					DI TYPE G1	"R2CL3" 44+18.00	D-3	13	a
		b																							133.0							24" APC				b
D-3	13	c																						1								24" AFES	"R2CL3" 45+69.18	D-3	13	c
SHEET TOTAL						16.66		2108			5			150.0	60									6	708.6		2			292.6						

1 REVISED PER ADDENDUM No. 1 DATED SEPTEMBER 20, 2012

3 REVISED PER ADDENDUM No. 3 DATED OCTOBER 15, 2012

DRAINAGE QUANTITIES
DQ-2

STATE OF CALIFORNIA - DEPARTMENT OF TRANSPORTATION
Caltrans® DESIGN

CALCULATED-DESIGNED BY TRIET LY
CHECKED BY MAHESH MONGA
REVISED BY WRL
DATE REVISED 09-12-12
FUNCTIONAL SUPERVISOR GETACHEW ESHETE

LAST REVISION DATE PLOTTED => 11-OCT-2012
TIME PLOTTED => 14:22
11-20-11

Dist	COUNTY	ROUTE	POST MILES TOTAL PROJECT	SHEET No.	TOTAL SHEETS
06	Mad	99	R6.9/R8.2	165	526

AKM Rahman 9-2-11
REGISTERED CIVIL ENGINEER DATE

6-4-12
PLANS APPROVAL DATE

REGISTERED PROFESSIONAL ENGINEER AKM F. RAHMAN No. 74163 Exp. 6/30/13 CIVIL STATE OF CALIFORNIA

THE STATE OF CALIFORNIA OR ITS OFFICERS OR AGENTS SHALL NOT BE RESPONSIBLE FOR THE ACCURACY OR COMPLETENESS OF SCANNED COPIES OF THIS PLAN SHEET.

1

3

DRAINAGE QUANTITIES

DRAINAGE SHEET No.	DRAINAGE SYSTEM No. ⬡	DRAINAGE UNIT ○	ABANDON CULVERT (EA)	SAND BACKFILL (CY)	REMOVE INLET (EA)	MINOR CONCRETE (MINOR STRUCTURE) (CY)	DESIGN H (N) (LF)	MISCELLANEOUS IRON AND STEEL (LB)	GRATE TYPE 24-12X (N) (EA)	GRATE TYPE 24-12 (N) (EA)	INLET DEPRESSION (EA)	8" CORRUGATED STEEL PIPE (0.064" THICK) (LF)	MINOR CONCRETE BACKFILL (CY)	RSP FABRIC (CLASS 8) (SQYD)	ROCK SLOPE PROTECTION (No. 2, METHOD B) (CY)	18" STEEL FES (EA)	18" CORRUGATED STEEL PIPE (.079" THICK) (LF)	24" STEEL FES (EA)	24" CORRUGATED STEEL PIPE (.079" THICK) (LF)	36" CORRUGATED STEEL PIPE INLET (.079" THICK) (LF)	MANHOLE TYPE A (EA)	MANHOLE TYPE B (EA)	HEIGHT OF COVER (N) (LF)	24" ALTERNATIVE FES (EA)	24" ALTERNATIVE PIPE CULVERT (LF)	CONCRETE FES 18" (EA)	CONCRETE FES 24" (EA)	CONCRETE FES 36" (EA)	REINFORCED CONCRETE PIPE 18" (LF)	REINFORCED CONCRETE PIPE 24" (LF)	REINFORCED CONCRETE PIPE 36" (LF)	DESCRIPTION	STATION	DRAINAGE SHEET No.	DRAINAGE SYSTEM No. ⬡	DRAINAGE UNIT ○
D-10	22	d												20.4	8																	RSP		D-10	22	d
D-5	23	a										13.0																				8" Galv Steel Pipe		D-5	23	a
		b				3.44	8.13	239	1		1																					DI TYPE G0	"12CL1" 67+25.00			b
		c															18.0															18" CSP				c
		d															28.8															18" CSP				d
		e															6.1															18" CSP				e
		f														1																18" STEEL FES	"12CL1" 67+25.00			f
D-5	23	g												13.3	4																	RSP		D-5	23	g
D-5	24	a										18.2																				8" Galv Steel Pipe		D-5	24	a
		b				2.45	7.93	239	1		1																					DI TYPE G0	"12CL1" 67+30.00			b
		c															18.2															18" CSP				c
		d															30.6															18" CSP				d
		e															6.1															18" CSP				e
		f														1																18" STEEL FES	"12CL1" 67+30.00			f
D-5	24	g												13.3	4																	RSP		D-5	24	g
D-7	25	a				1.56	4.32	239	1		1																					DI TYPE G0	"12CL1" 69+50.00	D-7	25	a
		b															15.7															18" CSP				b
		c															37.8															18" CSP				c
		d															8.6															18" CSP				d
		e														1																18" STEEL FES	"12CL1" 69+50.00			e
D-7	25	f												13.3	4																	RSP		D-7	25	f
D-7	26	a				1.54	4.21	239	1		1																					DI TYPE G0	"12CL1" 71+50.00	D-7	26	a
		b																												39.4		18" RCP				b
		c																									1					18" Conc FES	"12CL1" 71+50.00			c
D-7	26	d												13.3	4																	RSP		D-7	26	d
D-7	27	a				1.56	4.31	239	1		1																					DI TYPE G0	"12CL1" 74+40.00	D-7	27	a
		b																												28.8		18" RCP				b
		c																									1					18" Conc FES	"12CL1" 74+40.00			c
D-7	27	d												13.3	4																	RSP		D-7	27	d
D-7	28	a				1.54	4.22	239	1		1																					DI TYPE G0	"12CL1" 74+70.00	D-7	28	a
		b																												32.6		18" RCP				b
		c																									1					18" Conc FES	"12CL1" 74+70.00			c
D-7	28	d												13.3	4																	RSP		D-7	28	d
SHEET TOTAL						12.09		1434			6	31.2		100.2	56	3	169.9									3			100.8					

1 REVISED PER ADDENDUM No. 1 DATED SEPTEMBER 20, 2012

3 REVISED PER ADDENDUM No. 3 DATED OCTOBER 15, 2012

DRAINAGE QUANTITIES
DQ-5

STATE OF CALIFORNIA - DEPARTMENT OF TRANSPORTATION
Caltrans DESIGN

FUNCTIONAL SUPERVISOR: GETACHEW ESHETE
CALCULATED-DESIGNED BY: TRIET LY
CHECKED BY: MAHESH MONGA
REVISED BY: WRL
DATE REVISED: 09-12-12

LAST REVISION 11-20-11
DATE PLOTTED => 11-OCT-2012
TIME PLOTTED => 14:22

Dist	COUNTY	ROUTE	POST MILES TOTAL PROJECT	SHEET No.	TOTAL SHEETS
06	Mad	99	R6.9/R8.2	167	526

AKM Rahman 9-2-11
REGISTERED CIVIL ENGINEER DATE

6-4-12
PLANS APPROVAL DATE

REGISTERED PROFESSIONAL ENGINEER AKM F. RAHMAN No. 74163 Exp. 6/30/13 CIVIL STATE OF CALIFORNIA

THE STATE OF CALIFORNIA OR ITS OFFICERS OR AGENTS SHALL NOT BE RESPONSIBLE FOR THE ACCURACY OR COMPLETENESS OF SCANNED COPIES OF THIS PLAN SHEET.

1

3

DRAINAGE QUANTITIES

DRAINAGE SHEET No.	DRAINAGE SYSTEM No. ⬡	DRAINAGE UNIT ○	ABANDON CULVERT	SAND BACKFILL	REMOVE INLET	MINOR CONCRETE (MINOR STRUCTURE)	DESIGN H (N)	MISCELLANEOUS IRON AND STEEL	GRATE TYPE 24-12X (N)	GRATE TYPE 24-12 (N)	INLET DEPRESSION	8" CORRUGATED STEEL PIPE (0.064" THICK)	MINOR CONCRETE BACKFILL	RSP FABRIC (CLASS 8)	ROCK SLOPE PROTECTION (No. 2, METHOD B)	18" STEEL FES	18" CORRUGATED STEEL PIPE (.079" THICK)	24" STEEL FES	24" CORRUGATED STEEL PIPE (.079" THICK)	36" CORRUGATED STEEL PIPE INLET (.079" THICK)	MANHOLE TYPE A	MANHOLE TYPE B	HEIGHT OF COVER (N)	24" ALTERNATIVE FES	24" ALTERNATIVE PIPE CULVERT	CONCRETE FES			REINFORCED CONCRETE PIPE			DESCRIPTION	STATION	DRAINAGE SHEET No.	DRAINAGE SYSTEM No. ⬡	DRAINAGE UNIT ○
																										18"	24"	36"	18"	24"	36"					
			EA	CY	EA	CY	LF	LB	EA	EA	EA	LF	CY	SQYD	CY	EA	LF	EA	LF	LF	EA	EA	LF	EA	LF	EA	EA	EA	LF	LF	LF					
D-8	36	d												25.0	10																	RSP		D-8	36	d
D-8	37	a																									1					24" Conc FES	"12CL1" 82+00.00	D-8	37	a
		b																												137.5		24" RCP				b
		c																									1					24" Conc FES	"12CL1" 82+00.00			c
		d												25.0	10																	RSP				d
D-8	37	e											7.1																					D-8	37	e
D-8	38	a																									1					24" Conc FES	"12CL1" 84+00.00	D-8	38	a
		b																												126.0		24" RCP				b
		c																									1					24" Conc FES	"12CL1" 84+00.00			c
D-8	38	d												25.0	10																	RSP		D-8	38	d
D-8	39	a																									1					24" Conc FES	"12CL1" 87+00.00	D-8	39	a
		b																												126.7		24" RCP				b
		c																									1					24" Conc FES	"12CL1" 87+00.00			c
D-8	39	d												25.0	10																	RSP		D-8	39	d
D-8	40	a																									1					24" Conc FES	"12CL1" 89+00.00	D-8	40	a
		b																												125.8		24" RCP				b
		c																									1					24" Conc FES	"12CL1" 89+00.00			c
D-8	40	d												25.0	10																	RSP		D-8	40	d
D-4	41	a				1.56	4.19	239	1		1																					DI TYPE G0	"29SCL4" 47+35.00	D-4	41	a
		b																												57.9		24" RCP				b
		c					8.64														1											MANHOLE	"29SCL4" 47+35.00			c
		d																												200.7		24" RCP				d
		e					8.06														1											MANHOLE	"29SCL4" 49+37.00			e
		f																												48.8		24" RCP				f
		g					7.85														1											MANHOLE	"29SCL4" 49+87.30			g
		h																												92.7		24" RCP				h
		i					7.56														1											MANHOLE	"29SCL4" 50+83.00			i
D-4		j																												364.2		24" RCP		D-4		j
D-2		k					8.70														1											MANHOLE	"29SCL4" 54+50.00	D-2		k
		l																												197.6		24" RCP				l
		m					4.83															1										MANHOLE	"29SCL4" 56+45.80			m
		n																												144.6		24" RCP				n
D-2	41	o					4.75															1										MANHOLE	"29SCL4" 58+00.00	D-2	41	o
SHEET TOTAL						1.56		239			1		7.1	125.0	50						5	2					8			1622.5						

1 REVISED PER ADDENDUM No. 1 DATED SEPTEMBER 20, 2012

3 REVISED PER ADDENDUM No. 3 DATED OCTOBER 15, 2012

DRAINAGE QUANTITIES
DQ-7

STATE OF CALIFORNIA - DEPARTMENT OF TRANSPORTATION
Caltrans® DESIGN

FUNCTIONAL SUPERVISOR: GETACHEW ESHETE

CALCULATED-DESIGNED BY: TRIET LY
CHECKED BY: MAHESH MONGA

REVISED BY: WRL
DATE REVISED: 09-12-12

LAST REVISION 11-20-11
DATE PLOTTED => 15-OCT-2012
TIME PLOTTED => 09:03

Dist	COUNTY	ROUTE	POST MILES TOTAL PROJECT	SHEET No.	TOTAL SHEETS
06	Mad	99	R6.9/R8.2	168	526

AKM Rahman 9-2-11
REGISTERED CIVIL ENGINEER DATE

6-4-12
PLANS APPROVAL DATE

REGISTERED PROFESSIONAL ENGINEER AKM F. RAHMAN No. 74163 Exp. 6/30/13 CIVIL STATE OF CALIFORNIA

THE STATE OF CALIFORNIA OR ITS OFFICERS OR AGENTS SHALL NOT BE RESPONSIBLE FOR THE ACCURACY OR COMPLETENESS OF SCANNED COPIES OF THIS PLAN SHEET.

1

3

DRAINAGE QUANTITIES

DRAINAGE SHEET No.	DRAINAGE SYSTEM No. ⬡	DRAINAGE UNIT ○	ABANDON CULVERT	SAND BACKFILL	REMOVE INLET	MINOR CONCRETE (MINOR STRUCTURE)	DESIGN H (N)	MISCELLANEOUS IRON AND STEEL	GRATE TYPE 24-12X (N)	GRATE TYPE 24-12 (N)	INLET DEPRESSION	8" CORRUGATED STEEL PIPE (0.064" THICK)	MINOR CONCRETE BACKFILL	RSP FABRIC (CLASS 8)	ROCK SLOPE PROTECTION (No. 2, METHOD B)	18" STEEL FES	18" CORRUGATED STEEL PIPE (.079" THICK)	24" STEEL FES	24" CORRUGATED STEEL PIPE (.079" THICK)	36" CORRUGATED STEEL PIPE INLET (.079" THICK)	MANHOLE TYPE A	MANHOLE TYPE B	HEIGHT OF COVER (N)	24" ALTERNATIVE FES	24" ALTERNATIVE PIPE CULVERT	CONCRETE FES			REINFORCED CONCRETE PIPE			DESCRIPTION	STATION	DRAINAGE SHEET No.	DRAINAGE SYSTEM No. ⬡	DRAINAGE UNIT ○
																										18"	24"	36"	18"	24"	36"					
			EA	CY	EA	CY	LF	LB	EA	EA	EA	LF	CY	SQYD	CY	EA	LF	EA	LF	LF	EA	EA	LF	EA	LF	EA	EA	EA	LF	LF	LF					
		p																											60.8			18" RCP				p
D-2	41	q				1.48	3.95	239	1		~~1~~																					DI TYPE GO	"29SCL4" 58+00.00	D-2	41	q
D-4	42	a				1.66	4.73	239	1		~~1~~																					DI TYPE GO	"GCL1" 24+88.67	D-4	42	a
		b																											58.2			18" RCP				b
		c				1.78	5.21	239	1		~~1~~																					DI TYPE GO	"29SCL4" 47+35.00			c
	42	d																												72.6		24" RCP			42	d
	41	e																														MANHOLE	"29SCL4" 47+35.00		41	e
	42	f																												68.0		24" RCP			42	f
		g																									1					24" FES				g
D-4	42	h												25.0	10																	RSP		D-4	42	h
D-4	43	a				2.16	6.76	239	1		~~1~~																					DI TYPE GO	"29SCL4" 49+87.30	D-4	43	a
D-4	43	b																												4.4		24" RCP		D-4	43	b
D-4	44	a				1.52	4.11	239	1		~~1~~																					DI TYPE GO	"29SCL4" 49+87.30	D-4	44	a
D-4	44	b																												68.5		24" RCP		D-4	44	b
D-2	45	a				1.73	4.99	239	1		~~1~~																					DI TYPE GO	"29SCL4" 49+87.30	D-2	45	a
D-2	45	b																												8.3		24" RCP		D-2	45	b
D-2	46	a				1.43	3.77	239	1		~~1~~																					DI TYPE GO	"DWY1" 13+59.91	D-2	46	a
		b																											114.0			18" RCP				b
		c				1.87	5.58	239	1		~~1~~																					DI TYPE GO	"DWY1" 13+59.91			c
D-2		d																											100.2			18" RCP		D-2		d
D-4	46	e					6.28														1											MANHOLE	"DWY1" 17+10.53	D-4	46	e
														25.0	10																					
D-4	47	a				1.51	4.11	239	1		~~1~~																					DI TYPE GO	"DWY1" 17+98.90	D-4	47	a
		b																											82.2			18" RCP				b
		c				1.24	3.00	239	1		~~1~~																					DI TYPE GO	"DWY1" 13+59.91			c
		d																											81.0			18" RCP				d
D-4	47	e					6.47														1											MANHOLE		D-4	47	e
SHEET TOTAL						16.38		2390			~~10~~			50.0	20						2						1		496.4	221.8						

1 REVISED PER ADDENDUM No. 1 DATED SEPTEMBER 20, 2012

3 REVISED PER ADDENDUM No. 3 DATED OCTOBER 15, 2012

DRAINAGE QUANTITIES
DQ-8

STATE OF CALIFORNIA - DEPARTMENT OF TRANSPORTATION
Caltrans® DESIGN

FUNCTIONAL SUPERVISOR: GETACHEW ESHETE
CALCULATED-DESIGNED BY: TRIET LY
CHECKED BY: MAHESH MONGA
REVISED BY: WRL
DATE REVISED: 09-12-12

LAST REVISION 11-20-11
DATE PLOTTED => 15-OCT-2012
TIME PLOTTED => 09:03

Dist	COUNTY	ROUTE	POST MILES TOTAL PROJECT	SHEET No.	TOTAL SHEETS
06	Mad	99	R6.9/R8.2	169	526

AKM Rahman 9-2-11
REGISTERED CIVIL ENGINEER DATE

6-4-12
PLANS APPROVAL DATE

REGISTERED PROFESSIONAL ENGINEER AKM F. RAHMAN No. 74163 Exp. 6/30/13 CIVIL STATE OF CALIFORNIA

THE STATE OF CALIFORNIA OR ITS OFFICERS OR AGENTS SHALL NOT BE RESPONSIBLE FOR THE ACCURACY OR COMPLETENESS OF SCANNED COPIES OF THIS PLAN SHEET.

1

3

DRAINAGE QUANTITIES

DRAINAGE SHEET No.	DRAINAGE SYSTEM No. ⬡	DRAINAGE UNIT ○	ABANDON CULVERT	SAND BACKFILL	REMOVE INLET	MINOR CONCRETE (MINOR STRUCTURE)	DESIGN H (N)	MISCELLANEOUS IRON AND STEEL	GRATE TYPE 24-12X (N)	GRATE TYPE 24-12 (N)	INLET DEPRESSION	8" CORRUGATED STEEL PIPE (0.064" THICK)	MINOR CONCRETE BACKFILL	RSP FABRIC (CLASS 8)	ROCK SLOPE PROTECTION (No. 2, METHOD B)	18" STEEL FES	18" CORRUGATED STEEL PIPE (.079" THICK)	24" STEEL FES	24" CORRUGATED STEEL PIPE (.079" THICK)	36" CORRUGATED STEEL PIPE INLET (.079" THICK)	MANHOLE TYPE A	MANHOLE TYPE B	HEIGHT OF COVER (N)	24" ALTERNATIVE FES	24" ALTERNATIVE PIPE CULVERT	CONCRETE FES			REINFORCED CONCRETE PIPE			DESCRIPTION	STATION	DRAINAGE SHEET No.	DRAINAGE SYSTEM No. ⬡	DRAINAGE UNIT ○
																										18"	24"	36"	18"	24"	36"					
			EA	CY	EA	CY	LF	LB	EA	EA	EA	LF	CY	SQYD	CY	EA	LF	EA	LF	LF	EA	EA	LF	EA	LF	EA	EA	EA	LF	LF	LF					
D-3	48	a				1.49	4.00	239	1		✗																					DI TYPE GO		D-3	48	a
		b																											76.4			18" RCP				b
		c					4.95															1										MANHOLE				c
D-3	48	d																											268.8			18" RCP		D-3	48	d
D-10	49	a				1.82	5.36	239	1		✗																					DI TYPE GO		D-10	49	a
D-10	49	b																							72.4							24" APC		D-10	49	b
D-10	57	a			1																											REMOVE DI (h=3.6′)		D-10	57	a
		b	1	5.0																												ABANDON CULVERT				b
		c			1																											REMOVE DI (h=4.1′)				c
D-10	57	d	1	15.0																												ABANDON CULVERT		D-10	57	d
D-4	58	a				1.96	5.57	326		1	1																					DI TYPE G2		D-4	58	a
D-4	58	b																											5.8			18" RCP		D-4	58	b
D-3	59	a	1	5.6																												ABANDON CULVERT		D-3	59	a
D-3	60	a	1	0.7																												ABANDON CULVERT		D-3	60	a
D-3	61	a	1	4.3																												ABANDON CULVERT		D-3	61	a
D-3	62	a	1	61.8																												ABANDON CULVERT		D-3	62	a
D-4	63	a	1	0.2																												ABANDON CULVERT		D-4	63	a
D-6	64	a	1	9.5																												ABANDON CULVERT		D-6	64	a
D-5	65	a					4.92													5.17												36" OMPI	"R4CL2" 38+97.91	D-5	65	a
		b															19.1															18" CSP				b
		c														1																18" STEEL FES	"R4CL2" 39+15.49			c
D-5	65	d												12.6	5																	RSP		D-5	65	d
D-3	66	a				1.59	4.11	326		1	1																					DI TYPE G2	"R3CL3" 44+00.00	D-3	66	a
D-3		b																													200.9	36" RCP		D-3		b
D-10		c				1.92	5.38	326		1	1																					DI TYPE G2	"R2CL3" 49+20.00	D-10		c
		d																													164.8	36" RCP				d
		e				2.04	5.88	326		1	1																					DI TYPE G2	"R2CL3" 48+74.38			e
D-10	66	f																													142.0	36" RCP		D-10	66	f
D-6	71	a				2.10	6.09	239	1		✗																					DI TYPE GO	"R3CL3" 44+00.00	D-6	71	a
		b																							59.0							24"APC				b
		c				1.97	5.60	239	1		✗																					DI TYPE GO	"R2CL3" 49+20.00			c
		d																							17.0							24" APC				d
		e																						1								24" AFES	"R2CL3" 48+74.38			e
D-6	71	f												12.6	5																	RSP		D-6	71	f
SHEET TOTAL			7	102.1	2	14.89		2260			4 8			25.2	10	1	19.1			5.17		1		1	148.4				351.0		507.7					

1 REVISED PER ADDENDUM No. 1 DATED SEPTEMBER 20, 2012

3 REVISED PER ADDENDUM No. 3 DATED OCTOBER 15, 2012

DRAINAGE QUANTITIES
DQ-9

STATE OF CALIFORNIA - DEPARTMENT OF TRANSPORTATION
Caltrans® DESIGN

FUNCTIONAL SUPERVISOR: GETACHEW ESHETE
CALCULATED-DESIGNED BY: TRIET LY
CHECKED BY: MAHESH MONGA
REVISED BY: WRL
DATE REVISED: 09-12-12

LAST REVISION 11-20-11
DATE PLOTTED => 15-OCT-2012
TIME PLOTTED => 09:03

Dist	COUNTY	ROUTE	POST MILES TOTAL PROJECT	SHEET No.	TOTAL SHEETS
06	Mad	99	R6.9/R8.2	173	526

AKM Rahman 9-2-11
REGISTERED CIVIL ENGINEER DATE

6-4-12
PLANS APPROVAL DATE

REGISTERED PROFESSIONAL ENGINEER AKM F. RAHMAN No. 74163 Exp. 6/30/13 CIVIL STATE OF CALIFORNIA

THE STATE OF CALIFORNIA OR ITS OFFICERS OR AGENTS SHALL NOT BE RESPONSIBLE FOR THE ACCURACY OR COMPLETENESS OF SCANNED COPIES OF THIS PLAN SHEET.

3 3

DRAINAGE QUANTITIES SUMMARY (DRAINAGE FACILITY)

1

DRAINAGE QUANTITY SHEET No.	ABANDON CULVERT	SAND BACKFILL	REMOVE INLET	MINOR CONCRETE (MINOR STRUCTURE)	MISCELLANEOUS IRON AND STEEL	INLET DEPRESSION	8" CORRUGATED STEEL PIPE (0.064" THICK)	MINOR CONCRETE (BACKFILL)	RSP FABRIC (CLASS 8)	ROCK SLOPE PROTECTION (No. 2, METHOD B)	18" STEEL FES	18" CORRUGATED STEEL PIPE (.079" THICK)	24" STEEL FES	24" CORRUGATED STEEL PIPE (.079" THICK)	36" CORRUGATED STEEL PIPE INLET (.079" THICK)	MANHOLE TYPE A	MANHOLE TYPE B	24" ALTERNATIVE FES	24" ALTERNATIVE PIPE CULVERT	CONCRETE FES			REINFORCED CONCRETE PIPE		
																				18"	24"	36"	18"	24"	36"
	EA	CY	EA	CY	LB	EA	LF	CY	SQYD	CY	EA	LF	EA	LF	LF	EA	EA	EA	LF	EA	EA	EA	LF	LF	LF
DQ-1				28.5	3346	~~14~~			20.0	8			1	60.0				1	1642.8						
DQ-2				16.7	2108	5 ~~7~~			150.0	60								6	708.6		2			292.6	
DQ-3				29.6	4890	15		10.3	90.0	45				19.0				1	1390.2			1		8.0	76.4
DQ-4									395.0	173			1	75.8				2	66.7			10			548.8
DQ-5				12.1	1434	~~8~~	32		100.2	56	3	169.9								3			100.8		
DQ-6									175.0	70											16			1540.1	
DQ-7				1.6	239	~~1~~		7.1	125.0	50						5	2				8			1622.5	
DQ-8				16.4	2390	~~10~~			50.0	20						2					1		496.4	221.8	
DQ-9	7	102.1	2	15.0	2260	4 ~~8~~			25.2	10	1	19.1			5.2		1	1	148.4				351.0		507.7
DOWNDRAIN TABLE									86.4	288															
ECQ-1 SHEET										1947															
TOTAL	7	102.1	2	120.2	16,667	~~61~~ 24	32	17.4	1216.8	2727	4	189.0	2	154.8	5.2	7	3	11	3956.7	3	27	11	948.2	3685.0	1132.9

DRAINAGE QUANTITIES SUMMARY (MADERA IRRIGATION SYSTEM)

DRAINAGE QUANTITY SHEET No.	ABANDON CULVERT (MID)	SAND BACKFILL (MID)	REMOVE CULVERT (MID)	REMOVE CONCRETE (STRUCTURE) (MID)	REINFORCED CONCRETE PRESSURE PIPE (MID)					HEIGHT OF COVER (N)	MINOR CONCRETE (MINOR STRUCTURE) (MID)	STRUCTURAL CONCRETE	STRUCTURE EXCAVATION *	STRUCTURE BACKFILL *	BAR REINFORCING STEEL	PRESSURE MH (MID)	TUBULAR HANDRAILING (MID)	RSP FABRIC CLASS 8 (MID)	ROCK SLOPE PROTECTION (FACING, METHOD B) (MID)
					18"	36"	42"	66"	72"										
	EA	CY	LF	CY	LF	LF	LF	LF	LF	FT	CY	CY	CY	CY	LB	EA	LF	SQYD	CY
DQ-10					14.6	1198.4	2645.6	14.5	140.4		83.0					8	15	212	108
DQ-11	2	64	2011	79	49.0				140.8	28	51.9	128	397	133	15435	1	19	212	108
TOTAL	2	64	2011	79	63.6	1198.4	2645.6	14.5	281.2		134.9	128	397	133	15435	9	34	424	216

* QUANTITIES INCLUDED IN SUMMARY OF QUANTITIES SHEET Q-4

1 **REVISED PER ADDENDUM No. 1 DATED SEPTEMBER 20, 2012**

3 **REVISED PER ADDENDUM No. 3 DATED OCTOBER 15, 2012**

DRAINAGE QUANTITIES
DQ-13

STATE OF CALIFORNIA - DEPARTMENT OF TRANSPORTATION
Caltrans DESIGN

FUNCTIONAL SUPERVISOR: GETACHEW ESHETE
CALCULATED-DESIGNED BY: WILLIAM LEON
CHECKED BY: MAHESH MONGA
REVISED BY: WRL
DATE REVISED: 09-12-12

LAST REVISION 11-23-11 | DATE PLOTTED => 15-OCT-2012 | TIME PLOTTED => 09:04

Dist	COUNTY	ROUTE	POST MILES TOTAL PROJECT	SHEET No.	TOTAL SHEETS
06	Mad	99	R6.9/R8.2	280	526

Hassan Taha 01-23-12
REGISTERED CIVIL ENGINEER DATE

6-4-12
PLANS APPROVAL DATE

REGISTERED PROFESSIONAL ENGINEER HASSAN M. TAHA No. 60130 Exp. 06/30/12 CIVIL STATE OF CALIFORNIA

THE STATE OF CALIFORNIA OR ITS OFFICERS OR AGENTS SHALL NOT BE RESPONSIBLE FOR THE ACCURACY OR COMPLETENESS OF SCANNED COPIES OF THIS PLAN SHEET.

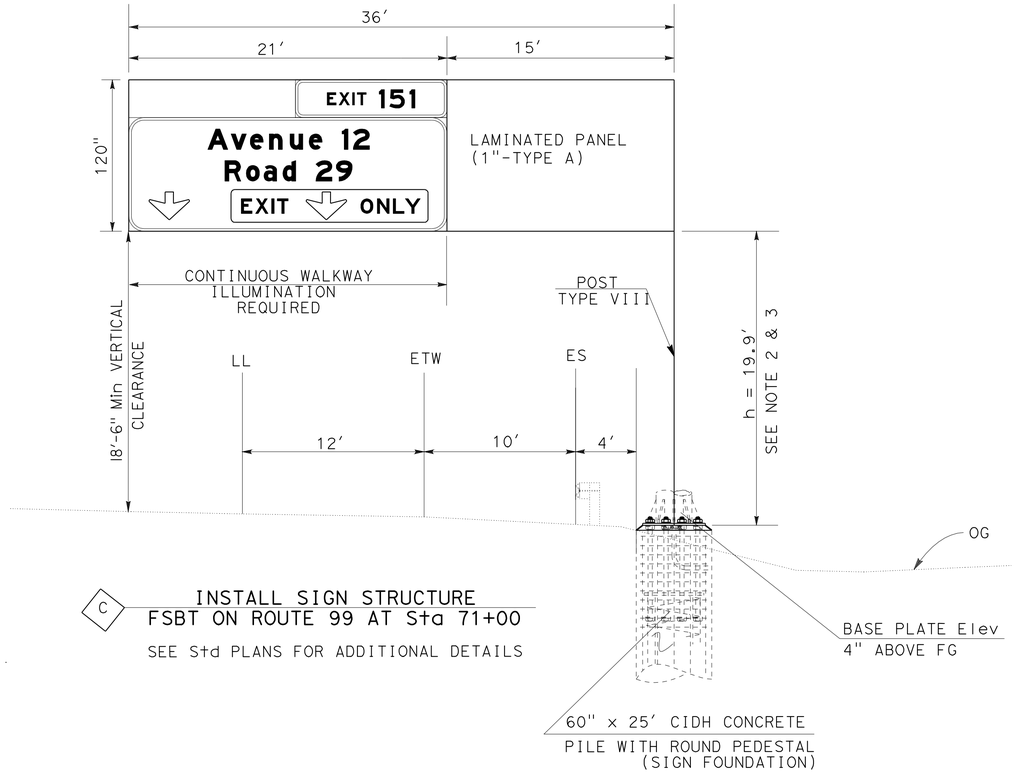

C INSTALL SIGN STRUCTURE
FSBT ON ROUTE 99 AT Sta 71+00

SEE Std PLANS FOR ADDITIONAL DETAILS

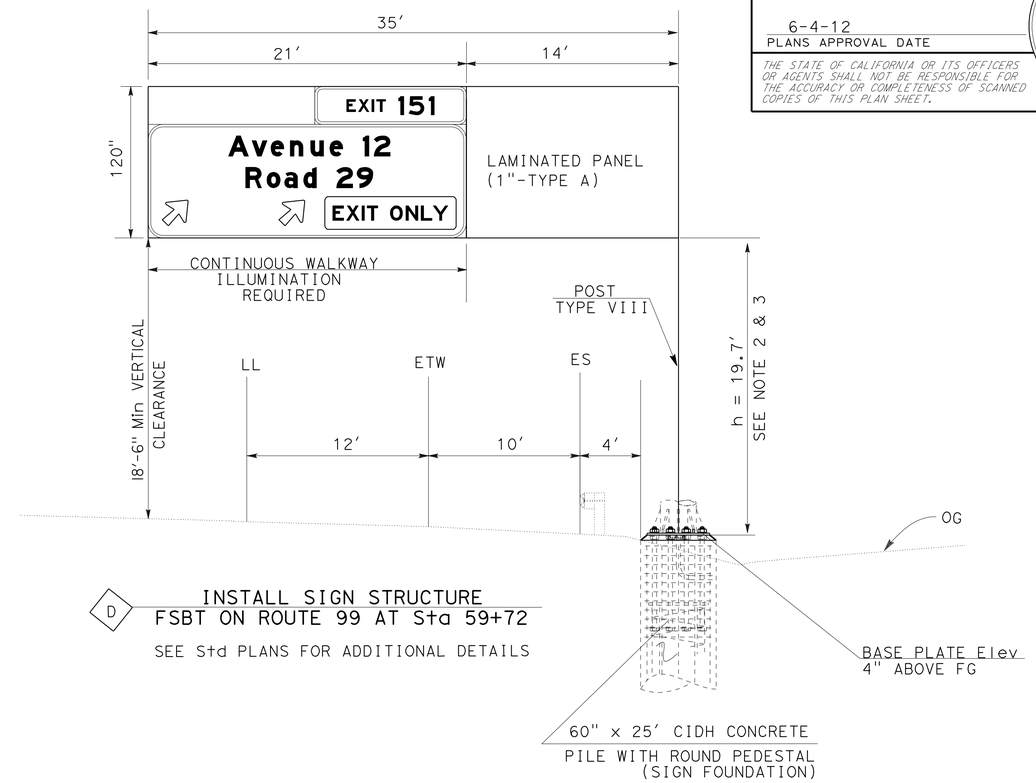

D INSTALL SIGN STRUCTURE
FSBT ON ROUTE 99 AT Sta 59+72

SEE Std PLANS FOR ADDITIONAL DETAILS

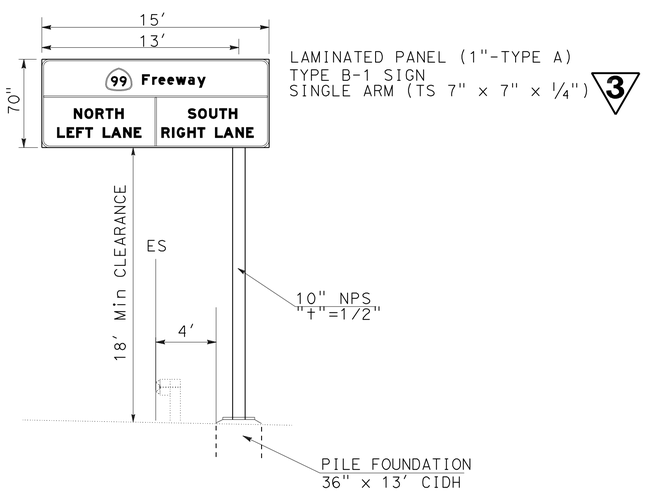

I INSTALL LIGHTWEIGHT SIGN STRUCTURE
FEBT ON AVENUE 12 AT Sta 36+00

SEE Std PLANS FOR ADDITIONAL DETAILS

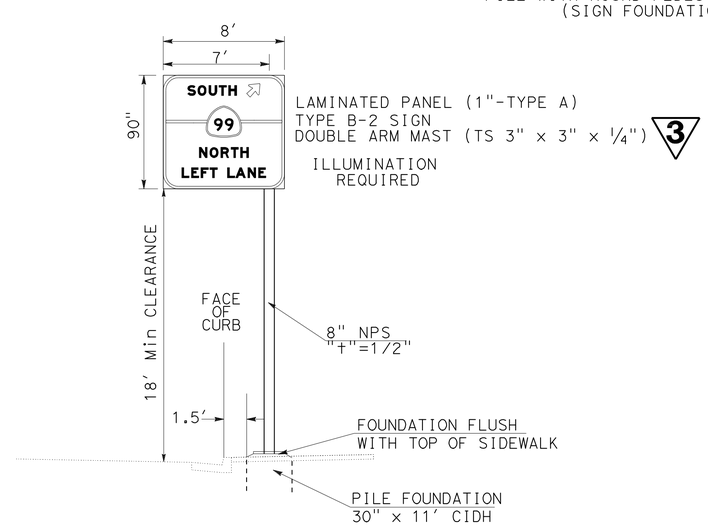

II INSTALL LIGHTWEIGHT SIGN STRUCTURE
FEBT ON AVENUE 12 AT Sta 44+45

SEE Std PLANS FOR ADDITIONAL DETAILS

3 **REVISED PER ADDENDUM No. 3 DATED OCTOBER 15, 2012**

OVERHEAD SIGN DETAILS

NO SCALE

SD-2

REVISED BY	DATE REVISED
KEVIN NGUYEN	HASSAN TAHA
CALCULATED-DESIGNED BY	CHECKED BY
FUNCTIONAL SUPERVISOR	MOHAMMED QATAMI

STATE OF CALIFORNIA - DEPARTMENT OF TRANSPORTATION
Caltrans
TRAFFIC DESIGN

LAST REVISION 09-01-11
DATE PLOTTED => 11-OCT-2012
TIME PLOTTED => 14:22

Dist	COUNTY	ROUTE	POST MILES TOTAL PROJECT	SHEET No.	TOTAL SHEETS
06	Mad	99	R6.9/R8.2	281	526

Hassan Taha 01-23-12
REGISTERED CIVIL ENGINEER DATE

6-4-12
PLANS APPROVAL DATE

REGISTERED PROFESSIONAL ENGINEER HASSAN M. TAHA No. 60130 Exp. 06/30/12 CIVIL STATE OF CALIFORNIA

THE STATE OF CALIFORNIA OR ITS OFFICERS OR AGENTS SHALL NOT BE RESPONSIBLE FOR THE ACCURACY OR COMPLETENESS OF SCANNED COPIES OF THIS PLAN SHEET.

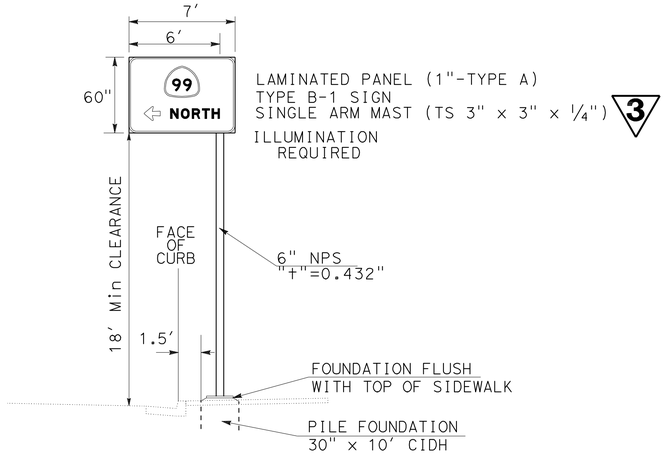

III INSTALL LIGHTWEIGHT SIGN STRUCTURE
FEBT ON AVENUE 12 AT Sta 53+65

SEE Std PLANS FOR ADDITIONAL DETAILS

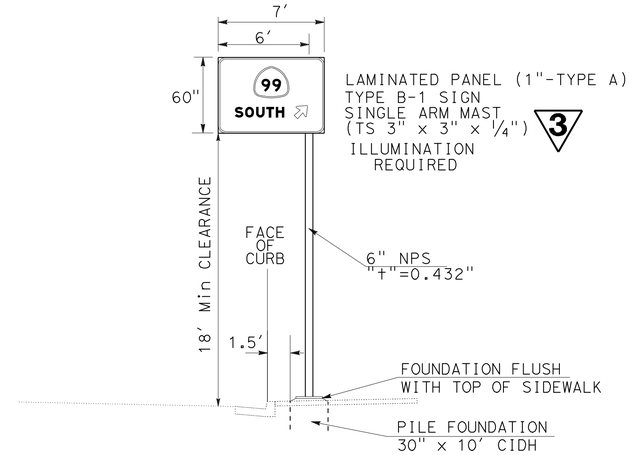

IV INSTALL LIGHTWEIGHT SIGN STRUCTURE
FWBT ON AVENUE 12 AT Sta 53+78

SEE Std PLANS FOR ADDITIONAL DETAILS

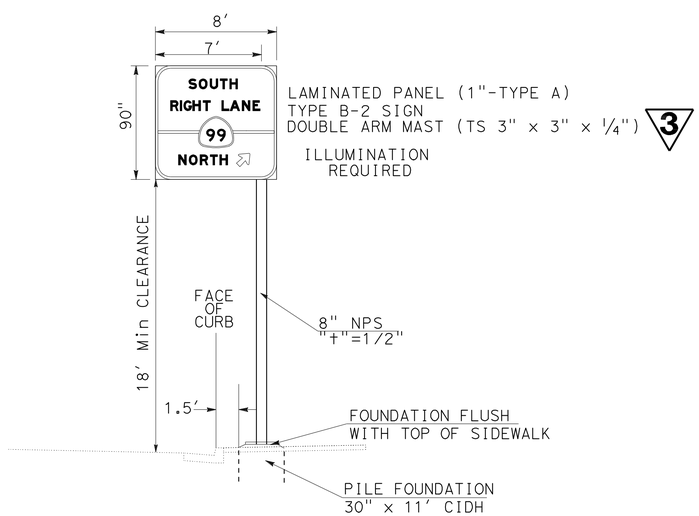

V INSTALL LIGHTWEIGHT SIGN STRUCTURE
FWBT ON AVENUE 12 AT Sta 68+80

SEE Std PLANS FOR ADDITIONAL DETAILS

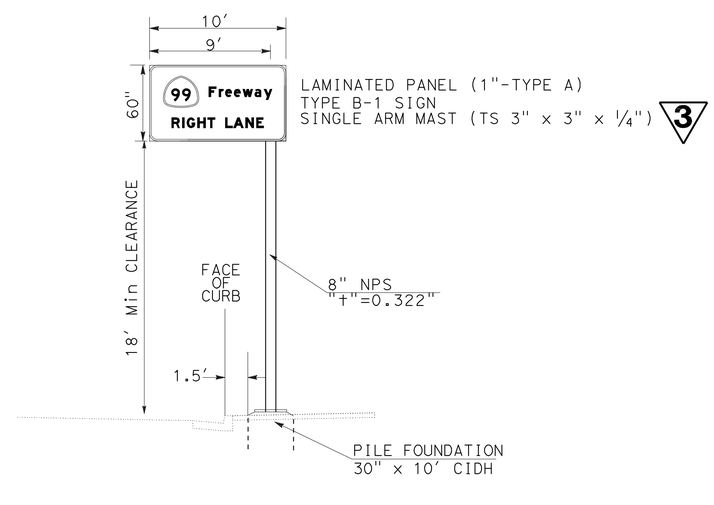

VI INSTALL LIGHTWEIGHT SIGN STRUCTURE
FWBT ON AVENUE 12 AT Sta 73+50

SEE Std PLANS FOR ADDITIONAL DETAILS

3 **REVISED PER ADDENDUM No. 3 DATED OCTOBER 15, 2012**

OVERHEAD SIGN DETAILS

NO SCALE

SD-3

STATE OF CALIFORNIA - DEPARTMENT OF TRANSPORTATION
Caltrans® TRAFFIC DESIGN

FUNCTIONAL SUPERVISOR: MOHAMMED QATAMI
CALCULATED-DESIGNED BY: KEVIN NGUYEN
CHECKED BY: HASSAN TAHA
REVISED BY / DATE REVISED

LAST REVISION 09-01-11
DATE PLOTTED => 11-OCT-2012
TIME PLOTTED => 14:23

Dist	COUNTY	ROUTE	POST MILES TOTAL PROJECT	SHEET No.	TOTAL SHEETS
06	Mad	99	R6.9/R8.2	297	526

AKM Rahman 9-2-11
REGISTERED CIVIL ENGINEER DATE

6-4-12
PLANS APPROVAL DATE

REGISTERED PROFESSIONAL ENGINEER AKM F. RAHMAN No. 74163 Exp. 6/30/13 CIVIL STATE OF CALIFORNIA

THE STATE OF CALIFORNIA OR ITS OFFICERS OR AGENTS SHALL NOT BE RESPONSIBLE FOR THE ACCURACY OR COMPLETENESS OF SCANNED COPIES OF THIS PLAN SHEET.

METAL BEAM GUARD RAILING

LOCATION	STATION	SIDE	LAYOUT TYPE (N)	SALVAGE MBGR	REMOVE MBGR	SALVAGE QUADGUARD	TRANSITION RAILING (TYPE WB)	ALTERNATIVE FLARED TERMINAL SYSTEM	ALTERNATIVE IN-LINE TERMINAL SYSTEM	MBGR (STEEL POST)
				LF	LF	EA	EA	EA	EA	LF
Ave 12 OC EB APPROACH	55+44.12 TO 56+16.17	Rt		75.0						
Ave 12 OH EB APPROACH	60+90.83 TO 61+4.34	Rt				1				
Ave 12 OC WB DEPARTURE	55+43.50 TO 56+16.17	Lt		75.0						
Ave 12 OC WB APPROACH	59+3.87 TO 59+17.34	Lt				1				
Ave 12 OC WB APPROACH	66+18.69 TO 66+74.09	Lt		55.4						
Rd 29 N NB APPROACH	209+70.03 TO 210+45.03	Rt	12A				1		1	
Rd 29 N NB DEPARTURE	212+40.92 TO 213+16.16	Rt	12AA				1		1	
Rd 29 N SB APPROACH	212+58.68 TO 213+33.69	Lt	12A				1		1	
Rd 29 N SB DEPARTURE	209+62.68 TO 210+63.04	Lt	12AA				1		1	25.0
Rd 29 S NB APPROACH	29+71.96 TO 30+46.96	Rt	12A				1		1	
Rd 29 S NB DEPARTURE	32+91.85 TO 33+66.85	Rt	12AA				1		1	
Rd 29 S SB APPROACH	32+71.66 TO 33+46.66	Lt	12A				1		1	
Rd 29 S SB DEPARTURE	29+51.85 TO 30+26.85	Lt	12AA				1		1	
"R1" RAMP APPROACH	36+27.85 TO 37+2.85	Lt	12A				1		1	
"R1" RAMP APPROACH	36+45.95 TO 37+20.95	Rt	12A				1		1	
Ave 12 EB OH SIGN	35+35.17 TO 36+9.76	Rt	16B					1		37.5
ROUTE 99 NB OH SIGN	23+33.52 TO 24+7.99	Rt	16B					1		37.5
ROUTE 99 SB OH SIGN	70+99.31TO 71+74.31	Lt	16B					1		37.5
ROUTE 99 SB OH SIGN	59+61.21 TO 60+37.10	Lt	16B					1		37.5
ROUTE 99 NB UNDER OC	47+7.38 TO 47+62.82	Rt			62.5					
ROUTE 99 SB UNDER OC	48+67.56 TO 49+54.77	Rt			87.5					
"R5" RAMP APPROACH	34+17.41 TO 35+48.27	Rt	12A				1		1	50.0
TOTAL				205.4	150.0	2	11	4	11	225.0

COLD PLANE AC PAVEMENT

LOCATION	STATION	AREA
		SQYD
GREEN COURT	~~"GCL1" 25+09.17 TO 27+28.91~~	~~1298~~

"GCL1" 25+43.39 TO 28+84.12 — 1917

1

REMOVE FIRE HYDRANT

LOCATION	STATION	SIDE	EA
Rd 29 S	49+91.55	Rt	1
Rd 29 S	51+76.18	Rt	1
TOTAL			2

EARTHWORK QUANTITIES SUMMARY 3

LOCATION	STATION	ROADWAY EXCAVATION	EMBANKMENT (N)	IMPORTED BORROW
		CY	CY	CY
Ave 12	"12CL1" 26+19.81 TO Ave 12 55+86.48 (Lt)	8,044	61,846	
Ave 12	"12CL1" 57+92.02 (Lt) TO Ave 12 60+80.00 (Rt)		9,561	
Ave 12	"12CL1" 66+76.03 TO Ave 12 116+17.23	27,439	78,512	
RD29S	"29SCL4" 19+50.00 TO Rd 29 S 30+53.31	2,883	2,041	
RD29	"29SCL4" 32+65.31 TO Rd 29 S 60+50.00	14,177	2,551	
RD29N	"29N1" 200+58.05 TO Rd 29 N 210+73.73	2,478	12,888	
RD29N	"29N1" 212+33.73 TO Rd 29 N 224+17.24	2,856	3,920	
GSB	"GSCL6" 137+00.00 TO GSB 156+16.41	7,629	1,773	
R-1	"R1CL1" 22+71.68 TO R-1 34+00.00	4,143	1,447	
R-1	"R1CL1" 36+26.00 TO R-1 57+50.00	3,278	11,672	
Rte 99	Rte 99 11+00.77 TO 17+50.00 (Lt)	777	291	
R-2	"R2CL3" 42+09.86 TO R-2 58+15.53	17,589	3,588	
R-3	"R3CL3" 36+67.07 TO R-3 49+63.11	11,163	13,033	
R-4	"R4CL2" 38+01.91 TO R-4 49+44.42	1,026	30,813	
R-5	"R5CL3" 32+35.55 TO R-5 36+91.99	718	8,202	
Rte 99	Rte 99 58+25.88 TO 73+80.46 (Lt)	2,562	961	
DWY1	"DWY1" 13+68.93 TO 18+24.30	2,753	14	
Rd 29N	"29N1" 200+00.00 TO 204+00.00	583	1,788*	
	FROM REMOVE SURFACING TABLE	2,078		
	FROM TEMPORARY CONSTRUCTION FOR STAGING WORK	7,023	66	
	BASIN 1	45,342		
	BASIN 2	19,649		
	BASIN 3	1,636		
Exist Rd 29N	"E" LINE Sta 2+20.00 TO 6+00.00	21,940		
OH Abut 1		9,536		
OH Abut 4		3,673		
OC Abut 1			2,590	
OC Abut 3			5,021	
OH Abut 1			1,850	
OH Abut 4			660	
	SUBTOTAL	220,975	253,234	54,357
	SUBSIDENCE			3,236
	TOTAL	220,975	253,234	57,593

(N) NOT A SEPARATE PAY ITEM, FOR INFORMATION ONLY

* QUANTITIES INCLUDED IN Rd 29N, FOR INFORMATION ONLY

1 REVISED PER ADDENDUM No. 1 DATED SEPTEMBER 20, 2012

3 REVISED PER ADDENDUM No. 3 DATED OCTOBER 15, 2012

SUMMARY OF QUANTITIES
Q-3

REVISED BY | DATE REVISED
HOSS SHOJAI | AKM RAHMAN
CALCULATED-DESIGNED BY | CHECKED BY
FUNCTIONAL SUPERVISOR: GETACHEW ESHETE
STATE OF CALIFORNIA - DEPARTMENT OF TRANSPORTATION
Caltrans DESIGN

LAST REVISION 04-18-12 | DATE PLOTTED => 11-OCT-2012 | TIME PLOTTED => 14:23

DIST	COUNTY	ROUTE	POST MILES TOTAL PROJECT	SHEET No.	TOTAL SHEETS
06	Mad	99	R6.9/R8.2	444	526

REGISTERED CIVIL ENGINEER 1-3-12 DATE

6-4-12
PLANS APPROVAL DATE

REGISTERED PROFESSIONAL ENGINEER TALAL SADEK No. C49664 Exp. 9-30-12 CIVIL STATE OF CALIFORNIA

The State of California or its officers or agents shall not be responsible for the accuracy or completeness of electronic copies of this plan sheet.

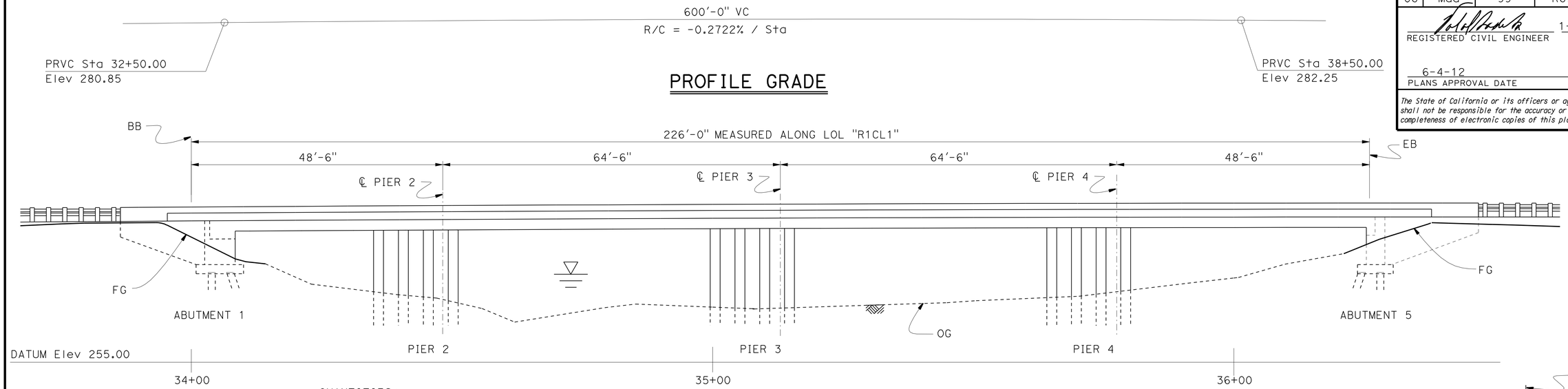

ELEVATION

1" = 10'-0"

QUANTITIES:

BRIDGE REMOVAL, LOCATION C	LUMP	SUM
STRUCTURE EXCAVATION (BRIDGE)	218	CY
STRUCTURE EXCAVATION (TYPE D)	64	CY
STRUCTURE BACKFILL (BRIDGE)	150	CY
FURNISH PILING (CLASS 140) (ALTERNATIVE W)	797 ~~491~~	LF
DRIVE PILE (CLASS 140) (ALTERNATIVE W)	14	EA
FURNISH 24" CAST-IN-STEEL SHELL CONCRETE PILING	748	LF
DRIVE 24" CAST-IN-STEEL SHELL CONCRETE PILE	12	EA
PRESTRESSING CAST-IN-PLACE CONCRETE	LUMP	SUM
STRUCTURAL CONCRETE, BRIDGE FOOTING	27	CY
STRUCTURAL CONCRETE, BRIDGE	526	CY
JOINT SEAL (MR 2")	65	LF
BAR REINFORCING STEEL (BRIDGE)	178,791	LB
CONCRETE BARRIER (TYPE 732)	523	LF

3

NOTES:

(A) Paint "Directional Onramp"

(B) Paint "Bridge No. 44-0089G"

(C) Concrete Barrier Type 732

(D) MBGR, see "ROAD PLANS"

(E) Electrical conduits, see "ROAD PLANS"

(F) See "ROAD 29 SOUTH COTTONWOOD CREEK" plans for existing bridge no. 41C-046 to be removed

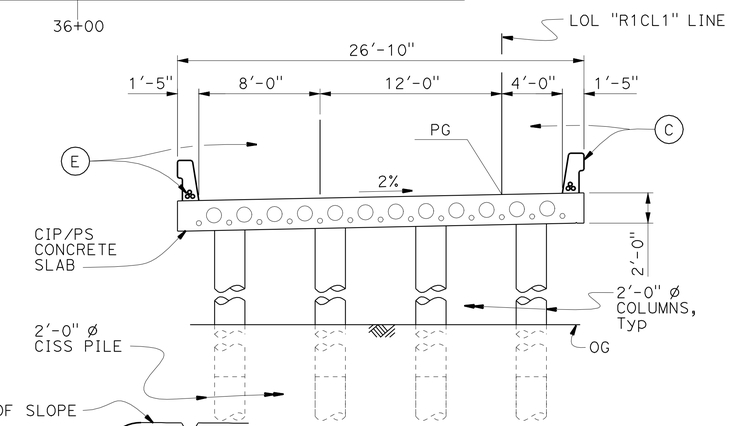

TYPICAL SECTION

1" = 5'

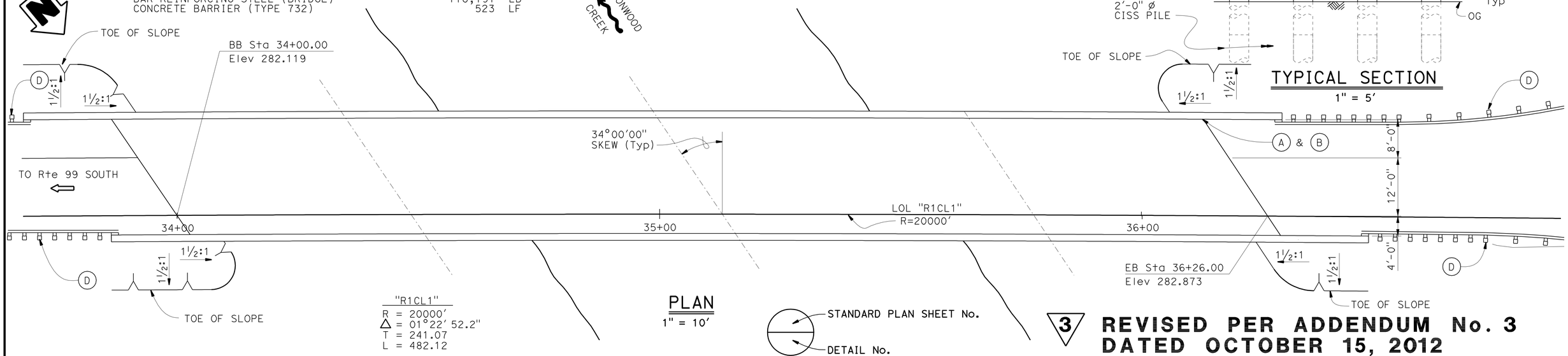

"R1CL1"
R = 20000'
Δ = 01°22' 52.2"
T = 241.07
L = 482.12

PLAN

1" = 10'

STANDARD PLAN SHEET No.

DETAIL No.

3 **REVISED PER ADDENDUM No. 3 DATED OCTOBER 15, 2012**

FRITZ HOFFMAN DESIGN ENGINEER	DESIGN	BY G. R-Gutierrez	CHECKED D. Alvarez	LOAD & RESISTANCE FACTOR DESIGN	LIVE LOADING: HL93 W/"LOW-BOY"; PERMIT DESIGN VEHICLE
	DETAILS	BY Marvin Lane	CHECKED D. Alvarez	LAYOUT BY X	CHECKED X
	QUANTITIES	BY G. R-Gutierrez	CHECKED S. Morimoto	SPECIFICATIONS BY D. Klein	PLANS AND SPECS COMPARED D. Klein

ORIGINAL SCALE IN INCHES FOR REDUCED PLANS 0 1 2 3

STATE OF CALIFORNIA DEPARTMENT OF TRANSPORTATION

DIVISION OF ENGINEERING SERVICES STRUCTURE DESIGN DESIGN BRANCH 6

BRIDGE NO. 41-0089G
POST MILE 7.1/7.9

DIRECTIONAL ONRAMP
GENERAL PLAN

UNIT: X
PROJECT NUMBER & PHASE: 06000004631 CONTRACT NO.: 06-471001

DISREGARD PRINTS BEARING EARLIER REVISION DATES

REVISION DATES: 6-20-11 01-05-12 12-14-11

SHEET 1 OF 17

STRUCTURES DESIGN GENERAL PLAN SHEET (ENGLISH) (REV.09-01-10)

FILE => 41-0089g-a-gp.dgn

USERNAME => s12616 DATE PLOTTED => 11-OCT-2012 TIME PLOTTED => 14:23

DIST	COUNTY	ROUTE	POST MILES TOTAL PROJECT	SHEET No.	TOTAL SHEETS
06	Mad	99	R6.9/R8.2	449	526

REGISTERED CIVIL ENGINEER 1-3-12 DATE

6-4-12
PLANS APPROVAL DATE

REGISTERED PROFESSIONAL ENGINEER TALAL SADEK No. C49664 Exp. 9-30-12 CIVIL STATE OF CALIFORNIA

The State of California or its officers or agents shall not be responsible for the accuracy or completeness of electronic copies of this plan sheet.

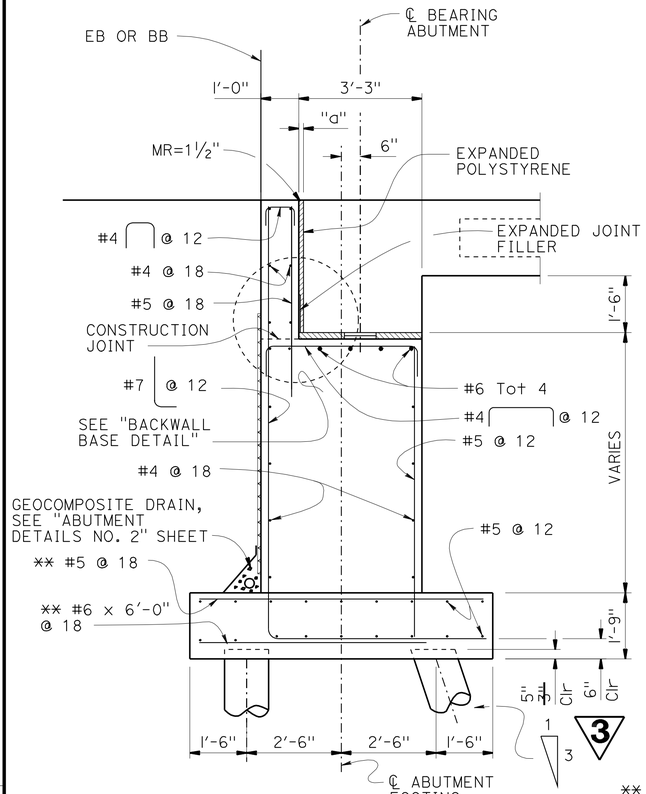

ABUTMENT SECTION

½" = 1'-0"

** Place transverse reinforcement parallel to ℄ bridge.

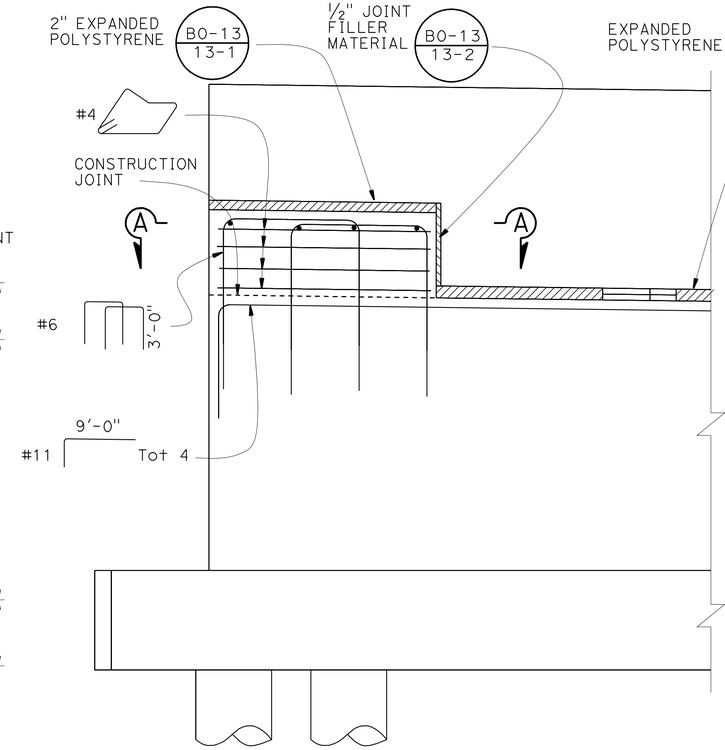

DETAIL "C"

¾" = 1'-0"

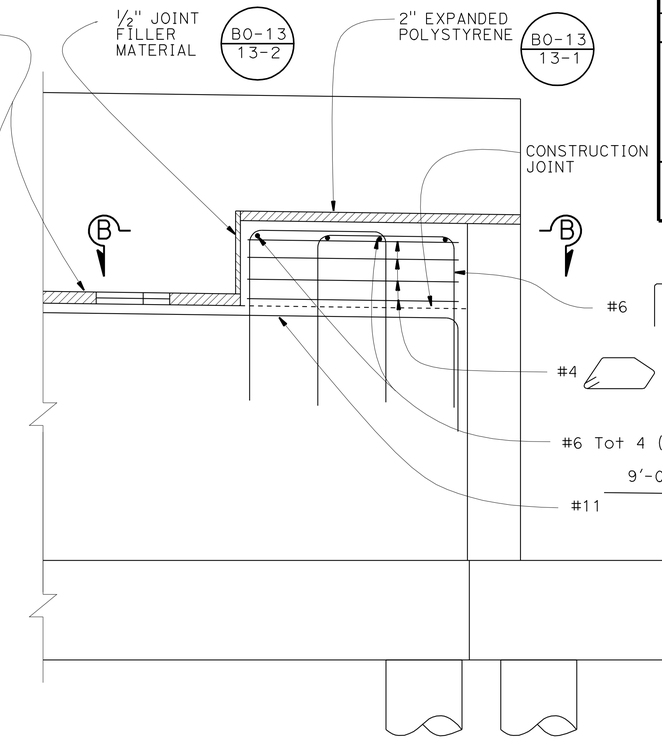

DETAIL "D"

¾" = 1'-0"

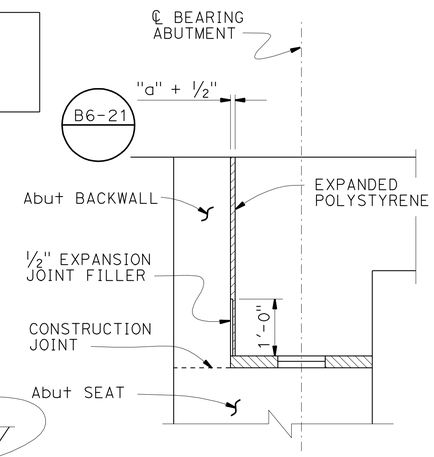

BACKWALL BASE DETAIL

¾" = 1'-0"

B0-13 / 13-2

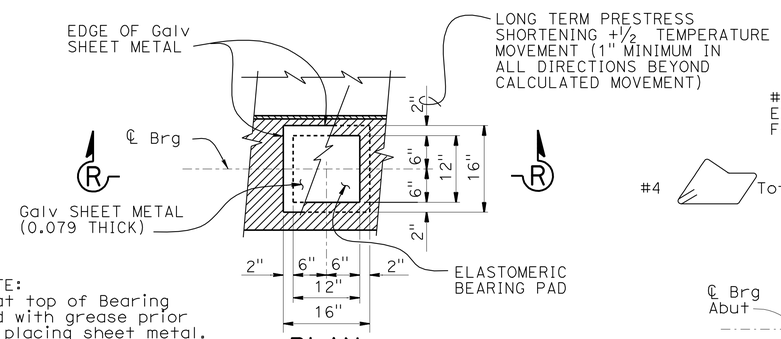

NOTE:
Coat top of Bearing Pad with grease prior to placing sheet metal.

PLAN

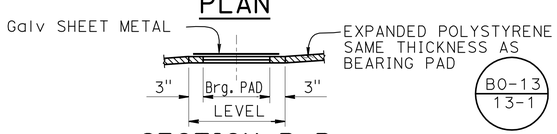

B0-13 / 13-1

SECTION R-R

BEARING PAD DETAIL

NO SCALE

DETAILS TYPICAL AT ALL BEARING PADS

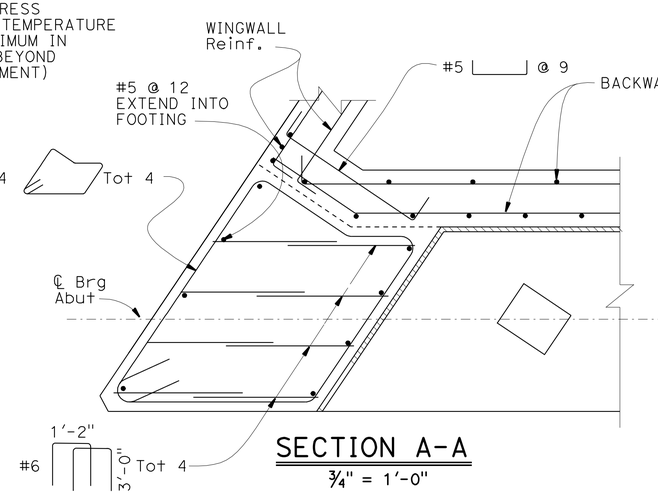

SECTION A-A

¾" = 1'-0"

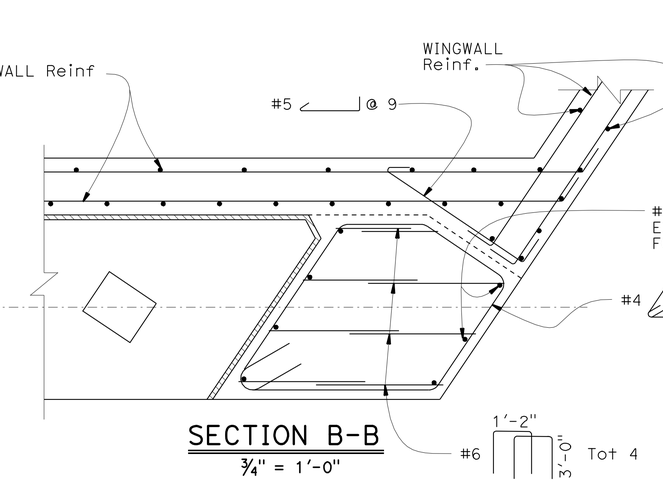

SECTION B-B

¾" = 1'-0"

3 REVISED PER ADDENDUM No. 3 DATED OCTOBER 15, 2012

DESIGN	BY G. R.-Gutierrez	CHECKED D. Alvarez	
DETAILS	BY Marvin Lane	CHECKED D. Alvarez	
QUANTITIES	BY G. R.-Gutierrez	CHECKED S. Morimoto	

STATE OF CALIFORNIA DEPARTMENT OF TRANSPORTATION

DIVISION OF ENGINEERING SERVICES STRUCTURE DESIGN DESIGN BRANCH 6

BRIDGE NO. 41-0089G

POST MILE 7.1/7.9

DIRECTIONAL ONRAMP

ABUTMENT DETAILS NO. 1

STRUCTURES DESIGN DETAIL SHEET (ENGLISH) (REV. 09-01-10)

ORIGINAL SCALE IN INCHES FOR REDUCED PLANS 0 1 2 3

UNIT: X
PROJECT NUMBER & PHASE: 06000004631 CONTRACT NO.: 06-471001

DISREGARD PRINTS BEARING EARLIER REVISION DATES

REVISION DATES 11-29-11 01-06-12 12-20-12

SHEET 6 OF 17

FILE => 41-0089g-f-a01dt01.add

USERNAME => s121614 DATE PLOTTED => 11-OCT-2012 TIME PLOTTED => 14:23

DIST	COUNTY	ROUTE	POST MILES TOTAL PROJECT	SHEET No.	TOTAL SHEETS
06	Mad	99	R6.9/R8.2	462	526

REGISTERED CIVIL ENGINEER 1-3-12 DATE

6-4-12
PLANS APPROVAL DATE

REGISTERED PROFESSIONAL ENGINEER Talal Sadek No. C49664 Exp. 09-30-12 CIVIL STATE OF CALIFORNIA

The State of California or its officers or agents shall not be responsible for the accuracy or completeness of electronic copies of this plan sheet.

INDEX TO PLANS

1. GENERAL PLAN
2. INDEX TO PLANS
3. DECK CONTOURS
4. FOUNDATION PLAN NO. 1
5. FOUNDATION PLAN NO. 2
6. ABUTMENT 1 LAYOUT NO. 1
7. ABUTMENT 1 LAYOUT NO. 2
8. ABUTMENT 4 LAYOUT
9. ABUTMENT DETAILS NO. 1
10. ABUTMENT DETAILS NO. 2
11. ABUTMENT DETAILS NO. 3
12. ABUTMENT DETAILS NO. 4
13. BENT 2 LAYOUT
14. BENT 3 LAYOUT
15. BENT DETAILS NO. 1
16. BENT DETAILS NO. 2
17. BENT 2 - FOOTING DETAILS
18. BENT 3 - FOOTING DETAILS
19. TYPICAL SECTION
20. GIRDER LAYOUT
21. GIRDER DETAILS
22. GIRDER REINFORCEMENT
23. DRAINAGE DETAILS
24. STRUCTURE APPROACH TYPE N(30S)
25. STRUCTURE APPROACH DRAINAGE DETAILS
26. SLOPE PAVING - FULL SLOPE
27. JOINT SEAL DETAILS NO. 1
28. JOINT SEAL DETAILS NO. 2
29. LOG OF TEST BORINGS 1 OF 5
30. LOG OF TEST BORINGS 2 OF 5
31. LOG OF TEST BORINGS 3 OF 5
32. LOG OF TEST BORINGS 4 OF 5
33. LOG OF TEST BORINGS 5 OF 5

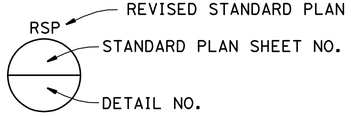

STANDARD PLANS DATED MAY 2006

A10A	ACRONYMS AND ABBREVIATIONS (A-L)
A10B	ACRONYMS AND ABBREVIATIONS (M-Z)
A10C	SYMBOLS (SHEET 1 OF 2)
A10D	SYMBOLS (SHEET 2 OF 2)
A62C	LIMITS OF PAYMENT FOR EXCAVATION AND BACKFILL - BRIDGE
A87A	CURBS AND DRIVEWAYS
BO-1	BRIDGE DETAILS
BO-3	BRIDGE DETAILS
BO-5	BRIDGE DETAILS
BO-13	BRIDGE DETAILS
RSP-B2-8	PILE DETAILS - CLASS 200
RSP-B6-21	JOINT SEALS (MAXIMUM MOVEMENT RATING = 2")
B7-1	BOX GIRDER DETAILS
B7-5	DECK DRAINS
B7-6	DECK DRAINS - TYPES D-1 AND D-2
B7-8	DECK DRAINAGE DETAILS
B7-10	UTILITY OPENING - BOX GIRDER
B7-11	UTILITY DETAILS
B8-5	CAST-IN-PLACE PRESTRESSED GIRDER DETAILS
B11-52	CHAIN LINK RAILING TYPE 7
B11-54	CONCRETE BARRIER TYPE 26
B14-3	COMMUNICATION AND SPRINKLER CONTROL CONDUITS (CONDUIT LESS THAN 4")
RSP-ES-6A	ELECTRICAL SYSTEMS (LIGHTING STANDARD, TYPES 15 AND 21)
ES-6B	ELECTRICAL SYSTEMS (LIGHTING STANDARD, TYPES 15 AND 21, BARRIER RAIL MOUNTED DETAILS)

QUANTITIES

BRIDGE REMOVAL, LOCATION A	LUMP SUM	
STRUCTURE EXCAVATION (BRIDGE)	4,124	CY
STRUCTURE BACKFILL (BRIDGE)	3,116	CY
FURNISH PILING (CLASS 200) (ALTERNATIVE W)	34,054 ~~34,274~~	LF
DRIVE PILE (CLASS 200) (ALTERNATIVE W)	420 ~~423~~	EA
PRESTRESSING CAST-IN-PLACE CONCRETE	LUMP SUM	
STRUCTURAL CONCRETE, BRIDGE FOOTING	844	CY
STRUCTURAL CONCRETE, BRIDGE	10,239	CY
STRUCTURAL CONCRETE, APPROACH SLAB (TYPE N)	335	CY
JOINT SEAL ASSEMBLY (MR 5")	345	LF
BAR REINFORCING STEEL (BRIDGE)	2,483,210	LB
WELDED STEEL PIPE CASING (BRIDGE)	162	LF
SLOPE PAVING (CONCRETE)	76	CY
BRIDGE DECK DRAINAGE SYSTEM	26,980	LB
CHAIN LINK RAILING (TYPE 7)	1,395	LF
CONCRETE BARRIER (TYPE 26 MODIFIED)	1,395	LF

3

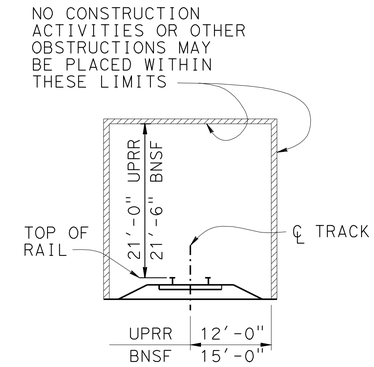

MINIMUM CONSTRUCTION CLEARANCES ENVELOPE

(NORMAL TO RAILROAD)

PRESTRESSING NOTES

270 ksi Low Relaxation Strand:

P_{jack}: (See Prestressing Table)

Anchor Set = 3/8 in

Total Number of Girders: (See Prestressing Table)

Distribution of prestress force (P_{jack}) between girders shall not exceed the ratio of 3:2. Maximum final force variation between girders shall not exceed 725 kips.

Concrete: f'_c = 4,500 psi @ 28 days

f'_{ci} = 3,500 psi @ time of stressing

Contractor shall submit elongation calculations based on initial stress at ⊠ = (See Prestressing table)

Stressing shall be performed at both ends.

The design is based on u = 0.15, k = 0.002/ft.

PILE DATA TABLE

LOCATION		PILE TYPE	CUT-OFF ELEVATION (ft)	NOMINAL RESISTANCE (kips)		DESIGN TIP ELEVATION (ft)	SPECIFIED TIP ELEVATION (ft)	NOMINAL DRIVING RESISTANCE (kips)
				COMPRESSION	TENSION			
Abut 1	STAGE 1	CLASS 200 Alt W	285.42	400	N/A	200 (a)	200	400
	STAGE 2	CLASS 200 Alt W	288.42	400	N/A	200 (a)	200	400
BENT 2	Col A & E	CLASS 200 Alt W	266.92	429	N/A	194 (a)	194	429
	Col B, C, & D	CLASS 200 Alt W	267.42	429	N/A	194 (a)	194	429
BENT 3	Col A & B	CLASS 200 Alt W	260.92	429	N/A	177 (a)	177	479
	Col C	CLASS 200 Alt W	260.42	429	N/A	177 (a)	177	479
	Col D	CLASS 200 Alt W	253.12	429	N/A	177 (a)	177	479
	Col E	CLASS 200 Alt W	252.42	429	N/A	177 (a)	177	479
Abut 4	STAGE 1 & 2	CLASS 200 Alt W	278.92	400	N/A	200 (a)	200	400

(a) Design tip elevations for abutment and bent piles are controlled by compression.

PRESTRESSING NOTE TABLE

Girders	Pjack (Kips)	Total No. of girders	⊠
A & B	8,560	2	0.8674
C & D	8,100	2	0.8672
E & F	7,620	2	0.8664
G & H	7,220	2	0.8662
I & J	6,820	2	0.8655
K, L, & M	9,480	3	0.8640

3 **REVISED PER ADDENDUM No. 3 DATED OCTOBER 15, 2012**

	BY	CHECKED
DESIGN	Richard Melko	Hilario Tuazon
DETAILS	John Yang	Richard Melko
QUANTITIES	David Romero	Adam Menke

STATE OF CALIFORNIA
DEPARTMENT OF TRANSPORTATION

DIVISION OF ENGINEERING SERVICES
STRUCTURE DESIGN
DESIGN BRANCH 6

BRIDGE NO. 41C0207
POST MILE 7.1/7.9

AVENUE 12 OH (REPLACE)
INDEX TO PLANS

STRUCTURES DESIGN DETAIL SHEET (ENGLISH) (REV. 09-01-10)

ORIGINAL SCALE IN INCHES FOR REDUCED PLANS 0 1 2 3

UNIT: 3591
PROJECT NUMBER & PHASE: 0600000463 1 CONTRACT NO.: 471001

DISREGARD PRINTS BEARING EARLIER REVISION DATES

REVISION DATES: 05-12-11 12-16-11 4-11-12

SHEET 2 OF 33

FILE => 41c0207-b-itp.add

USERNAME => s121614 DATE PLOTTED => 11-OCT-2012 TIME PLOTTED => 14:23

DIST	COUNTY	ROUTE	POST MILES TOTAL PROJECT	SHEET No.	TOTAL SHEETS
06	Mad	99	R6.9/R8.2	498	526

REGISTERED CIVIL ENGINEER 1-3-12 DATE

6-4-12
PLANS APPROVAL DATE

REGISTERED PROFESSIONAL ENGINEER TALAL SADEK No. C49664 Exp. 9-30-12 CIVIL STATE OF CALIFORNIA

The State of California or its officers or agents shall not be responsible for the accuracy or completeness of electronic copies of this plan sheet.

NOTES:
* For "BEARING PAD DETAIL" see "ABUTMENT 4 LAYOUT" sheet.

** Place transverse reinforcemtnt parallel to ℄ bridge.

1. For "DETAIL A" and "DETAIL B" see "ABUTMENT DETAILS NO. 1" sheet.

indicates Vertical Pile

Indicates 1:3 Battered Pile

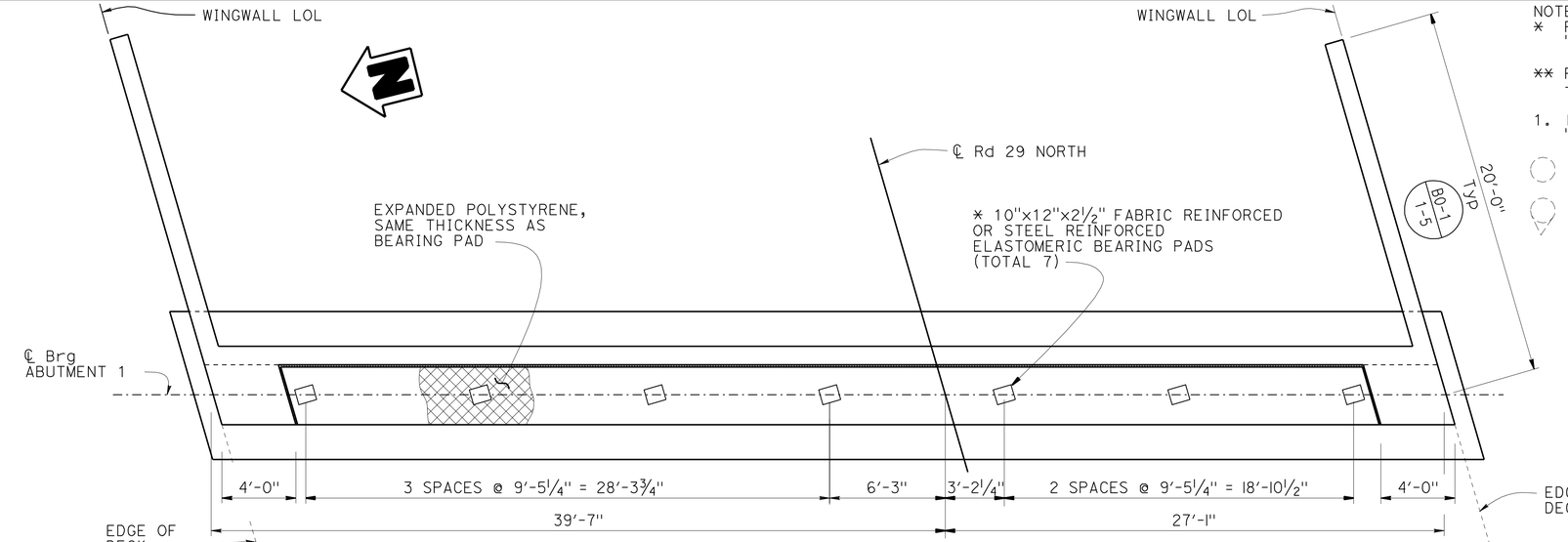

ABUTMENT 1 PLAN

¼" = 1'-0"

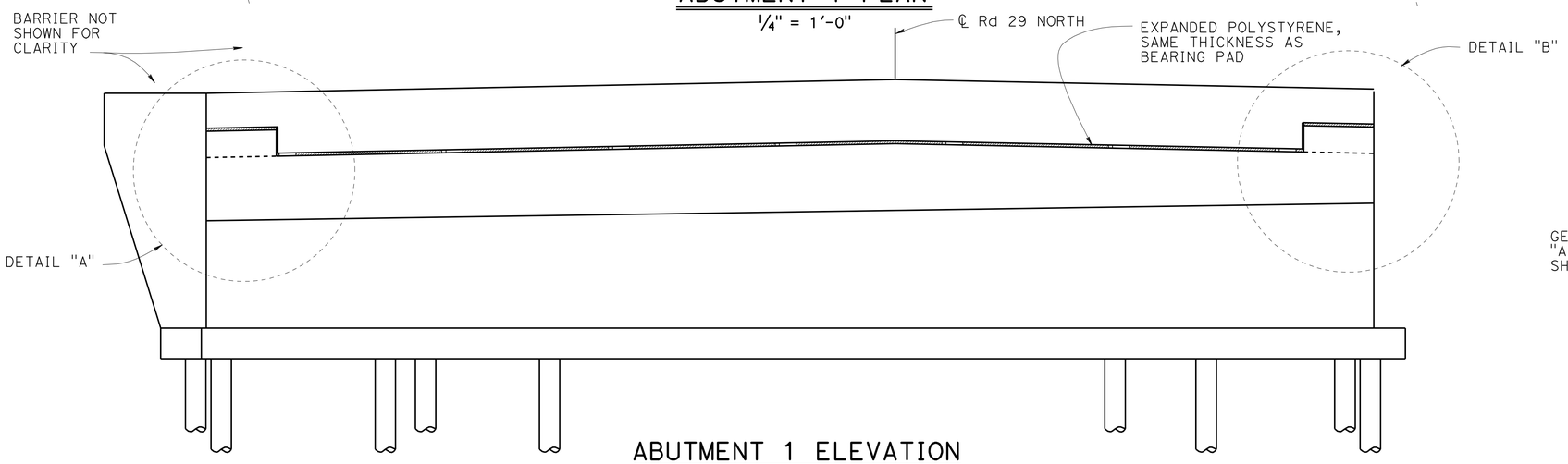

ABUTMENT 1 ELEVATION

¼" = 1'-0"

NOTE: All piles not shown

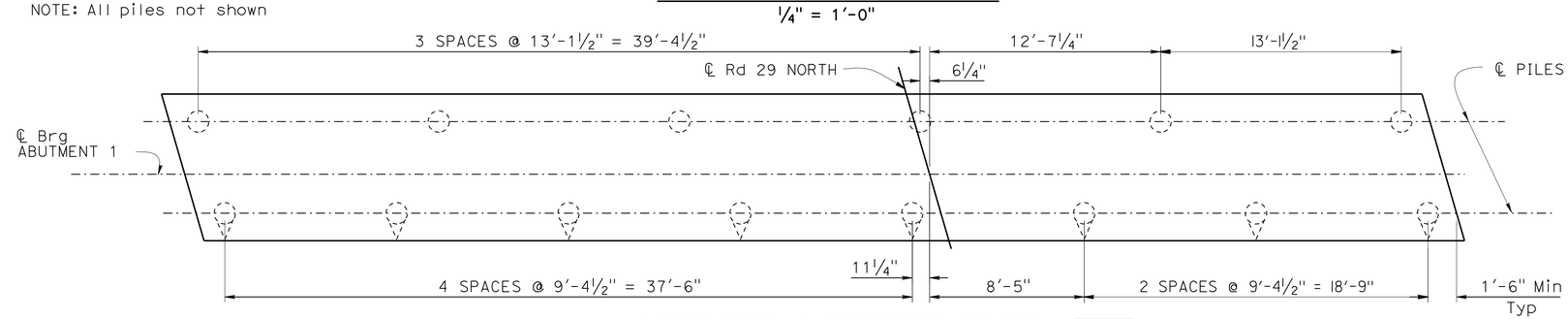

ABUTMENT 1 FOOTING PLAN

¼" = 1'-0"

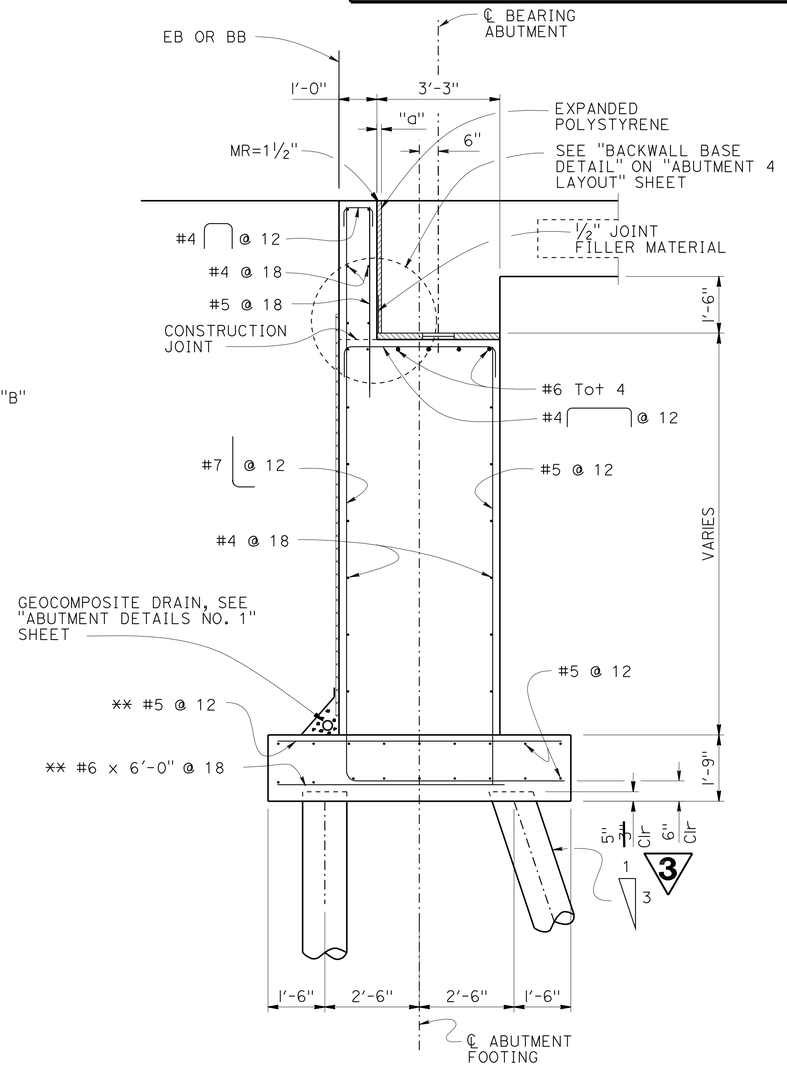

ABUTMENT SECTION

½" = 1'-0"

3 **REVISED PER ADDENDUM No. 3 DATED OCTOBER 15, 2012**

DESIGN	BY R. Washington	CHECKED T. Sadek	
DETAILS	BY M. Lane	CHECKED R. Washington	
QUANTITIES	BY R. Washington	CHECKED A. Salimi	

STATE OF CALIFORNIA
DEPARTMENT OF TRANSPORTATION

DIVISION OF ENGINEERING SERVICES
STRUCTURE DESIGN
DESIGN BRANCH 6

BRIDGE NO. 41C-0208
POST MILE 7.1/7.9

RD 29 NORTH COTTONWOOD CREEK
ABUTMENT 1 LAYOUT

STRUCTURES DESIGN DETAIL SHEET (ENGLISH) (REV. 09-01-10)

ORIGINAL SCALE IN INCHES FOR REDUCED PLANS 0 1 2 3

UNIT: 3591
PROJECT NUMBER & PHASE: 0600000463-1 CONTRACT NO.: 471001

DISREGARD PRINTS BEARING EARLIER REVISION DATES

REVISION DATES: 12-19-11 12-27-11 01-03-12

SHEET 5 OF 16

FILE => 41c0208-f-abt01-lay.add

USERNAME => s121614 DATE PLOTTED => 11-OCT-2012 TIME PLOTTED => 14:23

DIST	COUNTY	ROUTE	POST MILES TOTAL PROJECT	SHEET No.	TOTAL SHEETS
06	Mad	99	R6.9/R8.2	510	526

REGISTERED CIVIL ENGINEER 1-3-12 DATE

6-4-12
PLANS APPROVAL DATE

REGISTERED PROFESSIONAL ENGINEER TALAL SADEK No. C49664 Exp. 9-30-12 CIVIL STATE OF CALIFORNIA

The State of California or its officers or agents shall not be responsible for the accuracy or completeness of electronic copies of this plan sheet.

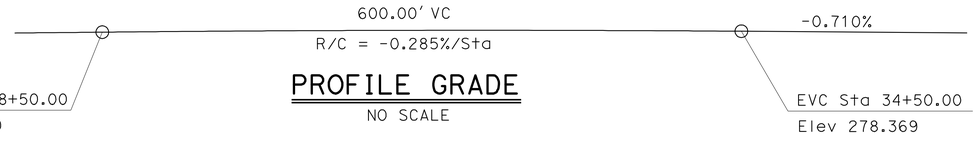

PROFILE GRADE
NO SCALE

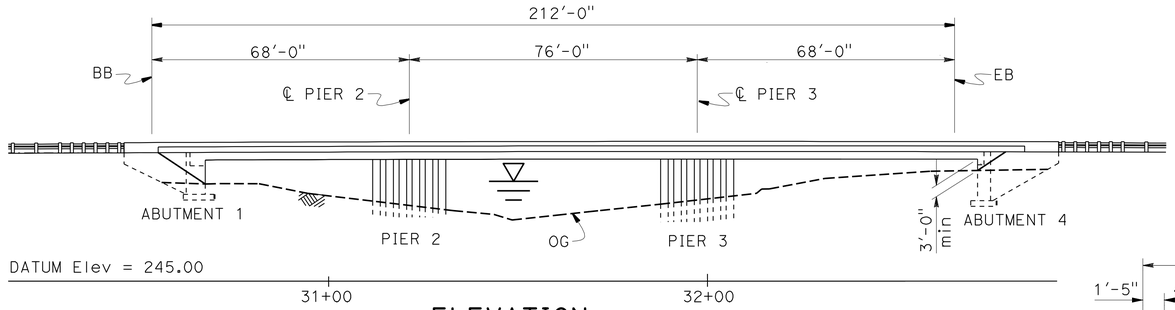

ELEVATION
1" = 20'

NOTES:

(A) Paint "Road 29 South Cottonwood Creek"

(B) Paint "Bridge No. 44-C0209"

(C) Concrete Barrier Type 732

(D) MBGR, see ""ROAD PLANS"

(E) Existing Bridge No. 41C-046 to be removed

(F) 2-3"Ø Conduits in both barriers

(G) Gas line shown on "FOUNDATION PLAN" to be relocated, see "ROAD PLANS"

Indicates Bridge Removal

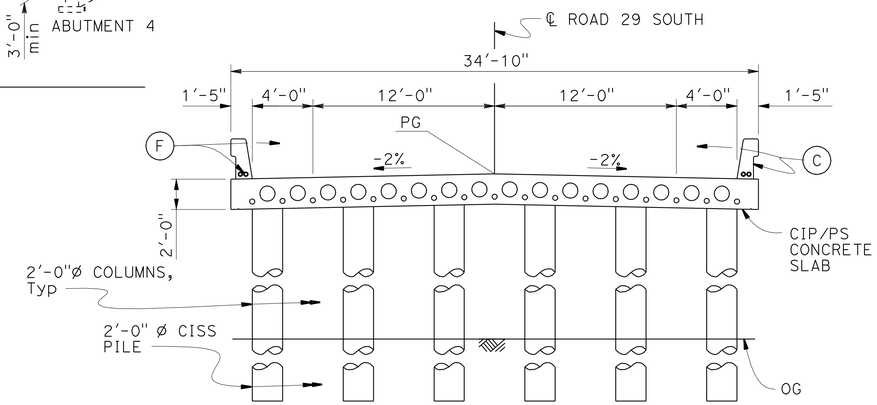

TYPICAL SECTION
1" = 5'

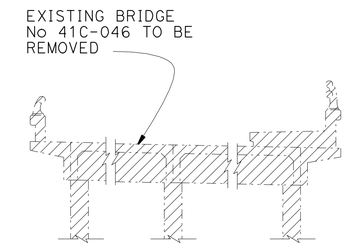

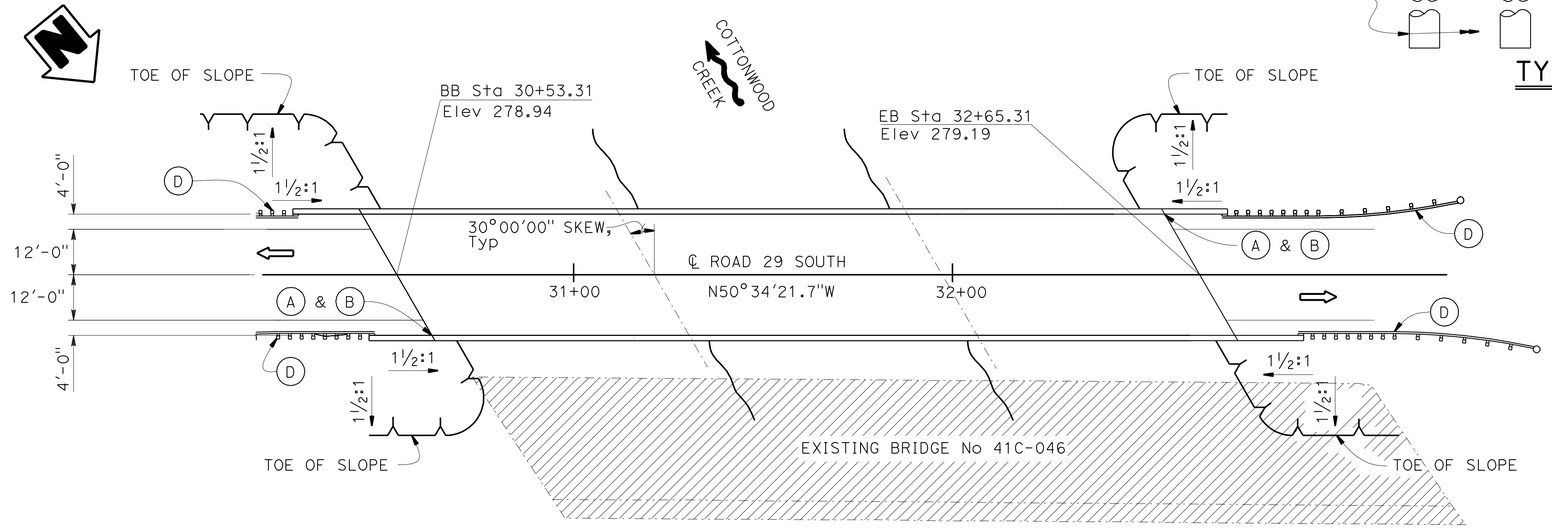

QUANTITIES

STRUCTURE EXCAVATION (BRIDGE)	224	CY
STRUCTURE EXCAVATION (TYPE D)	82	CY
STRUCTURE BACKFILL (BRIDGE)	167	CY
FURNISH PILING (CLASS 140) (ALTERNATIVE W)	1,055	LF
DRIVE PILE (CLASS 140) (ALTERNATIVE W)	18	EA
FURNISH 24" CAST-IN-STEEL SHELL CONCRETE PILING	886 ~~916~~	LF
DRIVE 24" CAST-IN-STEEL SHELL CONCRETE PILE	12	EA
PRESTRESSING CAST-IN-PLACE CONCRETE	LUMP	SUM
STRUCTURAL CONCRETE, BRIDGE FOOTING	44	CY
STRUCTURAL CONCRETE, BRIDGE	655	CY
JOINT SEAL (MR 1½")	80	LF
BAR REINFORCING STEEL (BRIDGE)	240,283	LB
CONCRETE BARRIER (TYPE 26 MODIFIED)	647	LF
CONCRETE BARRIER (TYPE 732)	495	LF

3

3 **REVISED PER ADDENDUM No. 3 DATED OCTOBER 15, 2012**

PLAN
1" = 20'

STANDARD PLAN SHEET No.
DETAIL No.

DESIGN	BY G. R.-Guitierrez	CHECKED T. Sadek	LOAD & RESISTANCE FACTOR DESIGN	LIVE LOADING: HL93 W/"LOW-BOY"; PERMIT DESIGN VEHICLE
DETAILS	BY M. Lane	CHECKED G. R.-Guitierrez	LAYOUT BY X	CHECKED X
QUANTITIES	BY G. R.-Guitierrez	CHECKED S. Morimoto	SPECIFICATIONS BY D. Klein	PLANS AND SPECS COMPARED D. Klein

FRITZ HOFFMAN
DESIGN ENGINEER

STATE OF CALIFORNIA
DEPARTMENT OF TRANSPORTATION

DIVISION OF ENGINEERING SERVICES
STRUCTURE DESIGN
DESIGN BRANCH 6

BRIDGE NO. 41C0209
POST MILE 7.1/7.9

ROAD 29 SOUTH COTTONWOOD CREEK
GENERAL PLAN

ORIGINAL SCALE IN INCHES FOR REDUCED PLANS 0 1 2 3

UNIT: 3591
PROJECT NUMBER & PHASE: 0600000463 & 1 CONTRACT NO.: 471001

DISREGARD PRINTS BEARING EARLIER REVISION DATES

REVISION DATES 9-08-11 9-15-11 12-08-11 01-04-12

SHEET 1 OF 17

USERNAME => s12614 DATE PLOTTED => 11-OCT-2012 TIME PLOTTED => 14:24

STRUCTURES DESIGN GENERAL PLAN SHEET (ENGLISH) (REV.09-01-10)

FILE => 41c0209-a-gp.add

DIST	COUNTY	ROUTE	POST MILES TOTAL PROJECT	SHEET No.	TOTAL SHEETS
06	Mad	99	R6.9/R8.2	514	526

REGISTERED CIVIL ENGINEER 1-3-12 DATE

6-4-12
PLANS APPROVAL DATE

REGISTERED PROFESSIONAL ENGINEER TALAL SADEK No. C49664 Exp. 9-30-12 CIVIL STATE OF CALIFORNIA

The State of California or its officers or agents shall not be responsible for the accuracy or completeness of electronic copies of this plan sheet.

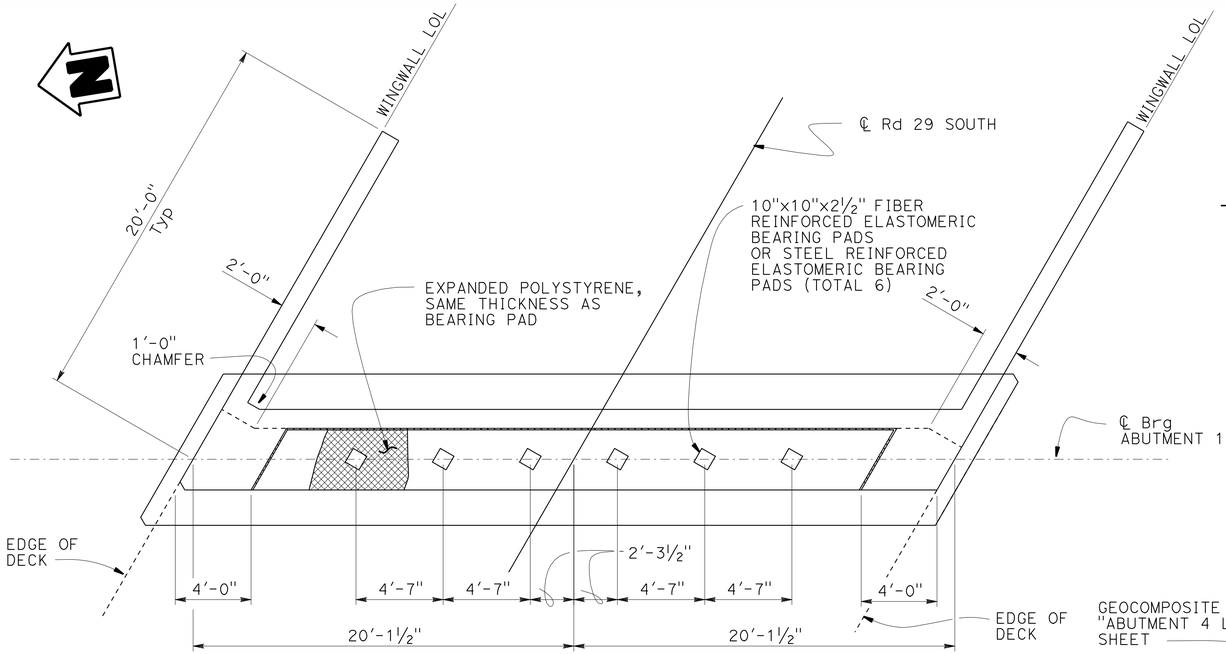

ABUTMENT 1 PLAN (B0-1)

¼" = 1'-0"

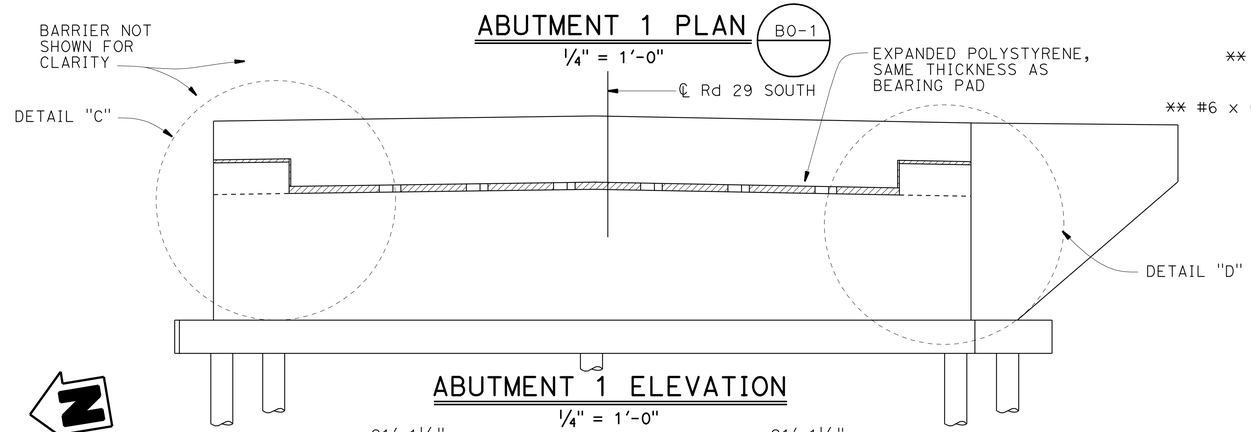

ABUTMENT 1 ELEVATION

¼" = 1'-0"

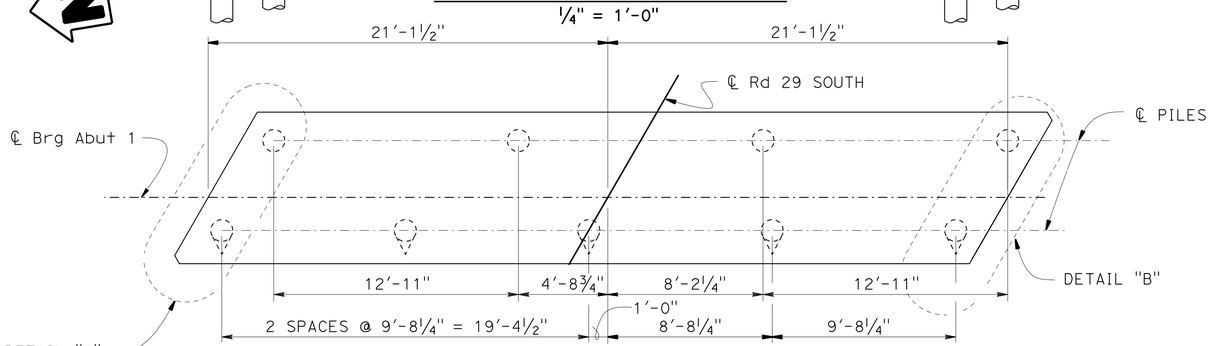

ABUTMENT 1 FOOTING PLAN

¼" = 1'-0"

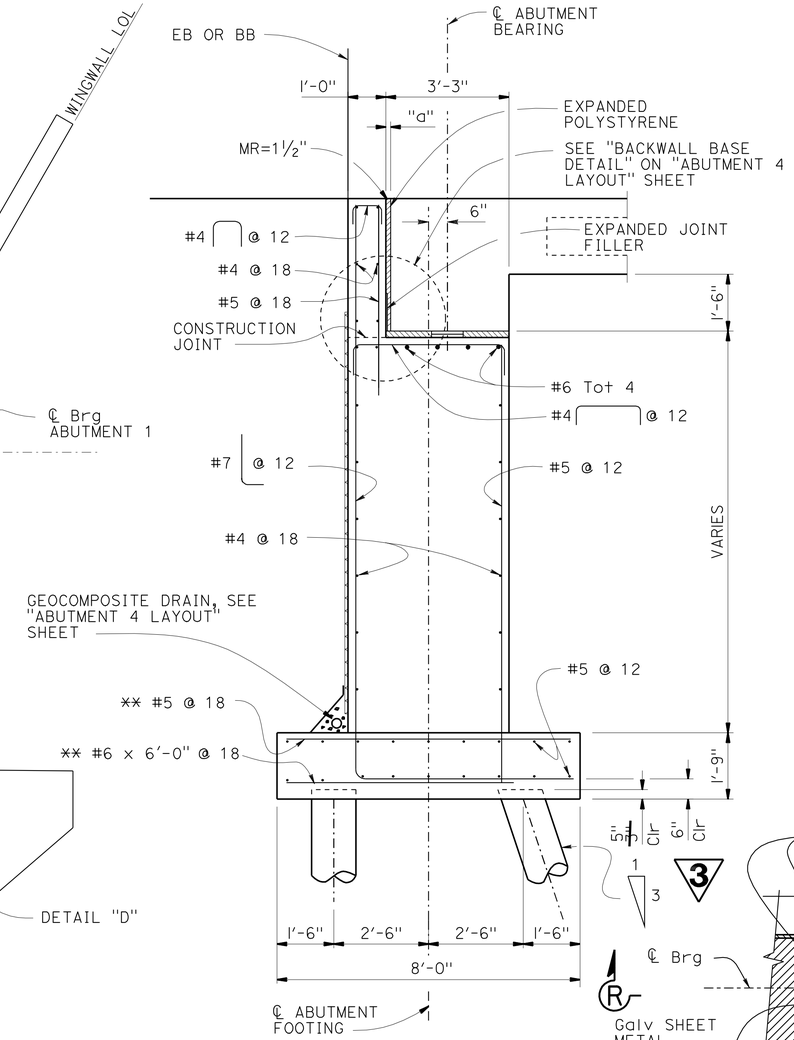

ABUTMENT SECTION

½" = 1'-0"

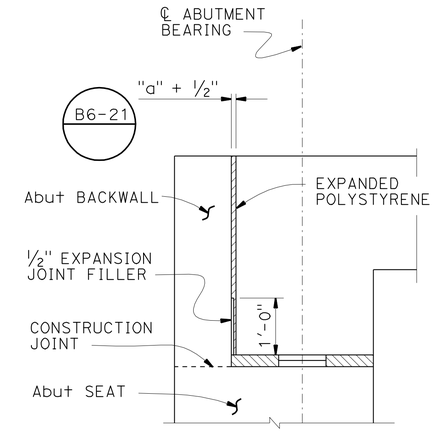

BACKWALL BASE DETAIL

¾" = 1'-0"

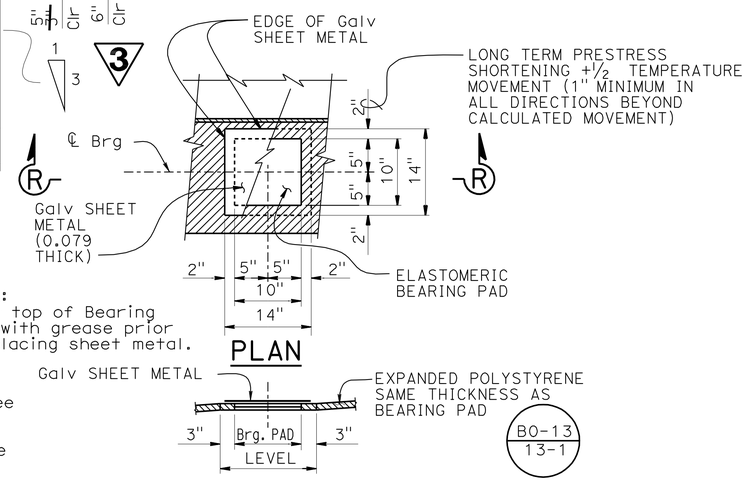

NOTE:
Coat top of Bearing Pad with grease prior to placing sheet metal.

PLAN

SECTION R-R

BEARING PAD DETAIL

NO SCALE
DETAILS TYPICAL AT ALL BEARING PADS

NOTES:
1. For "DETAIL A" and "DETAIL B" see see "ABUTMENT 4 LAYOUT" sheet.
2. For "DETAIL C" and "DETAIL D" see "ABUTMENT DETAILS NO. 1" sheet.

** Place transverse reinforcement parallel to ℄ bridge

indicates Vertical Pile

Indicates 1:3 Battered Pile

3 **REVISED PER ADDENDUM No. 3 DATED OCTOBER 15, 2012**

	BY	CHECKED
DESIGN	G. R.-Guitierrez	T. Sadek
DETAILS	M. Lane	G. R.-Guitierrez
QUANTITIES	G. R.-Guitierrez	S. Morimoto

STATE OF CALIFORNIA DEPARTMENT OF TRANSPORTATION

DIVISION OF ENGINEERING SERVICES STRUCTURE DESIGN DESIGN BRANCH 6

BRIDGE NO. 41C0209 POST MILE 7.1/7.9

ROAD 29 SOUTH COTTONWOOD CREEK

ABUTMENT 1 LAYOUT

STRUCTURES DESIGN DETAIL SHEET (ENGLISH) (REV. 09-01-10)

ORIGINAL SCALE IN INCHES FOR REDUCED PLANS 0 1 2 3

UNIT: 3591
PROJECT NUMBER & PHASE: 0600000463 & 1 CONTRACT NO.: 471001

DISREGARD PRINTS BEARING EARLIER REVISION DATES

REVISION DATES: 07-18-11 01-04-12 12-19-11

SHEET 5 OF 17

FILE => 41c0209-f-a01_lo01.add

USERNAME => s1216t4 DATE PLOTTED => 11-OCT-2012 TIME PLOTTED => 14:24