Dist	COUNTY	ROUTE	POST MILES TOTAL PROJECT	SHEET No.	TOTAL SHEETS
06	Tul	245	0.0/12.0	1	23

STATE OF CALIFORNIA

DEPARTMENT OF TRANSPORTATION

STP-P245(006)E

PROJECT PLANS FOR CONSTRUCTION ON

STATE HIGHWAY

IN TULARE COUNTY
IN WOODLAKE
FROM ROUTE 198 TO ROUTE 201

TO BE SUPPLEMENTED BY STANDARD PLANS DATED MAY 2006

INDEX OF PLANS

SHEET No.	DESCRIPTION
1	TITLE AND LOCATION MAP
2-4	TYPICAL CROSS SECTIONS
5-7	CONSTRUCTION DETAILS
8	CONSTRUCTION AREA SIGNS
9-10	PAVEMENT DELINEATION QUANTITIES
11-15	SUMMARY OF QUANTITIES
16	ELECTRICAL PLAN
17-23	NEW AND REVISED STANDARD PLANS

THE STANDARD PLANS LIST APPLICABLE TO THIS CONTRACT IS INCLUDED IN THE NOTICE TO BIDDERS AND SPECIAL PROVISIONS BOOK.

LOCATION MAP

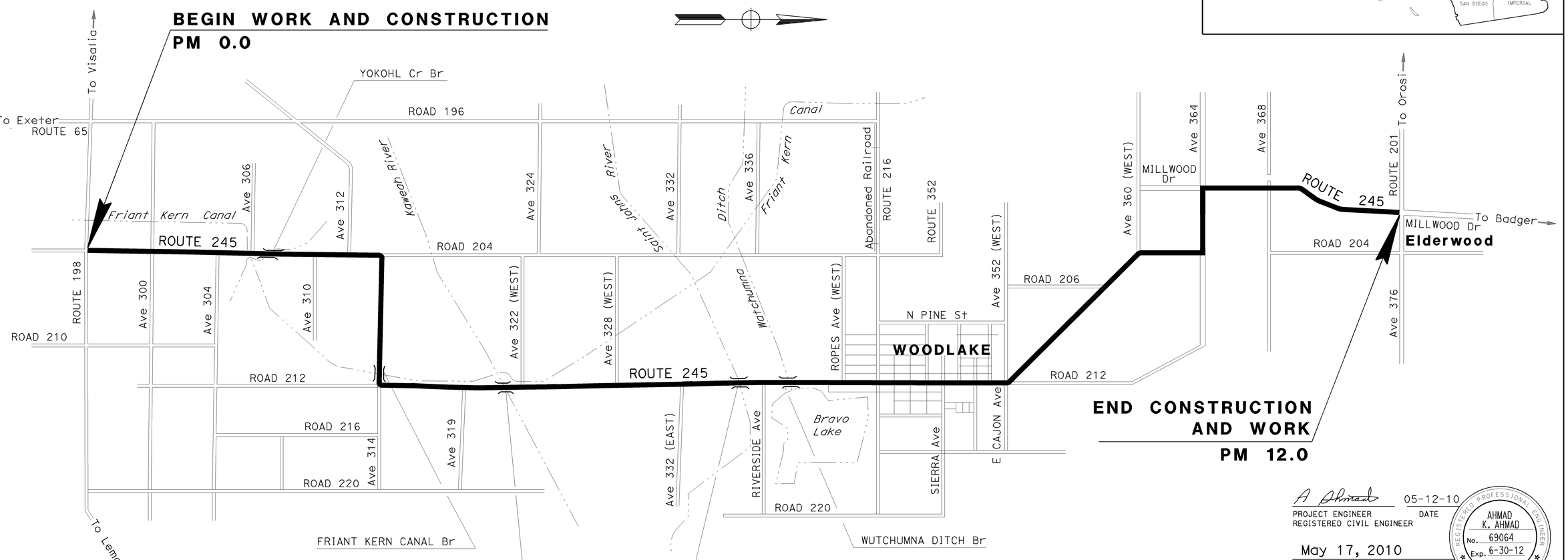

NO SCALE

THE CONTRACTOR SHALL POSSESS THE CLASS (OR CLASSES) OF LICENSE AS SPECIFIED IN THE "NOTICE TO BIDDERS."

A Ahmad 05-12-10
PROJECT ENGINEER DATE
REGISTERED CIVIL ENGINEER

May 17, 2010
PLANS APPROVAL DATE

REGISTERED PROFESSIONAL ENGINEER AHMAD K. AHMAD No. 69064 Exp. 6-30-12 CIVIL STATE OF CALIFORNIA

THE STATE OF CALIFORNIA OR ITS OFFICERS OR AGENTS SHALL NOT BE RESPONSIBLE FOR THE ACCURACY OR COMPLETENESS OF SCANNED COPIES OF THIS PLAN SHEET.

PROJECT MANAGER STEVEN MILTON
DESIGN ENGINEER ALI R. ALOATAMI

CONTRACT No.	06-448104
PROJECT ID	0600000142

LAST REVISION 00-00-00 DATE PLOTTED => 21-JUL-2010 TIME PLOTTED => 14:50

Dist	COUNTY	ROUTE	POST MILES TOTAL PROJECT	SHEET No.	TOTAL SHEETS
06	Tul	245	0.0/12.0	2	23

REGISTERED CIVIL ENGINEER 05-12-10 DATE

05-17-10
PLANS APPROVAL DATE

REGISTERED PROFESSIONAL ENGINEER AHMAD K. AHMAD No. 69064 Exp. 6-30-12 CIVIL STATE OF CALIFORNIA

THE STATE OF CALIFORNIA OR ITS OFFICERS OR AGENTS SHALL NOT BE RESPONSIBLE FOR THE ACCURACY OR COMPLETENESS OF SCANNED COPIES OF THIS PLAN SHEET.

NOTES:

1. DIMENSIONS OF THE PAVEMENT STRUCTURES (STRUCTURAL SECTIONS) ARE SUBJECT TO TOLERANCES SPECIFIED IN THE STANDARD SPECIFICATIONS.
2. SUPERELEVATION AS SHOWN OR AS DIRECTED BY THE ENGINEER.
3. FOR LOCATIONS AND QUANTITIES OF COLD PLANE AC Pvmt, HMA (TYPE A), AND RHMA (GAP GRADED) SEE SUMMARY OF QUANTITIES SHEETS.
4. FOR LOCATIONS AND TYPE OF HMA DIKE SEE SUMMARY OF QUANTITIES SHEETS.

ABBREVIATIONS:

HMA - HOT MIX ASPHALT
RHMA - RUBBERIZED HOT MIX ASPHALT

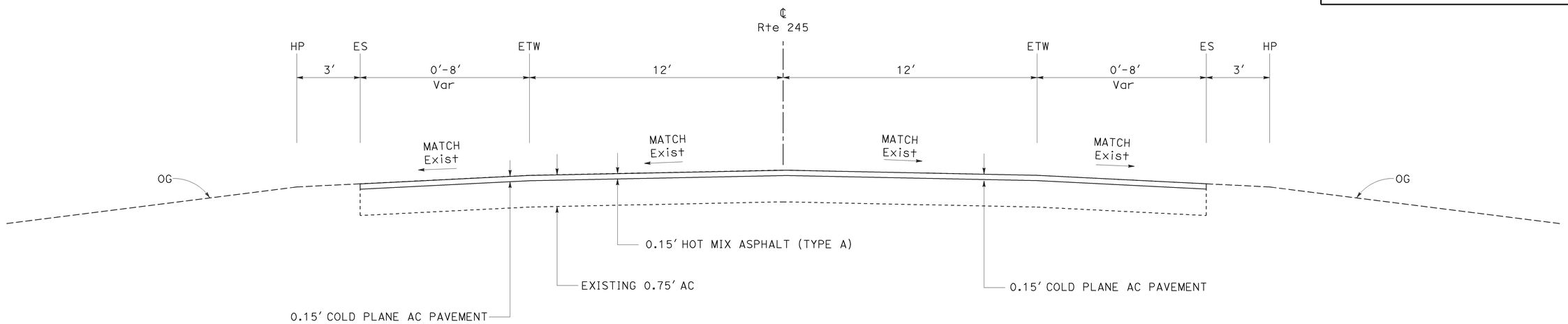

ROUTE 245
PM 6.39 TO 6.80

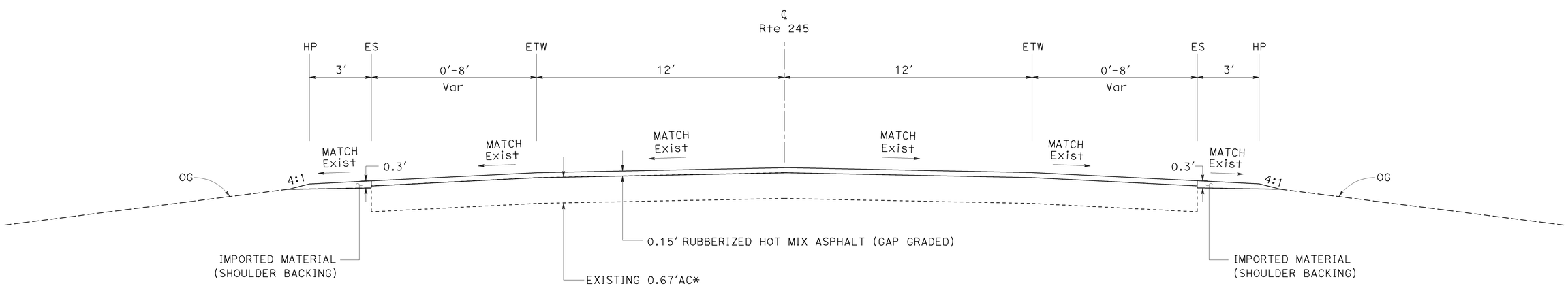

*Exist 0.64′ AC FROM PM 5.0 TO PM 6.0
AND 0.75′AC FROM PM 6.0 TO 7.0

ROUTE 245
PM 0.00 TO 6.39

TYPICAL CROSS SECTIONS

NO SCALE

X-1

STATE OF CALIFORNIA - DEPARTMENT OF TRANSPORTATION
Caltrans
DESIGN
FUNCTIONAL SUPERVISOR: ALI ALQATAMI
CALCULATED-DESIGNED BY: RANJIT K MONDAL
CHECKED BY: AHMAD K AHMAD
REVISED BY
DATE REVISED

LAST REVISION 05-12-10
DATE PLOTTED => 21-JUL-2010
TIME PLOTTED => 14:50

Dist	COUNTY	ROUTE	POST MILES TOTAL PROJECT	SHEET No.	TOTAL SHEETS
06	Tul	245	0.0/12.0	3	23

A Ahmad 05-12-10
REGISTERED CIVIL ENGINEER DATE

05-17-10
PLANS APPROVAL DATE

REGISTERED PROFESSIONAL ENGINEER
AHMAD K. AHMAD
No. 69064
Exp. 6-30-12
CIVIL
STATE OF CALIFORNIA

THE STATE OF CALIFORNIA OR ITS OFFICERS OR AGENTS SHALL NOT BE RESPONSIBLE FOR THE ACCURACY OR COMPLETENESS OF SCANNED COPIES OF THIS PLAN SHEET.

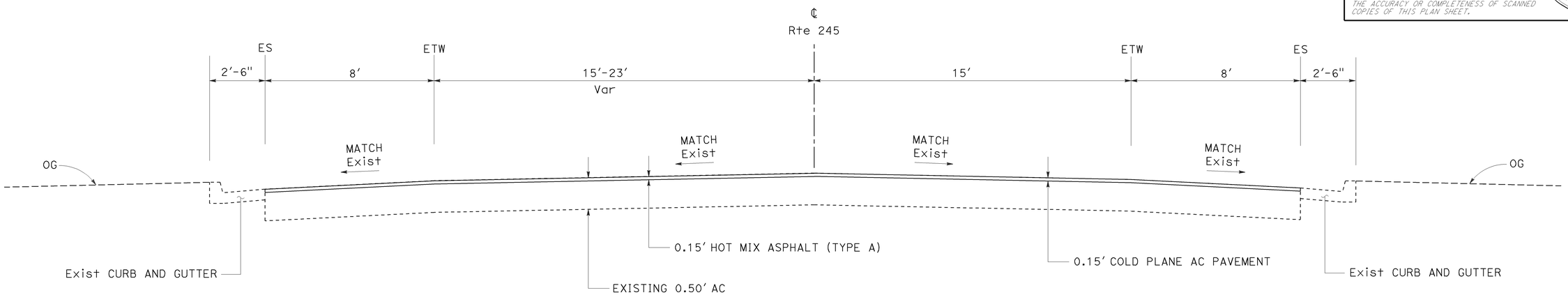

ROUTE 245
PM 7.08 TO 7.44

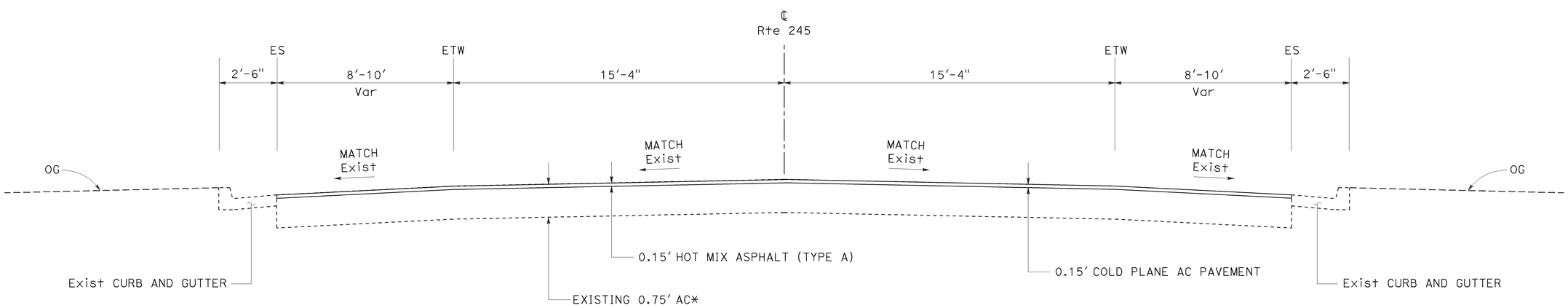

*EXISTING 0.50' AC FROM PM 7.00 TO 7.08

ROUTE 245
PM 6.80 TO 7.08

TYPICAL CROSS SECTIONS

NO SCALE

X-2

REVISED BY | DATE REVISED
RANJIT K MONDAL | AHMAD K AHMAD
CALCULATED-DESIGNED BY | CHECKED BY
FUNCTIONAL SUPERVISOR: ALI ALQATAMI
STATE OF CALIFORNIA - DEPARTMENT OF TRANSPORTATION
Caltrans
DESIGN

LAST REVISION 05-12-10
DATE PLOTTED => 21-JUL-2010
TIME PLOTTED => 14:50

Dist	COUNTY	ROUTE	POST MILES TOTAL PROJECT	SHEET No.	TOTAL SHEETS
06	Tul	245	0.0/12.0	4	23

A Ahmad 05-12-10
REGISTERED CIVIL ENGINEER DATE

05-17-10
PLANS APPROVAL DATE

REGISTERED PROFESSIONAL ENGINEER
AHMAD K. AHMAD
No. 69064
Exp. 6-30-12
CIVIL
STATE OF CALIFORNIA

THE STATE OF CALIFORNIA OR ITS OFFICERS OR AGENTS SHALL NOT BE RESPONSIBLE FOR THE ACCURACY OR COMPLETENESS OF SCANNED COPIES OF THIS PLAN SHEET.

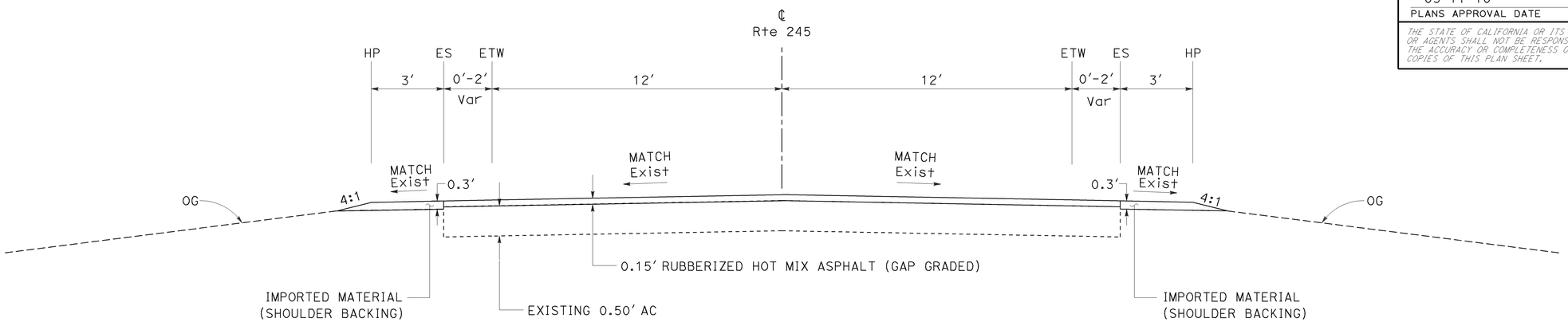

ROUTE 245

PM 7.94 TO 12.00

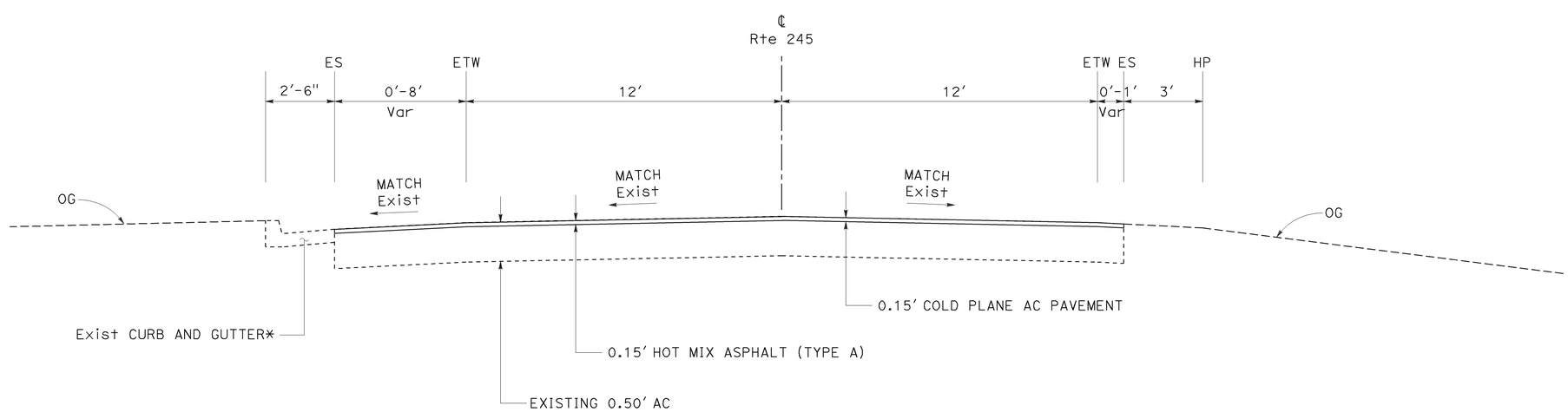

ROUTE 245

PM 7.44 TO 7.94

*CURB AND GUTTER EXISTS ONLY FROM PM 7.82 TO PM 7.94.

TYPICAL CROSS SECTIONS

NO SCALE

X-3

REVISED BY | DATE REVISED
RANJIT K MONDAL | AHMAD K AHMAD
CALCULATED-DESIGNED BY | CHECKED BY
FUNCTIONAL SUPERVISOR
ALI ALQATAMI

STATE OF CALIFORNIA - DEPARTMENT OF TRANSPORTATION
Caltrans
DESIGN

LAST REVISION 05-12-10 | DATE PLOTTED => 21-JUL-2010 | TIME PLOTTED => 14:50

Dist	COUNTY	ROUTE	POST MILES TOTAL PROJECT	SHEET No.	TOTAL SHEETS
06	Tul	245	0.0/12.0	5	23

A Ahmad 05-12-10
REGISTERED CIVIL ENGINEER DATE

05-17-10
PLANS APPROVAL DATE

REGISTERED PROFESSIONAL ENGINEER
AHMAD K. AHMAD
No. 69064
Exp. 6-30-12
CIVIL
STATE OF CALIFORNIA

THE STATE OF CALIFORNIA OR ITS OFFICERS OR AGENTS SHALL NOT BE RESPONSIBLE FOR THE ACCURACY OR COMPLETENESS OF SCANNED COPIES OF THIS PLAN SHEET.

LEGEND

COLD PLANE AC Pvmt

PLACE HMA (TYPE A)

ABBREVIATIONS:

HMA - HOT MIX ASPHALT

RHMA - RUBBERIZED HOT MIX ASPHALT

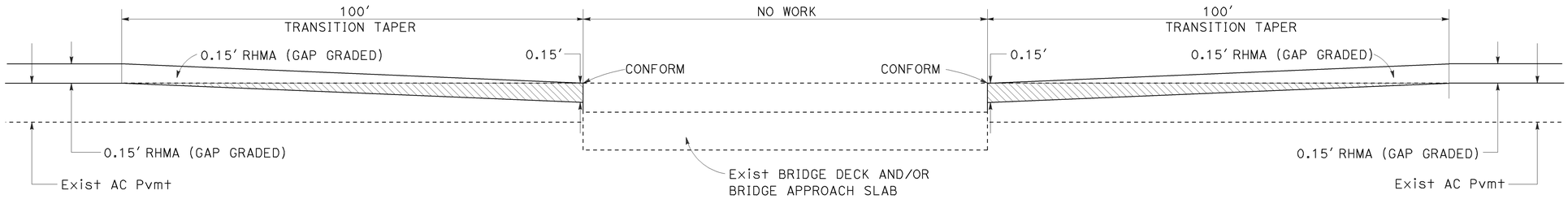

TYPICAL TRANSITION TAPER DETAIL AT PCC BRIDGE LOCATIONS

PM 1.390 (YOKOHL CREEK Br)

PM 4.192 (KAWEAH RIVER Br)

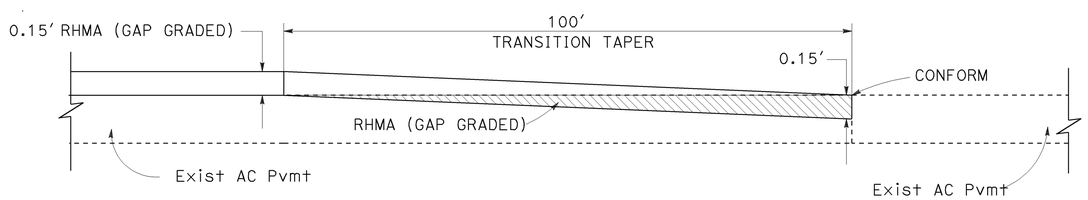

LONGITUDINAL TRANSITION TAPER DETAIL

PM 0.00 AND PM 12.00

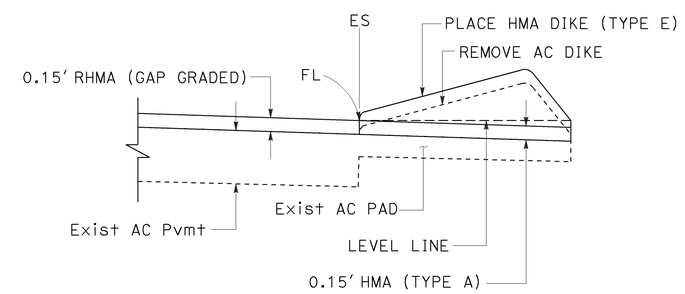

HMA DIKE DETAILS

NOTE: FOR ADDITIONAL DETAILS OF DIKE, SEE STANDARD PLANS.

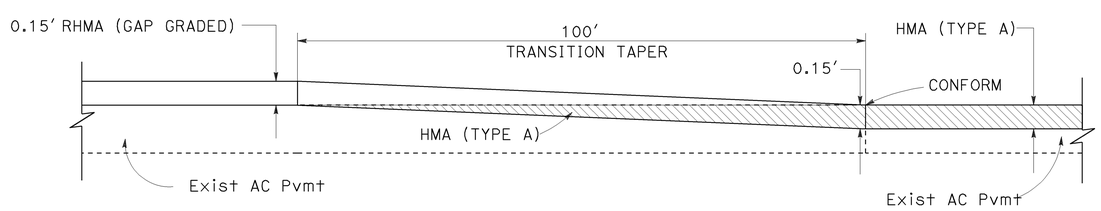

LONGITUDINAL TRANSITION TAPER DETAIL

PM 6.39 AND PM 7.94

CONSTRUCTION DETAILS

NO SCALE

C-1

REVISED BY | DATE REVISED

RANJIT K MONDAL | AHMAD K AHMAD

CALCULATED-DESIGNED BY | CHECKED BY

FUNCTIONAL SUPERVISOR | ALI ALQATAMI

STATE OF CALIFORNIA - DEPARTMENT OF TRANSPORTATION

DESIGN

Caltrans

LAST REVISION 05-12-10 | DATE PLOTTED => 21-JUL-2010 | TIME PLOTTED => 14:50

Dist	COUNTY	ROUTE	POST MILES TOTAL PROJECT	SHEET No.	TOTAL SHEETS
06	Tul	245	0.0/12.0	6	23

REGISTERED CIVIL ENGINEER 05-12-10 DATE

05-17-10
PLANS APPROVAL DATE

REGISTERED PROFESSIONAL ENGINEER AHMAD K. AHMAD No. 69064 Exp. 6-30-12 CIVIL STATE OF CALIFORNIA

THE STATE OF CALIFORNIA OR ITS OFFICERS OR AGENTS SHALL NOT BE RESPONSIBLE FOR THE ACCURACY OR COMPLETENESS OF SCANNED COPIES OF THIS PLAN SHEET.

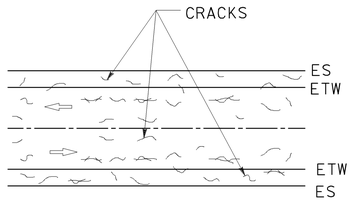

CRACK TREATMENT TYPICAL PLAN VIEW

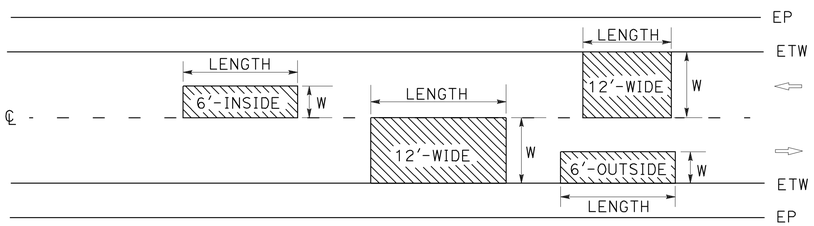

NOTE: EXACT LOCATIONS, WIDTHS, AND LENGTHS TO BE DETERMINED BY THE ENGINEER. SEE SUMMARY OF QUANTITIES SHEETS FOR COLD PLANE AC PAVEMENT LOCATIONS.

TYPICAL COLD PLANE DETAILS

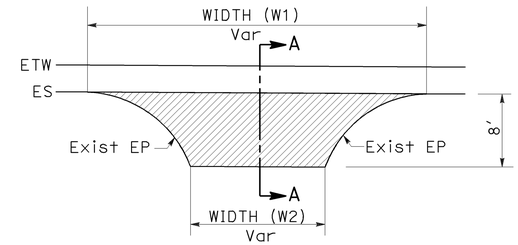

PLAN

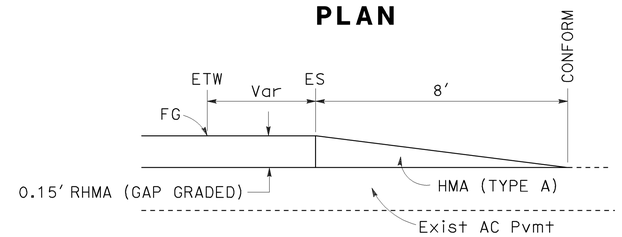

SECTION A-A

CONFORM AT DRIVEWAYS AND ACCESS ROADS

NOTE: SEE SUMMARY OF QUANTITIES SHEET FOR LOCATIONS.

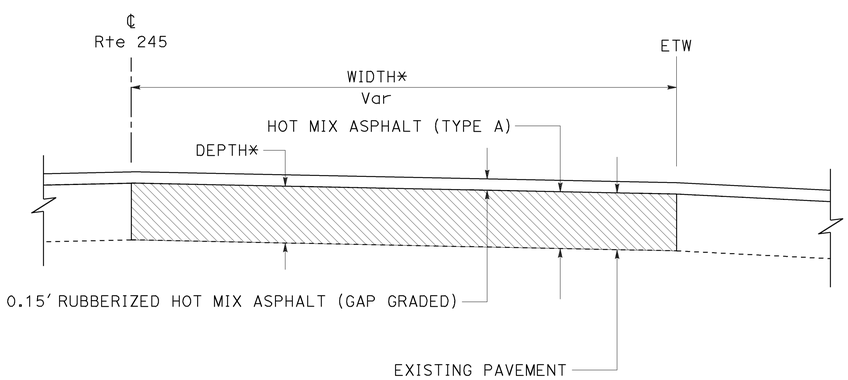

TYPICAL COLD PLANE DETAILS AT RHMA (GAP GRADED) OVERLAY LOCATIONS

*EXACT LOCATIONS, WIDTHS, AND LENGTHS TO BE DETERMINED BY THE ENGINEER. SEE SUMMARY OF QUANTITIES SHEET FOR COLD PLANE AC PAVEMENT LOCATIONS.

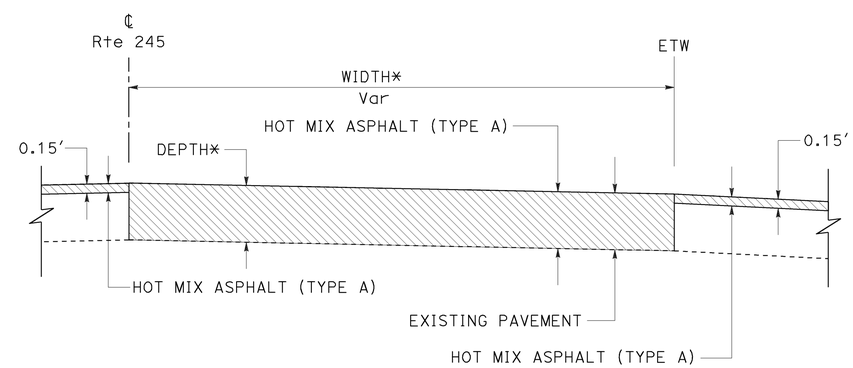

TYPICAL COLD PLANE DETAILS AT HMA (TYPE A) LOCATIONS

*EXACT LOCATIONS, WIDTHS, AND LENGTHS TO BE DETERMINED BY THE ENGINEER. SEE SUMMARY OF QUANTITIES SHEET FOR COLD PLANE AC PAVEMENT LOCATIONS.

CONSTRUCTION DETAILS

NO SCALE

C-2

STATE OF CALIFORNIA - DEPARTMENT OF TRANSPORTATION
DESIGN
FUNCTIONAL SUPERVISOR: ALI ALQATAMI
CALCULATED-DESIGNED BY: RANJIT K MONDAL
CHECKED BY: AHMAD K AHMAD
REVISED BY
DATE REVISED

LAST REVISION 05-12-10
DATE PLOTTED => 21-JUL-2010
TIME PLOTTED => 14:50

Dist	COUNTY	ROUTE	POST MILES TOTAL PROJECT	SHEET No.	TOTAL SHEETS
06	Tul	245	0.0/12.0	7	23

A Ahmad 05-12-10
REGISTERED CIVIL ENGINEER DATE

05-17-10
PLANS APPROVAL DATE

REGISTERED PROFESSIONAL ENGINEER AHMAD K. AHMAD No. 69064 Exp. 6-30-12 CIVIL STATE OF CALIFORNIA

THE STATE OF CALIFORNIA OR ITS OFFICERS OR AGENTS SHALL NOT BE RESPONSIBLE FOR THE ACCURACY OR COMPLETENESS OF SCANNED COPIES OF THIS PLAN SHEET.

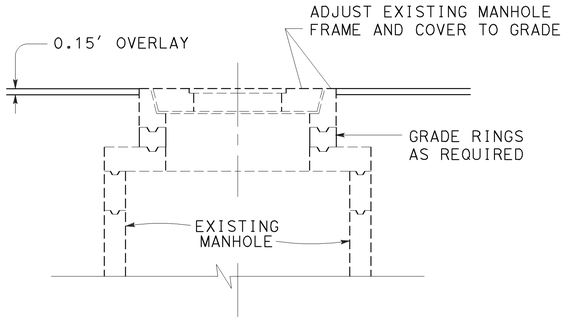

ADJUST MANHOLE TO GRADE

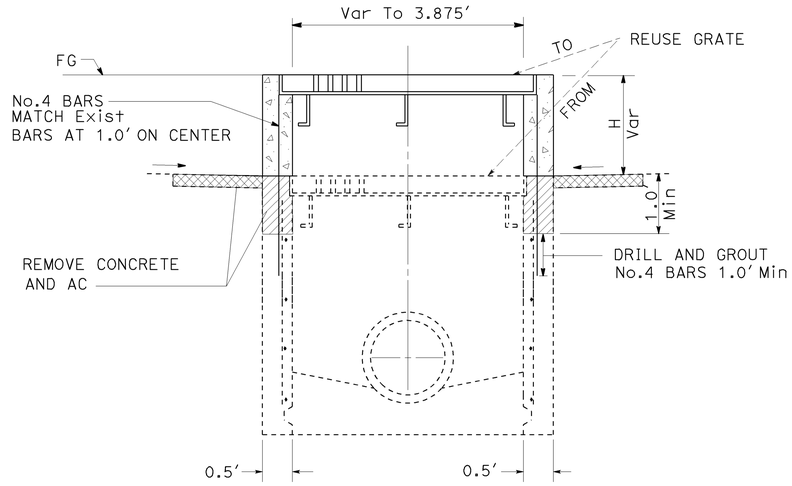

ADJUST INLET TO GRADE

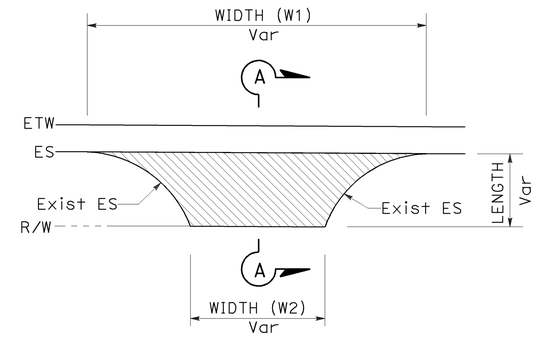

PLAN

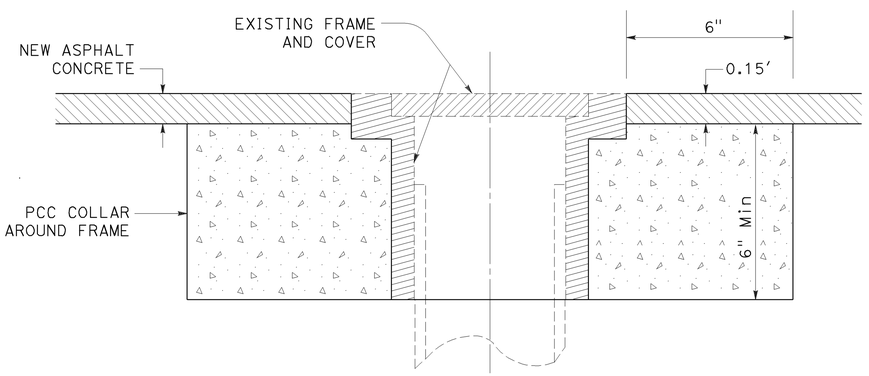

ALTERNATIVE 1
ADJUST VALVE COVER TO GRADE

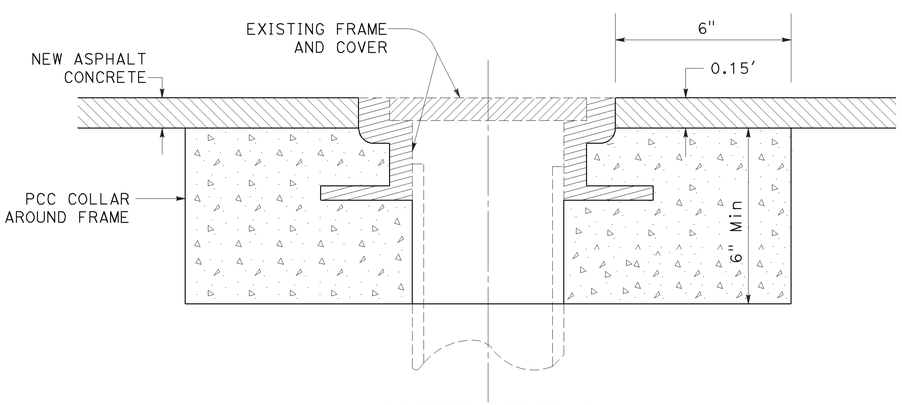

ALTERNATIVE 2
ADJUST VALVE COVER TO GRADE

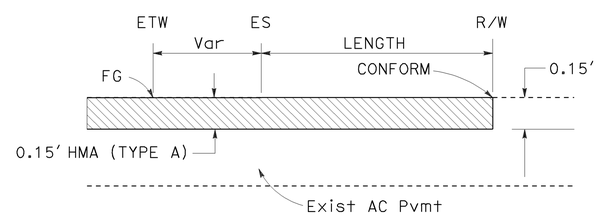

SECTION A-A
PM 6.39 TO PM 7.94

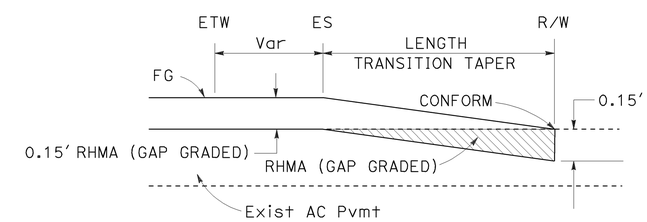

SECTION A-A
PM 0.00 TO PM 6.39
PM 7.94 TO PM 12.00

TRANSITION TAPER DETAIL AT PUBLIC ROAD INTERSECTIONS

NOTE: SEE SUMMARY OF QUANTITIES SHEET FOR LOCATIONS AND OTHER INFORMATION.

CONSTRUCTION DETAILS

NO SCALE

C-3

STATE OF CALIFORNIA - DEPARTMENT OF TRANSPORTATION
Caltrans
DESIGN

FUNCTIONAL SUPERVISOR: ALI ALQATAMI
CALCULATED-DESIGNED BY: RANJIT K MONDAL
CHECKED BY: AHMAD K AHMAD
REVISED BY
DATE REVISED

LAST REVISION 05-12-10
DATE PLOTTED => 21-JUL-2010
TIME PLOTTED => 14:50

Dist	COUNTY	ROUTE	POST MILES TOTAL PROJECT	SHEET No.	TOTAL SHEETS
06	Tul	245	0.0/12.0	8	23

REGISTERED CIVIL ENGINEER 01-29-10 DATE

5-17-10
PLANS APPROVAL DATE

REGISTERED PROFESSIONAL ENGINEER MAZIN H. AL-ALI No. 65523 Exp. 9/30/11 CIVIL STATE OF CALIFORNIA

THE STATE OF CALIFORNIA OR ITS OFFICERS OR AGENTS SHALL NOT BE RESPONSIBLE FOR THE ACCURACY OR COMPLETENESS OF SCANNED COPIES OF THIS PLAN SHEET.

STATIONARY MOUNTED CONSTRUCTION AREA SIGNS

SIGN No.	SIGN CODE	PANEL SIZE (inches)	SIGN MESSAGE	No. OF POST AND SIZE(inches)	No. OF SIGNS
A	W20-1	36" x 36"	ROAD WORK AHEAD	1- 4" x 6"	2
B	W20-1	30" x 30"	ROAD WORK AHEAD	1- 4" x 4"	42
C	G20-2	36" x 18"	END ROAD WORK	1- 4" x 6"	2
D	G20-1	36" x 18"	ROAD WORK NEXT 15 MILES	1- 4" x 6"	2

NOTE: LOCATIONS OF CONSTRUCTION AREA SIGNS SHOWN ARE APPROXIMATE. EXACT LOCATIONS TO BE DETERMINED BY THE ENGINEER.

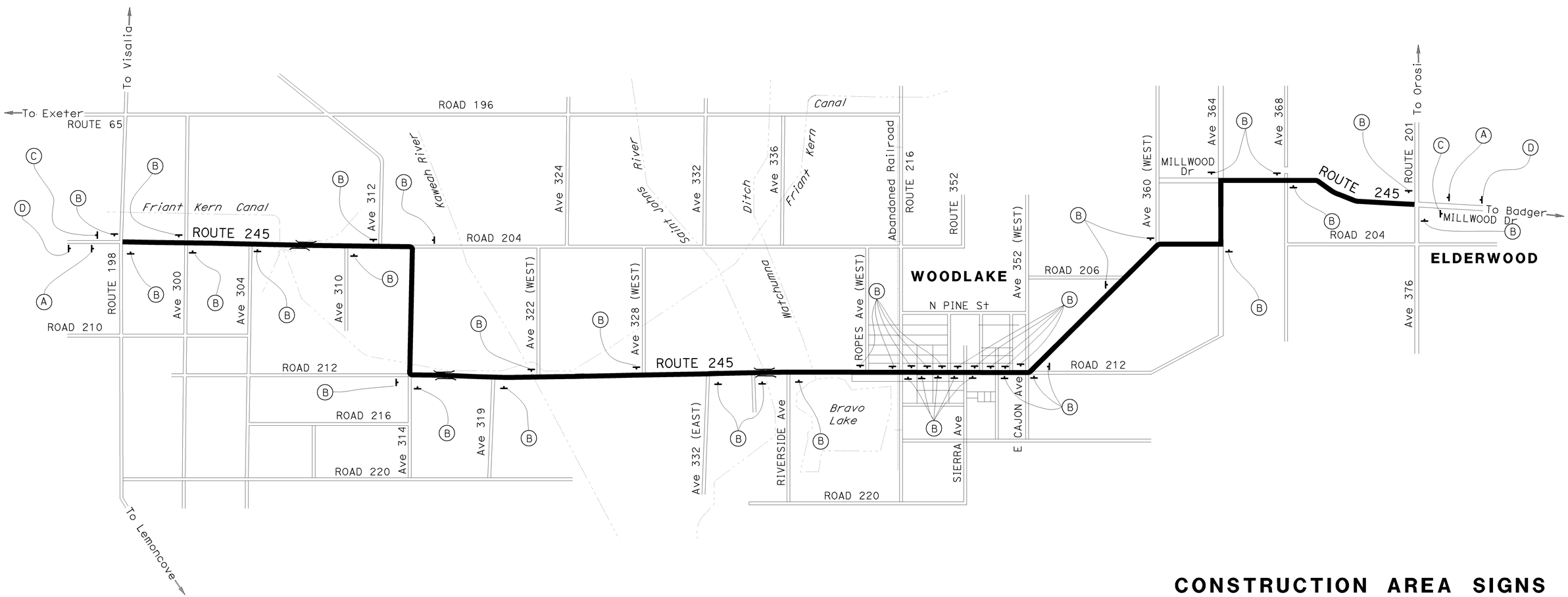

THIS PLAN ACCURATE FOR CONSTRUCTION AREA SIGNS ONLY.

CONSTRUCTION AREA SIGNS

NO SCALE

CS-1

STATE OF CALIFORNIA - DEPARTMENT OF TRANSPORTATION
Caltrans
TRAFFIC DESIGN

FUNCTIONAL SUPERVISOR: MOHAMMED QATAMI
CALCULATED-DESIGNED BY: MAZIN AL-ALI
CHECKED BY: HASEEB YOUSAF
REVISED BY
DATE REVISED

LAST REVISION 01-29-10
DATE PLOTTED => 21-JUL-2010
TIME PLOTTED => 14:50

Dist	COUNTY	ROUTE	POST MILES TOTAL PROJECT	SHEET No.	TOTAL SHEETS
06	Tul	245	0.0/12.0	9	23

REGISTERED CIVIL ENGINEER 01-29-10 DATE

5-17-10
PLANS APPROVAL DATE

REGISTERED PROFESSIONAL ENGINEER MAZIN H. AL-ALI No. 65523 Exp. 9/30/11 CIVIL STATE OF CALIFORNIA

THE STATE OFF CALIFORNIA OR ITS OFFICERS OR AGENTS SHALL NOT BE RESPONSIBLE FOR THE ACCURACY OR COMPLETENESS OFF SCANNED COPIES OFF THIS PLAN SHEET.

PAVEMENT DELINEATION QUANTITIES

ROUTE 245 LOCATION		DIRECTION	DETAIL No.	PAVEMENT MARKER (RETROREFLECTIVE) TYPE D	PAVEMENT MARKER (RETROREFLECTIVE) TYPE H	REMOVE PAVEMENT MARKER (N)	THERMOPLASTIC TRAFFIC STRIPE 4" SOLID	THERMOPLASTIC TRAFFIC STRIPE 4" (BROKEN 12-3)	THERMOPLASTIC TRAFFIC STRIPE 4" (BROKEN 36-12)	THERMOPLASTIC PAVEMENT MARKING	
PM	PM			EA	EA	EA	LF	LF	LF	DESCRIPTION	SQFT
0.00	0.12		19	16	27	43	634		634	2-"STOP"	44
0.12	0.44		6	36		36			1,690	1-"AHEAD"	31
0.44	0.50		19	10	14	23	317		317	2-LIMIT LINES	32
0.00	7.07	NB	27B				37,330			2-"STOP"	44
0.00	7.07	SB	27B				37,330				
0.50	0.52	NB	27C					106			
0.50	0.52	SB	27C					106			
0.52	0.58		19	10	14	23	317		317		
0.58	0.94		6	41		41			1,901		
0.94	1.00		19	10	14	23	317		317		
1.00	1.02	NB	27C					106		1-LIMIT LINE	16
1.02	1.37		22	156		156	3,696			1-"STOP"	22
1.25	1.27	SB	27C					106		1-LIMIT LINE	16
1.37	1.55		19	22	41	63	950		950	1-"STOP"	22
1.55	1.69		6	16		16			739		
1.69	1.75		19	10	14	23	317		317	1-LIMIT LINE	16
1.75	1.77	NB	27C					106		1-"STOP"	22
1.77	2.30		22	236		236	5,597			1-LIMIT LINE	16
2.30	2.61		19	38	69	107	1,637		1,637	1-"STOP"	22
2.61	2.78		22	78		78	1,795				
2.78	3.12		19	40	76	116	1,795		1,795		
3.12	3.28		22	74		74	1,690				
3.24	3.27	NB	27C					158		2-LIMIT LINES	32
3.28	3.45		19	22	38	60	898		898	2-"STOP"	44
3.45	3.83		6	43		43			2,006		
3.83	3.97		19	18	32	50	739		739		
3.88	3.92		27C					211			
3.97	4.12		6	18		18			792	1-LIMIT LINE	16
4.12	4.33		19	26	47	73	1,109		1,109	1-"STOP"	22
4.25	4.27	SB	27C					106		1-LIMIT LINE	16
4.33	4.89		6	63		63			2,957	1-"STOP"	22
4.89	5.00		19	16	25	41	581		581		
4.94	4.97	SB	27C					158			
5.00	5.09		22	42		42	950			1-LIMIT LINE	16
5.05	5.09	NB	27C					211		1-"STOP"	22
5.09	5.14		19	8	12	20	264		264		
5.14	5.49		6	40		40			1,848		
5.49	5.66		19	22	38	60	898		898	1-LIMIT LINE	16
5.66	5.85		6	22		22			1,003	1-"STOP"	22
5.56	5.58	NB	27C					106			
5.85	5.95		19	14	23	37	528		528		
5.95	8.17		22	980		980	23,443				
5.91	5.95	NB	27C					211		1-LIMIT LINE	16
6.23	6.25	NB	27C					106		1-"STOP"	22
6.30	6.32	NB	27B				106				
6.37	6.39	NB	27C					106		11-LIMIT LINES	176
6.61	6.63	SB	27C					106		13-"STOP"	286
6.73	6.75	SB	27C					106			
6.85	6.87	SB	27C					106			
6.98	7.01	SB	27C					158		5-CROSSWALK	300
7.30	12.00	SB	27B				24,816			6-"STOP"	132
7.30	12.00	NB	27B				24,816			2-"AHEAD"	62
8.05	8.08	NB	27C					158		9-LIMIT LINES	270
8.17	8.31		19	18	32	50	739		739	6-SLOW	138
8.31	8.45		6	16		16			739	6-SCHOOL	210
8.45	8.73		19	34	63	97	1,478		1,478	6-XING	126
8.73	9.06		6	37		37			1,742	3-CROSSWALK (YELLOW)	180
9.06	9.19		19	18	30	48	686		686		
9.11	9.14	NB	27C					158		1-LIMIT LINE	16
9.19	9.34		6	18		18			792	1-"STOP"	22
9.34	9.62		19	34	63	97	1,478		1,478		
9.47	9.49	NB	27C				106			1-LIMIT LINE	16
9.62	9.88		6	30		30			1,373	1-"STOP"	22
9.88	10.06		19	22	41	63	950		950		
10.06	10.39		6	37		37			1,742	7-LIMIT LINE	112
10.39	10.58		19	23	43	67	1,003		1,003	9-"STOP"	198
10.58	10.84		6	30		30			1,373	4-"AHEAD"	124
10.84	11.53		22	306		306	7,286				
10.96	10.98		27C					106			
11.53	11.66		19	18	30	48	686		686		
SUBTOTAL				2,769	786	3,555	137,544	2,801	14,781		2,959
TOTAL THIS SHEET				3,555		3,555	137,544	2,801	14,781		2,959

(N) NOT A SEPARATE PAY ITEM, FOR INFORMATION ONLY.

REVISED BY | DATE REVISED

HASEEB YOUSAF | MAZIN AL-ALI

CALCULATED-DESIGNED BY | CHECKED BY

FUNCTIONAL SUPERVISOR: MOHAMMED QATAMI

STATE OFF CALIFORNIA - DEPARTMENT OFF TRANSPORTATION

Caltrans® TRAFFIC DESIGN

PAVEMENT DELINEATION QUANTITIES

PDQ-1

LAST REVISION 01-29-10 | DATE PLOTTED => 21-JUL-2010 | TIME PLOTTED => 14:50

Dist	COUNTY	ROUTE	POST MILES TOTAL PROJECT	SHEET No.	TOTAL SHEETS
06	Tul	245	0.0/12.0	10	23

REGISTERED CIVIL ENGINEER 01-29-10 DATE

5-17-10
PLANS APPROVAL DATE

REGISTERED PROFESSIONAL ENGINEER
MAZIN H. AL-ALI
No. 65523
Exp. 9/30/11
CIVIL
STATE OF CALIFORNIA

THE STATE OFF CALIFORNIA OR ITS OFFICERS OR AGENTS SHALL NOT BE RESPONSIBLE FOR THE ACCURACY OR COMPLETENESS OFF SCANNED COPIES OFF THIS PLAN SHEET.

PAVEMENT DELINEATION QUANTITIES

ROUTE 245 LOCATION		DIRECTION	DETAIL No.	PAVEMENT MARKER (RETROREFLECTIVE)		REMOVE PAVEMENT MARKER	THERMOPLASTIC TRAFFIC STRIPE			THERMOPLASTIC PAVEMENT MARKING	
				TYPE D	TYPE H	(N)	4" SOLID	4" (BROKEN 12-3)	4" (BROKEN 36-12)		
PM	PM			EA	EA	EA	LF	LF	LF	DESCRIPTION	SQFT
11.66	11.91		6	29		29			1320		
11.91	12.00		19	12	21	33	475		475	2-LIMIT LINE	32
12.00	12.02	NB	27C					106		2-"STOP"	44
PARKING SPACE MARKING (PM 7.5)							400				
SUBTOTAL				62		62					76
SUBTOTAL PDQ-1				3,555		3,555	137,544	2,801	14,781		2,959
TOTAL				3,617		3,617	138,419	2,907	16,576		3,035

(N) NOT A SEPARATE PAY ITEM, FOR INFORMATION ONLY.

STATE OFF CALIFORNIA - DEPARTMENT OFF TRANSPORTATION
Caltrans
TRAFFIC DESIGN

FUNCTIONAL SUPERVISOR: MOHAMMED QATAMI
CALCULATED-DESIGNED BY: HASEEB YOUSAF
CHECKED BY: MAZIN AL-ALI
REVISED BY
DATE REVISED

PAVEMENT DELINEATION QUANTITIES

PDQ-2

LAST REVISION 01-29-10
DATE PLOTTED => 21-JUL-2010
TIME PLOTTED => 14:50

Dist	COUNTY	ROUTE	POST MILES TOTAL PROJECT	SHEET No.	TOTAL SHEETS
06	Tul	245	0.0/12.0	11	23

A Ahmad 05-12-10
REGISTERED CIVIL ENGINEER DATE

05-17-10
PLANS APPROVAL DATE

REGISTERED PROFESSIONAL ENGINEER AHMAD K. AHMAD No. 69064 Exp. 6-30-12 CIVIL STATE OF CALIFORNIA

THE STATE OF CALIFORNIA OR ITS OFFICERS OR AGENTS SHALL NOT BE RESPONSIBLE FOR THE ACCURACY OR COMPLETENESS OF SCANNED COPIES OF THIS PLAN SHEET.

RUBBERIZED HOT MIX ASPHALT (GAP GRADED)

DESCRIPTION	PM TO PM	RUBBERIZED HOT MIX ASPHALT (GAP GRADED)
		TON
NORTHBOUND ROUTE 245	0.019 TO 1.375	1,099.5
NORTHBOUND ROUTE 245	1.465 TO 4.173	2,315.8
NORTHBOUND ROUTE 245	4.252 TO 6.391	2,022.3
NORTHBOUND ROUTE 245	7.940 TO 11.981	3,043.2
SOUTHBOUND ROUTE 245	0.019 TO 1.375	1,095.0
SOUTHBOUND ROUTE 245	1.465 TO 4.173	2,335.8
SOUTHBOUND ROUTE 245	4.252 TO 6.391	1,984.8
SOUTHBOUND ROUTE 245	7.940 TO 11.981	3,175.2
REPLACEMENT OF COLD PLANE AC Pvmt	0.000 TO 12.000	734.6
	TOTAL	17,806.2

HOT MIX ASPHALT DIKE

SIDE	PM TO PM	REMOVE AC DIKE	PLACE HOT MIX ASPHALT DIKE (TYPE E)	HOT MIX ASPHALT (TYPE A)
		LF	LF	TON*
Rt	1.29 TO 1.39	528.0	528.0	14.6
	1.45 TO 1.54	475.2	475.2	13.1
	1.76 TO 1.87	580.8	580.8	16.1
	3.11 TO 3.18	353.8	353.8	9.8
	4.07 TO 4.19	644.2	644.2	17.8
	4.23 TO 4.35	617.8	617.8	17.1
Lt	3.10 TO 3.15	264.0	264.0	7.3
	4.08 TO 4.19	601.9	601.9	16.6
	4.23 TO 4.25	105.6	105.6	2.9
	4.27 TO 4.36	501.6	501.6	13.9
TOTAL		4,672.8	4,672.8	129.2

*QUANTITY INCLUDED IN HOT MIX ASPHALT TABLE

TACK COAT

DESCRIPTION	PM TO PM*	TACK COAT
		TON
RHMA (TYPE G) FOR NORTHBOUND ROUTE 245	0.02 TO 1.38	3.10
RHMA (TYPE G) FOR NORTHBOUND ROUTE 245	1.47 TO 4.17	6.53
RHMA (TYPE G) FOR NORTHBOUND ROUTE 245	4.25 TO 6.39	5.71
RHMA (TYPE G) FOR NORTHBOUND ROUTE 245	7.94 TO 11.98	8.59
RHMA (TYPE G) FOR SOUTHBOUND ROUTE 245	0.02 TO 1.38	3.09
RHMA (TYPE G) FOR SOUTHBOUND ROUTE 245	1.47 TO 4.17	6.59
RHMA (TYPE G) FOR SOUTHBOUND ROUTE 245	4.25 TO 6.39	5.60
RHMA (TYPE G) FOR SOUTHBOUND ROUTE 245	7.94 TO 11.98	8.96
REPLACEMENT OF COLD PLANE AC Pvmt	6.41 TO 7.92	10.18
REPLACEMENT OF COLD PLANE AC Pvmt	0.00 TO 12.00	16.59
AT PUBLIC ROAD INTERSECTIONS	0.00 TO 12.00	1.87
Misc HOT MIX ASPHALT (TYPE A)	0.00 TO 12.00	0.31
	TOTAL	77.12

* EXACT LOCATIONS TO BE DETERMINED BY THE ENGINEER.

HOT MIX ASPHALT (TYPE A)

DESCRIPTION	PM TO PM	HOT MIX ASPHALT (TYPE A)
		TON
REPLACEMENT OF COLD PLANE AC Pvmt	0.00 TO 12.00	11,492.4
HOT MIX ASPHALT DIKES	1.29 TO 4.36	129.2
HOT MIX ASPHALT (DRIVEWAYS AND ACCESS ROADS)	0.00 TO 12.00	41.0
	TOTAL	11,662.6

ADJUST MANHOLE TO GRADE

LOCATION (PM)	DIRECTION	OFFSET	EA
6.37	NB	11.0 Rt	1
		TOTAL	1

ADJUST INLET TO GRADE

LOCATION (PM)	DIRECTION	OFFSET	EA
10.47	NB	10.0 Rt	1
		TOTAL	1

ADJUST WATER VALVE COVER TO GRADE

LOCATION (PM)	DIRECTION	OFFSET	EA
7.13	SB	15.0 Lt	2
7.31	SB	15.0 Lt	1
7.56	SB	15.0 Lt	1
7.56	NB	15.0 Lt	1
6.18	NB	14.0 Lt	1
6.25	NB	17.0 Lt	1
6.37	SB	17.0 Lt	1
6.55	SB	17.0 Lt	1
6.68	NB	17.0 Lt	1
6.93	SB	14.0 Lt	1
6.94	SB	11.0 Lt	1
		TOTAL	12

IMPORTED MATERIAL (SHOULDER BACKING)

DIRECTION	LOCATION* FROM PM	LOCATION* TO PM	IMPORTED MATERIAL (N) CY	IMPORTED MATERIAL TON
NORTHBOUND	0.000	1.290	272.5	551.7
	1.536	3.100	307.1	621.9
	3.193	4.070	194.7	394.3
	4.350	5.974	343.2	694.9
	6.036	6.386	73.9	149.7
	7.940	12.000	833.2	1,687.2
SOUTHBOUND	0.000	1.394	294.4	596.2
	1.446	3.177	351.4	711.6
	3.193	4.078	186.9	378.5
	4.363	5.974	340.2	688.9
	6.036	6.386	73.9	149.7
	7.942	12.000	857.1	1,735.5
TOTAL				8,360.1

* EXACT LOCATIONS TO BE DETERMINED BY THE ENGINEER.
(N) NOT A SEPARATE PAY ITEM, FOR INFORMATION ONLY.

SUMMARY OF QUANTITIES

Q-1

REVISED BY | DATE REVISED
RANJIT K MONDAL | AHMAD K AHMAD
CALCULATED-DESIGNED BY | CHECKED BY
FUNCTIONAL SUPERVISOR: ALI ALQATAMI
STATE OF CALIFORNIA - DEPARTMENT OF TRANSPORTATION
Caltrans DESIGN

LAST REVISION | DATE PLOTTED => 21-JUL-2010 | TIME PLOTTED => 14:50
05-12-10

Dist	COUNTY	ROUTE	POST MILES TOTAL PROJECT	SHEET No.	TOTAL SHEETS
06	Tul	245	0.0/12.0	12	23

A Ahmad 05-12-10
REGISTERED CIVIL ENGINEER DATE

05-17-10
PLANS APPROVAL DATE

REGISTERED PROFESSIONAL ENGINEER AHMAD K. AHMAD No. 69064 Exp. 6-30-12 CIVIL STATE OF CALIFORNIA

THE STATE OF CALIFORNIA OR ITS OFFICERS OR AGENTS SHALL NOT BE RESPONSIBLE FOR THE ACCURACY OR COMPLETENESS OF SCANNED COPIES OF THIS PLAN SHEET.

COLD PLANE ASPHALT CONCRETE PAVEMENT
(TABLE 1)

DIRECTION	LOCATION* FROM PM	LOCATION* TO PM	LENGTH (N)	WIDTH (N) TRAVEL WAY	WIDTH (N) SHOULDER	COLD PLANE THICKNESS	COLD PLANE AC Pvmt SQYD	RHMA (GAP GRADED)	HMA (TYPE A) TON
NORTHBOUND	6.410	6.412	48.0′	12.00′	8.00′	0.15′	75.0	-	8.0
	6.412	6.430	95.0′	12.00′	8.00′	0.15′	211.2	-	22.5
	6.430	6.454	126.7′	12.00′	8.00′	0.15′	281.6	-	29.9
	6.454	6.478	127.0′	12.00′	8.00′	0.15′	197.7	-	21.0
	6.478	6.538	316.8′	12.00′	8.00′	0.15′	704.0	-	74.8
	6.538	6.544	32.0′	12.00′	8.00′	0.15′	28.9	-	3.1
	6.544	6.700	823.7′	12.00′	8.00′	0.15′	1,830.4	-	194.6
	6.700	6.800	528.0′	12.00′	8.00′	0.15′	1,173.3	-	124.7
	6.800	6.820	105.6′	15.33′	8.00′	0.15′	273.4	-	29.1
	6.820	6.843	121.4′	15.33′	10.00′	0.15′	341.8	-	36.3
	6.843	6.851	43.0′	15.33′	10.00′	0.15′	92.9	-	9.9
	6.851	6.864	69.0′	15.33′	10.00′	0.15′	148.4	-	15.8
	6.864	6.888	127.0′	15.33′	10.00′	0.15′	273.0	-	29.0
	6.888	6.924	190.1′	15.33′	10.00′	0.15′	535.0	-	56.9
	6.924	6.935	59.0′	15.33′	10.00′	0.15′	88.6	-	9.4
	6.935	6.952	89.8′	15.33′	10.00′	0.15′	252.6	-	26.9
	6.952	6.975	122.0′	15.33′	10.00′	0.15′	181.5	-	19.3
	6.975	6.996	110.9′	15.33′	10.00′	0.15′	312.1	-	33.2
	6.996	7.007	59.0′	15.33′	10.00′	0.15′	88.6	-	9.4
	7.007	7.024	90.0′	15.33′	10.00′	0.15′	193.5	-	20.6
	7.024	7.060	190.1′	15.33′	10.00′	0.15′	535.0	-	56.9
	7.060	7.080	105.6′	15.33′	10.00′	0.15′	297.2	-	31.6
	7.080	7.130	264.0′	15.00′	8.00′	0.15′	674.7	-	71.7
	7.130	7.444	1,657.9′	15.00′	8.00′	0.15′	4,236.9	-	450.4
	7.444	7.461	90.0′	12.00′	1.00′	0.15′	10.3	-	1.1
	7.461	7.476	79.2′	12.00′	1.00′	0.15′	114.4	-	12.2
	7.476	7.487	59.0′	12.00′	1.00′	0.15′	46.5	-	4.9
	7.487	7.531	232.3′	12.00′	1.00′	0.15′	335.6	-	35.7
	7.531	7.575	233.0′	12.00′	1.00′	0.15′	181.7	-	19.3
	7.575	7.596	110.9′	12.00′	1.00′	0.15′	160.2	-	17.0
	7.596	7.622	138.0′	12.00′	0.00′	0.15′	92.5	-	9.8
	7.622	7.637	79.2′	12.00′	0.00′	0.15′	105.6	-	11.2
	7.637	7.655	96.0′	12.00′	0.00′	0.15′	64.6	-	6.9
	7.655	7.766	586.1′	12.00′	0.00′	0.15′	781.4	-	83.1
	7.766	7.794	148.0′	12.00′	0.00′	0.15′	98.8	-	10.5
	7.794	7.800	31.7′	12.00′	0.00′	0.15′	42.2	-	4.5
SUBTOTAL							15,061.1	-	1,601.2
TOTAL THIS TABLE									

DIRECTION	LOCATION* FROM PM	LOCATION* TO PM	LENGTH (N)	WIDTH (N) TRAVEL WAY	WIDTH (N) SHOULDER	COLD PLANE THICKNESS	COLD PLANE AC Pvmt SQYD	RHMA (GAP GRADED)	HMA (TYPE A) TON
NORTHBOUND	7.800	7.857	301.0′	12.00′	0.00′	0.15′	200.6	-	21.3
	7.857	7.863	31.7′	12.00′	0.00′	0.15′	42.2	-	4.5
	7.863	7.921	310.0′	12.00′	0.00′	0.15′	174.0	-	18.5
SOUTHBOUND	6.406	6.430	126.7′	12.00′	4.00′	0.15′	225.3	-	24.0
	6.430	6.542	591.4′	12.00′	4.00′	0.15′	1,051.3	-	111.8
	6.542	6.553	58.1′	12.00′	4.00′	0.15′	64.5	-	6.9
	6.553	6.800	1,304.2′	12.00′	8.00′	0.15′	2,898.1	-	308.1
	6.800	6.820	105.6′	15.33′	8.00′	0.15′	273.7	-	29.1
	6.820	6.834	73.9′	15.33′	8.00′	0.15′	191.6	-	20.4
	6.834	6.874	211.2′	15.33′	10.00′	0.15′	453.6	-	48.2
	6.874	6.882	42.2′	15.33′	10.00′	0.15′	118.9	-	12.6
	6.882	6.933	269.3′	15.33′	10.00′	0.15′	578.4	-	61.5
	6.933	6.935	10.6′	15.33′	10.00′	0.15′	29.7	-	3.2
	6.935	6.962	89.8′	15.33′	10.00′	0.15′	132.9	-	14.1
	6.962	6.964	10.6′	15.33′	10.00′	0.15′	15.6	-	1.7
	6.964	7.026	327.4′	15.33′	10.00′	0.15′	921.3	-	98.0
	7.026	7.055	153.1′	15.33′	10.00′	0.15′	226.8	-	24.1
	7.055	7.080	132.0′	15.33′	10.00′	0.15′	371.5	-	39.5
	7.080	7.130	264.0′	15.00′	8.00′	0.15′	674.7	-	71.7
	7.130	7.444	1,657.9′	15.00′	8.00′	0.15′	4,236.9	-	450.4
	7.444	7.481	195.4′	12.00′	1.00′	0.15′	282.2	-	30.0
	7.481	7.490	47.5′	12.00′	0′	0.15′	31.7	-	3.4
	7.490	7.533	227.0′	12.00′	1.00′	0.15′	328.0	-	34.9
	7.533	7.542	47.5′	12.00′	1.00′	0.15′	37.0	-	3.9
	7.542	7.558	84.5′	12.00′	1.00′	0.15′	122.0	-	13.0
	7.558	7.566	42.2′	12.00′	1.00′	0.15′	32.9	-	3.5
	7.566	7.585	100.3′	12.00′	1.00′	0.15′	144.9	-	15.4
	7.585	7.624	205.9′	12.00′	1.00′	0.15′	160.2	-	17.0
	7.624	7.686	327.4′	12.00′	1.00′	0.15′	472.9	-	50.3
	7.686	7.734	253.4′	12.00′	1.00′	0.15′	197.1	-	21.0
	7.734	7.759	132.0′	12.00′	1.00′	0.15′	190.7	-	20.3
	7.759	7.821	327.4′	12.00′	1.00′	0.15′	254.6	-	27.1
	7.821	7.830	47.5′	12.00′	1.00′	0.15′	5.3	-	0.6
	7.830	7.850	105.6′	12.00′	8.00′	0.15′	234.7	-	25.0
	7.850	7.919	364.3′	12.00′	8.00′	0.15′	566.7	-	60.3
	7.919	7.921	10.6′	12.00′	8.00′	0.15′	23.5	-	2.5
SUBTOTAL							15,966.0	-	1,697.8
TOTAL THIS TABLE							31,027.1	-	3,299.0

* EXACT LOCATIONS TO BE DETERMINED BY THE ENGINEER.
(N) NOT A SEPARATE PAY ITEM, FOR INFORMATION ONLY.

SUMMARY OF QUANTITIES
Q-2

STATE OF CALIFORNIA - DEPARTMENT OF TRANSPORTATION
Caltrans®
DESIGN
FUNCTIONAL SUPERVISOR: ALI ALQATAMI
CALCULATED-DESIGNED BY: RANJIT K MONDAL
CHECKED BY: AHMAD K AHMAD
REVISED BY
DATE REVISED

LAST REVISION DATE PLOTTED => 21-JUL-2010
05-12-10 TIME PLOTTED => 14:50

Dist	COUNTY	ROUTE	POST MILES TOTAL PROJECT	SHEET No.	TOTAL SHEETS
06	Tul	245	0.0/12.0	13	23

A Ahmad 05-12-10
REGISTERED CIVIL ENGINEER DATE

05-17-10
PLANS APPROVAL DATE

REGISTERED PROFESSIONAL ENGINEER AHMAD K. AHMAD No. 69064 Exp. 6-30-12 CIVIL STATE OF CALIFORNIA

THE STATE OF CALIFORNIA OR ITS OFFICERS OR AGENTS SHALL NOT BE RESPONSIBLE FOR THE ACCURACY OR COMPLETENESS OF SCANNED COPIES OF THIS PLAN SHEET.

COLD PLANE ASPHALT CONCRETE PAVEMENT (TABLE 2)

DIRECTION	BEGIN* (PM)	LENGTH* (N)	AREA 12'-WIDE SQYD	AREA 6'-INSIDE SQYD	AREA 6'-OUTSIDE SQYD	COLD PLANE AC Pvmt SQYD	COLD PLANE DEPTH (N)	RHMA (GAP GRADED) TON	HMA (TYPE A) TON
NORTHBOUND	2.249	126.7'	169.0			169.0	0.67'		80.2
	2.486	142.6'		95.0		95.0	0.67'		45.1
	2.807	253.4'			169.0	169.0	0.67'		80.2
	2.882	68.6'		45.8		45.8	0.67'		21.7
	3.151	79.2'	105.6			105.6	0.67'		50.1
	3.195	142.6'			95.0	95.0	0.67'		45.1
	3.280	37.0'		24.6		24.6	0.67'		11.7
	3.302	42.2'		28.2		28.2	0.67'		13.4
	3.310	31.7'			21.1	21.1	0.67'		10.0
	3.449	42.2'			28.2	28.2	0.67'		13.4
	3.468	100.3'		66.9		66.9	0.67'		31.8
	3.489	52.8'	70.4			70.4	0.67'		33.4
	3.520	42.2'		28.2		28.2	0.67'		13.4
	3.566	184.8'	246.4			246.4	0.67'		117.0
	3.905	37.0'			24.6	24.6	0.67'		11.7
	4.052	337.9'			225.3	225.3	0.67'		107.0
	4.248	37.0'			24.6	24.6	0.67'		11.7
	4.320	58.1'			38.7	38.7	0.67'		18.4
	4.415	79.2'	105.6			105.6	0.67'		50.1
	4.442	26.4'		17.6		17.6	0.67'		8.4
	4.621	190.1'		126.7		126.7	0.67'		60.2
	4.935	158.4'	211.2			211.2	0.67'		100.3
	5.004	10.6'	14.1			14.1	0.64'		6.4
	5.488	31.7'		21.1		21.1	0.64'		9.6
	5.664	396.0'	528.0			528.0	0.64'		239.5
	5.739	337.9'		225.3		225.3	0.64'		102.2
	5.803	411.8'	549.1			549.1	0.64'		249.1
	5.886	21.1'			14.1	14.1	0.64'		6.4
	6.403	47.5'		31.7		31.7	0.75'		16.8
	6.454	126.7'		84.5		84.5	0.75'		44.9
	6.538	31.7'	42.2			42.2	0.75'		22.5
	6.843	42.2'		28.2		28.2	0.75'		15.0
	6.851	68.6'			45.8	45.8	0.75'		24.3
	6.864	126.7'			84.5	84.5	0.75'		44.9
	6.924	58.1'	77.4			77.4	0.75'		41.2
	6.952	121.4'	161.9			161.9	0.75'		86.1
	6.996	58.1'	77.4			77.4	0.75'		41.2
	7.007	89.8'			59.8	59.8	0.50'		21.2
	7.444	89.8'	119.7			119.7	0.50'		42.4
	7.476	58.1'			38.7	38.7	0.50'		13.7
	7.531	232.3'			154.9	154.9	0.50'		54.9
	7.596	137.3'			91.5	91.5	0.50'		32.4
	7.637	95.0'			63.4	63.4	0.50'		22.5
	7.766	147.8'			98.6	98.6	0.50'		34.9
	7.800	301.0'			200.6	200.6	0.50'		71.1
	7.863	359.0'			239.4	239.4	0.50'		84.8
	7.940	79.2'			52.8	52.8	0.50'		18.7
	8.009	258.7'			172.5	172.5	0.50'		61.1
SUBTOTAL						5,244.8		-	2,342.0
TOTAL THIS SHEET									

DIRECTION	BEGIN* (PM)	LENGTH* (N)	AREA 12'-WIDE SQYD	AREA 6'-INSIDE SQYD	AREA 6'-OUTSIDE SQYD	COLD PLANE AC Pvmt SQYD	COLD PLANE DEPTH (N)	RHMA (GAP GRADED) TON	HMA (TYPE A) TON
NORTHBOUND	8.073	211.2'			140.8	140.8	0.50'		49.9
	8.126	274.6'			183.0	183.0	0.50'		64.9
	8.379	306.2'			204.2	204.2	0.50'		72.4
	8.471	169.0'			112.6	112.6	0.50'		39.9
	8.540	47.5'			31.7	31.7	0.50'		11.2
	8.643	79.2'			52.8	52.8	0.50'		18.7
	8.690	380.2'			253.4	253.4	0.50'		89.8
	8.808	47.5'			31.7	31.7	0.50'		11.2
	8.830	506.9'			337.9	337.9	0.50'		119.8
	8.949	158.4'			105.6	105.6	0.50'		37.4
	9.031	52.8'			35.2	35.2	0.50'		12.5
	9.116	47.5'			31.7	31.7	0.50'		11.2
	9.134	1166.9'			777.9	777.9	0.50'		275.7
	9.367	301.0'			200.6	200.6	0.50'		71.1
	11.939	31.7'			21.1	21.1	0.50'		7.5
SOUTHBOUND	0.878	89.8'		59.8		59.8	0.67'		28.4
	0.899	116.2'		77.4		77.4	0.67'		36.8
	0.959	116.2'		77.4		77.4	0.67'		36.8
	1.053	264.0'		176.0		176.0	0.67'		83.6
	1.137	142.6'		95.0		95.0	0.67'		45.1
	1.678	73.9'	98.6			98.6	0.67'		46.8
	2.238	116.2'	154.9			154.9	0.67'		73.6
	2.272	105.6'	140.8			140.8	0.67'		66.9
	2.498	200.6'	133.8			200.6	0.67'		95.3
	2.632	47.5'	63.4			63.4	0.67'		30.1
	2.648	116.2'			77.4	77.4	0.67'		36.8
	2.725	52.8'			35.2	35.2	0.67'		16.7
	2.764	343.2'		228.8		228.8	0.67'		108.7
	2.844	52.8'		35.2		35.2	0.67'		16.7
	2.867	47.5'		31.7		31.7	0.67'		15.1
	2.937	31.7'		21.1		21.1	0.67'		10.0
	3.042	52.8'		35.2		35.2	0.67'		16.7
	3.057	58.1'			38.7	38.7	0.67'		18.4
	3.135	153.1'		102.1		102.1	0.67'		48.5
	3.171	37.0'	49.3			49.3	0.67'		23.4
	3.271	1320.0'	1,760.0			1,760.0	0.67'		835.8
	3.521	301.0'			200.6	200.6	0.67'		95.3
	4.224	274.6'	366.1			366.1	0.67'		173.8
	4.276	153.1'			102.1	102.1	0.67'		48.5
	4.415	380.2'			253.4	253.4	0.67'		120.4
	4.684	184.8'			123.2	123.2	0.67'		58.5
	4.750	52.8'			35.2	35.2	0.67'		16.7
	4.836	21.1'	28.2			28.2	0.67'		13.4
	4.860	105.6'			70.4	70.4	0.67'		33.4
	4.924	459.4'	612.5			612.5	0.67'		290.9
	5.143	47.5'			31.7	31.7	0.64'		14.4
	5.166	781.4'	1,041.9			1,041.9	0.64'		472.6
	5.355	21.1'	28.2			28.2	0.64'		12.8
SUBTOTAL						8,972.5		-	3,933.6
TOTAL THIS SHEET						14,217.3		-	6,275.6

*EXACT LOCATIONS TO BE DETERMINED BY THE ENGINEER.
(N) NOT A SEPARATE PAY ITEM, FOR INFORMATION ONLY.

SUMMARY OF QUANTITIES
Q-3

REVISED BY | DATE REVISED
RANJIT K MONDAL | AHMAD K AHMAD
CALCULATED-DESIGNED BY | CHECKED BY
FUNCTIONAL SUPERVISOR: ALI ALQATAMI
STATE OF CALIFORNIA - DEPARTMENT OF TRANSPORTATION
Caltrans® DESIGN

LAST REVISION 05-12-10 | DATE PLOTTED => 21-JUL-2010 | TIME PLOTTED => 14:51

Dist	COUNTY	ROUTE	POST MILES TOTAL PROJECT	SHEET No.	TOTAL SHEETS
06	Tul	245	0.0/12.0	14	23

A Ahmad 05-12-10
REGISTERED CIVIL ENGINEER DATE

05-17-10
PLANS APPROVAL DATE

REGISTERED PROFESSIONAL ENGINEER AHMAD K. AHMAD No. 69064 Exp. 6-30-12 CIVIL STATE OF CALIFORNIA

THE STATE OF CALIFORNIA OR ITS OFFICERS OR AGENTS SHALL NOT BE RESPONSIBLE FOR THE ACCURACY OR COMPLETENESS OF SCANNED COPIES OF THIS PLAN SHEET.

COLD PLANE ASPHALT CONCRETE PAVEMENT (TABLE 2 - CONTINUED)

DIRECTION	BEGIN* (PM)	LENGTH* (N)	AREA 12'-WIDE SQYD	AREA 6'-INSIDE SQYD	AREA 6'-OUTSIDE SQYD	COLD PLANE AC Pvmt SQYD	COLD PLANE DEPTH (N)	RHMA (GAP GRADED) TON	HMA (TYPE A) TON
SOUTHBOUND	5.378	63.4'			42.2	42.2	0.64'		19.2
	5.421	37.0'	49.3			49.3	0.64'		22.4
	5.492	63.4'		42.2		42.2	0.64'		19.2
	5.666	100.3'	133.8			133.8	0.64'		60.7
	5.871	100.3'			66.9	66.9	0.64'		30.3
	5.947	42.2'			28.2	28.2	0.64'		12.8
	5.962	73.9'	98.6			98.6	0.64'		44.7
	6.399	37.0'			24.6	24.6	0.75'		13.1
	6.542	58.1'			38.7	38.7	0.75'		20.6
	6.834	211.2'			140.8	140.8	0.75'		74.8
	6.882	269.3'			179.5	179.5	0.75'		95.4
	6.935	89.8'	119.7			119.7	0.75'		63.6
	6.962	10.6'	14.1			14.1	0.75'		7.5
	7.026	153.1'	204.2			204.2	0.50'		72.4
	7.481	47.5'		31.7		31.7	0.50'		11.2
	7.533	47.5'			31.7	31.7	0.50'		11.2
	7.558	42.2'			28.2	28.2	0.50'		10.0
	7.585	205.9'			137.3	137.3	0.50'		48.7
	7.686	253.4'			169.0	169.0	0.50'		59.9
	7.759	327.4'			218.2	218.2	0.50'		77.3
	7.821	47.5'	63.4			63.4	0.50'		22.5
	7.850	364.3'			242.9	242.9	0.50'		86.1
	7.942	411.8'			274.6	274.6	0.50'		97.3
	8.324	37.0'	49.3			49.3	0.50'		17.5
	8.376	116.2'			77.4	77.4	0.50'		27.5
	8.406	169.0'			112.6	112.6	0.50'		39.9
	8.454	89.8'	119.7			119.7	0.50'		42.4
	8.471	132.0'			88.0	88.0	0.50'		31.2
	8.536	52.8'	70.4			70.4	0.50'		24.9
	8.558	84.5'			56.3	56.3	0.50'		20.0
	8.602	100.3'			66.9	66.9	0.50'		23.7
	8.687	364.3'			242.9	242.9	0.50'		86.1
	8.756	169.0'	225.3			225.3	0.50'		79.8
	8.832	438.2'			292.2	292.2	0.50'		103.5
	8.958	95.0'		63.4		63.4	0.50'		22.5
	9.171	73.9'			49.3	49.3	0.50'		17.5
	9.206	190.1'	253.4			253.4	0.50'		89.8
	9.243	200.6'			133.8	133.8	0.50'		47.4
SUBTOTAL						4,280.7		-	1,654.6
TOTAL SHEET Q-3						14,217.3			6,275.6
TOTAL						18,498.0		-	7,930.2

HOT MIX ASPHALT (DRIVEWAYS AND ACCESS ROADS)

LOCATION* PM	SIDE (N)	LENGTH (N)	WIDTH(N) W1	WIDTH(N) W2	AREA (N) SQYD	HMA (TYPE A) TON
2.64	L+	8.0'	110.0'	32.0'	88.9	4.7
2.64	R+	8.0'	110.0'	32.0'	88.9	4.7
3.17	L+	8.0'	65.0'	22.0'	32.3	1.7
3.17	R+	8.0'	65.0'	22.0'	32.3	1.7
3.19	L+	8.0'	65.0'	22.0'	32.3	1.7
3.19	R+	8.0'	65.0'	22.0'	32.3	1.7
4.96	L+	8.0'	25.0'	15.0'	16.3	0.9
5.00	R+	8.0'	25.0'	15.0'	16.3	0.9
5.04	L+	8.0'	25.0'	15.0'	16.3	0.9
5.10	R+	8.0'	25.0'	15.0'	16.3	0.9
5.12	R+	8.0'	20.0'	12.0'	13.0	0.7
5.14	L+	8.0'	20.0'	12.0'	13.0	0.7
5.14	R+	8.0'	20.0'	12.0'	13.0	0.7
5.16	L+	8.0'	20.0'	12.0'	13.0	0.7
5.17	R+	8.0'	20.0'	12.0'	13.0	0.7
5.22	R+	8.0'	30.0'	15.0'	17.8	1.0
5.25	R+	8.0'	25.0'	10.0'	13.3	0.7
5.29	R+	8.0'	20.0'	10.0'	11.9	0.6
5.31	R+	8.0'	20.0'	10.0'	11.9	0.6
5.33	R+	8.0'	20.0'	10.0'	11.9	0.6
5.35	R+	8.0'	20.0'	10.0'	11.9	0.6
5.38	R+	8.0'	30.0'	10.0'	14.8	0.8
5.69	R+	8.0'	20.0'	10.0'	11.9	0.6
5.75	R+	8.0'	20.0'	10.0'	11.9	0.6
6.15	R+	8.0'	20.0'	10.0'	11.9	0.6
6.18	R+	8.0'	20.0'	10.0'	11.9	0.6
7.94	R+	8.0'	20.0'	10.0'	11.9	0.6
7.95	R+	8.0'	20.0'	10.0'	11.9	0.6
8.02	R+	8.0'	50.0'	50.0'	44.4	2.4
8.04	R+	8.0'	15.0'	10.0'	10.4	0.6
8.18	L+	8.0'	20.0'	10.0'	11.9	0.6
8.20	L+	8.0'	20.0'	10.0'	11.9	0.6
8.37	R+	8.0'	20.0'	10.0'	11.9	0.6
8.39	R+	8.0'	20.0'	10.0'	11.9	0.6
8.95	L+	8.0'	20.0'	10.0'	11.9	0.6
9.08	R+	8.0'	30.0'	10.0'	14.8	0.8
9.10	R+	8.0'	20.0'	10.0'	11.9	0.6
10.81	R+	8.0'	20.0'	10.0'	11.9	0.6
10.83	R+	8.0'	20.0'	10.0'	11.9	0.6
11.15	R+	8.0'	20.0'	10.0'	11.9	0.6
TOTAL					778.8	41.0**

* EXACT LOCATIONS TO BE DETERMINED BY THE ENGINEER.
(N) NOT A SEPARATE PAY ITEM, FOR INFORMATION ONLY.
** QUANTITY INCLUDED IN HOT MIX ASPHALT (TYPE A) TABLE.

CRACK TREATMENT

DIRECTION	LENGTH LNMI
NORTHBOUND	11.5
SOUTHBOUND	11.5
TOTAL	23.0

SUMMARY OF QUANTITIES

Q-4

STATE OF CALIFORNIA - DEPARTMENT OF TRANSPORTATION
Caltrans DESIGN
FUNCTIONAL SUPERVISOR: ALI ALQATAMI
CALCULATED-DESIGNED BY: AHMAD K AHMAD
CHECKED BY: RANJIT K MONDAL
REVISED BY / DATE REVISED

LAST REVISION 05-12-10 | DATE PLOTTED => 21-JUL-2010 | TIME PLOTTED => 14:51

Dist	COUNTY	ROUTE	POST MILES TOTAL PROJECT	SHEET No.	TOTAL SHEETS
06	Tul	245	0.0/12.0	15	23

A Ahmad 05-12-10
REGISTERED CIVIL ENGINEER DATE

05-17-10
PLANS APPROVAL DATE

REGISTERED PROFESSIONAL ENGINEER AHMAD K. AHMAD No. 69064 Exp. 6-30-12 CIVIL STATE OF CALIFORNIA

THE STATE OF CALIFORNIA OR ITS OFFICERS OR AGENTS SHALL NOT BE RESPONSIBLE FOR THE ACCURACY OR COMPLETENESS OF SCANNED COPIES OF THIS PLAN SHEET.

COLD PLANE ASPHALT CONCRETE PAVEMENT (TABLE 3) (PUBLIC ROAD INTERSECTIONS)

PUBLIC ROAD NAME	LOCATION*	SIDE (N)	LENGTH (N)	WIDTH (N) W1	WIDTH (N) W2	COLD PLANE THICKNESS (N)	COLD PLANE AC Pvmt	RHMA (GAP GRADED)	HMA (TYPE A)
	PM						SQYD	TON	TON
AVENUE 300	0.51	L†	27.0′	52.0′	23.0′	0′-0.15′	80.6	8.6	
AVENUE 300	0.51	R†	27.0′	52.0′	23.0′	0′-0.15′	80.0	8.5	
AVENUE 304 EAST	1.01	R†	27.0′	52.0′	25.0′	0′-0.15′	91.7	9.8	
AVENUE 306 WEST	1.27	L†	27.0′	120.0′	40.0′	0′-0.15′	244.4	26.0	
AVENUE 310 EAST	1.76	R†	27.0′	60.0′	26.0′	0′-0.15′	111.1	11.8	
AVENUE 312 WEST	2.01	L†	27.0′	58.0′	27.0′	0′-0.15′	91.7	9.8	
AVENUE 314 (Hwy TURNS NORTH)	3.26	R†	45.0′	170.0′	40.0′	0′-0.15′	500.0	53.2	
AVENUE 319/COTTAGE P.O. Dr	3.91	R†	24.0′	140.0′	30.0′	0′-0.15′	302.8	32.2	
AVENUE 322 WEST	4.27	L†	24.0′	60.0′	25.0′	0′-0.15′	111.1	11.8	
DRIVE 212/CURTIS Drive	4.96	R†	24.0′	190.0′	45.0′	0′-0.15′	366.7	39.0	
AVENUE 328 WEST	5.07	L†	25.0′	85.0′	26.0′	0′-0.15′	126.7	13.5	
AVENUE 332 EAST	5.57	R†	28.0′	60.0′	25.0′	0′-0.15′	108.9	11.6	
RIVERSIDE Ave EAST	6.19	R†	27.0′	60.0′	26.0′	0′-0.15′	94.4	10.0	
AVENUE 338/LENOX AVENUE	6.27	R†	27.0′	110.0′	30.0′	0′-0.15′	183.3	19.5	
HERMOSA St EAST	6.33	R†	27.0′	60.0′	26.0′	0′-0.15′	94.4	10.0	
DELTHA AVE WEST	6.57	L†	25.0′	60.0′	28.0′	0′-0.15′	94.4		10.0
LEGUNA AVE EAST	6.69	R†	20.0′	60.0′	26.0′	0′-0.15′	91.7		9.8
ROPES AVE	6.82	L†	16.7′	60.0′	28.0′	0′-0.15′	94.4		10.0
BRAVO AVE	6.95	L†	14.7′	60.0′	28.0′	0′-0.15′	91.7		9.8
BRAVO AVE	6.95	R†	14.7′	60.0′	28.0′	0′-0.15′	91.7		9.8
JCT 245/NARANJO Blvd	7.07	R†				0′-0.15′	111.1		11.8
ANTELOPE AVENUE	7.19	L†	17.0′	60.0′	28.0′	0′-0.15′	66.7		7.1
ANTELOPE AVENUE	7.19	R†	17.0′	60.0′	28.0′	0′-0.15′	82.2		8.7
LAKEVIEW AVENUE	7.31	L†	17.0′	55.0′	28.0′	0′-0.15′	75.0		8.0
LAKEVIEW AVENUE	7.31	R†	17.0′	55.0′	28.0′	0′-0.15′	75.0		8.0
WHITNEY AVENUE	7.44	L†	17.0′	65.0′	30.0′	0′-0.15′	95.6		10.2
WHITNEY AVENUE	7.44	R†	17.0′	65.0′	30.0′	0′-0.15′	95.6		10.2
SIERRA AVENUE	7.57	L†	27.0′	72.0′	28.0′	0′-0.15′	133.3		14.2
SIERRA AVENUE	7.57	R†	27.0′	72.0′	28.0′	0′-0.15′	133.3		14.2
SEQUOIA AVENUE WEST	7.69	L†	28.0′	85.0′	28.0′	0′-0.15′	144.4		15.4
AVENUE 350/WUTCHUMNA AVENUE	7.81	L†	28.0′	85.0′	28.0′	0′-0.15′	133.3		14.2
AVENUE 350/WUTCHUMNA AVENUE	7.81	R†	28.0′	85.0′	28.0′	0′-0.15′	133.3		14.2
KAWEAH St	7.93	L†	28.0′	75.0′	26.0′	0′-0.15′	133.3		14.2
CAJON AVENUE/352 AVENUE WEST	8.06	L†	28.0′			0′-0.15′	111.1	11.8	
CAJON AVENUE/352 AVENUE	8.06	R†	28.0′			0′-0.15′	166.7	17.7	
ROAD 206 SOUTH	9.13	R†	17.0′	140.0′	65.0′	0′-0.15′	194.4	20.7	
AVENUE 360 WEST	9.47	L†	18.0′	135.0′	65.0′	0′-0.15′	177.8	18.9	
AVENUE 364 (Hwy TURNS LEFT)	9.97	R†	18.0′	60.0′	26.0′	0′-0.15′	77.8	8.3	
JCT AVENUE 364 AND ROAD 200	9.97		100.0′	26.0′	26.0′	0′-0.15′	288.9	30.7	
ROAD 200 (Hwy TURNS NORTH)	10.47	L†	18.0′	45.0′	26.0′	0′-0.15′	111.1	11.8	
ROAD 200 (Hwy TURNS NORTH)	10.47	R†	18.0′	45.0′	26.0′	0′-0.15′	444.4	47.3	
AVENUE 368	10.96	L†	18.0′	65.0′	26.0′	0′-0.15′	97.2	10.3	
AVENUE 368	10.96	R†	18.0′	65.0′	26.0′	0′-0.15′	88.9	9.5	
TOTAL							6,222.2	462.1	199.4

* EXACT LOCATIONS TO BE DETERMINED BY THE ENGINEER.
(N) NOT A SEPARATE PAY ITEM, FOR INFORMATION ONLY.

COLD PLANE ASPHALT CONCRETE PAVEMENT (TABLE 4)

LOCATION* FROM PM	LOCATION* TO PM	LENGTH (N)	WIDTH (N)	COLD PLANE AC Pvmt	RHMA (GAP GRADED)	HMA (TYPE A)
				SQYD	TON	TON
0.00	0.02	100.0′	26.0′	774.4	82.3	-
1.37	1.39	100.0′	26.0′	288.9	30.7	-
1.45	1.47	100.0′	26.0′	288.9	30.7	-
4.17	4.19	100.0′	32.0′	355.6	37.8	-
4.23	4.25	100.0′	32.0′	208.2	37.8	-
6.39	6.41	100.0′	30.0′	284.1	-	35.4
7.92	7.94	100.0′	24.0′	189.2	-	28.4
11.98	12.00	100.0′	26.0′	500.0	53.2	-
TOTAL THIS TABLE				2,889.2	272.5	63.8
TOTAL FROM TABLE 1				31,027.1	-	3,299.0
TOTAL FROM TABLE 2				18,498.0	-	7,930.2
TOTAL FROM TABLE 3				6,222.2	462.1	199.4
GRAND TOTAL				58,636.5	734.6**	11,492.4***

* EXACT LOCATIONS TO BE DETERMINED BY THE ENGINEER.
(N) NOT A SEPARATE PAY ITEM, FOR INFORMATION ONLY.
** QUANTITY INCLUDED IN RUBBERIZED HOT MIX ASPHALT (GAP GRADED) TABLE
*** QUANTITY INCLUDED IN HOT MIX ASPHALT (TYPE A) TABLE.

TEMPORARY FENCE (TYPE ESA)

LOCATION*	DIRECTION	DESCRIPTION	LENGTH
PM			LF
4.05-4.20	SB	KAWEAH RIVER AREA	800
4.18-4.20	NB	KAWEAH RIVER AREA	200
4.20-4.30	SB	KAWEAH RIVER AREA	600
4.30-4.43	SB	KAWEAH RIVER AREA	200
5.97-5.98	NB	ST JOHNS RIVER AREA	200
6.04-6.05	NB	ST JOHNS RIVER AREA	200
		TOTAL	2,200

* EXACT LOCATIONS TO BE DETERMINED BY THE ENGINEER.

SUMMARY OF QUANTITIES

Q-5

STATE OF CALIFORNIA - DEPARTMENT OF TRANSPORTATION
Caltrans® DESIGN
FUNCTIONAL SUPERVISOR ALI ALQATAMI
CALCULATED-DESIGNED BY RANJIT K MONDAL CHECKED BY AHMAD K AHMAD
REVISED BY DATE REVISED

LAST REVISION 05-12-10 DATE PLOTTED => 21-JUL-2010 TIME PLOTTED => 14:51

Dist	COUNTY	ROUTE	POST MILES TOTAL PROJECT	SHEET No.	TOTAL SHEETS
06	Tul	245	0.0/12.0	16	23

Norma M. Gallegos 5-17-10
REGISTERED ELECTRICAL ENGINEER DATE

05-17-10
PLANS APPROVAL DATE

REGISTERED PROFESSIONAL ENGINEER NORMA M. GALLEGOS No. 19105 Exp. 6-30-12 ELECTRICAL STATE OF CALIFORNIA

THE STATE OF CALIFORNIA OR ITS OFFICERS OR AGENTS SHALL NOT BE RESPONSIBLE FOR THE ACCURACY OR COMPLETENESS OF SCANNED COPIES OF THIS PLAN SHEET.

LEGEND:

1 IDENTIFY LOOP DETECTORS AS SHOWN IN DETAIL A.

2 IDENTIFY LOOP DETECTORS AND PIEZO AXLE SENSORS AS SHOWN IN DETAIL A. INSTALL PIEZO AXLE SENSORS AS SHOWN IN DETAIL B.

ABBREVIATIONS:

STC - SCREENED TRANSMISSION CABLE
VCS - VEHICLE CLASSIFICATION STATION

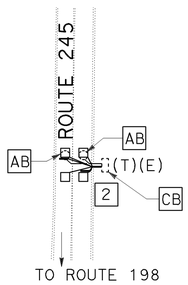

MODIFY VCS
PM 0.0

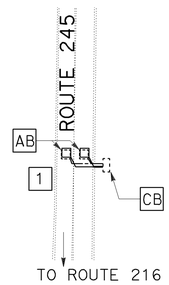

MODIFY TMS
PM 7.07

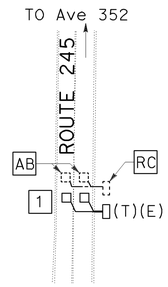

MODIFY TMS
PM 8.06

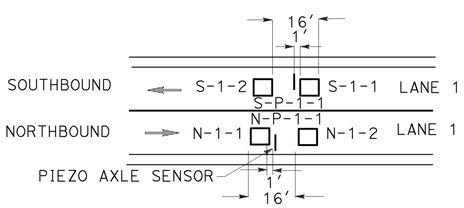

DLC IDENTIFICATION

D-L-N
- DIRECTION OF TRAFFIC
  - N - NORTHBOUND
  - S - SOUTHBOUND
  - E - EASTBOUND
  - W - WESTBOUND
- 1 - ENTERING
  2 - LEAVING
- LANE NUMBER

PIEZO AXLE SENSOR IDENTIFICATION

D-P-L-1
- DIRECTION OF TRAFFIC
  - N - NORTHBOUND
  - S - SOUTHBOUND
  - E - EASTBOUND
  - W - WESTBOUND
- 1 - FOR ALL PIEZO AXLE SENSORS
- LANE NUMBER
- P - PIEZO AXLE SENSOR

DLC AND PIEZO AXLE SENSOR IDENTIFICATION
DETAIL A

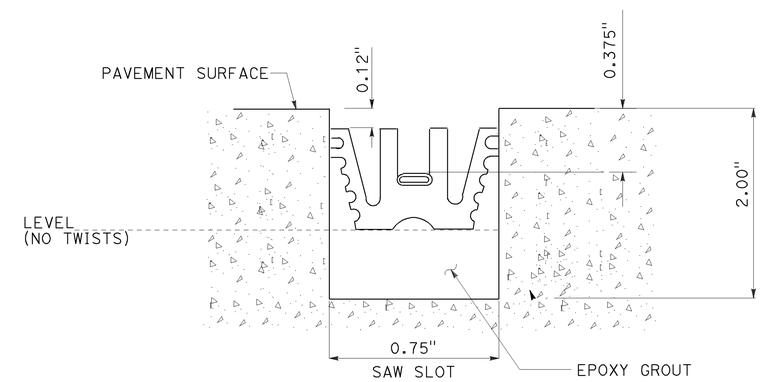

SECTION A-A

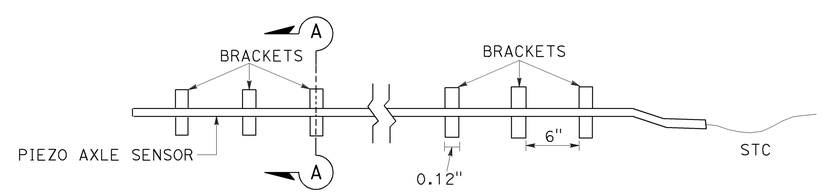

PIEZO AXLE SENSOR INSTALLATION
DETAIL B

MODIFY TRAFFIC MONITORING STATION
MODIFY VEHICLE CLASSIFICATION STATION

E-1

THIS PLAN IS ACCURATE FOR ELECTRICAL WORK ONLY.

SCALE: 1"=50'

STATE OF CALIFORNIA - DEPARTMENT OF TRANSPORTATION
Caltrans® ELECTRICAL DESIGN

FUNCTIONAL SUPERVISOR: ALI BAKHDOUD
CALCULATED-DESIGNED BY: NORMA M. GALLEGOS
CHECKED BY: DANIEL T. VO
REVISED BY
DATE REVISED

LAST REVISION 05-17-10 | DATE PLOTTED => 21-JUL-2010 | TIME PLOTTED => 15:32

DIST	COUNTY	ROUTE	POST MILES TOTAL PROJECT	SHEET NO.	TOTAL SHEETS
06	Tul	245	0.0/12.0	17	23

Randell D. Hiatt
REGISTERED CIVIL ENGINEER

June 6, 2008
PLANS APPROVAL DATE

REGISTERED PROFESSIONAL ENGINEER
Randell D. Hiatt
No. C50200
Exp. 6-30-09
CIVIL
STATE OF CALIFORNIA

The State of California or its officers or agents shall not be responsible for the accuracy or completeness of electronic copies of this plan sheet.

To accompany plans dated 5-17-10

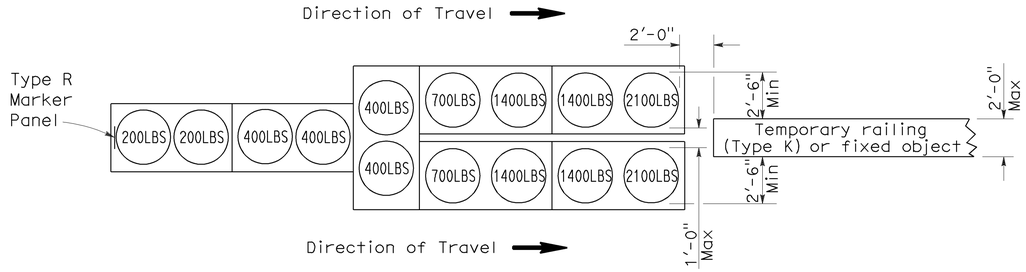

ARRAY 'TU14'

Approach speed 45 mph or more

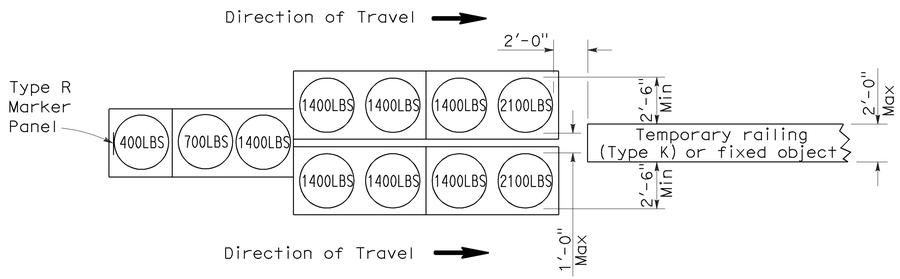

ARRAY 'TU11'

Approach speed less than 45 mph

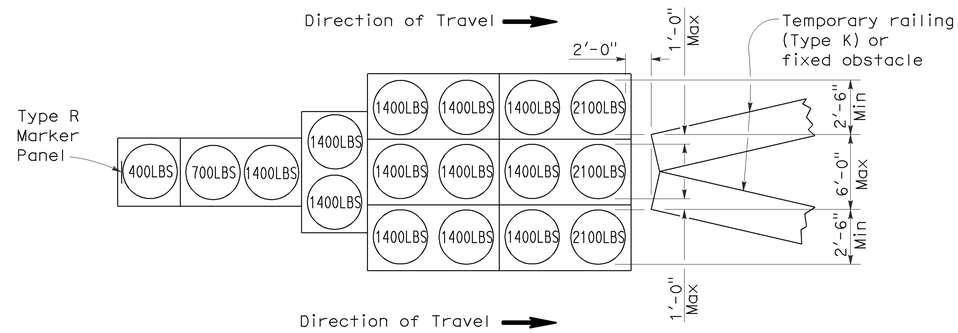

ARRAY 'TU17'

Approach speed less than 45 mph

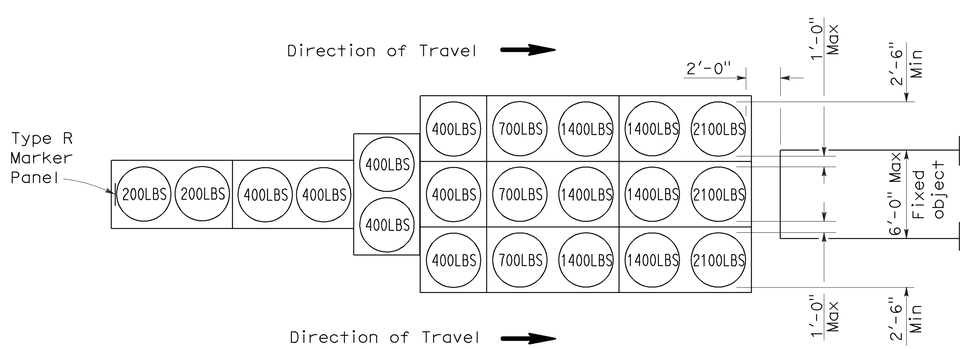

ARRAY 'TU21'

Approach speed 45 mph or more

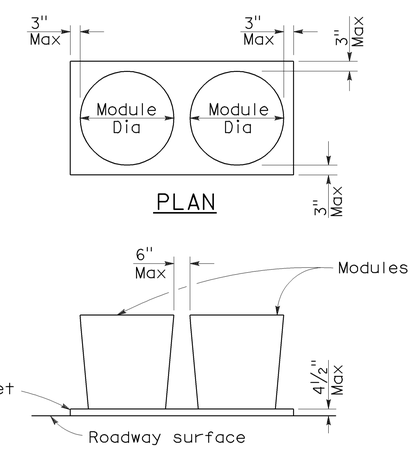

PLAN

ELEVATION

CRASH CUSHION PALLET DETAIL

See Note 7

NOTES:

1. (XXX) Indicates sand filled module location and weight of sand in pounds for each module. Module spacing is based on the greater diameter of the module.
2. All sand weights are nominal.
3. Temporary crash cushion arrays shall not encroach on the traveled way.
4. Place the top of Type R marker panel 1" below the module lid.
5. Refer to Standard Plan A73B for marker details.
6. Approach speeds indicated conform to NCHRP 350 Report criteria.
7. Use of pallets is optional.

STATE OF CALIFORNIA
DEPARTMENT OF TRANSPORTATION

TEMPORARY CRASH CUSHION, SAND FILLED (UNIDIRECTIONAL)

NO SCALE

RSP T1A DATED JUNE 6, 2008 SUPERSEDES STANDARD PLAN T1A
DATED MAY 1, 2006 - PAGE 211 OF THE STANDARD PLANS BOOK DATED MAY 2006.

REVISED STANDARD PLAN RSP T1A

2006 REVISED STANDARD PLAN RSP T1A

5-15-08

DIST	COUNTY	ROUTE	POST MILES TOTAL PROJECT	SHEET NO.	TOTAL SHEETS
06	Tul	245	0.0/12.0	18	23

Randell D. Hiatt
REGISTERED CIVIL ENGINEER

June 6, 2008
PLANS APPROVAL DATE

REGISTERED PROFESSIONAL ENGINEER
Randell D. Hiatt
No. C50200
Exp. 6-30-09
CIVIL
STATE OF CALIFORNIA

The State of California or its officers or agents shall not be responsible for the accuracy or completeness of electronic copies of this plan sheet.

To accompany plans dated 5-17-10

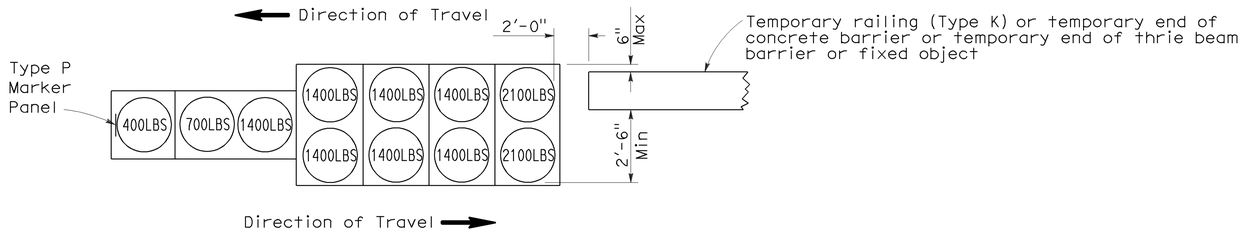

ARRAY 'TB11'

Approach speed less than 45 mph

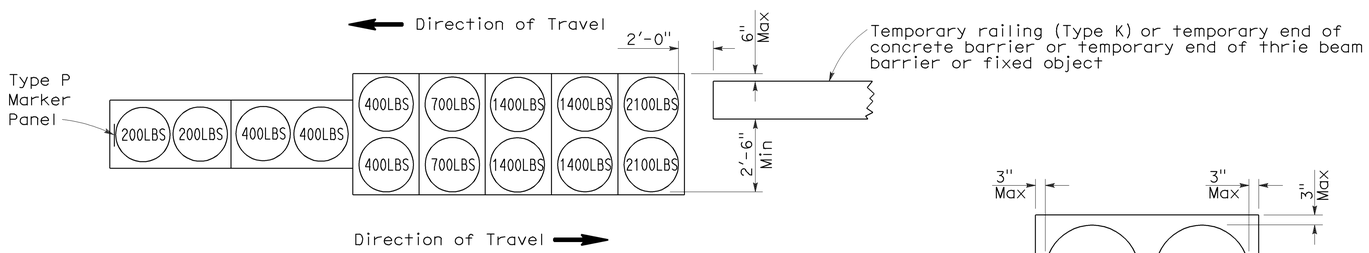

ARRAY 'TB14'

Approach speed 45 mph or more

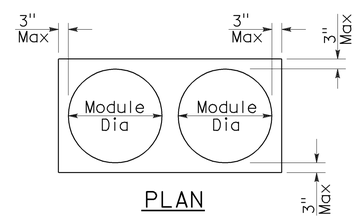

PLAN

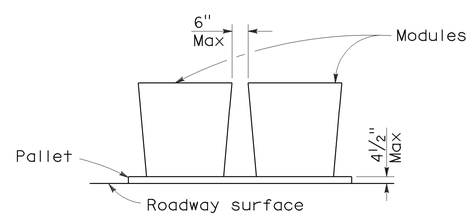

ELEVATION

CRASH CUSHION PALLET DETAIL

See Note 7

NOTES:

1. (XXX) Indicates sand filled module location and weight of sand in pounds for each module. Module spacing is based on the greater diameter of the module.
2. All sand weights are nominal.
3. Temporary crash cushion arrays shall not encroach on the traveled way.
4. Place the Type P marker panel so that the bottom of the panel rests upon the pallet.
5. Refer to Standard Plan A73B for marker details.
6. Approach speeds indicated conform to NCHRP 350 Report criteria.
7. Use of pallets is optional.

STATE OF CALIFORNIA
DEPARTMENT OF TRANSPORTATION

TEMPORARY CRASH CUSHION, SAND FILLED (BIDIRECTIONAL)

NO SCALE

RSP T1B DATED JUNE 6, 2008 SUPERSEDES STANDARD PLAN T1B
DATED MAY 1, 2006 - PAGE 212 OF THE STANDARD PLANS BOOK DATED MAY 2006.

REVISED STANDARD PLAN RSP T1B

2006 REVISED STANDARD PLAN RSP T1B

5-15-08

DIST	COUNTY	ROUTE	POST MILES TOTAL PROJECT	SHEET NO.	TOTAL SHEETS
06	Tul	245	0.0/12.0	19	23

Randell D. Hiatt
REGISTERED CIVIL ENGINEER

June 6, 2008
PLANS APPROVAL DATE

REGISTERED PROFESSIONAL ENGINEER
Randell D. Hiatt
No. C50200
Exp. 6-30-09
CIVIL
STATE OF CALIFORNIA

The State of California or its officers or agents shall not be responsible for the accuracy or completeness of electronic copies of this plan sheet.

To accompany plans dated 5-17-10

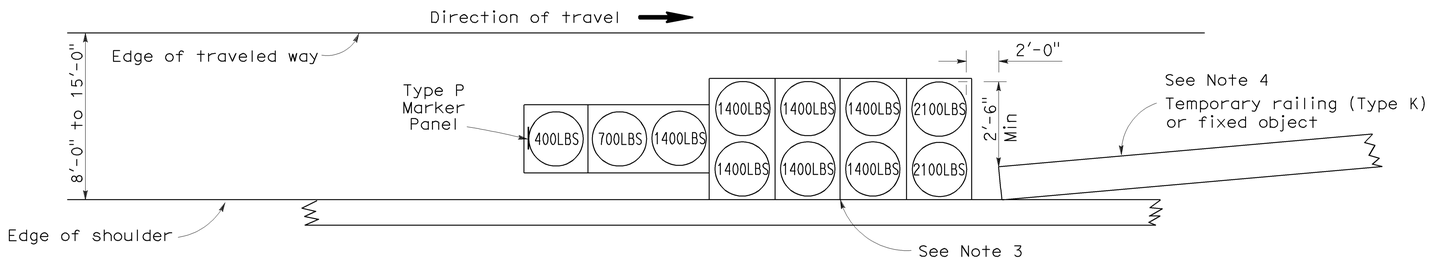

ARRAY 'TS11'

Approach speed less than 45 mph
See Note 9

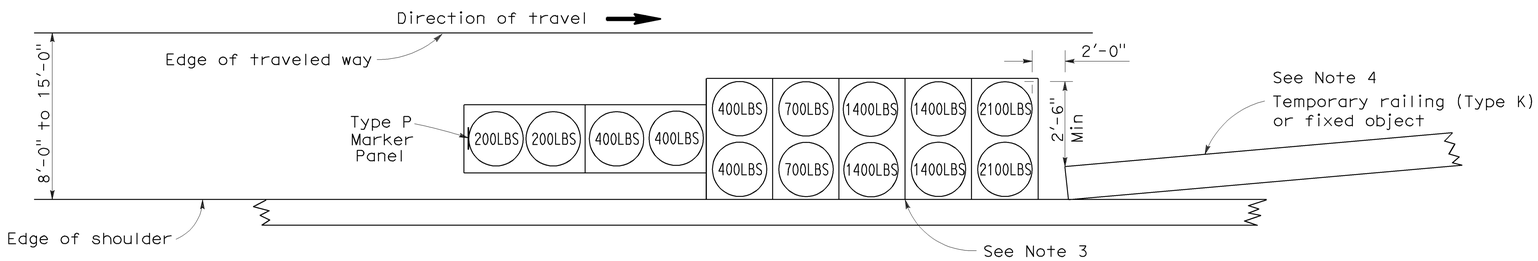

ARRAY 'TS14'

Approach speed 45 mph or more
See Note 9

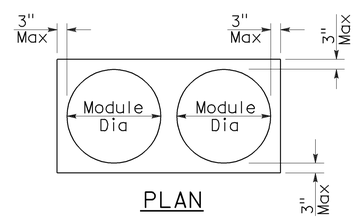

PLAN

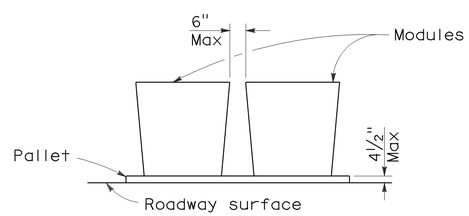

ELEVATION

CRASH CUSHION PALLET DETAIL

See Note 11

NOTES:

1. (XXX) Indicates sand filled module location and weight of sand in pounds for each module. Module spacing is based on the greater diameter of the module.
2. All sand weights are nominal.
3. The temporary crash cushion arrays shown on this plan shall be used only in locations where there will be traffic on one side of the temporary crash cushion array.
4. If the fixed object or approach end of the temporary railing is less than 15'-0" from the edge of traveled way, a temporary crash cushion is required in a construction or work zone.
5. Temporary crash cushion arrays shall not encroach on the traveled way.
6. Arrays for median shoulders shall conform to details shown on this plan for outside shoulders.
7. Place the Type P marker panel so that the bottom of the panel rests upon the pallet and faces traffic.
8. Refer to Standard Plan A73B for marker details.
9. For shoulder widths less than 8'-0", appropriate approved crash cushion protection, other than sand filled modules, shall be provided at fixed objects and at approach ends of temporary railing. The specific type of crash cushion shall be as shown on the project plans or as specified in the Special Provisions, or if not shown on the project plans or specified in the Special Provisions, shall be as approved by the Engineer.
10. Approach speeds indicated conform to NCHRP 350 Report criteria.
11. Use of pallets is optional.

STATE OF CALIFORNIA
DEPARTMENT OF TRANSPORTATION

TEMPORARY CRASH CUSHION, SAND FILLED (SHOULDER INSTALLATIONS)

NO SCALE

RSP T2 DATED JUNE 6, 2008 SUPERSEDES STANDARD PLAN T2
DATED MAY 1, 2006 - PAGE 213 OF THE STANDARD PLANS BOOK DATED MAY 2006.

REVISED STANDARD PLAN RSP T2

2006 REVISED STANDARD PLAN RSP T2

5-15-08

DIST	COUNTY	ROUTE	POST MILES TOTAL PROJECT	SHEET NO.	TOTAL SHEETS
06	Tul	245	0.0/12.0	20	23

LICENSED LANDSCAPE ARCHITECT

April 3, 2009
PLANS APPROVAL DATE

The State of California or its officers or agents shall not be responsible for the accuracy or completeness of electronic copies of this plan sheet.

LICENSED LANDSCAPE ARCHITECT — Robert B. Schott 3635 — Signature — 11-30-10 Renewal Date — 2-25-09 Date — STATE OF CALIFORNIA

To accompany plans dated 5-17-10

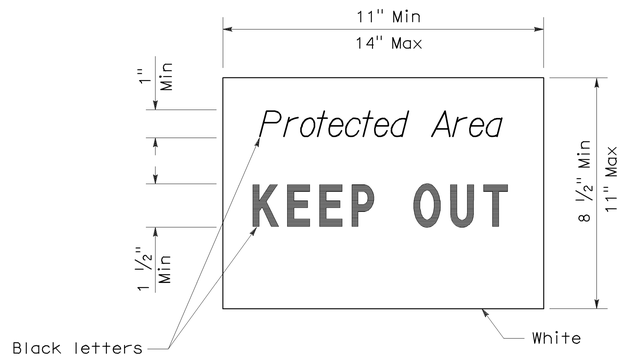

SIGN DETAIL

NOTE:

1. Temporary silt fence and temporary straw bale barrier shown for reference purposes only.

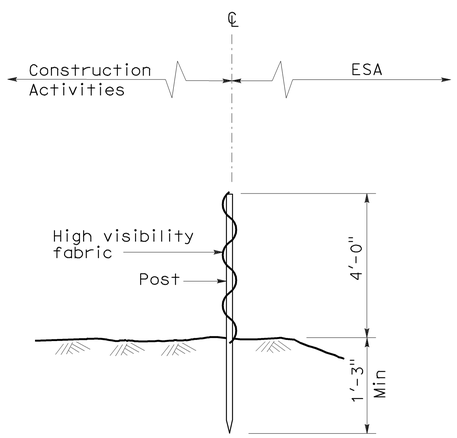

SECTION
TEMPORARY FENCE (TYPE ESA)

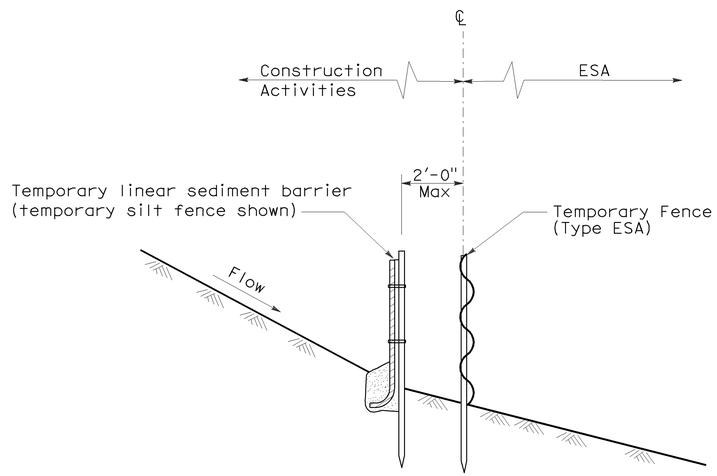

SECTION
PLACEMENT DETAIL
FOR TEMPORARY LINEAR SEDIMENT BARRIER
USED WITH TEMPORARY
FENCE (TYPE ESA)
(See Note 1)

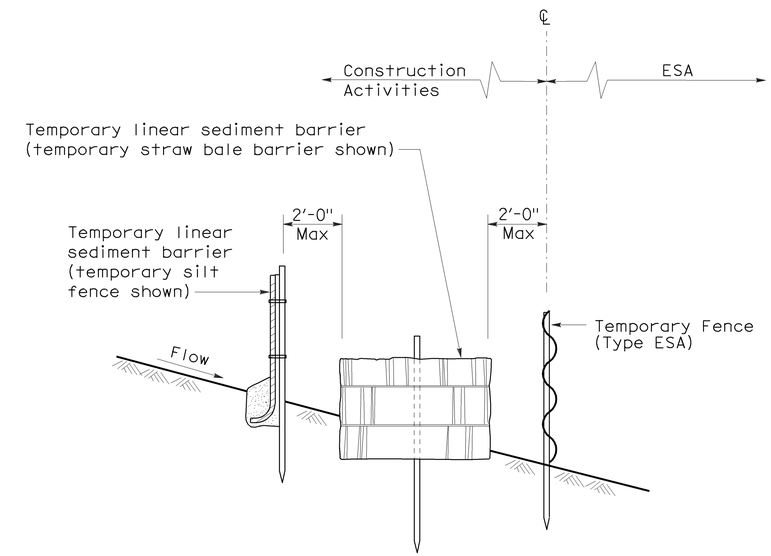

SECTION
PLACEMENT DETAIL
FOR TEMPORARY SILT FENCE
AND TEMPORARY STRAW BALE BARRIER
USED WITH TEMPORARY FENCE (TYPE ESA)
(See Note 1)

STATE OF CALIFORNIA
DEPARTMENT OF TRANSPORTATION

TEMPORARY WATER POLLUTION CONTROL DETAILS [TEMPORARY FENCE (TYPE ESA)]

NO SCALE

NSP T65 DATED APRIL 3, 2009 SUPPLEMENTS
THE STANDARD PLANS BOOK DATED MAY 2006.

NEW STANDARD PLAN NSP T65

2006 NEW STANDARD PLAN NSP T65

DIST	COUNTY	ROUTE	POST MILES TOTAL PROJECT	SHEET NO.	TOTAL SHEETS
06	Tul	245	0.0/12.0	21	23

REGISTERED ELECTRICAL ENGINEER

October 5, 2007
PLANS APPROVAL DATE

REGISTERED PROFESSIONAL ENGINEER Jeffery G. McRae No. E14512 Exp. 6-30-08 ELECTRICAL STATE OF CALIFORNIA

The State of California or its officers or agents shall not be responsible for the accuracy or completeness of electronic copies of this plan sheet.

To accompany plans dated 5-17-10

2006 REVISED STANDARD PLAN RSP ES-1A

ELECTROLIERS

STANDARD TYPES
15, 15D
15 STRUCTURE
21, 21D STRUCTURE
30
31
32
35
36-20A

High mast light pole

Double Arm lighting standard

Existing electrolier

Electrolier foundation (Future installation)

NOTES:

1. Luminaires shall be 310 W HPS when installed on Type 21, 21D, 30, 31, 32, 35 and 36-20A Standards, unless otherwise specified. Luminaires shall be 200 W HPS when installed on other type standards or poles, unless otherwise specified.
2. Luminaires shall be the cutoff type, ANSI Type Ⅲ medium cutoff lighting distribution, unless otherwise specified.
3. Variations noted adjacent to symbol on project plans.

Electrolier (see project notes or project plans)

Luminaire on wood pole

STANDARD NOTES:

- AB Abandon. If applied to conduit, remove conductors.
- BC Install pull box in existing conduit run.
- BP Pedestrian barricade, type as indicated on plan.
- CB Install conduit into existing pull box.
- CC Connect new and existing conduit. Remove existing conductors and install conductors as indicated.
- CF Conduit to remain for future use. Remove conductors. Install pull wire or rope.
- DH Detector handhole.
- FA Foundation to be abandoned.
- IS Install sign on signal mast arm.
- NS No slip base on standard.
- PEC Photoelectric control.
- PEU Photoelectric unit.
- RC Equipment or material to be removed and become the property of the Contractor.
- RE Remove electrolier, fuses and ballast. Tape ends of conductors.
- RL Relocate equipment.
- RR Remove and reuse equipment.
- RS Remove and salvage equipment.
- SC Splice new to existing conductors.
- SD Service disconnect.
- SF Standard to remain for future use. Remove luminaire, pole conductors, fuses and ballast.
- TSP Telephone service point.

ABBREVIATIONS AND EQUIPMENT DESIGNATIONS

PROPOSED	EXISTING	
BBS	bbs	Battery backup system
BC	bc	Bolt circle
C	C	Conduit
CCTV	cctv	Closed circuit television
CKT	ckt	Circuit
CMS	cms	Changeable message sign
DLC	dlc	Loop detector lead-in cable
EMS	ems	Extinguishable message sign
EVC	evc	Emergency vehicle cable
EVD	evd	Emergency vehicle detector
FB	fb	Flashing beacon
FBCA	fbca	Flashing beacon control assembly
FBS	fbs	Flashing beacon with slip base
FO	fo	Fiber optic
G	G	Ground (Equipment Grounding Conductor)
GFCI	GFCI	Ground fault circuit interrupt
HAR	har	Highway advisory radio
HEX	hex	Hexagonal
HPS	hps	High pressure sodium
IISNS	iisns	Internally illuminated street name sign
ISL	isl	Induction sign lighting
LED	led	Light emitting diode
LMA	lma	Luminaire mast arm
LPS	lps	Low pressure sodium
LTG	ltg	Lighting
LUM	lum	Luminaire
MAT	mat	Mast arm mounting vehicle signal faces, top attachment
MAS	mas	Mast arm mounting vehicle signal faces, side attachment
MAS-4A	mas-4A	Mast arm mounting vehicle signal faces, side attachment - 4 signal section
MAS-4B	mas-4B	
MAS-4C	mas-4C	
MAS-5A	mas-5A	Mast arm mounting vehicle signal faces, side attachment - 5 signal section
MAS-5B	mas-5B	
MC	mc	Mercury contactor
M/M	m/m	Multiple to multiple transformer
MT	mt	Conduit with pull wire or rope only
MTG	mtg	Mounting
	mv	Mercury vapor lighting fixture
N	N	Neutral (Grounded Conductor)
NC	NC	Normally closed
NO	NO	Normally open
PB	pb	Pull box
PEC	pec	Photoelectric control (Type Ⅰ, Ⅱ, Ⅲ, Ⅳ or Ⅴ as shown)
PED	ped	Pedestrian
PEU	peu	Photoelectric unit
PPB	ppb	Pedestrian push button
RL		Relocated equipment
RM	rm	Ramp metering
SB	sb	Slip base
SIC	sic	Signal interconnect cable
SIG	sig	Signal
SMA	sma	Signal mast arm
SNS	sns	Street name sign
SP	sp	Service point
TDC	tdc	Telephone demarcation cabinet
TMS	tms	Traffic monitoring station
TOS	tos	Traffic Operations System
VEH	veh	Vehicle
XFMR	xfmr	Transformer
COMM	comm	Communication
RWIS	rwis	Roadway weather information system

SOFFIT AND WALL MOUNTED LUMINAIRES

Pendant, 70 W HPS unless otherwise specified.

Flush, 70 W HPS unless otherwise specified.

Wall surface, 70 W HPS unless otherwise specified.

Existing soffit or wall luminaire to remain unmodified.

Existing soffit or wall luminaire to be modified as specified.

NOTE:

Arrow indicates "street side" of luminaire.

STATE OF CALIFORNIA
DEPARTMENT OF TRANSPORTATION

ELECTRICAL SYSTEMS (SYMBOLS AND ABBREVIATIONS)

NO SCALE

RSP ES-1A DATED OCTOBER 5, 2007 SUPERSEDES STANDARD PLAN ES-1A DATED MAY 1, 2006 - PAGE 400 OF THE STANDARD PLANS BOOK DATED MAY 2006.

REVISED STANDARD PLAN RSP ES-1A

DIST	COUNTY	ROUTE	POST MILES TOTAL PROJECT	SHEET NO.	TOTAL SHEETS
06	Tul	245	0.0/12.0	22	23

REGISTERED ELECTRICAL ENGINEER

October 5, 2007
PLANS APPROVAL DATE

REGISTERED PROFESSIONAL ENGINEER Jeffery G. McRae No. E14512 Exp. 6-30-08 ELECTRICAL STATE OF CALIFORNIA

The State of California or its officers or agents shall not be responsible for the accuracy or completeness of electronic copies of this plan sheet.

To accompany plans dated 5-17-10

CONDUIT

PROPOSED	EXISTING	
		Lighting Conduit, unless otherwise indicated or noted
		Traffic signal conduit
C	c	Communication conduit
T	t	Telephone conduit
F	f	Fire alarm conduit
FO	fo	Fiber optic conduit
		Conduit termination (RSP ES-9A C)
R	r	Conduit riser in/on structure or service pole

SERVICE EQUIPMENT

PROPOSED	EXISTING	
OH	oh	Overhead lines
U	U	Wood pole "U" indicates utility owned
		Pole guy with anchor
		Utility transformer - ground mounted
III		Service equipment enclosure type
		Service equipment enclosure door indicates front of enclosure
T	t	Telephone demarcation cabinet

POLE-MOUNTED SERVICE DESIGNATION

Type of installation

TYPE H SERVICE - 28'-10" ← Pole height above grade

ILLUMINATED OVERHEAD SIGN

PROPOSED	EXISTING	
		Overhead sign - Single post
		Overhead sign - Two post
		Overhead sign - Mounted on structure
		Overhead sign with electrolier

SIGNAL EQUIPMENT

PROPOSED	EXISTING	
		Pedestrian signal face
		Pedestrian push button post
		Pedestrian barricade
		Vehicle signal face (with backplate, 3-Section: red, yellow and green)
		Vehicle signal face with angle visors
PV	PV	Modifications of basic symbols: "L" indicates all non-arrow sections louvered "LG" indicates louvered green section only "PV" indicates 12" programmed visibility sections "8" indicates all 8" sections (only when specified)
		Type 15TS and Vehicle signal face
		Vehicle signal face with red, yellow and green left arrow sections
		Vehicle signal face with red and yellow sections and up green arrow
		Vehicle signal face (5 Section) with red, yellow and green sections and yellow and green right arrows
		Type 1 Standard and attached vehicle signal faces
		Standard with signal mast arm only and attached vehicle signal faces and internally illuminated street name sign
		Type 33 Standard, Left-turn vehicle signal face and sign
		Standard with luminaire and signal mast arms and attached vehicle signal faces
		Cantilever flashing beacon Type 9 Frame, with a sign unless otherwise specified or indicated
		Type 15-FBS Standard with two vehicle signal face sections with lens, backplate and visor with a sign
R	Y	Flashing beacon. One vehicle signal face section with lens, backplate and visor. "R" indicates red indication, "Y" indicates yellow indication
		Controller assembly. Door indicates front of cabinet

SIGNAL EQUIPMENT Cont

PROPOSED	EXISTING	
		Guard post
		Type 1 Standard with "Meter On" sign
		Emergency Vehicle detector

NOTES:

1. All signal sections shall be 12" unless shown otherwise.
2. Signal heads shall be provided with backplates unless shown otherwise.
3. Signal indication shall be LED.

STATE OF CALIFORNIA
DEPARTMENT OF TRANSPORTATION

ELECTRICAL SYSTEMS (SYMBOLS AND ABBREVIATIONS)

NO SCALE

RSP ES-1B DATED OCTOBER 5, 2007 SUPERCEDES STANDARD PLAN ES-1B DATED MAY 1, 2006 - PAGE 401 OF THE STANDARD PLANS BOOK DATED MAY 2006.

REVISED STANDARD PLAN RSP ES-1B

2006 REVISED STANDARD PLAN RSP ES-1B

7-10-07

DIST	COUNTY	ROUTE	POST MILES TOTAL PROJECT	SHEET NO.	TOTAL SHEETS
06	Tul	245	0.0/12.0	23	23

REGISTERED ELECTRICAL ENGINEER

October 5, 2007
PLANS APPROVAL DATE

The State of California or its officers or agents shall not be responsible for the accuracy or completeness of electronic copies of this plan sheet.

REGISTERED PROFESSIONAL ENGINEER
Jeffery G. McRae
No. E14512
Exp. 6-30-08
ELECTRICAL
STATE OF CALIFORNIA

To accompany plans dated 5-17-10

EQUIPMENT IDENTIFICATION

ILLUMINATED SIGN IDENTIFICATION NUMBER:

Sign No. 12345
10 ISL SCI 1.0

- Sign number - Place on post or structure
- Transformer rating (kVA)
- Lighting control type
- Number and type of fixtures

Do NOT place on standard or structure

ELECTROLIER OR EQUIPMENT IDENTIFICATION NUMBER:

12345 - 15'-0"

- Mast arm length, if shown. Do not place on standard or structure.
- Equipment number - Place on standard or structure. Existing equipment numbers are shown in parenthesis

CONDUIT AND CONDUCTOR IDENTIFICATION:

1½"C, 2#10, 15#14, 2 DLC

- Number and size of conductors and cables
- Size of conduit in inches

Ø1, Ø2, Ø2P, etc.	Traffic phase identification for signal faces, detectors and phase diagrams
1 2 3	Project note numbers
A B C	Equipment description, installation or item numbers
1 2 3	Conduit run numbers

SIGNAL AND LIGHTING STANDARD (TYPICAL DESIGNATION):

19A - 3 - 100

- Wind velocity = 100 mph
- Case 3 arm loading
- Standard type
- Standard Plan sheet number
- Detail number or letter

MISCELLANEOUS EQUIPMENT

PROPOSED	EXISTING	
CMS	cms	Changeable message sign
		Closed circuit television camera
		Highway advisory radio pole and antenna
EMS	ems	Extinguishable message sign
M V	m v	Detection device M = Microwave sensor V = Video image sensor

WIRING DIAGRAM LEGEND

P	Pole
CB	Circuit breaker
A	Ampere
V	Volt
M	Metered
UM	Unmetered
NB	Neutral bus
GB	Ground bus
G	Equipment grounding conductor
N	Grounded conductor (Neutral)

- External conductor
- Conductor or bus
- Tie point
- Contactor coil
- Contactor, Contact NO
- Terminal blocks
- Contactor, Contact NC
- Enclosure bond
- Grounding electrode
- Circuit breaker
- Receptacle

PULL BOXES

PROPOSED EXISTING

Pull box-No. 5 unless otherwise indicated or noted.

3 9A(21)

Pull box-Additional designations or descriptions

3 = No. 3½ pull box
5 = No. 5 pull box
6 = No. 6 pull box
7 = No. 7 (Ceiling pull box)
8 = No. 8 (Pendant soffit pull box)
9 = No. 9 pull box
9A = No. 9A pull box

(C) = Communications pull box
(E) = Pull box with extension
(S) = Sprinkler control pull box
(21) = Anchor bolts and conduit for future installation of Type 21 Standard
(T) = Traffic pull box

VEHICLE DETECTORS

5 J 9 U

- Vehicle detector designation
- U = Upper
  L = Lower
- Slot number in input file
- Input file (I or J)
- Phase

PROPOSED	EXISTING	
		Type A detector loop. Outline of sawcut shown.
		Type B detector loop. Outline of sawcut shown.
		Type C detector loop. Outline of sawcut shown.
		Type D detector loop. Outline of sawcut shown.
		Type E detector loop. Outline of sawcut shown.
		Type Q detector loop. Outline of sawcut shown.
		Magnetic detector
DH	dh	Detector handhole
		Microwave or video detection zone

STATE OF CALIFORNIA
DEPARTMENT OF TRANSPORTATION

ELECTRICAL SYSTEMS (SYMBOLS AND ABBREVIATIONS)

NO SCALE

RSP ES-1C DATED OCTOBER 5, 2007 SUPERCEDES STANDARD PLAN ES-1C DATED MAY 1, 2006 - PAGE 402 OF THE STANDARD PLANS BOOK DATED MAY 2006.

REVISED STANDARD PLAN RSP ES-1C

2006 REVISED STANDARD PLAN RSP ES-1C