Dist	COUNTY	ROUTE	POST MILES TOTAL PROJECT	SHEET No.	TOTAL SHEETS
06	Fre,Mad	99	26.7/R31.6, R0.0/R1.6	201	393

LICENSED LANDSCAPE ARCHITECT

4-2-12
PLANS APPROVAL DATE

LICENSED LANDSCAPE ARCHITECT
MICHAEL W. MILLS No. 4178
Expiration Date 11/30/12
Renewal Date 01/06/12
Date
STATE OF CALIFORNIA

THE STATE OF CALIFORNIA OR ITS OFFICERS OR AGENTS SHALL NOT BE RESPONSIBLE FOR THE ACCURACY OR COMPLETENESS OF SCANNED COPIES OF THIS PLAN SHEET.

NOTE:

FOR ACCURATE RIGHT OF WAY DATA, CONTACT RIGHT OF WAY ENGINEERING AT THE DISTRICT OFFICE.

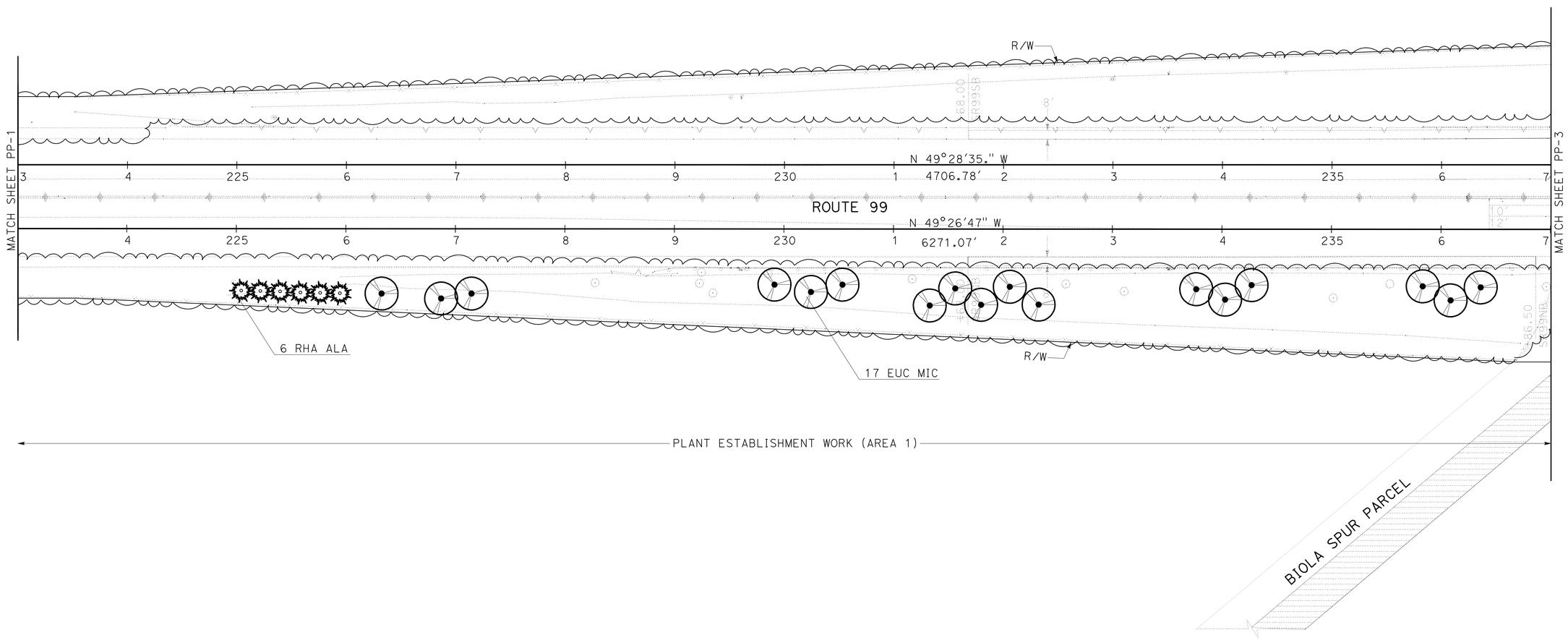

PLANTING PLAN

SCALE: 1" = 50'

PP-2

APPROVED FOR PLANTING WORK ONLY

STATE OF CALIFORNIA - DEPARTMENT OF TRANSPORTATION
Caltrans® LANDSCAPE ARCHITECTURE

SENIOR LANDSCAPE ARCHITECT: BRAD COLE
CALCULATED-DESIGNED BY: MICHAEL MILLS
CHECKED BY: CHARLES LA RUE
REVISED BY
DATE REVISED

LAST REVISION 12-20-11
DATE PLOTTED => 04-APR-2012
TIME PLOTTED => 09:45

Dist	COUNTY	ROUTE	POST MILES TOTAL PROJECT	SHEET No.	TOTAL SHEETS
06	Fre,Mad	99	26.7/R31.6, R0.0/R1.6	202	393

Michael W. Mills
LICENSED LANDSCAPE ARCHITECT

4-2-12
PLANS APPROVAL DATE

LICENSED LANDSCAPE ARCHITECT
MICHAEL W. MILLS No. 4178
Signature
11/30/12
Renewal Date
01/06/12
Date
STATE OF CALIFORNIA

THE STATE OF CALIFORNIA OR ITS OFFICERS OR AGENTS SHALL NOT BE RESPONSIBLE FOR THE ACCURACY OR COMPLETENESS OF SCANNED COPIES OF THIS PLAN SHEET.

NOTE:

FOR ACCURATE RIGHT OF WAY DATA, CONTACT
RIGHT OF WAY ENGINEERING AT THE DISTRICT OFFICE.

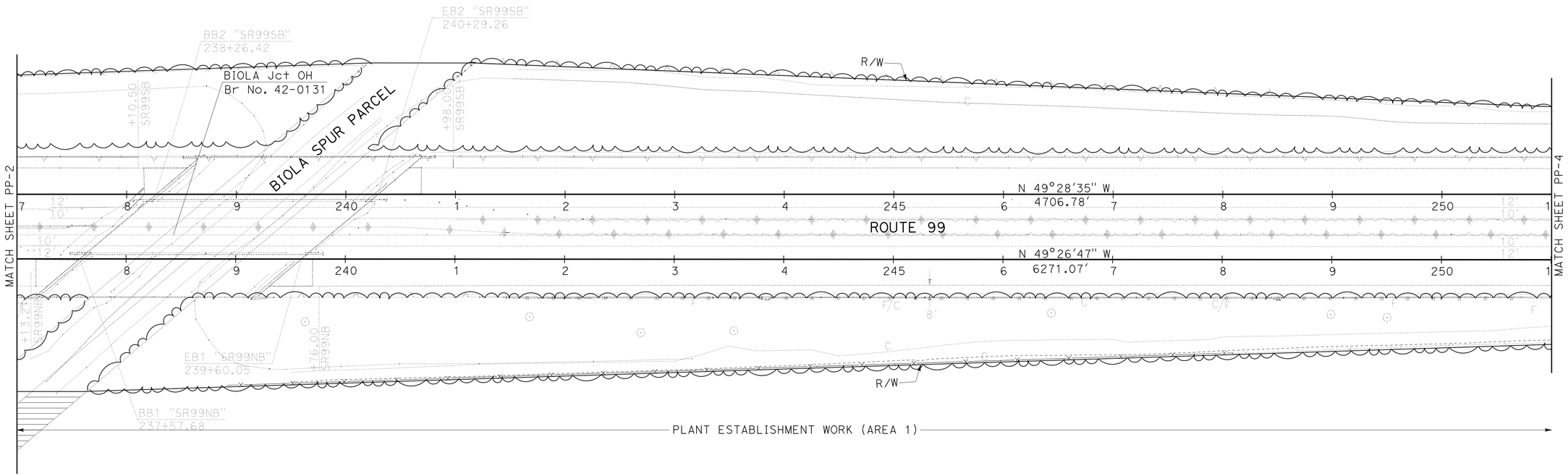

PLANTING PLAN

SCALE: 1" = 50'

PP-3

APPROVED FOR PLANTING WORK ONLY

STATE OF CALIFORNIA - DEPARTMENT OF TRANSPORTATION
Caltrans® LANDSCAPE ARCHITECTURE

SENIOR LANDSCAPE ARCHITECT: BRAD COLE
CALCULATED-DESIGNED BY: MICHAEL MILLS
CHECKED BY: CHARLES LA RUE
REVISED BY
DATE REVISED

LAST REVISION 12-20-11
DATE PLOTTED => 04-APR-2012
TIME PLOTTED => 09:45

Dist	COUNTY	ROUTE	POST MILES TOTAL PROJECT	SHEET No.	TOTAL SHEETS
06	Fre,Mad	99	26.7/R31.6, R0.0/R1.6	203	393

Michael W. Mills
LICENSED LANDSCAPE ARCHITECT

4-2-12
PLANS APPROVAL DATE

LICENSED LANDSCAPE ARCHITECT
MICHAEL W. MILLS No. 4178
Expiration Date
11/30/12
Renewal Date
01/06/12
Date
STATE OF CALIFORNIA

THE STATE OF CALIFORNIA OR ITS OFFICERS OR AGENTS SHALL NOT BE RESPONSIBLE FOR THE ACCURACY OR COMPLETENESS OF SCANNED COPIES OF THIS PLAN SHEET.

NOTE:

FOR ACCURATE RIGHT OF WAY DATA, CONTACT
RIGHT OF WAY ENGINEERING AT THE DISTRICT OFFICE.

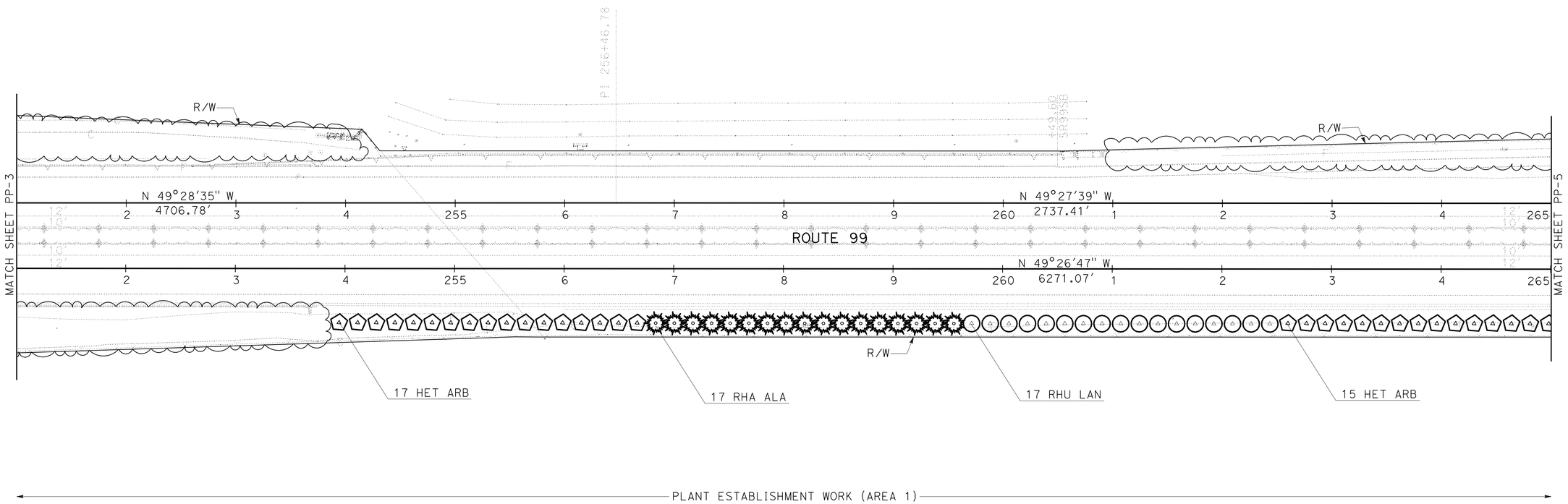

PLANTING PLAN

SCALE: 1" = 50'

PP-4

APPROVED FOR PLANTING WORK ONLY

STATE OF CALIFORNIA - DEPARTMENT OF TRANSPORTATION
Caltrans® LANDSCAPE ARCHITECTURE

SENIOR LANDSCAPE ARCHITECT: BRAD COLE
CALCULATED-DESIGNED BY: MICHAEL MILLS
CHECKED BY: CHARLES LA RUE
REVISED BY
DATE REVISED

LAST REVISION 12-20-11
DATE PLOTTED => 04-APR-2012
TIME PLOTTED => 09:45

Dist	COUNTY	ROUTE	POST MILES TOTAL PROJECT	SHEET No.	TOTAL SHEETS
06	Fre,Mad	99	26.7/R31.6, R0.0/R1.6	204	393

LICENSED LANDSCAPE ARCHITECT

4-2-12
PLANS APPROVAL DATE

LICENSED LANDSCAPE ARCHITECT
MICHAEL W. MILLS No. 4178
Signature
11/30/12
Renewal Date
01/06/12
Date
STATE OF CALIFORNIA

THE STATE OF CALIFORNIA OR ITS OFFICERS OR AGENTS SHALL NOT BE RESPONSIBLE FOR THE ACCURACY OR COMPLETENESS OF SCANNED COPIES OF THIS PLAN SHEET.

NOTE:

FOR ACCURATE RIGHT OF WAY DATA, CONTACT RIGHT OF WAY ENGINEERING AT THE DISTRICT OFFICE.

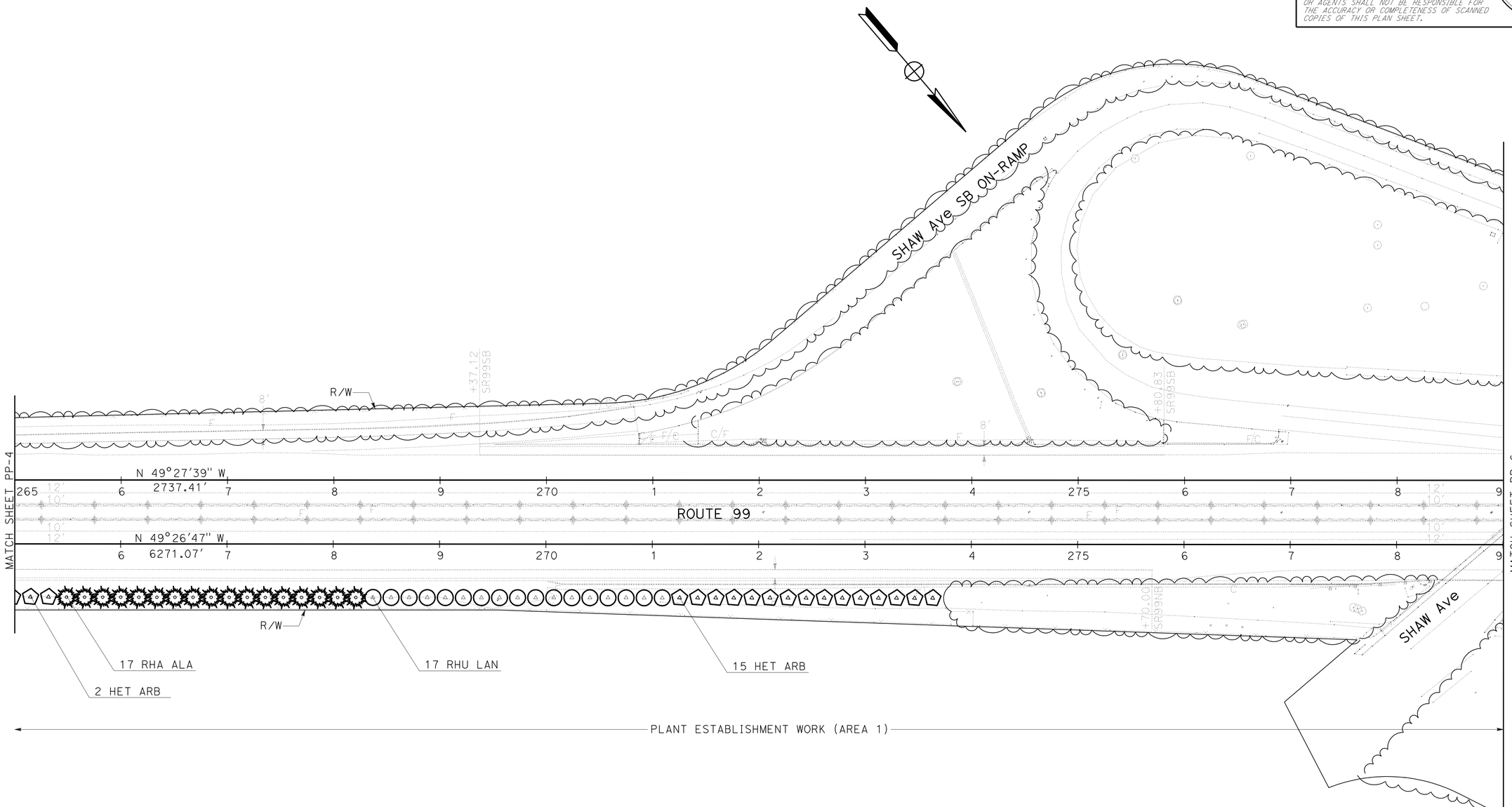

PLANTING PLAN

SCALE: 1" = 50'

PP-5

APPROVED FOR PLANTING WORK ONLY

STATE OF CALIFORNIA - DEPARTMENT OF TRANSPORTATION
Caltrans® LANDSCAPE ARCHITECTURE

SENIOR LANDSCAPE ARCHITECT: BRAD COLE

CALCULATED-DESIGNED BY: MICHAEL MILLS
CHECKED BY: CHARLES LA RUE

REVISED BY
DATE REVISED

LAST REVISION 12-20-11
DATE PLOTTED => 04-APR-2012
TIME PLOTTED => 09:46

Dist	COUNTY	ROUTE	POST MILES TOTAL PROJECT	SHEET No.	TOTAL SHEETS
06	Fre,Mad	99	26.7/R31.6, R0.0/R1.6	205	393

Michael W. Mills
LICENSED LANDSCAPE ARCHITECT

4-2-12
PLANS APPROVAL DATE

LICENSED LANDSCAPE ARCHITECT
MICHAEL W. MILLS No. 4178
Expiration Date 11/30/12
Renewal Date 01/06/12
DATE
STATE OF CALIFORNIA

THE STATE OF CALIFORNIA OR ITS OFFICERS OR AGENTS SHALL NOT BE RESPONSIBLE FOR THE ACCURACY OR COMPLETENESS OF SCANNED COPIES OF THIS PLAN SHEET.

NOTE:

FOR ACCURATE RIGHT OF WAY DATA, CONTACT RIGHT OF WAY ENGINEERING AT THE DISTRICT OFFICE.

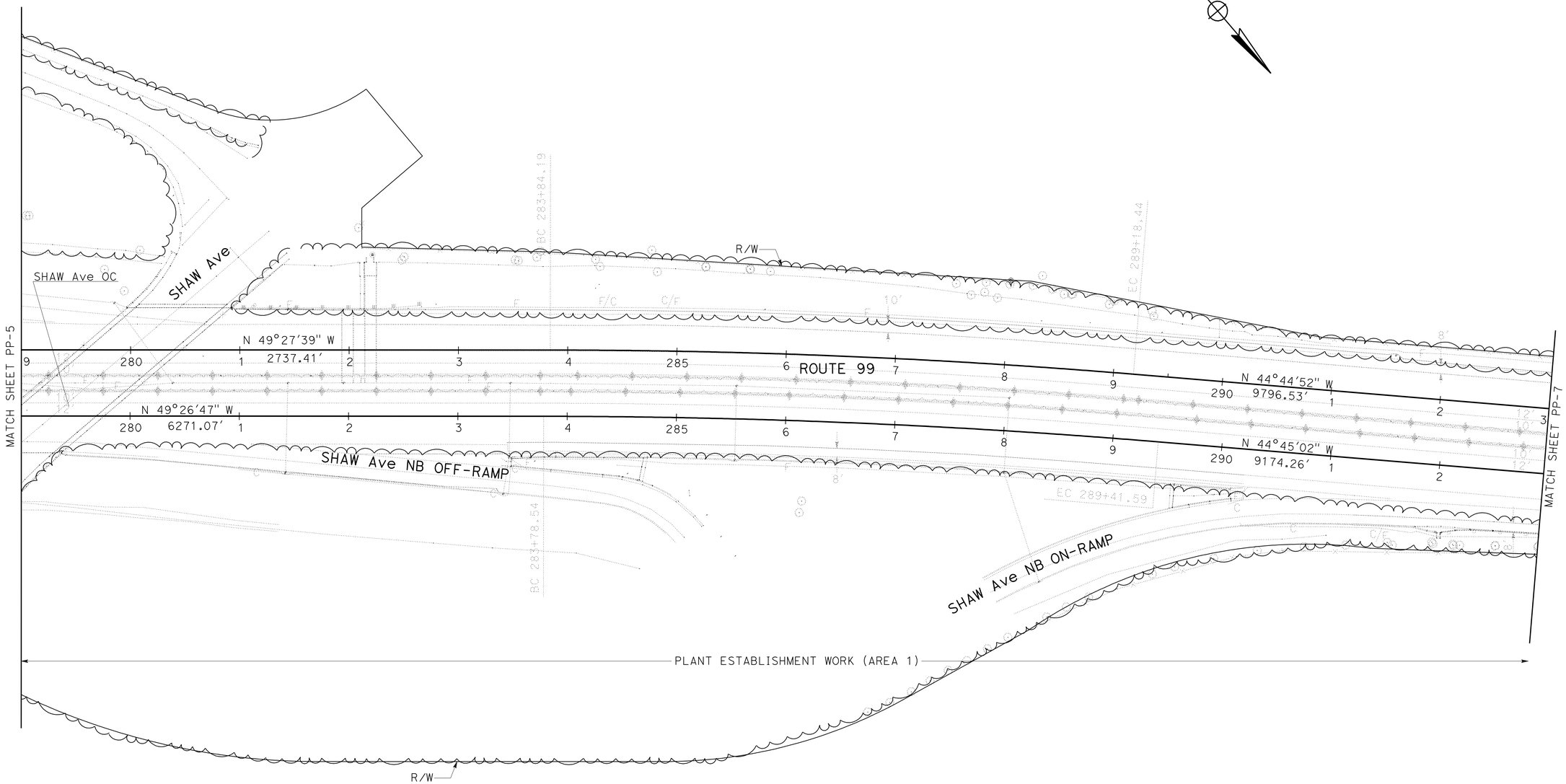

PLANTING PLAN

SCALE: 1" = 50'

PP-6

APPROVED FOR PLANTING WORK ONLY

STATE OF CALIFORNIA - DEPARTMENT OF TRANSPORTATION
Caltrans® LANDSCAPE ARCHITECTURE

SENIOR LANDSCAPE ARCHITECT: BRAD COLE
CALCULATED-DESIGNED BY: MICHAEL MILLS
CHECKED BY: CHARLES LA RUE
REVISED BY
DATE REVISED

LAST REVISION 12-20-11
DATE PLOTTED => 04-APR-2012
TIME PLOTTED => 09:46

Dist	COUNTY	ROUTE	POST MILES TOTAL PROJECT	SHEET No.	TOTAL SHEETS
06	Fre,Mad	99	26.7/R31.6, R0.0/R1.6	206	393

Michael W. Mills
LICENSED LANDSCAPE ARCHITECT

4-2-12
PLANS APPROVAL DATE

LICENSED LANDSCAPE ARCHITECT
MICHAEL W. MILLS No. 4178
Expiration Date 11/30/12
Renewal Date 01/06/12
Date
STATE OF CALIFORNIA

THE STATE OF CALIFORNIA OR ITS OFFICERS OR AGENTS SHALL NOT BE RESPONSIBLE FOR THE ACCURACY OR COMPLETENESS OF SCANNED COPIES OF THIS PLAN SHEET.

NOTE:

FOR ACCURATE RIGHT OF WAY DATA, CONTACT RIGHT OF WAY ENGINEERING AT THE DISTRICT OFFICE.

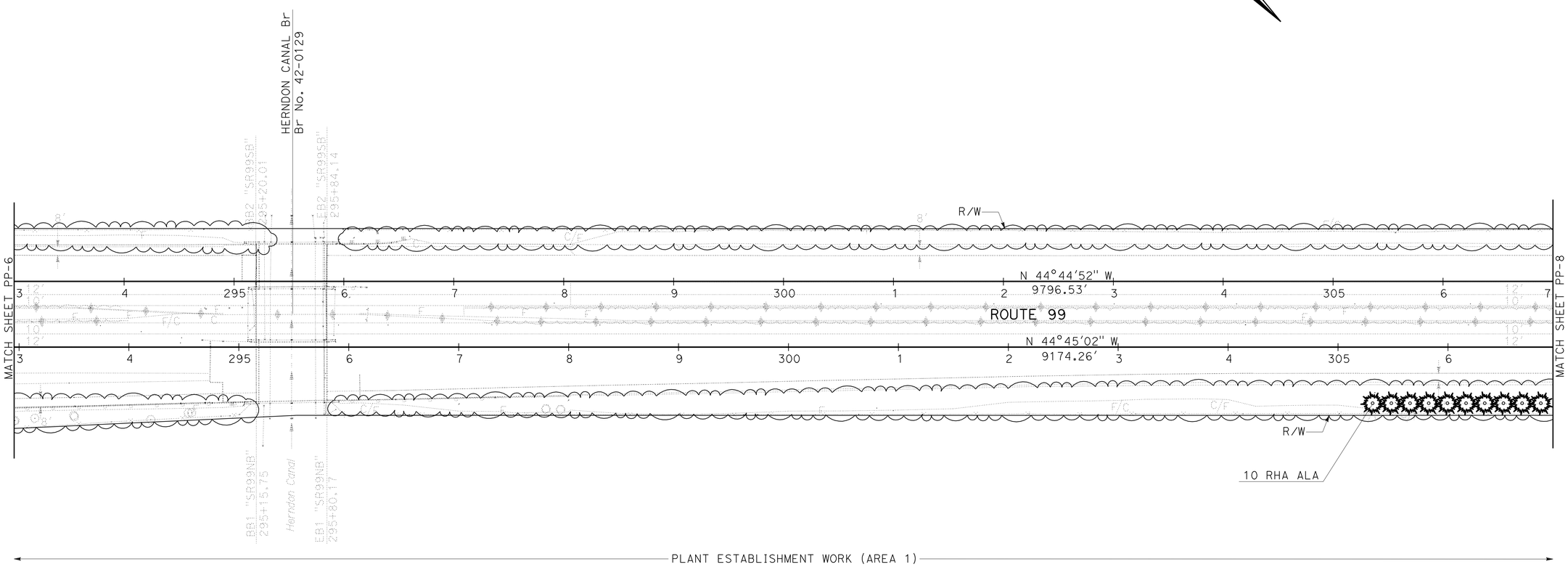

PLANTING PLAN

SCALE: 1" = 50'

PP-7

APPROVED FOR PLANTING WORK ONLY

STATE OF CALIFORNIA - DEPARTMENT OF TRANSPORTATION
Caltrans® LANDSCAPE ARCHITECTURE

SENIOR LANDSCAPE ARCHITECT: BRAD COLE

CALCULATED-DESIGNED BY: MICHAEL MILLS
CHECKED BY: CHARLES LA RUE

REVISED BY
DATE REVISED

LAST REVISION 12-20-11
DATE PLOTTED => 04-APR-2012
TIME PLOTTED => 09:46

Dist	COUNTY	ROUTE	POST MILES TOTAL PROJECT	SHEET No.	TOTAL SHEETS
06	Fre,Mad	99	26.7/R31.6, R0.0/R1.6	207	393

Michael W. Mills
LICENSED LANDSCAPE ARCHITECT

4-2-12
PLANS APPROVAL DATE

LICENSED LANDSCAPE ARCHITECT
MICHAEL W. MILLS No. 4178
Signature
11/30/12
Renewal Date
01/06/12
Date
STATE OF CALIFORNIA

THE STATE OF CALIFORNIA OR ITS OFFICERS OR AGENTS SHALL NOT BE RESPONSIBLE FOR THE ACCURACY OR COMPLETENESS OF SCANNED COPIES OF THIS PLAN SHEET.

NOTE:

FOR ACCURATE RIGHT OF WAY DATA, CONTACT
RIGHT OF WAY ENGINEERING AT THE DISTRICT OFFICE.

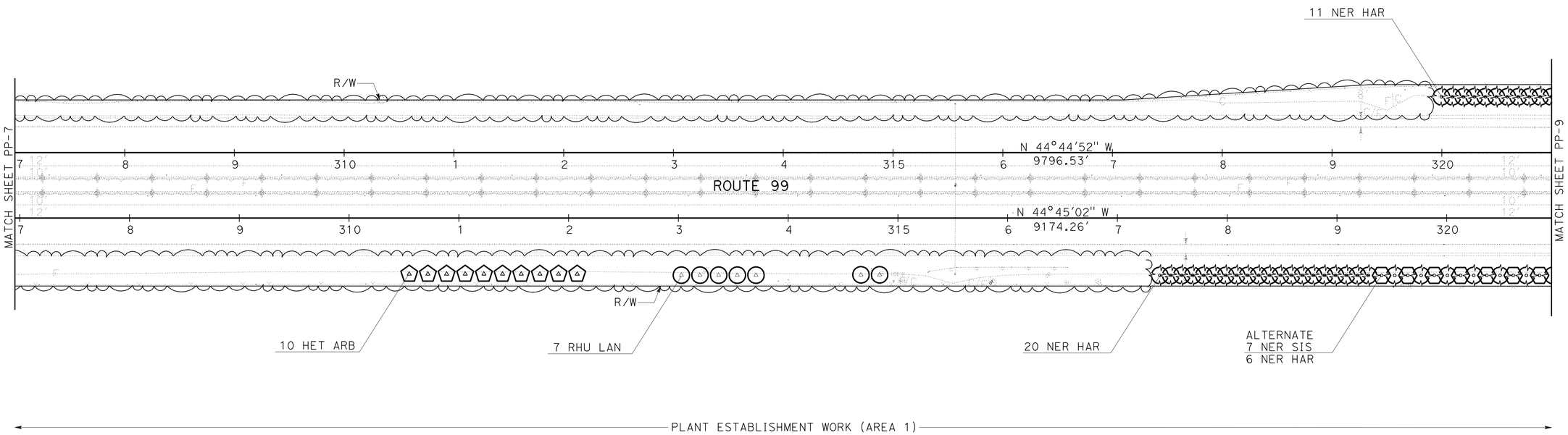

PLANTING PLAN

SCALE: 1" = 50'

PP-8

APPROVED FOR PLANTING WORK ONLY

STATE OF CALIFORNIA - DEPARTMENT OF TRANSPORTATION
Caltrans® LANDSCAPE ARCHITECTURE

SENIOR LANDSCAPE ARCHITECT: BRAD COLE
CALCULATED-DESIGNED BY: MICHAEL MILLS
CHECKED BY: CHARLES LA RUE
REVISED BY
DATE REVISED

LAST REVISION 12-20-11
DATE PLOTTED => 04-APR-2012
TIME PLOTTED => 09:46

Dist	COUNTY	ROUTE	POST MILES TOTAL PROJECT	SHEET No.	TOTAL SHEETS
06	Fre,Mad	99	26.7/R31.6, R0.0/R1.6	208	393

LICENSED LANDSCAPE ARCHITECT

4-2-12
PLANS APPROVAL DATE

LICENSED LANDSCAPE ARCHITECT
MICHAEL W. MILLS No. 4178
Expiration Date 11/30/12
Renewal Date 01/06/12
Date
STATE OF CALIFORNIA

THE STATE OF CALIFORNIA OR ITS OFFICERS OR AGENTS SHALL NOT BE RESPONSIBLE FOR THE ACCURACY OR COMPLETENESS OF SCANNED COPIES OF THIS PLAN SHEET.

NOTE:

FOR ACCURATE RIGHT OF WAY DATA, CONTACT RIGHT OF WAY ENGINEERING AT THE DISTRICT OFFICE.

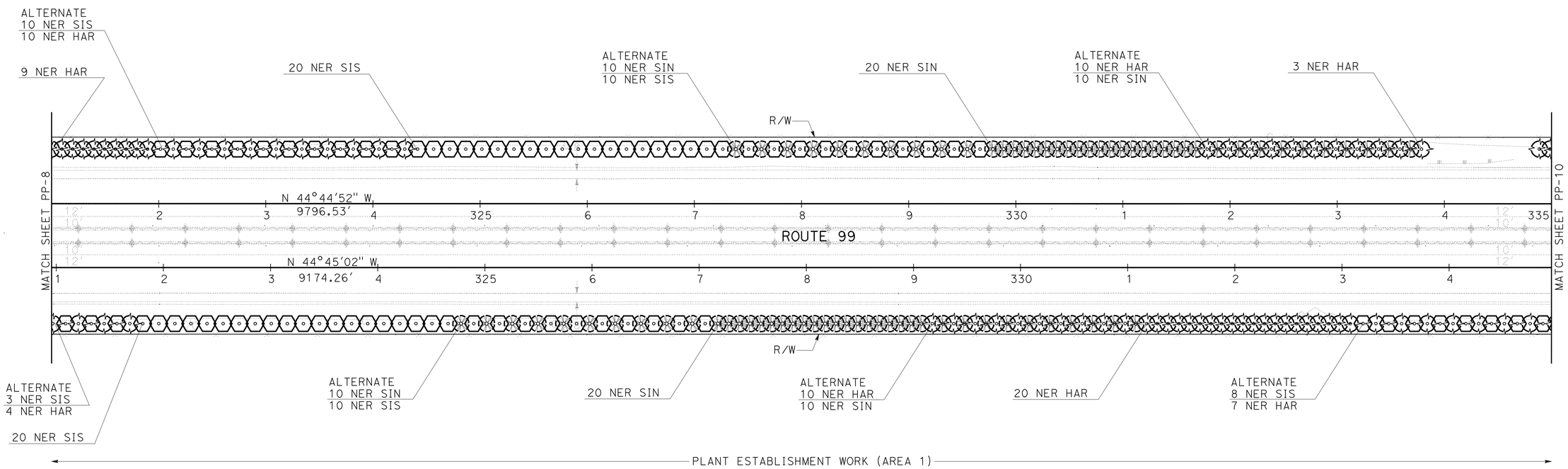

PLANTING PLAN

SCALE: 1" = 50'

PP-9

APPROVED FOR PLANTING WORK ONLY

STATE OF CALIFORNIA - DEPARTMENT OF TRANSPORTATION
Caltrans® LANDSCAPE ARCHITECTURE

SENIOR LANDSCAPE ARCHITECT: BRAD COLE
CALCULATED-DESIGNED BY: MICHAEL MILLS
CHECKED BY: CHARLES LA RUE
REVISED BY
DATE REVISED

LAST REVISION 12-20-11
DATE PLOTTED => 04-APR-2012
TIME PLOTTED => 09:46

Dist	COUNTY	ROUTE	POST MILES TOTAL PROJECT	SHEET No.	TOTAL SHEETS
06	Fre,Mad	99	26.7/R31.6, R0.0/R1.6	209	393

LICENSED LANDSCAPE ARCHITECT

4-2-12
PLANS APPROVAL DATE

LICENSED LANDSCAPE ARCHITECT
MICHAEL W. MILLS No. 4178
Signature
11/30/12
Renewal Date
01/06/12
Date
STATE OF CALIFORNIA

THE STATE OF CALIFORNIA OR ITS OFFICERS OR AGENTS SHALL NOT BE RESPONSIBLE FOR THE ACCURACY OR COMPLETENESS OF SCANNED COPIES OF THIS PLAN SHEET.

NOTE:

FOR ACCURATE RIGHT OF WAY DATA, CONTACT
RIGHT OF WAY ENGINEERING AT THE DISTRICT OFFICE.

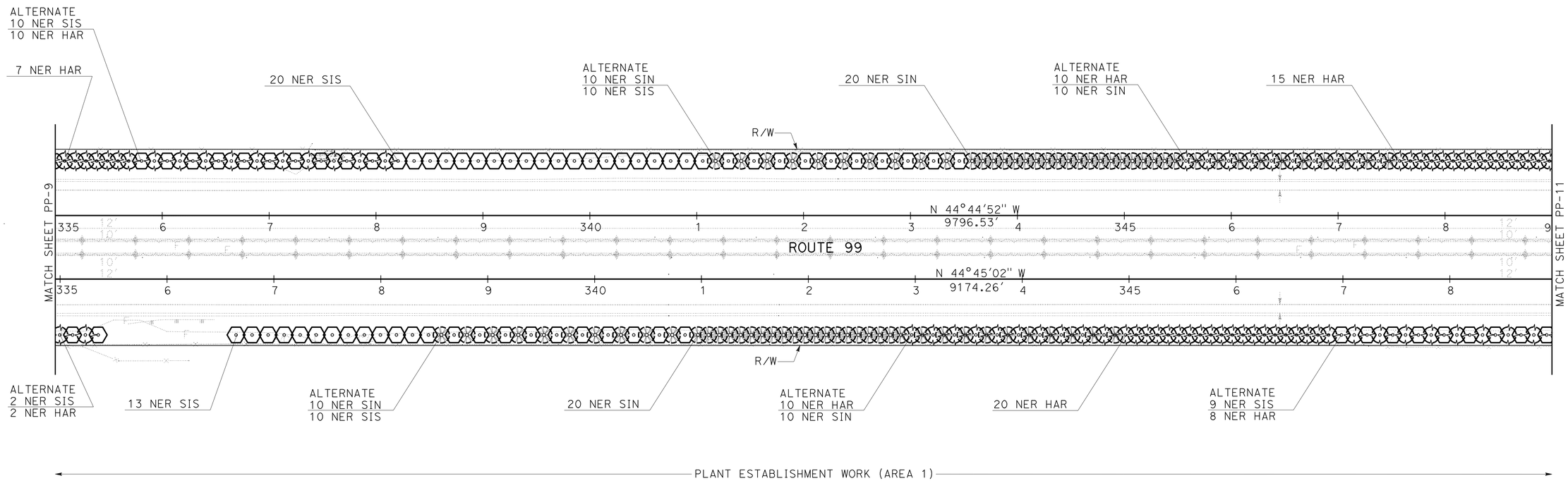

PLANTING PLAN

SCALE: 1" = 50'

PP-10

APPROVED FOR PLANTING WORK ONLY

STATE OF CALIFORNIA - DEPARTMENT OF TRANSPORTATION
Caltrans LANDSCAPE ARCHITECTURE

SENIOR LANDSCAPE ARCHITECT: BRAD COLE
CALCULATED-DESIGNED BY: MICHAEL MILLS
CHECKED BY: CHARLES LA RUE
REVISED BY
DATE REVISED

LAST REVISION 12-20-11
DATE PLOTTED => 04-APR-2012
TIME PLOTTED => 09:46

Dist	COUNTY	ROUTE	POST MILES TOTAL PROJECT	SHEET No.	TOTAL SHEETS
06	Fre,Mad	99	26.7/R31.6, R0.0/R1.6	210	393

LICENSED LANDSCAPE ARCHITECT

4-2-12
PLANS APPROVAL DATE

LICENSED LANDSCAPE ARCHITECT
MICHAEL W. MILLS No. 4178
Expiration Date
11/30/12
Renewal Date
01/06/12
Date
STATE OF CALIFORNIA

THE STATE OF CALIFORNIA OR ITS OFFICERS OR AGENTS SHALL NOT BE RESPONSIBLE FOR THE ACCURACY OR COMPLETENESS OF SCANNED COPIES OF THIS PLAN SHEET.

NOTE:

FOR ACCURATE RIGHT OF WAY DATA, CONTACT RIGHT OF WAY ENGINEERING AT THE DISTRICT OFFICE.

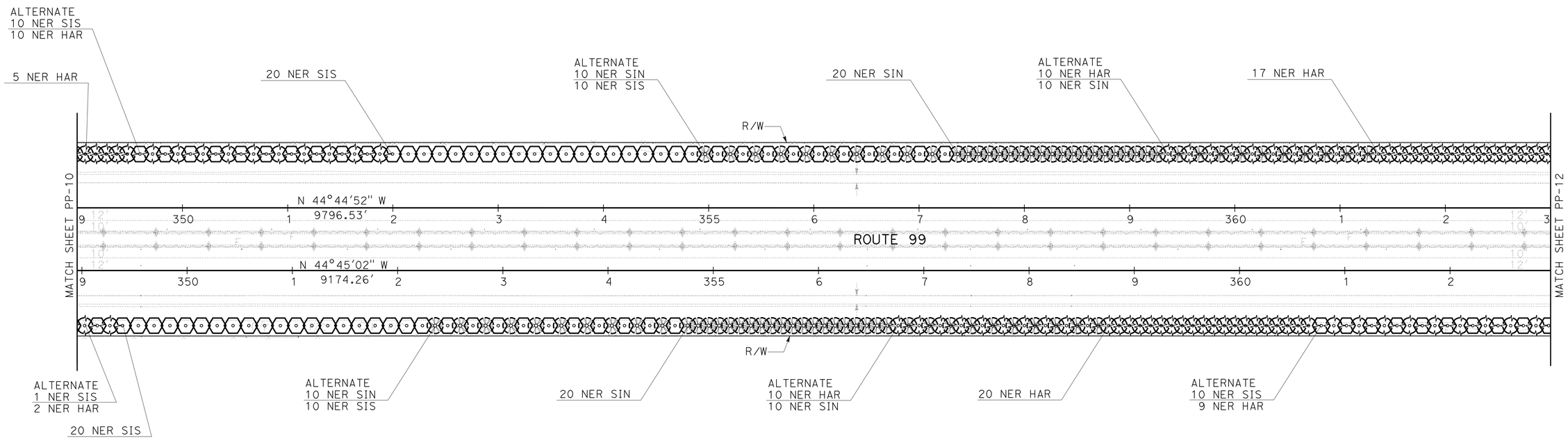

PLANTING PLAN

SCALE: 1" = 50'

PP-11

APPROVED FOR PLANTING WORK ONLY

REVISED BY	DATE REVISED

MICHAEL MILLS — CHARLES LA RUE

CALCULATED-DESIGNED BY — CHECKED BY

SENIOR LANDSCAPE ARCHITECT — BRAD COLE

STATE OF CALIFORNIA - DEPARTMENT OF TRANSPORTATION

Caltrans® LANDSCAPE ARCHITECTURE

LAST REVISION 12-20-11 | DATE PLOTTED => 04-APR-2012 | TIME PLOTTED => 09:46

Dist	COUNTY	ROUTE	POST MILES TOTAL PROJECT	SHEET No.	TOTAL SHEETS
06	Fre,Mad	99	26.7/R31.6, R0.0/R1.6	211	393

LICENSED LANDSCAPE ARCHITECT

4-2-12
PLANS APPROVAL DATE

LICENSED LANDSCAPE ARCHITECT
MICHAEL W. MILLS No. 4178
Expiration Date
11/30/12
Renewal Date
01/06/12
Date
STATE OF CALIFORNIA

THE STATE OF CALIFORNIA OR ITS OFFICERS OR AGENTS SHALL NOT BE RESPONSIBLE FOR THE ACCURACY OR COMPLETENESS OF SCANNED COPIES OF THIS PLAN SHEET.

NOTE:

FOR ACCURATE RIGHT OF WAY DATA, CONTACT RIGHT OF WAY ENGINEERING AT THE DISTRICT OFFICE.

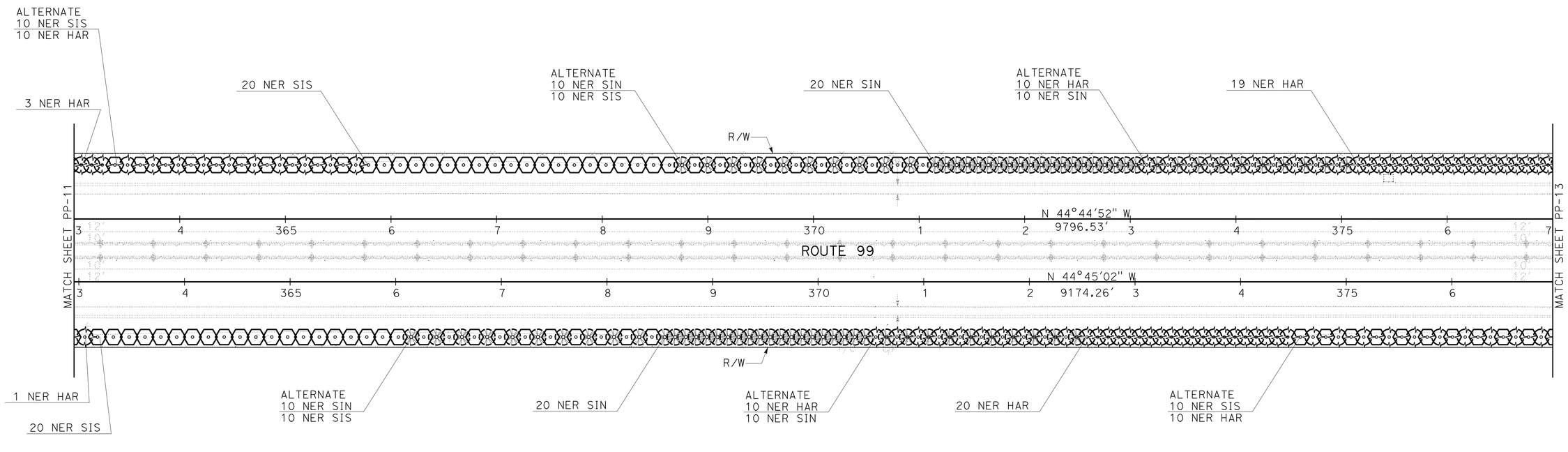

PLANTING PLAN

SCALE: 1" = 50'

PP-12

APPROVED FOR PLANTING WORK ONLY

STATE OF CALIFORNIA - DEPARTMENT OF TRANSPORTATION
Caltrans® LANDSCAPE ARCHITECTURE

SENIOR LANDSCAPE ARCHITECT: BRAD COLE

CALCULATED-DESIGNED BY: MICHAEL MILLS
CHECKED BY: CHARLES LA RUE

REVISED BY
DATE REVISED

LAST REVISION 12-20-11
DATE PLOTTED => 04-APR-2012
TIME PLOTTED => 09:46

Dist	COUNTY	ROUTE	POST MILES TOTAL PROJECT	SHEET No.	TOTAL SHEETS
06	Fre,Mad	99	26.7/R31.6, R0.0/R1.6	212	393

Michael W. Mills
LICENSED LANDSCAPE ARCHITECT

4-2-12
PLANS APPROVAL DATE

LICENSED LANDSCAPE ARCHITECT
MICHAEL W. MILLS No. 4178
Expiration Date 11/30/12
Renewal Date 01/06/12
Date
STATE OF CALIFORNIA

THE STATE OF CALIFORNIA OR ITS OFFICERS OR AGENTS SHALL NOT BE RESPONSIBLE FOR THE ACCURACY OR COMPLETENESS OF SCANNED COPIES OF THIS PLAN SHEET.

NOTE:

FOR ACCURATE RIGHT OF WAY DATA, CONTACT RIGHT OF WAY ENGINEERING AT THE DISTRICT OFFICE.

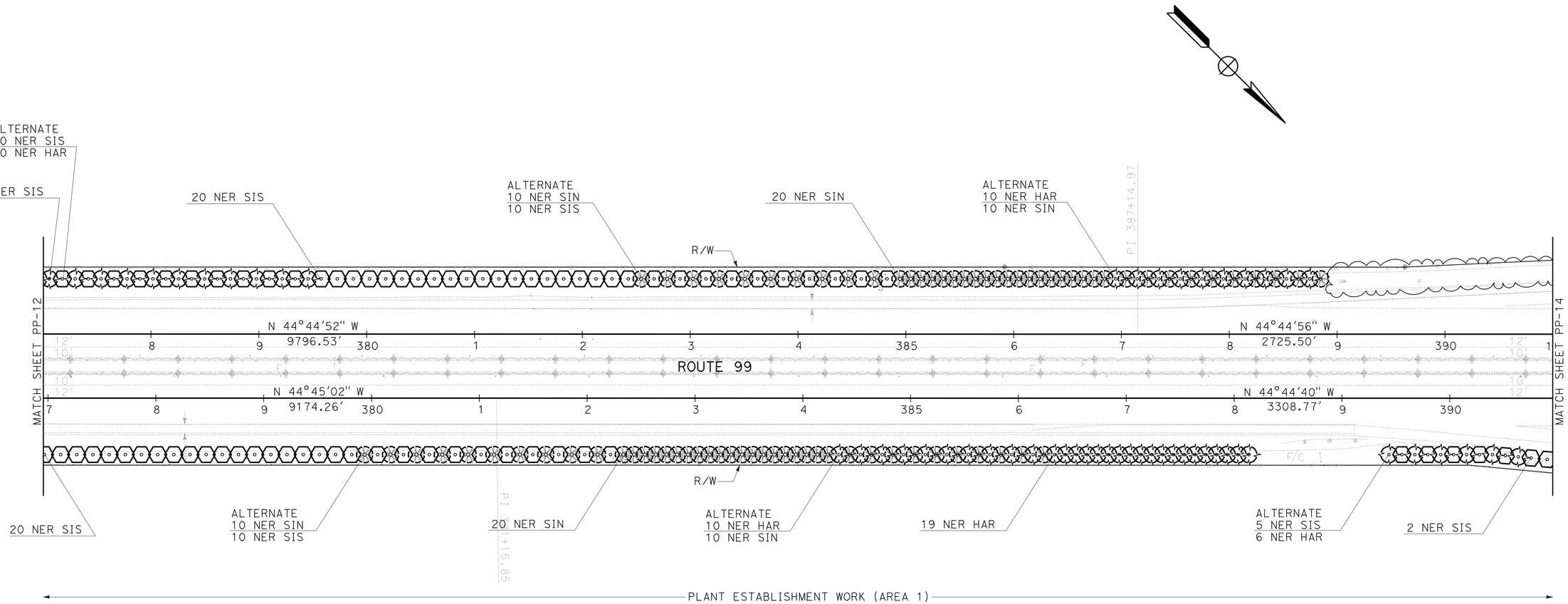

PLANTING PLAN

SCALE: 1" = 50'

PP-13

APPROVED FOR PLANTING WORK ONLY

STATE OF CALIFORNIA - DEPARTMENT OF TRANSPORTATION
Caltrans® LANDSCAPE ARCHITECTURE

SENIOR LANDSCAPE ARCHITECT: BRAD COLE

CALCULATED-DESIGNED BY: MICHAEL MILLS
CHECKED BY: CHARLES LA RUE

REVISED BY
DATE REVISED

LAST REVISION 12-20-11
DATE PLOTTED => 04-APR-2012
TIME PLOTTED => 09:46

Dist	COUNTY	ROUTE	POST MILES TOTAL PROJECT	SHEET No.	TOTAL SHEETS
06	Fre,Mad	99	26.7/R31.6, R0.0/R1.6	213	393

Michael W. Mills
LICENSED LANDSCAPE ARCHITECT

4-2-12
PLANS APPROVAL DATE

LICENSED LANDSCAPE ARCHITECT
MICHAEL W. MILLS No. 4178
Expiration Date
11/30/12
Renewal Date
01/06/12
Date
STATE OF CALIFORNIA

THE STATE OF CALIFORNIA OR ITS OFFICERS OR AGENTS SHALL NOT BE RESPONSIBLE FOR THE ACCURACY OR COMPLETENESS OF SCANNED COPIES OF THIS PLAN SHEET.

NOTE:

FOR ACCURATE RIGHT OF WAY DATA, CONTACT RIGHT OF WAY ENGINEERING AT THE DISTRICT OFFICE.

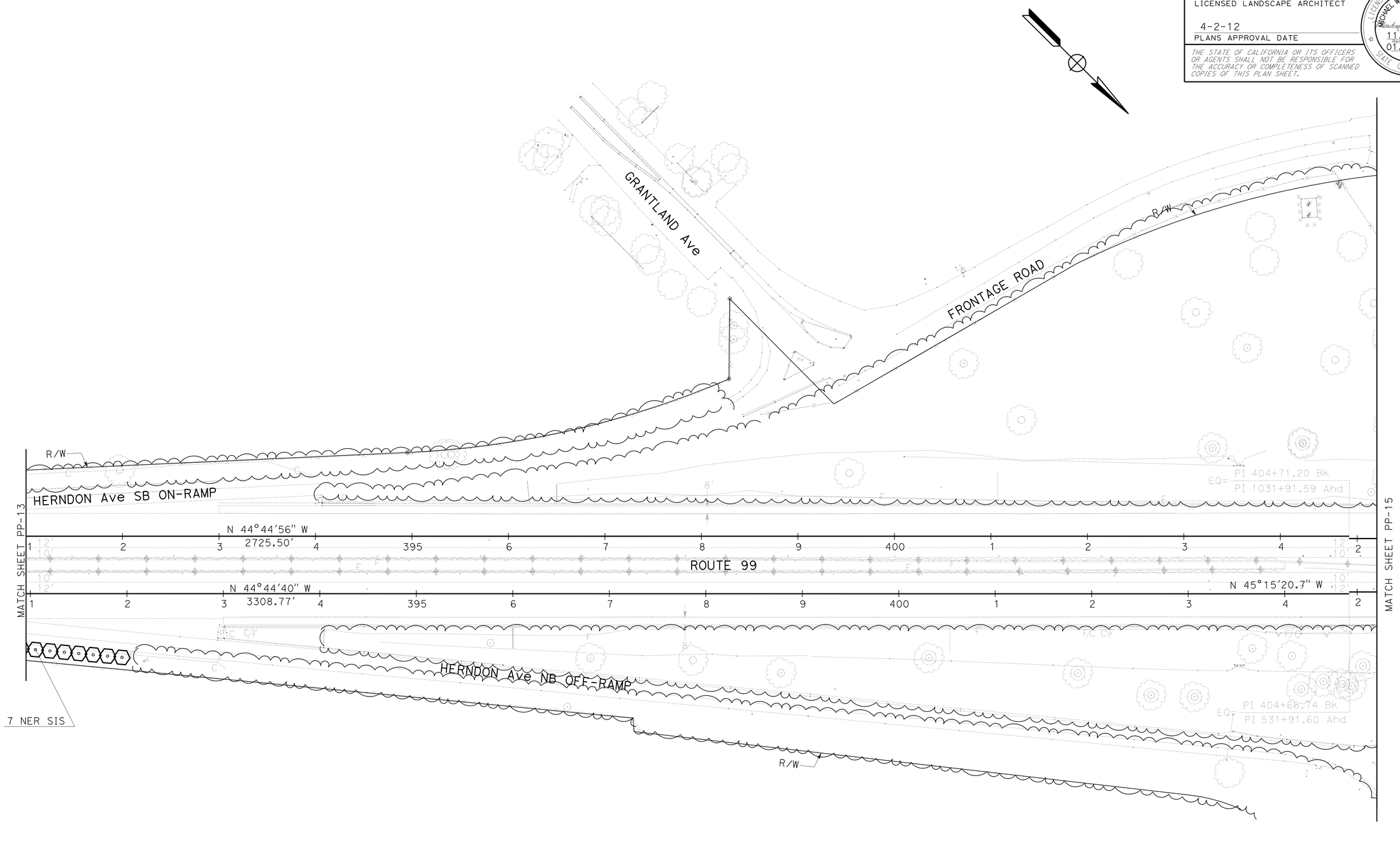

PLANTING PLAN

SCALE: 1" = 50'

PP-14

APPROVED FOR PLANTING WORK ONLY

STATE OF CALIFORNIA - DEPARTMENT OF TRANSPORTATION
Caltrans® LANDSCAPE ARCHITECTURE

SENIOR LANDSCAPE ARCHITECT: BRAD COLE

CALCULATED-DESIGNED BY: MICHAEL MILLS
CHECKED BY: CHARLES LA RUE

REVISED BY
DATE REVISED

LAST REVISION 12-20-11
DATE PLOTTED => 04-APR-2012
TIME PLOTTED => 09:47

Dist	COUNTY	ROUTE	POST MILES TOTAL PROJECT	SHEET No.	TOTAL SHEETS
06	Fre,Mad	99	26.7/R31.6, R0.0/R1.6	214	393

LICENSED LANDSCAPE ARCHITECT

4-2-12
PLANS APPROVAL DATE

LICENSED LANDSCAPE ARCHITECT
MICHAEL W. MILLS No. 4178
Expiration Date 11/30/12
Renewal Date 01/06/12
DATE
STATE OF CALIFORNIA

THE STATE OF CALIFORNIA OR ITS OFFICERS OR AGENTS SHALL NOT BE RESPONSIBLE FOR THE ACCURACY OR COMPLETENESS OF SCANNED COPIES OF THIS PLAN SHEET.

NOTE:

FOR ACCURATE RIGHT OF WAY DATA, CONTACT RIGHT OF WAY ENGINEERING AT THE DISTRICT OFFICE.

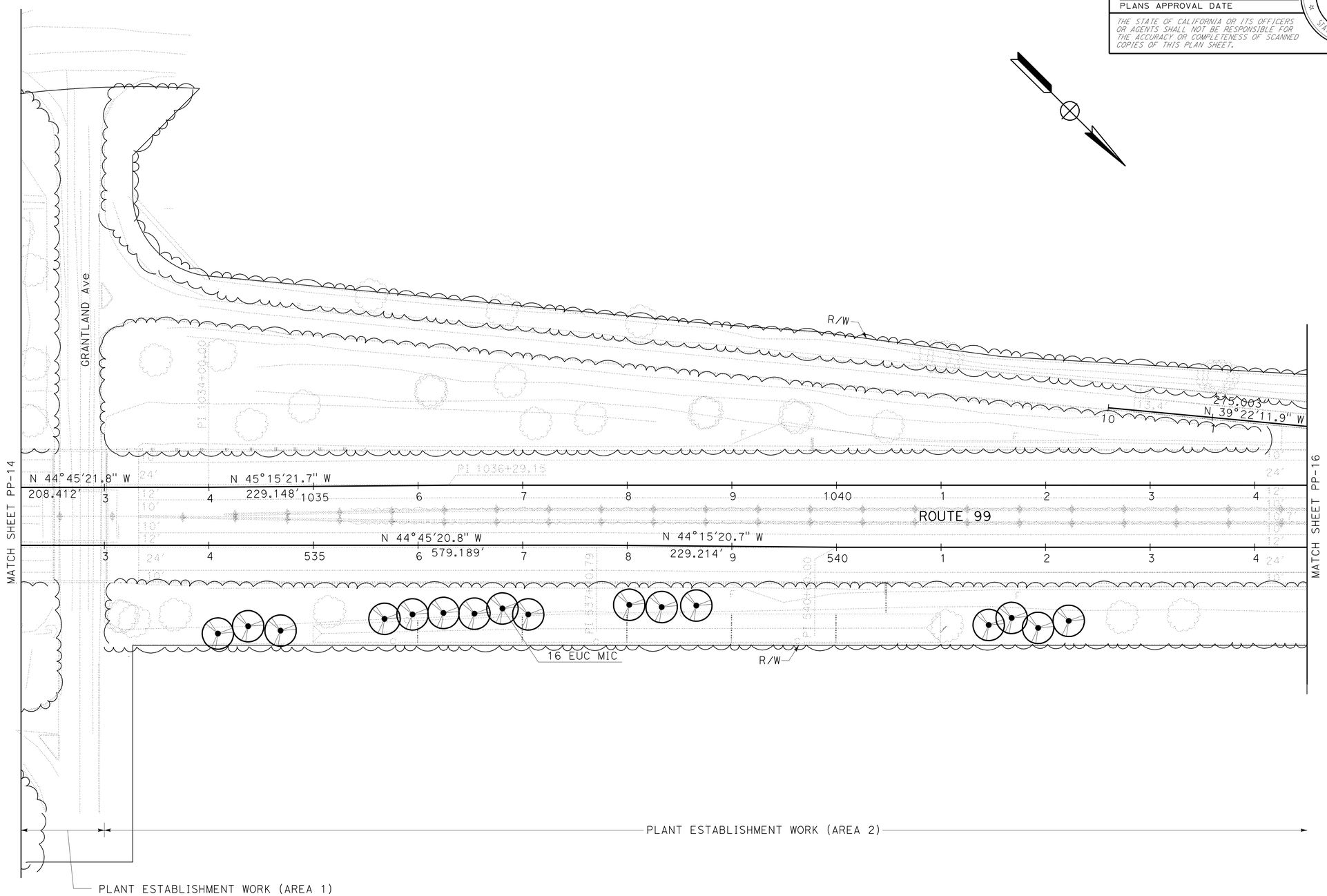

PLANTING PLAN

SCALE: 1" = 50'

PP-15

APPROVED FOR PLANTING WORK ONLY

STATE OF CALIFORNIA - DEPARTMENT OF TRANSPORTATION
Caltrans® LANDSCAPE ARCHITECTURE

SENIOR LANDSCAPE ARCHITECT: BRAD COLE

CALCULATED-DESIGNED BY: MICHAEL MILLS
CHECKED BY: CHARLES LA RUE

REVISED BY
DATE REVISED

LAST REVISION 12-20-11
DATE PLOTTED => 04-APR-2012
TIME PLOTTED => 09:47

Dist	COUNTY	ROUTE	POST MILES TOTAL PROJECT	SHEET No.	TOTAL SHEETS
06	Fre,Mad	99	26.7/R31.6, R0.0/R1.6	215	393

LICENSED LANDSCAPE ARCHITECT

4-2-12
PLANS APPROVAL DATE

LICENSED LANDSCAPE ARCHITECT MICHAEL W. MILLS No. 4178 STATE OF CALIFORNIA
Expiration Date 11/30/12
Renewal Date 01/06/12
Date

THE STATE OF CALIFORNIA OR ITS OFFICERS OR AGENTS SHALL NOT BE RESPONSIBLE FOR THE ACCURACY OR COMPLETENESS OF SCANNED COPIES OF THIS PLAN SHEET.

NOTE:

FOR ACCURATE RIGHT OF WAY DATA, CONTACT RIGHT OF WAY ENGINEERING AT THE DISTRICT OFFICE.

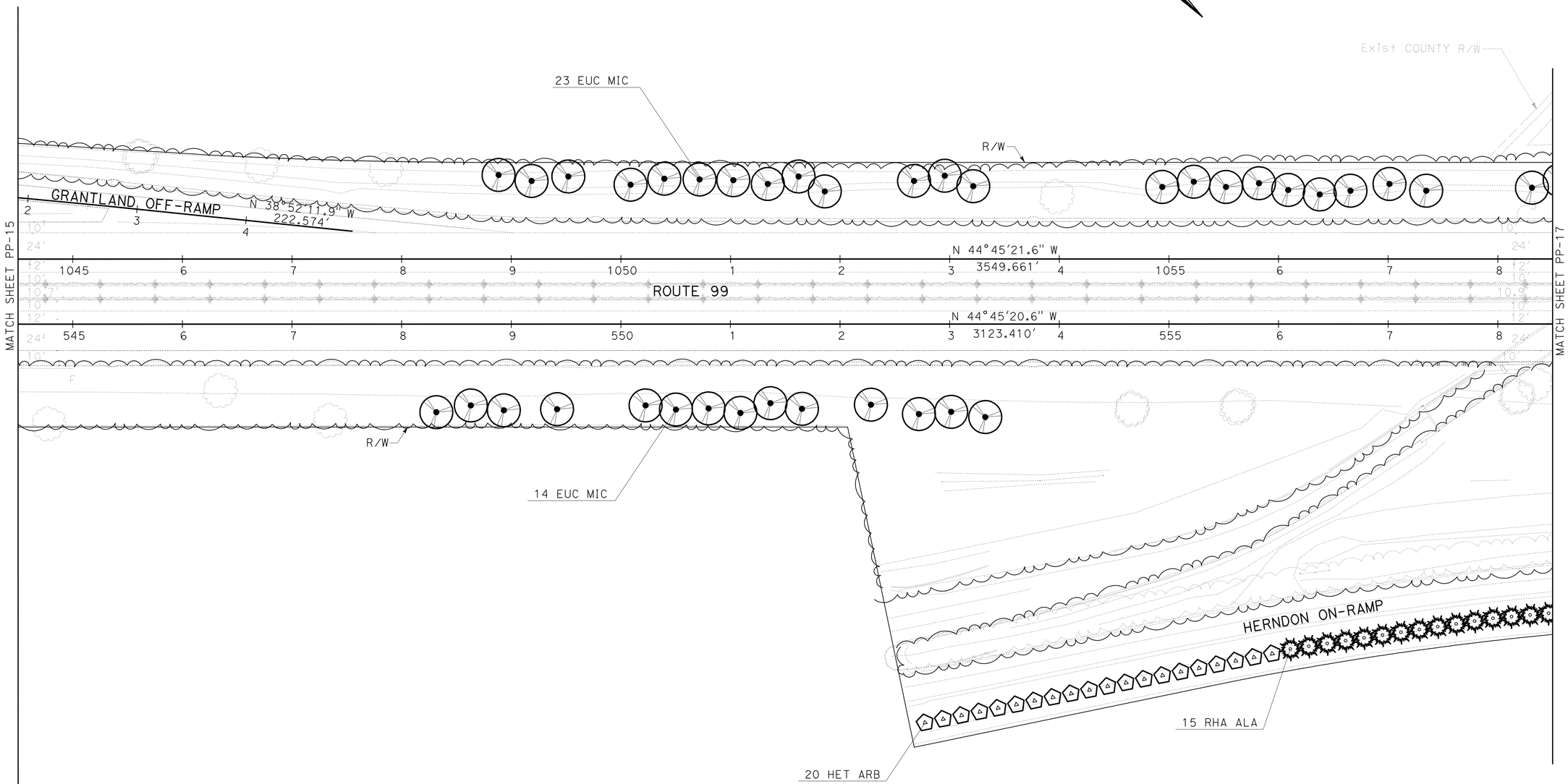

PLANTING PLAN

SCALE: 1" = 50' **PP-16**

APPROVED FOR PLANTING WORK ONLY

STATE OF CALIFORNIA - DEPARTMENT OF TRANSPORTATION
Caltrans LANDSCAPE ARCHITECTURE

SENIOR LANDSCAPE ARCHITECT: BRAD COLE
CALCULATED-DESIGNED BY: MICHAEL MILLS
CHECKED BY: CHARLES LA RUE
REVISED BY
DATE REVISED

LAST REVISION 12-20-11
DATE PLOTTED => 04-APR-2012
TIME PLOTTED => 09:47

Dist	COUNTY	ROUTE	POST MILES TOTAL PROJECT	SHEET No.	TOTAL SHEETS
06	Fre,Mad	99	26.7/R31.6, R0.0/R1.6	216	393

LICENSED LANDSCAPE ARCHITECT

4-2-12
PLANS APPROVAL DATE

LICENSED LANDSCAPE ARCHITECT
MICHAEL W. MILLS No. 4178
11/30/12
01/06/12
STATE OF CALIFORNIA

THE STATE OF CALIFORNIA OR ITS OFFICERS OR AGENTS SHALL NOT BE RESPONSIBLE FOR THE ACCURACY OR COMPLETENESS OF SCANNED COPIES OF THIS PLAN SHEET.

NOTE:

FOR ACCURATE RIGHT OF WAY DATA, CONTACT RIGHT OF WAY ENGINEERING AT THE DISTRICT OFFICE.

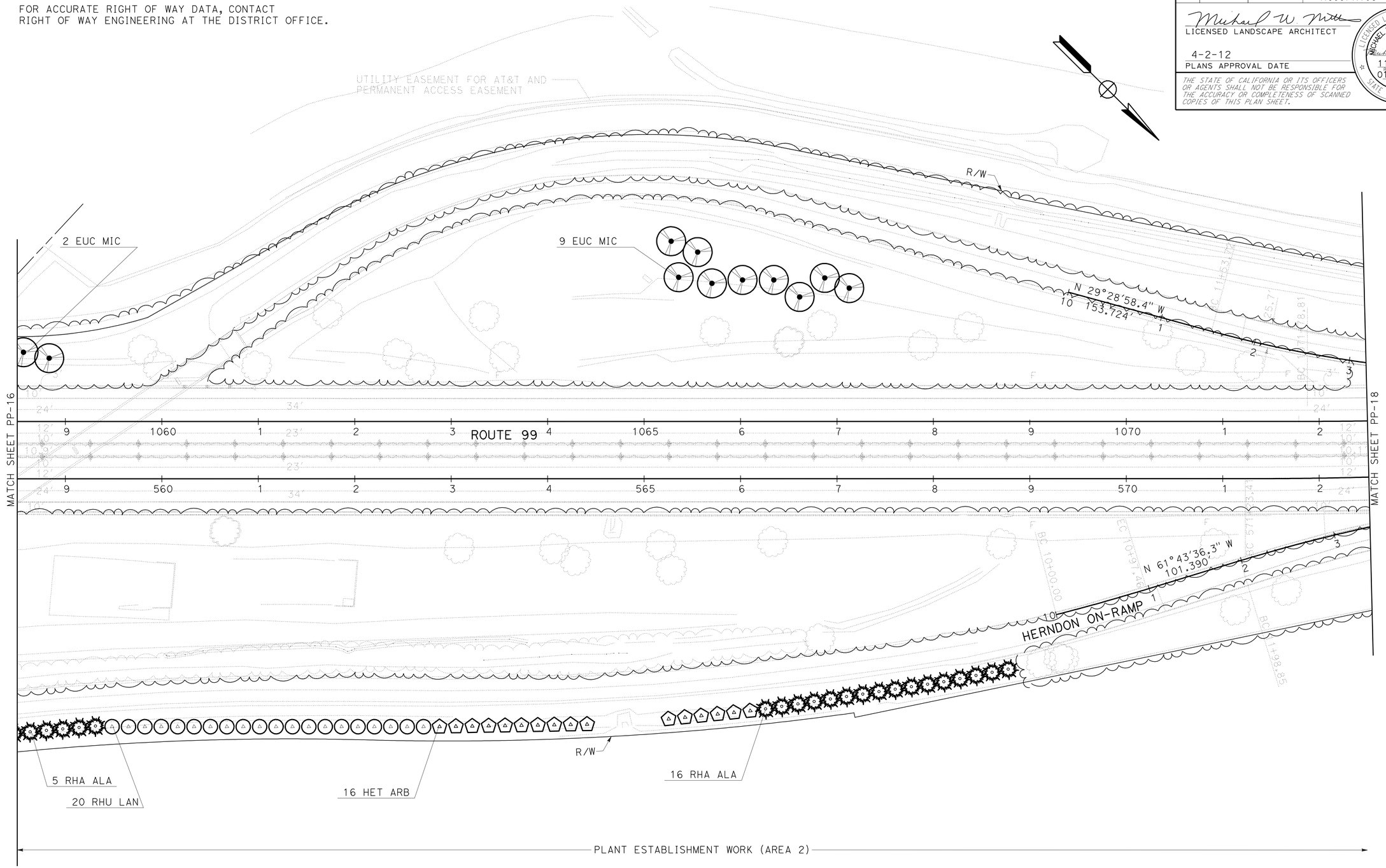

PLANTING PLAN

SCALE: 1" = 50' **PP-17**

APPROVED FOR PLANTING WORK ONLY

STATE OF CALIFORNIA - DEPARTMENT OF TRANSPORTATION
Caltrans® LANDSCAPE ARCHITECTURE

SENIOR LANDSCAPE ARCHITECT: BRAD COLE
CALCULATED-DESIGNED BY: MICHAEL MILLS
CHECKED BY: CHARLES LA RUE
REVISED BY
DATE REVISED

LAST REVISION 12-20-11
DATE PLOTTED => 04-APR-2012
TIME PLOTTED => 09:47

Dist	COUNTY	ROUTE	POST MILES TOTAL PROJECT	SHEET No.	TOTAL SHEETS
06	Fre,Mad	99	26.7/R31.6, R0.0/R1.6	217	393

LICENSED LANDSCAPE ARCHITECT

4-2-12
PLANS APPROVAL DATE

LICENSED LANDSCAPE ARCHITECT
MICHAEL W. MILLS No. 4178
Expiration Date 11/30/12
Renewal Date 01/06/12
Date
STATE OF CALIFORNIA

THE STATE OF CALIFORNIA OR ITS OFFICERS OR AGENTS SHALL NOT BE RESPONSIBLE FOR THE ACCURACY OR COMPLETENESS OF SCANNED COPIES OF THIS PLAN SHEET.

NOTE:

FOR ACCURATE RIGHT OF WAY DATA, CONTACT RIGHT OF WAY ENGINEERING AT THE DISTRICT OFFICE.

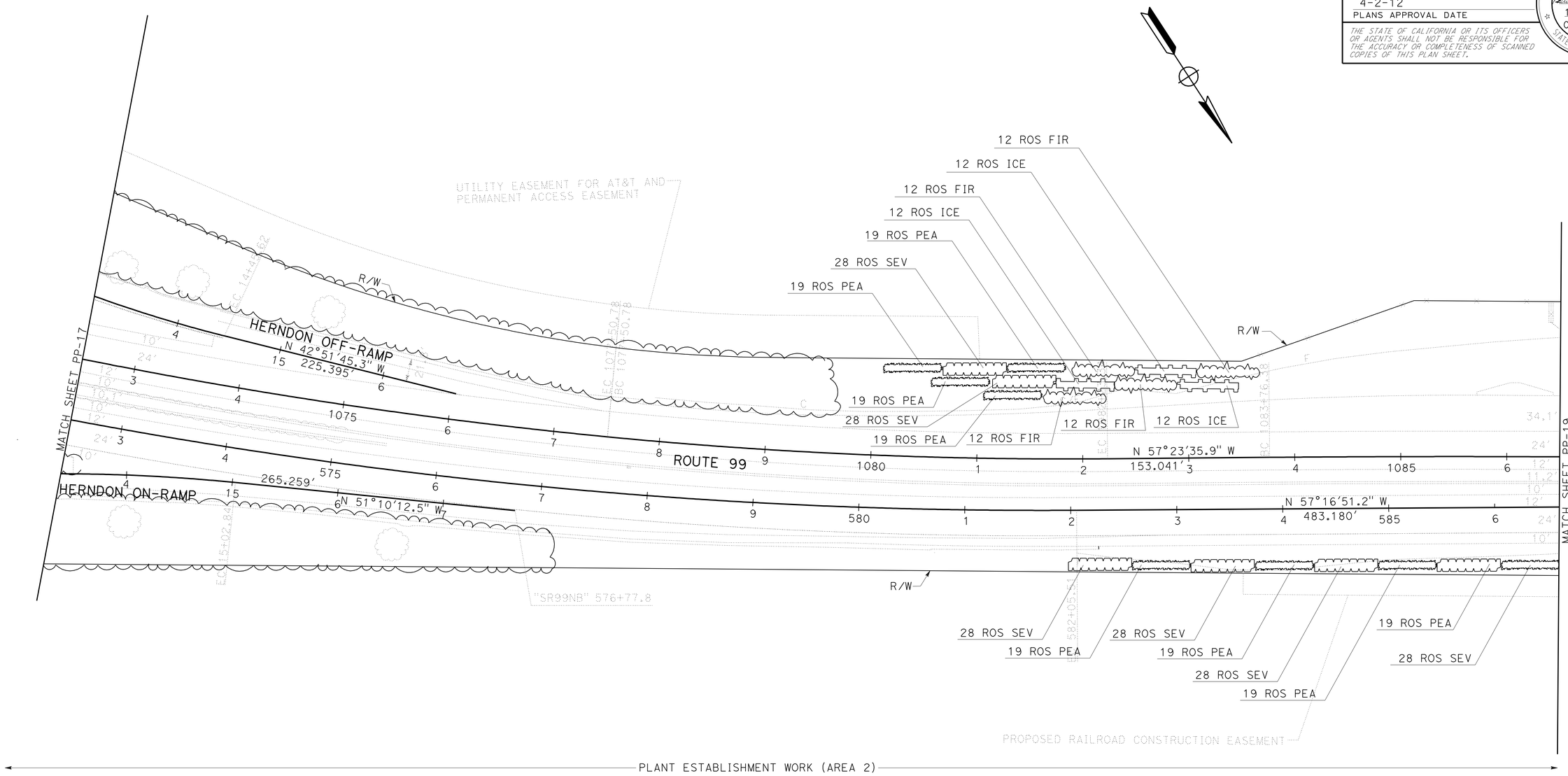

PLANTING PLAN

SCALE: 1" = 50'

PP-18

APPROVED FOR PLANTING WORK ONLY

STATE OF CALIFORNIA - DEPARTMENT OF TRANSPORTATION
Caltrans® LANDSCAPE ARCHITECTURE

SENIOR LANDSCAPE ARCHITECT: BRAD COLE
CALCULATED-DESIGNED BY: MICHAEL MILLS
CHECKED BY: CHARLES LA RUE
REVISED BY
DATE REVISED

LAST REVISION 12-20-11
DATE PLOTTED => 04-APR-2012
TIME PLOTTED => 09:47

Dist	COUNTY	ROUTE	POST MILES TOTAL PROJECT	SHEET No.	TOTAL SHEETS
06	Fre,Mad	99	26.7/R31.6, R0.0/R1.6	218	393

LICENSED LANDSCAPE ARCHITECT

4-2-12
PLANS APPROVAL DATE

LICENSED LANDSCAPE ARCHITECT MICHAEL W. MILLS No. 4178 STATE OF CALIFORNIA
Signature 11/30/12
Renewal Date 01/06/12
Date

THE STATE OF CALIFORNIA OR ITS OFFICERS OR AGENTS SHALL NOT BE RESPONSIBLE FOR THE ACCURACY OR COMPLETENESS OF SCANNED COPIES OF THIS PLAN SHEET.

NOTE:

FOR ACCURATE RIGHT OF WAY DATA, CONTACT RIGHT OF WAY ENGINEERING AT THE DISTRICT OFFICE.

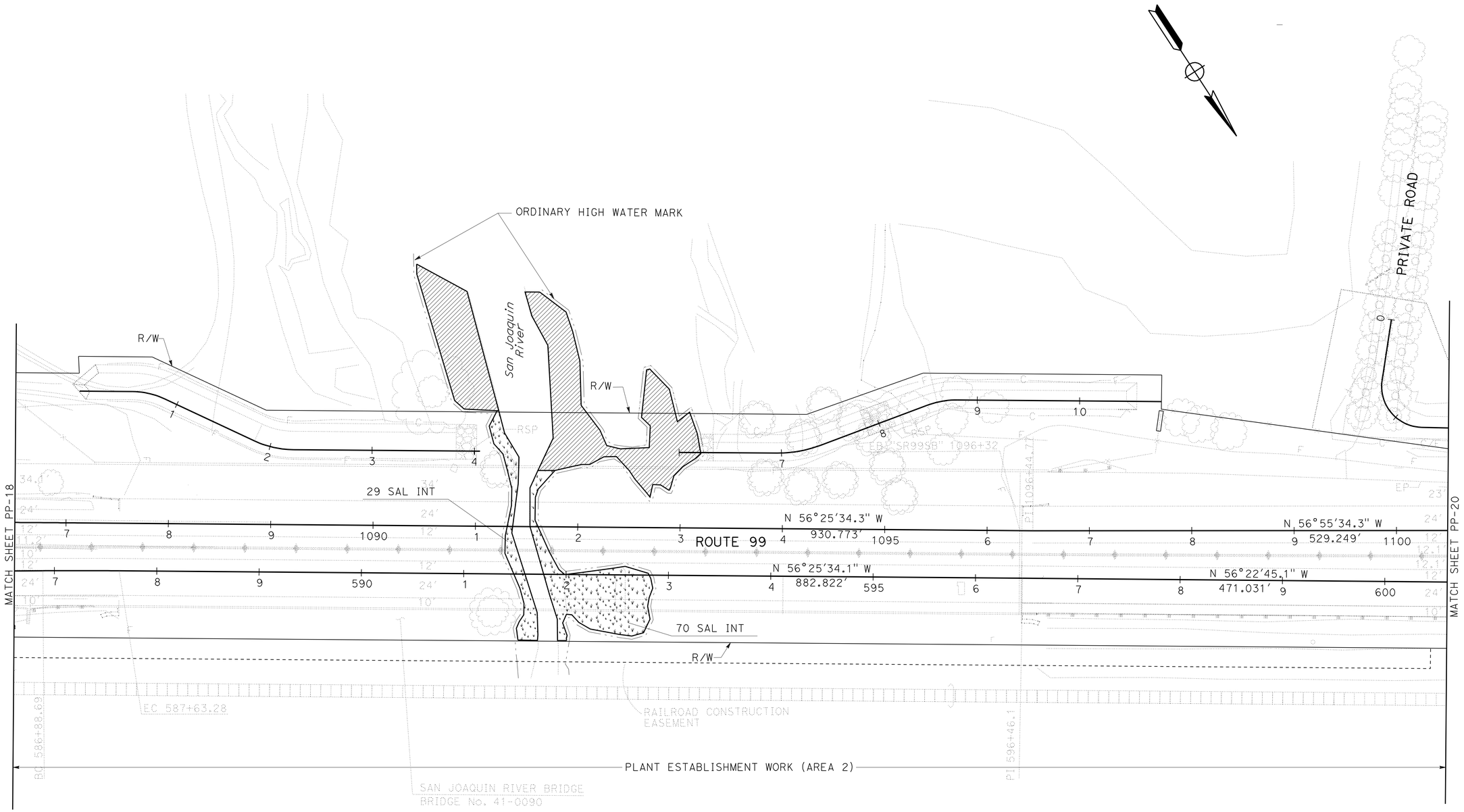

PLANTING PLAN

SCALE: 1" = 50'

PP-19

APPROVED FOR PLANTING WORK ONLY

STATE OF CALIFORNIA - DEPARTMENT OF TRANSPORTATION
Caltrans® LANDSCAPE ARCHITECTURE

SENIOR LANDSCAPE ARCHITECT: BRAD COLE
CALCULATED-DESIGNED BY: MICHAEL MILLS
CHECKED BY: CHARLES LA RUE
REVISED BY
DATE REVISED

LAST REVISION 12-20-11
DATE PLOTTED => 04-APR-2012
TIME PLOTTED => 09:47

Dist	COUNTY	ROUTE	POST MILES TOTAL PROJECT	SHEET No.	TOTAL SHEETS
06	Fre,Mad	99	26.7/R31.6, R0.0/R1.6	219	393

Michael W. Mills
LICENSED LANDSCAPE ARCHITECT

4-2-12
PLANS APPROVAL DATE

LICENSED LANDSCAPE ARCHITECT
MICHAEL W. MILLS No. 4178
Expiration Date 11/30/12
Renewal Date 01/06/12
Date
STATE OF CALIFORNIA

THE STATE OF CALIFORNIA OR ITS OFFICERS OR AGENTS SHALL NOT BE RESPONSIBLE FOR THE ACCURACY OR COMPLETENESS OF SCANNED COPIES OF THIS PLAN SHEET.

NOTE:

FOR ACCURATE RIGHT OF WAY DATA, CONTACT RIGHT OF WAY ENGINEERING AT THE DISTRICT OFFICE.

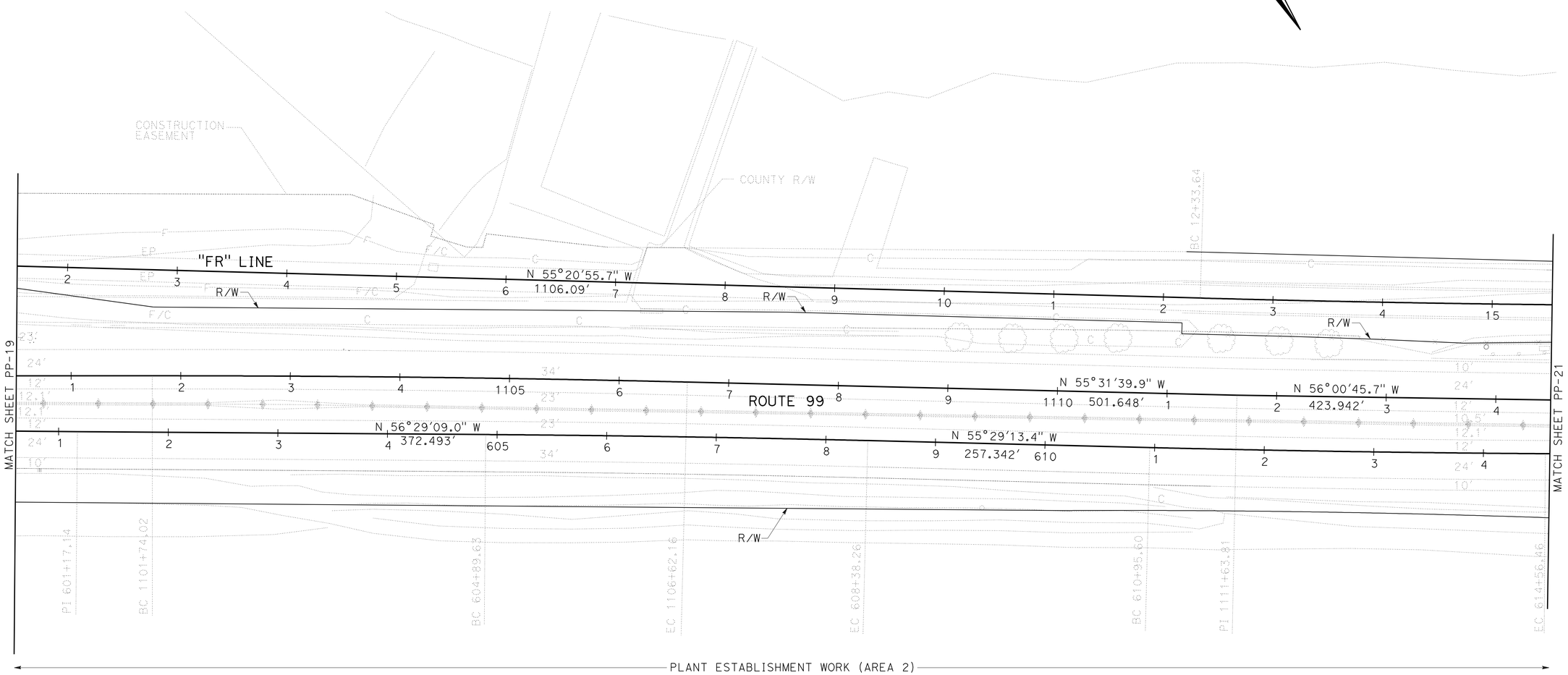

PLANTING PLAN

SCALE: 1" = 50'

PP-20

APPROVED FOR PLANTING WORK ONLY

STATE OF CALIFORNIA - DEPARTMENT OF TRANSPORTATION
Caltrans® LANDSCAPE ARCHITECTURE

SENIOR LANDSCAPE ARCHITECT: BRAD COLE
CALCULATED-DESIGNED BY: MICHAEL MILLS
CHECKED BY: CHARLES LA RUE
REVISED BY
DATE REVISED

LAST REVISION 12-20-11
DATE PLOTTED => 04-APR-2012
TIME PLOTTED => 09:47

Dist	COUNTY	ROUTE	POST MILES TOTAL PROJECT	SHEET No.	TOTAL SHEETS
06	Fre,Mad	99	26.7/R31.6, R0.0/R1.6	220	393

Michael W. Mills
LICENSED LANDSCAPE ARCHITECT

4-2-12
PLANS APPROVAL DATE

LICENSED LANDSCAPE ARCHITECT
MICHAEL W. MILLS No. 4178
Expiration Date 11/30/12
Renewal Date 01/06/12
Date
STATE OF CALIFORNIA

THE STATE OF CALIFORNIA OR ITS OFFICERS OR AGENTS SHALL NOT BE RESPONSIBLE FOR THE ACCURACY OR COMPLETENESS OF SCANNED COPIES OF THIS PLAN SHEET.

NOTE:

FOR ACCURATE RIGHT OF WAY DATA, CONTACT RIGHT OF WAY ENGINEERING AT THE DISTRICT OFFICE.

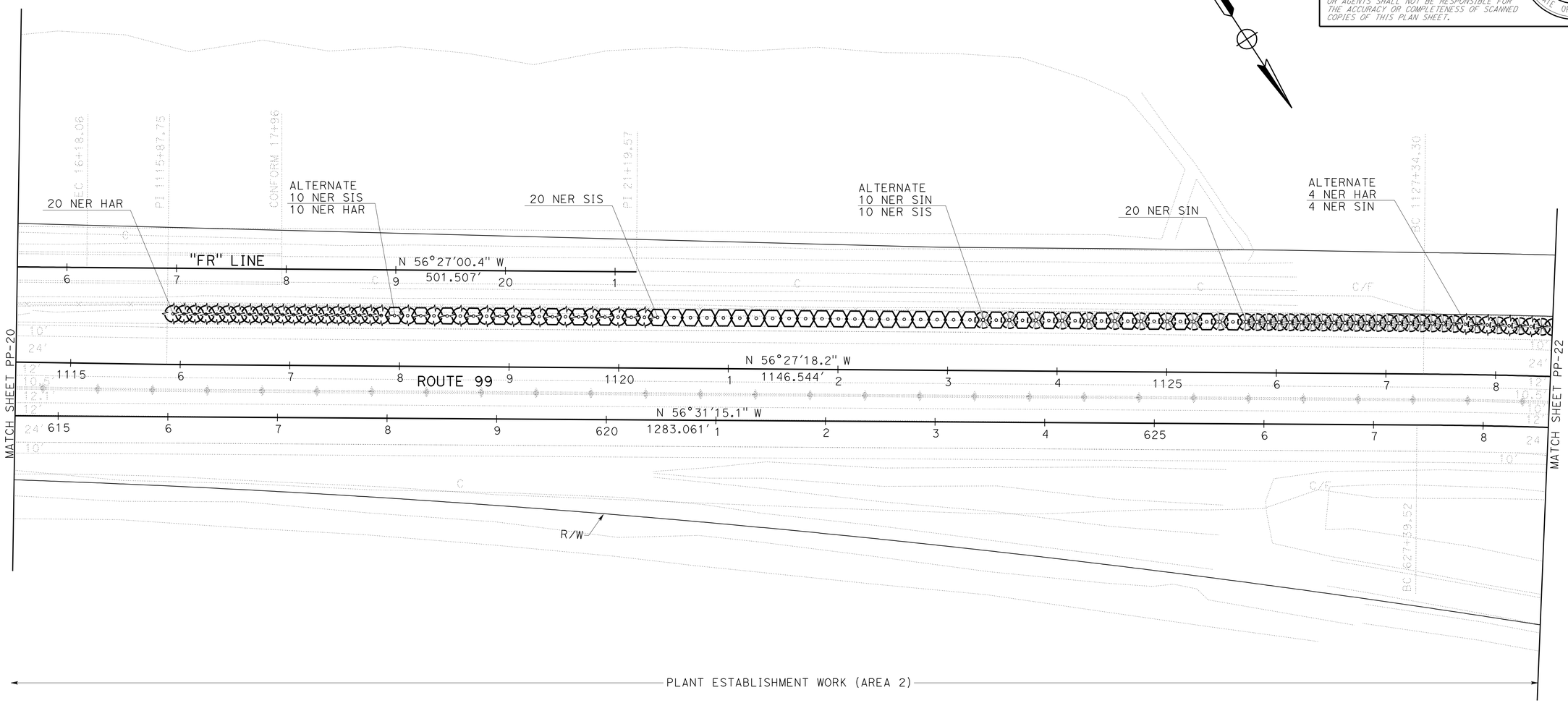

PLANTING PLAN

SCALE: 1" = 50' **PP-21**

APPROVED FOR PLANTING WORK ONLY

STATE OF CALIFORNIA - DEPARTMENT OF TRANSPORTATION
Caltrans® LANDSCAPE ARCHITECTURE

SENIOR LANDSCAPE ARCHITECT: BRAD COLE
CALCULATED-DESIGNED BY: MICHAEL MILLS
CHECKED BY: CHARLES LA RUE
REVISED BY
DATE REVISED

LAST REVISION 12-20-11
DATE PLOTTED => 04-APR-2012
TIME PLOTTED => 09:47

Dist	COUNTY	ROUTE	POST MILES TOTAL PROJECT	SHEET No.	TOTAL SHEETS
06	Fre,Mad	99	26.7/R31.6, R0.0/R1.6	221	393

Michael W. Mills
LICENSED LANDSCAPE ARCHITECT

4-2-12
PLANS APPROVAL DATE

LICENSED LANDSCAPE ARCHITECT
MICHAEL W. MILLS No. 4178
Expiration Date
11/30/12
Renewal Date
01/06/12
Date
STATE OF CALIFORNIA

THE STATE OF CALIFORNIA OR ITS OFFICERS OR AGENTS SHALL NOT BE RESPONSIBLE FOR THE ACCURACY OR COMPLETENESS OF SCANNED COPIES OF THIS PLAN SHEET.

NOTE:

FOR ACCURATE RIGHT OF WAY DATA, CONTACT RIGHT OF WAY ENGINEERING AT THE DISTRICT OFFICE.

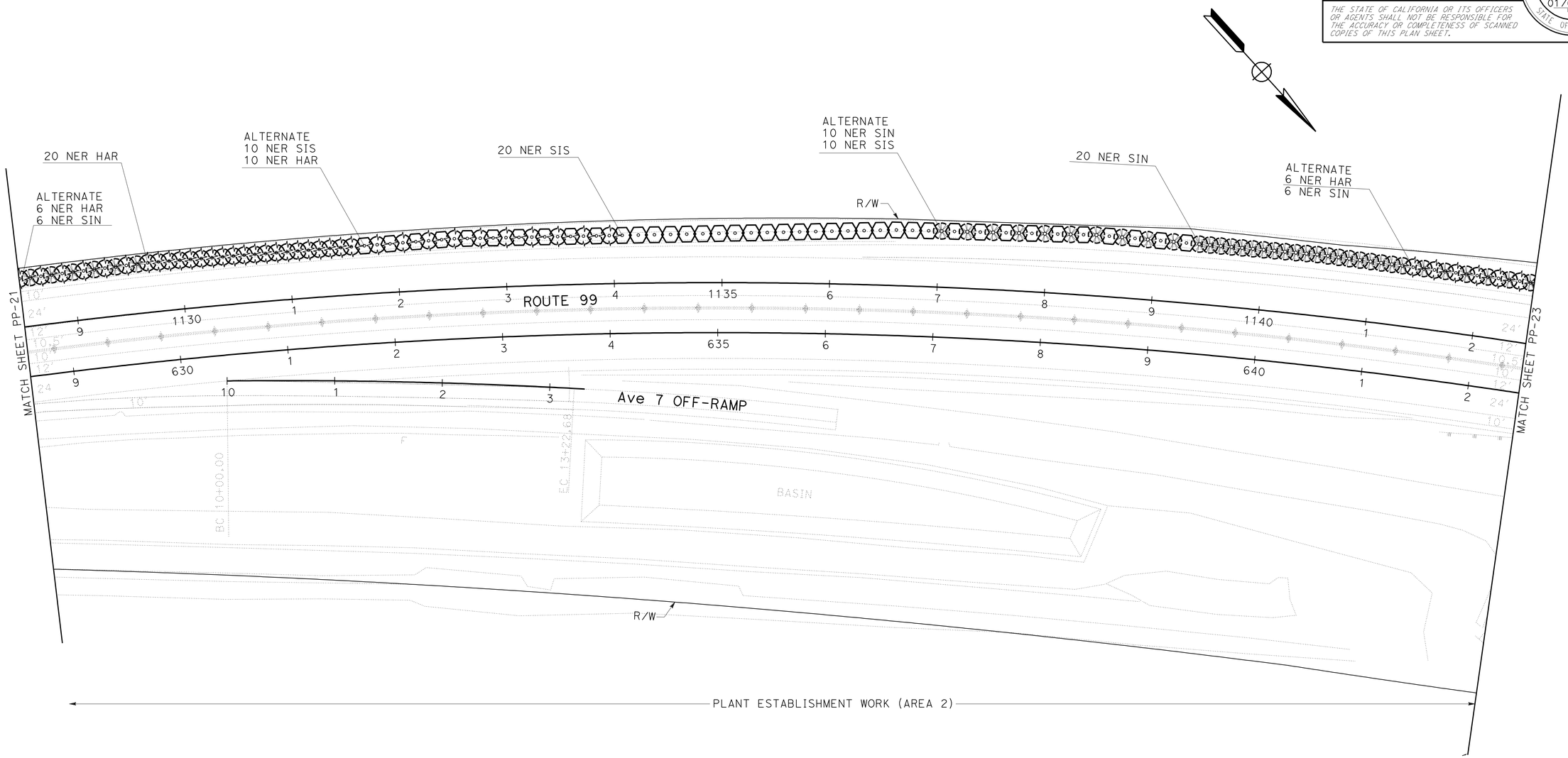

PLANTING PLAN

SCALE: 1" = 50'

PP-22

APPROVED FOR PLANTING WORK ONLY

STATE OF CALIFORNIA - DEPARTMENT OF TRANSPORTATION
Caltrans® LANDSCAPE ARCHITECTURE

SENIOR LANDSCAPE ARCHITECT: BRAD COLE

CALCULATED-DESIGNED BY: MICHAEL MILLS
CHECKED BY: CHARLES LA RUE

REVISED BY
DATE REVISED

LAST REVISION 12-20-11
DATE PLOTTED => 04-APR-2012
TIME PLOTTED => 09:47

Dist	COUNTY	ROUTE	POST MILES TOTAL PROJECT	SHEET No.	TOTAL SHEETS
06	Fre,Mad	99	26.7/R31.6, R0.0/R1.6	222	393

Michael W. Mills
LICENSED LANDSCAPE ARCHITECT

4-2-12
PLANS APPROVAL DATE

LICENSED LANDSCAPE ARCHITECT
MICHAEL W. MILLS No. 4178
Expiration Date
11/30/12
Renewal Date
01/06/12
Date
STATE OF CALIFORNIA

THE STATE OF CALIFORNIA OR ITS OFFICERS OR AGENTS SHALL NOT BE RESPONSIBLE FOR THE ACCURACY OR COMPLETENESS OF SCANNED COPIES OF THIS PLAN SHEET.

NOTE:

FOR ACCURATE RIGHT OF WAY DATA, CONTACT RIGHT OF WAY ENGINEERING AT THE DISTRICT OFFICE.

PLANTING PLAN

SCALE: 1" = 50' **PP-23**

APPROVED FOR PLANTING WORK ONLY

STATE OF CALIFORNIA - DEPARTMENT OF TRANSPORTATION
Caltrans® LANDSCAPE ARCHITECTURE

SENIOR LANDSCAPE ARCHITECT: BRAD COLE
CALCULATED-DESIGNED BY: MICHAEL MILLS
CHECKED BY: CHARLES LA RUE
REVISED BY
DATE REVISED

LAST REVISION 12-20-11
DATE PLOTTED => 04-APR-2012
TIME PLOTTED => 09:47

Dist	COUNTY	ROUTE	POST MILES TOTAL PROJECT	SHEET No.	TOTAL SHEETS
06	Fre,Mad	99	26.7/R31.6, R0.0/R1.6	223	393

LICENSED LANDSCAPE ARCHITECT

4-2-12
PLANS APPROVAL DATE

LICENSED LANDSCAPE ARCHITECT
MICHAEL W. MILLS No. 4178
Signature
11/30/12
Renewal Date
01/06/12
Date
STATE OF CALIFORNIA

THE STATE OF CALIFORNIA OR ITS OFFICERS OR AGENTS SHALL NOT BE RESPONSIBLE FOR THE ACCURACY OR COMPLETENESS OF SCANNED COPIES OF THIS PLAN SHEET.

NOTE:

FOR ACCURATE RIGHT OF WAY DATA, CONTACT RIGHT OF WAY ENGINEERING AT THE DISTRICT OFFICE.

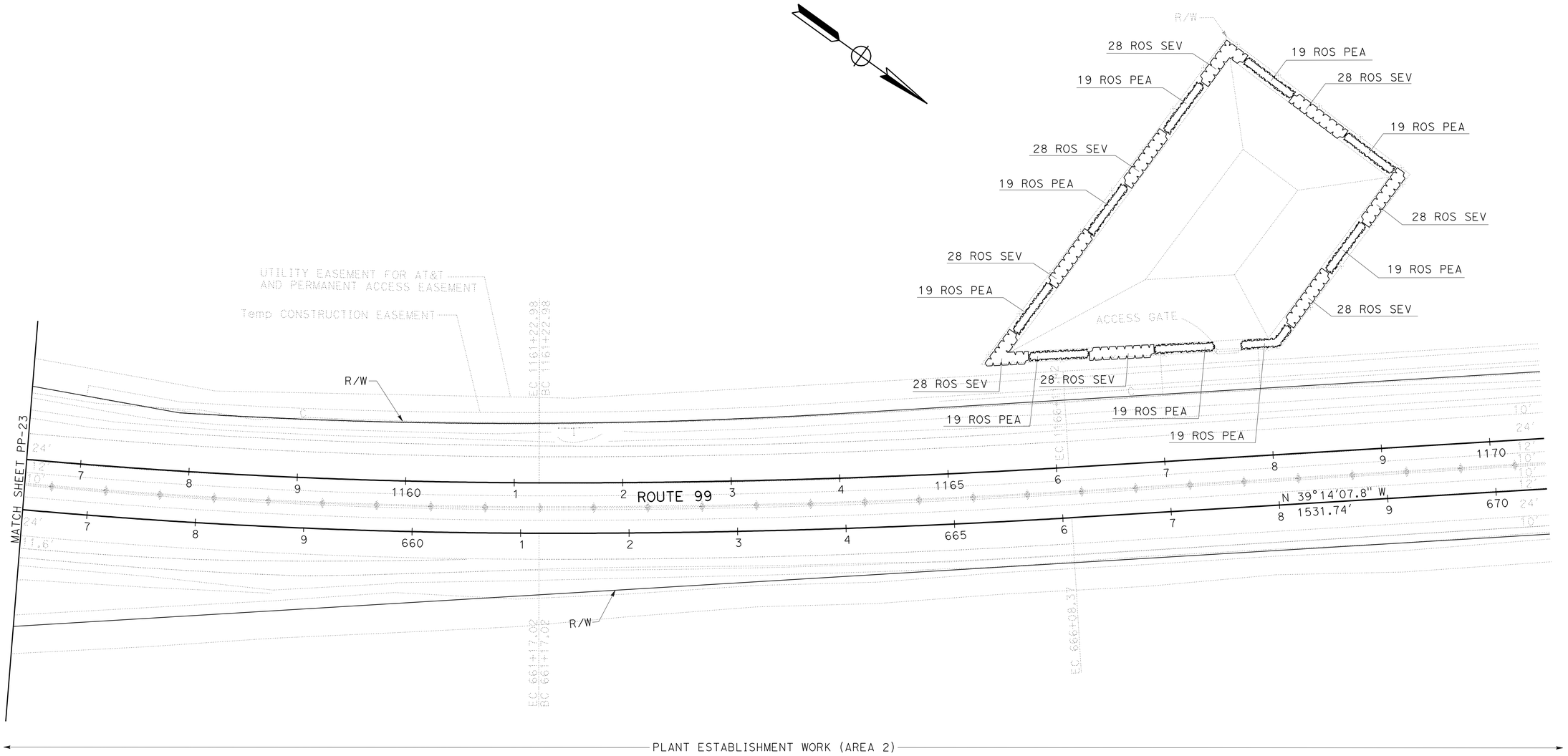

PLANTING PLAN

SCALE: 1" = 50' **PP-24**

APPROVED FOR PLANTING WORK ONLY

STATE OF CALIFORNIA - DEPARTMENT OF TRANSPORTATION
Caltrans® LANDSCAPE ARCHITECTURE

SENIOR LANDSCAPE ARCHITECT: BRAD COLE
CALCULATED-DESIGNED BY: MICHAEL MILLS
CHECKED BY: CHARLES LA RUE
REVISED BY
DATE REVISED

LAST REVISION 12-20-11
DATE PLOTTED => 04-APR-2012
TIME PLOTTED => 09:48

Dist	COUNTY	ROUTE	POST MILES TOTAL PROJECT	SHEET No.	TOTAL SHEETS
06	Fre,Mad	99	26.7/R31.6, R0.0/R1.6	224	393

LICENSED LANDSCAPE ARCHITECT

4-2-12
PLANS APPROVAL DATE

LICENSED LANDSCAPE ARCHITECT
MICHAEL W. MILLS No. 4178
Signature
11/30/12
Renewal Date
01/06/12
Date
STATE OF CALIFORNIA

THE STATE OF CALIFORNIA OR ITS OFFICERS OR AGENTS SHALL NOT BE RESPONSIBLE FOR THE ACCURACY OR COMPLETENESS OF SCANNED COPIES OF THIS PLAN SHEET.

NOTE:

FOR ACCURATE RIGHT OF WAY DATA, CONTACT
RIGHT OF WAY ENGINEERING AT THE DISTRICT OFFICE.

LEGEND:

(IX-1) EXISTING IRRIGATION CROSSOVER

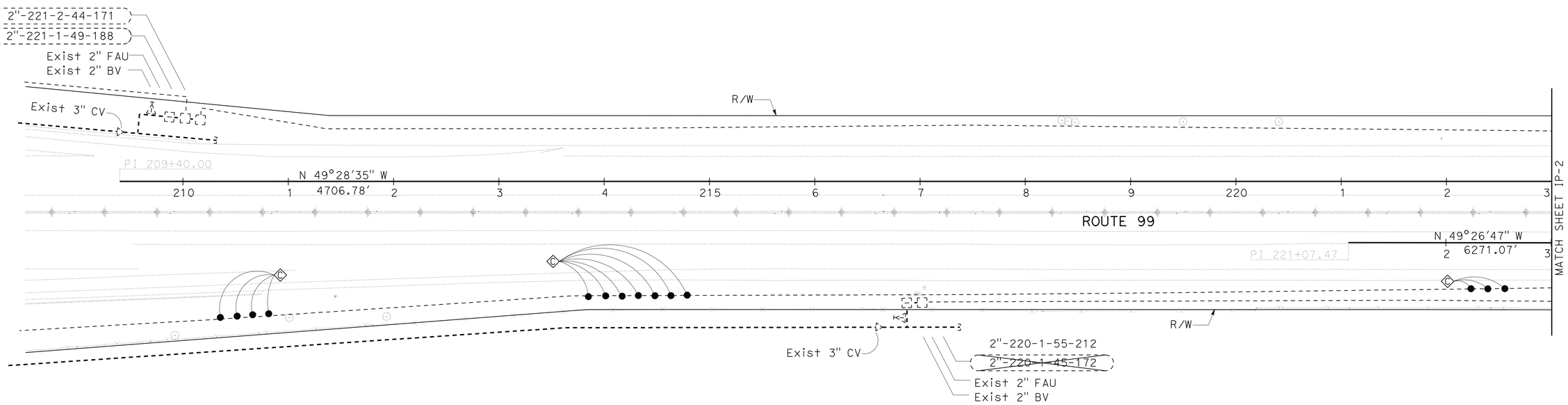

IRRIGATION PLAN

SCALE: 1" = 50'

IP-1

APPROVED FOR IRRIGATION WORK ONLY

REVISED BY | DATE REVISED
MICHAEL MILLS | CHARLES LA RUE
CALCULATED-DESIGNED BY | CHECKED BY
SENIOR LANDSCAPE ARCHITECT | BRAD COLE
STATE OF CALIFORNIA - DEPARTMENT OF TRANSPORTATION
Caltrans® LANDSCAPE ARCHITECTURE

LAST REVISION 12-20-11
DATE PLOTTED => 04-APR-2012
TIME PLOTTED => 10:20

Dist	COUNTY	ROUTE	POST MILES TOTAL PROJECT	SHEET No.	TOTAL SHEETS
06	Fre,Mad	99	26.7/R31.6, R0.0/R1.6	225	393

LICENSED LANDSCAPE ARCHITECT

4-2-12
PLANS APPROVAL DATE

LICENSED LANDSCAPE ARCHITECT
MICHAEL W. MILLS No. 4178
Expiration Date 11/30/12
Renewal Date 01/06/12
Date
STATE OF CALIFORNIA

THE STATE OF CALIFORNIA OR ITS OFFICERS OR AGENTS SHALL NOT BE RESPONSIBLE FOR THE ACCURACY OR COMPLETENESS OF SCANNED COPIES OF THIS PLAN SHEET.

NOTE:

FOR ACCURATE RIGHT OF WAY DATA, CONTACT RIGHT OF WAY ENGINEERING AT THE DISTRICT OFFICE.

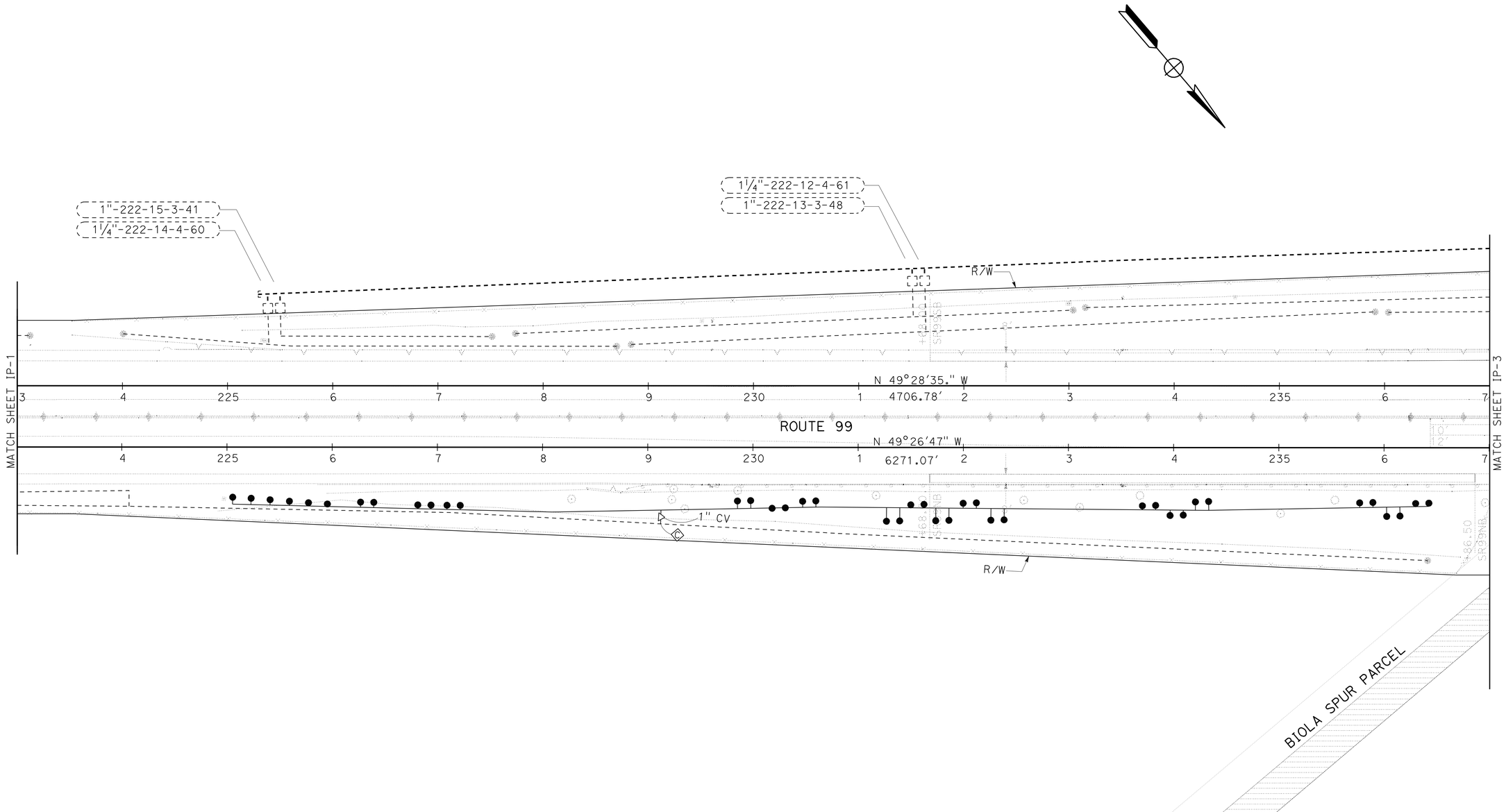

IRRIGATION PLAN

SCALE: 1" = 50'

IP-2

APPROVED FOR IRRIGATION WORK ONLY

STATE OF CALIFORNIA - DEPARTMENT OF TRANSPORTATION
Caltrans® LANDSCAPE ARCHITECTURE

SENIOR LANDSCAPE ARCHITECT: BRAD COLE

CALCULATED-DESIGNED BY: MICHAEL MILLS
CHECKED BY: CHARLES LA RUE

REVISED BY
DATE REVISED

LAST REVISION 12-20-11
DATE PLOTTED => 04-APR-2012
TIME PLOTTED => 10:20

Dist	COUNTY	ROUTE	POST MILES TOTAL PROJECT	SHEET No.	TOTAL SHEETS
06	Fre,Mad	99	26.7/R31.6, R0.0/R1.6	226	393

Michael W. Mills
LICENSED LANDSCAPE ARCHITECT

4-2-12
PLANS APPROVAL DATE

LICENSED LANDSCAPE ARCHITECT
MICHAEL W. MILLS No. 4178
Expiration Date
11/30/12
Renewal Date
01/06/12
Date
STATE OF CALIFORNIA

THE STATE OF CALIFORNIA OR ITS OFFICERS OR AGENTS SHALL NOT BE RESPONSIBLE FOR THE ACCURACY OR COMPLETENESS OF SCANNED COPIES OF THIS PLAN SHEET.

NOTE:

FOR ACCURATE RIGHT OF WAY DATA, CONTACT RIGHT OF WAY ENGINEERING AT THE DISTRICT OFFICE.

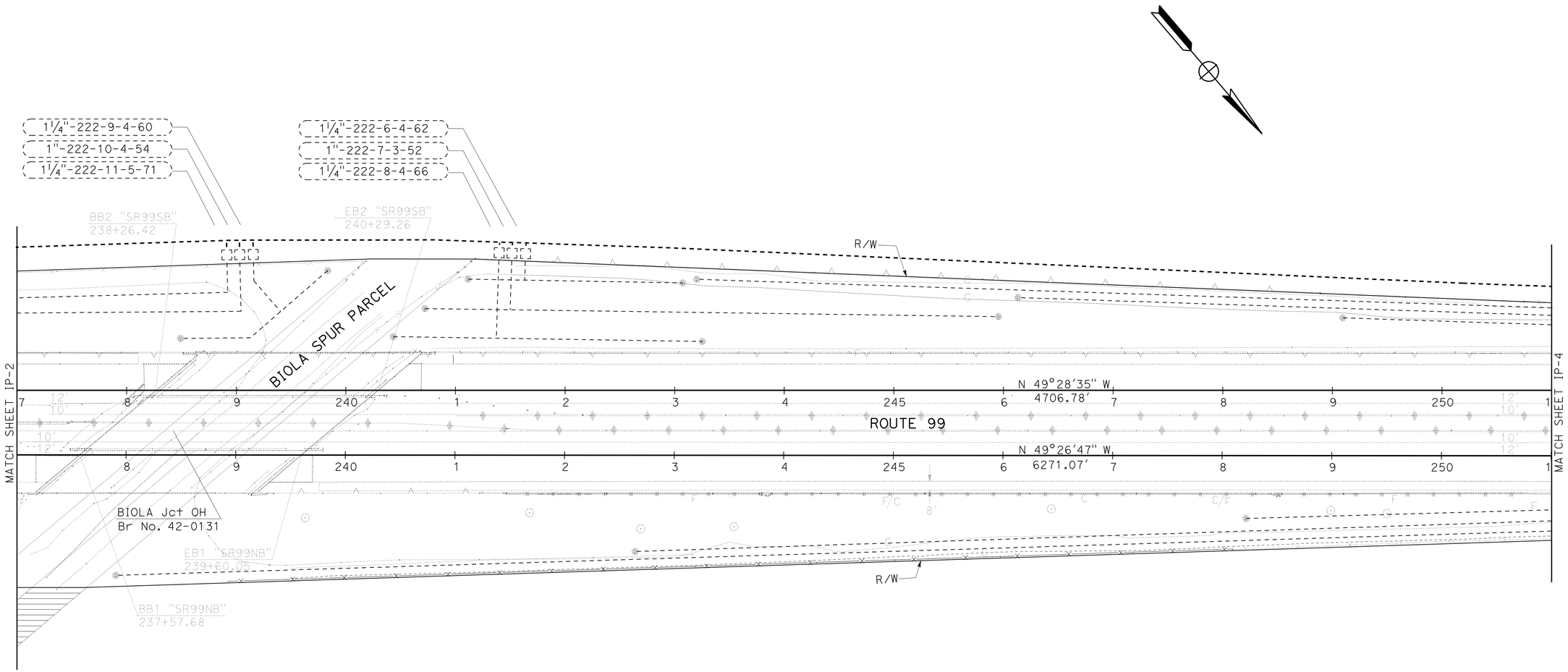

IRRIGATION PLAN

SCALE: 1" = 50'

IP-3

APPROVED FOR IRRIGATION WORK ONLY

STATE OF CALIFORNIA - DEPARTMENT OF TRANSPORTATION
Caltrans® LANDSCAPE ARCHITECTURE

SENIOR LANDSCAPE ARCHITECT: BRAD COLE

CALCULATED-DESIGNED BY: MICHAEL MILLS
CHECKED BY: CHARLES LA RUE

REVISED BY
DATE REVISED

LAST REVISION 12-20-11
DATE PLOTTED => 04-APR-2012
TIME PLOTTED => 10:20

Dist	COUNTY	ROUTE	POST MILES TOTAL PROJECT	SHEET No.	TOTAL SHEETS
06	Fre,Mad	99	26.7/R31.6, R0.0/R1.6	227	393

Michael W. Mills
LICENSED LANDSCAPE ARCHITECT

4-2-12
PLANS APPROVAL DATE

LICENSED LANDSCAPE ARCHITECT
MICHAEL W. MILLS No. 4178
Expiration Date 11/30/12
Renewal Date 01/06/12
Date
STATE OF CALIFORNIA

THE STATE OF CALIFORNIA OR ITS OFFICERS OR AGENTS SHALL NOT BE RESPONSIBLE FOR THE ACCURACY OR COMPLETENESS OF SCANNED COPIES OF THIS PLAN SHEET.

NOTE:

FOR ACCURATE RIGHT OF WAY DATA, CONTACT RIGHT OF WAY ENGINEERING AT THE DISTRICT OFFICE.

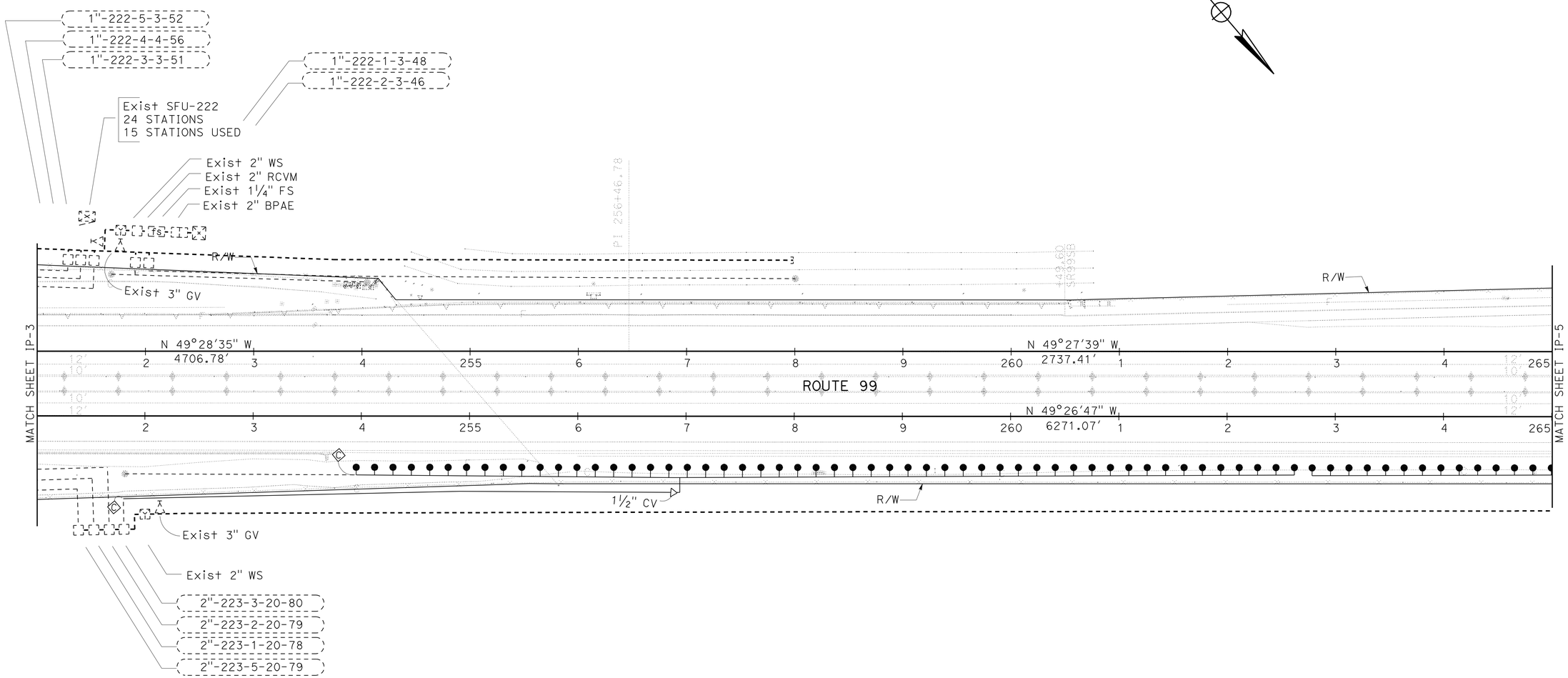

IRRIGATION PLAN

SCALE: 1" = 50'

IP-4

APPROVED FOR IRRIGATION WORK ONLY

STATE OF CALIFORNIA - DEPARTMENT OF TRANSPORTATION
Caltrans® LANDSCAPE ARCHITECTURE

SENIOR LANDSCAPE ARCHITECT: BRAD COLE
CALCULATED-DESIGNED BY: MICHAEL MILLS
CHECKED BY: CHARLES LA RUE
REVISED BY / DATE REVISED

LAST REVISION 12-20-11
DATE PLOTTED => 04-APR-2012
TIME PLOTTED => 10:20

Dist	COUNTY	ROUTE	POST MILES TOTAL PROJECT	SHEET No.	TOTAL SHEETS
06	Fre,Mad	99	26.7/R31.6, R0.0/R1.6	228	393

Michael W. Mills
LICENSED LANDSCAPE ARCHITECT

4-2-12
PLANS APPROVAL DATE

LICENSED LANDSCAPE ARCHITECT
MICHAEL W. MILLS No. 4178
Signature
11/30/12
Renewal Date
01/06/12
Date
STATE OF CALIFORNIA

THE STATE OF CALIFORNIA OR ITS OFFICERS OR AGENTS SHALL NOT BE RESPONSIBLE FOR THE ACCURACY OR COMPLETENESS OF SCANNED COPIES OF THIS PLAN SHEET.

NOTE:

FOR ACCURATE RIGHT OF WAY DATA, CONTACT RIGHT OF WAY ENGINEERING AT THE DISTRICT OFFICE.

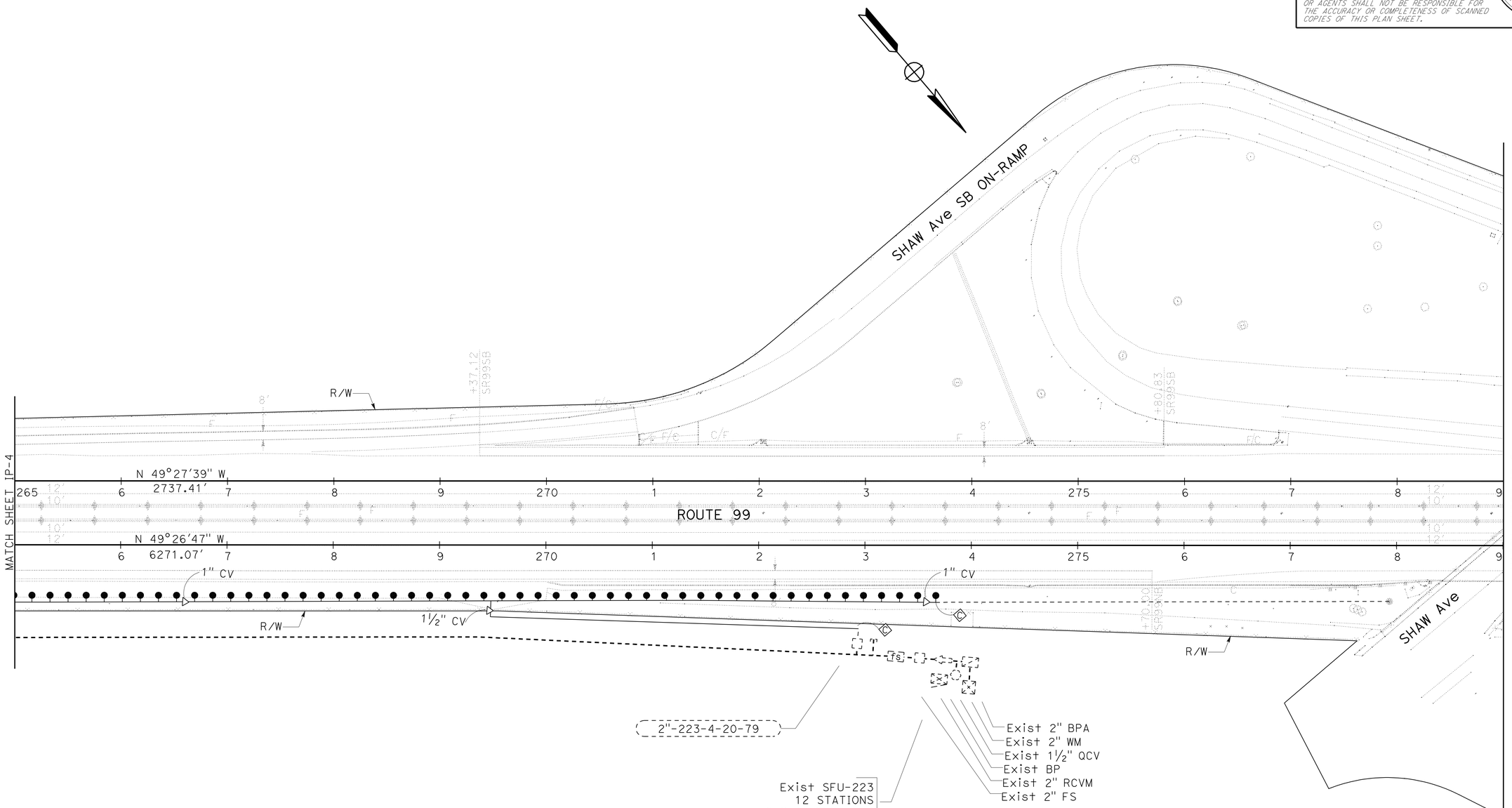

IRRIGATION PLAN

SCALE: 1" = 50'

IP-5

APPROVED FOR IRRIGATION WORK ONLY

STATE OF CALIFORNIA - DEPARTMENT OF TRANSPORTATION
Caltrans LANDSCAPE ARCHITECTURE

SENIOR LANDSCAPE ARCHITECT: BRAD COLE

CALCULATED-DESIGNED BY: MICHAEL MILLS
CHECKED BY: CHARLES LA RUE

REVISED BY
DATE REVISED

LAST REVISION 12-20-11
DATE PLOTTED => 04-APR-2012
TIME PLOTTED => 10:20

Dist	COUNTY	ROUTE	POST MILES TOTAL PROJECT	SHEET No.	TOTAL SHEETS
06	Fre,Mad	99	26.7/R31.6, R0.0/R1.6	229	393

LICENSED LANDSCAPE ARCHITECT

4-2-12
PLANS APPROVAL DATE

LICENSED LANDSCAPE ARCHITECT
MICHAEL W. MILLS No. 4178
Expiration Date
11/30/12
Renewal Date
01/06/12
Date
STATE OF CALIFORNIA

THE STATE OF CALIFORNIA OR ITS OFFICERS OR AGENTS SHALL NOT BE RESPONSIBLE FOR THE ACCURACY OR COMPLETENESS OF SCANNED COPIES OF THIS PLAN SHEET.

NOTE:

FOR ACCURATE RIGHT OF WAY DATA, CONTACT
RIGHT OF WAY ENGINEERING AT THE DISTRICT OFFICE.

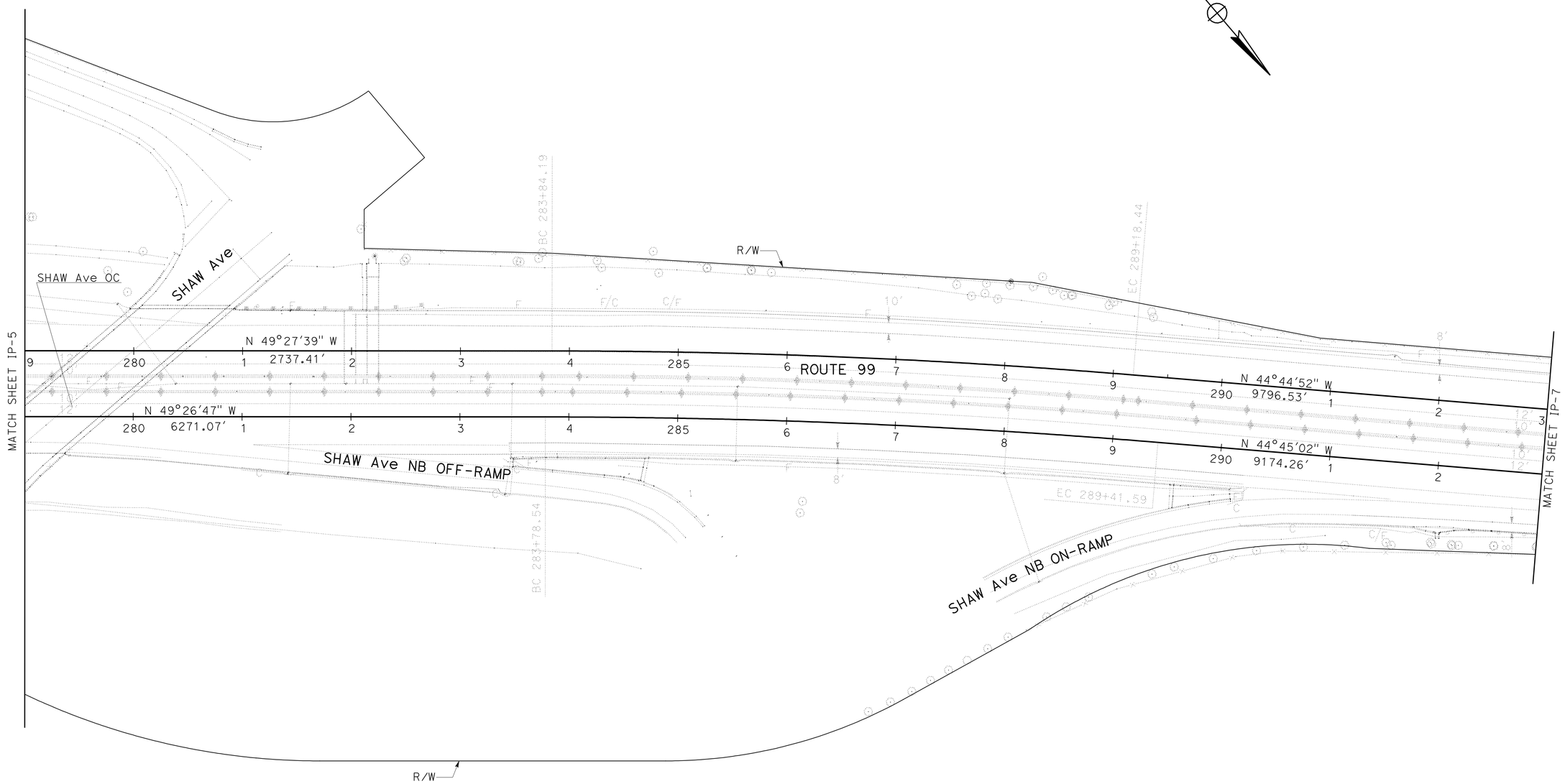

NO IRRIGATION WORK ON THIS SHEET

IRRIGATION PLAN

SCALE: 1" = 50'

IP-6

APPROVED FOR IRRIGATION WORK ONLY

STATE OF CALIFORNIA - DEPARTMENT OF TRANSPORTATION
Caltrans LANDSCAPE ARCHITECTURE

SENIOR LANDSCAPE ARCHITECT: BRAD COLE
CALCULATED-DESIGNED BY: MICHAEL MILLS
CHECKED BY: CHARLES LA RUE
REVISED BY
DATE REVISED

LAST REVISION 12-20-11
DATE PLOTTED => 04-APR-2012
TIME PLOTTED => 10:20

Dist	COUNTY	ROUTE	POST MILES TOTAL PROJECT	SHEET No.	TOTAL SHEETS
06	Fre,Mad	99	26.7/R31.6, R0.0/R1.6	230	393

Michael W. Mills
LICENSED LANDSCAPE ARCHITECT

4-2-12
PLANS APPROVAL DATE

LICENSED LANDSCAPE ARCHITECT
MICHAEL W. MILLS No. 4178
Expiration Date 11/30/12
Renewal Date 01/06/12
Date
STATE OF CALIFORNIA

THE STATE OF CALIFORNIA OR ITS OFFICERS OR AGENTS SHALL NOT BE RESPONSIBLE FOR THE ACCURACY OR COMPLETENESS OF SCANNED COPIES OF THIS PLAN SHEET.

NOTE:

FOR ACCURATE RIGHT OF WAY DATA, CONTACT RIGHT OF WAY ENGINEERING AT THE DISTRICT OFFICE.

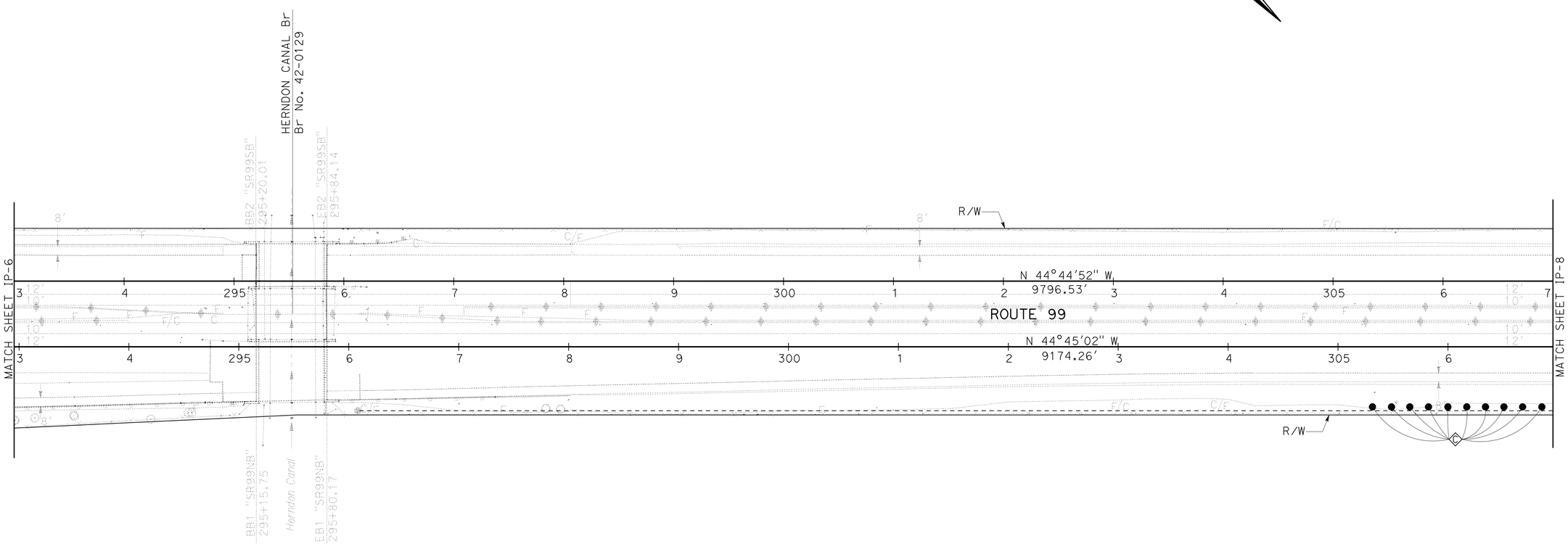

IRRIGATION PLAN

SCALE: 1" = 50'

IP-7

APPROVED FOR IRRIGATION WORK ONLY

STATE OF CALIFORNIA - DEPARTMENT OF TRANSPORTATION
Caltrans® LANDSCAPE ARCHITECTURE

SENIOR LANDSCAPE ARCHITECT: BRAD COLE
CALCULATED-DESIGNED BY: MICHAEL MILLS
CHECKED BY: CHARLES LA RUE
REVISED BY
DATE REVISED

LAST REVISION 12-20-11
DATE PLOTTED => 04-APR-2012
TIME PLOTTED => 10:20

Dist	COUNTY	ROUTE	POST MILES TOTAL PROJECT	SHEET No.	TOTAL SHEETS
06	Fre,Mad	99	26.7/R31.6, R0.0/R1.6	231	393

LICENSED LANDSCAPE ARCHITECT

4-2-12
PLANS APPROVAL DATE

LICENSED LANDSCAPE ARCHITECT
MICHAEL W. MILLS No. 4178
Signature
11/30/12
Renewal Date
01/06/12
Date
STATE OF CALIFORNIA

THE STATE OF CALIFORNIA OR ITS OFFICERS OR AGENTS SHALL NOT BE RESPONSIBLE FOR THE ACCURACY OR COMPLETENESS OF SCANNED COPIES OF THIS PLAN SHEET.

NOTE:

FOR ACCURATE RIGHT OF WAY DATA, CONTACT
RIGHT OF WAY ENGINEERING AT THE DISTRICT OFFICE.

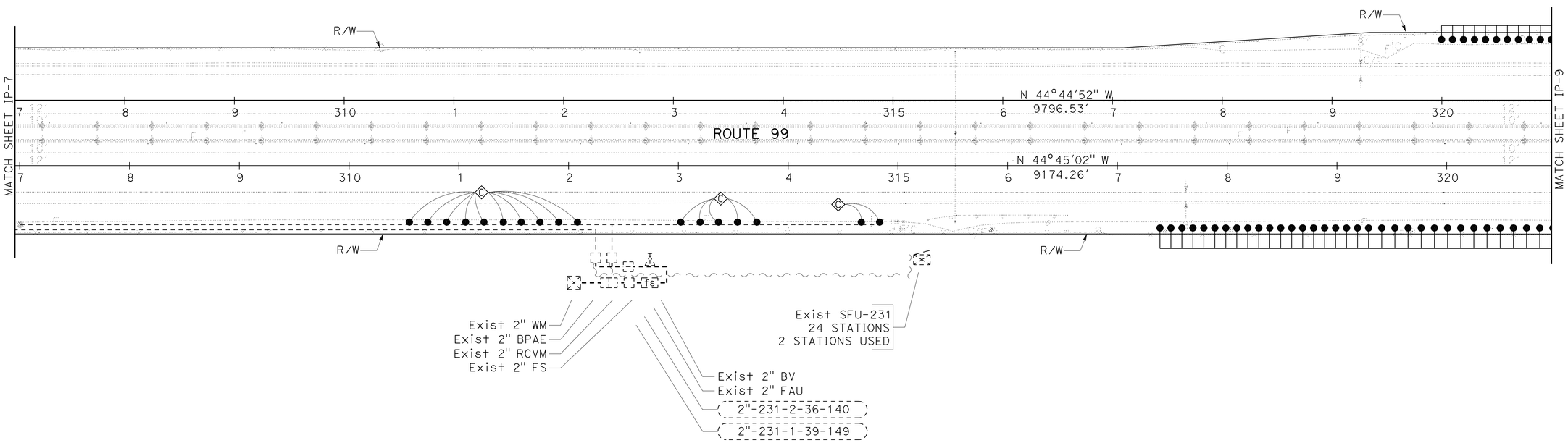

IRRIGATION PLAN

SCALE: 1" = 50'

IP-8

APPROVED FOR IRRIGATION WORK ONLY

STATE OF CALIFORNIA - DEPARTMENT OF TRANSPORTATION
Caltrans® LANDSCAPE ARCHITECTURE

SENIOR LANDSCAPE ARCHITECT: BRAD COLE
CALCULATED-DESIGNED BY: MICHAEL MILLS
CHECKED BY: CHARLES LA RUE
REVISED BY
DATE REVISED

LAST REVISION 12-20-11
DATE PLOTTED => 04-APR-2012
TIME PLOTTED => 10:20

Dist	COUNTY	ROUTE	POST MILES TOTAL PROJECT	SHEET No.	TOTAL SHEETS
06	Fre,Mad	99	26.7/R31.6, R0.0/R1.6	232	393

LICENSED LANDSCAPE ARCHITECT

4-2-12
PLANS APPROVAL DATE

LICENSED LANDSCAPE ARCHITECT
MICHAEL W. MILLS No. 4178
Signature
11/30/12
Renewal Date
01/06/12
Date
STATE OF CALIFORNIA

THE STATE OF CALIFORNIA OR ITS OFFICERS OR AGENTS SHALL NOT BE RESPONSIBLE FOR THE ACCURACY OR COMPLETENESS OF SCANNED COPIES OF THIS PLAN SHEET.

NOTE:

FOR ACCURATE RIGHT OF WAY DATA, CONTACT RIGHT OF WAY ENGINEERING AT THE DISTRICT OFFICE.

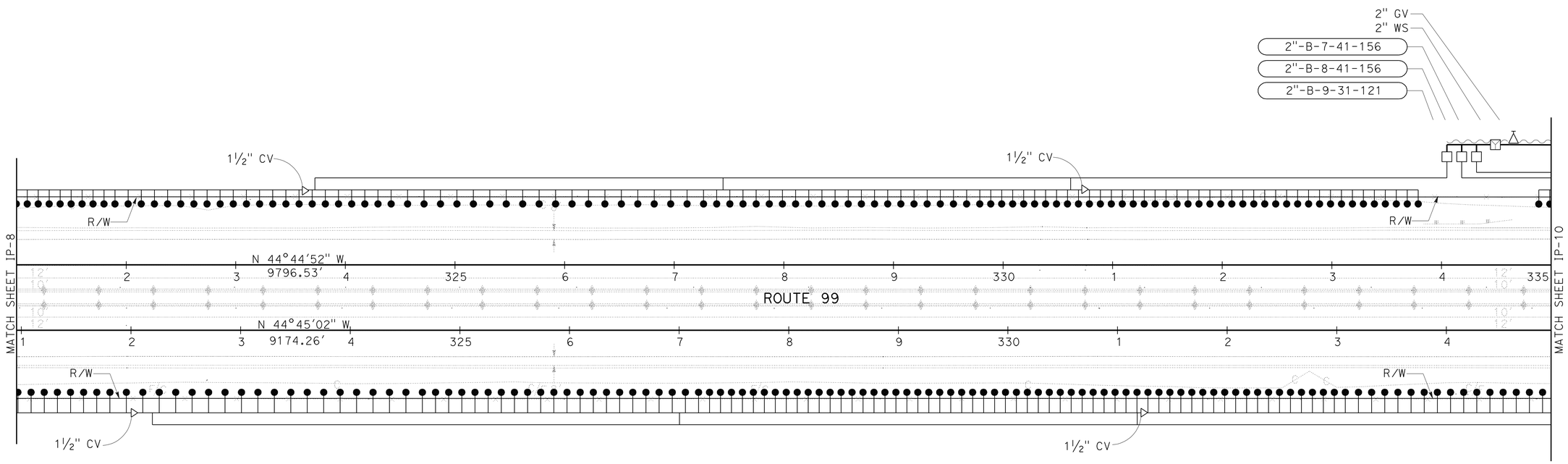

IRRIGATION PLAN

SCALE: 1" = 50'

IP-9

APPROVED FOR IRRIGATION WORK ONLY

STATE OF CALIFORNIA - DEPARTMENT OF TRANSPORTATION
Caltrans® LANDSCAPE ARCHITECTURE

SENIOR LANDSCAPE ARCHITECT: BRAD COLE
CALCULATED-DESIGNED BY: MICHAEL MILLS
CHECKED BY: CHARLES LA RUE
REVISED BY
DATE REVISED

LAST REVISION 12-20-11
DATE PLOTTED => 04-APR-2012
TIME PLOTTED => 10:20

Dist	COUNTY	ROUTE	POST MILES TOTAL PROJECT	SHEET No.	TOTAL SHEETS
06	Fre,Mad	99	26.7/R31.6, R0.0/R1.6	233	393

LICENSED LANDSCAPE ARCHITECT

4-2-12
PLANS APPROVAL DATE

LICENSED LANDSCAPE ARCHITECT
MICHAEL W. MILLS No. 4178
Expiration Date 11/30/12
Renewal Date 01/06/12
Date
STATE OF CALIFORNIA

THE STATE OF CALIFORNIA OR ITS OFFICERS OR AGENTS SHALL NOT BE RESPONSIBLE FOR THE ACCURACY OR COMPLETENESS OF SCANNED COPIES OF THIS PLAN SHEET.

NOTE:

FOR ACCURATE RIGHT OF WAY DATA, CONTACT RIGHT OF WAY ENGINEERING AT THE DISTRICT OFFICE.

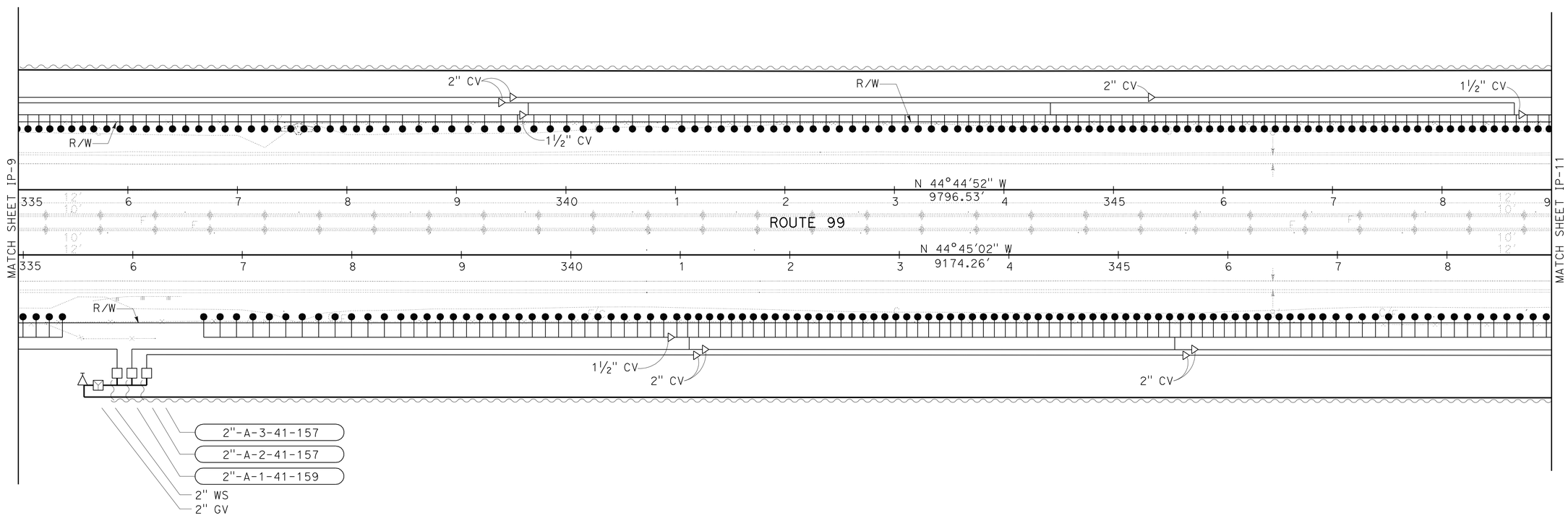

IRRIGATION PLAN

SCALE: 1" = 50'

IP-10

APPROVED FOR IRRIGATION WORK ONLY

STATE OF CALIFORNIA - DEPARTMENT OF TRANSPORTATION
Caltrans LANDSCAPE ARCHITECTURE

SENIOR LANDSCAPE ARCHITECT: BRAD COLE
CALCULATED-DESIGNED BY: MICHAEL MILLS
CHECKED BY: CHARLES LA RUE
REVISED BY
DATE REVISED

LAST REVISION 12-20-11
DATE PLOTTED => 04-APR-2012
TIME PLOTTED => 10:21

Dist	COUNTY	ROUTE	POST MILES TOTAL PROJECT	SHEET No.	TOTAL SHEETS
06	Fre,Mad	99	26.7/R31.6, R0.0/R1.6	234	393

LICENSED LANDSCAPE ARCHITECT

4-2-12
PLANS APPROVAL DATE

LICENSED LANDSCAPE ARCHITECT
MICHAEL W. MILLS No. 4178
Expiration Date 11/30/12
Renewal Date 01/06/12
Date
STATE OF CALIFORNIA

THE STATE OF CALIFORNIA OR ITS OFFICERS OR AGENTS SHALL NOT BE RESPONSIBLE FOR THE ACCURACY OR COMPLETENESS OF SCANNED COPIES OF THIS PLAN SHEET.

NOTE:

FOR ACCURATE RIGHT OF WAY DATA, CONTACT
RIGHT OF WAY ENGINEERING AT THE DISTRICT OFFICE.

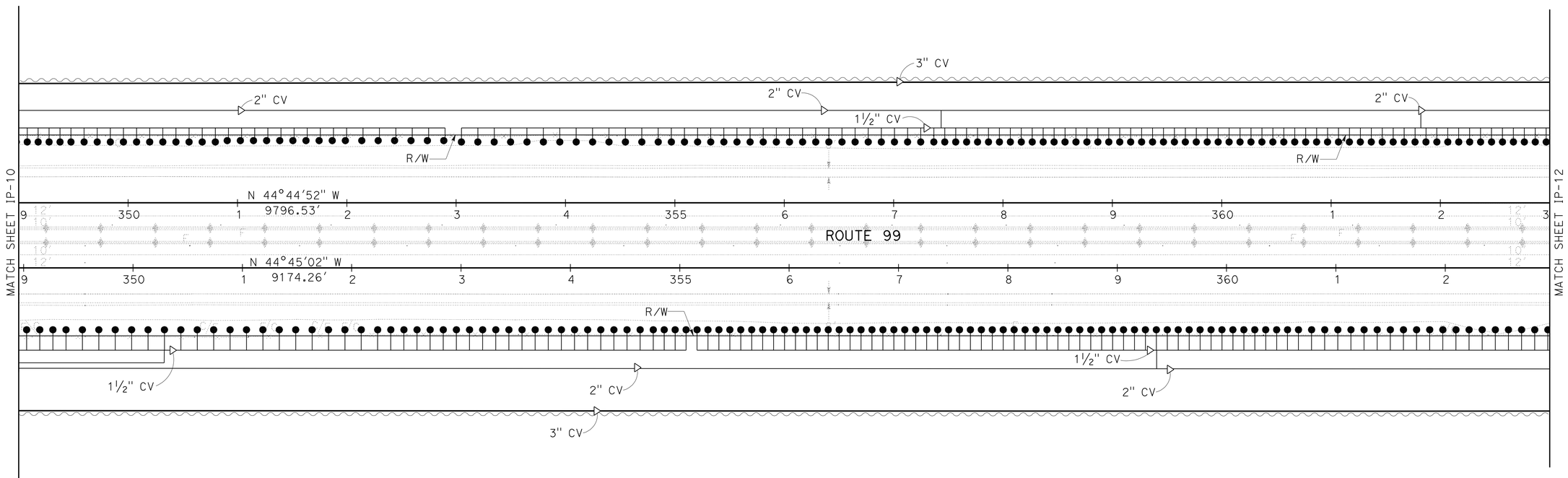

IRRIGATION PLAN

SCALE: 1" = 50'

IP-11

APPROVED FOR IRRIGATION WORK ONLY

STATE OF CALIFORNIA - DEPARTMENT OF TRANSPORTATION
Caltrans® LANDSCAPE ARCHITECTURE

SENIOR LANDSCAPE ARCHITECT: BRAD COLE
CALCULATED-DESIGNED BY: MICHAEL MILLS
CHECKED BY: CHARLES LA RUE
REVISED BY
DATE REVISED

LAST REVISION 12-20-11
DATE PLOTTED => 04-APR-2012
TIME PLOTTED => 10:21

Dist	COUNTY	ROUTE	POST MILES TOTAL PROJECT	SHEET No.	TOTAL SHEETS
06	Fre,Mad	99	26.7/R31.6, R0.0/R1.6	235	393

LICENSED LANDSCAPE ARCHITECT

4-2-12
PLANS APPROVAL DATE

LICENSED LANDSCAPE ARCHITECT
MICHAEL W. MILLS No. 4178
Signature
11/30/12
Renewal Date
01/06/12
Date
STATE OF CALIFORNIA

THE STATE OF CALIFORNIA OR ITS OFFICERS OR AGENTS SHALL NOT BE RESPONSIBLE FOR THE ACCURACY OR COMPLETENESS OF SCANNED COPIES OF THIS PLAN SHEET.

NOTE:

FOR ACCURATE RIGHT OF WAY DATA, CONTACT RIGHT OF WAY ENGINEERING AT THE DISTRICT OFFICE.

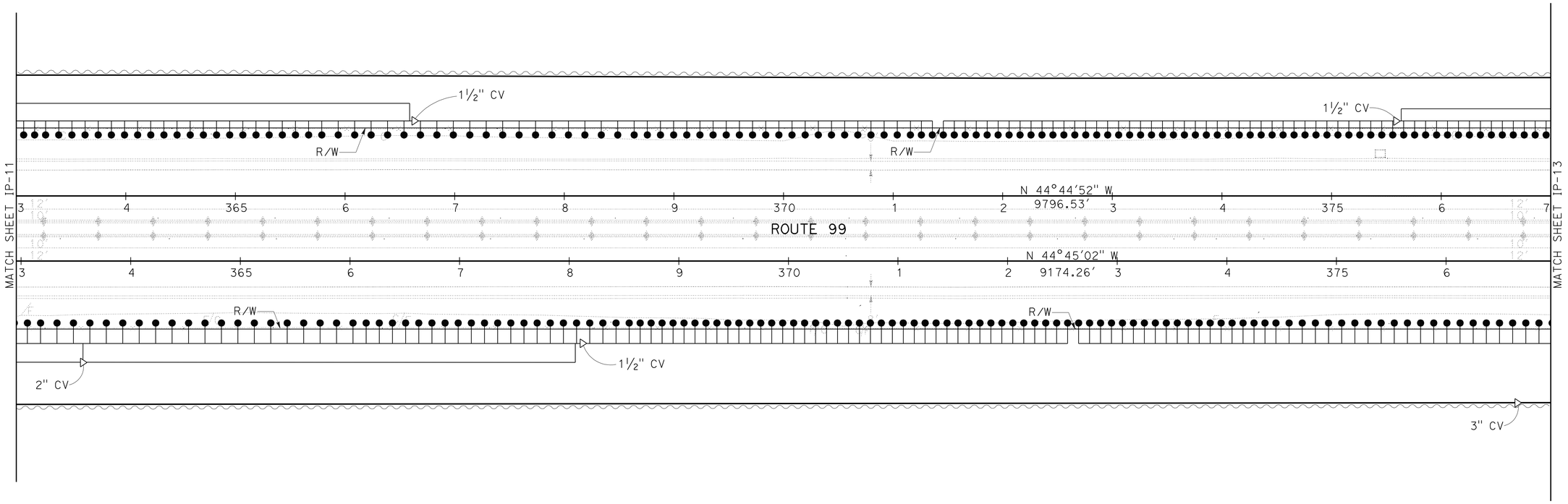

IRRIGATION PLAN

SCALE: 1" = 50'

IP-12

APPROVED FOR IRRIGATION WORK ONLY

MICHAEL MILLS — REVISED BY
CHARLES LA RUE — DATE REVISED
CALCULATED-DESIGNED BY
CHECKED BY
SENIOR LANDSCAPE ARCHITECT
BRAD COLE
STATE OF CALIFORNIA - DEPARTMENT OF TRANSPORTATION
Caltrans® LANDSCAPE ARCHITECTURE

LAST REVISION 12-20-11
DATE PLOTTED => 04-APR-2012
TIME PLOTTED => 10:21

Dist	COUNTY	ROUTE	POST MILES TOTAL PROJECT	SHEET No.	TOTAL SHEETS
06	Fre,Mad	99	26.7/R31.6, R0.0/R1.6	236	393

LICENSED LANDSCAPE ARCHITECT

4-2-12
PLANS APPROVAL DATE

LICENSED LANDSCAPE ARCHITECT
MICHAEL W. MILLS No. 4178
Expiration Date
11/30/12
Renewal Date
01/06/12
Date
STATE OF CALIFORNIA

THE STATE OF CALIFORNIA OR ITS OFFICERS OR AGENTS SHALL NOT BE RESPONSIBLE FOR THE ACCURACY OR COMPLETENESS OF SCANNED COPIES OF THIS PLAN SHEET.

NOTE:

FOR ACCURATE RIGHT OF WAY DATA, CONTACT
RIGHT OF WAY ENGINEERING AT THE DISTRICT OFFICE.

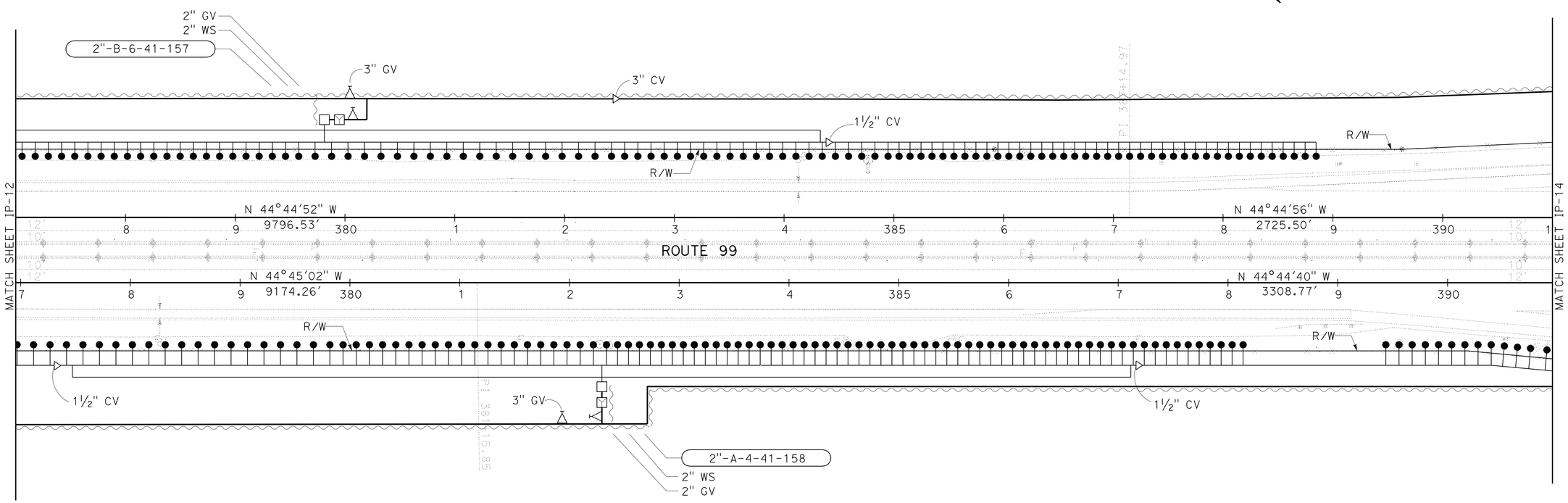

IRRIGATION PLAN

SCALE: 1" = 50'

IP-13

APPROVED FOR IRRIGATION WORK ONLY

STATE OF CALIFORNIA - DEPARTMENT OF TRANSPORTATION
Caltrans® LANDSCAPE ARCHITECTURE

SENIOR LANDSCAPE ARCHITECT: BRAD COLE
CALCULATED-DESIGNED BY: MICHAEL MILLS
CHECKED BY: CHARLES LA RUE
REVISED BY
DATE REVISED

LAST REVISION 12-20-11
DATE PLOTTED => 04-APR-2012
TIME PLOTTED => 10:21

Dist	COUNTY	ROUTE	POST MILES TOTAL PROJECT	SHEET No.	TOTAL SHEETS
06	Fre,Mad	99	26.7/R31.6, R0.0/R1.6	237	393

LICENSED LANDSCAPE ARCHITECT

4-2-12
PLANS APPROVAL DATE

LICENSED LANDSCAPE ARCHITECT
MICHAEL W. MILLS No. 4178
Expiration Date 11/30/12
Renewal Date 01/06/12
Date
STATE OF CALIFORNIA

THE STATE OF CALIFORNIA OR ITS OFFICERS OR AGENTS SHALL NOT BE RESPONSIBLE FOR THE ACCURACY OR COMPLETENESS OF SCANNED COPIES OF THIS PLAN SHEET.

NOTE:

FOR ACCURATE RIGHT OF WAY DATA, CONTACT RIGHT OF WAY ENGINEERING AT THE DISTRICT OFFICE.

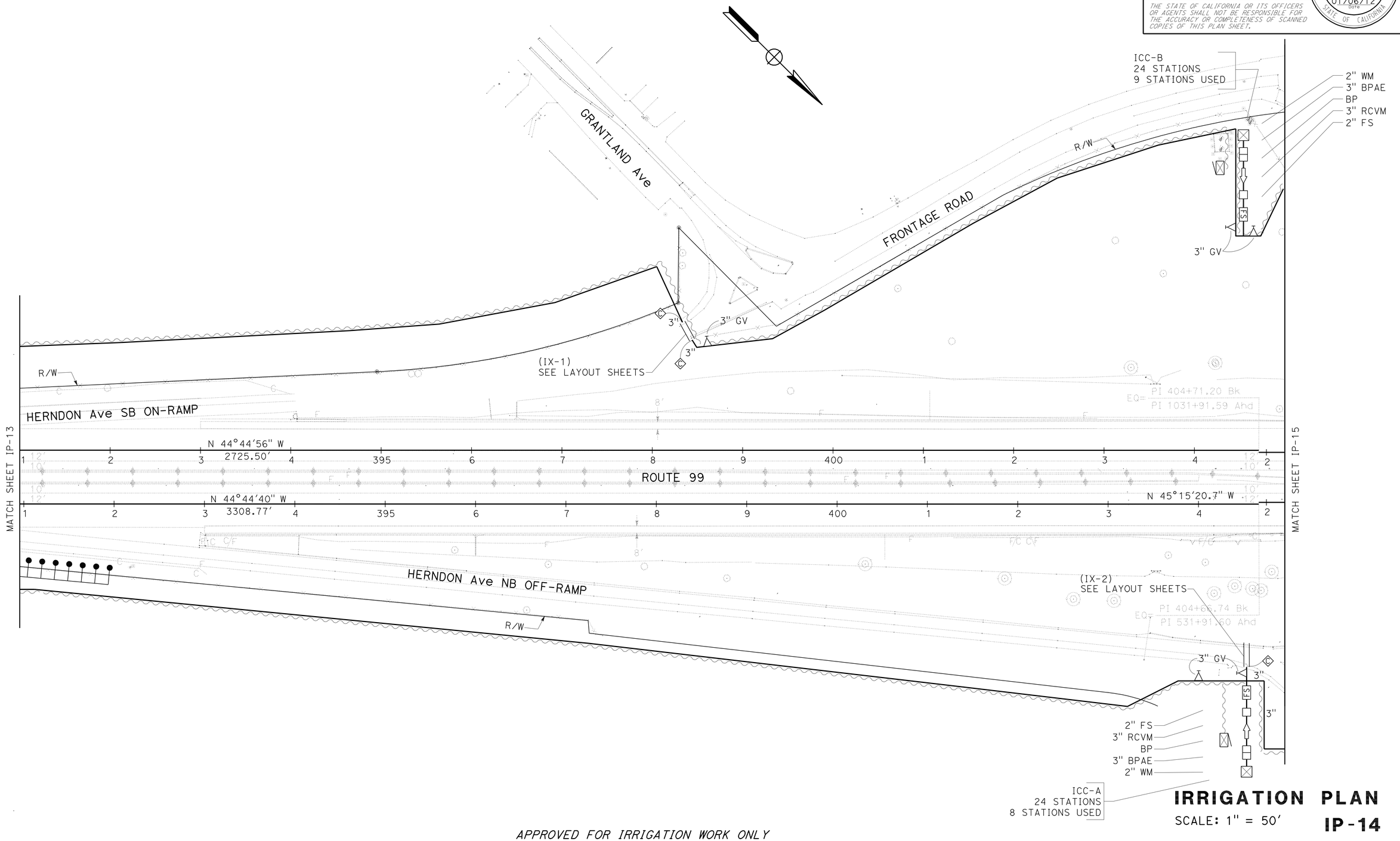

IRRIGATION PLAN

SCALE: 1" = 50'

IP-14

APPROVED FOR IRRIGATION WORK ONLY

STATE OF CALIFORNIA - DEPARTMENT OF TRANSPORTATION
Caltrans® LANDSCAPE ARCHITECTURE

SENIOR LANDSCAPE ARCHITECT: BRAD COLE

CALCULATED-DESIGNED BY: MICHAEL MILLS
CHECKED BY: CHARLES LA RUE

REVISED BY
DATE REVISED

LAST REVISION 12-20-11
DATE PLOTTED => 04-APR-2012
TIME PLOTTED => 10:21

Dist	COUNTY	ROUTE	POST MILES TOTAL PROJECT	SHEET No.	TOTAL SHEETS
06	Fre,Mad	99	26.7/R31.6, R0.0/R1.6	238	393

LICENSED LANDSCAPE ARCHITECT

4-2-12
PLANS APPROVAL DATE

LICENSED LANDSCAPE ARCHITECT MICHAEL W. MILLS No. 4178 STATE OF CALIFORNIA
Expiration Date 11/30/12
Renewal Date 01/06/12
Date

THE STATE OF CALIFORNIA OR ITS OFFICERS OR AGENTS SHALL NOT BE RESPONSIBLE FOR THE ACCURACY OR COMPLETENESS OF SCANNED COPIES OF THIS PLAN SHEET.

NOTE:

FOR ACCURATE RIGHT OF WAY DATA, CONTACT RIGHT OF WAY ENGINEERING AT THE DISTRICT OFFICE.

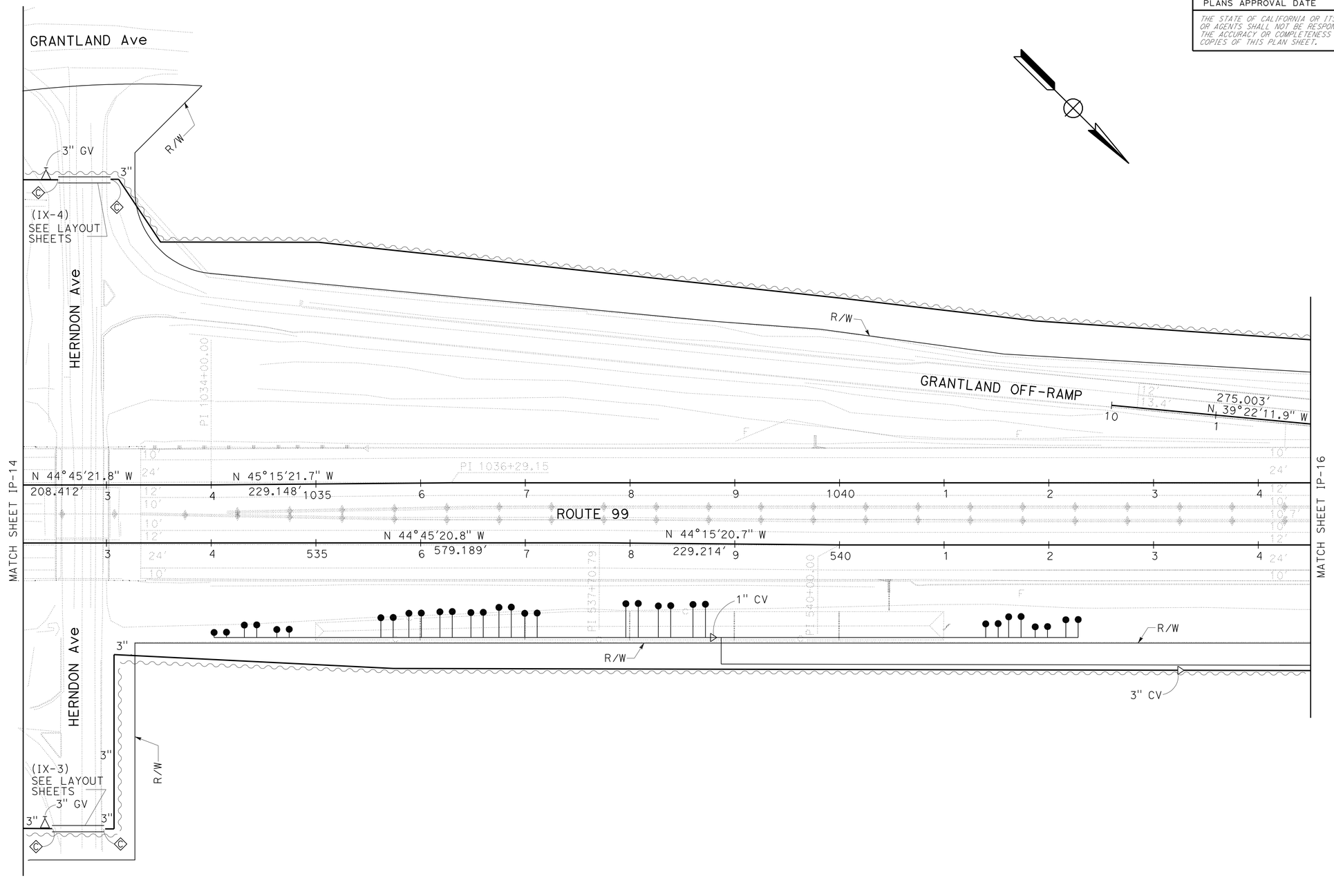

IRRIGATION PLAN

SCALE: 1" = 50'

IP-15

APPROVED FOR IRRIGATION WORK ONLY

STATE OF CALIFORNIA - DEPARTMENT OF TRANSPORTATION
Caltrans® LANDSCAPE ARCHITECTURE

SENIOR LANDSCAPE ARCHITECT: BRAD COLE
CALCULATED-DESIGNED BY: MICHAEL MILLS
CHECKED BY: CHARLES LA RUE
REVISED BY
DATE REVISED

LAST REVISION 12-20-11
DATE PLOTTED => 04-APR-2012
TIME PLOTTED => 10:21

Dist	COUNTY	ROUTE	POST MILES TOTAL PROJECT	SHEET No.	TOTAL SHEETS
06	Fre,Mad	99	26.7/R31.6, R0.0/R1.6	239	393

Michael W. Mills
LICENSED LANDSCAPE ARCHITECT

4-2-12
PLANS APPROVAL DATE

LICENSED LANDSCAPE ARCHITECT
MICHAEL W. MILLS No. 4178
Expiration Date
11/30/12
Renewal Date
01/06/12
Date
STATE OF CALIFORNIA

THE STATE OF CALIFORNIA OR ITS OFFICERS OR AGENTS SHALL NOT BE RESPONSIBLE FOR THE ACCURACY OR COMPLETENESS OF SCANNED COPIES OF THIS PLAN SHEET.

NOTE:

FOR ACCURATE RIGHT OF WAY DATA, CONTACT RIGHT OF WAY ENGINEERING AT THE DISTRICT OFFICE.

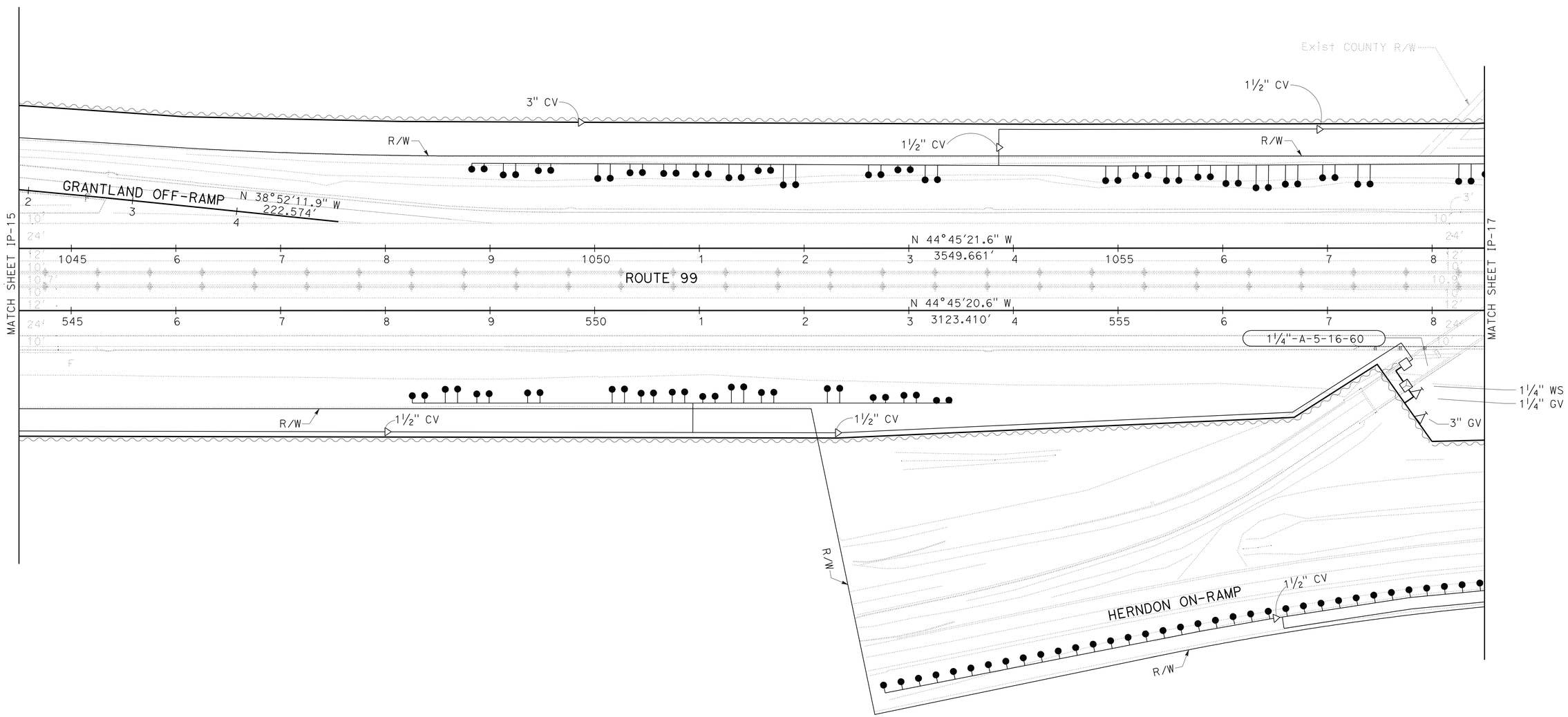

IRRIGATION PLAN

SCALE: 1" = 50'

IP-16

APPROVED FOR IRRIGATION WORK ONLY

STATE OF CALIFORNIA - DEPARTMENT OF TRANSPORTATION
Caltrans® LANDSCAPE ARCHITECTURE

SENIOR LANDSCAPE ARCHITECT: BRAD COLE
CALCULATED-DESIGNED BY: MICHAEL MILLS
CHECKED BY: CHARLES LA RUE
REVISED BY
DATE REVISED

LAST REVISION 12-20-11
DATE PLOTTED => 04-APR-2012
TIME PLOTTED => 10:21

Dist	COUNTY	ROUTE	POST MILES TOTAL PROJECT	SHEET No.	TOTAL SHEETS
06	Fre,Mad	99	26.7/R31.6, R0.0/R1.6	240	393

Michael W. Mills
LICENSED LANDSCAPE ARCHITECT

4-2-12
PLANS APPROVAL DATE

LICENSED LANDSCAPE ARCHITECT
MICHAEL W. MILLS No. 4178
Expiration Date
11/30/12
Renewal Date
01/06/12
Date
STATE OF CALIFORNIA

THE STATE OF CALIFORNIA OR ITS OFFICERS OR AGENTS SHALL NOT BE RESPONSIBLE FOR THE ACCURACY OR COMPLETENESS OF SCANNED COPIES OF THIS PLAN SHEET.

NOTE:

FOR ACCURATE RIGHT OF WAY DATA, CONTACT RIGHT OF WAY ENGINEERING AT THE DISTRICT OFFICE.

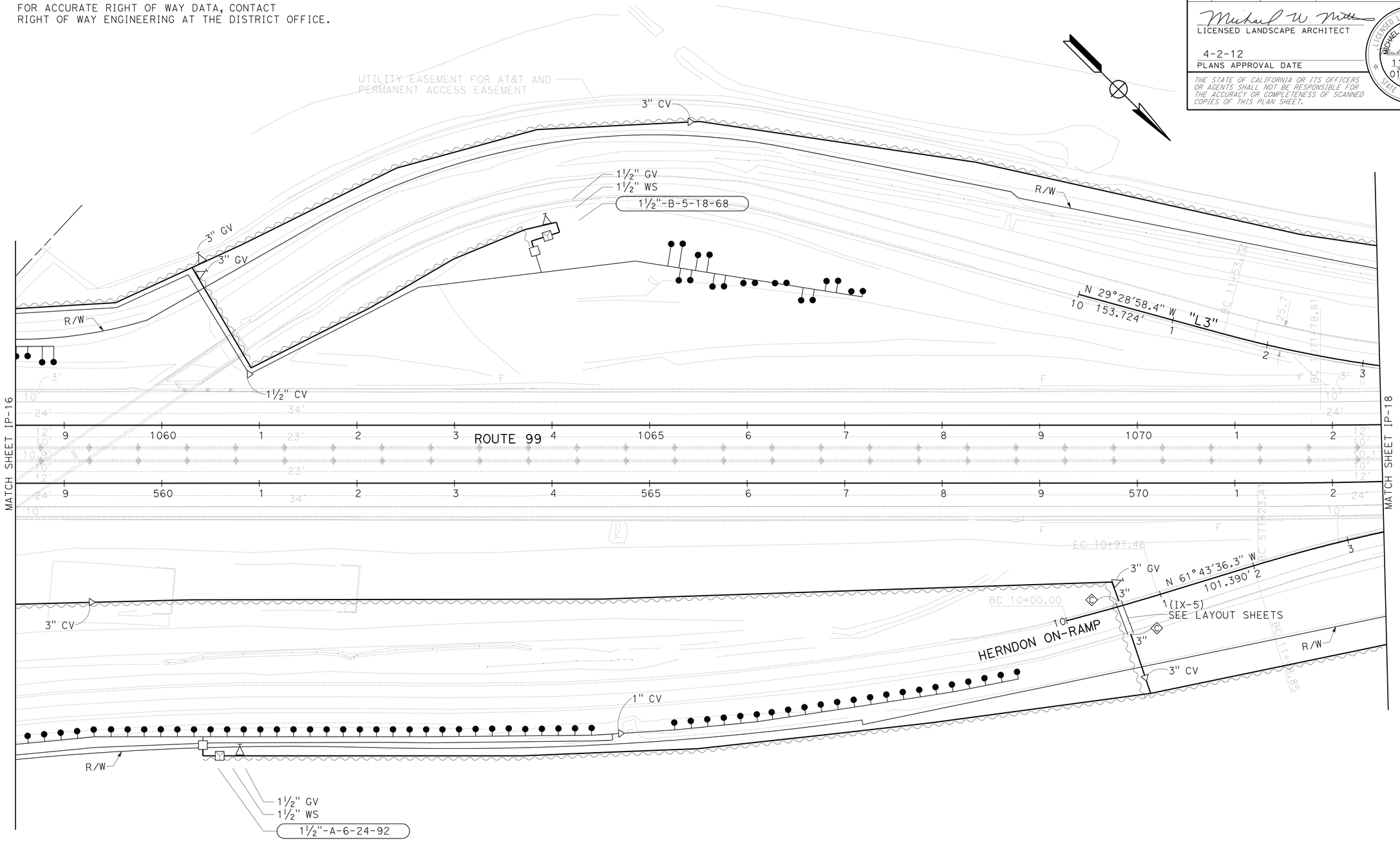

IRRIGATION PLAN

SCALE: 1" = 50'

IP-17

APPROVED FOR IRRIGATION WORK ONLY

STATE OF CALIFORNIA - DEPARTMENT OF TRANSPORTATION
Caltrans® LANDSCAPE ARCHITECTURE

SENIOR LANDSCAPE ARCHITECT: BRAD COLE
CALCULATED-DESIGNED BY: MICHAEL MILLS
CHECKED BY: CHARLES LA RUE
REVISED BY
DATE REVISED

LAST REVISION 12-20-11
DATE PLOTTED => 04-APR-2012
TIME PLOTTED => 10:21

Dist	COUNTY	ROUTE	POST MILES TOTAL PROJECT	SHEET No.	TOTAL SHEETS
06	Fre,Mad	99	26.7/R31.6, R0.0/R1.6	241	393

LICENSED LANDSCAPE ARCHITECT

4-2-12
PLANS APPROVAL DATE

LICENSED LANDSCAPE ARCHITECT
MICHAEL W. MILLS No. 4178
Expiration Date
11/30/12
Renewal Date
01/06/12
Date
STATE OF CALIFORNIA

THE STATE OF CALIFORNIA OR ITS OFFICERS OR AGENTS SHALL NOT BE RESPONSIBLE FOR THE ACCURACY OR COMPLETENESS OF SCANNED COPIES OF THIS PLAN SHEET.

NOTE:

FOR ACCURATE RIGHT OF WAY DATA, CONTACT RIGHT OF WAY ENGINEERING AT THE DISTRICT OFFICE.

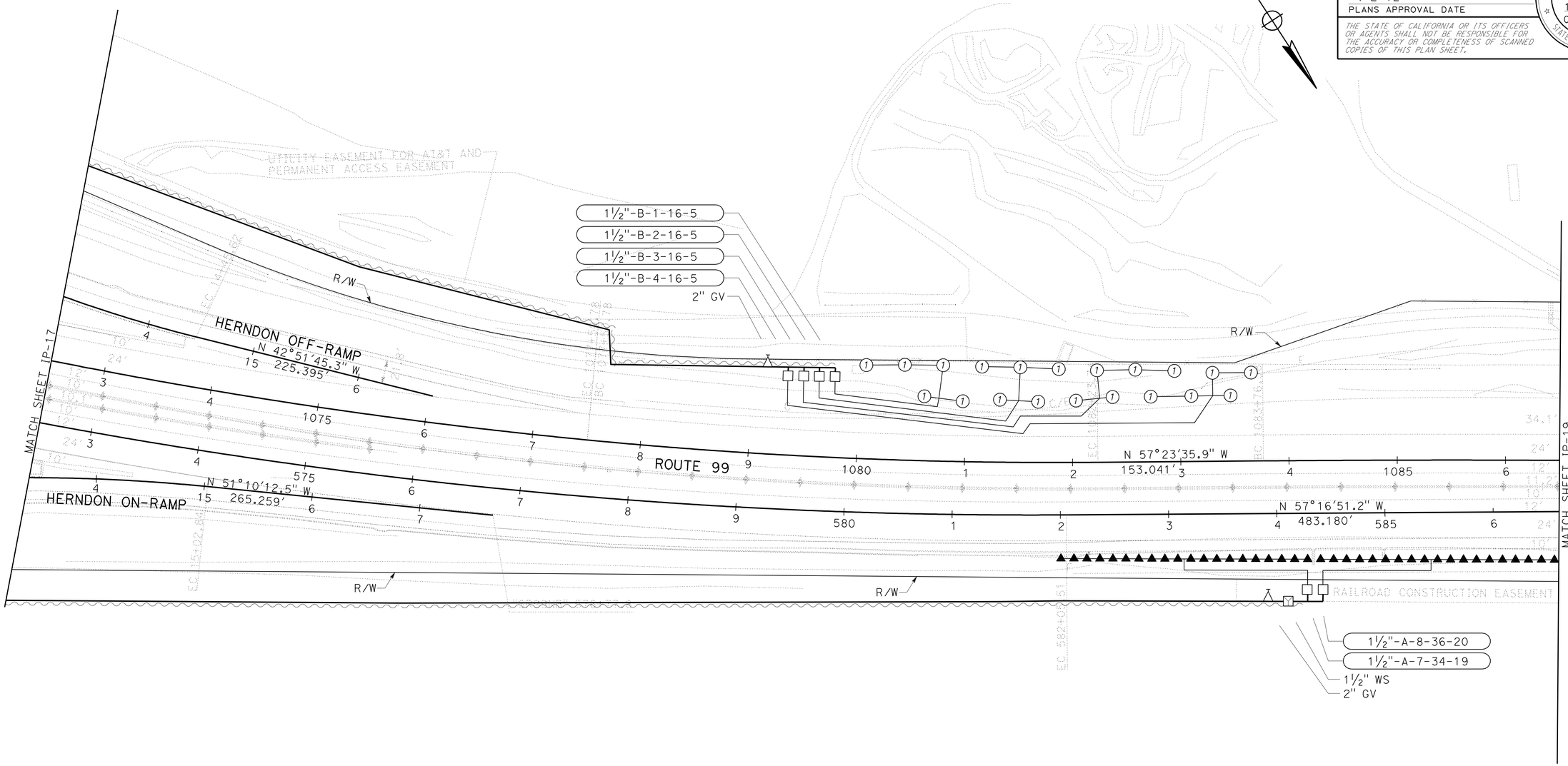

IRRIGATION PLAN

SCALE: 1" = 50'

IP-18

APPROVED FOR IRRIGATION WORK ONLY

STATE OF CALIFORNIA - DEPARTMENT OF TRANSPORTATION
Caltrans® LANDSCAPE ARCHITECTURE

SENIOR LANDSCAPE ARCHITECT: BRAD COLE
CALCULATED-DESIGNED BY: MICHAEL MILLS
CHECKED BY: CHARLES LA RUE
REVISED BY
DATE REVISED

LAST REVISION 12-20-11
DATE PLOTTED => 04-APR-2012
TIME PLOTTED => 10:21

Dist	COUNTY	ROUTE	POST MILES TOTAL PROJECT	SHEET No.	TOTAL SHEETS
06	Fre,Mad	99	26.7/R31.6, R0.0/R1.6	242	393

LICENSED LANDSCAPE ARCHITECT

4-2-12
PLANS APPROVAL DATE

LICENSED LANDSCAPE ARCHITECT MICHAEL W. MILLS No. 4178 STATE OF CALIFORNIA
Date Signed 11/30/12
Revised Date 01/06/12
Date

THE STATE OF CALIFORNIA OR ITS OFFICERS OR AGENTS SHALL NOT BE RESPONSIBLE FOR THE ACCURACY OR COMPLETENESS OF SCANNED COPIES OF THIS PLAN SHEET.

NOTE:

FOR ACCURATE RIGHT OF WAY DATA, CONTACT RIGHT OF WAY ENGINEERING AT THE DISTRICT OFFICE.

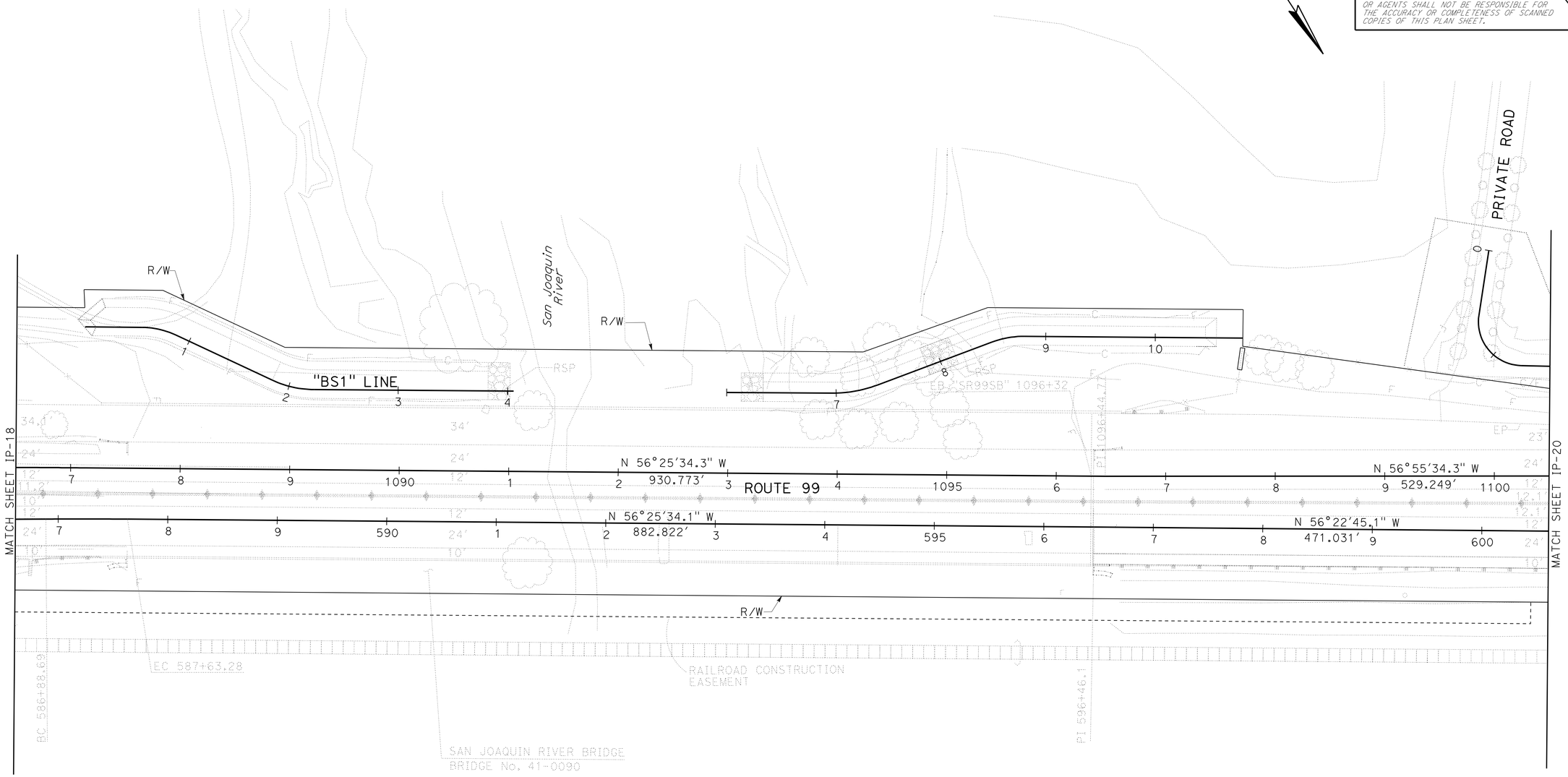

NO IRRIGATION WORK ON THIS SHEET

IRRIGATION PLAN

SCALE: 1" = 50'

IP-19

APPROVED FOR IRRIGATION WORK ONLY

STATE OF CALIFORNIA - DEPARTMENT OF TRANSPORTATION
Caltrans® LANDSCAPE ARCHITECTURE

SENIOR LANDSCAPE ARCHITECT: BRAD COLE
CALCULATED-DESIGNED BY: MICHAEL MILLS
CHECKED BY: CHARLES LA RUE
REVISED BY
DATE REVISED

LAST REVISION 12-20-11
DATE PLOTTED => 04-APR-2012
TIME PLOTTED => 10:22

Dist	COUNTY	ROUTE	POST MILES TOTAL PROJECT	SHEET No.	TOTAL SHEETS
06	Fre,Mad	99	26.7/R31.6, R0.0/R1.6	243	393

LICENSED LANDSCAPE ARCHITECT

4-2-12
PLANS APPROVAL DATE

LICENSED LANDSCAPE ARCHITECT
MICHAEL W. MILLS No. 4178
Expiration Date 11/30/12
Renewal Date 01/06/12
Date
STATE OF CALIFORNIA

THE STATE OF CALIFORNIA OR ITS OFFICERS OR AGENTS SHALL NOT BE RESPONSIBLE FOR THE ACCURACY OR COMPLETENESS OF SCANNED COPIES OF THIS PLAN SHEET.

NOTE:

FOR ACCURATE RIGHT OF WAY DATA, CONTACT RIGHT OF WAY ENGINEERING AT THE DISTRICT OFFICE.

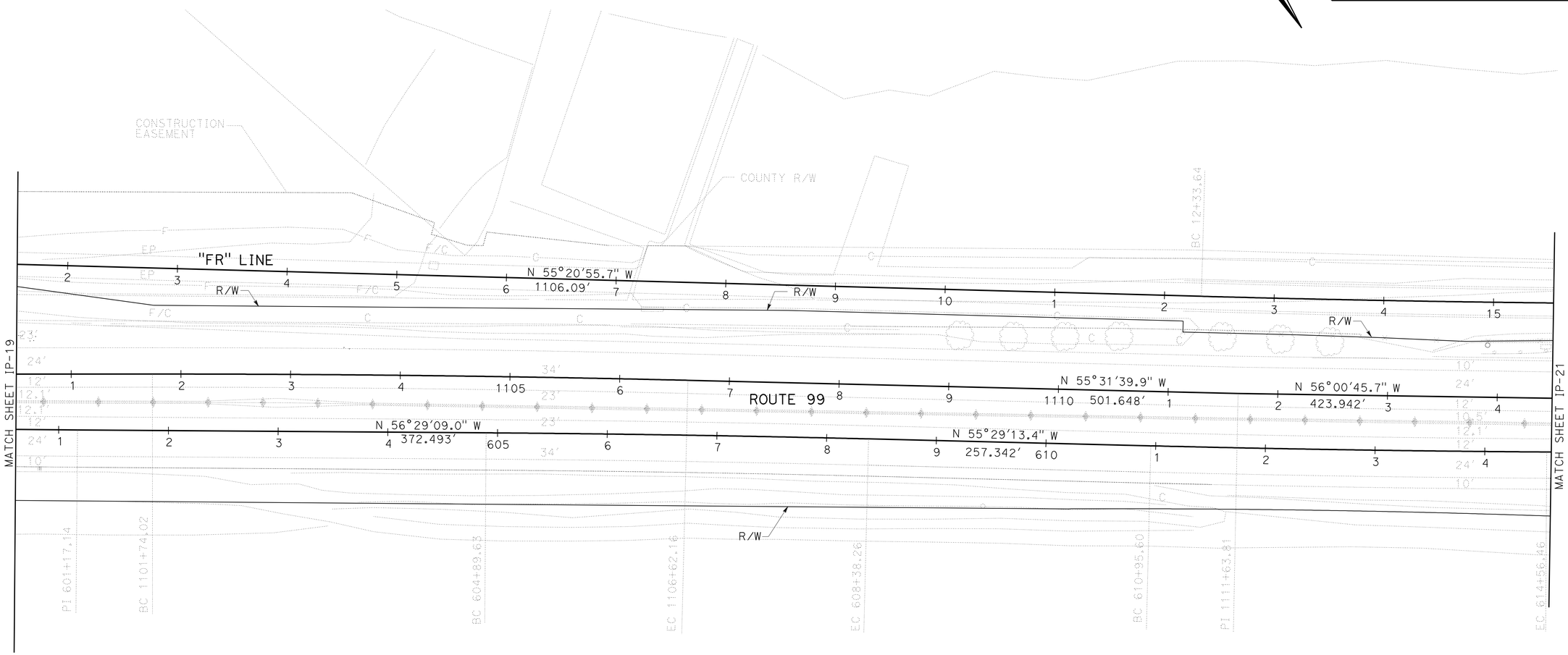

NO IRRIGATION WORK ON THIS SHEET

IRRIGATION PLAN

SCALE: 1" = 50'

IP-20

APPROVED FOR IRRIGATION WORK ONLY

STATE OF CALIFORNIA - DEPARTMENT OF TRANSPORTATION
Caltrans® LANDSCAPE ARCHITECTURE

SENIOR LANDSCAPE ARCHITECT: BRAD COLE
CALCULATED-DESIGNED BY: MICHAEL MILLS
CHECKED BY: CHARLES LA RUE
REVISED BY
DATE REVISED

LAST REVISION 12-20-11
DATE PLOTTED => 04-APR-2012
TIME PLOTTED => 10:22

Dist	COUNTY	ROUTE	POST MILES TOTAL PROJECT	SHEET No.	TOTAL SHEETS
06	Fre,Mad	99	26.7/R31.6, R0.0/R1.6	244	393

Michael W. Mills
LICENSED LANDSCAPE ARCHITECT

4-2-12
PLANS APPROVAL DATE

LICENSED LANDSCAPE ARCHITECT
MICHAEL W. MILLS No. 4178
Expiration Date 11/30/12
Renewal Date 01/06/12
Date
STATE OF CALIFORNIA

THE STATE OF CALIFORNIA OR ITS OFFICERS OR AGENTS SHALL NOT BE RESPONSIBLE FOR THE ACCURACY OR COMPLETENESS OF SCANNED COPIES OF THIS PLAN SHEET.

NOTE:

FOR ACCURATE RIGHT OF WAY DATA, CONTACT RIGHT OF WAY ENGINEERING AT THE DISTRICT OFFICE.

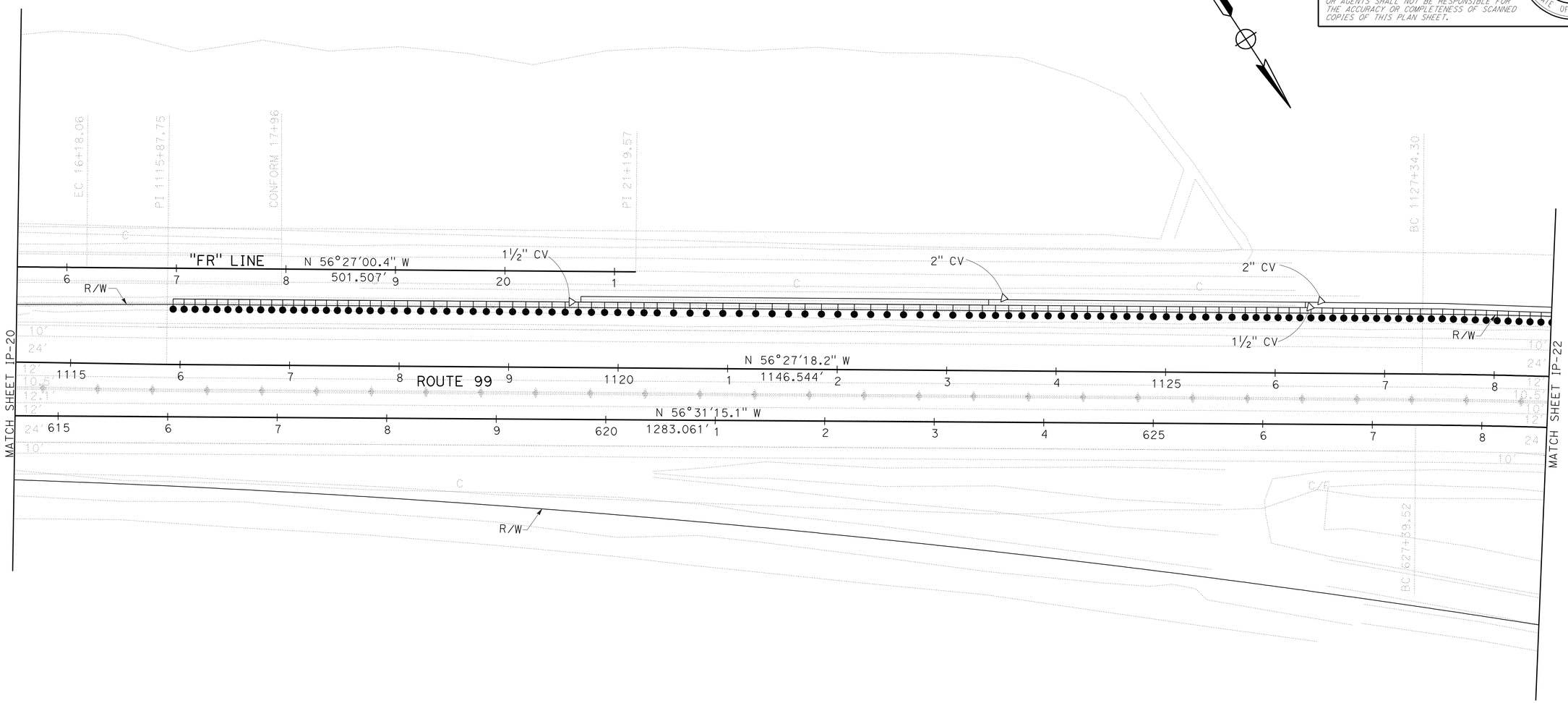

IRRIGATION PLAN

SCALE: 1" = 50'

IP-21

APPROVED FOR IRRIGATION WORK ONLY

STATE OF CALIFORNIA - DEPARTMENT OF TRANSPORTATION
Caltrans® LANDSCAPE ARCHITECTURE

SENIOR LANDSCAPE ARCHITECT: BRAD COLE
CALCULATED-DESIGNED BY: MICHAEL MILLS
CHECKED BY: CHARLES LA RUE
REVISED BY
DATE REVISED

LAST REVISION 12-20-11
DATE PLOTTED => 04-APR-2012
TIME PLOTTED => 10:22

Dist	COUNTY	ROUTE	POST MILES TOTAL PROJECT	SHEET No.	TOTAL SHEETS
06	Fre,Mad	99	26.7/R31.6, R0.0/R1.6	245	393

LICENSED LANDSCAPE ARCHITECT

4-2-12
PLANS APPROVAL DATE

LICENSED LANDSCAPE ARCHITECT
MICHAEL W. MILLS No. 4178
Expiration Date 11/30/12
Renewal Date 01/06/12
Date
STATE OF CALIFORNIA

THE STATE OF CALIFORNIA OR ITS OFFICERS OR AGENTS SHALL NOT BE RESPONSIBLE FOR THE ACCURACY OR COMPLETENESS OF SCANNED COPIES OF THIS PLAN SHEET.

NOTE:

FOR ACCURATE RIGHT OF WAY DATA, CONTACT RIGHT OF WAY ENGINEERING AT THE DISTRICT OFFICE.

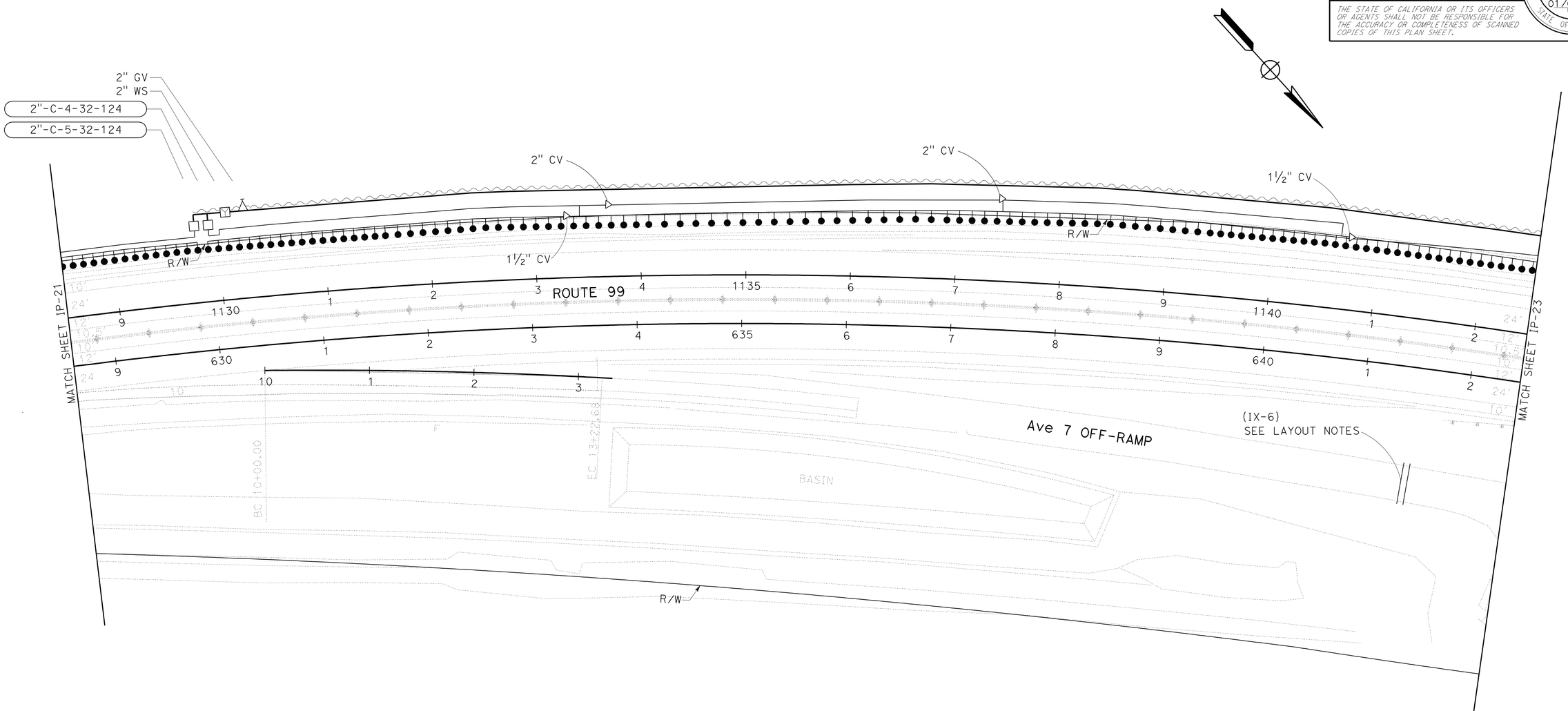

IRRIGATION PLAN

SCALE: 1" = 50'

IP-22

APPROVED FOR IRRIGATION WORK ONLY

STATE OF CALIFORNIA - DEPARTMENT OF TRANSPORTATION
Caltrans® LANDSCAPE ARCHITECTURE

SENIOR LANDSCAPE ARCHITECT: BRAD COLE
CALCULATED-DESIGNED BY: MICHAEL MILLS
CHECKED BY: CHARLES LA RUE
REVISED BY
DATE REVISED

LAST REVISION 12-20-11
DATE PLOTTED => 04-APR-2012
TIME PLOTTED => 10:22

Dist	COUNTY	ROUTE	POST MILES TOTAL PROJECT	SHEET No.	TOTAL SHEETS
06	Fre,Mad	99	26.7/R31.6, R0.0/R1.6	246	393

LICENSED LANDSCAPE ARCHITECT

4-2-12
PLANS APPROVAL DATE

LICENSED LANDSCAPE ARCHITECT MICHAEL W. MILLS No. 4178 STATE OF CALIFORNIA
Expiration Date 11/30/12
Renewal Date 01/06/12
Date

THE STATE OF CALIFORNIA OR ITS OFFICERS OR AGENTS SHALL NOT BE RESPONSIBLE FOR THE ACCURACY OR COMPLETENESS OF SCANNED COPIES OF THIS PLAN SHEET.

NOTE:

FOR ACCURATE RIGHT OF WAY DATA, CONTACT RIGHT OF WAY ENGINEERING AT THE DISTRICT OFFICE.

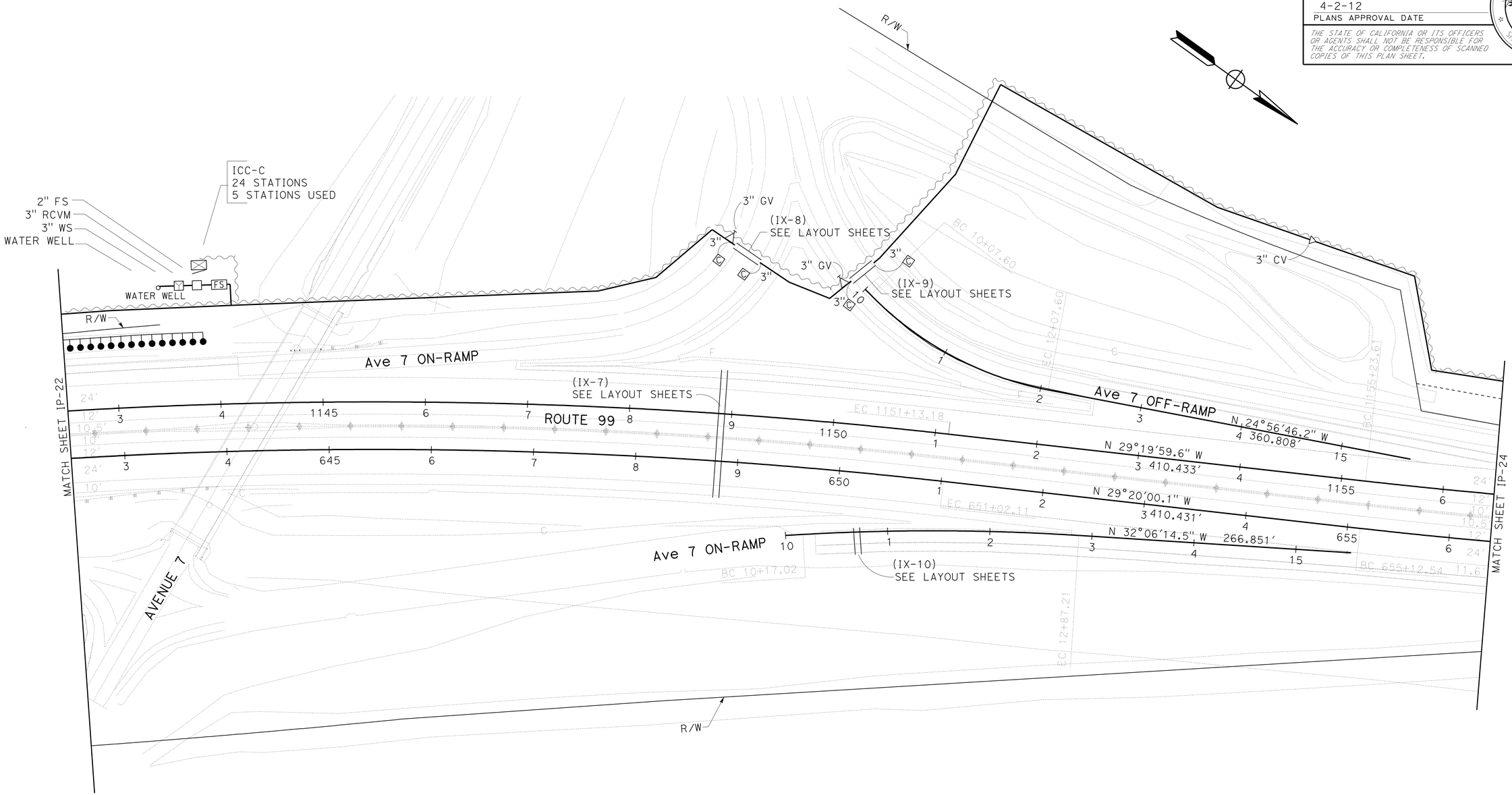

IRRIGATION PLAN

SCALE: 1" = 50'

IP-23

APPROVED FOR IRRIGATION WORK ONLY

STATE OF CALIFORNIA - DEPARTMENT OF TRANSPORTATION
Caltrans® LANDSCAPE ARCHITECTURE

SENIOR LANDSCAPE ARCHITECT: BRAD COLE
CALCULATED-DESIGNED BY: MICHAEL MILLS
CHECKED BY: CHARLES LA RUE
REVISED BY
DATE REVISED

LAST REVISION 12-20-11
DATE PLOTTED => 04-APR-2012
TIME PLOTTED => 10:22

Dist	COUNTY	ROUTE	POST MILES TOTAL PROJECT	SHEET No.	TOTAL SHEETS
06	Fre,Mad	99	26.7/R31.6, R0.0/R1.6	247	393

LICENSED LANDSCAPE ARCHITECT

4-2-12
PLANS APPROVAL DATE

LICENSED LANDSCAPE ARCHITECT
MICHAEL W. MILLS No. 4178
Expiration Date
11/30/12
Renewal Date
01/06/12
Date
STATE OF CALIFORNIA

THE STATE OF CALIFORNIA OR ITS OFFICERS OR AGENTS SHALL NOT BE RESPONSIBLE FOR THE ACCURACY OR COMPLETENESS OF SCANNED COPIES OF THIS PLAN SHEET.

NOTE:

FOR ACCURATE RIGHT OF WAY DATA, CONTACT
RIGHT OF WAY ENGINEERING AT THE DISTRICT OFFICE.

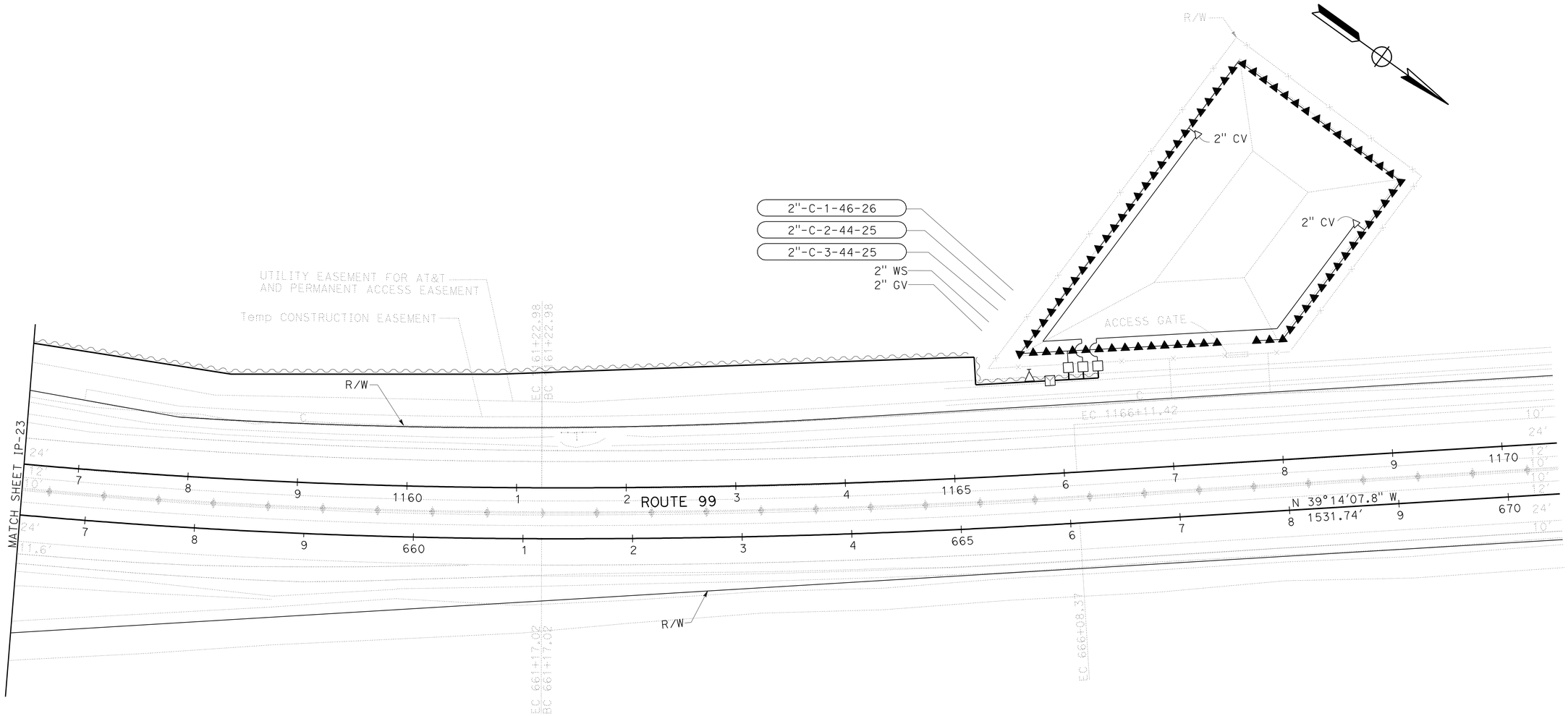

IRRIGATION PLAN

SCALE: 1" = 50'

IP-24

APPROVED FOR IRRIGATION WORK ONLY

STATE OF CALIFORNIA - DEPARTMENT OF TRANSPORTATION
Caltrans® LANDSCAPE ARCHITECTURE

SENIOR LANDSCAPE ARCHITECT: BRAD COLE

CALCULATED-DESIGNED BY: MICHAEL MILLS
CHECKED BY: CHARLES LA RUE

REVISED BY
DATE REVISED

LAST REVISION 12-20-11
DATE PLOTTED => 04-APR-2012
TIME PLOTTED => 10:22

Dist	COUNTY	ROUTE	POST MILES TOTAL PROJECT	SHEET No.	TOTAL SHEETS
06	Fre,Mad	99	26.7/R31.6, R0.0/R1.6	248	393

LICENSED LANDSCAPE ARCHITECT

4-2-12
PLANS APPROVAL DATE

LICENSED LANDSCAPE ARCHITECT — MICHAEL W. MILLS No. 4178 — Expiration Date 11/30/12 — Renewal Date 09/01/11 — STATE OF CALIFORNIA

THE STATE OF CALIFORNIA OR ITS OFFICERS OR AGENTS SHALL NOT BE RESPONSIBLE FOR THE ACCURACY OR COMPLETENESS OF SCANNED COPIES OF THIS PLAN SHEET.

SPRINKLER SCHEDULE

SYMBOL	TYPE	DESCRIPTION	SPRAY PATTERN	OPERATING PRESSURE (psi)	PRESSURE COMPENSATING	PLUS/MINUS 5% ② DISCHARGE GALLONS PER MINUTE (GPM)	GALLONS PER HOUR (GPH)	RADIUS (ft)	WIDTH x LENGTH (ft)	MATERIAL	INLET CONNECTION (NPT INCH)	③ POSITIVE-LOCKING Adj ARC STOP	BACKSPLASH PREVENTER	DIFFUSER PIN	DISTANCE CONTROL FLAP	Adj DISCHARGE	RISER TYPE	RISER MATERIAL PLASTIC	RISER MATERIAL GALVANIZED	RISER SIZE (IPS INCH)	RISER HEIGHT (INCH)	RISER FLOW SHUTOFF DEVICE	⑤ SWING JOINT (TYPE)	RISER SUPPORT	SPRINKLER PROTECTOR (TYPE)	REMARKS
①	A-1	SIDE IMPACT	P	30	-	3.1	-	38	-	B/B	½	X	X	X	X	-	IV	-	X	½	24	X	I	-	-	
▲	B-2	SHRUB SPRAY	H / Q	30	X	1.85 / 0.92	-	15	-	PL	½	-	-	-	-	X	VI	X	-	½	-	-	-	-	II	12" POP-UP
●	C-3	SPRAY	Q	30	X	0.26	-	8	-	PL	½	-	-	-	-	X	III	X	-	½	8	-	II	-	-	

X IN BOX DENOTES REQUIREMENT

APPLICABLE WHEN CIRCLED BELOW:

1 - SEE SPECIAL PROVISIONS.
② - IF A PRESSURE COMPENSATING DEVICE IS SPECIFIED, THE DISCHARGE AND RADII SHOWN REFLECT ITS USE.
③ - ARC STOP SHALL BE FITTED WITH A NUT AND BOLT.
4 - VINYL-COATED CAST IRON HOUSING.
⑤ - SWING JOINTS REQUIRED ADJACENT TO SHOULDERS, CURBS, SIDEWALKS, AND DIKES.
6 - UNLESS OTHERWISE SHOWN ON PLANS.

IRRIGATION CROSSOVERS

LOCATION: CROSSOVER		LINE	STATION	OFFSET (LF)	SIDE L†	SIDE R†	CONDUIT TYPE ⑤ SIZE (INCH) 8 LENGTH (LF)	12 LENGTH (LF)	(N) WATER LINE CROSSOVER SIZE (INCH)	(N) SPRINKLER CONTROL CROSSOVER SIZE (INCH)
(IX-1)	GRANTLAND Ave SB ON-RAMP	SR99SB	398+43	121.62	X	-	22	-	3	2
(IX-2)	GRANTLAND Ave NB OFF-RAMP	SR99NB	404+51	153.39	-	X	26	-	3	2
(IX-3)	GRANTLAND Ave	SR99NB	532+48	270.00	-	X	50	-	3	2
(IX-4)	GRANTLAND Ave	SR99SB	1032+54	289.00	X	-	50	-	3	2
(IX-5)	HERNDON NB ON-RAMP	SR99NB	569+83	120.00	-	X	36	-	3	2
(IX-6)	Ave 7 NB OFF-RAMP	SR99SB	641+50	91.88	-	X	40	-	3	2
(IX-7)	Ave 7 MAINLINE	SR99SB	1148+90		X	X	-	126	3	2
(IX-8)	Ave 7 SB ON-RAMP	SR99SB	1149+15	147.51	X	-	30	-	3	2
(IX-9)	Ave 7 SB OFF-RAMP	SR99SB	1150+07	136.84	X	-	28	-	3	2
(IX-10)	Ave 7 NB ON-RAMP	SR99SB	650+22	53.94	-	X	26	-	3	2
TOTAL							308	126		

(N) - NOT A SEPARATE PAY ITEM FOR INFORMATION ONLY
X - DENOTES REQUIREMENT

CONDUIT TYPE:

(APPLICABLE WHEN CIRCLED BELOW AND SHOWN UNDER THE 'CONDUIT TYPE' COLUMN HEADING)

1 BITUMINOUS COATED CORRUGATED STEEL PIPE (0.064 INCH THICK)
2 CORRUGATED STEEL PIPE (0.064 INCH THICK)
3 CORRUGATED HIGH DENSITY POLYETHYLENE PIPE
4 ALTERNATIVE CONDUIT
⑤ WELDED STEEL PIPE

LATERAL SUPPLY SIDE PIPE SIZING CHART

No. OF HEADS BY TYPE A-1	B-1 & B-2 F	B-1 & B-2 P	C-3	PIPE SIZE (INCH)
1	1-2	1-4	1-16	¾
2	3-4	5-7	17-36	1
3-4	5-6	8-12	37-64	1¼
5-6	7-8	13-16	65-96	1½
7-9	9-13	17-26	97-160	2

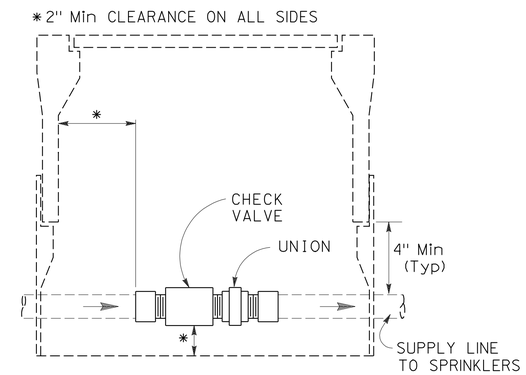

SECTION

CHECK VALVE

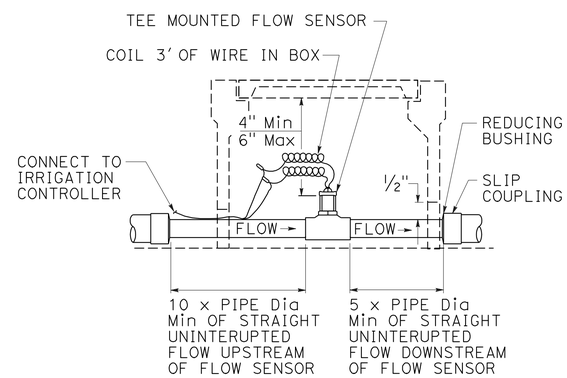

SECTION

FLOW SENSOR

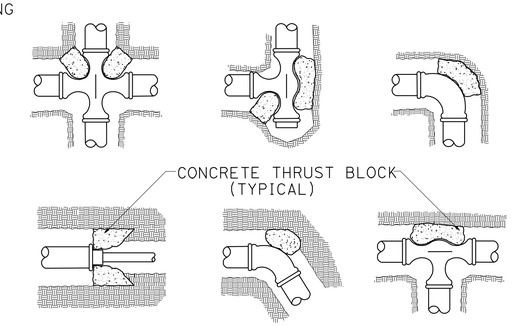

THRUST BLOCKS

LANDSCAPE DETAILS

NO SCALE

LD-1

STATE OF CALIFORNIA - DEPARTMENT OF TRANSPORTATION
Caltrans® LANDSCAPE ARCHITECTURE
SENIOR LANDSCAPE ARCHITECT: BRAD COLE
CALCULATED-DESIGNED BY: MICHAEL MILLS
CHECKED BY: SHERRY ALEXANDER
REVISED BY / DATE REVISED

LAST REVISION 12-01-11
DATE PLOTTED => 04-APR-2012
TIME PLOTTED => 11:30

Dist	COUNTY	ROUTE	POST MILES TOTAL PROJECT	SHEET No.	TOTAL SHEETS
06	Fre,Mad	99	26.7/R31.6, R0.0/R1.6	249	393

REGISTERED ELECTRICAL ENGINEER 01-09-12 DATE

4-2-12
PLANS APPROVAL DATE

REGISTERED PROFESSIONAL ENGINEER MONA N. ATTALLAH No. 18407 Exp. 6-30-12 ELECTRICAL STATE OF CALIFORNIA

THE STATE OF CALIFORNIA OR ITS OFFICERS OR AGENTS SHALL NOT BE RESPONSIBLE FOR THE ACCURACY OR COMPLETENESS OF SCANNED COPIES OF THIS PLAN SHEET.

NOTES:

1. FOR ACCURATE RIGHT OF WAY DATA, CONTACT RIGHT OF WAY ENGINEERING AT THE DISTRICT OFFICE.
2. ALL PULL BOXES SHALL BE No. 5(E) UNLESS OTHERWISE NOTED.

ABBREVIATIONS:

AT&T	AMERICAN TELEPHONE AND TELEGRAPH
BPE	BOOSTER PUMP ENCLOSURE
CTID	CALTRANS IDENTIFICATION
EQG	EQUIPMENT GROUND
HDPE	HIGH DENSITY POLYETHYLENE
MVDS	MICROWAVE VEHICLE DETECTION SYSTEM
PG&E	PACIFIC GAS AND ELECTRIC COMPANY
SMFO	SINGLE MODE FIBER OPTIC
STC	SCREENED TRANSMISSION CABLE
VCS	VEHICLE CLASSIFICATION STATION
Vis	VISIBILITY

LEGEND:

Vis	Exist VISIBILITY SENSOR UNIT AND POLE
RWIS	ROADSIDE WEATHER INFORMATION SYSTEM
BPE	BOOSTER PUMP ENCLOSURE
WPCP	WELL PUMP CONTROL PANEL
1	TYPE B TDC CABINET

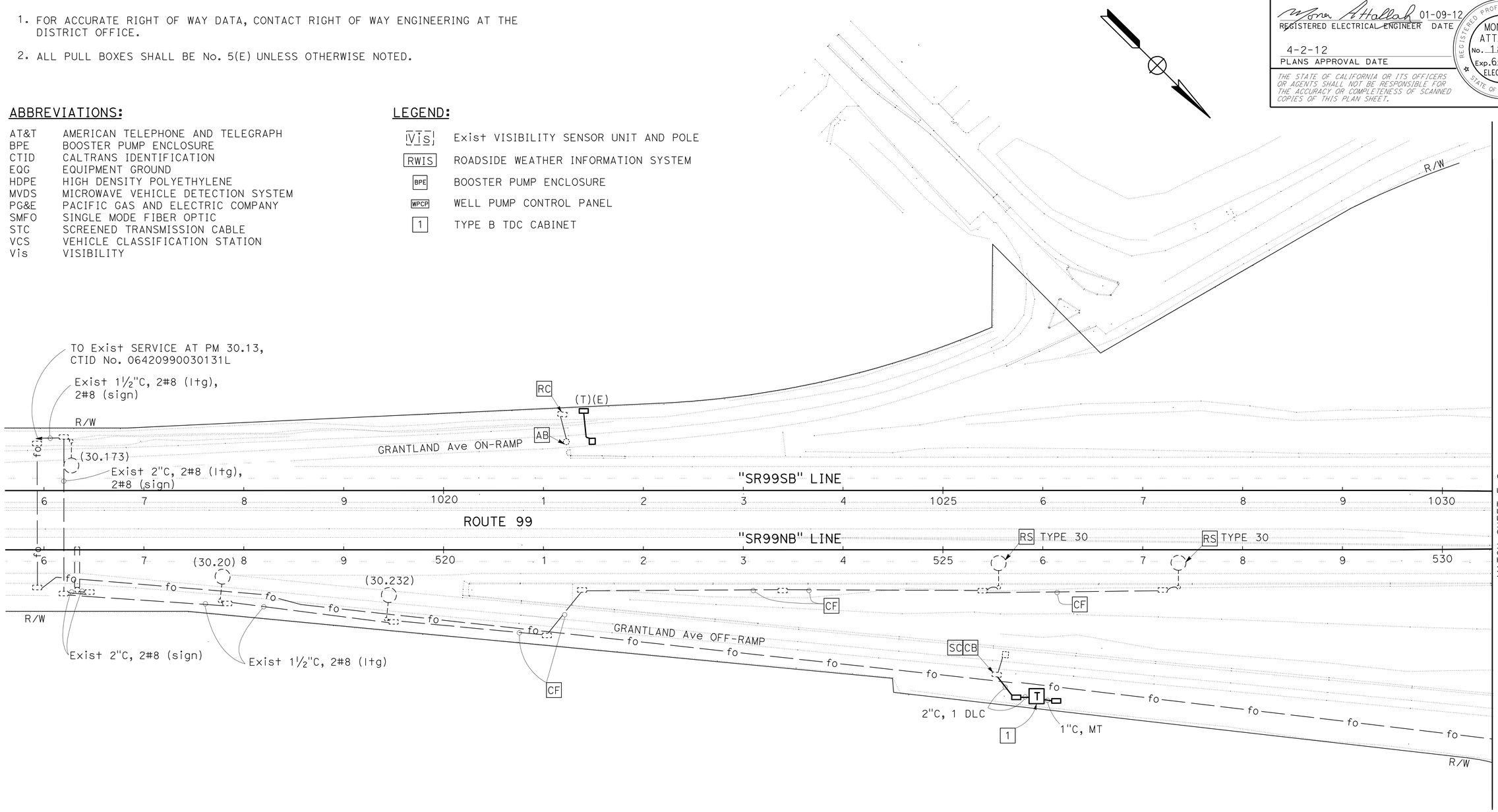

MODIFY TRAFFIC COUNT STATION
MODIFY LIGHTING AND SIGN ILLUMINATION

SCALE: 1" = 50'

APPROVED FOR ELECTRICAL WORK ONLY

E-1

STATE OF CALIFORNIA - DEPARTMENT OF TRANSPORTATION
Caltrans® **ELECTRICAL DESIGN**

FUNCTIONAL SUPERVISOR: ALI BAKHDOUD
CALCULATED-DESIGNED BY: MONA ATTALLAH
CHECKED BY: DANIEL VO
REVISED BY
DATE REVISED

LAST REVISION 01-09-12
DATE PLOTTED => 04-APR-2012
TIME PLOTTED => 11:30

Dist	COUNTY	ROUTE	POST MILES TOTAL PROJECT	SHEET No.	TOTAL SHEETS
06	Fre,Mad	99	26.7/R31.6, R0.0/R1.6	250	393

REGISTERED ELECTRICAL ENGINEER 01-09-12 DATE

4-2-12
PLANS APPROVAL DATE

REGISTERED PROFESSIONAL ENGINEER MONA N. ATTALLAH No. 18407 Exp. 6-30-12 ELECTRICAL STATE OF CALIFORNIA

THE STATE OF CALIFORNIA OR ITS OFFICERS OR AGENTS SHALL NOT BE RESPONSIBLE FOR THE ACCURACY OR COMPLETENESS OF SCANNED COPIES OF THIS PLAN SHEET.

LEGEND:

1 Exist 120/240 V, 1ø, 3-WIRE, TYPE III-CF SERVICE EQUIPMENT ENCLOSURE WITH THE FOLLOWING CIRCUIT BREAKERS:

METER 1 — CTID No. 06420990030481T

AMPERES	VOLTS	POLES	NAMEPLATE	METER	PHOTOELECTRIC CONTROL TYPE
100	240	2	MAIN BREAKER	YES	—
40	120	1	CCTV	YES	—
20	120	1	TDC	YES	—
40	120	1	FIBER OPTIC HUB	YES	—

METER 2 — CTID No. 06420990030481G

AMPERES	VOLTS	POLES	NAMEPLATE	METER	PHOTOELECTRIC CONTROL TYPE
100	240	2	MAIN BREAKER	YES	—
40	240	2	SPARE	YES	—
* 90	240	2	BPE	YES	—

* RS 70 A CB, ADD 90 A CB. REPLACE NAMEPLATE WITH BPE.

2 Exist SPLICE VAULT.

3 Exist CITY OF FRESNO SPLICE VAULT.

4 Exist CALTRANS FIBER OPTIC HUB.

5 Exist CITY OF FRESNO FIBER OPTIC HUB.

6 Exist MODEL 334 CABINET FOR CCTV AND MVDS.

7 REFER TO SHEET E-25 FOR BOOSTER PUMP ENCLOSURE DETAIL.

8 Exist 120/240 V, 1ø, 3-WIRE, TYPE III-AF SERVICE EQUIPMENT ENCLOSURE.

NOTES:

1. ALL FIBER OPTIC CONDUIT SHALL BE 6-1½"C AS SHOWN ON SHEET E-14, DETAIL A, UNLESS OTHERWISE NOTED. REFER TO SHEET E-18 FOR FIBER OPTIC CABLE REQUIREMENTS.
2. FOR ACCURATE RIGHT OF WAY DATA, CONTACT RIGHT OF WAY ENGINEERING AT THE DISTRICT OFFICE.
3. ALL PULL BOXES SHALL BE No. 5(E) UNLESS OTHERWISE NOTED.

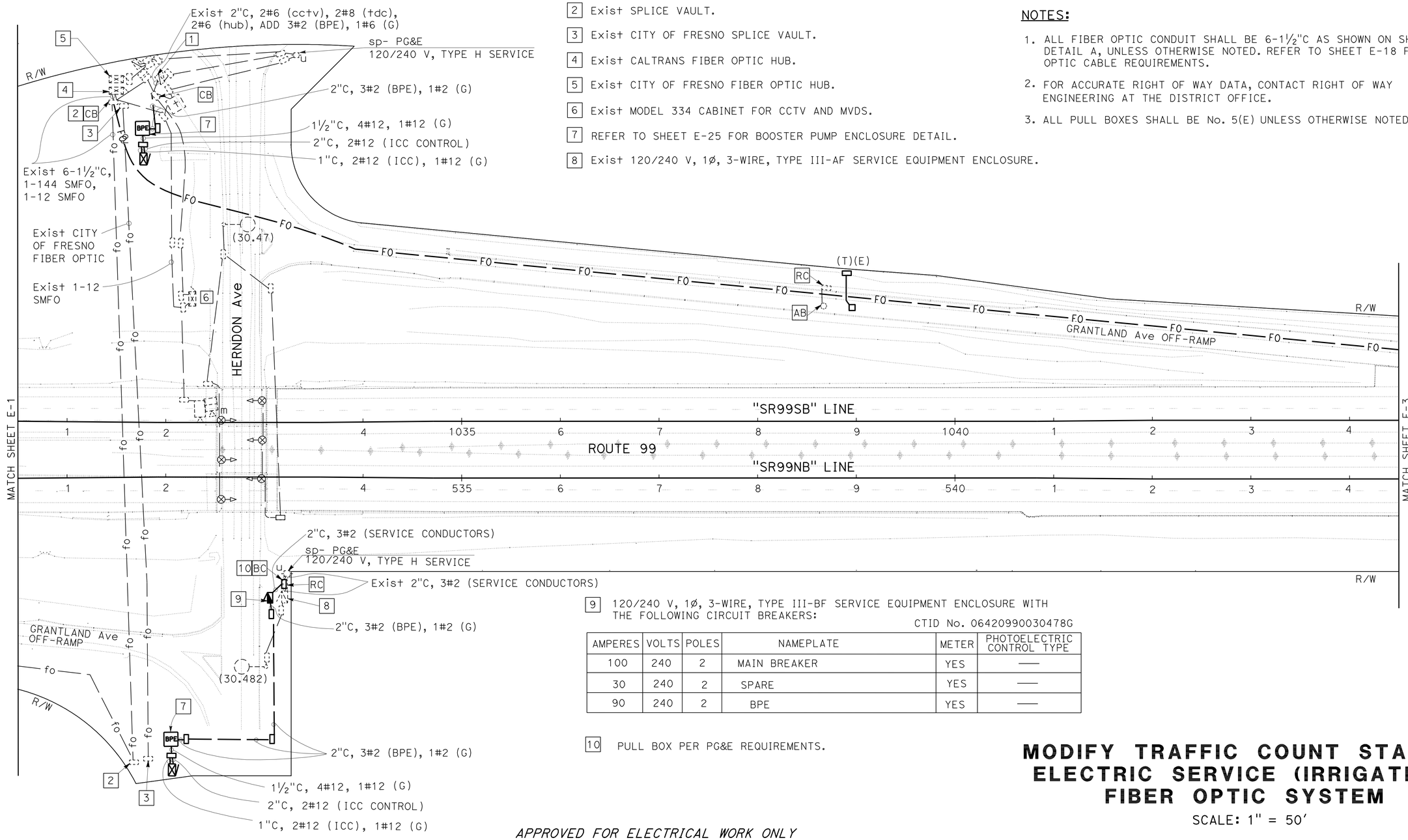

9 120/240 V, 1ø, 3-WIRE, TYPE III-BF SERVICE EQUIPMENT ENCLOSURE WITH THE FOLLOWING CIRCUIT BREAKERS:

CTID No. 06420990030478G

AMPERES	VOLTS	POLES	NAMEPLATE	METER	PHOTOELECTRIC CONTROL TYPE
100	240	2	MAIN BREAKER	YES	—
30	240	2	SPARE	YES	—
90	240	2	BPE	YES	—

10 PULL BOX PER PG&E REQUIREMENTS.

APPROVED FOR ELECTRICAL WORK ONLY

MODIFY TRAFFIC COUNT STATION ELECTRIC SERVICE (IRRIGATION) FIBER OPTIC SYSTEM

SCALE: 1" = 50'

E-2

STATE OF CALIFORNIA - DEPARTMENT OF TRANSPORTATION
Caltrans ELECTRICAL DESIGN

FUNCTIONAL SUPERVISOR: ALI BAKHDOUD
CALCULATED-DESIGNED BY: MONA ATTALLAH
CHECKED BY: DANIEL VO
REVISED BY / DATE REVISED

LAST REVISION 01-09-12
DATE PLOTTED => 16-APR-2012
TIME PLOTTED => 11:20

Dist	COUNTY	ROUTE	POST MILES TOTAL PROJECT	SHEET No.	TOTAL SHEETS
06	Fre,Mad	99	26.7/R31.6, R0.0/R1.6	251	393

REGISTERED ELECTRICAL ENGINEER 01-09-12 DATE

4-2-12
PLANS APPROVAL DATE

REGISTERED PROFESSIONAL ENGINEER MONA N. ATTALLAH No. 18407 Exp. 6-30-12 ELECTRICAL STATE OF CALIFORNIA

THE STATE OF CALIFORNIA OR ITS OFFICERS OR AGENTS SHALL NOT BE RESPONSIBLE FOR THE ACCURACY OR COMPLETENESS OF SCANNED COPIES OF THIS PLAN SHEET.

LEGEND:

1 SPLICE VAULT AS SHOWN ON SHEET E-15.

2 Exist 120/240 V, 1Ø, 3-WIRE, TYPE III-AF SERVICE EQUIPMENT ENCLOSURE WITH THE FOLLOWING CIRCUIT BREAKERS:

CTID No. 06420990030711L

AMPERES	VOLTS	POLES	NAMEPLATE	METER	PHOTOELECTRIC CONTROL TYPE
100	240	2	MAIN BREAKER	YES	——
40	240	2	HIGHWAY LIGHTING	YES	IV
30	240	2	* SIGN ILLUMINATION	YES	LC3

* ADD NAMEPLATE

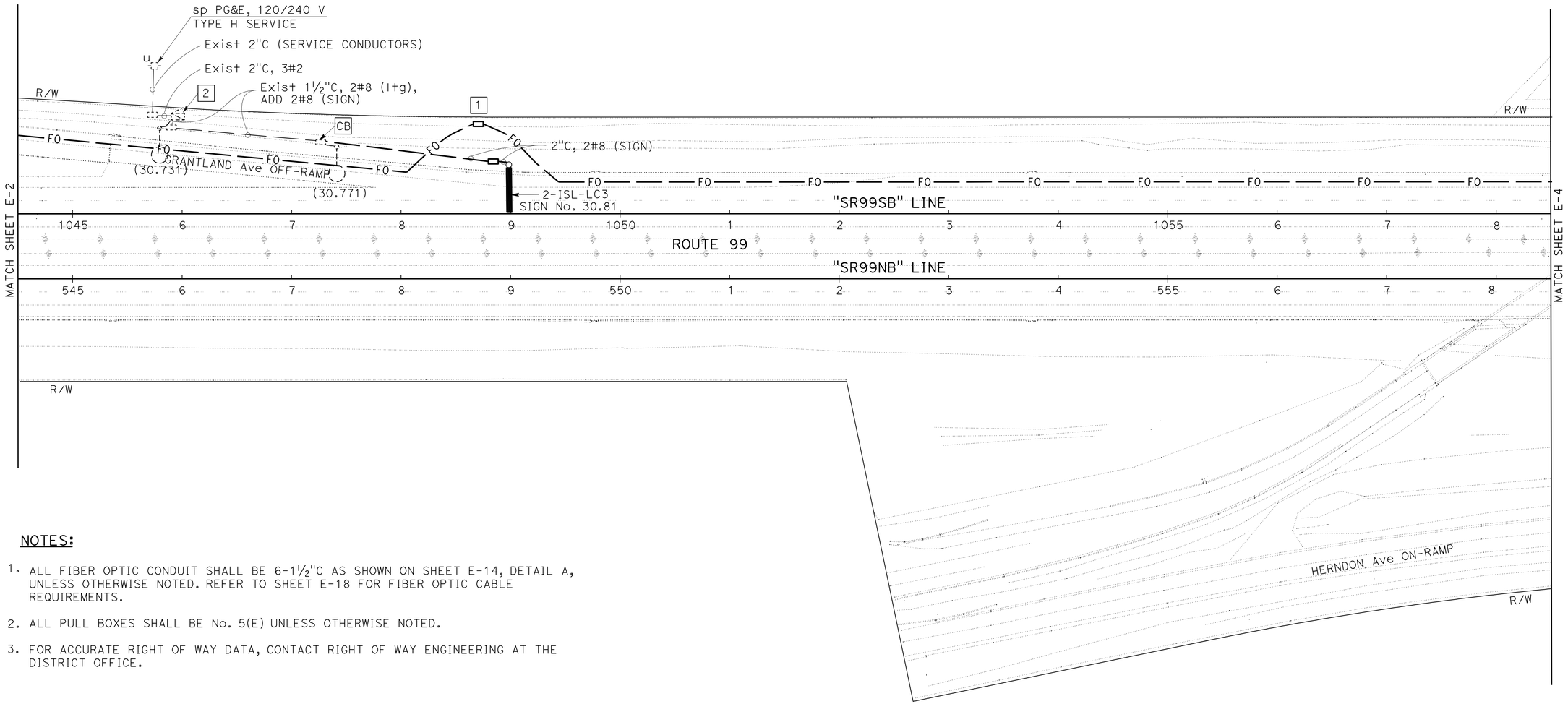

NOTES:

1. ALL FIBER OPTIC CONDUIT SHALL BE 6-1½"C AS SHOWN ON SHEET E-14, DETAIL A, UNLESS OTHERWISE NOTED. REFER TO SHEET E-18 FOR FIBER OPTIC CABLE REQUIREMENTS.
2. ALL PULL BOXES SHALL BE No. 5(E) UNLESS OTHERWISE NOTED.
3. FOR ACCURATE RIGHT OF WAY DATA, CONTACT RIGHT OF WAY ENGINEERING AT THE DISTRICT OFFICE.

MODIFY LIGHTING AND SIGN ILLUMINATION FIBER OPTIC SYSTEM

SCALE: 1" = 50'

E-3

APPROVED FOR ELECTRICAL WORK ONLY

REVISED BY | DATE REVISED
MONA ATTALLAH | DANIEL VO
CALCULATED-DESIGNED BY | CHECKED BY
FUNCTIONAL SUPERVISOR
ALI BAKHDOUD

STATE OF CALIFORNIA - DEPARTMENT OF TRANSPORTATION
Caltrans
ELECTRICAL DESIGN

LAST REVISION 01-09-12
DATE PLOTTED => 04-APR-2012
TIME PLOTTED => 11:30

Dist	COUNTY	ROUTE	POST MILES TOTAL PROJECT	SHEET No.	TOTAL SHEETS
06	Fre,Mad	99	26.7/R31.6, R0.0/R1.6	252	393

REGISTERED ELECTRICAL ENGINEER 01-09-12 DATE

4-2-12
PLANS APPROVAL DATE

REGISTERED PROFESSIONAL ENGINEER MONA N. ATTALLAH No. 18407 Exp. 6-30-12 ELECTRICAL STATE OF CALIFORNIA

THE STATE OF CALIFORNIA OR ITS OFFICERS OR AGENTS SHALL NOT BE RESPONSIBLE FOR THE ACCURACY OR COMPLETENESS OF SCANNED COPIES OF THIS PLAN SHEET.

LEGEND:

1. SPLICE VAULT AS SHOWN ON SHEET E-15.
2. Exist MODEL 334 CABINET FOR TMS. INSTALL STATE-FURNISHED MODEL 2070 CONTROLLER UNIT.
3. LABEL INDUCTIVE LOOP DETECTORS AS SHOWN ON SHEET E-13, DETAIL A. THE CONTRACTOR SHALL TERMINATE DLC AT LOWER INPUT PANEL (TB2) IN MODEL 334 CABINET AS SHOWN ON SHEET E-13, DETAIL A.
4. TYPE B TDC CABINET.
5. RS MVDS EQUIPMENT AND TYPE 30 NS POLE.

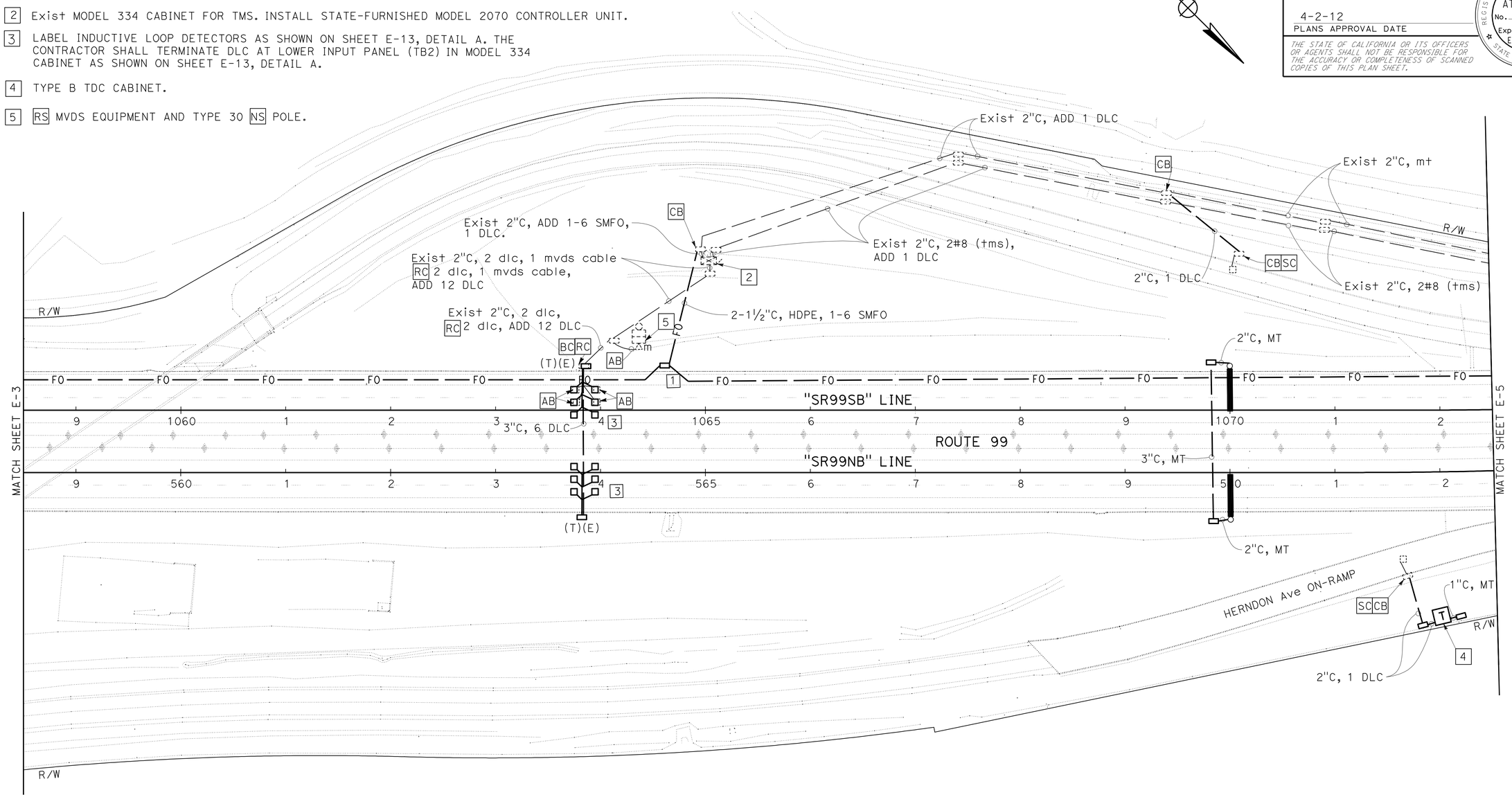

NOTES:

1. ALL PULL BOXES SHALL BE No. 5(E) UNLESS OTHERWISE NOTED.
2. ALL FIBER OPTIC CONDUIT SHALL BE 6-1½"C AS SHOWN ON SHEET E-14, DETAIL A, UNLESS OTHERWISE NOTED. REFER TO SHEET E-18 FOR FIBER OPTIC CABLE REQUIREMENTS.
3. FOR ACCURATE RIGHT OF WAY DATA, CONTACT RIGHT OF WAY ENGINEERING AT THE DISTRICT OFFICE.

REMOVE MICROWAVE VEHICLE DETECTION SYSTEM
MODIFY TRAFFIC COUNT STATION
MODIFY TRAFFIC MONITORING STATION (LOCATION 1)
MODIFY LIGHTING AND SIGN ILLUMINATION
FIBER OPTIC SYSTEM

SCALE: 1" = 50'

E-4

APPROVED FOR ELECTRICAL WORK ONLY

STATE OF CALIFORNIA - DEPARTMENT OF TRANSPORTATION
Caltrans® ELECTRICAL DESIGN

FUNCTIONAL SUPERVISOR: ALI BAKHDOUD
CALCULATED-DESIGNED BY: DANIEL VO
CHECKED BY: MONA ATTALLAH
REVISED BY
DATE REVISED

LAST REVISION 01-09-12
DATE PLOTTED => 04-APR-2012
TIME PLOTTED => 11:32

Dist	COUNTY	ROUTE	POST MILES TOTAL PROJECT	SHEET No.	TOTAL SHEETS
06	Fre,Mad	99	26.7/R31.6, R0.0/R1.6	253	393

REGISTERED ELECTRICAL ENGINEER 01-09-12 DATE

4-2-12
PLANS APPROVAL DATE

REGISTERED PROFESSIONAL ENGINEER MONA N. ATTALLAH No. 18407 Exp. 6-30-12 ELECTRICAL STATE OF CALIFORNIA

THE STATE OF CALIFORNIA OR ITS OFFICERS OR AGENTS SHALL NOT BE RESPONSIBLE FOR THE ACCURACY OR COMPLETENESS OF SCANNED COPIES OF THIS PLAN SHEET.

CONDUIT AND CONDUCTOR SCHEDULE

CONDUCTOR DESIGNATION		CONDUIT RUN NUMBER AND SIZE											
CABLE/ AWG	CIRCUIT	1	2	3	4	5	6	7	8	9	10	11	12
		* 2"	* 1½"	* 1½"	* 1½"	2"	* 1½"	* 2"	2"	2-1½"C TYPE 1	2-3"C	2"	3"
#8	ltg		*2	*2	2	2							
#8	vcs		**2	*2	2		2		2				
#8	RWIS			*2	*2		*2						
#8	visibility sensor			**2	**2		**2						
#8	mvds			*2	*2		*2	*2					
	tdc			**2	**2		**2						
#8	tms	*2		*2									
STC											6	6	3
DLC											12	12	6
FIBER OPTIC CABLE-6 SMFO										1			
#8	SIGN LTG			2	2	2							

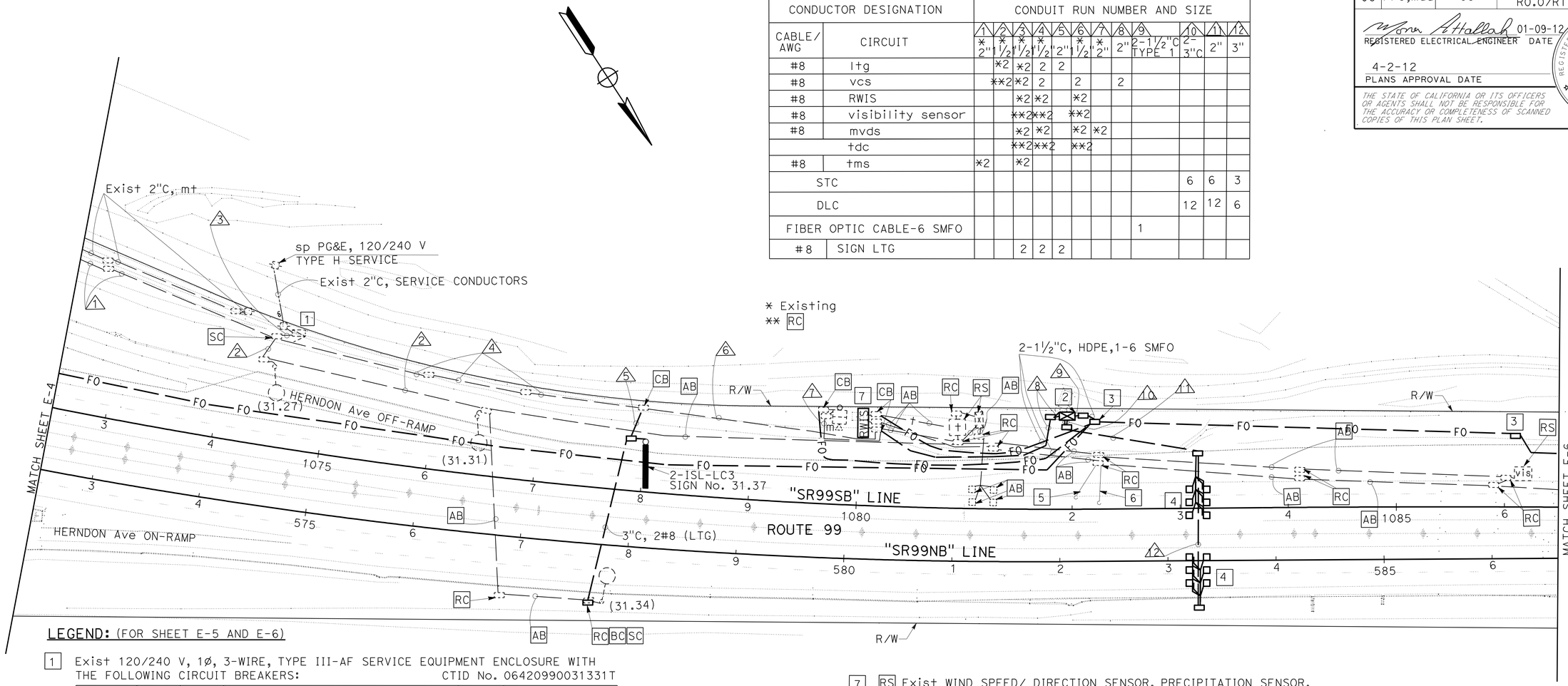

LEGEND: (FOR SHEET E-5 AND E-6)

1 Exist 120/240 V, 1ø, 3-WIRE, TYPE III-AF SERVICE EQUIPMENT ENCLOSURE WITH THE FOLLOWING CIRCUIT BREAKERS: CTID No. 06420990031331T

AMPERES	VOLTS	POLES	NAMEPLATE	METER	PHOTOELECTRIC CONTROL TYPE
100	240	3	MAIN BREAKER	2P-YES 1P-NO	—
40	240	2	Hwy ltg	YES	IV
40	120	1	traffic monitoring station	YES	—
40	120	1	*** traffic count station	YES	—
15	120	1	** vis sensor	YES	—
15	120	1	** tdc	YES	—
15	120	1	**** scan system	YES	—
15	120	1	peu controls	YES	—
15	120	1	mvds	YES	—
30	240	2	* SIGN ILLUMINATION	YES	LC3

* ADD CB AND NAMEPLATE.
** RC Exist NAMEPLATE. INSTALL "SPARE" NAMEPLATE.
*** REPLACE NAMEPLATE WITH "VCS".
**** REPLACE NAMEPLATE WITH "RWIS".

2 MODEL 334 CABINET WITH AUTOMATED TRAFFIC COUNTER.

3 SPLICE VAULT AS SHOWN ON SHEET E-15.

4 INDUCTIVE LOOP DETECTORS AND PIEZO AXLE SENSORS SHALL BE PLACED AND IDENTIFIED AS SHOWN ON SHEET E-13, DETAILS B AND C.

5 AB Exist PAVEMENT SURFACE SENSOR.

6 AB Exist SUBSURFACE PROBE.

7 RS Exist WIND SPEED/ DIRECTION SENSOR, PRECIPITATION SENSOR, AIR TEMPERATURE/ RELATIVE HUMIDITY SENSOR, RPU, RPU ENCLOSURE, AND DISCONNECT BOX. INSTALL ULTRASONIC WIND SPEED SENSOR, VISIBILITY SENSOR, PRECIPITATION SENSOR, RPU, RPU ENCLOSURE AND DISCONNECT BOX. REFER TO RWIS DETAIL ON SHEET E-17.

NOTES:

1. ALL PULL BOXES SHALL BE No. 5(E) UNLESS OTHERWISE NOTED.
2. ALL FIBER OPTIC CONDUIT SHALL BE 6-1½"C AS SHOWN ON SHEET E-14, DETAIL A, UNLESS OTHERWISE NOTED. REFER TO SHEET E-18 FOR FIBER OPTIC CABLE REQUIREMENTS.
3. FOR ACCURATE RIGHT OF WAY DATA, CONTACT RIGHT OF WAY ENGINEERING AT THE DISTRICT OFFICE.

MODIFY ROADSIDE WEATHER INFORMATION SYSTEM
MODIFY LIGHTING AND SIGN ILLUMINATION
MODIFY VEHICLE CLASSIFICATION STATION
FIBER OPTIC SYSTEM

SCALE: 1" = 50'

APPROVED FOR ELECTRICAL WORK ONLY

E-5

STATE OF CALIFORNIA - DEPARTMENT OF TRANSPORTATION
Caltrans® ELECTRICAL DESIGN
FUNCTIONAL SUPERVISOR: ALI BAKHDOUD
CALCULATED-DESIGNED BY: MONA ATTALLAH
CHECKED BY: DANIEL VO
REVISED BY / DATE REVISED

LAST REVISION 01-09-12 | DATE PLOTTED => 05-APR-2012 | TIME PLOTTED => 05:37

Dist	COUNTY	ROUTE	POST MILES TOTAL PROJECT	SHEET No.	TOTAL SHEETS
06	Fre,Mad	99	26.7/R31.6, R0.0/R1.6	254	393

REGISTERED ELECTRICAL ENGINEER 01-09-12 DATE

4-2-12
PLANS APPROVAL DATE

REGISTERED PROFESSIONAL ENGINEER MONA N. ATTALLAH No. 18407 Exp. 6-30-12 ELECTRICAL STATE OF CALIFORNIA

THE STATE OF CALIFORNIA OR ITS OFFICERS OR AGENTS SHALL NOT BE RESPONSIBLE FOR THE ACCURACY OR COMPLETENESS OF SCANNED COPIES OF THIS PLAN SHEET.

NOTES:

1. FOR LEGEND SEE SHEET E-5.
2. ALL PULL BOXES SHALL BE No. 5(E) UNLESS OTHERWISE NOTED.
3. ALL FIBER OPTIC CONDUIT SHALL BE 6-1½"C AS SHOWN ON SHEET E-14, DETAIL A, UNLESS OTHERWISE NOTED. REFER TO SHEET E-18 FOR FIBER OPTIC CABLE REQUIREMENTS.
4. FOR ACCURATE RIGHT OF WAY DATA, CONTACT RIGHT OF WAY ENGINEERING AT THE DISTRICT OFFICE.

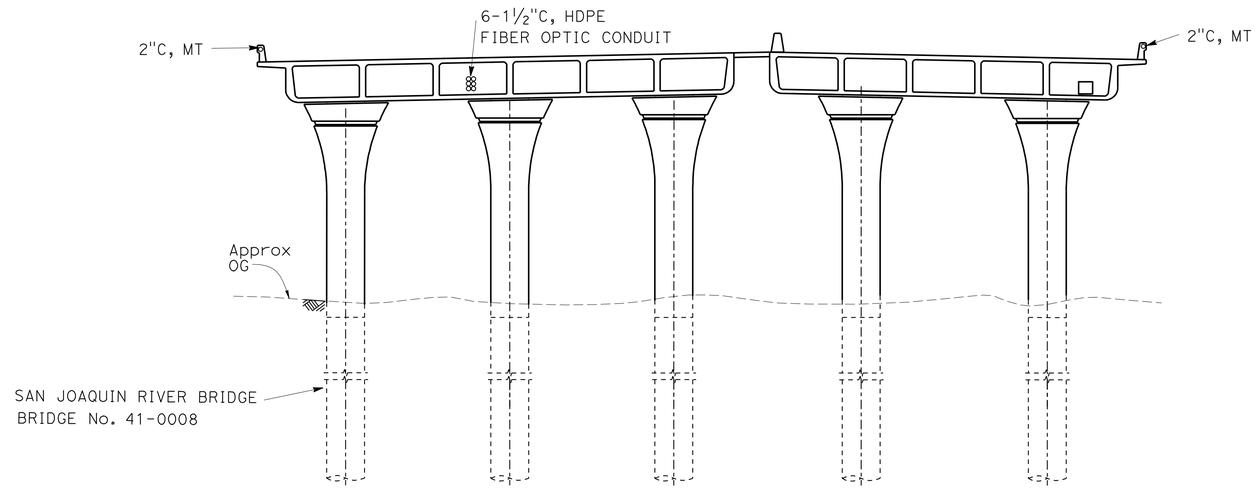

DETAIL A
NO SCALE

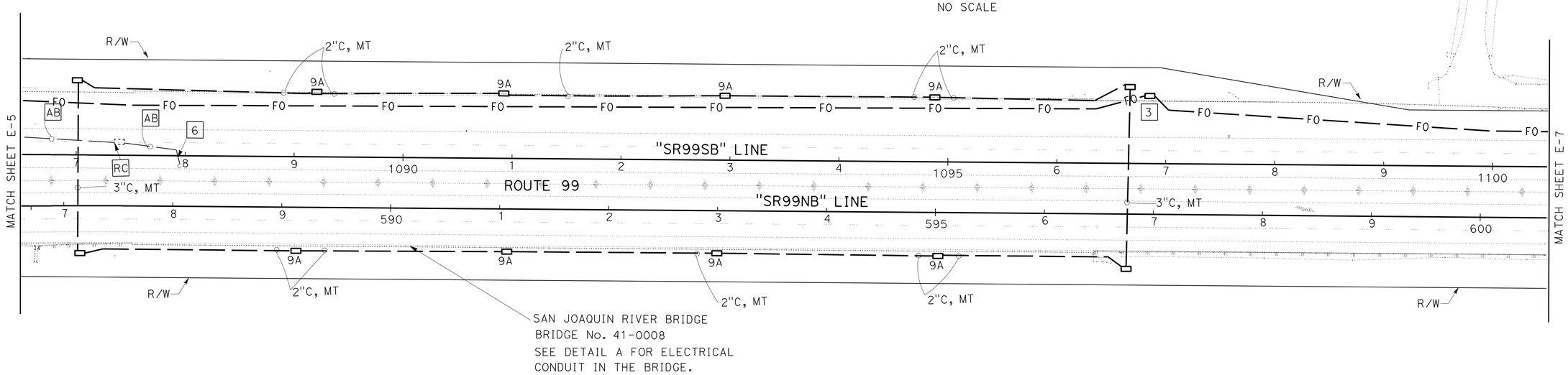

MODIFY ROADSIDE WEATHER INFORMATION SYSTEM
FIBER OPTIC SYSTEM

SCALE: 1" = 50'

E-6

APPROVED FOR ELECTRICAL WORK ONLY

STATE OF CALIFORNIA - DEPARTMENT OF TRANSPORTATION
Caltrans
ELECTRICAL DESIGN

FUNCTIONAL SUPERVISOR: ALI BAKHDOUD
CALCULATED-DESIGNED BY: MONA ATTALLAH
CHECKED BY: DANIEL VO
REVISED BY
DATE REVISED

LAST REVISION 01-09-12
DATE PLOTTED => 16-APR-2012
TIME PLOTTED => 11:21

Dist	COUNTY	ROUTE	POST MILES TOTAL PROJECT	SHEET No.	TOTAL SHEETS
06	Fre,Mad	99	26.7/R31.6, R0.0/R1.6	255	393

REGISTERED ELECTRICAL ENGINEER 01-09-12 DATE

4-2-12
PLANS APPROVAL DATE

REGISTERED PROFESSIONAL ENGINEER MONA N. ATTALLAH No. 18407 Exp. 6-30-12 ELECTRICAL STATE OF CALIFORNIA

THE STATE OF CALIFORNIA OR ITS OFFICERS OR AGENTS SHALL NOT BE RESPONSIBLE FOR THE ACCURACY OR COMPLETENESS OF SCANNED COPIES OF THIS PLAN SHEET.

LEGEND:

1 Exist 120/240 V, 1ø, 3-WIRE, TYPE III-AF SERVICE EQUIPMENT ENCLOSURE WITH THE FOLLOWING CIRCUIT BREAKERS:

AMPERES	VOLTS	POLES	NAMEPLATE	METER	PHOTOELECTRIC CONTROL TYPE
200	240	2	MAIN BREAKER	YES	——
70	120	1	334-C CABINET	YES	——
** 80	120	1	CMS1	YES	——
** 80	120	1	CMS2	YES	——
*** 80	120	1	SPARE	YES	——
*** 80	120	1	SPARE	YES	——
40	120	1	mvds	YES	——
40	240	2	* HWY LTG	YES	IV
30	240	2	* CMS	YES	——

* ADD CB AND NAMEPLATE.

** RS 80 A CB.

*** RC EXISTING CABLE FROM CB AND REPLACE NAME PLATE WITH "SPARE".

2 Exist MODEL 170E CONTROLLER ASSEMBLY WITH MODEL 334 CABINET FOR CMS.

3 SPLICE VAULT AS SHOWN ON SHEET E-15.

4 RS 60 Exist MODEL 500 CMS XENON PIXEL MATRIX MODULES, INSTALL 60 MODEL 500 CMS LED PIXEL MATRIX MODULES.

5 PLACE ELECTROLIER AT 32′ FROM ETW.

CONDUIT AND CONDUCTOR SCHEDULE

CONDUCTOR DESIGNATION		CONDUIT RUN NUMBER AND SIZE							
CABLE/ AWG	CIRCUIT	1 *3"	2 *3"	3 *2"	4 *2"	5 *3"	6 *3"	7 2-1½" HDPF	8 *2"
#4/0	service	*3							
#4	334 cabinet		*2	*2					
#2	cms lamps		*4 **2				*4 **2		
#2	lamps neutral		*2 **1				*2 **1		
#6	cms G						*1		
	harness #5					*1			
	harness #4					*1			
12C-#20	telephone				*1				
#8	mvds		*2						*2
#8	HWY LIGHTING		2						
FIBER OPTIC CABLE - 6 SMFO					1			1	

* Existing
** RC

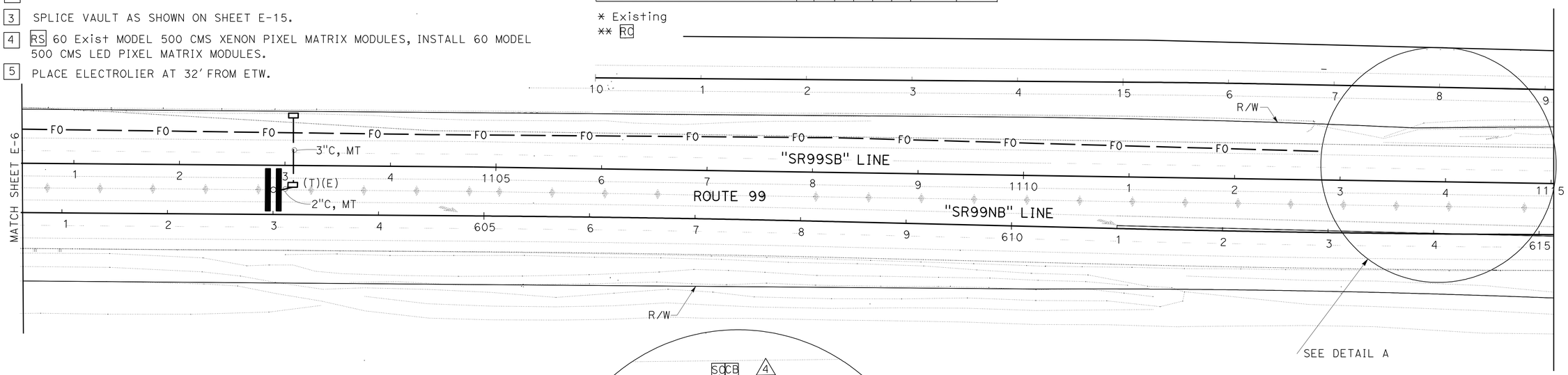

NOTES:

1. ALL PULL BOXES SHALL BE No. 5(E) UNLESS OTHERWISE NOTED.
2. ALL FIBER OPTIC CONDUIT SHALL BE 6-1½"C AS SHOWN ON SHEET E-14, DETAIL A, UNLESS OTHERWISE NOTED. REFER TO SHEET E-18 FOR FIBER OPTIC CABLE REQUIREMENTS.
3. FOR ACCURATE RIGHT OF WAY DATA, CONTACT RIGHT OF WAY ENGINEERING AT THE DISTRICT OFFICE.

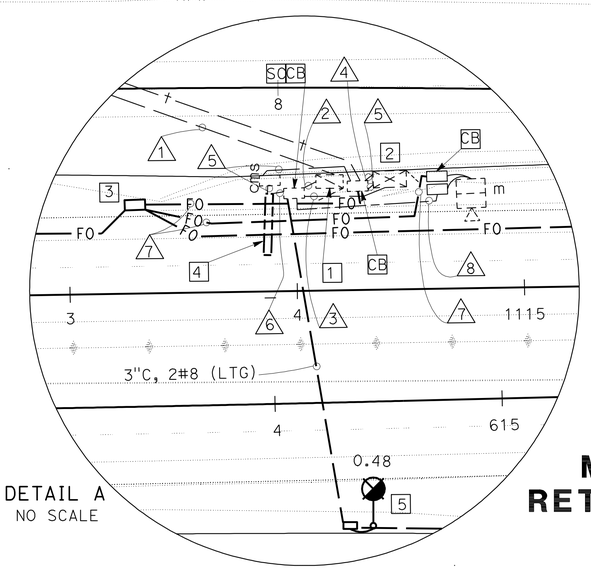

DETAIL A
NO SCALE

APPROVED FOR ELECTRICAL WORK ONLY

MODIFY LIGHTING AND SIGN ILLUMINATION
RETROFIT CHANGEABLE MESSAGE SIGN SYSTEM
FIBER OPTIC SYSTEM

SCALE: 1" = 50′

E-7

STATE OF CALIFORNIA - DEPARTMENT OF TRANSPORTATION
Caltrans® ELECTRICAL DESIGN

FUNCTIONAL SUPERVISOR: ALI BAKHDOUD
CALCULATED-DESIGNED BY: MONA ATTALLAH
CHECKED BY: DANIEL VO
REVISED BY
DATE REVISED

LAST REVISION 01-09-12
DATE PLOTTED => 05-APR-2012
TIME PLOTTED => 05:43

Dist	COUNTY	ROUTE	POST MILES TOTAL PROJECT	SHEET No.	TOTAL SHEETS
06	Fre,Mad	99	26.7/R31.6, R0.0/R1.6	256	393

Mona Attallah 01-09-12
REGISTERED ELECTRICAL ENGINEER DATE

4-2-12
PLANS APPROVAL DATE

REGISTERED PROFESSIONAL ENGINEER MONA N. ATTALLAH No. 18407 Exp. 6-30-12 ELECTRICAL STATE OF CALIFORNIA

THE STATE OF CALIFORNIA OR ITS OFFICERS OR AGENTS SHALL NOT BE RESPONSIBLE FOR THE ACCURACY OR COMPLETENESS OF SCANNED COPIES OF THIS PLAN SHEET.

LEGEND:

1 SPLICE VAULT AS SHOWN ON SHEET E-15.

2 PLACE ELECTROLIER AT 32′ FROM ETW.

NOTES:

1. ALL FIBER OPTIC CONDUIT SHALL BE 6-1½"C AS SHOWN ON SHEET E-14, DETAIL A, UNLESS OTHERWISE NOTED. REFER TO SHEET E-18 FOR FIBER OPTIC CABLE REQUIREMENTS.
2. FOR ACCURATE RIGHT OF WAY DATA, CONTACT RIGHT OF WAY ENGINEERING AT THE DISTRICT OFFICE.
3. ALL PULL BOXES SHALL BE No. 5(E) UNLESS OTHERWISE NOTED.

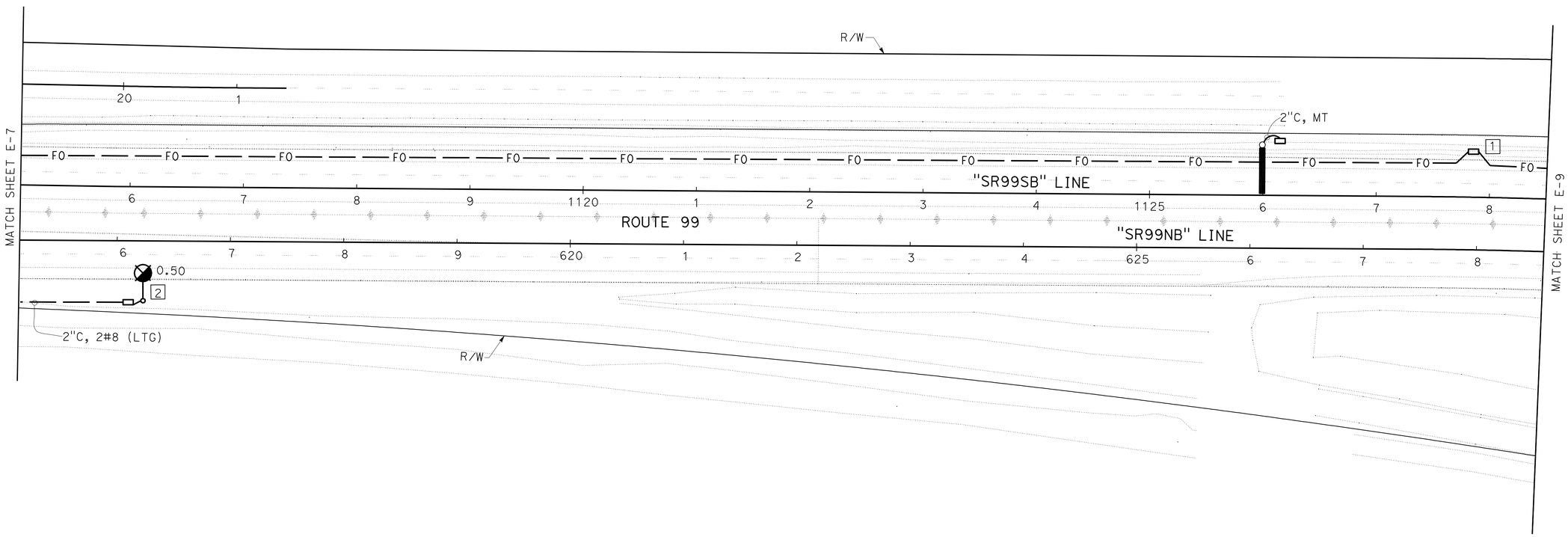

MODIFY LIGHTING AND SIGN ILLUMINATION FIBER OPTIC SYSTEM

SCALE: 1" = 50′

E-8

APPROVED FOR ELECTRICAL WORK ONLY

STATE OF CALIFORNIA - DEPARTMENT OF TRANSPORTATION
Caltrans® **ELECTRICAL DESIGN**

FUNCTIONAL SUPERVISOR: ALI BAKHDOUD
CALCULATED-DESIGNED BY: MONA ATTALLAH
CHECKED BY: DANIEL VO
REVISED BY
DATE REVISED

LAST REVISION 01-09-12
DATE PLOTTED => 05-APR-2012
TIME PLOTTED => 05:43

Dist	COUNTY	ROUTE	POST MILES TOTAL PROJECT	SHEET No.	TOTAL SHEETS
06	Fre,Mad	99	26.7/R31.6, R0.0/R1.6	257	393

REGISTERED ELECTRICAL ENGINEER 01-09-12 DATE

4-2-12
PLANS APPROVAL DATE

REGISTERED PROFESSIONAL ENGINEER MONA N. ATTALLAH No. 18407 Exp. 6-30-12 ELECTRICAL STATE OF CALIFORNIA

THE STATE OF CALIFORNIA OR ITS OFFICERS OR AGENTS SHALL NOT BE RESPONSIBLE FOR THE ACCURACY OR COMPLETENESS OF SCANNED COPIES OF THIS PLAN SHEET.

LEGEND:

1 Exist 120/240 V, 1ø, 3-WIRE, TYPE III-AF SERVICE EQUIPMENT ENCLOSURE WITH THE FOLLOWING CIRCUIT BREAKERS:

CTID No. 06410990000989T

AMPERES	VOLTS	POLES	NAMEPLATE	METER	PHOTOELECTRIC CONTROL TYPE
100	240	3	MAIN DISCONNECT	*** 2P-YES/ 1P-NO	———
40	240	2	HIGHWAY LIGHTING (CKT 1)	**** YES	IV
40	240	2	HIGHWAY LIGHTING (CKT 2)	**** YES	IV
** 30	240	2	SIGN LTG	**** YES	LC3
15	120	1	SOFFIT CONTROL	**** YES	———
40	120	1	HIGHWAY ADVISORY RADIO	**** YES	———
20	120	1	EMS-SB	**** YES	———
20	120	1	EMS-NB	**** YES	———
40	120	1	TMS	**** YES	———
* 30	120	1	* CCTV	**** YES	———

* RS 20 A CB FROM SPARE, ADD 30 A CB AND NAMEPLATE.
** RS 40 A CB, ADD 30 A CB. REPLACE NAMEPLATE WITH SIGN LTG.
*** MODIFY EXISTING 3P MAIN CB FROM 1P-METERED AND 2P-UNMETERED TO 2P-METERED AND 1P-UNMETERED.
**** CHANGE FROM UNMETERED TO METERED CIRCUIT.

2 Exist MODEL 334 CABINET FOR TMS. INSTALL STATE-FURNISHED MODEL 2070 CONTROLLER UNIT.

3 Exist MODEL 334 CABINET RS Exist HAR EQUIPMENT, INSTALL HAR EQUIPMENT.

4 LABEL INDUCTIVE LOOP DETECTORS AS SHOWN ON SHEET E-13, DETAIL A. THE CONTRACTOR SHALL TERMINATE DLC AT LOWER INPUT PANEL (TB2) IN MODEL 334 CONTROLLER CABINET AS SHOWN ON SHEET E-13, DETAIL A.

5 MODEL 334 CABINET FOR CCTV SYSTEM.

CONDUIT AND CONDUCTOR SCHEDULE

CONDUCTOR DESIGNATION		CONDUIT RUN NUMBER AND SIZE																											
CABLE/ AWG	CIRCUIT	1	2	3	4	5	6	7	8	9	10	11	12	13	14	15	16	17	18	19	20	21	22	23	24	25	26
		*2"	*2"	*2"	*2"	*2"	*2"	3"	2"	2-3"	2"	*2"	*2"	*2"	*2"	2"	*2"	2-1/2" HDPE	*2"	2-1/2" TYPE 1	*2"	*2"	*2"	3"	2"	1"	*2"
#4	hwy ltg	*4	2				2	2						*2			*2		*4			*2	2				*4
#8	soffit	**2																									**2
#8	har 334 cabinet	*2	*2			*2																					
12C-#20	telephone			*1																	*1						
RG-8/4	antenna coaxial				*1																						
#6	equipment ground				*1																						
#8	ems	*4	*4				*2	2															*2				
#6	CCTV	2	2					2	2																		
#8	tms	*2										*2															
FIBER OPTIC CABLE-6 SMFO													1					1		1	1						
COMPOSITE CABLE-CCTV										1	1																
mvds cable															**1												
DLC						2	2								*8 3	11											
#4	SIGN ILLUMINATION	2	2				2	2														2	2				
#2 WELL PUMP, #2 G																								3,1	3,1		
#10 ICC A, #12 G																								2,1		2,1	

* Existing
** RC

6 CCTV TYPE 35 POLE WITH CAMERA ASSEMBLY.

7 SPLICE VAULT AS SHOWN ON SHEET E-15.

8 TYPE B TDC CABINET.

9 REFER TO SHEETS E-23 AND E-24 FOR WELL PUMP CONTROL SCHEMATIC AND ELECTRICAL DETAILS.

10 SEE LEGEND 10 ON SHEET E-10 FOR IRRIGATION SERVICE TABLE.

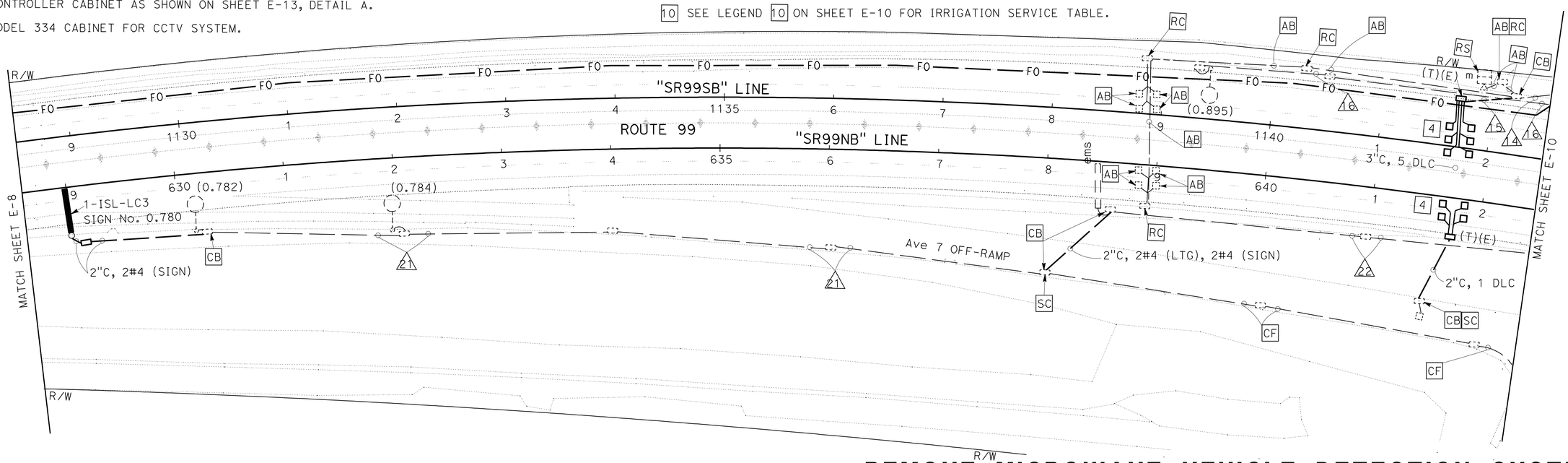

NOTES:

1. ALL FIBER OPTIC CONDUIT SHALL BE 6-1½"C AS SHOWN ON SHEET E-14, DETAIL A, UNLESS OTHERWISE NOTED. REFER TO SHEET E-18 FOR FIBER OPTIC CABLE REQUIREMENTS.
2. ALL PULL BOXES SHALL BE No. 5(E) UNLESS OTHERWISE NOTED.
3. FOR ACCURATE RIGHT OF WAY DATA, CONTACT RIGHT OF WAY ENGINEERING AT THE DISTRICT OFFICE.

REMOVE MICROWAVE VEHICLE DETECTION SYSTEM
MODIFY TRAFFIC COUNT STATION
MODIFY LIGHTING AND SIGN ILLUMINATION
MODIFY TRAFFIC MONITORING STATION (LOCATION 2)
ELECTRIC SERVICE (IRRIGATION)
FIBER OPTIC SYSTEM

SCALE: 1" = 50'

APPROVED FOR ELECTRICAL WORK ONLY

E-9

STATE OF CALIFORNIA - DEPARTMENT OF TRANSPORTATION
Caltrans® ELECTRICAL DESIGN
FUNCTIONAL SUPERVISOR: ALI BAKHDOUD
CALCULATED-DESIGNED BY: MONA ATTALLAH
CHECKED BY: DANIEL VO
REVISED BY / DATE REVISED

LAST REVISION 01-09-12
DATE PLOTTED => 16-APR-2012
TIME PLOTTED => 11:21

Dist	COUNTY	ROUTE	POST MILES TOTAL PROJECT	SHEET No.	TOTAL SHEETS
06	Fre,Mad	99	26.7/R31.6, R0.0/R1.6	258	393

REGISTERED ELECTRICAL ENGINEER 01-09-12 DATE

4-2-12
PLANS APPROVAL DATE

REGISTERED PROFESSIONAL ENGINEER MONA N. ATTALLAH No. 18407 Exp. 6-30-12 ELECTRICAL STATE OF CALIFORNIA

THE STATE OF CALIFORNIA OR ITS OFFICERS OR AGENTS SHALL NOT BE RESPONSIBLE FOR THE ACCURACY OR COMPLETENESS OF SCANNED COPIES OF THIS PLAN SHEET.

NOTES:

1. FOR LEGEND, NOTES AND SCHEDULES SEE SHEET E-9.
2. FOR ACCURATE RIGHT OF WAY DATA, CONTACT RIGHT OF WAY ENGINEERING AT THE DISTRICT OFFICE.

LEGEND:

10 120/240 V, 3ø, 4-WIRE, TYPE III-BF SERVICE EQUIPMENT ENCLOSURE WITH THE FOLLOWING CIRCUIT BREAKERS:

CTID No. 06410990000991G

AMPERES	VOLTS	POLES	NAMEPLATE	METER	NOTES
100	240	3	MAIN	YES	———
40	240	3	SPARE	YES	———
90	240	3	WELL PUMP	YES	———
20	120	1	ICC A	YES	———
———	———	6	SPACE	———	———

11 PULL BOX PER PG&E REQUIREMENTS.

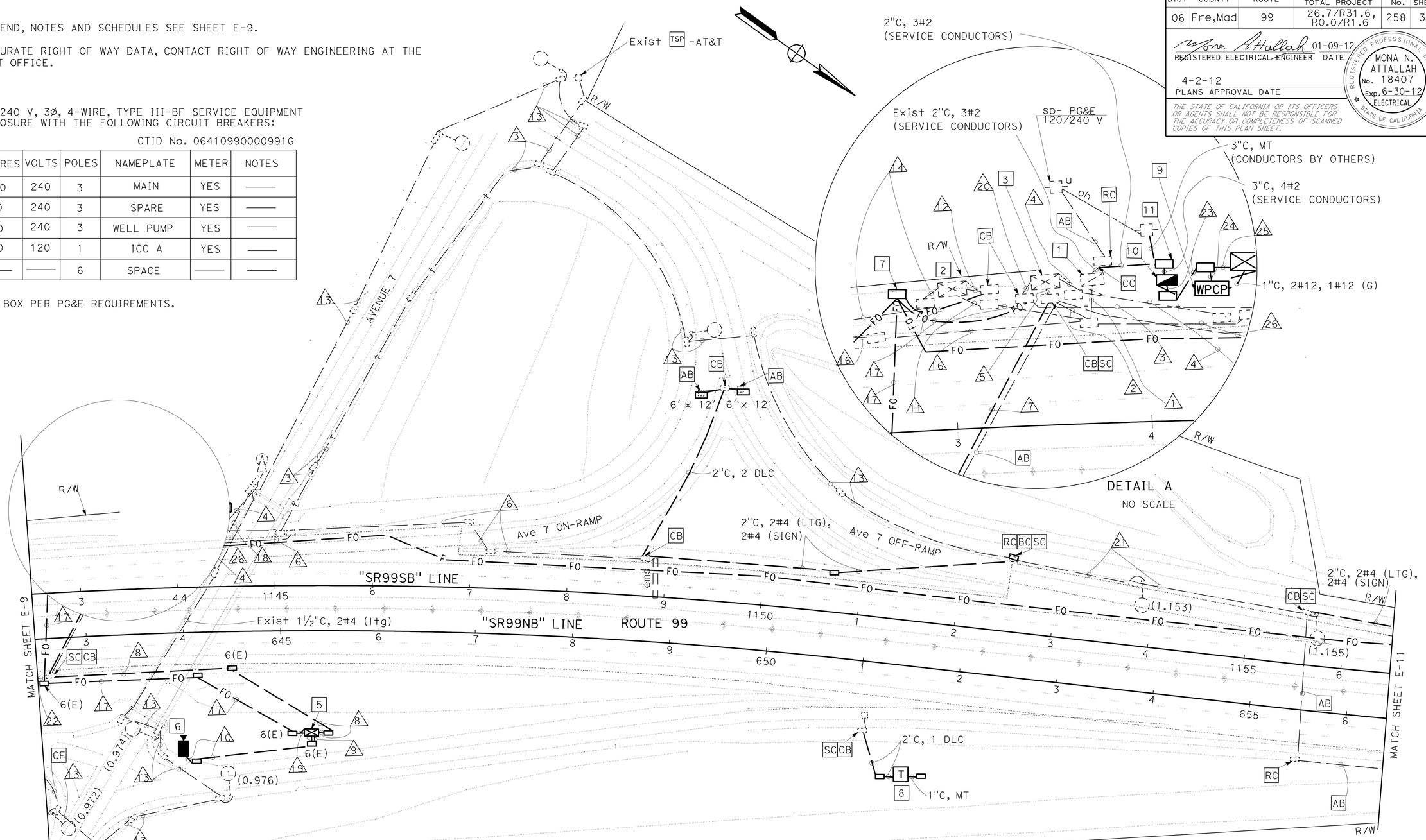

MODIFY TRAFFIC COUNT STATION
MODIFY LIGHTING AND SIGN ILLUMINATION
MODIFY HIGHWAY ADVISORY RADIO SYSTEM
CLOSED CIRCUIT TELEVISION SYSTEM
ELECTRIC SERVICE (IRRIGATION)
FIBER OPTIC SYSTEM

SCALE: 1" = 50'

E-10

APPROVED FOR ELECTRICAL WORK ONLY

STATE OF CALIFORNIA - DEPARTMENT OF TRANSPORTATION
Caltrans® **ELECTRICAL DESIGN**

FUNCTIONAL SUPERVISOR: ALI BAKHDOUD
CALCULATED-DESIGNED BY: MONA ATTALLAH
CHECKED BY: DANIEL VO
REVISED BY / DATE REVISED

LAST REVISION 01-09-12
DATE PLOTTED => 10-APR-2012
TIME PLOTTED => 07:59

Dist	COUNTY	ROUTE	POST MILES TOTAL PROJECT	SHEET No.	TOTAL SHEETS
06	Fre,Mad	99	26.7/R31.6, R0.0/R1.6	259	393

REGISTERED ELECTRICAL ENGINEER 01-09-12 DATE

4-2-12
PLANS APPROVAL DATE

REGISTERED PROFESSIONAL ENGINEER MONA N. ATTALLAH No. 18407 Exp. 6-30-12 ELECTRICAL STATE OF CALIFORNIA

THE STATE OF CALIFORNIA OR ITS OFFICERS OR AGENTS SHALL NOT BE RESPONSIBLE FOR THE ACCURACY OR COMPLETENESS OF SCANNED COPIES OF THIS PLAN SHEET.

LEGEND:

[1] SPLICE VAULT AS SHOWN ON SHEET E-15.

NOTES:

1. ALL FIBER OPTIC CONDUIT SHALL BE 6-1½"C AS SHOWN ON SHEET E- 14, DETAIL A, UNLESS OTHERWISE NOTED. REFER TO SHEET E-18 FOR FIBER OPTIC CABLE REQUIREMENTS.
2. FOR ACCURATE RIGHT OF WAY DATA, CONTACT RIGHT OF WAY ENGINEERING AT THE DISTRICT OFFICE.
3. ALL PULL BOXES SHALL BE No. 5(E) UNLESS OTHERWISE NOTED.

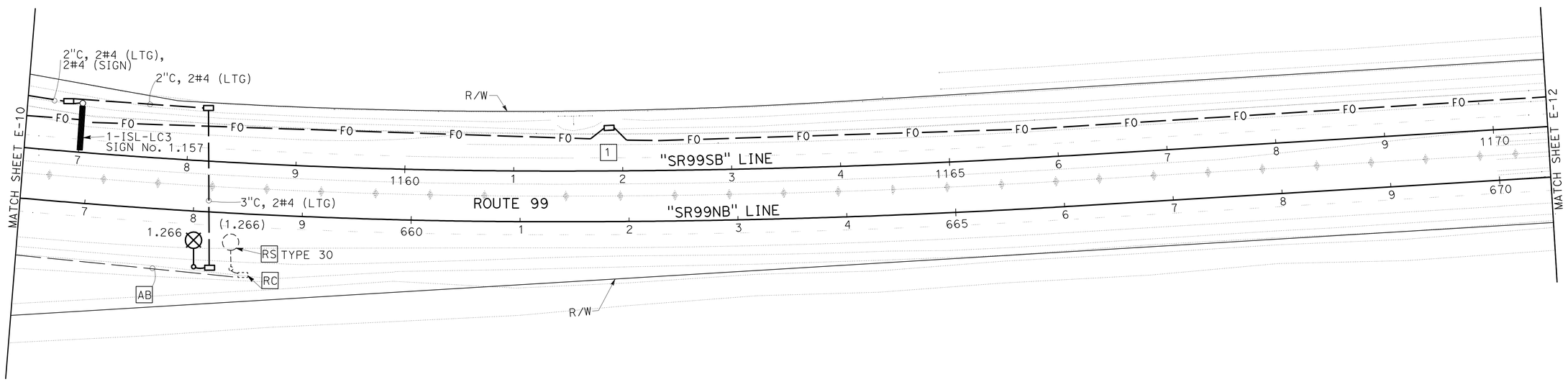

MODIFY LIGHTING AND SIGN ILLUMINATION FIBER OPTIC SYSTEM

SCALE: 1" = 50'

E-11

APPROVED FOR ELECTRICAL WORK ONLY

STATE OF CALIFORNIA - DEPARTMENT OF TRANSPORTATION
Caltrans® ELECTRICAL DESIGN

FUNCTIONAL SUPERVISOR: ALI BAKHDOUD
CALCULATED-DESIGNED BY: MONA ATTALLAH
CHECKED BY: DANIEL VO
REVISED BY
DATE REVISED

LAST REVISION 01-09-12
DATE PLOTTED => 05-APR-2012
TIME PLOTTED => 05:58

Dist	COUNTY	ROUTE	POST MILES TOTAL PROJECT	SHEET No.	TOTAL SHEETS
06	Fre,Mad	99	26.7/R31.6, R0.0/R1.6	260	393

REGISTERED ELECTRICAL ENGINEER 01-09-12 DATE

4-2-12
PLANS APPROVAL DATE

REGISTERED PROFESSIONAL ENGINEER MONA N. ATTALLAH No. 18407 Exp. 6-30-12 ELECTRICAL STATE OF CALIFORNIA

THE STATE OF CALIFORNIA OR ITS OFFICERS OR AGENTS SHALL NOT BE RESPONSIBLE FOR THE ACCURACY OR COMPLETENESS OF SCANNED COPIES OF THIS PLAN SHEET.

LEGEND:

[1] SPLICE VAULT AS SHOWN ON SHEET E-15.

NOTES:

1. ALL FIBER OPTIC CONDUIT SHALL BE 6-1½"C AS SHOWN ON SHEET E-14, DETAIL A, UNLESS OTHERWISE NOTED. REFER TO SHEET E-18 FOR FIBER OPTIC CABLE REQUIREMENTS.
2. FOR ACCURATE RIGHT OF WAY DATA, CONTACT RIGHT OF WAY ENGINEERING AT THE DISTRICT OFFICE.

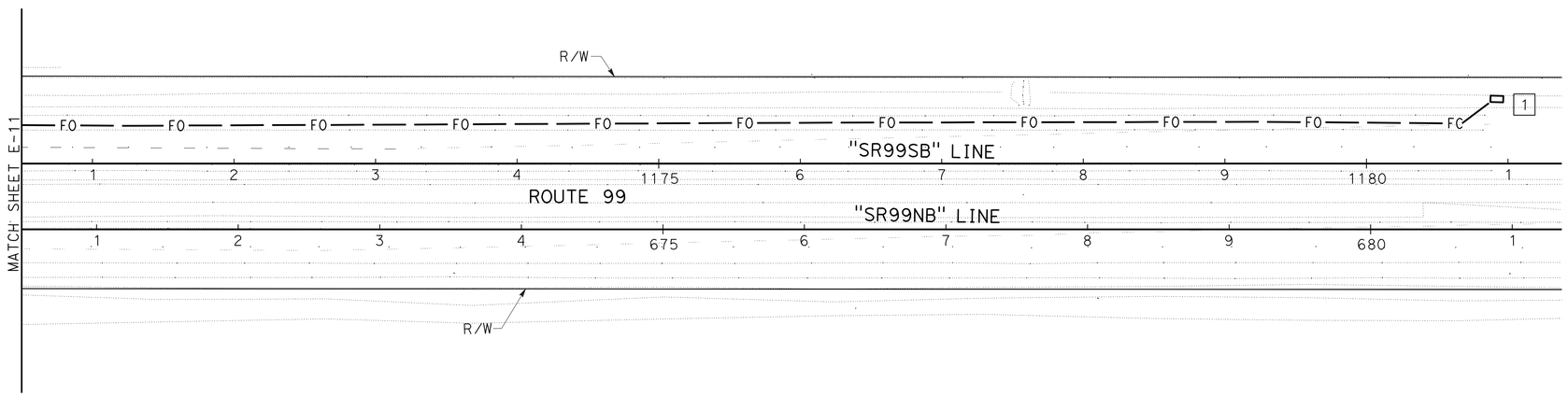

FIBER OPTIC SYSTEM

SCALE: 1" = 50'

E-12

APPROVED FOR ELECTRICAL WORK ONLY

STATE OF CALIFORNIA - DEPARTMENT OF TRANSPORTATION
Caltrans® **ELECTRICAL DESIGN**

FUNCTIONAL SUPERVISOR: ALI BAKHDOUD
CALCULATED-DESIGNED BY: MONA ATTALLAH
CHECKED BY: DANIEL VO
REVISED BY
DATE REVISED

LAST REVISION 01-09-12
DATE PLOTTED => 05-APR-2012
TIME PLOTTED => 09:58

Dist	COUNTY	ROUTE	POST MILES TOTAL PROJECT	SHEET No.	TOTAL SHEETS
06	Fre,Mad	99	26.7/R31.6, R0.0/R1.6	261	393

REGISTERED ELECTRICAL ENGINEER 01-09-12 DATE

4-2-12
PLANS APPROVAL DATE

REGISTERED PROFESSIONAL ENGINEER MONA N. ATTALLAH No. 18407 Exp. 6-30-12 ELECTRICAL STATE OF CALIFORNIA

THE STATE OF CALIFORNIA OR ITS OFFICERS OR AGENTS SHALL NOT BE RESPONSIBLE FOR THE ACCURACY OR COMPLETENESS OF SCANNED COPIES OF THIS PLAN SHEET.

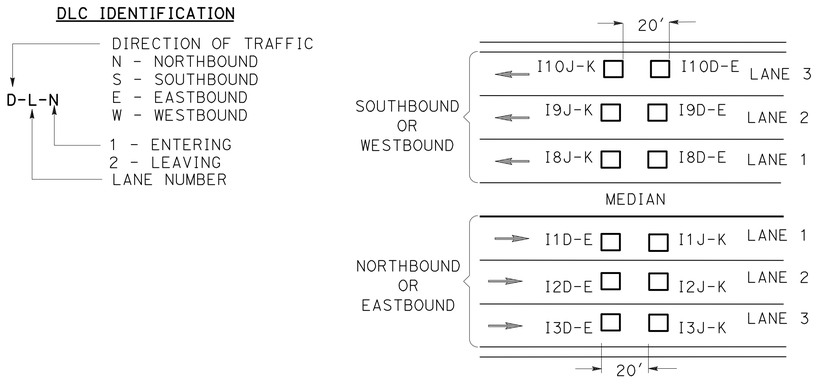

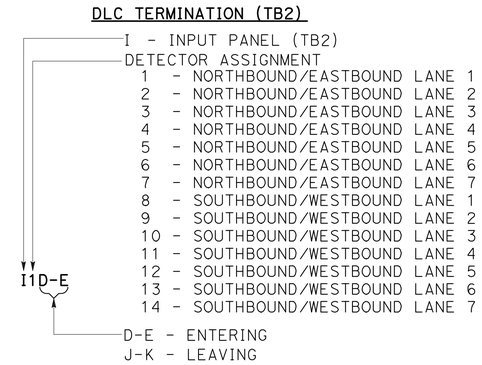

TMS DLC IDENTIFICATION AND TERMINATION DETAIL A

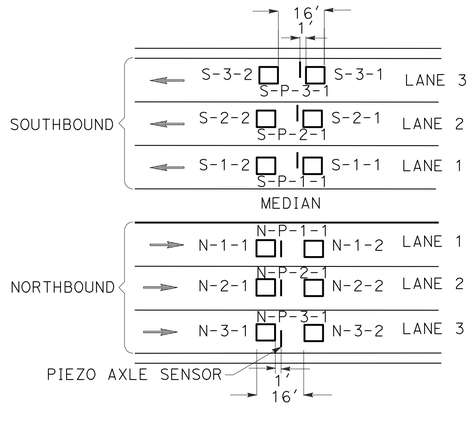

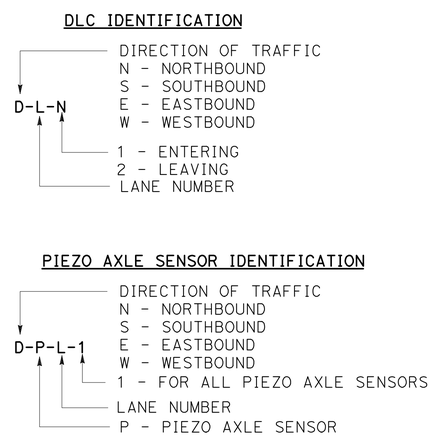

VCS DLC AND PIEZO AXLE SENSOR IDENTIFICATION DETAIL B

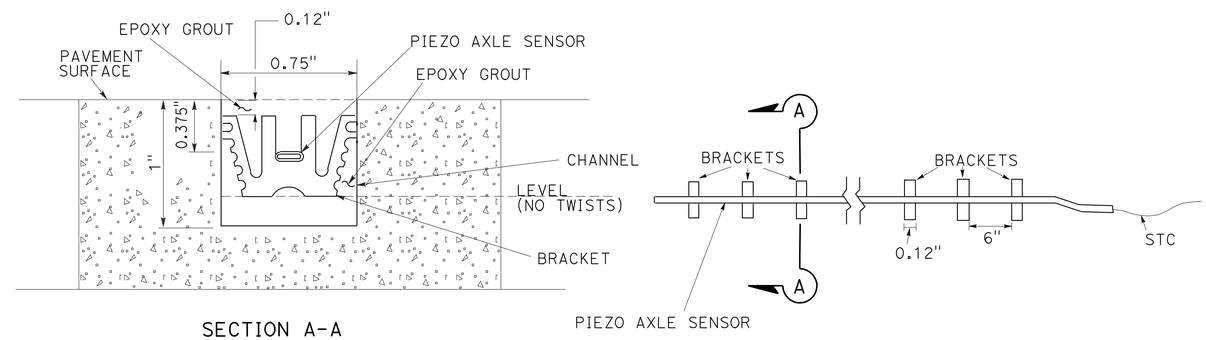

PIEZO AXLE SENSOR INSTALLATION DETAIL C

MODIFY VEHICLE CLASSIFICATION STATION
MODIFY TRAFFIC MONITORING STATION

NO SCALE

E-13

APPROVED FOR ELECTRICAL WORK ONLY

STATE OF CALIFORNIA - DEPARTMENT OF TRANSPORTATION
Caltrans® ELECTRICAL DESIGN

FUNCTIONAL SUPERVISOR: ALI BAKHDOUD
CALCULATED-DESIGNED BY: MONA ATTALLAH
CHECKED BY: DANIEL VO
REVISED BY
DATE REVISED

LAST REVISION 01-09-12
DATE PLOTTED => 04-APR-2012
TIME PLOTTED => 10:59

Dist	COUNTY	ROUTE	POST MILES TOTAL PROJECT	SHEET No.	TOTAL SHEETS
06	Fre,Mad	99	26.7/R31.6, R0.0/R1.6	262	393

REGISTERED ELECTRICAL ENGINEER 01-09-12 DATE

4-2-12
PLANS APPROVAL DATE

REGISTERED PROFESSIONAL ENGINEER MONA N. ATTALLAH No. 18407 Exp. 6-30-12 ELECTRICAL STATE OF CALIFORNIA

THE STATE OF CALIFORNIA OR ITS OFFICERS OR AGENTS SHALL NOT BE RESPONSIBLE FOR THE ACCURACY OR COMPLETENESS OF SCANNED COPIES OF THIS PLAN SHEET.

NOTES: (FOR THIS SHEET ONLY)

1. ANY FIBER OPTIC CONDUIT INSTALLED WITHIN 3′ OF GUARDRAIL SHALL BE 55" MINIMUM DEPTH TO TOP OF CONDUIT.
2. ALL FIBER OPTIC CONDUITS SHALL BE FITTED WITH UNDERGROUND RATED CONDUIT SPACERS AT INCREMENTS OF 5′.

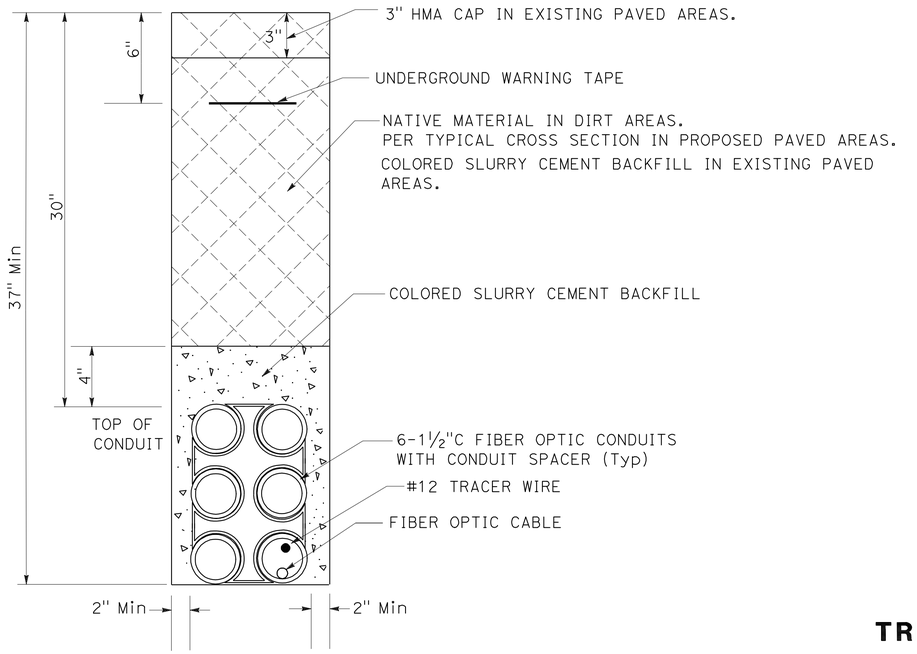

TRENCH IN DIRT/PAVEMENT DETAIL
6-1½" HDPE CONDUIT
DETAIL A

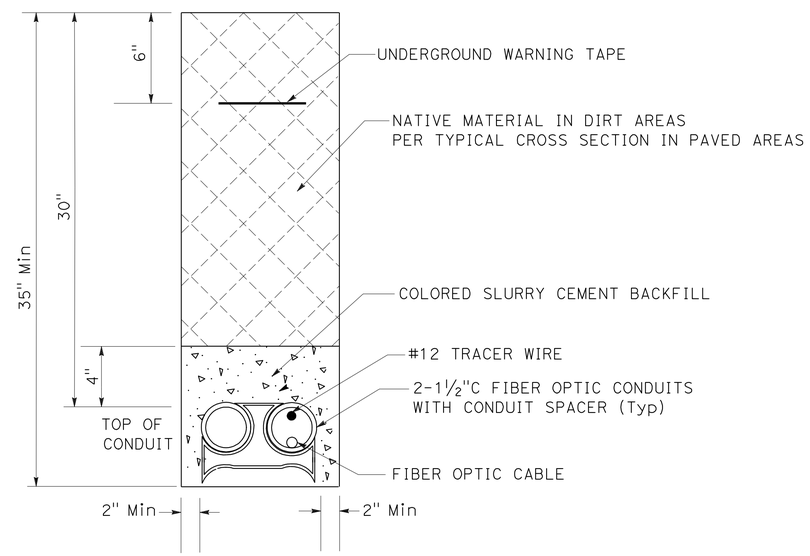

TRENCH IN DIRT/PAVEMENT DETAIL
2-1½" HDPE CONDUIT
DETAIL B

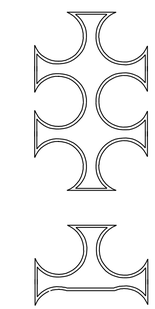

CONDUIT SPACER (Typ)

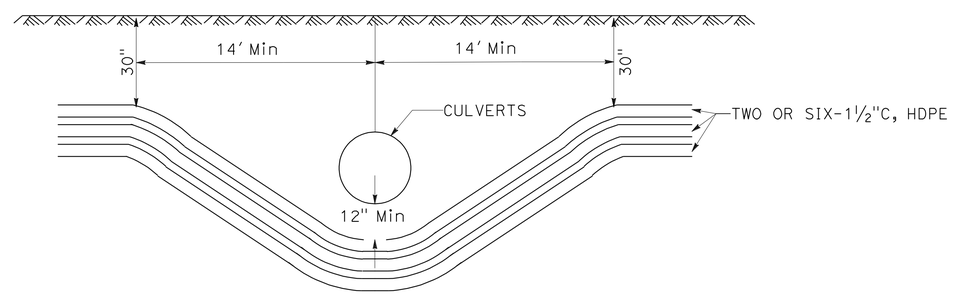

HDPE CONDUIT
DETAIL C

FIBER OPTIC SYSTEM
(TRENCH DETAILS)

NO SCALE

E-14

APPROVED FOR ELECTRICAL WORK ONLY

STATE OF CALIFORNIA - DEPARTMENT OF TRANSPORTATION
Caltrans ELECTRICAL DESIGN

FUNCTIONAL SUPERVISOR: ALI BAKHDOUD
CALCULATED-DESIGNED BY: MONA ATTALLAH
CHECKED BY: DANIEL VO
REVISED BY
DATE REVISED

LAST REVISION 01-09-12
DATE PLOTTED => 05-APR-2012
TIME PLOTTED => 06:16

Dist	COUNTY	ROUTE	POST MILES TOTAL PROJECT	SHEET No.	TOTAL SHEETS
06	Fre,Mad	99	26.7/R31.6, R0.0/R1.6	263	393

REGISTERED ELECTRICAL ENGINEER 01-09-12 DATE

4-2-12
PLANS APPROVAL DATE

REGISTERED PROFESSIONAL ENGINEER MONA N. ATTALLAH No. 18407 Exp. 6-30-12 ELECTRICAL STATE OF CALIFORNIA

THE STATE OF CALIFORNIA OR ITS OFFICERS OR AGENTS SHALL NOT BE RESPONSIBLE FOR THE ACCURACY OR COMPLETENESS OF SCANNED COPIES OF THIS PLAN SHEET.

NOTES: (FOR THIS SHEET ONLY)

1. GALVANIZED CAST-IN ANGLE FRAME.
2. TWO PIECE TRAFFIC RATED TORSION ASSISTED COVER, WITH PICK SLOTS AND BOLT DOWN HOLES. GALVANIZED AFTER FABRICATION. LABEL "CALTRANS FIBER OPTIC".
3. 12" DIAMETER DRAIN HOLE. LOCATE AT CENTER.
4. 7/8" DIAMETER PULL IRONS (4 EA).
5. 16" x 4" KNOCK-OUTS. (8 EA).
6. VAULT DESIGNED IN ACCORDANCE WITH CURRENT AASHTO TRAFFIC BRIDGE LOADING USING 3.756 kPSI COMPRESSIVE STRENGTH CONCRETE AND 60 kPSI YIELD STRENGTH ASTM A-706 STEEL REINFORCEMENT PER CALCULATIONS.
7. VAULT TO BE PLACED ON A 12" BASE OF CRUSHED ROCK SUMP.
8. EACH VAULT SHALL COME PROVIDED WITH TWO SETS BOLT/LID REMOVERS.
9. ALL MOUNTING HARDWARE SHALL BE GALVANIZED OR STAINLESS STEEL.

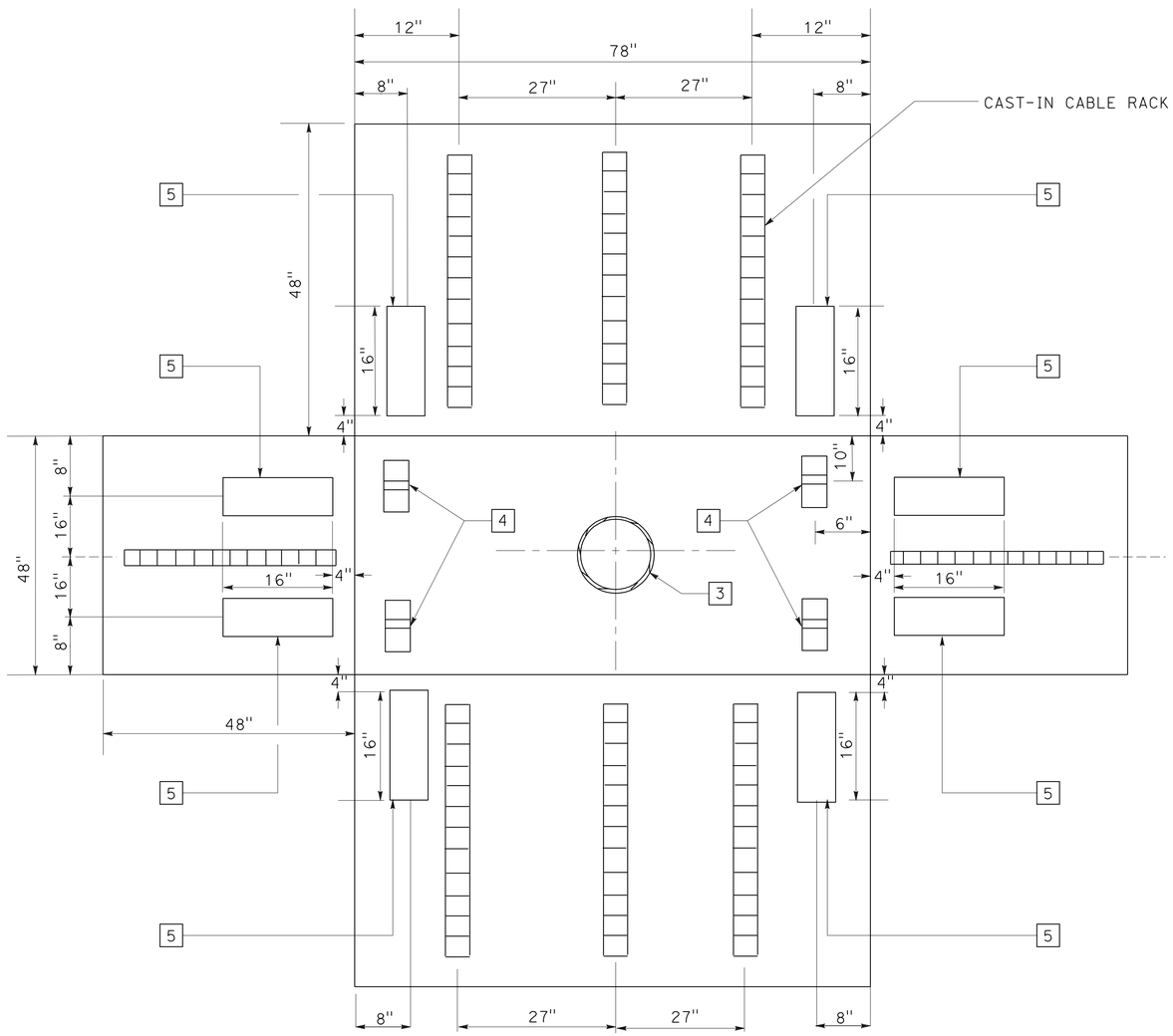

SPLICE VAULT DETAIL PLAN VIEW

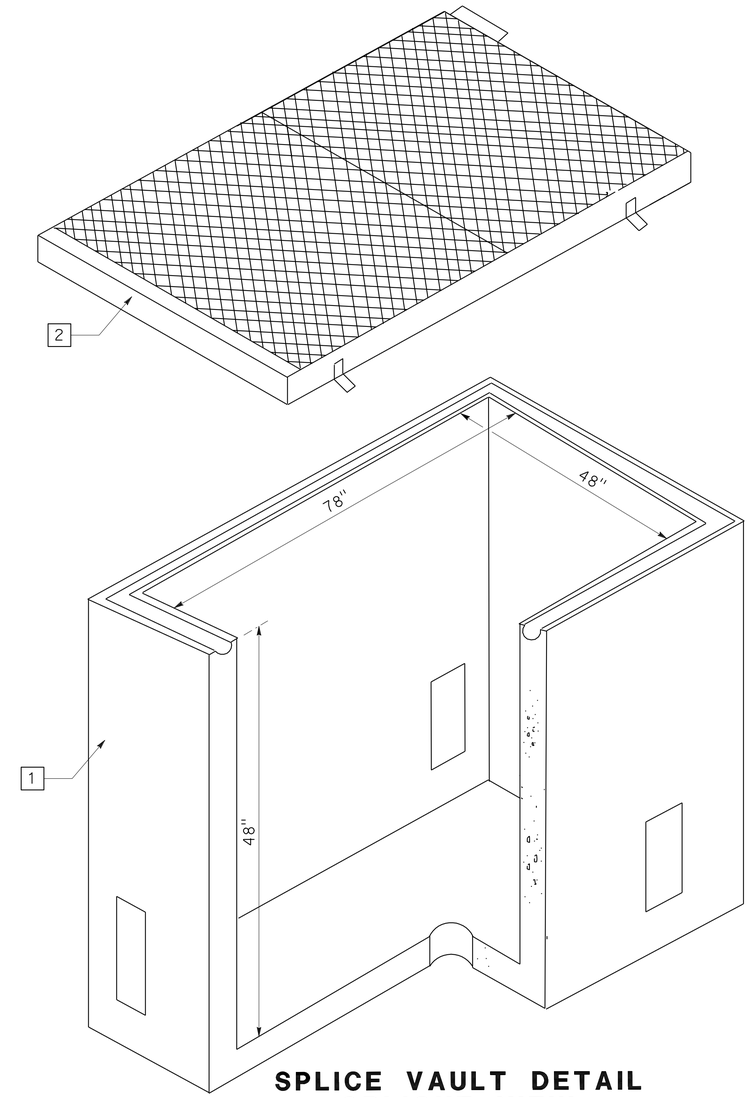

SPLICE VAULT DETAIL OBLIQUE VIEW

FIBER OPTIC SYSTEM
(SPLICE VAULT DETAILS)

NO SCALE

E-15

APPROVED FOR ELECTRICAL WORK ONLY

STATE OF CALIFORNIA - DEPARTMENT OF TRANSPORTATION
Caltrans
ELECTRICAL DESIGN

FUNCTIONAL SUPERVISOR: ALI BAKHDOUD
MONA ATTALLAH — DANIEL VO
CALCULATED-DESIGNED BY — CHECKED BY
REVISED BY — DATE REVISED

LAST REVISION 01-09-12
DATE PLOTTED => 05-APR-2012
TIME PLOTTED => 06:16

Dist	COUNTY	ROUTE	POST MILES TOTAL PROJECT	SHEET No.	TOTAL SHEETS
06	Fre,Mad	99	26.7/R31.6, R0.0/R1.6	264	393

REGISTERED ELECTRICAL ENGINEER 01-09-12 DATE

4-2-12
PLANS APPROVAL DATE

REGISTERED PROFESSIONAL ENGINEER MONA N. ATTALLAH No. 18407 Exp. 6-30-12 ELECTRICAL STATE OF CALIFORNIA

THE STATE OF CALIFORNIA OR ITS OFFICERS OR AGENTS SHALL NOT BE RESPONSIBLE FOR THE ACCURACY OR COMPLETENESS OF SCANNED COPIES OF THIS PLAN SHEET.

NOTES: (FOR THIS SHEET ONLY)

1. 90 DEGREE SWEEPS/BENDS WILL NOT BE ALLOWED UNLESS NOTED ON THE PLANS.
2. CONDUIT TAPERS INTO AND OUT OF VAULTS ARE TYPICAL.

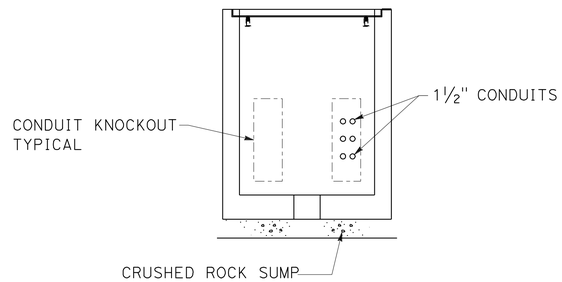

SECTION A-A

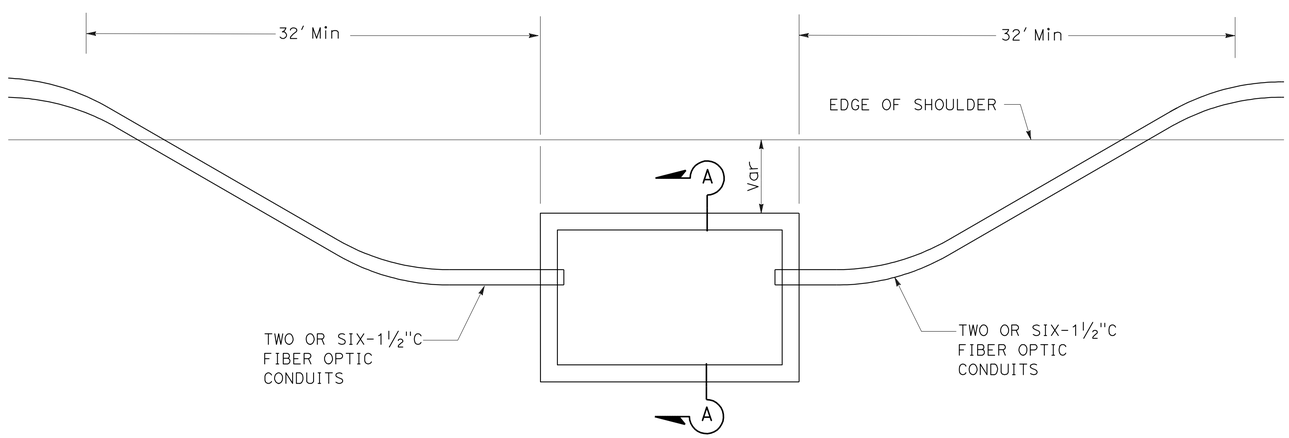

SPLICE VAULT PLAN VIEW

FIBER OPTIC SYSTEM
(SPLICE VAULT DETAILS)

NO SCALE **E-16**

APPROVED FOR ELECTRICAL WORK ONLY

STATE OF CALIFORNIA - DEPARTMENT OF TRANSPORTATION
Caltrans® ELECTRICAL DESIGN

FUNCTIONAL SUPERVISOR: ALI BAKHDOUD
CALCULATED-DESIGNED BY: MONA ATTALLAH
CHECKED BY: DANIEL VO
REVISED BY
DATE REVISED

LAST REVISION 01-09-12
DATE PLOTTED => 05-APR-2012
TIME PLOTTED => 06:16

Dist	COUNTY	ROUTE	POST MILES TOTAL PROJECT	SHEET No.	TOTAL SHEETS
06	Fre,Mad	99	26.7/R31.6, R0.0/R1.6	265	393

REGISTERED ELECTRICAL ENGINEER 01-09-12 DATE

4-2-12
PLANS APPROVAL DATE

REGISTERED PROFESSIONAL ENGINEER MONA N. ATTALLAH No. 18407 Exp. 6-30-12 ELECTRICAL STATE OF CALIFORNIA

THE STATE OF CALIFORNIA OR ITS OFFICERS OR AGENTS SHALL NOT BE RESPONSIBLE FOR THE ACCURACY OR COMPLETENESS OF SCANNED COPIES OF THIS PLAN SHEET.

NOTES: (FOR THIS SHEET ONLY)

1. ALL AC CONDUCTORS SHALL BE #14 OR LARGER AND DC CONDUCTORS SHALL BE #18 OR LARGER.
2. RS Exist WIND SPEED/DIRECTION SENSOR, PRECIPITATION SENSOR, AIR TEMPERATURE/RELATIVE HUMIDITY SENSOR, RPU, RPU ENCLOSURE, AND DISCONNECT BOX. INSTALL ULTRASONIC WIND SPEED SENSOR, VISIBILITY SENSOR, PRECIPITATION SENSOR, RPU, RPU ENCLOSURE AND DISCONNECT BOX.

ABBREVIATIONS:

RPU - REMOTE PROCESSING UNIT
VS - VISIBILITY SENSOR
MCB - 15 A, 1P, MAIN CB IN THE BREAKER BOX
ECB - 15 A, 1P, EQUIPMENT CB IN NEMA 4X ENCLOSURE
TB1 - 6 POSITION MINIMUM PHOENIX CONTACT #USK 10 OPEN CONSTRUCTION TERMINAL (OR EQUAL) BLOCK MOUNTED ON 9" DIM RAILING

LEGEND:

- EARTH OR EQUIPMENT GROUND
- SURGE PROTECTOR

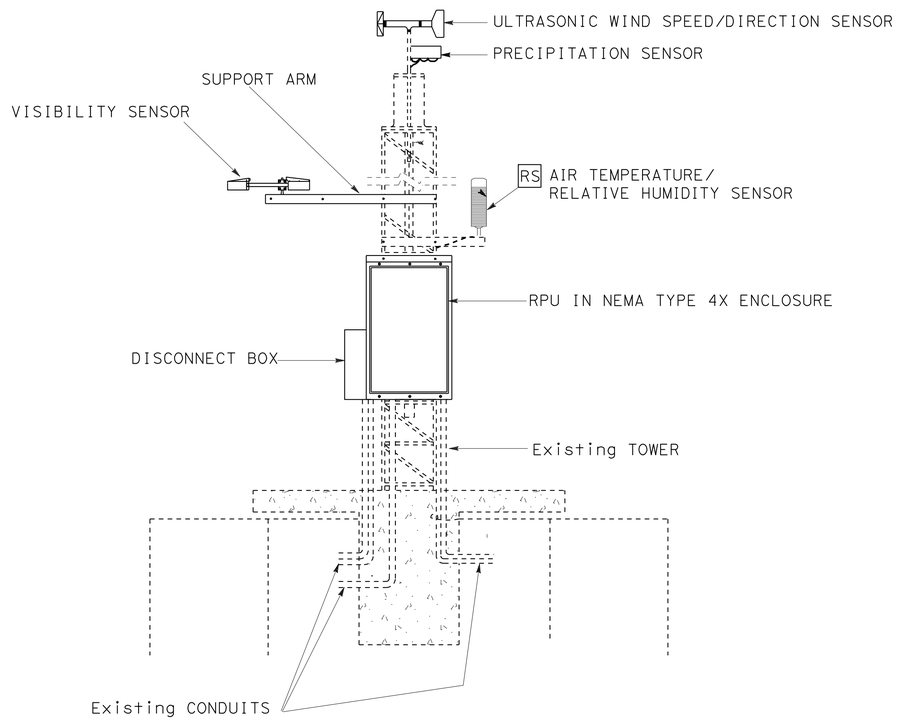

WEATHER STATION ASSEMBLY INSTALLATION

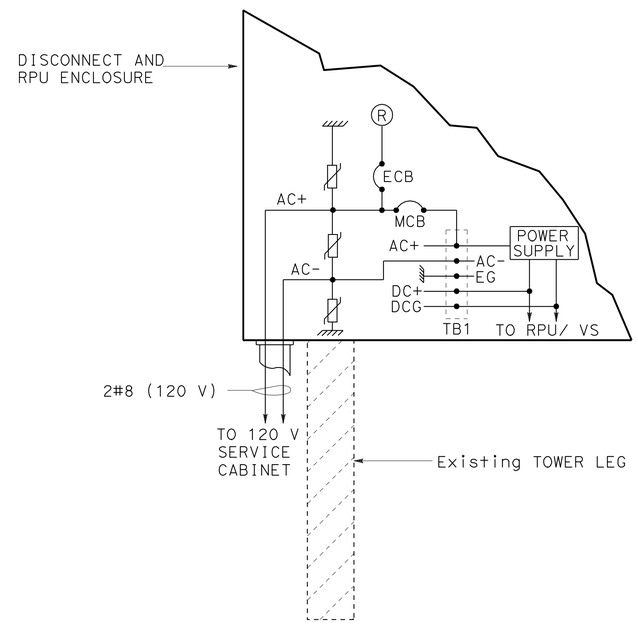

WEATHER STATION POWER CONNECTION

MODIFY ROADSIDE WEATHER INFORMATION SYSTEM
(WEATHER STATION ASSEMBLY DETAIL)

NO SCALE

E-17

APPROVED FOR ELECTRICAL WORK ONLY

STATE OF CALIFORNIA - DEPARTMENT OF TRANSPORTATION
Caltrans® ELECTRICAL DESIGN

FUNCTIONAL SUPERVISOR: ALI BAKHDOUD
CALCULATED-DESIGNED BY: MONA ATTALLAH
CHECKED BY: DANIEL VO
REVISED BY
DATE REVISED

LAST REVISION 01-09-12
DATE PLOTTED => 05-APR-2012
TIME PLOTTED => 06:16

Dist	COUNTY	ROUTE	POST MILES TOTAL PROJECT	SHEET No.	TOTAL SHEETS
06	Fre,Mad	99	26.7/R31.6, R0.0/R1.6	266	393

REGISTERED ELECTRICAL ENGINEER 01-09-12 DATE

4-2-12
PLANS APPROVAL DATE

REGISTERED PROFESSIONAL ENGINEER MONA N. ATTALLAH No. 18407 Exp. 6-30-12 ELECTRICAL STATE OF CALIFORNIA

THE STATE OF CALIFORNIA OR ITS OFFICERS OR AGENTS SHALL NOT BE RESPONSIBLE FOR THE ACCURACY OR COMPLETENESS OF SCANNED COPIES OF THIS PLAN SHEET.

LEGEND: (SHEETS E-18 TO E-22)

- —— EXISTING ELEMENT
- ● SPLICE FIBER TO FIBER
- × CUT END OF FIBER
- ▫ SC CONNECTOR ON NEW FDU OR ITU

ABBREVIATIONS: (SHEETS E-18 TO E-22)

FDU	FIBER DISTRIBUTION UNIT
FO	FIBER OPTIC
FOM	FIBER OPTIC MODEM (SF)
ITU	INTERCONNECT TERMINATION UNIT
RX	RECEIVE
SC	COMPRESSION CONNECTOR
(SF)	STATE-FURNISHED
SMFO	SINGLE MODE FIBER OPTIC CABLE
SV	SPLICE VAULT
TX	TRANSMIT
BL	BLUE
OR	ORANGE
GR	GREEN
BR	BROWN
SL	SLATE
WT	WHITE
RD	RED
BK	BLACK
YL	YELLOW
VL	VIOLET
RS	ROSE
AQ	AQUA

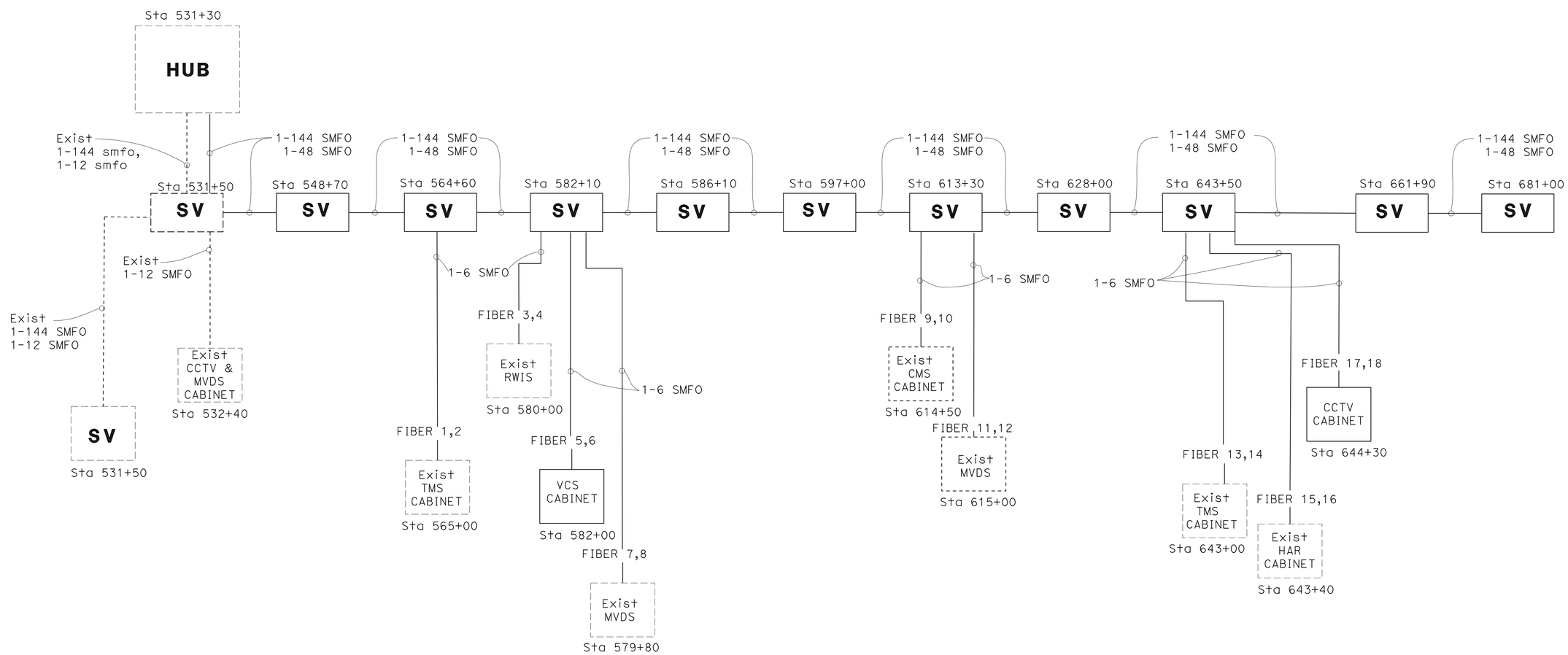

FIBER OPTIC SYSTEM
(FIBER OPTIC CABLE REQUIREMENT)
NO SCALE

E-18

APPROVED FOR ELECTRICAL WORK ONLY

STATE OF CALIFORNIA - DEPARTMENT OF TRANSPORTATION
Caltrans® **ELECTRICAL DESIGN**

FUNCTIONAL SUPERVISOR: ALI BAKHDOUD
CALCULATED-DESIGNED BY: MONA ATTALLAH
CHECKED BY: DANIEL VO
REVISED BY
DATE REVISED

LAST REVISION 01-09-12
DATE PLOTTED => 16-APR-2012
TIME PLOTTED => 11:21

Dist	COUNTY	ROUTE	POST MILES TOTAL PROJECT	SHEET No.	TOTAL SHEETS
06	Fre,Mad	99	26.7/R31.6, R0.0/R1.6	267	393

REGISTERED ELECTRICAL ENGINEER 01-09-12 DATE

4-2-12
PLANS APPROVAL DATE

REGISTERED PROFESSIONAL ENGINEER MONA N. ATTALLAH No. 18407 Exp. 6-30-12 ELECTRICAL STATE OF CALIFORNIA

THE STATE OF CALIFORNIA OR ITS OFFICERS OR AGENTS SHALL NOT BE RESPONSIBLE FOR THE ACCURACY OR COMPLETENESS OF SCANNED COPIES OF THIS PLAN SHEET.

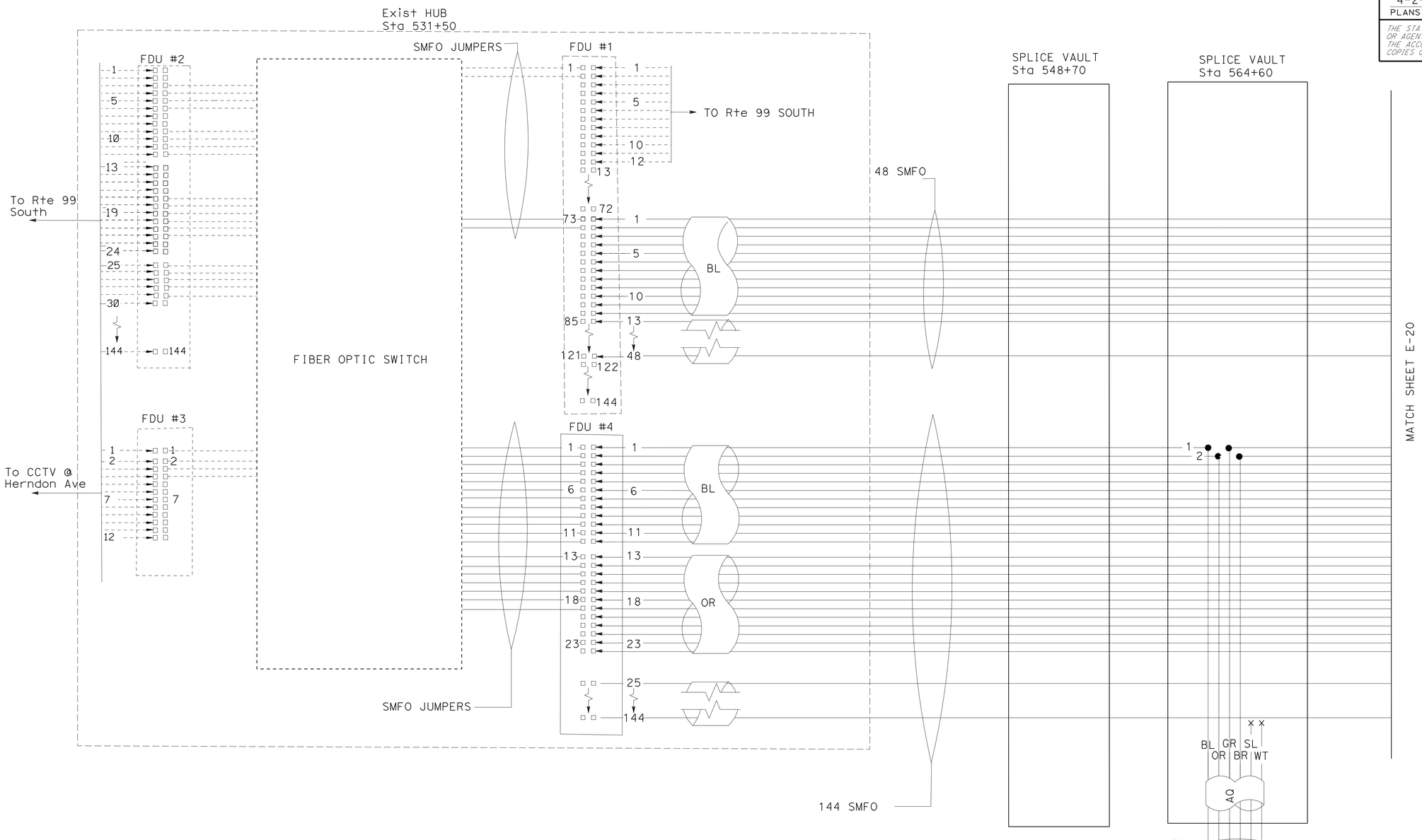

FIBER CABLE BREAKOUT

FIBER OPTIC SYSTEM (FIBER CABLE BREAKOUT DETAIL)

NO SCALE

APPROVED FOR ELECTRICAL WORK ONLY

E-19

STATE OF CALIFORNIA - DEPARTMENT OF TRANSPORTATION
Caltrans
ELECTRICAL DESIGN

FUNCTIONAL SUPERVISOR: ALI BAKHDOUD
CALCULATED-DESIGNED BY: MONA ATTALLAH
CHECKED BY: DANIEL VO
REVISED BY
DATE REVISED

LAST REVISION 01-09-12
DATE PLOTTED => 05-APR-2012
TIME PLOTTED => 06:17

Dist	COUNTY	ROUTE	POST MILES TOTAL PROJECT	SHEET No.	TOTAL SHEETS
06	Fre,Mad	99	26.7/R31.6, R0.0/R1.6	268	393

REGISTERED ELECTRICAL ENGINEER 01-09-12 DATE

4-2-12
PLANS APPROVAL DATE

REGISTERED PROFESSIONAL ENGINEER MONA N. ATTALLAH No. 18407 Exp. 6-30-12 ELECTRICAL STATE OF CALIFORNIA

THE STATE OF CALIFORNIA OR ITS OFFICERS OR AGENTS SHALL NOT BE RESPONSIBLE FOR THE ACCURACY OR COMPLETENESS OF SCANNED COPIES OF THIS PLAN SHEET.

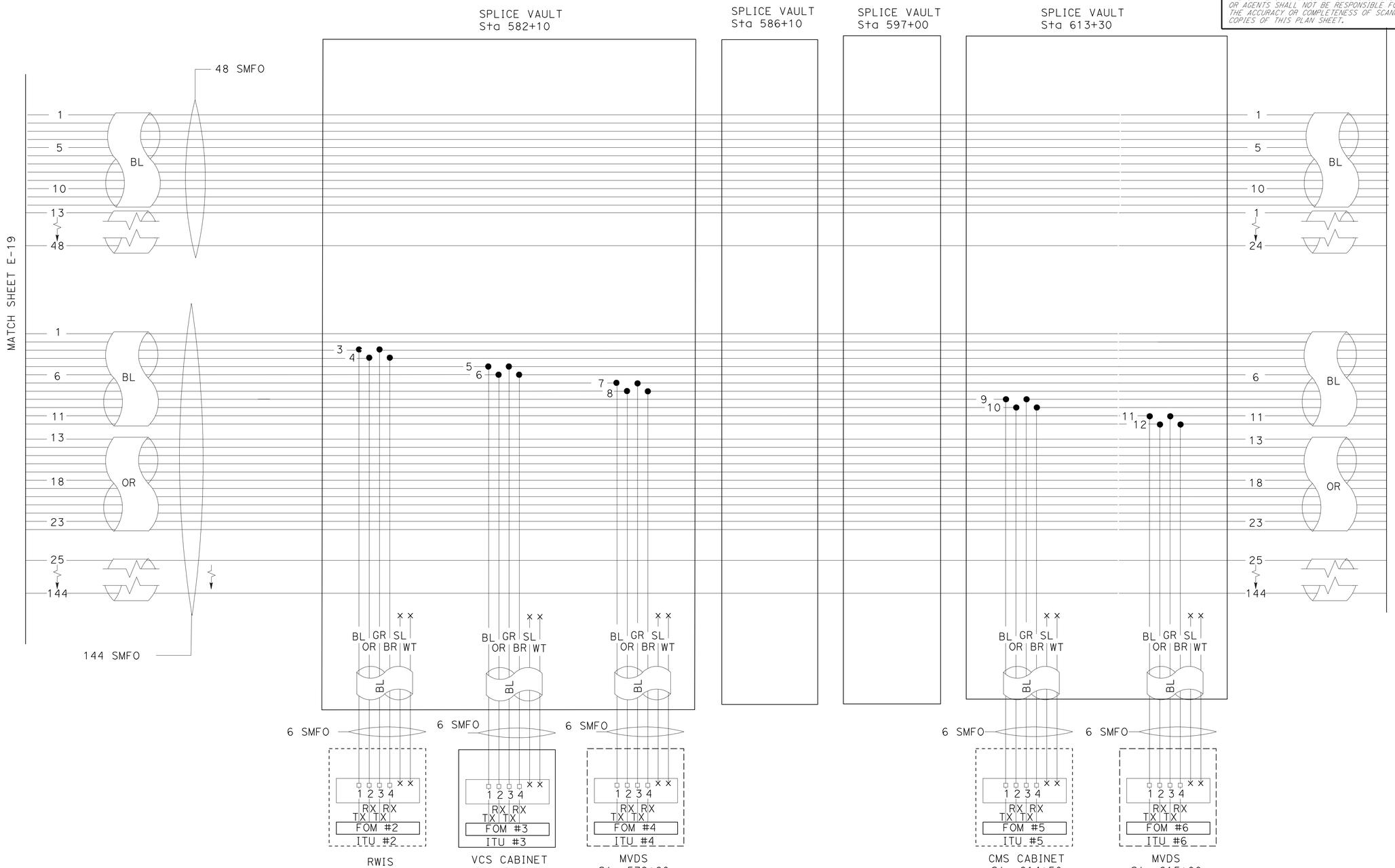

FIBER CABLE BREAKOUT

APPROVED FOR ELECTRICAL WORK ONLY

FIBER OPTIC SYSTEM
(FIBER CABLE BREAKOUT DETAIL)

NO SCALE

E-20

STATE OF CALIFORNIA - DEPARTMENT OF TRANSPORTATION
Caltrans® **ELECTRICAL DESIGN**

FUNCTIONAL SUPERVISOR: ALI BAKHDOUD
CALCULATED-DESIGNED BY: MONA ATTALLAH
CHECKED BY: DANIEL VO
REVISED BY
DATE REVISED

LAST REVISION 01-09-12
DATE PLOTTED => 05-APR-2012
TIME PLOTTED => 06:17

Dist	COUNTY	ROUTE	POST MILES TOTAL PROJECT	SHEET No.	TOTAL SHEETS
06	Fre,Mad	99	26.7/R31.6, R0.0/R1.6	269	393

Mona Attallah 01-09-12
REGISTERED ELECTRICAL ENGINEER DATE

4-2-12
PLANS APPROVAL DATE

REGISTERED PROFESSIONAL ENGINEER
MONA N. ATTALLAH
No. 18407
Exp. 6-30-12
ELECTRICAL
STATE OF CALIFORNIA

THE STATE OF CALIFORNIA OR ITS OFFICERS OR AGENTS SHALL NOT BE RESPONSIBLE FOR THE ACCURACY OR COMPLETENESS OF SCANNED COPIES OF THIS PLAN SHEET.

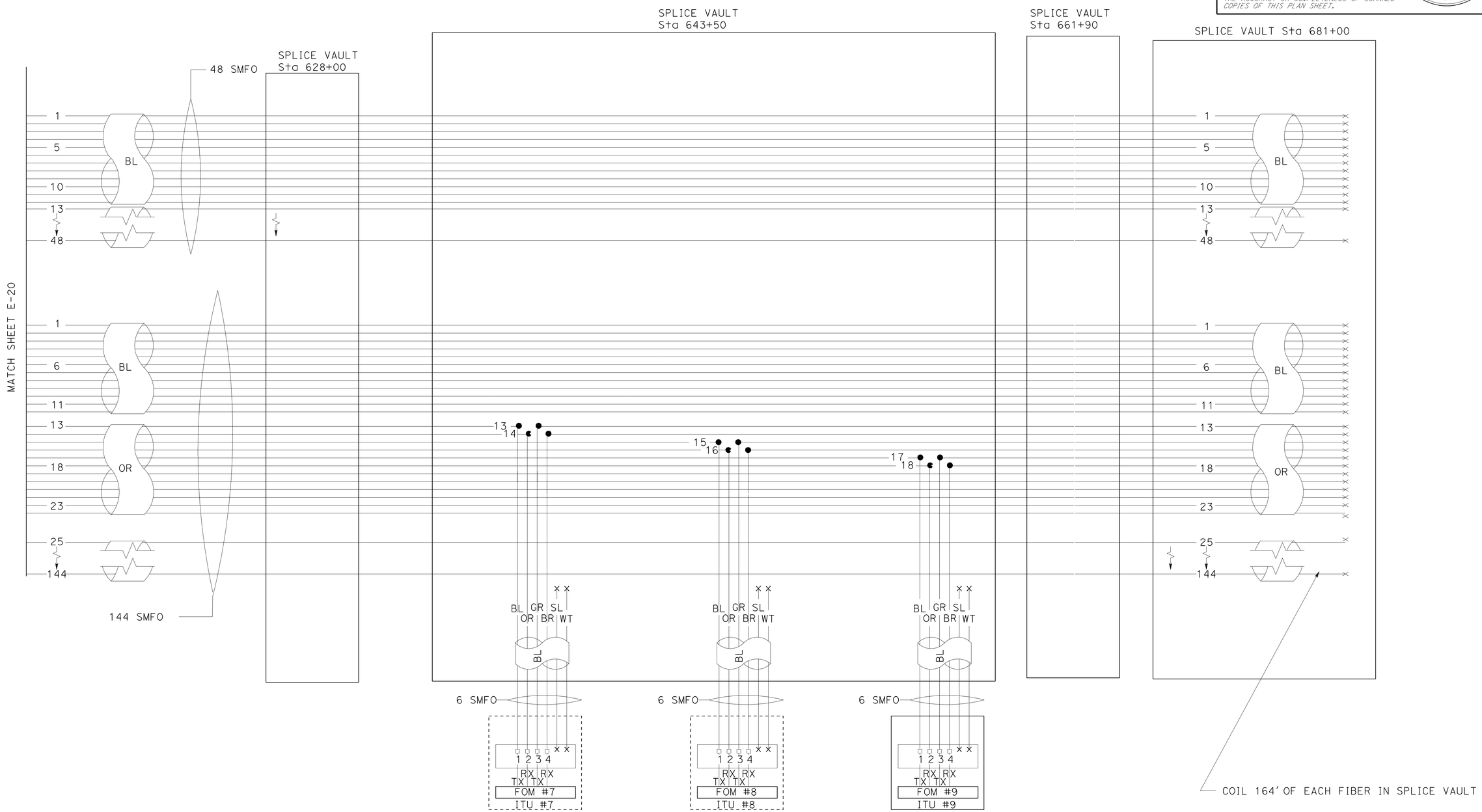

FIBER CABLE BREAKOUT

APPROVED FOR ELECTRICAL WORK ONLY

FIBER OPTIC SYSTEM
(FIBER CABLE BREAKOUT DETAIL)

NO SCALE

E-21

STATE OF CALIFORNIA - DEPARTMENT OF TRANSPORTATION
Caltrans® **ELECTRICAL DESIGN**

FUNCTIONAL SUPERVISOR: ALI BAKHDOUD
CALCULATED-DESIGNED BY: MONA ATTALLAH
CHECKED BY: DANIEL VO
REVISED BY
DATE REVISED

LAST REVISION 01-09-12
DATE PLOTTED => 16-APR-2012
TIME PLOTTED => 11:21

Dist	COUNTY	ROUTE	POST MILES TOTAL PROJECT	SHEET No.	TOTAL SHEETS
06	Fre,Mad	99	26.7/R31.6, R0.0/R1.6	270	393

REGISTERED ELECTRICAL ENGINEER 01-09-12 DATE

4-2-12
PLANS APPROVAL DATE

REGISTERED PROFESSIONAL ENGINEER MONA N. ATTALLAH No. 18407 Exp. 6-30-12 ELECTRICAL STATE OF CALIFORNIA

THE STATE OF CALIFORNIA OR ITS OFFICERS OR AGENTS SHALL NOT BE RESPONSIBLE FOR THE ACCURACY OR COMPLETENESS OF SCANNED COPIES OF THIS PLAN SHEET.

NOTE: (FOR THIS SHEET ONLY)

1. ALL SMFO JUMPERS TO BE TERMINATED WITH SC COMPRESSION TYPE CONNECTORS.

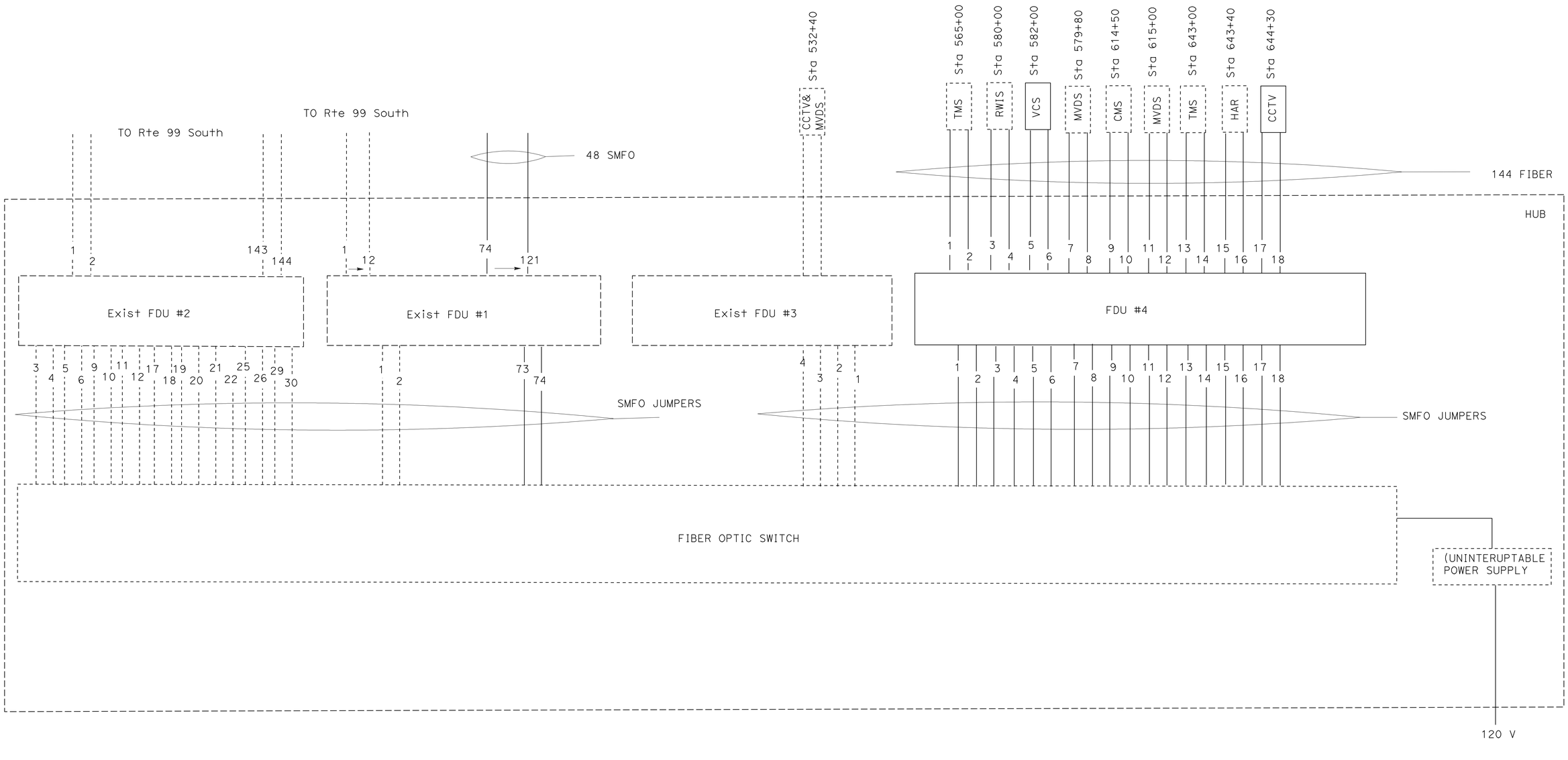

FIBER HUB DETAIL

APPROVED FOR ELECTRICAL WORK ONLY

FIBER OPTIC SYSTEM
(FIBER HUB DETAIL)

NO SCALE

E-22

STATE OF CALIFORNIA - DEPARTMENT OF TRANSPORTATION
Caltrans® ELECTRICAL DESIGN

FUNCTIONAL SUPERVISOR: ALI BAKHDOUD
CALCULATED-DESIGNED BY: MONA ATTALLAH
CHECKED BY: DANIEL VO
REVISED BY
DATE REVISED

LAST REVISION 01-09-12
DATE PLOTTED => 05-APR-2012
TIME PLOTTED => 06:17

Dist	COUNTY	ROUTE	POST MILES TOTAL PROJECT	SHEET No.	TOTAL SHEETS
06	Fre,Mad	99	26.7/R31.6, R0.0/R1.6	271	393

REGISTERED ELECTRICAL ENGINEER 01-09-12 DATE

4-2-12
PLANS APPROVAL DATE

REGISTERED PROFESSIONAL ENGINEER MONA N. ATTALLAH No. 18407 Exp. 6-30-12 ELECTRICAL STATE OF CALIFORNIA

THE STATE OF CALIFORNIA OR ITS OFFICERS OR AGENTS SHALL NOT BE RESPONSIBLE FOR THE ACCURACY OR COMPLETENESS OF SCANNED COPIES OF THIS PLAN SHEET.

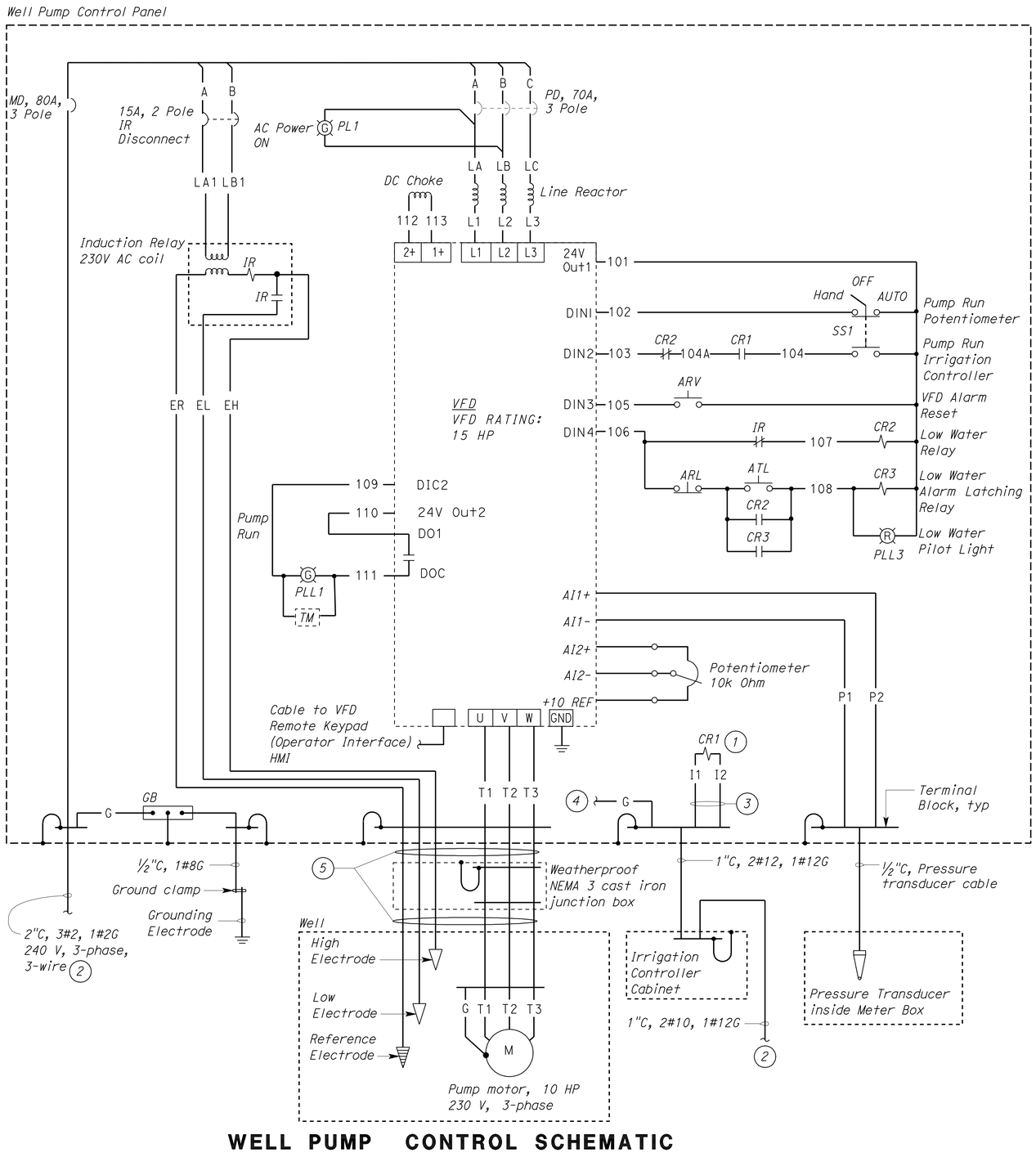

WELL PUMP CONTROL SCHEMATIC

General Notes:

A. *For exact location of well pump, well pump control panel and irrigation controller, see Landscape Plans and Water Plans.*

B. *Pull boxes in between well pump control panel and irrigation controller are not shown. See Electrical "E" sheets.*

C. *Provide power distribution blocks on line and load side of the Main Disconnect.*

Notes:

1. *Control relay irrigation, 24 Volts AC coil.*
2. *To Service equipment enclosure. For continuation, see Electrical "E" sheet for each well pump location.*
3. *To master valve/pump start terminals inside the irrigation controller cabinet.*
4. *Connect to ground bus.*
5. *Well pump motor cables integrated with equipment grounding conductor and 3#12 for electrodes.*

VFD I/O BOARD		
TERMINAL		DESCRIPTION
1	24 VOLT1	24 V CONTROL VOLTAGE 1
2	DIN1	DIGITAL INPUT 1-MANUAL OVERRIDE
3	DIN2	DIGITAL INPUT 2-START FORWARD
4	DIN3	DIGITAL INPUT 3-FAULT RESET
5	DIN4	DIGITAL INPUT 4-COMMON
6	AI1+	ANALOG INPUT
7	AI1-	ANALOG INPUT, COMMON
8	AI2+	ANALOG INPUT, VOLTAGE
9	AI2-	ANALOG INPUT, COMMON
10	+10 REF	REFERENCE VOLTAGE
11	DO1	DIGITAL OUTPUT 1
12	DOC	COMMON
13	24V OUT2	24V CONTROL VOLTAGE 2
14	DIC2	DIGITAL INPUT COMMON 2

LEGEND

SYMBOL	DESCRIPTION
	CIRCUIT BREAKER, SINGLE POLE
	CIRCUIT BREAKER, THREE POLE
	CONTACT, NORMALLY OPEN
	CONTACT, NORMALLY CLOSED
	SWITCH, DOUBLE-POLE, 3-POSITION
	OPERATING COIL
	THERMAL OVERLOAD
M	MOTOR
G	PILOT LIGHT
	GROUNDING ELECTRODE
MC	CONDUIT, RIGID STEEL, UNDERGROUND
	CONDUIT, RIGID STEEL, EXPOSED
	TYPE 4 CONDUIT
	CONDUIT, TURN UP
	CONDUIT, TURN DOWN
	PUSH BUTTON SWITCH, NORMALLY OPEN
	PUSH BUTTON SWITCH, NORMALLY CLOSED
	TRANSFORMER WINDING

ABBREVIATIONS

A	AMPERES
AC	ALTERNATING CURRENT
ARV	ALARM RESET VFD
ARL	ALARM RESET LOW WATER
ATL	ALARM TEST LOW WATER
C	CONDUIT
CR	CONTROL RELAY
CRI	CONTROL RELAY IRRIGATION
DC	DIRECT CURRENT
G	GROUND
GB	GROUND BAR
GFCI	GROUND FAULT CIRCUIT INTERRUPTER
HP	HORSEPOWER
ID	IDENTIFICATION
ICC	IRRIGATION CONTROLLER CABINET
IR	INDUCTION RELAY
MD	MAIN DISCONNECT
(N)	NEW
NB	NEUTRAL BAR
PD	PUMP DISCONNECT
PL	PILOT LIGHT
PLL	PILOT LIGHT LOW VOLTAGE
POT	POTENTIOMETER
SS	SELECTOR SWITCH
TB	TERMINAL BLOCK
TM	TIME METER
VFD	VARIABLE FREQUENCY DRIVE
WP	WEATHERPROOF

WELL PUMP CONTROL PANEL

NO SCALE

E-23

APPROVED FOR ELECTRICAL WORK ONLY

STATE OF CALIFORNIA - DEPARTMENT OF TRANSPORTATION
Caltrans
ELECTRICAL DESIGN
FUNCTIONAL SUPERVISOR: ALI BAKHDOUD
MONA ATTALLAH
DANIEL VO
CALCULATED-DESIGNED BY
CHECKED BY
REVISED BY
DATE REVISED

LAST REVISION 01-09-12
DATE PLOTTED => 04-APR-2012
TIME PLOTTED => 10:34

Dist	COUNTY	ROUTE	POST MILES TOTAL PROJECT	SHEET No.	TOTAL SHEETS
06	Fre,Mad	99	26.7/R31.6, R0.0/R1.6	272	393

REGISTERED ELECTRICAL ENGINEER 01-09-12 DATE

4-2-12
PLANS APPROVAL DATE

REGISTERED PROFESSIONAL ENGINEER MONA N. ATTALLAH No. 18407 Exp. 6-30-12 ELECTRICAL STATE OF CALIFORNIA

THE STATE OF CALIFORNIA OR ITS OFFICERS OR AGENTS SHALL NOT BE RESPONSIBLE FOR THE ACCURACY OR COMPLETENESS OF SCANNED COPIES OF THIS PLAN SHEET.

Notes:

1. *1½"C, 3#8, 1#10G (Well Pump) and 3#12 (Well Electrodes).*
2. *Pull box is repeated here for clarity. For size and exact location, see "E" sheets for each well pump location.*
3. *Type 1 conduit. Wrap underground metal conduit with two layers of 20 mil. thick tape. Tape overlap shall be at least 50 percent or more.*
4. *Type 4 conduit. For terminating the conduit at pressure transducer, see sheet W-2.*
5. *For type of conduit, size of conduit and number of conductors, see "E" sheets for each well pump locations.*
6. *Splice conductors to well pump motor cables inside the junction box. Contractor may splice the electrode conductors.*
7. *Type 1 conduit. 1½"C, with well pump motor cables integrated with equipment grounding and 3#12 for electrodes.*
8. *¾"C, Type 1 with Pressure transducer cable.*
9. *For continuation and size of the concrete pad see "W" sheets and for exact location of the pad see Landscape sheets for each well pump location.*

NAMEPLATE SCHEDULE			
ITEM NO.	TYPE	INSCRIPTION	LETTER SIZE (inch)
1	PLATE	WELL PUMP CONTROL PANEL	⅜
2	PLATE	MAIN DISCONNECT	½
3	PLATE	INDUCTION RELAY DISCONNECT	½
4	PLATE	PUMP DISCONNECT	¼
5	RING	CONTROL POWER	¼
6	RING	VFD RESET	¼
7	PLATE	POT	¼
8	RING	ALARM TEST	¼
9	RING	LOW WATER	¼
10	RING	ALARM RESET	¼
11	RING	SELECTOR SWITCH	¼
12	RING	PUMP RUN	¼
13	PLATE	TIME METER	¼

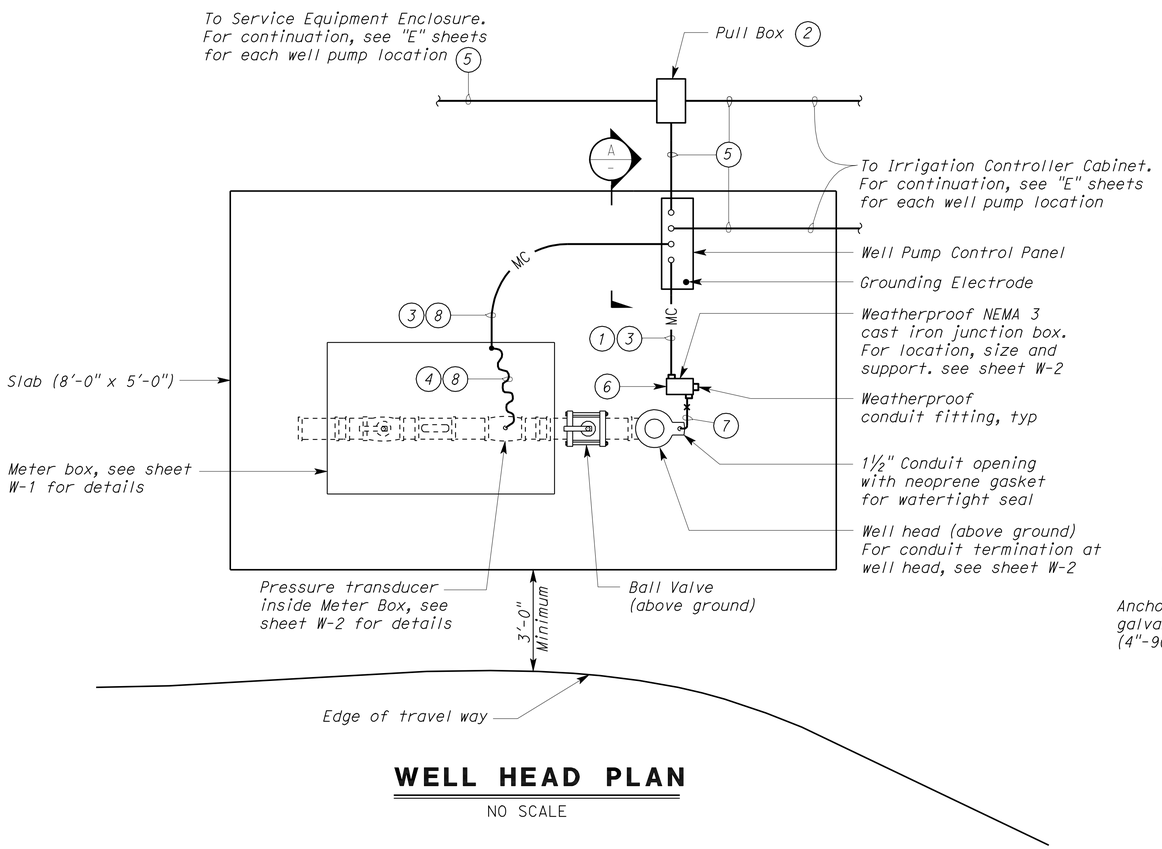

WELL HEAD PLAN

NO SCALE

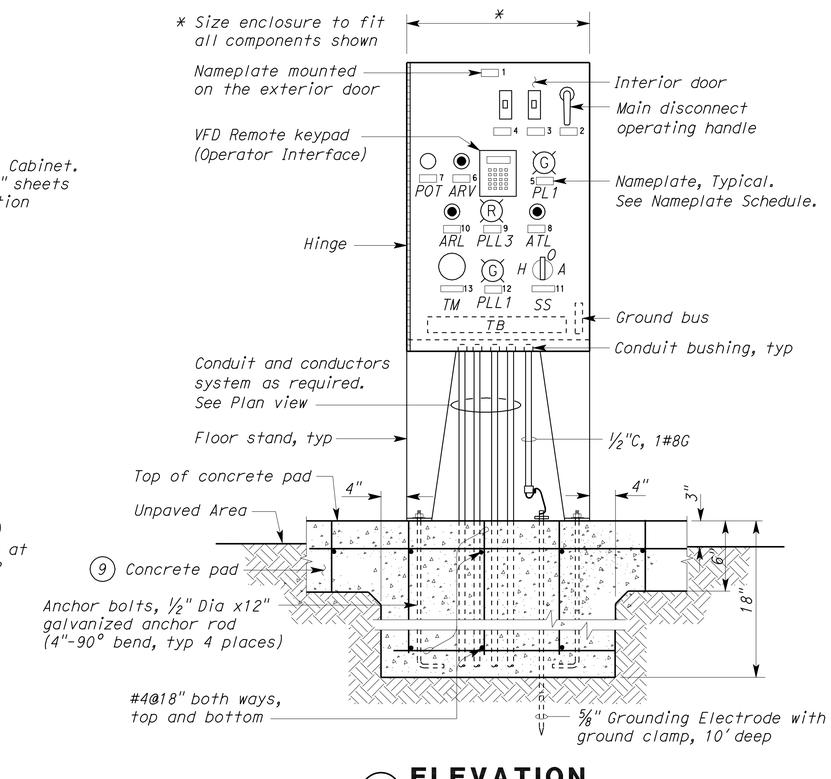

(A) ELEVATION

NO SCALE

(EXTERIOR WEATHERPROOF DOOR NOT SHOWN)

WELL PUMP CONTROL PANEL

NO SCALE

E-24

APPROVED FOR ELECTRICAL WORK ONLY

STATE OF CALIFORNIA - DEPARTMENT OF TRANSPORTATION
Caltrans
ELECTRICAL DESIGN

FUNCTIONAL SUPERVISOR: ALI BAKHDOUD
CALCULATED-DESIGNED BY: MONA ATTALLAH
CHECKED BY: DANIEL VO
REVISED BY
DATE REVISED

LAST REVISION 01-09-12
DATE PLOTTED => 04-APR-2012
TIME PLOTTED => 10:42

Dist	COUNTY	ROUTE	POST MILES TOTAL PROJECT	SHEET No.	TOTAL SHEETS
06	Fre,Mad	99	26.7/R31.6, R0.0/R1.6	273	393

REGISTERED ELECTRICAL ENGINEER 01-09-12 DATE

4-2-12
PLANS APPROVAL DATE

REGISTERED PROFESSIONAL ENGINEER MONA N. ATTALLAH No. 18407 Exp. 6-30-12 ELECTRICAL STATE OF CALIFORNIA

THE STATE OF CALIFORNIA OR ITS OFFICERS OR AGENTS SHALL NOT BE RESPONSIBLE FOR THE ACCURACY OR COMPLETENESS OF SCANNED COPIES OF THIS PLAN SHEET.

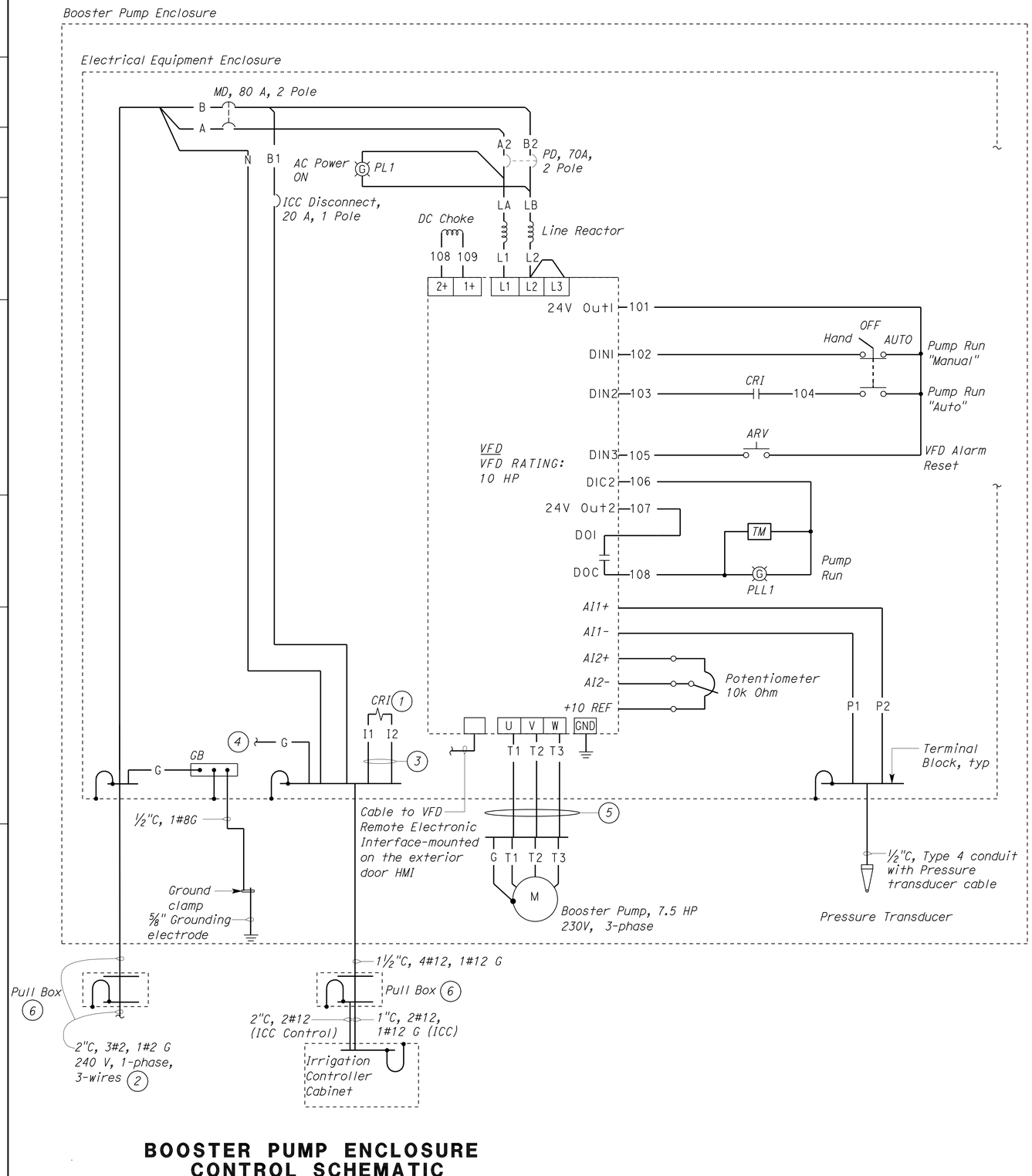

BOOSTER PUMP ENCLOSURE CONTROL SCHEMATIC

240V, 1-Phase, 3-Wire System

General Notes:

A. For exact location of Electrical Equipment Enclosure, and irrigation controller enclosure cabinet, see Electrical "E" sheets for each booster pump location.

B. Install power distribution blocks on both sides of the Main Disconnect.

C. Not all pull boxes are shown here for clarity. For exact loaction, size and number of pull boxes, see Electrical "E" sheets for each booster pump location.

Notes:

1. Control relay irrigation, 24 Volts AC coil.
2. To existing Service Equipment Enclosure. For continuation, see Electrical "E" sheets for each booster pump location.
3. To master valve/pump start terminals inside the irrigation controller cabinet.
4. Connect to ground bus.
5. 1"C, Type 4 conduit, with 3#8, 1#10G. Booster pump motor cables integrated with equipment grounding conductor.
6. For size and exact location of pull boxes, see Electrical "E" sheets for each booster pump location.

VFD I/O BOARD		
TERMINAL		DESCRIPTION
1	24V OUT1	24V CONTROL VOLTAGE 1
2	DIN1	DIGITAL INPUT 1-MANUAL OVERRIDE
3	DIN2	DIGITAL INPUT 2-START FORWARD
4	DIN3	DIGITAL INPUT 3-FAULT RESET
5	AI1+	ANALOG INPUT
6	AI1-	ANALOG INPUT, COMMON
7	AI2+	ANALOG INPUT, VOLTAGE
8	AI2-	ANALOG INPUT, COMMON
9	+10 REF	REFERENCE VOLTAGE
10	DO1	DIGITAL OUTPUT 1
11	DOC	COMMON
12	24V OUT2	24V CONTROL VOLTAGE 2
13	DIC2	DIGITAL INPUT COMMON 2

APPROVED FOR ELECTRICAL WORK ONLY

BOOSTER PUMP
(BOOSTER PUMP ENCLOSURE DETAIL)

NO SCALE

E-25

STATE OF CALIFORNIA - DEPARTMENT OF TRANSPORTATION
Caltrans ELECTRICAL DESIGN

FUNCTIONAL SUPERVISOR: ALI BAKHDOUD
CALCULATED-DESIGNED BY: MONA ATTALLAH
CHECKED BY: DANIEL VO
REVISED BY
DATE REVISED

LAST REVISION 01-09-12
DATE PLOTTED => 04-APR-2012
TIME PLOTTED => 10:42

DIST	COUNTY	ROUTE	POST MILES TOTAL PROJECT	SHEET NO.	TOTAL SHEETS
06	Fre,Mad	99	26.7/R31.6, R0.0/R1.6	274	393

REGISTERED CIVIL ENGINEER

November 17, 2006
PLANS APPROVAL DATE

REGISTERED PROFESSIONAL ENGINEER Dallas Forester No. C37765 Exp. 12-31-06 CIVIL STATE OF CALIFORNIA

The State of California or its officers or agents shall not be responsible for the accuracy or completeness of electronic copies of this plan sheet.

To accompany plans dated 4-2-12

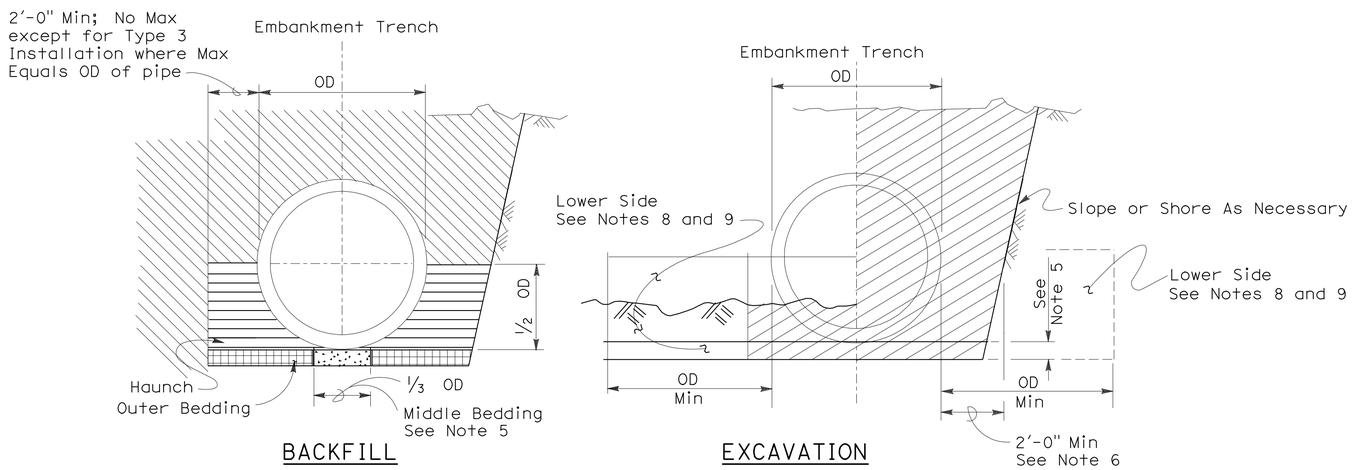

Roadway Embankment

Structure Backfill (Culvert) See Note 6

Structure Backfill (Culvert) See Note 6

Loose Backfill

Excavation Structure (Culvert)

TYPE 1 INSTALLATION:

The haunch and outer bedding shall be compacted to a minimum 90 percent relative compaction. In addition, the minimum sand equivalent in these areas shall be 30 and the maximum percentage passing the 75 μm sieve size shall be 12.

TYPE 2 INSTALLATION:

The haunch and outer bedding shall be compacted to a minimum 90 percent relative compaction. In addition, the minimum sand equivalent in these areas shall be 25.

TYPE 3 INSTALLATION:

The haunch and outer bedding shall be compacted to a minimum 85 percent relative compaction. 90 percent relative compaction will be required where the fill over the pipe is less than 4'-0" or 1/2 OD.

INSTALLATION TYPE 1

MINIMUM CLASS AND D-LOAD	COVER	
	108" Dia AND SMALLER	OVER 108" Dia
Class II 1000D	14.9'	12.9'
Class III 1350D	15.0' - 20.9'	13.0' - 18.9'
Class III Special 1700D	21.0' - 26.9'	19.0' - 24.9'
Class IV 2000D	27.0' - 31.9'	25.0' - 29.9'
Class IV Special 2500D	32.0' - 40.9'	30.0' - 38.9'
Class V 3000D	41.0' - 49.9'	39.0' - 46.9'
Class V Special 3600D	50.0' - 59.0'	47.0' - 58.0'

INSTALLATION TYPE 2

MINIMUM CLASS AND D-LOAD	COVER
Class II 1000D	9.9'
Class III 1350D	10.0'- 14.9'
Class III Special 1700D	15.0' - 19.9'
Class IV 2000D	20.0' - 24.9'
Class IV Special 2500D	25.0' - 31.9'
Class V 3000D	32.0' - 38.9'
Class V Special 3600D	39.0' - 47.0'

INSTALLATION TYPE 3

MINIMUM CLASS AND D-LOAD	COVER	
	48" Dia AND SMALLER	OVER 48" Dia
Class II 1000D	7.9'	5.9'
Class III 1350D	8.0' - 10.9'	6.0' - 8.9'
Class III Special 1700D	11.0' - 14.9'	9.0' - 12.9'
Class IV 2000D	15.0' - 17.9'	13.0' - 15.9'
Class IV Special 2500D	18.0' - 21.9'	16.0' - 19.9'
Class V 3000D	22.0' - 26.9'	20.0' - 24.9'
Class V Special 3600D	30.0' - 33.0'	25.0' - 31.0'

NOTES:

1. Unless otherwise shown on the plans or specified in the special provision, the Contractor shall have the option of selecting the class of RCP and the type of installation to be used, provided the height of cover does not exceed the value shown for the RCP selected.
   Example: 24" RCP culvert with maximum cover of 19'-0" the options are:
   a) Class III or stronger with Installation Type 1.
   b) Class III Special or stronger with Installation Type 2.
   c) Class IV Special or stronger with Installation Type 3.
   Cover is defined as the maximum vertical distance from top of the pipe to finished grade within the length of any given culvert.
2. The class of RCP and Installation Type selected shall be the same throughout the length of any given culvert.
3. The "length of any culvert" is defined as the culvert between:
   a) Successive drainage structure (inlets, junction boxes, headwalls, etc.).
   b) A drainage structure and the inlet or outlet end of the culvert.
   c) The inlet and outlet end of the culvert when there are no intervening drainage structures.
4. Oval and arch shaped RCP shall not be used.
5. 1/25 OD Min, not less than 3".
6. Slurry cement backfill may be substituted for backfill in the outer bedding and haunch areas. If slurry is used the outer and middle beddings shall be omitted. Prior to installation the soil under the middle 1/3 of the outside diameter of the pipe shall be softened by scarifying or other means to a minimum depth of 1/25 OD, but not less than 3". Where slurry cement backfill is used clear distance to trench wall may be reduced as set forth in Section 19-3.062 of the Standard Specifications.
7. Backfill shall be placed full width of excavation except where dimensions are shown for backfill width or thickness. Dimensions shown are minimums.
8. Lower side shall be suitable material as determined by the Engineer. Otherwise it shall be considered unsuitable as set forth in Section 19-2.02 of the Standard Specifications. See Note 9.
9. Where the pipe is placed in a trench, if the trench walls are sloped at 5 vertical to 1 horizontal or steeper for at least 90 percent of the trench height or up to not less than 12" from the grading plane, the firmness of the soil in the lower side need not be considered.
10. Non-reinforced precast concrete pipe sizes 3'-0" or smaller may be placed under installation Types 1, 2 or 3.

STATE OF CALIFORNIA
DEPARTMENT OF TRANSPORTATION

EXCAVATION AND BACKFILL CONCRETE PIPE CULVERTS

NO SCALE

RSP A62DA DATED NOVEMBER 17, 2006 SUPERSEDES STANDARD PLAN A62DA DATED MAY 1, 2006 - PAGE 20 OF THE STANDARD PLANS BOOK DATED MAY 2006.

REVISED STANDARD PLAN RSP A62DA

2006 REVISED STANDARD PLAN RSP A62DA

10-26-06

DIST	COUNTY	ROUTE	POST MILES TOTAL PROJECT	SHEET NO.	TOTAL SHEETS
06	Fre,Mad	99	26.7/R31.6, R0.0/R1.6	275	393

Randell D. Hiatt
REGISTERED CIVIL ENGINEER

June 6, 2008
PLANS APPROVAL DATE

REGISTERED PROFESSIONAL ENGINEER
Randell D. Hiatt
No. C50200
Exp. 6-30-09
CIVIL
STATE OF CALIFORNIA

The State of California or its officers or agents shall not be responsible for the accuracy or completeness of electronic copies of this plan sheet.

To accompany plans dated 4-2-12

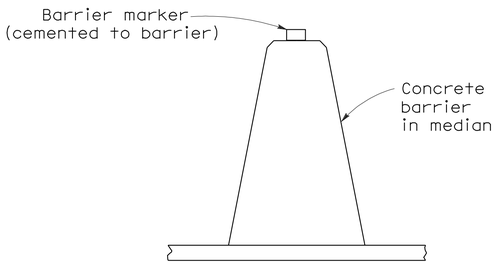

CONCRETE BARRIER TYPE 60 DELINEATION

See Notes 7 and 8

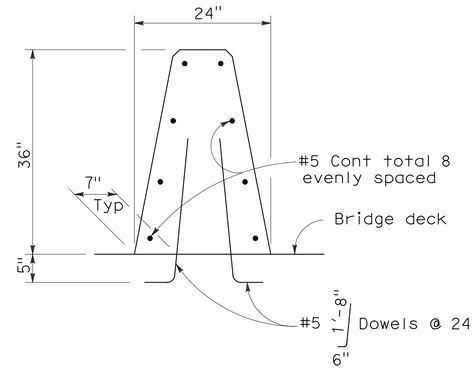

CONCRETE BARRIER TYPE 60A

Details similar to Type 60 except as noted.

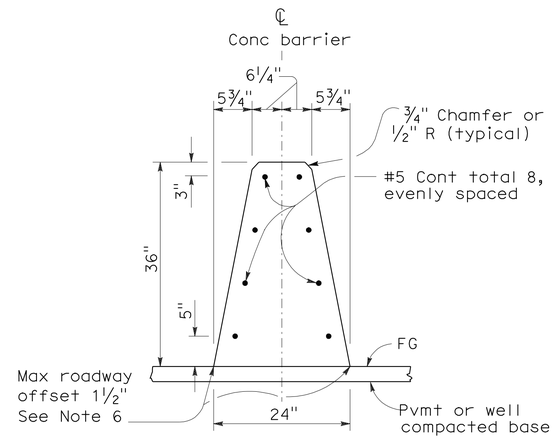

CONCRETE BARRIER TYPE 60

NOTES:

1. See Standard Plan A76B for details of Concrete Barrier Type 60 end anchors, connection to structures and transitions to Concrete Barrier Type 50 and Concrete Barrier Type 60S.
2. See Standard Plan A76C for Concrete Barrier Type 60 transitions at bridge column and sign pedestals.
3. Where glare screen is required on Concrete Barrier Type 60, use Concrete Barrier Type 60G.
4. Where the concrete barrier is added to the face of existing concrete structure, match existing weep holes.
5. Expansion joints in concrete barrier shall be located at all deck, pavement and principal wall joints. Expansion joint filler material shall be the same size as joint or ½" minimum.
6. Where roadway offset is greater than 1½", see Concrete Barrier Type 60C.
7. Barrier delineation to be used when required by the Special Provisions.
8. Spacing of barrier markers to match spacing of raised pavement markers on the adjacent median edgeline pavement delineation.
9. Reinforcing stirrup not required for roadway offsets less than 1'-0".
10. For roadway surfaces offset greater than 1½" to 3", no rebars required. For roadway surfaces offset greater than 3" to 8" use two #4 rebars at 3" above the lower roadway surface. For roadway surfaces offset greater than 8" to 12", use two #4 rebars at 3" above the lower roadway surface and two #4 rebars at 8" above the lower roadway surface. For roadway surfaces offset greater than 12" to 36", use two #4 rebars at 3" above the lower roadway surface and two #4 rebars at every 8" increment vertical spacing above the first two #4 rebars.

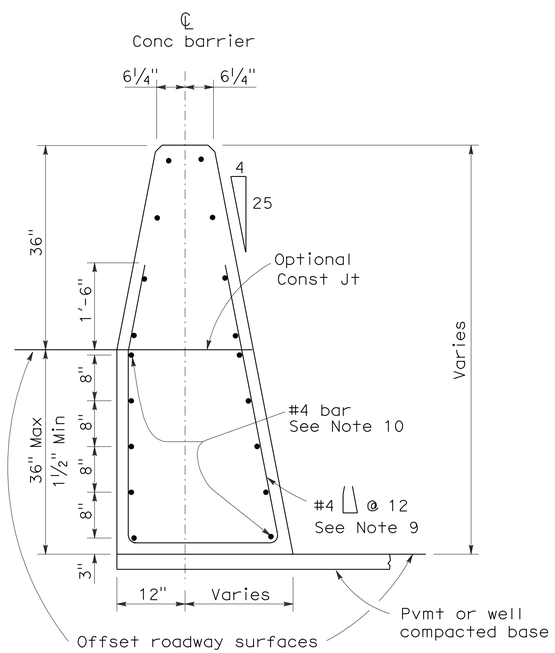

CONCRETE BARRIER TYPE 60C

Details similar to Type 60 except as noted.
Concrete barrier end anchor when necessary.
36" roadway surfaces offset shown.

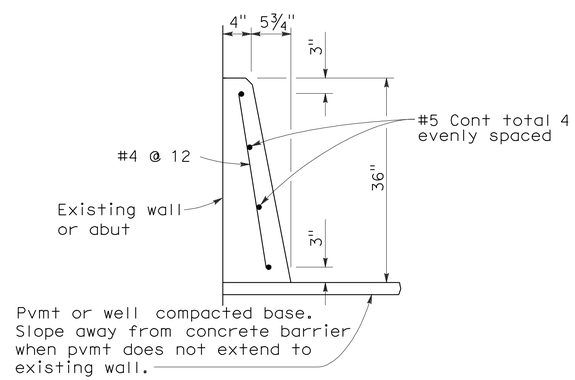

CONCRETE BARRIER TYPE 60D

STATE OF CALIFORNIA
DEPARTMENT OF TRANSPORTATION

CONCRETE BARRIER TYPE 60

NO SCALE

RSP A76A DATED JUNE 6, 2008 SUPERSEDES STANDARD PLAN A76A
DATED MAY 1, 2006 - PAGE 29 OF THE STANDARD PLANS BOOK DATED MAY 2006.

REVISED STANDARD PLAN RSP A76A

2006 REVISED STANDARD PLAN RSP A76A

5-21-08

Dist	COUNTY	ROUTE	POST MILES TOTAL PROJECT	SHEET No.	TOTAL SHEETS
06	Fre,Mad	99	26.7/R31.6, R0.0/R1.6	276	393

Randell D. Hiatt
REGISTERED CIVIL ENGINEER

May 20, 2011
PLANS APPROVAL DATE

REGISTERED PROFESSIONAL ENGINEER
Randell D. Hiatt
No. C50200
Exp. 6-30-11
CIVIL
STATE OF CALIFORNIA

The State of California or its officers or agents shall not be responsible for the accuracy or completeness of electronic copies of this plan sheet.

To accompany plans dated 4-2-12

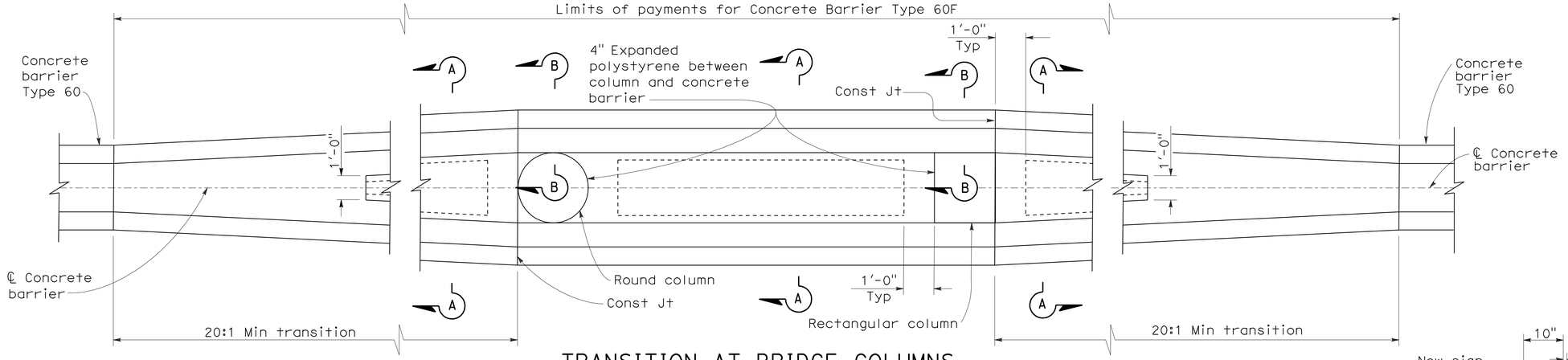

TRANSITION AT BRIDGE COLUMNS

CONCRETE BARRIER TYPE 60F
SEE NOTE 7

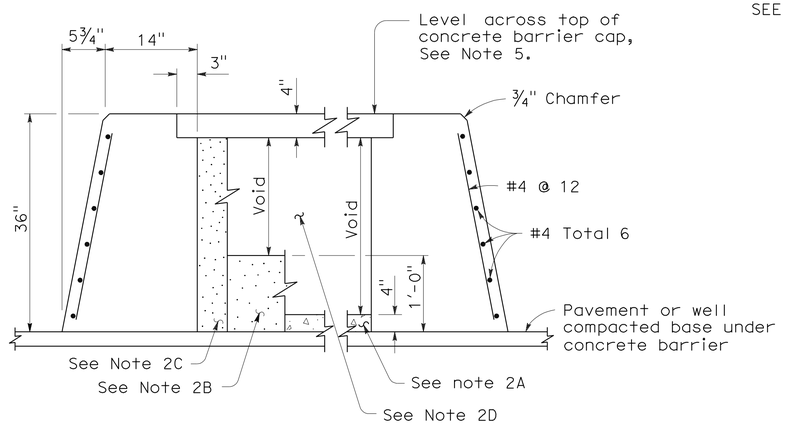

SECTION A-A

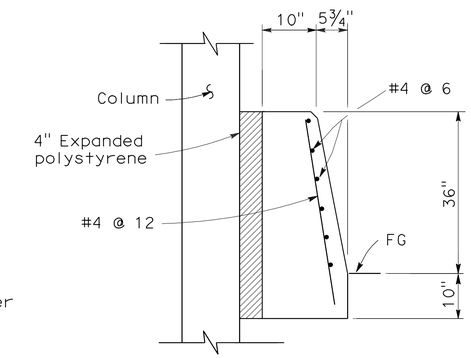

SECTION B-B

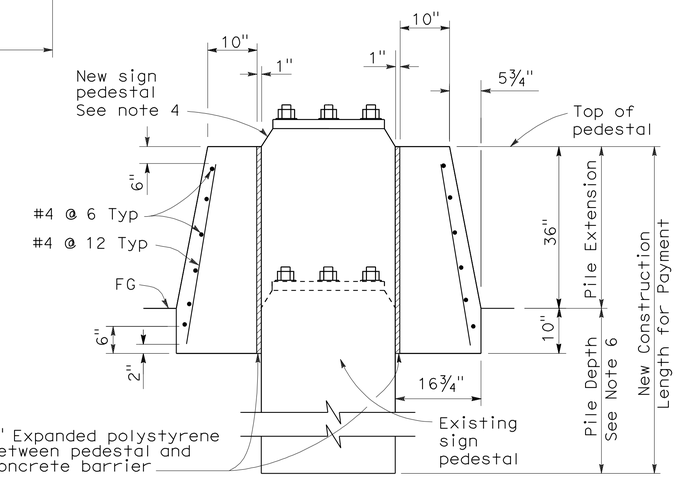

SECTION C-C

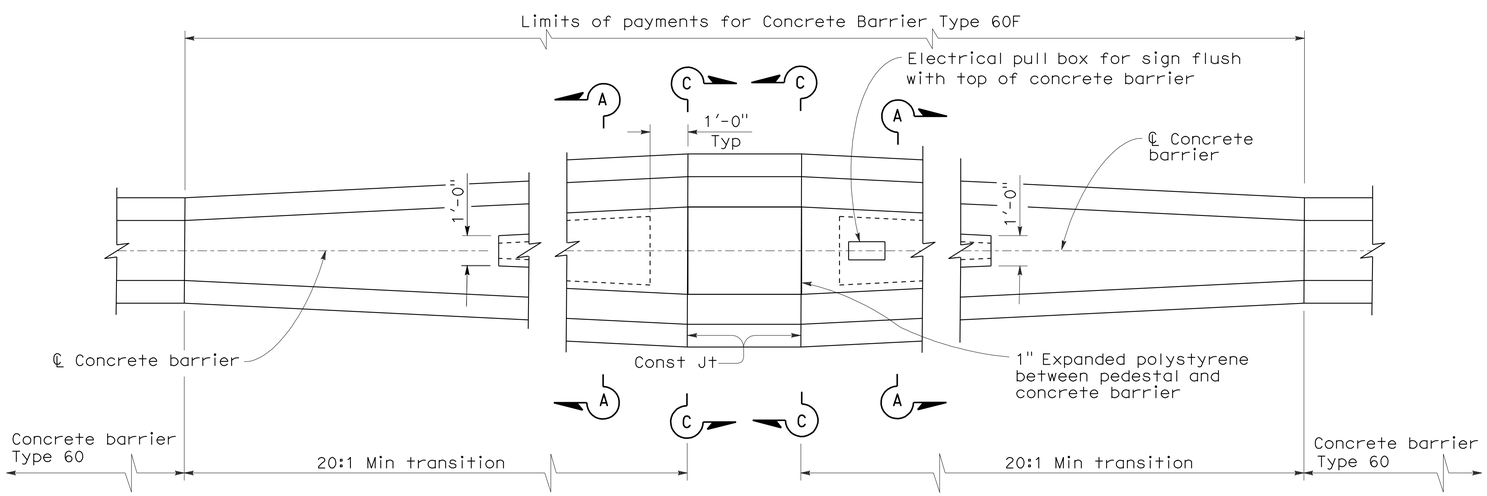

TRANSITION AT SIGN PEDESTAL

CONCRETE BARRIER TYPE 60F
SEE NOTE 7

NOTES:

1. See Revised Standard Plan RSP A76A for Concrete Barrier Type 60.
2. Contractor options for fill between concrete barrier walls:
   A. Place 4" PCC at base between concrete barrier walls.
   B. Place 1'-0" of granular material at base between walls.
   C. Place granular material from base to bottom of 4" cap.
   D. Monolithic concrete with foam blockouts is not permitted.
3. Reinforcing steel shall extend continuous through construction joints.
4. See "Overhead Sign" plans for sign pedestal elevations on new construction.
5. Adjust height of concrete barrier wall on low side of offset or superelevated roadways to provide level grade across top of concrete barrier cap.
6. See Overhead Signs Standard Plan Pile Foundation Tables.
7. All locations with limited shoulder width available for barrier, see Revised Standard Plan RSP A76F for use of Concrete Barrier Type 60GE.

STATE OF CALIFORNIA
DEPARTMENT OF TRANSPORTATION

CONCRETE BARRIER TYPE 60F

NO SCALE

RSP A76C DATED MAY 20, 2011 SUPERSEDES STANDARD PLAN A76C
DATED MAY 1, 2006 - PAGE 31 OF THE STANDARD PLANS BOOK DATED MAY 2006.

REVISED STANDARD PLAN RSP A76C

2006 REVISED STANDARD PLAN RSP A76C

4-6-11

Dist	COUNTY	ROUTE	POST MILES TOTAL PROJECT	SHEET No.	TOTAL SHEETS
06	Fre,Mad	99	26.7/R31.6, R0.0/R1.6	277	393

Randell D. Hiatt
REGISTERED CIVIL ENGINEER

May 20, 2011
PLANS APPROVAL DATE

REGISTERED PROFESSIONAL ENGINEER Randell D. Hiatt No. C50200 Exp. 6-30-11 CIVIL STATE OF CALIFORNIA

The State of California or its officers or agents shall not be responsible for the accuracy or completeness of electronic copies of this plan sheet.

To accompany plans dated 4-2-12

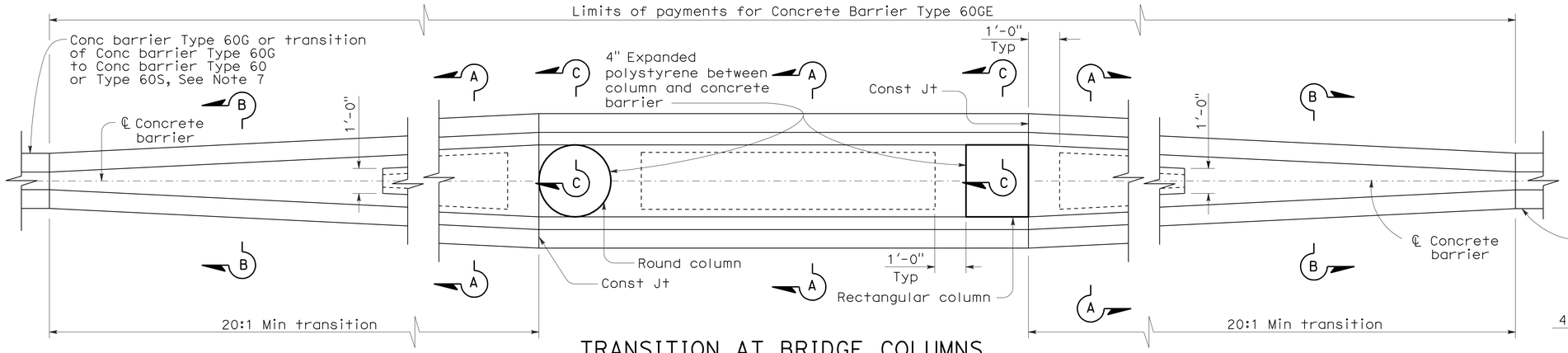

TRANSITION AT BRIDGE COLUMNS

CONCRETE BARRIER TYPE 60GE

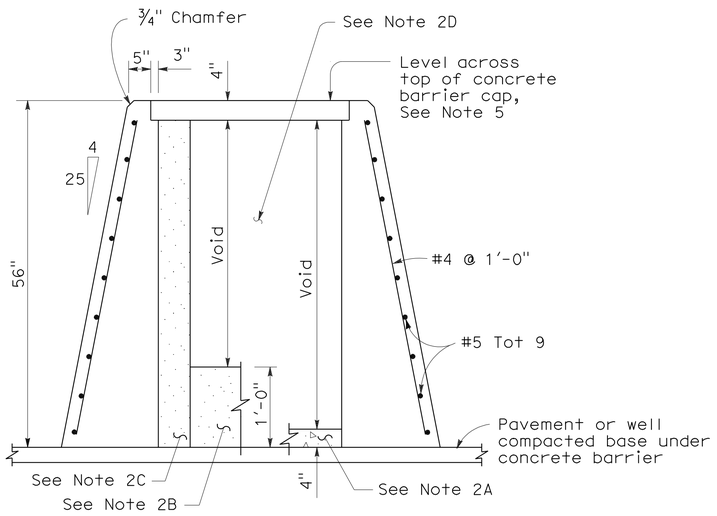

SECTION A-A

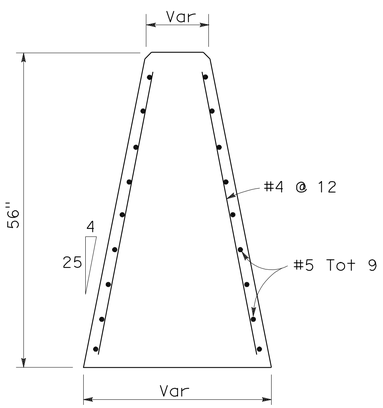

SECTION B-B

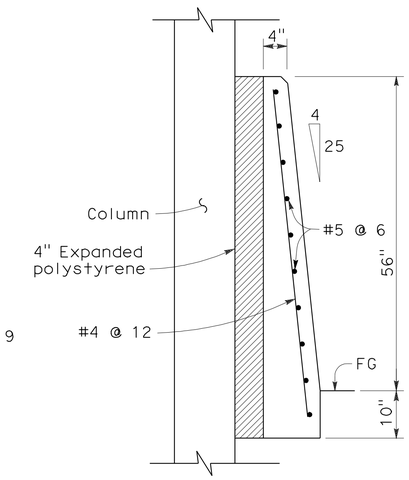

SECTION C-C

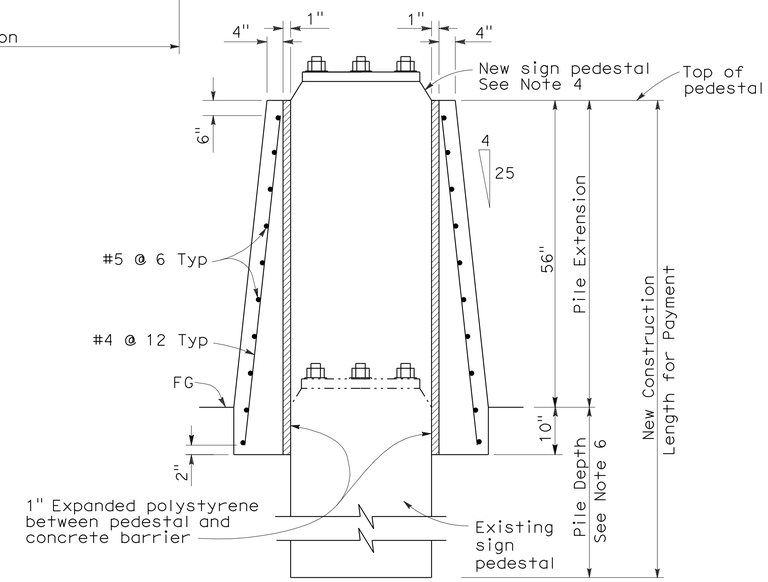

SECTION D-D

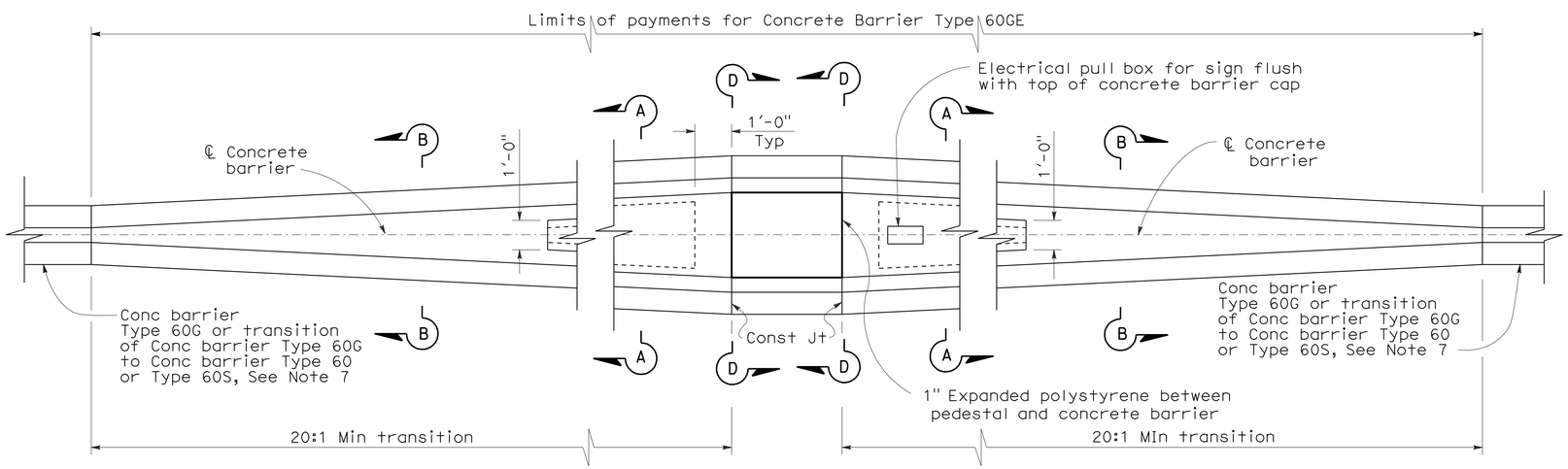

TRANSITION AT SIGN PEDESTAL

CONCRETE BARRIER TYPE 60GE

NOTES:

1. See Standard Plan A76D for Concrete Barrier Type 60G.
2. Contractor options for fill between concrete barrier walls:
   A. Place 4" PCC at base between concrete barrier walls.
   B. Place 1'-0" of granular material at base between walls.
   C. Place granular material from base to bottom of 4" cap.
   D. Monolithic concrete with foam blockouts is not permitted.
3. Reinforcing steel shall extend continuous through construction joints.
4. See "Overhead Sign" plans for sign pedestal elevations on new construction.
5. Adjust height of concrete barrier wall on low side of offset or superelevated roadways to provide level grade across top of concrete barrier cap.
6. See Overhead Signs Standard Plan Pile Foundation Tables.
7. See Revised Standard Plan A76E for concrete barrier transitions.

STATE OF CALIFORNIA
DEPARTMENT OF TRANSPORTATION

CONCRETE BARRIER TYPE 60GE

NO SCALE

RSP A76F DATED MAY 20, 2011 SUPERSEDES STANDARD PLAN A76F
DATED MAY 1, 2006 - PAGE 34 OF THE STANDARD PLANS BOOK DATED MAY 2006.

REVISED STANDARD PLAN RSP A76F

2006 REVISED STANDARD PLAN RSP A76F

4-6-11

Dist	COUNTY	ROUTE	POST MILES TOTAL PROJECT	SHEET No.	TOTAL SHEETS
06	Fre,Mad	99	26.7/R31.6, R0.0/R1.6	278	393

Randell D. Hiatt
REGISTERED CIVIL ENGINEER

May 20, 2011
PLANS APPROVAL DATE

REGISTERED PROFESSIONAL ENGINEER
Randell D. Hiatt
No. C50200
Exp. 6-30-11
CIVIL
STATE OF CALIFORNIA

The State of California or its officers or agents shall not be responsible for the accuracy or completeness of electronic copies of this plan sheet.

To accompany plans dated 4-2-12

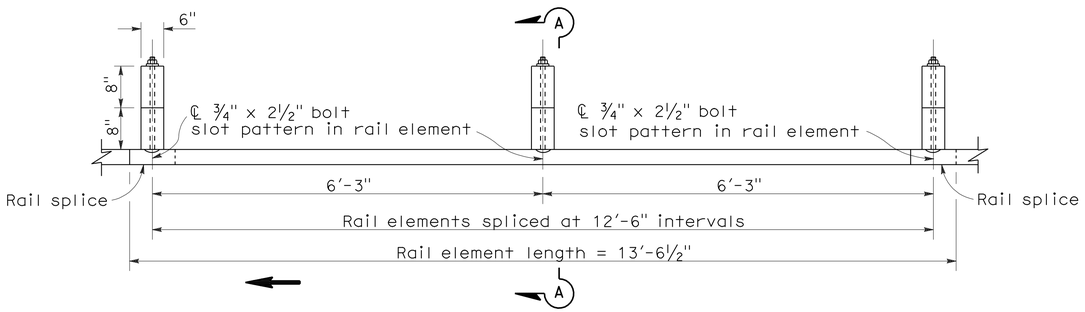

PLAN

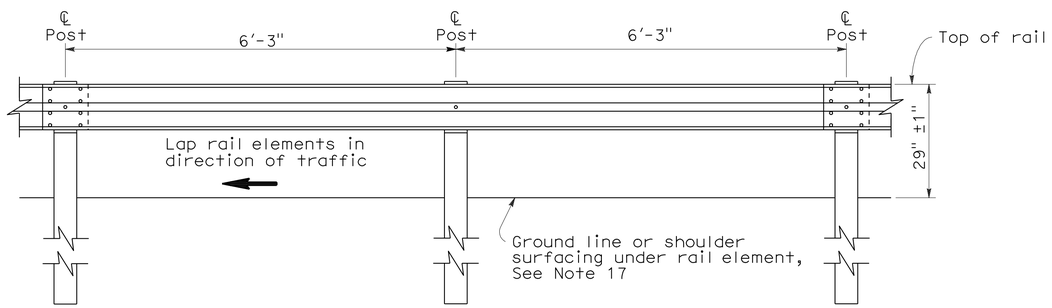

ELEVATION

METAL BEAM GUARD RAILING WITH WOOD POST AND BLOCKS

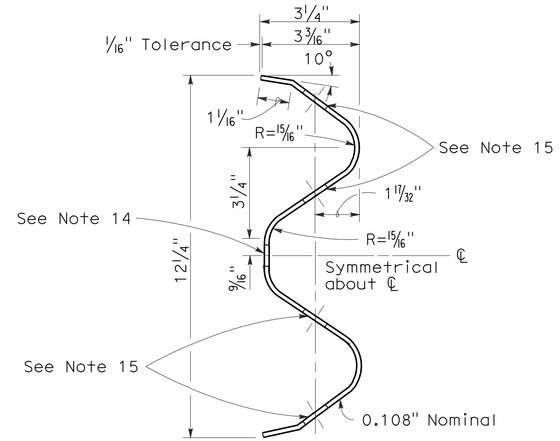

SECTION THRU RAIL ELEMENT

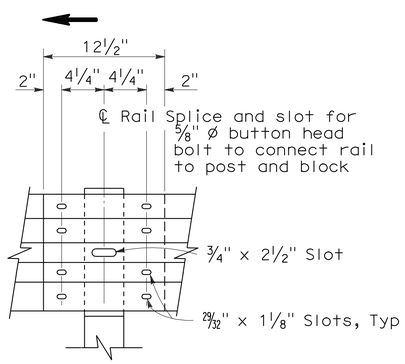

ELEVATION

RAIL ELEMENT SPLICE DETAIL

a) Connect the over lapped end of the rail elements with ⅝" ø x 1⅜" button head oval shoulder splice bolts inserted into the 29⁄32" x 1⅛" slots and bolted together with ⅝" ø recessed hex nuts. Recess of hex nut points toward rail element. A total of 8 bolts and nuts are to be used at each rail splice connection.

b) The ends of the rail elements are to be overlapped in the direction of traffic (see details).

c) Where end cap is to be attached to the end of a rail element, a total of 4 of the above described splice bolts and nuts are to be used.

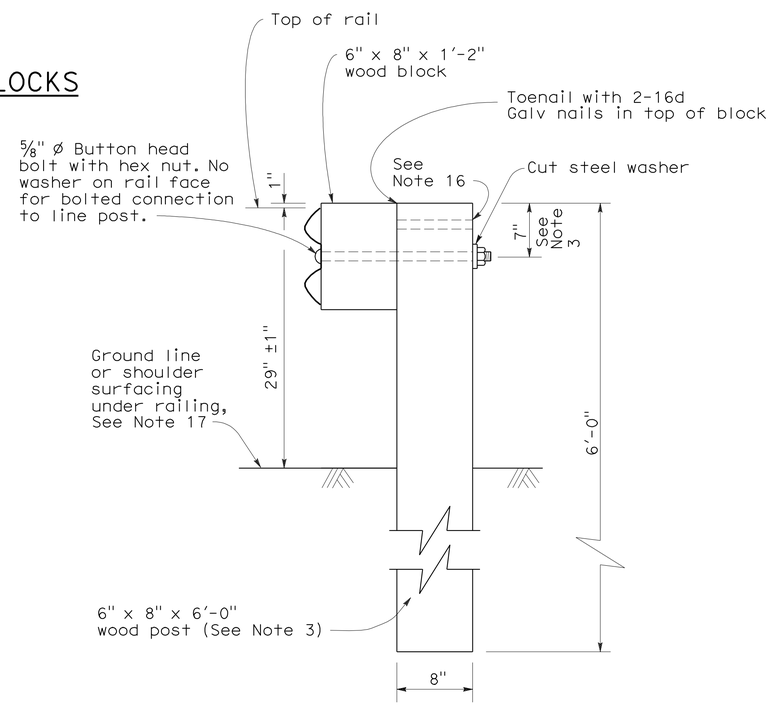

SECTION A-A

TYPICAL WOOD LINE POST INSTALLATION

See Note 4

NOTES:

1. For details of steel post installations, see Standard Plan A77A2.
2. For details of standard hardware used to construct guard railing, see Standard Plan A77B1.
3. For details of wood posts and wood blocks used to construct guard railing, see Standard Plan A77C1.
4. For additional installation details, see Standard Plan A77C3.
5. Guard railing post spacing to be 6'-3" center to center, except as otherwise noted.
6. For guard railing typical layouts, see the A77E, A77F and A77G Series of Standard Plans.
7. For terminal system end treatment details, see the A77L Series of Standard Plans. To connect railing to terminal system end treatment, transition the top of railing height at a ratio of 120:1 to terminal system end treatment height plus one 12'-6" standard railing section at the transitioned height for a horizontal connection to the end treatment.
8. For guard railing end anchor details, see Standard Plans A77H1 and A77I2.
9. For details of guard railing transition to bridge railing, see Standard Plan A77J4.
10. For additional details of guard railing connection to bridge railings, see Standard Plans A77J1, A77J2 and A77K1.
11. For guard railing connection details to abutments and walls, see Standard Plan A77J3.
12. Direction of adjacent traffic indicated by ➡.
13. For typical guard railing delineation and dike positioning details, see Standard Plan A77C4.
14. Slotted hole for bolted connection of rail element to block and post. See "Section Thru Rail Element".
15. Slotted holes for splice bolts to overlap ends of rail element. See "Section Thru Rail Element".
16. Additional hole in uppermost portion of line post is for potential future adjustments of railing height. See Standard Plan A77C1.
17. Install posts in soil.

STATE OF CALIFORNIA
DEPARTMENT OF TRANSPORTATION

METAL BEAM GUARD RAILING STANDARD RAILING SECTION (WOOD POST WITH WOOD BLOCK)

NO SCALE

RSP A77A1 DATED MAY 20, 2011 SUPERSEDES STANDARD PLAN A77A1 DATED MAY 1, 2006 - PAGE 41 OF THE STANDARD PLANS BOOK DATED MAY 2006.

REVISED STANDARD PLAN RSP A77A1

2006 REVISED STANDARD PLAN RSP A77A1

3-10-11

Dist	COUNTY	ROUTE	POST MILES TOTAL PROJECT	SHEET No.	TOTAL SHEETS
06	Fre,Mad	99	26.7/R31.6, R0.0/R1.6	279	393

Randell D. Hiatt
REGISTERED CIVIL ENGINEER

May 20, 2011
PLANS APPROVAL DATE

REGISTERED PROFESSIONAL ENGINEER
Randell D. Hiatt
No. C50200
Exp. 6-30-11
CIVIL
STATE OF CALIFORNIA

The State of California or its officers or agents shall not be responsible for the accuracy or completeness of electronic copies of this plan sheet.

To accompany plans dated 4-2-12

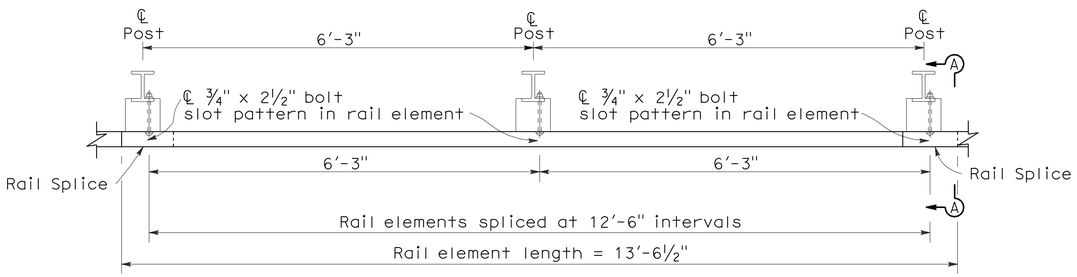

PLAN

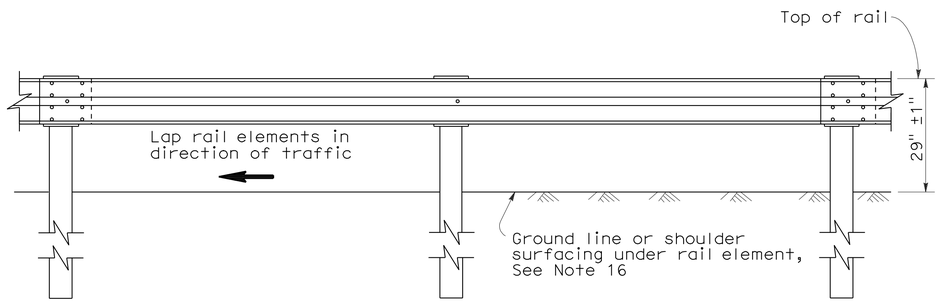

ELEVATION

METAL BEAM GUARD RAILING WITH STEEL POSTS AND NOTCHED WOOD OR NOTCHED RECYCLED PLASTIC BLOCKS

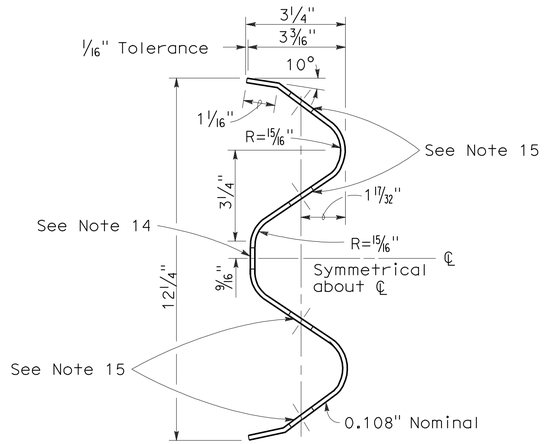

SECTION THRU RAIL ELEMENT

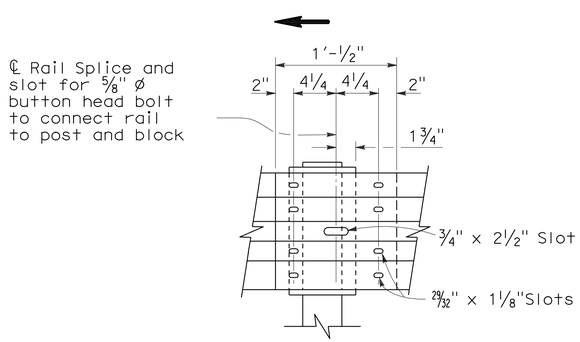

ELEVATION

RAIL ELEMENT SPLICE DETAIL

a) Connect the over lapped end of the rail elements with ⅝" ø x 1⅜" button head oval shoulder splice bolts inserted into the 29⁄₃₂" x 1⅛" slots and bolted together with ⅝" ø recessed hex nuts. Recess of hex nut points toward rail element. A total of 8 bolts and nuts are to be used at each rail splice connection.

b) The ends of the rail elements are to be overlapped in the direction of traffic (see details).

c) Where end cap is to be attached to the end of a rail element, a total of 4 of the above described splice bolts and nuts are to be used.

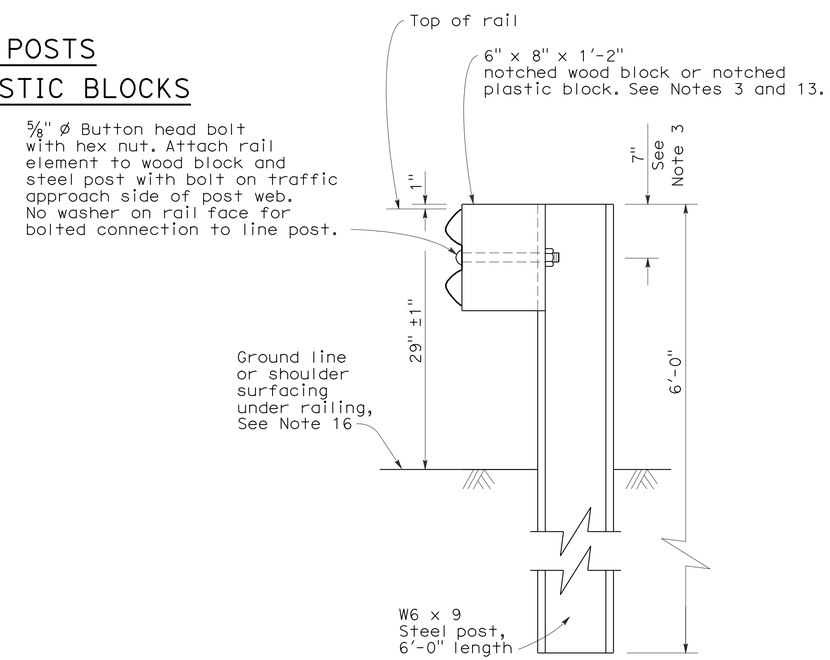

SECTION A-A

TYPICAL STEEL LINE POST INSTALLATION

See Note 4

NOTES:

1. For details of wood post installations, see Standard Plan A77A1.
2. For details of standard hardware used to construct guard railing, see Standard Plan A77B1.
3. For details of steel posts and notched wood blocks used to construct guard railing, see Standard Plan A77C2.
4. For additional installation details, see Standard Plan A77C3.
5. Guard railing post spacing to be 6′-3" center to center, except as otherwise noted.
6. For guard railing typical layouts, see the A77E, A77F and A77G Series of Standard Plans.
7. For terminal system end treatment details, see the A77L Series of Standard Plans. To connect railing to terminal system end treatment, transition the top of railing height at a ratio of 120:1 to terminal system end treatment height plus one 12′-6" standard railing section at the transitioned height for a horizontal connection to the end treatment.
8. For guard railing end anchor details, see Standard Plans A77H1 and A77I2.
9. For details of guard railing transition to bridge railing, see Standard Plan A77J4.
10. For additional details of guard railing connection to bridge railings, see Standard Plans A77J1, A77J2 and A77K1.
11. For dike positioning and guard railing delineation details, see Standard Plan A77C4.
12. Direction of adjacent traffic indicated by → .
13. Notched face of block faces steel post.
14. Slotted hole for bolted connection of rail element to block and post. See "Section Thru Rail Element".
15. Slotted holes for splice bolts to overlap ends of rail element. See "Section Thru Rail Element".
16. Install posts in soil.

STATE OF CALIFORNIA
DEPARTMENT OF TRANSPORTATION

METAL BEAM GUARD RAILING STANDARD RAILING SECTION (STEEL POST WITH NOTCHED WOOD OR NOTCHED RECYCLED PLASTIC BLOCK)

NO SCALE

RSP A77A2 DATED MAY 20, 2011 SUPERSEDES STANDARD PLAN A77A2 DATED MAY 1, 2006 - PAGE 42 OF THE STANDARD PLANS BOOK DATED MAY 2006.

REVISED STANDARD PLAN RSP A77A2

2006 REVISED STANDARD PLAN RSP A77A2

5-4-11

To accompany plans dated 4-2-12

Dist	COUNTY	ROUTE	POST MILES TOTAL PROJECT	SHEET No.	TOTAL SHEETS
06	Fre,Mad	99	26.7/R31.6, R0.0/R1.6	280	393

Randell D. Hiatt
REGISTERED CIVIL ENGINEER

May 20, 2011
PLANS APPROVAL DATE

REGISTERED PROFESSIONAL ENGINEER
Randell D. Hiatt
No. C50200
Exp. 6-30-11
CIVIL
STATE OF CALIFORNIA

The State of California or its officers or agents shall not be responsible for the accuracy or completeness of electronic copies of this plan sheet.

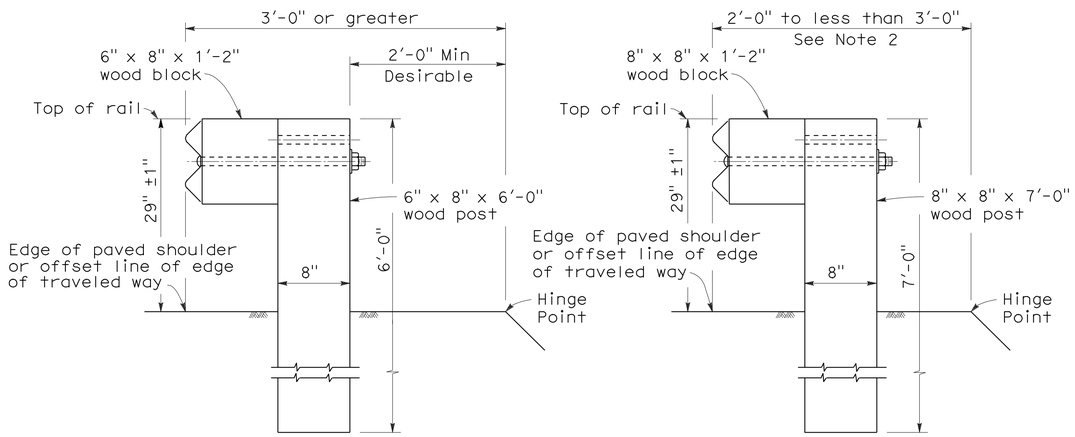

DETAIL A
TYPICAL ROADWAY INSTALLATION
See Note 1

DETAIL B
NARROW ROADWAY INSTALLATION
See Note 1

POST EMBEDMENT

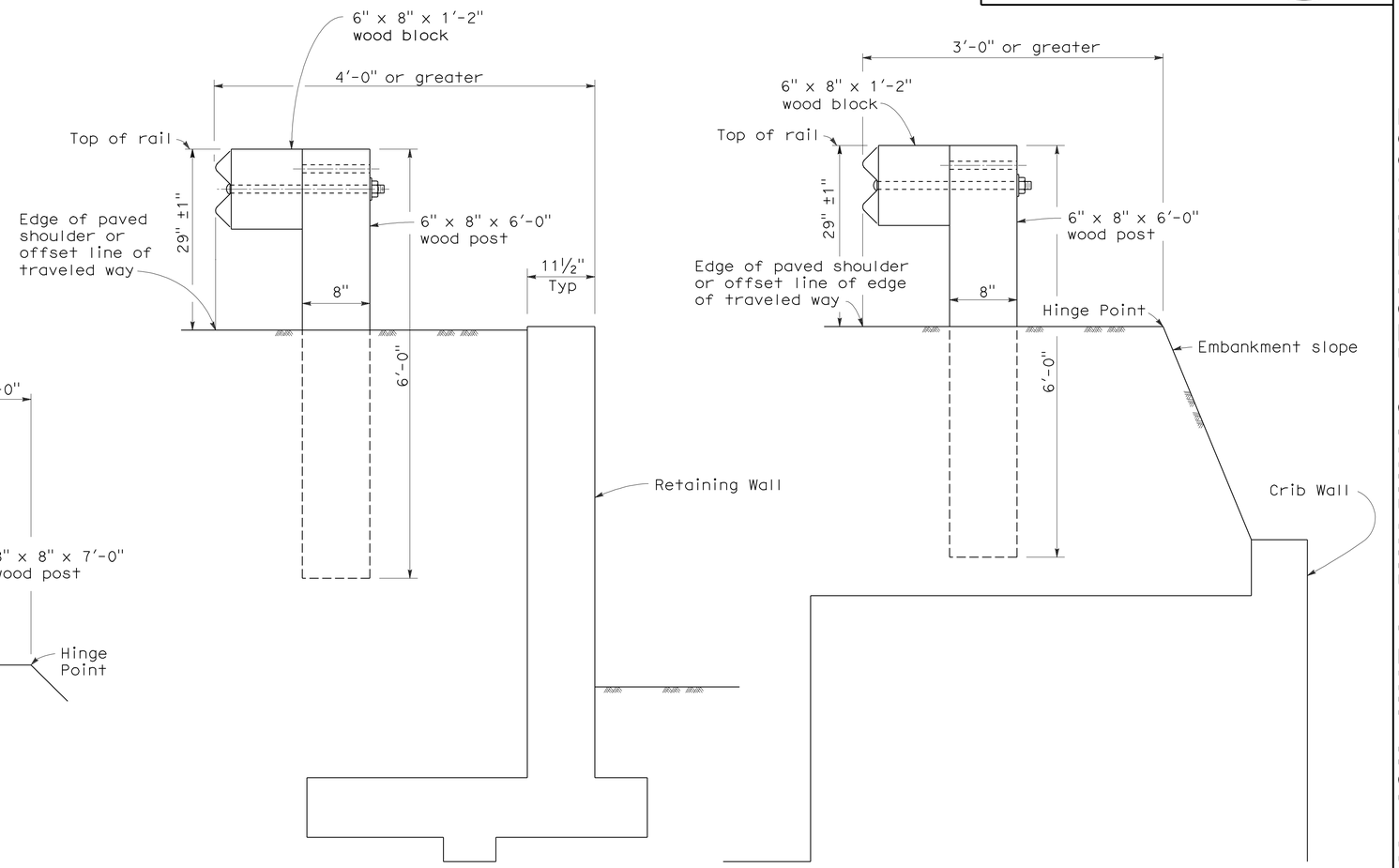

DETAIL C

DETAIL D

INSTALLATION AT EARTH RETAINING WALLS

NOTES:

1. These installation details also applicable to steel line post installations. For Detail A, C, and D, where steel line post installations are constructed, W6 x 9 steel post, 6'-0" in length, with 6" x 8" x 1'-2" notched wood blocks or notched recycled plastic blocks are to be used in place of the size of wood post and wood block shown. For Detail B, where steel line post installations are constructed, W6 x 9 steel post, 7'-0" in length, with 6" x 8" x 1'-2" notched wood blocks or notched recycled plastic blocks are to be used in place of the size of wood post and wood block shown. For additional installation details, see Standard Plans A77A1 and A77A2.
2. Where the distance between the face of the rail and the hinge point is less than 2'-0", see the Project Plans for special details.
3. For dike positioning with guard railing installations, see Standard Plan A77C4.

STATE OF CALIFORNIA
DEPARTMENT OF TRANSPORTATION

METAL BEAM GUARD RAILING TYPICAL LINE POST EMBEDMENT AND HINGE POINT OFFSET DETAILS

NO SCALE

RSP A77C3 DATED MAY 20, 2011 SUPERSEDES STANDARD PLAN A77C3
DATED MAY 1, 2006 - PAGE 46 OF THE STANDARD PLANS BOOK DATED MAY 2006.

REVISED STANDARD PLAN RSP A77C3

2006 REVISED STANDARD PLAN RSP A77C3

3-10-11

Dist	COUNTY	ROUTE	POST MILES TOTAL PROJECT	SHEET No.	TOTAL SHEETS
06	Fre,Mad	99	26.7/R31.6, R0.0/R1.6	281	393

Randell D. Hiatt
REGISTERED CIVIL ENGINEER

May 20, 2011
PLANS APPROVAL DATE

REGISTERED PROFESSIONAL ENGINEER
Randell D. Hiatt
No. C50200
Exp. 6-30-11
CIVIL
STATE OF CALIFORNIA

The State of California or its officers or agents shall not be responsible for the accuracy or completeness of electronic copies of this plan sheet.

To accompany plans dated 4-2-12

NOTES:

1. When necessary to place dike in front of face of guard railing, only Type C dike may be used. For dike details, see Standard Plan A87B.
2. For standard railing post embedment, see Standard Plans A77C3.
3. Guard railing delineation to be used where shown on the Project Plans.
4. When dike or curb is placed under guard railing, the maximum height of the dike or curb shall be 4". Mountable dike should not be used. For dike and curb details, see Standard Plans A87A and A87B.
5. For details of typical distance between the face of rail and hinge point, see Standard Plan A77C3.
6. For steel line posts, use ¼ - 20 self-tapping screws in 0.22" diameter holes or ¼" bolts in 9/32" diameter holes.

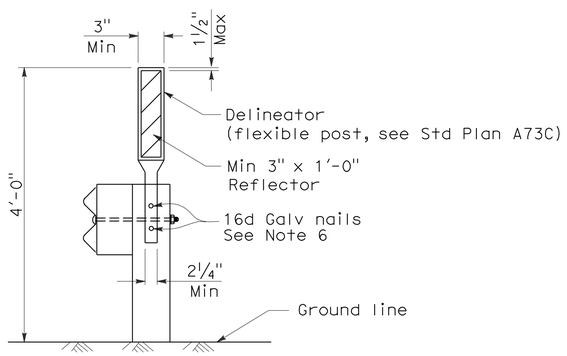

GUARD RAILING DELINEATION

See Note 3

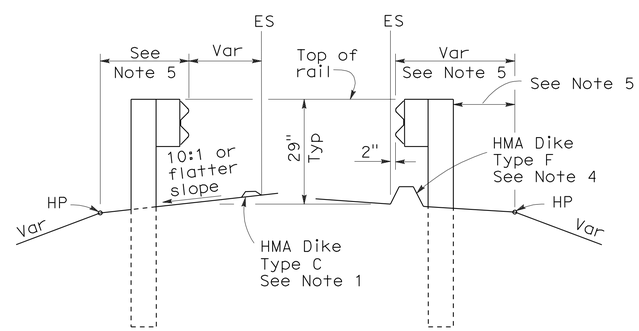

DIKE POSITIONING

See Note 1

STATE OF CALIFORNIA
DEPARTMENT OF TRANSPORTATION

METAL BEAM GUARD RAILING TYPICAL RAILING DELINEATION AND DIKE POSITIONING DETAILS

NO SCALE

RSP A77C4 DATED MAY 20, 2011 SUPERSEDES RSP A77C4 DATED JUNE 6, 2008 AND STANDARD PLAN A77C4 DATED MAY 1, 2006 - PAGE 47 OF THE STANDARD PLANS BOOK DATED MAY 2006.

REVISED STANDARD PLAN RSP A77C4

2006 REVISED STANDARD PLAN RSP A77C4

3-10-11

DIST	COUNTY	ROUTE	POST MILES TOTAL PROJECT	SHEET NO.	TOTAL SHEETS
06	Fre,Mad	99	26.7/R31.6, R0.0/R1.6	282	393

Randell D. Hiatt
REGISTERED CIVIL ENGINEER

June 6, 2008
PLANS APPROVAL DATE

REGISTERED PROFESSIONAL ENGINEER
Randell D. Hiatt
No. C50200
Exp. 6-30-09
CIVIL
STATE OF CALIFORNIA

The State of California or its officers or agents shall not be responsible for the accuracy or completeness of electronic copies of this plan sheet.

To accompany plans dated 4-2-12

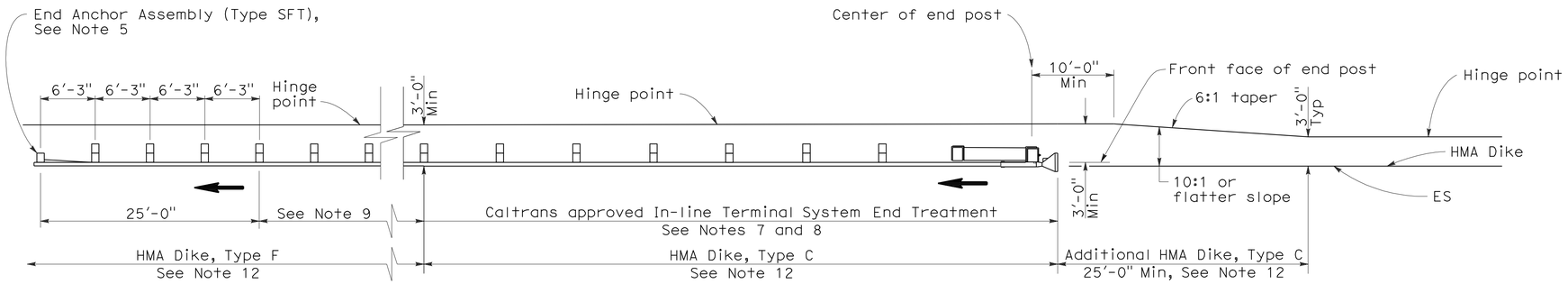

TYPE 11A LAYOUT

(EMBANKMENT GUARD INSTALLATION WITH IN-LINE END TREATMENT AT TRAFFIC APPROACH END OF RAILING)
See Note 6

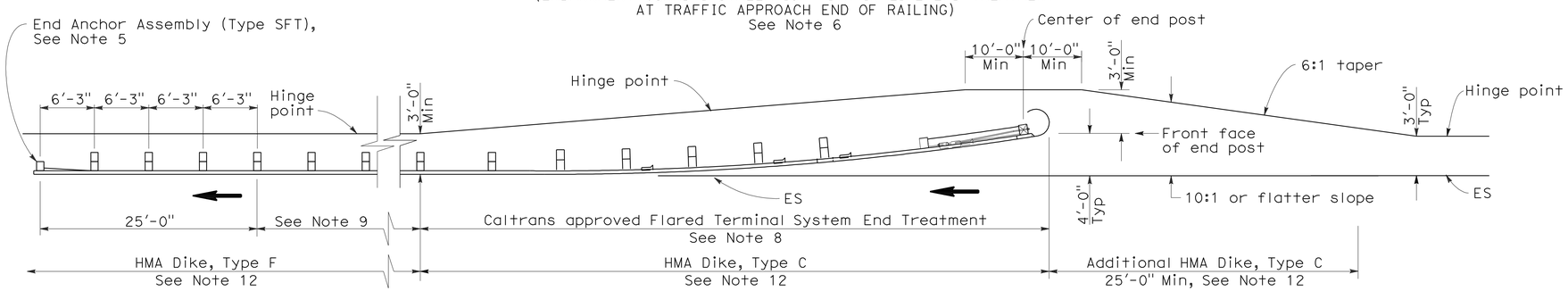

TYPE 11B LAYOUT

(EMBANKMENT GUARD RAILING INSTALLATION WITH FLARED END TREATMENT AT TRAFFIC APPROACH END OF RAILING)
See Note 6

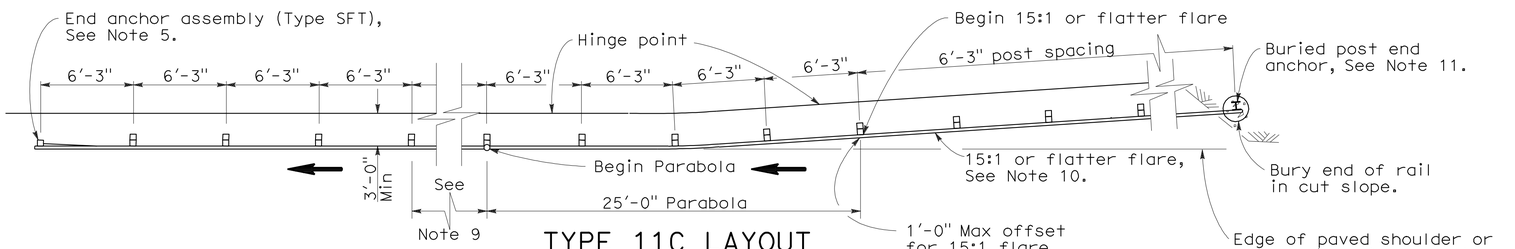

TYPE 11C LAYOUT

(EMBANKMENT GUARD RAILING INSTALLATION WITH BURIED END ANCHOR TREATMENT AT TRAFFIC APPROACH END OF RAILING)
See Notes 6 and 12

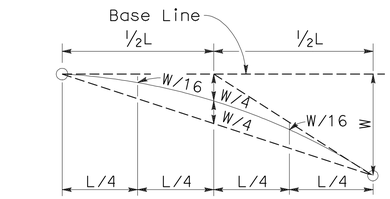

TYPICAL PARABOLIC LAYOUT

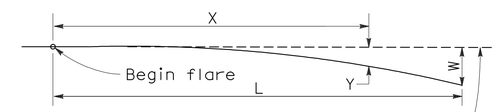

Base Line (Edge of paved shoulder or offset line of edge of traveled way)

$$Y = \frac{WX^2}{L^2}$$

Y = Offset from base line
W = Maximum offset
X = Distance along base line
L = Length of flare

PARABOLIC FLARE OFFSETS

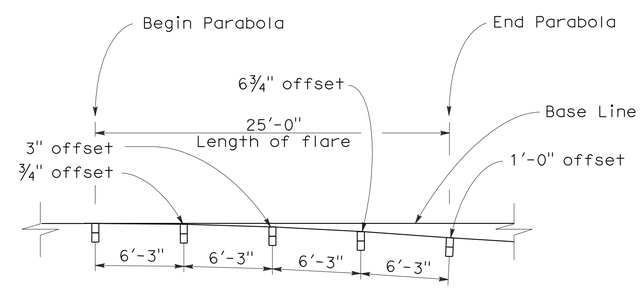

TYPICAL FLARE OFFSETS FOR 1 FOOT MAX END OFFSET

NOTES:

1. Line post, blocks and hardware to be used are shown on Standard Plans A77A1, A77A2, A77B1, A77C1, and A77C2.
2. Guard rail post spacing to be 6'-3" center to center, except as otherwise noted.
3. Except as noted, line posts are 6" x 8" x 6'-0" wood with 6" x 8" x 1'-2" wood blocks. W6 x 9 steel posts, 6'-0" in length, with 6" x 8" x 1'-2" notched wood blocks or recycled plastic blocks may be used for 6" x 8" x 6'-0" wood post with 6" x 8" x 1'-2" wood blocks where applicable and when specified.
4. Direction of adjacent traffic indicated by ⟶.
5. For End Anchor Assembly (Type SFT) details, see Standard Plan A77H1.
6. Layout Types 11A, 11B or 11C are typically used where guard railing is recommended to shield embankment slopes and a crashworthy end treatment is required for only one direction of traffic.
7. In-line Terminal System End Treatments are used where site conditions will not accommodate a flared end treatment.
8. The type of terminal system end treatment to be used will be shown on the Project Plans.
9. Dependent on site conditions (embankment height and side slope), construction of additional guard railing (length equal to multiples of 12'-6" with 6'-3" post spacing) may be advisable.
10. The 15:1 or flatter flare used with buried end anchors is based on the edge of the paved shoulder or offset line of edge of the traveled way. The length of guard railing within the 15:1 or flatter flare is based on site conditions and should be a length equal to multiples of 12'-6".
11. For details of the buried post end anchor used with Type 11C Layout, see Standard Plan A77I2.
12. Where placement of dike is required with guard railing installations, see Revised Standard Plan RSP A77C4 for dike positioning details.

STATE OF CALIFORNIA
DEPARTMENT OF TRANSPORTATION

METAL BEAM GUARD RAILING TYPICAL LAYOUTS FOR EMBANKMENTS

NO SCALE

RSP A77E1 DATED JUNE 6, 2008 SUPERSEDES STANDARD PLAN A77E1
DATED MAY 1, 2006 - PAGE 48 OF THE STANDARD PLANS BOOK DATED MAY 2006.

REVISED STANDARD PLAN RSP A77E1

2006 REVISED STANDARD PLAN RSP A77E1

12-10-07

DIST	COUNTY	ROUTE	POST MILES TOTAL PROJECT	SHEET NO.	TOTAL SHEETS
06	Fre,Mad	99	26.7/R31.6, R0.0/R1.6	283	393

Randell D. Hiatt
REGISTERED CIVIL ENGINEER

June 6, 2008
PLANS APPROVAL DATE

REGISTERED PROFESSIONAL ENGINEER
Randell D. Hiatt
No. C50200
Exp. 6-30-09
CIVIL
STATE OF CALIFORNIA

The State of California or its officers or agents shall not be responsible for the accuracy or completeness of electronic copies of this plan sheet.

To accompany plans dated 4-2-12

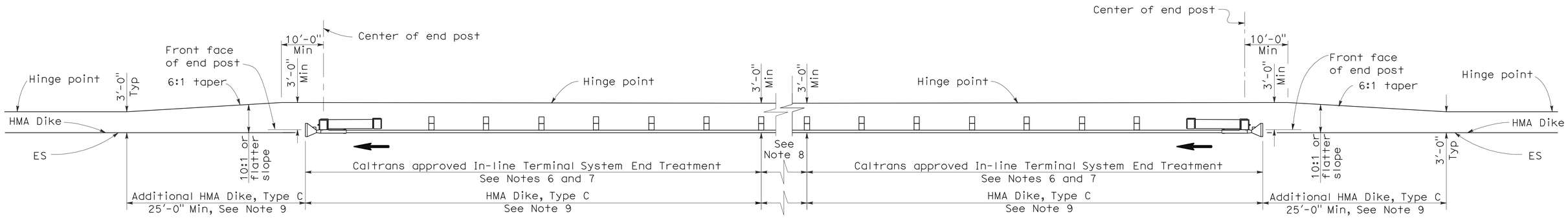

TYPE 11D LAYOUT

(EMBANKMENT GUARD RAILING INSTALLATION WITH IN-LINE END TREATMENT AT EACH END OF RAILING)
See Note 5

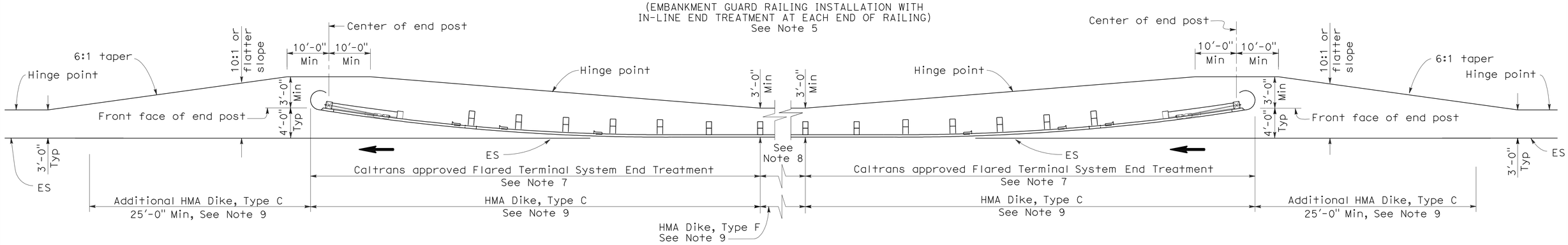

TYPE 11E LAYOUT

(EMBANKMENT GUARD RAILING INSTALLATION WITH FLARED END TREATMENT AT EACH END OF RAILING)
See Note 5

NOTES:

1. Line post, blocks and hardware to be used are shown on Standard Plans A77A1, A77A2, A77B1, A77C1 and A77C2.
2. Guard rail post spacing to be 6'-3" center to center, except as otherwise noted.
3. Except as noted, line posts are 6" x 8" x 6'-0" wood with 6" x 8" x 1'-2" wood blocks. W6 x 9 steel posts, 6'-0" in length, with 6" x 8" x 1'-2" notched wood blocks or plastic blocks may be used for 6" x 8" x 6'-0" wood post with 6" x 8" x 1'-2" wood blocks where applicable and when specified.
4. Direction of adjacent traffic indicated by ➡.
5. Layout Types 11D through 11L, shown on the A77E Series of Revised Standard Plans, are typically used where guard railing is recommended to shield embankment slopes and a crashworthy end treatment is required for both directions of traffic.
6. In-line Terminal System End Treatments are used where site conditions will not accommodate a flared end treatment.
7. The type of terminal system end treatment to be used will be shown on the Project Plans.
8. Dependent on site conditions (embankment height and side slope), construction of additional guard railing (length equal to multiples of 12'-6" with 6'-3" post spacing) may be advisable.
9. Where placement of dike is required with guard railing installations, see Revised Standard Plan RSP A77C4 for dike positioning details.

STATE OF CALIFORNIA
DEPARTMENT OF TRANSPORTATION

METAL BEAM GUARD RAILING TYPICAL LAYOUTS FOR EMBANKMENTS

NO SCALE

RSP A77E2 DATED JUNE 6, 2008 SUPERSEDES STANDARD PLAN A77E2
DATED MAY 1, 2006 - PAGE 49 OF THE STANDARD PLANS BOOK DATED MAY 2006.

REVISED STANDARD PLAN RSP A77E2

2006 REVISED STANDARD PLAN RSP A77E2

12-10-07

DIST	COUNTY	ROUTE	POST MILES TOTAL PROJECT	SHEET NO.	TOTAL SHEETS
06	Fre,Mad	99	26.7/R31.6, R0.0/R1.6	284	393

Randell D. Hiatt
REGISTERED CIVIL ENGINEER

June 6, 2008
PLANS APPROVAL DATE

REGISTERED PROFESSIONAL ENGINEER
Randell D. Hiatt
No. C50200
Exp. 6-30-09
CIVIL
STATE OF CALIFORNIA

The State of California or its officers or agents shall not be responsible for the accuracy or completeness of electronic copies of this plan sheet.

To accompany plans dated 4-2-12

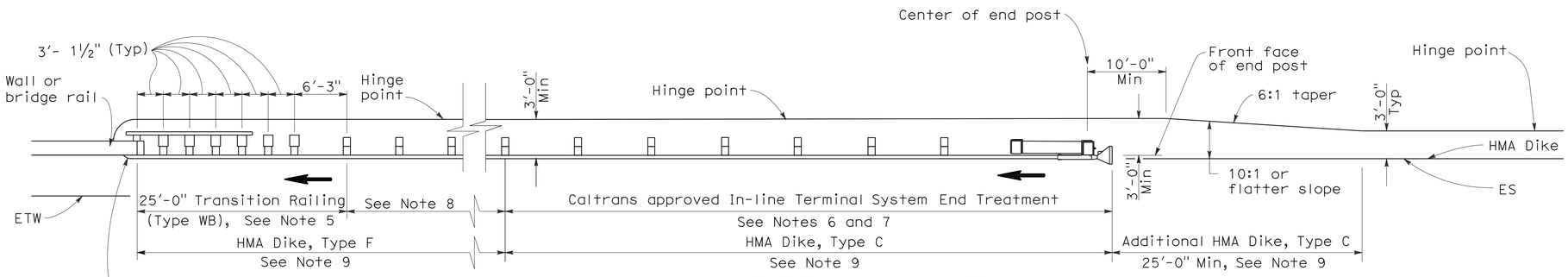

TYPE 12A LAYOUT

(GUARD RAILING INSTALLATION AT STRUCTURE APPROACH WITH AN IN-LINE END TREATMENT AT TRAFFIC APPROACH END OF RAILING)
See Notes 10

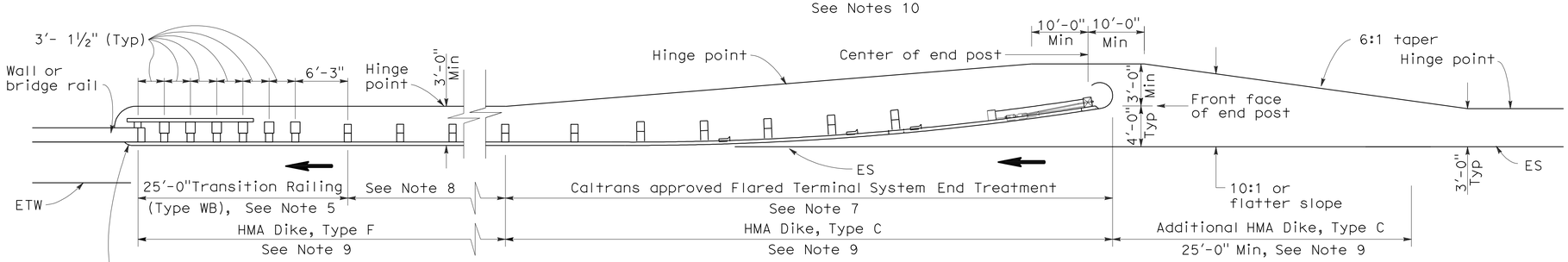

TYPE 12B LAYOUT

(GUARD RAILING INSTALLATION AT STRUCTURE APPROACH WITH A FLARED END TREATMENT AT TRAFFIC APPROACH END OF RAILING)
See Notes 10

NOTES:

1. Line post, blocks and hardware to be used are shown on Standard Plans A77A1, A77A2, A77B1, A77C1 and A77C2.
2. Guard rail post spacing to be 6'-3" center to center, except as otherwise noted.
3. Except as noted, line posts are 6" x 8" x 6'-0" wood with 6" x 8" x 1'-2" wood blocks. W6 x 9 steel posts, 6'-0" in length, with 6" x 8" x 1'-2" notched wood blocks or plastic blocks may be used for 6" x 8" x 6'-0" wood posts with 6" x 8" x 1'-2" wood blocks where applicable and when specified.
4. Direction of adjacent traffic indicated by ➡.
5. For Transition Railing (Type WB) details for Types 12A and 12B Layouts, see Standard Plan A77J4.
6. In-line Terminal System End Treatments are used where site conditions will not accommodate a flared end treatment.
7. The type of terminal system end treatment to be used will be shown on the Project Plans.
8. Dependent on site conditions (embankment height, side slopes, or other fixed objects), it may be advisable to construct additional guard railing (a length equal to multiples of 12'-6" with 6'-3" post spacing) between the transition railing and end treatment.
9. Where placement of dike is required with guard railing installations, see Revised Standard Plan RSP A77C4 for dike positioning details.
10. Type 12A or Type 12B Layouts are typically used:
    a. To the right of approaching traffic, at the end of a structure, on two-lane conventional highway where the roadbed width across the structure is less than 40 feet.
    b. To the left of approaching traffic, at the end of a structure, on two-lane conventional highway where the roadbed width across the structure is less than 40 feet.
    c. To the right of approaching traffic at the end of each structure on multilane freeways or expressways with separate adjacent or parallel bridges.
    d. To the right of approaching traffic at the end of the structure on multilane freeways or expressways with decked median on the bridge.
11. See Revised Standard Plan RSP A77F3 for typical layout used left of approaching traffic at the ends of each structure on multilane freeways or expressways with separate adjacent or parallel bridges.
12. For additional details of typical connections to bridge rail, see Connection Detail AA on Revised Standard Plans RSP A77J1 and RSP A77J2 and Connection Detail FF on Standard Plans A77K1 and A77K2.
13. For additional details of a typical connection to walls or abutments, see Standard Plan A77J3.

STATE OF CALIFORNIA
DEPARTMENT OF TRANSPORTATION

METAL BEAM GUARD RAILING TYPICAL LAYOUTS FOR STRUCTURE APPROACH

NO SCALE

RSP A77F1 DATED JUNE 6, 2008 SUPERSEDES STANDARD PLAN A77F1
DATED MAY 1, 2006 - PAGE 54 OF THE STANDARD PLANS BOOK DATED MAY 2006.

REVISED STANDARD PLAN RSP A77F1

2006 REVISED STANDARD PLAN RSP A77F1

DIST	COUNTY	ROUTE	POST MILES TOTAL PROJECT	SHEET NO.	TOTAL SHEETS
06	Fre,Mad	99	26.7/R31.6, R0.0/R1.6	285	393

Randell D. Hiatt
REGISTERED CIVIL ENGINEER

June 6, 2008
PLANS APPROVAL DATE

REGISTERED PROFESSIONAL ENGINEER
Randell D. Hiatt
No. C50200
Exp. 6-30-09
CIVIL
STATE OF CALIFORNIA

The State of California or its officers or agents shall not be responsible for the accuracy or completeness of electronic copies of this plan sheet.

To accompany plans dated 4-2-12

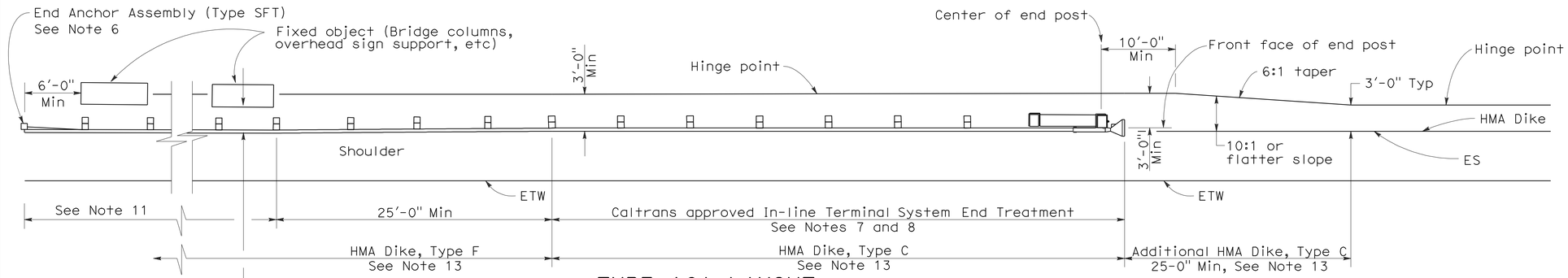

TYPE 16A LAYOUT

(GUARD RAILING INSTALLATION AT ROADSIDE FIXED OBJECT OR OBJECTS WITH AN IN-LINE END TREATMENT AT TRAFFIC APPROACH END OF RAILING)
See Notes 12 and 13

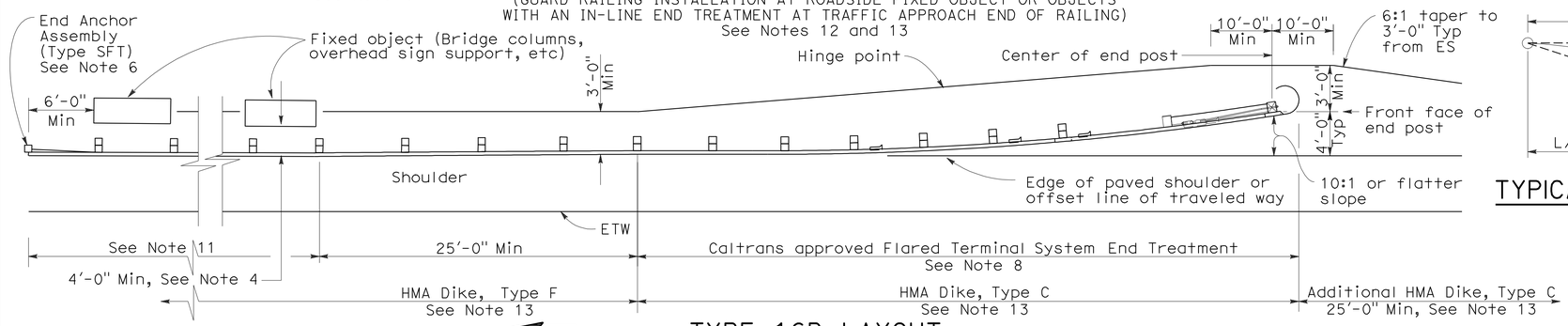

TYPE 16B LAYOUT

(GUARD RAILING INSTALLATION AT ROADSIDE FIXED OBJECT OR OBJECTS WITH A FLARED END TREATMENT AT TRAFFIC APPROACH END OF RAILING)
See Notes 12 and 13

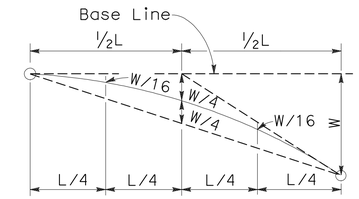

TYPICAL PARABOLIC LAYOUT

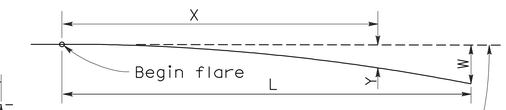

Base Line (Edge of paved shoulder or offset line of edge of traveled way)

$$Y = \frac{WX^2}{L^2}$$

Y = Offset from base line
W = Maximum offset
X = Distance along base line
L = Length of flare

PARABOLIC FLARE OFFSETS

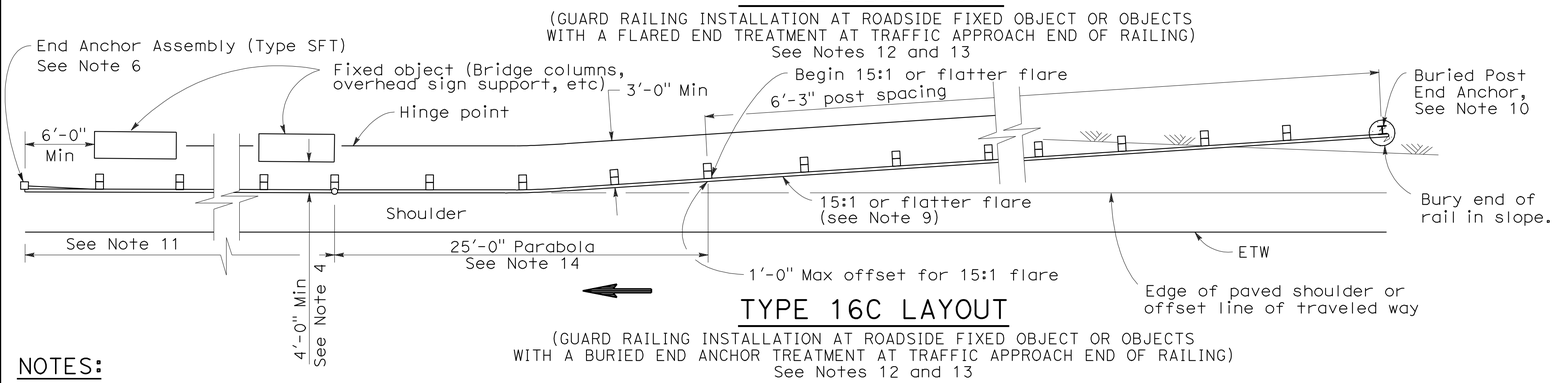

TYPE 16C LAYOUT

(GUARD RAILING INSTALLATION AT ROADSIDE FIXED OBJECT OR OBJECTS WITH A BURIED END ANCHOR TREATMENT AT TRAFFIC APPROACH END OF RAILING)
See Notes 12 and 13

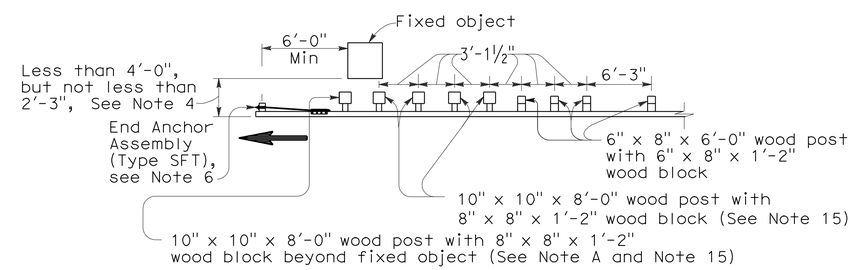

NOTE A: For a series of fixed objects (bridge columns, overhead sign supports, etc.) additional 10" x 10" x 8'-0" wood post with 8" x 8" x 1'-2" wood blocks at 3'-1½" center to center spacing are to be used between fixed objects.

STRENGTHENED RAILING SECTIONS FOR FIXED OBJECT

Use strengthened railing sections with Types 16A, 16B or 16C Layouts where minimum clearance between the face of the guard railing and fixed object(s) is less than 4'-0", but not less than 2'-3". See Note 4

NOTES:

1. Line post, blocks and hardware to be used are shown on Revised Standard Plans A77A1, A77A2, A77B1, A77C1 and A77C2.
2. Guard railing post spacing to be 6'-3" center to center, except as otherwise noted.
3. Except as noted, line posts are 6" x 8" x 6'-0" wood with 6" x 8" x 1'-2" wood blocks. W6 x 9 steel posts, 6'-0" in length, with 6" x 8" x 1'-2" notched wood blocks or notched recycled plastic blocks may be used for 6" x 8" x 6'-0" wood line posts with 6" x 8" x 1'-2" wood blocks where applicable and when specified.
4. A 4'-0" minimum clearance is required between the face of the railing and the face of a fixed object located directly behind standard guard railing sections with post spacing of 6'-3". Construct guard railing as shown in the detail "Strengthened Railing Sections for Fixed Objects" on this plan, where the clearance between the face of the railing and the face of a fixed object is less than 4'-0", but not less than 2'-3". Where the clearance is less than 2'-3", a concrete wall or barrier should be constructed to shield the fixed object(s).
5. Direction of adjacent traffic indicated by ⟶.
6. For End Anchor Assembly (Type SFT) details, see Standard Plan A77H1.
7. In-line Terminal System End Treatments are used where site conditions will not accommodate a flared end treatment.
8. The type of terminal system to be used will be shown on the Project Plans.
9. The 15:1 or flatter flare used with Type 16C Layout is based on the edge of the paved shoulder or offset line of edge of the traveled way. The length of guard railing within the 15:1 or flatter flare is based on site conditions and should be a length equal to multiples of 12'-6".
10. For details of the Buried Post End Anchor used with Type 16C Layout, see Standard Plan A77I2.
11. As site conditions dictate, construct additional guard railing to shield fixed object(s). Additional guard railing length equal to multiples of 12'-6". Post spacing at 6'-3" except as specified in Note 4.
12. Layout Types 16A, 16B or 16C are typically used where guard railing is recommended to shield roadside fixed object(s) and a crashworthy end treatment is required for only one direction of traffic.
13. Where placement of dike is required with guard railing, see Revised Standard Plan RSP A77C4 for dike positioning details.
14. For typical flare offsets for 25'-0" length parabola with maximum offset of 1'-0", see Revised Standard Plan RSP A77E1.
15. W6 x 15 steel post, 8'-0" in length, with 8" x 8" x 1'-2" notched wood block or notched recycled plastic blocks may be used in place of the 10" x 10" x 8'-0" wood post with 8" x 8" x 1'-2" wood block shown in the "Strengthened Railing Sections Detail".

STATE OF CALIFORNIA
DEPARTMENT OF TRANSPORTATION

METAL BEAM GUARD RAILING TYPICAL LAYOUTS FOR ROADSIDE FIXED OBJECTS

NO SCALE

RSP A77G3 DATED JUNE 6, 2008 SUPERSEDES STANDARD PLAN A77G3 DATED MAY 1, 2006 - PAGE 61 OF THE STANDARD PLANS BOOK DATED MAY 2006.

REVISED STANDARD PLAN RSP A77G3

2006 REVISED STANDARD PLAN RSP A77G3

12-10-07

Dist	COUNTY	ROUTE	POST MILES TOTAL PROJECT	SHEET No.	TOTAL SHEETS
06	Fre,Mad	99	26.7/R31.6, R0.0/R1.6	286	393

Randell D. Hiatt
REGISTERED CIVIL ENGINEER

May 20, 2011
PLANS APPROVAL DATE

REGISTERED PROFESSIONAL ENGINEER
Randell D. Hiatt
No. C50200
Exp. 6-30-11
CIVIL
STATE OF CALIFORNIA

The State of California or its officers or agents shall not be responsible for the accuracy or completeness of electronic copies of this plan sheet.

To accompany plans dated 4-2-12

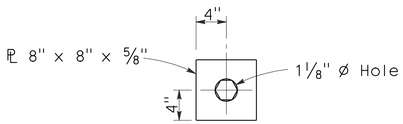

DETAIL A
CABLE CONNECTION END PLATE

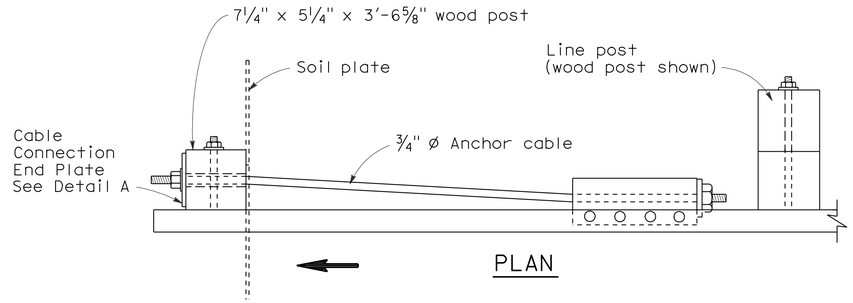

PLAN

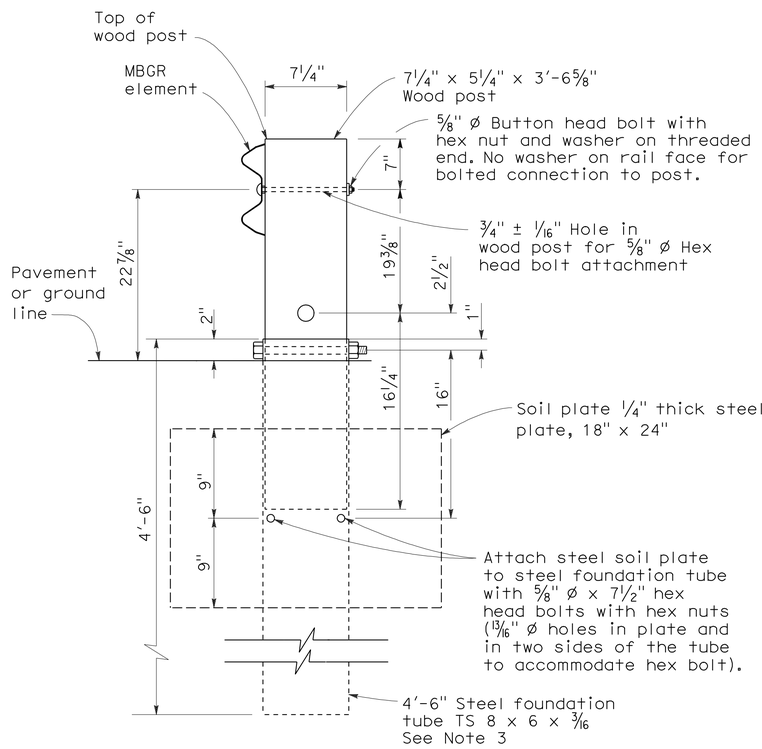

SECTION A-A

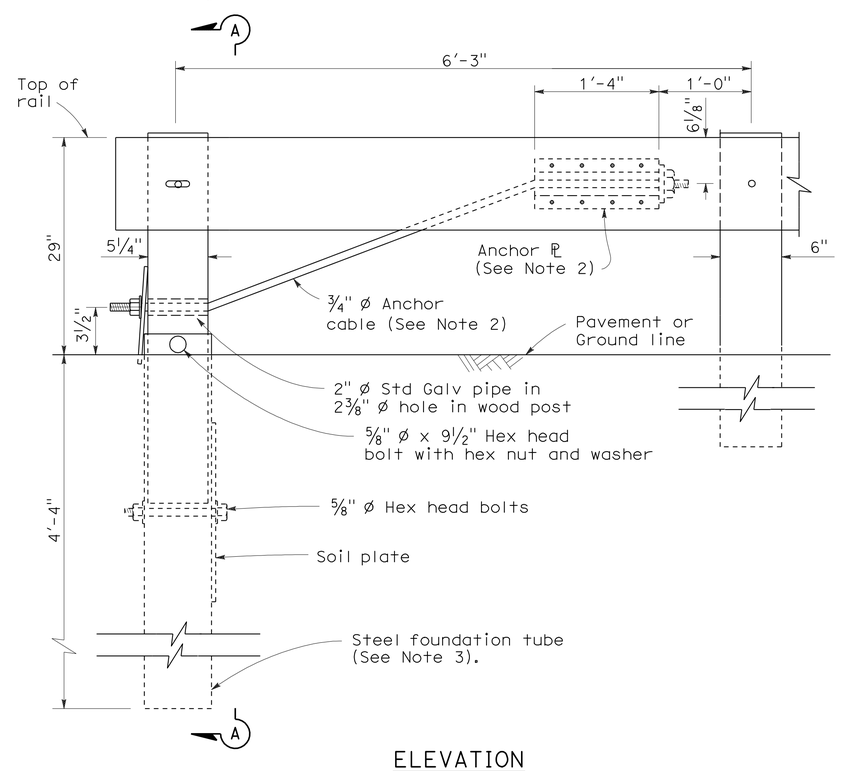

ELEVATION
END ANCHOR ASSEMBLY (TYPE SFT)

See Note 1

NOTES:

1. See the A77E, A77F and A77G series of Standard Plans for typical use of End Anchor Assembly (Type SFT).
2. For details of the anchor plate and 3/4" cable, see Standard Plan A77H3.
3. A 6'-0" length steel foundation tube, TS 8 x 6 x 3/16, without a soil plate, may be furnished and installed in place of the 4'-6" length steel foundation tube and soil plate shown. Minimum embedment of the 6'-0" length tube shall be 5'-9". A 5/8" Ø hex head bolt and nut shall be installed in the hole in the 6'-0" length tube to keep the wood post from dropping into the tube.
4. Direction of traffic indicated by ⟹.
5. Install line post, steel foundation tube and soil plate in soil.

STATE OF CALIFORNIA
DEPARTMENT OF TRANSPORTATION

METAL RAILING END ANCHOR ASSEMBLY (TYPE SFT)

NO SCALE

RSP A77H1 DATED MAY 20, 2011 SUPERSEDES STANDARD PLAN A77H1
DATED MAY 1, 2006 - PAGE 67 OF THE STANDARD PLANS BOOK DATED MAY 2006.

REVISED STANDARD PLAN RSP A77H1

2006 REVISED STANDARD PLAN RSP A77H1

2-10-07

Dist	COUNTY	ROUTE	POST MILES TOTAL PROJECT	SHEET No.	TOTAL SHEETS
06	Fre,Mad	99	26.7/R31.6, R0.0/R1.6	287	393

Randell D. Hiatt
REGISTERED CIVIL ENGINEER

May 20, 2011
PLANS APPROVAL DATE

REGISTERED PROFESSIONAL ENGINEER
Randell D. Hiatt
No. C50200
Exp. 6-30-11
CIVIL
STATE OF CALIFORNIA

The State of California or its officers or agents shall not be responsible for the accuracy or completeness of electronic copies of this plan sheet.

To accompany plans dated 4-2-12

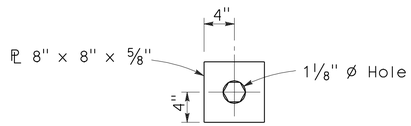

DETAIL A
CABLE CONNECTION
END PLATE

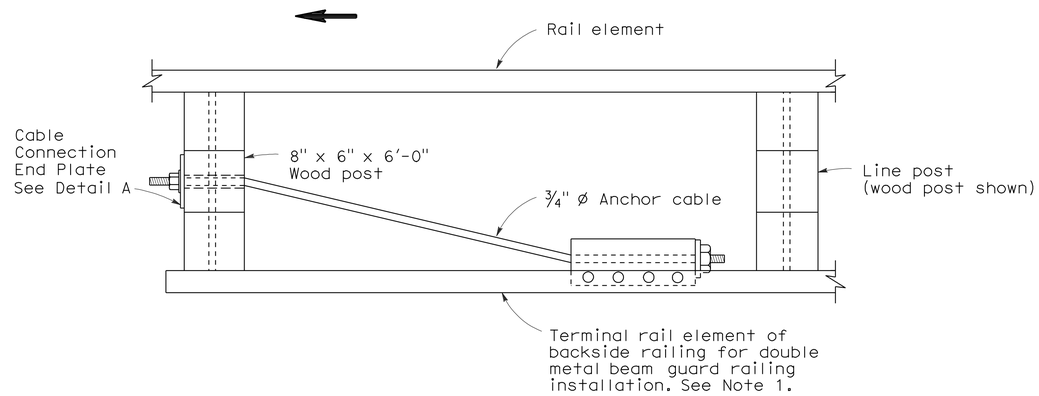

PLAN

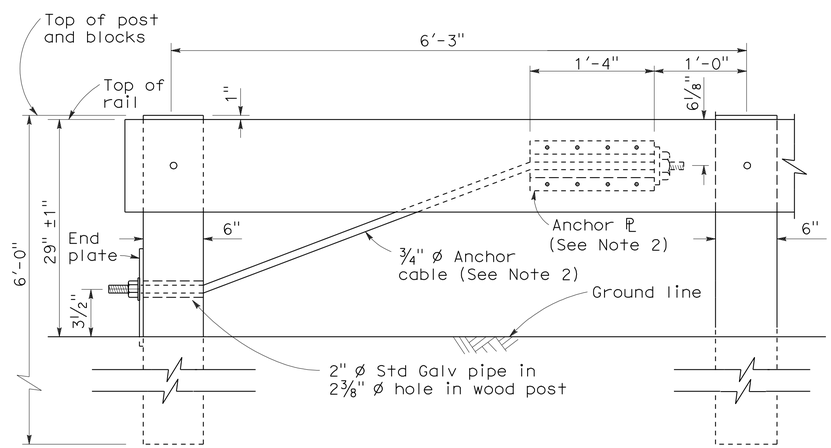

ELEVATION
RAIL TENSIONING
ASSEMBLY
See Note 1

NOTES:

1. See Standard Plan A77F3 and Standard Plan A77G1 for typical use of rail tensioning assembly.
2. For details of the anchor plate and 3/4" cable, see Standard Plan A77H3.
3. Direction of traffic indicated by ⟶.

STATE OF CALIFORNIA
DEPARTMENT OF TRANSPORTATION

METAL RAILING
RAIL TENSIONING ASSEMBLY

NO SCALE

RSP A77H2 DATED MAY 20, 2011 SUPERSEDES STANDARD PLAN A77H2
DATED MAY 1, 2006 - PAGE 68 OF THE STANDARD PLANS BOOK DATED MAY 2006.

REVISED STANDARD PLAN RSP A77H2

2006 REVISED STANDARD PLAN RSP A77H2

3-10-11

Dist	COUNTY	ROUTE	POST MILES TOTAL PROJECT	SHEET No.	TOTAL SHEETS
06	Fre,Mad	99	26.7/R31.6, R0.0/R1.6	288	393

Randell D. Hiatt
REGISTERED CIVIL ENGINEER

May 20, 2011
PLANS APPROVAL DATE

REGISTERED PROFESSIONAL ENGINEER
Randell D. Hiatt
No. C50200
Exp. 6-30-11
CIVIL
STATE OF CALIFORNIA

The State of California or its officers or agents shall not be responsible for the accuracy or completeness of electronic copies of this plan sheet.

To accompany plans dated 4-2-12

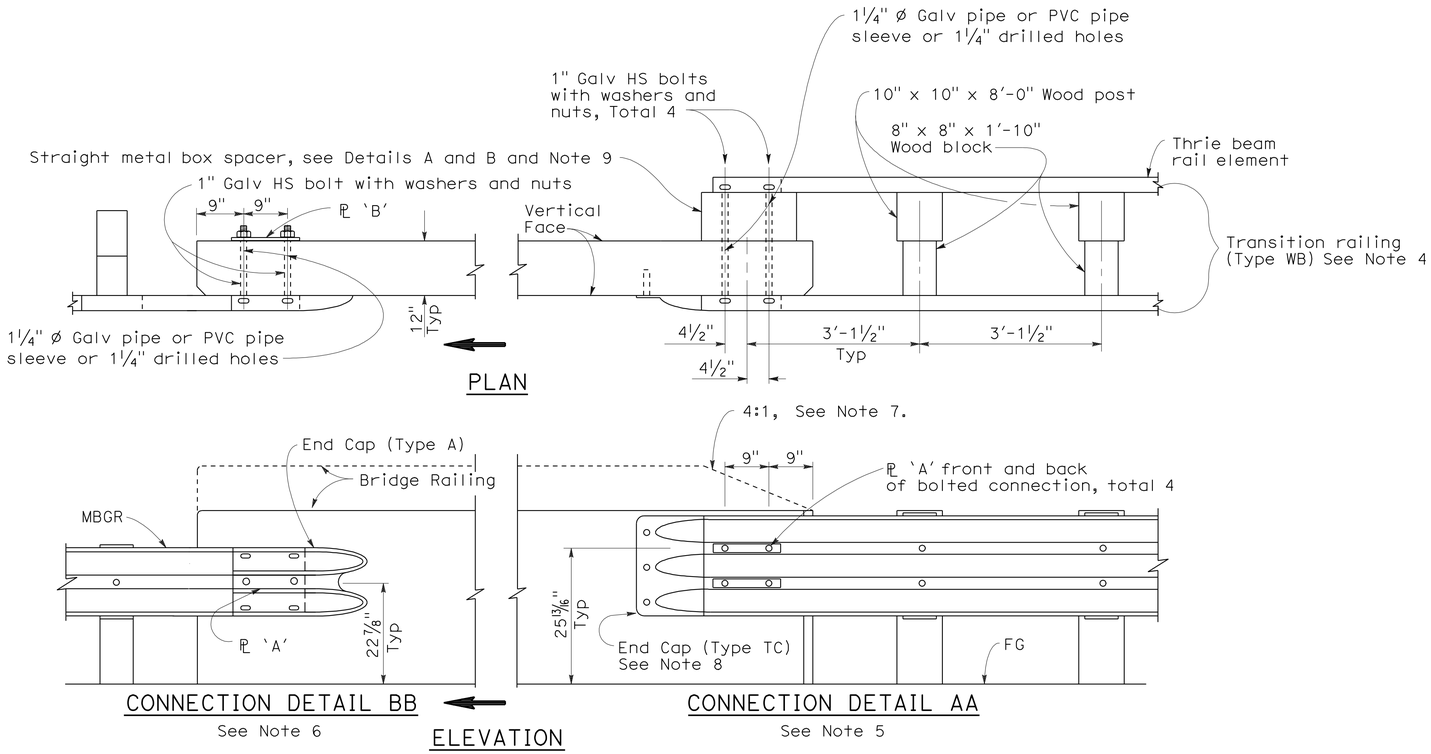

GUARD RAILING CONNECTION TO BRIDGE RAILING WITHOUT SIDEWALK

NOTES:

1. See Revised Standard Plan RSP A77J2 for additional connection details to bridges without sidewalks.
2. Additional details of posts, blocks and hardware are shown on Standard Plan A77B1, A77C1 and A77C2.
3. Direction of adjacent traffic indicated by ➡.
4. For additional details of Transition Railing (Type WB), see Standard Plan A77J4. Transition Railing (Type WB) transitions the 12 gage w-beam standard railing section of guard railing to a heavier gage nested thrie beam railing section which is connected to the concrete bridge railing.
5. For typical use of Connection Detail AA, see Layout Types 12A and 12B on Revised Standard Plan RSP A77F1, Layout Types 12C and 12D on Standard Plan A77F2, and Layout Type 12E on Revised Standard Plan RSP A77F3.
6. For typical use of Connection Detail BB, see Layout Type 12D (structure departure railing connection) on Standard Plan A77F2 and Layout Type 12DD on Standard Plan A77F5.
7. Where the height of the bridge railing exceeds the height of the thrie beam railing by more than 1" at Connection Detail AA, taper the top of the end of the bridge railing at 4:1 to match the top elevation of the thrie beam rail.
8. For details of End Cap (Type TC), see Standard Plan A77J4.
9. See Standard Plan A77J4 for additional details regarding depth dimension for straight metal box spacer.

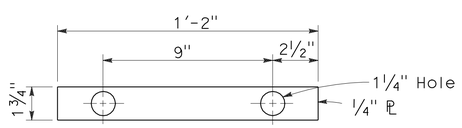

PLATE 'A'

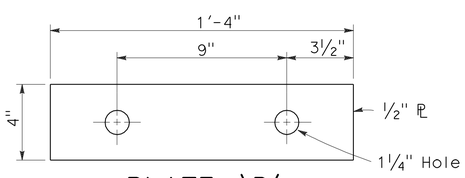

PLATE 'B'
(For backside of connection BB)

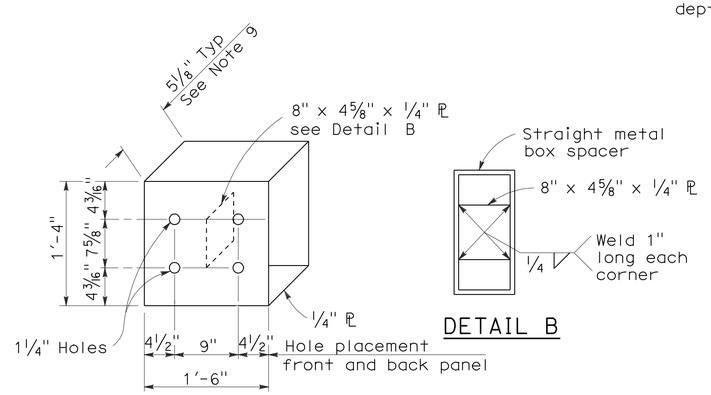

DETAIL A

DETAIL B

STRAIGHT METAL BOX SPACER

STATE OF CALIFORNIA
DEPARTMENT OF TRANSPORTATION

METAL BEAM GUARD RAILING CONNECTIONS TO BRIDGE RAILINGS WITHOUT SIDEWALKS DETAILS No.1

NO SCALE

RSP A77J1 DATED MAY 20, 2011 SUPERSEDES RSP A77J1 DATED JUNE 6, 2008 AND STANDARD PLAN A77J1 DATED MAY 1, 2006 - PAGE 72 OF THE STANDARD PLANS BOOK DATED MAY 2006.

REVISED STANDARD PLAN RSP A77J1

2006 REVISED STANDARD PLAN RSP A77J1

3-10-11

DIST	COUNTY	ROUTE	POST MILES TOTAL PROJECT	SHEET NO.	TOTAL SHEETS
06	Fre,Mad	99	26.7/R31.6, R0.0/R1.6	289	393

Randell D. Hiatt
REGISTERED CIVIL ENGINEER

June 6, 2008
PLANS APPROVAL DATE

REGISTERED PROFESSIONAL ENGINEER
Randell D. Hiatt
No. C50200
Exp. 6-30-09
CIVIL
STATE OF CALIFORNIA

The State of California or its officers or agents shall not be responsible for the accuracy or completeness of electronic copies of this plan sheet.

To accompany plans dated 4-2-12

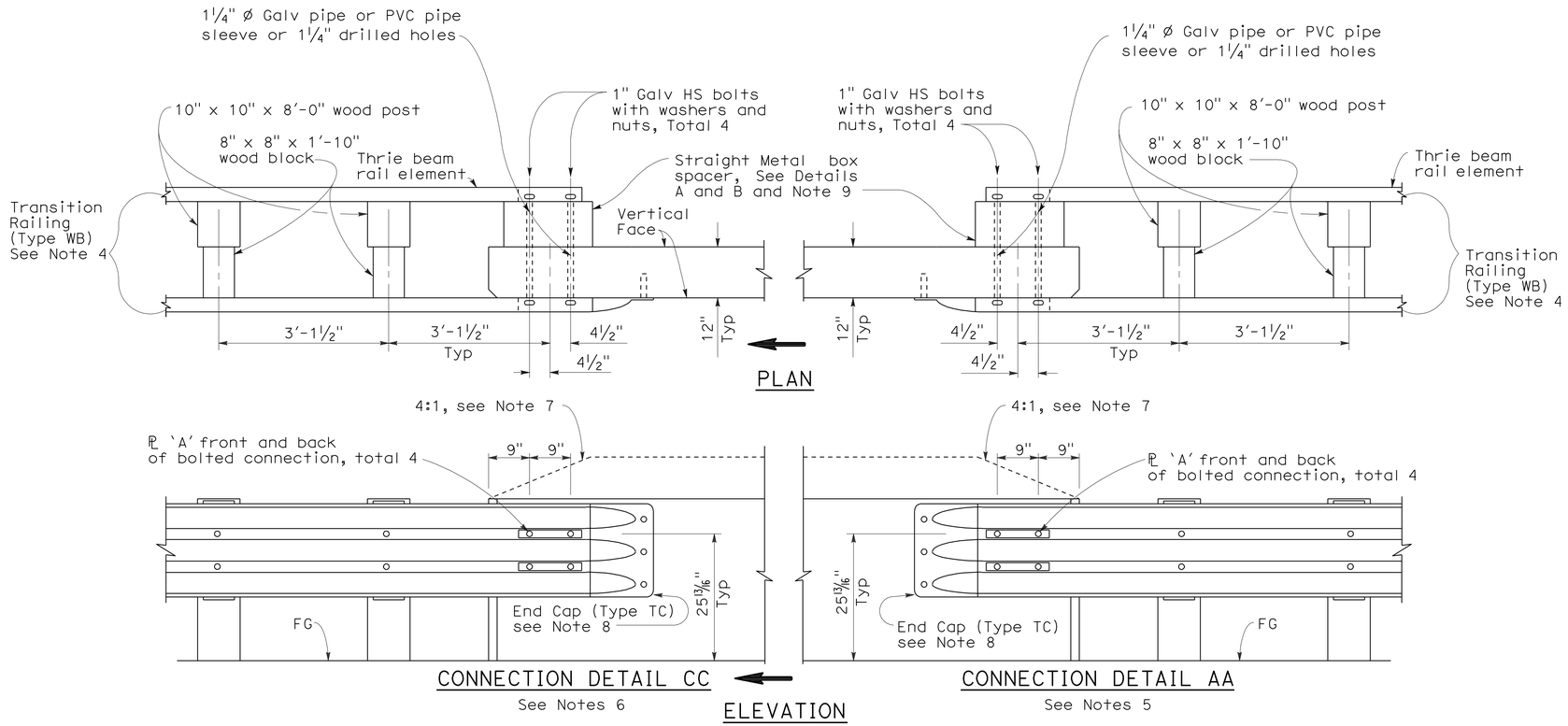

GUARD RAILING CONNECTION TO BRIDGE RAILING WITHOUT SIDEWALK

NOTES:

1. See Revised Standard Plan RSP A77J1 for additional connection details to bridges without sidewalks.
2. Additional details of posts, blocks and hardware are shown on Standard Plan A77B1, A77C1 and A77C2.
3. Direction of adjacent traffic indicated by ⟹.
4. For additional details of Transition Railing (Type WB), see Standard Plan A77J4. Transition Railing (Type WB) transitions the 12 gage w-beam standard railing section of guard railing to a heavier gage nested thrie beam railing section which is connected to the concrete bridge railing.
5. For typical use of Connection Detail AA, see Layout Types 12A and 12B on Revised Standard Plan RSP A77F1, Layout Types 12C and 12D on Standard Plan A77F2, and Layout Type 12E on Revised Standard Plan RSP A77F3.
6. For typical use of Connection Detail CC, see Layout Types 12AA and 12BB on Standard Plan A77F4 and Layout Type 12CC on Standard Plan A77F5.
7. Where the height of the bridge railing exceeds the height of the thrie beam railing by more than 1" at Connection Detail AA and connection Detail CC, taper the top of the end of the bridge railing at 4:1 to match the top elevation of the thrie beam railing.
8. For details of End Cap (Type TC), see Standard Plans A77J4.
9. See Standard Plans A77J4 for additional details regarding depth dimension for straight metal box spacer.

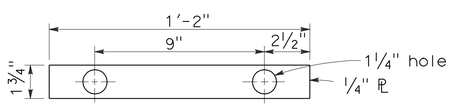

PLATE 'A'

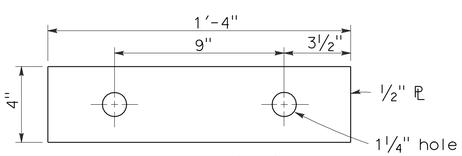

PLATE 'B'
(For backside of connection BB)

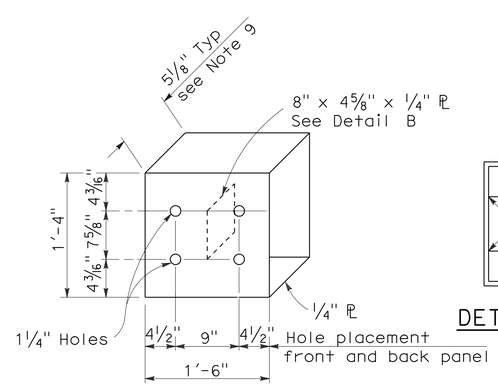

DETAIL A

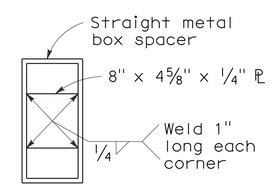

DETAIL B

STRAIGHT METAL BOX SPACER

STATE OF CALIFORNIA
DEPARTMENT OF TRANSPORTATION

METAL BEAM GUARD RAILING CONNECTIONS TO BRIDGE RAILINGS WITHOUT SIDEWALKS DETAILS No.2

NO SCALE

RSP A77J2 DATED JUNE 6, 2008 SUPERSEDES STANDARD PLAN A77J2 DATED MAY 1, 2006 - PAGE 73 OF THE STANDARD PLANS BOOK DATED MAY 2006.

REVISED STANDARD PLAN RSP A77J2

2006 REVISED STANDARD PLAN RSP A77J2

12-10-07

Dist	COUNTY	ROUTE	POST MILES TOTAL PROJECT	SHEET No.	TOTAL SHEETS
06	Fre,Mad	99	26.7/R31.6, R0.0/R1.6	290	393

Randell D. Hiatt
REGISTERED CIVIL ENGINEER

May 20, 2011
PLANS APPROVAL DATE

REGISTERED PROFESSIONAL ENGINEER
Randell D. Hiatt
No. C50200
Exp. 6-30-11
CIVIL
STATE OF CALIFORNIA

The State of California or its officers or agents shall not be responsible for the accuracy or completeness of electronic copies of this plan sheet.

To accompany plans dated 4-2-12

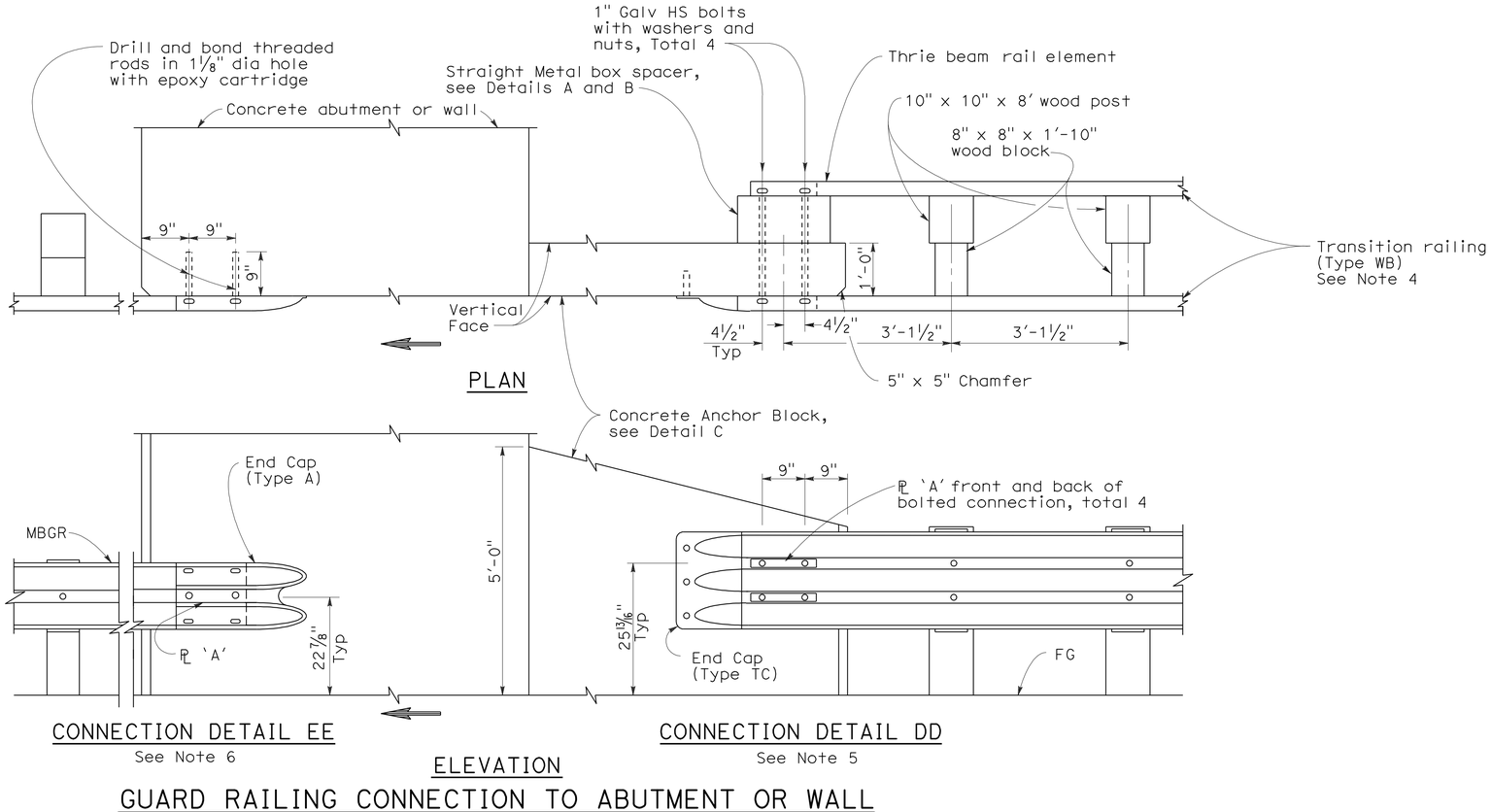

GUARD RAILING CONNECTION TO ABUTMENT OR WALL

NOTES:

1. These connection details apply to abutments and walls.
2. Additional details of posts, blocks and hardware are shown on Standard Plans A77B1, A77C1 and A77C2.
3. Direction of adjacent traffic indicated by ➡.
4. For additional details of Transition Railing (Type WB), see Standard Plan A77J4 Transition Railing (Type WB) transitions the 12 gage w-beam standard railing section of guard railing to a heavier gage nested thrie beam railing section which is connected to the concrete anchor block.
5. For typical use of Connection Details DD, See Layout Types 12A and 12B on Standard Plan A77F1 and Layout Types 12C and 12D on Standard Plan A77F2.
6. For typical use of Connection Detail EE, see Layout Type 12D on Standard Plan A77F2 and Layout Type 12DD on Standard Plan A77F5.

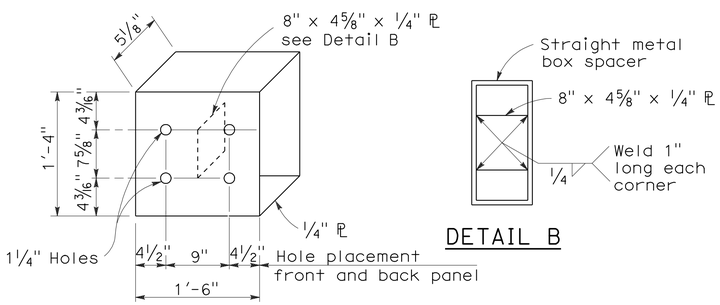

DETAIL A

STRAIGHT METAL BOX SPACER

DETAIL B

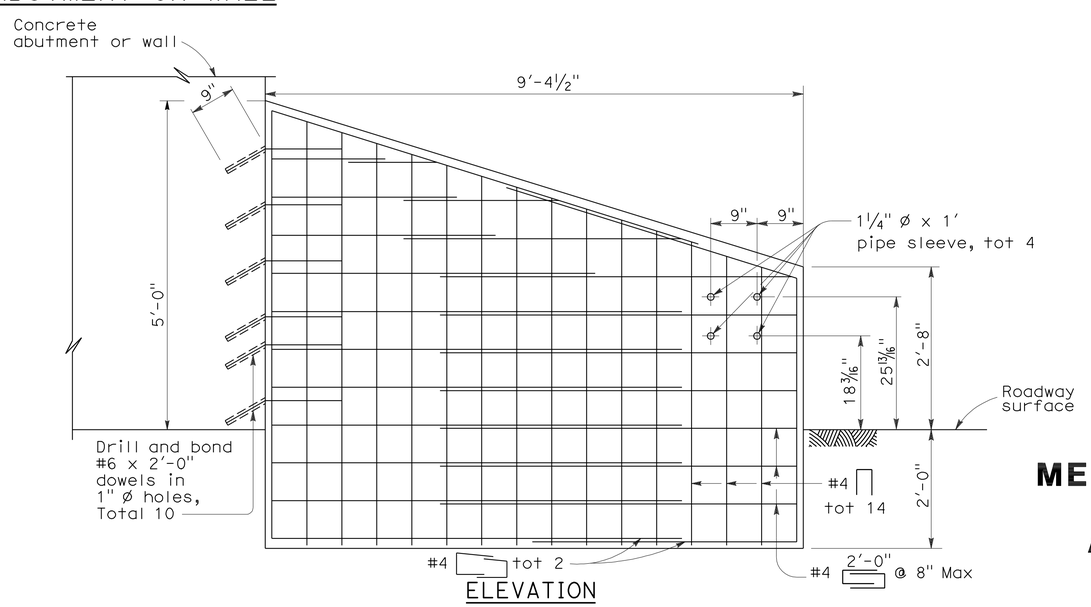

ELEVATION

ANCHOR BLOCK FOR TRANSITION RAILING CONNECTION

DETAIL C

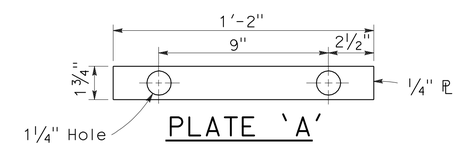

PLATE 'A'

STATE OF CALIFORNIA
DEPARTMENT OF TRANSPORTATION

METAL BEAM GUARD RAILING CONNECTIONS TO ABUTMENTS AND WALLS

NO SCALE

RSP A77J3 DATED MAY 20, 2011 SUPERSEDES STANDARD PLAN A77J3 DATED MAY 1, 2006 - PAGE 74 OF THE STANDARD PLANS BOOK DATED MAY 2006.

REVISED STANDARD PLAN RSP A77J3

2006 REVISED STANDARD PLAN RSP A77J3

3-10-11

Dist	COUNTY	ROUTE	POST MILES TOTAL PROJECT	SHEET No.	TOTAL SHEETS
06	Fre,Mad	99	26.7/R31.6, R0.0/R1.6	291	393

Randell D. Hiatt
REGISTERED CIVIL ENGINEER

May 20, 2011
PLANS APPROVAL DATE

REGISTERED PROFESSIONAL ENGINEER Randell D. Hiatt No. C50200 Exp. 6-30-11 CIVIL STATE OF CALIFORNIA

The State of California or its officers or agents shall not be responsible for the accuracy or completeness of electronic copies of this plan sheet.

To accompany plans dated 4-2-12

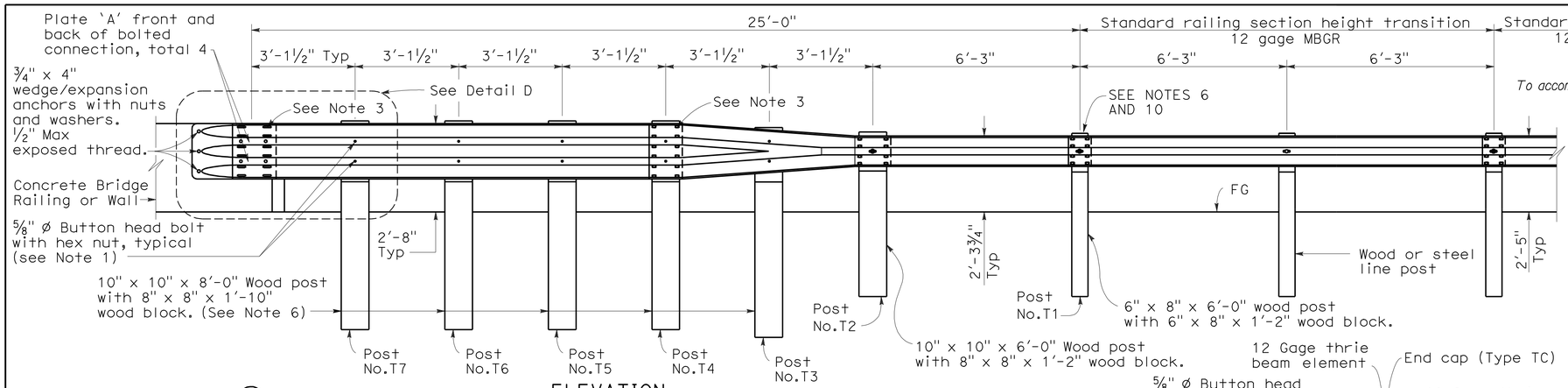

ELEVATION

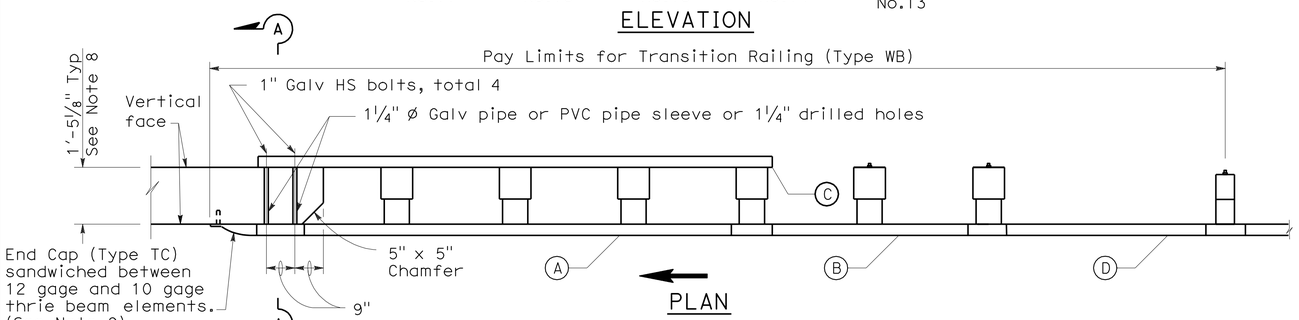

PLAN

TRANSITION RAILING (TYPE WB)

(No Blockout Attachment)

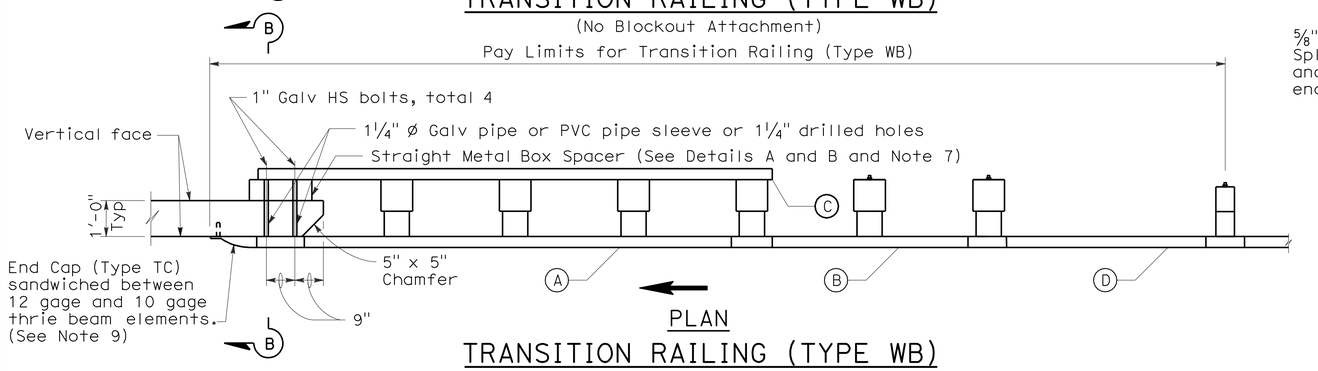

PLAN

TRANSITION RAILING (TYPE WB)

(Blockout Attachment)

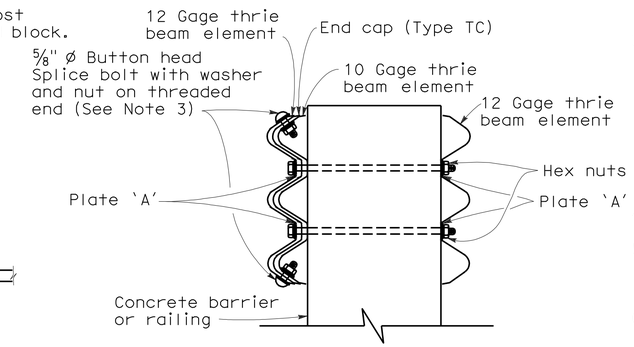

SECTION A-A

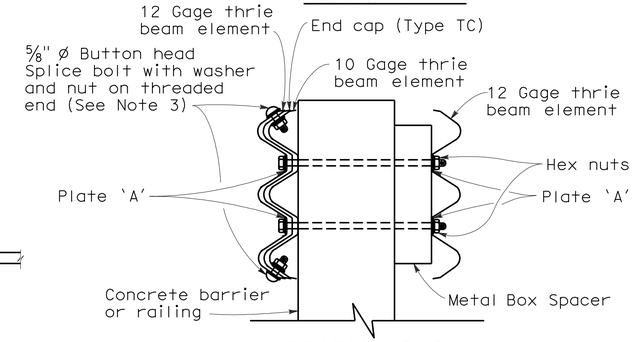

SECTION B-B

NOTES:

1. Use ⅝" ø Button head bolts and hex nuts for connections to posts. No washer on rail face for bolted connections to post.
2. The nested rail elements, end cap, and 'W' beam to thrie beam element may be spliced together prior to bolting the elements to the wood post and concrete barrier or railing.
3. Exterior splice bolt holes for rail element splices at Post No. T4 and the connection to the concrete barrier or railing shall be the standard 29/32" x 1⅛" slot size. Interior splice bolt holes at these locations may be increased up to 1¼" ø. Only the top 2 and the bottom 2 splice bolts with washers and nuts are required for rail splices at Post No. T4 and the connection to the concrete barrier or railing.
4. Direction of adjacent traffic indicated by ➡.
5. The top elevation of Posts No. T2 through No. T7 shall not project more than 1" above the top elevation of the rail element.
6. Typically, the railing connected to Transition Railing (Type WB) will be either standard railing section of metal beam guard railing with height transition ratio of 120:1 or an approved Caltrans end treatment attached to Post No. T1.
7. The depth of the metal box spacer varies from the 5⅛" to 1½" and is dependent on the width of the concrete railing or wall. The combined dimension for the depth of the metal box spacer plus the width of railing or wall is typically 17⅛". Where the space between the backside of the concrete railing or wall and the rear thrie beam element is less than 1½", metal plates similar to Plate 'A' are to be used as spacers.
8. Where the width of the concrete railing or wall is greater than 17⅛", wood blocks are to be used to fill the space created between the backside of Posts No. T4 through No. T7 and the rear thrie beam element. These wood blocks shall be 8" in width and 1'-2" in length. The dimension between the front thrie beam element and the rear thrie beam element is to match the width of the concrete railing or wall.
9. End cap may be installed over 12 gage and 10 gage thrie beam elements where transition railing is installed on the departure end of bridge railing.
10. Conform standard railing section height to 2'-3¾" at Post No. T1 using height transition ratio of 120:1.

LEGEND

(A) Nested thrie beam elements (one 12 gage element nested over one 10 gage element).

(B) One 10 gage "W" beam to thrie beam element.

(C) One 12 gage thrie beam element.

(D) One 10 gage "W" beam rail element (7'-3½" length)

10 gage = 0.135" thick

12 gage = 0.108" thick

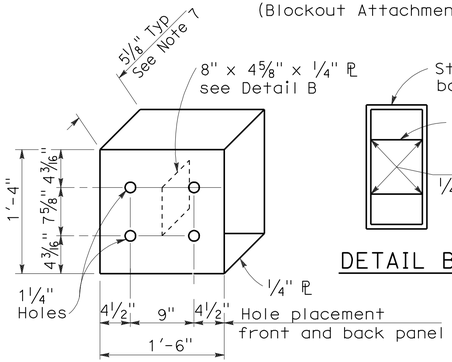

DETAIL A

STRAIGHT METAL BOX SPACER

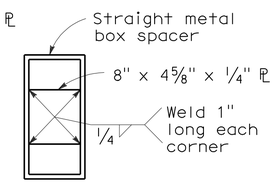

DETAIL B

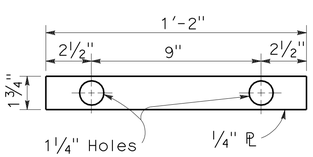

DETAIL C

PLATE 'A'

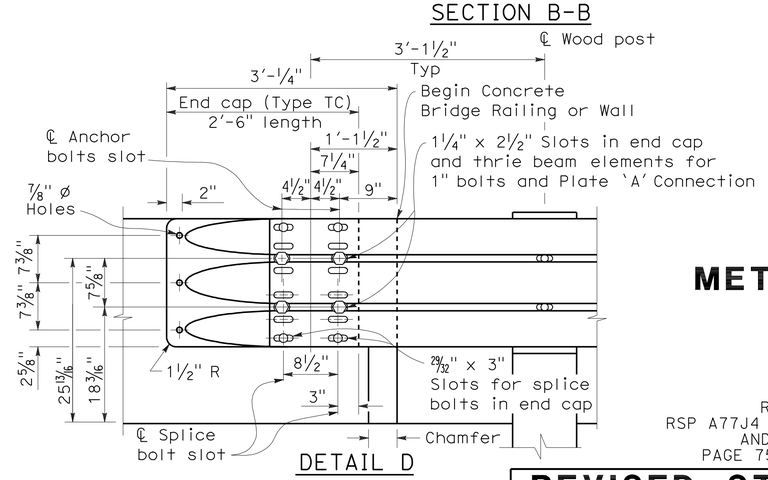

DETAIL D

STATE OF CALIFORNIA
DEPARTMENT OF TRANSPORTATION

METAL BEAM GUARD RAILING TRANSITION RAILING (TYPE WB)

NO SCALE

RSP A77J4 DATED MAY 20, 2011 SUPERSEDES
RSP A77J4 DATED JUNE 5, 2009, RSP A77J4 DATED JUNE 6, 2008
AND STANDARD PLAN A77J4 DATED MAY 1, 2006 -
PAGE 75 OF THE STANDARD PLANS BOOK DATED MAY 2006.

REVISED STANDARD PLAN RSP A77J4

2006 REVISED STANDARD PLAN RSP A77J4

5-14-09

DIST	COUNTY	ROUTE	POST MILES TOTAL PROJECT	SHEET NO.	TOTAL SHEETS
06	Fre,Mad	99	26.7/R31.6, R0.0/R1.6	292	393

Randell D. Hiatt
REGISTERED CIVIL ENGINEER

June 6, 2008
PLANS APPROVAL DATE

REGISTERED PROFESSIONAL ENGINEER
Randell D. Hiatt
No. C50200
Exp. 6-30-09
CIVIL
STATE OF CALIFORNIA

The State of California or its officers or agents shall not be responsible for the accuracy or completeness of electronic copies of this plan sheet.

To accompany plans dated 4-2-12

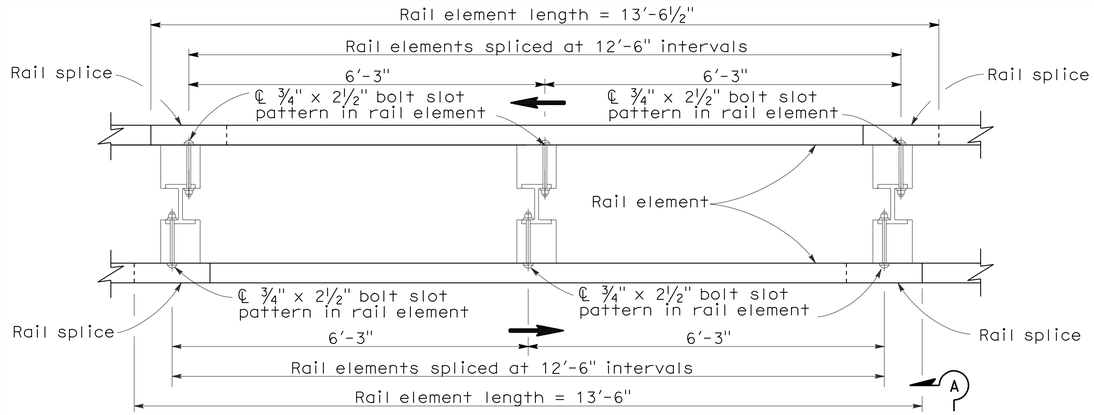

PLAN

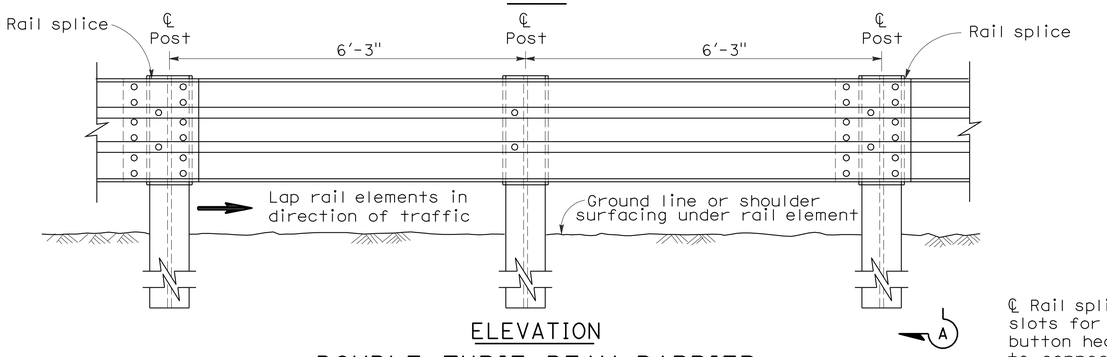

ELEVATION

DOUBLE THRIE BEAM BARRIER

(Steel post with notched wood or notched plastic blocks)
See Note 1

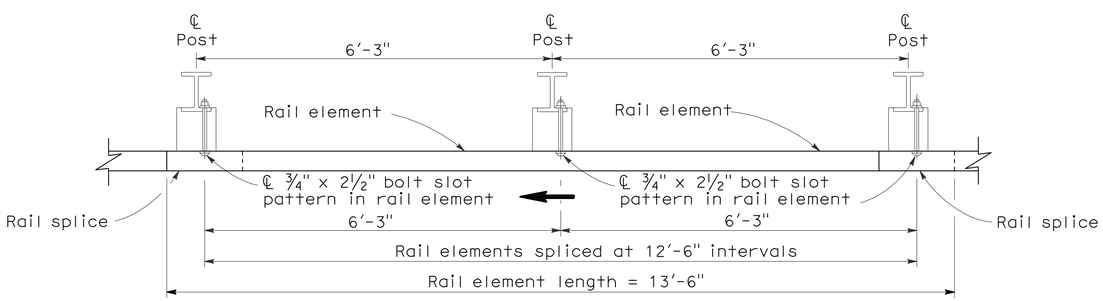

PLAN

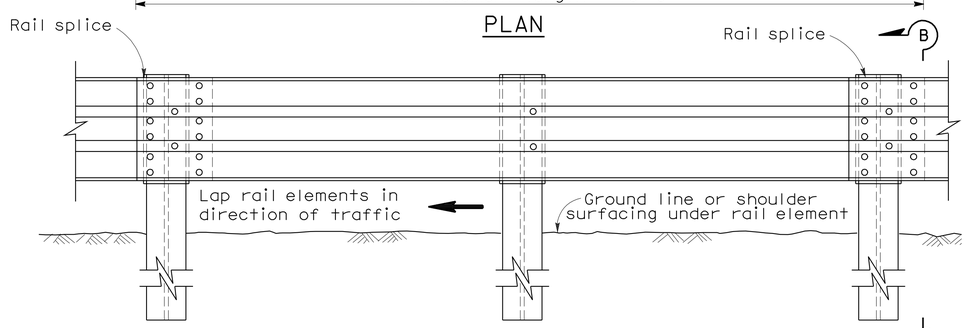

ELEVATION

SINGLE THRIE BEAM BARRIER

(Steel post with notched wood or notched plastic blocks)
See Note 1

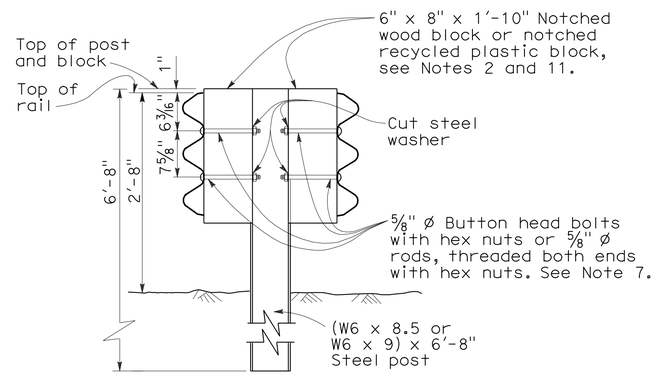

SECTION A-A

TYPICAL STEEL LINE POST INSTALLATION

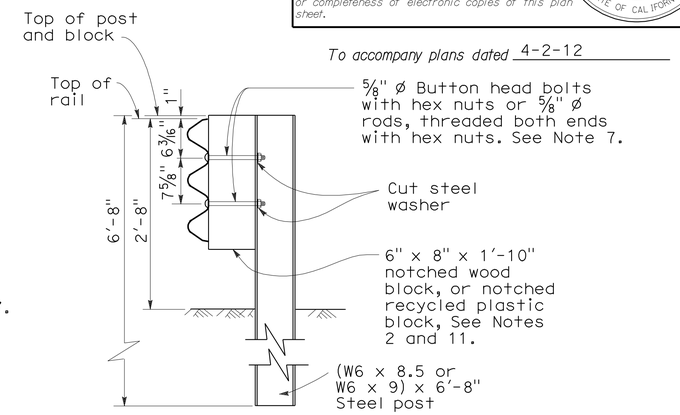

SECTION B-B

TYPICAL STEEL LINE POST INSTALLATION

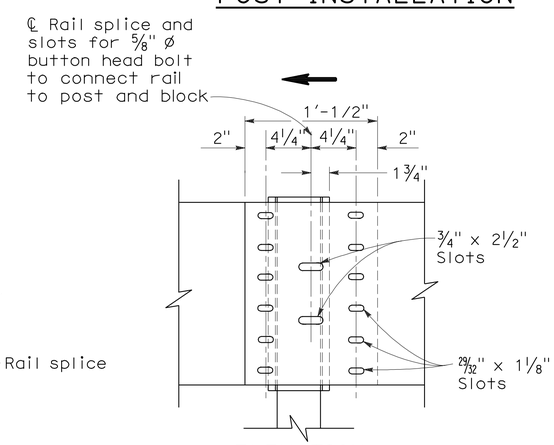

ELEVATION

RAIL ELEMENT SPLICE DETAIL

a) Connect the overlapped ends of the thrie beam rail elements with ⅝" ø x 1⅛" button head oval shoulder bolts inserted into the 29/32" x 1⅛" slots and bolted together with ⅝" ø x 1⅛" recessed hex nuts. Recess of hex nut points toward rail element. A total of 12 bolts and nuts are to be used at each rail splice connection.

b) The ends of the rail elements are to be overlapped in the direction of traffic (see details).

c) Where end cap is to be attached to the end of a rail element, a total of 4 of the above described splice bolts and nuts are to be used. Where a return cap is to be attached to the ends of rail elements, a total of 8 of the above described splice bolts and nuts are to be used.

NOTES:

1. For details of the cross section of the thrie beam rail element and details for wood post with wood block installations, see Standard Plan A78A.
2. For details of standard hardware, posts and blocks used to construct thrie beam barrier, see Revised Standard Plan RSP A78C1 and Standard Plan A78C2.
3. Thrie beam barrier post spacing to be 6'-3" center to center, except as otherwise noted.
4. Top of barrier rail to be 2'-8" above ground line or shoulder surfacing under the rail element.
5. For barrier end treatments and barrier connections, see Standard Plans A78E1, A78E2 and A78E3, Revised Standard Plans RSPs A78F1 and A78F2, Standard Plan A78G and Revised Standard Plan RSP A78H.
6. For connection to Concrete Barrier, see Revised Standard Plan RSP A78I.
7. Attach rail element to block and steel post with 2 bolts or rods on approaching traffic side of block and post web. No washer on rail face for rod or bolted connections to line post.
8. For details of thrie beam barrier on bridges, see Standard Plan A78D2. For details of thrie beam barrier at fixed objects, see Standard Plan A78D1.
9. Direction of traffic indicated by ⟶.
10. Notched face of block faces steel post.

STATE OF CALIFORNIA
DEPARTMENT OF TRANSPORTATION

THRIE BEAM BARRIER STANDARD BARRIER RAILING SECTION (STEEL POST WITH NOTCHED WOOD BLOCK OR NOTCHED RECYCLED PLASTIC BLOCK)

NO SCALE

RSP A78B DATED JUNE 6, 2008 SUPERSEDES STANDARD PLAN A78B DATED MAY 1, 2006 - PAGE 84 OF THE STANDARD PLANS BOOK DATED MAY 2006.

REVISED STANDARD PLAN RSP A78B

2006 REVISED STANDARD PLAN RSP A78B

5-14-08

DIST	COUNTY	ROUTE	POST MILES TOTAL PROJECT	SHEET No.	TOTAL SHEETS
06	Fre,Mad	99	26.7/R31.6, R0.0/R1.6	293	393

Randell D. Hiatt
REGISTERED CIVIL ENGINEER

June 6, 2008
PLANS APPROVAL DATE

REGISTERED PROFESSIONAL ENGINEER
Randell D. Hiatt
No. C50200
Exp. 6-30-09
CIVIL
STATE OF CALIFORNIA

The State of California or its officers or agents shall not be responsible for the accuracy or completeness of electronic copies of this plan sheet.

To accompany plans dated 4-2-12

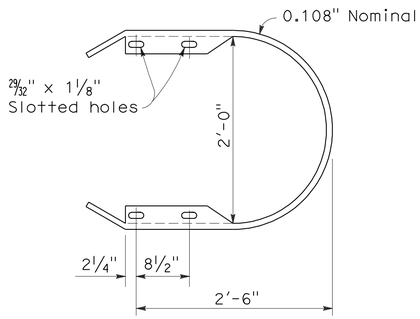

RETURN CAP
(TYPE TA)

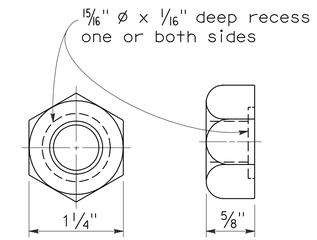

5/8" ø RECESS NUT

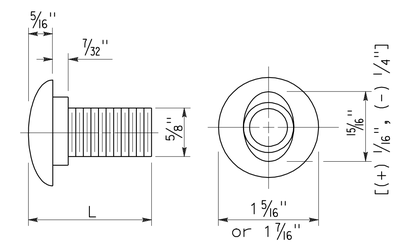

5/8" ø BUTTON HEAD BOLT

L	THREAD LENGTH
1 1/4"	full thread length
2"	full thread length
9 1/2"	4" Min thread length
18"	4" Min thread length

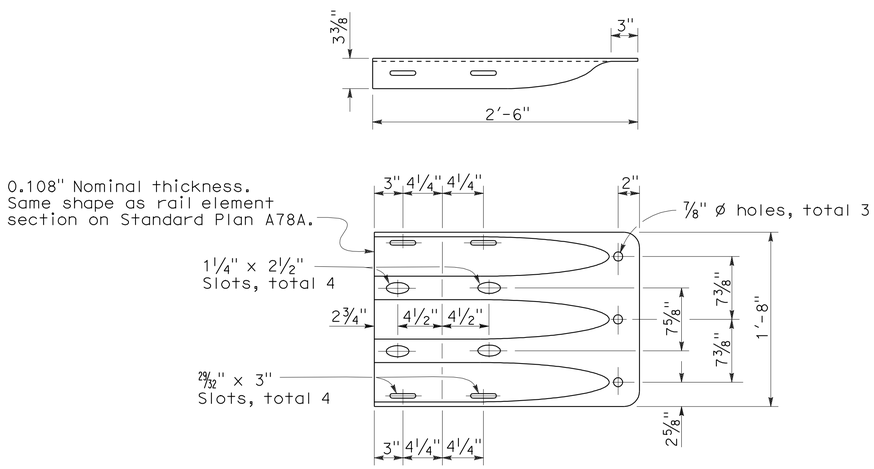

END CAP
(TYPE TC)

STATE OF CALIFORNIA
DEPARTMENT OF TRANSPORTATION

THRIE BEAM BARRIER STANDARD HARDWARE DETAILS

NO SCALE

RSP A78C1 DATED JUNE 6, 2008 SUPERSEDES STANDARD PLAN A78C1
DATED MAY 1, 2006 - PAGE 85 OF THE STANDARD PLANS BOOK DATED MAY 2006.

REVISED STANDARD PLAN RSP A78C1

2006 REVISED STANDARD PLAN RSP A78C1

4-21-08

DIST	COUNTY	ROUTE	POST MILES TOTAL PROJECT	SHEET NO.	TOTAL SHEETS
06	Fre,Mad	99	26.7/R31.6, R0.0/R1.6	294	393

Randell D. Hiatt
REGISTERED CIVIL ENGINEER

June 6, 2008
PLANS APPROVAL DATE

REGISTERED PROFESSIONAL ENGINEER
Randell D. Hiatt
No. C50200
Exp. 6-30-09
CIVIL
STATE OF CALIFORNIA

The State of California or its officers or agents shall not be responsible for the accuracy or completeness of electronic copies of this plan sheet.

To accompany plans dated 4-2-12

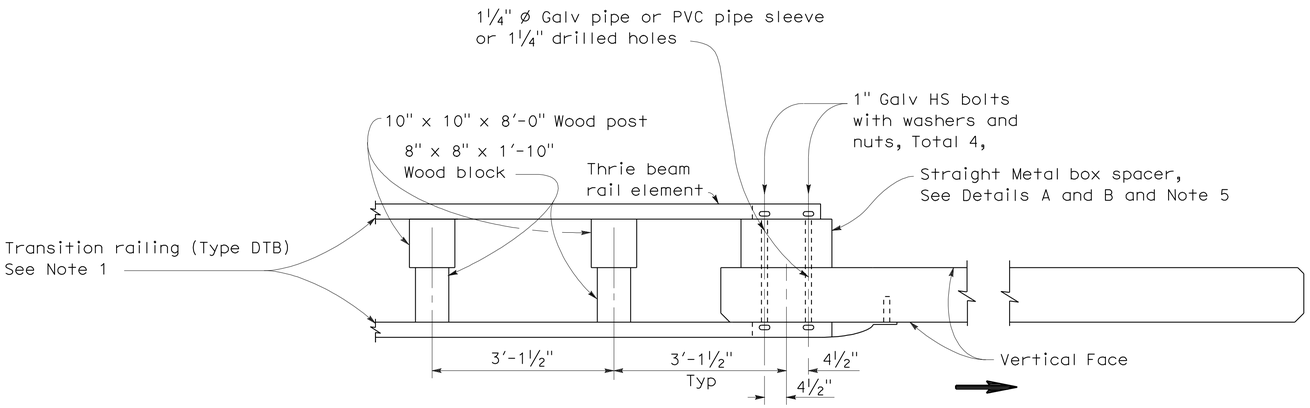

PLAN

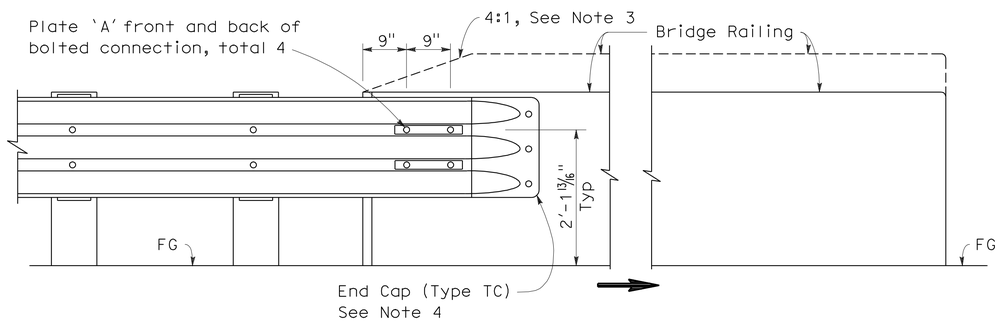

ELEVATION

CONNECTION DETAIL 1A

See Note 2

DOUBLE THRIE BEAM BARRIER CONNECTION TO BRIDGE RAILING WITHOUT SIDEWALK

NOTES:

1. For additional details of Transition Railing (Type DTB), see Standard Plans A78K. Transition Railing (Type DTB) transitions the standard 12 gage double thrie beam barrier to a heavier gage double thrie beam railing section then to a heavier gage nested double thrie beam barrier section which then is connected to the concrete bridge railing.
2. For typical use of Connection Detail 1A, see Type 25A Connection Layout on Revised Standard Plan RSP A78H.
3. Where the height of the bridge railing exceeds the height of the thrie beam railing by more than 1" at Connection Detail 1A, taper the top of the end of the bridge railing at 4:1 to match the top elevation of the thrie beam railing.
4. For details of End Cap (Type TC), see Standard Plan A78C1.
5. See Standard Plan A78K for additional details regarding depth dimension for straight metal box spacer.
6. Direction of adjacent traffic indicated by ⟹.

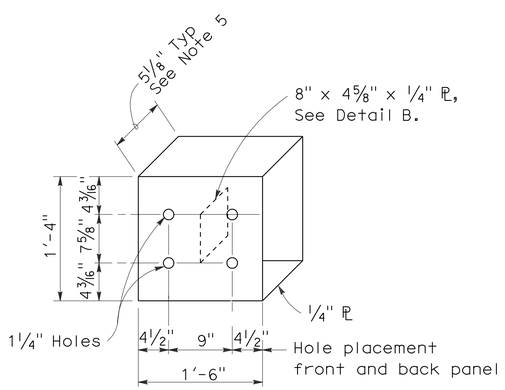

DETAIL A

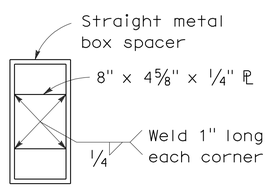

DETAIL B

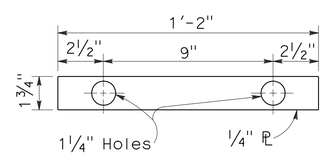

DETAIL C

STRAIGHT METAL BOX SPACER

PLATE 'A'

STATE OF CALIFORNIA
DEPARTMENT OF TRANSPORTATION

DOUBLE THRIE BEAM BARRIER CONNECTION TO BRIDGE RAILINGS WITHOUT SIDEWALKS

NO SCALE

RSP A78F1 DATED JUNE 6, 2008 SUPERSEDES STANDARD PLAN A78F1
DATED MAY 1, 2006 - PAGE 92 OF THE STANDARD PLANS BOOK DATED MAY 2006.

REVISED STANDARD PLAN RSP A78F1

2006 REVISED STANDARD PLAN RSP A78F1

12-10-07

DIST	COUNTY	ROUTE	POST MILES TOTAL PROJECT	SHEET NO.	TOTAL SHEETS
06	Fre,Mad	99	26.7/R31.6, R0.0/R1.6	295	393

Randell D. Hiatt
REGISTERED CIVIL ENGINEER

June 6, 2008
PLANS APPROVAL DATE

REGISTERED PROFESSIONAL ENGINEER
Randell D. Hiatt
No. C50200
Exp. 6-30-09
CIVIL
STATE OF CALIFORNIA

The State of California or its officers or agents shall not be responsible for the accuracy or completeness of electronic copies of this plan sheet.

To accompany plans dated 4-2-12

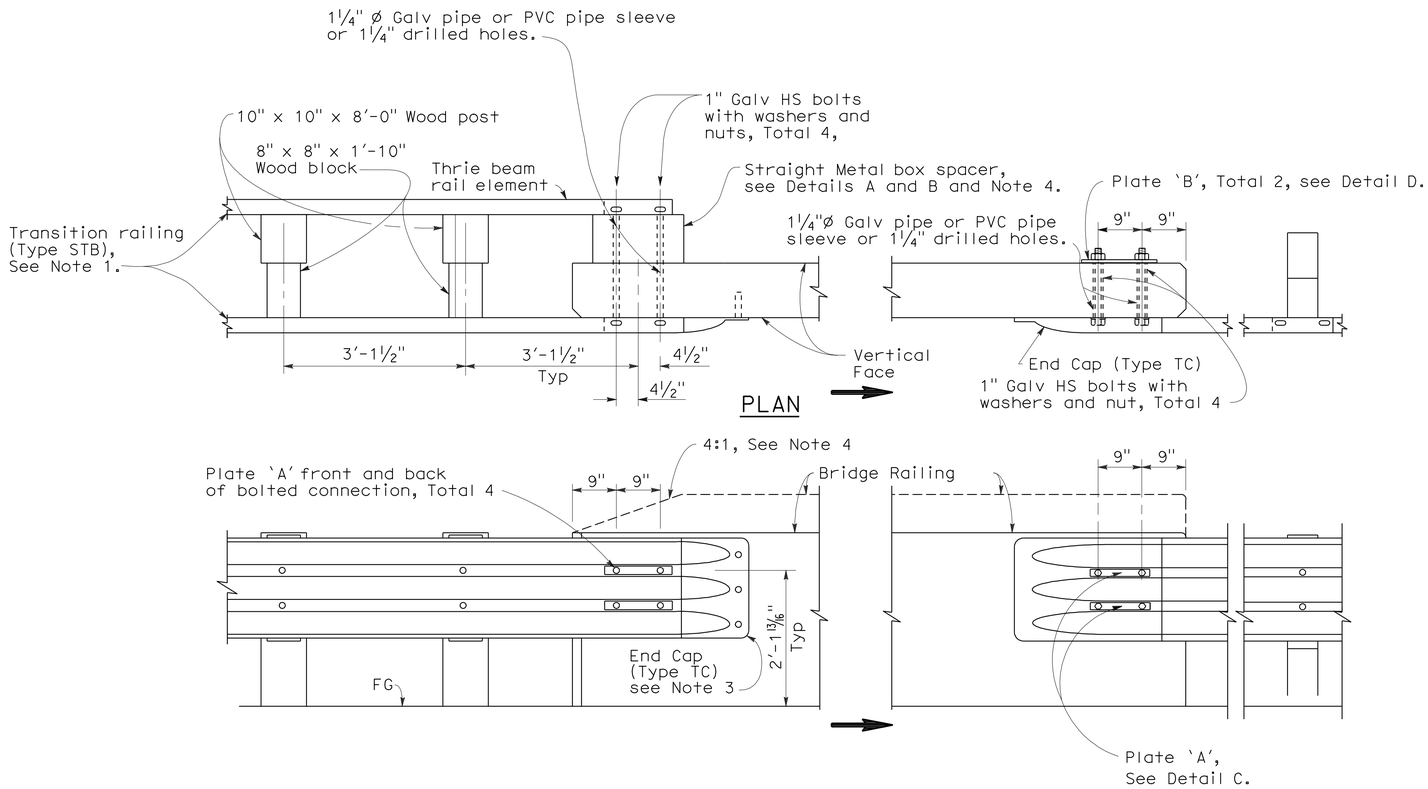

SINGLE THRIE BEAM BARRIER CONNECTION TO BRIDGE RAILING WITHOUT SIDEWALK

NOTES:

1. For additional details of Transition Railing (Type STB), see Standard Plans A78J. Transition Railing (Type STB) transitions the standard 12 gage single thrie beam barrier to a heavier gage single thrie beam railing section then to a heavier gage nested double thrie beam barrier section which then is connected to the concrete bridge railing.
2. Where the height of the bridge railing exceeds the height of the thrie beam railing by more than 1" at Connection Detail 2A, taper the top of the end of the bridge railing at 4:1 to match the top elevation of the thrie beam railing.
3. For details of End Cap (Type TC), see Standard Plan A78C1.
4. See Standard Plan A78J for additional details regarding depth dimension for straight metal box spacer.
5. Direction of adjacent traffic indicated by ⟹.

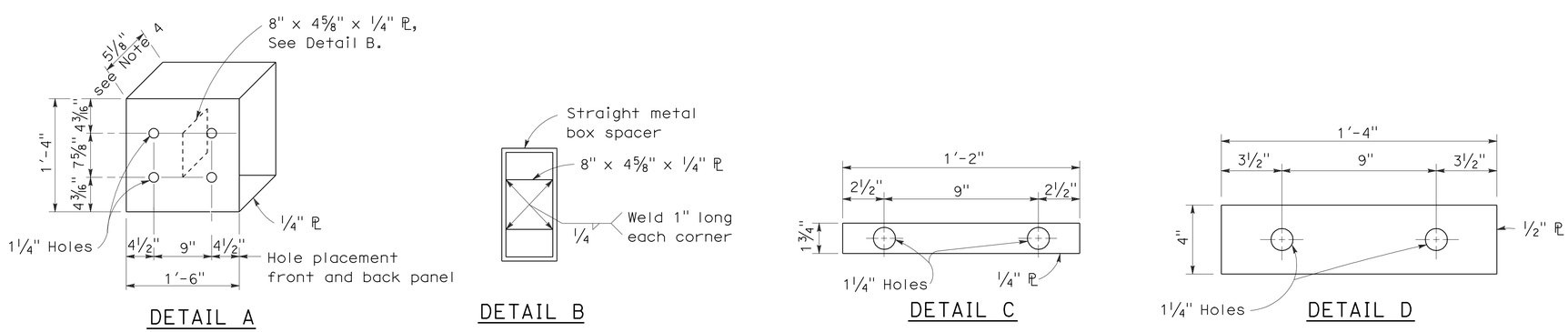

DETAIL A — DETAIL B — DETAIL C — DETAIL D

STRAIGHT METAL BOX SPACER — PLATE 'A' — PLATE 'B'

STATE OF CALIFORNIA
DEPARTMENT OF TRANSPORTATION

SINGLE THRIE BEAM BARRIER CONNECTIONS TO BRIDGE RAILINGS WITHOUT SIDEWALKS

NO SCALE

RSP A78F2 DATED JUNE 6, 2008 SUPERSEDES STANDARD PLAN A78F2
DATED MAY 1, 2006 - PAGE 93 OF THE STANDARD PLANS BOOK DATED MAY 2006.

REVISED STANDARD PLAN RSP A78F2

2006 REVISED STANDARD PLAN RSP A78F2

12-10-07

DIST	COUNTY	ROUTE	POST MILES TOTAL PROJECT	SHEET NO.	TOTAL SHEETS
06	Fre,Mad	99	26.7/R31.6, R0.0/R1.6	296	393

Randell D. Hiatt
REGISTERED CIVIL ENGINEER

June 6, 2008
PLANS APPROVAL DATE

REGISTERED PROFESSIONAL ENGINEER Randell D. Hiatt No. C50200 Exp. 6-30-09 CIVIL STATE OF CALIFORNIA

The State of California or its officers or agents shall not be responsible for the accuracy or completeness of electronic copies of this plan sheet.

To accompany plans dated 4-2-12

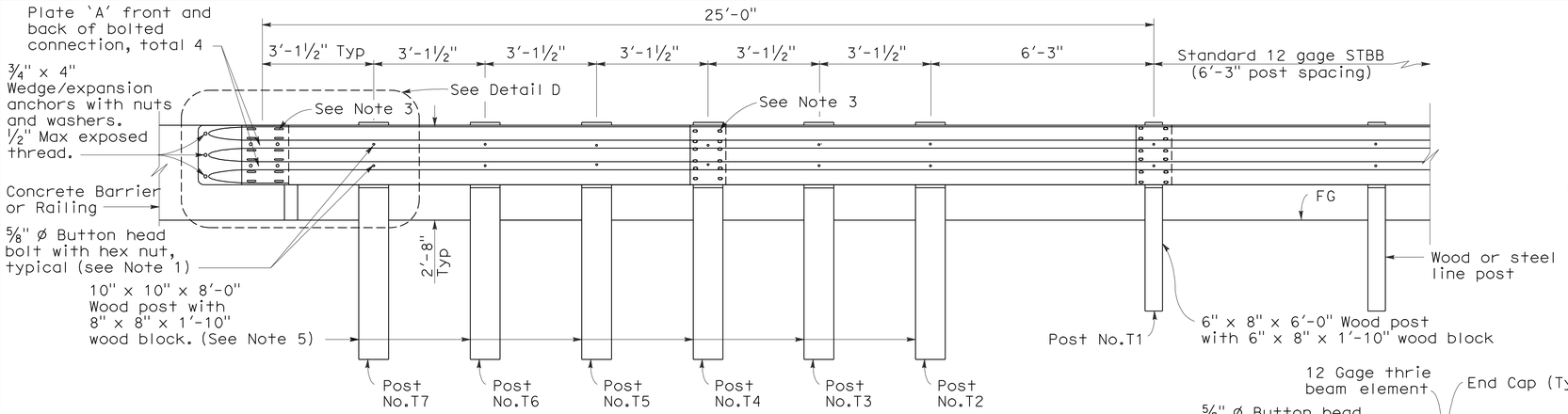

ELEVATION

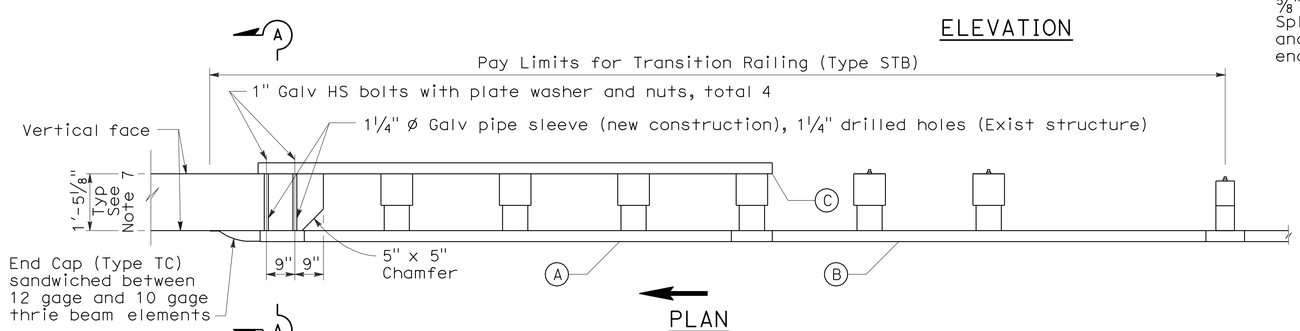

PLAN

TRANSITION RAILING (TYPE STB)

(No Blockout Attachment)

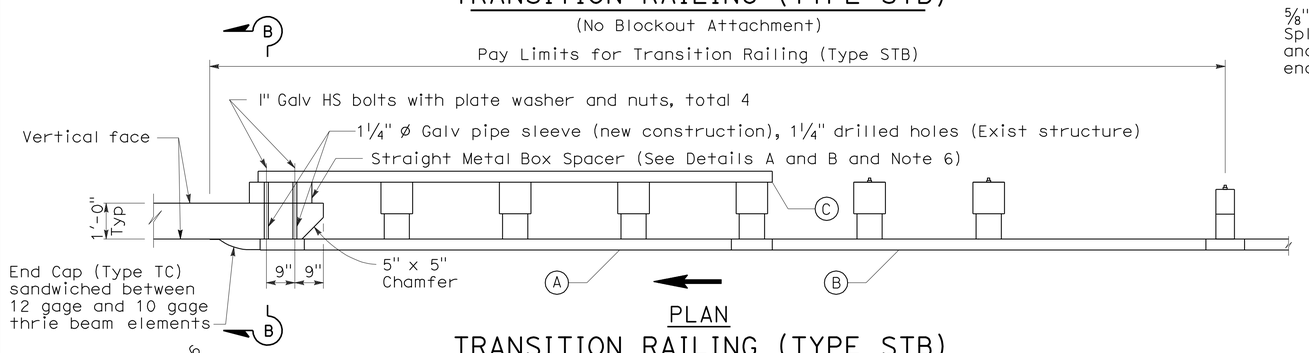

PLAN

TRANSITION RAILING (TYPE STB)

(Blockout Attachment)

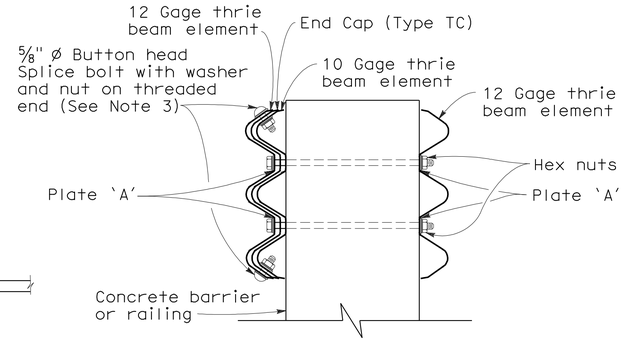

SECTION A-A

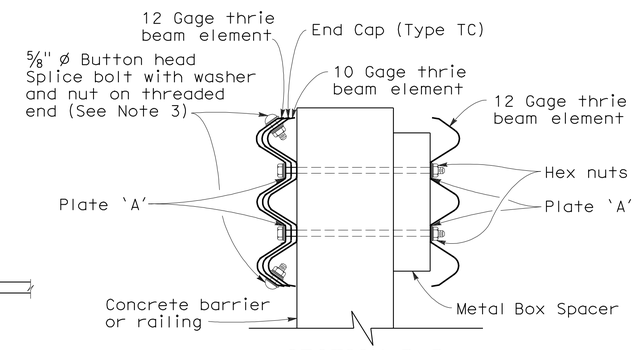

SECTION B-B

LEGEND

(A) Nested thrie beam elements (one 12 gage element nested over one 10 gage element).

(B) One 10 gage thrie beam element.

(C) One 12 gage thrie beam element.

10 gage = 0.135" thick

12 gage = 0.108" thick

NOTES:

1. Use ⅝" ø Button head bolts and hex nuts for connection to posts. No washer on rail face for bolted connections to post.
2. The nested rail elements, end cap and single 10 gage thrie beam element, may be spliced together prior to bolting the elements to the wood post and concrete barrier or railing.
3. Exterior splice bolt holes for rail element splices at Post No.T4 and the connection to the concrete barrier or railing shall be the standard 29/32" x 1⅛" slot size. Interior splice bolt holes at these locations may be increased up to 1¼" ø. Only the top 2 and the bottom 2 splice bolts with washers and nuts are required for rail splices at Post No.T4 and the connection to the concrete barrier or railing.
4. Direction of adjacent traffic indicated by ⟶.
5. The top elevation of Post Nos.T2 through T7 shall not project more than 1" above the top elevation of the rail element.
6. The depth of the metal box spacer varies from the 5⅛" to 1½" and is dependent on the width of the concrete railing or wall. The combined dimension for the depth of the metal box spacer plus the width of railing or wall is typically 17⅛". Where the space between the backside of the concrete railing or wall and the rear thrie beam element is less than 1½" metal plates similar to Plate 'A' are to be used as spacers.
7. Where the width of the concrete railing or wall is greater than 17⅛", wood blocks are to be used to fill the space created between the backside of Post No.4 through No.7 and the rear thrie beam element. These wood blocks shall be 8" in width and 1'-2" in length. The dimension between the front thrie beam element and the rear thrie beam element is to match the width of the concrete railing or wall.
8. For details of End Cap (Type TC), see Revised Standard Plan RSP A78C1.

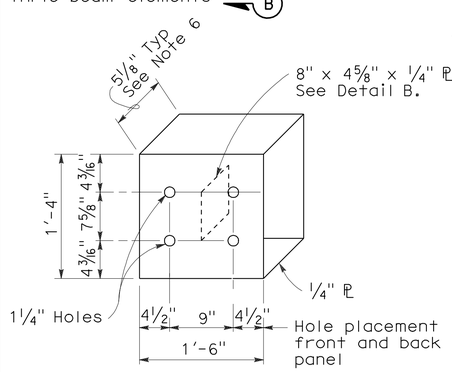

DETAIL A

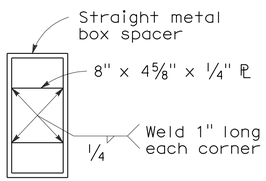

DETAIL B

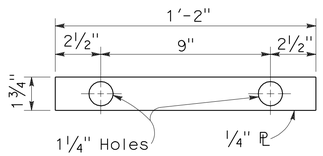

DETAIL C

STRAIGHT METAL BOX SPACER

PLATE 'A'

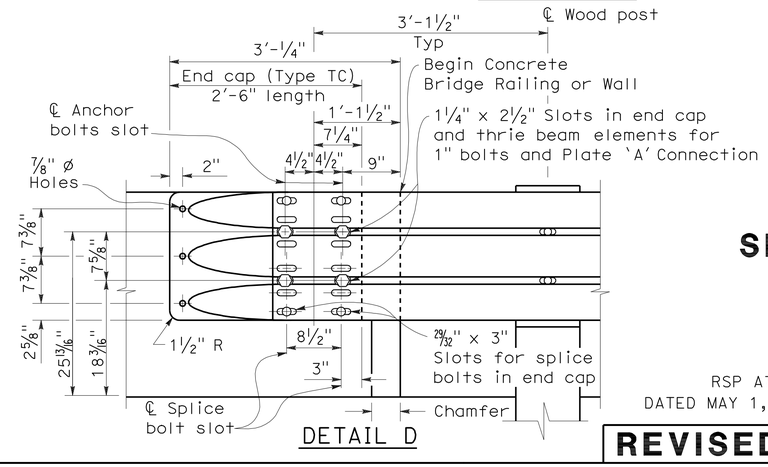

DETAIL D

STATE OF CALIFORNIA
DEPARTMENT OF TRANSPORTATION

SINGLE THRIE BEAM BARRIER TRANSITION RAILING (TYPE STB)

NO SCALE

RSP A78J DATED JUNE 6, 2008 SUPERSEDES STANDARD PLAN A78J
DATED MAY 1, 2006 - PAGE 97 OF THE STANDARD PLANS BOOK DATED MAY 2006.

REVISED STANDARD PLAN RSP A78J

2006 REVISED STANDARD PLAN RSP A78J

5-1-08

DIST	COUNTY	ROUTE	POST MILES TOTAL PROJECT	SHEET NO.	TOTAL SHEETS
06	Fre,Mad	99	26.7/R31.6, R0.0/R1.6	297	393

REGISTERED CIVIL ENGINEER

June 5, 2009
PLANS APPROVAL DATE

REGISTERED PROFESSIONAL ENGINEER Glenn DeCou No. C34547 Exp. 9-30-09 CIVIL STATE OF CALIFORNIA

The State of California or its officers or agents shall not be responsible for the accuracy or completeness of electronic copies of this plan sheet.

To accompany plans dated 4-2-12

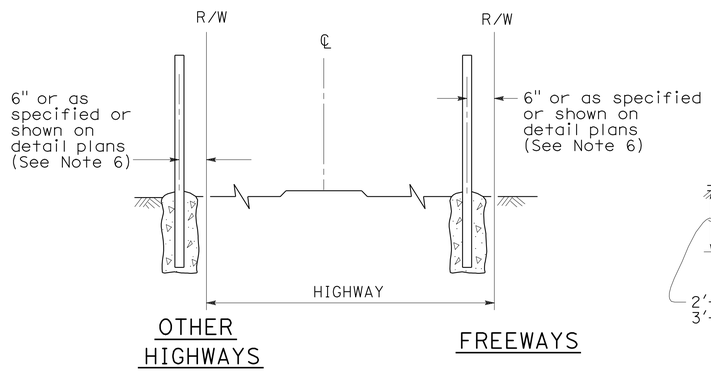

FENCE LOCATION

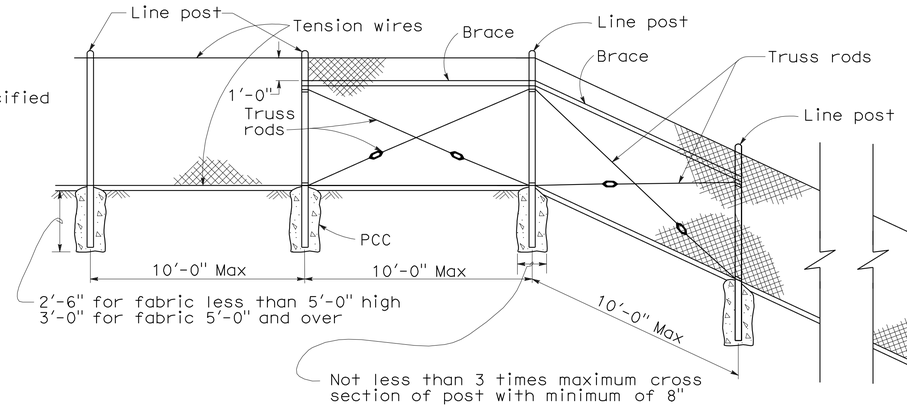

CHAIN LINK FENCE ON SHARP BREAK IN GRADE

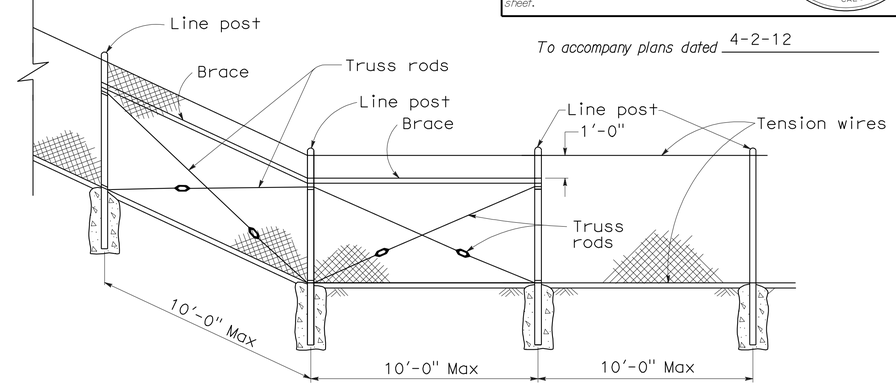

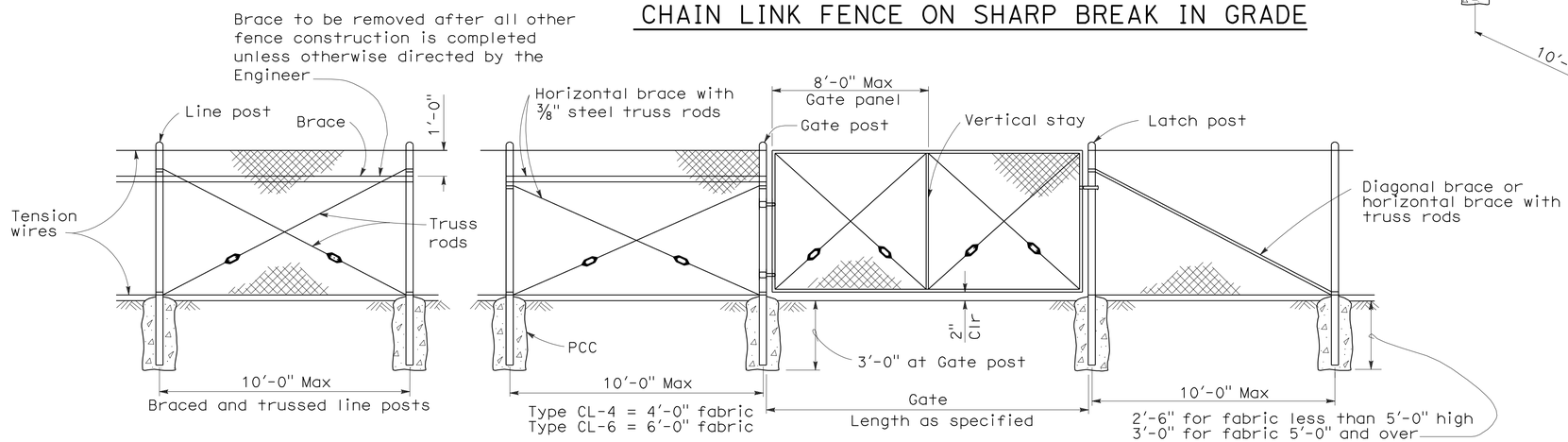

CHAIN LINK GATE INSTALLATION

GATE POST			
FENCE HEIGHT	GATE WIDTHS	NOMINAL ID	WEIGHT PER FOOT
6'-0" and Less	Up thru 6'-0"	2½"	4.95 LB
	Over 6'-0" thru 12'-0"	4"	10.79 LB
	Over 12'-0" thru 18'-0"	5"	14.62 LB
	Over 18'-0" to 24'-0" Max	6"	18.97 LB
Over 6'-0"	Up thru 6'-0"	3"	7.58 LB
	Over 6'-0" thru 12'-0"	5"	14.62 LB
	Over 12'-0" thru 18'-0"	6"	18.97 LB
	Over 18'-0" to 24'-0" Max	8"	28.55 LB

Above post dimensions and weights are minimums. Larger sizes may be used on approval of the Engineer.

NOTES:

1. The below table shows examples of post and brace sections which may comply with the Specifications.
2. Sections shown in the tables must also comply with the strength requirements and other provisions of the Specifications.
3. Other sections which comply with the strength requirements and other provisions of the Specifications may be used on approval of the Engineer.
4. Options exercised shall be uniform on any one project.
5. Dimensions shown are nominal.
6. Offset to be 2'-0" at monument locations, measured at right angles to R/W lines. Taper to achieve offset to be at least 20'-0" long.

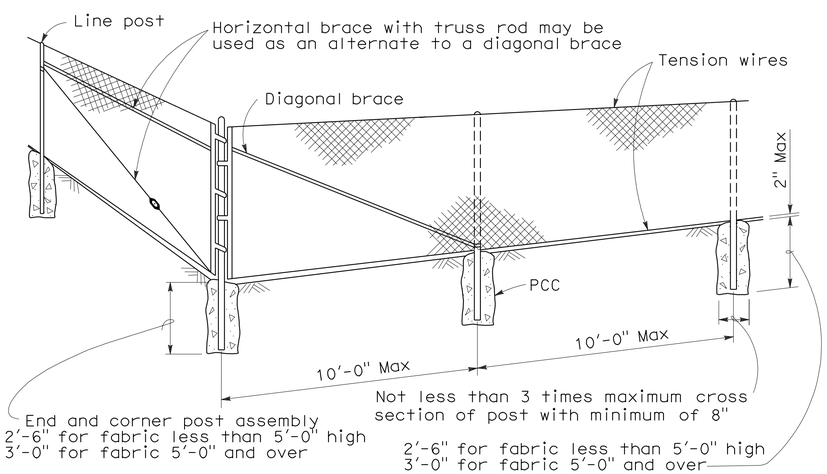

CORNER POST

TYPICAL MEMBER DIMENSIONS (See Notes)											
FENCE HEIGHT	LINE POSTS			END, LATCH & CORNER POSTS				BRACES			
	ROUND ID	H	ROLL FORMED	ROUND ID	ROLL FORMED			ROUND ID	H	ROLL FORMED	
6' & less	1½"	1⅞" × 1⅝"	1⅞" × 1⅝"	2"	3½" × 3½"	2" × 1¾"		1¼"	1½" × 1 5/16"	1⅝" × 1¼"	1¾" × 1¼"
Over 6'	2"	2¼" × 2"	2" × 1¾"	2½"	3½" × 3½"	2½" × 2½"		1¼"	1½" × 1 5/16"	1⅝" × 1¼"	1¾" × 1¼"

STATE OF CALIFORNIA
DEPARTMENT OF TRANSPORTATION

CHAIN LINK FENCE

NO SCALE

RSP A85 DATED JUNE 5, 2009 SUPERSEDES STANDARD PLAN A85
DATED MAY 1, 2006 - PAGE 111 OF THE STANDARD PLANS BOOK DATED MAY 2006.

REVISED STANDARD PLAN RSP A85

2006 REVISED STANDARD PLAN RSP A85

5-7-09

DIST	COUNTY	ROUTE	POST MILES TOTAL PROJECT	SHEET NO.	TOTAL SHEETS
06	Fre,Mad	99	26.7/R31.6, R0.0/R1.6	298	393

REGISTERED CIVIL ENGINEER

June 5, 2009
PLANS APPROVAL DATE

REGISTERED PROFESSIONAL ENGINEER Glenn DeCou No. C34547 Exp. 9-30-09 CIVIL STATE OF CALIFORNIA

The State of California or its officers or agents shall not be responsible for the accuracy or completeness of electronic copies of this plan sheet.

To accompany plans dated 4-2-12

NOTES:

1. H is 2'-6" for fabric less than 5'-0" high.
   H is 3'-0" for fabric 5'-0" and over.
2. T is not less than 3 times maximum cross section of post with minimum of 8".
3. Arms with barbed wire to be used where shown on plans.
4. See Revised Standard Plan RSP A85 for Chain Link Fencing dimensions.
5. Reinforcing must comply with ASTM A 706.
6. See Detail A on New Standard Plan NSP A86B for connection at headwall.

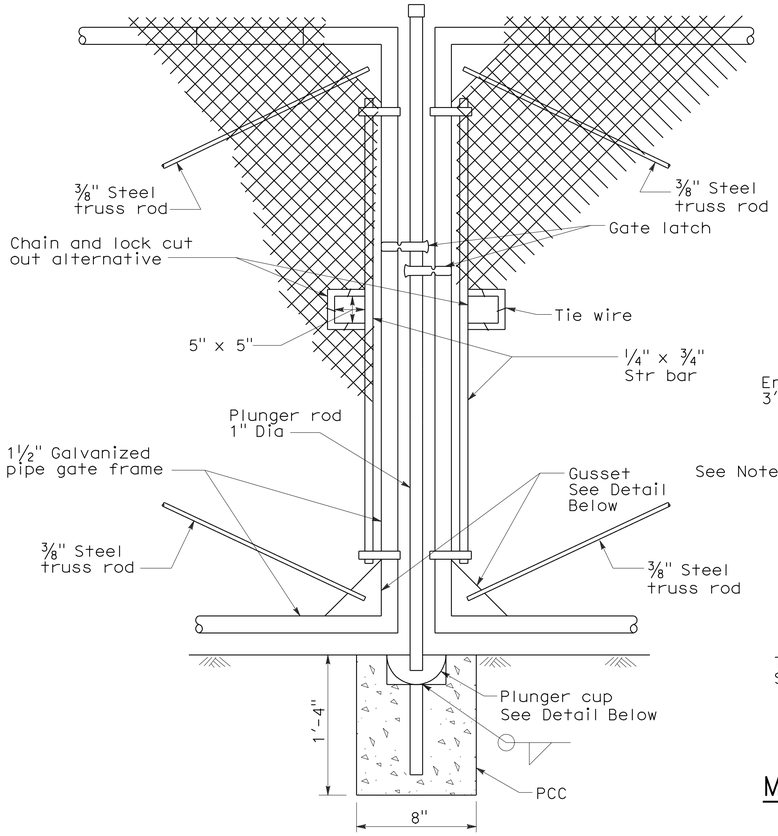

TYPICAL DOUBLE GATE REMOVABLE CENTER POST

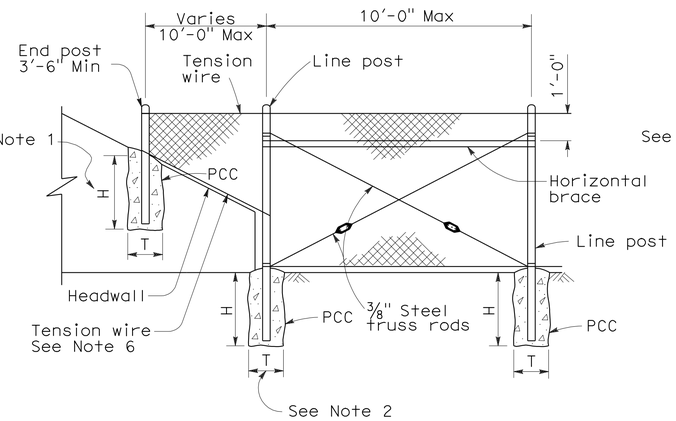

METHOD OF TYING FENCE TO HEADWALL

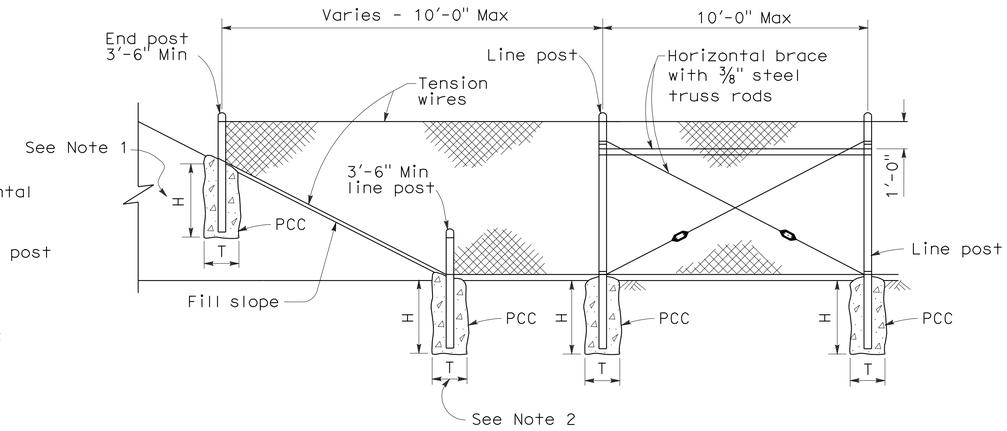

METHOD OF ERECTING FENCE FOR FILL SLOPE

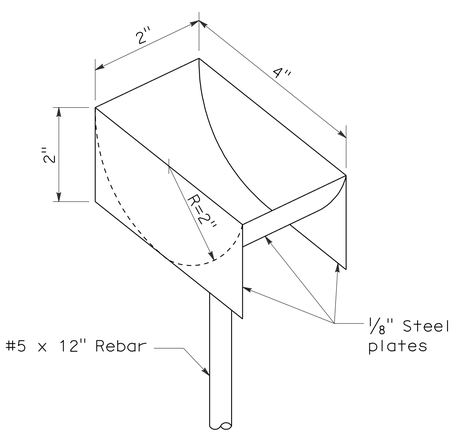

PLUNGER CUP DETAIL

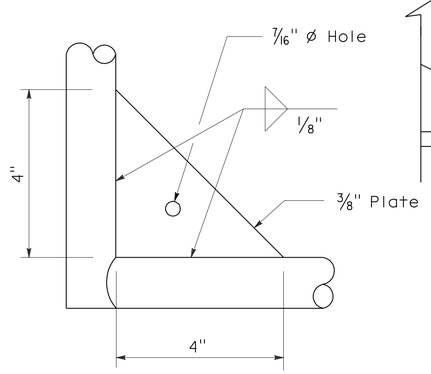

GUSSET DETAIL

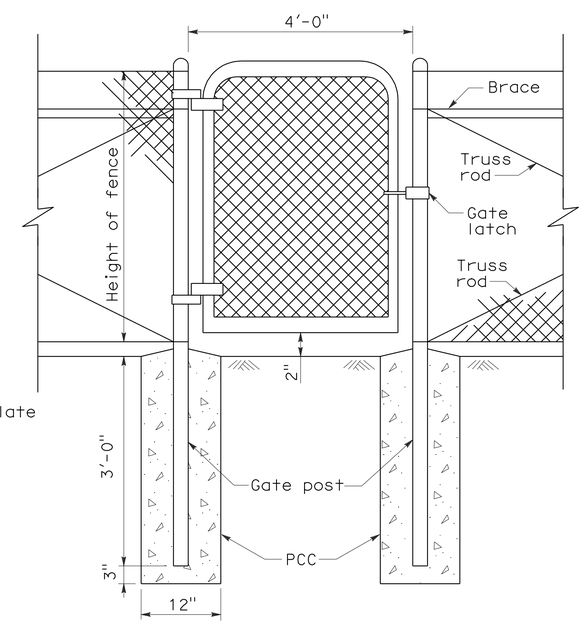

WALK GATE

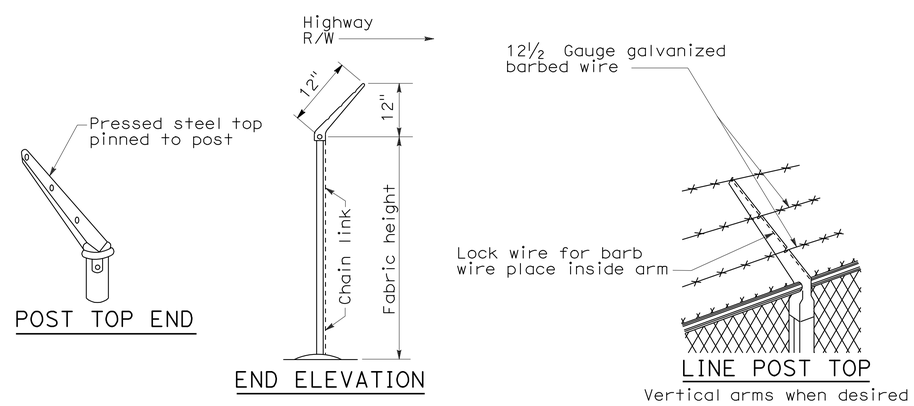

POST TOP END

END ELEVATION

LINE POST TOP
Vertical arms when desired

BARBED WIRE POST TOP
See Note 3

STATE OF CALIFORNIA
DEPARTMENT OF TRANSPORTATION

CHAIN LINK FENCE DETAILS

NO SCALE

NSP A85A DATED JUNE 5, 2009 SUPPLEMENTS THE STANDARD PLANS BOOK DATED MAY 2006.

NEW STANDARD PLAN NSP A85A

2006 NEW STANDARD PLAN NSP A85A

5-7-09

DIST	COUNTY	ROUTE	POST MILES TOTAL PROJECT	SHEET NO.	TOTAL SHEETS
06	Fre,Mad	99	26.7/R31.6, R0.0/R1.6	299	393

REGISTERED CIVIL ENGINEER

June 5, 2009
PLANS APPROVAL DATE

REGISTERED PROFESSIONAL ENGINEER Glenn DeCou No. C34547 Exp. 9-30-09 CIVIL STATE OF CALIFORNIA

The State of California or its officers or agents shall not be responsible for the accuracy or completeness of electronic copies of this plan sheet.

To accompany plans dated 4-2-12

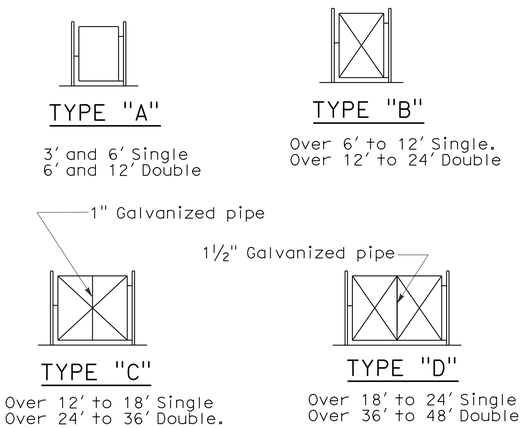

TYPICAL FRAMEWORK SHOWING NUMBER OF BAYS IN GATE

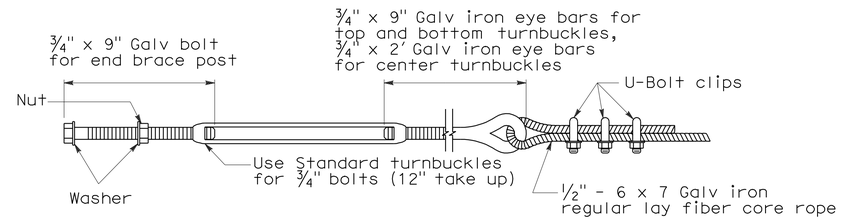

TURNBUCKLE A

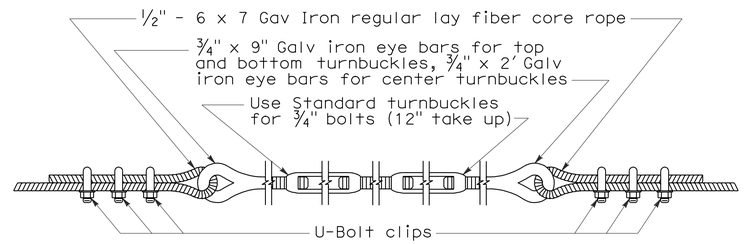

TURNBUCKLE B

NOTES:

1. All material for abutment connection to be galvanized.
2. The chain link fabric shall be replaced by barbed wire strands at 12" maximum centers between the double posts.
3. When the width of the culvert makes it necessary to anchor a post to the top of the culvert, a cast iron shoe or other device approved by the Engineer shall be used.
4. Fencing over stream and around headwall may also use Barbed Wire or Wire Mesh fencing with either wood post or steel post installation.
5. See Revised Standard Plan RSP A85 for Chain Link fence dimensions. See Standard Plan A86 for Barbed Wire and Wire Mesh fence dimensions and for wood post and steel post installation.

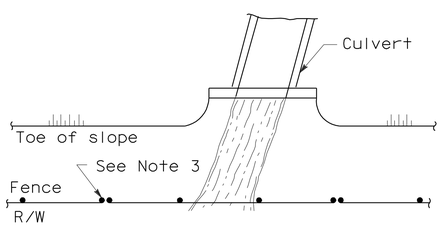

PLAN

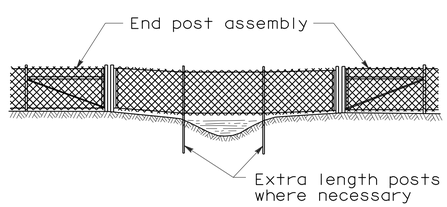

ELEVATION

INSTALLATION OVER STREAM

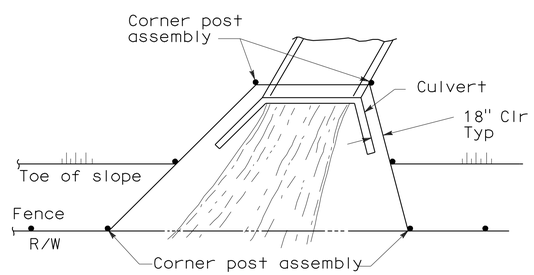

PLAN

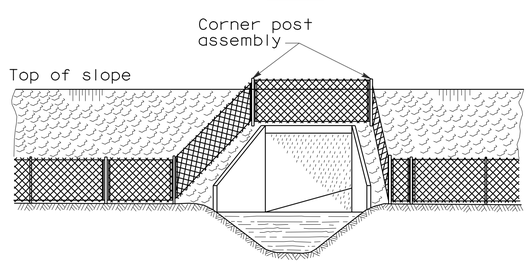

ELEVATION

INSTALLATION AROUND HEADWALL

See Note 4

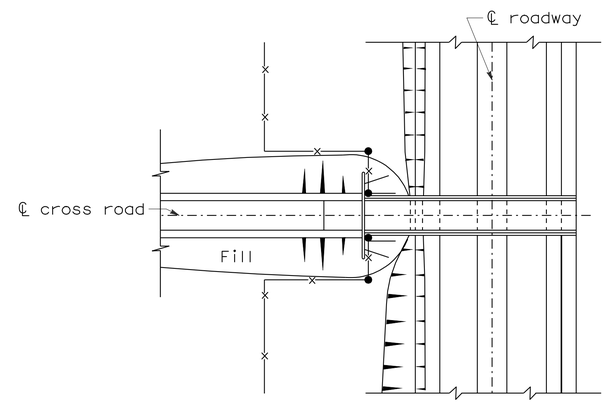

PLAN OF ROADWAY - UNDERPASS

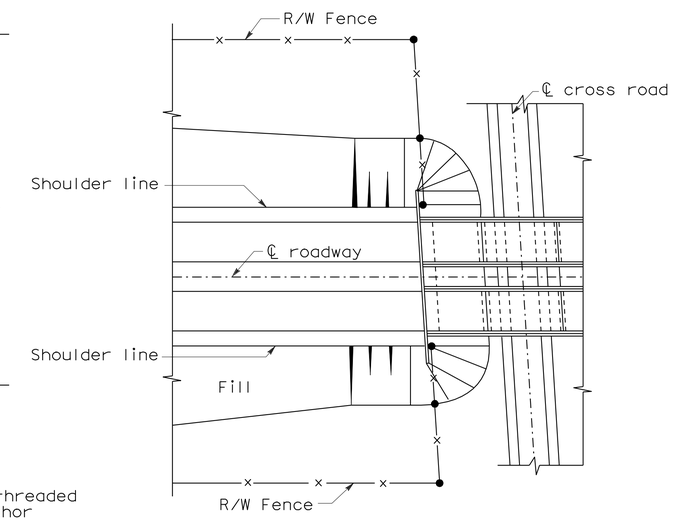

PLAN OF ROADWAY - OVERPASS

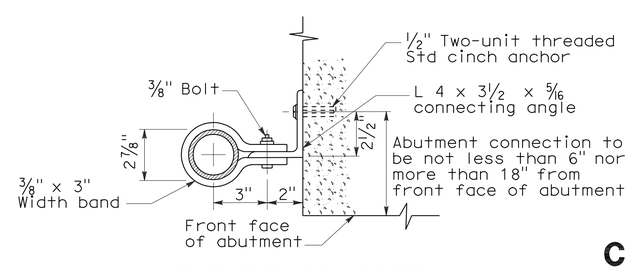

ABUTMENT CONNECTION

TYPICAL INSTALLATION AT BRIDGES

STATE OF CALIFORNIA
DEPARTMENT OF TRANSPORTATION

CHAIN LINK FENCE DETAILS

NO SCALE

NSP A85B DATED JUNE 5, 2009 SUPPLEMENTS THE STANDARD PLANS BOOK DATED MAY 2006.

NEW STANDARD PLAN NSP A85B

2006 NEW STANDARD PLAN NSP A85B

5-12-09

DIST	COUNTY	ROUTE	POST MILES TOTAL PROJECT	SHEET NO.	TOTAL SHEETS
06	Fre,Mad	99	26.7/R31.6, R0.0/R1.6	300	393

REGISTERED CIVIL ENGINEER

May 15, 2009
PLANS APPROVAL DATE

REGISTERED PROFESSIONAL ENGINEER William K. Farnbach No. C49042 Exp. 9-30-10 CIVIL STATE OF CALIFORNIA

The State of California or its officers or agents shall not be responsible for the accuracy or completeness of electronic copies of this plan sheet.

To accompany plans dated 4-2-12

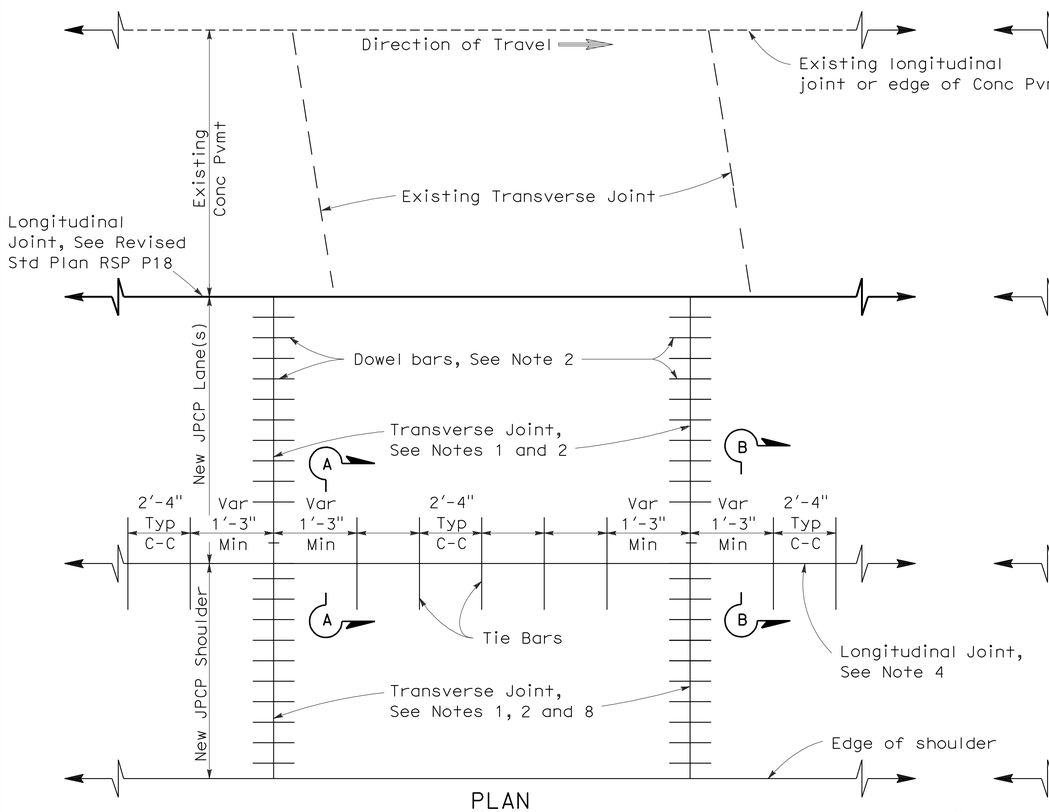

PLAN

LANE/SHOULDER ADDITION OR RECONSTRUCTION

See Notes 6 and 7

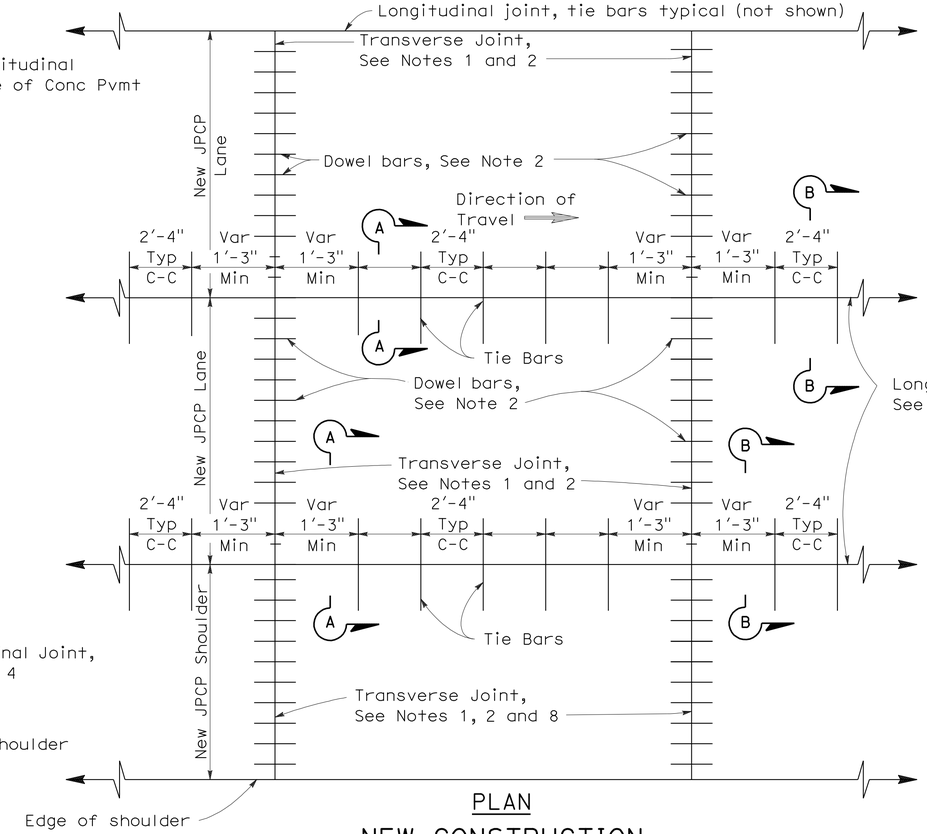

PLAN

NEW CONSTRUCTION

See Notes 6 and 7

NOTES:

1. Transverse joints shall be constructed at right angles to the longitudinal pavement joints in new jointed plain concrete pavement and spaced at successive repeated intervals of 12', 15', 13' and 14'.
2. For transverse joint and dowel bar details not shown, See Revised Standard Plan RSP P10.
3. Construct longitudinal contraction joints as shown in Section A-A when more than one lane or shoulder widths are placed at one time. If constructing one lane at a time, use longitudinal construction joint, as shown in Section B-B.
4. For additional longitudinal joint details, see Revised Standard Plan RSP P18.
5. If fresh concrete is placed adjacent to existing concrete, the top corner of the new hardened concrete does not need to be rounded to the 1/4" radius as shown.
6. Joint spacing patterns do not apply to intersections.
7. Details can also apply to inside widening.
8. Dowel bars may be omitted from shoulders when the shoulder cross slope is not the same as the adjacent traffic lane.

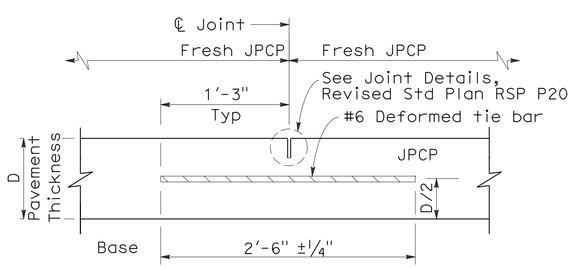

SECTION A-A

LONGITUDINAL CONTRACTION JOINT

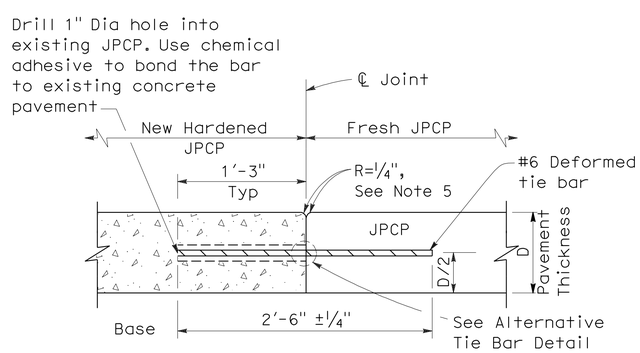

SECTION B-B

LONGITUDINAL CONSTRUCTION JOINT

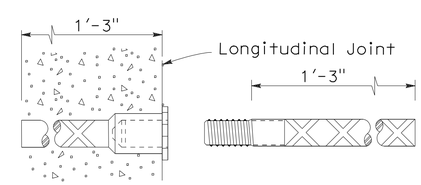

ALTERNATIVE TIE BAR SPLICE DETAIL

(Splice Coupler)

TIE BAR DETAILS

STATE OF CALIFORNIA
DEPARTMENT OF TRANSPORTATION

JOINTED PLAIN CONCRETE PAVEMENT

NO SCALE

RSP P1 DATED MAY 15, 2009 SUPERSEDES STANDARD PLAN P1
DATED MAY 1, 2006 - PAGE 119 OF THE STANDARD PLANS BOOK DATED MAY 2006.

REVISED STANDARD PLAN RSP P1

2006 REVISED STANDARD PLAN RSP P1

5-8-09