ACNHPI-005-5(144)E

Dist	COUNTY	ROUTE	POST MILES TOTAL PROJECT	SHEET No.	TOTAL SHEETS
06	Fre	5	48.8/53.0	1	117

STATE OF CALIFORNIA
DEPARTMENT OF TRANSPORTATION

PROJECT PLANS FOR CONSTRUCTION ON
STATE HIGHWAY

IN FRESNO COUNTY
ABOUT 38 MILES SOUTH OF SANTA NELLA
FROM 0.1 MILE SOUTH OF PANOCHE ROAD OVERCROSSING
TO 0.2 MILE NORTH OF RUSSELL AVENUE OVERCROSSING

TO BE SUPPLEMENTED BY STANDARD PLANS DATED 2010

INDEX OF PLANS

SHEET No.	DESCRIPTION
1	TITLE AND LOCATION MAP
2-4	TYPICAL CROSS SECTIONS
5-21	LAYOUTS
22-32	CONSTRUCTION DETAILS
33-34	TEMPORARY WATER POLLUTION CONTROL PLANS
35	UTILITY PLANS
36	CONSTRUCTION AREA SIGNS
37-38	STAGE CONSTRUCTION PLANS
39-43	TRAFFIC HANDLING PLANS AND QUANTITIES
44-64	PAVEMENT DELINEATION AND SIGN PLANS, DETAILS AND QUANTITIES
65-68	SUMMARY OF QUANTITIES
69-81	ELECTRICAL PLANS
82-115	REVISED STANDARD PLANS

STRUCTURE PLANS

116-117 PANOCHE CREEK Br, Br No. 42-0249 R/L

THE STANDARD PLANS LIST APPLICABLE TO THIS CONTRACT IS INCLUDED IN THE NOTICE TO BIDDERS AND SPECIAL PROVISIONS BOOK.

LOCATION MAP

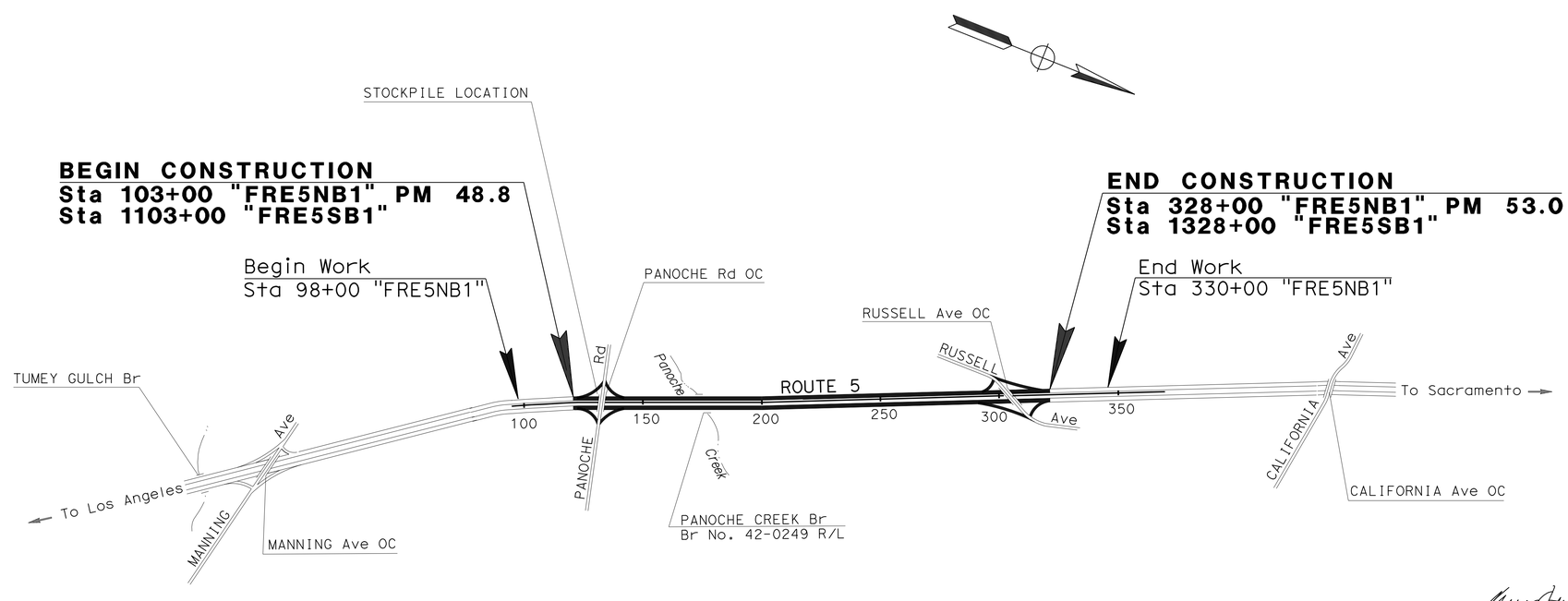

NO SCALE

PROJECT MANAGER CHRIS GARDNER

DESIGN ENGINEER JUN XU

03-03-14
PROJECT ENGINEER DATE
REGISTERED CIVIL ENGINEER

June 23, 2014
PLANS APPROVAL DATE

REGISTERED PROFESSIONAL ENGINEER RODRIGO M. CRUZ No. 57918 Exp. 06/30/16 CIVIL STATE OF CALIFORNIA

THE STATE OF CALIFORNIA OR ITS OFFICERS OR AGENTS SHALL NOT BE RESPONSIBLE FOR THE ACCURACY OR COMPLETENESS OF SCANNED COPIES OF THIS PLAN SHEET.

THE CONTRACTOR SHALL POSSESS THE CLASS (OR CLASSES) OF LICENSE AS SPECIFIED IN THE "NOTICE TO BIDDERS."

CONTRACT No.	06-0Q2704
PROJECT ID	0613000050

LAST REVISION 06-20-14 DATE PLOTTED => 29-JUL-2014 TIME PLOTTED => 15:40

Dist	COUNTY	ROUTE	POST MILES TOTAL PROJECT	SHEET No.	TOTAL SHEETS
06	Fre	5	48.8/53.0	2	117

REGISTERED CIVIL ENGINEER 03-03-14 DATE

6-23-14
PLANS APPROVAL DATE

REGISTERED PROFESSIONAL ENGINEER RODRIGO M. CRUZ No. 57918 Exp. 06/30/16 CIVIL STATE OF CALIFORNIA

THE STATE OF CALIFORNIA OR ITS OFFICERS OR AGENTS SHALL NOT BE RESPONSIBLE FOR THE ACCURACY OR COMPLETENESS OF SCANNED COPIES OF THIS PLAN SHEET.

NOTES:

1. DIMENSIONS OF THE PAVEMENT STRUCTURES (STRUCTURAL SECTIONS) ARE SUBJECT TO TOLERANCES IN THE STANDARD SPECIFICATIONS.
2. FOR ACCURATE RIGHT OF WAY DATA SHEET, CONTACT RIGHT OF WAY ENGINEERING AT THE DISTRICT OFFICE.
3. EXACT LOCATIONS AND TYPES OF DIKE ARE SHOWN ON THE LAYOUTS AND IN THE SUMMARY OF QUANTITIES SHEETS.
4. RUMBLE STRIP CONSTRUCTION. SEE SHEETS C-6 AND Q-2.
5. PREVIOUS PANEL REPLACEMENT USING 1.50′ FDAC AT SOME LOCATIONS ONLY.
6. Exist DTBB OCCURS BETWEEN PANOCHE CREEK Br AND RUSSELL Ave OC. Exist SOUTHBOUND DTBB CENTERLINE TO Exist ETW VARIES FROM 5′ TO 42′.
7. RANDOM DISTRESSED PCC PANELS MUST BE REMOVED AND REPLACED WITH HMA (TYPE A) AS SHOWN ON THESE SHEETS. RAPID STRENGTH CONCRETE MUST BE USED IN LIEU OF HMA FOR LOCATIONS WITHOUT K-RAIL. REFER TO SHEET Q-2 FOR LOCATIONS.
8. FOR LOCATION OF SAFETY EDGE, SEE SHEET Q-3.
9. APPLICABLE ONLY WHERE NO PANEL REPLACEMENT IS REQUIRED AND THE LAST LAYER OF HMA IS ABOVE Exist PCC.

DESIGN DESIGNATIONS

DESCRIPTION	2015-2025	2015-2035
2015 ADT	40,500	40,500
2025 ADT	51,500	-
2035 ADT	-	66,000
2025 DHV	6,200	-
2035 DHV	-	7,900
D	65%	65%
T	8%	8%
TI	14.5	16
V	70 MPH	

PAVEMENT CLIMATE REGION

INLAND VALLEY

ABBREVIATIONS:

BWC	BONDED WEARING COARSE
FDAC	FULL DEPTH ASPHALT CONCRETE
GPI	GEOSYNTHETIC PAVEMENT INTERLAYER
ISR	INDIVIDUAL SLAB REPLACEMENT
RAC	RUBBERIZED ASPHALT CONCRETE
RSC	RAPID STRENGTH CONCRETE
SE	SAFETY EDGE

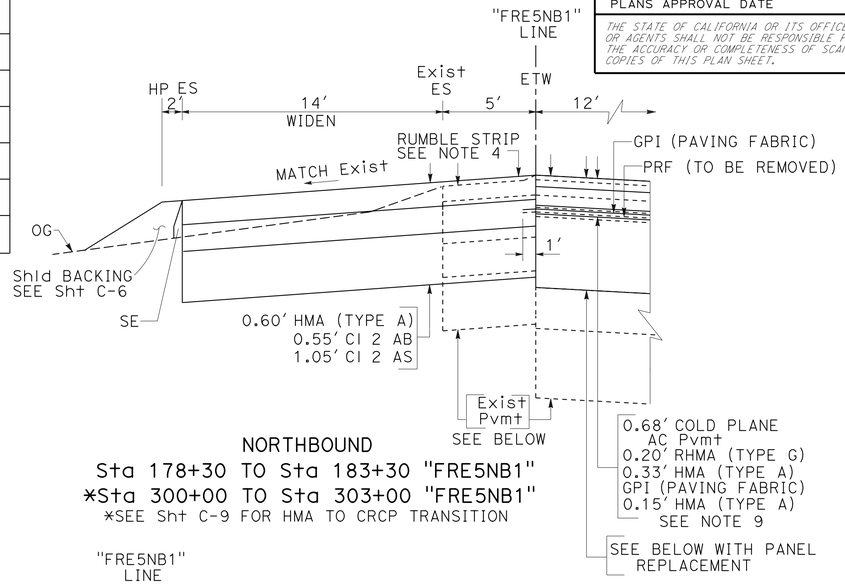

NORTHBOUND
Sta 178+30 TO Sta 183+30 "FRE5NB1"
*Sta 300+00 TO Sta 303+00 "FRE5NB1"
*SEE Sht C-9 FOR HMA TO CRCP TRANSITION

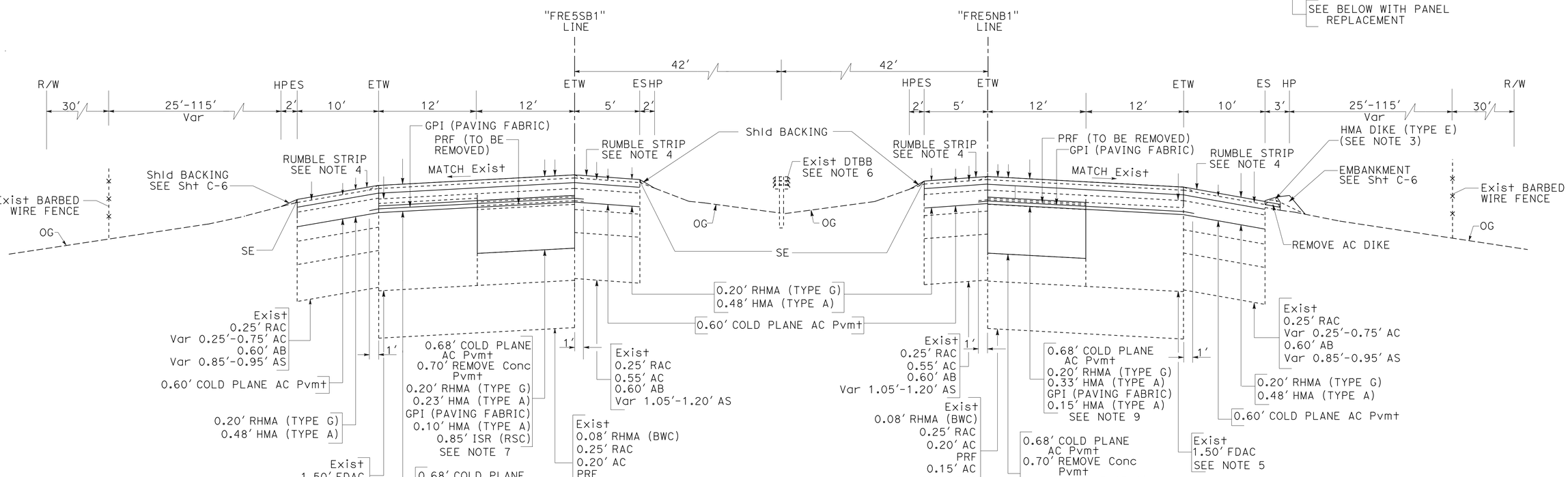

SOUTHBOUND
Sta 1103+00 TO Sta 1170+95 "FRE5SB1"
Sta 1173+30 TO Sta 1328+00 "FRE5SB1"

NORTHBOUND
Sta 103+00 TO Sta 171+56 "FRE5NB1"
Sta 173+91 TO Sta 178+30 "FRE5NB1"
Sta 303+00 TO Sta 328+00 "FRE5NB1"

TYPICAL CROSS SECTIONS

NO SCALE

ROUTE 5

X-1

STATE OF CALIFORNIA - DEPARTMENT OF TRANSPORTATION
Caltrans® DESIGN

FUNCTIONAL SUPERVISOR: JUN XU
CALCULATED-DESIGNED BY: ROD CRUZ
CHECKED BY: IRENE LEE
REVISED BY
DATE REVISED

LAST REVISION 06-20-14
DATE PLOTTED => 01-JUL-2014
TIME PLOTTED => 10:41

Dist	COUNTY	ROUTE	POST MILES TOTAL PROJECT	SHEET No.	TOTAL SHEETS
06	Fre	5	48.8/53.0	3	117

REGISTERED CIVIL ENGINEER 03-03-14 DATE

6-23-14
PLANS APPROVAL DATE

REGISTERED PROFESSIONAL ENGINEER RODRIGO M. CRUZ No. 57918 Exp. 06/30/16 CIVIL STATE OF CALIFORNIA

THE STATE OF CALIFORNIA OR ITS OFFICERS OR AGENTS SHALL NOT BE RESPONSIBLE FOR THE ACCURACY OR COMPLETENESS OF SCANNED COPIES OF THIS PLAN SHEET.

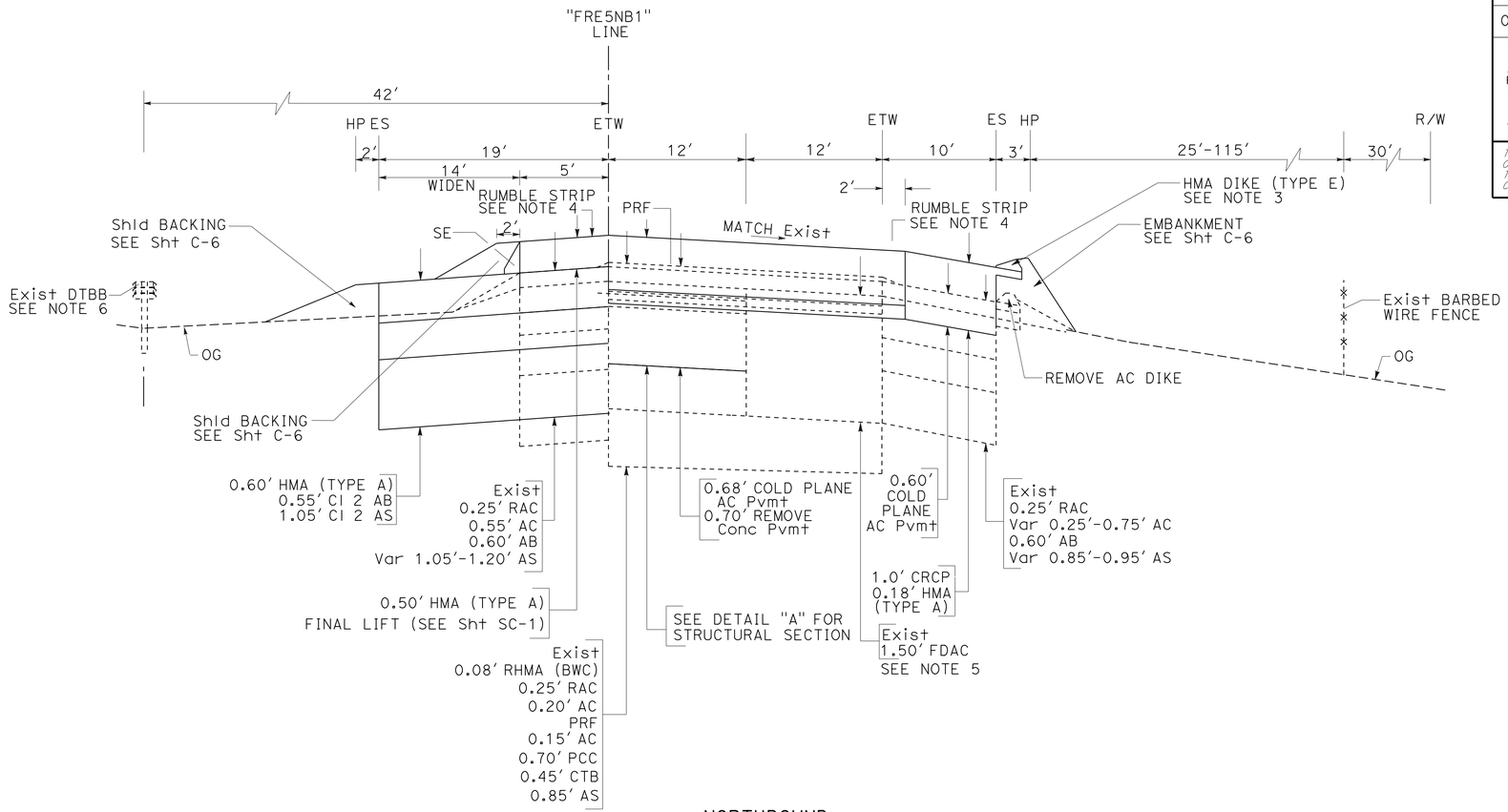

NORTHBOUND

Sta 183+30 TO Sta 300+00 "FRE5NB1"

(CRCP LIMITS, SEE Sht X-1 & LAYOUT SHEETS FOR INSIDE Shld WIDENING LIMITS)

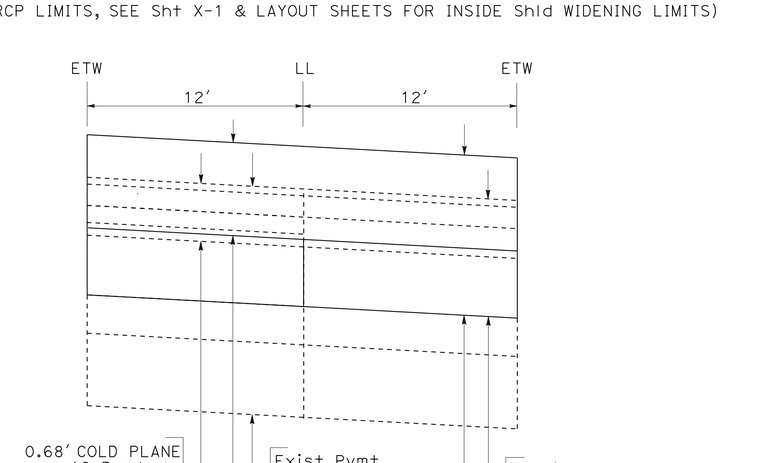

DETAIL "A"

TYPICAL CROSS SECTIONS

NO SCALE

X-2

STATE OF CALIFORNIA - DEPARTMENT OF TRANSPORTATION

Caltrans® **DESIGN**

FUNCTIONAL SUPERVISOR: JUN XU

CALCULATED-DESIGNED BY: ROD CRUZ

CHECKED BY: IRENE LEE

REVISED BY | DATE REVISED

LAST REVISION 06-20-14 | DATE PLOTTED => 01-JUL-2014 | TIME PLOTTED => 10:41

Dist	COUNTY	ROUTE	POST MILES TOTAL PROJECT	SHEET No.	TOTAL SHEETS
06	Fre	5	48.8/53.0	4	117

REGISTERED CIVIL ENGINEER 03-03-14 DATE

6-23-14
PLANS APPROVAL DATE

REGISTERED PROFESSIONAL ENGINEER RODRIGO M. CRUZ No. 57918 Exp. 06/30/16 CIVIL STATE OF CALIFORNIA

THE STATE OF CALIFORNIA OR ITS OFFICERS OR AGENTS SHALL NOT BE RESPONSIBLE FOR THE ACCURACY OR COMPLETENESS OF SCANNED COPIES OF THIS PLAN SHEET.

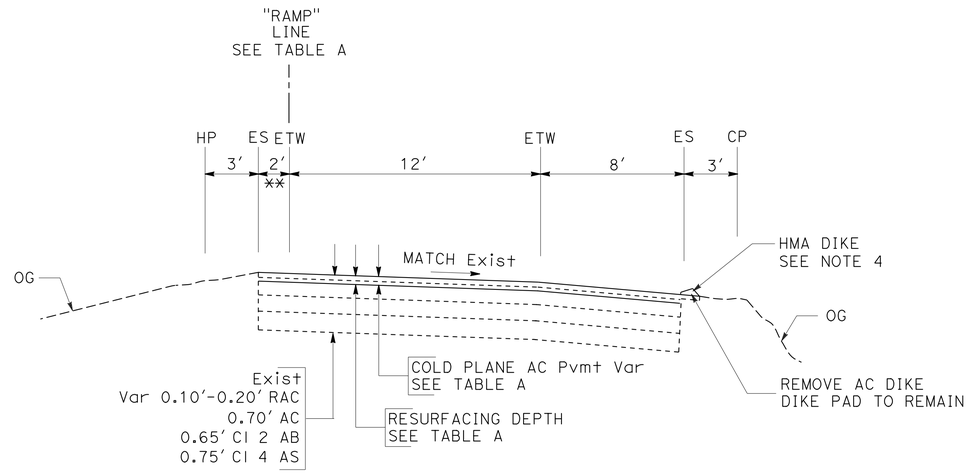

TYPICAL ON/OFF RAMP

RAMP STRUCTURAL SECTION TABLE A

RAMP NAME	STATION	COLD PLANE AC Pvmnt	OVERLAY THICKNESS
		Ft	Ft
NB OFF to PANOCHE, "P1" LINE	12+90 TO 23+11	0.15	0.15 RHMA
SB ON from PANOCHE, "P3" LINE	116+49 TO 126+56	0.15	0.15 RHMA
NB ON from PANOCHE, "P2" LINE	50+17 TO 60+13	0.20	0.20 RHMA
SB OFF to RUSSELL, "R4" LINE	160+19 TO 168+18	0.30	*0.20 RHMA/0.10 HMA
SB ON from RUSSELL, "R3" LINE	131+41 TO 136+63	0.35	*0.20 RHMA/0.15 HMA
NB ON FROM RUSSELL, "R2" LINE	60+31 TO 64+90	0.15	0.15 RHMA

* - RHMA MUST BE THE TOP LAYER.
** - FOR RAMP "P3" AND "R3", 4-FOOT INSIDE Shld

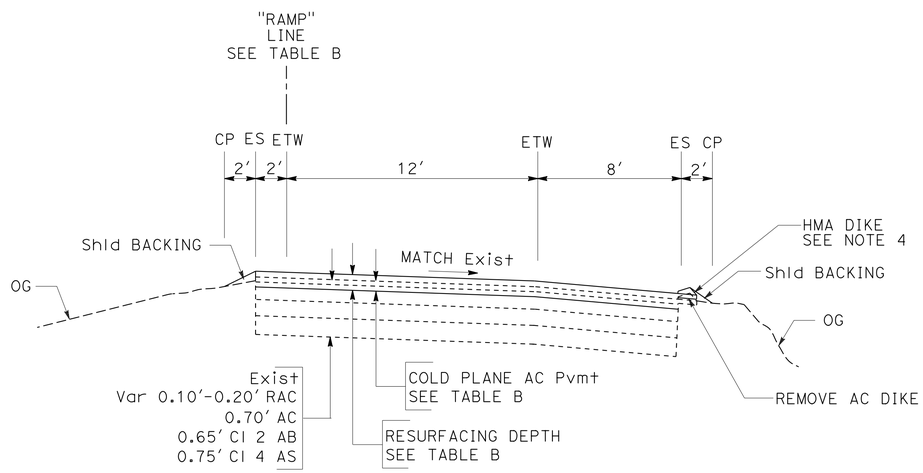

TYPICAL OFF RAMP

RAMP STRUCTURAL SECTION TABLE B

RAMP NAME	STATION	COLD PLANE AC Pvmnt	OVERLAY THICKNESS
		Ft	Ft
SB OFF to PANOCHE, "P4" LINE	150+23 TO 160+80	0.40	*0.20 RHMA/0.45 HMA
NB OFF TO RUSSELL, "R1" LINE	32+77 TO 41+36	0.40	*0.20 RHMA/0.30 HMA

* - RHMA MUST BE THE TOP LAYER.

TYPICAL CROSS SECTIONS

NO SCALE

X-3

STATE OF CALIFORNIA - DEPARTMENT OF TRANSPORTATION
Caltrans
DESIGN

FUNCTIONAL SUPERVISOR: JUN XU
CALCULATED-DESIGNED BY: ROD CRUZ
CHECKED BY: IRENE LEE
REVISED BY
DATE REVISED

LAST REVISION 06-09-14
DATE PLOTTED => 01-JUL-2014
TIME PLOTTED => 10:42

Dist	COUNTY	ROUTE	POST MILES TOTAL PROJECT	SHEET No.	TOTAL SHEETS
06	Fre	5	48.8/53.0	5	117

REGISTERED CIVIL ENGINEER 03-03-14 DATE

6-23-14
PLANS APPROVAL DATE

REGISTERED PROFESSIONAL ENGINEER RODRIGO M. CRUZ No. 57918 Exp. 06/30/16 CIVIL STATE OF CALIFORNIA

THE STATE OF CALIFORNIA OR ITS OFFICERS OR AGENTS SHALL NOT BE RESPONSIBLE FOR THE ACCURACY OR COMPLETENESS OF SCANNED COPIES OF THIS PLAN SHEET.

NOTES:

1. FOR ACCURATE RIGHT OF WAY DATA, CONTACT RIGHT OF WAY ENGINEERING AT THE DISTRICT OFFICE.
2. FOR LOCATION OF RUMBLE STRIP, SEE CONSTRUCTION DETAIL Sht C-6 AND QUANTITY Sht Q-2.
3. FOR LOCATION OF SAFETY EDGE, SEE Sht Q-3.
4. SEE Sht C-9 FOR HMA/CRCP TRANSITION TAPER DETAILS.

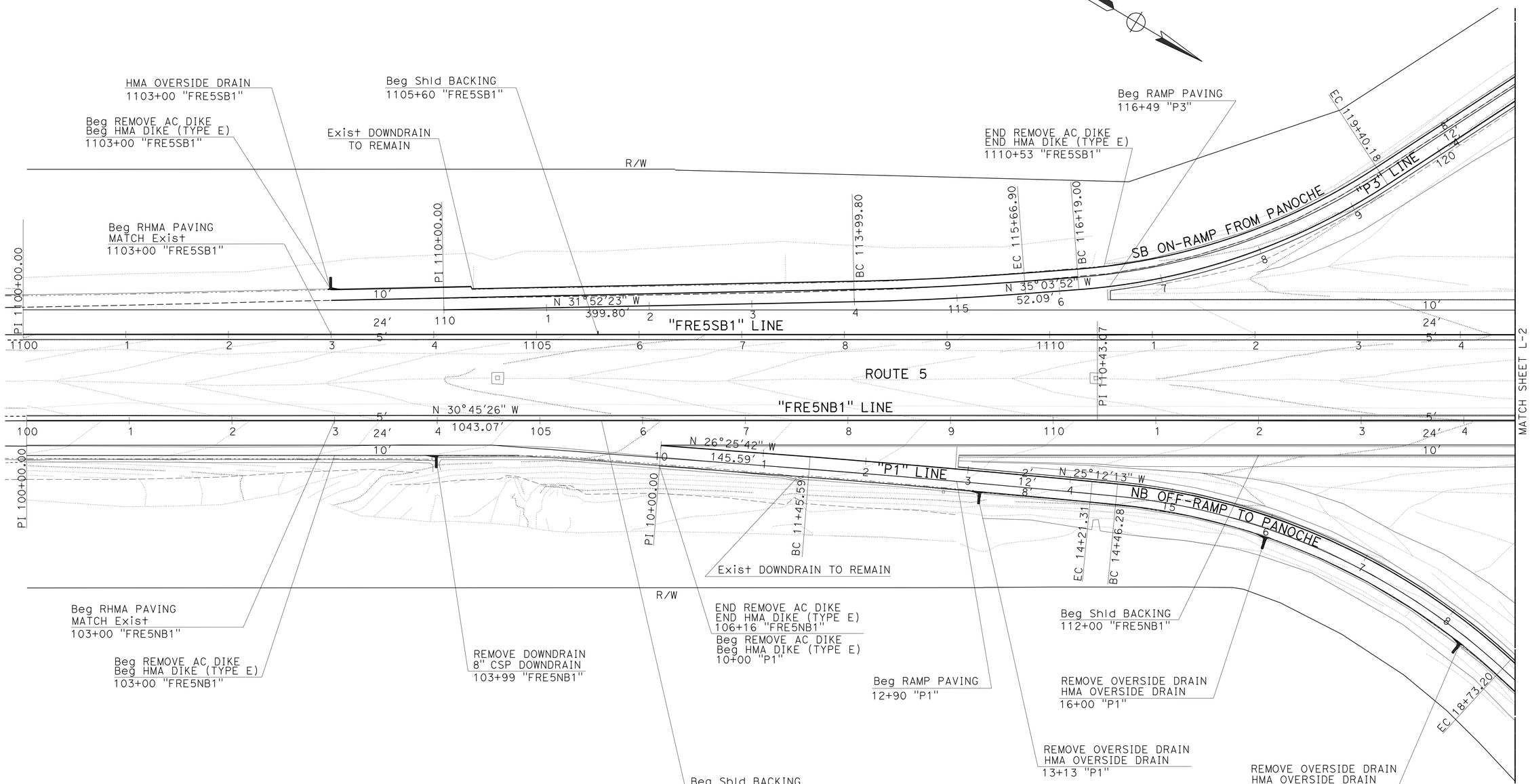

LAYOUT

SCALE: 1"=50'

L-1

REVISED BY	DATE REVISED
IRENE LEE	ROD CRUZ
CALCULATED-DESIGNED BY	CHECKED BY
FUNCTIONAL SUPERVISOR	JUN XU

STATE OF CALIFORNIA - DEPARTMENT OF TRANSPORTATION

Caltrans

DESIGN

LAST REVISION 06-09-14 | DATE PLOTTED => 01-JUL-2014 | TIME PLOTTED => 10:42

Dist	COUNTY	ROUTE	POST MILES TOTAL PROJECT	SHEET No.	TOTAL SHEETS
06	Fre	5	48.8/53.0	6	117

REGISTERED CIVIL ENGINEER 03-03-14 DATE

6-23-14
PLANS APPROVAL DATE

REGISTERED PROFESSIONAL ENGINEER RODRIGO M. CRUZ No. 57918 Exp. 06/30/16 CIVIL STATE OF CALIFORNIA

THE STATE OF CALIFORNIA OR ITS OFFICERS OR AGENTS SHALL NOT BE RESPONSIBLE FOR THE ACCURACY OR COMPLETENESS OF SCANNED COPIES OF THIS PLAN SHEET.

NOTE:

FOR ACCURATE RIGHT OF WAY DATA, CONTACT RIGHT OF WAY ENGINEERING AT THE DISTRICT OFFICE.

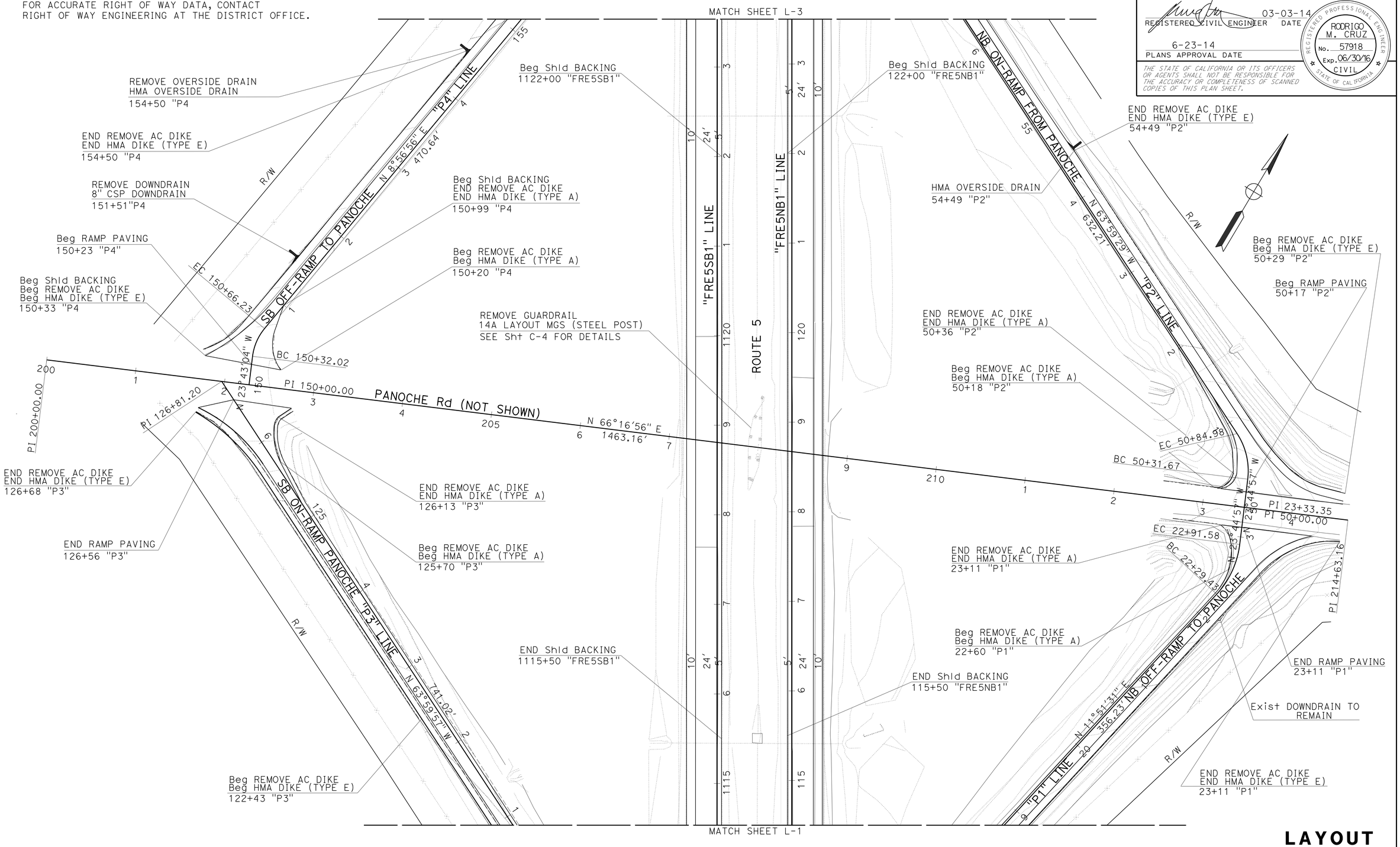

LAYOUT

SCALE: 1"=50'

L-2

REVISED BY	DATE REVISED

CALCULATED-DESIGNED BY	CHECKED BY
IRENE LEE	ROD CRUZ

FUNCTIONAL SUPERVISOR: JUN XU

STATE OF CALIFORNIA - DEPARTMENT OF TRANSPORTATION

Caltrans

DESIGN

LAST REVISION 06-09-14 | DATE PLOTTED => 01-JUL-2014 | TIME PLOTTED => 10:42

Dist	COUNTY	ROUTE	POST MILES TOTAL PROJECT	SHEET No.	TOTAL SHEETS
06	Fre	5	48.8/53.0	7	117

REGISTERED CIVIL ENGINEER 03-03-14 DATE

6-23-14
PLANS APPROVAL DATE

REGISTERED PROFESSIONAL ENGINEER RODRIGO M. CRUZ No. 57918 Exp. 06/30/16 CIVIL STATE OF CALIFORNIA

THE STATE OF CALIFORNIA OR ITS OFFICERS OR AGENTS SHALL NOT BE RESPONSIBLE FOR THE ACCURACY OR COMPLETENESS OF SCANNED COPIES OF THIS PLAN SHEET.

NOTE:

FOR ACCURATE RIGHT OF WAY DATA, CONTACT RIGHT OF WAY ENGINEERING AT THE DISTRICT OFFICE.

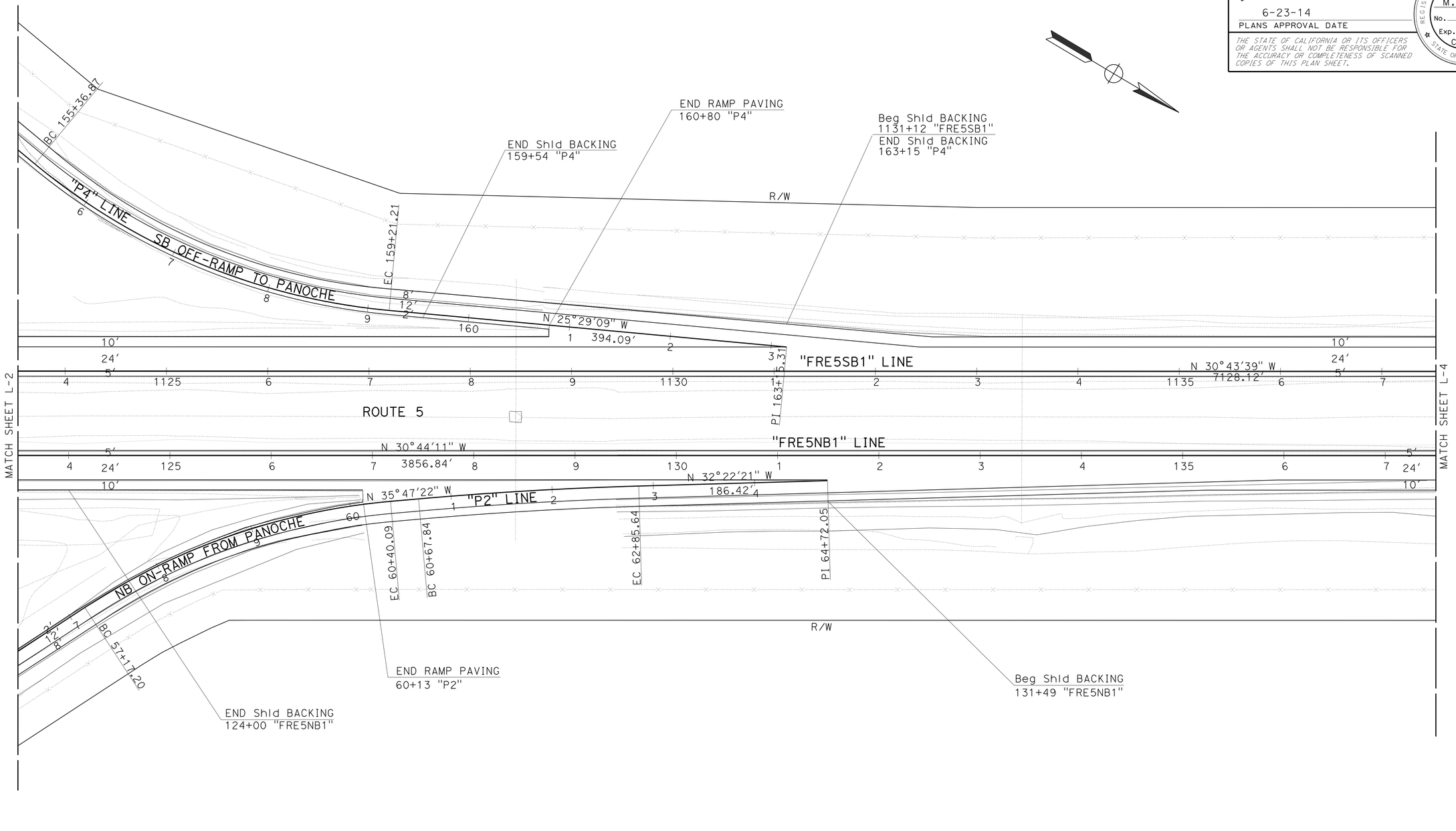

LAYOUT

SCALE: 1"=50'

L-3

REVISED BY	DATE REVISED
IRENE LEE	ROD CRUZ

CALCULATED-DESIGNED BY / CHECKED BY

FUNCTIONAL SUPERVISOR: JUN XU

STATE OF CALIFORNIA - DEPARTMENT OF TRANSPORTATION

Caltrans

DESIGN

LAST REVISION 06-09-14 | DATE PLOTTED => 01-JUL-2014 | TIME PLOTTED => 10:42

Dist	COUNTY	ROUTE	POST MILES TOTAL PROJECT	SHEET No.	TOTAL SHEETS
06	Fre	5	48.8/53.0	8	117

REGISTERED CIVIL ENGINEER 03-03-14 DATE

6-23-14
PLANS APPROVAL DATE

REGISTERED PROFESSIONAL ENGINEER RODRIGO M. CRUZ No. 57918 Exp. 06/30/16 CIVIL STATE OF CALIFORNIA

THE STATE OF CALIFORNIA OR ITS OFFICERS OR AGENTS SHALL NOT BE RESPONSIBLE FOR THE ACCURACY OR COMPLETENESS OF SCANNED COPIES OF THIS PLAN SHEET.

NOTE:

FOR ACCURATE RIGHT OF WAY DATA, CONTACT
RIGHT OF WAY ENGINEERING AT THE DISTRICT OFFICE.

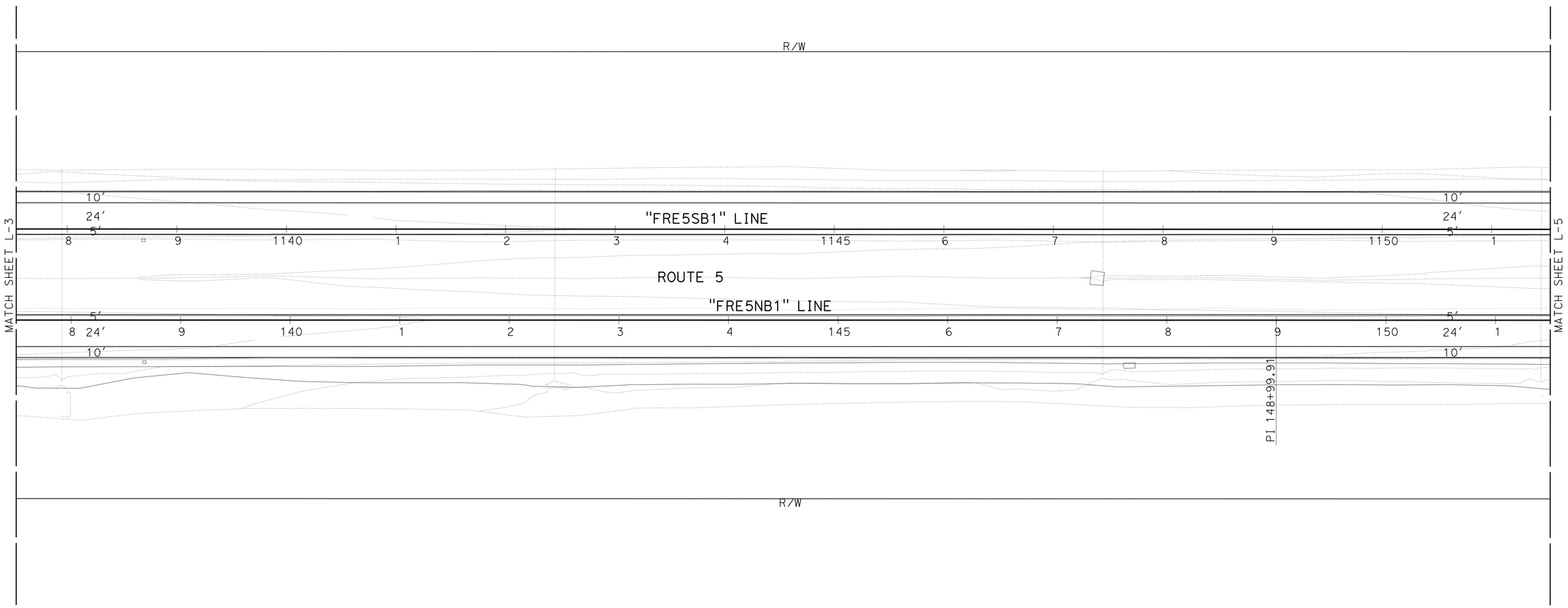

LAYOUT

SCALE: 1"=50′ **L-4**

REVISED BY	DATE REVISED
IRENE LEE	ROD CRUZ
CALCULATED-DESIGNED BY	CHECKED BY
FUNCTIONAL SUPERVISOR	JUN XU

STATE OF CALIFORNIA - DEPARTMENT OF TRANSPORTATION
Caltrans
DESIGN

LAST REVISION 06-09-14 | DATE PLOTTED => 01-JUL-2014 | TIME PLOTTED => 10:42

Dist	COUNTY	ROUTE	POST MILES TOTAL PROJECT	SHEET No.	TOTAL SHEETS
06	Fre	5	48.8/53.0	9	117

REGISTERED CIVIL ENGINEER 03-03-14 DATE

6-23-14
PLANS APPROVAL DATE

REGISTERED PROFESSIONAL ENGINEER RODRIGO M. CRUZ No. 57918 Exp. 06/30/16 CIVIL STATE OF CALIFORNIA

THE STATE OF CALIFORNIA OR ITS OFFICERS OR AGENTS SHALL NOT BE RESPONSIBLE FOR THE ACCURACY OR COMPLETENESS OF SCANNED COPIES OF THIS PLAN SHEET.

NOTE:

FOR ACCURATE RIGHT OF WAY DATA, CONTACT RIGHT OF WAY ENGINEERING AT THE DISTRICT OFFICE.

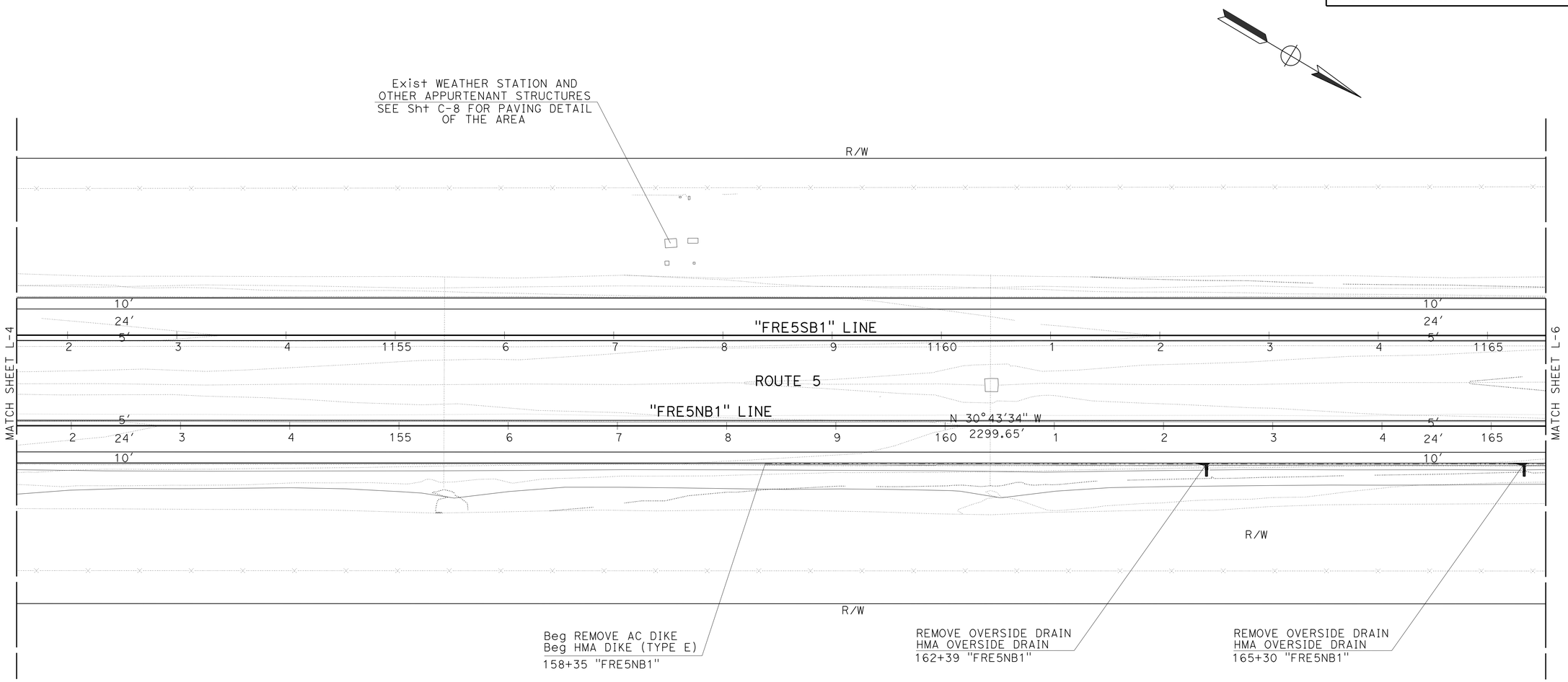

LAYOUT

SCALE: 1"=50′ **L-5**

REVISED BY	DATE REVISED

CALCULATED-DESIGNED BY	CHECKED BY
IRENE LEE	ROD CRUZ

FUNCTIONAL SUPERVISOR: JUN XU

STATE OF CALIFORNIA - DEPARTMENT OF TRANSPORTATION

Caltrans

DESIGN

LAST REVISION 06-09-14

DATE PLOTTED => 01-JUL-2014
TIME PLOTTED => 10:42

Dist	COUNTY	ROUTE	POST MILES TOTAL PROJECT	SHEET No.	TOTAL SHEETS
06	Fre	5	48.8/53.0	10	117

REGISTERED CIVIL ENGINEER 03-03-14 DATE

6-23-14
PLANS APPROVAL DATE

REGISTERED PROFESSIONAL ENGINEER RODRIGO M. CRUZ No. 57918 Exp. 06/30/16 CIVIL STATE OF CALIFORNIA

THE STATE OF CALIFORNIA OR ITS OFFICERS OR AGENTS SHALL NOT BE RESPONSIBLE FOR THE ACCURACY OR COMPLETENESS OF SCANNED COPIES OF THIS PLAN SHEET.

NOTE:

FOR ACCURATE RIGHT OF WAY DATA, CONTACT RIGHT OF WAY ENGINEERING AT THE DISTRICT OFFICE.

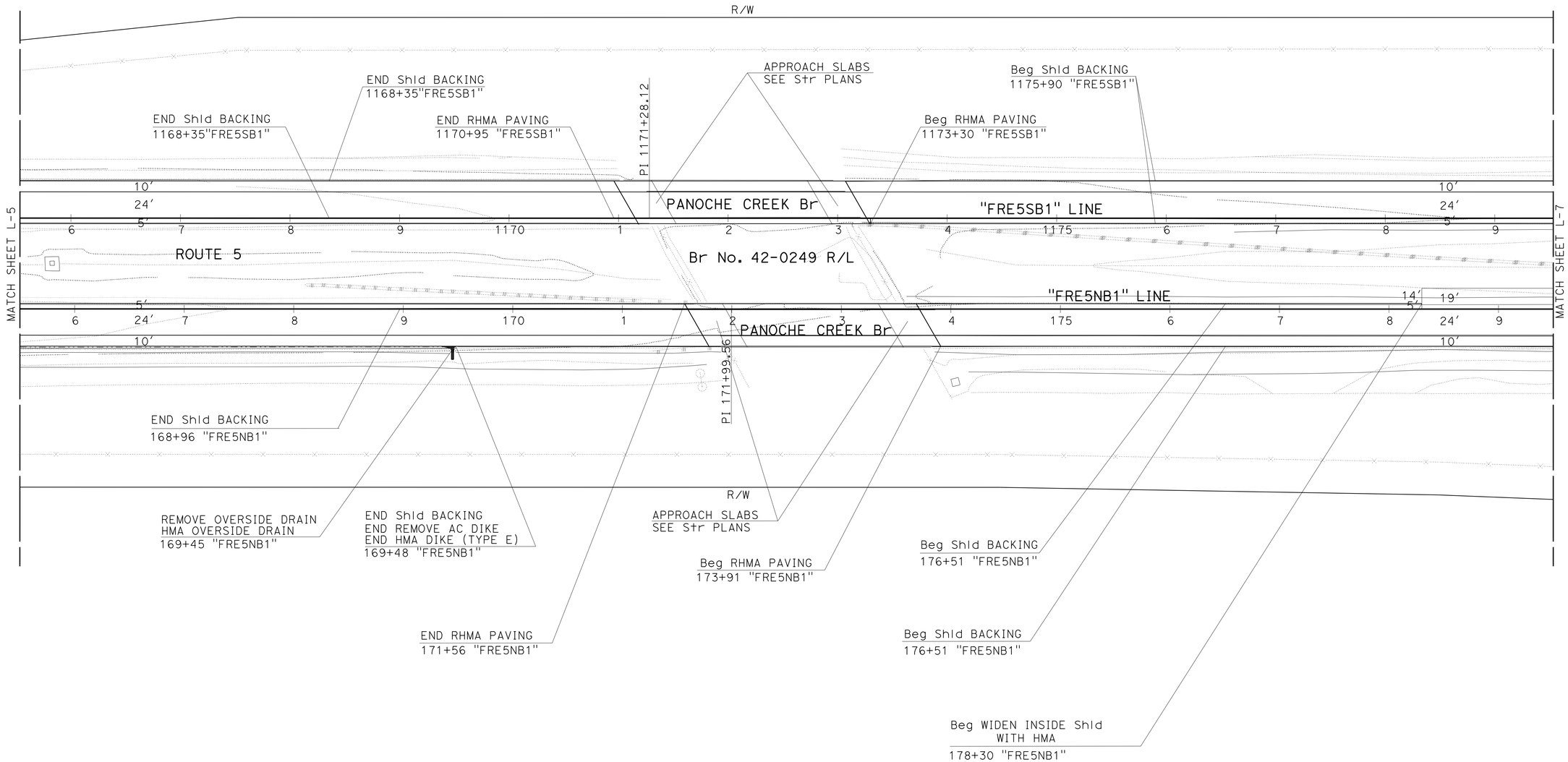

LAYOUT

SCALE: 1"=50'

L-6

REVISED BY	DATE REVISED
IRENE LEE	ROD CRUZ
CALCULATED-DESIGNED BY	CHECKED BY
FUNCTIONAL SUPERVISOR	JUN XU

STATE OF CALIFORNIA - DEPARTMENT OF TRANSPORTATION

Caltrans

DESIGN

LAST REVISION 06-09-14 | DATE PLOTTED => 01-JUL-2014 | TIME PLOTTED => 10:42

Dist	COUNTY	ROUTE	POST MILES TOTAL PROJECT	SHEET No.	TOTAL SHEETS
06	Fre	5	48.8/53.0	11	117

REGISTERED CIVIL ENGINEER 03-03-14 DATE

6-23-14
PLANS APPROVAL DATE

REGISTERED PROFESSIONAL ENGINEER RODRIGO M. CRUZ No. 57918 Exp. 06/30/16 CIVIL STATE OF CALIFORNIA

THE STATE OF CALIFORNIA OR ITS OFFICERS OR AGENTS SHALL NOT BE RESPONSIBLE FOR THE ACCURACY OR COMPLETENESS OF SCANNED COPIES OF THIS PLAN SHEET.

NOTE:

FOR ACCURATE RIGHT OF WAY DATA, CONTACT RIGHT OF WAY ENGINEERING AT THE DISTRICT OFFICE.

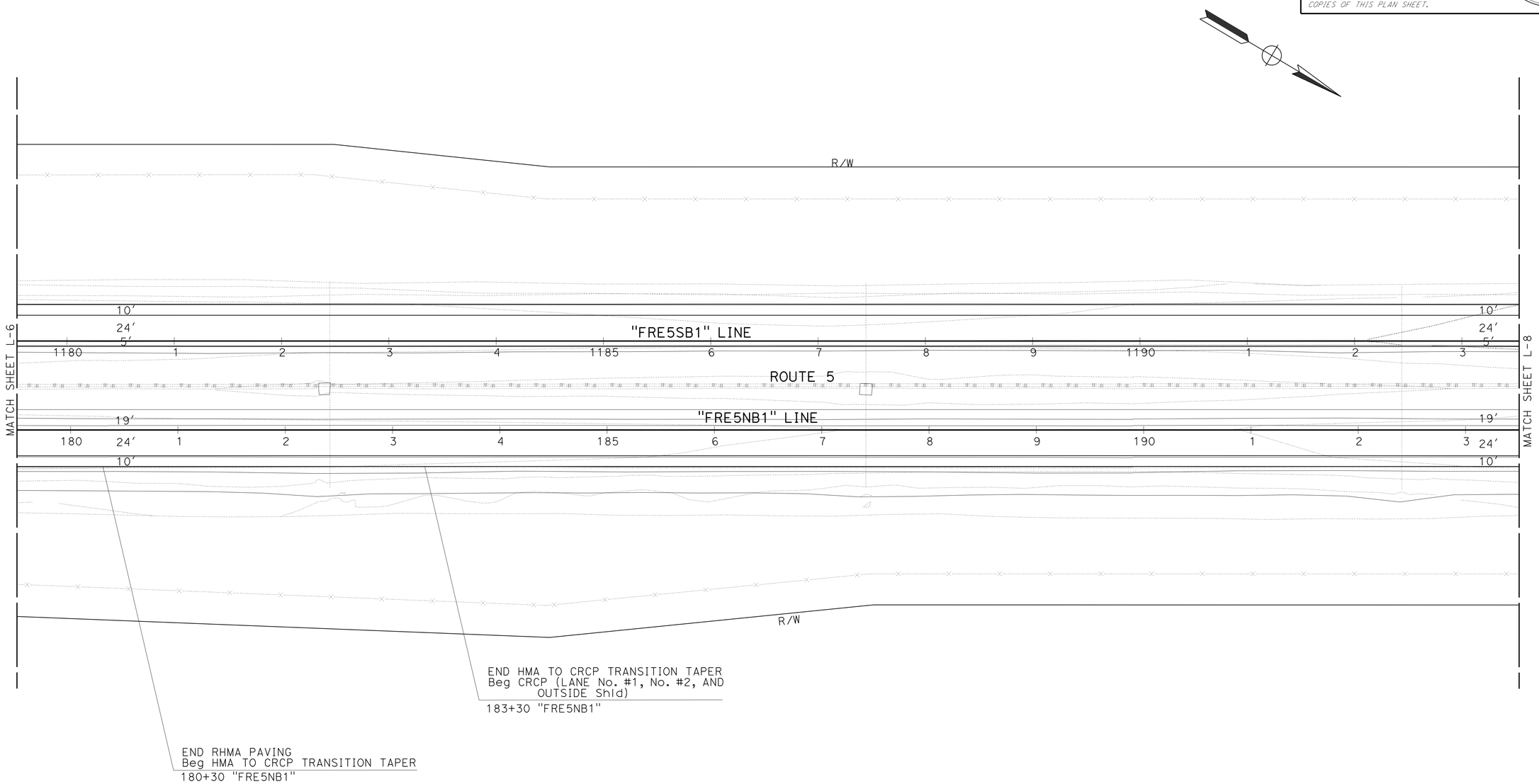

LAYOUT

SCALE: 1"=50′ **L-7**

STATE OF CALIFORNIA - DEPARTMENT OF TRANSPORTATION
Caltrans
DESIGN

FUNCTIONAL SUPERVISOR: JUN XU
CALCULATED-DESIGNED BY: IRENE LEE
CHECKED BY: ROD CRUZ
REVISED BY
DATE REVISED

LAST REVISION 06-09-14
DATE PLOTTED => 01-JUL-2014
TIME PLOTTED => 10:42

Dist	COUNTY	ROUTE	POST MILES TOTAL PROJECT	SHEET No.	TOTAL SHEETS
06	Fre	5	48.8/53.0	12	117

REGISTERED CIVIL ENGINEER 03-03-14 DATE

6-23-14
PLANS APPROVAL DATE

REGISTERED PROFESSIONAL ENGINEER RODRIGO M. CRUZ No. 57918 Exp. 06/30/16 CIVIL STATE OF CALIFORNIA

THE STATE OF CALIFORNIA OR ITS OFFICERS OR AGENTS SHALL NOT BE RESPONSIBLE FOR THE ACCURACY OR COMPLETENESS OF SCANNED COPIES OF THIS PLAN SHEET.

NOTE:

FOR ACCURATE RIGHT OF WAY DATA, CONTACT
RIGHT OF WAY ENGINEERING AT THE DISTRICT OFFICE.

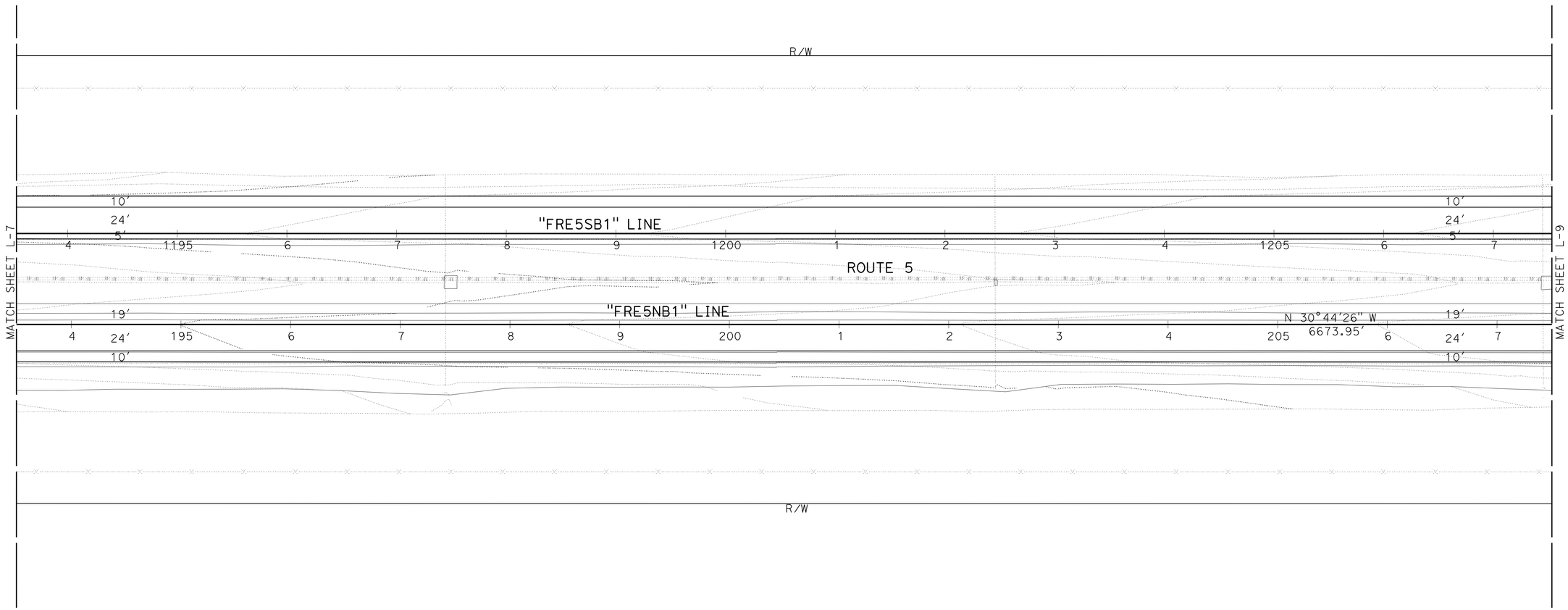

LAYOUT

SCALE: 1"=50′ **L-8**

STATE OF CALIFORNIA - DEPARTMENT OF TRANSPORTATION
Caltrans® **DESIGN**

FUNCTIONAL SUPERVISOR: JUN XU
CALCULATED-DESIGNED BY: IRENE LEE
CHECKED BY: ROD CRUZ
REVISED BY
DATE REVISED

LAST REVISION 06-09-14
DATE PLOTTED => 01-JUL-2014
TIME PLOTTED => 10:42

Dist	COUNTY	ROUTE	POST MILES TOTAL PROJECT	SHEET No.	TOTAL SHEETS
06	Fre	5	48.8/53.0	13	117

REGISTERED CIVIL ENGINEER 03-03-14 DATE

6-23-14
PLANS APPROVAL DATE

REGISTERED PROFESSIONAL ENGINEER RODRIGO M. CRUZ No. 57918 Exp. 06/30/16 CIVIL STATE OF CALIFORNIA

THE STATE OF CALIFORNIA OR ITS OFFICERS OR AGENTS SHALL NOT BE RESPONSIBLE FOR THE ACCURACY OR COMPLETENESS OF SCANNED COPIES OF THIS PLAN SHEET.

NOTE:

FOR ACCURATE RIGHT OF WAY DATA, CONTACT
RIGHT OF WAY ENGINEERING AT THE DISTRICT OFFICE.

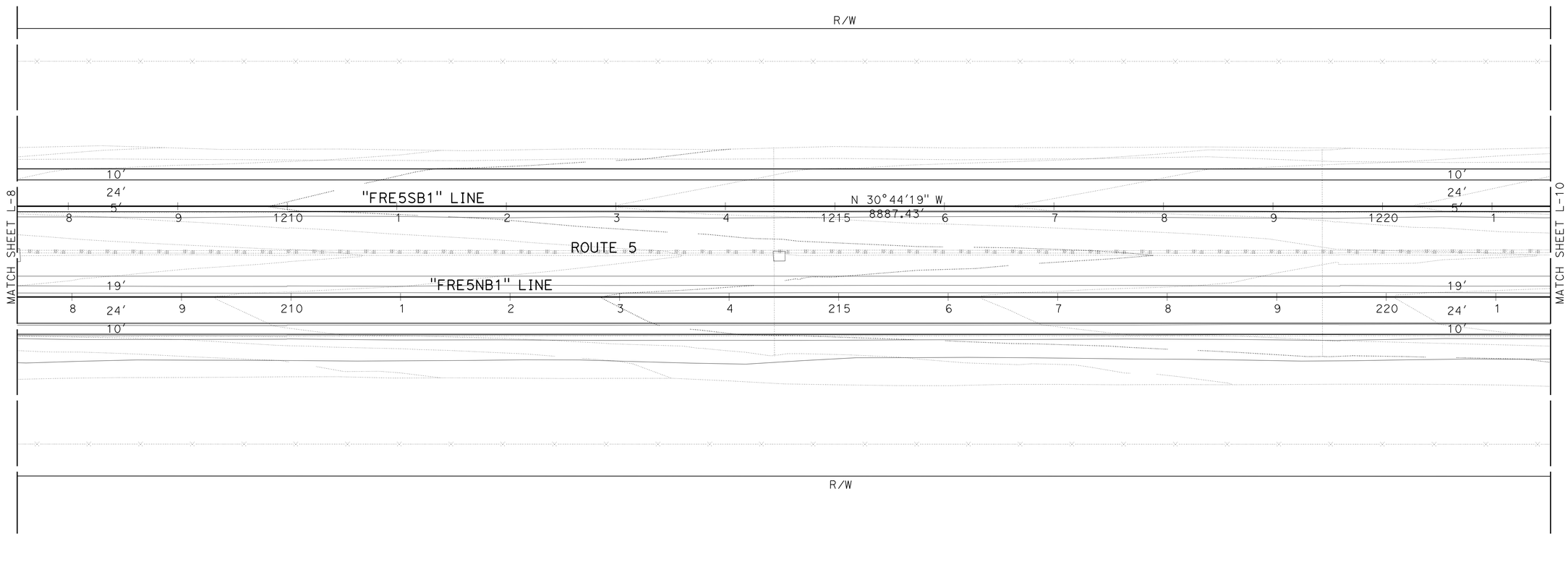

LAYOUT

SCALE: 1"=50′ **L-9**

REVISED BY | DATE REVISED

IRENE LEE | ROD CRUZ

CALCULATED-DESIGNED BY | CHECKED BY

FUNCTIONAL SUPERVISOR: JUN XU

STATE OF CALIFORNIA - DEPARTMENT OF TRANSPORTATION

Caltrans® DESIGN

LAST REVISION 06-09-14 | DATE PLOTTED => 01-JUL-2014 | TIME PLOTTED => 10:42

Dist	COUNTY	ROUTE	POST MILES TOTAL PROJECT	SHEET No.	TOTAL SHEETS
06	Fre	5	48.8/53.0	14	117

REGISTERED CIVIL ENGINEER 03-03-14 DATE

6-23-14
PLANS APPROVAL DATE

REGISTERED PROFESSIONAL ENGINEER RODRIGO M. CRUZ No. 57918 Exp. 06/30/16 CIVIL STATE OF CALIFORNIA

THE STATE OF CALIFORNIA OR ITS OFFICERS OR AGENTS SHALL NOT BE RESPONSIBLE FOR THE ACCURACY OR COMPLETENESS OF SCANNED COPIES OF THIS PLAN SHEET.

NOTE:

FOR ACCURATE RIGHT OF WAY DATA, CONTACT RIGHT OF WAY ENGINEERING AT THE DISTRICT OFFICE.

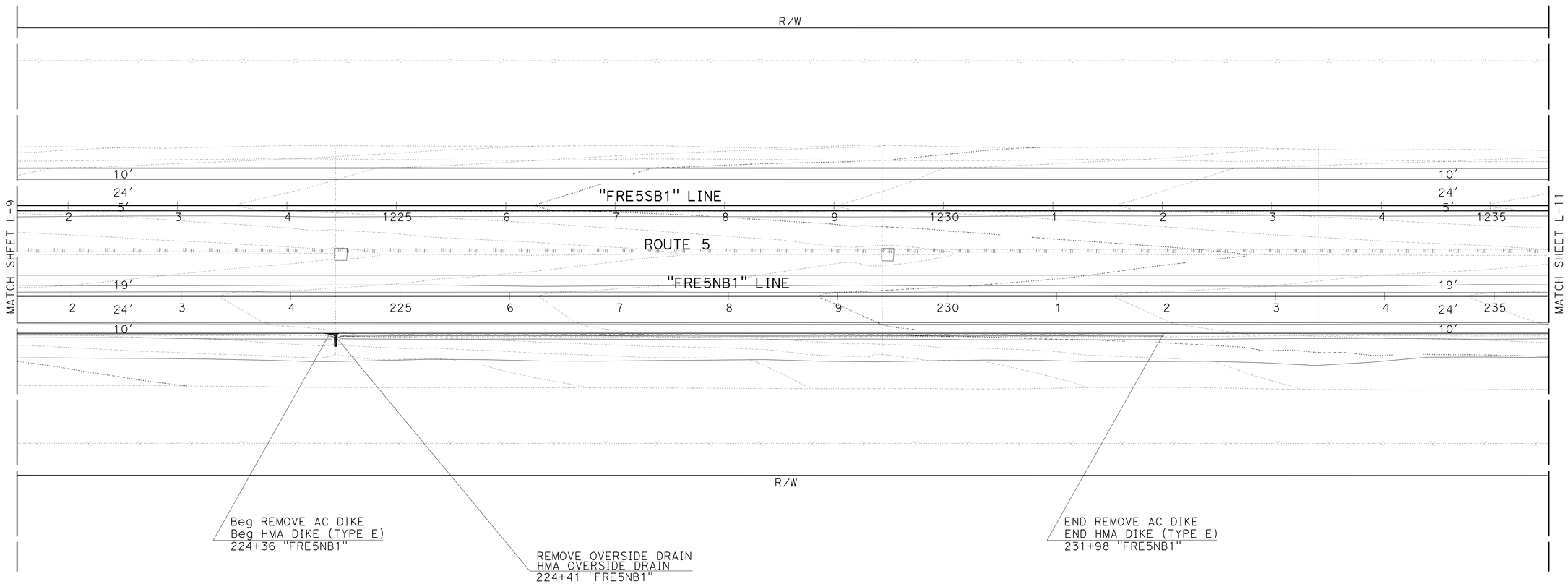

LAYOUT

SCALE: 1"=50′ **L-10**

REVISED BY | DATE REVISED

IRENE LEE | ROD CRUZ

CALCULATED-DESIGNED BY | CHECKED BY

FUNCTIONAL SUPERVISOR: JUN XU

STATE OF CALIFORNIA - DEPARTMENT OF TRANSPORTATION

Caltrans® **DESIGN**

LAST REVISION 06-09-14 | DATE PLOTTED => 01-JUL-2014 | TIME PLOTTED => 10:42

Dist	COUNTY	ROUTE	POST MILES TOTAL PROJECT	SHEET No.	TOTAL SHEETS
06	Fre	5	48.8/53.0	15	117

REGISTERED CIVIL ENGINEER 03-03-14 DATE

6-23-14
PLANS APPROVAL DATE

REGISTERED PROFESSIONAL ENGINEER
RODRIGO M. CRUZ
No. 57918
Exp. 06/30/16
CIVIL
STATE OF CALIFORNIA

THE STATE OF CALIFORNIA OR ITS OFFICERS OR AGENTS SHALL NOT BE RESPONSIBLE FOR THE ACCURACY OR COMPLETENESS OF SCANNED COPIES OF THIS PLAN SHEET.

NOTE:

FOR ACCURATE RIGHT OF WAY DATA, CONTACT
RIGHT OF WAY ENGINEERING AT THE DISTRICT OFFICE.

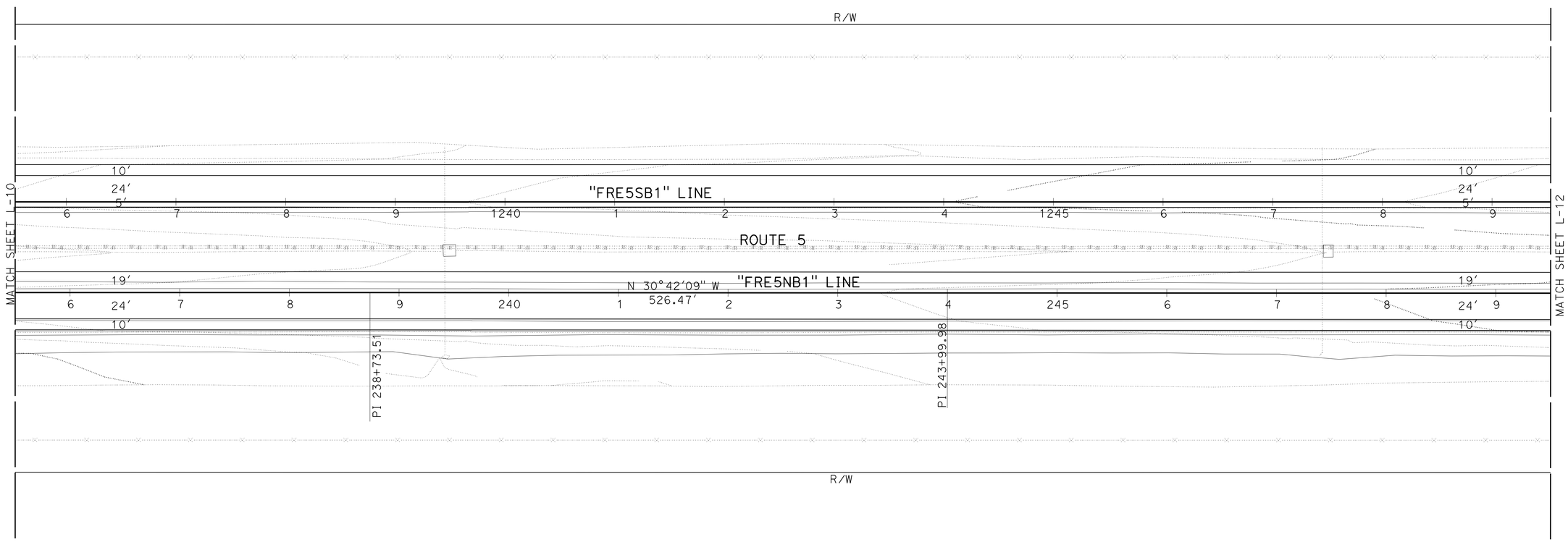

LAYOUT

SCALE: 1"=50′ **L-11**

STATE OF CALIFORNIA - DEPARTMENT OF TRANSPORTATION
Caltrans
DESIGN

FUNCTIONAL SUPERVISOR: JUN XU
CALCULATED-DESIGNED BY: IRENE LEE
CHECKED BY: ROD CRUZ
REVISED BY
DATE REVISED

LAST REVISION 06-09-14
DATE PLOTTED => 01-JUL-2014
TIME PLOTTED => 10:42

Dist	COUNTY	ROUTE	POST MILES TOTAL PROJECT	SHEET No.	TOTAL SHEETS
06	Fre	5	48.8/53.0	16	117

REGISTERED CIVIL ENGINEER 03-03-14 DATE

6-23-14
PLANS APPROVAL DATE

REGISTERED PROFESSIONAL ENGINEER RODRIGO M. CRUZ No. 57918 Exp. 06/30/16 CIVIL STATE OF CALIFORNIA

THE STATE OF CALIFORNIA OR ITS OFFICERS OR AGENTS SHALL NOT BE RESPONSIBLE FOR THE ACCURACY OR COMPLETENESS OF SCANNED COPIES OF THIS PLAN SHEET.

NOTE:

FOR ACCURATE RIGHT OF WAY DATA, CONTACT
RIGHT OF WAY ENGINEERING AT THE DISTRICT OFFICE.

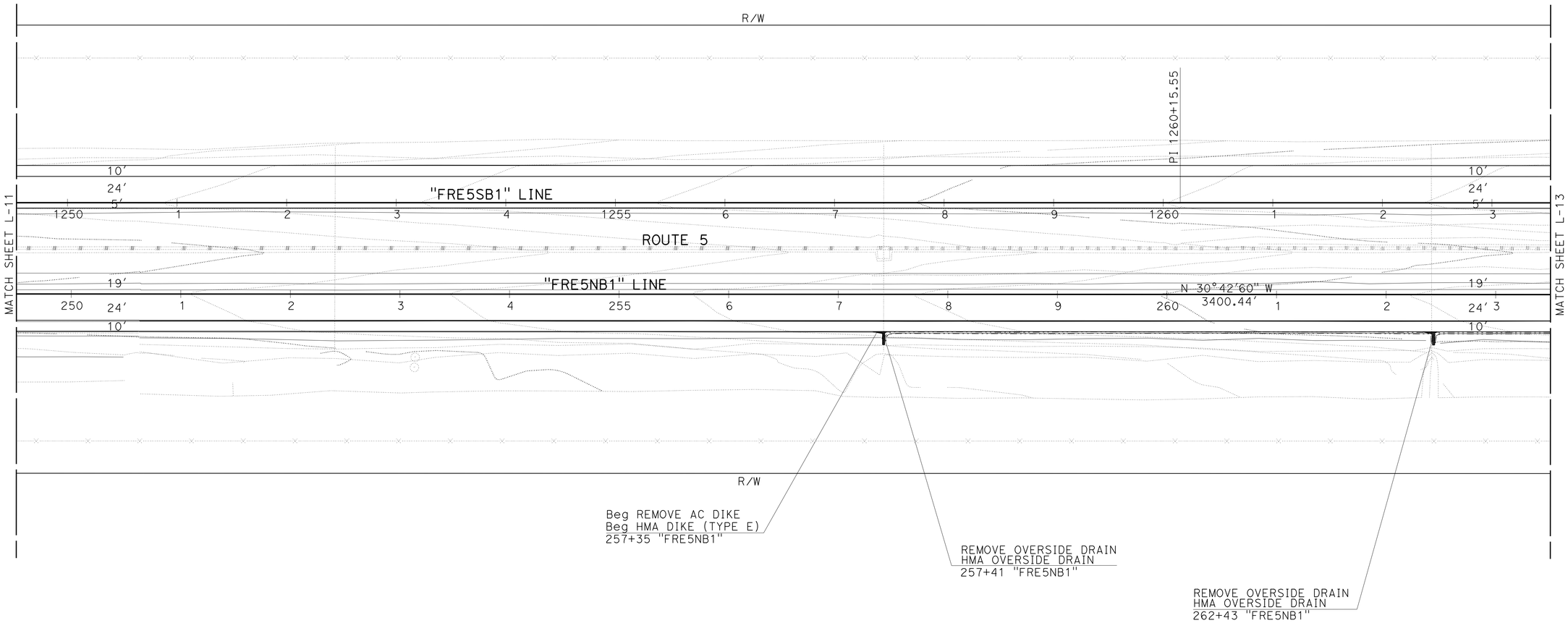

LAYOUT

SCALE: 1"=50' **L-12**

STATE OF CALIFORNIA - DEPARTMENT OF TRANSPORTATION
Caltrans
DESIGN

FUNCTIONAL SUPERVISOR: JUN XU
CALCULATED-DESIGNED BY: IRENE LEE
CHECKED BY: ROD CRUZ
REVISED BY
DATE REVISED

LAST REVISION 06-09-14
DATE PLOTTED => 01-JUL-2014
TIME PLOTTED => 10:42

Dist	COUNTY	ROUTE	POST MILES TOTAL PROJECT	SHEET No.	TOTAL SHEETS
06	Fre	5	48.8/53.0	17	117

REGISTERED CIVIL ENGINEER 03-03-14 DATE

6-23-14
PLANS APPROVAL DATE

REGISTERED PROFESSIONAL ENGINEER
RODRIGO M. CRUZ
No. 57918
Exp. 06/30/16
CIVIL
STATE OF CALIFORNIA

THE STATE OF CALIFORNIA OR ITS OFFICERS OR AGENTS SHALL NOT BE RESPONSIBLE FOR THE ACCURACY OR COMPLETENESS OF SCANNED COPIES OF THIS PLAN SHEET.

NOTE:

FOR ACCURATE RIGHT OF WAY DATA, CONTACT
RIGHT OF WAY ENGINEERING AT THE DISTRICT OFFICE.

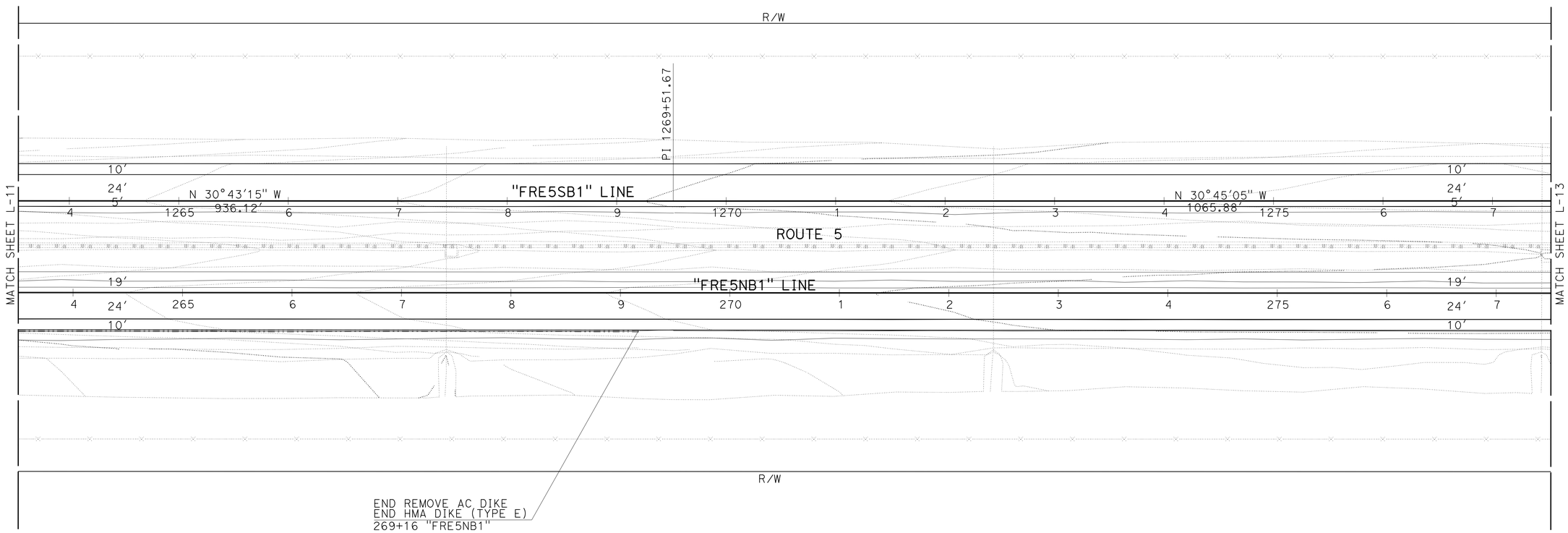

LAYOUT

SCALE: 1"=50′ **L-13**

REVISED BY | DATE REVISED
IRENE LEE | ROD CRUZ
CALCULATED-DESIGNED BY | CHECKED BY
FUNCTIONAL SUPERVISOR
JUN XU

STATE OF CALIFORNIA - DEPARTMENT OF TRANSPORTATION
Caltrans
DESIGN

LAST REVISION 06-09-14
DATE PLOTTED => 01-JUL-2014
TIME PLOTTED => 10:42

Dist	COUNTY	ROUTE	POST MILES TOTAL PROJECT	SHEET No.	TOTAL SHEETS
06	Fre	5	48.8/53.0	18	117

REGISTERED CIVIL ENGINEER 03-03-14 DATE

6-23-14
PLANS APPROVAL DATE

REGISTERED PROFESSIONAL ENGINEER RODRIGO M. CRUZ No. 57918 Exp. 06/30/16 CIVIL STATE OF CALIFORNIA

THE STATE OF CALIFORNIA OR ITS OFFICERS OR AGENTS SHALL NOT BE RESPONSIBLE FOR THE ACCURACY OR COMPLETENESS OF SCANNED COPIES OF THIS PLAN SHEET.

NOTE:

FOR ACCURATE RIGHT OF WAY DATA, CONTACT
RIGHT OF WAY ENGINEERING AT THE DISTRICT OFFICE.

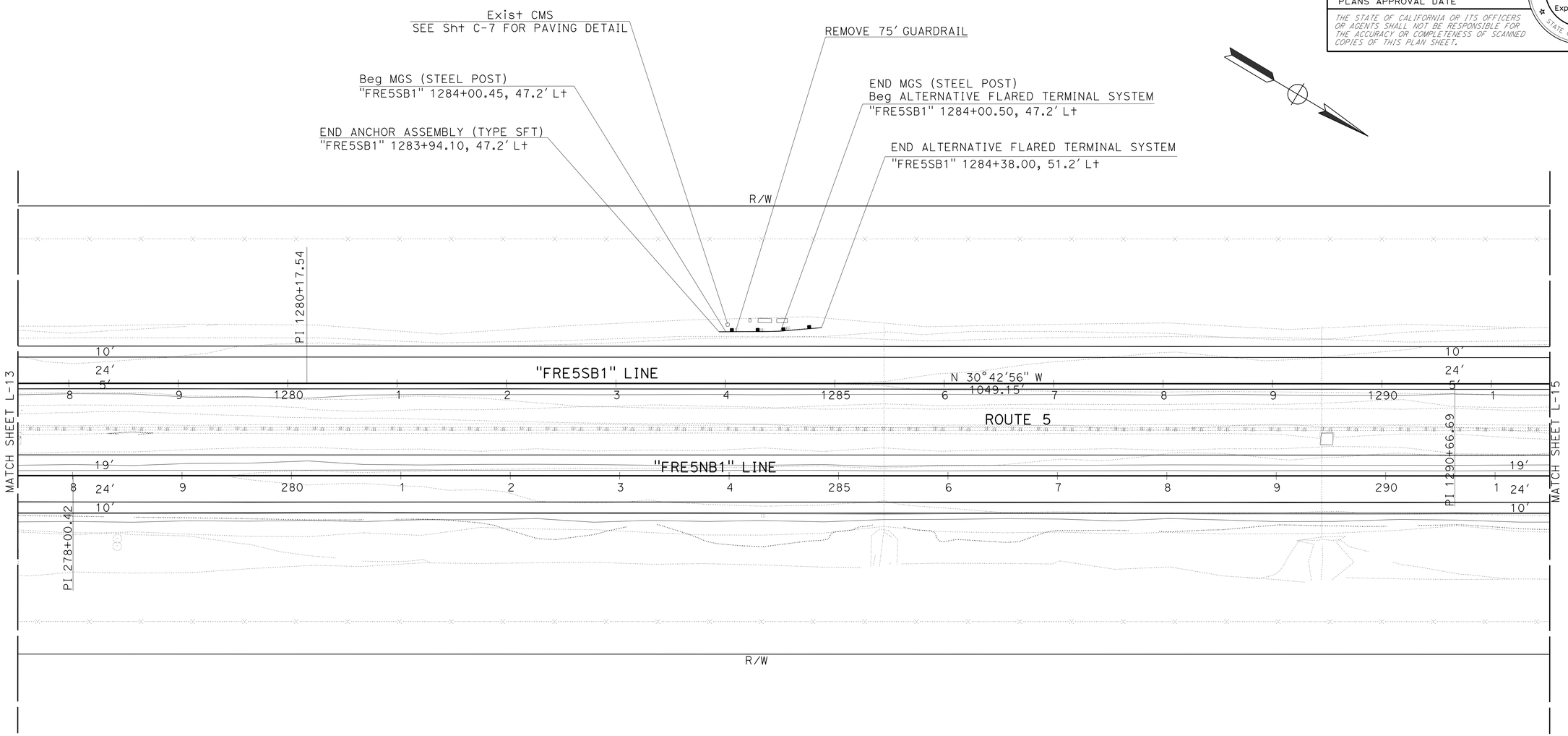

LAYOUT

SCALE: 1"=50' **L-14**

STATE OF CALIFORNIA - DEPARTMENT OF TRANSPORTATION
Caltrans
DESIGN

FUNCTIONAL SUPERVISOR: JUN XU
CALCULATED-DESIGNED BY: IRENE LEE
CHECKED BY: ROD CRUZ
REVISED BY
DATE REVISED

LAST REVISION 06-09-14
DATE PLOTTED => 01-JUL-2014
TIME PLOTTED => 10:42

Dist	COUNTY	ROUTE	POST MILES TOTAL PROJECT	SHEET No.	TOTAL SHEETS
06	Fre	5	48.8/53.0	19	117

REGISTERED CIVIL ENGINEER 03-03-14 DATE

6-23-14
PLANS APPROVAL DATE

REGISTERED PROFESSIONAL ENGINEER RODRIGO M. CRUZ No. 57918 Exp. 06/30/16 CIVIL STATE OF CALIFORNIA

THE STATE OF CALIFORNIA OR ITS OFFICERS OR AGENTS SHALL NOT BE RESPONSIBLE FOR THE ACCURACY OR COMPLETENESS OF SCANNED COPIES OF THIS PLAN SHEET.

NOTE:

FOR ACCURATE RIGHT OF WAY DATA, CONTACT RIGHT OF WAY ENGINEERING AT THE DISTRICT OFFICE.

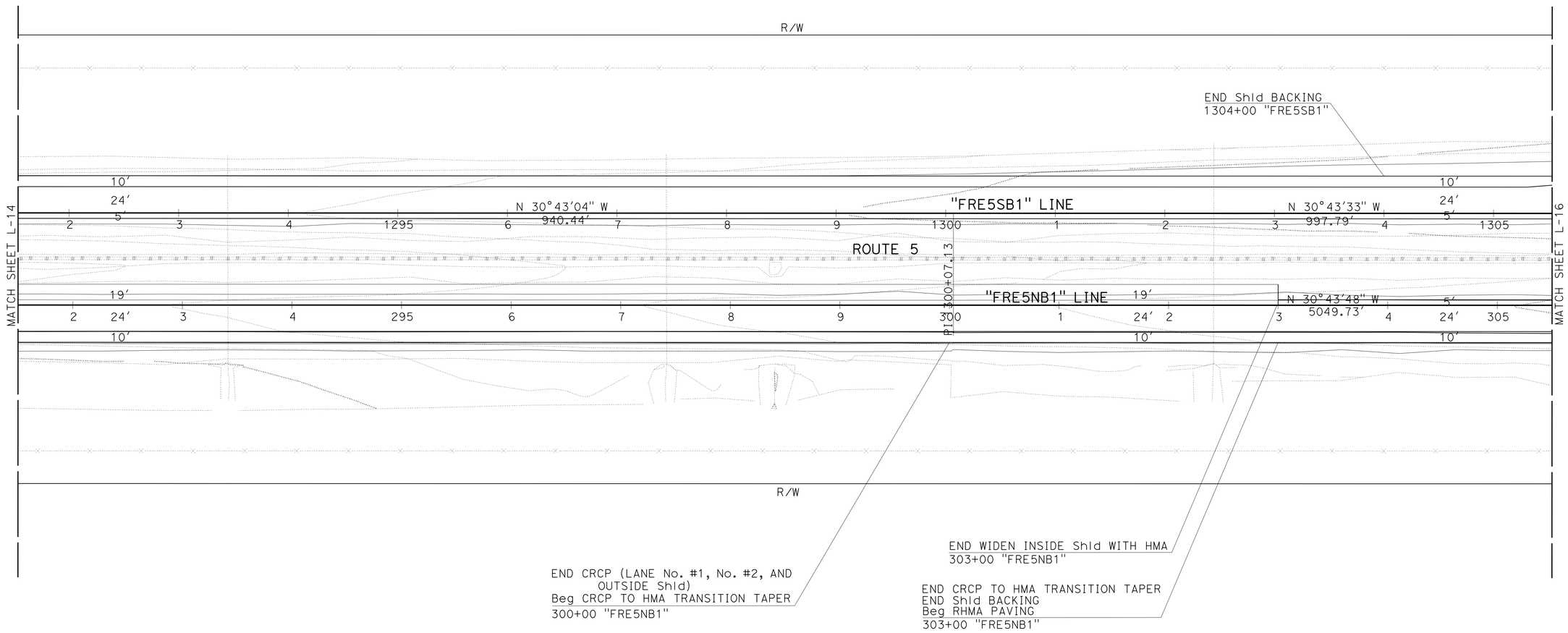

LAYOUT

SCALE: 1"=50′ **L-15**

REVISED BY	DATE REVISED
IRENE LEE	ROD CRUZ
CALCULATED-DESIGNED BY	CHECKED BY
FUNCTIONAL SUPERVISOR	JUN XU

STATE OF CALIFORNIA - DEPARTMENT OF TRANSPORTATION

Caltrans

DESIGN

LAST REVISION 06-09-14 | DATE PLOTTED => 01-JUL-2014 | TIME PLOTTED => 10:42

Dist	COUNTY	ROUTE	POST MILES TOTAL PROJECT	SHEET No.	TOTAL SHEETS
06	Fre	5	48.8/53.0	20	117

REGISTERED CIVIL ENGINEER 03-03-14 DATE

6-23-14
PLANS APPROVAL DATE

REGISTERED PROFESSIONAL ENGINEER RODRIGO M. CRUZ No. 57918 Exp. 06/30/16 CIVIL STATE OF CALIFORNIA

THE STATE OF CALIFORNIA OR ITS OFFICERS OR AGENTS SHALL NOT BE RESPONSIBLE FOR THE ACCURACY OR COMPLETENESS OF SCANNED COPIES OF THIS PLAN SHEET.

NOTE:

FOR ACCURATE RIGHT OF WAY DATA, CONTACT RIGHT OF WAY ENGINEERING AT THE DISTRICT OFFICE.

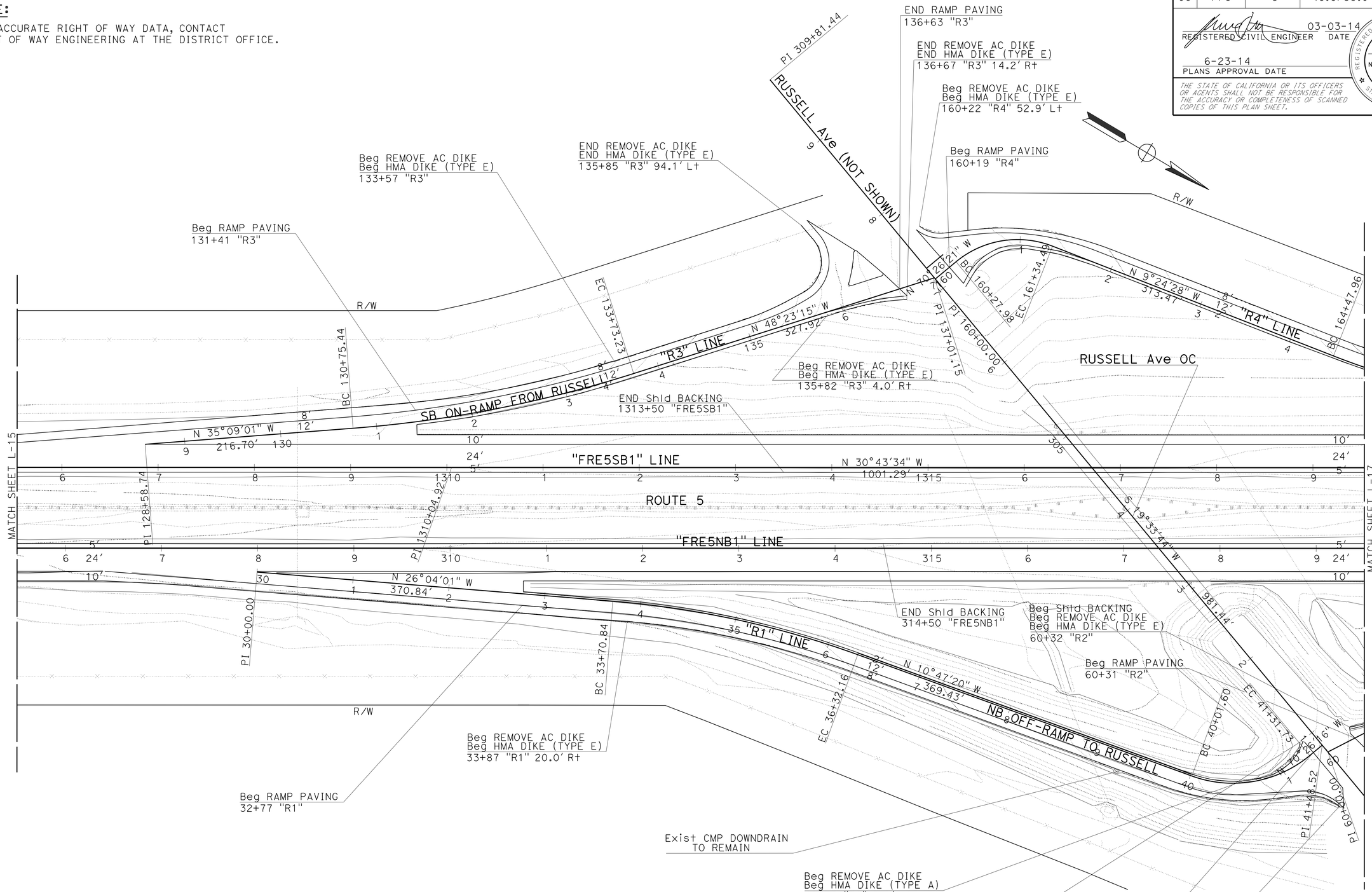

LAYOUT

SCALE: 1"=50'

L-16

REVISED BY	DATE REVISED
IRENE LEE	ROD CRUZ
CALCULATED-DESIGNED BY	CHECKED BY
FUNCTIONAL SUPERVISOR	JUN XU

STATE OF CALIFORNIA - DEPARTMENT OF TRANSPORTATION

Caltrans

DESIGN

LAST REVISION 06-09-14 | DATE PLOTTED => 01-JUL-2014 | TIME PLOTTED => 10:42

Dist	COUNTY	ROUTE	POST MILES TOTAL PROJECT	SHEET No.	TOTAL SHEETS
06	Fre	5	48.8/53.0	21	117

REGISTERED CIVIL ENGINEER 03-03-14 DATE

6-23-14
PLANS APPROVAL DATE

REGISTERED PROFESSIONAL ENGINEER RODRIGO M. CRUZ No. 57918 Exp. 06/30/16 CIVIL STATE OF CALIFORNIA

THE STATE OF CALIFORNIA OR ITS OFFICERS OR AGENTS SHALL NOT BE RESPONSIBLE FOR THE ACCURACY OR COMPLETENESS OF SCANNED COPIES OF THIS PLAN SHEET.

NOTE:

FOR ACCURATE RIGHT OF WAY DATA, CONTACT
RIGHT OF WAY ENGINEERING AT THE DISTRICT OFFICE.

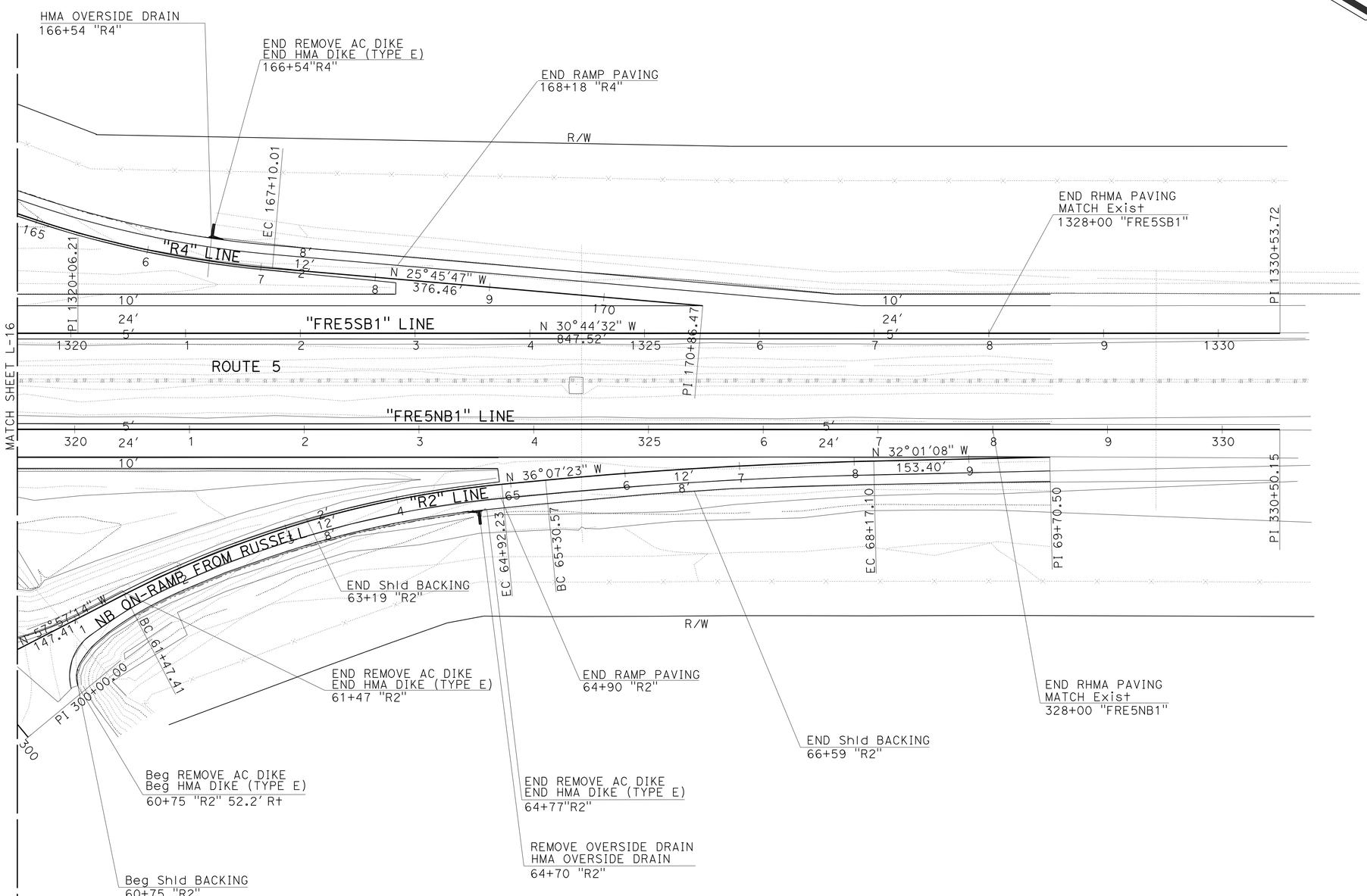

LAYOUT

SCALE: 1"=50' **L-17**

STATE OF CALIFORNIA - DEPARTMENT OF TRANSPORTATION
Caltrans
DESIGN

FUNCTIONAL SUPERVISOR: JUN XU
CALCULATED-DESIGNED BY: IRENE LEE
CHECKED BY: ROD CRUZ
REVISED BY
DATE REVISED

LAST REVISION 06-09-14
DATE PLOTTED => 01-JUL-2014
TIME PLOTTED => 10:42

Dist	COUNTY	ROUTE	POST MILES TOTAL PROJECT	SHEET No.	TOTAL SHEETS
06	Fre	5	48.8/53.0	22	117

REGISTERED CIVIL ENGINEER 03-03-14 DATE

6-23-14
PLANS APPROVAL DATE

REGISTERED PROFESSIONAL ENGINEER RODRIGO M. CRUZ No. 57918 Exp. 06/30/16 CIVIL STATE OF CALIFORNIA

THE STATE OF CALIFORNIA OR ITS OFFICERS OR AGENTS SHALL NOT BE RESPONSIBLE FOR THE ACCURACY OR COMPLETENESS OF SCANNED COPIES OF THIS PLAN SHEET.

NOTES:

1. FOR THICKNESS OF RHMA/HMA OVERLAY, SEE TYPICAL X-SECTIONS SHEETS.
2. TRANSITION TAPER IN CONCRETE PAVEMENT HAS BEEN PREVIOUSLY GROUND AND REPLACED WITH AC. THIS AREA MUST BE COLD PLANED.
3. FOR RANDOM PCC PANEL REPLACEMENT LOCATIONS, SEE SHEET Q-2.
4. RAMP TRANSITION TAPER LENGTH:
   - RAMP "P4" - 125′
   - RAMP "R2" - 170′
   - OTHER RAMPS - 200′

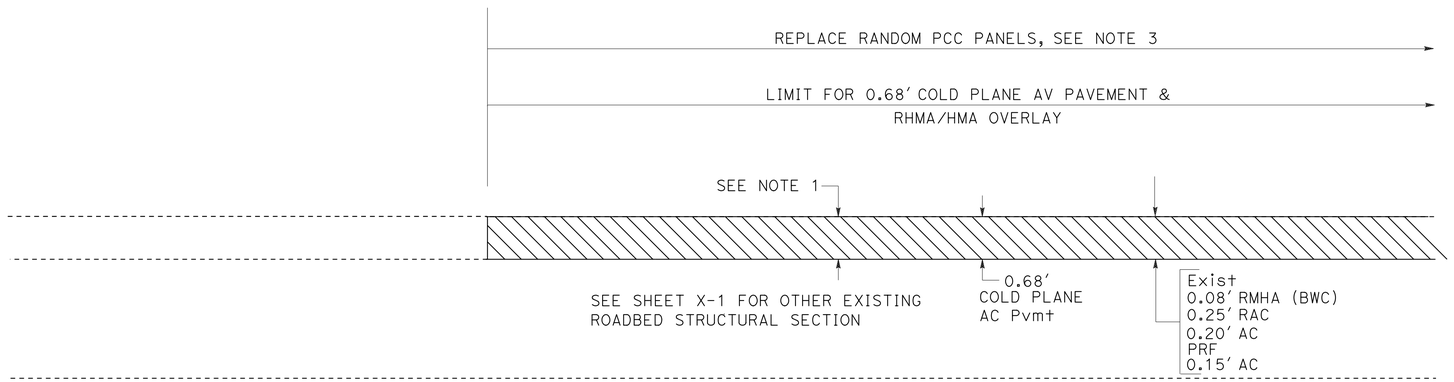

NB AND SB LANE AND SHOULDER RESURFACING DETAIL TO MATCH EXISTING AC PAVEMENT

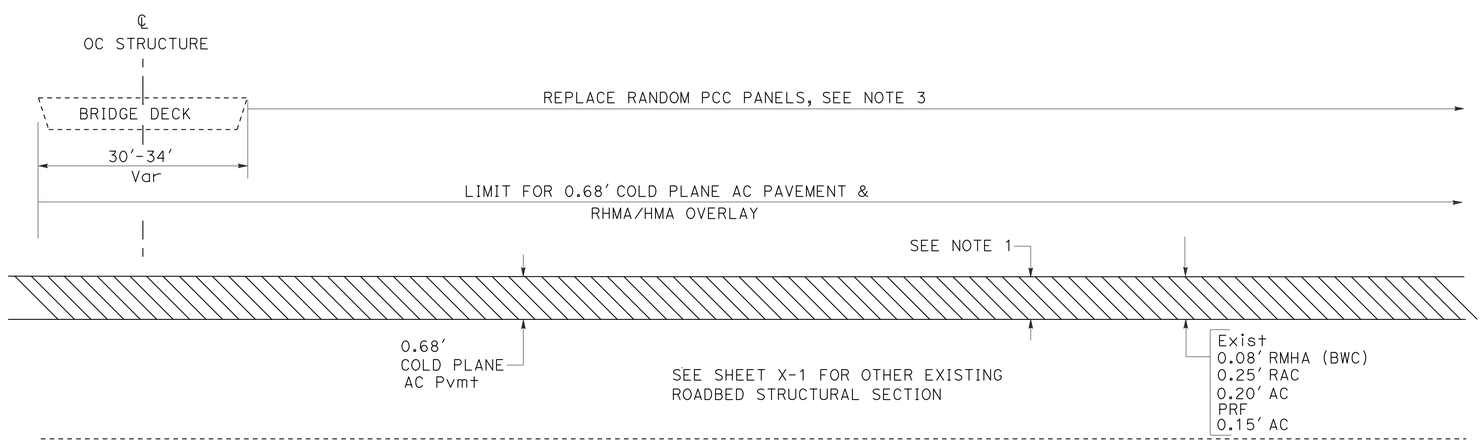

TYPICAL RESURFACING DETAIL AT NB AND SB OC STRUCTURES (PANOCHE Rd OC & RUSSELL Ave OC) (SYMMETRICAL ALONG THE ℄ OC STRUCTURE)

ABBREVIATIONS:

BWC	BONDED WEARING COARSE
RAC	RUBBERIZED ASPHALT CONCRETE
SE	SAFETY EDGE

LEGEND:

- COLD PLANE AC PAVEMENT
- MAINLINE PAVING
- RAMP PAVING
- PAVEMENT TRANSITION PANEL
- APPROACH SLAB REPLACEMENT
- REMOVE AND REPLACE PCC PANEL
- CRCP LIMIT
- DIRECTION OF TRAFFIC

CONSTRUCTION DETAILS

NO SCALE

C-1

REVISED BY	DATE REVISED

CALCULATED-DESIGNED BY	CHECKED BY
ROD CRUZ	IRENE LEE

FUNCTIONAL SUPERVISOR: JUN XU

STATE OF CALIFORNIA - DEPARTMENT OF TRANSPORTATION

Caltrans

DESIGN

LAST REVISION 05-30-14 | DATE PLOTTED => 01-JUL-2014 | TIME PLOTTED => 10:42

Dist	COUNTY	ROUTE	POST MILES TOTAL PROJECT	SHEET No.	TOTAL SHEETS
06	Fre	5	48.8/53.0	23	117

REGISTERED CIVIL ENGINEER 03-03-14 DATE

6-23-14
PLANS APPROVAL DATE

REGISTERED PROFESSIONAL ENGINEER RODRIGO M. CRUZ No. 57918 Exp. 06/30/16 CIVIL STATE OF CALIFORNIA

THE STATE OF CALIFORNIA OR ITS OFFICERS OR AGENTS SHALL NOT BE RESPONSIBLE FOR THE ACCURACY OR COMPLETENESS OF SCANNED COPIES OF THIS PLAN SHEET.

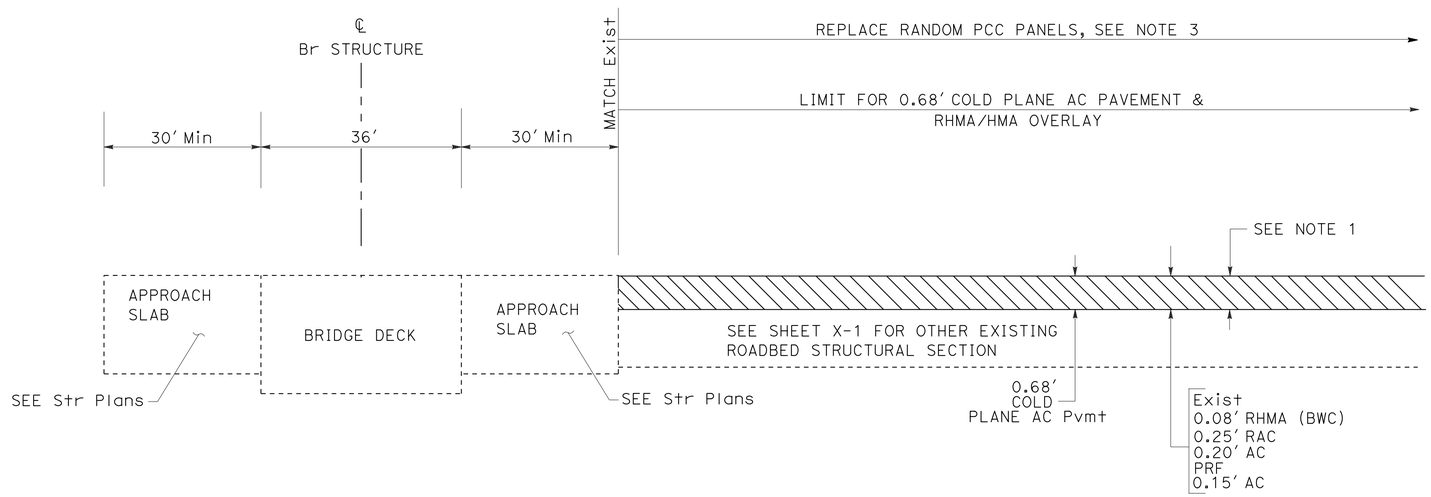

TYPICAL RESURFACING DETAIL AT NB AND SB PANOCHE CREEK Br
(SYMMETRICAL ALONG THE ℄ Br STRUCTURE)

CONSTRUCTION DETAILS

NO SCALE

C-2

STATE OF CALIFORNIA - DEPARTMENT OF TRANSPORTATION
Caltrans
DESIGN

FUNCTIONAL SUPERVISOR: JUN XU
CALCULATED-DESIGNED BY: ROD CRUZ
CHECKED BY: IRENE LEE
REVISED BY
DATE REVISED

LAST REVISION 05-30-14
DATE PLOTTED => 01-JUL-2014
TIME PLOTTED => 10:42

Dist	COUNTY	ROUTE	POST MILES TOTAL PROJECT	SHEET No.	TOTAL SHEETS
06	Fre	5	48.8/53.0	24	117

REGISTERED CIVIL ENGINEER 03-03-14 DATE

6-23-14
PLANS APPROVAL DATE

REGISTERED PROFESSIONAL ENGINEER RODRIGO M. CRUZ No. 57918 Exp. 06/30/16 CIVIL STATE OF CALIFORNIA

THE STATE OF CALIFORNIA OR ITS OFFICERS OR AGENTS SHALL NOT BE RESPONSIBLE FOR THE ACCURACY OR COMPLETENESS OF SCANNED COPIES OF THIS PLAN SHEET.

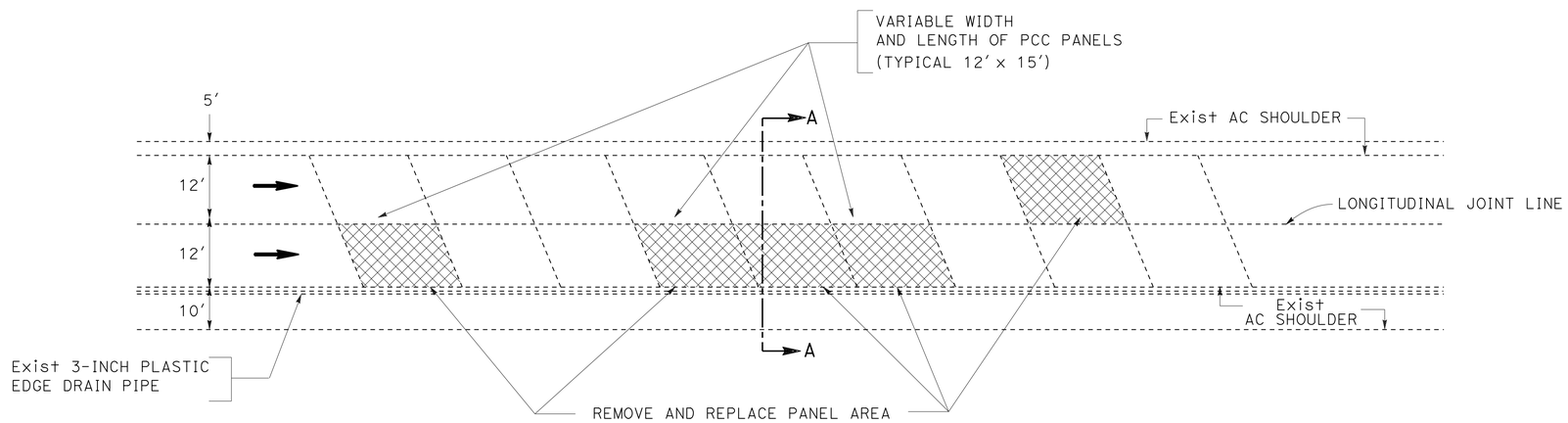

PLAN

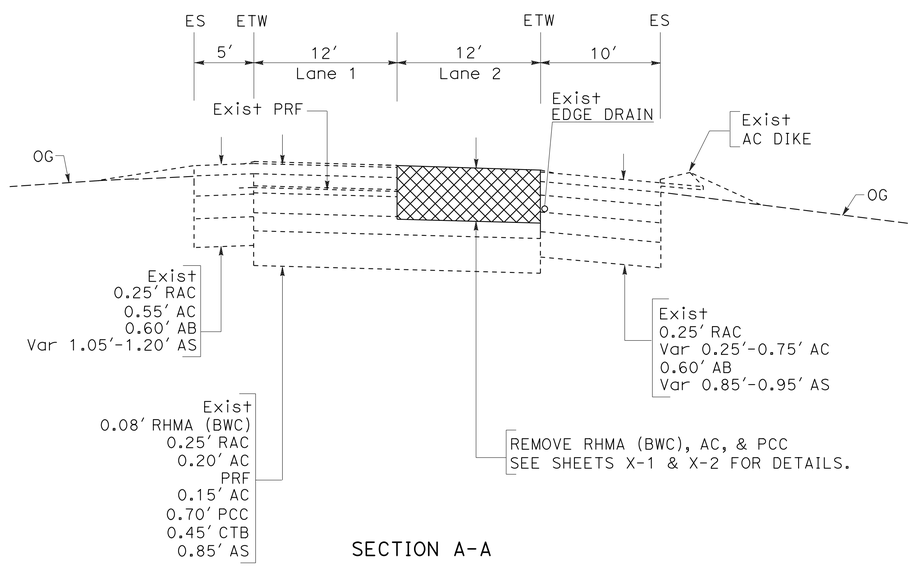

SECTION A-A

TYPICAL PANEL REPLACEMENT

CONSTRUCTION DETAILS

NO SCALE

C-3

STATE OF CALIFORNIA - DEPARTMENT OF TRANSPORTATION
Caltrans
DESIGN

FUNCTIONAL SUPERVISOR: JUN XU
CALCULATED-DESIGNED BY: ROD CRUZ
CHECKED BY: IRENE LEE
REVISED BY
DATE REVISED

LAST REVISION 06-20-14
DATE PLOTTED => 01-JUL-2014
TIME PLOTTED => 10:43

Dist	COUNTY	ROUTE	POST MILES TOTAL PROJECT	SHEET No.	TOTAL SHEETS
06	Fre	5	48.8/53.0	25	117

REGISTERED CIVIL ENGINEER 03-03-14 DATE

6-23-14
PLANS APPROVAL DATE

REGISTERED PROFESSIONAL ENGINEER RODRIGO M. CRUZ No. 57918 Exp. 06/30/16 CIVIL STATE OF CALIFORNIA

THE STATE OF CALIFORNIA OR ITS OFFICERS OR AGENTS SHALL NOT BE RESPONSIBLE FOR THE ACCURACY OR COMPLETENESS OF SCANNED COPIES OF THIS PLAN SHEET.

NOTE: (THIS SHEET ONLY)

FOR DETAILS NOT SHOWN, SEE REVISED STANDARD PLAN A77R1.

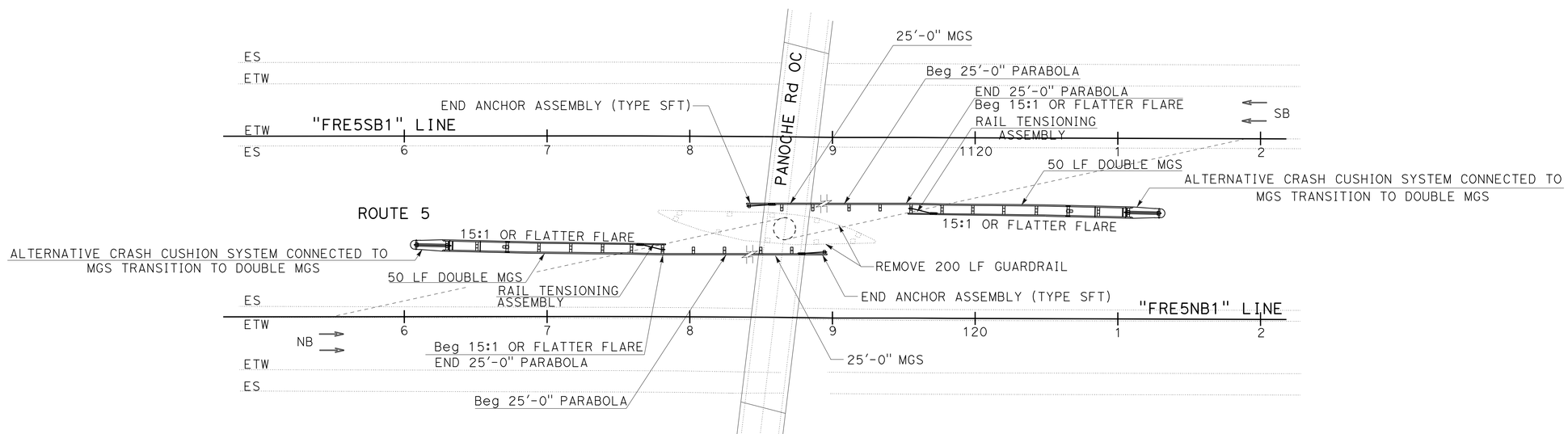

MIDWEST GUARDRAIL SYSTEM TYPE 14A LAYOUT INSTALLATION
ROUTE 5/PANOCHE ROAD OC

CONSTRUCTION DETAILS

NO SCALE

C-4

STATE OF CALIFORNIA - DEPARTMENT OF TRANSPORTATION
Caltrans® DESIGN

FUNCTIONAL SUPERVISOR: JUN XU

CALCULATED-DESIGNED BY: ROD CRUZ
CHECKED BY: IRENE LEE

REVISED BY
DATE REVISED

LAST REVISION 06-20-14
DATE PLOTTED => 01-JUL-2014
TIME PLOTTED => 10:43

Dist	COUNTY	ROUTE	POST MILES TOTAL PROJECT	SHEET No.	TOTAL SHEETS
06	Fre	5	48.8/53.0	26	117

REGISTERED CIVIL ENGINEER 03-03-14 DATE

6-23-14
PLANS APPROVAL DATE

REGISTERED PROFESSIONAL ENGINEER RODRIGO M. CRUZ No. 57918 Exp. 06/30/16 CIVIL STATE OF CALIFORNIA

THE STATE OF CALIFORNIA OR ITS OFFICERS OR AGENTS SHALL NOT BE RESPONSIBLE FOR THE ACCURACY OR COMPLETENESS OF SCANNED COPIES OF THIS PLAN SHEET.

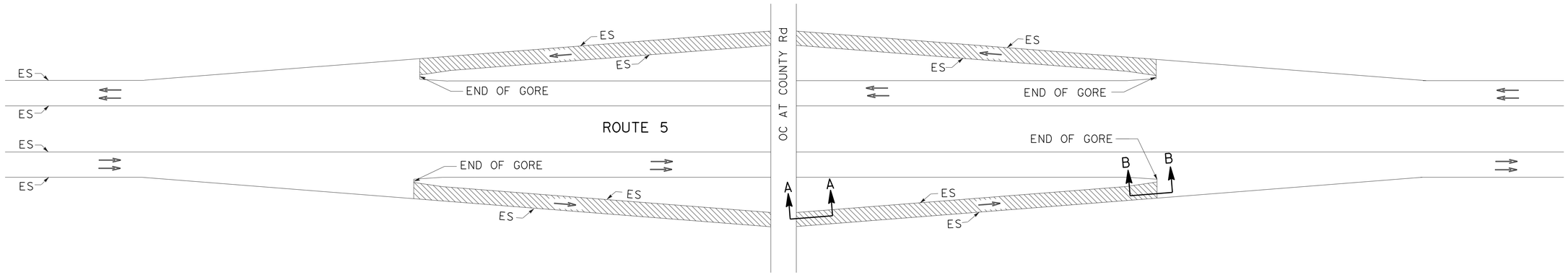

PLAN

TYPICAL ON/OFF RAMP PAVING DETAIL

PANOCHE Rd
RUSSELL Ave

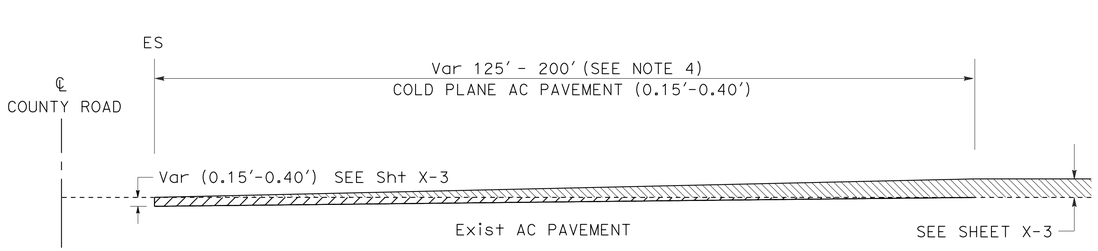

SECTION A-A

TYPICAL ON/OFF RAMP TRANSITION TO COUNTY ROAD

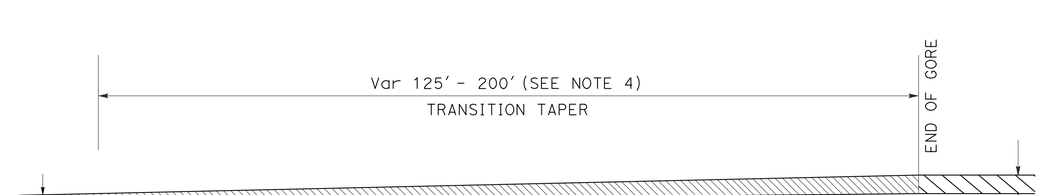

SECTION B-B

TYPICAL ON/OFF RAMP/GORE TRANSITION DETAIL

CONSTRUCTION DETAILS

NO SCALE

C-5

STATE OF CALIFORNIA - DEPARTMENT OF TRANSPORTATION
Caltrans DESIGN

FUNCTIONAL SUPERVISOR: JUN XU
CALCULATED-DESIGNED BY: ROD CRUZ
CHECKED BY: IRENE LEE
REVISED BY
DATE REVISED

LAST REVISION 06-09-14 | DATE PLOTTED => 01-JUL-2014 | TIME PLOTTED => 10:43

Dist	COUNTY	ROUTE	POST MILES TOTAL PROJECT	SHEET No.	TOTAL SHEETS
06	Fre	5	48.8/53.0	27	117

REGISTERED CIVIL ENGINEER 03-03-14 DATE

6-23-14
PLANS APPROVAL DATE

REGISTERED PROFESSIONAL ENGINEER RODRIGO M. CRUZ No. 57918 Exp. 06/30/16 CIVIL STATE OF CALIFORNIA

THE STATE OF CALIFORNIA OR ITS OFFICERS OR AGENTS SHALL NOT BE RESPONSIBLE FOR THE ACCURACY OR COMPLETENESS OF SCANNED COPIES OF THIS PLAN SHEET.

NOTES: (THIS SHEET ONLY)

1. THE MINIMUM 6" OFFSET FROM ETW TO THE EDGE OF THE RUMBLE STRIP SHOULD BE USED WHENEVER POSSIBLE TO MINIMIZE ENCROACHMENT INTO THE BICYCLE OUTSIDE SHOULDER AREA.
2. RUMBLE STRIPS AS SHOWN ON THIS PLANSHEET, SHALL NOT BE CONSTRUCTED ON BRIDGE DECKS, BRIDGE APPROACH SLABS OR ACROSS THE FULL WIDTH OF RAMPS AND PUBLIC OR PRIVATE ROAD APPROACHES.
3. PLACE AC DIKE AT VARIOUS LOCATIONS AS SHOWN ON LAYOUTS SHEETS AND SHEET Q-2 FOR DETAILS.
4. INSIDE SHOULDER THAT STARTS AT Sta 176+00 AND ENDS AT Sta 304+00 FOR NORTHBOUND DIRECTION IS 19 FEET WIDE.
5. REFER TO SHEET Q-2 FOR LOCATION OF CONCRETE PAVEMENT RUMBLE STRIP.

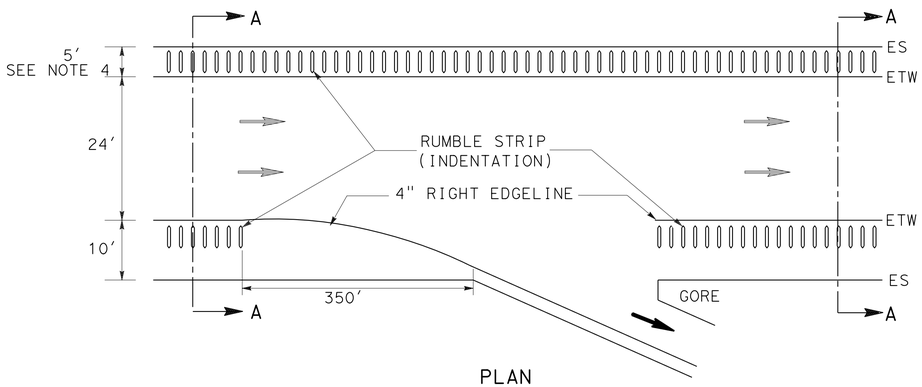

PLAN

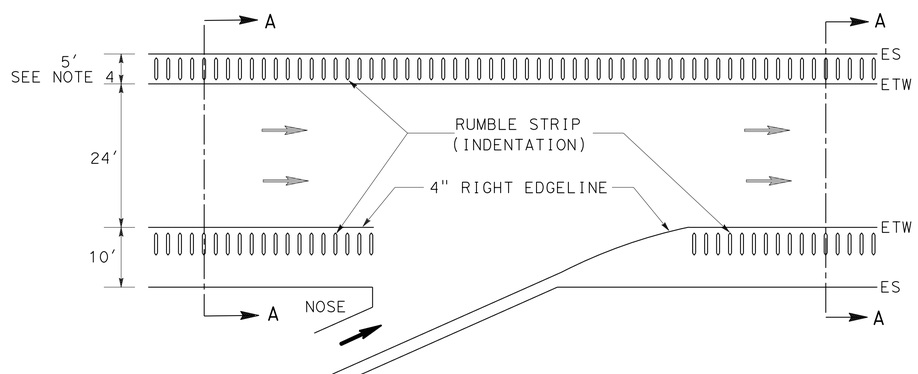

PLAN

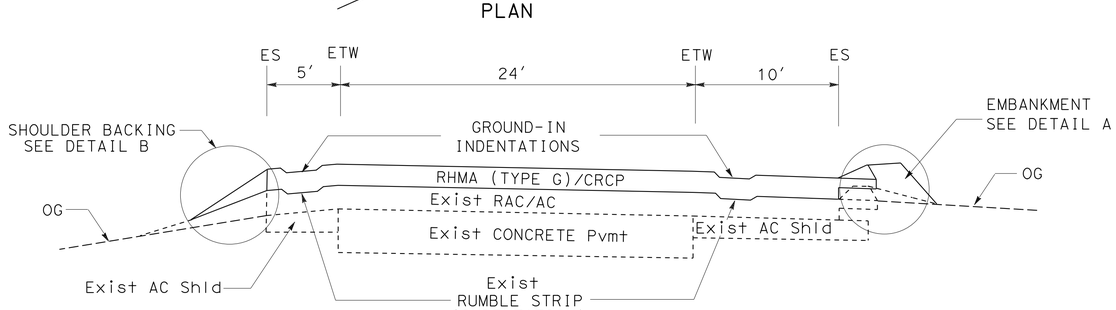

SECTION A-A

RUMBLE STRIP DETAILS

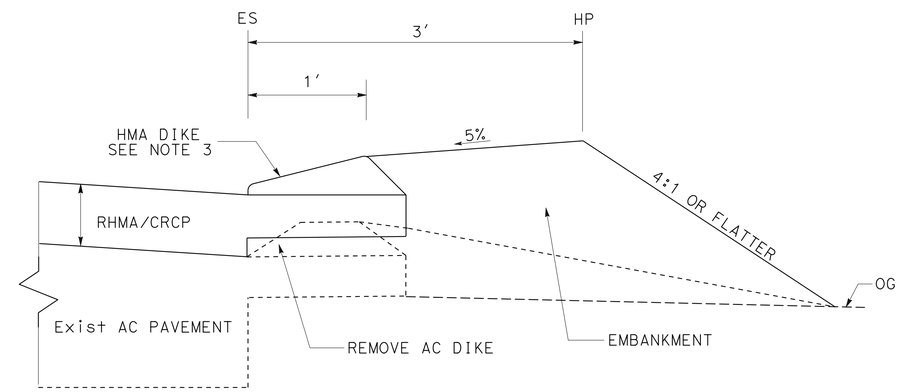

EMBANKMENT MATERIAL BEHIND BACK OF DIKE

DETAIL A

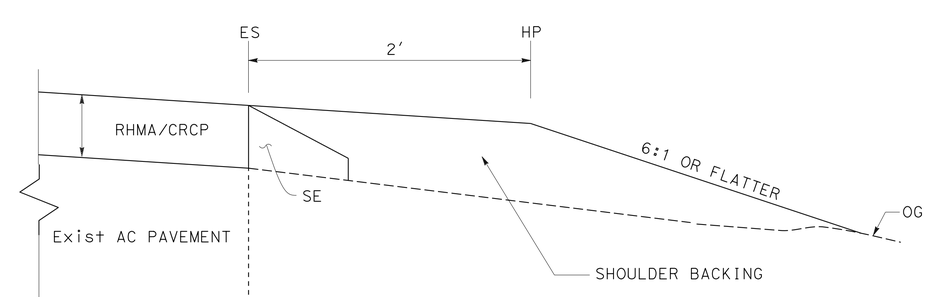

SHOULDER BACKING

DETAIL B

CONSTRUCTION DETAILS

NO SCALE

C-6

STATE OF CALIFORNIA - DEPARTMENT OF TRANSPORTATION
Caltrans®
DESIGN
FUNCTIONAL SUPERVISOR: JUN XU
CALCULATED-DESIGNED BY: ROD CRUZ
CHECKED BY: IRENE LEE
REVISED BY
DATE REVISED

LAST REVISION 06-20-14
DATE PLOTTED => 01-JUL-2014
TIME PLOTTED => 10:43

Dist	COUNTY	ROUTE	POST MILES TOTAL PROJECT	SHEET No.	TOTAL SHEETS
06	Fre	5	48.8/53.0	28	117

REGISTERED CIVIL ENGINEER 03-03-14 DATE

6-23-14
PLANS APPROVAL DATE

REGISTERED PROFESSIONAL ENGINEER RODRIGO M. CRUZ No. 57918 Exp. 06/30/16 CIVIL STATE OF CALIFORNIA

THE STATE OF CALIFORNIA OR ITS OFFICERS OR AGENTS SHALL NOT BE RESPONSIBLE FOR THE ACCURACY OR COMPLETENESS OF SCANNED COPIES OF THIS PLAN SHEET.

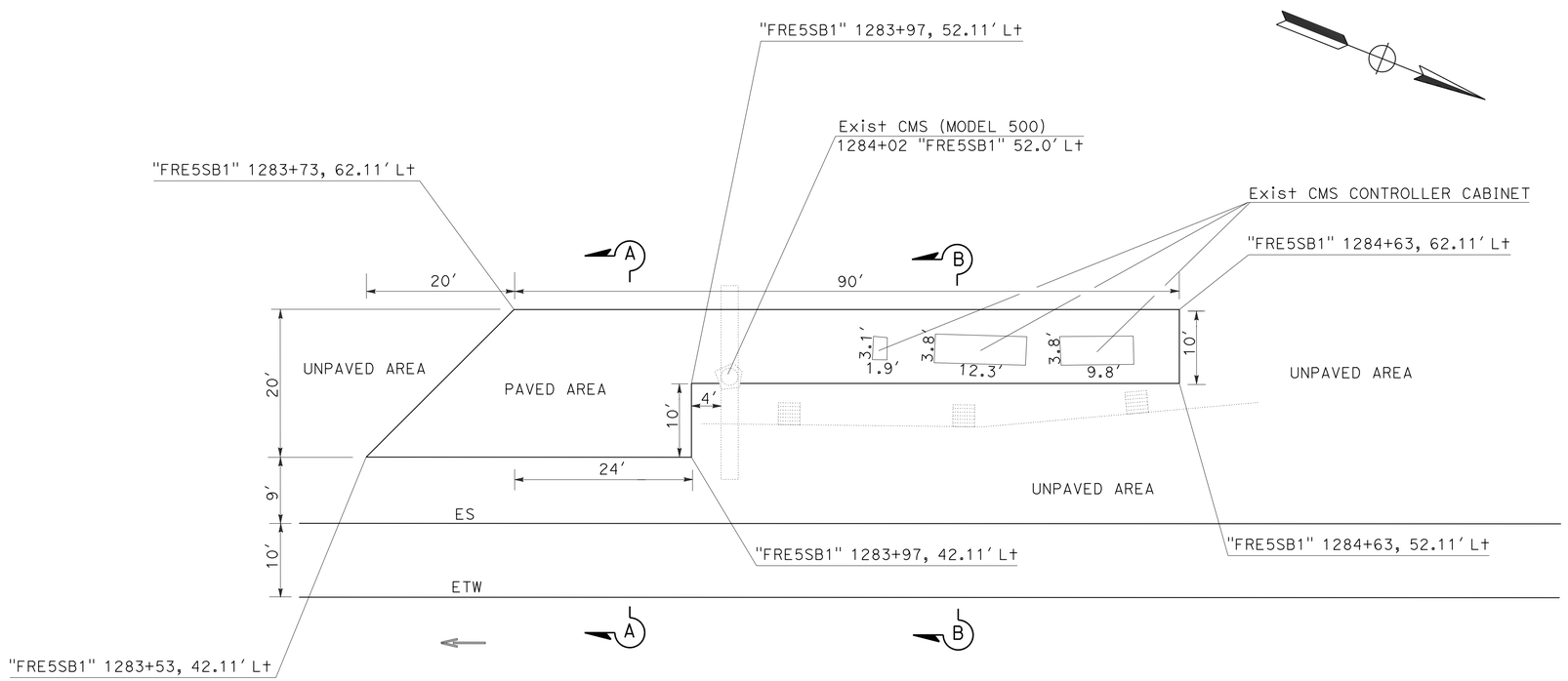

PLAN

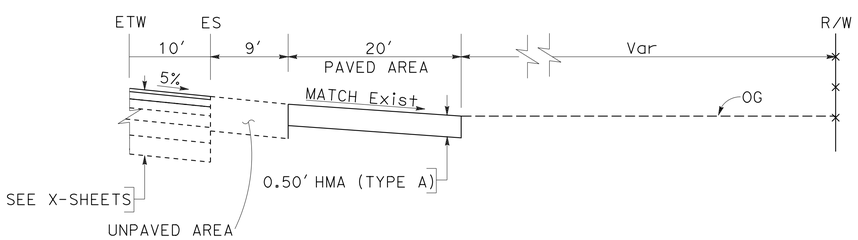

SECTION A-A

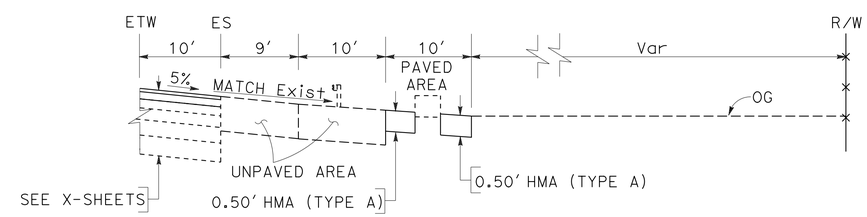

SECTION B-B

PAVING DETAIL AROUND CMS AREA

(FACING SOUTHBOUND TRAFFIC)

CONSTRUCTION DETAILS

NO SCALE

C-7

STATE OF CALIFORNIA - DEPARTMENT OF TRANSPORTATION
Caltrans
DESIGN

FUNCTIONAL SUPERVISOR: JUN XU
CALCULATED-DESIGNED BY: ROD CRUZ
CHECKED BY: IRENE LEE
REVISED BY
DATE REVISED

LAST REVISION 06-20-14 | DATE PLOTTED => 01-JUL-2014 TIME PLOTTED => 10:43

Dist	COUNTY	ROUTE	POST MILES TOTAL PROJECT	SHEET No.	TOTAL SHEETS
06	Fre	5	48.8/53.0	29	117

REGISTERED CIVIL ENGINEER 03-03-14 DATE

6-23-14
PLANS APPROVAL DATE

REGISTERED PROFESSIONAL ENGINEER RODRIGO M. CRUZ No. 57918 Exp. 06/30/16 CIVIL STATE OF CALIFORNIA

THE STATE OF CALIFORNIA OR ITS OFFICERS OR AGENTS SHALL NOT BE RESPONSIBLE FOR THE ACCURACY OR COMPLETENESS OF SCANNED COPIES OF THIS PLAN SHEET.

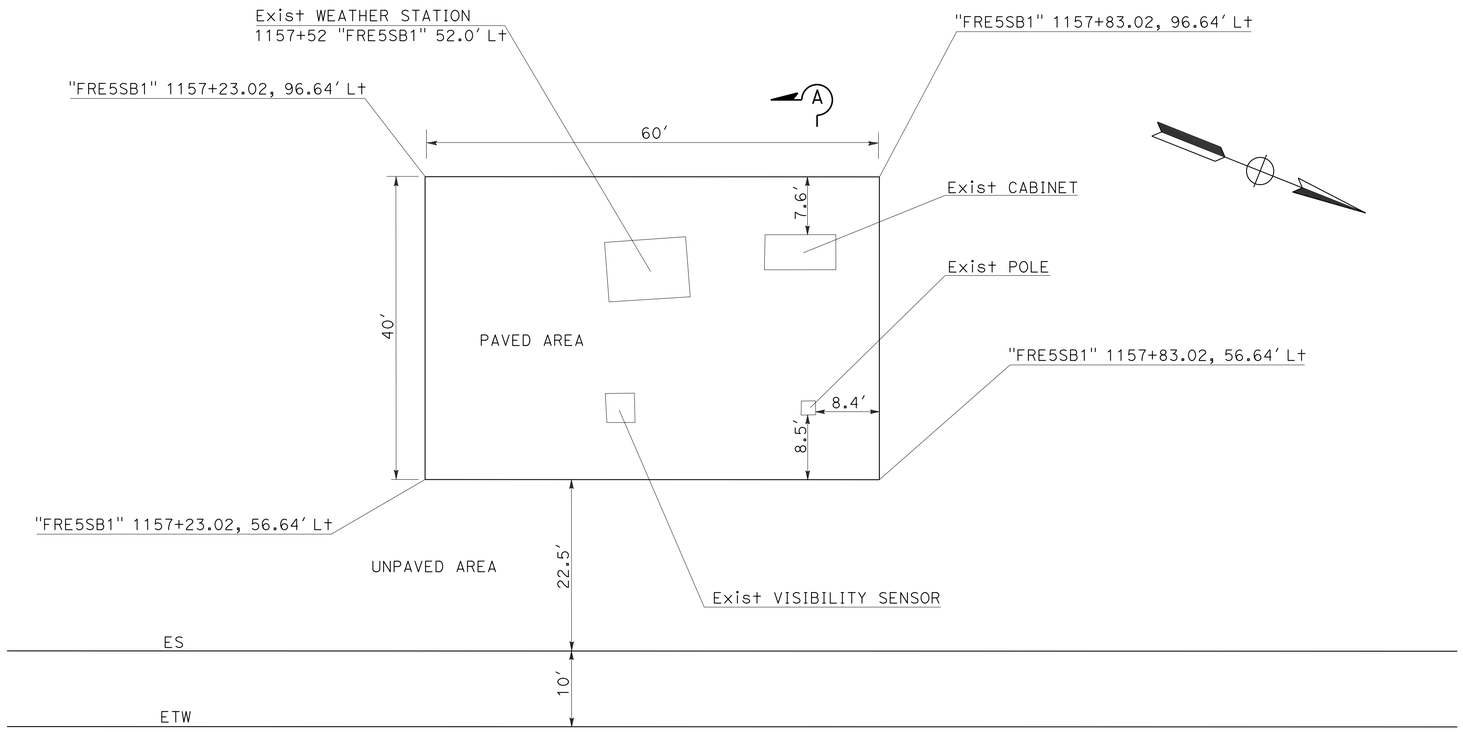

PLAN

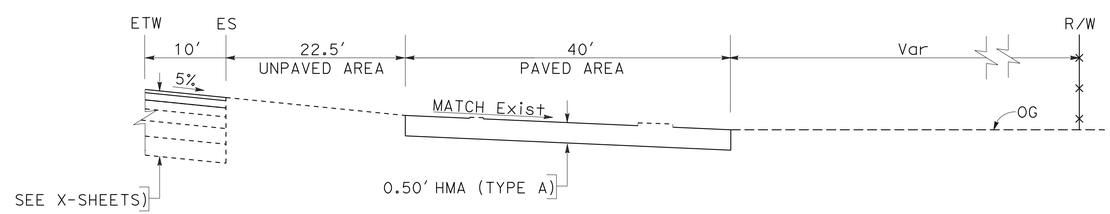

SECTION A-A

PAVING DETAIL AROUND WEATHER STATION AREA

(FACING SOUTHBOUND TRAFFIC)

CONSTRUCTION DETAILS

NO SCALE

C-8

STATE OF CALIFORNIA - DEPARTMENT OF TRANSPORTATION
Caltrans
DESIGN

FUNCTIONAL SUPERVISOR: JUN XU
CALCULATED-DESIGNED BY: ROD CRUZ
CHECKED BY: IRENE LEE
REVISED BY
DATE REVISED

LAST REVISION 06-20-14
DATE PLOTTED => 01-JUL-2014
TIME PLOTTED => 10:43

Dist	COUNTY	ROUTE	POST MILES TOTAL PROJECT	SHEET No.	TOTAL SHEETS
06	Fre	5	48.8/53.0	30	117

REGISTERED CIVIL ENGINEER 03-03-14 DATE

6-23-14
PLANS APPROVAL DATE

REGISTERED PROFESSIONAL ENGINEER RODRIGO M. CRUZ No. 57918 Exp. 06/30/16 CIVIL STATE OF CALIFORNIA

THE STATE OF CALIFORNIA OR ITS OFFICERS OR AGENTS SHALL NOT BE RESPONSIBLE FOR THE ACCURACY OR COMPLETENESS OF SCANNED COPIES OF THIS PLAN SHEET.

NOTES: (THIS SHEET ONLY)

1. FOR DETAILS NOT SHOWN, SEE REVISED STANDARD PLAN P30.
2. FOR LIMITS OF APPROACH SLAB REPLACEMENT, SEE STRUCTURE PLANS.
3. SEE TYPICAL X-SECTION SHEETS FOR OTHER ROADBED STRUCTURAL SECTION.
4. PAVEMENT TRANSITION PANEL ALSO APPLICABLE TO THE PANOCHE CREEK LEFT BRIDGE.

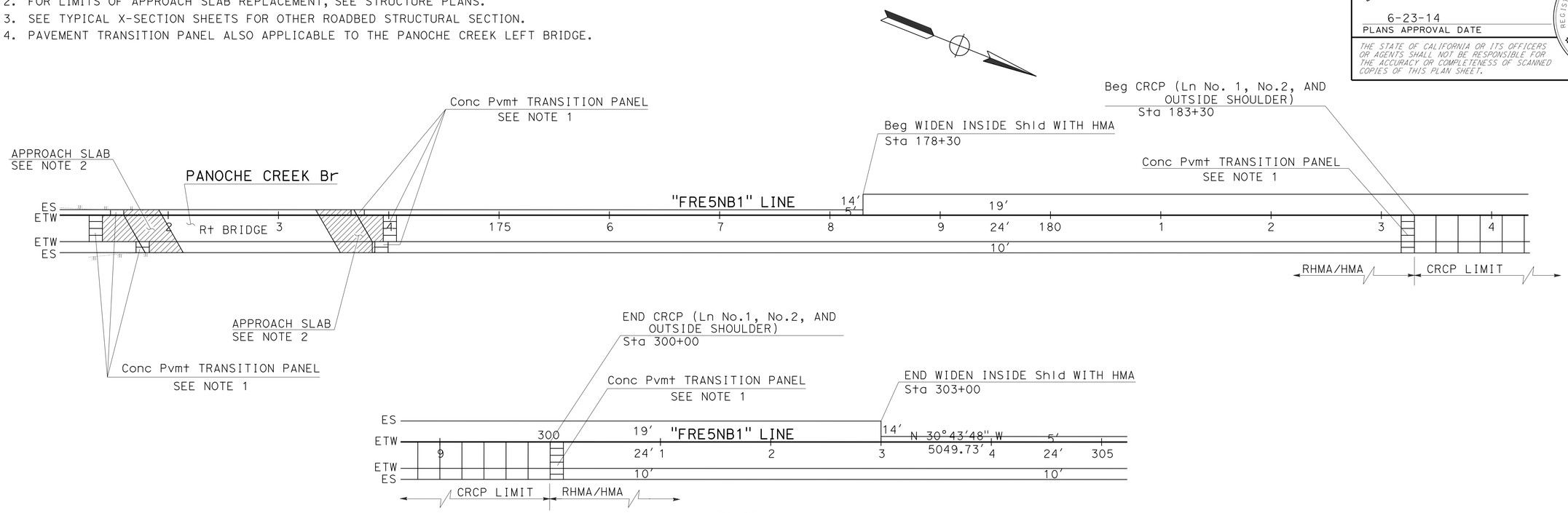

ROUTE 5

CONCRETE PAVEMENT TRANSITION PANEL LIMIT DETAILS (APPROACH SLAB/RHMA & CRCP/RHMA TRANSITION)

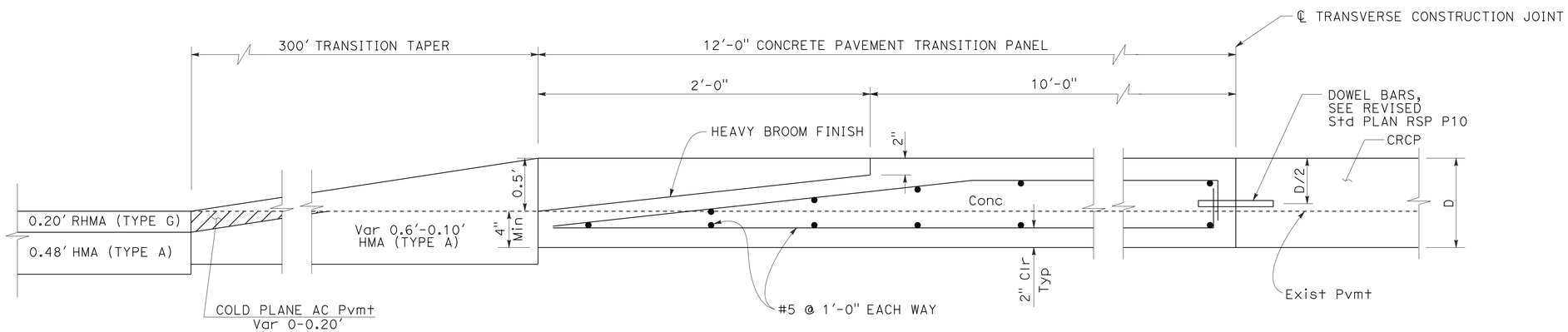

ELEVATION

HMA TO CRCP TRANSITION TAPER DETAILS

CONSTRUCTION DETAILS

NO SCALE

C-9

STATE OF CALIFORNIA - DEPARTMENT OF TRANSPORTATION
DESIGN
FUNCTIONAL SUPERVISOR: JUN XU
CALCULATED-DESIGNED BY: ROD CRUZ
CHECKED BY: IRENE LEE
REVISED BY / DATE REVISED

LAST REVISION 06-09-14
DATE PLOTTED => 01-JUL-2014
TIME PLOTTED => 10:43

Dist	COUNTY	ROUTE	POST MILES TOTAL PROJECT	SHEET No.	TOTAL SHEETS
06	Fre	5	48.8/53.0	31	117

REGISTERED CIVIL ENGINEER 03-03-14 DATE

6-23-14
PLANS APPROVAL DATE

REGISTERED PROFESSIONAL ENGINEER RODRIGO M. CRUZ No. 57918 Exp. 06/30/16 CIVIL STATE OF CALIFORNIA

THE STATE OF CALIFORNIA OR ITS OFFICERS OR AGENTS SHALL NOT BE RESPONSIBLE FOR THE ACCURACY OR COMPLETENESS OF SCANNED COPIES OF THIS PLAN SHEET.

NOTE: (THIS SHEET ONLY)

USE 15'-7½" LENGTH RAIL.

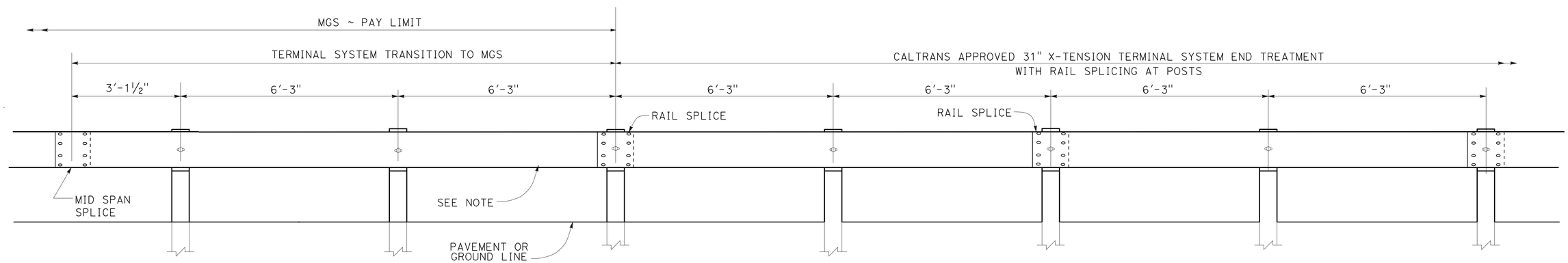

TRANSITION DETAIL FOR 31" X-TENSION TERMINAL SYSTEM END TREATMENT WITH RAIL SPLICING AT POSTS TO MIDWEST GUARDRAIL SYSTEM

CONSTRUCTION DETAILS

NO SCALE

C-10

REVISED BY | DATE REVISED
ROD CRUZ | IRENE LEE
CALCULATED-DESIGNED BY | CHECKED BY
FUNCTIONAL SUPERVISOR: JUN XU

STATE OF CALIFORNIA - DEPARTMENT OF TRANSPORTATION
Caltrans
DESIGN

LAST REVISION 06-09-14 | DATE PLOTTED => 01-JUL-2014 | TIME PLOTTED => 10:43

Dist	COUNTY	ROUTE	POST MILES TOTAL PROJECT	SHEET No.	TOTAL SHEETS
06	Fre	5	48.8/53.0	32	117

REGISTERED CIVIL ENGINEER 03-03-14 DATE

6-23-14
PLANS APPROVAL DATE

REGISTERED PROFESSIONAL ENGINEER RODRIGO M. CRUZ No. 57918 Exp. 06/30/16 CIVIL STATE OF CALIFORNIA

THE STATE OF CALIFORNIA OR ITS OFFICERS OR AGENTS SHALL NOT BE RESPONSIBLE FOR THE ACCURACY OR COMPLETENESS OF SCANNED COPIES OF THIS PLAN SHEET.

NOTES: (THIS SHEET ONLY)

1. REFER TO REVISED STANDARD PLANS RSP A77L1 AND RSP A77L2 FOR COMPONENT DETAILS FOR MGS NOT SHOWN ON THIS PLAN.
2. ALL POSTS FOR ANY STANDARD BARRIER RUN MUST BE OF THE SAME TYPE: WOOD OR STEEL POST.
3. REFER TO REVISED STANDARD PLAN RSP A77R2 AND TYPE 15A LAYOUT FOR DOUBLE MGS CONNECTION TO DETAIL A.
4. INSTALL POSTS IN SOIL.

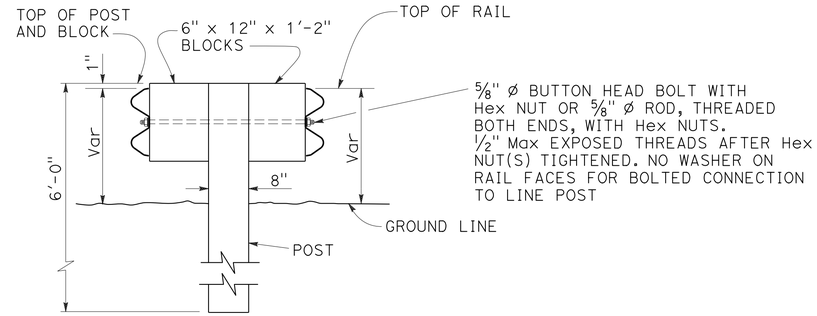

SECTION A-A

TYPICAL DOUBLE MIDWEST GUARDRAIL SYSTEM

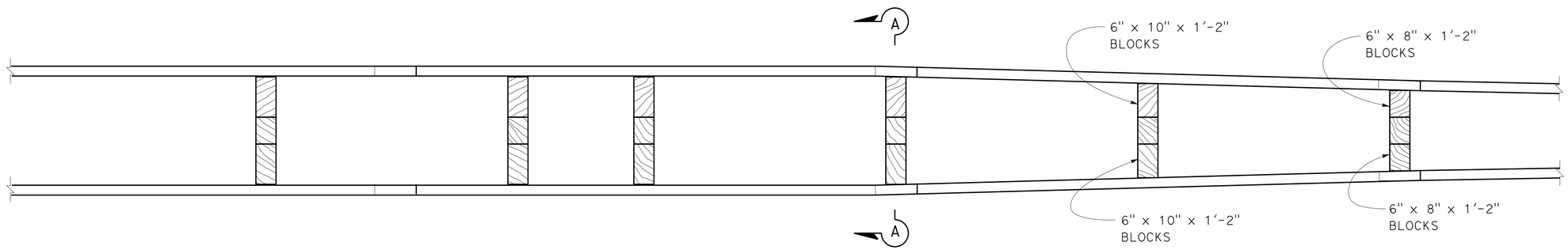

PLAN

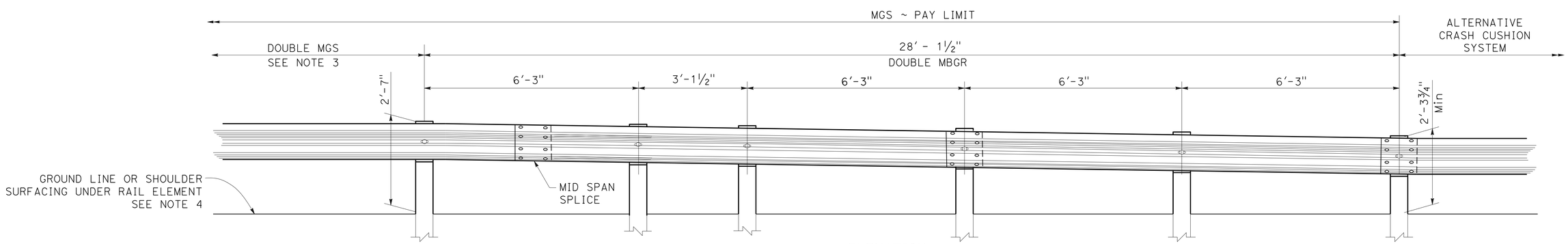

ELEVATION

TRANSITION DETAIL FOR 27 3/4" CRASH CUSHION TO DOUBLE MIDWEST GUARDRAIL SYSTEM

CONSTRUCTION DETAILS

NO SCALE

C-11

STATE OF CALIFORNIA - DEPARTMENT OF TRANSPORTATION
Caltrans® DESIGN

FUNCTIONAL SUPERVISOR: JUN XU
CALCULATED-DESIGNED BY: ROD CRUZ
CHECKED BY: IRENE LEE
REVISED BY
DATE REVISED

LAST REVISION 06-20-14
DATE PLOTTED => 01-JUL-2014
TIME PLOTTED => 10:43

Dist	COUNTY	ROUTE	POST MILES TOTAL PROJECT	SHEET No.	TOTAL SHEETS
06	Fre	5	48.8/53.0	33	117

REGISTERED CIVIL ENGINEER 03-03-14 DATE

6-23-14
PLANS APPROVAL DATE

REGISTERED PROFESSIONAL ENGINEER RODRIGO M. CRUZ No. 57918 Exp. 06/30/16 CIVIL STATE OF CALIFORNIA

THE STATE OF CALIFORNIA OR ITS OFFICERS OR AGENTS SHALL NOT BE RESPONSIBLE FOR THE ACCURACY OR COMPLETENESS OF SCANNED COPIES OF THIS PLAN SHEET.

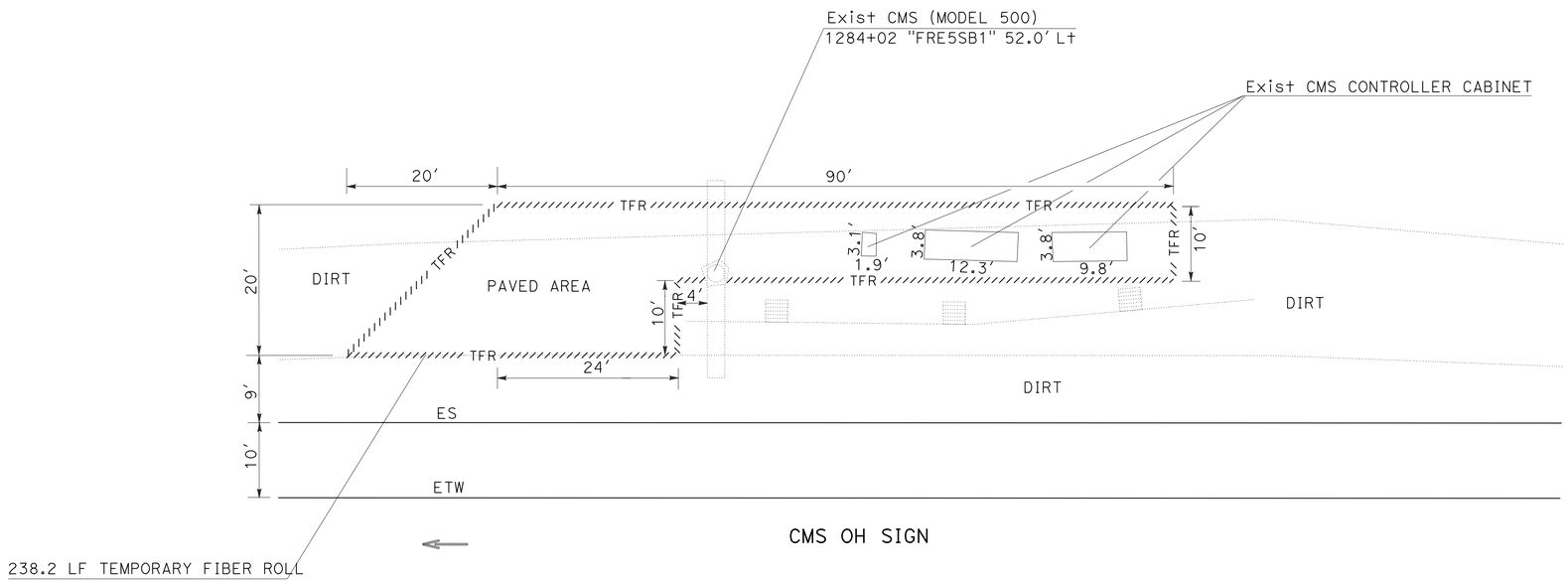

CMS OH SIGN

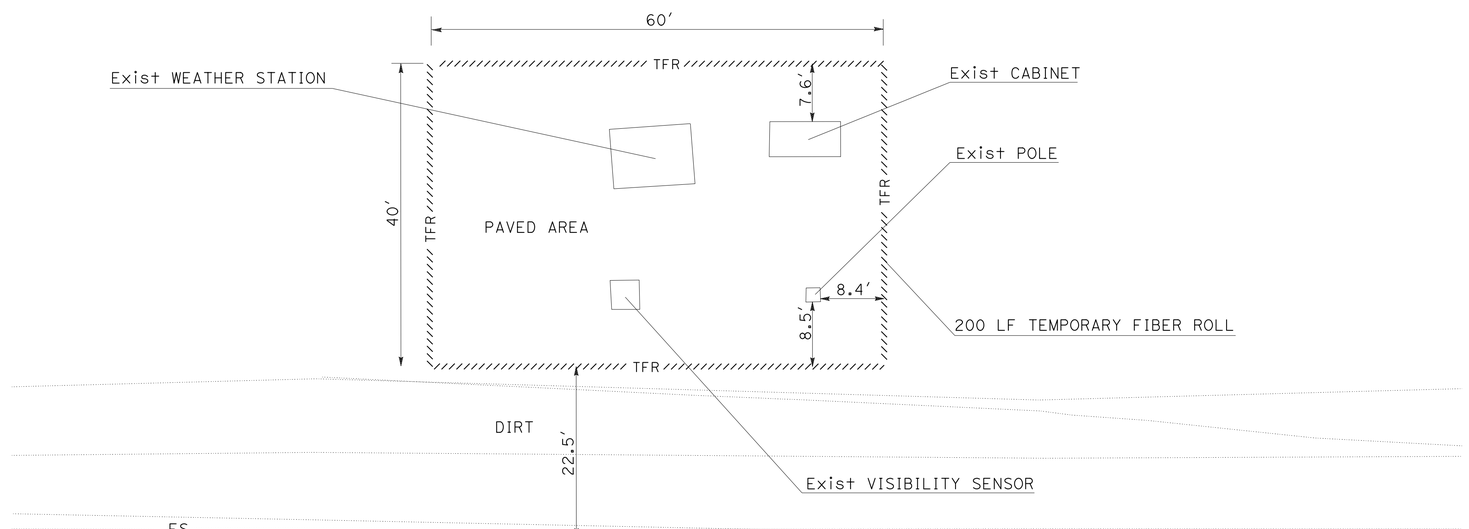

WEATHER STATION

TEMPORARY FIBER ROLL LOCATION

TEMPORARY WATER POLLUTION CONTROL PLAN

NO SCALE

WPC-1

APPROVED FOR TEMPORARY WATER POLLUTION CONTROL WORK ONLY

STATE OF CALIFORNIA - DEPARTMENT OF TRANSPORTATION
Caltrans®
DESIGN

FUNCTIONAL SUPERVISOR: JUN XU
CALCULATED-DESIGNED BY: ROD CRUZ
CHECKED BY: IRENE LEE
REVISED BY
DATE REVISED

LAST REVISION 06-03-14 | DATE PLOTTED => 01-JUL-2014 | TIME PLOTTED => 10:43

Dist	COUNTY	ROUTE	POST MILES TOTAL PROJECT	SHEET No.	TOTAL SHEETS
06	Fre	5	48.8/53.0	34	117

REGISTERED CIVIL ENGINEER 03-03-14 DATE

6-23-14
PLANS APPROVAL DATE

REGISTERED PROFESSIONAL ENGINEER RODRIGO M. CRUZ No. 57918 Exp. 06/30/16 CIVIL STATE OF CALIFORNIA

THE STATE OF CALIFORNIA OR ITS OFFICERS OR AGENTS SHALL NOT BE RESPONSIBLE FOR THE ACCURACY OR COMPLETENESS OF SCANNED COPIES OF THIS PLAN SHEET.

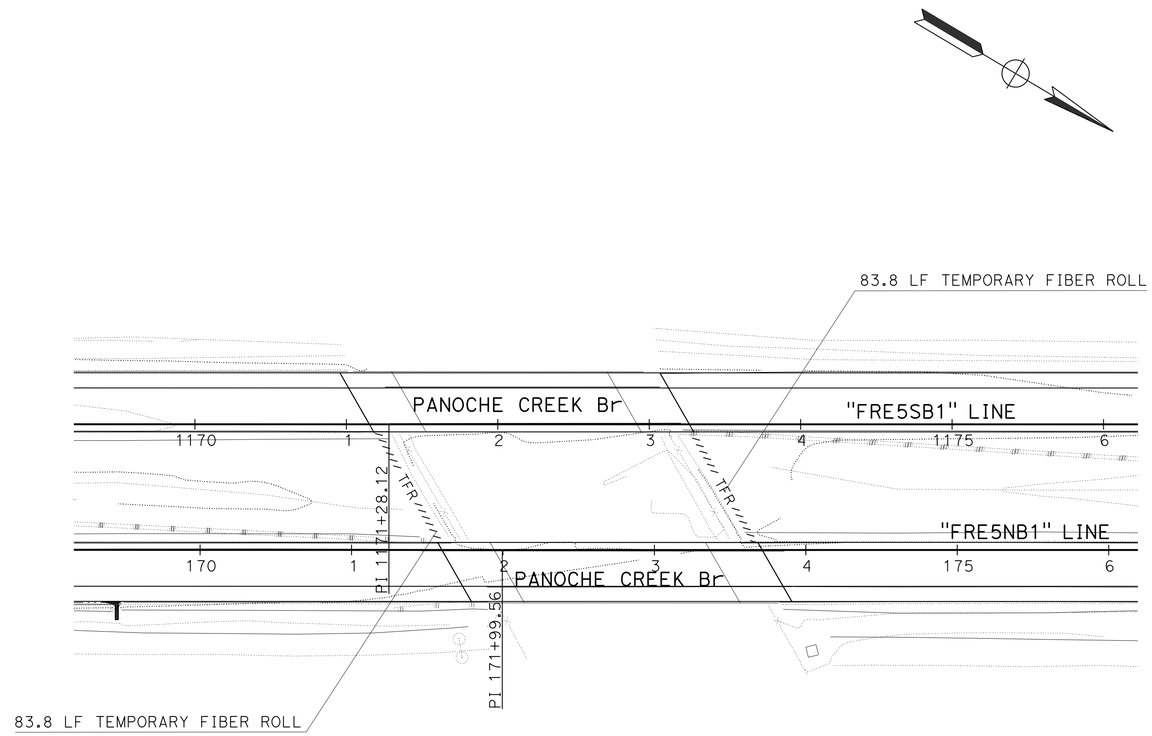

PANOCHE CREEK Br

TEMPORARY FIBER ROLL LOCATION

APPROVED FOR TEMPORARY WATER POLLUTION CONTROL WORK ONLY

TEMPORARY WATER POLLUTION CONTROL PLAN

SCALE: 1"=50'

WPC-2

STATE OF CALIFORNIA - DEPARTMENT OF TRANSPORTATION
Caltrans
DESIGN

FUNCTIONAL SUPERVISOR: JUN XU
CALCULATED-DESIGNED BY: IRENE LEE
CHECKED BY: ROD CRUZ
REVISED BY
DATE REVISED

LAST REVISION 06-03-14
DATE PLOTTED => 01-JUL-2014
TIME PLOTTED => 10:43

Dist	COUNTY	ROUTE	POST MILES TOTAL PROJECT	SHEET No.	TOTAL SHEETS
06	Fre	5	48.8/53.0	35	117

REGISTERED CIVIL ENGINEER 03-03-14 DATE

6-23-14
PLANS APPROVAL DATE

REGISTERED PROFESSIONAL ENGINEER RODRIGO M. CRUZ No. 57918 Exp. 06/30/16 CIVIL STATE OF CALIFORNIA

THE STATE OF CALIFORNIA OR ITS OFFICERS OR AGENTS SHALL NOT BE RESPONSIBLE FOR THE ACCURACY OR COMPLETENESS OF SCANNED COPIES OF THIS PLAN SHEET.

NOTES:

1. FOR ACCURATE RIGHT OF WAY DATA, CONTACT RIGHT OF WAY ENGINEERING AT THE DISTRICT OFFICE.
2. LOCATIONS OF UTILITY FACILITIES SHOWN ON THE PLANS ARE APPROXIMATE AND SHALL BE VERIFIED BY THE CONTRACTOR PRIOR TO CONSTRUCTION.
3. UTILITY OWNERSHIP ON THIS PROJECT:
   - ⓐ ELECTRIC - PACIFIC GAS & ELECTRIC COMPANY (PG&E)
   - ⓑ UNDERGROUND TELEPHONE CABLE - PACIFIC BELL/AMERICAN TELEPHONE AND TELEGRAPH (AT&T)
   - ⓒ WATER LINE - WESTLANDS WATER DISTRICT
   - ⓓ PVC PIPE - CHEVRON LAND AND DEVELOPMENT COMPANY
4. ALL UTILITIES ARE EXISTING.

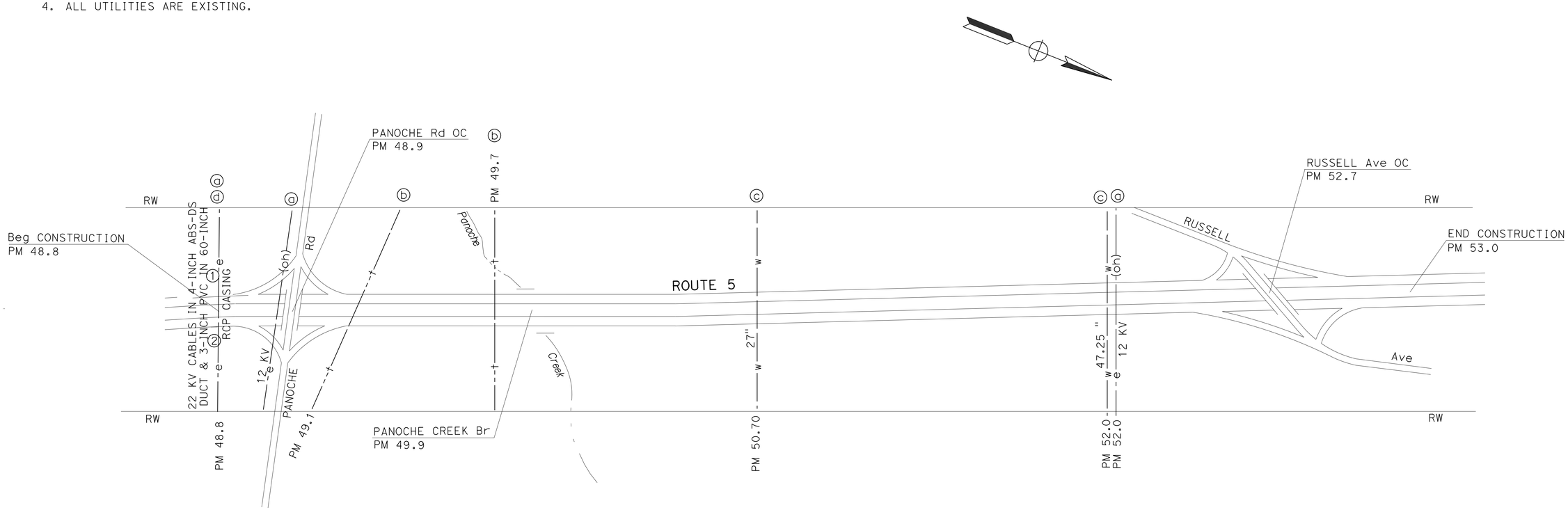

HIGH RISK UTILITY AND POTHOLE LOCATION TABLE

No.	PM	DESCRIPTION	OWNER	HORIZONTAL LOCATION		DEPTH BELOW OG	COMMENTS
				L+ (FROM ETW)	R+ (FROM ETW)		
①	48.8	22 KV CABLE	PG&E	218′		11.9′±	Inside 60-INCH RCP
②	48.8	22 KV CABLE	PG&E		165′	14.6′±	Inside 60-INCH RCP

APPROVED FOR UTILITY INFORMATION ONLY

UTILITY PLAN

NO SCALE **U-1**

STATE OF CALIFORNIA - DEPARTMENT OF TRANSPORTATION
Caltrans
DESIGN

FUNCTIONAL SUPERVISOR: JUN XU
CALCULATED-DESIGNED BY: IRENE LEE
CHECKED BY: ROD CRUZ
REVISED BY
DATE REVISED

LAST REVISION 06-20-14
DATE PLOTTED => 01-JUL-2014
TIME PLOTTED => 10:43

Dist	COUNTY	ROUTE	POST MILES TOTAL PROJECT	SHEET No.	TOTAL SHEETS
06	Fre	5	48.8/53.0	36	117

REGISTERED CIVIL ENGINEER 05-01-14 DATE

6-23-14
PLANS APPROVAL DATE

REGISTERED PROFESSIONAL ENGINEER MAZIN H. AL-ALI No. 65523 Exp. 9/30/15 CIVIL STATE OF CALIFORNIA

THE STATE OF CALIFORNIA OR ITS OFFICERS OR AGENTS SHALL NOT BE RESPONSIBLE FOR THE ACCURACY OR COMPLETENESS OF SCANNED COPIES OF THIS PLAN SHEET.

STATIONARY MOUNTED CONSTRUCTION AREA SIGNS

SIGN No. (X)	SIGN CODE	PANEL SIZE	SIGN MESSAGE	No. OF POSTS AND SIZE	No.OF SIGNS
A	W20-1	60" x 60"	ROAD WORK AHEAD	2-6" x 6"	4
B	W20-1	36" x 36"	ROAD WORK AHEAD	1-4" x 6"	4
C	W20-2	36" x 18"	END ROAD WORK	1-4" x 4"	2
D	C40(CA)	102" x 42"	TRAFFIC FINES DOUBLED IN CONSTRUCTION ZONES	2-6" x 6"	2

NOTES:
1. EXACT SIGN LOCATIONS TO BE DETERMINED BY THE ENGINEER.
2. FOR SIGN "C40" (TRAFFIC FINES DOUBLED IN CONSTRUCTION ZONES), ALL LETTERS MUST BE BLACK ON WHITE BACKGROUND.
3. COVER ALL CONFLICTING SIGNS.
4. FOR ADDITIONAL CONSTRUCTION AREA SIGNS REFER TO TRAFFIC HANDLING SHEETS.

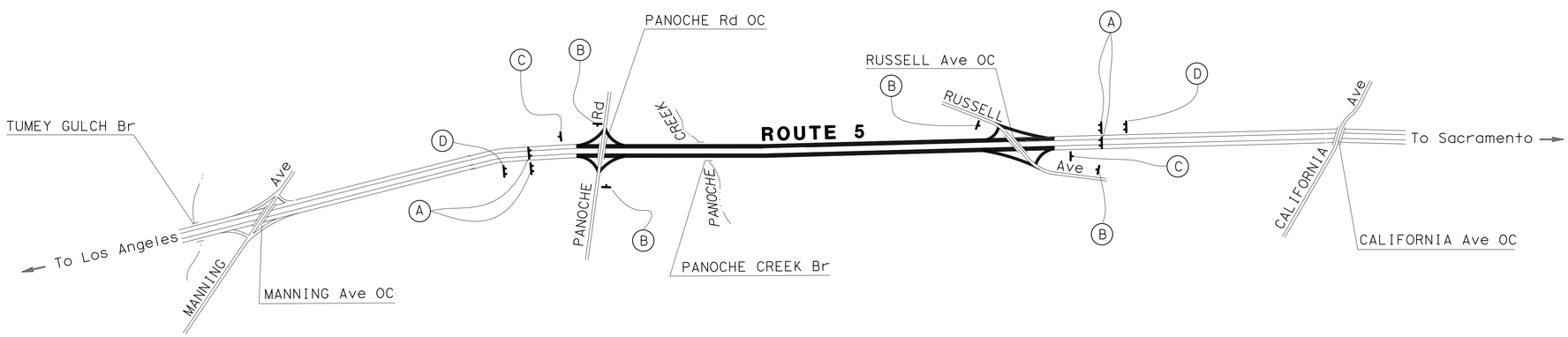

APPROVED FOR CONSTRUCTION AREA SIGN WORK ONLY

CONSTRUCTION AREA SIGNS

NO SCALE

CS-1

STATE OF CALIFORNIA - DEPARTMENT OF TRANSPORTATION
Caltrans
TRAFFIC DESIGN

FUNCTIONAL SUPERVISOR: MOHAMMED QATAMI
CALCULATED-DESIGNED BY: HASEEB YOUSAF
CHECKED BY: MAZIN AL-ALI
REVISED BY
DATE REVISED

LAST REVISION 06-23-14
DATE PLOTTED => 01-JUL-2014
TIME PLOTTED => 10:43

Dist	COUNTY	ROUTE	POST MILES TOTAL PROJECT	SHEET No.	TOTAL SHEETS
06	Fre	5	48.8/53.0	37	117

REGISTERED CIVIL ENGINEER 03-03-14 DATE

6-23-14
PLANS APPROVAL DATE

REGISTERED PROFESSIONAL ENGINEER RODRIGO M. CRUZ No. 57918 Exp. 06/30/16 CIVIL STATE OF CALIFORNIA

THE STATE OF CALIFORNIA OR ITS OFFICERS OR AGENTS SHALL NOT BE RESPONSIBLE FOR THE ACCURACY OR COMPLETENESS OF SCANNED COPIES OF THIS PLAN SHEET.

LEGEND:

CONSTRUCTION THIS STAGE

COMPLETED PREVIOUS STAGE

NOTES: (THIS SHEET ONLY)

1. SEE SHEET X-2 FOR ROADBED STRUCTURAL SECTION.
2. SEE SHEETS X-2 and C-6 FOR RUMBLE STRIP, DIKE AND SHOULDER BACKING DETAILS.

STAGE 1 WORK

1. COLD PLANE Exist RUMBLE STRIP THEN OVERLAY PRIOR TO INSIDE SHOULDER WIDENING USING LANE AND SHOULDER CLOSURE AT NIGHT.
2. WIDEN & CONSTRUCT INSIDE SHOULDER USING HMA. TWO-LANE TRAFFIC WILL BE SHIFTED TO THE RIGHT & PART OF THE OUTSIDE SHOULDER WILL BE UTILIZED FOR DETOUR. OUTSIDE Shld IS NOT REQUIRED TO BE RECONSTRUCTED.

STAGE 2 WORK

1. CONSTRUCT No. 2 LANE & OUTSIDE SHOULDER USING CRCP WITH A RAISED PROFILE OF APPROXIMATELY 7 INCHES. TWO-LANE TRAFFIC WILL USE THE COMPLETED WIDENED PORTION OF THE INSIDE SHOULDER & PART OF THE EXISTING No. 1 LANE.

STAGE 3 WORK

1. CONSTRUCT No. 1 LANE USING CRCP WITH A RAISED PROFILE OF APPROXIMATELY 7 INCHES. TWO-LANE TRAFFIC WILL USE THE COMPLETED INSIDE SHOULDER & PART OF THE EXISTING No. 2 LANE & OUTSIDE SHOULDER.
2. PROVIDE TEMPORARY TRAFFIC BARRIER OPENINGS FOR INGRESS AND EGRESS POINTS. SEE TH Shts FOR DETAILS.

STAGE 4 WORK

1. OVERLAY FINAL HMA LIFT FOR THE 5-FOOT INSIDE SHOULDER & THEN TAPER TO MATCH HMA FG. TWO-LANE TRAFFIC WILL USE PORTION OF THE No. 1 & 2 LANES & PORTION OF THE OUTSIDE SHOULDER. THEN RE-STRIPE FOR FINAL PAVEMENT DELINEATION.
2. CONSTRUCT SHOULDER RUMBLE STRIP.

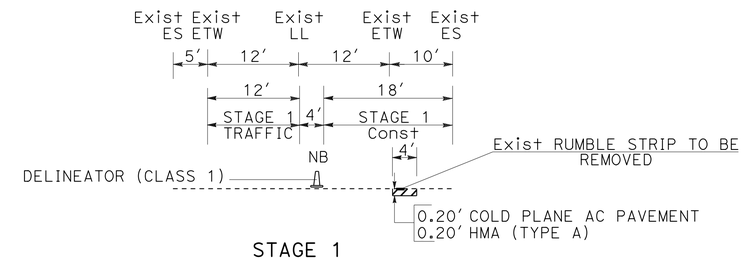

STAGE 1
Sta 175+50 TO Sta 303+00 "FRE5NB1"

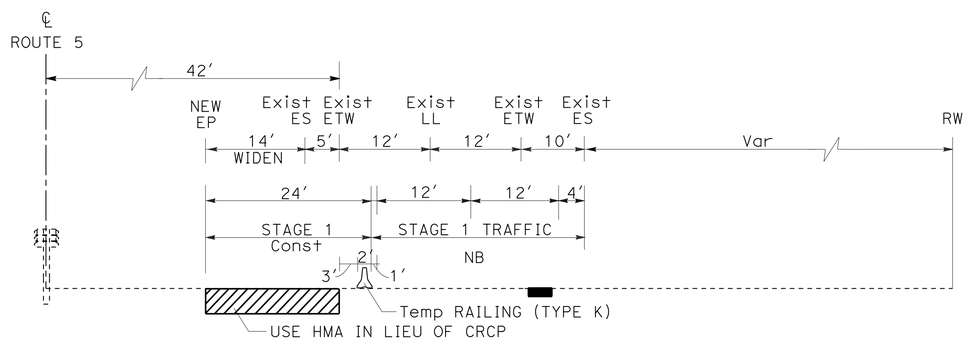

STAGE 1

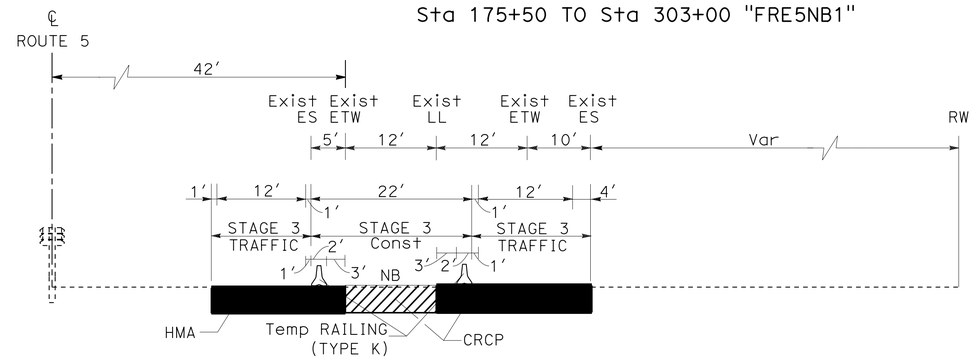

STAGE 3

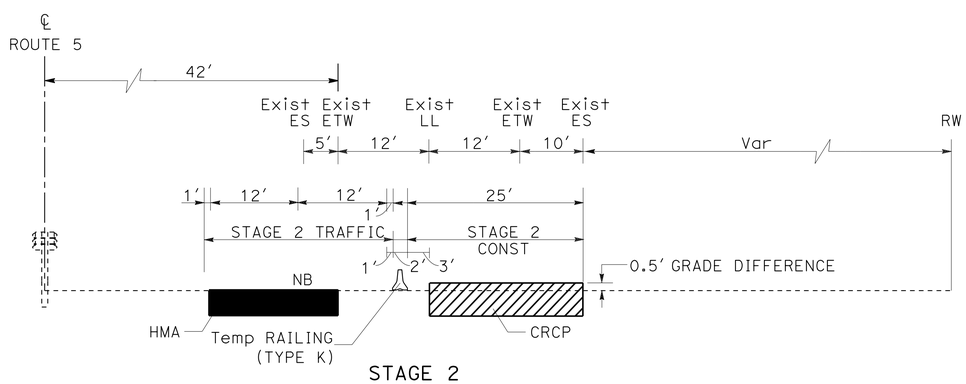

STAGE 2

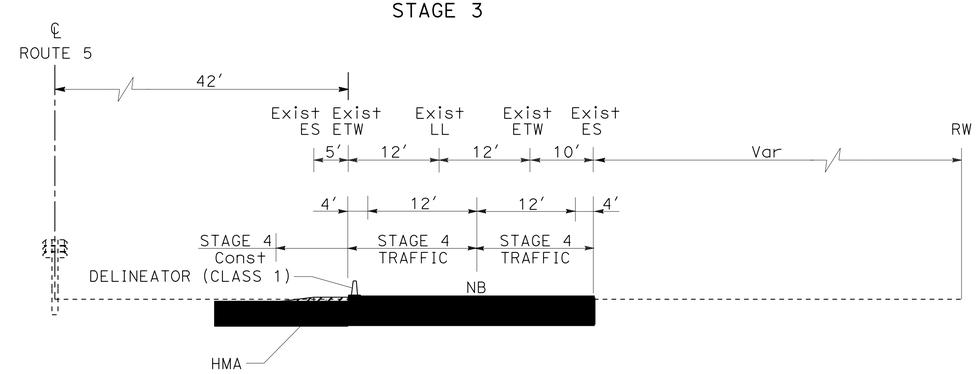

STAGE 4

NORTHBOUND INSIDE SHOULDER WIDENING AND CRCP STAGE CONSTRUCTION

Sta 178+30 TO Sta 303+00 "FRE5NB1"

APPROVED FOR STAGE CONSTRUCTION WORK ONLY

STAGE CONSTRUCTION

NO SCALE

SC-1

STATE OF CALIFORNIA - DEPARTMENT OF TRANSPORTATION
Caltrans® DESIGN

FUNCTIONAL SUPERVISOR: JUN XU
CALCULATED-DESIGNED BY: ROD CRUZ
CHECKED BY: IRENE LEE
REVISED BY
DATE REVISED

LAST REVISION 06-20-14
DATE PLOTTED => 01-JUL-2014
TIME PLOTTED => 10:43

Dist	COUNTY	ROUTE	POST MILES TOTAL PROJECT	SHEET No.	TOTAL SHEETS
06	Fre	5	48.8/53.0	38	117

REGISTERED CIVIL ENGINEER 03-03-14 DATE

6-23-14
PLANS APPROVAL DATE

REGISTERED PROFESSIONAL ENGINEER RODRIGO M. CRUZ No. 57918 Exp. 06/30/16 CIVIL STATE OF CALIFORNIA

THE STATE OF CALIFORNIA OR ITS OFFICERS OR AGENTS SHALL NOT BE RESPONSIBLE FOR THE ACCURACY OR COMPLETENESS OF SCANNED COPIES OF THIS PLAN SHEET.

NOTES: (THIS SHEET ONLY)

1. SEE X-SECTION SHEETS FOR ROADBED STRUCTURAL SECTION.
2. INSIDE AND OUTSIDE SHOULDER COLD PLANING AND OVERLAY NOT SHOWN.

STAGE 1 WORK

1. COLD PLANE ONE LANE AT A TIME APPROXIMATELY EVERY ONE HALF MILE SECTION FOR BOTH LANES USING LANE AND/OR SHOULDER CLOSURE AT NIGHT. RUN TRAFFIC OVER COLD PLANED AREAS. PROVIDE TEMPORARY HMA TAPER AT BEGIN AND END OF THE COLD PLANED SECTION.

STAGE 2 WORK

1. REMOVE ISOLATED FAILED PANELS THEN OVERLAY WITH RAPID STRENGTH CONCRETE.

STAGE 3 WORK

1. COLD PLANE REMAINING ASPHALT CONCRETE THEN RESURFACE WITH HMA.

STAGE 4 WORK

1. PLACE GEOSYNTHETIC PAVEMENT INTERLAYER (PAVING FABRIC) THEN RESURFACE WITH HMA. REPEAT SEQUENCE OF WORK EVERY HALF MILE SECTION WHERE FEASIBLE UNTIL THE ENTIRE PROJECT LIMITS IS COMPLETED.

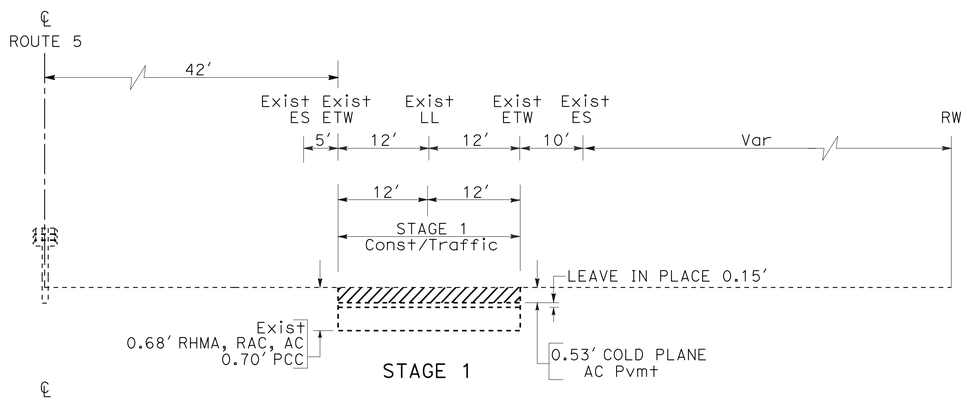

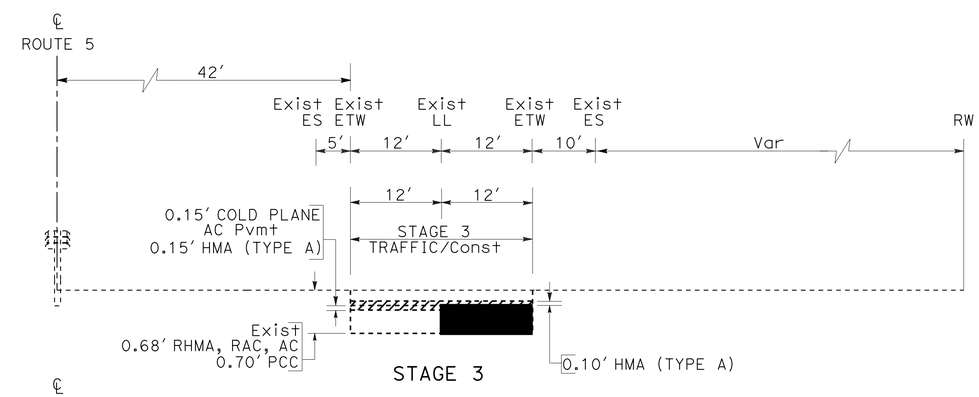

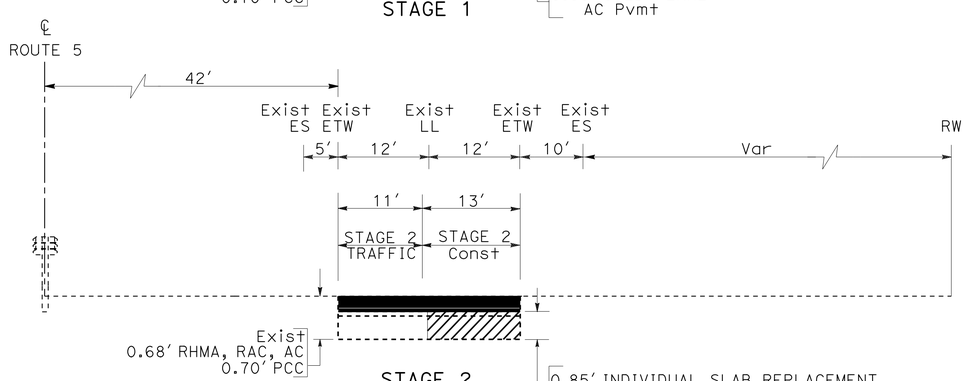

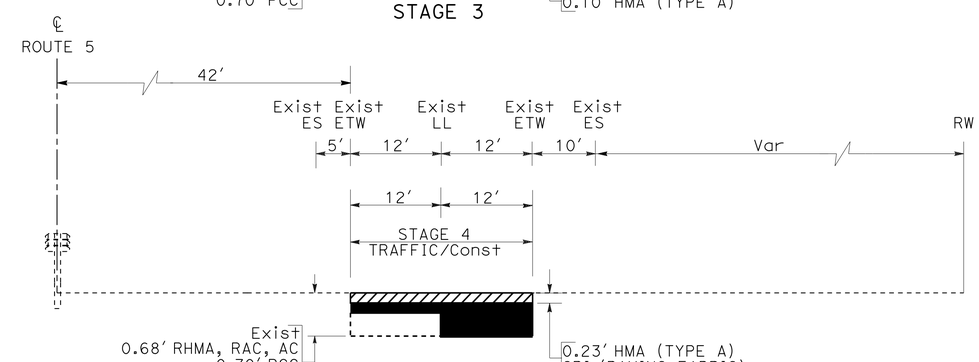

TYPICAL RANDOM INDIVIDUAL SLAB REPLACEMENT STAGE CONSTRUCTION

SOUTHBOUND

Sta 1103+00 TO Sta 1170+95 "FRE5SB1"
Sta 1173+30 TO Sta 1328+00 "FRE5SB1"

NORTHBOUND

Sta 103+00 TO Sta 171+56 "FRE5NB1"
Sta 173+91 TO Sta 183+30 "FRE5NB1"
Sta 300+00 TO Sta 328+00 "FRE5NB1"

STAGE CONSTRUCTION

NO SCALE

SC-2

APPROVED FOR STAGE CONSTRUCTION WORK ONLY

STATE OF CALIFORNIA - DEPARTMENT OF TRANSPORTATION
Caltrans® DESIGN
FUNCTIONAL SUPERVISOR: JUN XU
CALCULATED-DESIGNED BY: ROD CRUZ
CHECKED BY: IRENE LEE
REVISED BY
DATE REVISED

LAST REVISION 06-23-14
DATE PLOTTED => 01-JUL-2014
TIME PLOTTED => 10:43

Dist	COUNTY	ROUTE	POST MILES TOTAL PROJECT	SHEET No.	TOTAL SHEETS
06	Fre	5	48.8/53.0	39	117

REGISTERED CIVIL ENGINEER 04-09-14 DATE

6-23-14
PLANS APPROVAL DATE

REGISTERED PROFESSIONAL ENGINEER MAZIN H. AL-ALI No.65523 Exp. 9/30/15 CIVIL STATE OF CALIFORNIA

THE STATE OF CALIFORNIA OR ITS OFFICERS OR AGENTS SHALL NOT BE RESPONSIBLE FOR THE ACCURACY OR COMPLETENESS OF SCANNED COPIES OF THIS PLAN SHEET.

LEGEND:

- CONSTRUCTION THIS STAGE
- Temp RAILING (TYPE K)
- CHANNELIZER (SURFACE MOUNTED)
- Temp CRASH CUSHION
- XX Temp TRAFFIC STRIPE DETAIL No.
- CONSTRUCTION AREA SIGN (ONE POST/ TWO POST)
- X CONSTRUCTION AREA SIGNS No.
- XX REMOVE Exist TRAFFIC STRIPE
- Temp PAVEMENT MARKING TYPE VI ARROW

NOTES:

1. SIGN LOCATIONS ARE APPROXIMATE.
   EXACT LOCATIONS TO BE DETERMINED BY THE ENGINEER.
2. FOR ADDITIONAL CONSTRUCTION AREA SIGNS, REFER TO SHEET CS-1.
3. PROVIDE AN OPENING FOR CONTRACTOR USE IN TEMPORARY RAILING (TYPE K). SEE SHEET TH-3 DETAIL A.

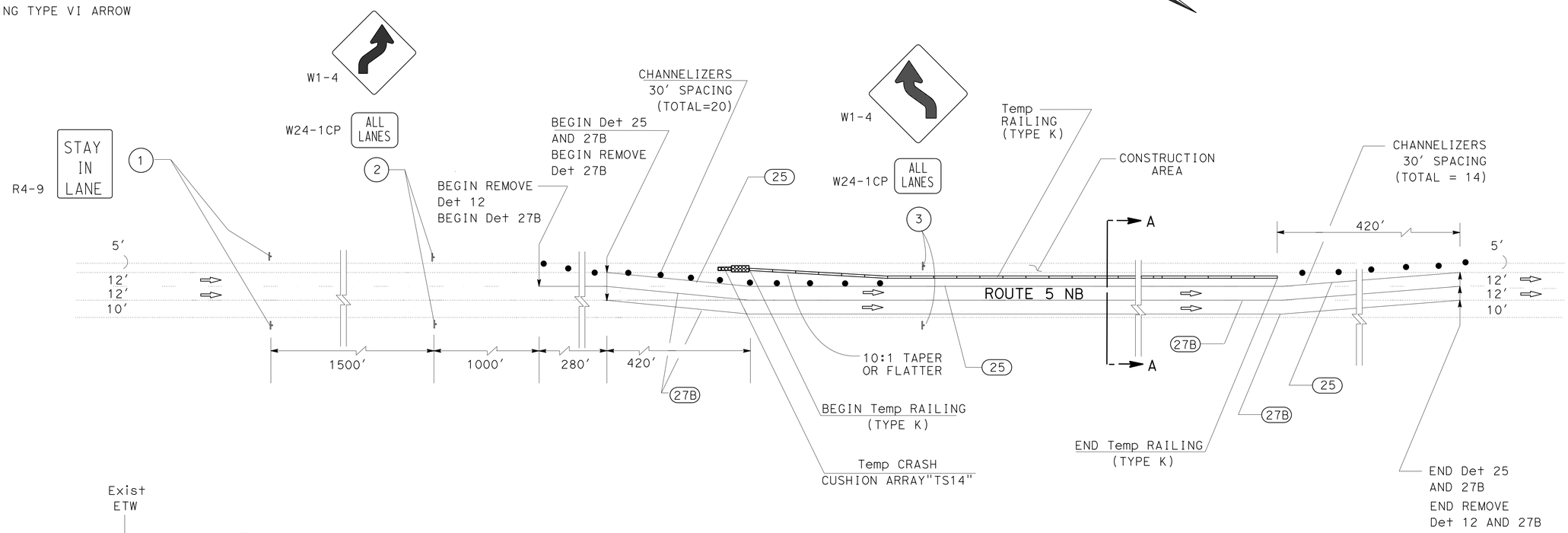

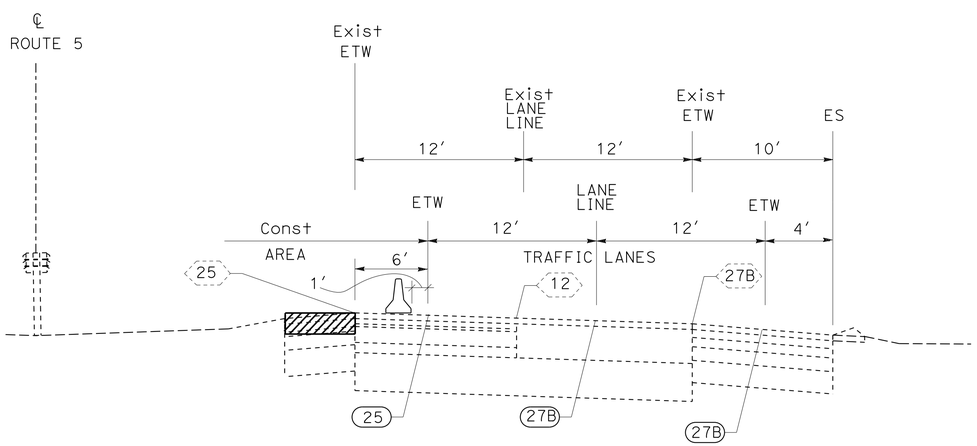

SECTION A-A

NORTHBOUND ROUTE 5

TYPICAL TRAFFIC CONTROL SYSTEM
LANE SHIFT DETAIL WITH Temp RAILING (TYPE K)

TRAFFIC HANDLING PLAN
(STAGE 1)

NO SCALE

TH-1

APPROVED FOR TRAFFIC HANDLING WORK ONLY

STATE OF CALIFORNIA - DEPARTMENT OF TRANSPORTATION
Caltrans
TRAFFIC DESIGN

FUNCTIONAL SUPERVISOR: MOHAMMED QATAMI
CALCULATED-DESIGNED BY: MAZIN AL-ALI
CHECKED BY: HASEEB YOUSAF
REVISED BY
DATE REVISED

LAST REVISION 06-23-14
DATE PLOTTED => 01-JUL-2014
TIME PLOTTED => 10:43

Dist	COUNTY	ROUTE	POST MILES TOTAL PROJECT	SHEET No.	TOTAL SHEETS
06	Fre	5	48.8/53.0	40	117

REGISTERED CIVIL ENGINEER 04-09-14 DATE

6-23-14
PLANS APPROVAL DATE

REGISTERED PROFESSIONAL ENGINEER MAZIN H. AL-ALI No.65523 Exp.9/30/15 CIVIL STATE OF CALIFORNIA

THE STATE OF CALIFORNIA OR ITS OFFICERS OR AGENTS SHALL NOT BE RESPONSIBLE FOR THE ACCURACY OR COMPLETENESS OF SCANNED COPIES OF THIS PLAN SHEET.

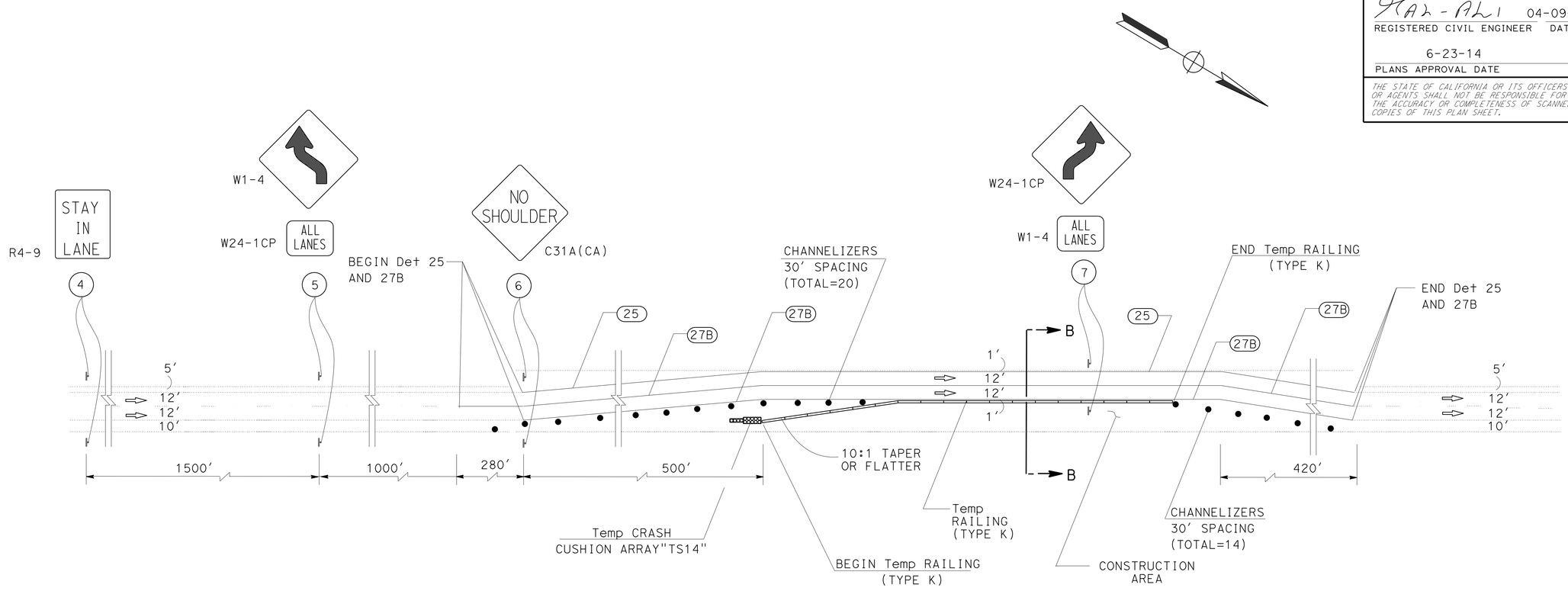

TYPICAL TRAFFIC CONTROL SYSTEM
LANE SHIFT DETAIL WITH Temp RAILING (TYPE K)

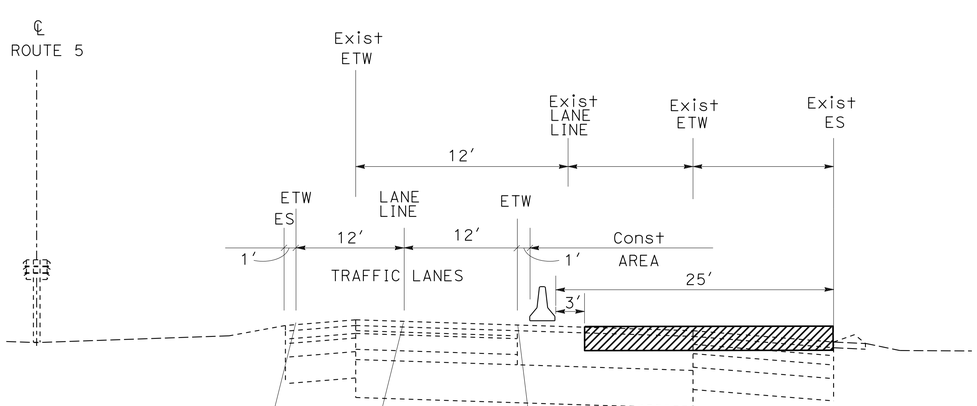

SECTION B-B

NORTHBOUND ROUTE 5

TRAFFIC HANDLING PLAN

(STAGE 2)

NO SCALE

TH-2

APPROVED FOR TRAFFIC HANDLING WORK ONLY

STATE OF CALIFORNIA - DEPARTMENT OF TRANSPORTATION
Caltrans
TRAFFIC DESIGN
FUNCTIONAL SUPERVISOR: MOHAMMED QATAMI
CALCULATED-DESIGNED BY: MAZIN AL-ALI
CHECKED BY: HASEEB YOUSAF
REVISED BY
DATE REVISED

LAST REVISION 06-23-14
DATE PLOTTED => 01-JUL-2014
TIME PLOTTED => 10:43

Dist	COUNTY	ROUTE	POST MILES TOTAL PROJECT	SHEET No.	TOTAL SHEETS
06	Fre	5	48.8/53.0	41	117

REGISTERED CIVIL ENGINEER 04-09-14 DATE

6-23-14
PLANS APPROVAL DATE

REGISTERED PROFESSIONAL ENGINEER MAZIN H. AL-ALI No. 65523 Exp. 9/30/15 CIVIL STATE OF CALIFORNIA

THE STATE OF CALIFORNIA OR ITS OFFICERS OR AGENTS SHALL NOT BE RESPONSIBLE FOR THE ACCURACY OR COMPLETENESS OF SCANNED COPIES OF THIS PLAN SHEET.

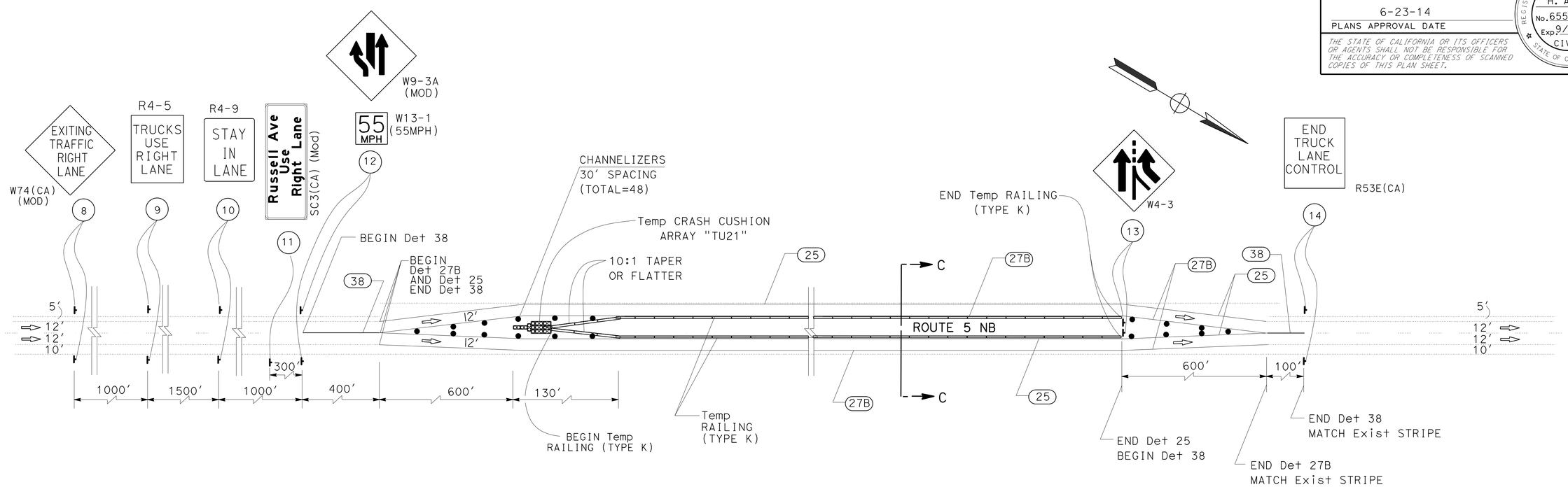

TYPICAL TRAFFIC CONTROL SYSTEM
INTERIOR LANE CLOSURE DETAIL WITH Temp RAILING (TYPE K)

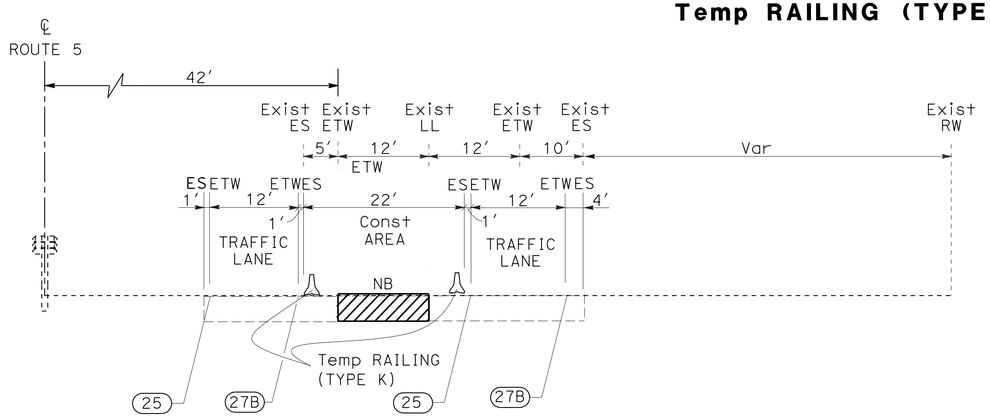

SECTION C-C
NORTHBOUND ROUTE 5

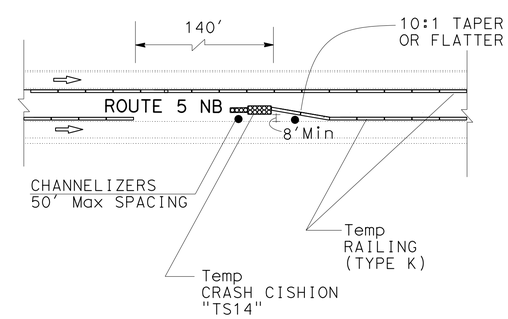

DETAIL A

APPROVED FOR TRAFFIC HANDLING WORK ONLY

TRAFFIC HANDLING PLAN
(STAGE 3)

NO SCALE

TH-3

STATE OF CALIFORNIA - DEPARTMENT OF TRANSPORTATION
Caltrans
TRAFFIC DESIGN
FUNCTIONAL SUPERVISOR: MOHAMMED QATAMI
CALCULATED-DESIGNED BY: MAZIN AL-ALI
CHECKED BY: HASEEB YOUSAF
REVISED BY
DATE REVISED

LAST REVISION 06-23-14
DATE PLOTTED => 01-JUL-2014
TIME PLOTTED => 10:43

Dist	COUNTY	ROUTE	POST MILES TOTAL PROJECT	SHEET No.	TOTAL SHEETS
06	Fre	5	48.8/53.0	42	117

REGISTERED CIVIL ENGINEER 04-09-14 DATE

6-23-14
PLANS APPROVAL DATE

REGISTERED PROFESSIONAL ENGINEER
MAZIN H. AL-ALI
No. 65523
Exp. 9/30/15
CIVIL
STATE OF CALIFORNIA

THE STATE OF CALIFORNIA OR ITS OFFICERS OR AGENTS SHALL NOT BE RESPONSIBLE FOR THE ACCURACY OR COMPLETENESS OF SCANNED COPIES OF THIS PLAN SHEET.

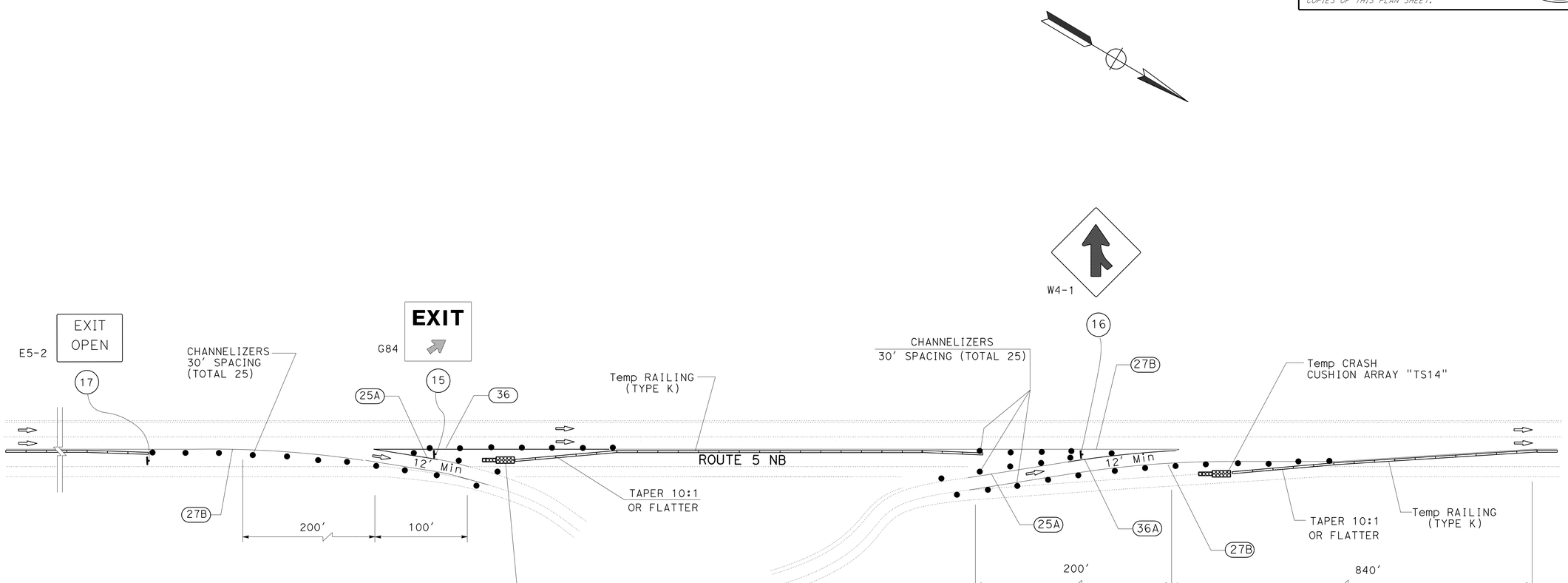

TYPICAL TRAFFIC CONTROL SYSTEM
RAMP ENTRANCE/ EXIT DETAILS
WITH Temp RAILING (TYPE K)

APPROVED FOR TRAFFIC HANDLING WORK ONLY

TRAFFIC HANDLING PLAN

NO SCALE

TH-4

STATE OF CALIFORNIA - DEPARTMENT OF TRANSPORTATION
Caltrans
TRAFFIC DESIGN

FUNCTIONAL SUPERVISOR: MOHAMMED QATAMI

CALCULATED-DESIGNED BY: MAZIN AL-ALI
CHECKED BY: HASEEB YOUSAF

REVISED BY
DATE REVISED

LAST REVISION 06-23-14
DATE PLOTTED => 01-JUL-2014
TIME PLOTTED => 10:43

Dist	COUNTY	ROUTE	POST MILES TOTAL PROJECT	SHEET No.	TOTAL SHEETS
06	Fre	5	48.8/53.0	43	117

REGISTERED CIVIL ENGINEER 04-09-14 DATE

6-23-14
PLANS APPROVAL DATE

REGISTERED PROFESSIONAL ENGINEER MAZIN H. AL-ALI No. 65523 Exp. 9/30/15 CIVIL STATE OF CALIFORNIA

THE STATE OF CALIFORNIA OR ITS OFFICERS OR AGENTS SHALL NOT BE RESPONSIBLE FOR THE ACCURACY OR COMPLETENESS OF SCANNED COPIES OF THIS PLAN SHEET.

PAVEMENT DELINEATION QUANTITIES (TRAFFIC HANDLING)

SHEET No.	ROUTE 5	LOCATION	DETAIL No.	TEMPORARY PAVEMENT MARKER TYPE G Yellow (One-Way)	TEMPORARY PAVEMENT MARKER TYPE H Yellow (One-Way)	TEMPORARY TRAFFIC STRIPE (PAINT)	REMOVE THERMOPLASTIC TRAFFIC STRIPE	REMOVE PAVEMENT MARKER
				EA	EA	LF	LF	EA
TH-1	ROUTE 5 NB (STAGE 1)	Sta 178+30 TO 303+00	12				3118	260
		Sta 178+30 TO 303+00	27B				12,470	
		Sta 178+30 TO 303+00	27B			12,470		
		Sta 178+30 TO 303+00	27B			12,470		
		Sta 178+30 TO 303+00	25		260	12,470		
TH-2	ROUTE 5 NB (STAGE 2)	Sta 178+30 TO 303+00	25		260	12,470		
		Sta 178+30 TO 303+00	27B			12,470		
		Sta 178+30 TO 303+00	27B			12,470		
TH-3	ROUTE 5 NB (STAGE 3)	Sta 178+30 TO 303+00	25		260	12,470		
		Sta 178+30 TO 303+00	25		260	12,470		
		Sta 178+30 TO 303+00	27B			12,470		
		Sta 178+30 TO 303+00	27B			12,470		
			38	22		500		
TH-4	ROUTE 5	RAMPS	27B			5,200		
			25A		85	2,000		
			36	51		1,200		
			36A	35		800		
TOTAL				1233		134,400	15,588	260

CHANNELIZER (SURFACE MOUNTED)

SHEET No.	EA
TH-1	41
TH-2	41
TH-3	88
TH-3 (Ramps)	50
TOTAL	220

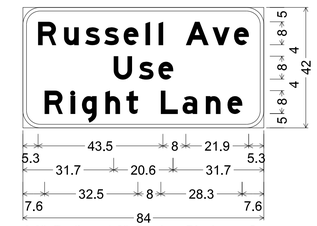

6.0" Radius, 1.3" Border, Black on Orange;
[Russell Ave] E Mod; [Use] E Mod;
[Right Lane] E Mod;

(11) SC3(CA) (Mod)

TEMPORARY CRASH CUSHION MODULE

SHEET No.	EA
TH-1	14
TH-2	14
TH-3	35
TH-4	28
TOTAL	91

CONSTRUCTION AREA SIGNS (TRAFFIC HANDLING)

SHEET No.	SIGN (X)	CODE	PANEL SIZE	NUMBER OF POST AND SIZE	No. OF SIGNS
					EA
TH-1 STAGE 1	1	R4-9	36" x 48"	1-6" x 6"	2
	2	W1-4	48" x 48"	1-6" x 6"	2
		W24-1CP	30" x 30"		2
	3	W1-4	48" x 48"	1-6" x 6"	2
		W24-1CP	30" x 30"		2
TH-2 STAGE 2	4	R4-9	36" x 48"	1-6" x 6"	2
	5	W1-4	48" x 48"	1-6" x 6"	2
		W24-1CP	30" x 30"		2
	6	C31A (CA)	48" x 48"	1-6" x 6"	2
	7	W1-4	48" x 48"	1-6" x 6"	2
		W24-1CP	30" x 30"		2
TH-3 STAGE 3	8	W74 (CA) (Mod)	48" x 48"	1-6" x 6"	2
	9	R4-5	48" x 60"	1-6" x 6"	2
	10	R4-9	36" x 48"	1-6" x 6"	2
	11	SC3(CA) (Mod)	84" x 42"	2-4" x 6"	1
	12	W9-3A	48" x 48"	1-6" x 6"	2
		W13-1	30" x 30"		2
	13	W4-3	48" x 48"	1-6" x 6"	2
	14	R53E(CA)	48" x 60"	1-6" x 6"	2
TH-4	15	G84	48" x 54"	1-6" x 6"	1
	16	W4-1	48" x 48"	1-6" x 6"	1
	17	E5-2	36" x 48"	1-6" x 6"	1

NOTE: FOR ADDITIONAL CONSTRUCTION AREA SIGNS REFER TO CS-1 SHEET.

TEMPORARY RAILING (TYPE K)

STAGE	SHEET No.	LOCATION	LF
STAGE 1 (NB I-5)	TH-1	Sta 178+30 TO 303+30	12,500
STAGE 2 (NB I-5)	TH-2	Sta 178+30 TO 303+30	12,500
STAGE 3 (NB I-5)	TH-3	Sta 178+30 TO 303+30	12,500
		Sta 178+30 TO 303+30	12,500
TOTAL			50,000

TRAFFIC HANDLING QUANTITIES

THQ-1

REVISED BY | DATE REVISED
MAZIN AL-ALI | HASEEB YOUSAF
CALCULATED-DESIGNED BY | CHECKED BY
FUNCTIONAL SUPERVISOR | MOHAMMED QATAMI
STATE OF CALIFORNIA - DEPARTMENT OF TRANSPORTATION
Caltrans® TRAFFIC DESIGN

LAST REVISION 06-23-14 | DATE PLOTTED => 01-JUL-2014 | TIME PLOTTED => 10:43

Dist	COUNTY	ROUTE	POST MILES TOTAL PROJECT	SHEET No.	TOTAL SHEETS
06	Fre	5	48.8/53.0	44	117

REGISTERED CIVIL ENGINEER — DATE 04-09-14

6-23-14
PLANS APPROVAL DATE

REGISTERED PROFESSIONAL ENGINEER — MAZIN H. AL-ALI — No. 65523 — Exp. 9/30/15 — CIVIL — STATE OF CALIFORNIA

THE STATE OF CALIFORNIA OR ITS OFFICERS OR AGENTS SHALL NOT BE RESPONSIBLE FOR THE ACCURACY OR COMPLETENESS OF SCANNED COPIES OF THIS PLAN SHEET.

LEGEND:

- LIMITS OF DESIGNATED TRAFFIC STRIPING DETAIL
- DELINEATOR
- RELOCATE ROADSIDE SIGN (FOR LOCATIONS SEE ELECTRICAL PLANS)
- S "STOP" THERMOPLASTIC PAVEMENT MARKING
- A "AHEAD" THERMOPLASTIC PAVEMENT MARKING
- (X-X) ROADSIDE SIGN NUMBER
- ● REMOVE ROADSIDE SIGN

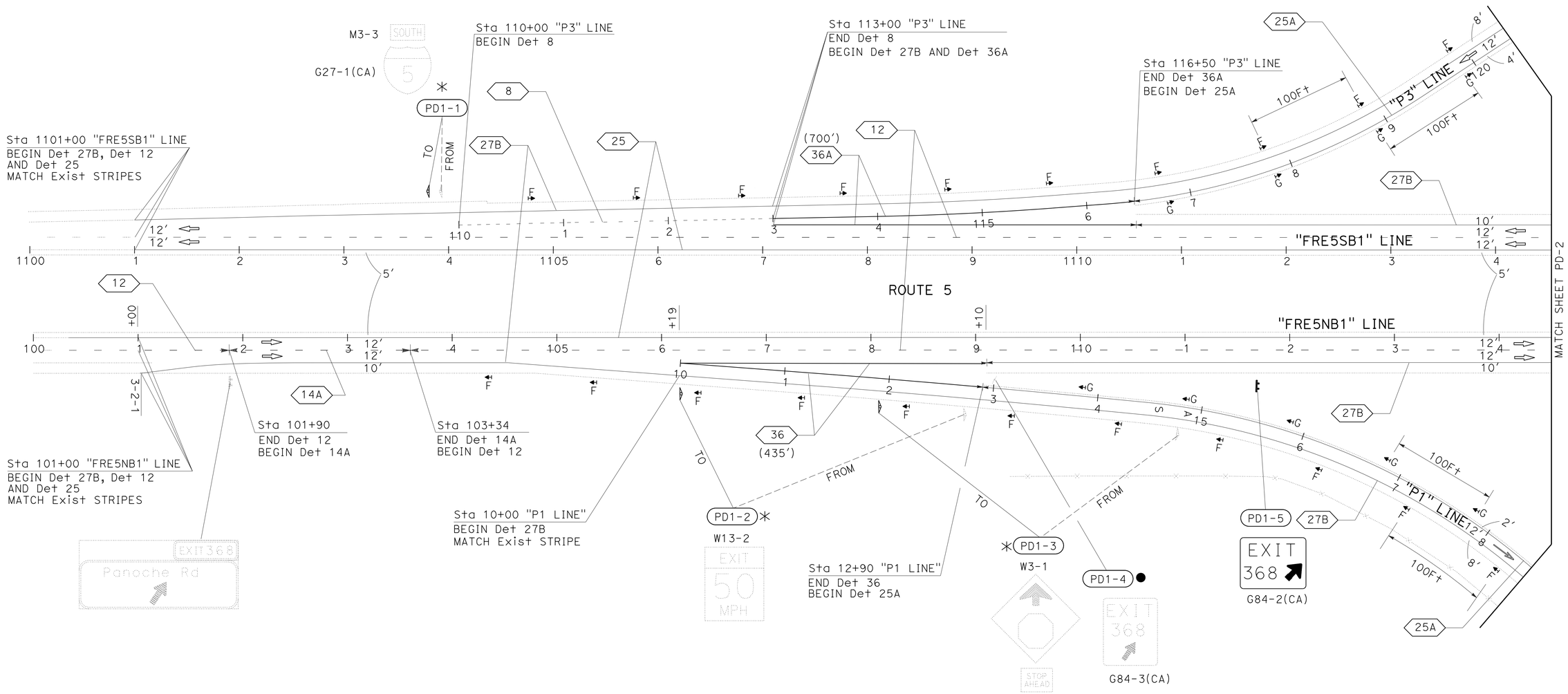

PAVEMENT DELINEATION AND SIGN PLAN

SCALE: 1"=50'

PD-1

APPROVED FOR PAVEMENT DELINEATION AND SIGN WORK ONLY

STATE OF CALIFORNIA - DEPARTMENT OF TRANSPORTATION
Caltrans
TRAFFIC DESIGN

FUNCTIONAL SUPERVISOR: MOHAMMED QATAMI
CALCULATED-DESIGNED BY: HASEEB YOUSAF
CHECKED BY: MAZIN AL-ALI
REVISED BY
DATE REVISED

LAST REVISION 06-23-14
DATE PLOTTED => 01-JUL-2014
TIME PLOTTED => 10:43

Dist	COUNTY	ROUTE	POST MILES TOTAL PROJECT	SHEET No.	TOTAL SHEETS
06	Fre	5	48.8/53.0	45	117

REGISTERED CIVIL ENGINEER 04-09-14 DATE

6-23-14
PLANS APPROVAL DATE

REGISTERED PROFESSIONAL ENGINEER MAZIN H. AL-ALI No. 65523 Exp. 9/30/15 CIVIL STATE OF CALIFORNIA

THE STATE OF CALIFORNIA OR ITS OFFICERS OR AGENTS SHALL NOT BE RESPONSIBLE FOR THE ACCURACY OR COMPLETENESS OF SCANNED COPIES OF THIS PLAN SHEET.

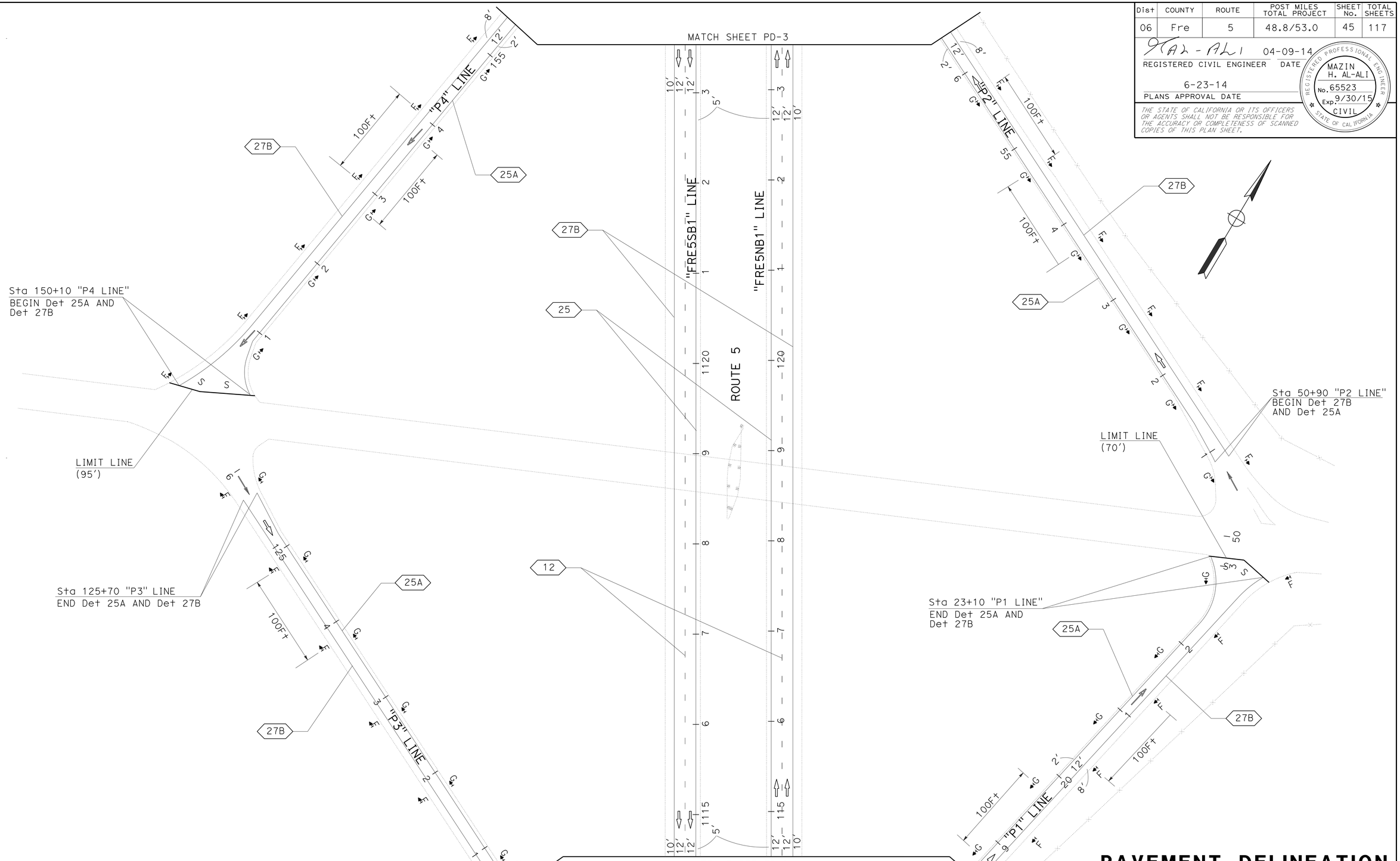

APPROVED FOR PAVEMENT DELINEATION AND SIGN WORK ONLY

PAVEMENT DELINEATION AND SIGN PLAN

SCALE: 1"=50'

PD-2

STATE OF CALIFORNIA - DEPARTMENT OF TRANSPORTATION
Caltrans
TRAFFIC DESIGN

FUNCTIONAL SUPERVISOR: MOHAMMED QATAMI
CALCULATED-DESIGNED BY: HASEEB YOUSAF
CHECKED BY: MAZIN AL-ALI
REVISED BY
DATE REVISED

LAST REVISION 06-23-14
DATE PLOTTED => 01-JUL-2014
TIME PLOTTED => 10:43

Dist	COUNTY	ROUTE	POST MILES TOTAL PROJECT	SHEET No.	TOTAL SHEETS
06	Fre	5	48.8/53.0	46	117

REGISTERED CIVIL ENGINEER 04-09-14 DATE

6-23-14
PLANS APPROVAL DATE

REGISTERED PROFESSIONAL ENGINEER MAZIN H. AL-ALI No. 65523 Exp. 9/30/15 CIVIL STATE OF CALIFORNIA

THE STATE OF CALIFORNIA OR ITS OFFICERS OR AGENTS SHALL NOT BE RESPONSIBLE FOR THE ACCURACY OR COMPLETENESS OF SCANNED COPIES OF THIS PLAN SHEET.

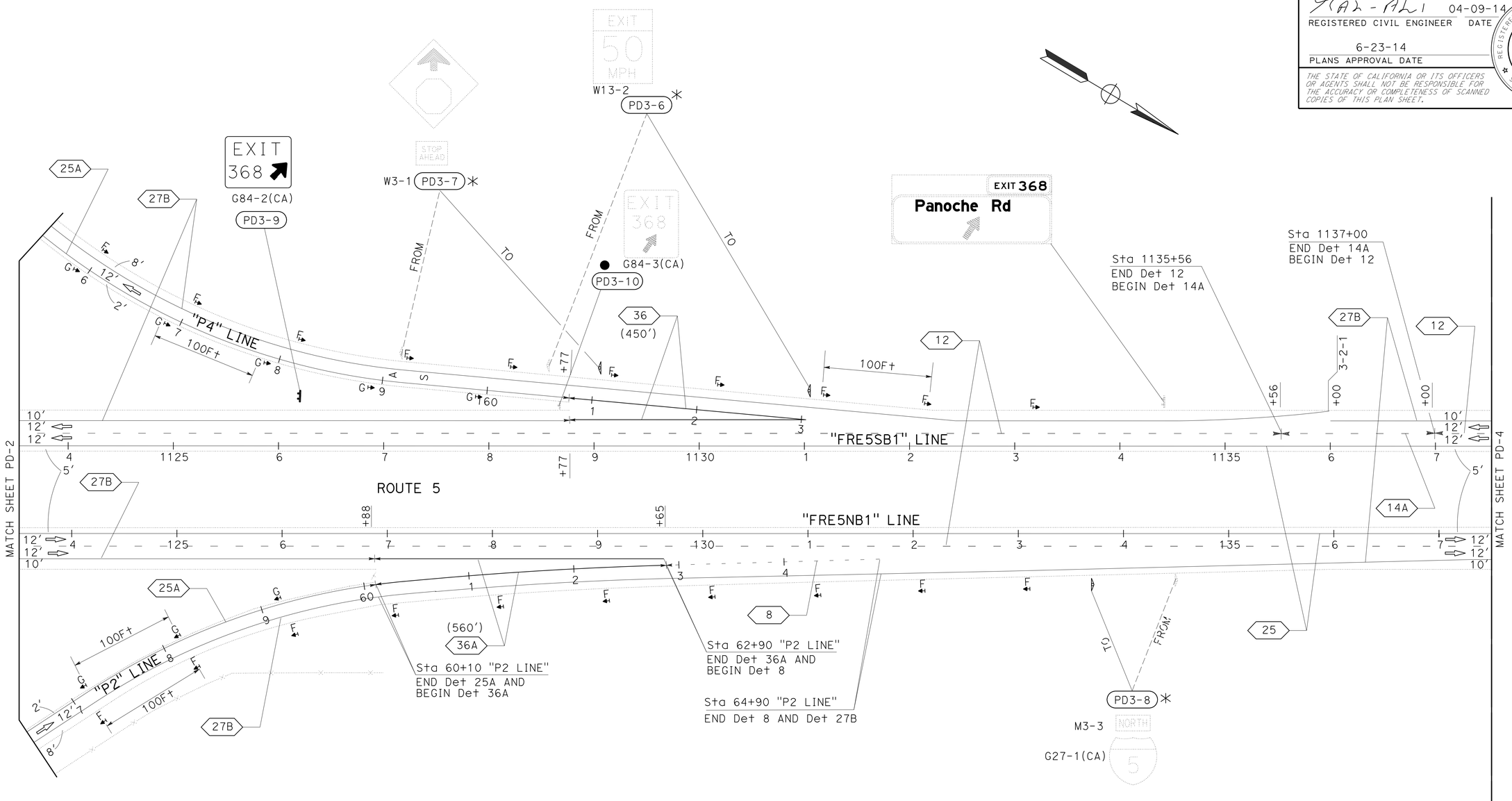

PAVEMENT DELINEATION AND SIGN PLAN

SCALE: 1"=50'

PD-3

APPROVED FOR PAVEMENT DELINEATION AND SIGN WORK ONLY

STATE OF CALIFORNIA - DEPARTMENT OF TRANSPORTATION
Caltrans® TRAFFIC DESIGN

FUNCTIONAL SUPERVISOR: MOHAMMED QATAMI
CALCULATED-DESIGNED BY: HASEEB YOUSAF
CHECKED BY: MAZIN AL-ALI
REVISED BY / DATE REVISED

LAST REVISION 06-23-14 | DATE PLOTTED => 01-JUL-2014 | TIME PLOTTED => 10:43

Dist	COUNTY	ROUTE	POST MILES TOTAL PROJECT	SHEET No.	TOTAL SHEETS
06	Fre	5	48.8/53.0	47	117

REGISTERED CIVIL ENGINEER — DATE 04-09-14

6-23-14
PLANS APPROVAL DATE

REGISTERED PROFESSIONAL ENGINEER
MAZIN H. AL-ALI
No. 65523
Exp. 9/30/15
CIVIL
STATE OF CALIFORNIA

THE STATE OF CALIFORNIA OR ITS OFFICERS OR AGENTS SHALL NOT BE RESPONSIBLE FOR THE ACCURACY OR COMPLETENESS OF SCANNED COPIES OF THIS PLAN SHEET.

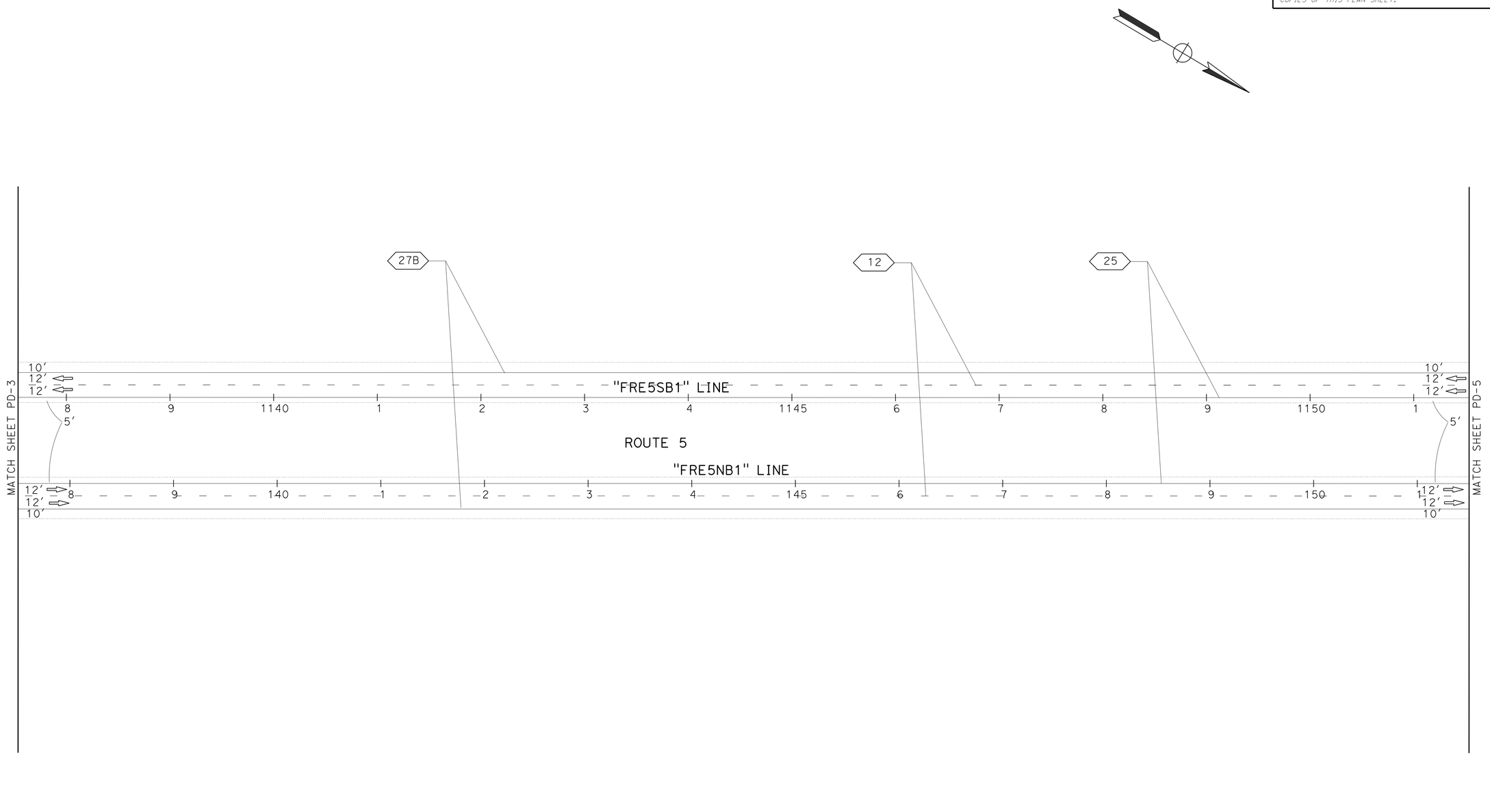

PAVEMENT DELINEATION AND SIGN PLAN

SCALE: 1"=50′

PD-4

APPROVED FOR PAVEMENT DELINEATION AND SIGN WORK ONLY

REVISED BY	
DATE REVISED	
CALCULATED-DESIGNED BY	HASEEB YOUSAF
CHECKED BY	MAZIN AL-ALI
FUNCTIONAL SUPERVISOR	MOHAMMED QATAMI

STATE OF CALIFORNIA - DEPARTMENT OF TRANSPORTATION
Caltrans
TRAFFIC DESIGN

LAST REVISION 06-23-14 | DATE PLOTTED => 01-JUL-2014 | TIME PLOTTED => 10:43

Dist	COUNTY	ROUTE	POST MILES TOTAL PROJECT	SHEET No.	TOTAL SHEETS
06	Fre	5	48.8/53.0	48	117

REGISTERED CIVIL ENGINEER 04-09-14 DATE

6-23-14
PLANS APPROVAL DATE

REGISTERED PROFESSIONAL ENGINEER MAZIN H. AL-ALI No. 65523 Exp. 9/30/15 CIVIL STATE OF CALIFORNIA

THE STATE OF CALIFORNIA OR ITS OFFICERS OR AGENTS SHALL NOT BE RESPONSIBLE FOR THE ACCURACY OR COMPLETENESS OF SCANNED COPIES OF THIS PLAN SHEET.

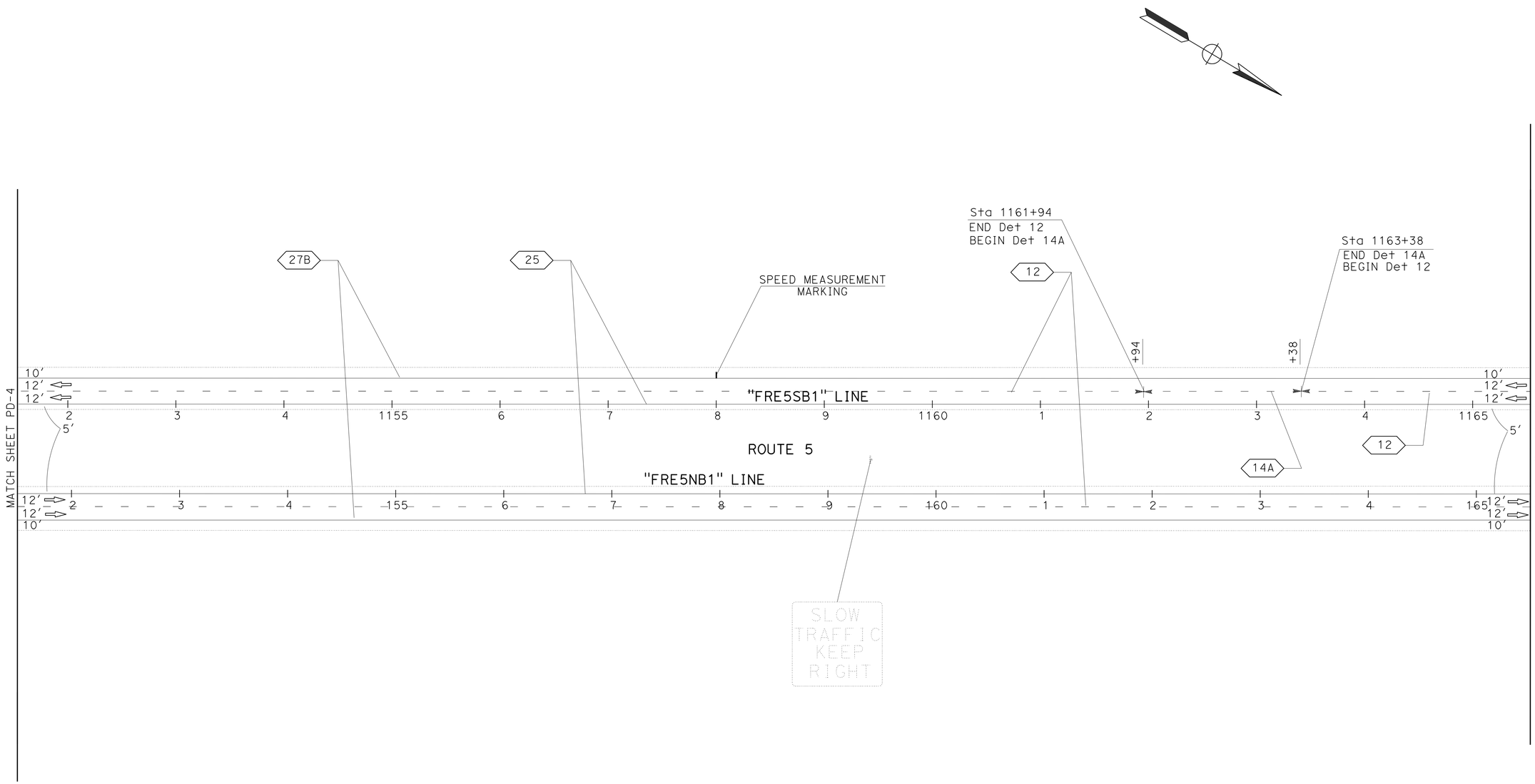

PAVEMENT DELINEATION AND SIGN PLAN

SCALE: 1"=50'

PD-5

APPROVED FOR PAVEMENT DELINEATION AND SIGN WORK ONLY

STATE OF CALIFORNIA - DEPARTMENT OF TRANSPORTATION
Caltrans
TRAFFIC DESIGN

FUNCTIONAL SUPERVISOR: MOHAMMED QATAMI
CALCULATED-DESIGNED BY: HASEEB YOUSAF
CHECKED BY: MAZIN AL-ALI
REVISED BY
DATE REVISED

LAST REVISION 06-23-14
DATE PLOTTED => 01-JUL-2014
TIME PLOTTED => 10:43

Dist	COUNTY	ROUTE	POST MILES TOTAL PROJECT	SHEET No.	TOTAL SHEETS
06	Fre	5	48.8/53.0	49	117

REGISTERED CIVIL ENGINEER 04-09-14 DATE

6-23-14
PLANS APPROVAL DATE

REGISTERED PROFESSIONAL ENGINEER
MAZIN H. AL-ALI
No. 65523
Exp. 9/30/15
CIVIL
STATE OF CALIFORNIA

THE STATE OF CALIFORNIA OR ITS OFFICERS OR AGENTS SHALL NOT BE RESPONSIBLE FOR THE ACCURACY OR COMPLETENESS OF SCANNED COPIES OF THIS PLAN SHEET.

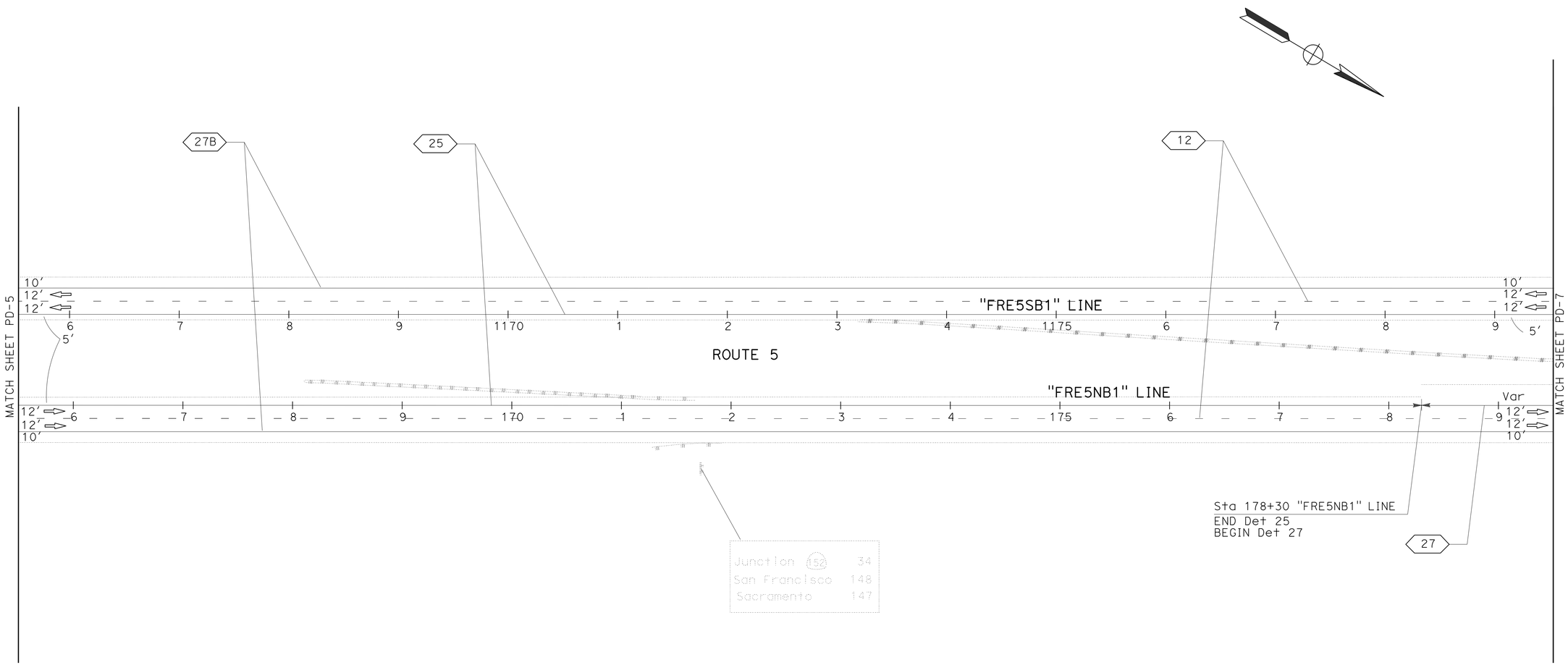

PAVEMENT DELINEATION AND SIGN PLAN

SCALE: 1"=50′

PD-6

APPROVED FOR PAVEMENT DELINEATION AND SIGN WORK ONLY

REVISED BY	DATE REVISED

CALCULATED-DESIGNED BY: HASEEB YOUSAF
CHECKED BY: MAZIN AL-ALI
FUNCTIONAL SUPERVISOR: MOHAMMED QATAMI

STATE OF CALIFORNIA - DEPARTMENT OF TRANSPORTATION
Caltrans
TRAFFIC DESIGN

LAST REVISION 06-23-14
DATE PLOTTED => 01-JUL-2014
TIME PLOTTED => 10:44

Dist	COUNTY	ROUTE	POST MILES TOTAL PROJECT	SHEET No.	TOTAL SHEETS
06	Fre	5	48.8/53.0	50	117

REGISTERED CIVIL ENGINEER 04-09-14 DATE

6-23-14
PLANS APPROVAL DATE

REGISTERED PROFESSIONAL ENGINEER
MAZIN H. AL-ALI
No. 65523
Exp. 9/30/15
CIVIL
STATE OF CALIFORNIA

THE STATE OF CALIFORNIA OR ITS OFFICERS OR AGENTS SHALL NOT BE RESPONSIBLE FOR THE ACCURACY OR COMPLETENESS OF SCANNED COPIES OF THIS PLAN SHEET.

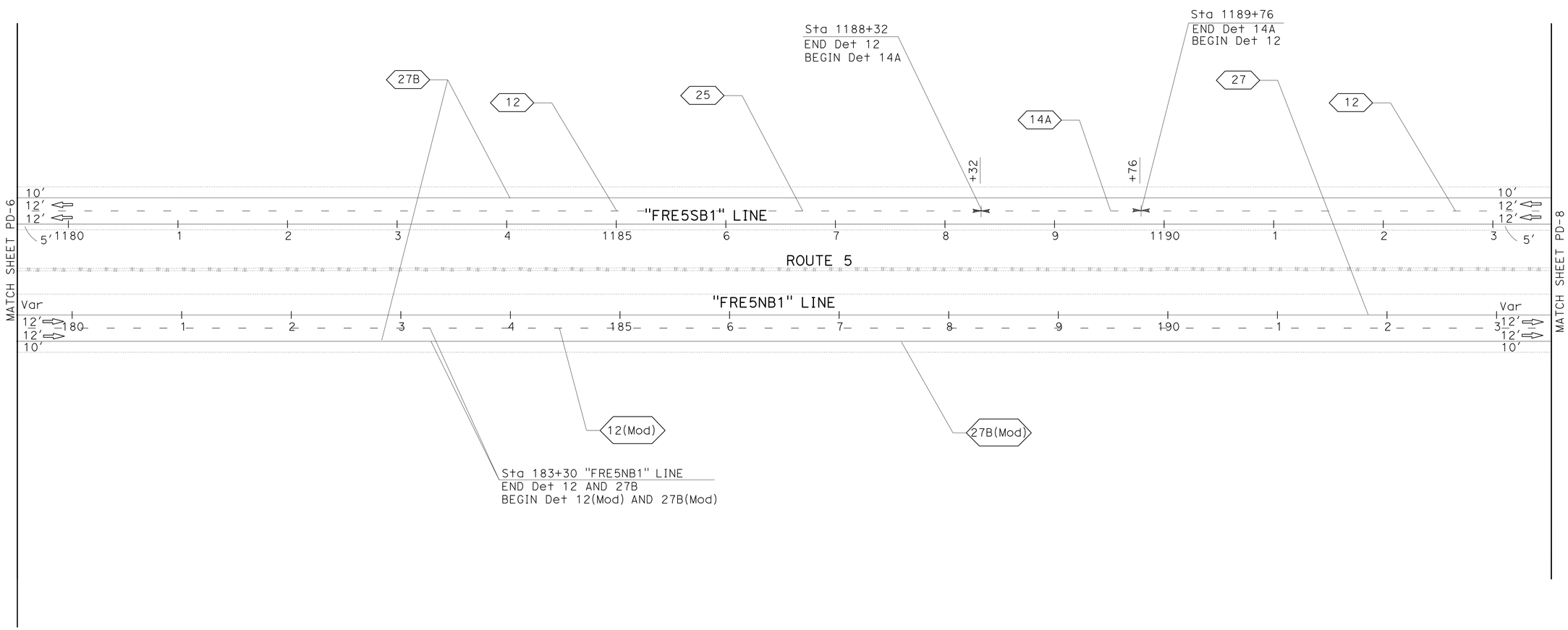

PAVEMENT DELINEATION AND SIGN PLAN

SCALE: 1"=50′

PD-7

APPROVED FOR PAVEMENT DELINEATION AND SIGN WORK ONLY

STATE OF CALIFORNIA - DEPARTMENT OF TRANSPORTATION
Caltrans
TRAFFIC DESIGN

FUNCTIONAL SUPERVISOR: MOHAMMED QATAMI
CALCULATED-DESIGNED BY: HASEEB YOUSAF
CHECKED BY: MAZIN AL-ALI
REVISED BY
DATE REVISED

LAST REVISION 06-23-14 | DATE PLOTTED => 01-JUL-2014 | TIME PLOTTED => 10:44

Dist	COUNTY	ROUTE	POST MILES TOTAL PROJECT	SHEET No.	TOTAL SHEETS
06	Fre	5	48.8/53.0	51	117

REGISTERED CIVIL ENGINEER 04-09-14 DATE

6-23-14
PLANS APPROVAL DATE

REGISTERED PROFESSIONAL ENGINEER
MAZIN H. AL-ALI
No. 65523
Exp. 9/30/15
CIVIL
STATE OF CALIFORNIA

THE STATE OF CALIFORNIA OR ITS OFFICERS OR AGENTS SHALL NOT BE RESPONSIBLE FOR THE ACCURACY OR COMPLETENESS OF SCANNED COPIES OF THIS PLAN SHEET.

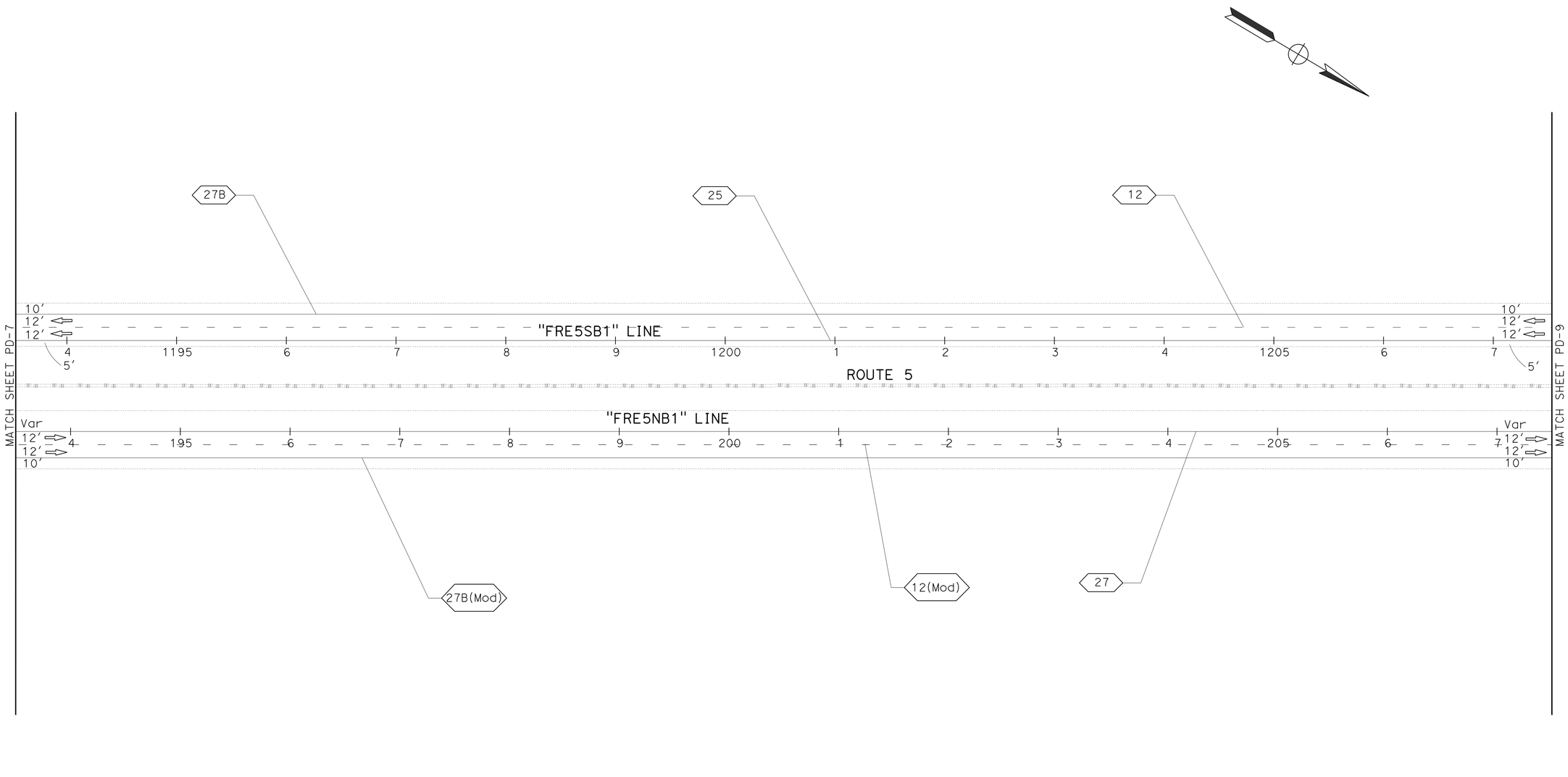

PAVEMENT DELINEATION AND SIGN PLAN

SCALE: 1"=50′

PD-8

APPROVED FOR PAVEMENT DELINEATION AND SIGN WORK ONLY

REVISED BY	
DATE REVISED	
CALCULATED-DESIGNED BY	HASEEB YOUSAF
CHECKED BY	MAZIN AL-ALI
FUNCTIONAL SUPERVISOR	MOHAMMED QATAMI

STATE OF CALIFORNIA - DEPARTMENT OF TRANSPORTATION
Caltrans
TRAFFIC DESIGN

LAST REVISION 06-23-14
DATE PLOTTED => 01-JUL-2014
TIME PLOTTED => 10:44

Dist	COUNTY	ROUTE	POST MILES TOTAL PROJECT	SHEET No.	TOTAL SHEETS
06	Fre	5	48.8/53.0	52	117

REGISTERED CIVIL ENGINEER 04-09-14 DATE

6-23-14
PLANS APPROVAL DATE

REGISTERED PROFESSIONAL ENGINEER
MAZIN H. AL-ALI
No. 65523
Exp. 9/30/15
CIVIL
STATE OF CALIFORNIA

THE STATE OF CALIFORNIA OR ITS OFFICERS OR AGENTS SHALL NOT BE RESPONSIBLE FOR THE ACCURACY OR COMPLETENESS OF SCANNED COPIES OF THIS PLAN SHEET.

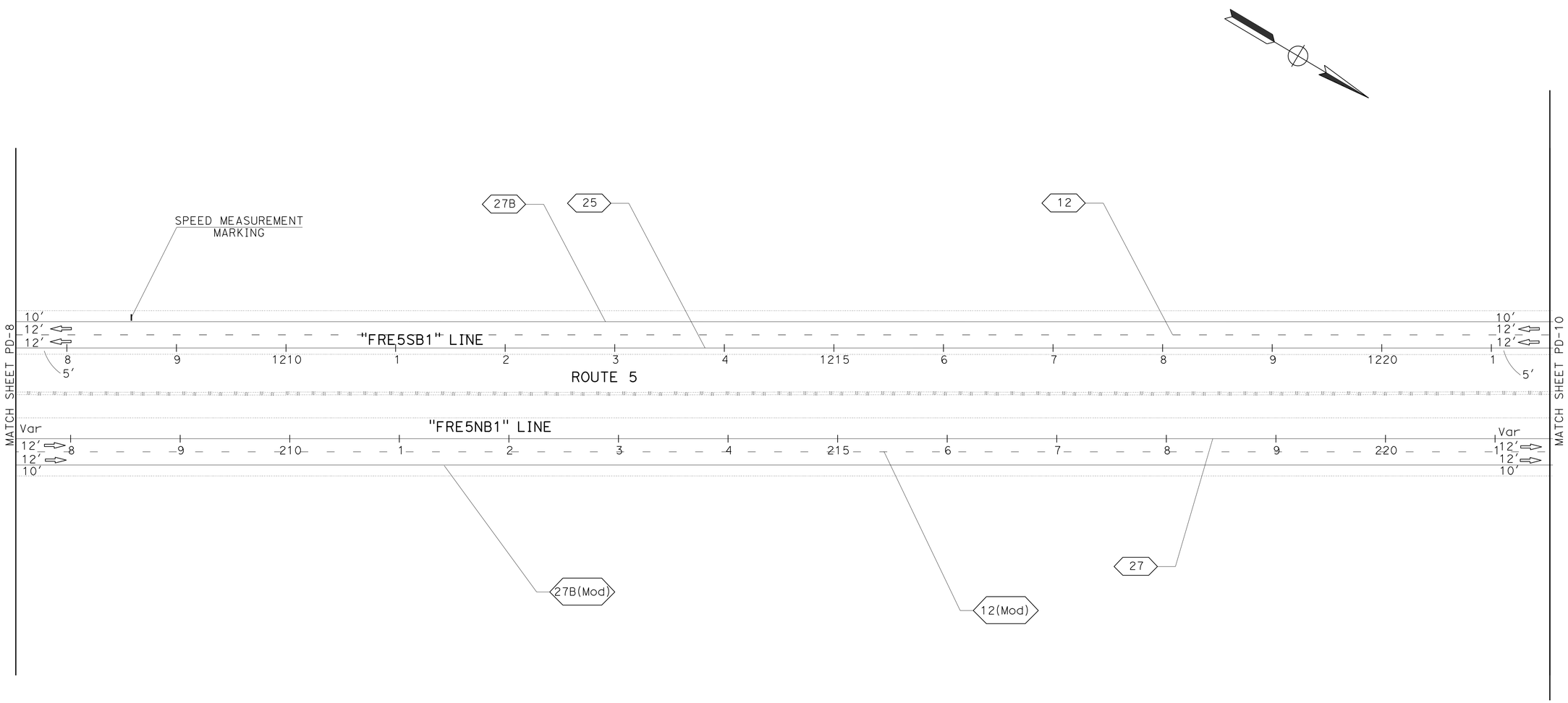

PAVEMENT DELINEATION AND SIGN PLAN

SCALE: 1"=50′

PD-9

APPROVED FOR PAVEMENT DELINEATION AND SIGN WORK ONLY

STATE OF CALIFORNIA - DEPARTMENT OF TRANSPORTATION
Caltrans
TRAFFIC DESIGN

FUNCTIONAL SUPERVISOR: MOHAMMED QATAMI
CALCULATED-DESIGNED BY: HASEEB YOUSAF
CHECKED BY: MAZIN AL-ALI
REVISED BY
DATE REVISED

LAST REVISION 06-23-14
DATE PLOTTED => 01-JUL-2014
TIME PLOTTED => 10:44

Dist	COUNTY	ROUTE	POST MILES TOTAL PROJECT	SHEET No.	TOTAL SHEETS
06	Fre	5	48.8/53.0	53	117

REGISTERED CIVIL ENGINEER — DATE 04-09-14

6-23-14
PLANS APPROVAL DATE

REGISTERED PROFESSIONAL ENGINEER
MAZIN H. AL-ALI
No. 65523
Exp. 9/30/15
CIVIL
STATE OF CALIFORNIA

THE STATE OF CALIFORNIA OR ITS OFFICERS OR AGENTS SHALL NOT BE RESPONSIBLE FOR THE ACCURACY OR COMPLETENESS OF SCANNED COPIES OF THIS PLAN SHEET.

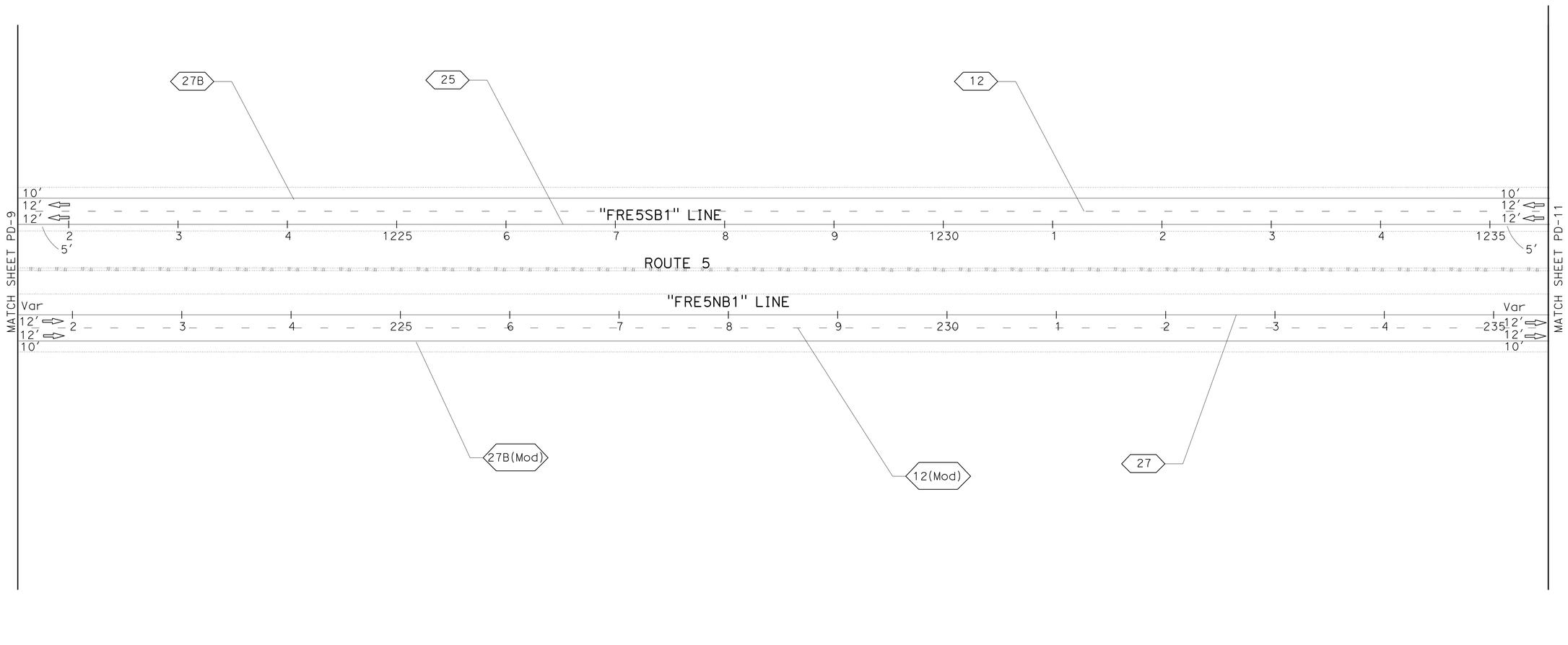

PAVEMENT DELINEATION AND SIGN PLAN

SCALE: 1"=50′

PD-10

APPROVED FOR PAVEMENT DELINEATION AND SIGN WORK ONLY

STATE OF CALIFORNIA - DEPARTMENT OF TRANSPORTATION
Caltrans
TRAFFIC DESIGN

FUNCTIONAL SUPERVISOR: MOHAMMED QATAMI
CALCULATED-DESIGNED BY: HASEEB YOUSAF
CHECKED BY: MAZIN AL-ALI
REVISED BY
DATE REVISED

LAST REVISION 06-23-14
DATE PLOTTED => 01-JUL-2014
TIME PLOTTED => 10:44

Dist	COUNTY	ROUTE	POST MILES TOTAL PROJECT	SHEET No.	TOTAL SHEETS
06	Fre	5	48.8/53.0	54	117

REGISTERED CIVIL ENGINEER 04-09-14 DATE

6-23-14
PLANS APPROVAL DATE

REGISTERED PROFESSIONAL ENGINEER
MAZIN H. AL-ALI
No. 65523
Exp. 9/30/15
CIVIL
STATE OF CALIFORNIA

THE STATE OF CALIFORNIA OR ITS OFFICERS OR AGENTS SHALL NOT BE RESPONSIBLE FOR THE ACCURACY OR COMPLETENESS OF SCANNED COPIES OF THIS PLAN SHEET.

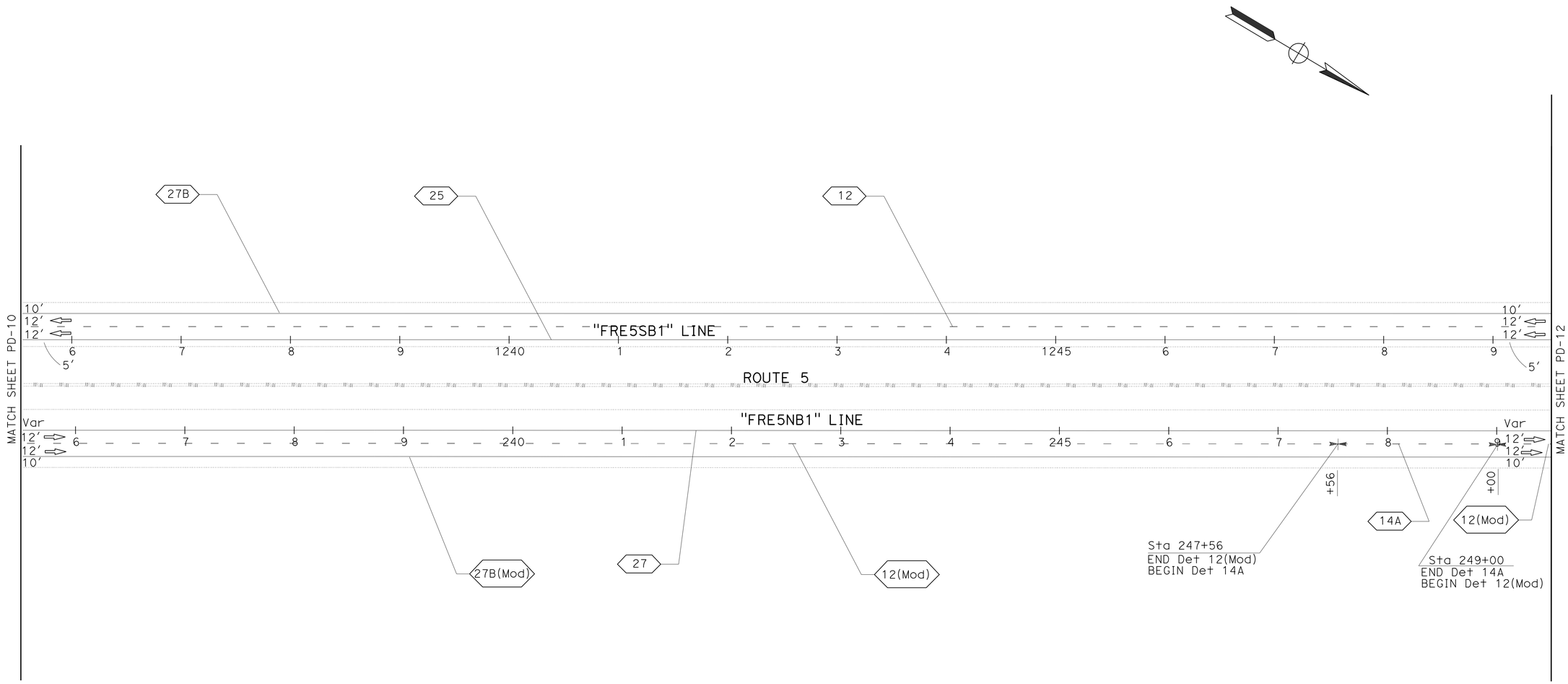

PAVEMENT DELINEATION AND SIGN PLAN

SCALE: 1"=50′

PD-11

APPROVED FOR PAVEMENT DELINEATION AND SIGN WORK ONLY

STATE OF CALIFORNIA - DEPARTMENT OF TRANSPORTATION
Caltrans
TRAFFIC DESIGN

FUNCTIONAL SUPERVISOR: MOHAMMED QATAMI
CALCULATED-DESIGNED BY: HASEEB YOUSAF
CHECKED BY: MAZIN AL-ALI
REVISED BY
DATE REVISED

LAST REVISION 06-23-14
DATE PLOTTED => 01-JUL-2014
TIME PLOTTED => 10:44

Dist	COUNTY	ROUTE	POST MILES TOTAL PROJECT	SHEET No.	TOTAL SHEETS
06	Fre	5	48.8/53.0	55	117

REGISTERED CIVIL ENGINEER 04-09-14 DATE

6-23-14
PLANS APPROVAL DATE

REGISTERED PROFESSIONAL ENGINEER
MAZIN H. AL-ALI
No. 65523
Exp. 9/30/15
CIVIL
STATE OF CALIFORNIA

THE STATE OF CALIFORNIA OR ITS OFFICERS OR AGENTS SHALL NOT BE RESPONSIBLE FOR THE ACCURACY OR COMPLETENESS OF SCANNED COPIES OF THIS PLAN SHEET.

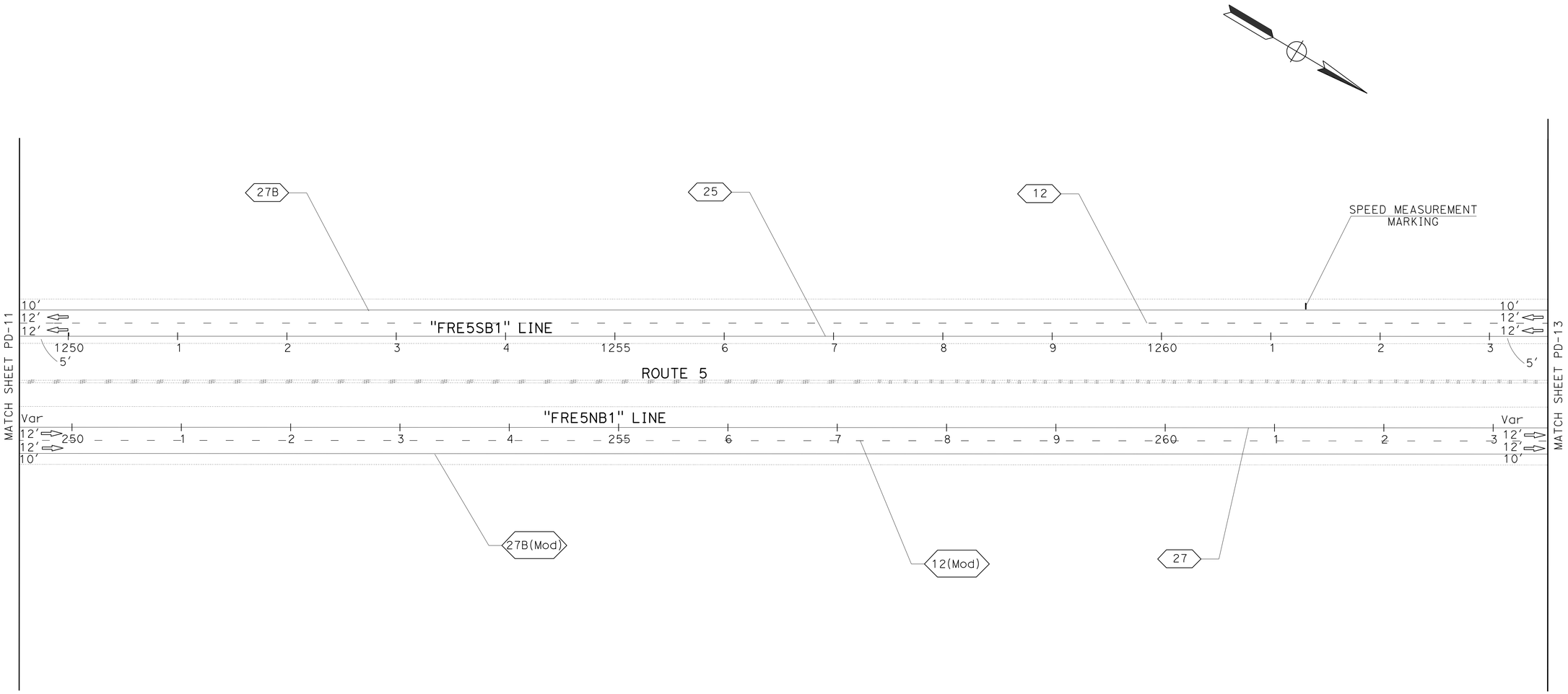

PAVEMENT DELINEATION AND SIGN PLAN

SCALE: 1"=50′

PD-12

APPROVED FOR PAVEMENT DELINEATION AND SIGN WORK ONLY

STATE OF CALIFORNIA - DEPARTMENT OF TRANSPORTATION
Caltrans
TRAFFIC DESIGN

FUNCTIONAL SUPERVISOR: MOHAMMED QATAMI
CALCULATED-DESIGNED BY: HASEEB YOUSAF
CHECKED BY: MAZIN AL-ALI
REVISED BY
DATE REVISED

LAST REVISION DATE PLOTTED => 01-JUL-2014
06-23-14 TIME PLOTTED => 10:44

Dist	COUNTY	ROUTE	POST MILES TOTAL PROJECT	SHEET No.	TOTAL SHEETS
06	Fre	5	48.8/53.0	56	117

REGISTERED CIVIL ENGINEER DATE 04-09-14

6-23-14
PLANS APPROVAL DATE

REGISTERED PROFESSIONAL ENGINEER
MAZIN H. AL-ALI
No. 65523
Exp. 9/30/15
CIVIL
STATE OF CALIFORNIA

THE STATE OF CALIFORNIA OR ITS OFFICERS OR AGENTS SHALL NOT BE RESPONSIBLE FOR THE ACCURACY OR COMPLETENESS OF SCANNED COPIES OF THIS PLAN SHEET.

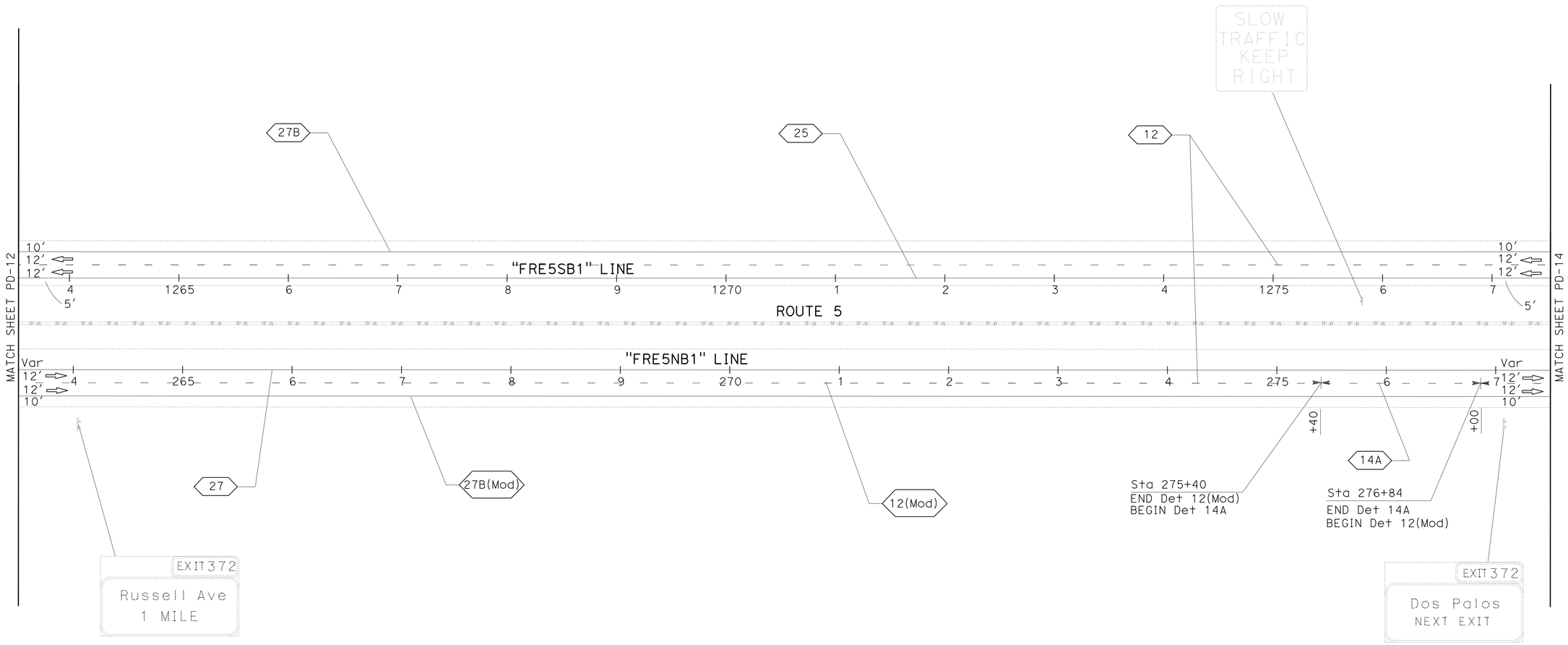

PAVEMENT DELINEATION AND SIGN PLAN

SCALE: 1"=50′

PD-13

APPROVED FOR PAVEMENT DELINEATION AND SIGN WORK ONLY

STATE OF CALIFORNIA - DEPARTMENT OF TRANSPORTATION
Caltrans®
TRAFFIC DESIGN

FUNCTIONAL SUPERVISOR: MOHAMMED QATAMI

CALCULATED-DESIGNED BY: HASEEB YOUSAF
CHECKED BY: MAZIN AL-ALI

REVISED BY
DATE REVISED

LAST REVISION 06-23-14
DATE PLOTTED => 01-JUL-2014
TIME PLOTTED => 10:44

Dist	COUNTY	ROUTE	POST MILES TOTAL PROJECT	SHEET No.	TOTAL SHEETS
06	Fre	5	48.8/53.0	57	117

REGISTERED CIVIL ENGINEER 04-09-14 DATE

6-23-14
PLANS APPROVAL DATE

REGISTERED PROFESSIONAL ENGINEER
MAZIN H. AL-ALI
No. 65523
Exp. 9/30/15
CIVIL
STATE OF CALIFORNIA

THE STATE OF CALIFORNIA OR ITS OFFICERS OR AGENTS SHALL NOT BE RESPONSIBLE FOR THE ACCURACY OR COMPLETENESS OF SCANNED COPIES OF THIS PLAN SHEET.

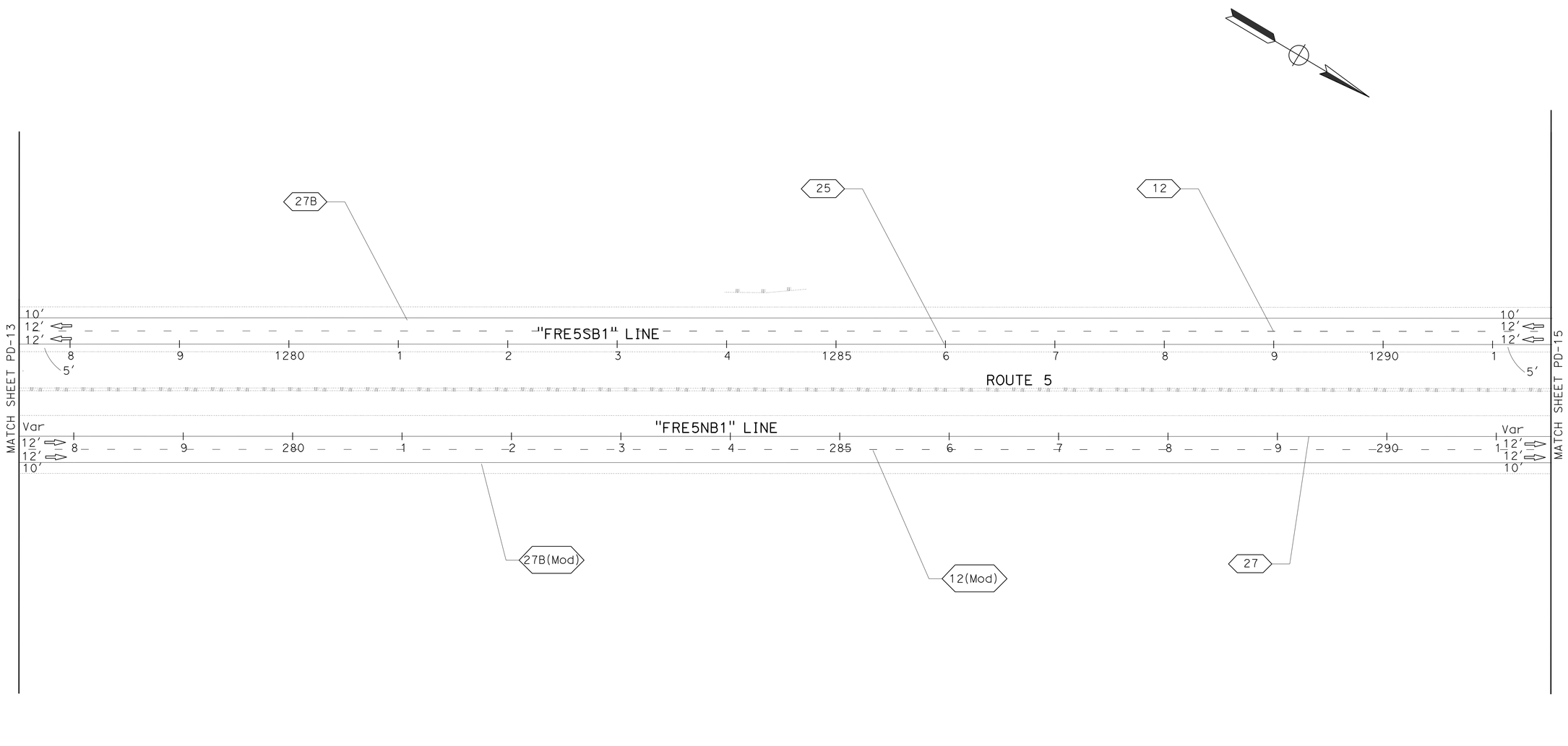

PAVEMENT DELINEATION AND SIGN PLAN

SCALE: 1"=50'

PD-14

APPROVED FOR PAVEMENT DELINEATION AND SIGN WORK ONLY

REVISED BY	DATE REVISED
HASEEB YOUSAF	MAZIN AL-ALI
CALCULATED-DESIGNED BY	CHECKED BY
FUNCTIONAL SUPERVISOR	MOHAMMED QATAMI

STATE OF CALIFORNIA - DEPARTMENT OF TRANSPORTATION
Caltrans
TRAFFIC DESIGN

LAST REVISION 06-23-14 | DATE PLOTTED => 01-JUL-2014 | TIME PLOTTED => 10:44

Dist	COUNTY	ROUTE	POST MILES TOTAL PROJECT	SHEET No.	TOTAL SHEETS
06	Fre	5	48.8/53.0	58	117

REGISTERED CIVIL ENGINEER 04-09-14 DATE

6-23-14
PLANS APPROVAL DATE

REGISTERED PROFESSIONAL ENGINEER
MAZIN H. AL-ALI
No. 65523
Exp. 9/30/15
CIVIL
STATE OF CALIFORNIA

THE STATE OF CALIFORNIA OR ITS OFFICERS OR AGENTS SHALL NOT BE RESPONSIBLE FOR THE ACCURACY OR COMPLETENESS OF SCANNED COPIES OF THIS PLAN SHEET.

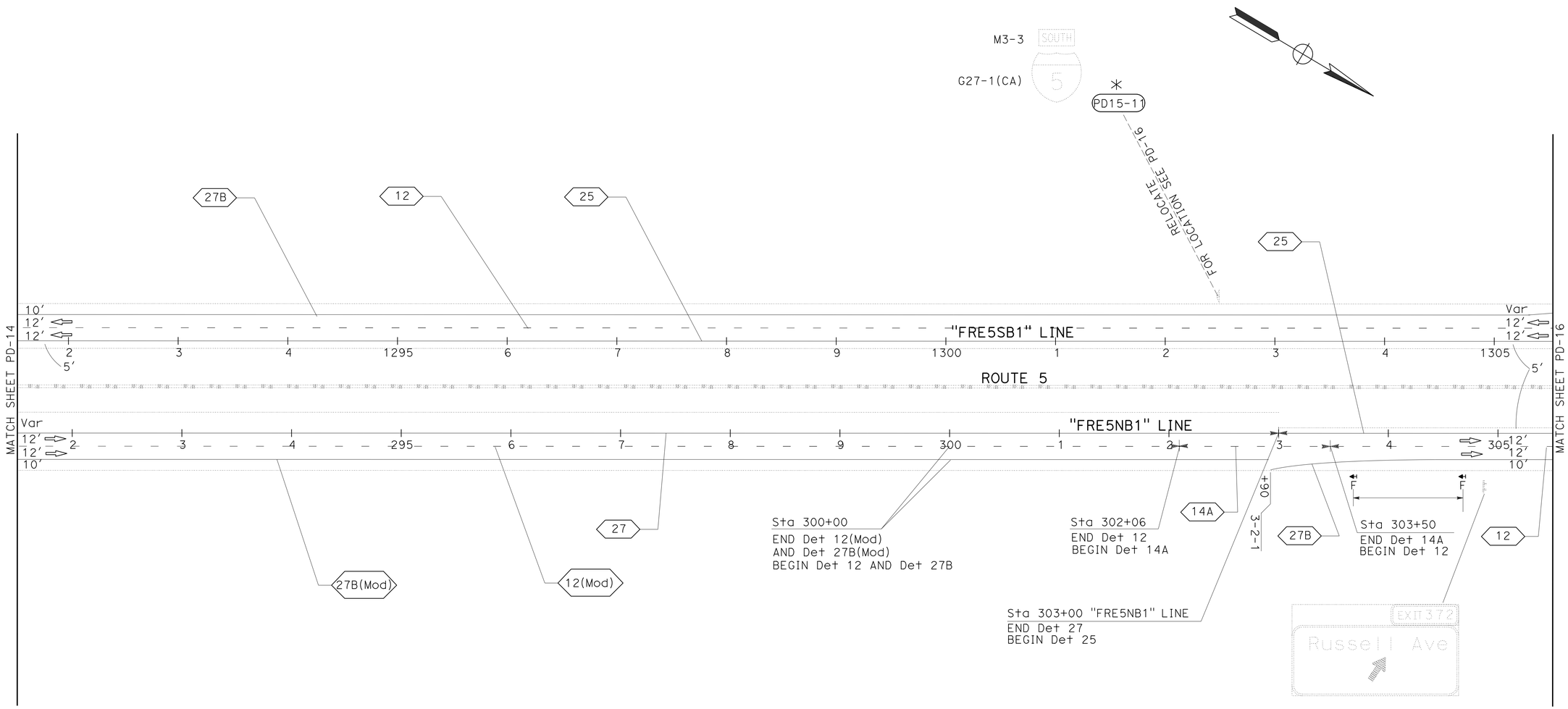

PAVEMENT DELINEATION AND SIGN PLAN

SCALE: 1"=50′

PD-15

APPROVED FOR PAVEMENT DELINEATION AND SIGN WORK ONLY

STATE OF CALIFORNIA - DEPARTMENT OF TRANSPORTATION
Caltrans
TRAFFIC DESIGN

FUNCTIONAL SUPERVISOR: MOHAMMED QATAMI

CALCULATED-DESIGNED BY: HASEEB YOUSAF
CHECKED BY: MAZIN AL-ALI

REVISED BY
DATE REVISED

LAST REVISION 06-23-14
DATE PLOTTED => 01-JUL-2014
TIME PLOTTED => 10:44

Dist	COUNTY	ROUTE	POST MILES TOTAL PROJECT	SHEET No.	TOTAL SHEETS
06	Fre	5	48.8/53.0	59	117

REGISTERED CIVIL ENGINEER 04-09-14 DATE

6-23-14
PLANS APPROVAL DATE

REGISTERED PROFESSIONAL ENGINEER MAZIN H. AL-ALI No. 65523 Exp. 9/30/15 CIVIL STATE OF CALIFORNIA

THE STATE OF CALIFORNIA OR ITS OFFICERS OR AGENTS SHALL NOT BE RESPONSIBLE FOR THE ACCURACY OR COMPLETENESS OF SCANNED COPIES OF THIS PLAN SHEET.

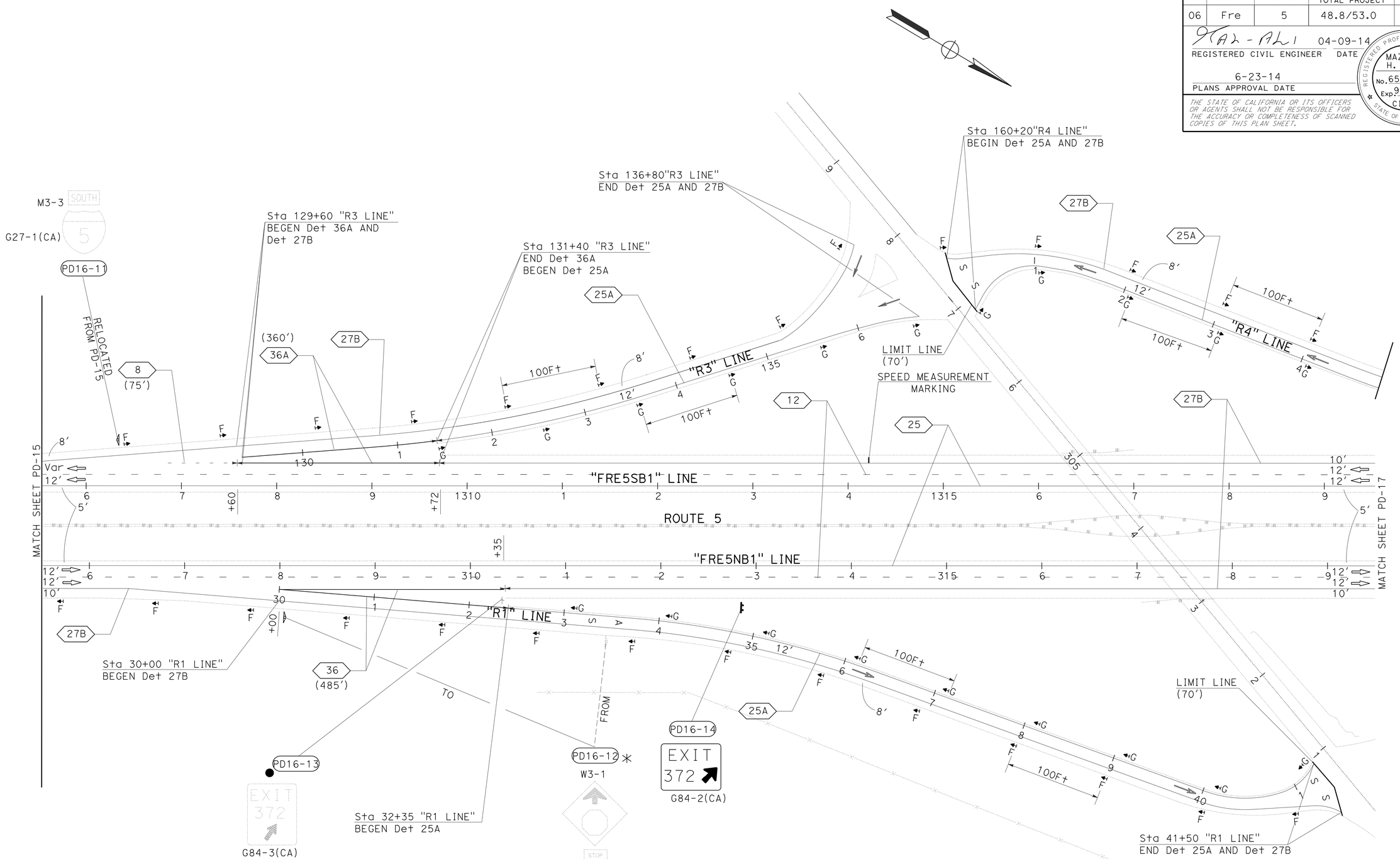

PAVEMENT DELINEATION AND SIGN PLAN

SCALE: 1"=50'

PD-16

APPROVED FOR PAVEMENT DELINEATION AND SIGN WORK ONLY

STATE OF CALIFORNIA - DEPARTMENT OF TRANSPORTATION
Caltrans
TRAFFIC DESIGN

FUNCTIONAL SUPERVISOR: MOHAMMED QATAMI
CALCULATED-DESIGNED BY: HASEEB YOUSAF
CHECKED BY: MAZIN AL-ALI
REVISED BY
DATE REVISED

LAST REVISION 06-23-14
DATE PLOTTED => 01-JUL-2014
TIME PLOTTED => 10:44

Dist	COUNTY	ROUTE	POST MILES TOTAL PROJECT	SHEET No.	TOTAL SHEETS
06	Fre	5	48.8/53.0	60	117

REGISTERED CIVIL ENGINEER — DATE 04-09-14

6-23-14
PLANS APPROVAL DATE

REGISTERED PROFESSIONAL ENGINEER — MAZIN H. AL-ALI — No. 65523 — Exp. 9/30/15 — CIVIL — STATE OF CALIFORNIA

THE STATE OF CALIFORNIA OR ITS OFFICERS OR AGENTS SHALL NOT BE RESPONSIBLE FOR THE ACCURACY OR COMPLETENESS OF SCANNED COPIES OF THIS PLAN SHEET.

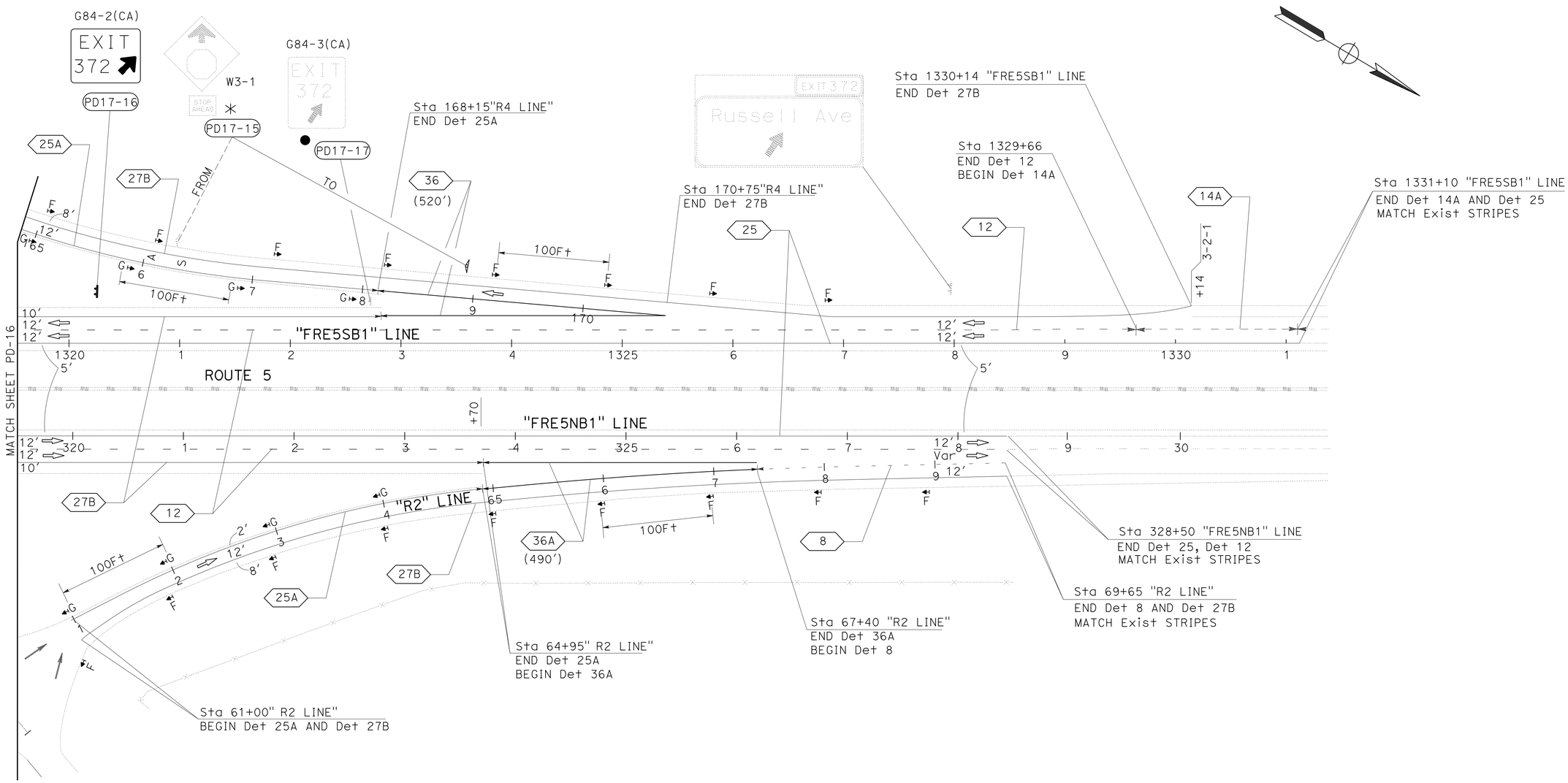

PAVEMENT DELINEATION AND SIGN PLAN

SCALE: 1"=50'

PD-17

APPROVED FOR PAVEMENT DELINEATION AND SIGN WORK ONLY

STATE OF CALIFORNIA - DEPARTMENT OF TRANSPORTATION
Caltrans®
TRAFFIC DESIGN

FUNCTIONAL SUPERVISOR: MOHAMMED QATAMI
CALCULATED-DESIGNED BY: HASEEB YOUSAF
CHECKED BY: MAZIN AL-ALI
REVISED BY
DATE REVISED

LAST REVISION 06-23-14
DATE PLOTTED => 01-JUL-2014
TIME PLOTTED => 10:44

Dist	COUNTY	ROUTE	POST MILES TOTAL PROJECT	SHEET No.	TOTAL SHEETS
06	Fre	5	48.8/53.0	61	117

REGISTERED CIVIL ENGINEER 04-09-14 DATE

6-23-14
PLANS APPROVAL DATE

REGISTERED PROFESSIONAL ENGINEER MAZIN H. AL-ALI No. 65523 Exp. 9/30/15 CIVIL STATE OF CALIFORNIA

THE STATE OF CALIFORNIA OR ITS OFFICERS OR AGENTS SHALL NOT BE RESPONSIBLE FOR THE ACCURACY OR COMPLETENESS OF SCANNED COPIES OF THIS PLAN SHEET.

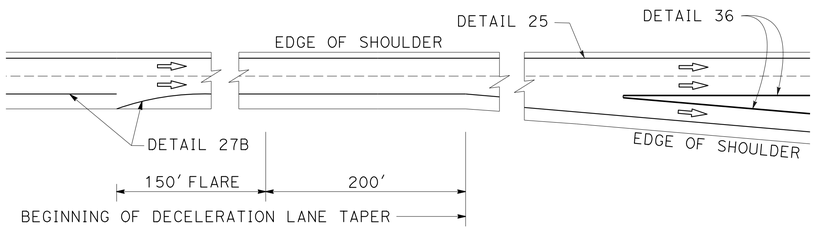

RIGHT EDGELINE FLARE DETAIL

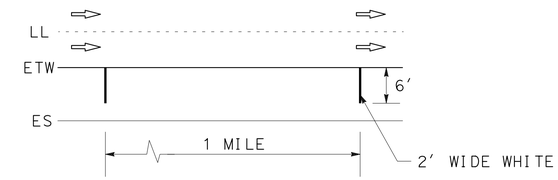

AIRCRAFT PATROL PAVEMENT MARKING DETAIL

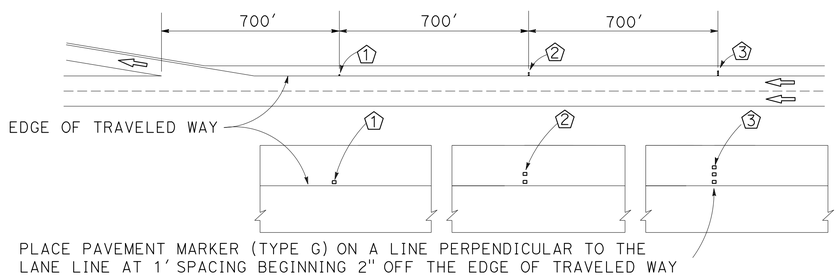

ADVANCE MARKERS DETAIL

(3-2-1 FOG MARKER)

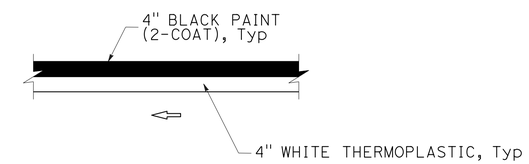

TRAFFIC STRIPE CONTRAST DETAIL DETAIL 27B MODIFIED

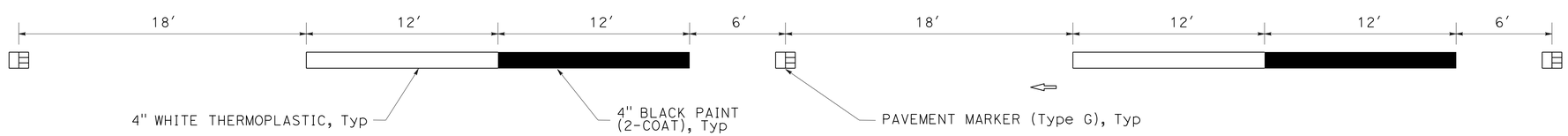

TRAFFIC STRIPE CONTRAST DETAIL DETAIL 12 MODIFIED

PAVEMENT DELINEATION DETAILS

PDD-1

NO SCALE

STATE OF CALIFORNIA - DEPARTMENT OF TRANSPORTATION
Caltrans
TRAFFIC DESIGN

FUNCTIONAL SUPERVISOR: MOHAMMED QATAMI
CALCULATED-DESIGNED BY: HASEEB YOUSAF
CHECKED BY: MAZIN AL-ALI
REVISED BY
DATE REVISED

LAST REVISION 06-23-14
DATE PLOTTED => 01-JUL-2014
TIME PLOTTED => 10:44

Dist	COUNTY	ROUTE	POST MILES TOTAL PROJECT	SHEET No.	TOTAL SHEETS
06	Fre	5	48.8/53.0	62	117

REGISTERED CIVIL ENGINEER 04-09-14 DATE

6-23-14
PLANS APPROVAL DATE

REGISTERED PROFESSIONAL ENGINEER MAZIN H. AL-ALI No.65523 Exp.9/30/15 CIVIL STATE OF CALIFORNIA

THE STATE OF CALIFORNIA OR ITS OFFICERS OR AGENTS SHALL NOT BE RESPONSIBLE FOR THE ACCURACY OR COMPLETENESS OF SCANNED COPIES OF THIS PLAN SHEET.

PAVEMENT DELINEATION QUANTITIES

SHEET No.	ROUTE	LOCATION FROM	LOCATION TO	DIRECTION	DETAIL No.	INSTALL/REMOVE	PAVEMENT MARKER (RETROREFLECTIVE) TYPE C	PAVEMENT MARKER (RETROREFLECTIVE) TYPE G	PAVEMENT MARKER (RETROREFLECTIVE) TYPE H	THERMOPLASTIC TRAFFIC STRIPE SOLID YELLOW 4"	THERMOPLASTIC TRAFFIC STRIPE SOLID WHITE 4"	THERMOPLASTIC TRAFFIC STRIPE SOLID WHITE 8"	THERMOPLASTIC TRAFFIC STRIPE (BROKEN 36-12) 4"	THERMOPLASTIC TRAFFIC STRIPE (BROKEN 17-7) 4"	PAINT TRAFFIC STRIPE (2-COAT) 4"	THERMOPLASTIC PAVEMENT MARKING DESCRIPTION	THERMOPLASTIC PAVEMENT MARKING SQFT
							EA	EA	EA	LF	LF	LF	LF	LF	LF		
PD-1 THRU PD-2	5	101+00	101+90	NB	12	I		3					90			4-TYPE V ARROWS	132
	5	101+90	103+34	NB	14A	I	4						144			1-TYPE I ARROW (24')	31
	5	103+34	123+50	NB	12	I		43					2,016			2-LIMIT LINES	165
	5	101+00	123+50	NB	25	I			48	2,250						5-STOP	110
	5	101+00	106+19	NB	27B	I					519					1-AHEAD	31
	5	109+10	123+50	NB	27B	I					1,440						
	NB OFF RAMP "P1 LINE"			NB	36	I		38				435					
		10+00	23+10	NB	27B	I					1,310						
		12+90	23+10	NB	25A	I			44	1,020							
	NB ON RAMP "P2 LINE"	50+90	56+50	NB	25A	I			24	560							
		50+90	56+50	NB	27B	I					275						
					36A	I		13				435					
	5	1101+00	1123+50	SB	12	I		48					2,250				
	5	1101+00	1123+50	SB	25	I			48	2,250							
	5	1101+00	1123+50	SB	27B	I					2,250						
	SB ON RAMP "P3 LINE"	110+00	113+00	SB	8	I								300		1-TYPE I ARROW (24')	31
		113+00	116+50	SB	36A	I		31				700					
		116+50	125+70	SB	25A	I			39	920							
		113+00	125+70	SB	27B	I					1,270						
	SB OFF RAMP "P4 LINE"	150+10	155+50	SB	25A	I			24	540							
		150+10	155+50	SB	27B	I					540						
						I											
PD-3 THRU PD-6	SB OFF RAMP "P4 LINE"	155+50	160+77	SB	25A	I			23	527						1-STOP	22
		155+50	160+77	SB	27B	I					527					1-AHEAD	31
					36	I		40				450				AIRCRAFT PATROL PAVEMENT MARKING	12
	5	1123+50	1179+50	SB	27B	I					5,600						
	5	1123+50	1135+56	SB	12	I		26					1,206				
	5	1135+56	1137+00	SB	14A	I	4						144				
	5	1137+00	1161+94	SB	12	I		53					2,494				
	5	1161+94	1163+38	SB	14A	I	4						144				
	5	1163+38	1179+50	SB	12	I		35					1,612				
	5	1123+50	1179+50	SB	25	I			118	5,600							
	NB ON RAMP "P2 LINE"	56+50	60+10	NB	25A	I			15	360							
		56+50	62+90	NB	27B	I					640						
		60+10	62+90	NB	36A	I		24				560					
		62+90	64+90	NB	8	I								200			
	5	123+50	178+30	NB	25	I			115	5,480							
	5	178+30	179+50	NB	27	I			3	240							
	5	123+50	179+50	NB	12	I		118					5,600				
	5	123+50	179+50	NB	27B	I					5,600						
PD-7 THRU PD-15	5	1179+50	1305+50	SB	27B	I					12,600					AIRCRAFT PATROL PAVEMENT MARKING	24
	5	1179+50	1305+50	SB	25	I			264	12,600							
	5	1179+50	1188+32	SB	12	I		19					882				
	5	1188+32	1189+76	SB	14A	I	4						144				
	5	1189+76	1305+50	SB	12	I		242					11,574				
	5	179+50	303+00	NB	27	I			259	24,700							
	5	303+00	305+50	NB	25	I			6	250							
	5	179+50	183+30	NB	12	I		9					380				
	5	183+30	247+56	NB	12(Mod)	I		135					6,426		6,426		
	5	247+56	249+00	NB	14A	I	4						144				
	5	249+00	275+40	NB	12(Mod)	I		56					2,640		2,640		
	5	275+40	276+84	NB	14A	I	4						144				
	5	276+84	300+00	NB	12(Mod)	I		49					2,316		2,316		
	5	300+00	302+06	NB	12	I		5					206				
	5	302+06	303+50	NB	14A	I	4						144				
	5	303+50	305+50	NB	12	I		5					200				
	5	179+50	183+30	NB	27B	I					380						
	5	183+30	300+00	NB	27B(Mod)	I					11,670				11,670		
	5	300+00	305+50	NB	27B	I					550						
SHEET SUBTOTAL							28	992	1030	57,297	45,171	2580	40,900	500	23,052		589

PAVEMENT DELINEATION QUANTITIES

PDQ-1

STATE OF CALIFORNIA - DEPARTMENT OF TRANSPORTATION
Caltrans
TRAFFIC DESIGN

FUNCTIONAL SUPERVISOR: MOHAMMED QATAMI
CALCULATED-DESIGNED BY: HASEEB YOUSAF
CHECKED BY: MAZIN AL-ALI
REVISED BY
DATE REVISED

LAST REVISION 06-23-14
DATE PLOTTED => 01-JUL-2014
TIME PLOTTED => 10:44

Dist	COUNTY	ROUTE	POST MILES TOTAL PROJECT	SHEET No.	TOTAL SHEETS
06	Fre	5	48.8/53.0	63	117

REGISTERED CIVIL ENGINEER 04-09-14 DATE

6-23-14
PLANS APPROVAL DATE

REGISTERED PROFESSIONAL ENGINEER MAZIN H. AL-ALI No. 65523 Exp. 9/30/15 CIVIL STATE OF CALIFORNIA

THE STATE OF CALIFORNIA OR ITS OFFICERS OR AGENTS SHALL NOT BE RESPONSIBLE FOR THE ACCURACY OR COMPLETENESS OF SCANNED COPIES OF THIS PLAN SHEET.

PAVEMENT DELINEATION QUANTITIES

SHEET No.	ROUTE	LOCATION FROM	LOCATION TO	DIRECTION	DETAIL No.	INSTALL/REMOVE	PAVEMENT MARKER (RETROREFLECTIVE) TYPE C EA	TYPE G EA	TYPE H EA	THERMOPLASTIC TRAFFIC STRIPE SOLID YELLOW 4" LF	SOLID WHITE 4" LF	SOLID WHITE 8" LF	(BROKEN 36-12) 4" LF	(BROKEN 17-7) 4" LF	PAINT TRAFFIC STRIPE (2-COAT) 4" LF	THERMOPLASTIC PAVEMENT MARKING DESCRIPTION	SQFT
PD-16 THRU PD-17	5	1305+50	1329+66	SB	12	I		51					2,416			4-TYPE V ARROWS	132
	5	1329+66	1331+10	SB	14A	I							144			4-TYPE I ARROW (24')	124
	5	1305+50	1331+10	SB	25	I			55	2,250						2-LIMIT LINES	140
	5			SB	8	I								175		6-STOP	132
	5	1305+50	1330+14	SB	27B	I					2,464					2-AHEAD	62
	SB ON RAMP "R3 LINE"	129+60	131+40	SB	36A	I		18				360					
		129+60	136+80	SB	27B	I					720						
		129+60	136+80	SB	25A	I			24	540							
	SB OFF RAMP "R4 LINE"	160+20	168+15	SB	25A	I			34	795							
		160+20	170+75	SB	27B	I					1,055						
				SB	36	I		12				520					
	5	305+50	328+50	NB	25	I			49	2,300							
	5	305+50	328+50	NB	12	I		49					2,300				
	5	305+50	326+15	NB	27B	I					2,065						
	NB OFF RAMP "R1 LINE"	30+00	41+50	NB	27B	I					1,150						
				NB	36	I		21				485					
		32+35	41+50	NB	25A	I			39	915							
	NB ON RAMP "R2 LINE"	61+00	64+95	NB	25A	I			18	395							
		64+95	67+40	NB	36A	I		21				490					
		67+40	69+65	NB	8	I								225			
		61+00	69+65	NB	27B	I					865						
SHEET SUBTOTAL								172	219	7,195	8,319	1855	4,860	400			590
SHEET SUBTOTAL PDQ-1							28	992	1030	57,297	45,171	2580	40,900	500	23,052		589
TOTAL							2441			117,982		4435	45,760	900	23,052		1179

DELINEATOR (CLASS 1)

SHEET No.	CLASS 1 TYPE	CLASS 1 EACH
PD-1	F	21
	G	9
PD-2	F	23
	G	22
PD-3	F	20
	G	8
PD-15	F	2
PD-16	F	28
	G	20
PD-17	F	17
	G	8
TOTAL		178

PAVEMENT DELINEATION QUANTITIES

PDQ-2

STATE OF CALIFORNIA - DEPARTMENT OF TRANSPORTATION
Caltrans® TRAFFIC DESIGN

FUNCTIONAL SUPERVISOR: MOHAMMED QATAMI
CALCULATED-DESIGNED BY: HASEEB YOUSAF
CHECKED BY: MAZIN AL-ALI
REVISED BY / DATE REVISED

LAST REVISION 06-23-14
DATE PLOTTED => 01-JUL-2014
TIME PLOTTED => 10:44

Dist	COUNTY	ROUTE	POST MILES TOTAL PROJECT	SHEET No.	TOTAL SHEETS
06	Fre	5	48.8/53.0	64	117

REGISTERED CIVIL ENGINEER 04-09-14 DATE

6-25-14
PLANS APPROVAL DATE

REGISTERED PROFESSIONAL ENGINEER MAZIN H. AL-ALI No. 65523 Exp. 9/30/15 CIVIL STATE OF CALIFORNIA

THE STATE OF CALIFORNIA OR ITS OFFICERS OR AGENTS SHALL NOT BE RESPONSIBLE FOR THE ACCURACY OR COMPLETENESS OF SCANNED COPIES OF THIS PLAN SHEET.

SIGN QUANTITIES

SHEET No.	SIGN No. (X-X)	SIGN CODE	SIGN MESSAGE	No. OF POST AND SIZE	PANEL SIZE	SINGLE FACED	DOUBLE FACED	BACKGROUND SHEETING COLOR	BACKGROUND RETROREFLECTIVITY ASTM TYPE	LEGEND SHEETING COLOR	LEGEND RETROREFLECTIVITY ASTM TYPE	GRAFFITI FLOW STANDARD	GRAFFITI FLOW PREMIUM	FURNISH SINGLE SHEET ALUMINUM SIGN 0.063"	FURNISH SINGLE SHEET ALUMINUM SIGN 0.080" (FRAMED)	FURNISH SINGLE SHEET ALUMINUM SIGN UNFRAMED	FURNISH SINGLE SHEET ALUMINUM SIGN FRAMED	ROADSIDE SIGN-TWO POST	REMOVE ROADSIDE SIGN	RELOCATE ROADSIDE SIGN INSTALLATION * SSBM (N)	TREATED WOOD WASTE **
														SQFT	SQFT			EA	EA	EA	lb
PD-1	PD1-1	M3-3																		1	
		G27-1(CA)																			
	PD1-2	W13-2																		1	
	PD1-3	W3-1																		1	
	PD1-4	G84-3(CA)																	1		428
	PD1-5	G84-2(CA)	EXIT 368 W/ARROW	2-6"x 6"	60" x 90"	X		GREEN	XI	WHITE	XI		X		37.5		X	1			
PD-3	PD3-6	W13-2																		1	
	PD3-7	W3-1																		1	
	PD3-8	M3-3																		1	
		G27-1(CA)																			
	PD3-9	G84-2(CA)	EXIT 368 W/ARROW	2-6"x 6"	60" x 90"	X		GREEN	XI	WHITE	XI		X		37.5		X	1			
	PD3-10	G84-3(CA)																	1		428
PD-15	PD15-11	M3-3																		1	
		G27-1(CA)																			
PD-16	PD16-12	W3-1																		1	
	PD16-13	G84-3(CA)																	1		428
	PD16-14	G84-2(CA)	EXIT 372 W/ARROW	2-6"x 6"	60" x 90"	X		GREEN	XI	WHITE	XI		X		37.5		X	1			
PD-17	PD17-15	W3-1																		1	
	PD17-16	G84-2(CA)	EXIT 372 W/ARROW	2-6"x 6"	60" x 90"	X		GREEN	XI	WHITE	XI		X		37.5		X	1			
	PD17-17	G84-3(CA)																	1		428
SUBTOTAL															150.00			4	4		1712

* - INSTALLATION TO BE INCLUDED AS PART OF ELECTRICAL WORK.
SEE ELECTRICAL PLANS.

** - QUANTITY INCLUDED IN SHEET Q-2

(N) NOT A SEPARATE PAY ITEM, FOR INFORMATION ONLY.

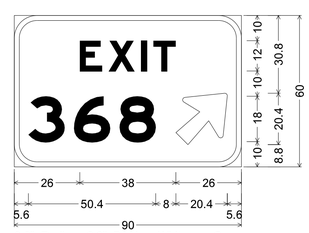

9.0" Radius, 2.0" Border, White on Green;
[EXIT] E Mod; [368] E Mod;
Arrow 16CAP-1L - 25.0" 45°;

G84-2(CA) PD1-5 PD3-9

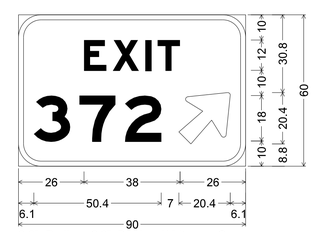

9.0" Radius, 2.0" Border, White on Green;
[EXIT] E Mod; [372] E Mod;
Arrow 16CAP-1L - 25.0" 45°;

G84-2(CA) PD16-14 PD17-16

SIGN QUANTITIES DETAILS

SQ-1

STATE OF CALIFORNIA - DEPARTMENT OF TRANSPORTATION
TRAFFIC DESIGN

FUNCTIONAL SUPERVISOR: MOHAMMED QATAMI
CALCULATED-DESIGNED BY: HASEEB YOUSAF
CHECKED BY: MAZIN AL-ALI
REVISED BY
DATE REVISED

LAST REVISION 06-23-14
DATE PLOTTED => 22-JUL-2014
TIME PLOTTED => 09:01

Dist	COUNTY	ROUTE	POST MILES TOTAL PROJECT	SHEET No.	TOTAL SHEETS
06	Fre	5	48.8/53.0	65	117

REGISTERED CIVIL ENGINEER 03-03-14 DATE

6-23-14
PLANS APPROVAL DATE

REGISTERED PROFESSIONAL ENGINEER RODRIGO M. CRUZ No. 57918 Exp. 06/30/16 CIVIL STATE OF CALIFORNIA

THE STATE OF CALIFORNIA OR ITS OFFICERS OR AGENTS SHALL NOT BE RESPONSIBLE FOR THE ACCURACY OR COMPLETENESS OF SCANNED COPIES OF THIS PLAN SHEET.

ROADWAY ITEMS

LOCATION	HMA (TYPE A)	RHMA (TYPE G)	CLASS 2 AGGREGATE BASE	CLASS 2 AGGREGATE SUBBASE	CRCP	TACK COAT	REMARKS
	TON	TON	CY	CY	CY	TON	
"FRE5NB1" 103+00 TO 171+56	9,625.8	4,010.8				8.7	MAINLINE, INSIDE & OUTSIDE Shld
"FRE5NB1" 104+79 TO 109+08	214.5	107.2				0.2	RAMP "P1" GORE AREA, TW & OUTSIDE Shld
"FRE5NB1" 126+90 TO 135+21	330.1	165.1				0.4	RAMP "P2" GORE AREA, TW & OUTSIDE Shld
"FRE5NB1" 173+91 TO 180+30	897.2	373.8				0.8	MAINLINE, INSIDE & OUTSIDE Shld
"FRE5NB1" 178+30 TO 180+30	244.8	102.0				0.2	MAINLINE & OUTSIDE Shld
"FRE5NB1" 178+30 TO 303+00	4,993.9		1,270.1	2,424.7		2.0	INSIDE 5-FOOT Shld
"FRE5NB1" 180+30 TO 183+30	612.0					0.3	HMA to CRCP TRANSITION
"FRE5NB1" 183+30 TO 300+00	2,043.4				14,695.6		CRCP (LANE 1 & 2 & OUTSIDE Shld)
"FRE5NB1" 300+00 TO 303+00	612.0					0.3	HMA to CRCP TRANSITION
"FRE5NB1" 303+00 TO 328+00	3,510.0	1,462.5				3.2	MAINLINE, INSIDE & OUTSIDE Shld
"FRE5NB1" 306+57 TO 310+76	212.5	106.2				0.2	RAMP "R1" GORE AREA, TW & OUTSIDE Shld
"FRE5NB1" 323+68 TO 328+00	253.5	126.8				0.3	RAMP "R2" GORE AREA, TW & OUTSIDE Shld
"FRE5SB1" 1103+00 TO 1170+95	9,540.2	3,975.1				8.6	MAINLINE, INSIDE & OUTSIDE Shld
"FRE5SB1" 1103+00 TO 1110+59	378.3	189.1				0.7	RAMP "P3" GORE AREA, TW & OUTSIDE Shld
"FRE5SB1" 1128+77 TO 1132+55	189.2	94.6				0.2	RAMP "P4" GORE AREA, TW & OUTSIDE Shld
"FRE5SB1" 1173+30 TO 1328+00	21,719.9	9,050.0				19.7	MAINLINE, INSIDE & OUTSIDE Shld
"FRE5SB1" 1305+53 TO 1309+69	208.8	104.4				0.2	RAMP "R3" GORE AREA, TW & OUTSIDE Shld
"FRE5SB1" 1322+40 TO 1326+66	191.6	95.8				0.2	RAMP "R4" GORE AREA, TW & OUTSIDE Shld
STAGE CONSTRUCTION QUANTITIES	8,621.1		3,556.3	6,789.2		7.4	SEE SHEET Q-3
"P1" 12+90 TO 23+11		252.7				0.7	PANOCHE Ave NB OFF RAMP
"P2" 50+17 TO 60+13		328.7				0.7	PANOCHE Ave NB ON RAMP
"P3" 116+49 TO 126+56		249.2				0.7	PANOCHE Ave SB ON RAMP
"P4" 150+26 TO 160+80	782.6	348.8				0.8	PANOCHE Ave SB OFF RAMP
"R1" 32+77 TO 41+36	425.2	283.5				0.6	RUSSELL Ave NB OFF RAMP
"R2" 60+31 TO 64+90		113.6				0.3	RUSSELL Ave NB ON RAMP
"R3" 131+41 TO 136+63	301.5	172.3				0.4	RUSSELL Ave SB ON RAMP
"R4" 160+19 TO 168+18	395.5	263.7				0.6	RUSSELL Ave SB OFF RAMP
PANEL REPLACEMENT	2,325.7						SEE SHEET Q-2
HMA DIKE	241.9						SEE SHEET Q-2
HMA Misc AREA	137.1						SEE SHEET Q-3
SAFETY EDGE	150.7				235.1		SEE SHEET Q-3
TOTAL	69,159.0	21,975.9	4,826.4	9,213.9	14,930.7	58.4	

ABBREVIATIONS:

ACC ALTERNATIVE CRASH CUSHION
ISR INDIVIDUAL SLAB REPLACEMENT

EARTHWORK

DESCRIPTION	ROADWAY EXCAVATION	(N) EMBANKMENT	REMARKS
	CY	CY	
"FRE5NB1" 178+30 TO 183+30	609.2	-	INSIDE Shld WIDENING
"FRE5NB1" 183+30 TO 300+00	14,220.1	885.0	INSIDE Shld WIDENING
"FRE5NB1" 300+00 TO 303+00	365.6	-	INSIDE Shld WIDENING
CMS AREA	23.1	-	
WEATHER STATION AREA	41.8	-	
TOTAL	15,259.8		

(N) NOT A SEPARATE PAY ITEM, FOR INFORMATION ONLY.

JOINT SEAL

LOCATION	ISOLATION JOINT SEAL (SILICONE)	(N) LONGITUDINAL CONTRACTION JOINT
	LF	LF
"FRE5NB1" 183+30 TO 300+00	11,670.0	23,340.0

(N) NOT A SEPARATE PAY ITEM, FOR INFORMATION ONLY.

SUMMARY OF QUANTITIES

Q-1

STATE OF CALIFORNIA - DEPARTMENT OF TRANSPORTATION
Caltrans DESIGN
FUNCTIONAL SUPERVISOR JUN XU
CALCULATED-DESIGNED BY ROD CRUZ
CHECKED BY IRENE LEE
REVISED BY
DATE REVISED

LAST REVISION 06-23-14
DATE PLOTTED => 01-JUL-2014
TIME PLOTTED => 10:44

Dist	COUNTY	ROUTE	POST MILES TOTAL PROJECT	SHEET No.	TOTAL SHEETS
06	Fre	5	48.8/53.0	66	117

REGISTERED CIVIL ENGINEER 03-03-14 DATE

6-23-14
PLANS APPROVAL DATE

REGISTERED PROFESSIONAL ENGINEER RODRIGO M. CRUZ No. 57918 Exp. 06/30/16 CIVIL STATE OF CALIFORNIA

THE STATE OF CALIFORNIA OR ITS OFFICERS OR AGENTS SHALL NOT BE RESPONSIBLE FOR THE ACCURACY OR COMPLETENESS OF SCANNED COPIES OF THIS PLAN SHEET.

PANEL REPLACEMENT

POST MILE LOCATION***	NB/SB	LANE No. 1	LANE No. 2	No. of PANELS	REMOVE Conc Pvmt**	HMA (TYPE A)	ISR (RAPID STRENGTH Conc)	DRILL & BOND (DOWEL BAR)
				(N)	CY	TON	CY	EA
PM 48.974 - PM 49.000	NB	3	9	12	-	53.5	68.0	192.0
PM 49.000 - PM 50.000	NB	6	24	30	-	133.7	170.0	480.0
PM 50.000 - PM 51.000	NB	4	17	21	98.0	249.5	-	-
PM 51.000 - PM 52.000	NB	0	105	105	490.0	1247.4	-	-
PM 52.000 - PM 53.000	NB	1	90	91	210.0	200.5	255.0	720.0
PM 53.000 - PM 53.070	NB	0	5	5	-	22.3	28.3	80.0
SUB TOTAL					798.0	1906.9	521.3	1472.0
PM 53.000 - PM 52.000	SB	0	48	48	-	213.8	272.0	768.0
PM 52.000 - PM 51.000	SB	0	14	14	-	62.4	79.3	224.0
PM 51.000 - PM 50.000	SB	2	8	10	-	44.6	56.7	160.0
PM 50.000 - PM 49.000	SB	0	12	12	-	53.5	68.0	192.0
PM 49.000 - PM 48.800	SB	0	10	10	-	44.6	56.7	160.0
SUB TOTAL					-	418.8	532.7	1504.0
TOTAL					798.0	2325.7*	1054.0	2976.0

***LOCATION OF PANEL SHOWN ARE APPROXIMATE. EXACT LOCATIONS TO BE DETERMINED BY THE ENGINEER.
**PORTION OF EXISTING 0.70' PCC ONLY WHERE NO RAPID STRENGTH CONCRETE, SEE Shts X-2 & C-3.
*INCLUDED IN ROADWAY ITEMS TABLE, Sht Q-1.
(N) - NOT A SEPARATE PAY ITEM, FOR INFORMATION ONLY.

DIKE

STATION	REMOVE AC DIKE	PLACE HMA DIKE (TYPE A)	PLACE HMA DIKE (TYPE E)	HMA (TYPE A)
	LF	LF	LF	TON
103+00 TO 106+16 "FRE5NB1"	316		316	8.3
158+35 TO 169+48 "FRE5NB1"	1113		1113	29.3
224+36 TO 231+98 "FRE5NB1"	762		762	20.1
257+35 TO 269+16 "FRE5NB1"	1181		1181	31.1
1103+00 TO 1110+53 "FRE5SB1"	753		753	19.8
10+00 TO 23+11 "P1" Rt	1311		1311	34.5
22+60 TO 23+11 "P1" Lt	51	51		1.4
50+29 to 54+49 "P2" Rt	420		420	11.1
50+18 TO 50+36 "P2" Lt	18	18		0.5
125+70 TO 126+13 "P3" Rt	43	43		1.2
122+43 TO 126+68 "P3" Lt	425		425	11.2
150+20 TO 150+99 "P4" Rt	79	79		2.2
150+33 TO 154+50 "P4" Lt	417		417	11.0
33+87 TO 41+30 "R1" Rt	743		743	19.6
40+56 TO 41+34 "R1" Lt	78	78		2.1
60+75 TO 64+77 "R2" Rt	402		402	10.6
60+32 TO 61+47 "R2" Lt	115		115	3.0
135+82 TO 136+67 "R3" Rt	85	85		2.3
133+57 TO 135+85 "R3" Lt	228		228	6.0
160+22 TO 166+54 "R4" Lt	632		632	16.6
TOTAL	9172	354	8818	241.9*

* - QUANTITY INCLUDED IN ROADWAY ITEMS TABLE ON Sht Q-1.

SHOULDER RUMBLE STRIP (HMA, GROUND-IN INDENTATIONS)

DIRECTION	STATION	INSIDE SHOULDER	OUTSIDE SHOULDER
		Sta	Sta
NB MAINLINE	103+00 TO 171+00	68.0	-
NB MAINLINE	174+50 TO 328+00	153.5	-
NB MAINLINE	109+06 TO 126+90	-	17.8
NB MAINLINE	131+50 TO 171+00	-	39.5
NB MAINLINE	174+50 TO 176+51	-	2.0
NB MAINLINE	310+76 TO 323+68	-	12.9
SUB TOTAL		221.5	72.2
SB MAINLINE	1103+00 TO 1170+00	67.0	-
SB MAINLINE	1174+00 TO 1328+00	154.0	-
SB MAINLINE	1110+56 TO 1128+77	-	18.2
SB MAINLINE	1133+50 TO 1170+00	-	36.5
SB MAINLINE	1174+00 TO 1304+50	-	130.5
SB MAINLINE	1309+69 TO 1322+83	-	13.1
SUB TOTAL		221.0	198.3
TOTAL		713.0	

MIDWEST GUARDRAIL SYSTEM

STRUCTURE NAME	LOCATION: MEDIAN CL Rte 5	LOCATION: SHOULDER INSIDE NB	LOCATION: SHOULDER INSIDE SB	LOCATION: SHOULDER OUTSIDE NB	LOCATION: SHOULDER OUTSIDE SB	LAYOUT TYPE (N)	REMOVE GUARDRAIL LF	TREATED WOOD WASTE LB	DOUBLE MGS (STEEL POST) LF	MGS (STEEL POST) LF	ALTERNATIVE FLARED TERMINAL SYSTEM EA	END ANCHOR ASSEMBLY (TYPE SFT) EA	RAIL TENSIONING ASSEMBLY EA	ALTERNATIVE CRASH CUSHION SYSTEM EA	REMARKS
PANOCHE ROAD OC	x					14A	200	1485.7	100	106.2		2	2	2	INCLUDES MGS TRANSITION LENGTH TO ACC
CMS OH STRUCTURE (PM 52.06)					x	16B	75	742.9		100	1	1			
FROM SHEET SQ-1								1712.0							TREATED WOOD WASTE FROM ROADSIGN SIGN REMOVAL
TOTAL							275	3940.6	100	206.2	1	3	2	2	

(N) - NOT A SEPARATE PAY ITEM, FOR INFORMATION ONLY.

SHOULDER RUMBLE STRIP (CONCRETE PAVEMENT, GROUND-IN INDENTATIONS)

NB MAINLINE STATION	OUTSIDE SHOULDER
	Sta
176+51 TO 304+00	127.5

SUMMARY OF QUANTITIES

Q-2

REVISED BY | DATE REVISED
ROD CRUZ | IRENE LEE
CALCULATED-DESIGNED BY | CHECKED BY
FUNCTIONAL SUPERVISOR: JUN XU
STATE OF CALIFORNIA - DEPARTMENT OF TRANSPORTATION
Caltrans® DESIGN

LAST REVISION 06-23-14 | DATE PLOTTED => 01-JUL-2014 | TIME PLOTTED => 10:44

Dist	COUNTY	ROUTE	POST MILES TOTAL PROJECT	SHEET No.	TOTAL SHEETS
06	Fre	5	48.8/53.0	67	117

REGISTERED CIVIL ENGINEER 03-03-14 DATE

6-23-14
PLANS APPROVAL DATE

REGISTERED PROFESSIONAL ENGINEER RODRIGO M. CRUZ No. 57918 Exp. 06/30/16 CIVIL STATE OF CALIFORNIA

THE STATE OF CALIFORNIA OR ITS OFFICERS OR AGENTS SHALL NOT BE RESPONSIBLE FOR THE ACCURACY OR COMPLETENESS OF SCANNED COPIES OF THIS PLAN SHEET.

HMA Misc AREA

LOCATION	PLACE HMA (Misc AREA)	HMA (TYPE A)	REMARKS
	SQYD	TON	
13+13 "P1"	1.1	0.2	OVERSIDE DRAIN
16+00 "P1"	1.6	0.3	OVERSIDE DRAIN
18+24 "P1"	1.7	0.3	OVERSIDE DRAIN
54+49 "P2"	2.3	0.4	OVERSIDE DRAIN
64+70 "R2"	2.2	0.4	OVERSIDE DRAIN
154+50 "P4"	1.0	0.2	OVERSIDE DRAIN
162+39 "FRE5NB1"	2.3	0.4	OVERSIDE DRAIN
165+30 "FRE5NB1"	1.9	0.3	OVERSIDE DRAIN
166+54 "R4"	2.3	0.4	OVERSIDE DRAIN
169+45 "FRE5NB1"	1.4	0.2	OVERSIDE DRAIN
224+41 "FRE5NB1"	2.6	0.4	OVERSIDE DRAIN
257+41 "FRE5NB1"	5.1	0.9	OVERSIDE DRAIN
262+43 "FRE5NB1"	4.9	0.8	OVERSIDE DRAIN
1103+00 "FRE5SB1"	2.3	0.4	OVERSIDE DRAIN
CMS OH SIGN	138.9	46.9	PAVING AROUND AREA
WEATHER STATION	250.7	84.6	PAVING AROUND AREA
TOTAL	422.3	137.1*	

*INCLUDED IN HMA ROADWAY ITEMS TABLE, Sht Q-1.

SHOULDER BACKING

LOCATION	LENGTH (N)	INSIDE SHOULDER	OUTSIDE SHOULDER
	LF	TON	TON
105+60 TO 115+50 "FRE5NB1"	990		6.4
112+00 TO 115+50 "FRE5NB1"	350	2.3	
122+00 TO 124+00 "FRE5NB1"	200		1.3
122+00 TO 168+96 "FRE5NB1"	4,696	30.4	
131+49 TO 169+48 "FRE5NB1"	3,799		51.9
176+51 TO 304+00 "FRE5NB1"	12,749		527.4
176+51 TO 304+00 "FRE5NB1"	12,749	3,679.6	
304+00 TO 314+50 "FRE5NB1"	1,050	6.9	
1105+60 TO 1115+50 "FRE5SB1"	990	6.4	
1122+00 TO 1168+35 "FRE5SB1"	4,635	30.0	
1131+12 TO 1168+35 "FRE5SB1"	3,723		24.2
1175+90 TO 1304+00 "FRE5SB1"	12,810		83.0
1175+90 TO 1313+50 "FRE5SB1"	13,760	89.2	
150+33 TO 163+15 "P4" Lt	1,282	16.7	
150+99 TO 159+54 "P4" Rt	855		11.1
60+32 TO 63+19 "R2" Lt	287	1.5	
60+75 TO 66+59 "R2" Rt	584		3.1
SUB TOTAL		3,863.0	708.4
TOTAL		4,571.4	

(N) - NOT A SEPARATE PAY ITEM, FOR INFORMATION ONLY

DOWNDRAIN

LOCATION	8-INCH CSP (0.064")	8-INCH ENTRANCE TAPER	REMARKS
	LF	EA	
103+99 "FRE5NB1"	10.0	1	NB MAINLINE, OUTSIDE SHOULDER
151+51 "P4"	10.0	1	SB OFF RAMP TO PANOCHE
TOTAL	20.0	2	

SAFETY EDGE

LOCATION				LENGTH (N)	HMA (TYPE A)	Conc
SHEET	STATION	Lt	Rt	LF	TON	CY
L-1 TO L-6	105+60 TO 115+50 "FRE5NB1"	X		990	2.6	
L-2 TO L-6	122+00 TO 168+96 "FRE5NB1"	X		4,696	12.2	
L-1 TO L-2	112+00 TO 115+50 "FRE5NB1"		X	350	0.9	
L-2 TO L-3	122+00 TO 124+00 "FRE5NB1"		X	200	0.5	
L-3 TO L-5	137+00 TO 158+35 "FRE5NB1"		X	2,135	5.5	
L-6 TO L-10	176+51 TO 224+36 "FRE5NB1"		X	4,785		104.1
L-6 TO L-15	176+51 TO 304+00 "FRE5NB1"	X		12,749	33.1	
L-15 TO L-16	304+00 TO 314+50 "FRE5NB1"	X		1,050	2.7	
L-10 TO L-12	231+98 TO 257+35 "FRE5NB1"		X	2,537		55.2
L-13 TO L-15	269+16 TO 304+00 "FRE5NB1"		X	3,484		75.8
L-1 TO L-2	1105+60 TO 1115+50 "FRE5SB1"		X	990	2.6	
L-2 TO L-6	1122+00 TO 1168+35 "FRE5SB1"		X	4,635	12.0	
L-3 TO L-6	1131+12 TO 1168+35 "FRE5SB1"	X		3,723	9.7	
L-6 TO L-15	1175+90 TO 1304+00 "FRE5SB1"	X		12,810	33.2	
L-6 TO L-16	1175+90 TO 1313+50 "FRE5SB1"		X	13,760	35.7	
TOTAL				68,894	150.7*	235.1*

*INCLUDED IN HMA ROADWAY ITEMS TABLE, Sht Q-1.
(N) - NOT A SEPARATE PAY ITEM, FOR INFORMATION ONLY

TEMPORARY FIBER ROLL

LOCATION	LF	DESCRIPTION
CMS OH SIGN PAVED AREA (SEE Sht WPC-1)	238.2	PERIMETER SEDIMENT CONTROL
WEATHER STATION PAVED AREA (SEE Sht WPC-1)	200.0	PERIMETER SEDIMENT CONTROL
PANOCHE CREEK Br (SEE Sht WPC-2)	167.6	PERIMETER SEDIMENT CONTROL
TOTAL	605.8	

STAGE CONSTRUCTION QUANTITIES

LOCATION	STAGE, PHASE	COLD PLANE AC Pvmt	HMA (TYPE A)	CLASS 2 AB	CLASS 2 AS	REMARKS
		SQYD	TON	CY	CY	
"FRE5NB1" 175+50 TO 303+00	*1, 1	5,666.7	765.0			REMOVE Exist RUMBLE STRIP
"FRE5NB1" 178+30 TO 303+00	*1, 2		7,856.1			WIDEN INSIDE Shld to 19 Ft
"FRE5NB1" 178+30 TO 303+00	*1, 2			3556.3		WIDEN INSIDE Shld to 19 Ft
"FRE5NB1" 178+30 TO 303+00	*1, 2				6789.2	WIDEN INSIDE Shld to 19 Ft
TOTAL		5,666.7**	8,621.1***	3,556.3***	6,789.2***	

* REFER TO Sht SC-1 FOR DETAILS
** QUANTITY INCLUDED IN COLD PLANE ASPHALT CONCRETE TABLE
*** QUANTITY INCLUDED IN ROADWAY ITEMS TABLE

SUMMARY OF QUANTITIES

Q-3

REVISED BY | DATE REVISED
ROD CRUZ | IRENE LEE
CALCULATED-DESIGNED BY | CHECKED BY
FUNCTIONAL SUPERVISOR: JUN XU
STATE OF CALIFORNIA - DEPARTMENT OF TRANSPORTATION
Caltrans® DESIGN

LAST REVISION 06-19-14 | DATE PLOTTED => 01-JUL-2014 | TIME PLOTTED => 10:44

Dist	COUNTY	ROUTE	POST MILES TOTAL PROJECT	SHEET No.	TOTAL SHEETS
06	Fre	5	48.8/53.0	68	117

REGISTERED CIVIL ENGINEER 03-03-14 DATE

6-23-14
PLANS APPROVAL DATE

REGISTERED PROFESSIONAL ENGINEER RODRIGO M. CRUZ No. 57918 Exp. 06/30/16 CIVIL STATE OF CALIFORNIA

THE STATE OF CALIFORNIA OR ITS OFFICERS OR AGENTS SHALL NOT BE RESPONSIBLE FOR THE ACCURACY OR COMPLETENESS OF SCANNED COPIES OF THIS PLAN SHEET.

COLD PLANE ASPHALT CONCRETE PAVEMENT

STATION	LOCATION	SQYD	REMARKS
103+00 TO 105+60	NORTHBOUND - MAINLINE	1,126.7	TRAVELED WAY & SHOULDERS
104+79 TO 109+08	NORTHBOUND - RAMP	794.3	RAMP "P1" GORE AREA, RAMP TW & OUTSIDE Shld
105+60 TO 168+96	NORTHBOUND - MAINLINE	27,456.0	TRAVELED WAY & SHOULDERS
126+90 TO 135+21	NORTHBOUND - RAMP	1,222.7	RAMP "P2" GORE AREA, RAMP TW & OUTSIDE Shld
168+96 TO 171+56	NORTHBOUND - MAINLINE	1,126.7	TRAVELED WAY & SHOULDERS
173+91 TO 176+51	NORTHBOUND - MAINLINE	1,126.7	TRAVELED WAY & SHOULDERS
176+51 TO 180+30	NORTHBOUND - MAINLINE	1,431.8	TRAVELED WAY & SHOULDERS
183+30 TO 300+00	NORTHBOUND - MAINLINE	44,086.7	TRAVELED WAY & OUTSIDE Shld (CRCP SECTION)
303+00 TO 325+40	NORTHBOUND - MAINLINE	9,706.7	TRAVELED WAY & SHOULDERS
306+57 TO 310+76	NORTHBOUND - RAMP	787.0	RAMP "R1" GORE AREA, RAMP TW & OUTSIDE Shld
323+68 TO 328+00	NORTHBOUND - RAMP	938.9	RAMP "R2" GORE AREA, RAMP TW & OUTSIDE Shld
325+40 TO 328+00	NORTHBOUND - MAINLINE	1,126.7	TRAVELED WAY & SHOULDERS
1103+00 TO 1105+60	SOUTHBOUND - MAINLINE	1,126.7	TRAVELED WAY & SHOULDERS
1103+00 TO 1110+59	SOUTHBOUND - RAMP	1,401.1	RAMP "P3" GORE AREA, RAMP TW & OUTSIDE Shld
1105+60 TO 1168+35	SOUTHBOUND - MAINLINE	27,191.7	TRAVELED WAY & SHOULDERS
1128+77 TO 1132+55	SOUTHBOUND - RAMP	700.8	RAMP "P4" GORE AREA, RAMP TW & OUTSIDE Shld
1168+35 TO 1170+95	SOUTHBOUND - MAINLINE	1,126.7	TRAVELED WAY & SHOULDERS
1173+30 TO 1175+90	SOUTHBOUND - MAINLINE	1,126.7	TRAVELED WAY & SHOULDERS
1175+90 TO 1325+40	SOUTHBOUND - MAINLINE	64,783.3	TRAVELED WAY & SHOULDERS
1305+53 TO 1309+69	SOUTHBOUND - RAMP	773.5	RAMP "R3" GORE AREA, RAMP TW & OUTSIDE Shld
1322+83 TO 1326+66	SOUTHBOUND - RAMP	709.8	RAMP "R4" GORE AREA, RAMP TW & OUTSIDE Shld
1325+40 TO 1328+00	SOUTHBOUND - MAINLINE	1,126.7	TRAVELED WAY & SHOULDERS
12+90 TO 23+11	NORTHBOUND OFF-RAMP	2,495.8	RAMP "P1" TRAVELED WAY AND SHOULDERS
50+17 TO 60+13	NORTHBOUND ON-RAMP	2,434.7	RAMP "P2" TRAVELED WAY AND SHOULDERS
116+49 TO 126+56	SOUTHBOUND ON-RAMP	2,461.6	RAMP "P3" TRAVELED WAY AND SHOULDERS
150+23 TO 160+80	SOUTHBOUND OFF-RAMP	2,583.8	RAMP "P4" TRAVELED WAY AND SHOULDERS
32+77 TO 41+36	NORTHBOUND OFF-RAMP	2,099.8	RAMP "R1" TRAVELED WAY AND SHOULDERS
60+31 TO 64+90	NORTHBOUND ON-RAMP	1,122.0	RAMP "R2" TRAVELED WAY AND SHOULDERS
131+41 TO 136+63	SOUTHBOUND ON-RAMP	1,276.0	RAMP "R3" TRAVELED WAY AND SHOULDERS
160+19 TO 168+18	SOUTHBOUND OFF-RAMP	1,953.1	RAMP "R4" TRAVELED WAY AND SHOULDERS
FROM STAGE CONSTRUCTION QUANTITIES		5,666.7	SEE Sht Q-3
TOTAL		213,090.7	

GEOSYNTHETIC PAVEMENT INTERLAYER (PAVING FABRIC)

LOCATION	SQYD	REMARKS
"FRE5NB1" 103+00 TO 171+56	6,602.1	INCLUDES 1-FOOT EXTENSION TO SHOULDERS
"FRE5NB1" 173+91 TO 183+30	1,096.8	INCLUDES 1-FOOT EXTENSION TO SHOULDERS
"FRE5NB1" 300+00 TO 328+00	2,696.3	INCLUDES 1-FOOT EXTENSION TO SHOULDERS
"FRE5SB1" 1103+00 TO 1170+95	6,543.3	INCLUDES 1-FOOT EXTENSION TO SHOULDERS
"FRE5SB1" 1173+30 TO 1328+00	14,897.0	INCLUDES 1-FOOT EXTENSION TO SHOULDERS
TOTAL	31,835.5	

REMOVE ASPHALT CONCRETE OVERSIDE DRAIN

LOCATION	EA	REMARKS
162+39 "FRE5NB1"	1	NORTHBOUND MAINLINE
165+30 "FRE5NB1"	1	NORTHBOUND MAINLINE
169+45 "FRE5NB1"	1	NORTHBOUND MAINLINE
224+41 "FRE5NB1"	1	NORTHBOUND MAINLINE
257+41 "FRE5NB1"	1	NORTHBOUND MAINLINE
262+43 "FRE5NB1"	1	NORTHBOUND MAINLINE
13+13 "P1"	1	NB OFF-RAMP TO PANOCHE
16+00 "P1"	1	NB OFF-RAMP TO PANOCHE
18+24 "P1"	1	NB OFF-RAMP TO PANOCHE
64+70 "R2"	1	NB ON-RAMP FROM RUSSELL
154+50 "P4"	1	SB OFF-RAMP TO PANOCHE
TOTAL	11	

REMOVE DOWNDRAIN

LOCATION	EA	REMARKS
103+99 "FRE5NB1"	1	NORTHBOUND MAINLINE
151+51 "P4"	1	SB OFF-RAMP TO PANOCHE
TOTAL	2	

SUMMARY OF QUANTITIES

Q-4

REVISED BY | DATE REVISED
ROD CRUZ | IRENE LEE
CALCULATED-DESIGNED BY | CHECKED BY
FUNCTIONAL SUPERVISOR: JUN XU

STATE OF CALIFORNIA - DEPARTMENT OF TRANSPORTATION
Caltrans
DESIGN

LAST REVISION 06-20-14 | DATE PLOTTED => 01-JUL-2014 | TIME PLOTTED => 10:44

Dist	COUNTY	ROUTE	POST MILES TOTAL PROJECT	SHEET No.	TOTAL SHEETS
06	Fre	5	48.8/53.0	69	117

REGISTERED ELECTRICAL ENGINEER 06-23-14 DATE

6-23-14
PLANS APPROVAL DATE

REGISTERED PROFESSIONAL ENGINEER HASHIM KHALID No. 18054 Exp. 6/30/15 ELECTRICAL STATE OF CALIFORNIA

THE STATE OF CALIFORNIA OR ITS OFFICERS OR AGENTS SHALL NOT BE RESPONSIBLE FOR THE ACCURACY OR COMPLETENESS OF SCANNED COPIES OF THIS PLAN SHEET.

LEGEND:

1 120/240V, 1ø, 3-WIRE, TYPE III-BF SERVICE EQUIPMENT ENCLOSURE WITH THE FOLLOWING CIRCUIT BREAKERS:

Ctid No. 06420050049103L

AMPERES	VOLTS	POLES	NAMEPLATE	METER	PHOTO ELECTRIC CONTROL
100	240	2	MAIN BREAKER	YES	——
30	240	2	HIGHWAY LIGHTING N	YES	V
30	240	2	HIGHWAY LIGHTING S	YES	V
30	240	2	STREET LIGHTING	YES	V
15	120	1	HIGHWAY LIGHTING CONTROL	YES	——
15	120	1	STREET LIGHTING CONTROL	YES	——
30	240	2	SPARE	YES	——
20	120	1	SPARE	YES	——
——	——	6	SPACE	——	——

2 PG&E APPROVED WOOD POLE.

3 PG&E APPROVED SPLICE BOX.

4 120/240V, 1ø, 3-WIRE, TYPE III-BF SERVICE EQUIPMENT ENCLOSURE WITH THE FOLLOWING CIRCUIT BREAKERS:

Ctid No. 06420050049462L

AMPERES	VOLTS	POLES	NAMEPLATE	METER	PHOTO ELECTRIC CONTROL
100	240	2	MAIN BREAKER	YES	——
15	120	1	VEHICLE CLASSIFICATION STATION	YES	——
30	240	2	SPARE	YES	——
20	120	1	SPARE	YES	——
——	——	6	SPACE	——	——

5 YOU MUST FURNISH AND INSTALL MODEL 334L CONTROLLER CABINET, TWO WIRELESS MODEMS AND ATC FOR VCS. INSTALL DEPARTMENT-FURNISHED MODEL 2070E CONTROLLER UNIT FOR TMS.

6 Exist 120/240V, 1ø, 3-WIRE, TYPE III-BF SERVICE EQUIPMENT ENCLOSURE WITH THE FOLLOWING CIRCUIT BREAKERS:

Ctid No. 06420050049462L

AMPERES	VOLTS	POLES	NAMEPLATE	METER	PHOTO ELECTRIC CONTROL
200	240	2	MAIN BREAKER	YES	——
80	120	1	CMS LAMPS	YES	——
80	120	1	CMS LAMPS	YES	——
80	120	1	CMS LAMPS	YES	——
80	120	1	CMS LAMPS	YES	——
40	120	1	334-C CABINET	YES	——
80	120	1	TMS	YES	——
——	——	2	SPACE	——	——

7 LOOP DETECTORS AND PIEZO AXLE SENSORS MUST BE PLACED AND IDENTIFIED AS SHOWN ON DETAILS A AND B ON SHEET E-12.

8 120/240V, 1ø, 3-WIRE, TYPE III-BF SERVICE EQUIPMENT ENCLOSURE WITH THE FOLLOWING CIRCUIT BREAKERS:

Ctid No. 06420050052909L

AMPERES	VOLTS	POLES	NAMEPLATE	METER	PHOTO ELECTRIC CONTROL
100	240	2	MAIN BREAKER	YES	——
30	240	2	HIGHWAY LIGHTING N	YES	V
30	240	2	HIGHWAY LIGHTING S	YES	V
30	240	2	STREET LIGHTING	YES	V
15	120	1	HIGHWAY LIGHTING CONTROL	YES	——
15	120	1	STREET LIGHTING CONTROL	YES	——
30	240	2	SPARE	YES	——
20	120	1	SPARE	YES	——
——	——	6	SPACE	——	——

9 RC Exist TYPE A SERVICE ENCLOSURE AND EQUIPMENT. YOU MUST INSTALL PG&E APPROVED RISER AND EQUIPMENT ON Exist WOOD POLE.

10 RL Exist SIGNS TO NEW ELECTROLIER. SEE TRAFFIC PLANS FOR MORE DETAILS.

11 Exsit CCTV POLE WITH CAMERA ASSEMBLY. RS Exist CAMERA ASSEMBLY. YOU MUST FURNISH AND INSTALL CAMERA ASSEMBLY.

12 Exist CCTV CABINET. INSTALL VIDEO ENCODER UNIT AND WIRELESS MODEM.

13 Exist MODEL 334L CONTROLLER CABINET. YOU MUST FURNISH TWO WIRELESS MODEMS AND ATC FOR VCS. INSTALL DEPARTMENT-FURNISHED MODEL 2070E CONTROLLER UNIT FOR TMS.

14 RS Exist XENON MODEL 500 CMS. INSTALL DEPARTMENT-FURNISHED LED MODEL 500 CMS.

15 RC Exist SERVICE ENCLOSURE AND CONTROLLER CABINET.

16 Exist 120/240V, 1ø, 3-WIRE, TYPE III-BF SERVICE EQUIPMENT ENCLOSURE WITH THE FOLLOWING CIRCUIT BREAKERS:

Ctid No. 06420050049462L

AMPERES	VOLTS	POLES	NAMEPLATE	METER	PHOTO ELECTRIC CONTROL
100	240	3	MAIN BREAKER	YES	——
15	120	1	SCAN SYSTEM	YES	——
15	120	1	TDC	YES	——
15	120	1	VIS SENSOR	YES	——
30	120	1	CCTV	YES	——
——	——	9	SPACE	——	——

17 RS Exist 200 W HPS Lum, INSTALL 165 W LED Lum.

ABBREVIATIONS:

RPU	REMOTE PROCESSING UNIT
VIS	VISIBILITY SENSOR
AT&T	AMERICAN TELEPHONE AND TELEGRAPH COMPANY
PG&E	PACIFIC GAS AND ELECTRIC COMPANY
STC	SCREENED TRASMISSION CABLE
ATC	AUTOMATED TRAFFIC COUNTER
VIS	VISIBILITY SENSOR
RPU	REMOTE PROCESSING UNIT

SYMBOLS

RPU	Exist REMOTE PROCESSING UNIT
VIS	Exist VISIBILITY SENSOR
OH	PG&E OVERHEAD SERVICE CONDUCTORS

LEGEND, SYMBOLS AND ABBREVIATIONS

NO SCALE

E-1

APPROVED FOR ELECTRICAL WORK ONLY

STATE OF CALIFORNIA - DEPARTMENT OF TRANSPORTATION
Caltrans ELECTRICAL DESIGN

FUNCTIONAL SUPERVISOR: ALI BAKHDOUD
CALCULATED-DESIGNED BY: GURVINDERJIT S. BAINS
CHECKED BY: HASHIM M. KHALID
REVISED BY / DATE REVISED

LAST REVISION 06-19-14
DATE PLOTTED => 02-JUL-2014
TIME PLOTTED => 13:20

Dist	COUNTY	ROUTE	POST MILES TOTAL PROJECT	SHEET No.	TOTAL SHEETS
06	Fre	5	48.8/53.0	70	117

REGISTERED ELECTRICAL ENGINEER 06-23-14 DATE

6-23-14
PLANS APPROVAL DATE

REGISTERED PROFESSIONAL ENGINEER HASHIM KHALID No. 18054 Exp. 6/30/15 ELECTRICAL STATE OF CALIFORNIA

THE STATE OF CALIFORNIA OR ITS OFFICERS OR AGENTS SHALL NOT BE RESPONSIBLE FOR THE ACCURACY OR COMPLETENESS OF SCANNED COPIES OF THIS PLAN SHEET.

NOTES:

1. ALL PULL BOXES MUST BE No. 5(T)(E) UNLESS OTHERWISE NOTED.
2. FOR ACCURATE RIGHT OF WAY DATA, CONTACT RIGHT OF WAY ENGINEERING AT THE DISTRICT OFFICE.

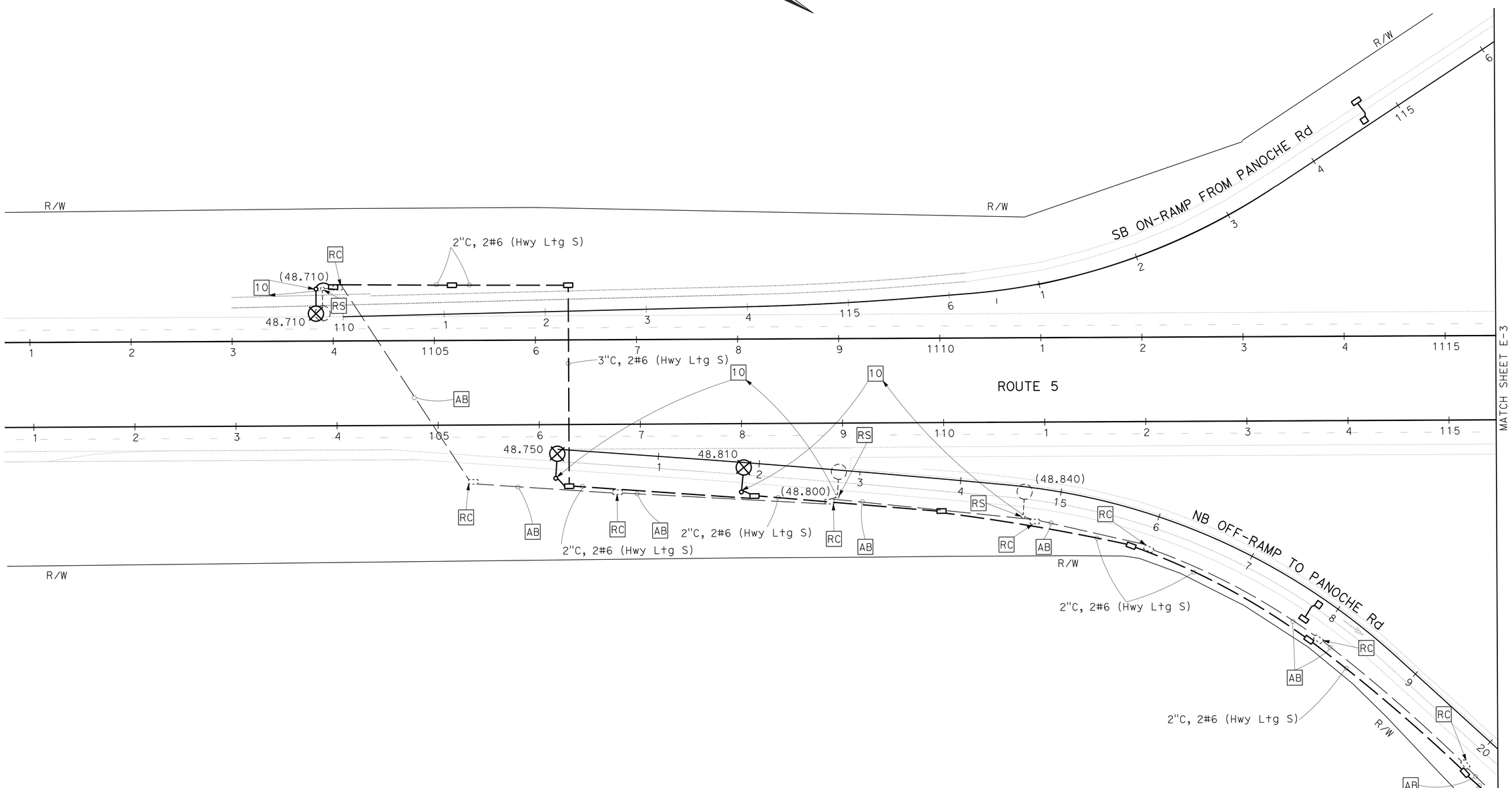

APPROVED FOR ELECTRICAL WORK ONLY

SCALE: 1"=50'

MODIFY LIGHTING

E-2

STATE OF CALIFORNIA - DEPARTMENT OF TRANSPORTATION
Caltrans® ELECTRICAL DESIGN

FUNCTIONAL SUPERVISOR: ALI BAKHDOUD
CALCULATED-DESIGNED BY: GURVINDERJIT S. BAINS
CHECKED BY: HASHIM M. KHALID
REVISED BY
DATE REVISED

LAST REVISION 06-19-14 DATE PLOTTED => 02-JUL-2014 TIME PLOTTED => 13:20

Dist	COUNTY	ROUTE	POST MILES TOTAL PROJECT	SHEET No.	TOTAL SHEETS
06	Fre	5	48.8/53.0	71	117

REGISTERED ELECTRICAL ENGINEER 06-23-14 DATE

6-23-14
PLANS APPROVAL DATE

REGISTERED PROFESSIONAL ENGINEER HASHIM KHALID No. 18054 Exp. 6/30/15 ELECTRICAL STATE OF CALIFORNIA

THE STATE OF CALIFORNIA OR ITS OFFICERS OR AGENTS SHALL NOT BE RESPONSIBLE FOR THE ACCURACY OR COMPLETENESS OF SCANNED COPIES OF THIS PLAN SHEET.

NOTES:

1. ALL PULL BOXES MUST BE No. 5(T)(E) UNLESS OTHERWISE NOTED.
2. FOR ACCURATE RIGHT OF WAY DATA, CONTACT RIGHT OF WAY ENGINEERING AT THE DISTRICT OFFICE.

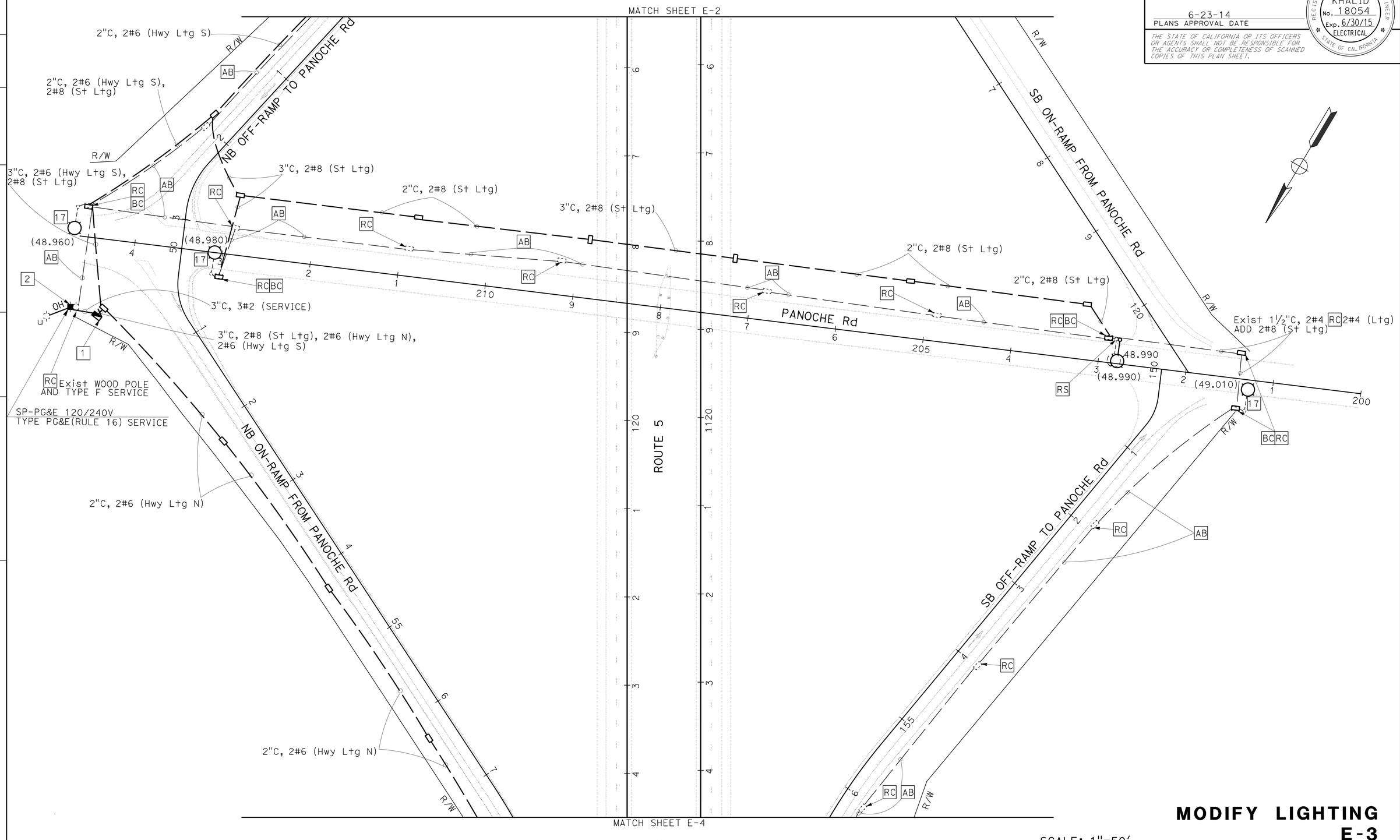

APPROVED FOR ELECTRICAL WORK ONLY

SCALE: 1"=50'

MODIFY LIGHTING
E-3

STATE OF CALIFORNIA - DEPARTMENT OF TRANSPORTATION
Caltrans
ELECTRICAL DESIGN

FUNCTIONAL SUPERVISOR: ALI BAKHDOUD
CALCULATED-DESIGNED BY: GURVINDERJIT S. BAINS
CHECKED BY: HASHIM M. KHALID
REVISED BY
DATE REVISED

LAST REVISION 06-19-14
DATE PLOTTED => 02-JUL-2014
TIME PLOTTED => 13:20

Dist	COUNTY	ROUTE	POST MILES TOTAL PROJECT	SHEET No.	TOTAL SHEETS
06	Fre	5	48.8/53.0	72	117

REGISTERED ELECTRICAL ENGINEER DATE 06-23-14

PLANS APPROVAL DATE 6-23-14

REGISTERED PROFESSIONAL ENGINEER HASHIM KHALID No. 18054 Exp. 6/30/15 ELECTRICAL STATE OF CALIFORNIA

THE STATE OF CALIFORNIA OR ITS OFFICERS OR AGENTS SHALL NOT BE RESPONSIBLE FOR THE ACCURACY OR COMPLETENESS OF SCANNED COPIES OF THIS PLAN SHEET.

NOTES:

1. ALL PULL BOXES MUST BE No. 5(T)(E) UNLESS OTHERWISE NOTED.
2. FOR ACCURATE RIGHT OF WAY DATA, CONTACT RIGHT OF WAY ENGINEERING AT THE DISTRICT OFFICE.

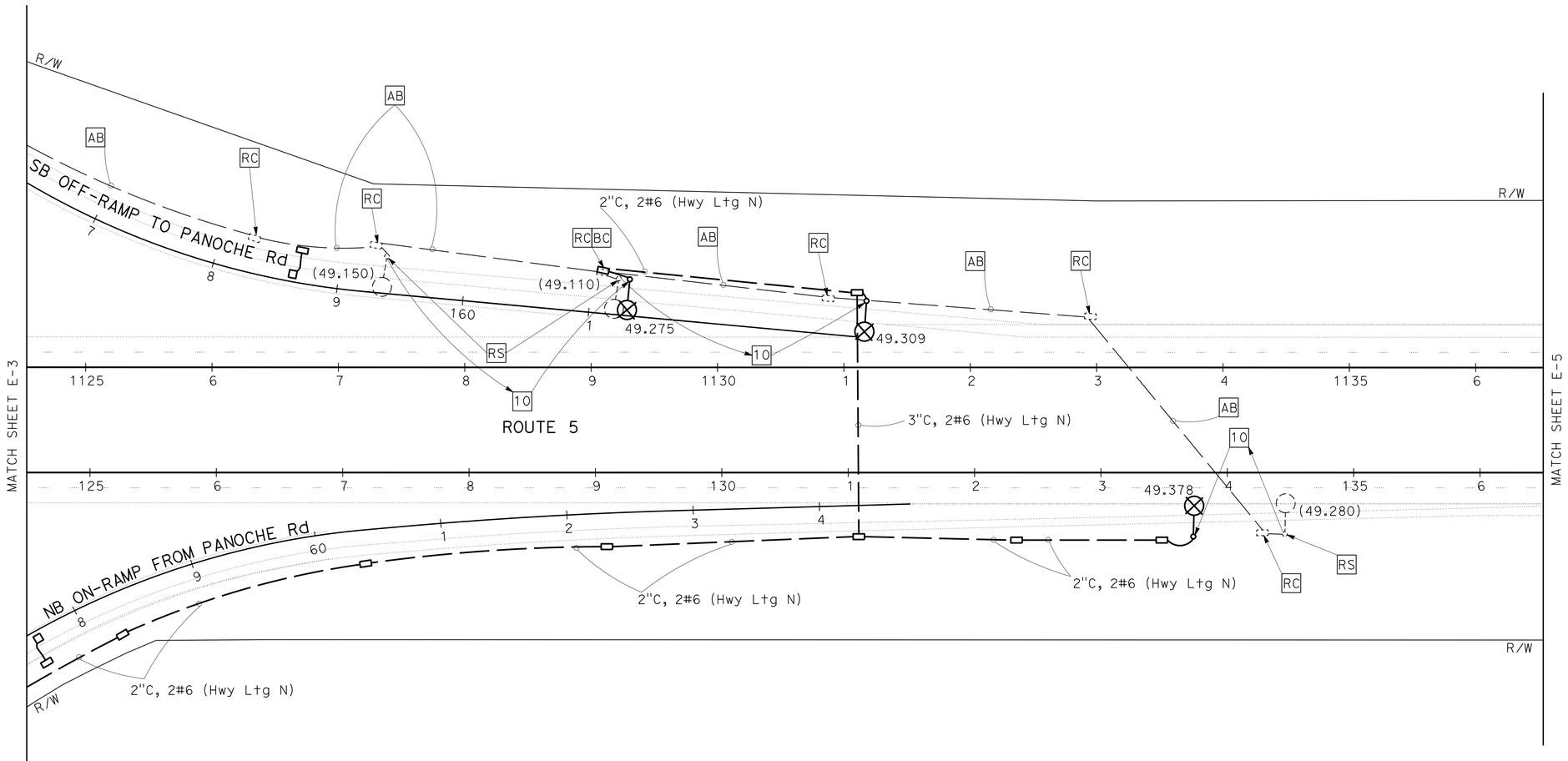

APPROVED FOR ELECTRICAL WORK ONLY

SCALE: 1"=50'

MODIFY LIGHTING
E-4

STATE OF CALIFORNIA - DEPARTMENT OF TRANSPORTATION
Caltrans
ELECTRICAL DESIGN

FUNCTIONAL SUPERVISOR: ALI BAKHDOUD
CALCULATED-DESIGNED BY: GURVINDERJIT S. BAINS
CHECKED BY: HASHIM M. KHALID
REVISED BY
DATE REVISED

LAST REVISION 06-19-14
DATE PLOTTED => 02-JUL-2014
TIME PLOTTED => 13:20

Dist	COUNTY	ROUTE	POST MILES TOTAL PROJECT	SHEET No.	TOTAL SHEETS
06	Fre	5	48.8/53.0	73	117

REGISTERED ELECTRICAL ENGINEER 06-23-14 DATE

6-23-14
PLANS APPROVAL DATE

REGISTERED PROFESSIONAL ENGINEER HASHIM KHALID No. 18054 Exp. 6/30/15 ELECTRICAL STATE OF CALIFORNIA

THE STATE OF CALIFORNIA OR ITS OFFICERS OR AGENTS SHALL NOT BE RESPONSIBLE FOR THE ACCURACY OR COMPLETENESS OF SCANNED COPIES OF THIS PLAN SHEET.

NOTES:

1. ALL PULL BOXES MUST BE No. 5(T)(E) UNLESS OTHERWISE NOTED.
2. FOR ACCURATE RIGHT OF WAY DATA, CONTACT RIGHT OF WAY ENGINEERING AT THE DISTRICT OFFICE.

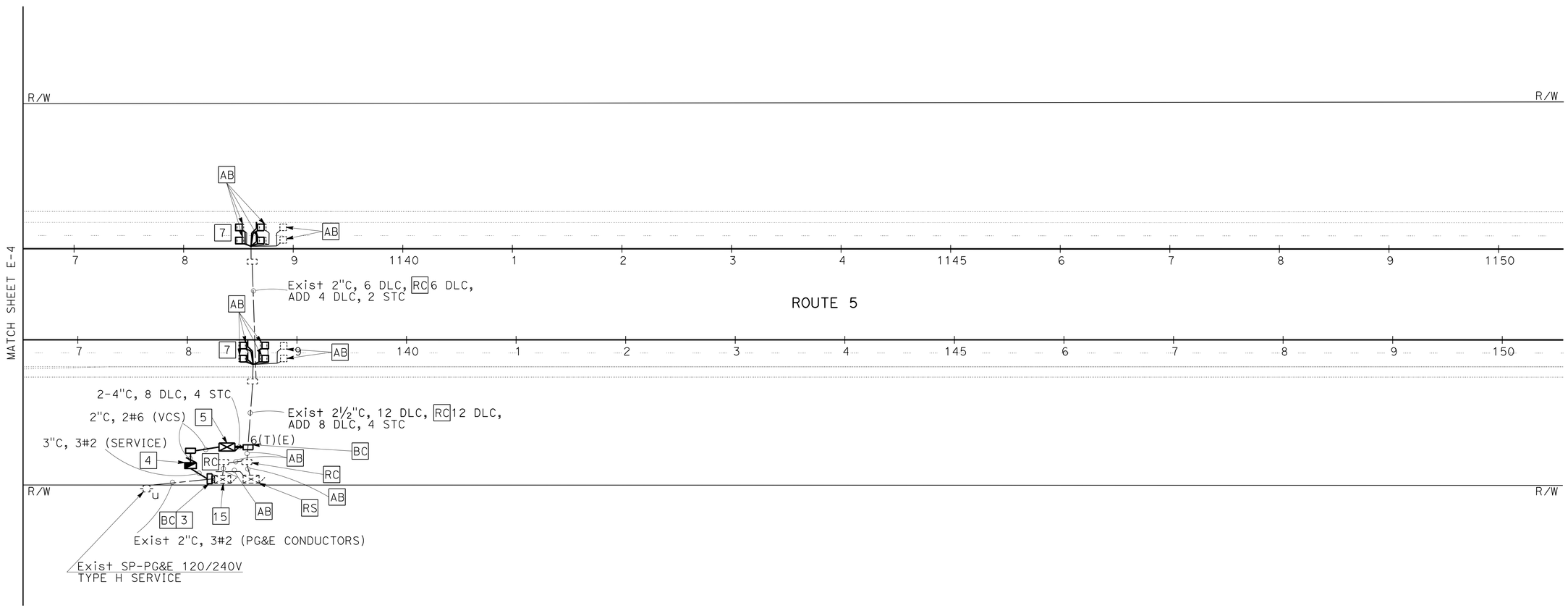

VEHICLE CLASSIFICATION STATION E-5

SCALE: 1"=50'

APPROVED FOR ELECTRICAL WORK ONLY

STATE OF CALIFORNIA - DEPARTMENT OF TRANSPORTATION
Caltrans® ELECTRICAL DESIGN

FUNCTIONAL SUPERVISOR: ALI BAKHDOUD
CALCULATED-DESIGNED BY: GURVINDERJIT S. BAINS
CHECKED BY: HASHIM M. KHALID
REVISED BY
DATE REVISED

LAST REVISION 06-19-14
DATE PLOTTED => 02-JUL-2014
TIME PLOTTED => 13:20

Dist	COUNTY	ROUTE	POST MILES TOTAL PROJECT	SHEET No.	TOTAL SHEETS
06	Fre	5	48.8/53.0	74	117

REGISTERED ELECTRICAL ENGINEER 06-23-14 DATE

6-23-14
PLANS APPROVAL DATE

REGISTERED PROFESSIONAL ENGINEER HASHIM KHALID No. 18054 Exp. 6/30/15 ELECTRICAL STATE OF CALIFORNIA

THE STATE OF CALIFORNIA OR ITS OFFICERS OR AGENTS SHALL NOT BE RESPONSIBLE FOR THE ACCURACY OR COMPLETENESS OF SCANNED COPIES OF THIS PLAN SHEET.

NOTES:

1. ALL PULL BOXES MUST BE No. 5(T)(E) UNLESS OTHERWISE NOTED.
2. FOR ACCURATE RIGHT OF WAY DATA, CONTACT RIGHT OF WAY ENGINEERING AT THE DISTRICT OFFICE.

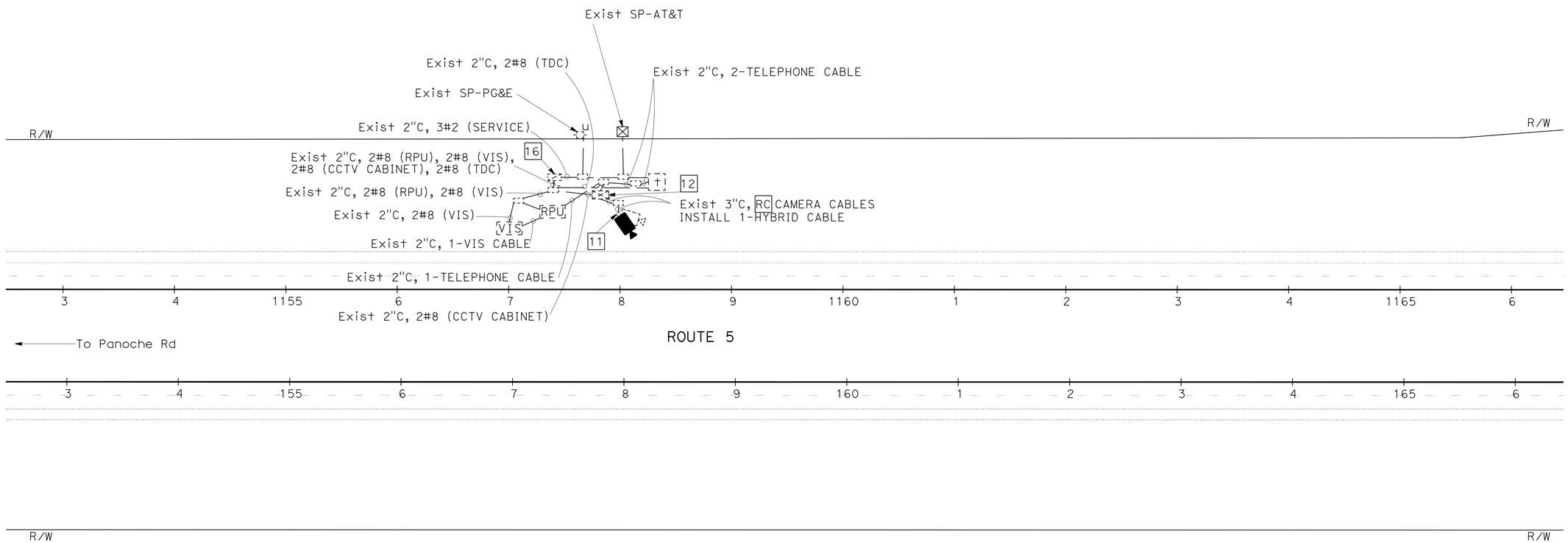

PM 49.8

MODIFY CLOSED CIRCUIT TELEVISION SYSTEM

SCALE: 1"=50'

E-6

APPROVED FOR ELECTRICAL WORK ONLY

STATE OF CALIFORNIA - DEPARTMENT OF TRANSPORTATION
Caltrans® ELECTRICAL DESIGN

FUNCTIONAL SUPERVISOR: ALI BAKHDOUD
CALCULATED-DESIGNED BY: GURVINDERJIT S. BAINS
CHECKED BY: HASHIM M. KHALID
REVISED BY
DATE REVISED

LAST REVISION 06-19-14
DATE PLOTTED => 02-JUL-2014
TIME PLOTTED => 13:20

Dist	COUNTY	ROUTE	POST MILES TOTAL PROJECT	SHEET No.	TOTAL SHEETS
06	Fre	5	48.8/53.0	75	117

REGISTERED ELECTRICAL ENGINEER 06-23-14 DATE

6-23-14
PLANS APPROVAL DATE

REGISTERED PROFESSIONAL ENGINEER HASHIM KHALID No. 18054 Exp. 6/30/15 ELECTRICAL STATE OF CALIFORNIA

THE STATE OF CALIFORNIA OR ITS OFFICERS OR AGENTS SHALL NOT BE RESPONSIBLE FOR THE ACCURACY OR COMPLETENESS OF SCANNED COPIES OF THIS PLAN SHEET.

NOTES:

1. ALL PULL BOXES MUST BE No. 5(T)(E) UNLESS OTHERWISE NOTED.
2. FOR ACCURATE RIGHT OF WAY DATA, CONTACT RIGHT OF WAY ENGINEERING AT THE DISTRICT OFFICE.

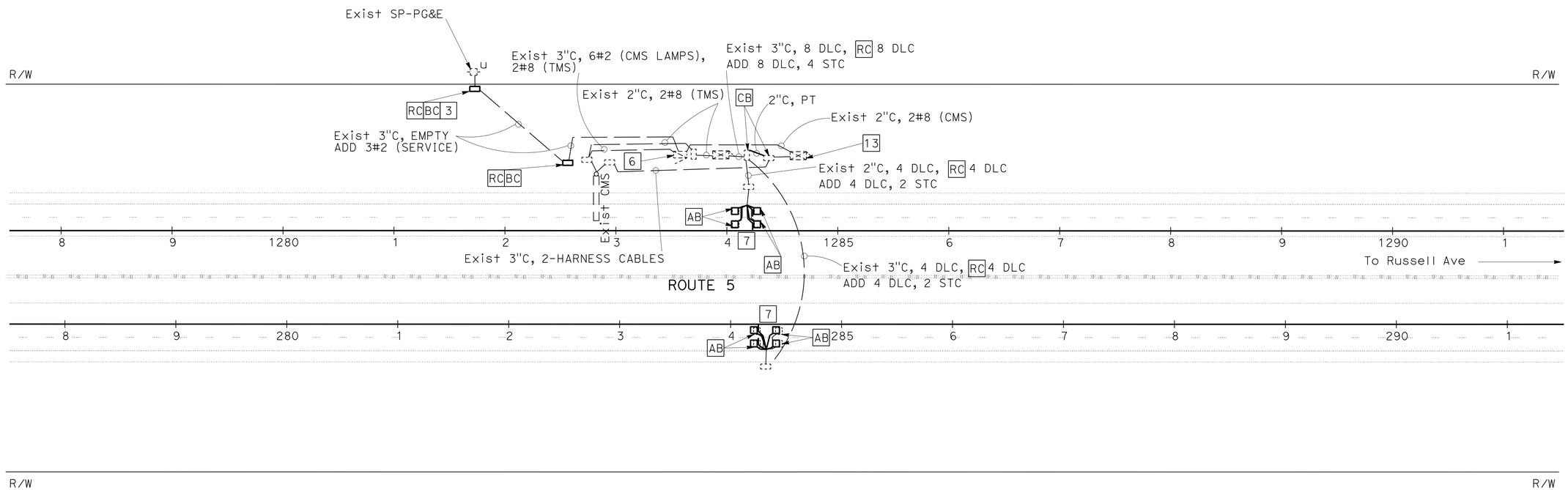

PM 52.0

VEHICLE CLASSIFICATION STATION

SCALE: 1"=50'

E-7

APPROVED FOR ELECTRICAL WORK ONLY

STATE OF CALIFORNIA - DEPARTMENT OF TRANSPORTATION
Caltrans® **ELECTRICAL DESIGN**

FUNCTIONAL SUPERVISOR: ALI BAKHDOUD
CALCULATED-DESIGNED BY: GURVINDERJIT S. BAINS
CHECKED BY: HASHIM M. KHALID
REVISED BY
DATE REVISED

LAST REVISION 06-19-14
DATE PLOTTED => 02-JUL-2014
TIME PLOTTED => 13:20

Dist	COUNTY	ROUTE	POST MILES TOTAL PROJECT	SHEET No.	TOTAL SHEETS
06	Fre	5	48.8/53.0	76	117

REGISTERED ELECTRICAL ENGINEER 06-23-14 DATE

6-23-14
PLANS APPROVAL DATE

REGISTERED PROFESSIONAL ENGINEER HASHIM KHALID No. 18054 Exp. 6/30/15 ELECTRICAL STATE OF CALIFORNIA

THE STATE OF CALIFORNIA OR ITS OFFICERS OR AGENTS SHALL NOT BE RESPONSIBLE FOR THE ACCURACY OR COMPLETENESS OF SCANNED COPIES OF THIS PLAN SHEET.

NOTES:

1. ALL PULL BOXES MUST BE No. 5(T)(E) UNLESS OTHERWISE NOTED.
2. FOR ACCURATE RIGHT OF WAY DATA, CONTACT RIGHT OF WAY ENGINEERING AT THE DISTRICT OFFICE.

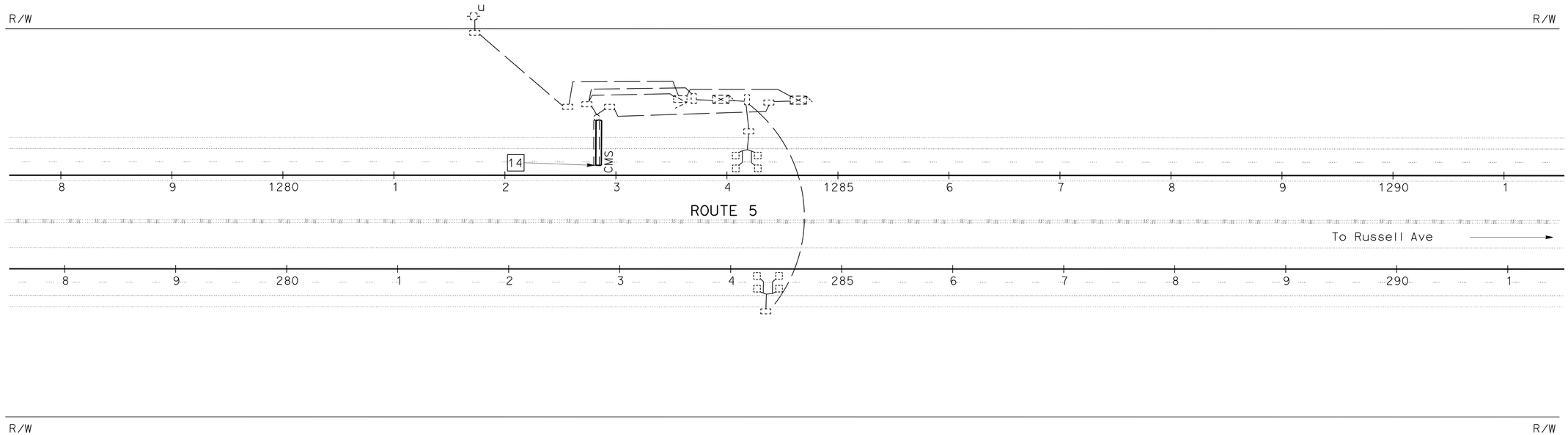

PM 52.0

MODIFY CHANGABLE MESSAGE SIGN

SCALE: 1"=50'

E-8

APPROVED FOR ELECTRICAL WORK ONLY

STATE OF CALIFORNIA - DEPARTMENT OF TRANSPORTATION
Caltrans® **ELECTRICAL DESIGN**

FUNCTIONAL SUPERVISOR: ALI BAKHDOUD
CALCULATED-DESIGNED BY: GURVINDERJIT S. BAINS
CHECKED BY: HASHIM M. KHALID
REVISED BY
DATE REVISED

LAST REVISION 06-19-14
DATE PLOTTED => 02-JUL-2014
TIME PLOTTED => 13:20

Dist	COUNTY	ROUTE	POST MILES TOTAL PROJECT	SHEET No.	TOTAL SHEETS
06	Fre	5	48.8/53.0	77	117

REGISTERED ELECTRICAL ENGINEER 06-23-14 DATE

6-23-14
PLANS APPROVAL DATE

REGISTERED PROFESSIONAL ENGINEER HASHIM KHALID No. 18054 Exp. 6/30/15 ELECTRICAL STATE OF CALIFORNIA

THE STATE OF CALIFORNIA OR ITS OFFICERS OR AGENTS SHALL NOT BE RESPONSIBLE FOR THE ACCURACY OR COMPLETENESS OF SCANNED COPIES OF THIS PLAN SHEET.

NOTES:

1. ALL PULL BOXES MUST BE No. 5(T)(E) UNLESS OTHERWISE NOTED.
2. FOR ACCURATE RIGHT OF WAY DATA, CONTACT RIGHT OF WAY ENGINEERING AT THE DISTRICT OFFICE.

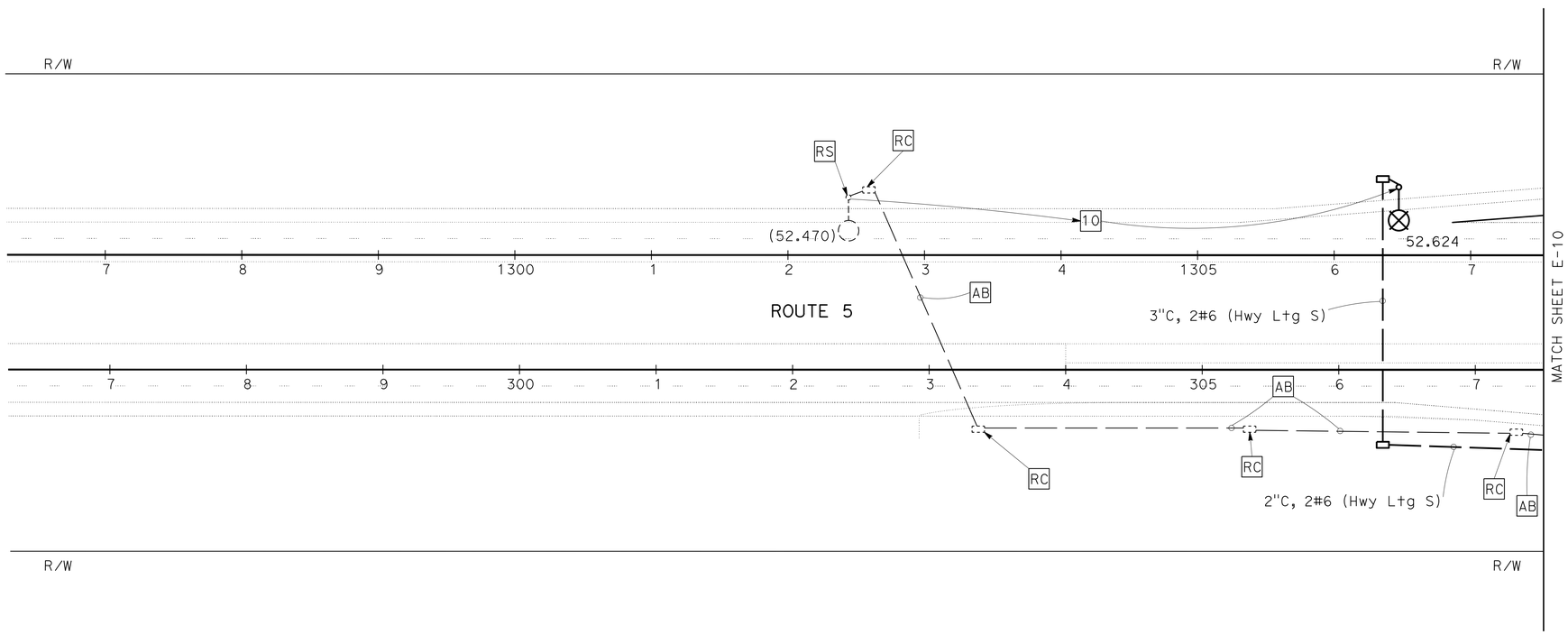

MODIFY LIGHTING
E-9

SCALE: 1"=50'

APPROVED FOR ELECTRICAL WORK ONLY

STATE OF CALIFORNIA - DEPARTMENT OF TRANSPORTATION
Caltrans® ELECTRICAL DESIGN

FUNCTIONAL SUPERVISOR: ALI BAKHDOUD
CALCULATED-DESIGNED BY: GURVINDERJIT S. BAINS
CHECKED BY: HASHIM M. KHALID
REVISED BY
DATE REVISED

LAST REVISION 06-19-14
DATE PLOTTED => 02-JUL-2014
TIME PLOTTED => 13:20

Dist	COUNTY	ROUTE	POST MILES TOTAL PROJECT	SHEET No.	TOTAL SHEETS
06	Fre	5	48.8/53.0	78	117

REGISTERED ELECTRICAL ENGINEER 06-23-14 DATE

6-23-14
PLANS APPROVAL DATE

REGISTERED PROFESSIONAL ENGINEER HASHIM KHALID No. 18054 Exp. 6/30/15 ELECTRICAL STATE OF CALIFORNIA

THE STATE OF CALIFORNIA OR ITS OFFICERS OR AGENTS SHALL NOT BE RESPONSIBLE FOR THE ACCURACY OR COMPLETENESS OF SCANNED COPIES OF THIS PLAN SHEET.

NOTES:

1. ALL PULL BOXES MUST BE No. 5(T)(E) UNLESS OTHERWISE NOTED.
2. FOR ACCURATE RIGHT OF WAY DATA, CONTACT RIGHT OF WAY ENGINEERING AT THE DISTRICT OFFICE.

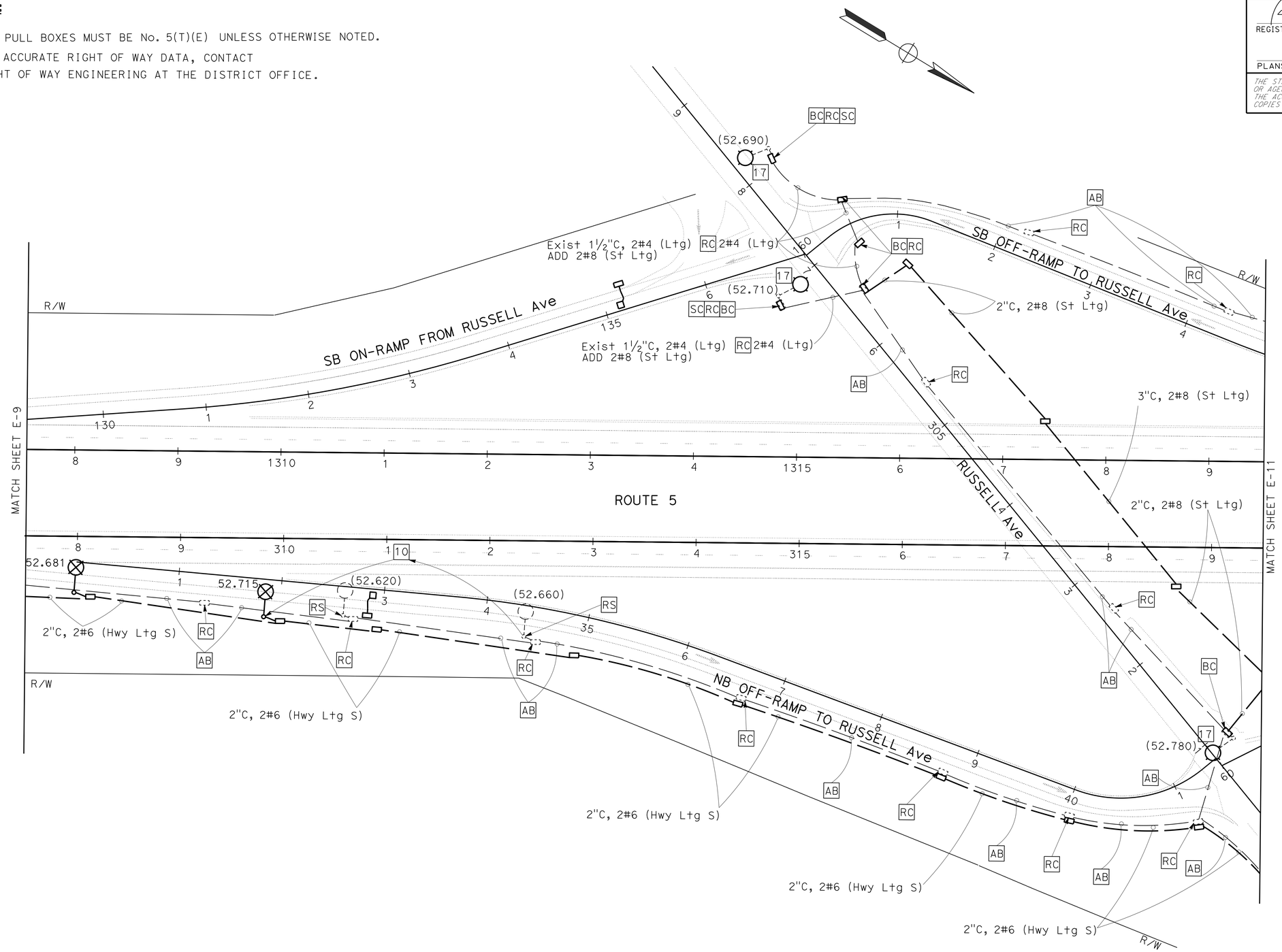

MODIFY LIGHTING
E-10

SCALE: 1"=50'

APPROVED FOR ELECTRICAL WORK ONLY

STATE OF CALIFORNIA - DEPARTMENT OF TRANSPORTATION
Caltrans
ELECTRICAL DESIGN

FUNCTIONAL SUPERVISOR: ALI BAKHDOUD
CALCULATED-DESIGNED BY: GURVINDERJIT S. BAINS
CHECKED BY: HASHIM M. KHALID
REVISED BY
DATE REVISED

LAST REVISION 06-19-14
DATE PLOTTED => 02-JUL-2014
TIME PLOTTED => 13:20

Dist	COUNTY	ROUTE	POST MILES TOTAL PROJECT	SHEET No.	TOTAL SHEETS
06	Fre	5	48.8/53.0	79	117

REGISTERED ELECTRICAL ENGINEER 06-23-14 DATE

6-23-14
PLANS APPROVAL DATE

REGISTERED PROFESSIONAL ENGINEER HASHIM KHALID No. 18054 Exp. 6/30/15 ELECTRICAL STATE OF CALIFORNIA

THE STATE OF CALIFORNIA OR ITS OFFICERS OR AGENTS SHALL NOT BE RESPONSIBLE FOR THE ACCURACY OR COMPLETENESS OF SCANNED COPIES OF THIS PLAN SHEET.

NOTES:

1. ALL PULL BOXES MUST BE No. 5(T)(E) UNLESS OTHERWISE NOTED.
2. FOR ACCURATE RIGHT OF WAY DATA, CONTACT RIGHT OF WAY ENGINEERING AT THE DISTRICT OFFICE.

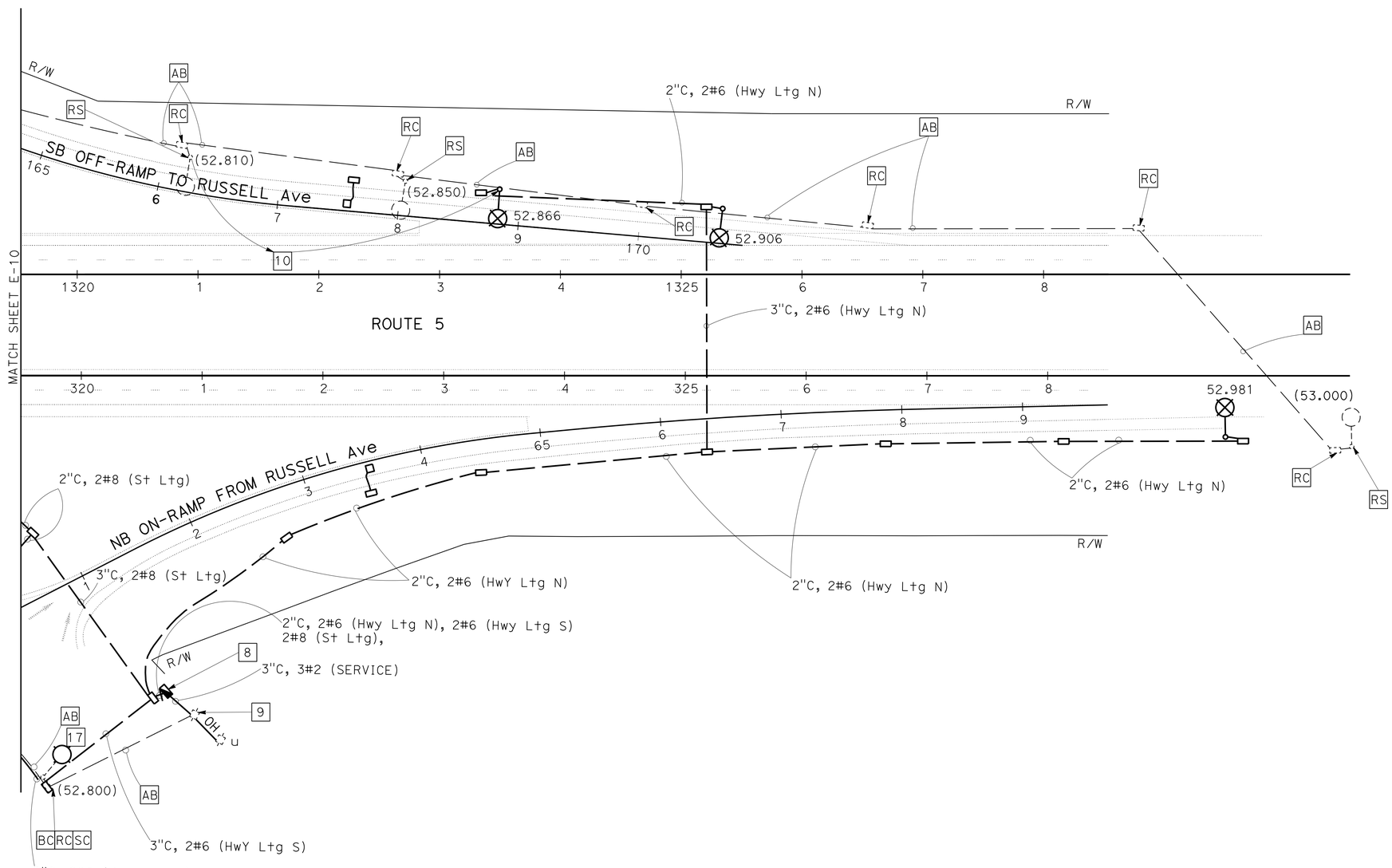

MODIFY LIGHTING
E-11

SCALE: 1" = 50'

APPROVED FOR ELECTRICAL WORK ONLY

STATE OF CALIFORNIA - DEPARTMENT OF TRANSPORTATION
Caltrans® ELECTRICAL DESIGN

FUNCTIONAL SUPERVISOR: ALI BAKHDOUD
CALCULATED-DESIGNED BY: GURVINDERJIT S. BAINS
CHECKED BY: HASHIM M. KHALID
REVISED BY
DATE REVISED

LAST REVISION 06-19-14
DATE PLOTTED => 02-JUL-2014
TIME PLOTTED => 13:20

Dist	COUNTY	ROUTE	POST MILES TOTAL PROJECT	SHEET No.	TOTAL SHEETS
06	Fre	5	48.8/53.0	80	117

REGISTERED ELECTRICAL ENGINEER 06-23-14 DATE

6-23-14
PLANS APPROVAL DATE

REGISTERED PROFESSIONAL ENGINEER HASHIM KHALID No. 18054 Exp. 6/30/15 ELECTRICAL STATE OF CALIFORNIA

THE STATE OF CALIFORNIA OR ITS OFFICERS OR AGENTS SHALL NOT BE RESPONSIBLE FOR THE ACCURACY OR COMPLETENESS OF SCANNED COPIES OF THIS PLAN SHEET.

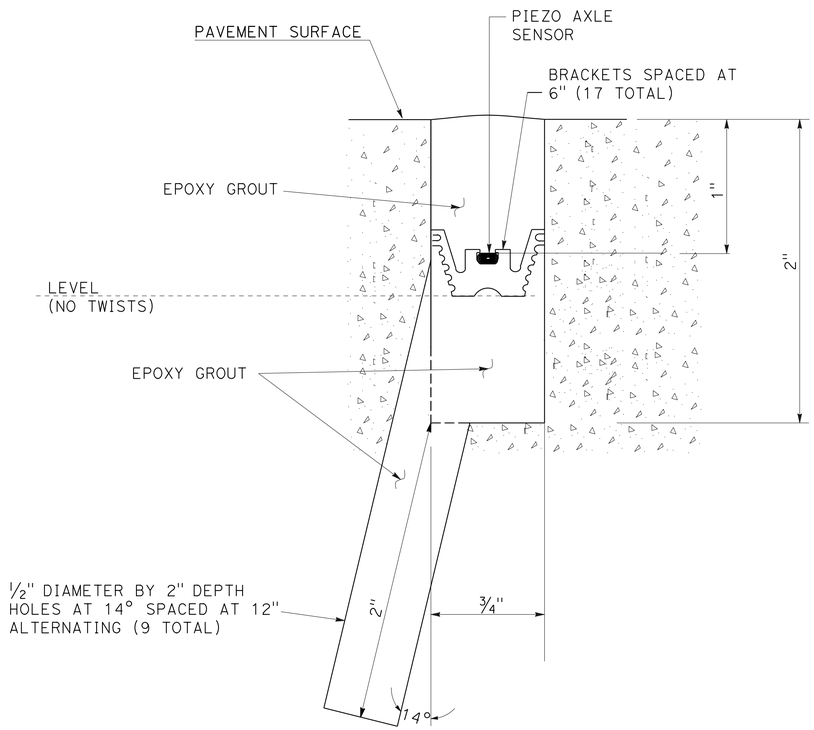

SECTION A-A

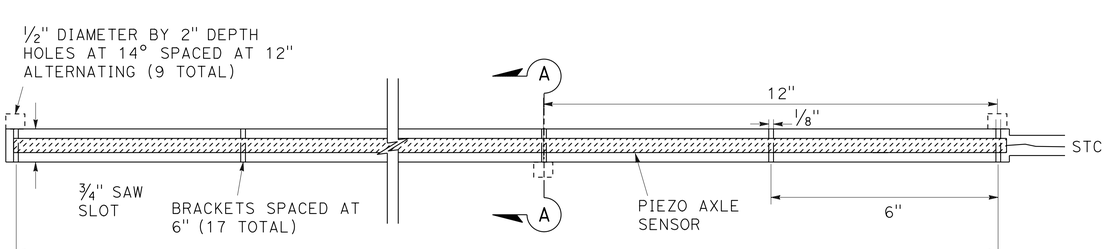

PIEZO AXLE SENSOR INSTALLATION

TOP VIEW
DETAIL A

INDUCTIVE LOOP DETECTOR SENSOR DESIGNATION

N-1-2

- DIRECTION OF TRAFFIC
  - N - NORTHBOUND , S - SOUTHBOUND
  - E - EASTBOUND , W - WESTBOUND
- 1 - ENTERING
  2 - LEAVING
- LANE NUMBER
  - 1 - FIRST LANE FROM LEFT
  - 2 - SECOND LANE

PIEZO AXLE SENSOR DESIGNATION

N-P-1-1

- DIRECTION OF TRAFFIC
  - N - NORTHBOUND, S - SOUTHBOUND
  - E - EASTBOUND, W - WESTBOUND
- PIEZO AXLE SENSOR
- 1 - FOR ALL PIEZO AXLE SENSORS
- LANE NUMBER
  - 1 - FIRST LANE FROM LEFT
  - 2 - SECOND LANE

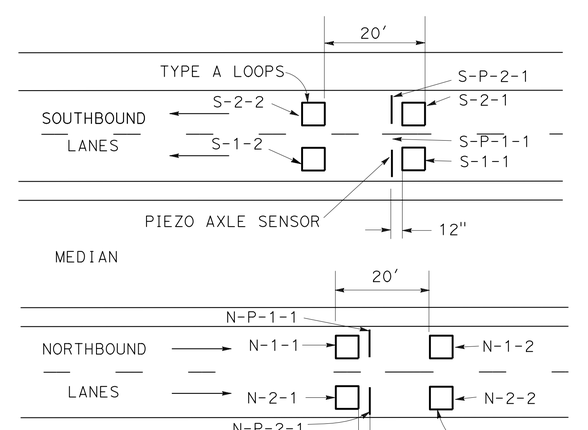

LOOP DETECTOR AND PIEZO AXLE SENSOR PLACEMENT AND DESIGNATION

DETAIL B

VEHICLE CLASSIFICATION STATION DETAILS

NO SCALE

E-12

APPROVED FOR ELECTRICAL WORK ONLY

STATE OF CALIFORNIA - DEPARTMENT OF TRANSPORTATION
Caltrans® **ELECTRICAL DESIGN**

FUNCTIONAL SUPERVISOR: ALI BAKHDOUD
CALCULATED-DESIGNED BY: GURVINDERJIT S. BAINS
CHECKED BY: HASHIM M. KHALID
REVISED BY
DATE REVISED

LAST REVISION 06-19-14 | DATE PLOTTED => 02-JUL-2014 | TIME PLOTTED => 13:20

Dist	COUNTY	ROUTE	POST MILES TOTAL PROJECT	SHEET No.	TOTAL SHEETS
06	Fre	5	48.8/53.0	81	117

REGISTERED ELECTRICAL ENGINEER 06-23-14 DATE

6-23-14
PLANS APPROVAL DATE

REGISTERED PROFESSIONAL ENGINEER HASHIM KHALID No. 18054 Exp. 6/30/15 ELECTRICAL STATE OF CALIFORNIA

THE STATE OF CALIFORNIA OR ITS OFFICERS OR AGENTS SHALL NOT BE RESPONSIBLE FOR THE ACCURACY OR COMPLETENESS OF SCANNED COPIES OF THIS PLAN SHEET.

NOTE:

THE QUANTITIES ON THIS SHEET ARE NOT SEPARATE PAY ITEM, FOR INFORMATION ONLY.

MODIFY LIGHTING

SHEET No.	2"C, TYPE 1	2"C, TYPE 3	3"C, TYPE 1	3"C, TYPE 3	No. 8 CONDUCTOR (G)	No. 2 CONDUCTOR	No. 6 CONDUCTOR	No. 8 CONDUCTOR	No. 5(T)(E) PB	TYPE III BF SERVICE EQUIPMENT ENCLOSURE AND FOUNDATION	TYPE-15 ELECTROLIER AND FOUNDATION	TYPE-30 ELECTROLIER AND FOUNDATION	TYPE A DETECTOR LOOP	LED Lum 165 W
	LF								EA					
E-2	30	1300		200	1400		2900		11			3	2	
E-3		2040	60	460	2600	200	2300	3200	16	1	1			3
E-4	30	1300		200	1350		2700		10			3	2	
E-9	10	110		200	325		650		2			1		
E-10	20	1700		200	2125		2500	1850	19			2	2	3
E-11	40	1150	20	500	1750	100	3100	850	13	1		3	2	1

MODIFY CLOSED CIRCUIT TELEVISION SYSYTEM

SHEET No.	HYBRID CABLE	CAMERA ASSEMBLY	VIDEO ENCODER UNIT
E-6	LF	EA	
	100	1	1

VEHICLE CLASSIFICATION STATION

SHEET No.	TYPE A DETECTOR LOOP	PIEZO AXLE SENSOR AND STC	TYPE III BF SERVICE EQUIPMENT ENCLOSURE AND FOUNDATION	MODEL 334L CONTROLLER CABINET, FOUNDATION, WIRELELSS MODEMS AND ATC	No. 5(T)(E) PB	No. 6(T)(E) PB	PG&E APPROVED PB	DLC	4"C, TYPE 1	2"C, TYPE 3	3"C, TYPE 1	No. 2 CONDUCTOR
E-5	EA							LF				
	8	4	1	1	1	1	1	1200	10	30	40	100
E-7	8	4			1			1100				700

ELECTRICAL QUANTITIES
E-13

REVISED BY | DATE REVISED
GURVINDERJIT S. BAINS | HASHIM M. KHALID
CALCULATED-DESIGNED BY | CHECKED BY
FUNCTIONAL SUPERVISOR: ALI BAKHDOUD
STATE OF CALIFORNIA - DEPARTMENT OF TRANSPORTATION
Caltrans ELECTRICAL DESIGN

LAST REVISION 06-19-14 | DATE PLOTTED => 02-JUL-2014 | TIME PLOTTED => 13:20

M

Maint	MAINTENANCE
Max	MAXIMUM
MB	METAL BEAM
MBB	METAL BEAM BARRIER
MBGR	METAL BEAM GUARD RAILING
Med	MEDIAN
MGS	MIDWEST GUARDRAIL SYSTEM
MH	MANHOLE
Min	MINIMUM
Misc	MISCELLANEOUS
Misc I & S	MISCELLANEOUS IRON AND STEEL
Mkr	MARKER
Mod	MODIFIED, MODIFY
Mon	MONUMENT
MP	METAL PLATE
MPGR	METAL PLATE GUARD RAILING
MR	MOVEMENT RATING
MSE	MECHANICALLY STABILIZED EMBANKMENT
Mt	MOUNTAIN, MOUNT
Mtl	MATERIAL
MVP	MAINTENANCE VEHICLE PULLOUT

N

N	NORTH
NB	NORTHBOUND
No.	NUMBER (MUST HAVE PERIOD)
Nos.	NUMBERS (MUST HAVE PERIOD)
NPS	NOMINAL PIPE SIZE
NS	NEAR SIDE
NSP	NEW STANDARD PLAN
NTS	NOT TO SCALE

O

Oblr	OBLITERATE
OC	OVERCROSSING
OD	OUTSIDE DIAMETER
OF	OUTSIDE FACE
OG	ORIGINAL GROUND
OGAC	OPEN GRADED ASPHALT CONCRETE
OGFC	OPEN GRADED FRICTION COURSE
OH	OVERHEAD
OHWM	ORDINARY HIGH WATER MARK
O-O	OUT TO OUT
Opp	OPPOSITE
OSD	OVERSIDE DRAIN

P

P	PAGE
PAP	PERFORATED ALUMINUM PIPE
PB	PULL BOX
PC	POINT OF CURVATURE, PRECAST
PCC	POINT OF COMPOUND CURVE, PORTLAND CEMENT CONCRETE
PCMS	PORTABLE CHANGEABLE MESSAGE SIGN
PCP	PERFORATED CONCRETE PIPE, PRESTRESSED CONCRETE PIPE
PCVC	POINT OF COMPOUND VERTICAL CURVE
PEC	PERMIT TO ENTER AND CONSTRUCT
Ped	PEDESTRIAN
Ped OC	PEDESTRIAN OVERCROSSING
Ped UC	PEDESTRIAN UNDERCROSSING
Perm Mtl	PERMEABLE MATERIAL

P continued

PG	PROFILE GRADE
PI	POINT OF INTERSECTION
PJP	PARTIAL JOINT PENETRATION
Pkwy	PARKWAY
ℙ,PL	PLATE
P/L	PROPERTY LINE
PM	POST MILE, TIME FROM NOON TO MIDNIGHT
PN	PAVING NOTCH
POC	POINT OF HORIZONTAL CURVE
POT	POINT OF TANGENT
POVC	POINT OF VERTICAL CURVE
PP	PIPE PILE, PLASTIC PIPE, POWER POLE
PPL	PREFORMED PERMEABLE LINER
PPP	PERFORATED PLASTIC PIPE
PRC	POINT OF REVERSE CURVE
PRF	PAVEMENT REINFORCING FABRIC
PRVC	POINT OF REVERSE VERTICAL CURVE
PS&E	PLANS, SPECIFICATIONS AND ESTIMATES
PS, P/S	PRESTRESSED
PSP	PERFORATED STEEL PIPE
PT	POINT OF TANGENCY
PVC	POLYVINYL CHLORIDE
Pvmt	PAVEMENT

Q

Qty	QUANTITY

R

R	RADIUS
R & D	REMOVE AND DISPOSE
R & S	REMOVE AND SALVAGE
R/C	RATE OF CHANGE
RCA	REINFORCED CONCRETE ARCH
RCB	REINFORCED CONCRETE BOX
RCP	REINFORCED CONCRETE PIPE
RCPA	REINFORCED CONCRETE PIPE ARCH
Rd	ROAD
Reinf	REINFORCED, REINFORCEMENT, REINFORCING
Rel	RELOCATE
Repl	REPLACEMENT
Ret	RETAINING
Rev	REVISED, REVISION
Rdwy	ROADWAY
RHMA	RUBBERIZED HOT MIX ASPHALT
Riv	RIVER
RM	ROAD-MIXED
RP	RADIUS POINT, REFERENCE POINT
RR	RAILROAD
RSP	ROCK SLOPE PROTECTION, REVISED STANDARD PLAN
Rt	RIGHT
Rte	ROUTE
RW	REDWOOD, RETAINING WALL
R/W	RIGHT OF WAY
Rwy	RAILWAY

S

S	SOUTH, SUPPLEMENT
SAE	STRUCTURE APPROACH EMBANKMENT
Salv	SALVAGE
SAPP	STRUCTURAL ALUMINUM PLATE PIPE
SB	SOUTHBOUND
SC	SAND CUSHION
SCSP	SLOTTED CORRUGATED STEEL PIPE
SD	STORM DRAIN
Sec	SECOND, SECTION
Sep	SEPARATION
SG	SUBGRADE
Shld	SHOULDER
Sht	SHEET
Sim	SIMILAR
₤	STATION LINE
SM	SELECTED MATERIAL
Spec	SPECIAL, SPECIFICATIONS
SPP	SLOTTED PLASTIC PIPE
SS	SLOPE STAKE
SSBM	STRAP AND SADDLE BRACKET METHOD
SSD	STRUCTURAL SECTION DRAIN
SSPA	STRUCTURAL STEEL PLATE ARCH
SSPP	STRUCTURAL STEEL PLATE PIPE
SSPPA	STRUCTURAL STEEL PLATE PIPE ARCH
SSRP	STEEL SPIRAL RIB PIPE
St	STREET
Sta	STATION
STBB	SINGLE THRIE BEAM BARRIER
Std	STANDARD
Str	STRUCTURE
Surf	SURFACING
SW	SIDEWALK, SOUND WALL
Swr	SEWER
Sym	SYMMETRICAL
S4S	SURFACE 4 SIDES

T

T	SEMI-TANGENT
Tan	TANGENT
TBB	THRIE BEAM BARRIER
Tbr	TIMBER
TC	TOP OF CURB
TCB	TRAFFIC CONTROL BOX
TCE	TEMPORARY CONSTRUCTION EASEMENT
Tel	TELEPHONE
Temp	TEMPORARY
TG	TOP OF GRADE
Tot	TOTAL
TP	TELEPHONE POLE
TPB	TREATED PERMEABLE BASE
TPM	TREATED PERMEABLE MATERIAL
Trans	TRANSITION

T continued

TS	TRANSVERSE, TRAFFIC SIGNAL, TUBULAR STEEL
Typ	TYPICAL

U

UC	UNDERCROSSING
UD	UNDERDRAIN
UG	UNDERGROUND
UON	UNLESS OTHERWISE NOTED
UP	UNDERPASS

V

V	VALVE, DESIGN SPEED
Var	VARIABLE, VARIES
VC	VERTICAL CURVE
VCP	VITRIFIED CLAY PIPE
Vert	VERTICAL
Via	VIADUCT
Vol	VOLUME

W

W	WEST, WIDTH
WB	WESTBOUND
WH	WEEP HOLE
WM	WIRE MESH
WS	WATER SURFACE
WSP	WELDED STEEL PIPE
Wt	WEIGHT
WV	WATER VALVE
WW	WINGWALL
WWLOL	WINGWALL LAYOUT LINE

X

X Sec	CROSS SECTION
Xing	CROSSING

Y

Yr	YEAR
Yrs	YEARS

Dist	COUNTY	ROUTE	POST MILES TOTAL PROJECT	SHEET No.	TOTAL SHEETS
06	Fre	5	48.8/53.0	82	117

Grace M. Tsushima
REGISTERED CIVIL ENGINEER

July 19, 2013
PLANS APPROVAL DATE

REGISTERED PROFESSIONAL ENGINEER
Grace M. Tsushima
No. C49814
Exp. 9-30-14
CIVIL
STATE OF CALIFORNIA

THE STATE OF CALIFORNIA OR ITS OFFICERS OR AGENTS SHALL NOT BE RESPONSIBLE FOR THE ACCURACY OR COMPLETENESS OF SCANNED COPIES OF THIS PLAN SHEET.

TO ACCOMPANY PLANS DATED 6-23-14

2010 REVISED STANDARD PLAN RSP A10B

UNIT OF MEASUREMENT SYMBOLS:

Some of the symbols used in the project plan quantity tables and in the Bid Item List are:

TABLE A

SYMBOL USED	DEFINITIONS
ACRE	ACRE
CF	CUBIC FOOT
CY	CUBIC YARD
EA	EACH
GAL	GALLON
LB	POUND
LF	LINEAR FOOT
SQFT	SQUARE FOOT
SQYD	SQUARE YARD
STA	100 FEET
TAB	TABLET
TON	2,000 POUNDS

Some of the symbols used in the plans other than in the project plan quantity tables are:

TABLE B

SYMBOL USED	DEFINITIONS
ksi	KIPS PER SQUARE INCH
ksf	KIPS PER SQUARE FOOT
psi	POUNDS PER SQUARE INCH
psf	POUNDS PER SQUARE FOOT
lb/ft^3, pcf	POUNDS PER CUBIC FOOT
tsf	TONS PER SQUARE FOOT
mph, MPH *	MILES PER HOUR
ø	NOMINAL DIAMETER
oz	OUNCE
lb	POUND
kip	1,000 POUNDS
cal	CALORIE
ft	FOOT OR FEET
gal	GALLON

* For use on a sign panel only

STATE OF CALIFORNIA
DEPARTMENT OF TRANSPORTATION

ABBREVIATIONS (SHEET 2 OF 2)

NO SCALE

RSP A10B DATED JULY 19, 2013 SUPERSEDES STANDARD PLAN A10B DATED MAY 20, 2011 - PAGE 2 OF THE STANDARD PLANS BOOK DATED 2010.

REVISED STANDARD PLAN RSP A10B

6-7-13

Dist	COUNTY	ROUTE	POST MILES TOTAL PROJECT	SHEET No.	TOTAL SHEETS
06	Fre	5	48.8/53.0	83	117

REGISTERED CIVIL ENGINEER

July 19, 2013
PLANS APPROVAL DATE

REGISTERED PROFESSIONAL ENGINEER Roberta L. McLaughlin No. C40375 Exp. 3-31-15 CIVIL STATE OF CALIFORNIA

THE STATE OF CALIFORNIA OR ITS OFFICERS OR AGENTS SHALL NOT BE RESPONSIBLE FOR THE ACCURACY OR COMPLETENESS OF SCANNED COPIES OF THIS PLAN SHEET.

TO ACCOMPANY PLANS DATED 6-23-14

EXIT RAMP NEUTRAL AREA (GORE) TREATMENT

DETAIL 36

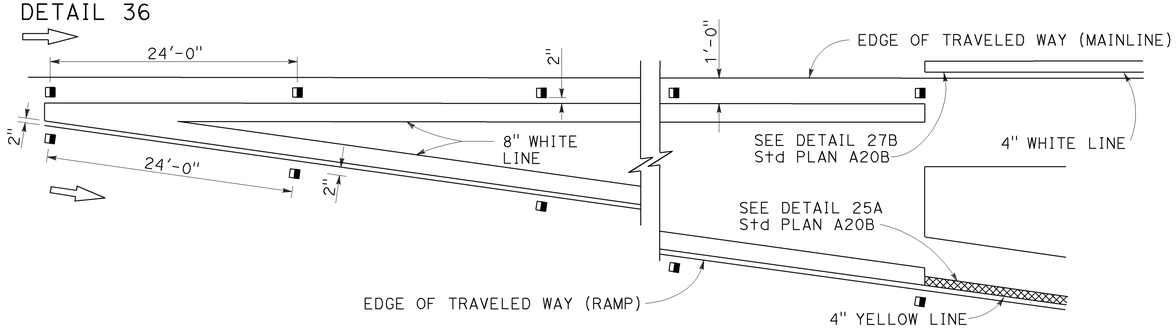

ENTRANCE RAMP NEUTRAL AREA (MERGE) TREATMENT

DETAIL 36A

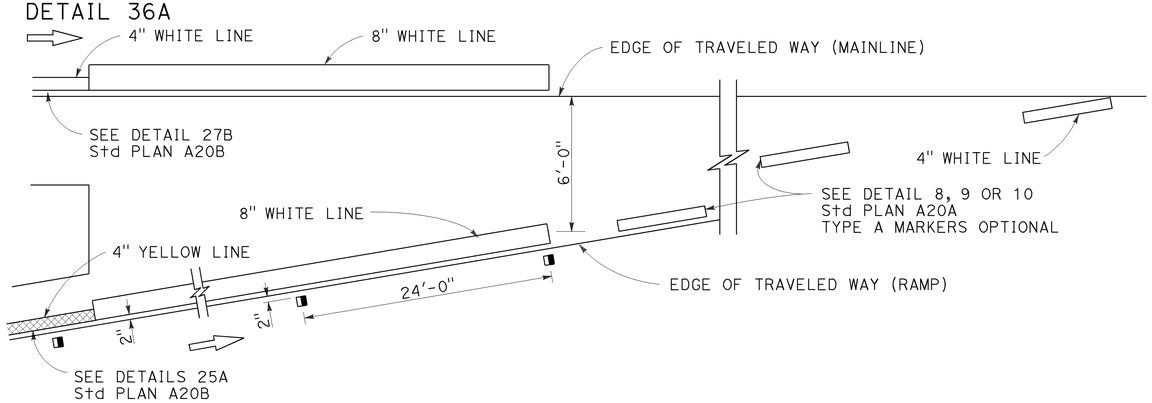

ENTRANCE RAMP NEUTRAL AREA (ACCELERATION LANE) TREATMENT

DETAIL 36B

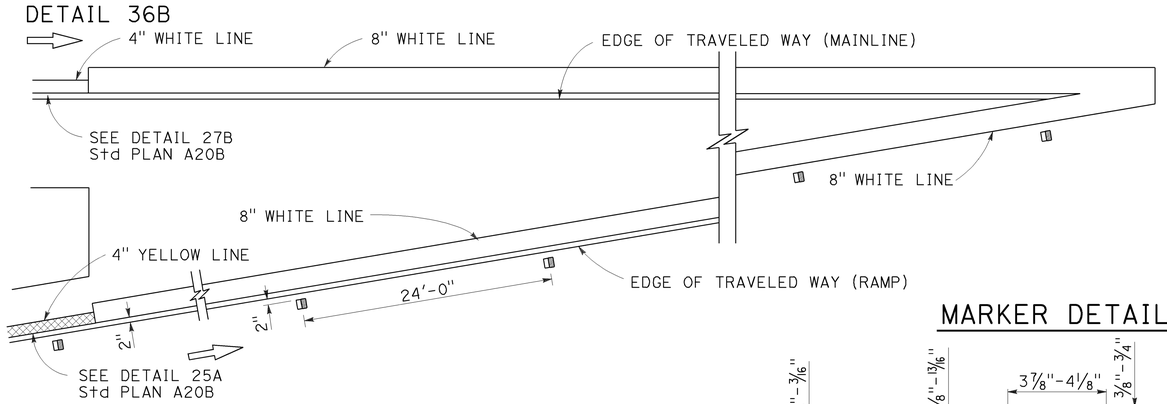

LANE DROP AT EXIT RAMPS

DETAIL 37

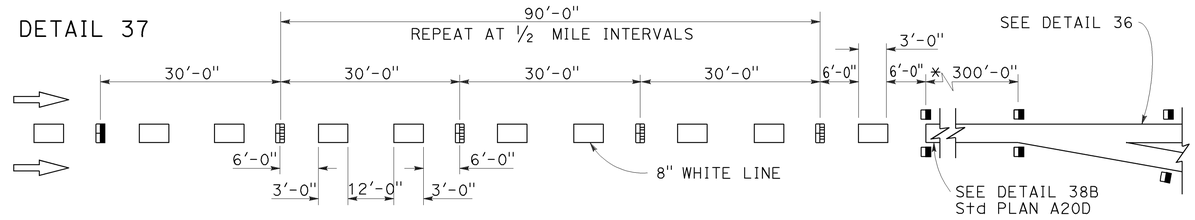

DETAIL 37A

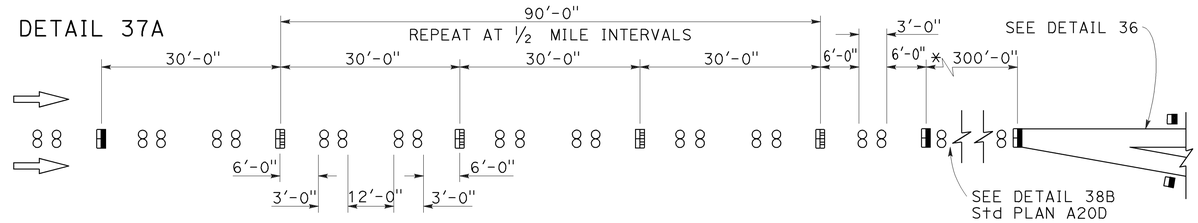

* The solid channelizing line shown may be omitted on short auxiliary lanes where weaving length is critical.

LANE DROP AT INTERSECTIONS

DETAIL 37B

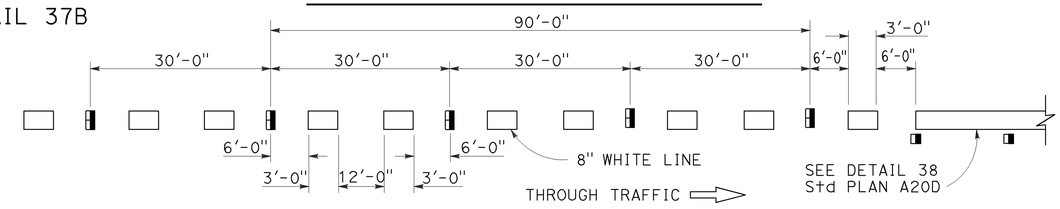

DETAIL 37C

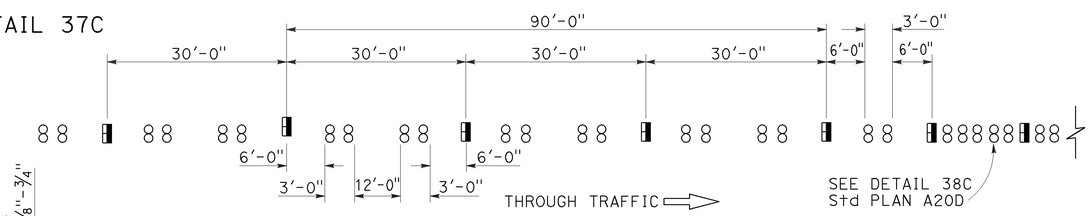

MARKER DETAILS

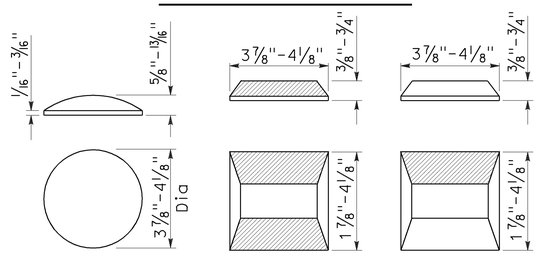

RETROREFLECTIVE FACE

LEGEND:

MARKERS

- TYPE A WHITE NON-REFLECTIVE
- TYPE C RED-CLEAR RETROREFLECTIVE
- TYPE G ONE-WAY CLEAR RETROREFLECTIVE

STATE OF CALIFORNIA
DEPARTMENT OF TRANSPORTATION

PAVEMENT MARKERS AND TRAFFIC LINE TYPICAL DETAILS

NO SCALE

RSP A20C DATED JULY 19, 2013 SUPERSEDES STANDARD PLAN A20C DATED MAY 20, 2011 - PAGE 11 OF THE STANDARD PLANS BOOK DATED 2010.

REVISED STANDARD PLAN RSP A20C

2010 REVISED STANDARD PLAN RSP A20C

4-29-13

Dist	COUNTY	ROUTE	POST MILES TOTAL PROJECT	SHEET No.	TOTAL SHEETS
06	Fre	5	48.8/53.0	84	117

REGISTERED CIVIL ENGINEER

April 20, 2012
PLANS APPROVAL DATE

REGISTERED PROFESSIONAL ENGINEER
Roberta L. McLaughlin
No. C40375
Exp. 3-31-13
CIVIL
STATE OF CALIFORNIA

THE STATE OF CALIFORNIA OR ITS OFFICERS OR AGENTS SHALL NOT BE RESPONSIBLE FOR THE ACCURACY OR COMPLETENESS OF SCANNED COPIES OF THIS PLAN SHEET.

TO ACCOMPANY PLANS DATED 6-23-14

2010 REVISED STANDARD PLAN RSP A24A

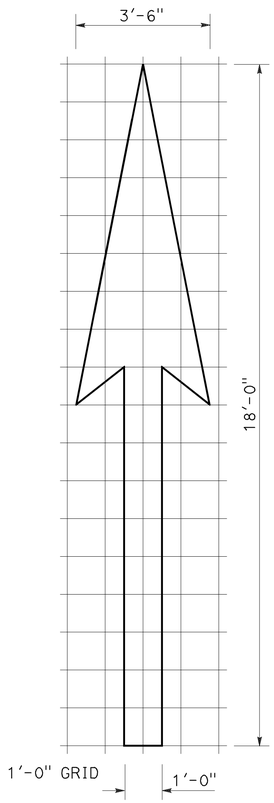

A=25 ft^2

TYPE I 18'-0" ARROW

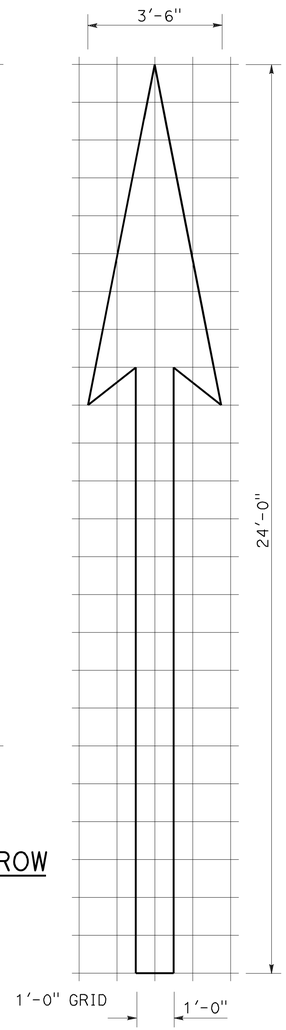

A=31 ft^2

TYPE I 24'-0" ARROW

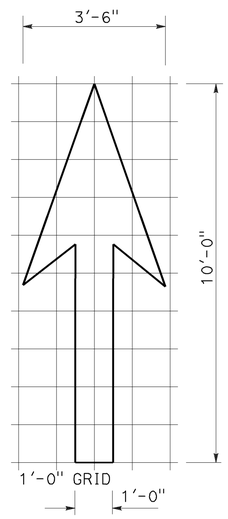

A=14 ft^2

TYPE I 10'-0" ARROW

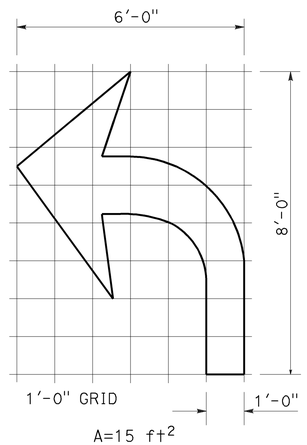

A=15 ft^2

TYPE IV (L) ARROW

(For Type IV (R) arrow, use mirror image)

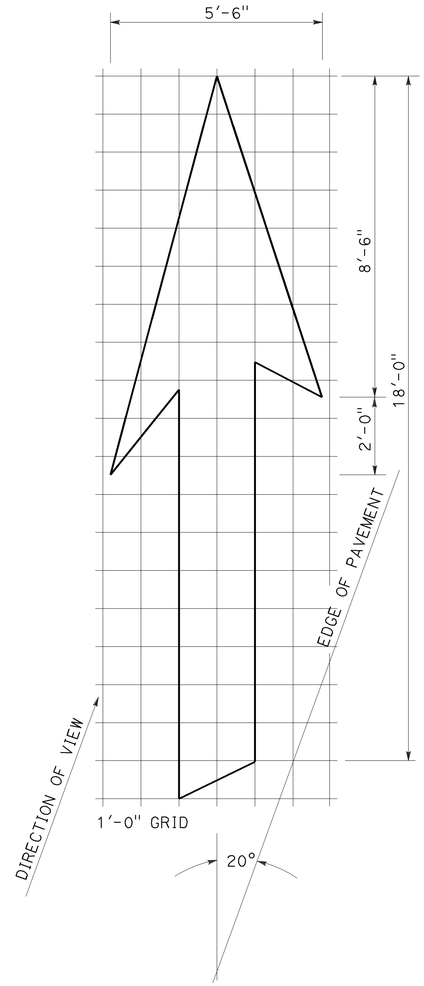

A=42 ft^2

TYPE VI ARROW

Right lane drop arrow
(For left lane, use mirror image)

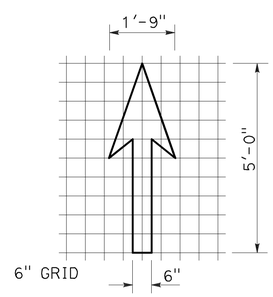

A=3.5 ft^2

BIKE LANE ARROW

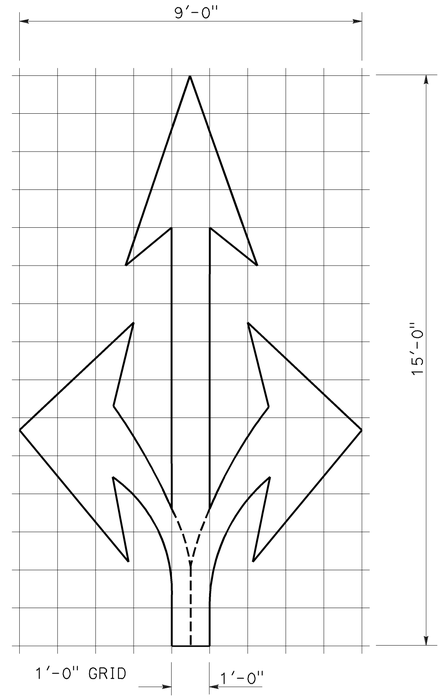

A=36 ft^2

TYPE VIII ARROW

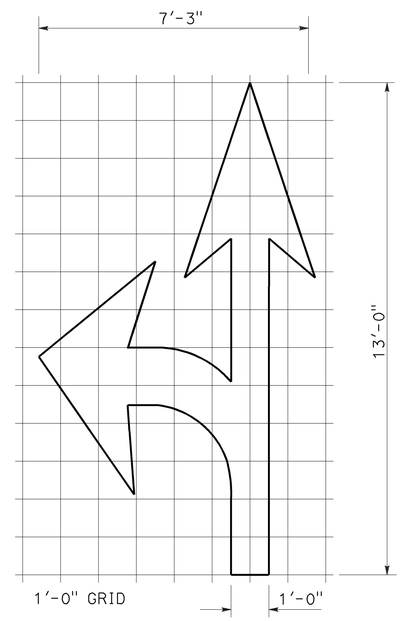

A=27 ft^2

TYPE VII (L) ARROW

(For Type VII (R) arrow, use mirror image)

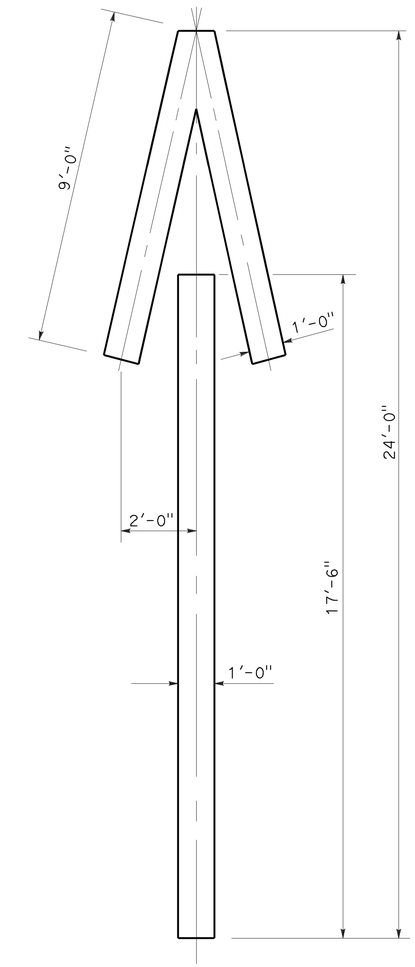

A=33 ft^2

TYPE V ARROW

NOTE:
Minor variations in dimensions may be accepted by the Engineer.

STATE OF CALIFORNIA
DEPARTMENT OF TRANSPORTATION

PAVEMENT MARKINGS ARROWS

NO SCALE

RSP A24A DATED APRIL 20, 2012 SUPERSEDES STANDARD PLAN A24A DATED MAY 20, 2011 - PAGE 13 OF THE STANDARD PLANS BOOK DATED 2010.

REVISED STANDARD PLAN RSP A24A

3-14-12

Dist	COUNTY	ROUTE	POST MILES TOTAL PROJECT	SHEET No.	TOTAL SHEETS
06	Fre	5	48.8/53.0	85	117

REGISTERED CIVIL ENGINEER

July 20, 2012
PLANS APPROVAL DATE

REGISTERED PROFESSIONAL ENGINEER
Roberta L. McLaughlin
No. C40375
Exp. 3-31-13
CIVIL
STATE OF CALIFORNIA

THE STATE OF CALIFORNIA OR ITS OFFICERS OR AGENTS SHALL NOT BE RESPONSIBLE FOR THE ACCURACY OR COMPLETENESS OF SCANNED COPIES OF THIS PLAN SHEET.

TO ACCOMPANY PLANS DATED 6-23-14

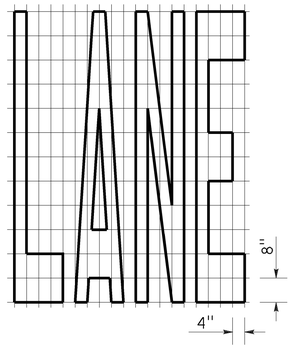

A=24 ft²

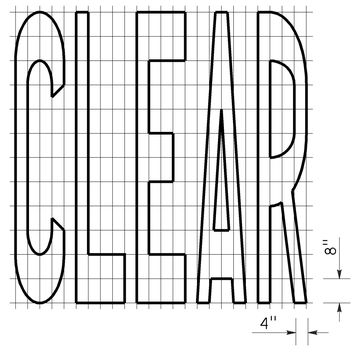

A=27 ft²

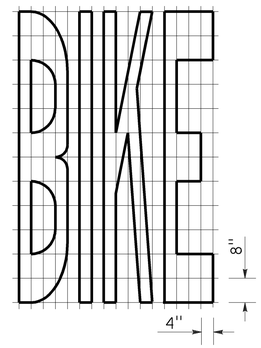

A=21 ft²

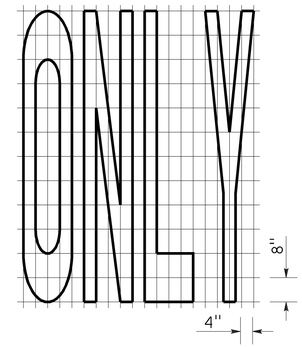

A=22 ft²

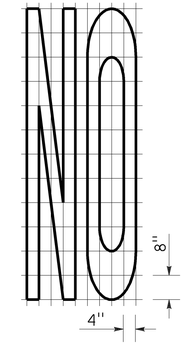

A=14 ft²

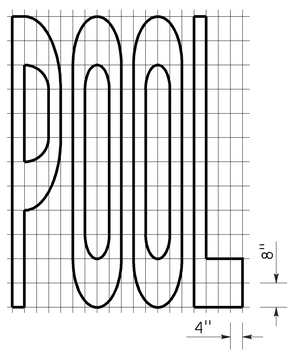

A=23 ft²

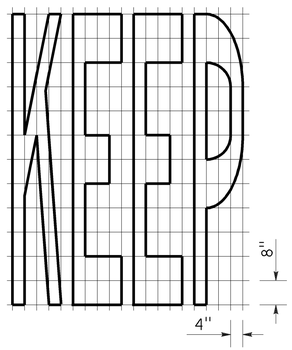

A=24 ft²

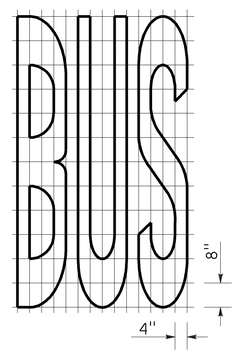

A=20 ft²

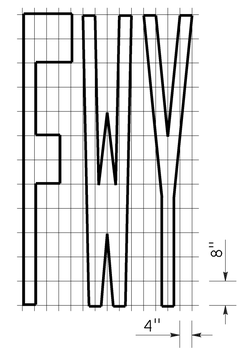

A=16 ft²

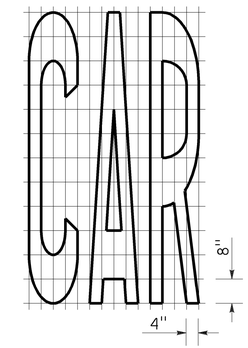

A=17 ft²

WORD MARKINGS			
ITEM	ft²	ITEM	ft²
LANE	24	NO	14
POOL	23	BIKE	21
CAR	17	BUS	20
CLEAR	27	ONLY	22
KEEP	24	FWY	16

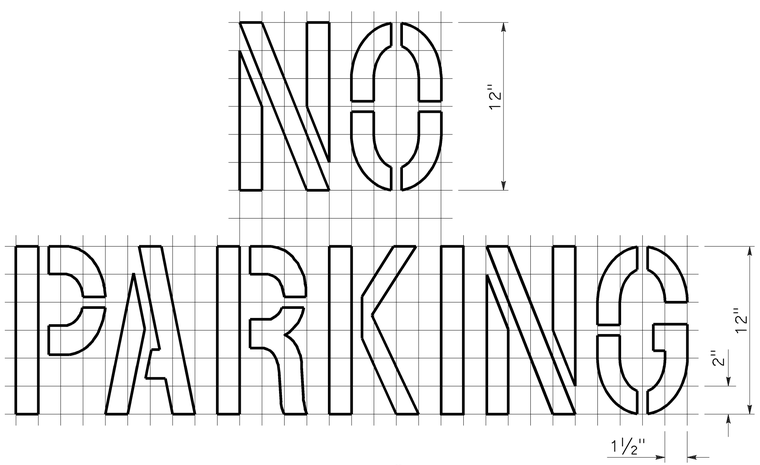

A=2 ft²
See Notes 6 and 7

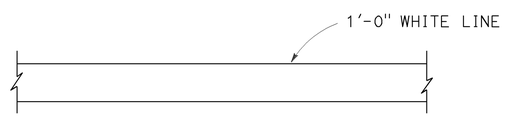

LIMIT LINE (STOP LINE)

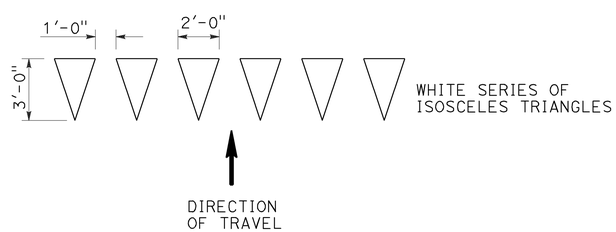

YIELD LINE

NOTES:

1. If a message consists of more than one word, it should read "UP", i.e., the first word should be nearest the driver.
2. The space between words should be at least four times the height of the characters for low speed roads, but not more than ten times the height of the characters. The space may be reduced appropriately where there is limited space because of local conditions.
3. Minor variations in dimensions may be accepted by the Engineer.
4. Portions of a letter, number or symbol may be separated by connecting segments not to exceed 2" in width.
5. The words "NO PARKING" pavement marking is to be used for parking facilities. For typical locations of markings, see Standard Plans A90A and A90B.
6. The words "NO PARKING", shall be painted in white letters no less than 1'-0" high on a contrasting background and located so that it is visible to traffic enforcement officials.

STATE OF CALIFORNIA
DEPARTMENT OF TRANSPORTATION

PAVEMENT MARKINGS WORDS, LIMIT AND YIELD LINES

NO SCALE

RSP A24E DATED JULY 20, 2012 SUPERSEDES STANDARD PLAN A24E
DATED MAY 20, 2011 - PAGE 17 OF THE STANDARD PLANS BOOK DATED 2010.

REVISED STANDARD PLAN RSP A24E

2010 REVISED STANDARD PLAN RSP A24E

6-12-12

Dist	COUNTY	ROUTE	POST MILES TOTAL PROJECT	SHEET No.	TOTAL SHEETS
06	Fre	5	48.8/53.0	86	117

Randell D. Hiatt
REGISTERED CIVIL ENGINEER

July 19, 2013
PLANS APPROVAL DATE

REGISTERED PROFESSIONAL ENGINEER
Randell D. Hiatt
No. C50200
Exp. 6-30-15
CIVIL
STATE OF CALIFORNIA

THE STATE OF CALIFORNIA OR ITS OFFICERS OR AGENTS SHALL NOT BE RESPONSIBLE FOR THE ACCURACY OR COMPLETENESS OF SCANNED COPIES OF THIS PLAN SHEET.

TO ACCOMPANY PLANS DATED 6-23-14

2010 REVISED STANDARD PLAN RSP A77L2

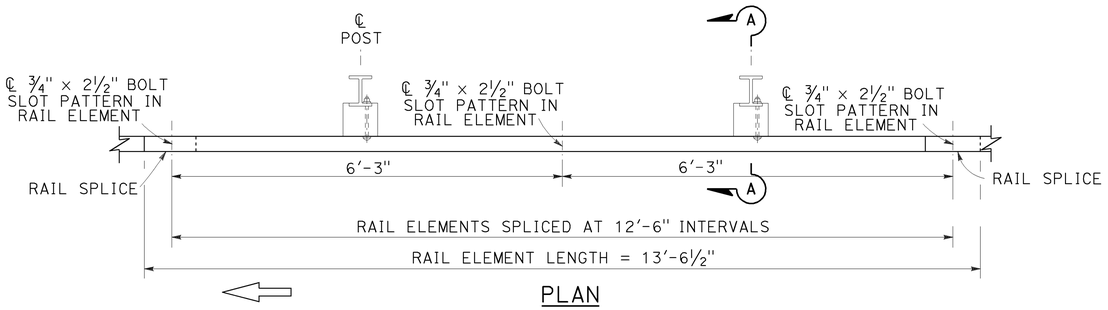

PLAN

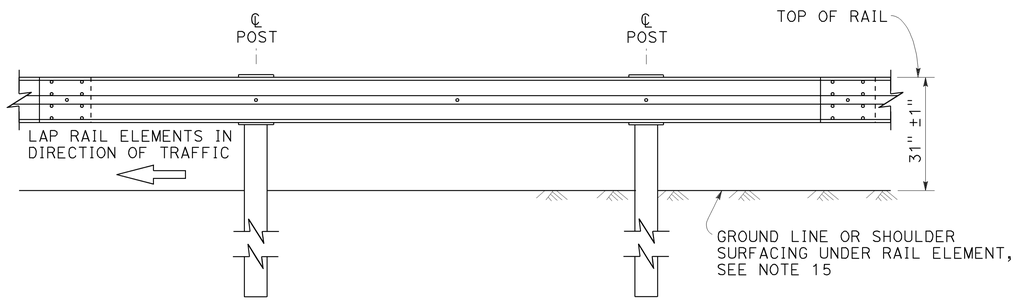

ELEVATION

MIDWEST GUARDRAIL SYSTEM WITH STEEL POSTS AND NOTCHED WOOD OR NOTCHED RECYCLED PLASTIC BLOCKS

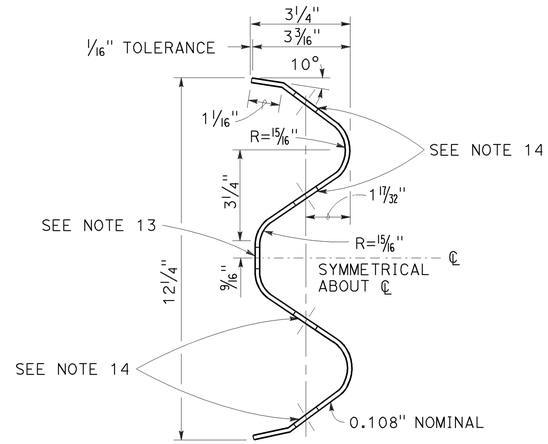

SECTION THRU RAIL ELEMENT

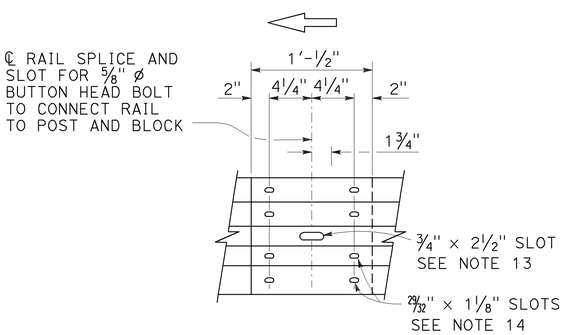

ELEVATION

RAIL ELEMENT SPLICE DETAIL

a) Connect the over lapped end of the rail elements with ⅝" ø × 1⅜" button head oval shoulder splice bolts inserted into the 29⁄32" × 1⅛" slots and bolted together with ⅝" ø recessed hex nuts. Recess of hex nut points toward rail element. A total of 8 bolts and nuts are to be used at each rail splice connection.

b) The ends of the rail elements are to be overlapped in the direction of traffic (see details).

c) Where end cap is to be attached to the end of a rail element, a total of 4 of the above described splice bolts and nuts are to be used.

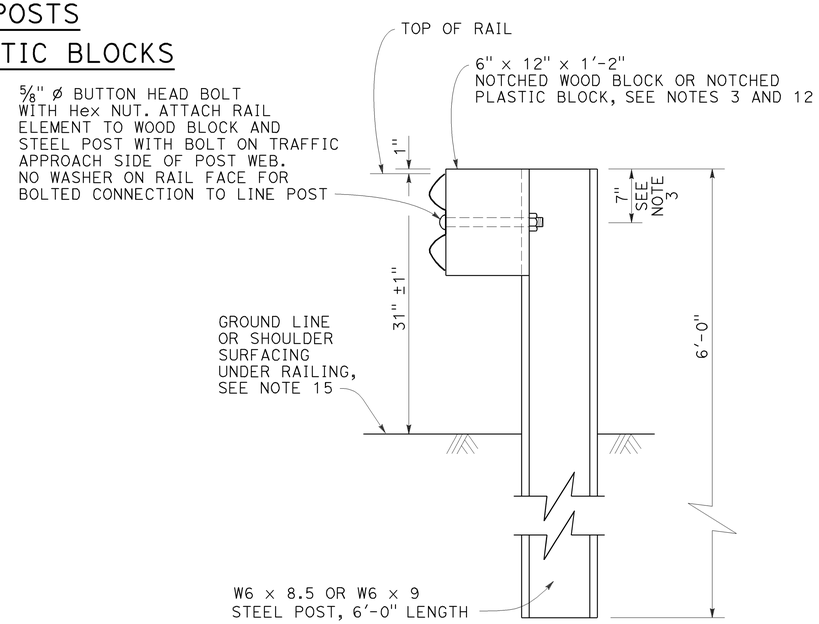

SECTION A-A

TYPICAL STEEL LINE POST INSTALLATION

See Note 4

NOTES:

1. For details of wood post installations, see Revised Standard Plan RSP A77L1.
2. For details of standard hardware used to construct MGS, see Revised Standard Plan RSP A77M1.
3. For details of steel posts and notched wood blocks used to construct MGS, see Revised Standard Plan RSP A77N2.
4. For additional installation details, see Revised Standard Plan RSP A77N3.
5. MGS post spacing to be 6'-3" center to center, except as otherwise noted.
6. For MGS typical layouts, see the A77P, A77Q and A77R Series of Standard Plans.
7. If railing is connected to terminal system end treatment, use 31" height terminal system end treatment.
8. For MGS end anchor details, see Revised Standard Plans RSP A77S1 and RSP A77T2.
9. For details of MGS transition to bridge railing, see Revised Standard Plan RSP A77U4.
10. For additional details of MGS connection to bridge railings, see Revised Standard Plans RSP A77U1, RSP A77U2 and RSP A77V1.
11. For dike positioning and MGS delineation details, see Revised Standard Plan RSP A77N4.
12. Notched face of block faces steel post.
13. Slotted hole for bolted connection of rail element to block and post. See "Section Thru Rail Element".
14. Slotted holes for splice bolts to overlap ends of rail element. See "Section Thru Rail Element".
15. Install posts in soil.

STATE OF CALIFORNIA
DEPARTMENT OF TRANSPORTATION

MIDWEST GUARDRAIL SYSTEM STANDARD RAILING SECTION (STEEL POST WITH NOTCHED WOOD OR NOTCHED RECYCLED PLASTIC BLOCK)

NO SCALE

RSP A77L2 DATED JULY 19, 2013 SUPPLEMENTS THE STANDARD PLANS BOOK DATED 2010.

REVISED STANDARD PLAN RSP A77L2

Dist	COUNTY	ROUTE	POST MILES TOTAL PROJECT	SHEET No.	TOTAL SHEETS
06	Fre	5	48.8/53.0	87	117

Randell D. Hiatt
REGISTERED CIVIL ENGINEER

July 19, 2013
PLANS APPROVAL DATE

REGISTERED PROFESSIONAL ENGINEER
Randell D. Hiatt
No. C50200
Exp. 6-30-15
CIVIL
STATE OF CALIFORNIA

THE STATE OF CALIFORNIA OR ITS OFFICERS OR AGENTS SHALL NOT BE RESPONSIBLE FOR THE ACCURACY OR COMPLETENESS OF SCANNED COPIES OF THIS PLAN SHEET.

TO ACCOMPANY PLANS DATED 6-23-14

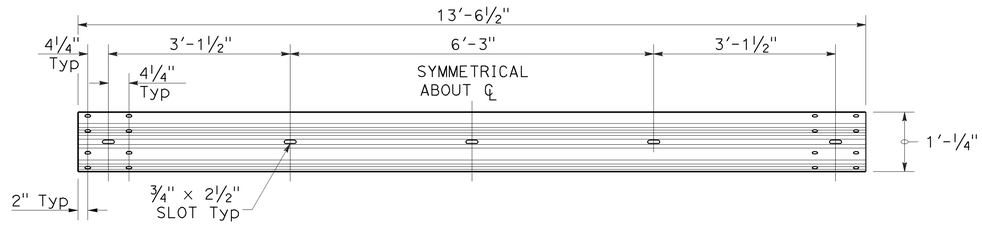

TYPICAL RAIL ELEMENT

NOTE:

1. Slotted holes for splice bolts to overlap ends of rail element.

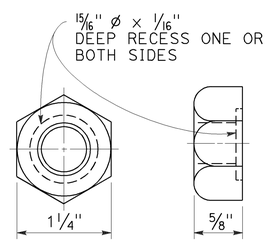

⅝" ø RECESS NUT

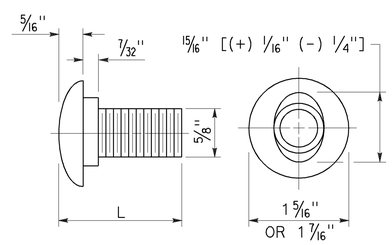

⅝" ø BUTTON HEAD BOLT

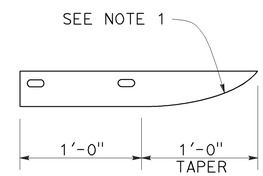

PLAN

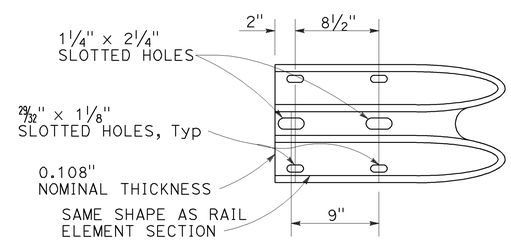

ELEVATION

END CAP
(TYPE A)

BUTTON HEAD BOLT

L	THREAD LENGTH
1⅜"	FULL THREAD LENGTH
2"	FULL THREAD LENGTH
10"	4" Min THREAD LENGTH
18"	4" Min THREAD LENGTH
20"	4" Min THREAD LENGTH
22"	4" Min THREAD LENGTH
26"	4" Min THREAD LENGTH
36"	4" Min THREAD LENGTH
** 2¾"	2" Min THREAD LENGTH
** 19"	4" Min THREAD LENGTH

** For nested rail applications.

STATE OF CALIFORNIA
DEPARTMENT OF TRANSPORTATION

MIDWEST GUARDRAIL SYSTEM STANDARD HARDWARE

NO SCALE

RSP A77M1 DATED JULY 19, 2013 SUPPLEMENTS THE STANDARD PLANS BOOK DATED 2010.

REVISED STANDARD PLAN RSP A77M1

2010 REVISED STANDARD PLAN RSP A77M1

7-3-13

Dist	COUNTY	ROUTE	POST MILES TOTAL PROJECT	SHEET No.	TOTAL SHEETS
06	Fre	5	48.8/53.0	88	117

Randell D. Hiatt
REGISTERED CIVIL ENGINEER

July 19, 2013
PLANS APPROVAL DATE

REGISTERED PROFESSIONAL ENGINEER
Randell D. Hiatt
No. C50200
Exp. 6-30-15
CIVIL
STATE OF CALIFORNIA

THE STATE OF CALIFORNIA OR ITS OFFICERS OR AGENTS SHALL NOT BE RESPONSIBLE FOR THE ACCURACY OR COMPLETENESS OF SCANNED COPIES OF THIS PLAN SHEET.

TO ACCOMPANY PLANS DATED 6-23-14

NOTES:

1. Line post, blocks and hardware to be used are shown on Revised Standard Plans RSP A77L1, RSP A77L2, RSP A77M1, RSP A77N1, and RSP A77N2.
2. MGS post spacing to be 6′-3″ center to center, except as otherwise noted.
3. Except as noted, line posts are 6″ x 8″ x 6′-0″ wood with 6″ x 12″ x 1′-2″ wood blocks. W6 x 8.5 or W6 x 9 steel posts, 6′-0″ in length, with 6″ x 12″ x 1′-2″ notched wood blocks or notched recycled plastic blocks may be used for 6″ x 8″ x 6′-0″ wood line posts with 6″ x 12″ x 1′-2″ wood blocks where applicable and when specified.
4. A 4′-0″ minimum clearance is required between the face of the railing and the face of a fixed object located directly behind MGS sections with post spacing of 6′-3″. Construct MGS as shown in the detail "Strengthened Midwest Guardrail System Sections for Fixed Object" on this plan, where the clearance between the face of the railing and the face of a fixed object is less than 4′-0″, but not less than 3′-0″. Where the clearance is less than 3′-0″, a concrete wall or barrier should be constructed to shield the fixed object(s).
5. For End Anchor Assembly (Type SFT) details, see Revised Standard Plan RSP A77S1.
6. For details of Rail Tensioning Assembly, see Revised Standard Plan RSP A77S2.
7. The type of crash cushion to be used will be shown on the Project Plans.
8. Type 14A layout is typically used on multilane freeways or expressways to shield fixed objects where a median type barrier is not constructed between the separated roadbeds.
9. For typical flare offsets for 25′-0″ length parabola with maximum offset of 1′-0″, see Revised Standard Plan RSP A77P1.
10. The 15:1 or flatter flare is measured off of the edge of traveled way.
11. W6 x 15 steel post, 8′-0″ in length, with 8″ x 12″ x 1′-2″ notched wood block or notched recycled plastic block may be used in place of the 10″ x 10″ x 8′-0″ wood post with 8″ x 12″ x 1′-2″ wood block shown in the detail "Strengthened Midwest Guardrail System Sections for Fixed Object".

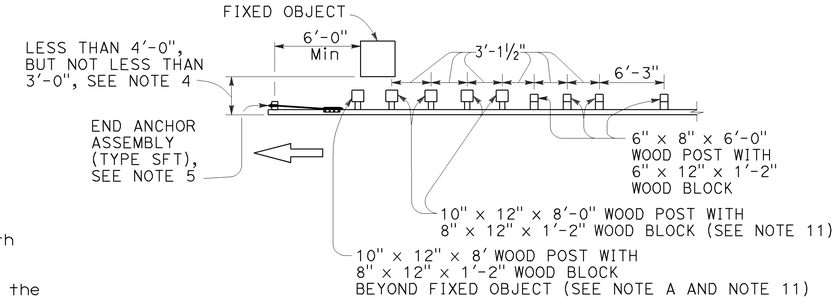

NOTE A: For a series of fixed objects (bridge columns, overhead sign supports, etc.) additional 10″ x 10″ x 8′-0″ wood post with 8″ x 12″ x 1′-2″ wood blocks at 3′-1½″ center to center spacing are to be used between fixed objects.

STRENGTHENED MIDWEST GUARDRAIL SYSTEM SECTIONS FOR FIXED OBJECT

Use strengthened MGS sections with Type 14A layout where minimum clearance between the face of the railing and fixed object(s) is less than 4′-0″, but not less than 3′-0″, See Note 4.

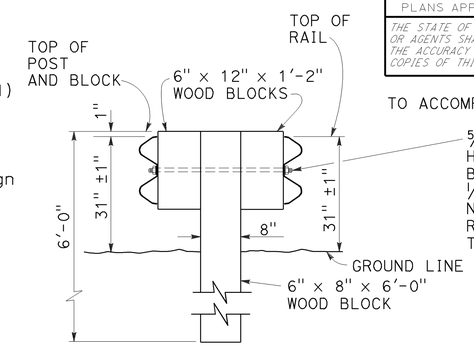

⅝″ ø BUTTON HEAD BOLT WITH Hex NUT OR ⅝″ ø ROD, THREADED BOTH ENDS, WITH Hex NUTS. ½″ Max EXPOSED THREADS AFTER Hex NUT(S) TIGHTENED. NO WASHER ON RAIL FACES FOR BOLTED CONNECTION TO LINE POST

SECTION A-A
TYPICAL DOUBLE MIDWEST GUARDRAIL SYSTEM

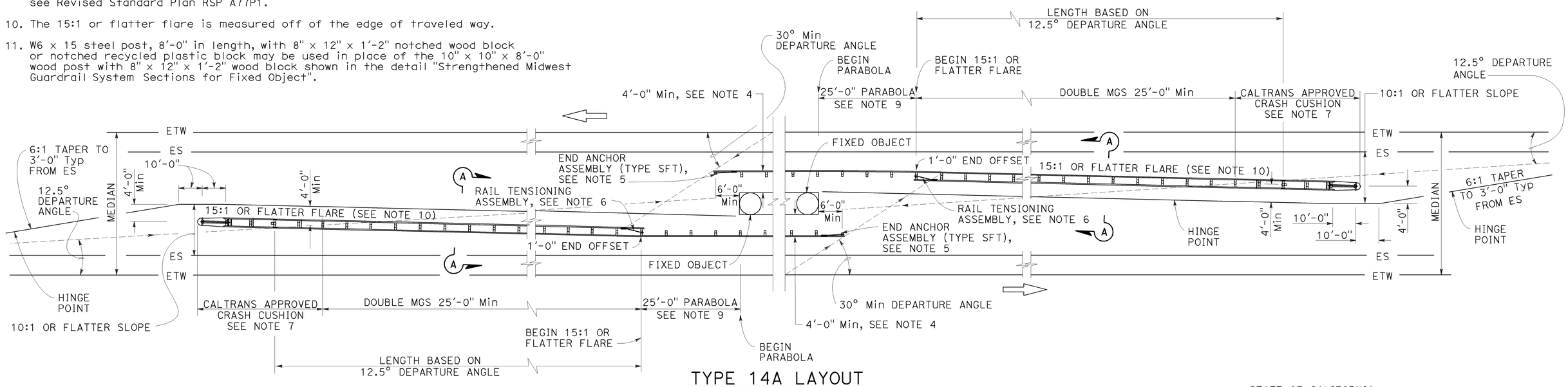

TYPE 14A LAYOUT

See Note 8

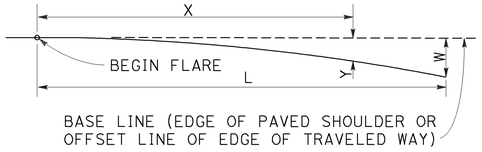

$$Y = \frac{WX^2}{L^2}$$

Y = OFFSET FROM BASE LINE
W = MAXIMUM OFFSET
X = DISTANCE ALONG BASE LINE
L = LENGTH OF FLARE

PARABOLIC FLARE OFFSETS

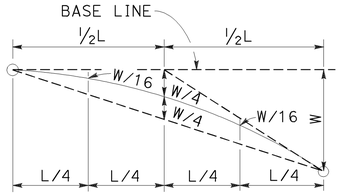

TYPICAL PARABOLIC LAYOUT

STATE OF CALIFORNIA
DEPARTMENT OF TRANSPORTATION

MIDWEST GUARDRAIL SYSTEM TYPICAL LAYOUTS FOR FIXED OBJECTS BETWEEN SEPARATE ROADBEDS (TWO-WAY TRAFFIC)

NO SCALE

RSP A77R1 DATED JULY 19, 2013 SUPPLEMENTS THE STANDARD PLANS BOOK DATED 2010.

REVISED STANDARD PLAN RSP A77R1

2010 REVISED STANDARD PLAN RSP A77R1

7-16-13

Dist	COUNTY	ROUTE	POST MILES TOTAL PROJECT	SHEET No.	TOTAL SHEETS
06	Fre	5	48.8/53.0	89	117

Randell D. Hiatt
REGISTERED CIVIL ENGINEER

July 19, 2013
PLANS APPROVAL DATE

REGISTERED PROFESSIONAL ENGINEER
Randell D. Hiatt
No. C50200
Exp. 6-30-15
CIVIL
STATE OF CALIFORNIA

THE STATE OF CALIFORNIA OR ITS OFFICERS OR AGENTS SHALL NOT BE RESPONSIBLE FOR THE ACCURACY OR COMPLETENESS OF SCANNED COPIES OF THIS PLAN SHEET.

TO ACCOMPANY PLANS DATED 6-23-14

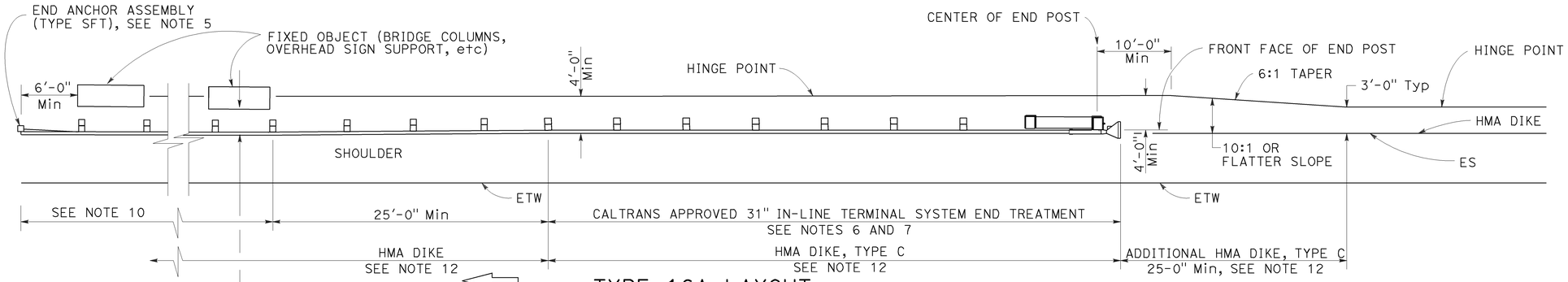

TYPE 16A LAYOUT

(MGS installation at roadside fixed object or objects with 31" in-line end treatment at traffic approach end of railing)
See Notes 11 and 12

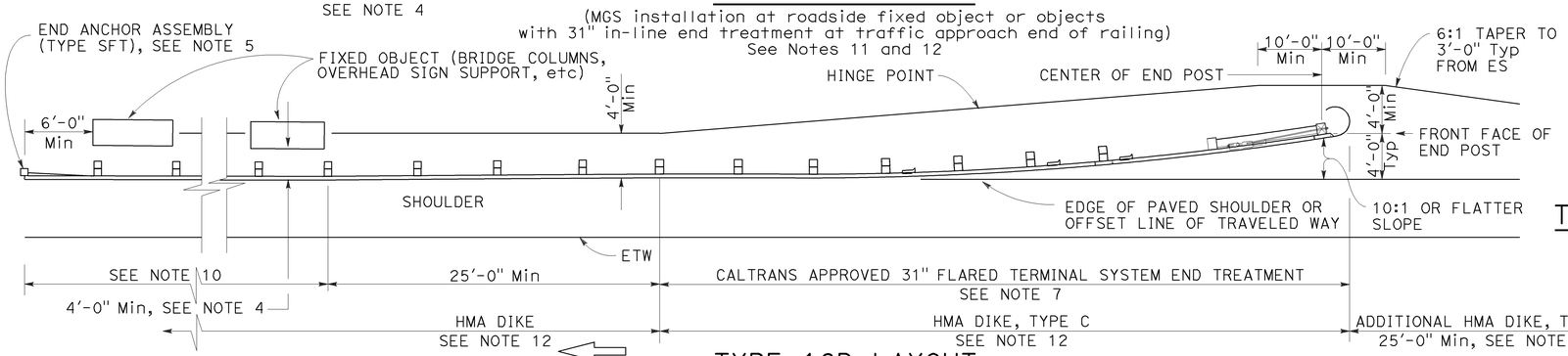

TYPE 16B LAYOUT

(MGS installation at roadside fixed object or objects with 31' flared end treatment at traffic approach end of railing)
See Notes 11 and 12

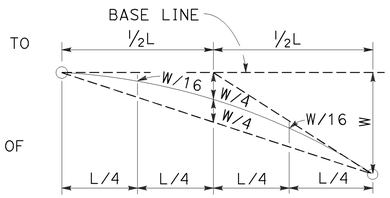

TYPIC AL PARABOLIC LAYOUT

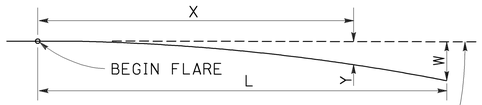

BASE LINE (EDGE OF PAVED SHOULDER OR OFFSET LINE OF EDGE OF TRAVELED WAY)

$$Y = \frac{WX^2}{L^2}$$

Y = OFFSET FROM BASE LINE
W = MAXIMUM OFFSET
X = DISTANCE ALONG BASE LINE
L = LENGTH OF FLARE

PARABOLIC FLARE OFFSETS

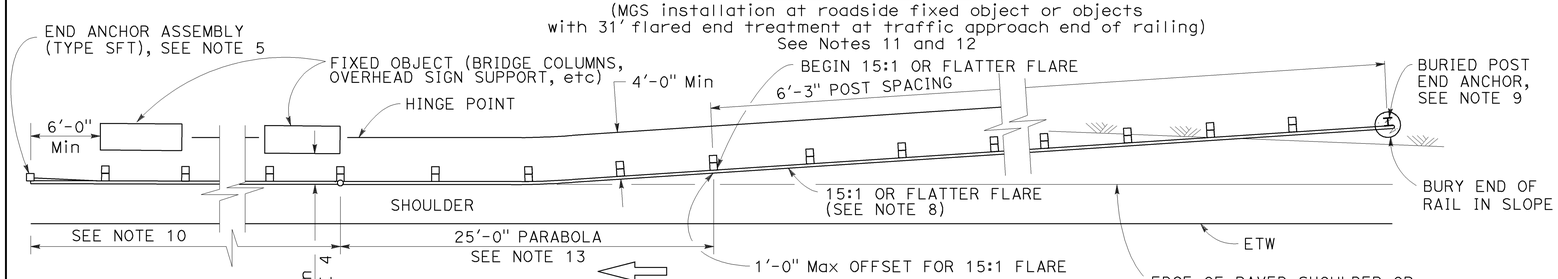

TYPE 16C LAYOUT

(MGS installation at roadside fixed object or objects with a buried end anchor treatment at traffic approach end of railing)
See Notes 11 and 12

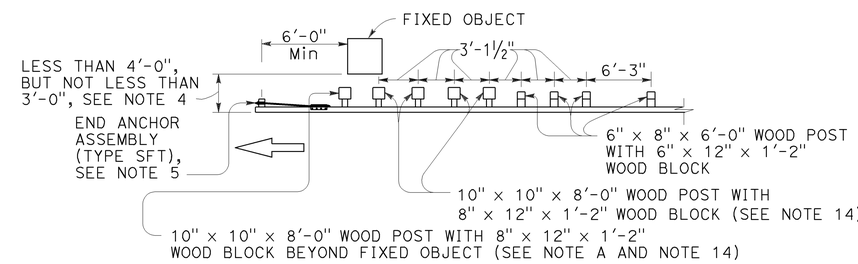

NOTE A: For a series of fixed objects (bridge columns, overhead sign supports, etc.) additional 10" x 10" x 8'-0" wood post with 8" x 12" x 1'-2" wood blocks at 3'-1½" center to center spacing are to be used between fixed objects.

STRENGTHENED MIDWEST GUARDRAIL SYSTEM SECTIONS FOR FIXED OBJECT

Use strengthened MGS sections with Types 16A, 16B or 16C layouts where minimum clearance between the face of the railing and fixed object(s) is less than 4'-0", but not less than 3'-0". See Note 4

NOTES:

1. Line post, blocks and hardware to be used are shown on Revised Standard Plans RSP A77L1, RSP A77L2, RSP A77M1, RSP A77N1 and RSP A77N2.
2. MGS post spacing to be 6'-3" center to center, except as otherwise noted.
3. Except as noted, line posts are 6" x 8" x 6'-0" wood with 6" x 12" x 1'-2" wood blocks. W6 x 8.5 or W6 x 9 steel posts, 6'-0" in length, with 6" x 12" x 1'-2" notched wood blocks or notched recycled plastic blocks may be used for 6" x 8" x 6'-0" wood line posts with 6" x 12" x 1'-2" wood blocks where applicable and when specified.
4. A 4'-0" minimum clearance is required between the face of the railing and the face of a fixed object located directly behind MGS sections with post spacing of 6'-3". Construct MGS as shown in the detail "Strengthened Midwest Guardrail System Sections for Fixed Object" on this plan, where the clearance between the face of the railing and the face of a fixed object is less than 4'-0", but not less than 3'-0". Where the clearance is less than 3'-0", a concrete wall or barrier should be constructed to shield the fixed object(s).
5. For End Anchor Assembly (Type SFT) details, see Revised Standard Plan RSP A77S1.
6. 31" in-line terminal system end treatments are used where site conditions will not accommodate a 31" flared end treatment.
7. The type of 31" terminal system to be used will be shown on the Project Plans.
8. The 15:1 or flatter flare used with Type 16C Layout is based on the edge of the paved shoulder or offset line of edge of the traveled way. The length of MGS within the 15:1 or flatter flare is based on site conditions and should be a length equal to multiples of 12'-6".
9. For details of the Buried Post End Anchor used with Type 16C Layout, see Revised Standard Plan RSP A77T2.
10. As site conditions dictate, construct additional MGS to shield fixed object(s). Additional MGS length equal to multiples of 12'-6". Post spacing at 6'-3" except as specified in Note 4.
11. Layout Types 16A, 16B or 16C are typically used where MGS is recommended to shield roadside fixed object(s) and a crashworthy 31" end treatment is required for only one direction of traffic.
12. Where placement of dike is required with MGS, see Revised Standard Plan RSP A77N4 for dike positioning details.
13. For typical flare offsets for 25'-0" length parabola with maximum offset of 1'-0", see Revised Standard Plan RSP A77P1.
14. W6 x 15 steel post, 8'-0" in length, with 8" x 12" x 1'-2" notched wood block or notched recycled plastic blocks may be used in place of the 10" x 10" x 8'-0" wood post with 8" x 12" x 1'-2" wood block shown in the detail "Strengthened Midwest Guardrail System Sections for Fixed Object".

STATE OF CALIFORNIA
DEPARTMENT OF TRANSPORTATION

MIDWEST GUARDRAIL SYSTEM TYPICAL LAYOUTS FOR ROADSIDE FIXED OBJECTS

NO SCALE

RSP A77R3 DATED JULY 19, 2013 SUPPLEMENTS THE STANDARD PLANS BOOK DATED 2010.

REVISED STANDARD PLAN RSP A77R3

2010 REVISED STANDARD PLAN RSP A77R3

6-20-13

Dist	COUNTY	ROUTE	POST MILES TOTAL PROJECT	SHEET No.	TOTAL SHEETS
06	Fre	5	48.8/53.0	90	117

Randell D. Hiatt
REGISTERED CIVIL ENGINEER

November 15, 2013
PLANS APPROVAL DATE

REGISTERED PROFESSIONAL ENGINEER
Randell D. Hiatt
No. C50200
Exp. 6-30-15
CIVIL
STATE OF CALIFORNIA

THE STATE OF CALIFORNIA OR ITS OFFICERS OR AGENTS SHALL NOT BE RESPONSIBLE FOR THE ACCURACY OR COMPLETENESS OF SCANNED COPIES OF THIS PLAN SHEET.

TO ACCOMPANY PLANS DATED 6-23-14

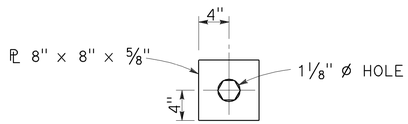

DETAIL "A"
CABLE CONNECTION
END PLATE

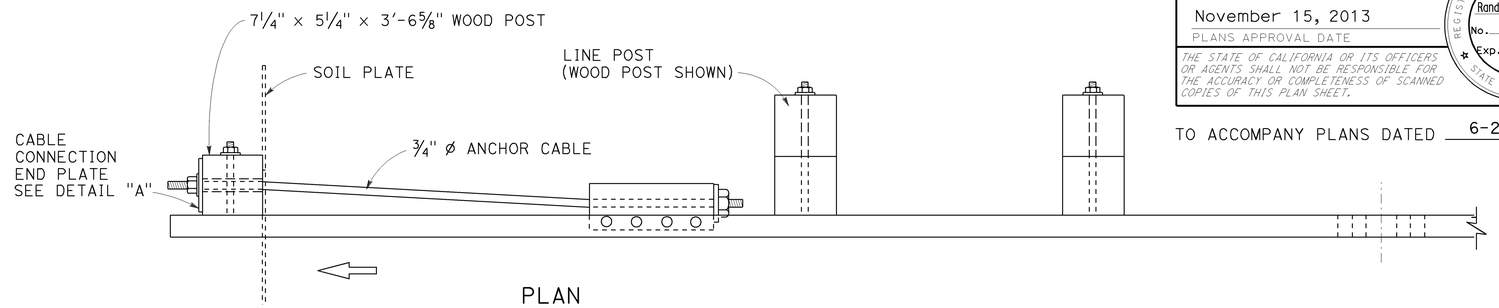

PLAN

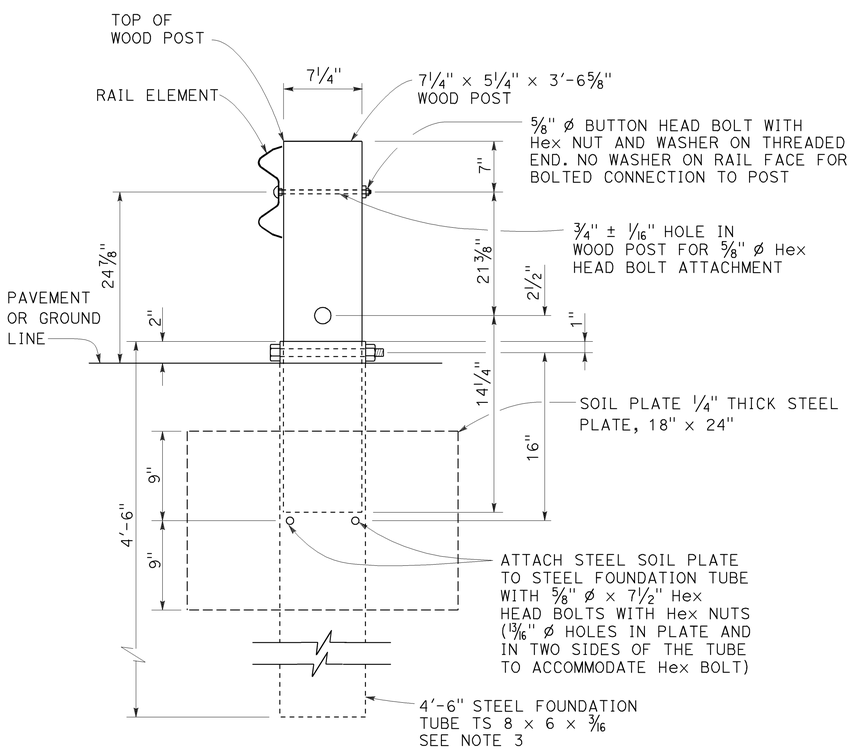

SECTION A-A

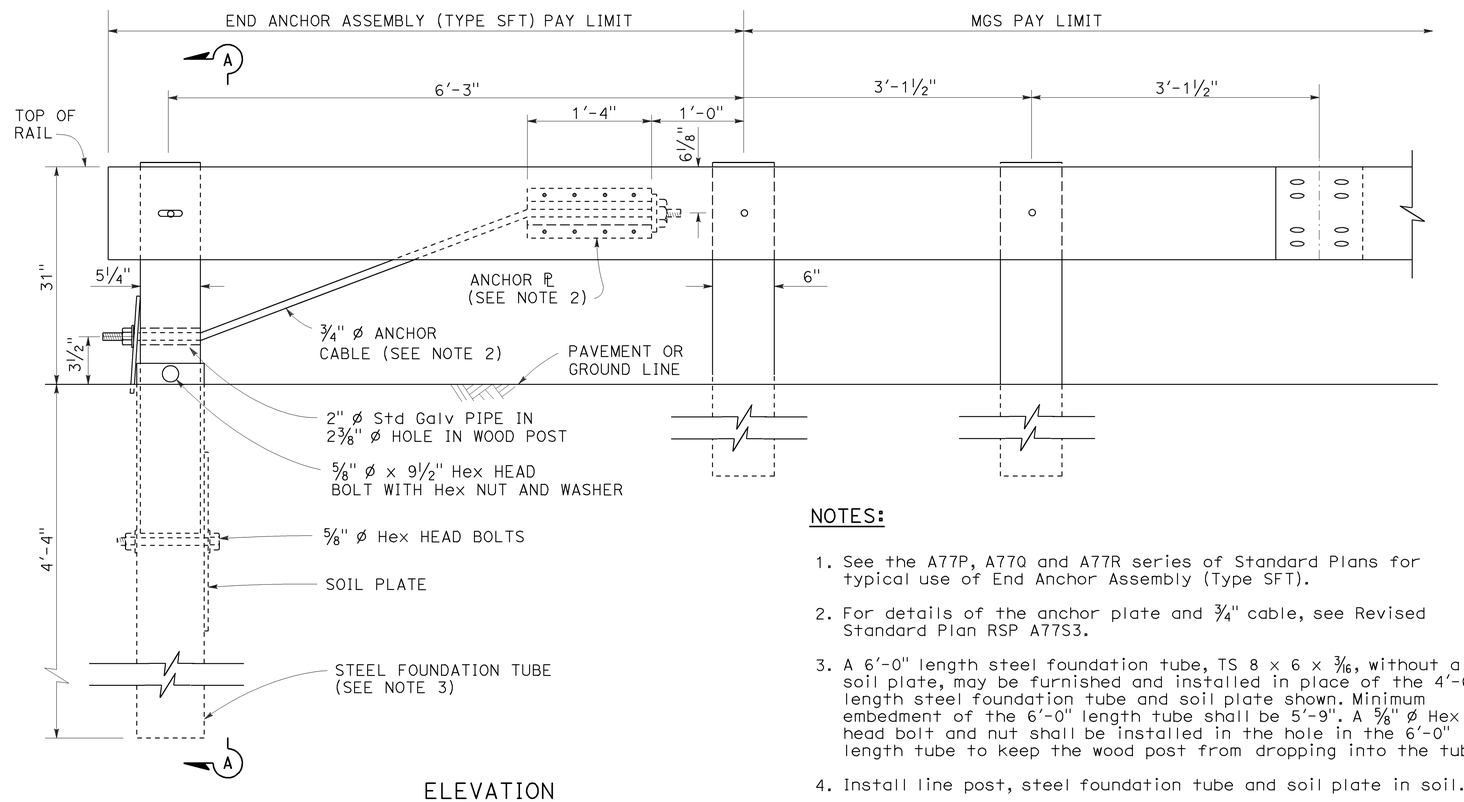

ELEVATION

END ANCHOR
ASSEMBLY (TYPE SFT)
See Note 1

NOTES:

1. See the A77P, A77Q and A77R series of Standard Plans for typical use of End Anchor Assembly (Type SFT).
2. For details of the anchor plate and 3/4" cable, see Revised Standard Plan RSP A77S3.
3. A 6'-0" length steel foundation tube, TS 8 x 6 x 3/16, without a soil plate, may be furnished and installed in place of the 4'-6" length steel foundation tube and soil plate shown. Minimum embedment of the 6'-0" length tube shall be 5'-9". A 5/8" ø Hex head bolt and nut shall be installed in the hole in the 6'-0" length tube to keep the wood post from dropping into the tube.
4. Install line post, steel foundation tube and soil plate in soil.

STATE OF CALIFORNIA
DEPARTMENT OF TRANSPORTATION

MIDWEST GUARDRAIL SYSTEM END ANCHOR ASSEMBLY (TYPE SFT)

NO SCALE

RSP A77S1 DATED NOVEMBER 15, 2013 SUPERSEDES RSP A77S1
DATED JULY 19, 2013 THAT SUPPLEMENTS THE STANDARD PLANS BOOK DATED 2010.

REVISED STANDARD PLAN RSP A77S1

2010 REVISED STANDARD PLAN RSP A77S1

10-4-13

Dist	COUNTY	ROUTE	POST MILES TOTAL PROJECT	SHEET No.	TOTAL SHEETS
06	Fre	5	48.8/53.0	91	117

Randell D. Hiatt
REGISTERED CIVIL ENGINEER

July 19, 2013
PLANS APPROVAL DATE

REGISTERED PROFESSIONAL ENGINEER
Randell D. Hiatt
No. C50200
Exp. 6-30-15
CIVIL
STATE OF CALIFORNIA

THE STATE OF CALIFORNIA OR ITS OFFICERS OR AGENTS SHALL NOT BE RESPONSIBLE FOR THE ACCURACY OR COMPLETENESS OF SCANNED COPIES OF THIS PLAN SHEET.

TO ACCOMPANY PLANS DATED 6-23-14

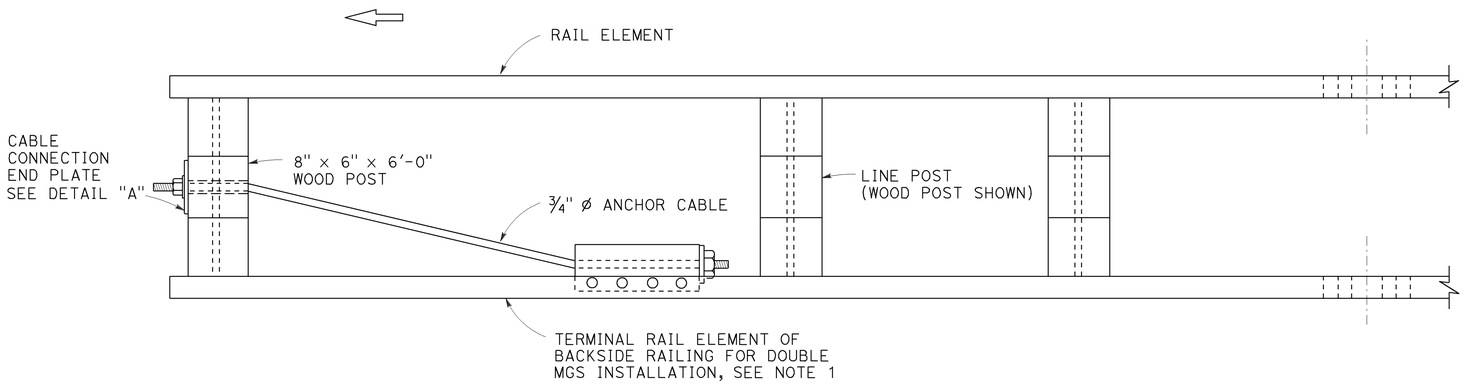

PLAN

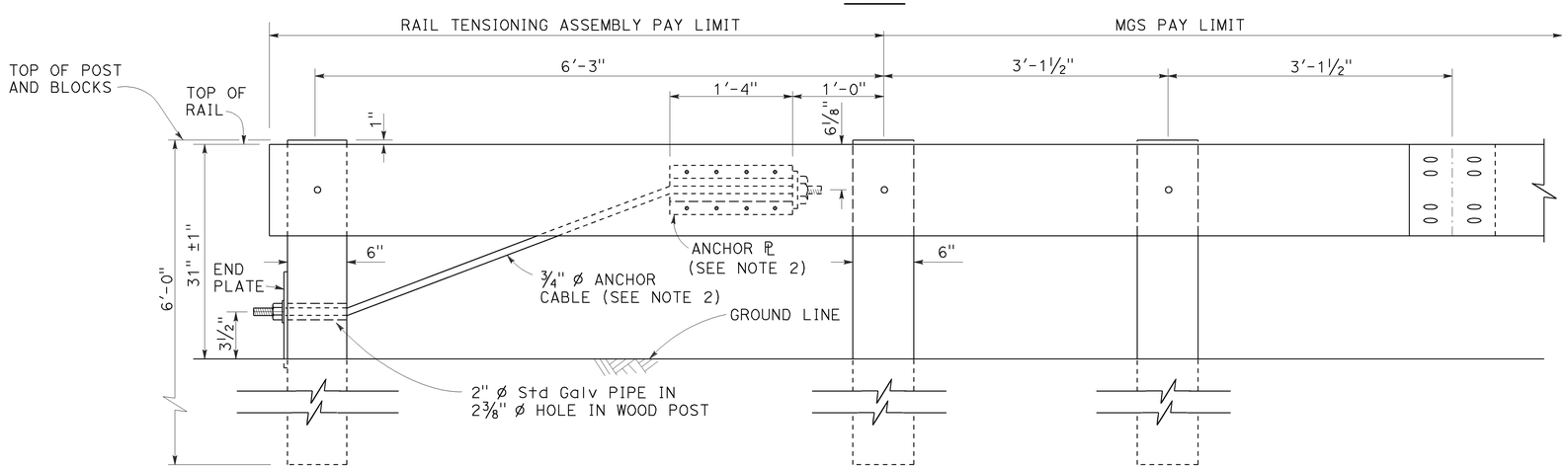

ELEVATION
RAIL TENSIONING ASSEMBLY
See Note 1

NOTES:

1. See Revised Standard Plans RSP A77Q3 and RSP A77R1 for typical use of rail tensioning assembly.
2. For details of the anchor plate and ¾" cable, see Revised Standard Plan RSP A77S3.

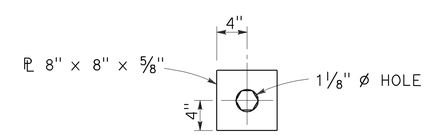

DETAIL "A"
CABLE CONNECTION END PLATE

STATE OF CALIFORNIA
DEPARTMENT OF TRANSPORTATION

MIDWEST GUARDRAIL SYSTEM
RAIL TENSIONING ASSEMBLY

NO SCALE

RSP A77S2 DATED JULY 19, 2013 SUPPLEMENTS THE STANDARD PLANS BOOK DATED 2010.

REVISED STANDARD PLAN RSP A77S2

2010 REVISED STANDARD PLAN RSP A77S2

7-3-13

Dist	COUNTY	ROUTE	POST MILES TOTAL PROJECT	SHEET No.	TOTAL SHEETS
06	Fre	5	48.8/53.0	92	117

Randell D. Hiatt
REGISTERED CIVIL ENGINEER

November 15, 2013
PLANS APPROVAL DATE

REGISTERED PROFESSIONAL ENGINEER
Randell D. Hiatt
No. C50200
Exp. 6-30-15
CIVIL
STATE OF CALIFORNIA

THE STATE OF CALIFORNIA OR ITS OFFICERS OR AGENTS SHALL NOT BE RESPONSIBLE FOR THE ACCURACY OR COMPLETENESS OF SCANNED COPIES OF THIS PLAN SHEET.

TO ACCOMPANY PLANS DATED 6-23-14

NOTE:

See Revised Standard Plans RSP A77S1, RSP A77S2 and RSP A77T1 for typical use of anchor cable and anchor plate.

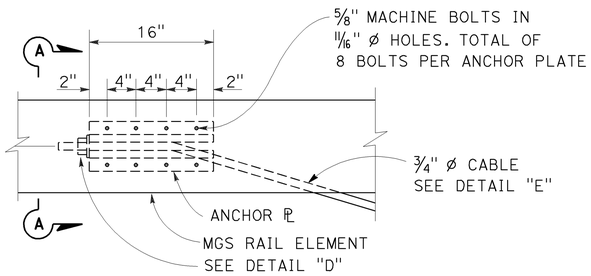

ANCHOR PLATE DETAIL

(MGS shown, TBB similar)

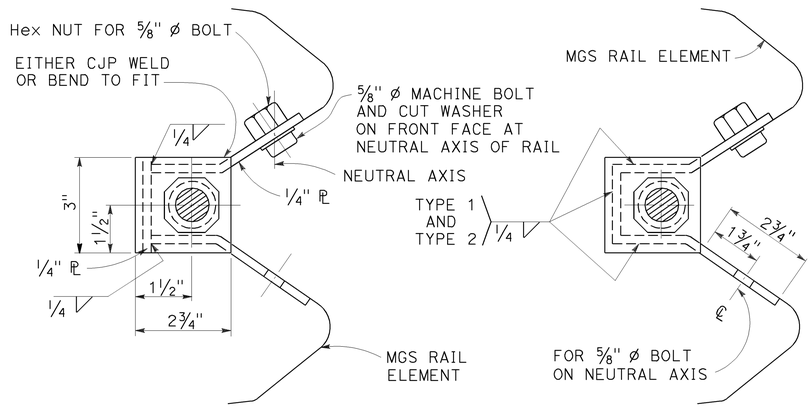

NOTE:

Dimensioning applies to both types.

SECTION A-A
(ALTERNATIVE TYPE 1)

SECTION A-A
(ALTERNATIVE TYPE 2)

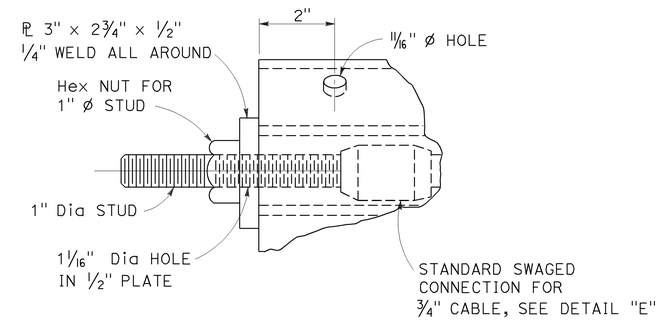

DETAIL "D"

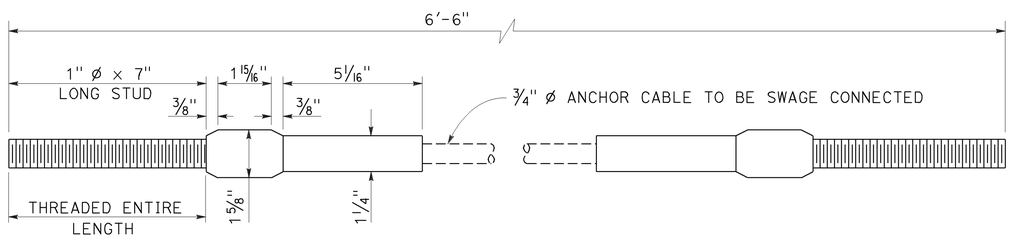

ANCHOR CABLE WITH SWAGED FITTING AND STUD

DETAIL "E"

STATE OF CALIFORNIA
DEPARTMENT OF TRANSPORTATION

METAL RAILING ANCHOR CABLE AND ANCHOR PLATE DETAILS

NO SCALE

RSP A77S3 DATED NOVEMBER 15, 2013 SUPERSEDES RSP A77S3 DATED JULY 19, 2013 THAT SUPPLEMENTS THE STANDARD PLANS BOOK DATED 2010.

REVISED STANDARD PLAN RSP A77S3

2010 REVISED STANDARD PLAN RSP A77S3

10-4-13

Dist	COUNTY	ROUTE	POST MILES TOTAL PROJECT	SHEET No.	TOTAL SHEETS
06	Fre	5	48.8/53.0	93	117

REGISTERED CIVIL ENGINEER

July 19, 2013
PLANS APPROVAL DATE

REGISTERED PROFESSIONAL ENGINEER
Michael Janzen
No. 44788
Exp. 03-31-14
CIVIL
STATE OF CALIFORNIA

THE STATE OF CALIFORNIA OR ITS OFFICERS OR AGENTS SHALL NOT BE RESPONSIBLE FOR THE ACCURACY OR COMPLETENESS OF SCANNED COPIES OF THIS PLAN SHEET.

TO ACCOMPANY PLANS DATED 6-23-14

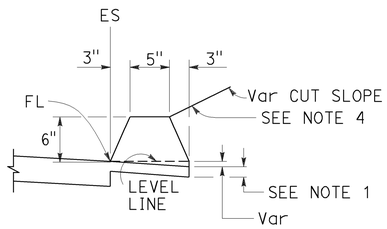

TYPE A
See Note 3

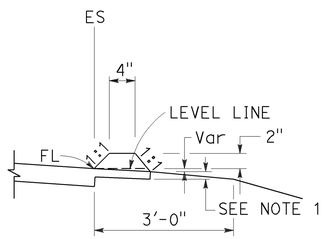

TYPE C

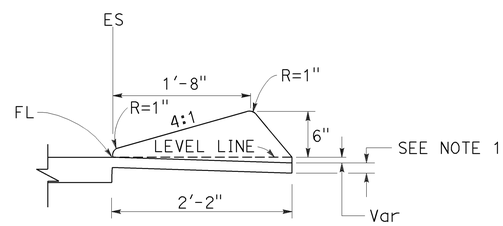

TYPE D

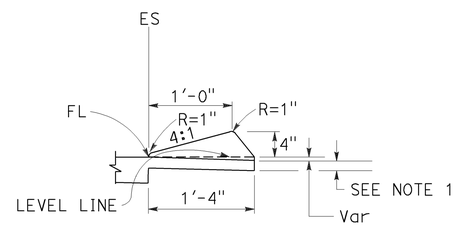

TYPE E

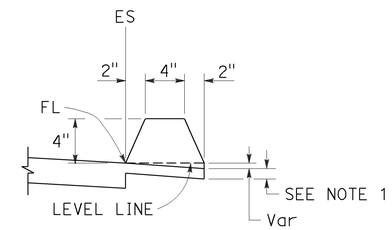

TYPE F
See Note 5

DIKES

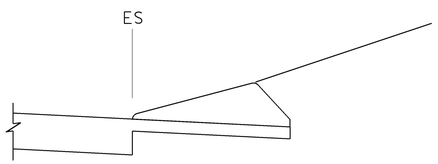

CASE C-1
Cut Slope

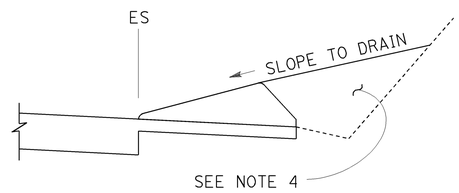

CASE C-2
Cut Slope

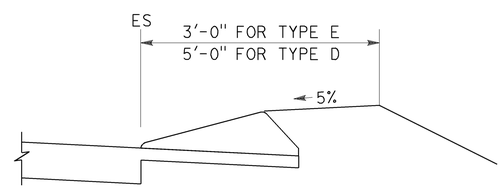

CASE F

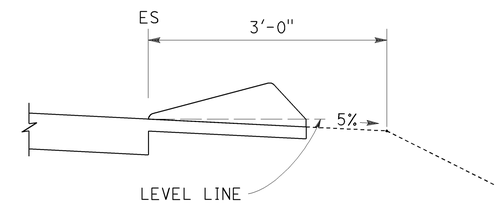

CASE R
See Note 2

TYPE D AND E BACKFILL DETAILS

NOTES:

1. For HMA shoulders only, extend top layer of HMA placed on the shoulder under dike with no joint at the ES. For projects with OGFC shoulders, do not extend OGFC under dike. See project plans for modified dike detail.
2. Case R applies to retrofit only projects where restrictive conditions do not provide enough width for Case F backfill.
3. Type A dike only to be used where restrictive slope conditions do not provide enough width to use Type D or Type E dike.
4. Fill and compact with excavated material to top of dike.
5. Use Type F dike, where dike is required with guard railing installations. See Revised Standard Plan RSP A77N4 for dike positioning details.

DIKE QUANTITIES

TYPE	CUBIC YARDS PER LINEAR FOOT
A	0.0135
C	0.0038
D	0.0293
E	0.0130
F	0.0066

Quantities based on 5% cross slope.

STATE OF CALIFORNIA
DEPARTMENT OF TRANSPORTATION

HOT MIX ASPHALT DIKES

NO SCALE

RSP A87B DATED JULY 19, 2013 SUPERSEDES STANDARD PLAN A87B DATED MAY 20, 2011 - PAGE 120 OF THE STANDARD PLANS BOOK DATED 2010.

REVISED STANDARD PLAN RSP A87B

2010 REVISED STANDARD PLAN RSP A87B

6-27-13

Dist	COUNTY	ROUTE	POST MILES TOTAL PROJECT	SHEET No.	TOTAL SHEETS
06	Fre	5	48.8/53.0	94	117

William K. Farnbach
REGISTERED CIVIL ENGINEER

July 19, 2013
PLANS APPROVAL DATE

REGISTERED PROFESSIONAL ENGINEER
William K. Farnbach
No. C49042
Exp. 9-30-14
CIVIL
STATE OF CALIFORNIA

THE STATE OF CALIFORNIA OR ITS OFFICERS OR AGENTS SHALL NOT BE RESPONSIBLE FOR THE ACCURACY OR COMPLETENESS OF SCANNED COPIES OF THIS PLAN SHEET.

TO ACCOMPANY PLANS DATED 6-23-14

2010 REVISED STANDARD PLAN RSP P4

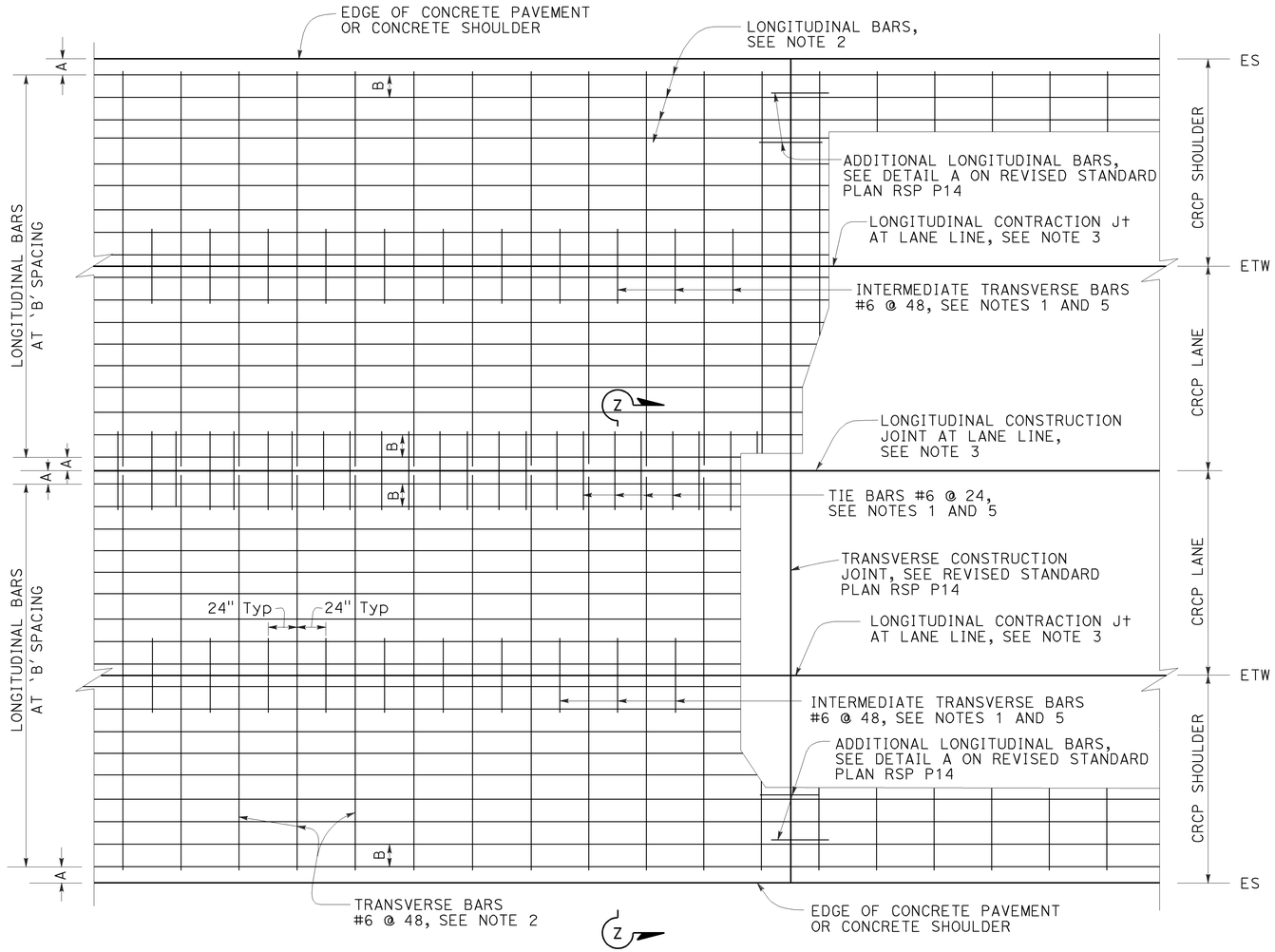

PLAN

See Note 4

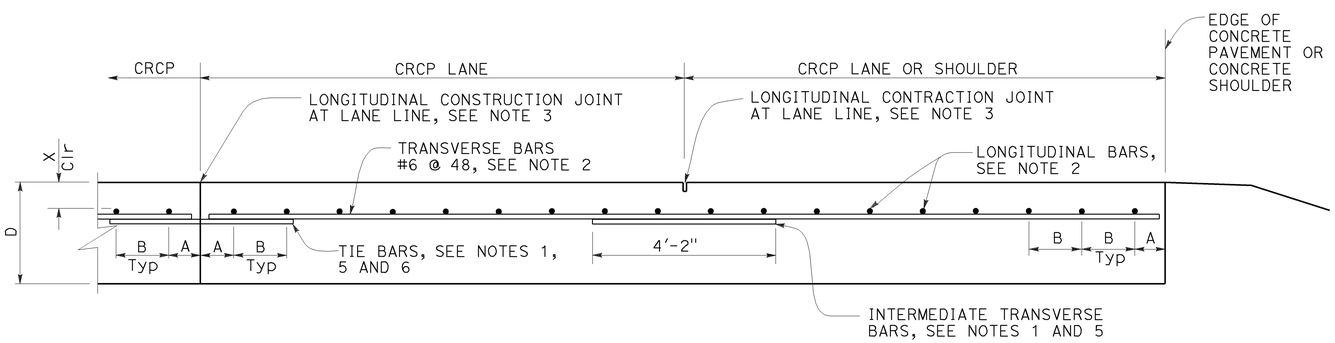

SECTION Z-Z

TABLE No. 1 LONGITUDINAL BAR REINFORCEMENT

SLAB THICKNESS AND BAR SIZE		FIRST SPACING AT EDGE OR JOINT	REGULAR BARS	ADDITIONAL BARS AT TRANSVERSE CONSTRUCTION JOINT	Clr
D	BAR SIZE	SPACING A	SPACING B	SPACING 2 × B	X
.75′	#6	3" TO 4"	8.0"	16"	4"
.80′	#6	3" TO 4"	7.5"	15"	4"
.85′	#6	3" TO 4"	7.0"	14"	4"
.90′	#6	3" TO 4"	6.5"	13"	4"
.95′	#6	3" TO 4"	6.25"	12.5"	4"
1.00′	#6	3" TO 4"	6.0"	12"	5"
1.05′	#6	3" TO 4"	5.75"	11.5"	5"
1.10′	#6	3" TO 4"	5.5"	11"	5.5"

NOTES:

1. Place transverse tie bars and intermediate transvese bars parallel to and in the same plane as transverse bars.
2. The length of lap splices for bar reinforcement must be at least 25".
3. For longitudinal contraction and construction joint details, see Revised Standard Plan RSP P16.
4. For curved lane layout see Revised Standard Plan RSP P16.
5. For tie bar and intermediate transverse bar details see Revised Standard Plan RSP P16.

STATE OF CALIFORNIA
DEPARTMENT OF TRANSPORTATION

CONTINUOUSLY REINFORCED CONCRETE PAVEMENT

NO SCALE

RSP P4 DATED JULY 19, 2013 SUPERSEDES RSP P4 DATED APRIL 20, 2012 AND STANDARD PLAN P4 DATED MAY 20, 2011 - PAGE 128 OF THE STANDARD PLANS BOOK DATED 2010.

REVISED STANDARD PLAN RSP P4

5-31-13

Dist	COUNTY	ROUTE	POST MILES TOTAL PROJECT	SHEET No.	TOTAL SHEETS
06	Fre	5	48.8/53.0	95	117

William K. Farnbach
REGISTERED CIVIL ENGINEER

July 19, 2013
PLANS APPROVAL DATE

REGISTERED PROFESSIONAL ENGINEER
William K. Farnbach
No. C49042
Exp. 9-30-14
CIVIL
STATE OF CALIFORNIA

THE STATE OF CALIFORNIA OR ITS OFFICERS OR AGENTS SHALL NOT BE RESPONSIBLE FOR THE ACCURACY OR COMPLETENESS OF SCANNED COPIES OF THIS PLAN SHEET.

TO ACCOMPANY PLANS DATED 6-23-14

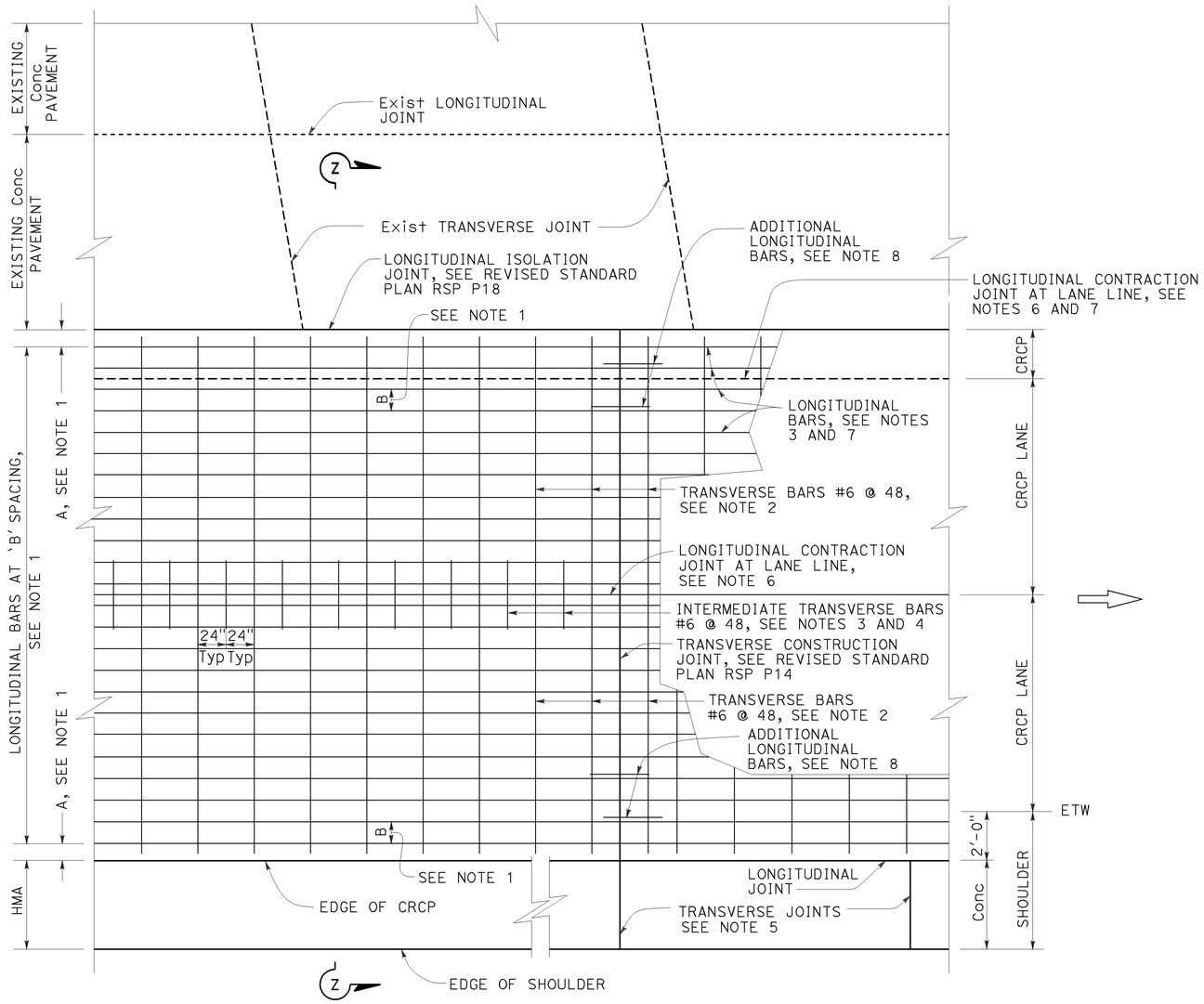

PLAN
See Note 9

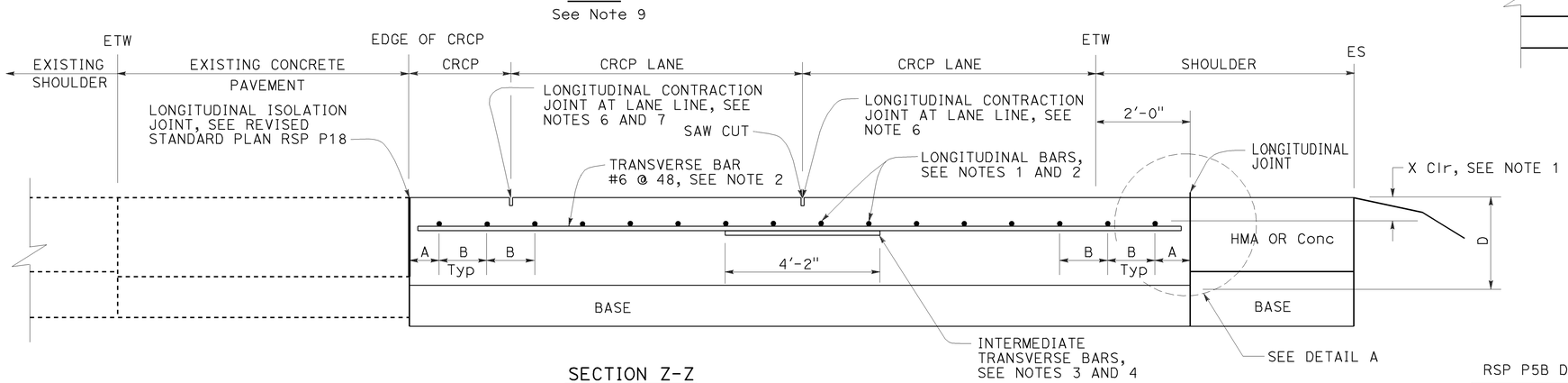

SECTION Z-Z

NOTES:

1. For longitudinal bar size, spacing and clearances, see Revised Standard Plan RSP P4.
2. The length of lap splices for bar reinforcement must be at least 25".
3. For tie bar and intermediate transverse bar details, see Revised Standard Plan RSP P16.
4. Place Intermediate transverse bars parallel to and in the same plane as transverse bars.
5. Construct transverse joints at right angle to the longitudinal joints in adjacent CRCP. Space joints at no less than 10′ intervals and no more than 14′ intervals. Match location of JPCP transverse joint with CRCP transverse construction joint, expansion joint or wide flange beam. Omit dowel bars.
6. For longitudinal contraction and construction joint details, see Revised Standard Plan RSP P16.
7. Do not construct longitudinal contraction joint when edge of new CRCP is less than 3′-3" from lane line.
8. For additional longitudinal bars detail, see Detail A on Revised Standard Plan RSP P14.
9. For longitudinal construction joint plan layout not shown, see Revised Standard Plan RSP P4. For tie bar details at longitudinal construction joint, see Revised Standard Plan RSP P16.
10. For limits of rumble strips, see Project Plans.

ABBREVIATION:

D = Thickness of CRCP

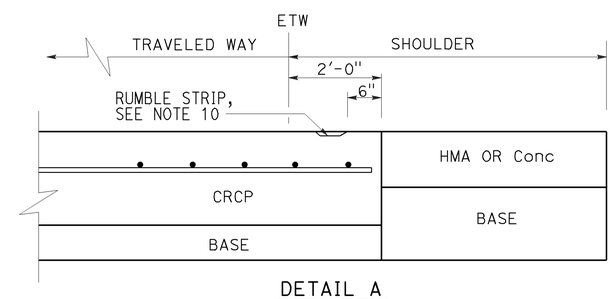

DETAIL A

STATE OF CALIFORNIA
DEPARTMENT OF TRANSPORTATION

CONTINUOUSLY REINFORCED CONCRETE PAVEMENT (WIDENED LANE) LANE AND SHOULDER ADDITION OR REPLACEMENT

NO SCALE

RSP P5B DATED JULY 19, 2013 SUPPLEMENTS THE STANDARD PLANS BOOK DATED 2010.

REVISED STANDARD PLAN RSP P5B

2010 REVISED STANDARD PLAN RSP P5B

5-31-13

Dist	COUNTY	ROUTE	POST MILES TOTAL PROJECT	SHEET No.	TOTAL SHEETS
06	Fre	5	48.8/53.0	96	117

William K. Farnbach
REGISTERED CIVIL ENGINEER

July 19, 2013
PLANS APPROVAL DATE

REGISTERED PROFESSIONAL ENGINEER William K. Farnbach No. C49042 Exp. 9-30-14 CIVIL STATE OF CALIFORNIA

THE STATE OF CALIFORNIA OR ITS OFFICERS OR AGENTS SHALL NOT BE RESPONSIBLE FOR THE ACCURACY OR COMPLETENESS OF SCANNED COPIES OF THIS PLAN SHEET.

TO ACCOMPANY PLANS DATED 6-23-14

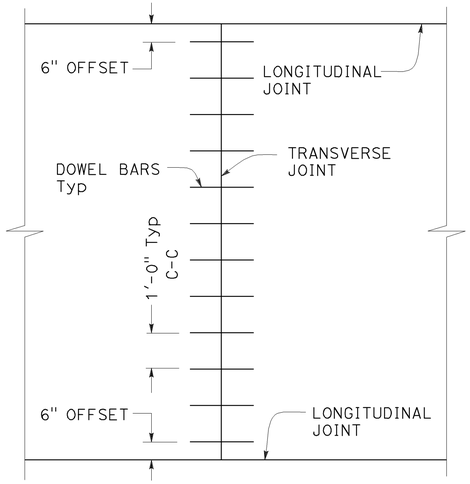

TRANSVERSE JOINT DOWEL BAR LAYOUT

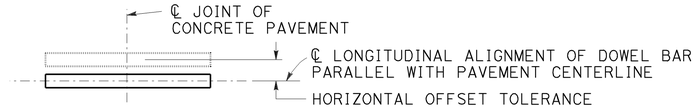

PLAN

HORIZONTAL OFFSET TOLERANCE

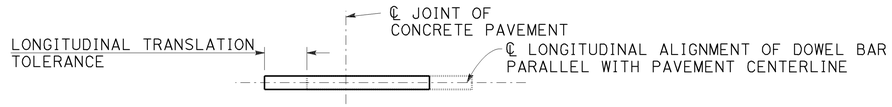

PLAN

LONGITUDINAL TRANSLATION TOLERANCE

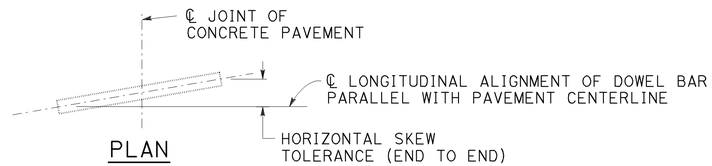

PLAN

HORIZONTAL SKEW TOLERANCE

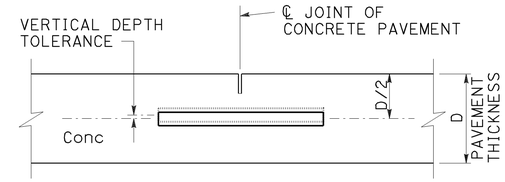

ELEVATION

VERTICAL DEPTH TOLERANCE

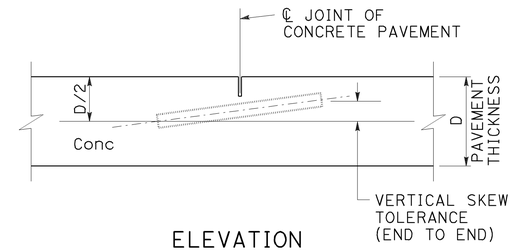

ELEVATION

VERTICAL SKEW TOLERANCE

NOTES:

1. See Revised Standard Plan RSP P1 for typical dowel bar placement and locations.
2. Where fresh concrete pavement is placed against new concrete or existing concrete pavement, rounding the corner of the existing concrete pavement is not required.
3. May also use ¾" Dia dowel bars 2'-4" ± ¼" in length. Center the length of dowel bars at the centerline of longitudinal joint.

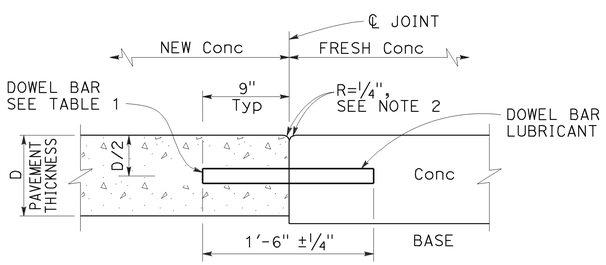

TRANSVERSE CONSTRUCTION JOINT DETAIL

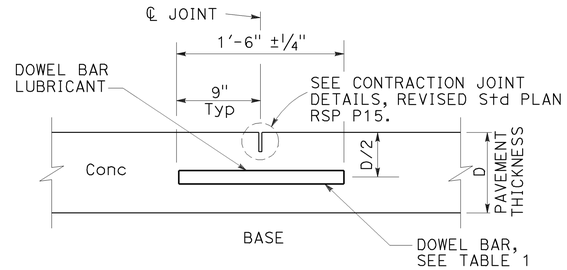

TRANSVERSE CONTRACTION JOINT

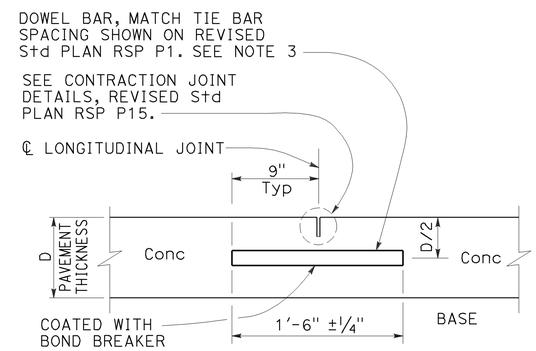

LONGITUDINAL CONTRACTION JOINT WITH DOWEL BARS

See Revised Std Plan RSP P18

TABLE 1

DOWEL BAR DIAMETER TABLE			
PAVEMENT THICKNESS	0.65'	> 0.65' - 0.85'	> 0.85'
MINIMUM DOWEL * BAR DIAMETER	1"	1¼"	1½"

* The drilled hole diameter must be ⅛" to 3/16" larger than the bar diameter.

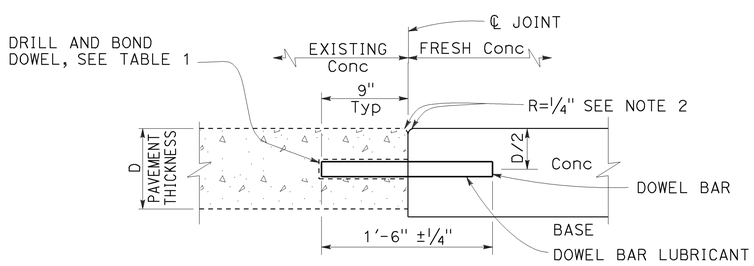

TRANSVERSE CONSTRUCTION JOINT FOR EXISTING CONCRETE PAVEMENT

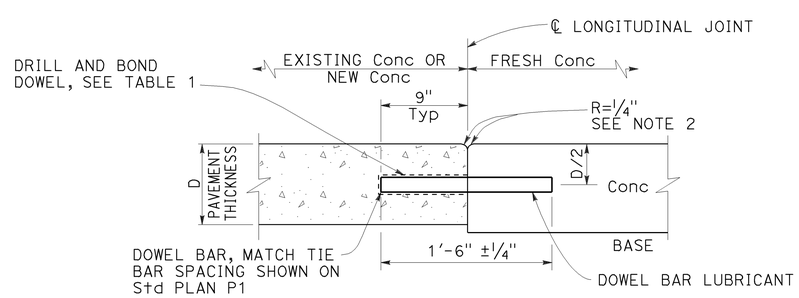

LONGITUDINAL CONSTRUCTION JOINT WITH DOWEL BARS

See Revised Std Plan RSP P18

STATE OF CALIFORNIA
DEPARTMENT OF TRANSPORTATION

CONCRETE PAVEMENT DOWEL BAR DETAILS

NO SCALE

RSP P10 DATED JULY 19, 2013 SUPERSEDES RSP P10 DATED APRIL 20, 2012 AND STANDARD PLAN P10 DATED MAY 20, 2011 - PAGE 131 OF THE STANDARD PLANS BOOK DATED 2010.

REVISED STANDARD PLAN RSP P10

2010 REVISED STANDARD PLAN RSP P10

5-31-13

Dist	COUNTY	ROUTE	POST MILES TOTAL PROJECT	SHEET No.	TOTAL SHEETS
06	Fre	5	48.8/53.0	97	117

William K. Farnbach
REGISTERED CIVIL ENGINEER

July 19, 2013
PLANS APPROVAL DATE

REGISTERED PROFESSIONAL ENGINEER
William K. Farnbach
No. C49042
Exp. 9-30-14
CIVIL
STATE OF CALIFORNIA

THE STATE OF CALIFORNIA OR ITS OFFICERS OR AGENTS SHALL NOT BE RESPONSIBLE FOR THE ACCURACY OR COMPLETENESS OF SCANNED COPIES OF THIS PLAN SHEET.

TO ACCOMPANY PLANS DATED 6-23-14

NOTES:

1. For longitudinal bar size, spacing and clearances, see Table 1 on Revised Standard Plan RSP P4.
2. The length of lap splices for bar reinforcement must be at least 25".
3. For tie bars in longitudinal construction joint, see Revised Standard Plan RSP P16.
4. Place additional longitudinal bars parallel to and in the same plane as the longitudinal bars.
5. Place additional longitudinal bars symmetrically about longitudinal construction joint.

ABBREVIATION

D = Thickness of CRCP

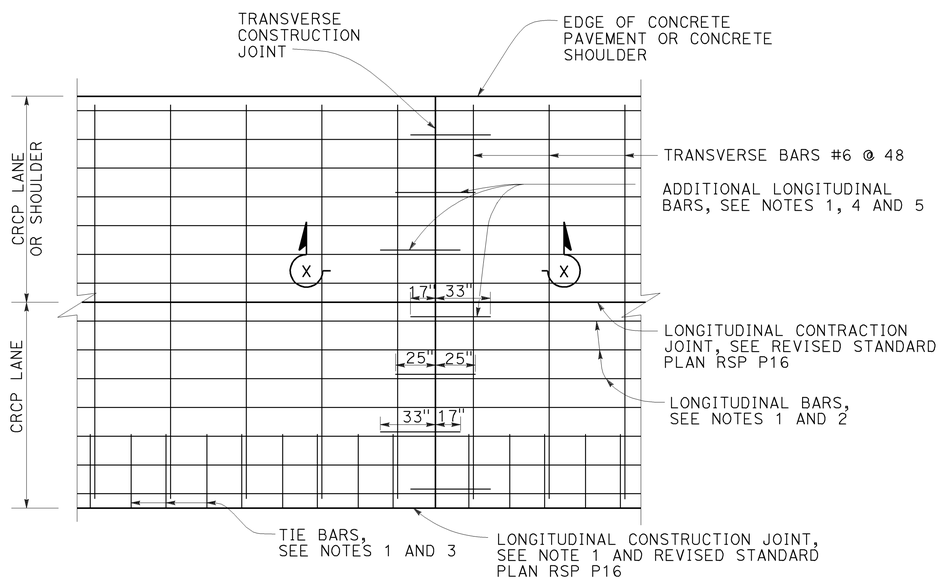

DETAIL A

Additional longitudinal bars at transverse construction joint

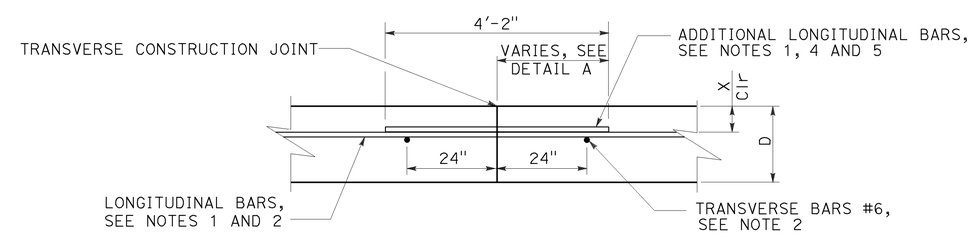

SECTION X-X

TRANSVERSE CONSTRUCTION JOINT

STATE OF CALIFORNIA
DEPARTMENT OF TRANSPORTATION

CONTINUOUSLY REINFORCED CONCRETE PAVEMENT TRANSVERSE CONSTRUCTION JOINT

NO SCALE

RSP P14 DATED JULY 19, 2013 SUPPLEMENTS THE STANDARD PLANS BOOK DATED 2010.

REVISED STANDARD PLAN RSP P14

2010 REVISED STANDARD PLAN RSP P14

5-31-13

Dist	COUNTY	ROUTE	POST MILES TOTAL PROJECT	SHEET No.	TOTAL SHEETS
06	Fre	5	48.8/53.0	98	117

William K. Farnbach
REGISTERED CIVIL ENGINEER

July 19, 2013
PLANS APPROVAL DATE

REGISTERED PROFESSIONAL ENGINEER
William K. Farnbach
No. C49042
Exp. 9-30-14
CIVIL
STATE OF CALIFORNIA

THE STATE OF CALIFORNIA OR ITS OFFICERS OR AGENTS SHALL NOT BE RESPONSIBLE FOR THE ACCURACY OR COMPLETENESS OF SCANNED COPIES OF THIS PLAN SHEET.

TO ACCOMPANY PLANS DATED 6-23-14

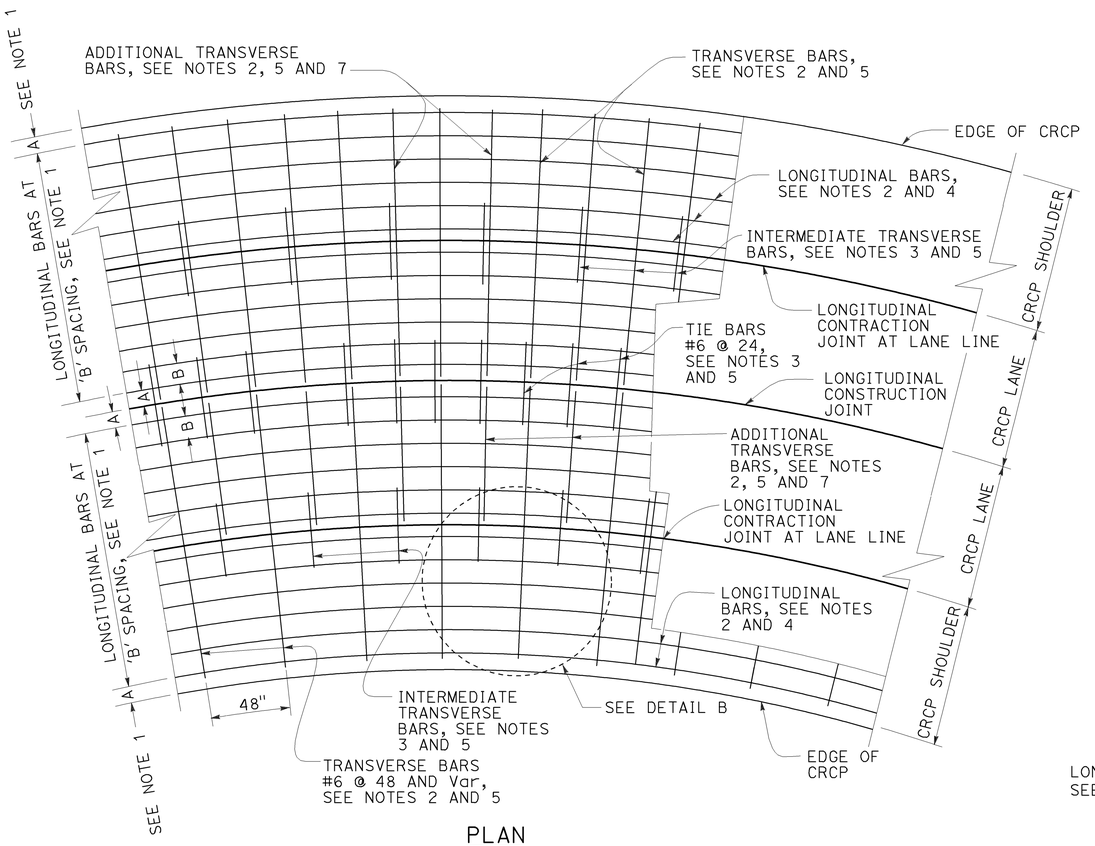

PLAN

CURVED LANES

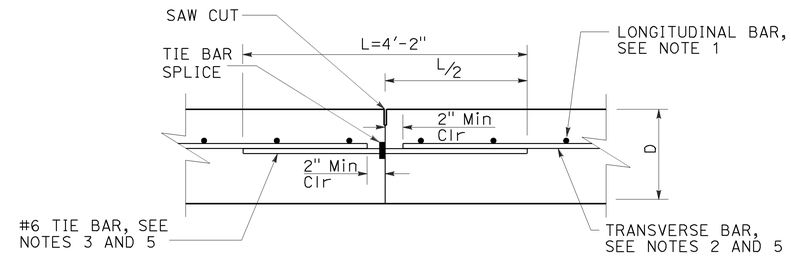

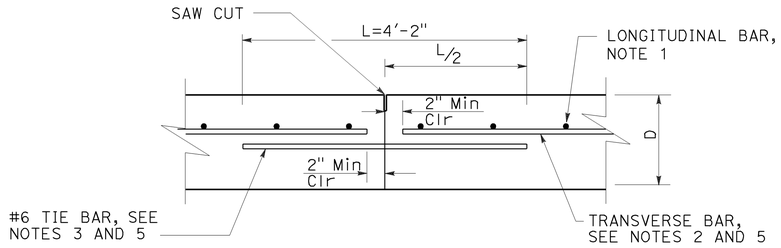

ALTERNATE

LONGITUDINAL CONSTRUCTION JOINT

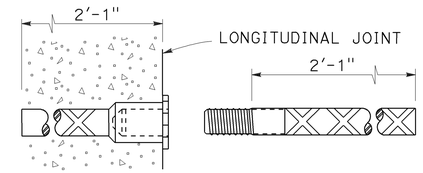

TIE BAR SPLICE COUPLER DETAIL

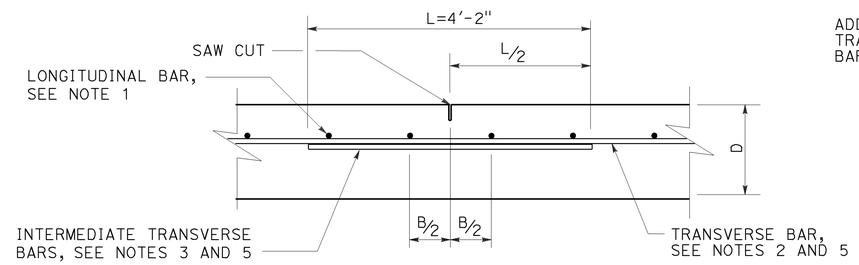

LONGITUDINAL CONTRACTION JOINT

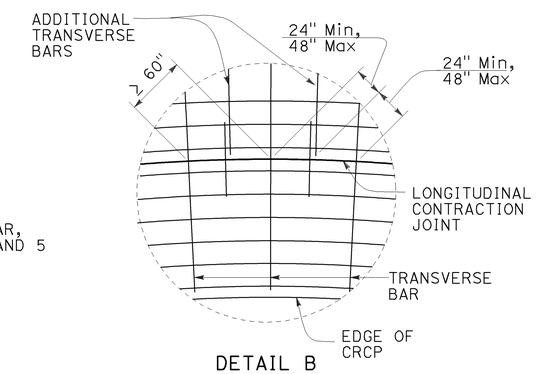

DETAIL B

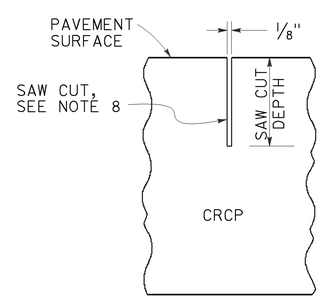

CONTRACTION JOINT SAW CUT DETAIL

NOTES:

1. For longitudinal bar spacing and clearances, see Table 1 on Revised Standard Plan RSP P4.
2. The length of lap splices for bar reinforcement must be at least 25".
3. Place tie bars and intermediate transverse bars parallel to and in the same plane as the transverse bars.
4. Place longitudinal bars parallel to roadway curvature.
5. Place transverse bars, additional transverse bars, tie bars and intermediate transverse bars perpendicular to the pavement curvature.
6. For additional longitudinal bars detail, see Detail A on Revised Standard Plans RSP P14.
7. Place additional transverse bars where required, see Detail B.
8. The bottom of the saw cut must be at least 0.5" clear of any dowel bar, tie bar and bar reinforcement.

ABBREVIATION:

D = Thickness of CRCP

STATE OF CALIFORNIA
DEPARTMENT OF TRANSPORTATION

CONTINUOUSLY REINFORCED CONCRETE PAVEMENT TIE BARS AND JOINT DETAILS

NO SCALE

RSP P16 DATED JULY 19, 2013 SUPPLEMENTS THE STANDARD PLANS BOOK DATED 2010.

REVISED STANDARD PLAN RSP P16

2010 REVISED STANDARD PLAN RSP P16

5-31-13

Dist	COUNTY	ROUTE	POST MILES TOTAL PROJECT	SHEET No.	TOTAL SHEETS
06	Fre	5	48.8/53.0	99	117

William K. Farnbach
REGISTERED CIVIL ENGINEER

July 19, 2013
PLANS APPROVAL DATE

REGISTERED PROFESSIONAL ENGINEER
William K. Farnbach
No. C49042
Exp. 9-30-14
CIVIL
STATE OF CALIFORNIA

THE STATE OF CALIFORNIA OR ITS OFFICERS OR AGENTS SHALL NOT BE RESPONSIBLE FOR THE ACCURACY OR COMPLETENESS OF SCANNED COPIES OF THIS PLAN SHEET.

TO ACCOMPANY PLANS DATED 6-23-14

2010 REVISED STANDARD PLAN RSP P18

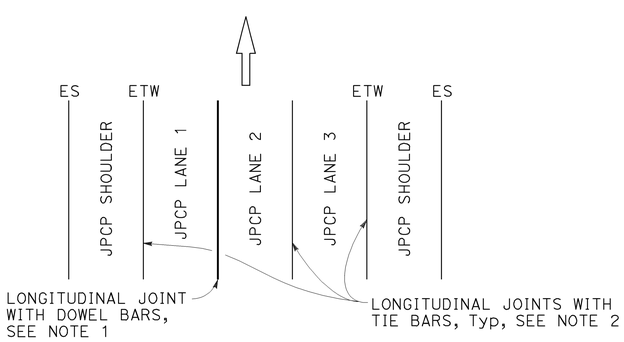

3 LANES WITH CONCRETE SHOULDERS
PLAN

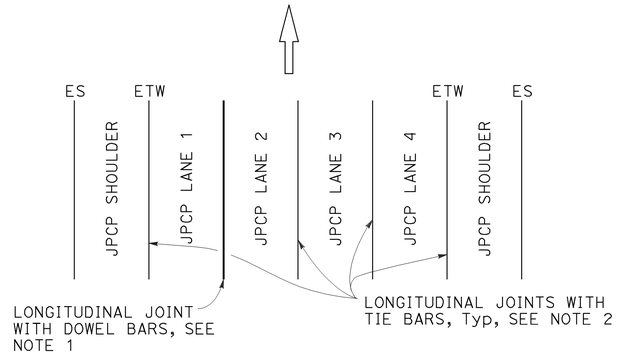

4 LANES WITH CONCRETE SHOULDERS
PLAN

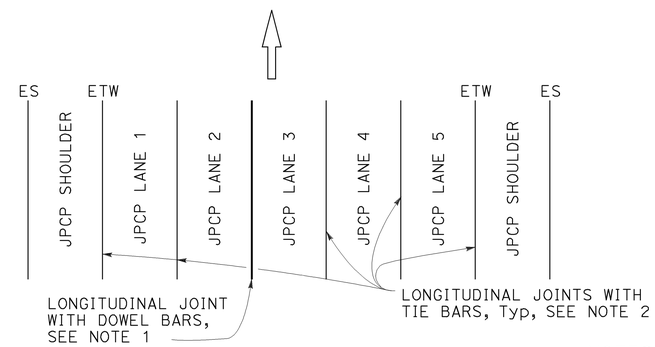

5 LANES WITH CONCRETE SHOULDERS
PLAN

NOTES:

1. See Revised Standard Plan RSP P10 for longitudinal joint with dowel bars.
2. See Revised Standard Plan RSP P15 for longitudinal joint with tie bars.
3. S= Reservoir depth.
   S= 7/8" ± 1/16" for asphalt rubber seals
   S= 9/16" ± 1/16" for silicone seals
   Preformed compression seals must be 13/16" wide and S= 1 11/16" ± 1/16"

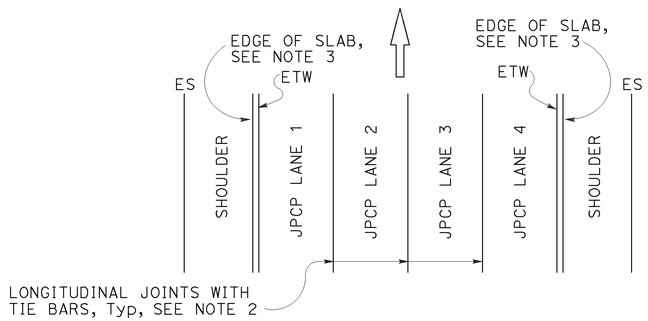

4 LANES OR LESS WITH AC SHOULDERS
PLAN

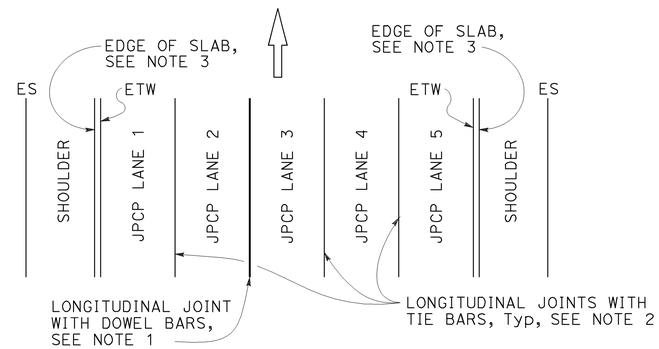

5 LANES WITH AC SHOULDERS
PLAN

NEW CONSTRUCTION

Location of Longitudinal Joints
For JPCP

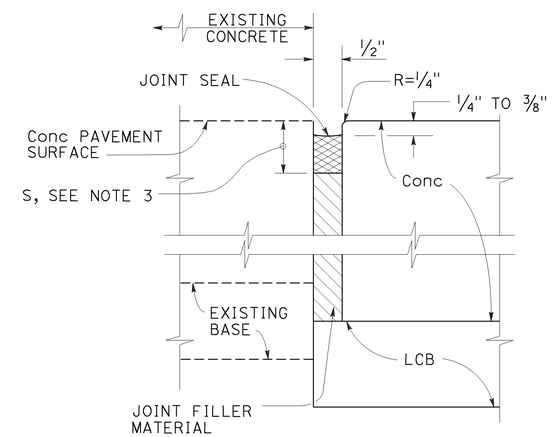

DETAIL "A"

ISOLATION JOINT

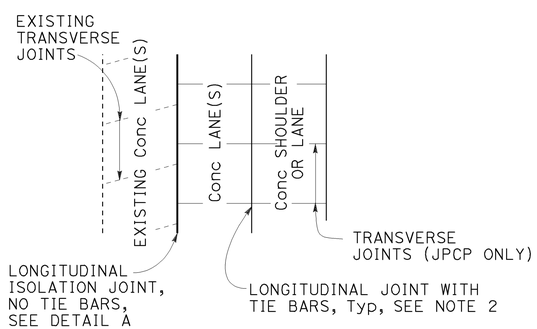

CASE 1
PLAN

Transverse Joints do not align between new and existing.

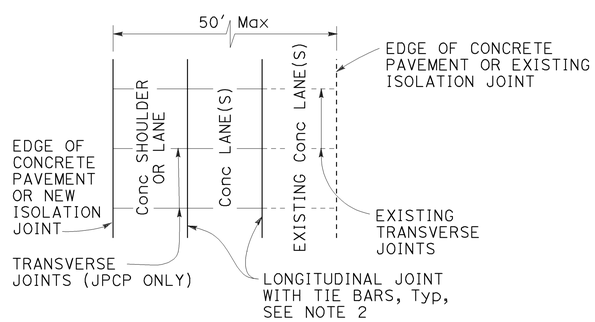

CASE 2
PLAN

Transverse Joints align between new and existing. (For JPCP only)

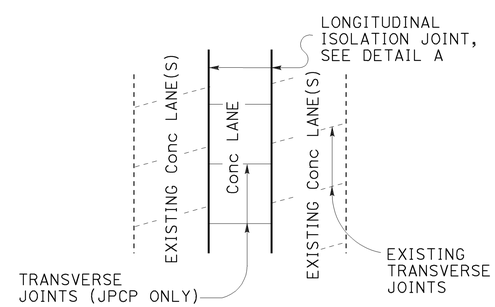

CASE 3 (INTERIOR LANE REPLACEMENT)
PLAN

Transverse Joints do not align between new and existing.

LANE/SHOULDER ADDITION OR RECONSTRUCTION

For JPCP and CRCP

STATE OF CALIFORNIA
DEPARTMENT OF TRANSPORTATION

CONCRETE PAVEMENT LANE SCHEMATICS AND ISOLATION JOINT DETAIL

NO SCALE

RSP P18 DATED JULY 19, 2013 SUPERSEDES RSP P18 DATED APRIL 20, 2012 AND STANDARD PLAN P18 DATED MAY 20, 2011 - PAGE 135 OF THE STANDARD PLANS BOOK DATED 2010.

REVISED STANDARD PLAN RSP P18

5-31-13

Dist	COUNTY	ROUTE	POST MILES TOTAL PROJECT	SHEET No.	TOTAL SHEETS
06	Fre	5	48.8/53.0	100	117

William K. Farnbach
REGISTERED CIVIL ENGINEER

July 19, 2013
PLANS APPROVAL DATE

REGISTERED PROFESSIONAL ENGINEER
William K. Farnbach
No. C49042
Exp. 9-30-14
CIVIL
STATE OF CALIFORNIA

THE STATE OF CALIFORNIA OR ITS OFFICERS OR AGENTS SHALL NOT BE RESPONSIBLE FOR THE ACCURACY OR COMPLETENESS OF SCANNED COPIES OF THIS PLAN SHEET.

TO ACCOMPANY PLANS DATED 6-23-14

2010 REVISED STANDARD PLAN RSP P20

NOTES:

1. Details do not apply to isolation joints and longitudinal construction joints.
2. Tie bars, dowel bars, and bar reinforcement are not shown.
3. Depths are measured from the final concrete pavement surface elevation after any grinding.

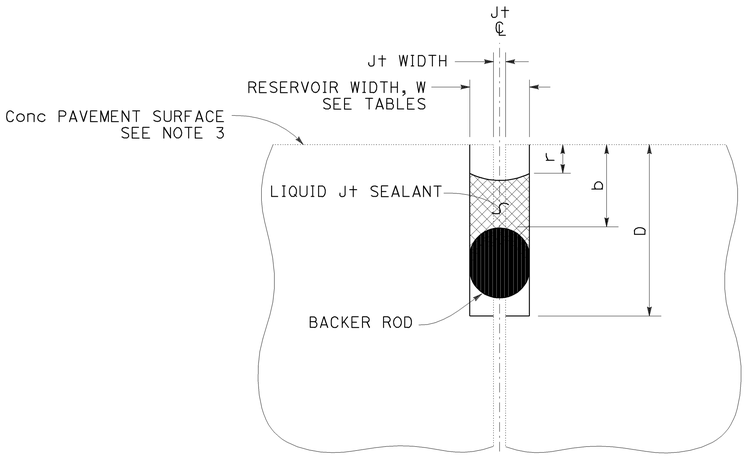

LIQUID JOINT SEALANT

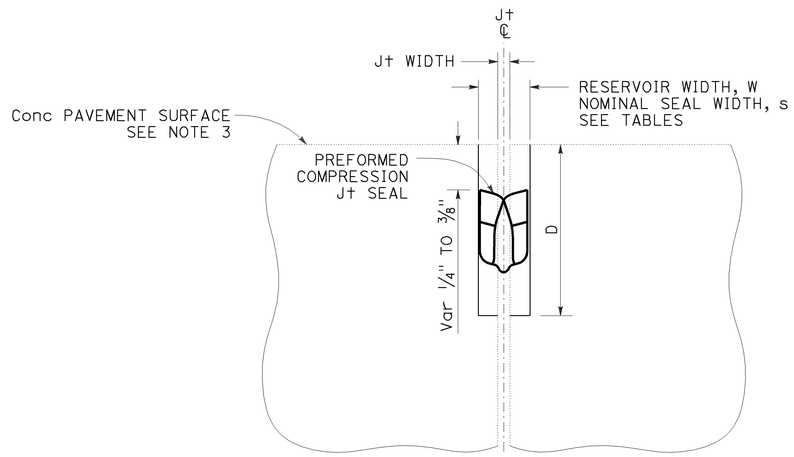

PREFORMED COMPRESSION JOINT SEAL

Const SEASON	Min RESERVOIR WIDTH * W ± 1/16"
WINTER	1/4"
SPRING	3/8"
SUMMER	3/8"
FALL	3/8"

* Minimum reservoir width for replace joint seal = existing joint width + 1/8"

RESERVOIR WIDTH W ±1/16"	LIQUID JOINT SEALANT DIMENSIONS					
	BACKER ROD NOMINAL Dia *	DEPTHS (ASPHALT RUBBER) **		DEPTHS (SILICONE)		
		RESERVOIR D ± 1/4"	BACKER ROD b ± 1/16"	RESERVOIR D ± 1/4"	BACKER ROD b ± 1/16"	RECESS r ± 1/16"
1/4"	3/8"	1 3/4"	7/8"	1 3/8"	1/2"	1/4"
3/8"	1/2"	1 7/8"	7/8"	1 1/2"	1/2"	1/4"
1/2"	3/4"	2"	7/8"	1 3/4"	9/16"	5/16"
5/8"	7/8"	2 1/4"	1"	2"	5/8"	5/16"
3/4"	1"	2 3/4"	1 1/8"	2 1/4"	3/4"	3/8"
7/8"	1 1/4"	3"	1 1/4"	2 1/2"	13/16"	3/8"
1"	1 1/2"	3 1/4"	1 3/8"	2 5/8"	7/8"	3/8"
1 1/8"	1 1/2"	3 1/2"	1 1/2"	2 13/16"	1"	1/2"

* Larger diameter backer rods may be substituted according to manufacturer recommendations if reservoir depth is increased equivalently.

** Asphalt rubber sealant recess depth "r" varies from 1/4" to 3/8"

RESERVOIR WIDTH W ±1/16"	PREFORMED COMPRESSION JOINT SEAL DIMENSIONS	
	NOMINAL SEAL WIDTH s	RESERVOIR DEPTH D ± 1/4"
1/4"	7/16"	1 1/4"
3/8"	11/16"	1 7/16"
1/2"	13/16"	1 11/16"
5/8"	1"	1 7/8"
3/4"	1 1/4"	2 1/8"
7/8"	1 5/8"	2 5/8"
1"	1 5/8"	2 5/8"
1 1/8"	2"	2 7/8"

STATE OF CALIFORNIA
DEPARTMENT OF TRANSPORTATION

JOINT SEALS

NO SCALE

RSP P20 DATED JULY 19, 2013 SUPERSEDES STANDARD PLAN P20
DATED MAY 20, 2011 - PAGE 136 OF THE STANDARD PLANS BOOK DATED 2010.

REVISED STANDARD PLAN RSP P20

Dist	COUNTY	ROUTE	POST MILES TOTAL PROJECT	SHEET No.	TOTAL SHEETS
06	Fre	5	48.8/53.0	101	117

REGISTERED CIVIL ENGINEER

July 19, 2013
PLANS APPROVAL DATE

REGISTERED PROFESSIONAL ENGINEER William K. Farnbach No. C49042 Exp. 9-30-14 CIVIL STATE OF CALIFORNIA

THE STATE OF CALIFORNIA OR ITS OFFICERS OR AGENTS SHALL NOT BE RESPONSIBLE FOR THE ACCURACY OR COMPLETENESS OF SCANNED COPIES OF THIS PLAN SHEET.

TO ACCOMPANY PLANS DATED 6-23-14

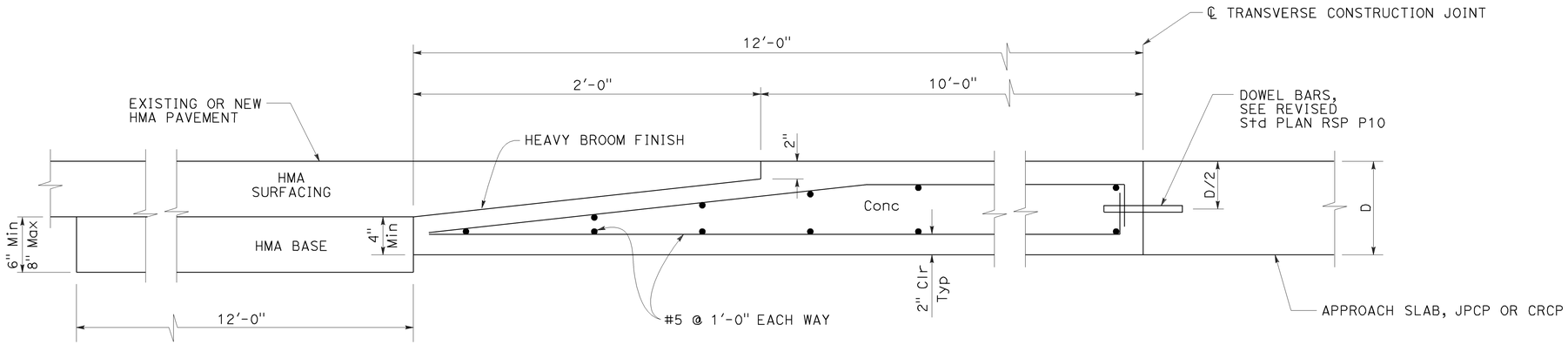

ELEVATION

CONCRETE PAVEMENT TRANSITION PANEL

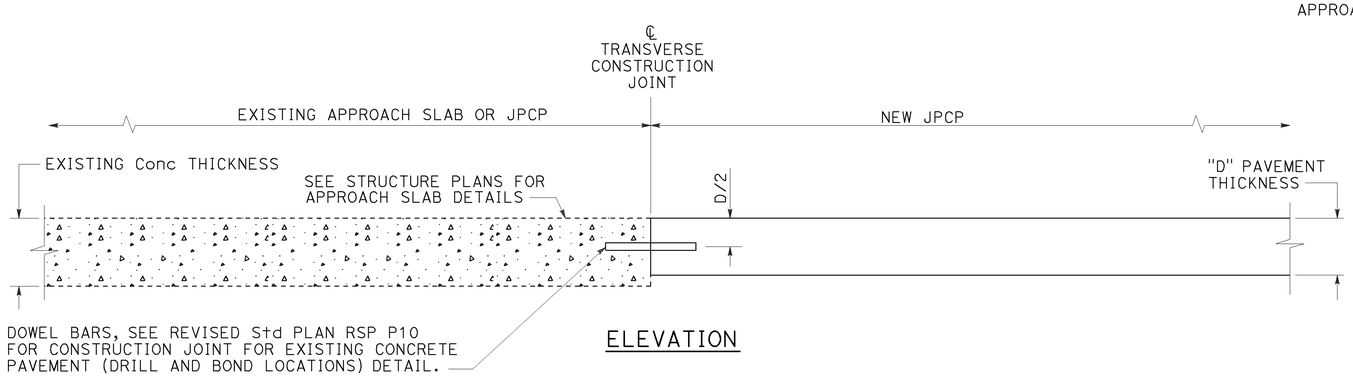

ELEVATION

TERMINAL JOINT TYPE 1

For Exist JPCP or Approach Slab

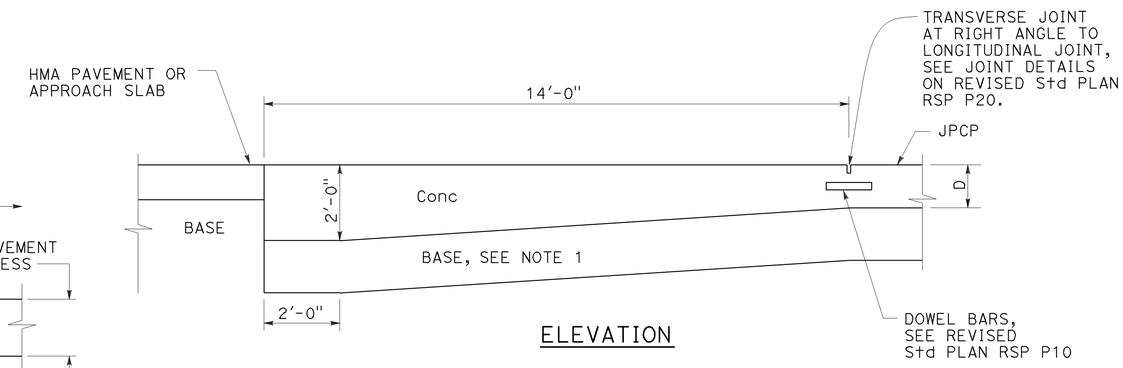

ELEVATION

PAVEMENT END ANCHOR

For HMA Pvmt or Approach Slab

NOTE:

1. Maintain same base thickness as JPCP.

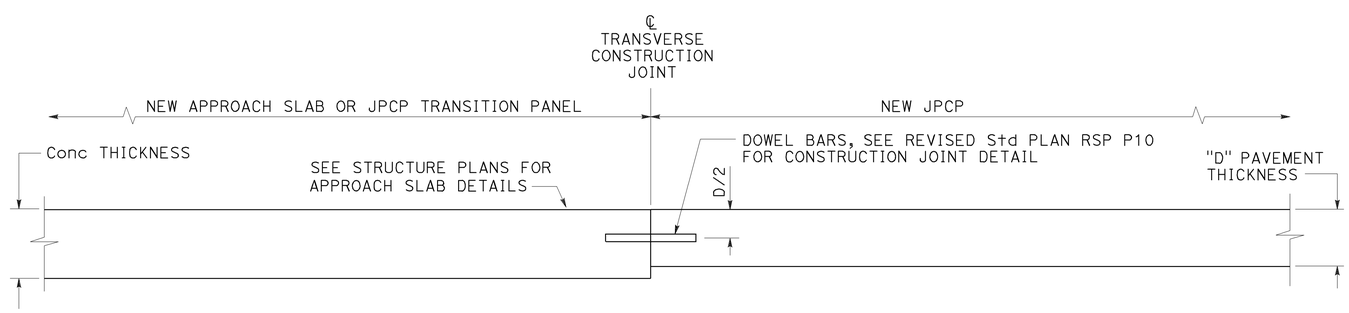

ELEVATION

TERMINAL JOINT TYPE 2

For JPCP Transition Panel or Approach Slab

STATE OF CALIFORNIA
DEPARTMENT OF TRANSPORTATION

CONCRETE PAVEMENT-END PANEL PAVEMENT TRANSITIONS

NO SCALE

RSP P30 DATED JULY 19, 2013 SUPERSEDES RSP P30 DATED APRIL 20, 2012 AND STANDARD PLAN P30 DATED MAY 20, 2011 - PAGE 137 OF THE STANDARD PLANS BOOK DATED 2010.

REVISED STANDARD PLAN RSP P30

2010 REVISED STANDARD PLAN RSP P30

3-26-13

DIST	COUNTY	ROUTE	POST MILES TOTAL PROJECT	SHEET No.	TOTAL SHEETS
06	Fre	5	48.8/53.0	102	117

REGISTERED CIVIL ENGINEER

November 15, 2013
PLANS APPROVAL DATE

REGISTERED PROFESSIONAL ENGINEER Cornelis M. Hakim No. C55610 Exp. 12-31-14 CIVIL STATE OF CALIFORNIA

THE STATE OF CALIFORNIA OR ITS OFFICERS OR AGENTS SHALL NOT BE RESPONSIBLE FOR THE ACCURACY OR COMPLETENESS OF SCANNED COPIES OF THIS PLAN SHEET.

TO ACCOMPANY PLANS DATED 6-23-14

2010 REVISED STANDARD PLAN RSP P74

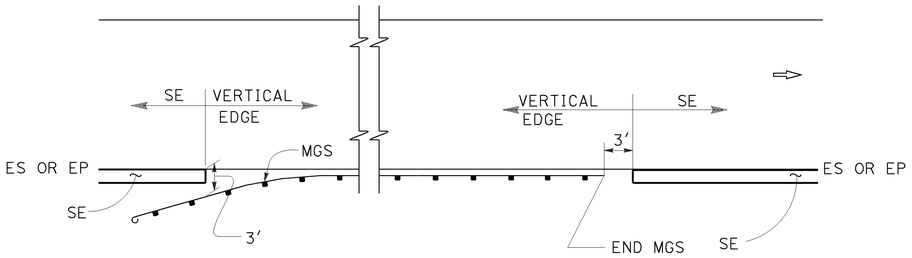

MGS

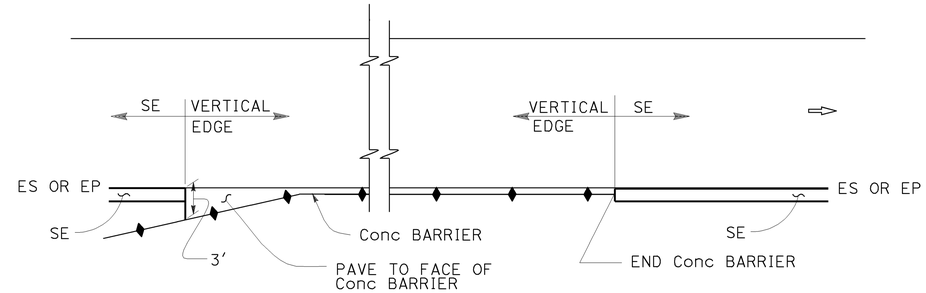

CONCRETE BARRIER

ABBREVIATIONS:

SE SAFETY EDGE

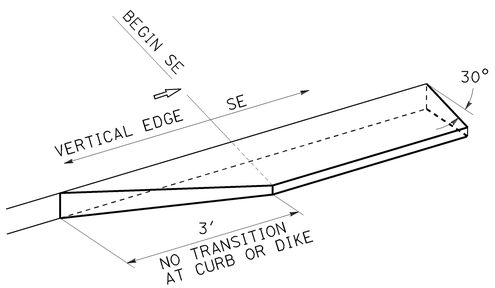

TRANSITION DETAIL FOR CONCRETE ONLY

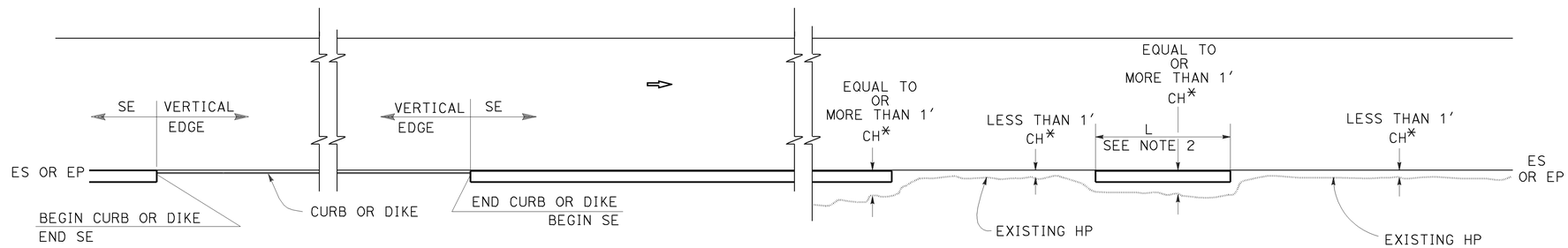

CURB OR DIKE

NARROW SIDE SLOPE

* CH = Distance from ES or EP to existing HP.

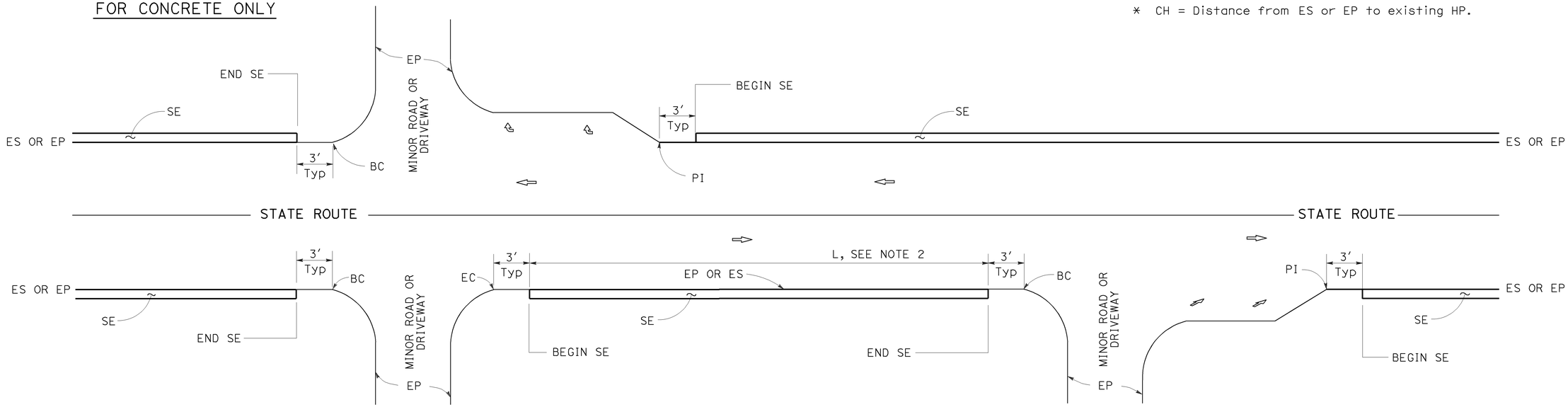

INTERSECTION

MINOR ROADWAY OR DRIVEWAY

DRIVEWAY AND INTERSECTION

STATE OF CALIFORNIA
DEPARTMENT OF TRANSPORTATION

PAVEMENT EDGE TREATMENTS

NO SCALE

RSP P74 DATED NOVEMBER 15, 2013 SUPERSEDES RSP P74 DATED JANUARY 20, 2012 THAT SUPPLEMENTS THE STANDARD PLANS BOOK DATED 2010.

REVISED STANDARD PLAN RSP P74

NOTES:

1. For details not shown, see Revised Standard Plans RSP P75 and RSP P76.
2. Safety edge is optional when L is less than 30′.

10-11-13

DIST	COUNTY	ROUTE	POST MILES TOTAL PROJECT	SHEET No.	TOTAL SHEETS
06	Fre	5	48.8/53.0	103	117

REGISTERED CIVIL ENGINEER

November 15, 2013
PLANS APPROVAL DATE

REGISTERED PROFESSIONAL ENGINEER Cornelis M. Hakim No. C55610 Exp. 12-31-14 CIVIL STATE OF CALIFORNIA

THE STATE OF CALIFORNIA OR ITS OFFICERS OR AGENTS SHALL NOT BE RESPONSIBLE FOR THE ACCURACY OR COMPLETENESS OF SCANNED COPIES OF THIS PLAN SHEET.

TO ACCOMPANY PLANS DATED 6-23-14

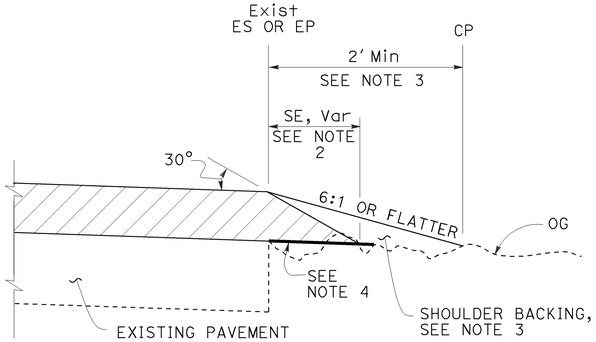

CASE A
Safety Edge

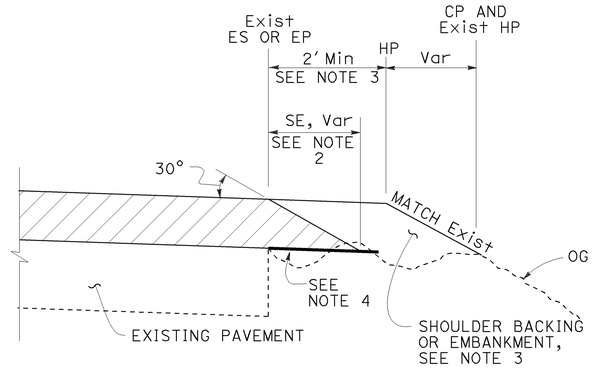

CASE B
Safety Edge

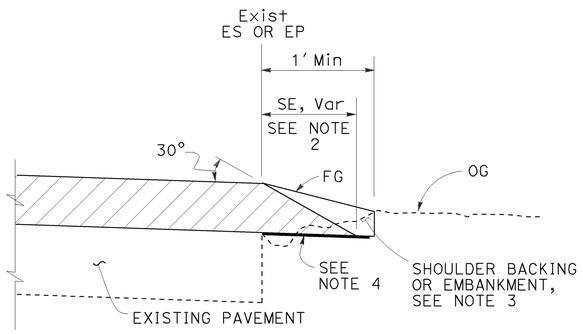

CASE C
Safety Edge

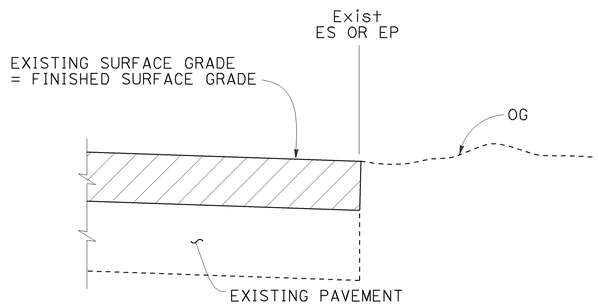

CASE D
Vertical Edge

LEGEND:

- HMA OVERLAY
- HMA OR CONCRETE OVERLAY
- CONCRETE OVERLAY

ABBREVIATIONS:

SE SAFETY EDGE
TT TOTAL THICKNESS OF SE

TABLE A
EDGE TREATMENT FOR VARIOUS OVERLAY THICKNESS AND CONDITIONS

	OVERLAY THICKNESS	
FIELD CONDITION	LESS THAN 0.15'	0.15' OR MORE
Exist SLOPE 6:1 OR FLATTER	CASE E	CASE A
Exist SLOPE 3:1 TO 6:1	CASE E	CASE B
Exist SLOPE STEEPER THAN 3:1	CASE F	CASE F
CUT SECTION (REPLACE, COLD PLANE, MILL PAVEMENT)	CASE D	CASE C

ADDITIONAL HMA OR CONCRETE QUANTITIES FOR SE/SIDE/MILE

TYPICAL CROSS SECTION	TT	TOTAL ADDITIONAL MATERIAL FOR SE/SIDE/MILE		
		HMA (TON)	CONCRETE (CY)*	CONCRETE (CY)**
TT	0.15'	NA	NA	NA
	0.20'	13.7	NA	NA
	0.30'	30.9	NA	NA
	0.40'	54.9	NA	NA
	0.45'	69.4	NA	NA
TT 0.43'	0.50'	84.2	NA	NA
	0.60'	113.9	NA	NA
	0.70'	143.6	70.9	94.2
	0.80'	173.3	85.6	112.2
	0.90'	203.0	100.3	130.2
	1.00'	232.7	114.9	148.2
	1.10'	262.4	129.6	166.2
	1.20'	292.1	144.3	184.2

* For Detail "A"
** For Optional Detail "A"

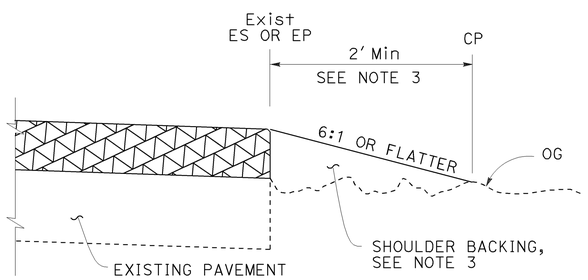

CASE E
Vertical Edge

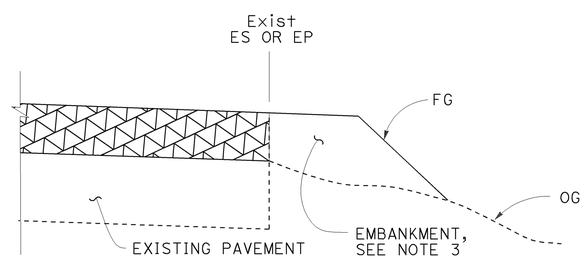

CASE F
Vertical Edge
* See Table A and Revised Std Plan RSP P74

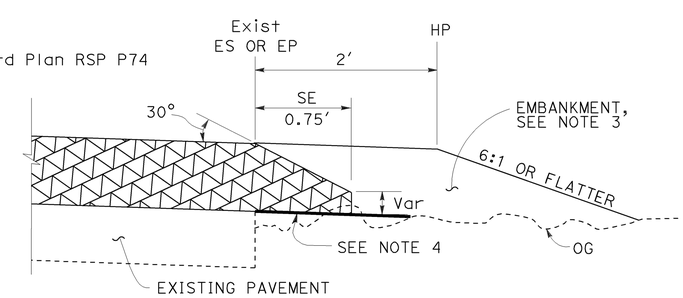

DETAIL "A"
For HMA overlay thickness more than 0.43' or concrete overlay

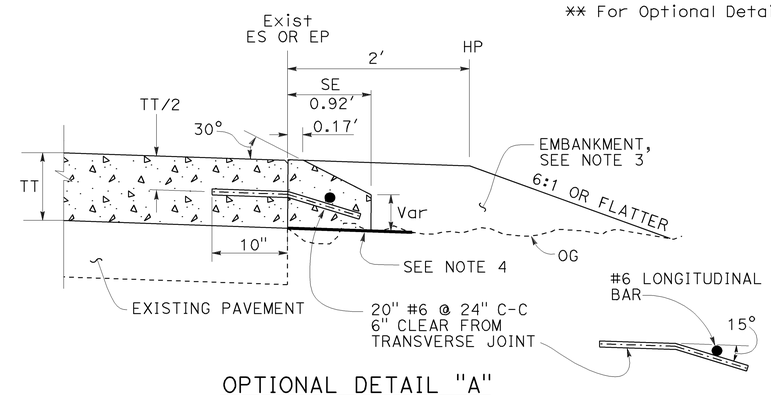

OPTIONAL DETAIL "A"
For concrete overlay
See Note 5

NOTES:

1. For limits of safety edge and vertical edge treatments, see Revised Standard Plan RSP P74.
2. Details shown for HMA overlay thickness less than 0.43'. See Detail "A" for HMA overlay thickness more than 0.43' or concrete overlay.
3. For locations and limits of shoulder backing or embankment see project plans.
4. Grade existing ground to place safety edge. 1' minimum width
5. Safety edge transverse joint must match overlay transverse joint. End of #6 longitudinal bar must be 2" ±½" clear from transverse joint.
6. Safety edge is not needed in the area of MGS, barrier, right turn lane and acceleration lane. See Revised Standard Plan RSP P74.

STATE OF CALIFORNIA
DEPARTMENT OF TRANSPORTATION

PAVEMENT EDGE TREATMENTS-OVERLAYS

NO SCALE

RSP P75 DATED NOVEMBER 15, 2013 SUPERSEDES RSP P75 DATED JANUARY 20, 2012 THAT SUPPLEMENTS THE STANDARD PLANS BOOK DATED 2010.

REVISED STANDARD PLAN RSP P75

2010 REVISED STANDARD PLAN RSP P75

10-4-13

DIST	COUNTY	ROUTE	POST MILES TOTAL PROJECT	SHEET No.	TOTAL SHEETS
06	Fre	5	48.8/53.0	104	117

REGISTERED CIVIL ENGINEER

November 15, 2013
PLANS APPROVAL DATE

REGISTERED PROFESSIONAL ENGINEER Cornelis M. Hakim No. C55610 Exp. 12-31-14 CIVIL STATE OF CALIFORNIA

THE STATE OF CALIFORNIA OR ITS OFFICERS OR AGENTS SHALL NOT BE RESPONSIBLE FOR THE ACCURACY OR COMPLETENESS OF SCANNED COPIES OF THIS PLAN SHEET.

TO ACCOMPANY PLANS DATED 6-23-14

LEGEND:

- HMA PAVEMENT
- HMA OR CONCRETE PAVEMENT
- CONCRETE PAVEMENT

ABBREVIATIONS:

SE SAFETY EDGE
TT TOTAL THICKNESS OF SE
HW HINGE WIDTH, DISTANCE FROM ES OR EP TO HP

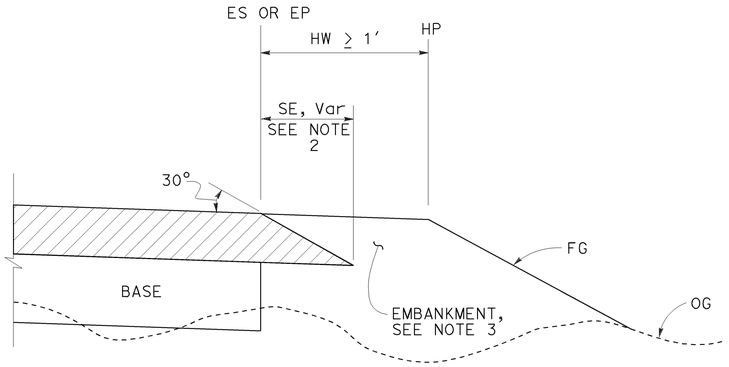

CASE K
Safety Edge - Fill Section, HW ≥ 1′

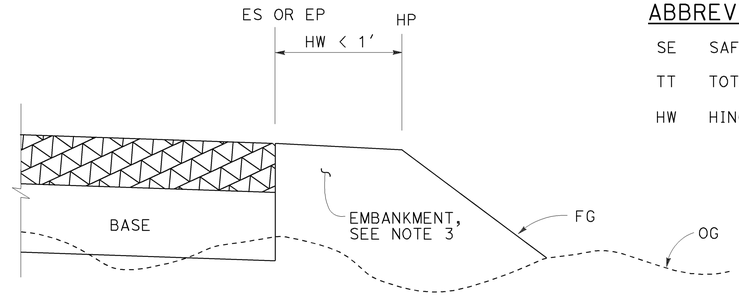

CASE L
Vertical Edge - Fill Section, HW < 1′

FILL SECTION

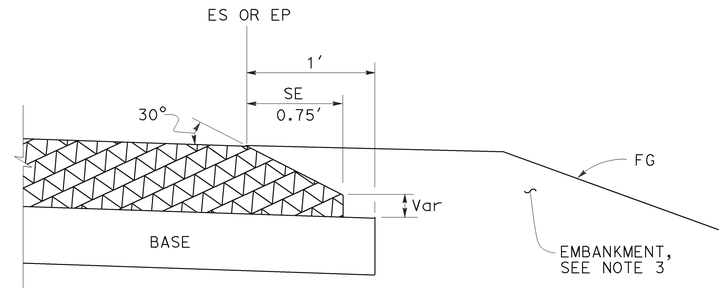

DETAIL "B"
For HMA pavement thickness more than 0.43′ or concrete pavement

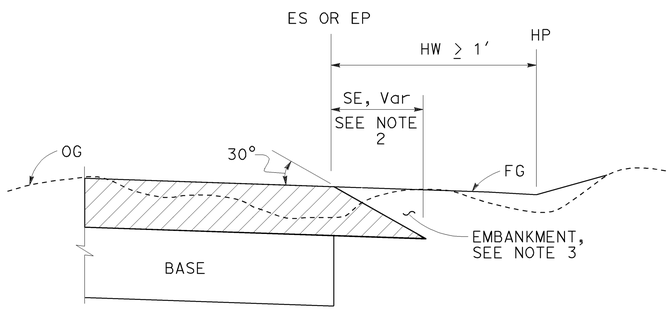

CASE M
Safety Edge - Cut Section, HW ≥ 1′

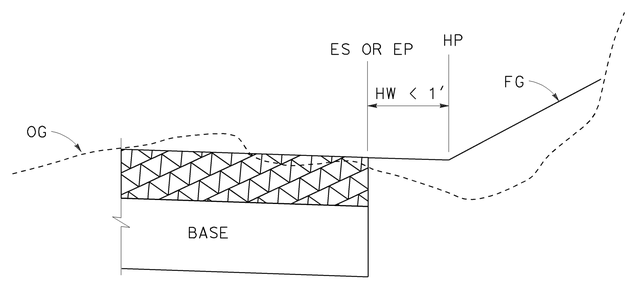

CASE N
Vertical Edge - Cut Section, HW < 1′

CUT SECTION

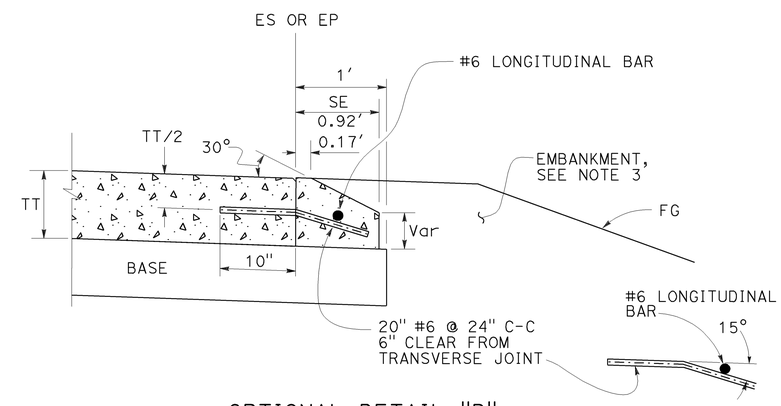

OPTIONAL DETAIL "B"
For concrete pavement
See Note 4

NOTES:

1. For limits of safety edge and vertical edge treatments, see Revised Standard Plan RSP P74
2. Details shown for HMA pavement thickness less than 0.43′. See Detail "B" for HMA pavement thickness more than 0.43′ or concrete pavement.
3. For locations and limits of embankment see project plans.
4. Safety edge transverse joint must match pavement transverse joint. End of #6 longitudinal bar must be 2" ±½" clear from transverse joint.
5. Safety edge is not needed in the area of MGS, barrier, right turn lane and acceleration lane. See Revised Standard Plan RSP P74.

STATE OF CALIFORNIA
DEPARTMENT OF TRANSPORTATION

PAVEMENT EDGE TREATMENTS-NEW CONSTRUCTION

NO SCALE

RSP P76 DATED NOVEMBER 15, 2013 SUPERSEDES RSP P76 DATED JANUARY 20, 2012 THAT SUPPLEMENTS THE STANDARD PLANS BOOK DATED 2010.

REVISED STANDARD PLAN RSP P76

2010 REVISED STANDARD PLAN RSP P76

10-4-13

Dist	COUNTY	ROUTE	POST MILES TOTAL PROJECT	SHEET No.	TOTAL SHEETS
06	Fre	5	48.8/53.0	105	117

REGISTERED CIVIL ENGINEER

July 19, 2013
PLANS APPROVAL DATE

REGISTERED PROFESSIONAL ENGINEER
Gurinderpal Bhullar
No. C48815
Exp. 9-30-14
CIVIL
STATE OF CALIFORNIA

THE STATE OF CALIFORNIA OR ITS OFFICERS OR AGENTS SHALL NOT BE RESPONSIBLE FOR THE ACCURACY OR COMPLETENESS OF SCANNED COPIES OF THIS PLAN SHEET.

TO ACCOMPANY PLANS DATED 6-23-14

2010 REVISED STANDARD PLAN RSP T9

TABLE 1

TAPER LENGTH CRITERIA AND CHANNELIZING DEVICE SPACING

SPEED (S)	MINIMUM TAPER LENGTH * FOR WIDTH OF OFFSET 12 FEET (W)				MAXIMUM CHANNELIZING DEVICE SPACING		
					X	Y	Z **
	TANGENT 2L	MERGING L	SHIFTING L/2	SHOULDER L/3	TAPER	TANGENT	CONFLICT
mph	ft	ft	ft	ft	ft	ft	ft
20	160	80	40	27	20	40	10
25	250	125	63	42	25	50	12
30	360	180	90	60	30	60	15
35	490	245	123	82	35	70	17
40	640	320	160	107	40	80	20
45	1080	540	270	180	45	90	22
50	1200	600	300	200	50	100	25
55	1320	660	330	220	55	110	27
60	1440	720	360	240	60	120	30
65	1560	780	390	260	65	130	32
70	1680	840	420	280	70	140	35

* - For other offsets, use the following merging taper length formula for L:
For speed of 40 mph or less, $L = WS^2/60$
For speed of 45 mph or more, $L = WS$

Where: L = Taper length in feet
W = Width of offset in feet
S = Posted speed limit, off-peak 85th-percentile speed prior to work starting, or the anticipated operating speed in mph

** - Use for taper and tangent sections where there are no pavement markings or where there is a conflict between existing pavement markings and channelizers (CA).

TABLE 2

LONGITUDINAL BUFFER SPACE AND FLAGGER STATION SPACING

SPEED *	Min D **	DOWNGRADE Min D ***		
		-3%	-6%	-9%
mph	ft	ft	ft	ft
20	115	116	120	126
25	155	158	165	173
30	200	205	215	227
35	250	257	271	287
40	305	315	333	354
45	360	378	400	427
50	425	446	474	507
55	495	520	553	593
60	570	598	638	686
65	645	682	728	785
70	730	771	825	891

* - Speed is posted speed limit, off-peak 85th-percentile speed prior to work starting, or the anticipated operating speed in mph

** - Longitudinal buffer space or flagger station spacing

*** - Use on sustained downgrade steeper than -3 percent and longer than 1 mile.

TABLE 3

ADVANCE WARNING SIGN SPACING

ROAD TYPE	DISTANCE BETWEEN SIGNS *		
	A	B	C
	ft	ft	ft
URBAN - 25 mph OR LESS	100	100	100
URBAN - MORE THAN 25 mph TO 40 mph	250	250	250
URBAN - MORE THAN 40 mph	350	350	350
RURAL	500	500	500
EXPRESSWAY / FREEWAY	1000	1500	2640

* - The distances are approximate, are intended for guidance purposes only, and should be applied with engineering judgment. These distances should be adjusted by the Engineer for field conditions, if necessary, by increasing or decreasing the recommmended distances.

STATE OF CALIFORNIA
DEPARTMENT OF TRANSPORTATION

TRAFFIC CONTROL SYSTEM TABLES FOR LANE AND RAMP CLOSURES

NO SCALE

RSP T9 DATED JULY 19, 2013 SUPERSEDES RSP T9 DATED APRIL 19, 2013 THAT SUPPLEMENTS THE STANDARD PLANS BOOK DATED 2010.

REVISED STANDARD PLAN RSP T9

4-30-13

TO ACCOMPANY PLANS DATED 6-23-14

Dist	COUNTY	ROUTE	POST MILES TOTAL PROJECT	SHEET No.	TOTAL SHEETS
06	Fre	5	48.8/53.0	106	117

REGISTERED CIVIL ENGINEER

April 19, 2013
PLANS APPROVAL DATE

REGISTERED PROFESSIONAL ENGINEER Gurinderpal Bhullar No. C48815 Exp. 9-30-14 CIVIL STATE OF CALIFORNIA

THE STATE OF CALIFORNIA OR ITS OFFICERS OR AGENTS SHALL NOT BE RESPONSIBLE FOR THE ACCURACY OR COMPLETENESS OF SCANNED COPIES OF THIS PLAN SHEET.

NOTES:

See Revised Standard Plan RSP T9 for tables.

Use cone spacing X for taper segment, Y for tangent segment or Z for conflict situations, as approriate, per Table 1, unless X, Y, or Z cone spacing is shown on this sheet.

Unless otherwise specified in the special provisions, all temporary warning signs shall have black legend on fluorescent orange background.

California codes are designated by (CA). Otherwise, Federal (MUTCD) codes are shown.

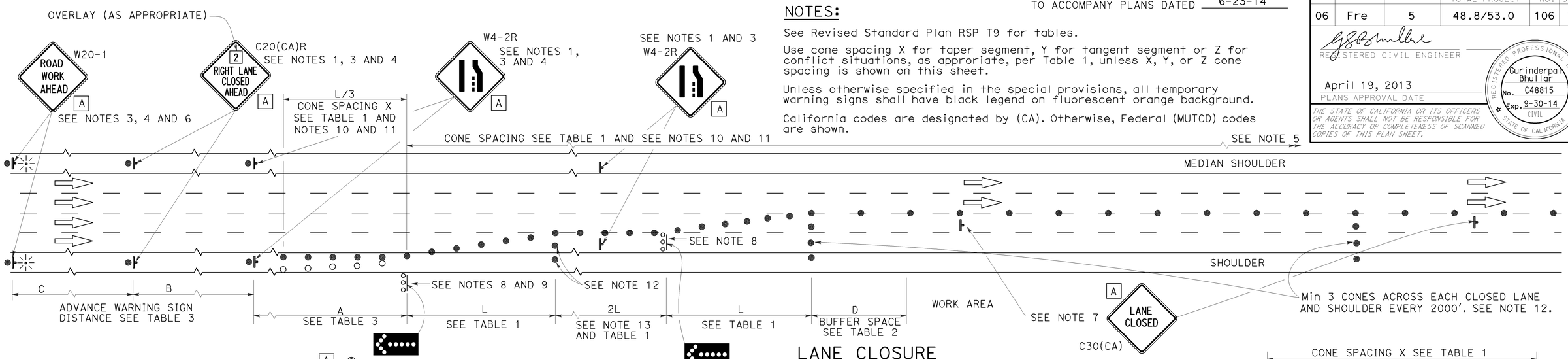

LANE CLOSURE

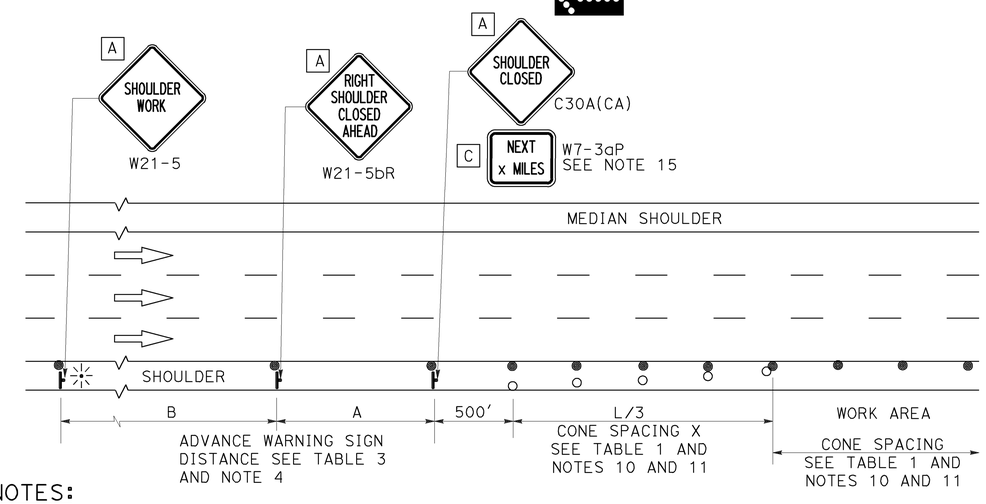

SHOULDER CLOSURE

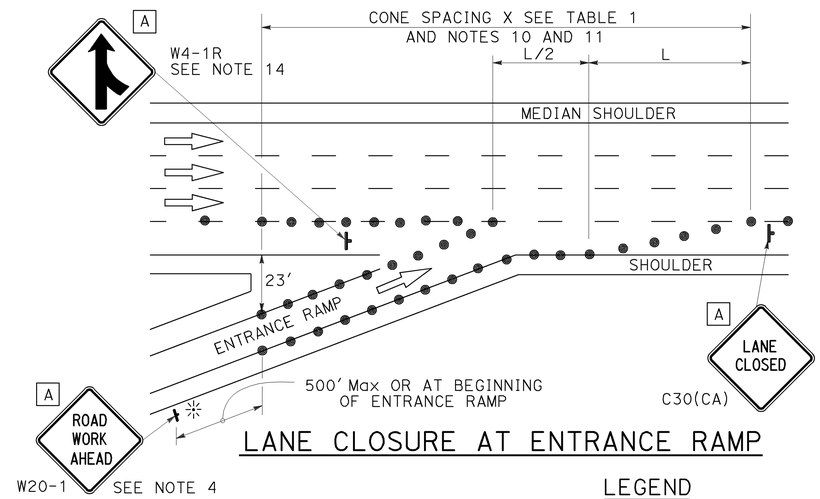

LANE CLOSURE AT ENTRANCE RAMP

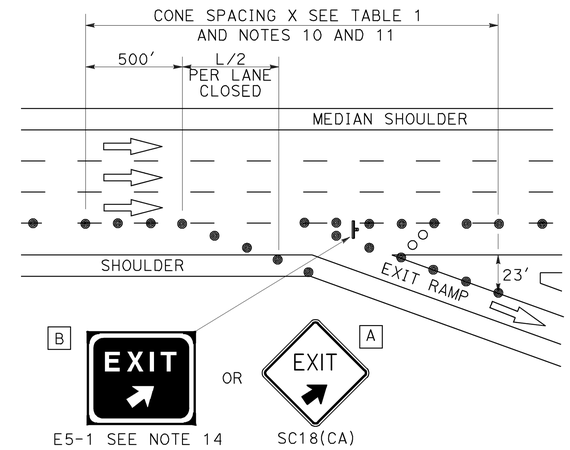

LANE CLOSURE AT EXIT RAMP

NOTES:

1. Median lane closures shall conform to the details as shown except that C20(CA)L and W4-2L signs shall be used.
2. At least one person shall be assigned to provide full time maintenance of traffic control devices for lane closures.
3. Duplicate sign installations are not required:
   a) On opposite shoulder if at least one-half of the available lanes remain open to traffic.
   b) In the median if the width of the median shoulder is less than 8' and the outside lanes are to be closed.
4. Each advance warning sign on each side of the roadway shall be equipped with at least two flags for daytime closure. Each flag shall be at least 16" x 16" in size and shall be orange or fluorescent red-orange in color. Flashing beacons shall be placed at the locations indicated for lane closure during hours of darkness.
5. A G20-2 "END ROAD WORK" sign, with minimum size of 48" x 24" as appropriate, shall be placed at the end of the lane closure unless the end of work area is obvious or ends within a larger project's limits.
6. If the W20-1 sign would follow within 2000' of a stationary W20-1 or G20-1 "ROAD WORK NEXT _____ MILES", use a C20(CA) sign for the first advance warning sign.
7. Place a C30(CA) sign every 2000' throughout length of lane closure.
8. One flashing arrow sign for each lane closed. The flashing arrow signs shall be Type I.
9. A minimum 1500' of sight distance shall be provided where possible for vehicles approaching the first flashing arrow sign. Lane closures shall not begin at top of crest vertical curve or on a horizontal curve.
10. All cones used for lane closures during the hours of darkness shall be fitted with retroreflective bands (or sleeves) as specified in the specifications.
11. Portable delineators, placed at one-half the spacing indicated for traffic cones may be used instead of cones for daytime closures only.
12. Unless otherwise specified in the special provisions, a minimum of 3 cones shall be placed transversely across each closed lane and shoulder at each location where a taper across a traffic lane ends and every 2000' as shown on the "Lane Closure" detail. Two Type II barricades may be used instead of the 3 cones. The transverse alignment of the cones or barricades on the closed shoulder may be shifted from the transverse alignment to provide access to the work.
13. Unless otherwise specified in the special provisions, the 2L tangent shown along lane lines shall be used between the L tapers required for each closed traffic lane.
14. Unless otherwise specified in the special provisions, the E5-1 or SC18(CA) and W4-1 signs shall be used as shown.
15. A W7-3aP "NEXT____ MILES" plaque must be used if theshoulder closure extends beyond the distance that can be perceived by road users.

LEGEND

- TRAFFIC CONE
- TRAFFIC CONE (OPTIONAL TAPER)
- TEMPORARY TRAFFIC CONTROL SIGN
- FLASHING ARROW SIGN (FAS)
- FAS SUPPORT OR TRAILER
- PORTABLE FLASHING BEACON

SIGN PANEL SIZE (Min)

A	48" x 48"
B	72" x 60"
C	36" x 30"

STATE OF CALIFORNIA
DEPARTMENT OF TRANSPORTATION

TRAFFIC CONTROL SYSTEM FOR LANE CLOSURE ON FREEWAYS AND EXPRESSWAYS

NO SCALE

RSP T10 DATED APRIL 19, 2013 SUPERSEDES STANDARD PLAN T10 DATED MAY 20, 2011 - PAGE 237 OF THE STANDARD PLANS BOOK DATED 2010.

REVISED STANDARD PLAN RSP T10

2010 REVISED STANDARD PLAN RSP T10

12-18-12

Dist	COUNTY	ROUTE	POST MILES TOTAL PROJECT	SHEET No.	TOTAL SHEETS
06	Fre	5	48.8/53.0	107	117

REGISTERED CIVIL ENGINEER

April 19, 2013
PLANS APPROVAL DATE

REGISTERED PROFESSIONAL ENGINEER Gurinderpal Bhullar No. C48815 Exp. 9-30-14 CIVIL STATE OF CALIFORNIA

THE STATE OF CALIFORNIA OR ITS OFFICERS OR AGENTS SHALL NOT BE RESPONSIBLE FOR THE ACCURACY OR COMPLETENESS OF SCANNED COPIES OF THIS PLAN SHEET.

TO ACCOMPANY PLANS DATED 6-23-14

TYPICAL RAMP CLOSURES

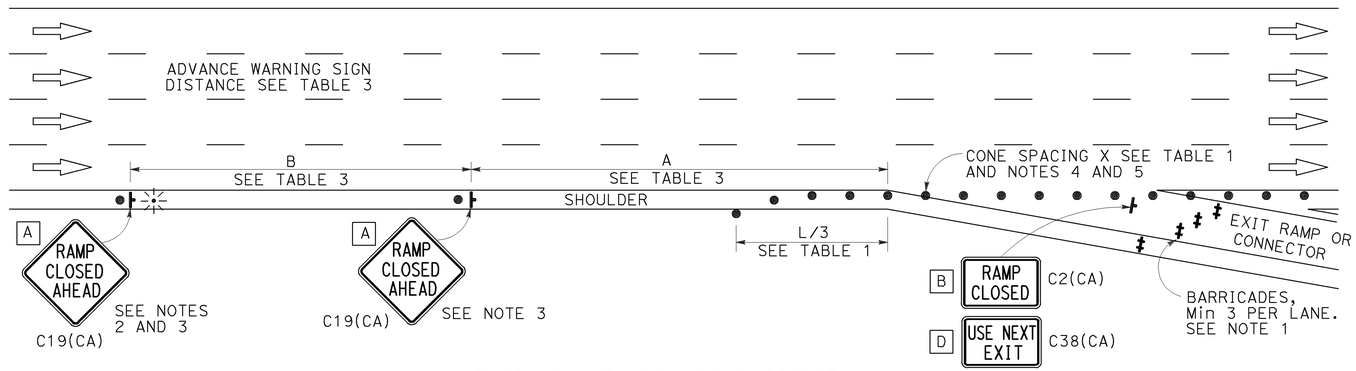

EXIT RAMP OR CONNECTOR

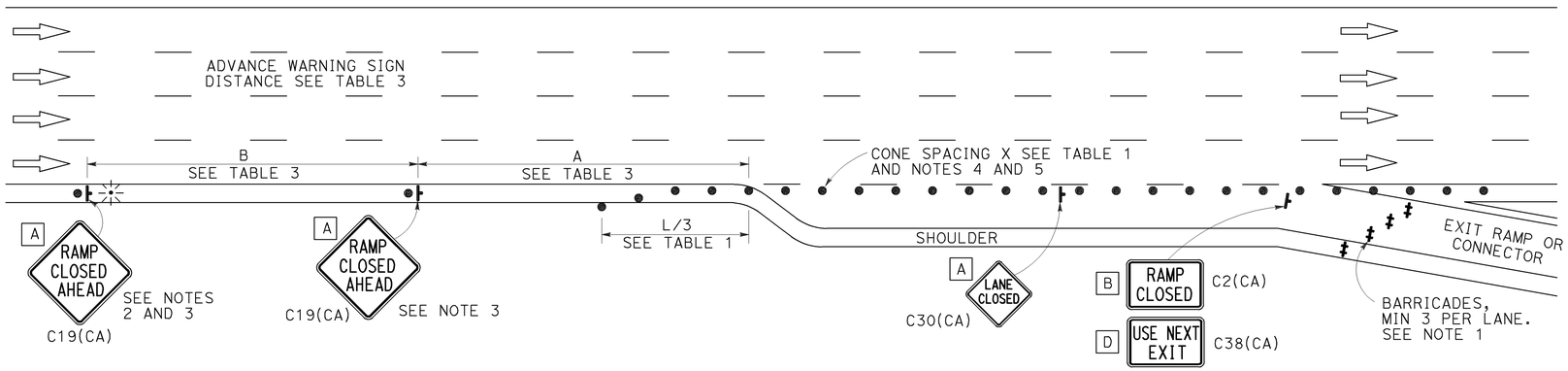

EXIT RAMP OR CONNECTOR WITH ADDITIONAL LANE

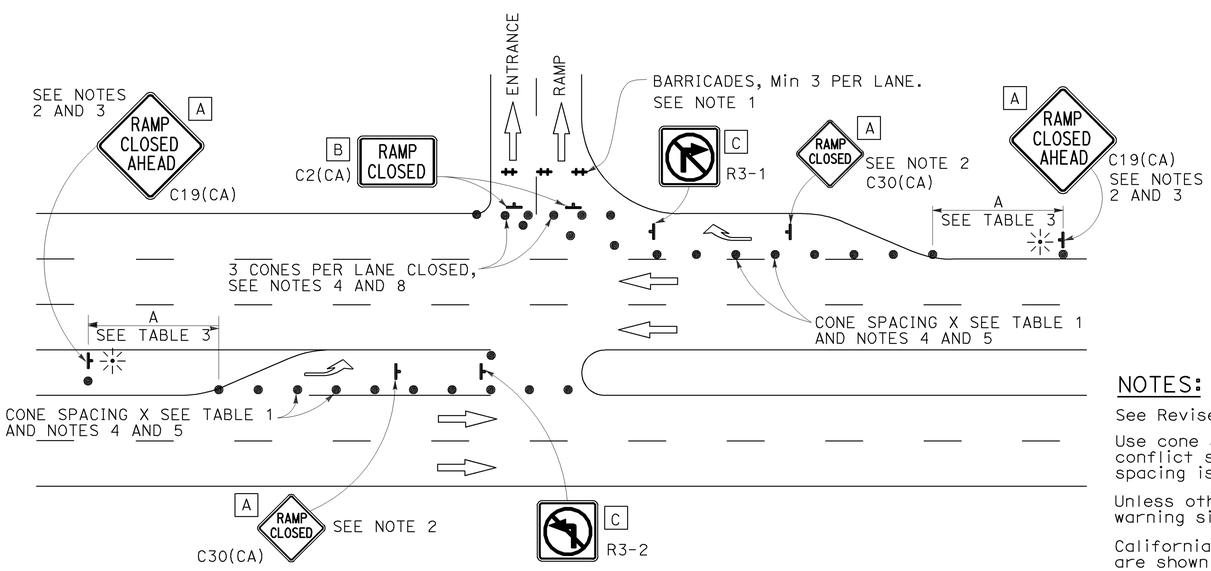

ENTRANCE RAMP WITH TURNING POCKETS

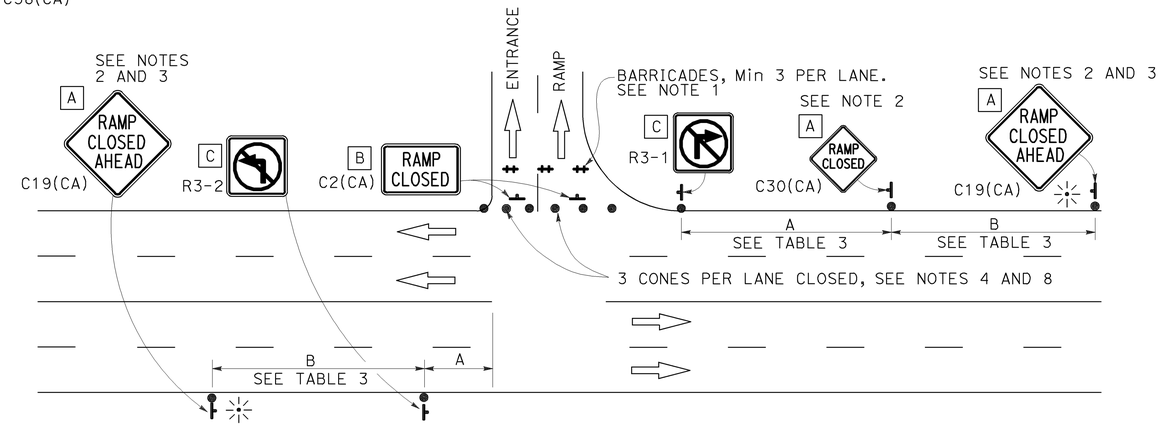

ENTRANCE RAMP WITHOUT TURNING POCKETS

SIGN PANEL SIZE (Min)

- A 48" × 48"
- B 48" × 30"
- C 36" × 36"
- D 48" × 36"

LEGEND

- TRAFFIC CONE
- TEMPORARY TRAFFIC CONTROL SIGN
- BARRICADES
- PORTABLE FLASHING BEACON

NOTES:

1. Barricades shall be Type I, II, or III for closures lasting one week or less and Type III for closures lasting longer than one week.
2. In addition to placing the C19(CA) "RAMP CLOSED AHEAD" and C30(CA) "RAMP CLOSED" signs, black on orange overlay plates with the word "CLOSED" may be mounted, as directed by the Engineer, on all guide signs that refer to the closed ramp. The letter size on the overlay shall be the same as the guide sign.
3. Each advance C19(CA) "RAMP CLOSED AHEAD" sign shall be equipped with at least two flags for daytime closure. Each flag shall be at least 16" x 16" in size and shall be orange or fluorescent red-orange in color. A flashing beacon shall be placed on top of the first C19(CA) sign during hours of darkness.
4. All cones used for ramp closures during the hours of darkness shall be fitted with retroreflective bands (or sleeves) as specified in the specifications.
5. Portable delineators, placed at one-half the spacing indicated for traffic cones, may be used instead of cones for daytime ramp closures only.
6. At least one person shall be assigned to provide full time maintenance of traffic control devices, unless otherwise directed by the Engineer.
7. The existing "EXIT" signs shall be covered during ramp closures.
8. A minimum of 3 cones shall be placed transversely across each closed lane and shoulder.

NOTES:

See Revised Standard Plan RSP T9 for tables.

Use cone spacing X for taper segment, Y for tangent segment or Z for conflict situations, as approriate, per Table 1, unless X, Y, or Z cone spacing is shown on this sheet.

Unless otherwise specified in the special provisions, all temporary warning signs shall have black legend on fluorescent orange background.

California codes are designated by (CA). Otherwise, Federal (MUTCD) codes are shown.

STATE OF CALIFORNIA
DEPARTMENT OF TRANSPORTATION

TRAFFIC CONTROL SYSTEM FOR RAMP CLOSURE

NO SCALE

RSP T14 DATED APRIL 19, 2013 SUPERSEDES STANDARD PLAN T14
DATED MAY 20, 2011 - PAGE 242 OF THE STANDARD PLANS BOOK DATED 2010.

REVISED STANDARD PLAN RSP T14

2010 REVISED STANDARD PLAN RSP T14

12-18-12

Dist	COUNTY	ROUTE	POST MILES TOTAL PROJECT	SHEET No.	TOTAL SHEETS
06	Fre	5	48.8/53.0	108	117

REGISTERED CIVIL ENGINEER

April 19, 2013
PLANS APPROVAL DATE

REGISTERED PROFESSIONAL ENGINEER Gurinderpal Bhullar No. C48815 Exp. 9-30-14 CIVIL STATE OF CALIFORNIA

THE STATE OF CALIFORNIA OR ITS OFFICERS OR AGENTS SHALL NOT BE RESPONSIBLE FOR THE ACCURACY OR COMPLETENESS OF SCANNED COPIES OF THIS PLAN SHEET.

TO ACCOMPANY PLANS DATED 6-23-14

2010 REVISED STANDARD PLAN RSP T15

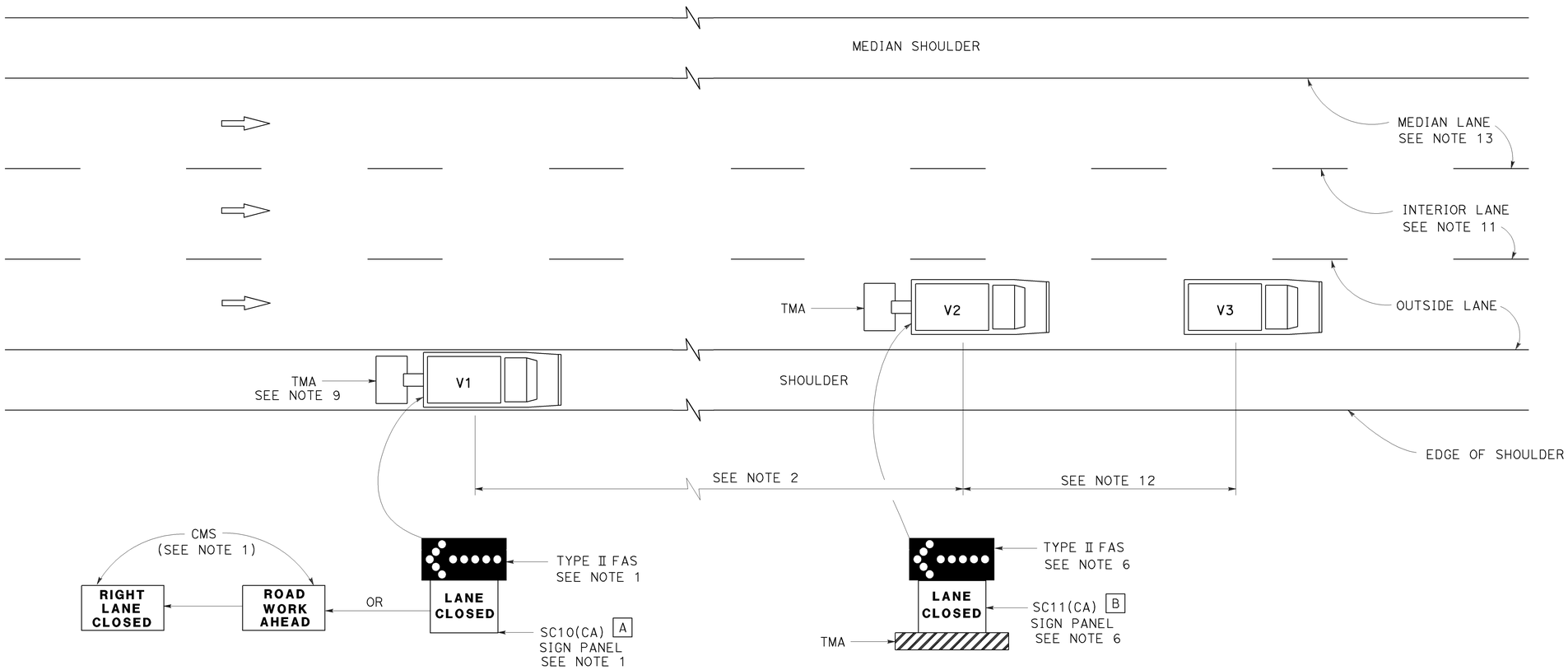

MOVING LANE CLOSURE ON MEDIAN LANE OR OUTSIDE LANE OF MULTILANE HIGHWAYS

SIGN PANEL SIZE (Min)

A 66" x 36"

B 54" x 42"

LEGEND

V1	SIGN VEHICLE
V2	SHADOW VEHICLE
V3	WORK/APPLICATION VEHICLE
⬅	FLASHING ARROW SIGN (FAS)
CMS	CHANGEABLE MESSAGE SIGN
TMA	TRUCK-MOUNTED ATTENUATOR

NOTES:

1. Either a changeable message sign or a SC10(CA) sign panel and a Type II flashing arrow sign shall be mounted on the rear of sign vehicle V1. The changeable message sign shall be sequenced to show the "ROAD WORK AHEAD" message first, followed by the "RIGHT LANE CLOSED" message. For median lane closure, the flashing arrow symbol shall be reversed with the arrowhead on the right and the changeable message sign shall show "LEFT LANE CLOSED".
2. If traffic queues develop, sign vehicle V1 should be positioned upstream from the end of queue. Sign vehicle V1 shall be positioned where highly visible when shoulders are not available.
3. A minimum sight distance of 1500′ should be provided in advance of sign vehicle V1.
4. Sign vehicle V1 should remain at the beginning of horizontal or vertical curves until the other vehicles (V2 and V3) are far enough beyond the curve to resume the minimum sight distance of 1500′.
5. Vehicle-mounted sign panels shall have Type III or above retroreflective sheeting, black on white, or black on fluorescent orange, with 6" minimum series D letters per Caltrans sign specifications.
6. Shadow vehicle V2 shall be equipped with a truck-mounted attenuator. The sign panel shown and a Type II flashing arrow sign shall be mounted on the rear of shadow vehicle V2. For median lane closure the flashing arrow sign symbol shall be displayed with the arrowhead on the right.
7. All vehicles used for lane closures shall be equipped with two-way radios, and the vehicle operators shall maintain communication during the work or application operation.
8. All vehicles shall be equipped with flashing or rotating amber lights.
9. If sign vehicle V1 encroaches into the traffic lane due to insufficient shoulder width, sign vehicle V1 shall be equipped with a truck-mounted attenuator. Sign vehicle V1 shall stay as close to the edge of shoulder as practicable.
10. Where workers would be on foot in the work area, a stationary type lane closure (Revised Standard Plan T10, T11, etc., as applicable) shall be used instead of this plan.
11. For moving lane closure on interior lane of multilane highways, use Revised Standard Plan T16.
12. The spacing between work vehicle(s) and the shadow vehicles, and between each shadow vehicle should be minimized to deter road users from driving in between.
13. When the work/application vehicle V3 occupies the median lane, sign vehicle V1 should drive in the median shoulder and indicate left lane closed ahead.

STATE OF CALIFORNIA
DEPARTMENT OF TRANSPORTATION

TRAFFIC CONTROL SYSTEM FOR MOVING LANE CLOSURE ON MULTILANE HIGHWAYS

NO SCALE

RSP T15 DATED APRIL 19, 2013 SUPERSEDES STANDARD PLAN T15
DATED MAY 20, 2011 - PAGE 243 OF THE STANDARD PLANS BOOK DATED 2010.

REVISED STANDARD PLAN RSP T15

12-18-12

Dist	COUNTY	ROUTE	POST MILES TOTAL PROJECT	SHEET No.	TOTAL SHEETS
06	Fre	5	48.8/53.0	109	117

Theresa Gabriel
REGISTERED ELECTRICAL ENGINEER

July 19, 2013
PLANS APPROVAL DATE

REGISTERED PROFESSIONAL ENGINEER
Theresa Aziz Gabriel
No. E15129
Exp. 6-30-14
ELECTRICAL
STATE OF CALIFORNIA

THE STATE OF CALIFORNIA OR ITS OFFICERS OR AGENTS SHALL NOT BE RESPONSIBLE FOR THE ACCURACY OR COMPLETENESS OF SCANNED COPIES OF THIS PLAN SHEET.

TO ACCOMPANY PLANS DATED 6-23-14

LEGEND:

AB	ABANDON. IF APPLIED TO CONDUIT, REMOVE CONDUCTORS
BC	INSTALL PULL BOX IN EXISTING CONDUIT RUN
BP	PEDESTRIAN BARRICADE, TYPE AS INDICATED ON PLAN
CB	INSTALL CONDUIT INTO EXISTING PULL BOX
CC	CONNECT NEW AND EXISTING CONDUIT. REMOVE EXISTING CONDUCTORS AND INSTALL CONDUCTORS AS INDICATED
CF	CONDUIT TO REMAIN FOR FUTURE USE. REMOVE CONDUCTORS. INSTALL PULL TAPE
DH	DETECTOR HANDHOLE
FA	FOUNDATION TO BE ABANDONED
IS	INSTALL SIGN ON SIGNAL MAST ARM
NS	NO SLIP BASE ON STANDARD
PEC	PHOTOELECTRIC CONTROL
PEU	PHOTOELECTRIC UNIT
RC	EQUIPMENT OR MATERIAL TO BE REMOVED AND BECOME THE PROPERTY OF THE CONTRACTOR
RE	REMOVE ELECTROLIER, FUSES AND BALLAST. TAPE ENDS OF CONDUCTORS
RL	RELOCATE EQUIPMENT
RR	REMOVE AND REUSE EQUIPMENT
RS	REMOVE AND SALVAGE EQUIPMENT
SC	SPLICE NEW TO EXISTING CONDUCTORS
SD	SERVICE DISCONNECT
TSP	TELEPHONE SERVICE POINT

ABBREVIATIONS

APS	ACCESSIBLE PEDESTRIAN SIGNAL
BBS	BATTERY BACKUP SYSTEM
BC	BOLT CIRCLE
BPB	BICYCLE PUSH BUTTON
C	CONDUIT
CB	CIRCUIT BREAKER
CCTV	CLOSED CIRCUIT TELEVISION
Ckt	CIRCUIT
CMS	CHANGEABLE MESSAGE SIGN
Ctid	CALTRANS IDENTIFICATION
Comm	COMMUNICATION
DLC	LOOP DETECTOR LEAD-IN CABLE
EMS	EXTINGUISHABLE MESSAGE SIGN
EVUC	EMERGENCY VEHICLE UNIT CABLE
EVUD	EMERGENCY VEHICLE UNIT DETECTOR
FB	FLASHING BEACON
FBCA	FLASHING BEACON CONTROL ASSEMBLY
FBS	FLASHING BEACON WITH SLIP BASE
FO	FIBER OPTIC
G	EQUIPMENT GROUNDING CONDUCTOR
GB	GROUND BUS
GFCI	GROUND FAULT CIRCUIT INTERRUPTER
HAR	HIGHWAY ADVISORY RADIO
Hex	HEXAGONAL
HPS	HIGH PRESSURE SODIUM
IISNS	INTERNALLY ILLUMINATED STREET NAME SIGN
ISL	INDUCTION SIGN LIGHTING
LED	LIGHT EMITTING DIODE
LMA	LUMINAIRE MAST ARM
LPS	LOW PRESSURE SODIUM
Ltg	LIGHTING
Lum	LUMINAIRE
M	METERED
MAT	MAST ARM MOUNTING TOP ATTACHMENT
MAS	MAST ARM MOUNTING SIDE ATTACHMENT
M/M	MULTIPLE TO MULTIPLE TRANSFORMER
Mtg	MOUNTING
MV	MERCURY VAPOR LIGHTING FIXTURE
MVDS	MICROWAVE VEHICLE DETECTION SYSTEM
N	NEUTRAL (GROUNDED CONDUCTOR)
NB	NEUTRAL BUS
NC	NORMALLY CLOSE
NO	NORMALLY OPEN
P	CIRCUIT BREAKER'S POLE
PB	PULL BOX
PBA	PUSH BUTTON ASSEMBLY
PEC	PHOTOELECTRIC CONTROL
Ped	PEDESTRIAN
PEU	PHOTOELECTRIC UNIT
PT	CONDUIT WITH PULL TAPE
RE	RELOCATED EQUIPMENT
RM	RAMP METERING
RWIS	ROADSIDE WEATHER INFORMATION SYSTEM
SB	SLIP BASE
SIC	SIGNAL INTERCONNECT CABLE
Sig	SIGNAL
SMA	SIGNAL MAST ARM
SNS	STREET NAME SIGN
SP	SERVICE POINT
TDC	TELEPHONE DEMARCATION CABINET
TMS	TRAFFIC MONITORING STATION
TOS	TRAFFIC OPERATIONS SYSTEM
Veh	VEHICLE
VIVDS	VIDEO IMAGE VEHICLE DETECTION SYSTEM
WIM	WEIGH-IN-MOTION
Xfmr	TRANSFORMER

SOFFIT AND WALL MOUNTED LUMINAIRES

PENDANT, 70 W HPS UNLESS OTHERWISE SPECIFIED

FLUSH, 70 W HPS UNLESS OTHERWISE SPECIFIED

WALL SURFACE, 70 W HPS UNLESS OTHERWISE SPECIFIED

EXISTING SOFFIT OR WALL LUMINAIRE TO REMAIN UNMODIFIED

EXISTING SOFFIT OR WALL LUMINAIRE TO BE MODIFIED AS SPECIFIED

NOTE:

Arrow indicates "street side" of luminaire.

MISCELLANEOUS ELECTROLIERS

NEW	EXISTING	
		LUMINAIRE ON WOOD POLE
		NON-STANDARD ELECTROLIER (SEE PROJECT NOTES OR PROJECT PLANS)
		CITY ELECTROLIER
		ELECTROLIER FOUNDATION (FUTURE INSTALLATION)

NOTES:

1. HPS luminaires shall be 310 W HPS when installed on Type 21, 21D, 30, 31 and 32 Standards, unless otherwise specified. HPS luminaires shall be 200 W when installed on other type standards or poles, unless otherwise specified.
2. LED luminaires shall be 235 W when installed on Type 21, 21D, 30, 31 and 32 Standards, unless otherwise specified. LED luminaires shall be 165 W when installed on other type standards or poles, unless otherwise specified.
3. Luminaires shall be the cutoff type, ANSI Type III medium cutoff lighting distribution, unless otherwise specified.

STANDARD ELECTROLIER

NEW	EXISTING	STANDARD TYPE
		15
		15D
		15 STRUCTURE
		15D STRUCTURE
		21
		21D
		21 STRUCTURE
		21D STRUCTURE
		30
		31
		32

COMMONLY USED SYMBOLS FOR UNITED STATES CUSTOMARY UNITS OF MEASUREMENT:

SYMBOL USED	DEFINITIONS
Ω	OHMS
min	MINUTE
s	SECOND
bps	BITS PER SECOND
Bps	BYTES PER SECOND
A	AMPERE
V	VOLT
V(dc)	VOLT (DIRECT CURRENT)
V(ac)	VOLT (ALTERNATING CURRENT)
FC	FOOT - CANDLE
W	WATTS
VA	VOLT-AMPERE
M	MEGA
k	KILO
m	MILLI
μ	MICRO
P	PICO
Hz	HERTZ

STATE OF CALIFORNIA
DEPARTMENT OF TRANSPORTATION

ELECTRICAL SYSTEMS (LEGEND AND ABBREVIATIONS)

NO SCALE

RSP ES-1A DATED JULY 19, 2013 SUPERSEDES STANDARD PLAN ES-1A DATED MAY 20, 2011 - PAGE 425 OF THE STANDARD PLANS BOOK DATED 2010.

REVISED STANDARD PLAN RSP ES-1A

2010 REVISED STANDARD PLAN RSP ES-1A

7-15-13

Dist	COUNTY	ROUTE	POST MILES TOTAL PROJECT	SHEET No.	TOTAL SHEETS
06	Fre	5	48.8/53.0	110	117

Theresa Gabriel
REGISTERED ELECTRICAL ENGINEER

July 19, 2013
PLANS APPROVAL DATE

REGISTERED PROFESSIONAL ENGINEER Theresa Aziz Gabriel No. E15129 Exp. 6-30-14 ELECTRICAL STATE OF CALIFORNIA

THE STATE OF CALIFORNIA OR ITS OFFICERS OR AGENTS SHALL NOT BE RESPONSIBLE FOR THE ACCURACY OR COMPLETENESS OF SCANNED COPIES OF THIS PLAN SHEET.

TO ACCOMPANY PLANS DATED 6-23-14

CONDUIT

NEW	EXISTING	
		LIGHTING CONDUIT, UNLESS OTHERWISE INDICATED OR NOTED
		TRAFFIC SIGNAL CONDUIT
C	c	COMMUNICATION CONDUIT
T	t	TELEPHONE CONDUIT
F	f	FIRE ALARM CONDUIT
FO	fo	FIBER OPTIC CONDUIT
		CONDUIT TERMINATION
R	r	CONDUIT RISER ATTACHED TO THE STRUCTURE OR SERVICE POLE

SERVICE EQUIPMENT

NEW	EXISTING	
OH	oh	OVERHEAD LINES
U	U	WOOD POLE, "U" INDICATES UTILITY OWNED
		POLE GUY WITH ANCHOR
		UTILITY TRANSFORMER - GROUND MOUNTED
III	III	SERVICE EQUIPMENT ENCLOSURE TYPE. DOOR INDICATES FRONT OF ENCLOSURE
T	t	TELEPHONE DEMARCATION CABINET

POLE-MOUNTED SERVICE DESIGNATION

TYPE H SERVICE, 28'-10" — TYPE OF INSTALLATION AND POLE HEIGHT ABOVE GRADE

FLASHING BEACON

NEW	EXISTING	
R	R	FLASHING BEACON (ONE VEHICLE SIGNAL HEAD WITH BACKPLATE AND VISOR) "R" INDICATES RED INDICATION, "Y" INDICATES YELLOW INDICATION
Y Y	Y Y	FLASHING BEACON WITH TYPE 15-FBS STANDARD AND A SIGN.
R R	R R	FLASHING BEACON WITH TYPES 9, 9A OR 9B SIGN UNLESS OTHERWISE SPECIFIED OR INDICATED

SIGNAL EQUIPMENT

NEW	EXISTING	
C	C	PEDESTRIAN SIGNAL HEAD "C" INDICATES COUNTDOWN PEDESTRIAN HEAD
		PUSH BUTTON ASSEMBLY POST
		PEDESTRIAN BARRICADE
		VEHICLE SIGNAL HEAD (WITH BACKPLATE AND 3-SECTIONS: RED, YELLOW AND GREEN)
		VEHICLE SIGNAL HEAD WITH ANGLE VISOR
PV	PV	MODIFICATIONS OF BASIC SYMBOL: "L" INDICATES ALL NON-ARROW SECTIONS LOUVERED "LG" INDICATES LOUVERED GREEN SECTION ONLY "PV" INDICATES ALL 12" SECTIONS PROGRAMMED VISIBILITY "8" INDICATES ALL 8" SECTIONS (ONLY WHEN SPECIFIED)
		VEHICLE SIGNAL HEAD CONSISTING OF RED, YELLOW AND GREEN LEFT ARROW SECTIONS
		VEHICLE SIGNAL HEAD CONSISTING OF RED AND YELLOW SECTIONS WITH AN UP GREEN ARROW SECTION
		VEHICLE SIGNAL HEAD (5 SECTION) CONSISTING OF RED, YELLOW AND GREEN SECTIONS WITH YELLOW AND GREEN RIGHT ARROW SECTIONS
		TYPE 15TS STANDARD WITH VEHICLE SIGNAL HEAD AND LUMINAIRE
		TYPE 21TS STANDARD WITH VEHICLE SIGNAL HEAD AND LUMINAIRE
		STANDARD WITH LUMINAIRE AND SIGNAL MAST ARMS AND ATTACHED VEHICLE SIGNAL HEADS
		TYPE 1 STANDARD WITH ATTACHED VEHICLE SIGNAL HEADS
		STANDARD WITH A SIGNAL MAST ARM, ATTACHED VEHICLE SIGNAL HEADS AND INTERNALLY ILLUMINATED STREET NAME SIGN
		CONTROLLER ASSEMBLY. DOOR INDICATES FRONT OF CABINET

SIGNAL EQUIPMENT Cont

NEW	EXISTING	
		GUARD POST
		TYPE 1 STANDARD WITH RAMP METERING SIGN
		OPTICAL DETECTOR FOR THE EMERGENCY VEHICLE DETECTION SYSTEM

NOTES:

1. All signal sections shall be 12" unless shown otherwise.
2. Signal heads shall be provided with backplates unless shown otherwise.

ILLUMINATED OVERHEAD SIGN

NEW	EXISTING	
		SINGLE POST, SINGLE ILLUMINATED SIGN, BALANCED BUTTERFLY
		SINGLE POST, DOUBLE ILLUMINATED SIGN, BALANCED BUTTERFLY
		SINGLE POST, SINGLE ILLUMINATED SIGN, FULL CANTILEVER
		DOUBLE POST, SINGLE ILLUMINATED SIGN
		SINGLE ILLUMINATED SIGN MOUNTED ON STRUCTURE
		DOUBLE POST, SINGLE ILLUMINATED SIGN WITH ELECTROLIER

STATE OF CALIFORNIA
DEPARTMENT OF TRANSPORTATION

ELECTRICAL SYSTEMS (LEGEND AND ABBREVIATIONS)

NO SCALE

RSP ES-1B DATED JULY 19, 2013 SUPERSEDES STANDARD PLAN ES-1B DATED MAY 20, 2011 - PAGE 426 OF THE STANDARD PLANS BOOK DATED 2010.

REVISED STANDARD PLAN RSP ES-1B

2010 REVISED STANDARD PLAN RSP ES-1B

7-15-13

Dist	COUNTY	ROUTE	POST MILES TOTAL PROJECT	SHEET No.	TOTAL SHEETS
06	Fre	5	48.8/53.0	111	117

Theresa Gabriel
REGISTERED ELECTRICAL ENGINEER

July 19, 2013
PLANS APPROVAL DATE

REGISTERED PROFESSIONAL ENGINEER
Theresa Aziz Gabriel
No. E15129
Exp. 6-30-14
ELECTRICAL
STATE OF CALIFORNIA

THE STATE OF CALIFORNIA OR ITS OFFICERS OR AGENTS SHALL NOT BE RESPONSIBLE FOR THE ACCURACY OR COMPLETENESS OF SCANNED COPIES OF THIS PLAN SHEET.

TO ACCOMPANY PLANS DATED 6-23-14

EQUIPMENT IDENTIFICATION

ILLUMINATED SIGN IDENTIFICATION NUMBER:

SIGN No. 12345

10 ISL SCI 1.0

- SIGN NUMBER - PLACE ON POST OR STRUCTURE
- TRANSFORMER RATING (kVA)
- LIGHTING CONTROL TYPE
- NUMBER AND TYPE OF FIXTURES

DO NOT PLACE ON STANDARD OR STRUCTURE

ELECTROLIER OR EQUIPMENT IDENTIFICATION NUMBER:

12345 - 15'-0"

- MAST ARM LENGTH, IF SHOWN. DO NOT PLACE ON STANDARD OR STRUCTURE
- EQUIPMENT NUMBER - PLACE ON STANDARD OR STRUCTURE. EXISTING EQUIPMENT NUMBERS ARE SHOWN IN PARENTHESIS

CONDUIT AND CONDUCTOR IDENTIFICATION:

1½"C, 2#10, 15#14, 2 DLC, 12P#18

- PAIR
- NUMBER AND SIZE OF CONDUCTORS AND CABLES
- SIZE OF CONDUIT IN INCHES

ø1, ø2, ø2P, etc.	TRAFFIC PHASE IDENTIFICATION FOR SIGNAL FACES, DETECTORS AND PHASE DIAGRAMS
1 2 3	LEGEND NUMBERS
A B C	EQUIPMENT, SIGNAL POLES, INSTALLATION OR ITEMS
1 2 3	CONDUIT RUN NUMBERS

SIGNAL AND LIGHTING STANDARD (TYPICAL DESIGNATION):

19A - 3 - 100

- WIND VELOCITY = 100 mph
- CASE 3 ARM LOADING
- STANDARD TYPE
- STANDARD PLAN SHEET NUMBER
- DETAIL, NUMBER, SECTION, TYPE OR ELEVATION

MISCELLANEOUS EQUIPMENT

NEW	EXISTING	
CMS	cms	CHANGEABLE MESSAGE SIGN
		CLOSED CIRCUIT TELEVISION CAMERA
		HIGHWAY ADVISORY RADIO POLE AND ANTENNA
EMS	ems	EXTINGUISHABLE MESSAGE SIGN
M V	m v	DETECTION DEVICE M = MICROWAVE SENSOR V = VIDEO IMAGE SENSOR

WIRING DIAGRAM LEGEND

- EXTERNAL CONDUCTOR
- CONDUCTOR OR BUS
- TIE POINT
- CONTACTOR COIL
- CONTACTOR, NO CONTACT
- TERMINAL BLOCKS
- CONTACTOR, NC CONTACT
- ENCLOSURE BOND
- GROUNDING ELECTRODE
- CIRCUIT BREAKER
- RECEPTACLE

PULL BOXES

NEW	EXISTING	
		PULL BOX, No. 5 UNLESS OTHERWISE INDICATED OR NOTED
3	9A(21)	PULL BOX, ADDITIONAL DESIGNATIONS OR DESCRIPTIONS

3 No. 3½ PULL BOX
5 No. 5 PULL BOX
6 No. 6 PULL BOX
7 No. 7 (CEILING PULL BOX)
8 No. 8 (PENDANT SOFFIT PULL BOX)
9 No. 9 PULL BOX
9A No. 9A PULL BOX

(C) COMMUNICATIONS PULL BOX
(E) PULL BOX WITH EXTENSION
(S) SPRINKLER CONTROL PULL BOX
(21) ANCHOR BOLTS AND CONDUIT FOR FUTURE INSTALLATION OF TYPE 21 STANDARD
(T) TRAFFIC PULL BOX

VEHICLE DETECTORS

5 J 9 U

- VEHICLE DETECTOR DESIGNATION
- U = UPPER
  L = LOWER
- SLOT NUMBER IN INPUT FILE
- INPUT FILE (I OR J)
- PHASE

NEW	EXISTING	
		TYPE A DETECTOR LOOP. OUTLINE OF SAWCUT SHOWN
		TYPE B DETECTOR LOOP. OUTLINE OF SAWCUT SHOWN
		TYPE C DETECTOR LOOP. OUTLINE OF SAWCUT SHOWN
		TYPE D DETECTOR LOOP. OUTLINE OF SAWCUT SHOWN
		TYPE E DETECTOR LOOP. OUTLINE OF SAWCUT SHOWN
		TYPE Q DETECTOR LOOP. OUTLINE OF SAWCUT SHOWN
		MAGNETIC DETECTOR
DH	dh	DETECTOR HANDHOLE
		MICROWAVE OR VIDEO DETECTION ZONE

STATE OF CALIFORNIA
DEPARTMENT OF TRANSPORTATION

ELECTRICAL SYSTEMS (LEGEND AND ABBREVIATIONS)

NO SCALE

RSP ES-1C DATED JULY 19, 2013 SUPERSEDES STANDARD PLAN ES-1C DATED MAY 20, 2011 - PAGE 427 OF THE STANDARD PLANS BOOK DATED 2010.

REVISED STANDARD PLAN RSP ES-1C

2010 REVISED STANDARD PLAN RSP ES-1C

7-11-13

Dist	COUNTY	ROUTE	POST MILES TOTAL PROJECT	SHEET No.	TOTAL SHEETS
06	Fre	5	48.8/53.0	112	117

Theresa Gabriel
REGISTERED ELECTRICAL ENGINEER

July 19, 2013
PLANS APPROVAL DATE

REGISTERED PROFESSIONAL ENGINEER
Theresa Aziz Gabriel
No. E15129
Exp. 6-30-14
ELECTRICAL
STATE OF CALIFORNIA

THE STATE OF CALIFORNIA OR ITS OFFICERS OR AGENTS SHALL NOT BE RESPONSIBLE FOR THE ACCURACY OR COMPLETENESS OF SCANNED COPIES OF THIS PLAN SHEET.

TO ACCOMPANY PLANS DATED 6-23-14

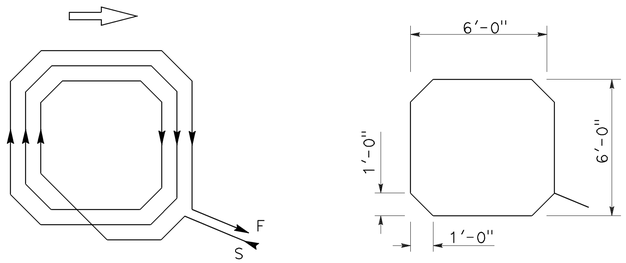

WINDING DETAIL SAWCUT DETAIL

TYPE A LOOP DETECTOR CONFIGURATION

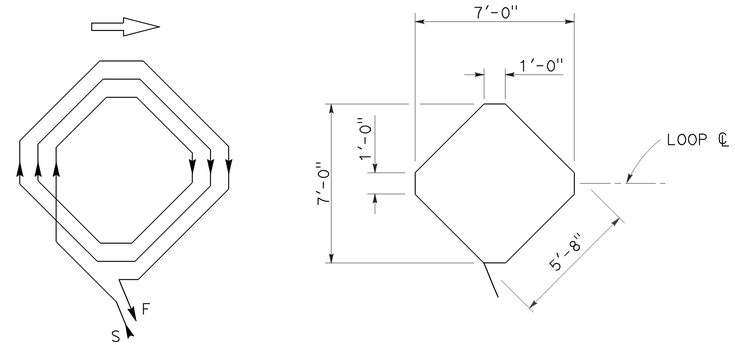

WINDING DETAIL SAWCUT DETAIL

TYPE B LOOP DETECTOR CONFIGURATION

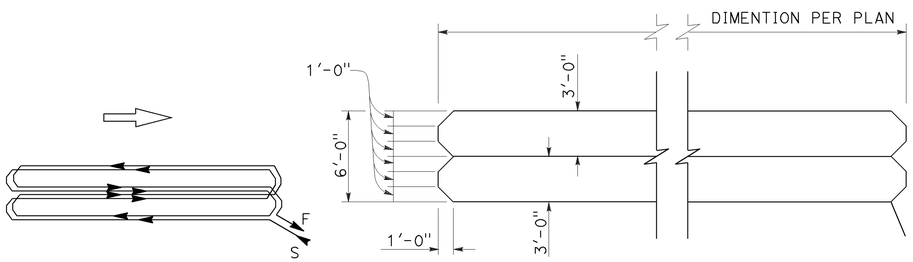

WINDING DETAIL SAWCUT DETAIL

TYPE C LOOP DETECTOR CONFIGURATION

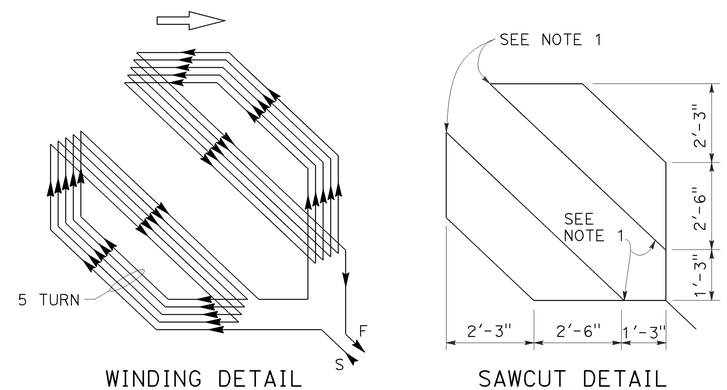

WINDING DETAIL SAWCUT DETAIL

TYPE D LOOP DETECTOR CONFIGURATION

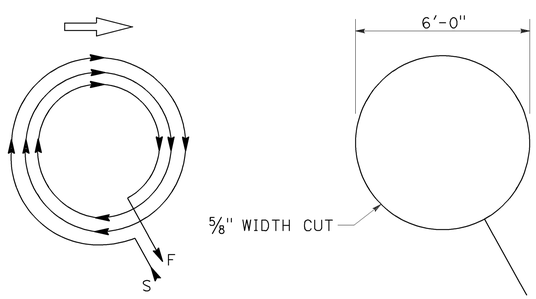

WINDING DETAIL SAWCUT DETAIL

TYPE E LOOP DETECTOR CONFIGURATION

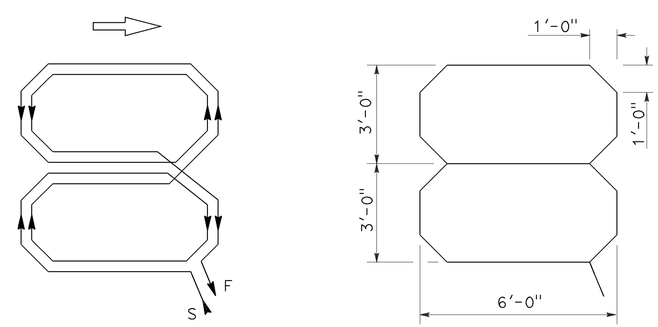

WINDING DETAIL SAWCUT DETAIL

TYPE Q LOOP DETECTOR CONFIGURATION

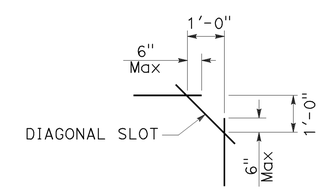

PLAN VIEW OF DIAGONAL SLOT AT CORNERS

NOTES:

1. Round corners of acute angle sawcuts to prevent damage to conductors.
2. Typical distance separating loops from edge to edge is 10' for Type A, B, D and E installation in single lane.

STATE OF CALIFORNIA
DEPARTMENT OF TRANSPORTATION

ELECTRICAL SYSTEMS (DETECTORS)

NO SCALE

RSP ES-5B DATED JULY 19, 2013 SUPERSEDES STANDARD PLAN ES-5B DATED MAY 20, 2011 - PAGE 449 OF THE STANDARD PLANS BOOK DATED 2010.

REVISED STANDARD PLAN RSP ES-5B

2010 REVISED STANDARD PLAN RSP ES-5B

7-9-13

Dist	COUNTY	ROUTE	POST MILES TOTAL PROJECT	SHEET No.	TOTAL SHEETS
06	Fre	5	48.8/53.0	113	117

Theresa Gabriel
REGISTERED ELECTRICAL ENGINEER

July 19, 2013
PLANS APPROVAL DATE

REGISTERED PROFESSIONAL ENGINEER
Theresa Aziz Gabriel
No. E15129
Exp. 6-30-14
ELECTRICAL
STATE OF CALIFORNIA

THE STATE OF CALIFORNIA OR ITS OFFICERS OR AGENTS SHALL NOT BE RESPONSIBLE FOR THE ACCURACY OR COMPLETENESS OF SCANNED COPIES OF THIS PLAN SHEET.

TO ACCOMPANY PLANS DATED 6-23-14

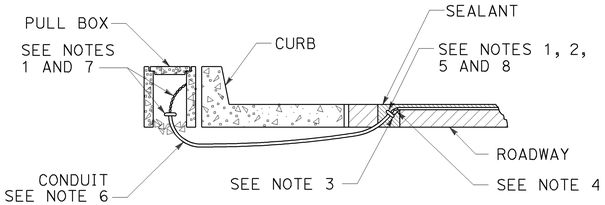

TYPE A
CURB TERMINATION DETAIL

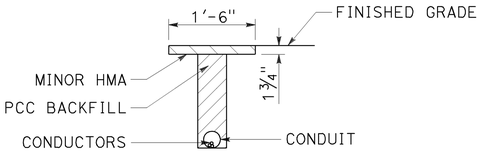

"T" TRENCH
DETAIL T

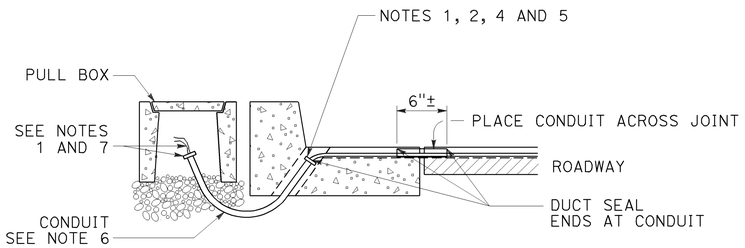

CROSS SECTION

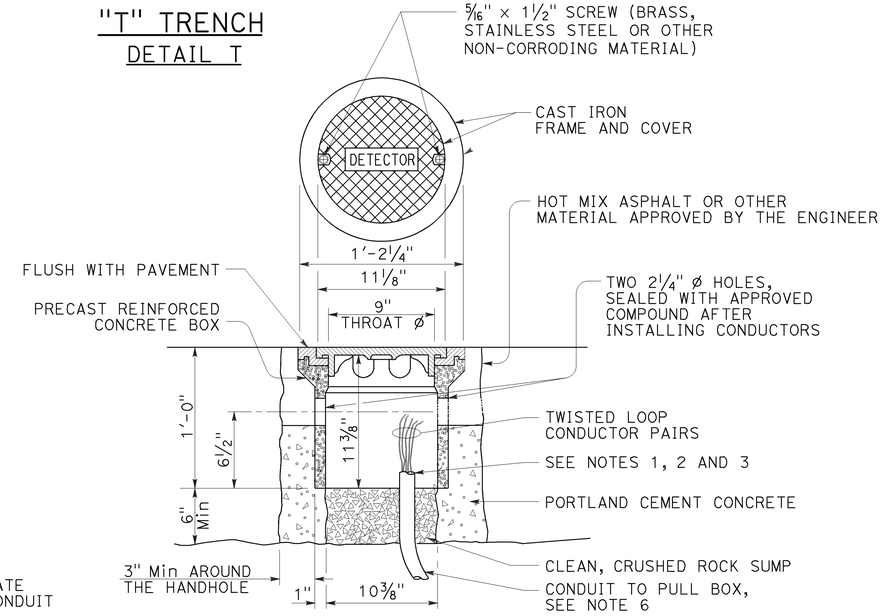

DETECTOR HANDHOLE DETAIL

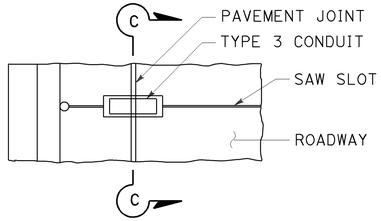

PLAN VIEW

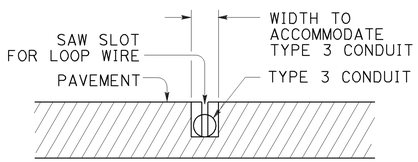

SECTION C-C

TYPE B
CURB TERMINATION DETAIL

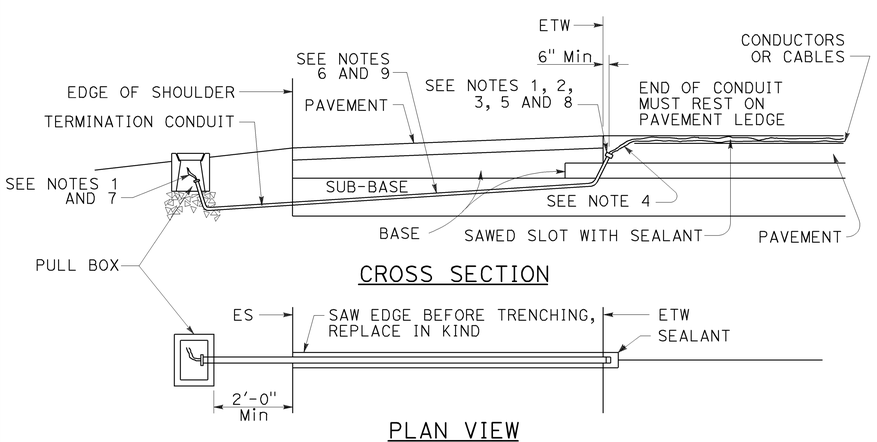

CROSS SECTION

PLAN VIEW

SHOULDER TERMINATION DETAILS

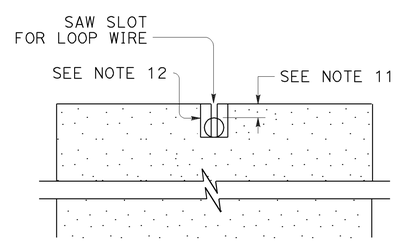

SECTION A-A

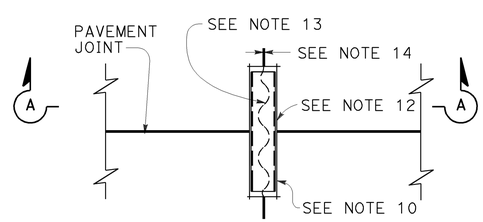

PLAN VIEW

TYPICAL LOOP LEAD-IN DETAIL
AT PAVEMENT JOINT

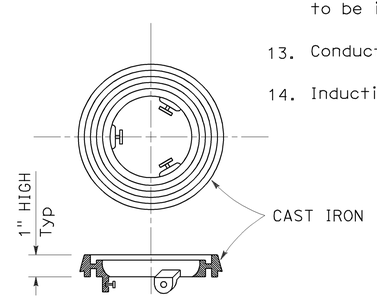

LOCKING GRADE RING

NOTES:

1. Bushing shall be used at end of conduit.
2. Tape detector conductors or cables 3" each side of bushings.
3. Install duct seal compound to each end of termination conduit before installing sealant.
4. Round all sharp edges where detector conductors or cables have to pass.
5. End of conduit shall be 3⅛" below roadway surface.
6.

Conduit size	Loop conductors
1"C minimum	1 to 2 pairs
1½"C minimum	3 to 4 pairs
2"C minimum	5 or more pairs

7. Splice detector conductors or cables to detector lead-in-cable.
8. Location of detector handhole when shown on plans.
9. When the shoulder and traveled way are paved with the same material and there is no joint between them, the conduit shall extend only 2'-0" into the shoulder pavement.
10. ¾"C, Type 3 conduit 6" long minimum, plug both ends with duct compound to keep out sealant.
11. ½" Minimum between top of conduit and pavement surface.
12. Sawcut shall not exceed 1" in width and ⅛" longer than conduit to be installed.
13. Conductors with ½" minimum slack inside conduit.
14. Inductive loop detector saw slot.

STATE OF CALIFORNIA
DEPARTMENT OF TRANSPORTATION

ELECTRICAL SYSTEMS (CURB TERMINATION AND HANDHOLE)

NO SCALE

RSP ES-5D DATED JULY 19, 2013 SUPERSEDES STANDARD PLAN ES-5D
DATED MAY 20, 2011 - PAGE 451 OF THE STANDARD PLANS BOOK DATED 2010.

REVISED STANDARD PLAN RSP ES-5D

2010 REVISED STANDARD PLAN RSP ES-5D

7-9-13

DIST	COUNTY	ROUTE	POST MILES TOTAL PROJECT	SHEET NO.	TOTAL SHEETS
06	Fre	5	48.8/53.0	114	117

Theresa Gabriel
REGISTERED ELECTRICAL ENGINEER

July 19, 2013
PLANS APPROVAL DATE

REGISTERED PROFESSIONAL ENGINEER
Theresa Aziz Gabriel
No. E15129
Exp. 6-30-14
ELECTRICAL
STATE OF CALIFORNIA

THE STATE OF CALIFORNIA OR ITS OFFICERS OR AGENTS SHALL NOT BE RESPONSIBLE FOR THE ACCURACY OR COMPLETENESS OF SCANNED COPIES OF THIS PLAN SHEET.

TO ACCOMPANY PLANS DATED 6-23-14

2010 REVISED STANDARD PLAN RSP ES-8B

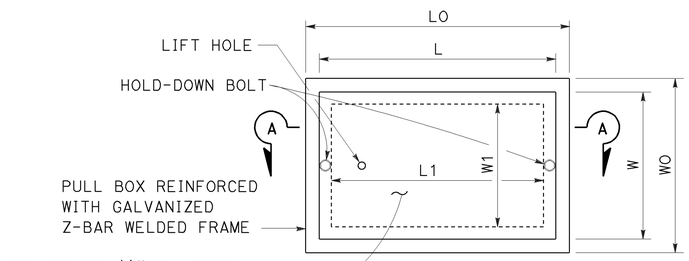

TOP VIEW

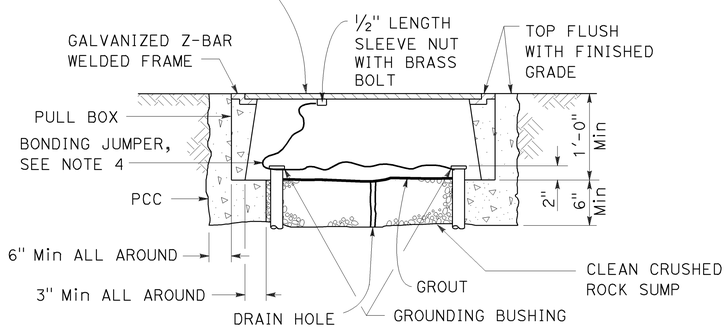

SECTION A-A

No. 3½(T), No. 5(T) AND No. 6(T) TRAFFIC PULL BOX

NOTES:

1. Traffic pull box shall be provided with steel cover and special concrete footing. Steel cover shall have embossed non-skid pattern.
2. Steel reinforcing shall be as regularly used in the standard products of the respective manufacturer.
3. Pull box covers shall be marked as follows: "SERVICE" Service circuits between service point and service disconnect; "SPRINKLER-CONTROL" Sprinkler control circuits, 50 V or less; "CALTRANS" On all pull boxes, except pull boxes marked "SPRINKLER-CONTROL"; and "TELEPHONE" Telephone service.
   - A) No. 3½(T) pull box.
     - 1) "SIGNAL" - Traffic signal circuits with or without lighting or sign lighting circuits.
     - 2) "LIGHTING" - Lighting or sign lighting circuits where voltage is under 600 V.
   - B) No. 5(T) or 6(T) pull box.
     - 1) "TRAFFIC SIGNAL" - Traffic signal circuits with or without lighting or sign lighting circuits.
     - 2) "LIGHTING" - Lighting or sign lighting circuits where voltage is under 600 V.
     - 3) "LIGHTING-HIGH VOLTAGE" - Lighting or sign lighting circuits where voltage is above 600 V.
     - 4) "IRRIGATION" - Circuits to irrigation controller 120 V or more.
     - 5) "RAMP METER" - Ramp meter circuits.
     - 6) "COUNT STATION" - Count or speed monitor circuits.
     - 7) "COMMUNICATION" - Communication circuits.
     - 8) "TOS COMMUNICATIONS" - TOS communications line.
     - 9) "TOS POWER" - TOS power.
     - 10) "TDC POWER" - Telephone demarcation cabinet power.
     - 11) "CCTV" - Closed circuit television circuits.
     - 12) "TMS" - Traffic monitoring station circuits.
     - 13) "CMS" - Changeable message sign circuits.
     - 14) "HAR" - Highway advisory radio circuits.
     - 15) "BOOSTER PUMP" - Booster pump circuit.
4. Bonding jumper for metal covers shall be 3' long, minimum.
5. The nominal dimensions of the opening in which the cover sets shall be the same as the cover dimensions except the length and width dimensions shall be ⅛" greater.
6. Covers and boxes shall be interchangeable with California standard male and female gages. When interchanged with a standard male or female gage, the top surfaces shall be flush within ⅛".

DIMENSION TABLE

PULL BOX	PULL BOX						COVER				
	MINIMUM * THICKNESS	MINIMUM DEPTH BOX AND EXTENSION	WO	LO	L1	W1	L **	W **	R	EDGE THICKNESS	EDGE TAPER
No. 3½(T)	1½"	1'-0"	1'-5"± 1"	1'-8⅞"±	1'-2½"±	10⅝"± 1"	1'-8"±	1'-1¾"±	0"	½"	NONE
No. 5(T)	1¾"	1'-0"	1'-11½"± 1"	2'-5½"±	1'-7"±	1'-1"± 1"	2'-3"±	1'-4"±	0"	½"	NONE
No. 6(T)	2"	1'-0"	2'-6"± 1"	2'-11½"±	1'-11½"±	1'-5"± 1"	2'-9"±	1'-8"±	0"	½"	NONE

* EXCLUDING CONDUIT WEB ** TOP DIMENSION

STATE OF CALIFORNIA
DEPARTMENT OF TRANSPORTATION

ELECTRICAL SYSTEMS (TRAFFIC PULL BOX)

NO SCALE

RSP ES-8B DATED JULY 19, 2013 SUPERSEDES RSP ES-8B DATED JANUARY 20, 2012 THAT SUPPLEMENTS THE STANDARD PLANS BOOK DATED 2010.

REVISED STANDARD PLAN RSP ES-8B

7-15-13

Dist	COUNTY	ROUTE	POST MILES TOTAL PROJECT	SHEET No.	TOTAL SHEETS
06	Fre	5	48.8/53.0	115	117

Theresa Gabriel
REGISTERED ELECTRICAL ENGINEER

July 19, 2013
PLANS APPROVAL DATE

REGISTERED PROFESSIONAL ENGINEER
Theresa Aziz Gabriel
No. E15129
Exp. 6-30-14
ELECTRICAL
STATE OF CALIFORNIA

THE STATE OF CALIFORNIA OR ITS OFFICERS OR AGENTS SHALL NOT BE RESPONSIBLE FOR THE ACCURACY OR COMPLETENESS OF SCANNED COPIES OF THIS PLAN SHEET.

TO ACCOMPANY PLANS DATED 6-23-14

ISOFOOTCANDLE CURVE - MINIMUM

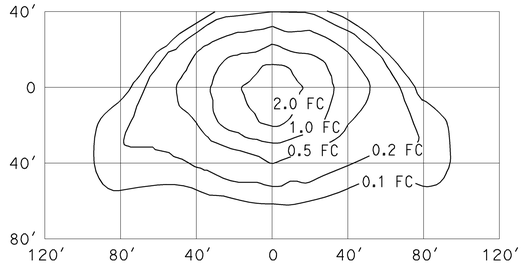

TYPE III MEDIUM CUTOFF

Cutoff Luminaire
34′ Mounting Height
Lamp operated at 22,000 lm
200-W high pressure sodium lamp
ANSI Designation S66

ISOFOOTCANDLE CURVE - MINIMUM

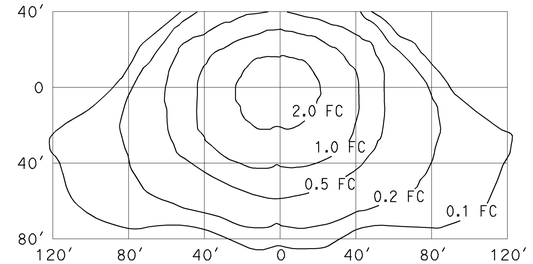

TYPE III MEDIUM CUTOFF

Cutoff Luminaire
40′ Mounting Height
Lamp operated at 37,000 lm
310-W high pressure sodium lamp
ANSI Designation S67

ISOFOOTCANDLE CURVE - MINIMUM

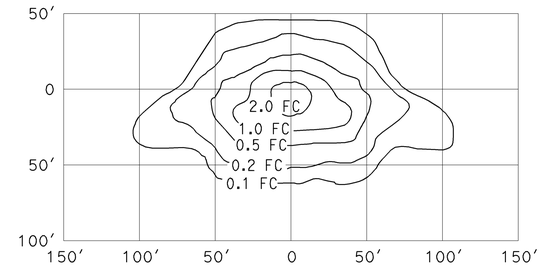

TYPE III MEDIUM CUTOFF

Cutoff Luminaire
30′ Mounting Height
Lamp operated at 16,000 lm
150-W high pressure sodium lamp
ANSI Designation S55

ISOFOOTCANDLE CURVE - MINIMUM

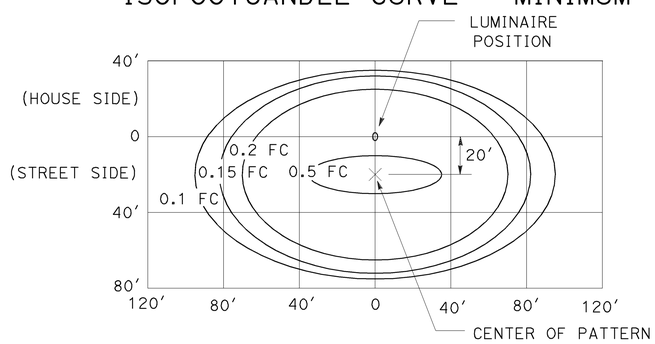

LED LUMINAIRE ROADWAY 1

165-W at 34′ Mounting Height

ISOFOOTCANDLE CURVE - MINIMUM

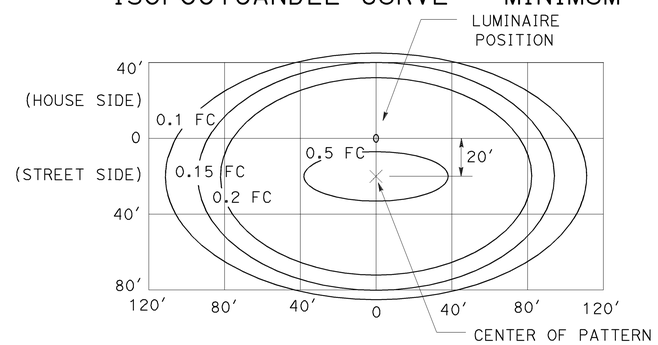

LED LUMINAIRE ROADWAY 2

235-W at 40′ Mounting Height

ISOFOOTCANDLE CURVE - MINIMUM

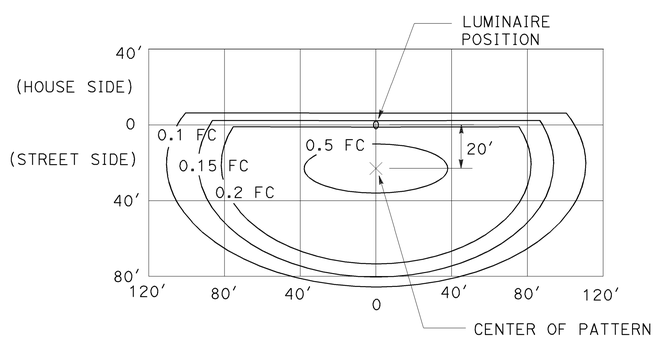

LED LUMINAIRE ROADWAY 3

235-W at 40′ Mounting Height
with back side control

ISOFOOTCANDLE CURVE - MINIMUM

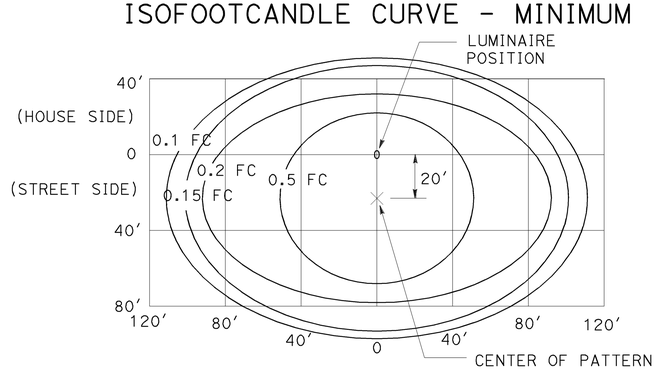

LED LUMINAIRE ROADWAY 4

300-W at 40′ Mounting Height

ISOFOOTCANDLE CURVE - MINIMUM

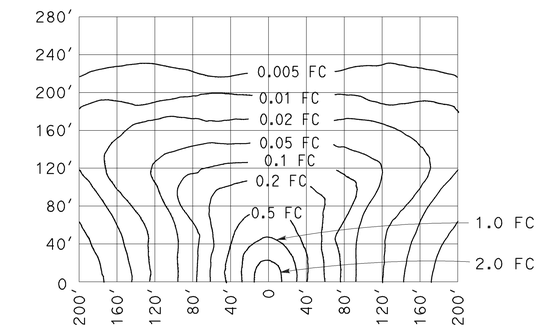

LOW PRESSURE SODIUM LUMINAIRE

40′ Mounting Height
Lamp operated at 33,000 lm
180-W low pressure sodium lamp

STATE OF CALIFORNIA
DEPARTMENT OF TRANSPORTATION

ELECTRICAL SYSTEMS (ISOFOOTCANDLE DIAGRAMS)

NO SCALE

RSP ES-10A DATED JULY 19, 2013 SUPERSEDES RSP ES-10A DATED JULY 20, 2012 THAT SUPPLEMENTS THE STANDARD PLANS BOOK DATED 2010.

REVISED STANDARD PLAN RSP ES-10A

2010 REVISED STANDARD PLAN RSP ES-10A

DIST	COUNTY	ROUTE	POST MILES TOTAL PROJECT	SHEET No.	TOTAL SHEETS
06	Fre	5	48.8/53.0	116	117

Gloria Reyes-Gutierrez 4-23-14
REGISTERED CIVIL ENGINEER DATE

6-23-14
PLANS APPROVAL DATE

REGISTERED PROFESSIONAL ENGINEER
GLORIA REYES-GUTIERREZ
No. C 57583
Exp. 12-31-15
CIVIL
STATE OF CALIFORNIA

The State of California or its officers or agents shall not be responsible for the accuracy or completeness of scanned copies of this plan sheet.

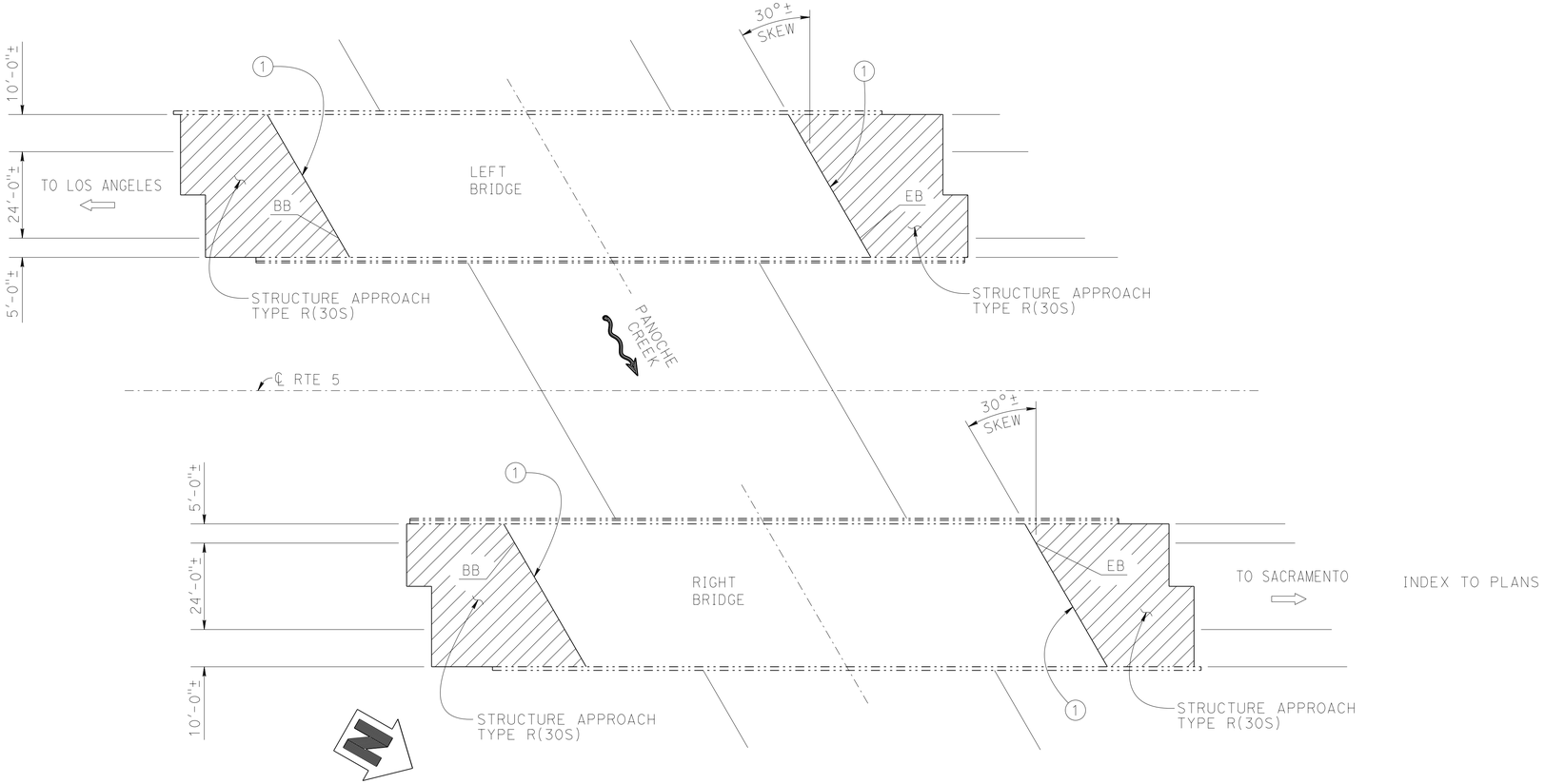

PLAN

1" = 20'-0"

INDEX TO PLANS

INDEX TO PLANS

SHEET NO.	SHEET TITLE
1	GENERAL PLAN
2	STRUCTURE APPROACH TYPE R(30S)

STANDARD PLANS DATED 2010

A10A	ABBREVIATIONS (SHEET 1 OF 2)
RSP A10B	ABBREVIATIONS (SHEET 2 OF 2)
B6-21	JOINT SEALS (MAXIMUM MOVEMENT RATING = 2")

NOTES:

(1) - Remove & replace existing joint seals at abutments. Use Type A Joint Seal, MR=1". (B6-21)

▨ - Indicates existing approach slab to be removed.

——— - Indicates new approach slab.

QUANTITIES

AGGREGATE BASE (APPROACH SLAB)	20	CY
STRUCTURAL CONCRETE, APPROACH SLAB (TYPE R)	202	CY
JOINT SEAL (MR 1")	184	LF

DESIGN	BY R. WASHINGTON	CHECKED G. REYES-GUTIERREZ			
DETAILS	BY D. PATO	CHECKED G. REYES-GUTIERREZ	LAYOUT	BY D. PATO	CHECKED G. REYES-GUTIERREZ
QUANTITIES	BY R. WASHINGTON	CHECKED G. REYES-GUTIERREZ	SPECIFICATIONS	BY J. RAMIREZ	PLANS AND SPECS COMPARED X

GARY BLAKESLEY
DESIGN ENGINEER

STATE OF CALIFORNIA
DEPARTMENT OF TRANSPORTATION

DIVISION OF ENGINEERING SERVICES
STRUCTURE DESIGN
DESIGN BRANCH 6

BRIDGE NO. 42-0249R/L
POST MILE 49.99

PANOCHE CREEK BRIDGE
GENERAL PLAN

ORIGINAL SCALE IN INCHES FOR REDUCED PLANS 0 1 2 3

UNIT: 3591
PROJECT NUMBER & PHASE: 0613000050-1
CONTRACT NO.: 06-002704

DISREGARD PRINTS BEARING EARLIER REVISION DATES

REVISION DATES				SHEET	OF
11-13-13	1-13-14	2-20-14	4-23-14	1	2

USERNAME => s113541 DATE PLOTTED => 01-JUL-2014 TIME PLOTTED => 10:45

STRUCTURES DESIGN GENERAL PLAN SHEET (ENGLISH) (REV.09-01-10)

FILE => 42-0249-a-gp1.dgn

DIST	COUNTY	ROUTE	POST MILES TOTAL PROJECT	SHEET No.	TOTAL SHEETS
06	Fre	5	48.8/53.0	117	117

Gloria Reyes-Gutierrez 4-23-14
REGISTERED CIVIL ENGINEER DATE

6-23-14
PLANS APPROVAL DATE

REGISTERED PROFESSIONAL ENGINEER GLORIA REYES-GUTIERREZ No. C 57583 Exp. 12-31-15 CIVIL STATE OF CALIFORNIA

The State of California or its officers or agents shall not be responsible for the accuracy or completeness of electronic copies of this plan sheet.

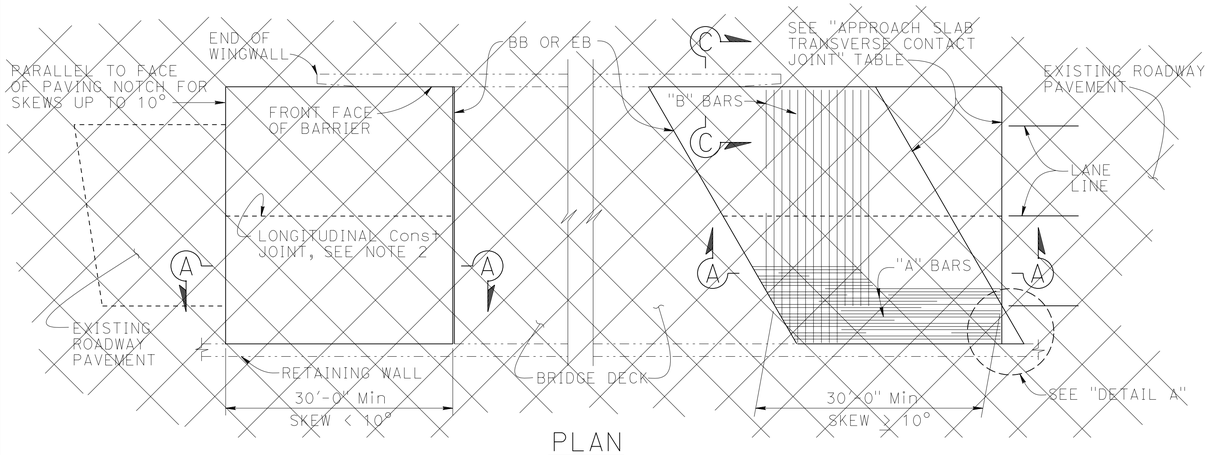

PLAN
1" = 10'

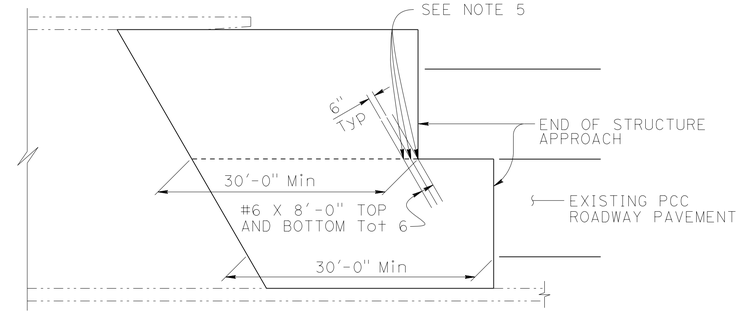

STRUCTURE APPROACH - END STAGGER DETAIL
NO SCALE

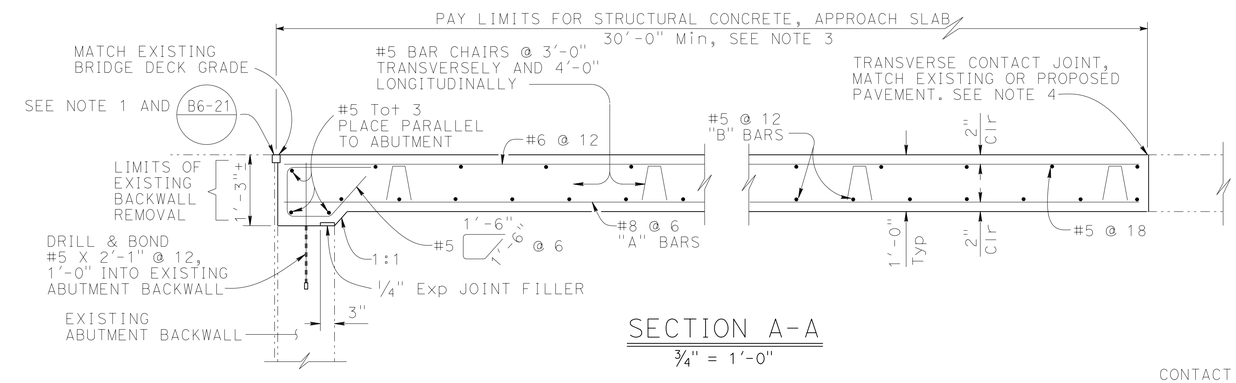

SECTION A-A
3/4" = 1'-0"

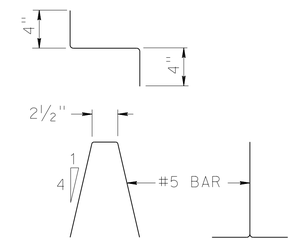

BAR CHAIR DETAIL
1 1/2" = 1'-0"

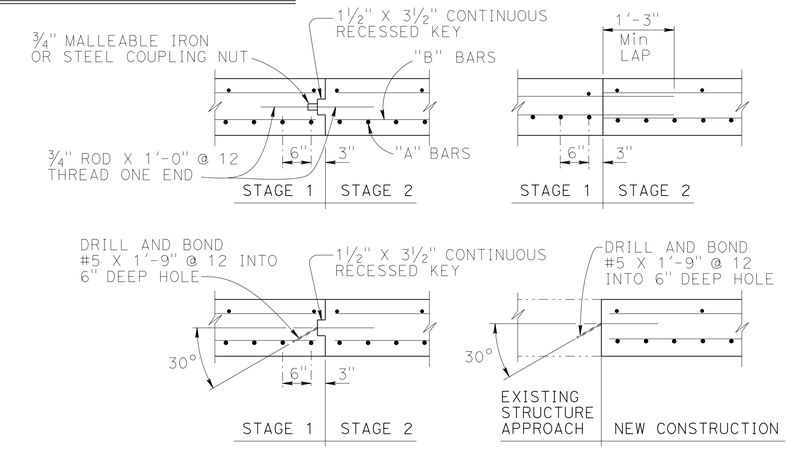

OPTIONAL LANE CLOSURE OR STAGE CONSTRUCTION

LONGITUDINAL CONSTRUCTION JOINT ALTERNATIVES
3/4" = 1'-0"

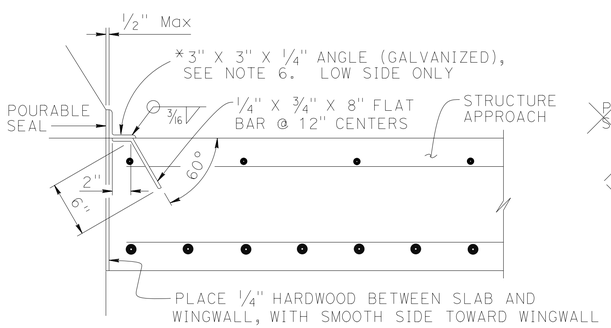

*(TO BE USED WITH CONCRETE BARRIER WITH VERTICAL FACE)

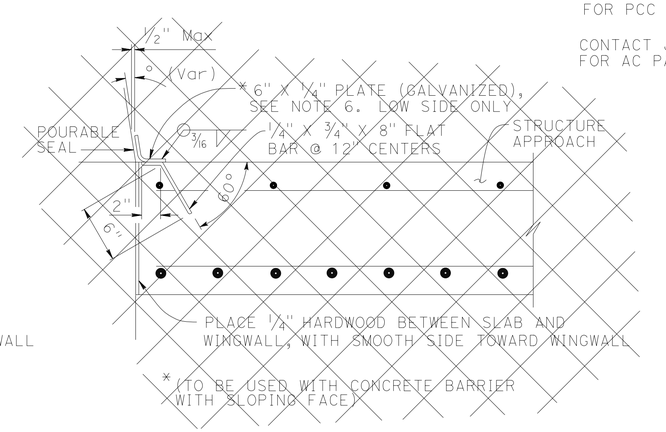

*(TO BE USED WITH CONCRETE BARRIER WITH SLOPING FACE)

DETAIL B
1 1/2" = 1'-0"

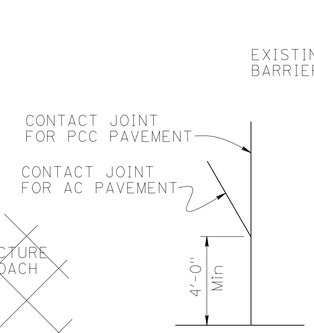

DETAIL A
No Scale

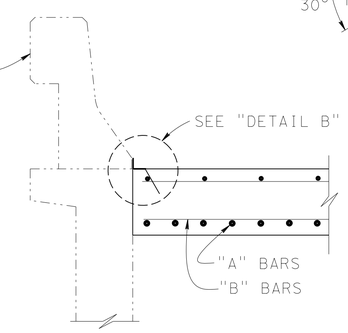

SECTION C-C
3/4" = 1'-0"

APPROACH SLAB TRANSVERSE CONTACT JOINT		
APPROACH SKEW	WITH AC ROADWAY PAVEMENT	WITH PCC ROADWAY PAVEMENT
10° - 45°	PARALLEL TO FACE OF PN USE "DETAIL A"	STAGGER LINES 24' TO 36' APART

NOTES:

1. Sealed Joint Type A. Adjust bar reinforcement to clear a sawcut for sealed joint, when required
2. Longitudinal construction joints, when permitted by Engineer, shall be located on lane lines
3. Transverse contact joint shall be a minimum of 5'-0" from an existing or constructed weakened plane joint
4. For transverse contact joint with new PCC paving, refer to Standard Plan P10
5. Couplers are required for stage construction or lane closures
6. End angle or plate at beginning of barrier transition, end of wingwall or end of structure approach as applicable

NOTE:
THE CONTRACTOR SHALL VERIFY ALL CONTROLLING FIELD DIMENSIONS BEFORE ORDERING OR FABRICATING ANY MATERIAL.

STANDARD DRAWING
FILE NO. xs3-130
APPROVAL DATE July 2011

DS OSD 2147A (ENGLISH STANDARD DRAWING "XS" BORDER REV. (02-02-11)

ORIGINAL SCALE IN INCHES FOR REDUCED PLANS 0 1 2 3

STATE OF CALIFORNIA
DEPARTMENT OF TRANSPORTATION

DIVISION OF ENGINEERING SERVICES

BRIDGE NO. 42-0249R/L
POST MILE 49.99

PANOCHE CREEK BRIDGE
STRUCTURE APPROACH TYPE R(30S)

UNIT: 3591
PROJECT NUMBER & PHASE: 0613000050-1
CONTRACT NO.: 06-002704

DISREGARD PRINTS BEARING EARLIER REVISION DATES

REVISION DATES 11-15-13 12-09-13 1-13-14 4-23-14 SHEET 2 OF 2

FILE => 42-0249-x-xs130.dgn

USERNAME => s113541 DATE PLOTTED => 01-JUL-2014 TIME PLOTTED => 10:45