Dist	COUNTY	ROUTE	POST MILES TOTAL PROJECT	SHEET No.	TOTAL SHEETS
06	Tul	198	23.5/43.0	1	8

STATE OF CALIFORNIA

DEPARTMENT OF TRANSPORTATION

PROJECT PLANS FOR CONSTRUCTION ON

STATE HIGHWAY

IN TULARE COUNTY IN AND NEAR LEMON COVE AT VARIOUS LOCATIONS FROM 0.3 MILE WEST OF MEHRTEN AVENUE TO 0.5 MILE EAST OF MINERAL KING ROAD

TO BE SUPPLEMENTED BY STANDARD PLANS DATED MAY 2006

INDEX OF PLANS

Sheet No.	DESCRIPTION
1	TITLE AND LOCATION MAP
2	TYPICAL CROSS SECTION AND CONSTRUCTION DETAILS
3	CONSTRUCTION AREA SIGNS
4	SUMMARY OF QUANTITIES
5-8	REVISED AND NEW STANDARD PLANS

THE STANDARD PLANS LIST APPLICABLE TO THIS CONTRACT IS INCLUDED IN THE NOTICE TO BIDDERS AND SPECIAL PROVISIONS BOOK.

LOCATION MAP

LOCATIONS OF CONSTRUCTION

Loc	POST MILE	DESCRIPTION
1	23.92	0.16 MILE EAST OF MEHRTEN AVENUE
2	24.31	0.55 MILE EAST OF MEHRTEN AVENUE
3	24.54	0.78 MILE EAST OF MEHRTEN AVENUE
4	24.81	1.05 MILES EAST OF MEHRTEN AVENUE
5	25.09	1.33 MILES EAST OF MEHRTEN AVENUE
6	27.22	0.74 MILE WEST OF ROUTE 216
7	27.51	0.45 MILE WEST OF ROUTE 216
8	27.86	0.10 MILE WEST OF ROUTE 216
9	29.39	1.43 MILES EAST OF ROUTE 216
10	29.47	1.51 MILES EAST OF ROUTE 216
11	29.78	1.82 MILES EAST OF ROUTE 216
12	30.59	2.63 MILES EAST OF ROUTE 216
13	30.75	2.79 MILES EAST OF ROUTE 216
14	31.27	2.24 MILES WEST OF HORSE CREEK ROAD
15	32.22	1.29 MILES WEST OF HORSE CREEK ROAD
16	32.55	0.96 MILE WEST OF HORSE CREEK ROAD
17	32.60	0.91 MILE WEST OF HORSE CREEK ROAD
18	33.27	0.24 MILE WEST OF HORSE CREEK ROAD
19	33.49	0.02 MILE WEST OF HORSE CREEK ROAD
20	34.50	0.99 MILE EAST OF HORSE CREEK ROAD
21	34.74	1.23 MILES EAST OF HORSE CREEK ROAD
22	35.52	2.01 MILES EAST OF HORSE CREEK ROAD
23	37.25	3.65 MILES WEST OF DINELEY DRIVE
24	39.68	1.22 MILES WEST OF DINELEY DRIVE
25	40.02	0.88 MILE WEST OF DINELEY DRIVE
26	42.22	1.32 MILES EAST OF DINELEY DRIVE
27	42.49	1.59 MILES EAST OF DINELEY DRIVE

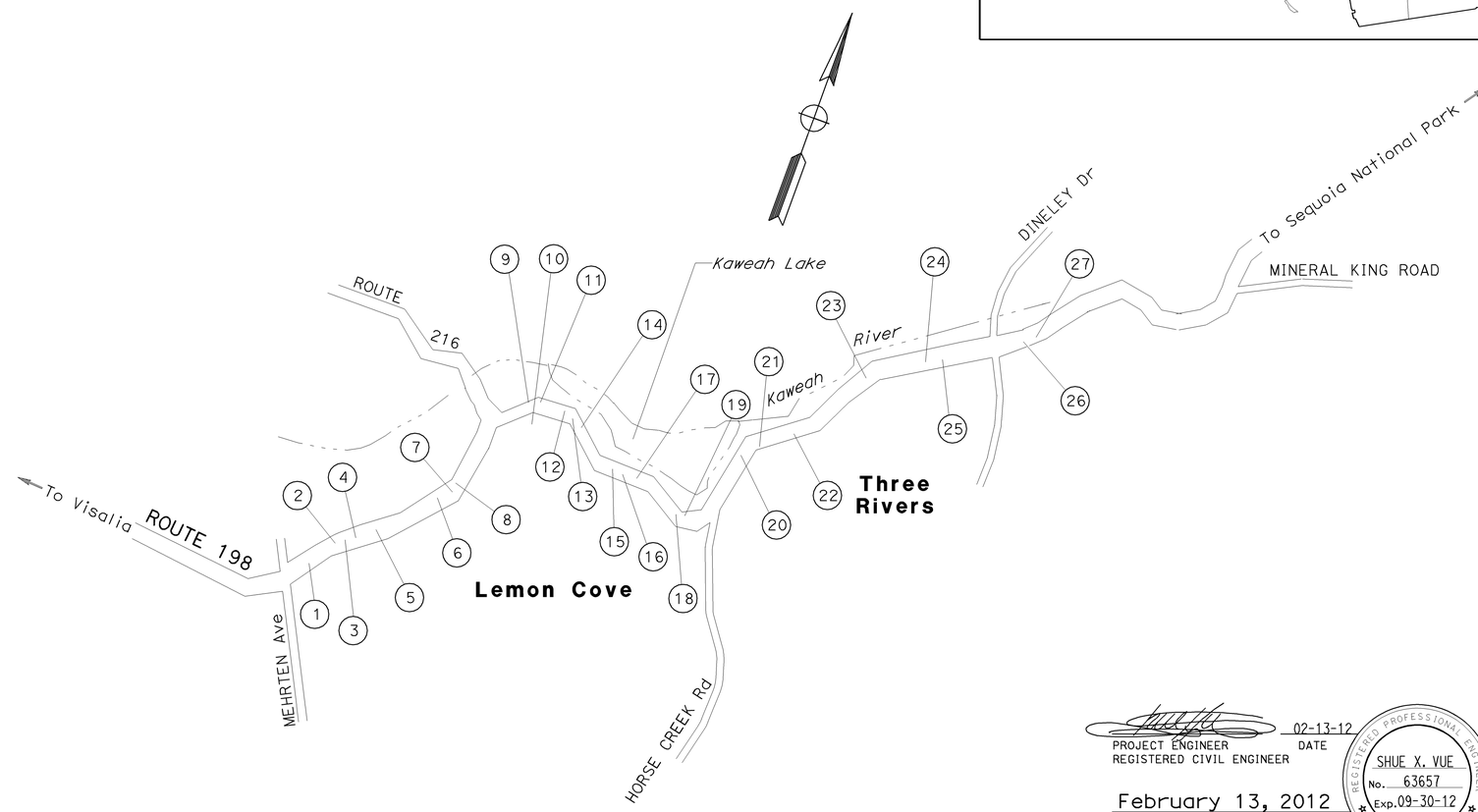

NO SCALE

PROJECT ENGINEER REGISTERED CIVIL ENGINEER — DATE 02-13-12

February 13, 2012
PLANS APPROVAL DATE

REGISTERED PROFESSIONAL ENGINEER — SHUE X. VUE — No. 63657 — Exp. 09-30-12 — CIVIL — STATE OF CALIFORNIA

THE STATE OF CALIFORNIA OR ITS OFFICERS OR AGENTS SHALL NOT BE RESPONSIBLE FOR THE ACCURACY OR COMPLETENESS OF SCANNED COPIES OF THIS PLAN SHEET.

PROJECT MANAGER: BILL MOSES
DESIGN ENGINEER: FRANK GONZALEZ

THE CONTRACTOR SHALL POSSESS THE CLASS (OR CLASSES) OF LICENSE AS SPECIFIED IN THE "NOTICE TO BIDDERS."

CONTRACT No.	06-0N6604
PROJECT ID	0600020632

LAST REVISION 02-13-12 — DATE PLOTTED => 14-FEB-2012 — TIME PLOTTED => 16:44

Dist	COUNTY	ROUTE	POST MILES TOTAL PROJECT	SHEET No.	TOTAL SHEETS
06	Tul	198	23.5/43.0	2	8

REGISTERED CIVIL ENGINEER 02-13-12 DATE

2-13-12
PLANS APPROVAL DATE

REGISTERED PROFESSIONAL ENGINEER
SHUE X. VUE
No. 63657
Exp. 09-30-12
CIVIL
STATE OF CALIFORNIA

THE STATE OF CALIFORNIA OR ITS OFFICERS OR AGENTS SHALL NOT BE RESPONSIBLE FOR THE ACCURACY OR COMPLETENESS OF SCANNED COPIES OF THIS PLAN SHEET.

NOTES:

1. DIMENSIONS OF THE PAVEMENT STRUCTURES (STRUCTURAL SECTIONS) ARE SUBJECT TO TOLERANCES SPECIFIED IN THE STANDARD SPECIFICATIONS.
2. FOR ACCURATE RIGHT OF WAY DATA, CONTACT RIGHT OF WAY ENGINEERING AT THE DISTRICT OFFICE.
3. DOWNDRAINS SHALL BE DISCONNECTED AND RECONNECTED AS REQUIRED.
4. DELAMINATIONS SHALL BE FIXED PER Spec IN THE PIPES WHERE NECESSARY PRIOR TO CURE-IN-PLACE PIPE LINER PROCESS.

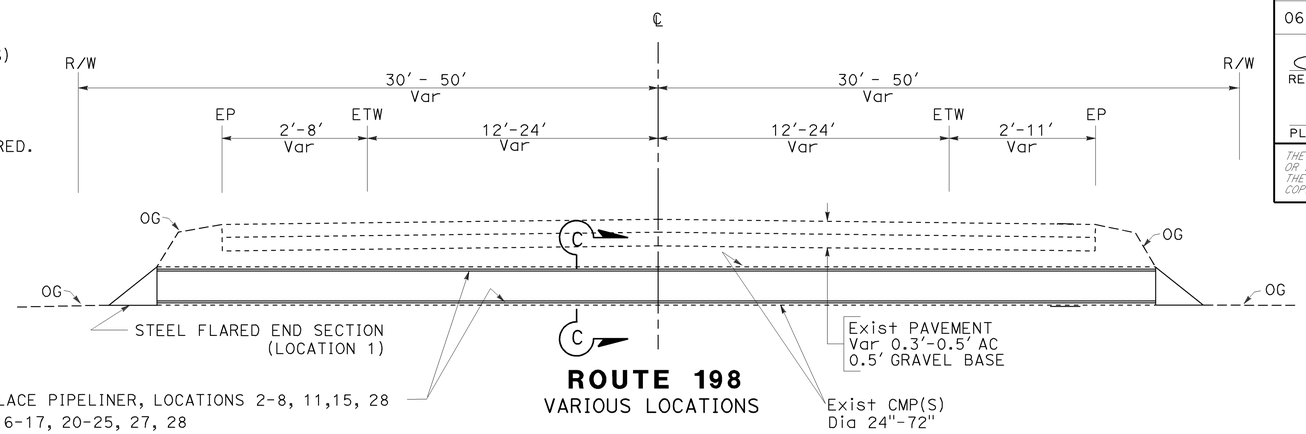

CLEAN, INSPECT AND PREPARE HOST PIPE CURED-IN-PLACE PIPELINER, LOCATIONS 2-8, 11,15, 28
CONCRETE INVERT PAVING, LOCATIONS 9, 10, 12-14, 16-17, 20-25, 27, 28

ROUTE 198
VARIOUS LOCATIONS

CORRUGATED METAL PIPES CONSTRUCTION DETAILS

Loc	PM	DESCRIPTION	Dia	LENGTH
1	23.92	STEEL FLARED END SECTION	24"	-
2	24.31	CLEANING, INSPECTING AND PREPARING HOST PIPE, CURED-IN-PLACE PIPE LINER	24"	74'
3	24.54	CLEANING, INSPECTING AND PREPARING HOST PIPE, CURED-IN-PLACE PIPE LINER	24"	62'
4	24.81	CLEANING, INSPECTING AND PREPARING HOST PIPE, CURED-IN-PLACE PIPE LINER	24"	78'
5	25.09	CLEANING, INSPECTING AND PREPARING HOST PIPE, CURED-IN-PLACE PIPE LINER	24"	68'
6	27.22	CLEANING, INSPECTING AND PREPARING HOST PIPE, CURED-IN-PLACE PIPE LINER	24"	100'
7	27.51	CLEANING, INSPECTING AND PREPARING HOST PIPE, CURED-IN-PLACE PIPE LINER	24"	73'
8	27.86	CLEANING, INSPECTING AND PREPARING HOST PIPE, CURED-IN-PLACE PIPE LINER	24"	86'
9	29.39	CLEANING, INSPECTING AND PREPARING HOST PIPE, MINOR CONCRETE (INVERT PAVING)	48"	182'
10	29.47	CLEANING, INSPECTING AND PREPARING HOST PIPE, MINOR CONCRETE (INVERT PAVING)	36"	154'
11	29.78	CLEANING, INSPECTING AND PREPARING HOST PIPE, CURED-IN-PLACE PIPE LINER	24"	199'
12	30.59	CLEANING, INSPECTING AND PREPARING HOST PIPE, MINOR CONCRETE (INVERT PAVING)	48"	195'
13	30.75	CLEANING, INSPECTING AND PREPARING HOST PIPE, MINOR CONCRETE (INVERT PAVING)	72"	143'
14	31.27	CLEANING, INSPECTING AND PREPARING HOST PIPE, MINOR CONCRETE (INVERT PAVING)	66"	176'
15	32.22	CLEANING, INSPECTING AND PREPARING HOST PIPE, CURED-IN-PLACE PIPE LINER	30"	186'
16	32.55	CLEANING, INSPECTING AND PREPARING HOST PIPE, MINOR CONCRETE (INVERT PAVING)	48"	95'
17	32.60	CLEANING, INSPECTING AND PREPARING HOST PIPE, MINOR CONCRETE (INVERT PAVING)	4×5.5"	165'
18	33.27	GROUT HEADWALL (Inlet), MINOR CONCRETE	30"	-
19	33.49	GROUT HEADWALL (Inlet), MINOR CONCRETE	30"	-
20	34.50	CLEANING, INSPECTING AND PREPARING HOST PIPE, MINOR CONCRETE (INVERT PAVING)	30"	111'
21	34.74	CLEANING, INSPECTING AND PREPARING HOST PIPE, MINOR CONCRETE (INVERT PAVING)	36"	197'
22	35.52	CLEANING, INSPECTING AND PREPARING HOST PIPE, MINOR CONCRETE (INVERT PAVING)	60"	156'
23	37.25	CLEANING, INSPECTING AND PREPARING HOST PIPE, MINOR CONCRETE (INVERT PAVING)	48"	50'
24	39.68	CLEANING, INSPECTING AND PREPARING HOST PIPE, MINOR CONCRETE (INVERT PAVING)	36"	44'
25	40.02	CLEANING, INSPECTING AND PREPARING HOST PIPE, MINOR CONCRETE (INVERT PAVING)	36"	40'
26	42.22	CLEANING, INSPECTING AND PREPARING HOST PIPE, MINOR CONCRETE (INVERT PAVING)	36"	32'
27	42.49	CLEANING, INSPECTING AND PREPARING HOST PIPE, CURED-IN-PLACE PIPE LINER	30"	77'

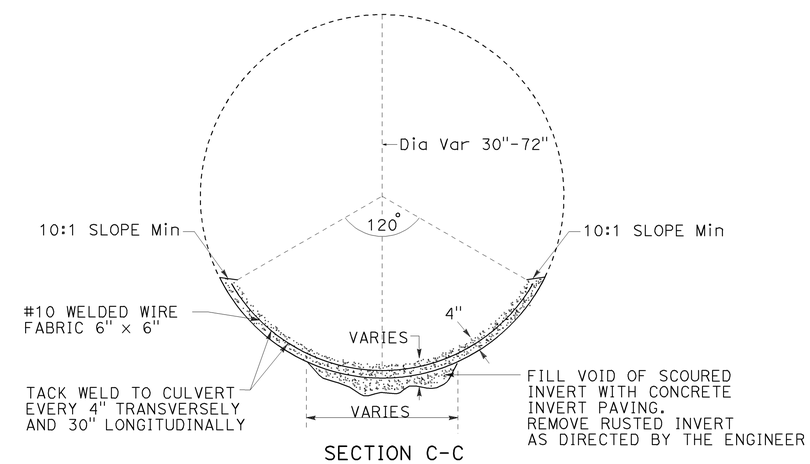

SECTION C-C
LOCATIONS 9, 10, 12-14, 16-17, 20-25, 27, 28
CONCRETE INVERT PAVING

NO SCALE

TYPICAL CROSS SECTIONS AND CONSTRUCTION DETAILS
X-1

STATE OF CALIFORNIA - DEPARTMENT OF TRANSPORTATION
Caltrans® MAINTENANCE DESIGN
FUNCTIONAL SUPERVISOR: FRANK GONZALEZ
CALCULATED-DESIGNED BY: RENE SIQUEIROS
CHECKED BY: SHUE VUE
REVISED BY
DATE REVISED

LAST REVISION 02-13-12
DATE PLOTTED => 14-FEB-2012
TIME PLOTTED => 16:44

Dist	COUNTY	ROUTE	POST MILES TOTAL PROJECT	SHEET No.	TOTAL SHEETS
06	Tul	198	23.5/43.0	3	8

REGISTERED CIVIL ENGINEER 02-13-12 DATE

2-13-12
PLANS APPROVAL DATE

REGISTERED PROFESSIONAL ENGINEER
SHUE X. VUE
No. 63657
Exp. 09-30-12
CIVIL
STATE OF CALIFORNIA

THE STATE OF CALIFORNIA OR ITS OFFICERS OR AGENTS SHALL NOT BE RESPONSIBLE FOR THE ACCURACY OR COMPLETENESS OF SCANNED COPIES OF THIS PLAN SHEET.

STATIONARY MOUNTED CONSTRUCTION AREA SIGNS

	SIGN CODE	PANEL SIZE	SIGN MESSAGE	No. OF POST AND SIZE	No. OF SIGNS
A	W20-1	36" x 36"	ROAD WORK AHEAD	1 - 4" x 6"	7
B	G20-1	36" x 18"	END ROAD WORK	1 - 4" x 4"	3

NOTES:

1. EXACT LOCATION AND POSITION OF SIGNS WILL BE DETERMINED BY THE ENGINEER.
2. SIGN POST LENGTHS ARE APPROXIMATE, EXACT SIZE AND LENGTH WILL BE DETERMINED BY THE ENGINEER.

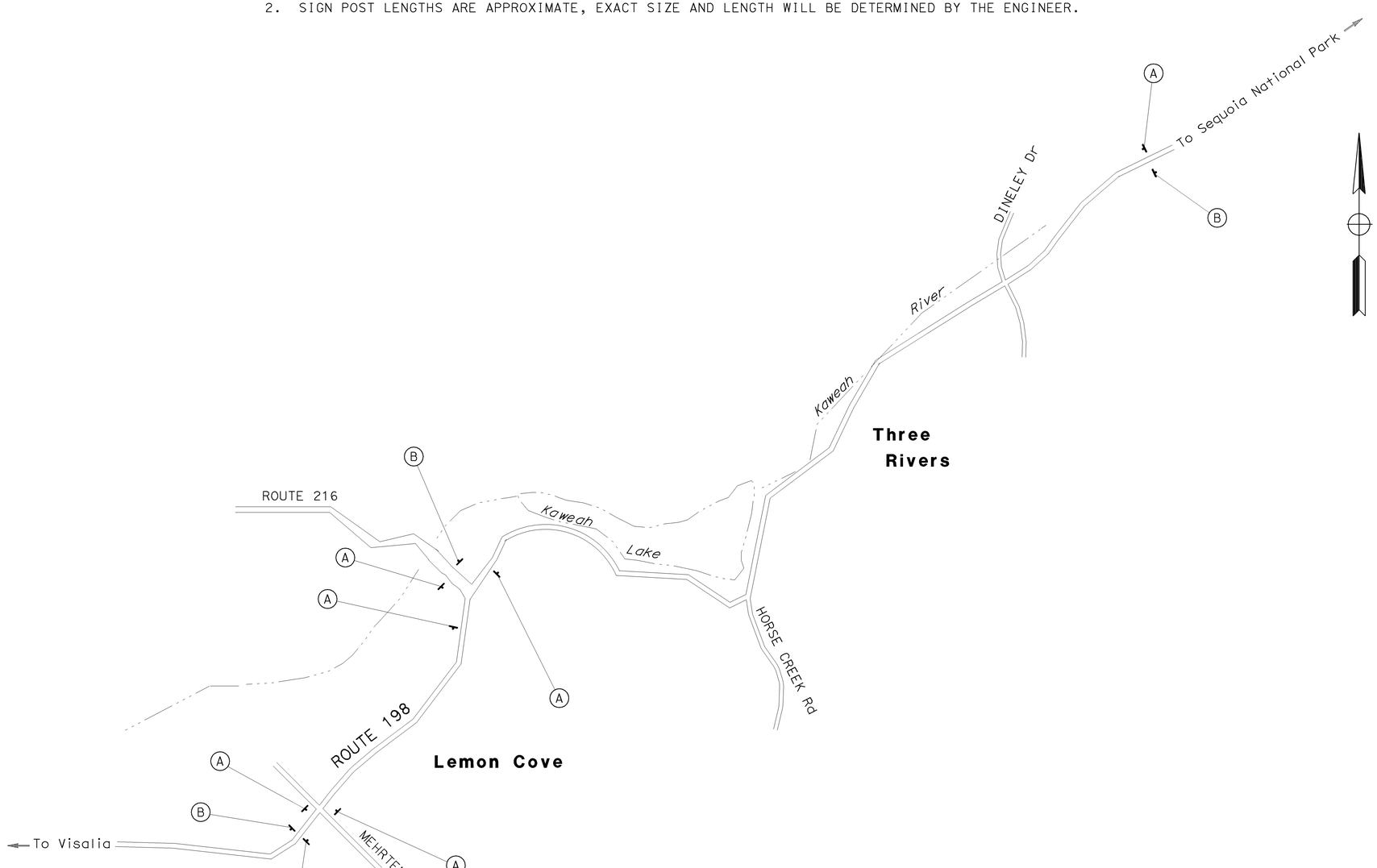

APPROVED FOR CONSTRUCTION AREA SIGN WORK ONLY

CONSTRUCTION AREA SIGNS

NO SCALE

CS-1

STATE OF CALIFORNIA - DEPARTMENT OF TRANSPORTATION
Caltrans® MAINTENANCE DESIGN

FUNCTIONAL SUPERVISOR: FRANK GONZALEZ
CALCULATED-DESIGNED BY: RENE SIQUEIROS
CHECKED BY: SHUE VUE
REVISED BY
DATE REVISED

LAST REVISION 02-13-12 | DATE PLOTTED => 14-FEB-2012 | TIME PLOTTED => 16:44

Dist	COUNTY	ROUTE	POST MILES TOTAL PROJECT	SHEET No.	TOTAL SHEETS
06	Tul	198	23.5/43.0	4	8

REGISTERED CIVIL ENGINEER 02-13-12 DATE

2-13-12
PLANS APPROVAL DATE

REGISTERED PROFESSIONAL ENGINEER
SHUE X. VUE
No. 63657
Exp. 09-30-12
CIVIL
STATE OF CALIFORNIA

THE STATE OF CALIFORNIA OR ITS OFFICERS OR AGENTS SHALL NOT BE RESPONSIBLE FOR THE ACCURACY OR COMPLETENESS OF SCANNED COPIES OF THIS PLAN SHEET.

SUMMARY OF QUANTITIES

Loc	CURED-IN-PLACE PIPELINER		CONCRETE INVERT PAVING	24" STEEL FLARED END SECTION		CLEANING, INSPECTING, AND PREPARING CULVERT	EPOXY HEADWALL (N)
	24" Dia	30" Dia		INLET	OUTLET		INLET
	LF	LF	CY	EA	EA	CY	
1					1		
2	74			1	1	1.1	
3	62			1		0.9	
4	78					1.1	
5	68					1.0	
6	100					1.5	
7	73					1.1	
8	86					1.3	
9			7.1			10.6	
10			8.0			5.0	
11	199					2.9	
12			10.1			11.3	
13			11.1			18.7	
14			12.5			19.4	
15		186				4.2	
16			4.9			5.5	
17			10.7			15.0	
18							1
19							1
20			3.6			2.5	
21			7.6			6.4	
22			10.1			14.2	
23			2.6			2.9	
24			1.7			1.4	
25			1.6			1.3	
26			1.2			1.0	
27		77				1.7	
SUBTOTAL	740	263	97.7	2	2	132.1	2
TOTAL	740	263	97.7	4		132.1	2

(N) NOT A SEPARATE PAY ITEM, FOR INFORMATION ONLY.

STATE OF CALIFORNIA - DEPARTMENT OF TRANSPORTATION
Caltrans® MAINTENANCE DESIGN

FUNCTIONAL SUPERVISOR: FRANK GONZALEZ
CALCULATED-DESIGNED BY: RENE SIQUEIROS
CHECKED BY: SHUE VUE
REVISED BY
DATE REVISED

SUMMARY OF QUANTITIES
Q-1

LAST REVISION 02-14-12
DATE PLOTTED => 14-FEB-2012
TIME PLOTTED => 16:44

DIST	COUNTY	ROUTE	POST MILES TOTAL PROJECT	SHEET NO.	TOTAL SHEETS
06	Tul	198	23.5/43.0	5	8

Randell D. Hiatt
REGISTERED CIVIL ENGINEER

June 6, 2008
PLANS APPROVAL DATE

REGISTERED PROFESSIONAL ENGINEER
Randell D. Hiatt
No. C50200
Exp. 6-30-09
CIVIL
STATE OF CALIFORNIA

The State of California or its officers or agents shall not be responsible for the accuracy or completeness of electronic copies of this plan sheet.

To accompany plans dated 2-13-12

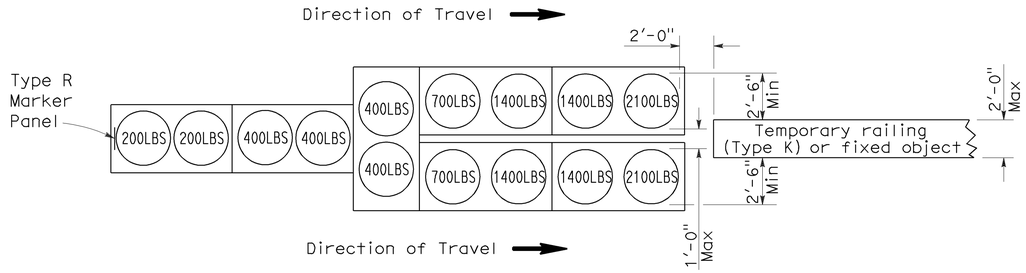

ARRAY 'TU14'

Approach speed 45 mph or more

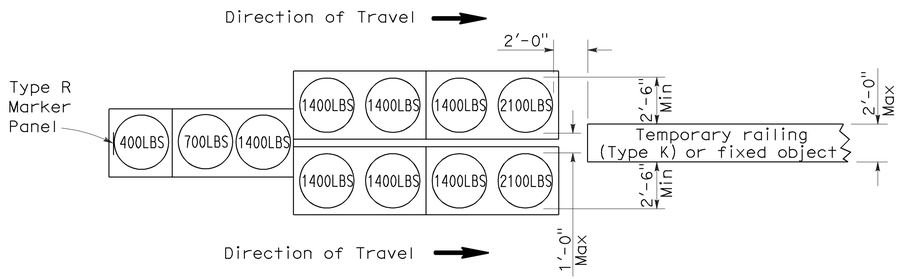

ARRAY 'TU11'

Approach speed less than 45 mph

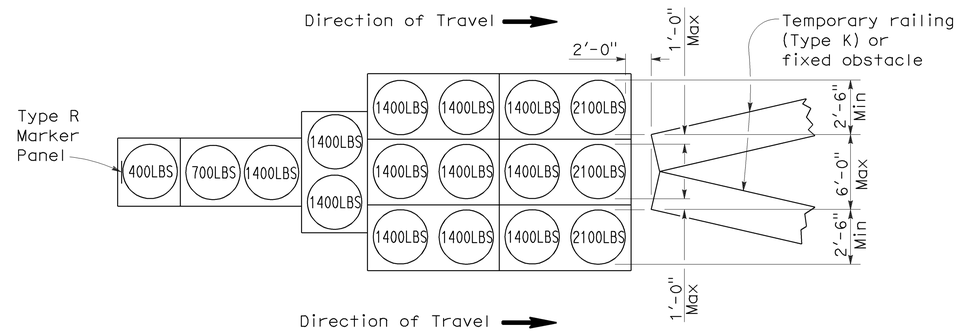

ARRAY 'TU17'

Approach speed less than 45 mph

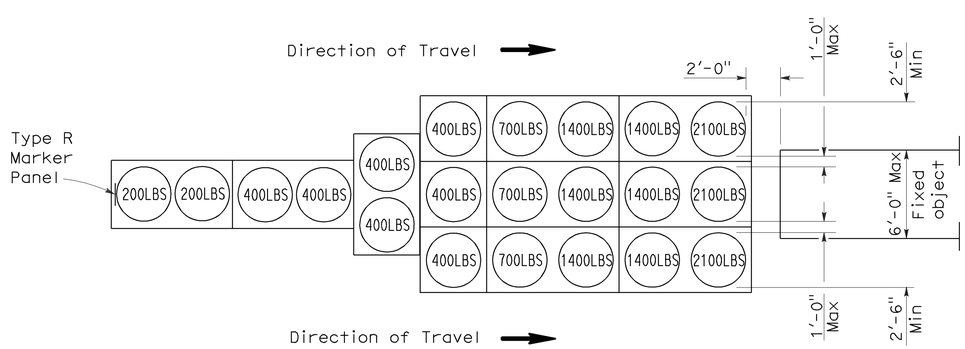

ARRAY 'TU21'

Approach speed 45 mph or more

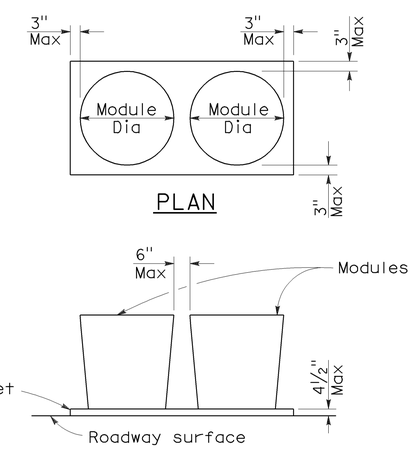

PLAN

ELEVATION

CRASH CUSHION PALLET DETAIL

See Note 7

NOTES:

1. (XXX) Indicates sand filled module location and weight of sand in pounds for each module. Module spacing is based on the greater diameter of the module.
2. All sand weights are nominal.
3. Temporary crash cushion arrays shall not encroach on the traveled way.
4. Place the top of Type R marker panel 1" below the module lid.
5. Refer to Standard Plan A73B for marker details.
6. Approach speeds indicated conform to NCHRP 350 Report criteria.
7. Use of pallets is optional.

STATE OF CALIFORNIA
DEPARTMENT OF TRANSPORTATION

TEMPORARY CRASH CUSHION, SAND FILLED (UNIDIRECTIONAL)

NO SCALE

RSP T1A DATED JUNE 6, 2008 SUPERSEDES STANDARD PLAN T1A
DATED MAY 1, 2006 - PAGE 211 OF THE STANDARD PLANS BOOK DATED MAY 2006.

REVISED STANDARD PLAN RSP T1A

2006 REVISED STANDARD PLAN RSP T1A

5-15-08

DIST	COUNTY	ROUTE	POST MILES TOTAL PROJECT	SHEET NO.	TOTAL SHEETS
06	Tul	198	23.5/43.0	6	8

Randell D. Hiatt
REGISTERED CIVIL ENGINEER

June 6, 2008
PLANS APPROVAL DATE

REGISTERED PROFESSIONAL ENGINEER
Randell D. Hiatt
No. C50200
Exp. 6-30-09
CIVIL
STATE OF CALIFORNIA

The State of California or its officers or agents shall not be responsible for the accuracy or completeness of electronic copies of this plan sheet.

To accompany plans dated 2-13-12

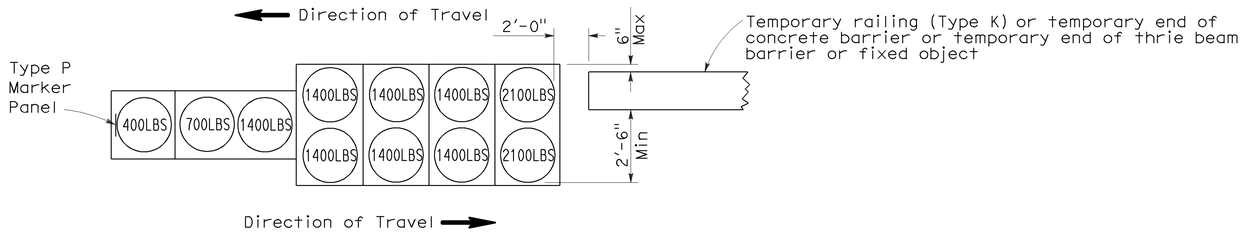

ARRAY 'TB11'

Approach speed less than 45 mph

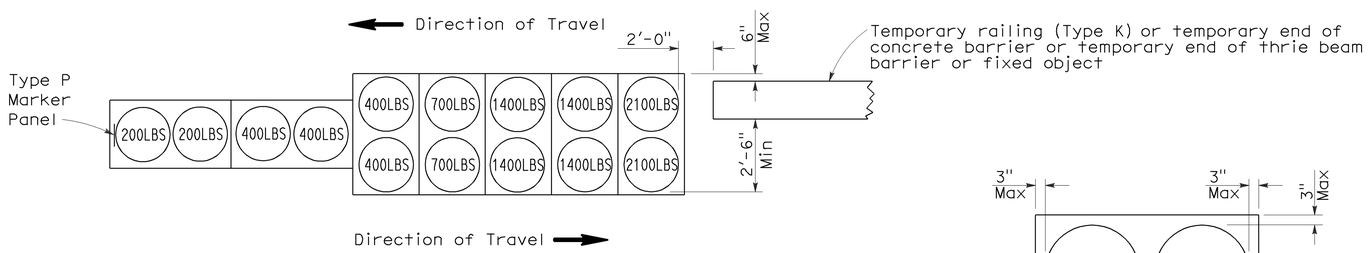

ARRAY 'TB14'

Approach speed 45 mph or more

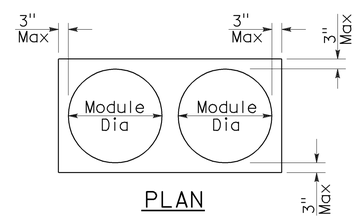

PLAN

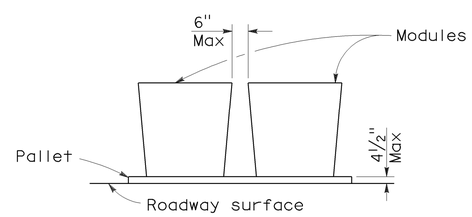

ELEVATION

CRASH CUSHION PALLET DETAIL

See Note 7

NOTES:

1. (XXX) Indicates sand filled module location and weight of sand in pounds for each module. Module spacing is based on the greater diameter of the module.
2. All sand weights are nominal.
3. Temporary crash cushion arrays shall not encroach on the traveled way.
4. Place the Type P marker panel so that the bottom of the panel rests upon the pallet.
5. Refer to Standard Plan A73B for marker details.
6. Approach speeds indicated conform to NCHRP 350 Report criteria.
7. Use of pallets is optional.

STATE OF CALIFORNIA
DEPARTMENT OF TRANSPORTATION

TEMPORARY CRASH CUSHION, SAND FILLED (BIDIRECTIONAL)

NO SCALE

RSP T1B DATED JUNE 6, 2008 SUPERSEDES STANDARD PLAN T1B
DATED MAY 1, 2006 - PAGE 212 OF THE STANDARD PLANS BOOK DATED MAY 2006.

REVISED STANDARD PLAN RSP T1B

2006 REVISED STANDARD PLAN RSP T1B

5-15-08

DIST	COUNTY	ROUTE	POST MILES TOTAL PROJECT	SHEET NO.	TOTAL SHEETS
06	Tul	198	23.5/43.0	7	8

Randell D. Hiatt
REGISTERED CIVIL ENGINEER

June 6, 2008
PLANS APPROVAL DATE

REGISTERED PROFESSIONAL ENGINEER
Randell D. Hiatt
No. C50200
Exp. 6-30-09
CIVIL
STATE OF CALIFORNIA

The State of California or its officers or agents shall not be responsible for the accuracy or completeness of electronic copies of this plan sheet.

To accompany plans dated 2-13-12

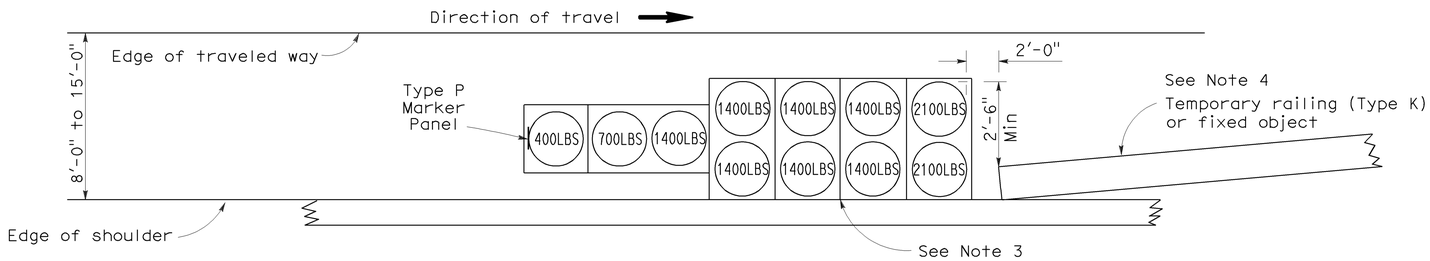

ARRAY 'TS11'

Approach speed less than 45 mph
See Note 9

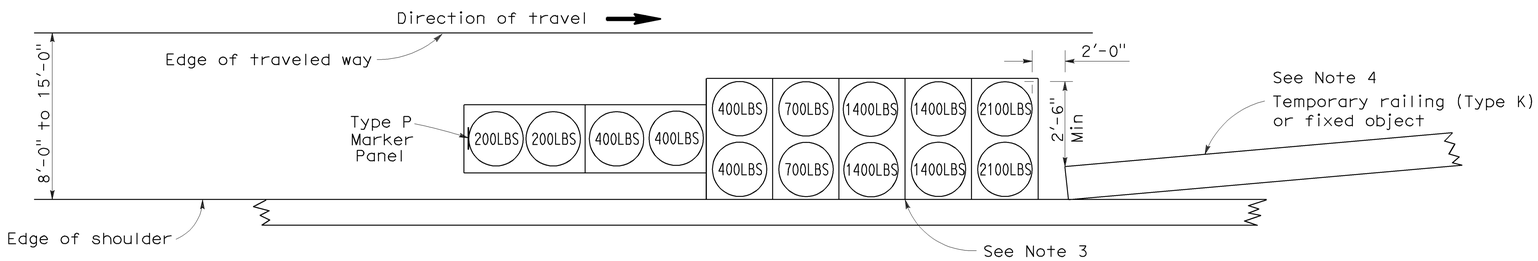

ARRAY 'TS14'

Approach speed 45 mph or more
See Note 9

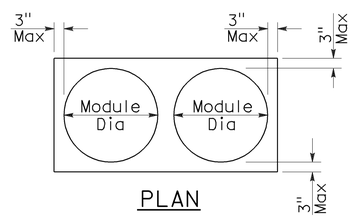

PLAN

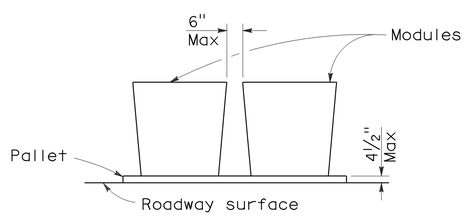

ELEVATION

CRASH CUSHION PALLET DETAIL

See Note 11

NOTES:

1. (XXX) Indicates sand filled module location and weight of sand in pounds for each module. Module spacing is based on the greater diameter of the module.
2. All sand weights are nominal.
3. The temporary crash cushion arrays shown on this plan shall be used only in locations where there will be traffic on one side of the temporary crash cushion array.
4. If the fixed object or approach end of the temporary railing is less than 15'-0" from the edge of traveled way, a temporary crash cushion is required in a construction or work zone.
5. Temporary crash cushion arrays shall not encroach on the traveled way.
6. Arrays for median shoulders shall conform to details shown on this plan for outside shoulders.
7. Place the Type P marker panel so that the bottom of the panel rests upon the pallet and faces traffic.
8. Refer to Standard Plan A73B for marker details.
9. For shoulder widths less than 8'-0", appropriate approved crash cushion protection, other than sand filled modules, shall be provided at fixed objects and at approach ends of temporary railing. The specific type of crash cushion shall be as shown on the project plans or as specified in the Special Provisions, or if not shown on the project plans or specified in the Special Provisions, shall be as approved by the Engineer.
10. Approach speeds indicated conform to NCHRP 350 Report criteria.
11. Use of pallets is optional.

STATE OF CALIFORNIA
DEPARTMENT OF TRANSPORTATION

TEMPORARY CRASH CUSHION, SAND FILLED (SHOULDER INSTALLATIONS)

NO SCALE

RSP T2 DATED JUNE 6, 2008 SUPERSEDES STANDARD PLAN T2
DATED MAY 1, 2006 - PAGE 213 OF THE STANDARD PLANS BOOK DATED MAY 2006.

REVISED STANDARD PLAN RSP T2

2006 REVISED STANDARD PLAN RSP T2

5-15-08

Dist	COUNTY	ROUTE	POST MILES TOTAL PROJECT	SHEET No.	TOTAL SHEETS
06	Tul	198	23.5/43.0	8	8

Randell D. Hiatt
REGISTERED CIVIL ENGINEER

May 20, 2011
PLANS APPROVAL DATE

REGISTERED PROFESSIONAL ENGINEER
Randell D. Hiatt
No. C50200
Exp. 6-30-11
CIVIL
STATE OF CALIFORNIA

The State of California or its officers or agents shall not be responsible for the accuracy or completeness of electronic copies of this plan sheet.

To accompany plans dated 2-13-12

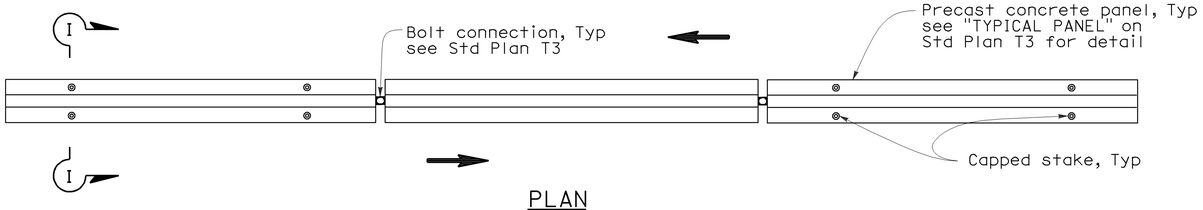

PLAN

RAILING STAKING CONFIGURATION FOR TWO-WAY TRAFFIC

See Note 1

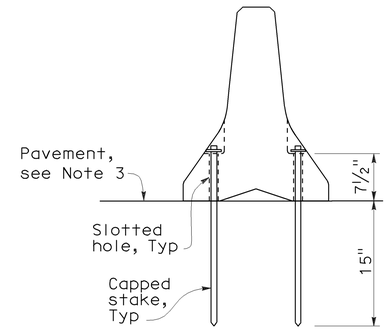

SECTION I-I

NOTES:

1. Where Type K Temporary Railing is placed as a temporary or long term barrier in two-way traffic on highways with less than 24" from the edge of traveled way, use four capped stakes per every other panel with end panels staked.
2. Where Type K Temporary Railing is placed 3" to 24" from the edge of an excavation on highways, use two capped stakes per panel along the traffic side.
3. Staked Type K Temporary Railing must be supported by at least 4" thick concrete, hot mix asphalt or existing asphalt concrete pavement.
4. The minimum yield strength for the washer must be 60,000 psi.
5. Direction of adjacent traffic indicated by ⟶.

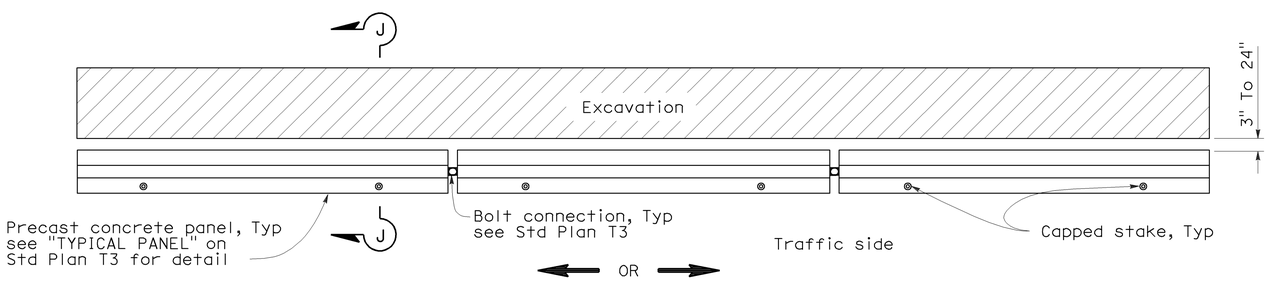

PLAN

RAILING STAKING CONFIGURATION ADJACENT TO AN EXCAVATION

See Note 2

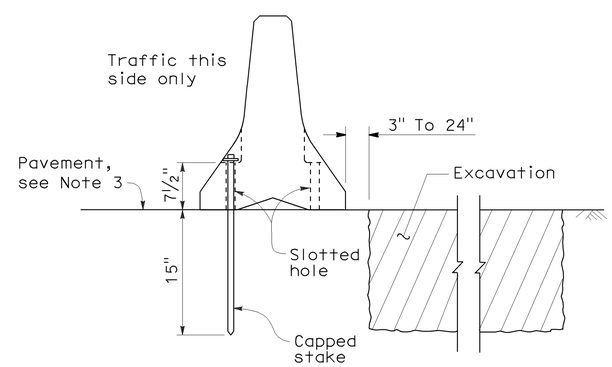

SECTION J-J

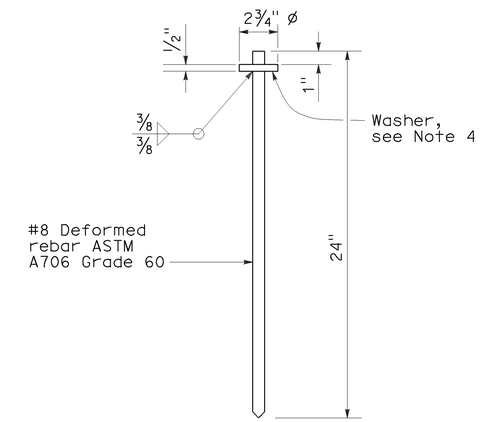

CAPPED STAKE DETAIL

STATE OF CALIFORNIA
DEPARTMENT OF TRANSPORTATION

TEMPORARY RAILING (TYPE K)

NO SCALE

NSP T3A DATED MAY 20, 2011 SUPPLEMENTS
THE STANDARD PLANS BOOK DATED MAY 2006.

NEW STANDARD PLAN NSP T3A

2006 NEW STANDARD PLAN NSP T3A