Dist	COUNTY	ROUTE	POST MILES TOTAL PROJECT	SHEET No.	TOTAL SHEETS
06	Ker, Kin	5,14,58, 202,204	Var	1	18

STATE OF CALIFORNIA

DEPARTMENT OF TRANSPORTATION

PROJECT PLANS FOR CONSTRUCTION ON

STATE HIGHWAY

IN KERN AND KINGS COUNTIES AT VARIOUS LOCATIONS

TO BE SUPPLEMENTED BY STANDARD PLANS DATED 2010

INDEX OF PLANS

Sheet No.	DESCRIPTION
1	TITLE AND LOCATION MAP
2	CONSTRUCTION AREA SIGNS
3	PAVEMENT DELINEATIONS QUANTITIES
4-7	TRAFFIC CONTROL SYSTEM
8-18	STRUCTURE PLANS

THE STANDARD PLANS LIST APPLICABLE TO THIS CONTRACT INCLUDED IN THE NOTICE TO BIDDERS AND SPECIAL PROVISIONS BOOK.

LOCATION MAP

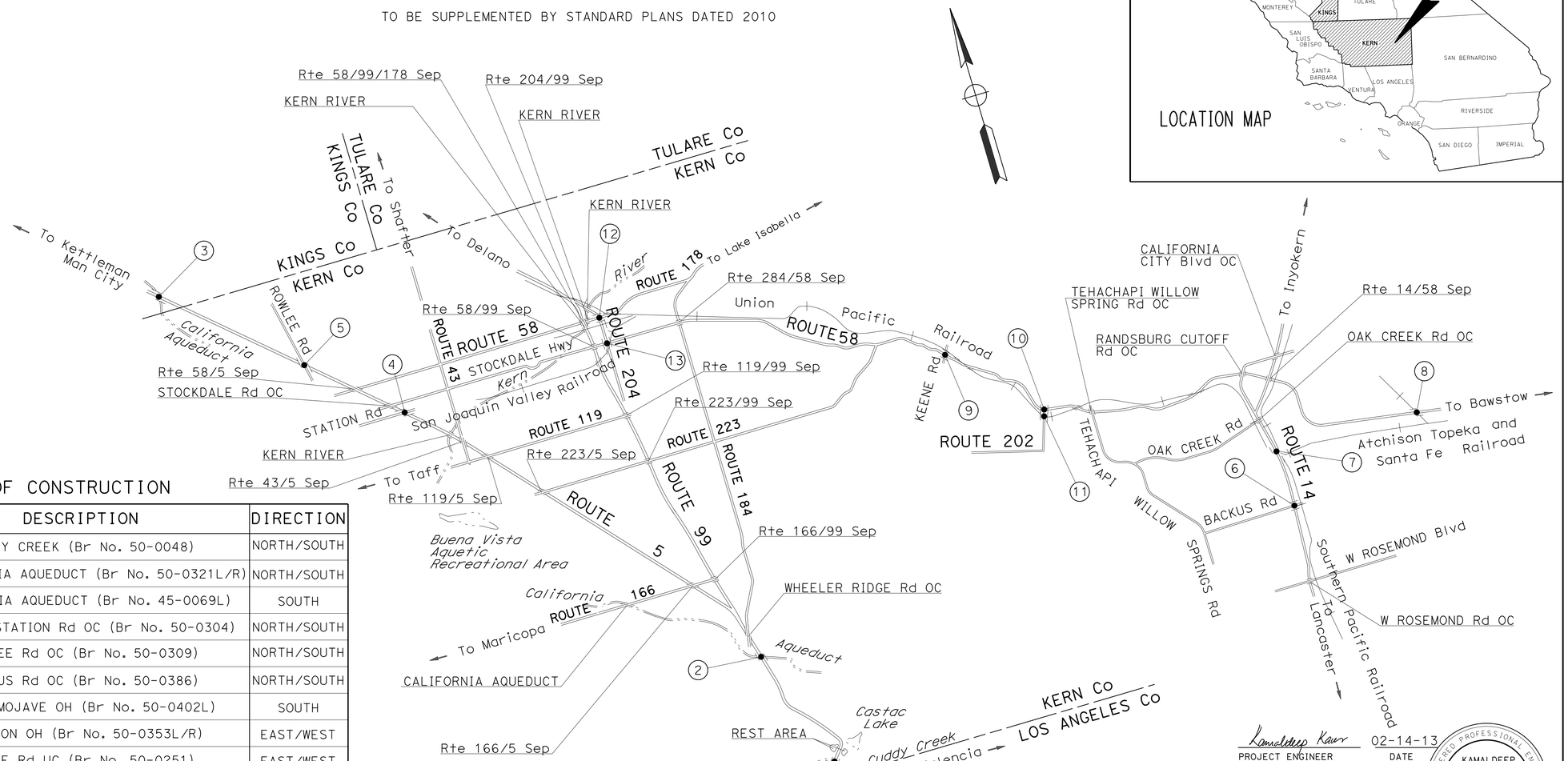

LOCATIONS OF CONSTRUCTION

Loc No.	COUNTY	ROUTE	PM	DESCRIPTION	DIRECTION
1	Ker	5	R0.55	CUDDY CREEK (Br No. 50-0048)	NORTH/SOUTH
2		5	12.47	CALIFORNIA AQUEDUCT (Br No. 50-0321L/R)	NORTH/SOUTH
3	Kin	5	14.92	CALIFORNIA AQUEDUCT (Br No. 45-0069L)	SOUTH
4	Ker	5	45.13	PUMPING STATION Rd OC (Br No. 50-0304)	NORTH/SOUTH
5		5	58.01	ROWLEE Rd OC (Br No. 50-0309)	NORTH/SOUTH
6		14	R9.14	BACKUS Rd OC (Br No. 50-0386)	NORTH/SOUTH
7		14	R15.33	SOUTH MOJAVE OH (Br No. 50-0402L)	SOUTH
8		58	R141.50	BORON OH (Br No. 50-0353L/R)	EAST/WEST
9		58	82.06	KEENE Rd UC (Br No. 50-0251)	EAST/WEST
10		202	11.99	Rte 202/58 SEPARATION (Br No. 50-0342)	EAST/WEST
11		202	R9.59	TEHACHAPI CREEK (Br No. 50-0486)	EAST/WEST
12		204	4.22	GOLDEN STATE AVENUE SEPERATION (Br No. 50-0326F)	NORTH
13		204	R0.03	Rte 204/58 SEPERATION (Br No. 50-0406E)	NORTH

THE CONTRACTOR SHALL POSSESS THE CLASS (OR CLASSES) OF LICENSE AS SPECIFIED IN THE "NOTICE TO BIDDERS."

NO SCALE

PROJECT MANAGER BILL MOSES

DESIGN ENGINEER FRANK GONZALEZ

Kamaldeep Kaur 02-14-13
PROJECT ENGINEER DATE
REGISTERED CIVIL ENGINEER

February 19, 2013
PLANS APPROVAL DATE

REGISTERED PROFESSIONAL ENGINEER KAMALDEEP KAUR No. C73047 Exp. 12/31/14 CIVIL STATE OF CALIFORNIA

THE STATE OF CALIFORNIA OR ITS OFFICERS OR AGENTS SHALL NOT BE RESPONSIBLE FOR THE ACCURACY OR COMPLETENESS OF SCANNED COPIES OF THIS PLAN SHEET.

CONTRACT No.	06-0M6204
PROJECT ID	0600020509

LAST REVISION 02-15-13 DATE PLOTTED => 26-FEB-2013 TIME PLOTTED => 13:06

STATIONARY MOUNTED CONSTRUCTION AREA SIGNS

SIGN No.	SIGN CODE	PANEL SIZE	SIGN MESSAGE	No. OF POST AND SIZE	No. OF SIGNS
A	W20-1	48" x 48"	ROAD WORK AHEAD	2 - 6" x 6"	20
B	W20-1	36" x 36"	ROAD WORK AHEAD	1 - 4" x 6"	12
C	G20-2	36" x 18"	END ROAD WORK	1 - 4" x 4"	31

NOTE: SIGN LOCATIONS SHOWN ARE APPROXIMATE. EXACT LOCATIONS TO BE DETERMINED BY THE ENGINEER.

Dist	COUNTY	ROUTE	POST MILES TOTAL PROJECT	SHEET No.	TOTAL SHEETS
06	Ker, Kin	5,14,58 202,204	Var	2	18

Kamaldeep Kaur 02-14-13
REGISTERED CIVIL ENGINEER DATE

2-19-13
PLANS APPROVAL DATE

REGISTERED PROFESSIONAL ENGINEER KAMALDEEP KAUR No. C73047 Exp. 12/31/14 CIVIL STATE OF CALIFORNIA

THE STATE OF CALIFORNIA OR ITS OFFICERS OR AGENTS SHALL NOT BE RESPONSIBLE FOR THE ACCURACY OR COMPLETENESS OF SCANNED COPIES OF THIS PLAN SHEET.

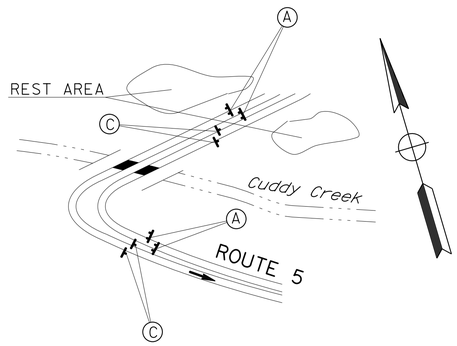

LOCATION 1

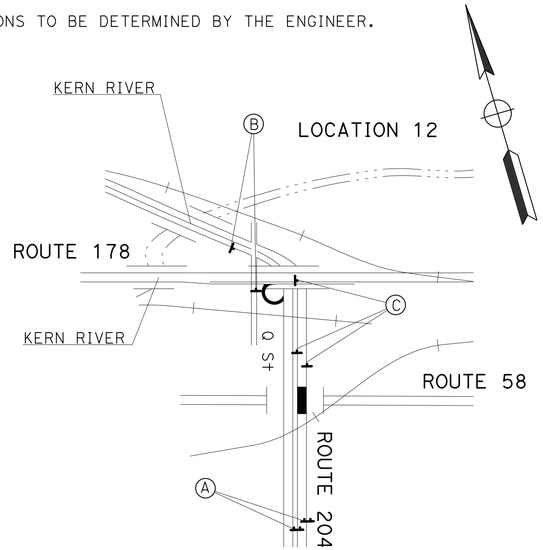

LOCATION 12

LOCATION 13

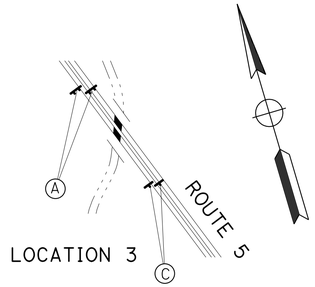

LOCATION 3

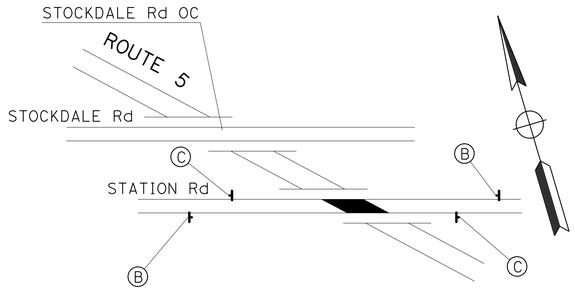

LOCATION 4

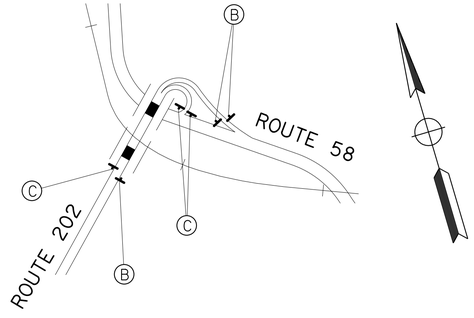

LOCATION 10

LOCATION 11

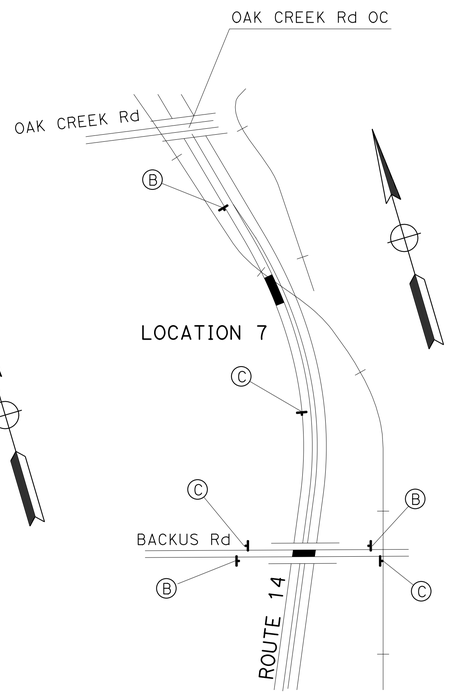

LOCATION 7

LOCATION 6

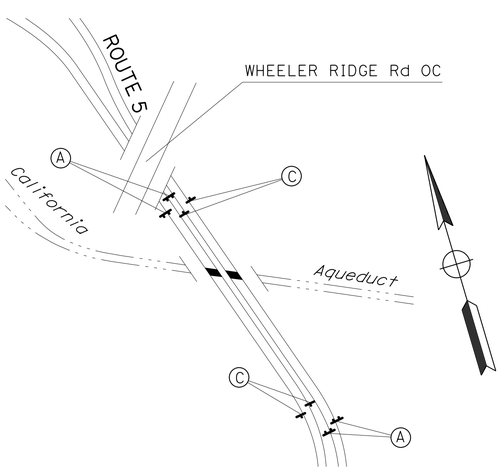

LOCATION 2

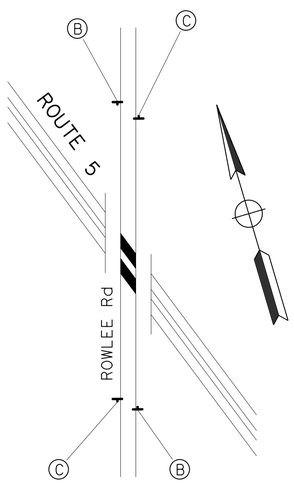

LOCATION 5

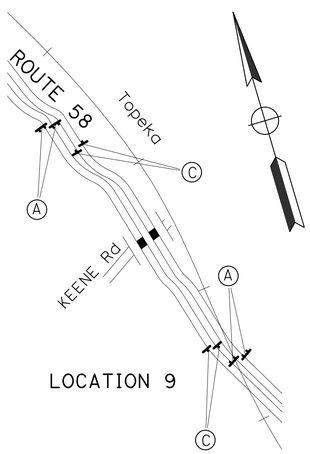

LOCATION 9

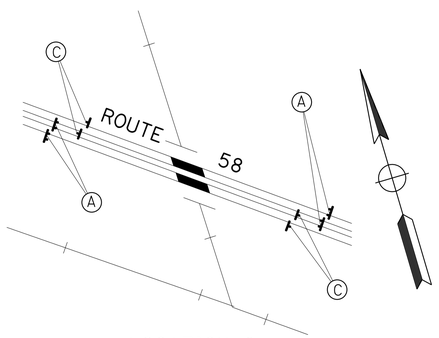

LOCATION 8

APPROVED FOR CONSTRUCTION AREA SIGN WORK ONLY

CONSTRUCTION AREA SIGNS

NO SCALE

CS-1

STATE OF CALIFORNIA - DEPARTMENT OF TRANSPORTATION
Caltrans® MAINTENANCE DESIGN

FUNCTIONAL SUPERVISOR: FRANK GONZALEZ
CALCULATED-DESIGNED BY: LEE XIONG
CHECKED BY: KAMALDEEP KAUR
REVISED BY
DATE REVISED

LAST REVISION 02-15-13
DATE PLOTTED => 26-FEB-2013
TIME PLOTTED => 13:06

Dist	COUNTY	ROUTE	POST MILES TOTAL PROJECT	SHEET No.	TOTAL SHEETS
06	Ker, Kin	5,14,58, 202,204	Var	3	18

Kamaldeep Kaur 02-14-13
REGISTERED CIVIL ENGINEER DATE

2-19-13
PLANS APPROVAL DATE

REGISTERED PROFESSIONAL ENGINEER KAMALDEEP KAUR No. C73047 Exp. 12/31/14 CIVIL STATE OF CALIFORNIA

THE STATE OF CALIFORNIA OR ITS OFFICERS OR AGENTS SHALL NOT BE RESPONSIBLE FOR THE ACCURACY OR COMPLETENESS OF SCANNED COPIES OF THIS PLAN SHEET.

PAVEMENT DELINEATION QUANTITIES

Loc No.	COUNTY	ROUTE	CROSSING	BRIDGE No.	DETAIL No.	THERMOPLASTIC TRAFFIC STRIPE 4" (BROKEN 36-12) LF	THERMOPLASTIC TRAFFIC STRIPE 4" (BROKEN 17-7) LF	THERMOPLASTIC TRAFFIC STRIPE 4" LF	PAVEMENT MARKER RETROREFLECTIVE TYPE G EA	PAVEMENT MARKER RETROREFLECTIVE TYPE H EA	PAVEMENT MARKER RETROREFLECTIVE-RECESSED TYPE G EA	PAVEMENT MARKER RETROREFLECTIVE-RECESSED TYPE H EA	REMOVE THERMOPLASTIC TRAFFIC STRIPE LF	REMOVE YELLOW THERMOPLASTIC TRAFFIC STRIPE (HAZARDOUS WASTE) LF	TEMPORARY DRAINAGE INLET PROTECTION	REMOVE PAVEMENT MARKER (N) EA
1	Ker	5	CUDDY CREEK	50-0048											2	50
2		5	CALIFORNIA AQUEDUCT	50-0321L/R												
3	Kin	5	CALIFORNIA AQUEDUCT	45-0069L	12	190			5				190			
					25			190		5				190		
					27B			190					190			
4	Ker	5	PUMPING STATION Rd OC	50-0304												
5		5	ROWLEE Rd OC	50-0309	21			620						620		
					27B			620					620			
6		14	BACKUS Rd OC	50-0386	21			500						500		
7		14	SOUTH MOJAVE OH	50-0402L												
8		58	BORON OH	50-0353L/R	12	248					8		248			
					25			248				8		248		
					27B			248					248			
9		58	KEENE Rd UC	50-0251	12	224					6		224			
					25			224				6		224		
					27B			224					224			
10		202	Rte 202/58 SEPARATION	50-0342	21			408						408		
					27B			408					408			
11		202	TEHACHAPI CREEK	50-0486	28			1928						1928		
					27B			964					964			
12		204	GOLDEN STATE AVENUE SEPARATION	50-0326F	25			321		8				321		
					27B			321					321			
13		204	Rte 204/58 SEPARATION	50-0406E	9		526		12				526			
SUBTOTAL						662	526	7414	17	13	14	14	4163	4439	2	
TOTAL						662	526	7414	30		28		4163	4439	2	

(N) NOT A SEPARATE PAY ITEM, FOR INFORMATION ONLY.

PAVEMENT DELINEATION QUANTITIES

PDQ-1

REVISED BY | DATE REVISED
LEE XIONG | KAMALDEEP KAUR
CALCULATED-DESIGNED BY | CHECKED BY
FUNCTIONAL SUPERVISOR | FRANK GONZALEZ

STATE OF CALIFORNIA - DEPARTMENT OF TRANSPORTATION
Caltrans MAINTENANCE DESIGN

LAST REVISION 02-15-13 | DATE PLOTTED => 26-FEB-2013 TIME PLOTTED => 13:06

Dist	COUNTY	ROUTE	POST MILES TOTAL PROJECT	SHEET No.	TOTAL SHEETS
06	Ker, Kin	5,14,58, 202,204	Var	4	18

REGISTERED CIVIL ENGINEER 12-7-12 DATE

2-19-13
PLANS APPROVAL DATE

REGISTERED PROFESSIONAL ENGINEER Gurinderpal Bhullar No. C48815 Exp. 9-30-14 CIVIL STATE OF CALIFORNIA

THE STATE OF CALIFORNIA OR ITS OFFICERS OR AGENTS SHALL NOT BE RESPONSIBLE FOR THE ACCURACY OR COMPLETENESS OF SCANNED COPIES OF THIS PLAN SHEET.

NOTES:

Unless otherwise specified in the special provisions, all temporary warning signs shall have black legend on orange background.

California code are designated by (CA). Otherwise, Federal (MUTCD) codes are shown.

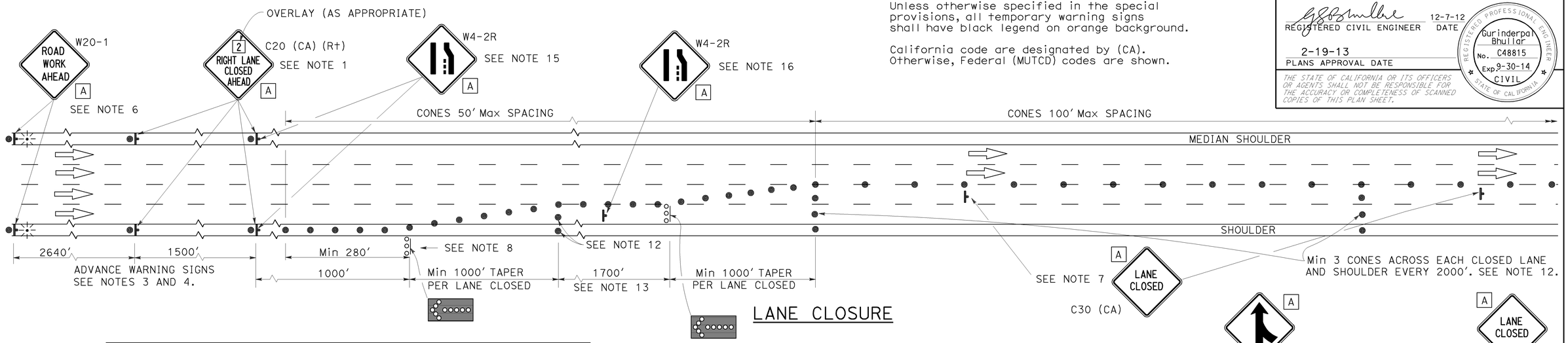

LANE CLOSURE

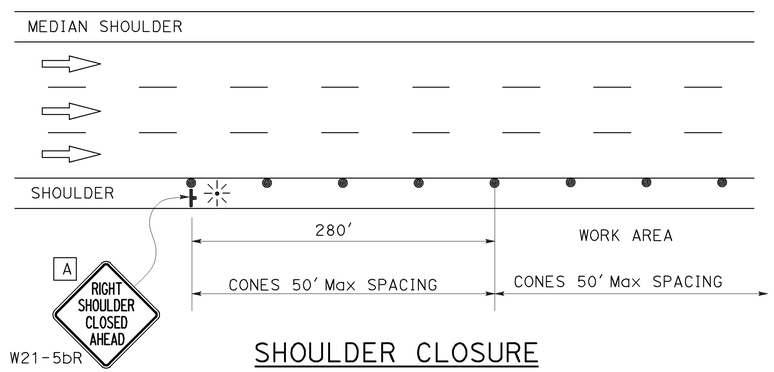

SHOULDER CLOSURE

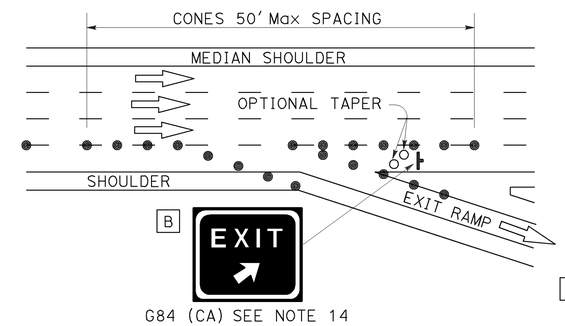

LANE CLOSURE AT EXIT RAMP

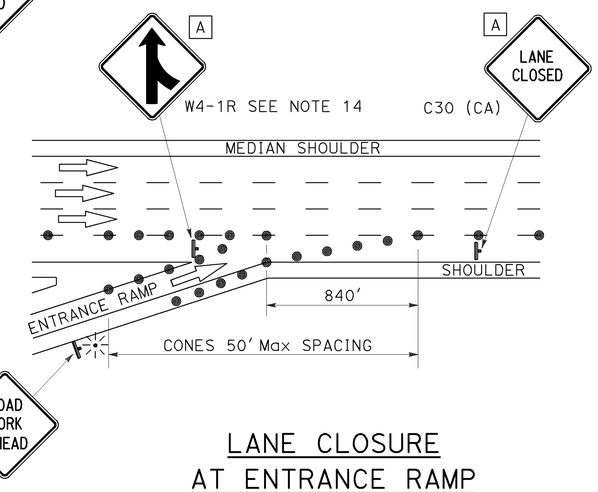

LANE CLOSURE AT ENTRANCE RAMP

NOTES:

1. Median lane closures shall conform to the details for outside lane closures except that C20 (CA) (Lt) signs shall be used.
2. At least one person shall be assigned to provide full time maintenance of traffic control devices for lane closures.
3. Duplicate sign installations are not required:
   a) On opposite shoulder if at least one-half of the available lanes remain open to traffic.
   b) In the median if the width of the median shoulder is less than 8' and the outside lanes are to be closed.
4. Each advance warning sign on each side of the roadway shall be equipped with at least two flags for daytime closure. Each flag shall be at least 16" x 16" in size and shall be orange or fluorescent red-orange in color. Flashing beacons shall be placed at the locations indicated for lane closure during hours of darkness.
5. A C14 (CA) "END ROAD WORK" sign, as appropriate, shall be placed at the end of the lane closure unless the end of work area is obvious or ends within a larger project's limits.
6. If the W20-1 sign would follow within 2000' of a stationary W20-1 or C11 (CA) "ROAD WORK NEXT _____ MILES", use a C20 (CA) sign for the first advance warning sign.
7. Place a C30 (CA) sign every 2000' throughout length of lane closure.
8. One flashing arrow sign for each lane closed. The first flashing arrow sign shall be Type I. All others may be either Type I or Type II.
9. A minimum 1500' of sight distance shall be provided where possible for vehicles approaching the first flashing arrow sign. Lane closures shall not begin at top of crest vertical curve or on a horizontal curve.
10. All cones used for lane closures during the hours of darkness shall be fitted with retroreflective bands (or sleeves) as specified in the specifications.
11. Portable delineators, placed at one-half the spacing indicated for traffic cones may be used instead of cones for daytime closures only.
12. Unless otherwise specified in the special provisions, a minimum of 3 cones shall be placed transversely across each closed lane and shoulder at each location where a taper across a traffic lane ends and every 2000' as shown on the "Lane Closure" detail. Two Type II barricades may be used instead of the 3 cones. The transverse alignment of the cones or barricades on the closed shoulder may be shifted from the transverse alignment to provide access to the work.
13. Unless otherwise specified in the special provisions, the 1700' tangent shown along lane lines shall be used between the 1000' tapers required for each closed traffic lane.
14. Unless otherwise specified in the special provisions, the G84 (CA) and W4-1 signs shall be used as shown.
15. When specified in the special provisions, a W4-2 "LANE ENDS" symbol sign is to be used in place of the C20 (CA) "RIGHT LANE CLOSED AHEAD" sign.
16. The W4-2 "LANE ENDS" symbol sign shown at this location is to be used where the W4-2 sign is used as advance warning as described in Note 15.

SIGN PANEL SIZE (Min)

A	48" x 48"
B	54" x 48"

LEGEND

- TRAFFIC CONE
- TRAFFIC CONE (OPTIONAL TAPER)
- TEMPORARY SIGN
- FLASHING ARROW SIGN (FAS)
- FAS SUPPORT OR TRAILER
- PORTABLE FLASHING BEACON

STATE OF CALIFORNIA
DEPARTMENT OF TRANSPORTATION

TRAFFIC CONTROL SYSTEM FOR LANE CLOSURE ON FREEWAYS AND EXPRESSWAYS

NO SCALE

TCS-1

REVISED BY | DATE REVISED | CALCULATED-DESIGNED BY | CHECKED BY | FUNCTIONAL SUPERVISOR

STATE OF CALIFORNIA - DEPARTMENT OF TRANSPORTATION

LAST REVISION 00-00-00 | DATE PLOTTED => 10-DEC-2012 | TIME PLOTTED => 09:45

Dist	COUNTY	ROUTE	POST MILES TOTAL PROJECT	SHEET No.	TOTAL SHEETS
06	Ker, Kin	5,14,58, 202,204	Var	5	18

REGISTERED CIVIL ENGINEER 12-7-12 DATE

2-19-13
PLANS APPROVAL DATE

REGISTERED PROFESSIONAL ENGINEER Gurinderpal Bhullar No. C48815 Exp. 9-30-14 CIVIL STATE OF CALIFORNIA

THE STATE OF CALIFORNIA OR ITS OFFICERS OR AGENTS SHALL NOT BE RESPONSIBLE FOR THE ACCURACY OR COMPLETENESS OF SCANNED COPIES OF THIS PLAN SHEET.

TYPICAL LANE CLOSURE

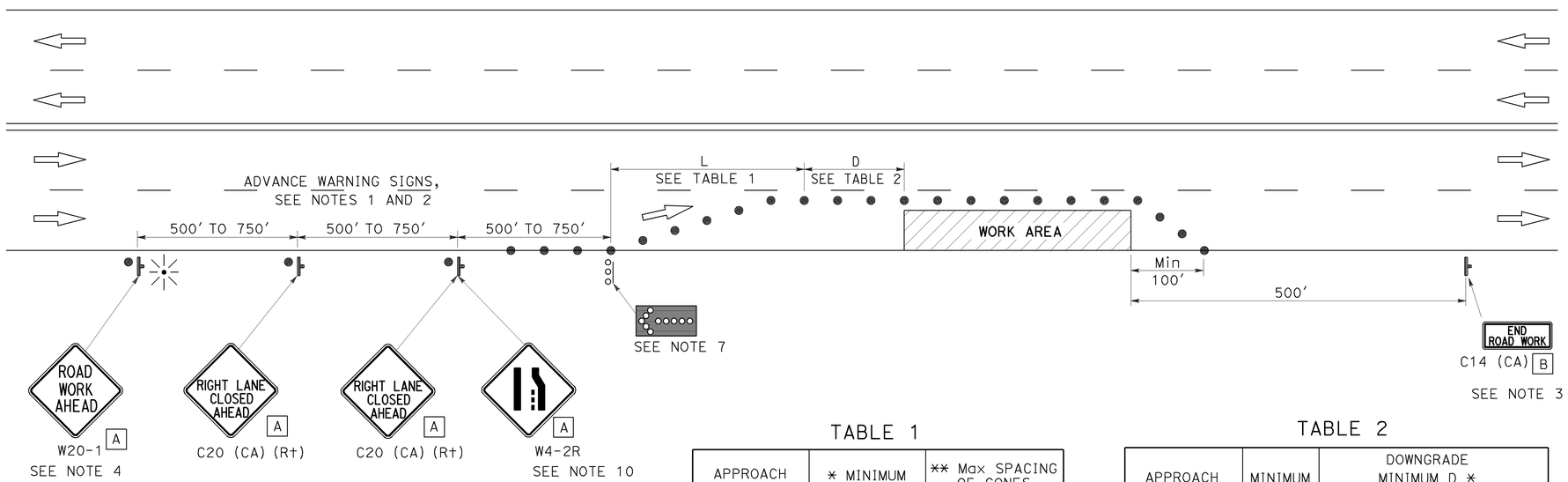

NOTES:

Unless otherwise specified in the special provisions, all temporary warning signs shall have black legend on orange background.

California code are designated by (CA). Otherwise, Federal (MUTCD) codes are shown.

LEGEND

- TRAFFIC CONE
- TEMPORARY SIGN
- FLASHING ARROW SIGN (FAS)
- FAS SUPPORT OR TRAILER
- PORTABLE FLASHING BEACON

SIGN PANEL SIZE (Min)

A 36" x 36"

B 36" x 18"

TABLE 1

APPROACH SPEED	* MINIMUM L	** Max SPACING OF CONES ALONG TAPER
mph	ft	ft
20 AND BELOW	80	20
25	125	25
30	180	30
35	245	35
40	320	40
45	540	45
50	600	50
Over 50	SEE NOTE 9	

* USE L FOR LANE WIDTHS LESS THAN OR EQUAL TO 12'.
** SEE NOTE 8.

TABLE 2

APPROACH SPEED	MINIMUM D	DOWNGRADE MINIMUM D *		
		-3%	-6%	-9%
mph	ft	ft	ft	ft
25 AND BELOW	155	158	165	173
30	200	205	215	227
35	250	257	271	287
40	305	315	333	354
45	360	378	400	427
50	425	446	474	507
OVER 50	SEE NOTE 9			

* USE ON SUSTAINED DOWNGRADE STEEPER THAN -3 PERCENT AND LONGER THAN 1 MILE.

NOTES:

1. Where approach speeds are low, advance warning signs may be placed at 300' spacing and placed closer in urban areas.
2. Each advance warning sign shall be equipped with at least two flags for daytime closure. Each flag shall be at least 16" x 16" in size and shall be orange or fluorescent red-orange in color. Flashing beacons shall be placed at the locations indicated for lane closure during hours of darkness.
3. A C14 (CA) "END ROAD WORK" sign, as appropriate, shall be placed at the end of the lane closure unless the end of work area is obvious, or ends within a larger project's limits.
4. If the W20-1 sign would follow within 2000' of a stationary W20-1 or C11 (CA) "ROAD WORK NEXT _____ MILES", use a C20 (CA) sign for the first advance warning sign.
5. All cones used for lane closures during the hours of darkness shall be fitted with retroreflective bands (or sleeves) as specified in the specifications.
6. Portable delineators, placed at one-half the spacing indicated for traffic cones, may be used instead of cones for daytime closures only.
7. Flashing arrow sign shall be either Type I or Type II.
8. The maximum spacing between cones along a tangent shall be 50' and along a taper shall be approximately as shown in Table 1.
9. For approach speeds over 50 mph, use the "Traffic Control System for Lane Closure On Freeways And Expressways" plan for lane closure details and requirements.
10. When specified in the special provisions, a W4-2 "LANE ENDS" symbol sign is to be used in place of the C20 (CA) "RIGHT LANE CLOSED AHEAD" sign.

STATE OF CALIFORNIA
DEPARTMENT OF TRANSPORTATION

TRAFFIC CONTROL SYSTEM FOR LANE CLOSURE ON MULTILANE CONVENTIONAL HIGHWAYS

NO SCALE

TCS-2

STATE OF CALIFORNIA - DEPARTMENT OF TRANSPORTATION
Caltrans

FUNCTIONAL SUPERVISOR | CALCULATED-DESIGNED BY | CHECKED BY | REVISED BY | DATE REVISED

LAST REVISION 00-00-00 | DATE PLOTTED => 10-DEC-2012 | TIME PLOTTED => 09:45

Dist	COUNTY	ROUTE	POST MILES TOTAL PROJECT	SHEET No.	TOTAL SHEETS
06	Ker, Kin	5,14,58, 202,204	Var	6	18

REGISTERED CIVIL ENGINEER 12-7-12 DATE

2-19-13
PLANS APPROVAL DATE

REGISTERED PROFESSIONAL ENGINEER Gurinderpal Bhullar No. C48815 Exp. 9-30-14 CIVIL STATE OF CALIFORNIA

THE STATE OF CALIFORNIA OR ITS OFFICERS OR AGENTS SHALL NOT BE RESPONSIBLE FOR THE ACCURACY OR COMPLETENESS OF SCANNED COPIES OF THIS PLAN SHEET.

NOTES:

Unless otherwise specified in the special provisions, all temporary warning signs shall have black legend on orange background.

California code are designated by (CA). Otherwise, Federal (MUTCD) codes are shown.

TYPICAL LANE CLOSURE WITH REVERSIBLE CONTROL

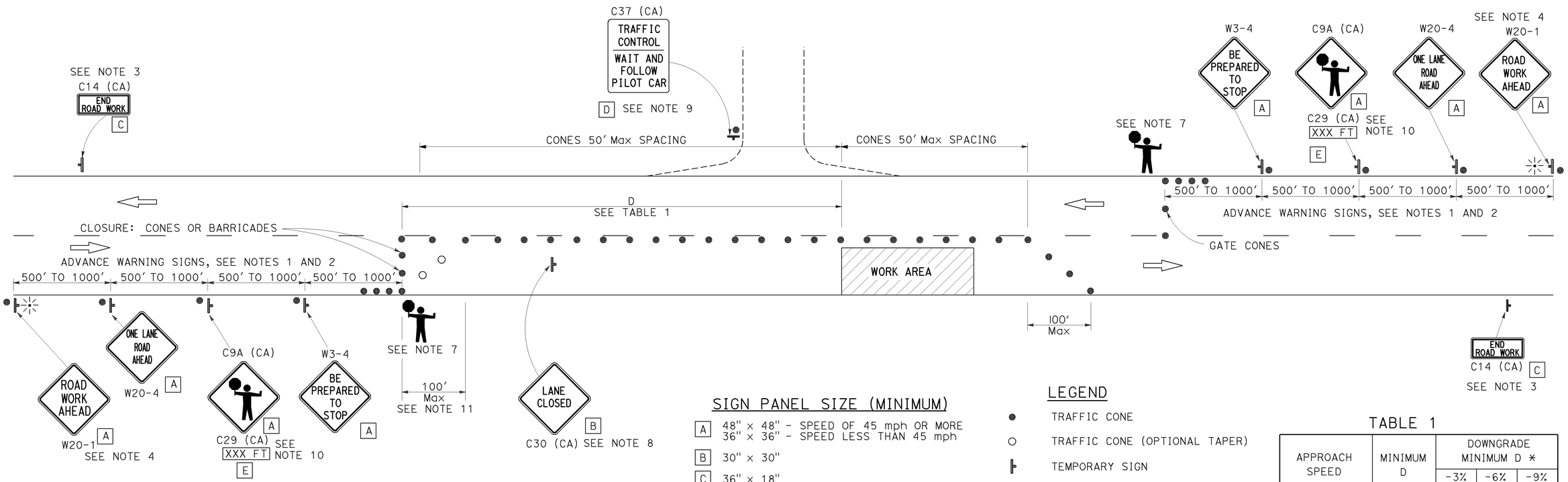

SIGN PANEL SIZE (MINIMUM)

- A: 48" x 48" - SPEED OF 45 mph OR MORE; 36" x 36" - SPEED LESS THAN 45 mph
- B: 30" x 30"
- C: 36" x 18"
- D: 36" x 42"
- E: 36" x 9"

LEGEND

- TRAFFIC CONE
- TRAFFIC CONE (OPTIONAL TAPER)
- TEMPORARY SIGN
- PORTABLE FLASHING BEACON
- FLAGGER

TABLE 1

APPROACH SPEED	MINIMUM D	DOWNGRADE MINIMUM D *		
		-3%	-6%	-9%
mph	ft	ft	ft	ft
25 AND BELOW	155	158	165	173
30	200	205	215	227
35	250	257	271	287
40	305	315	333	354
45	360	378	400	427
50	425	446	474	507
55	495	520	553	593
60	570	598	638	686
65	645	682	728	785

* USE ON SUSTAINED DOWNGRADE STEEPER THAN -3 PERCENT AND LONGER THAN 1 MILE.

NOTES:

1. Where approach speeds are low, advance warning signs may be placed at 300' spacing, and closer in urban areas.
2. Each advance warning sign in each direction of travel shall be equipped with at least two flags for daytime closure. Each flag shall be at least 16" x 16" in size and shall be orange or fluorescent red-orange in color. Flashing beacons shall be placed at the locations indicated for lane closure during hours of darkness.
3. A C14 (CA) "END ROAD WORK" sign, as appropriate, shall be placed at the end of the lane control unless the end of work area is obvious, or ends within a larger project's limits.
4. If the W20-1 sign would follow within 2000' of a stationary W20-1 or C11 (CA) "ROAD WORK NEXT _____MILES", use a W20-4 sign for the first advance warning sign.
5. All cones used for lane closures during the hours of darkness shall be fitted with retroreflective bands (or sleeves) as specified in the specifications.
6. Portable delineators, placed at one-half the spacing indicated for traffic cones, may be used instead of cones for daytime closures only.
7. Additional advance flaggers may be required. Flagger should stand in a conspicuous place, be visible to approaching traffic as well as approaching vehicles after the first vehicle has stopped. During the hours of darkness, the flagging-station and flagger shall be illuminated and clearly visible to approaching traffic. The illumination footprint of the lighting on the ground shall be at least 20' in diameter. Place a minimum of four cones at 50' intervals in advance of flagger station as shown.
8. Place C30 (CA) "LANE CLOSED" sign at 500' to 1000' intervals throughout extended work areas. They are optional if the work area is visible from the flagger station.
9. When a pilot car is used, place a C37 (CA) "TRAFFIC CONTROL-WAIT AND FOLLOW PILOT CAR" sign at all intersections within traffic control area. Signs shall be clean and visible at all times.
10. An optional C29 (CA) sign may be placed below the C9A (CA) sign.
11. Traffic cones or barricades may be placed on the optional taper as shown, barricades shall be Type I, II, or III.

STATE OF CALIFORNIA
DEPARTMENT OF TRANSPORTATION

TRAFFIC CONTROL SYSTEM FOR LANE CLOSURE ON TWO LANE CONVENTIONAL HIGHWAYS

NO SCALE

TCS-3

STATE OF CALIFORNIA - DEPARTMENT OF TRANSPORTATION
Caltrans

FUNCTIONAL SUPERVISOR | CALCULATED-DESIGNED BY | CHECKED BY | REVISED BY | DATE REVISED

LAST REVISION 00-00-00 | DATE PLOTTED => 10-DEC-2012 | TIME PLOTTED => 09:45

Dist	COUNTY	ROUTE	POST MILES TOTAL PROJECT	SHEET No.	TOTAL SHEETS
06	Ker, Kin	5,14,58, 202,204	Var	7	18

REGISTERED CIVIL ENGINEER 12-7-12 DATE

2-19-13
PLANS APPROVAL DATE

REGISTERED PROFESSIONAL ENGINEER Gurinderpal Bhullar No. C48815 Exp. 9-30-14 CIVIL STATE OF CALIFORNIA

THE STATE OF CALIFORNIA OR ITS OFFICERS OR AGENTS SHALL NOT BE RESPONSIBLE FOR THE ACCURACY OR COMPLETENESS OF SCANNED COPIES OF THIS PLAN SHEET.

TYPICAL RAMP CLOSURES

SIGN PANEL SIZE (Min)

- A 48" x 48"
- B 48" x 30"
- C 30" x 30"
- D 48" x 48" - SPEED OF 50 mph OR MORE
  36" x 36" - SPEED LESS THAN 50 mph
- E 48" x 36"

LEGEND

- TRAFFIC CONE
- TEMPORARY SIGN
- BARRICADES

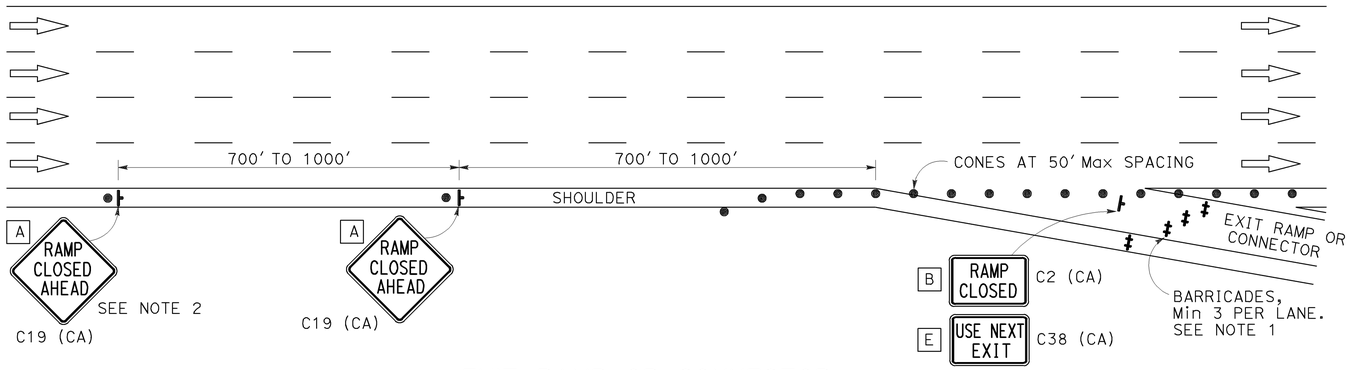

EXIT RAMP OR CONNECTOR

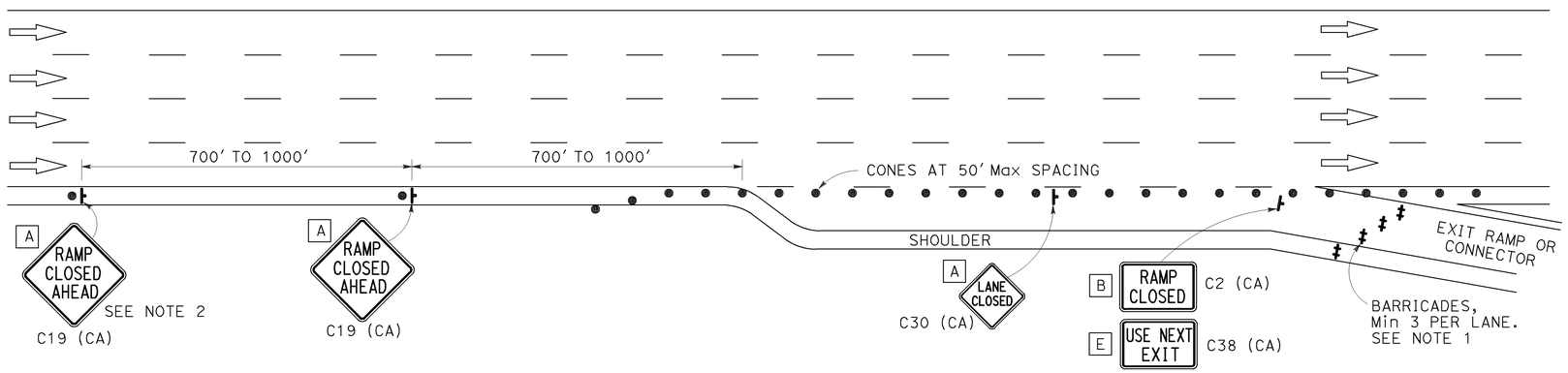

EXIT RAMP OR CONNECTOR WITH ADDITIONAL LANE

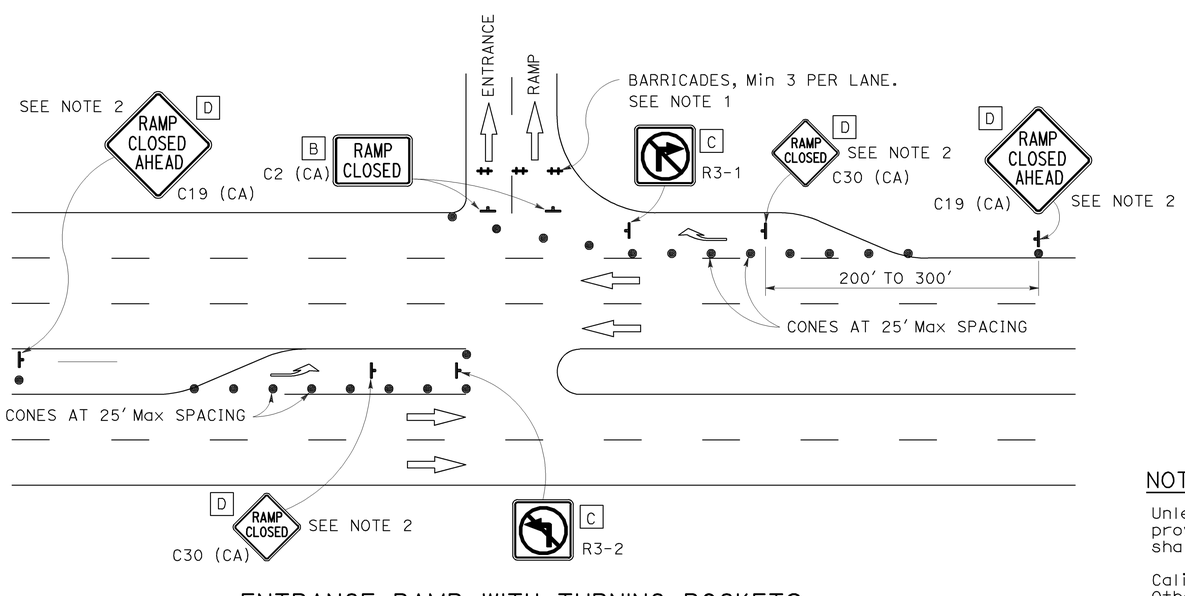

ENTRANCE RAMP WITH TURNING POCKETS

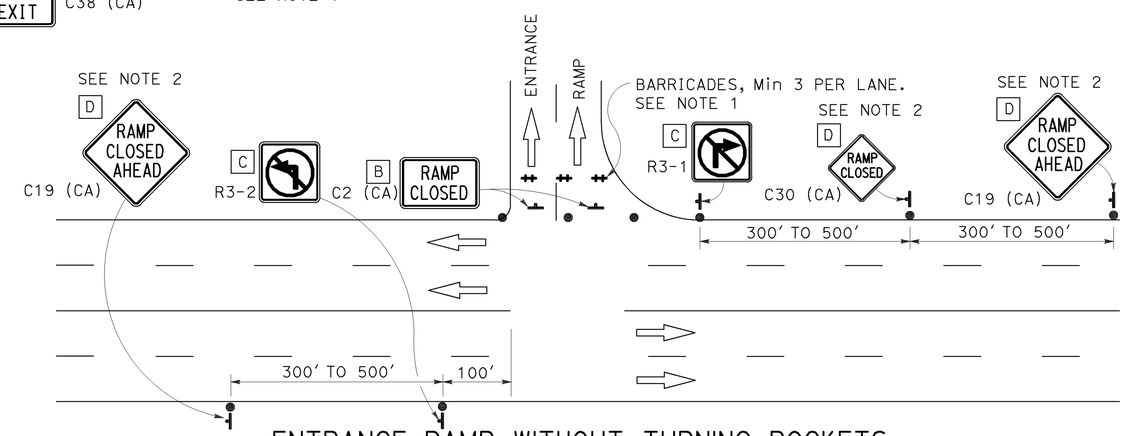

ENTRANCE RAMP WITHOUT TURNING POCKETS

NOTES:

1. Barricades shall be Type I, II, or III for closures lasting one week or less and Type III for closures lasting longer than one week.
2. In addition to placing the C19 (CA) "RAMP CLOSED AHEAD" and C30 (CA) "RAMP CLOSED" signs, black on orange overlay plates with the word "CLOSED" may be mounted, as directed by the Engineer, on all guide signs that refer to the closed ramp. The letter size on the overlay shall be the same as the guide sign.
3. Each advance C19 (CA) "RAMP CLOSED AHEAD" sign shall be equipped with at least two flags for daytime closure. Each flag shall be at least 16" x 16" in size and shall be orange or fluorescent red-orange in color.
4. All cones used for ramp closures during the hours of darkness shall be fitted with retroreflective bands (or sleeves) as specified in the specifications.
5. Portable delineators, placed at one-half the spacing indicated for traffic cones, may be used instead of cones for daytime ramp closures only.
6. At least one person shall be assigned to provide full time maintenance of traffic control devices, unless otherwise directed by the Engineer.
7. The existing "EXIT" sign in the gore area shall be covered during ramp closures.

NOTES:

Unless otherwise specified in the special provisions, all temporary warning signs shall have black legend on orange background.

California code are designated by (CA). Otherwise, Federal (MUTCD) codes are shown.

STATE OF CALIFORNIA
DEPARTMENT OF TRANSPORTATION

TRAFFIC CONTROL SYSTEM FOR RAMP CLOSURE

NO SCALE

TCS-4

STATE OF CALIFORNIA - DEPARTMENT OF TRANSPORTATION
Caltrans

FUNCTIONAL SUPERVISOR | CALCULATED-DESIGNED BY | CHECKED BY | REVISED BY | DATE REVISED

LAST REVISION 00-00-00 | DATE PLOTTED => 10-DEC-2012 | TIME PLOTTED => 09:45

DIST	COUNTY	ROUTE	POST MILES TOTAL PROJECT	SHEET No.	TOTAL SHEETS
06	Ker,Kin	5,14,58, 202,204	Var	8	18

REGISTERED CIVIL ENGINEER 12-11-12 DATE

2-19-13
PLANS APPROVAL DATE

REGISTERED PROFESSIONAL ENGINEER HUBERT DANG No. C 69174 Exp. 6-30-14 CIVIL STATE OF CALIFORNIA

The State of California or its officers or agents shall not be responsible for the accuracy or completeness of electronic copies of this plan sheet.

CUDDY CREEK BR NO 50-0049

QUANTITIES

RAPID SETTING CONCRETE (PATCH)	27	CF
REMOVE CONCRETE DECK SURFACE	2,827	SQFT
REMOVE POLYESTER CONCRETE OVERLAY	7,754	SQFT
REMOVE UNSOUND CONCRETE	27	CF
PREPARE CONCRETE BRIDGE DECK SURFACE	10,581	SQFT
FURNISH POLYESTER CONCRETE OVERLAY	798	CF
PLACE POLYESTER CONCRETE OVERLAY	10,581	SQFT
STRUCTURE EXCAVATION (BRIDGE)	13	CY
STRUCTURAL CONCRETE, APPROACH SLAB (TYPE R)	213	CY
PAVING NOTCH EXTENSION	6	CF
BONDED JOINT SEAL (MR 1/2")	199	LF
TIMBER LAGGING	0.8	MFBM

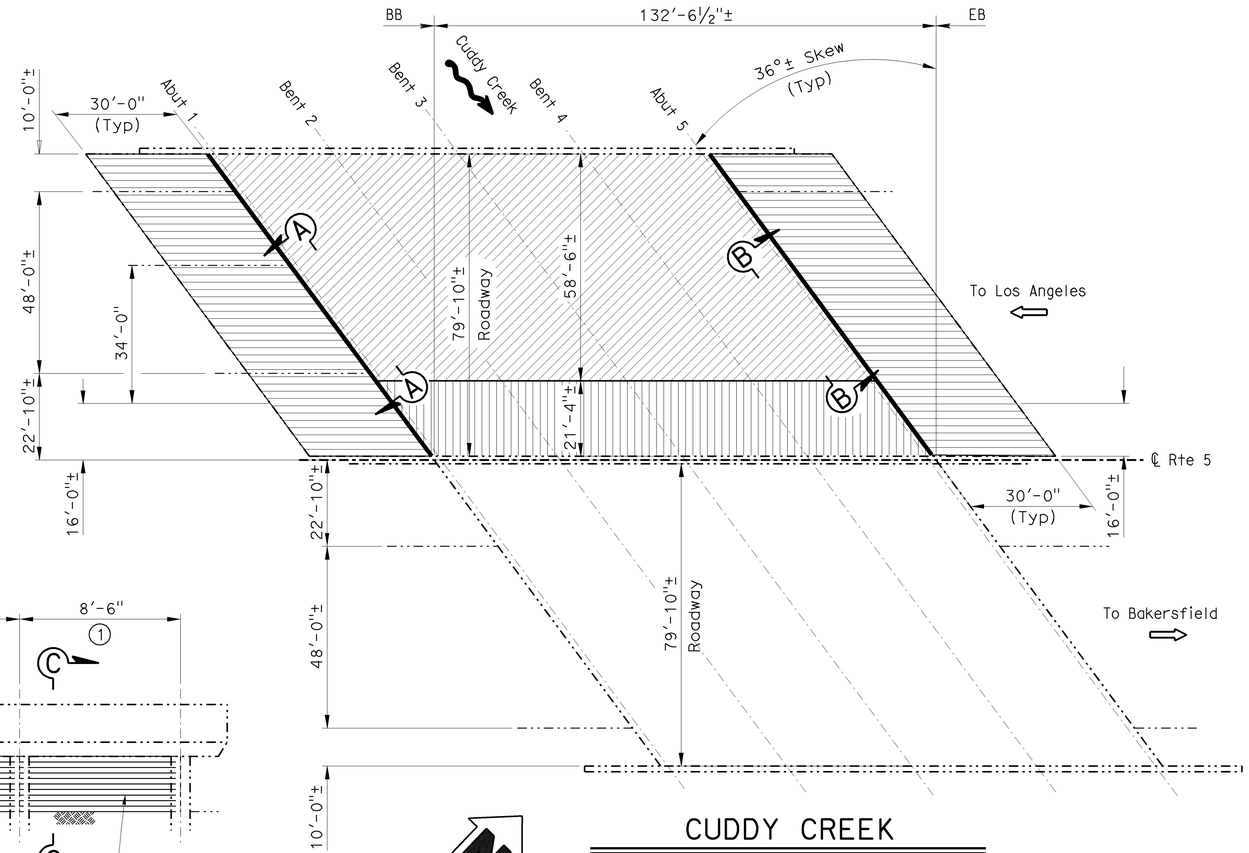

CUDDY CREEK

Br No. 50-0048, KER, ROUTE 5, PM R00.55
1" = 20'

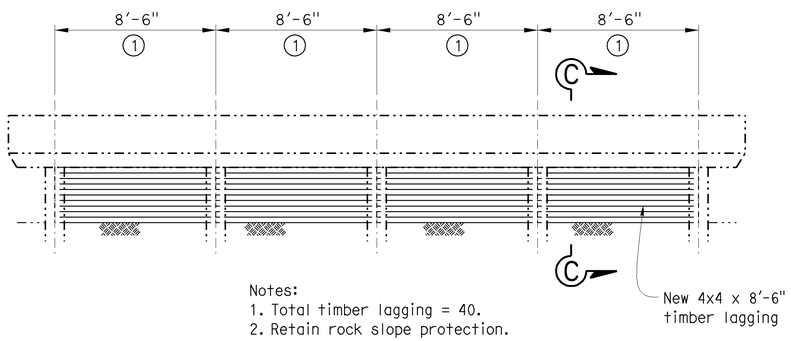

Notes:
1. Total timber lagging = 40.
2. Retain rock slope protection.

SECTION A-A

NO SCALE

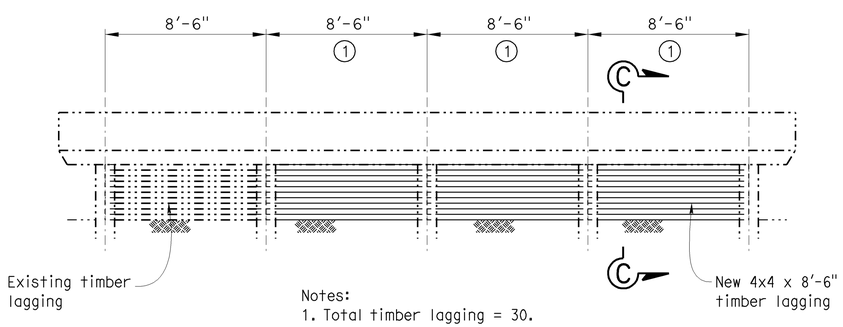

Notes:
1. Total timber lagging = 30.

SECTION B-B

NO SCALE

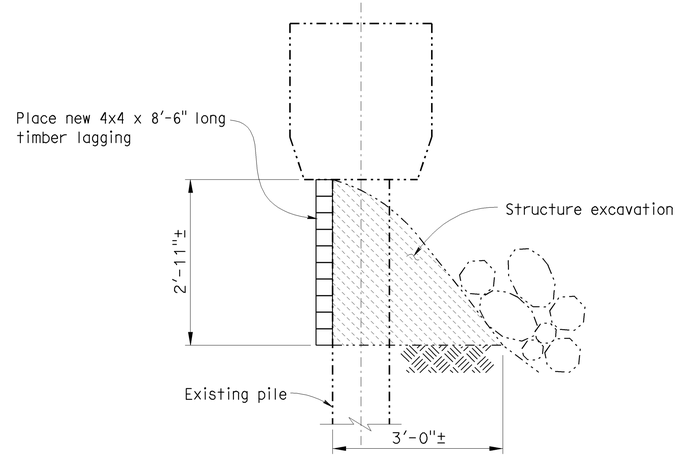

SECTION C-C

3/4" = 1'-0"

NOTES: (APPLY TO ALL SHEETS)
Indicates existing.

THE CONTRACTOR SHALL VERIFY ALL CONTROLLING FIELD DIMENSIONS BEFORE ORDERING OR FABRICATING ANY MATERIAL.

STANDARD PLAN SHEET NUMBER
DETAIL NUMBER

NOTES: (APPLY TO THIS SHEET ONLY)

Indicates limits of remove existing 3/4"± depth Polyester Concrete Overlay, remove unsound concrete, place rapid setting concrete patch, prepare concrete bridge deck surface, furnish and place new 3/4" min depth Polyester Concrete Overlay. For details, see "JOINT SEAL AND DECK REPAIR DETAILS" sheet.

Indicates limits of remove existing 3/4"± depth concrete bridge deck surface, remove unsound concrete, place rapid setting concrete patch, prepare concrete bridge deck surface, furnish and place new 3/4" min depth Polyester Concrete Overlay. For details, see "JOINT SEAL AND DECK REPAIR DETAILS" sheet.

Indicates limits of remove existing approach pavement with the entire thickness of CTB and place new Structure Approach Type R(30D). For details, see "STRUCTURE APPROACH TYPE R(30D) sheet.

Indicates location of remove joint seal and place new joint seal. For details, see "JOINT SEAL AND DECK REPAIR DETAILS" sheet.

(1) Indicates location of structure excavation soil and install timber lagging.

INDEX TO PLANS

SHEET NO.	TITLE
1	GENERAL PLAN NO. 1
2	GENERAL PLAN NO. 2
3	GENERAL PLAN NO. 3
4	GENERAL PLAN NO. 4
5	GENERAL PLAN NO. 5
6	GENERAL PLAN NO. 6
7	GENERAL PLAN NO. 7
8	MISCELLANEOUS DETAILS
9	JOINT SEAL AND DECK REPAIR DETAILS
10	STRUCTURE APPROACH TYPE R(30D)
11	JOINT SEAL ASSEMBLY (Maximum Movement Rating = 4")

STANDARD PLANS DATED 2010

SHEET NO.	TITLE
A10A	ABBREVIATIONS (SHEET 1 OF 2)
A10B	ABBREVIATIONS (SHEET 2 OF 2)
B6-21	JOINT SEALS (MAXIMUM MOVEMENT RATING=2")

12-11-12 Michael J. Lee
DESIGN ENGINEER

	BY	CHECKED			
DESIGN	H. Dang	K. Truong	LOAD FACTOR DESIGN	LIVE LOADING: HS20-44 AND ALTERNATIVE AND PERMIT DESIGN LOAD	
DETAILS	M. Hallstrom	K. Truong	LAYOUT	M. Hallstrom	X
QUANTITIES	H. Dang	K. Truong	SPECIFICATIONS	X	PLANS AND SPECS COMPARED X

STATE OF CALIFORNIA
DEPARTMENT OF TRANSPORTATION

DIVISION OF MAINTENANCE
STRUCTURE MAINTENANCE DESIGN

BRIDGE NO. VARIOUS
POST MILE VARIES

ROUTE 5, 14, 58, 202, 204 BRIDGES
GENERAL PLAN NO. 1

STRUCTURES MAINTENANCE GENERAL PLAN SHEET (ENGLISH) (REV. 09-01-10)

ORIGINAL SCALE IN INCHES FOR REDUCED PLANS 0 1 2 3

UNIT: 3488
PROJECT NUMBER & PHASE: 0600020509 1
CONTRACT NO.: 06-0M6201

DISREGARD PRINTS BEARING EARLIER REVISION DATES

REVISION DATES

SHEET 1 OF 11

FILE => 06-0m6201_01gp_01.dgn

USERNAME => s137417 DATE PLOTTED => 26-FEB-2013 TIME PLOTTED => 08:28

DIST	COUNTY	ROUTE	POST MILES TOTAL PROJECT	SHEET No.	TOTAL SHEETS
06	Ker,Kin	5,14,58, 202,204	Var	9	18

REGISTERED CIVIL ENGINEER 12-11-12 DATE

2-19-13
PLANS APPROVAL DATE

REGISTERED PROFESSIONAL ENGINEER HUBERT DANG No. C 69174 Exp. 6-30-14 CIVIL STATE OF CALIFORNIA

The State of California or its officers or agents shall not be responsible for the accuracy or completeness of electronic copies of this plan sheet.

NOTES: (APPLY TO THIS SHEET ONLY)

Indicates limits of remove existing 2" AC overlay, remove unsound concrete, place rapid setting concrete patch, prepare concrete bridge deck surface and place new 2" min depth AC overlay. For details, see "JOINT SEAL AND DECK REPAIR DETAILS" sheet.

Indicates limits of remove unsound concrete, place rapid setting concrete patch, prepare concrete bridge deck surface, treat bridge deck with high molecular weight methacrylate, furnish and place new 3/4" Polyester Concrete Overlay. For details, see "JOINT SEAL AND DECK REPAIR DETAILS" sheet.

Indicates limits of remove existing concrete bridge deck surface. For details, see "DECK SURFACE REMOVAL DETAIL" on "JOINT SEAL AND DECK REPAIR DETAILS" sheet.

Indicates location of remove joint seal and place new joint seal. For details, see "JOINT SEAL AND DECK REPAIR DETAILS" sheet.

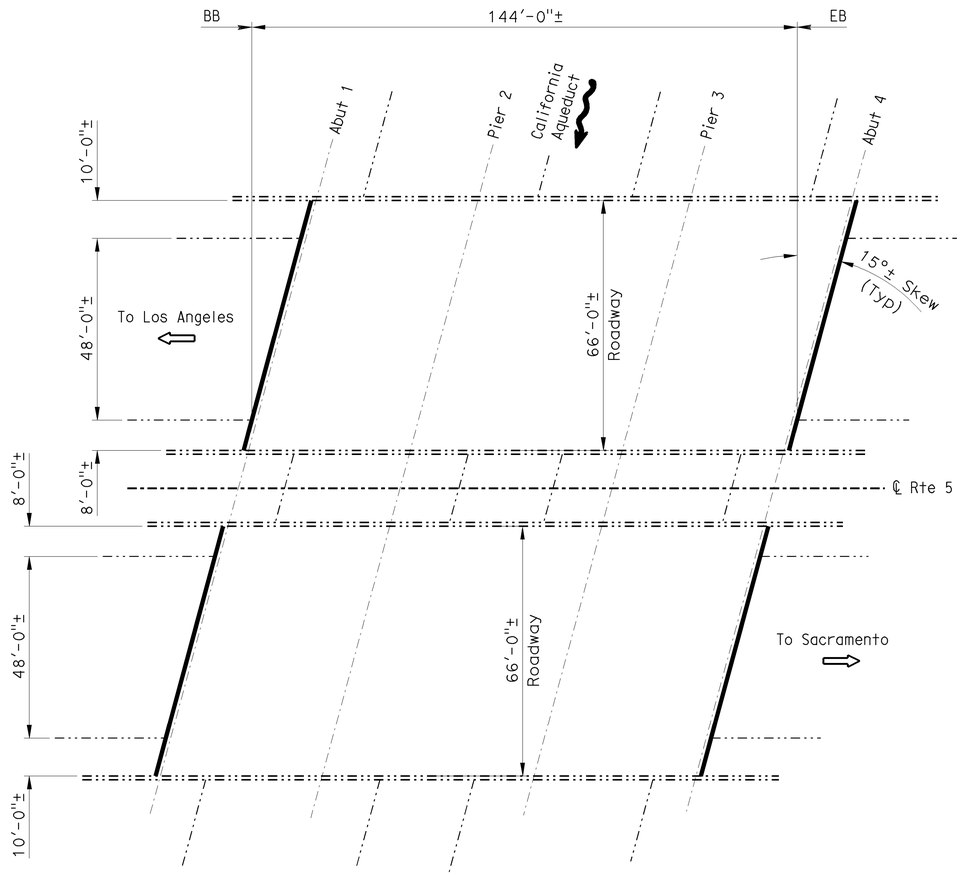

CALIFORNIA AQUEDUCT

Br No. 50-0321L/R, KER, ROUTE 5, PM 12.47
1" = 20'

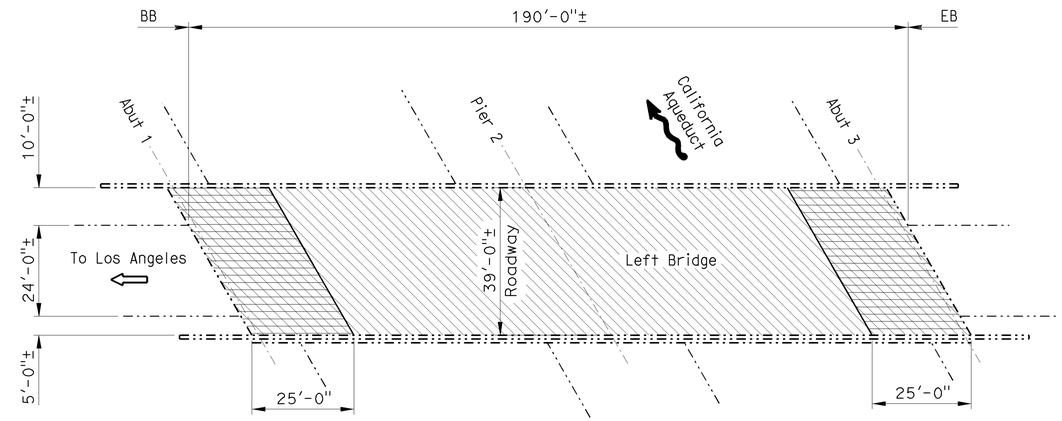

CALIFORNIA AQUEDUCT

Br No. 45-0069L, KIN, ROUTE 5, PM 14.92
1" = 20'

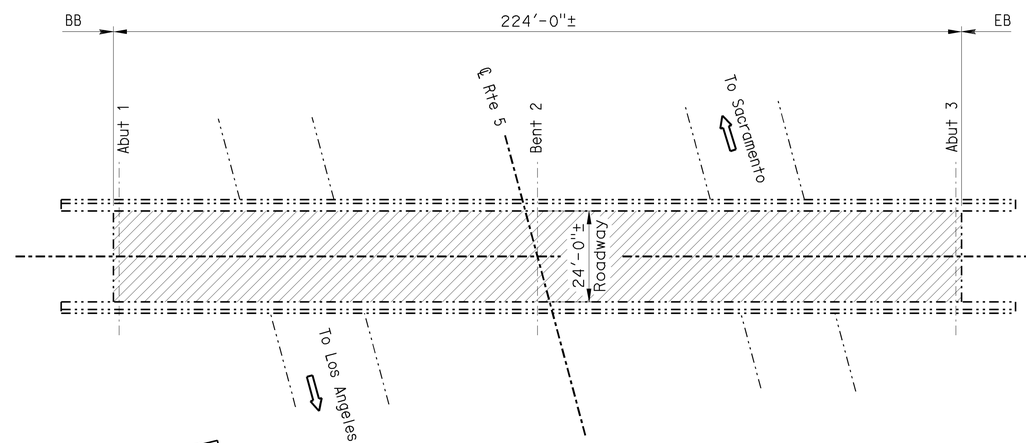

PUMPING STATION ROAD OVERCROSSING

Br No. 50-0304, KER, ROUTE 5, PM 45.13
1" = 20'

CALIFORNIA AQUEDUCT — BR NO 50-0321L/R

QUANTITIES

CLEAN EXPANSION JOINT	276	LF
JOINT SEAL (MR 1")	276	LF

CALIFORNIA AQUEDUCT — BR NO 45-0069L

QUANTITIES

RAPID SETTING CONCRETE (PATCH)	19	CF
REMOVE CONCRETE DECK SURFACE	7,410	SQFT
REMOVE UNSOUND CONCRETE	19	CF
PREPARE CONCRETE BRIDGE DECK SURFACE	7,410	SQFT
FURNISH POLYESTER CONCRETE OVERLAY	556	CF
PLACE POLYESTER CONCRETE OVERLAY	7,410	SQFT

PUMPING STATION ROAD OC — BR NO 50-0304

QUANTITIES

RAPID SETTING CONCRETE (PATCH)	14	CF
REMOVE ASPHALT CONCRETE SURFACING	5,376	SQFT
REMOVE UNSOUND CONCRETE	14	CF
PREPARE CONCRETE BRIDGE DECK SURFACE	5,376	SQFT
HOT MIX ASPHALT (TYPE A)	67	TON

12-11-12 Michael J. Lee
DESIGN ENGINEER

	BY	CHECKED			
DESIGN	H. Dang	K. Truong	LOAD FACTOR DESIGN	LIVE LOADING: HS20-44 AND ALTERNATIVE AND PERMIT DESIGN LOAD	
DETAILS	M. Hallstrom	K. Truong	LAYOUT	M. Hallstrom	X
QUANTITIES	H. Dang	K. Truong	SPECIFICATIONS	X	PLANS AND SPECS COMPARED X

STATE OF CALIFORNIA
DEPARTMENT OF TRANSPORTATION

DIVISION OF MAINTENANCE
STRUCTURE MAINTENANCE DESIGN

BRIDGE NO. VARIOUS
POST MILE VARIES

ROUTE 5, 14, 58, 202, 204 BRIDGES
GENERAL PLAN NO. 2

STRUCTURES MAINTENANCE GENERAL PLAN SHEET (ENGLISH) (REV. 09-01-10)

ORIGINAL SCALE IN INCHES FOR REDUCED PLANS 0 1 2 3

UNIT: 3488
PROJECT NUMBER & PHASE: 0600020509 1
CONTRACT NO.: 06-0M6201

DISREGARD PRINTS BEARING EARLIER REVISION DATES

REVISION DATES

SHEET 2 OF 11

FILE => 06-0m6201_02gp_02.dgn

USERNAME => s137417 DATE PLOTTED => 26-FEB-2013 TIME PLOTTED => 08:28

DIST	COUNTY	ROUTE	POST MILES TOTAL PROJECT	SHEET No.	TOTAL SHEETS
06	Ker,Kin	5,14,58, 202,204	Var	10	18

REGISTERED CIVIL ENGINEER 12-11-12 DATE

2-19-13
PLANS APPROVAL DATE

REGISTERED PROFESSIONAL ENGINEER HUBERT DANG No. C 69174 Exp. 6-30-14 CIVIL STATE OF CALIFORNIA

The State of California or its officers or agents shall not be responsible for the accuracy or completeness of electronic copies of this plan sheet.

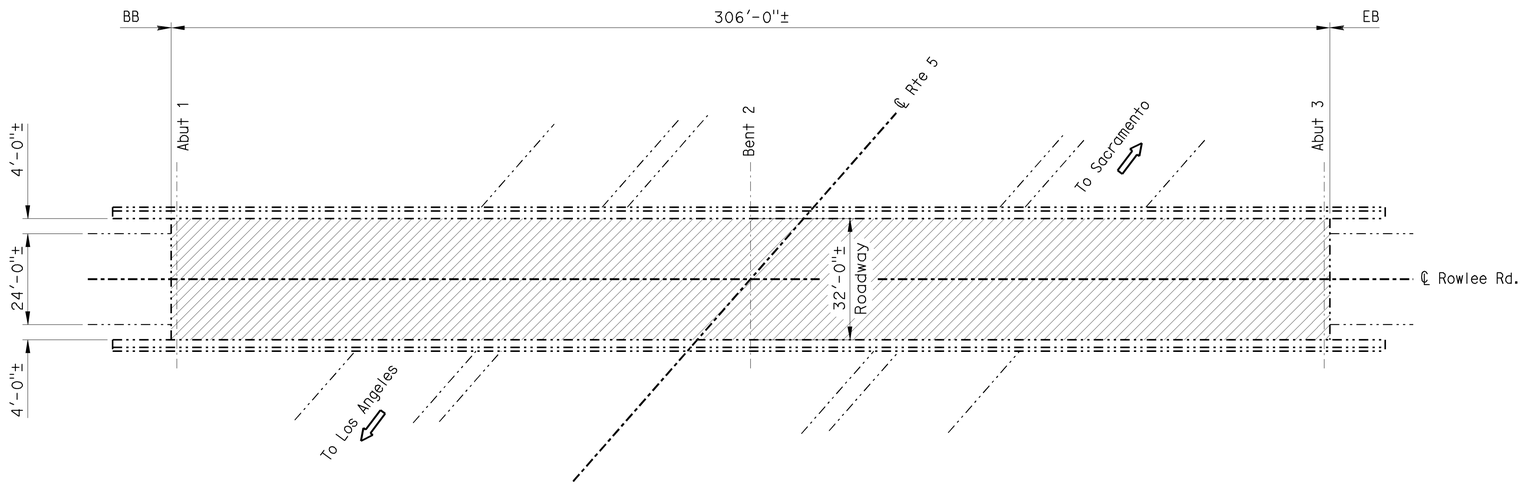

ROWLEE ROAD OVERCROSSING

Br No. 50-0309, KER, ROUTE 5, PM 58.01
1" = 20'

NOTES: (APPLY TO THIS SHEET ONLY)

Indicates limits of remove existing epoxy chipseal, prepare concrete bridge deck surface and treat bridge deck with high molecular weight methacrylate.

Indicates limits of prepare concrete bridge deck surface and treat bridge deck with high molecular weight methacrylate.

ROWLEE ROAD OC — BR NO 50-0309

QUANTITIES

PREPARE CONCRETE BRIDGE DECK SURFACE	9,792	SQFT
TREAT BRIDGE DECK	9,792	SQFT
FURNISH BRIDGE DECK TREATMENT MATERIAL	109	GAL
REMOVE CHIP SEAL	9,792	SQFT

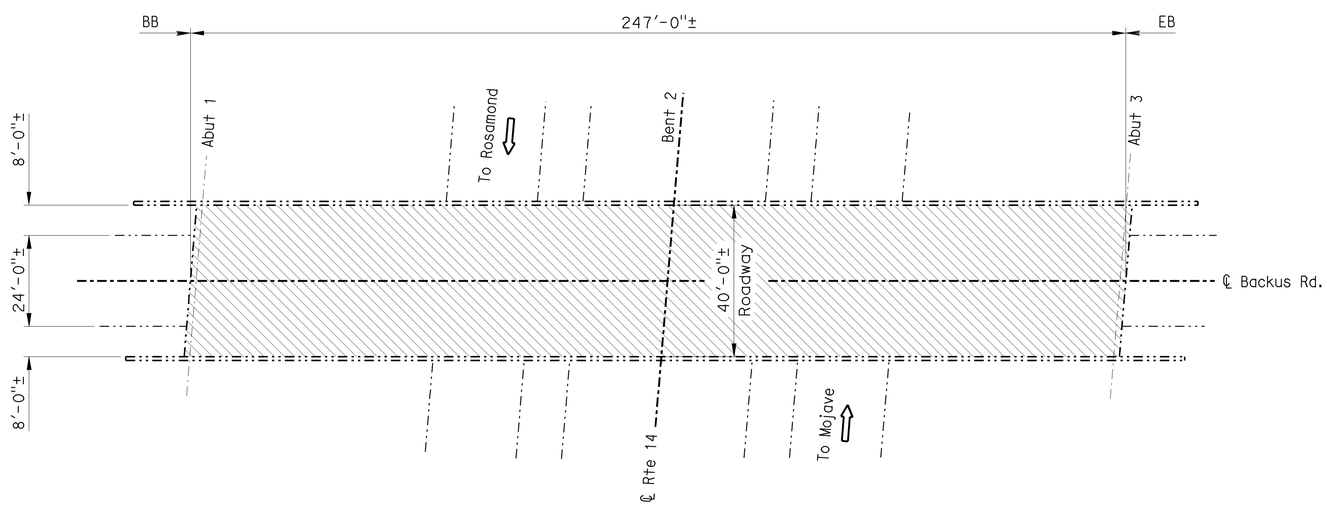

BACKUS ROAD OVERCROSSING

Br No. 50-0386, KER, ROUTE 14, PM R09.14
1" = 20'

BACKUS ROAD OC — BR NO 50-0386

QUANTITIES

PREPARE CONCRETE BRIDGE DECK SURFACE	9,880	SQFT
TREAT BRIDGE DECK	9,880	SQFT
FURNISH BRIDGE DECK TREATMENT MATERIAL	110	GAL

12-11-12 Michael J. Lee
DESIGN ENGINEER

	BY	CHECKED			
DESIGN	H. Dang	K. Truong	LOAD FACTOR DESIGN	LIVE LOADING: HS20-44 AND ALTERNATIVE AND PERMIT DESIGN LOAD	
DETAILS	M. Hallstrom	K. Truong	LAYOUT	M. Hallstrom	X
QUANTITIES	H. Dang	K. Truong	SPECIFICATIONS	X	PLANS AND SPECS COMPARED X

STATE OF CALIFORNIA DEPARTMENT OF TRANSPORTATION

DIVISION OF MAINTENANCE STRUCTURE MAINTENANCE DESIGN

BRIDGE NO. VARIOUS
POST MILE VARIES

ROUTE 5, 14, 58, 202, 204 BRIDGES
GENERAL PLAN NO. 3

STRUCTURES MAINTENANCE GENERAL PLAN SHEET (ENGLISH) (REV. 09-01-10)

ORIGINAL SCALE IN INCHES FOR REDUCED PLANS 0 1 2 3

UNIT: 3488
PROJECT NUMBER & PHASE: 0600020509 1 CONTRACT NO.: 06-0M6201

DISREGARD PRINTS BEARING EARLIER REVISION DATES

REVISION DATES

SHEET 3 OF 11

FILE => 06-0m6201_03gp_03.dgn

USERNAME => s137417 DATE PLOTTED => 26-FEB-2013 TIME PLOTTED => 08:28

DIST	COUNTY	ROUTE	POST MILES TOTAL PROJECT	SHEET No.	TOTAL SHEETS
06	Ker,Kin	5,14,58, 202,204	Var	11	18

REGISTERED CIVIL ENGINEER 12-11-12 DATE

2-19-13
PLANS APPROVAL DATE

REGISTERED PROFESSIONAL ENGINEER HUBERT DANG No. C 69174 Exp. 6-30-14 CIVIL STATE OF CALIFORNIA

The State of California or its officers or agents shall not be responsible for the accuracy or completeness of electronic copies of this plan sheet.

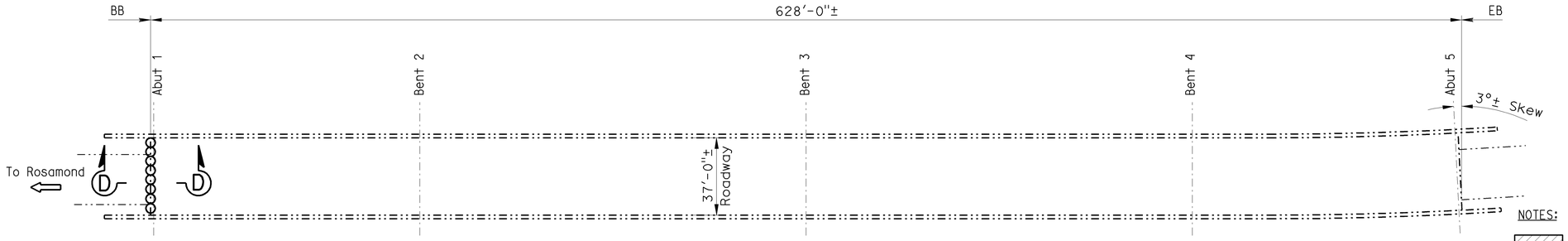

SOUTH MOJAVE OVERHEAD

Br No. 50-0402L, KER, ROUTE 14, PM R15.33
1" = 30'

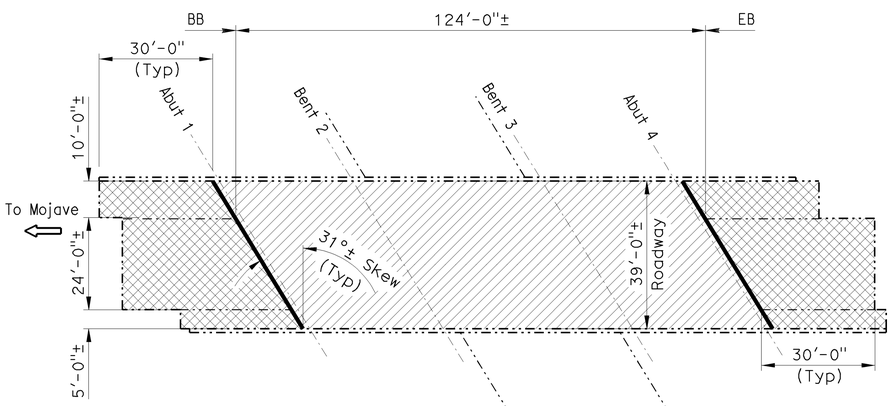

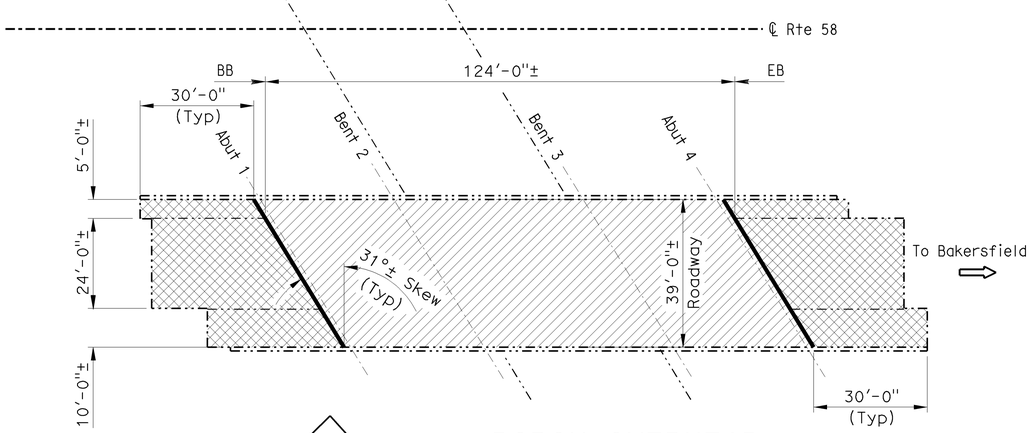

BORON OVERHEAD

Br No. 50-0353L/R, KER, ROUTE 58, PM R141.50
1" = 20'

NOTES: (APPLY TO THIS SHEET ONLY)

Indicates limits of remove unsound concrete, place rapid setting concrete patch, prepare concrete bridge deck surface, furnish and place new ¾" min depth Polyester Concrete Overlay. For details, see "JOINT SEAL AND DECK REPAIR DETAILS" sheet.

Indicates limits of remove existing approach pavement with the entire thickness of CTB and place new Structure Approach Type R(30D). For details, see "STRUCTURE APPROACH TYPE R(30D)" sheet.

Indicates location of remove joint seal and place new joint seal. For details, see "JOINT SEAL AND DECK REPAIR DETAILS" sheet.

Indicates location of remove existing joint seal assembly and place new joint seal assembly. For details, see "JOINT SEAL ASSEMBLY (Maximum Movement Rating = 4")" sheet.

For Section D-D, see "MISCELLANEOUS DETAILS" sheet.

SOUTH MOJAVE OVERHEAD — BR NO 50-0402L

QUANTITIES

BRIDGE REMOVAL (PORTION)	LUMP	SUM
STRUCTURAL CONCRETE, BRIDGE	4	CY
JOINT SEAL ASSEMBLY (MR 3")	76	LF
BAR REINFORCING STEEL (BRIDGE)	527	LB

BORON OVERHEAD — BR NO 50-0353L/R

QUANTITIES

RAPID SETTING CONCRETE (PATCH)	24	CF
REMOVE UNSOUND CONCRETE	24	CF
PREPARE CONCRETE BRIDGE DECK SURFACE	9,672	SQFT
FURNISH POLYESTER CONCRETE OVERLAY	726	CF
PLACE POLYESTER CONCRETE OVERLAY	9,672	SQFT
STRUCTURAL CONCRETE, APPROACH SLAB (TYPE R)	246	CY
JOINT SEAL (MR ½")	184	LF

12-11-12 Michael J. Lee
DESIGN ENGINEER

	BY	CHECKED			
DESIGN	H. Dang	K. Truong	LOAD FACTOR DESIGN	LIVE LOADING: HS20-44 AND ALTERNATIVE AND PERMIT DESIGN LOAD	
DETAILS	M. Hallstrom	K. Truong	LAYOUT	M. Hallstrom	X
QUANTITIES	H. Dang	K. Truong	SPECIFICATIONS	X	X

STATE OF CALIFORNIA
DEPARTMENT OF TRANSPORTATION

DIVISION OF MAINTENANCE
STRUCTURE MAINTENANCE DESIGN

BRIDGE NO. VARIOUS
POST MILE VARIES

ROUTE 5, 14, 58, 202, 204 BRIDGES
GENERAL PLAN NO. 4

STRUCTURES MAINTENANCE GENERAL PLAN SHEET (ENGLISH) (REV. 09-01-10)

ORIGINAL SCALE IN INCHES FOR REDUCED PLANS 0 1 2 3

UNIT: 3488
PROJECT NUMBER & PHASE: 0600020509 1 CONTRACT NO.: 06-0M6201

DISREGARD PRINTS BEARING EARLIER REVISION DATES

REVISION DATES

SHEET 4 OF 11

FILE => 06-0m6201_04gp_04.dgn

USERNAME => s137417 DATE PLOTTED => 26-FEB-2013 TIME PLOTTED => 08:29

DIST	COUNTY	ROUTE	POST MILES TOTAL PROJECT	SHEET No.	TOTAL SHEETS
06	Ker,Kin	5,14,58, 202,204	Var	12	18

REGISTERED CIVIL ENGINEER 12-11-12 DATE

2-19-13
PLANS APPROVAL DATE

REGISTERED PROFESSIONAL ENGINEER HUBERT DANG No. C 69174 Exp. 6-30-14 CIVIL STATE OF CALIFORNIA

The State of California or its officers or agents shall not be responsible for the accuracy or completeness of electronic copies of this plan sheet.

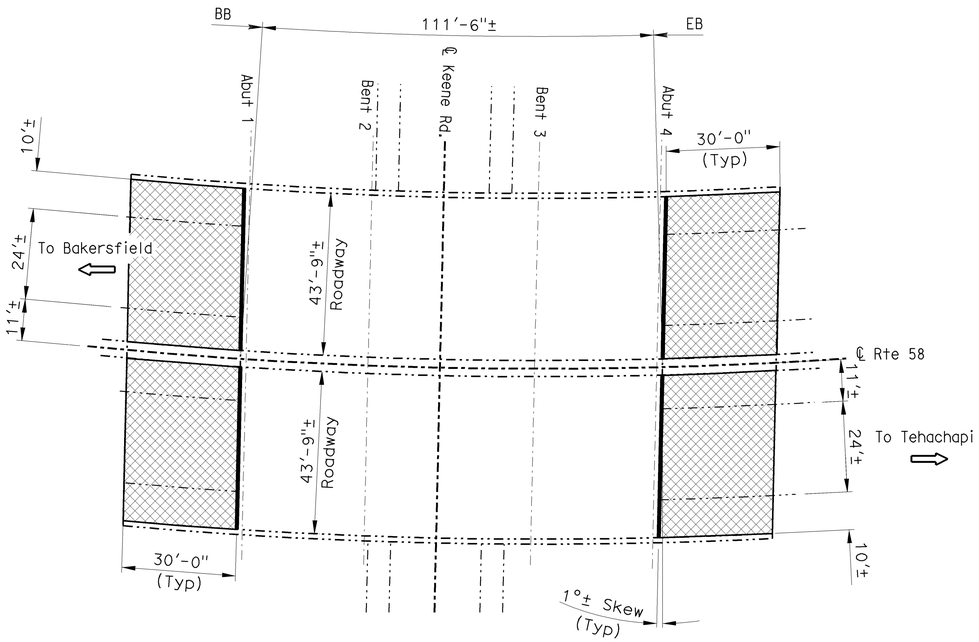

KEENE ROAD UNDERCROSSING

Br No. 50-0251, KER, ROUTE 58, PM 82.06
1" = 20'

KEENE ROAD UC — BR NO 50-0251

QUANTITIES

STRUCTURAL CONCRETE, APPROACH SLAB (TYPE R)	236	CY
JOINT SEAL (MR ½")	176	LF

NOTES: (APPLY TO THIS SHEET ONLY)

Indicates limits of remove unsound concrete, place rapid setting concrete patch, prepare concrete bridge deck surface, furnish and place new ¾" min depth Polyester Concrete Overlay. For details, see "JOINT SEAL AND DECK REPAIR DETAILS" sheet.

Indicates limits of remove existing approach pavement with the entire thickness of CTB and place new Structure Approach Type R(30D). For details, see "STRUCTURE APPROACH TYPE R(30D)" sheet.

Indicates limits of remove existing concrete bridge deck surface. For details, see "DECK SURFACE REMOVAL DETAIL" on "JOINT SEAL AND DECK REPAIR DETAILS" sheet.

Indicates location of remove joint seal and place new joint seal. For details, see "JOINT SEAL AND DECK REPAIR DETAILS" sheet.

ROUTE 202/58 SEPARATION — BR NO 50-0342

QUANTITIES

RAPID SETTING CONCRETE (PATCH)	20	CF
REMOVE CONCRETE DECK SURFACE	8,160	SQFT
REMOVE UNSOUND CONCRETE	20	CF
PREPARE CONCRETE BRIDGE DECK SURFACE	8,160	SQFT
FURNISH POLYESTER CONCRETE OVERLAY	612	CF
PLACE POLYESTER CONCRETE OVERLAY	8,160	SQFT

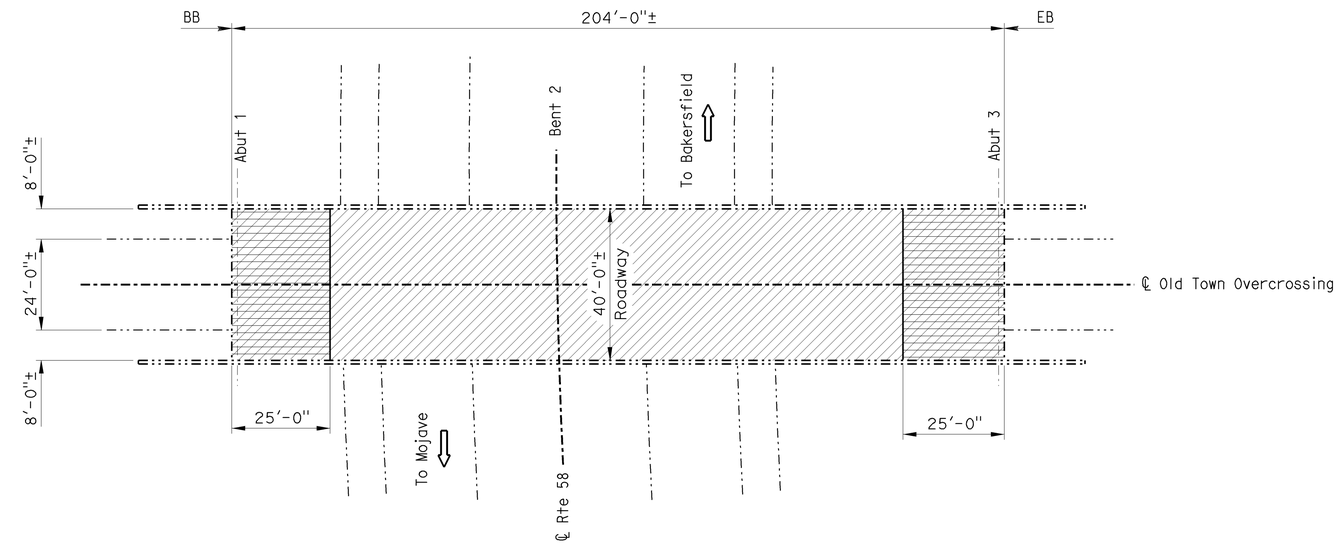

ROUTE 202/58 SEPARATION

Br No. 50-0342, KER, ROUTE 202, PM 11.99
1" = 20'

12-11-12 Michael J. Lee DESIGN ENGINEER	DESIGN	BY H. Dang	CHECKED K. Truong	LOAD FACTOR DESIGN	LIVE LOADING: HS20-44 AND ALTERNATIVE AND PERMIT DESIGN LOAD		
	DETAILS	BY M. Hallstrom	CHECKED K. Truong	LAYOUT	BY M. Hallstrom	CHECKED X	
	QUANTITIES	BY H. Dang	CHECKED K. Truong	SPECIFICATIONS	BY X	PLANS AND SPECS COMPARED X	

STATE OF CALIFORNIA DEPARTMENT OF TRANSPORTATION

DIVISION OF MAINTENANCE STRUCTURE MAINTENANCE DESIGN

BRIDGE NO. VARIOUS
POST MILE VARIES

ROUTE 5, 14, 58, 202, 204 BRIDGES
GENERAL PLAN NO. 5

STRUCTURES MAINTENANCE GENERAL PLAN SHEET (ENGLISH) (REV. 09-01-10)

ORIGINAL SCALE IN INCHES FOR REDUCED PLANS 0 1 2 3

UNIT: 3488
PROJECT NUMBER & PHASE: 0600020509 1
CONTRACT NO.: 06-0M6201

DISREGARD PRINTS BEARING EARLIER REVISION DATES

REVISION DATES

SHEET 5 OF 11

DIST	COUNTY	ROUTE	POST MILES TOTAL PROJECT	SHEET No.	TOTAL SHEETS
06	Ker,Kin	5,14,58, 202,204	Var	13	18

REGISTERED CIVIL ENGINEER 12-11-12 DATE

2-19-13
PLANS APPROVAL DATE

REGISTERED PROFESSIONAL ENGINEER HUBERT DANG No. C 69174 Exp. 6-30-14 CIVIL STATE OF CALIFORNIA

The State of California or its officers or agents shall not be responsible for the accuracy or completeness of electronic copies of this plan sheet.

NOTES: (APPLY TO THIS SHEET ONLY)

Indicates limits of remove unsound concrete, place rapid setting concrete patches, prepare concrete bridge deck surface, treat bridge deck with high molecular weight methacrylate, furnish and place new 3/4" min depth Polyester Concrete Overlay. For details, see "JOINT SEAL AND DECK REPAIR DETAILS" sheet.

Indicates limits of remove existing concrete bridge deck surface. For details, see "DECK SURFACE REMOVAL DETAIL" on "JOINT SEAL AND DECK REPAIR DETAILS" sheet.

Indicates location of remove joint seal and place new joint seal. For details, see "JOINT SEAL AND DECK REPAIR DETAILS" sheet.

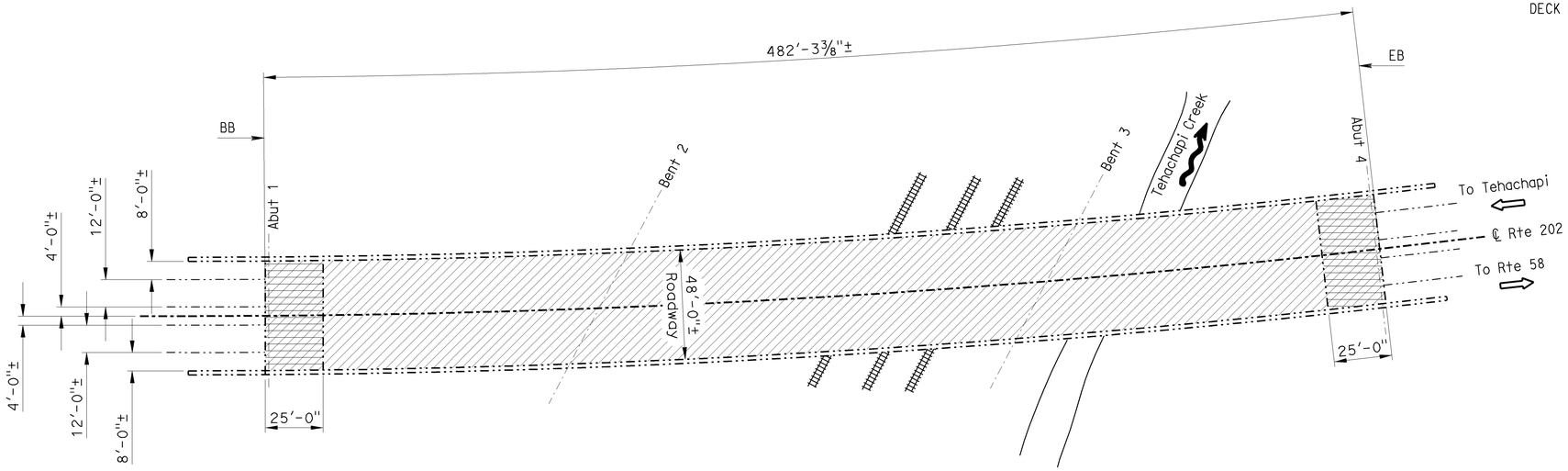

TEHACHAPI CREEK

Br No. 50-0486, KER, ROUTE 202, PM 09.59
1" = 30'

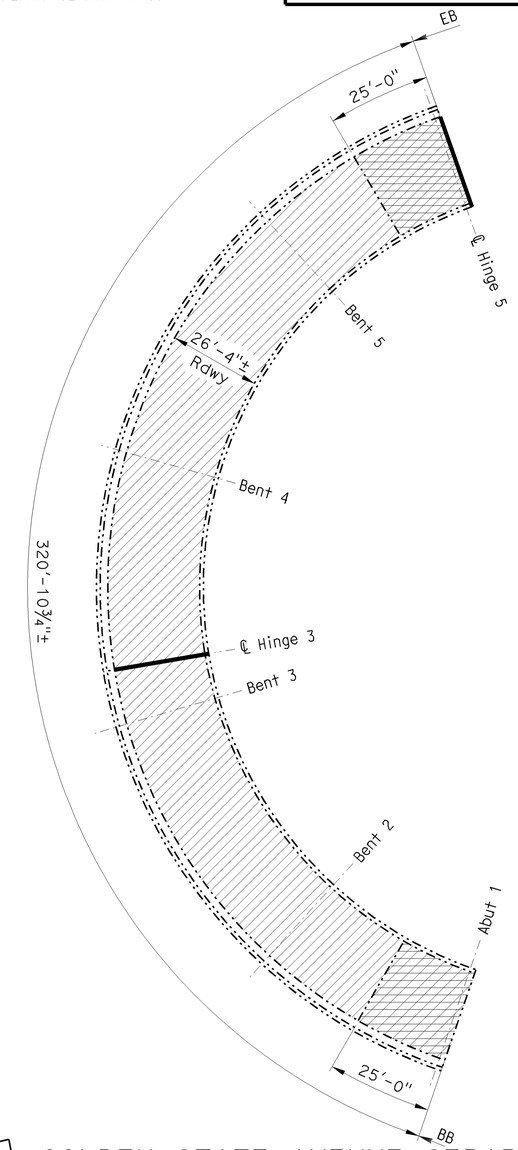

GOLDEN STATE AVENUE SEPARATION

Br No. 50-0326F, KER, ROUTE 204, PM 04.22
1" = 20'

TEHACHAPI CREEK BR NO 50-0486

QUANTITIES

RAPID SETTING CONCRETE (PATCH)	58	CF
REMOVE CONCRETE DECK SURFACE	23,150	SQFT
REMOVE UNSOUND CONCRETE	58	CF
PREPARE CONCRETE BRIDGE DECK SURFACE	23,150	SQFT
FURNISH POLYESTER CONCRETE OVERLAY	1,736	CF
PLACE POLYESTER CONCRETE OVERLAY	23,150	SQFT

GOLDEN STATE AVENUE SEP BR NO 50-0326F

QUANTITIES

RAPID SETTING CONCRETE (PATCH)	21	CF
REMOVE CONCRETE DECK SURFACE	8,449	SQFT
REMOVE UNSOUND CONCRETE	21	CF
PREPARE CONCRETE BRIDGE DECK SURFACE	8,449	SQFT
FURNISH POLYESTER CONCRETE OVERLAY	634	CF
PLACE POLYESTER CONCRETE OVERLAY	8,449	SQFT
CLEAN EXPANSION JOINT	54	LF
JOINT SEAL (MR 1 1/2")	54	LF

12-11-12 Michael J. Lee
DESIGN ENGINEER

	BY	CHECKED
DESIGN	H. Dang	K. Truong
DETAILS	M. Hallstrom	K. Truong
QUANTITIES	H. Dang	K. Truong

LOAD FACTOR DESIGN — LIVE LOADING: HS20-44 AND ALTERNATIVE AND PERMIT DESIGN LOAD
LAYOUT — BY M. Hallstrom — CHECKED X
SPECIFICATIONS — BY X — PLANS AND SPECS COMPARED X

STATE OF CALIFORNIA
DEPARTMENT OF TRANSPORTATION

DIVISION OF MAINTENANCE
STRUCTURE MAINTENANCE DESIGN

BRIDGE NO. VARIOUS
POST MILE VARIES

ROUTE 5, 14, 58, 202, 204 BRIDGES
GENERAL PLAN NO. 6

STRUCTURES MAINTENANCE GENERAL PLAN SHEET (ENGLISH) (REV. 09-01-10)

ORIGINAL SCALE IN INCHES FOR REDUCED PLANS 0 1 2 3

UNIT: 3488
PROJECT NUMBER & PHASE: 0600020509 1
CONTRACT NO.: 06-0M6201

DISREGARD PRINTS BEARING EARLIER REVISION DATES

REVISION DATES

SHEET 6 OF 11

DIST	COUNTY	ROUTE	POST MILES TOTAL PROJECT	SHEET No.	TOTAL SHEETS
06	Ker,Kin	5,14,58, 202,204	Var	14	18

REGISTERED CIVIL ENGINEER 12-11-12 DATE

2-19-13
PLANS APPROVAL DATE

REGISTERED PROFESSIONAL ENGINEER HUBERT DANG No. C 69174 Exp. 6-30-14 CIVIL STATE OF CALIFORNIA

The State of California or its officers or agents shall not be responsible for the accuracy or completeness of electronic copies of this plan sheet.

NOTES: (APPLY TO THIS SHEET ONLY)

Indicates limits of prepare concrete bridge deck surface and treat bridge deck with high molecular weight methacrylate.

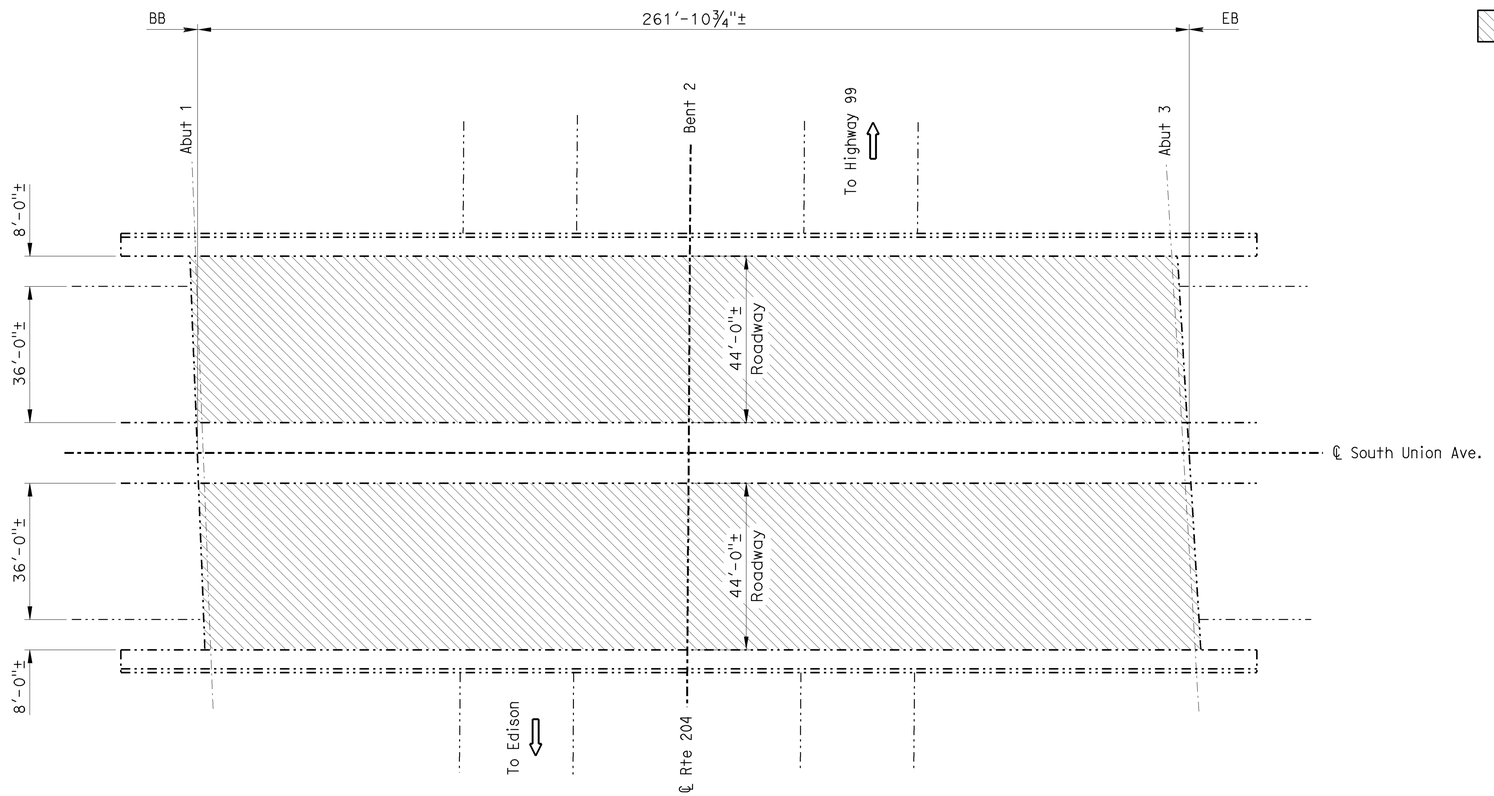

ROUTE 204/58 SEPARATION

Br No. 50-0406E, KER, ROUTE 204, PM R00.03
1" = 20'

ROUTE 204/58 SEPARATION BR NO 50-0406E

QUANTITIES

PREPARE CONCRETE BRIDGE DECK SURFACE	23,047	SQFT
TREAT BRIDGE DECK	23,047	SQFT
FURNISH BRIDGE DECK TREATMENT MATERIAL	256	GAL

12-11-12 Michael J. Lee
DESIGN ENGINEER

	BY	CHECKED
DESIGN	H. Dang	K. Truong
DETAILS	M. Hallstrom	K. Truong
QUANTITIES	H. Dang	K. Truong

LOAD FACTOR DESIGN — LIVE LOADING: HS20-44 AND ALTERNATIVE AND PERMIT DESIGN LOAD
LAYOUT — BY M. Hallstrom — CHECKED X
SPECIFICATIONS — BY X — PLANS AND SPECS COMPARED X

STATE OF CALIFORNIA
DEPARTMENT OF TRANSPORTATION

DIVISION OF MAINTENANCE
STRUCTURE MAINTENANCE DESIGN

BRIDGE NO. VARIOUS
POST MILE VARIES

ROUTE 5, 14, 58, 202, 204 BRIDGES
GENERAL PLAN NO. 7

STRUCTURES MAINTENANCE GENERAL PLAN SHEET (ENGLISH) (REV. 09-01-10)

ORIGINAL SCALE IN INCHES FOR REDUCED PLANS 0 1 2 3

UNIT: 3488
PROJECT NUMBER & PHASE: 0600020509 1 CONTRACT NO.: 06-0M6201

DISREGARD PRINTS BEARING EARLIER REVISION DATES

REVISION DATES

SHEET 7 OF 11

FILE => 06-0m6201_07gp_07.dgn

USERNAME => s137417 DATE PLOTTED => 26-FEB-2013 TIME PLOTTED => 08:23

DIST	COUNTY	ROUTE	POST MILES TOTAL PROJECT	SHEET No.	TOTAL SHEETS
06	Ker,Kin	5,14,58, 202,204	Var	15	18

REGISTERED CIVIL ENGINEER 12-11-12 DATE

2-19-13
PLANS APPROVAL DATE

REGISTERED PROFESSIONAL ENGINEER HUBERT DANG No. C 69174 Exp. 6-30-14 CIVIL STATE OF CALIFORNIA

The State of California or its officers or agents shall not be responsible for the accuracy or completeness of electronic copies of this plan sheet.

TEMPORARY DECKING DESIGN LOADING

MOMENT DEMAND/FOOT (kips-ft/ft)	BOLT SHEAR/FOOT (kips/ft)	BOLT TENSION (kips)
8.0	3.9	4.8

Plate deflection shall not exceed s/300 (s = span of plate).
Maximum anchor bolt spacing = 0'-9".

NOTES: (APPLY TO THIS SHEET ONLY)

Indicates limits of remove existing joint seal assembly and PCC. Retain existing reinforcement.

Indicates limits of place new PCC, new reinforcement and new joint seal system.

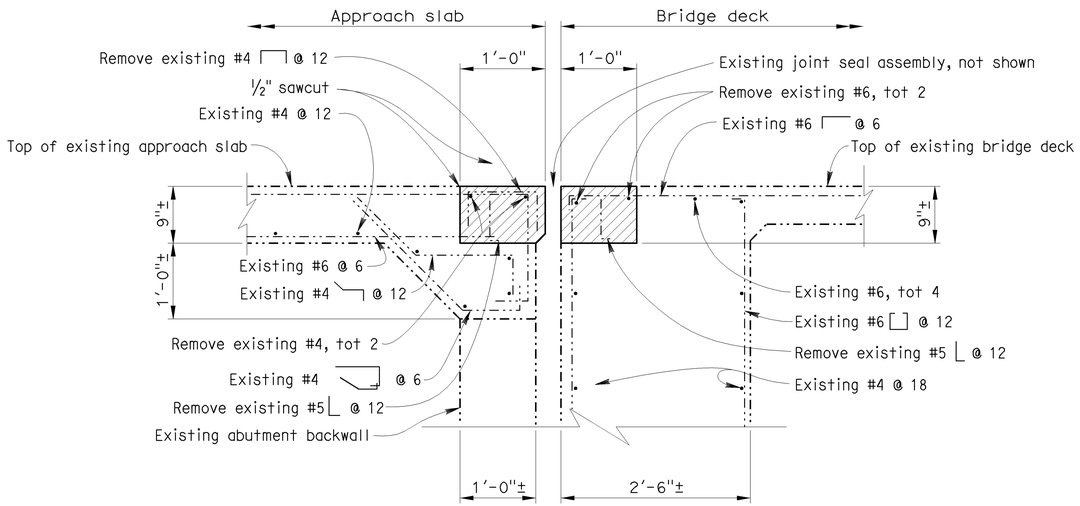

EXISTING

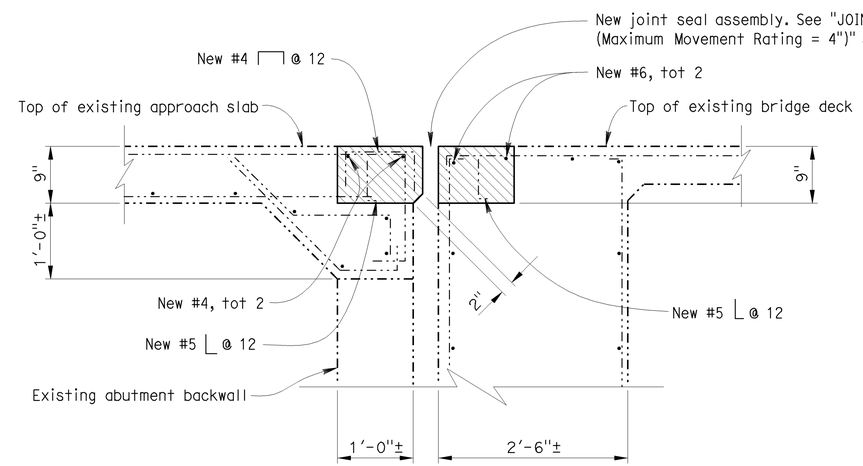

RECONSTRUCTION

SECTION D-D

1" = 1'-0"

DESIGN	BY H. Dang	CHECKED K. Truong	
DETAILS	BY M. Hallstrom	CHECKED K. Truong	
QUANTITIES	BY H. Dang	CHECKED K. Truong	

STATE OF CALIFORNIA
DEPARTMENT OF TRANSPORTATION

DIVISION OF MAINTENANCE
STRUCTURE MAINTENANCE DESIGN

BRIDGE NO. VARIOUS
POST MILE VARIES

ROUTE 5, 14, 58, 202, 204 BRIDGES
MISCELLANEOUS DETAILS

STRUCTURES MAINTENANCE DETAIL SHEET (ENGLISH) (REV. 09-01-10)

ORIGINAL SCALE IN INCHES FOR REDUCED PLANS 0 1 2 3

UNIT: 3488
PROJECT NUMBER & PHASE: 0600020509 1
CONTRACT NO.: 06-0M6201

DISREGARD PRINTS BEARING EARLIER REVISION DATES

REVISION DATES

SHEET 8 OF 11

FILE => 06-0m6201_08_misc-dets.dgn

USERNAME => s137417 DATE PLOTTED => 26-FEB-2013 TIME PLOTTED => 08:29

DIST	COUNTY	ROUTE	POST MILES TOTAL PROJECT	SHEET No.	TOTAL SHEETS
06	Ker,Kin	5,14,58, 202,204	Var	16	18

REGISTERED CIVIL ENGINEER 12-11-12 DATE

2-19-13
PLANS APPROVAL DATE

REGISTERED PROFESSIONAL ENGINEER HUBERT DANG No. C 69174 Exp. 6-30-14 CIVIL STATE OF CALIFORNIA

The State of California or its officers or agents shall not be responsible for the accuracy or completeness of electronic copies of this plan sheet.

JOINT SEAL TABLE

BRIDGE NAME	BRIDGE NUMBER	LOCATION		MINIMUM "MR" (inches)	APPROXIMATE LENGTH (feet)	EXISTING WATERSTOP	APPROX DEPTH TO CLEAN EXPANSION JOINT (inches)
CUDDY CREEK	50-0048	Abut 1	BB	1*	99.3	No	12.0
		Abut 5	EB	1*	99.3	No	12.0
CALIFORNIA AQUEDUCT	50-0321L	Abut 1	BB	1	68.9	No	11.5
		Abut 4	EB	1	68.9	No	11.5
CALIFORNIA AQUEDUCT	50-0321R	Abut 1	BB	1	68.9	No	11.5
		Abut 4	EB	1	68.9	No	11.5
SOUTH MOJAVE OVERHEAD	50-0402L	Abut 1	BW	3**	37.6	No	24.0
BORON OVERHEAD	50-0353L	Abut 1	BB	1/2	45.8	No	11.0
		Abut 4	EB	1/2	45.8	No	11.0
BORON OVERHEAD	50-0353R	Abut 1	BB	1/2	45.8	No	11.0
		Abut 4	EB	1/2	45.8	No	11.0
KEENE ROAD UNDERCROSSING	50-0251	Abut 1	BB	1/2	88.0	No	12.0
		Abut 4	EB	1/2	88.0	No	12.0
GOLDEN STATE AVENUE SEPARATION	50-0326F	Hinge 3	H	1 1/2	26.8	No	12.0
		Hinge 5	H	1 1/2	26.8	No	12.0

LEGEND:
BB = Paving notch at beginning of bridge
EB = Paving notch at end of bridge
BW = Backwall
H = Hinge
℄ = Bent joint
* = Bonded Joint Seal
** = Joint Seal Assembly

The following note applies to JOINT SEAL TYPE A:

Install Type A joint seal 3" up into curb or rail on the low side of the deck where joint matches curb or rail joint. For details not shown see B6-21

The following notes apply to JOINT SEAL TYPE B:

1) Seal must satisfy both minimum Movement Rating (MR) and minimum W1 requirements.

2) Minimum W1 is the calculated maximum width of the joint based on field measurements. After the joints have been cleaned, minimum W1 is to be calculated by the Engineer.

3) W1 shall be the smaller of the values determined as follows:

   A) 0.85 times the manufacturer's designed minimum uncompressed width of the seal.

   B) The width of the seal on the third successive test cycle of the pressure deflection test, when compressed to an average pressure of 3 psi.

4) Bend Type B joint seal 6" up into curb or rail on the low side of the deck where deck joint matches curb or rail joint.

5) For details not shown see B6-21

DECK REPAIR TABLE

BRIDGE NAME	BRIDGE NUMBER	APPROXIMATE AREA DAMAGED (PERCENT)	APPROXIMATE DEPTH (INCHES)
CUDDY CREEK	50-0048	1	3
CALIFORNIA AQUEDUCT	50-0069L	1	3
PUMPING STATION ROAD OVERCROSSING	50-0304	1	3
BORON OVERHEAD	50-0353L	1	3
BORON OVERHEAD	50-0353R	1	3
ROUTE 202/58 SEPARATION	50-0342	1	3
TEHACHAPI CREEK	50-0486	1	3
GOLDEN STATE AVENUE SEPARATION	50-0326F	1	3

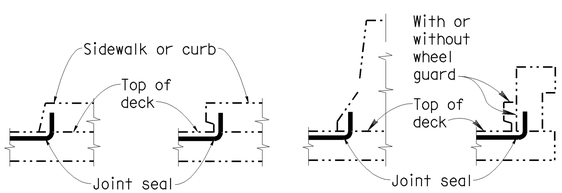

SIDEWALK OR CURB BARRIER RAIL

JOINT SEAL AT LOW SIDE OF DECK

Details shown for illustration purposes only. For use only where deck joint matches the barrier rail joint.
NO SCALE

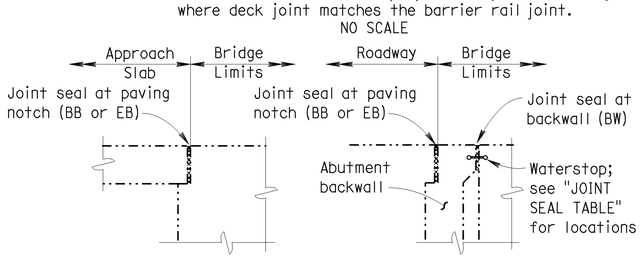

DIAPHRAGM ABUTMENT ABUTMENT WITH BACKWALL

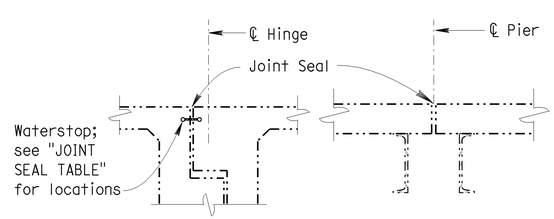

HINGE PIER

JOINT SEAL LOCATION

NO SCALE

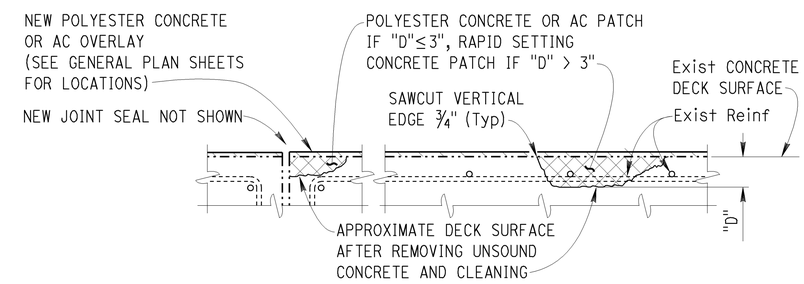

JOINT AND DECK REPAIR DETAIL

LOCATIONS TO BE DETERMINED BY THE ENGINEER.
REINFORCEMENT MAY BE ENCOUNTERED
DURING DECK CONCRETE REMOVAL.
NO SCALE

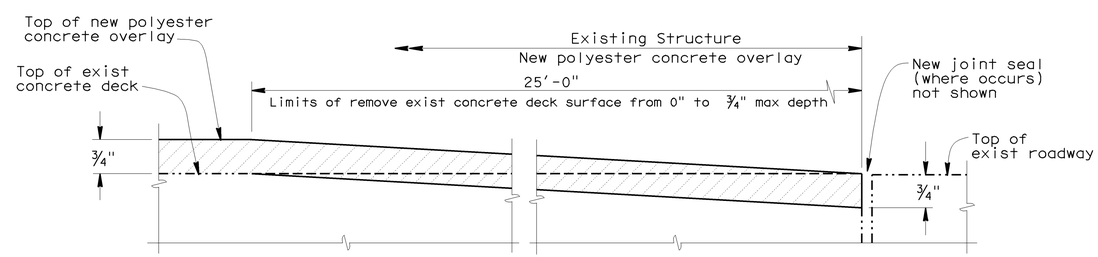

DECK SURFACE REMOVAL DETAIL

NO SCALE

DESIGN	BY H. Dang	CHECKED K. Truong	
DETAILS	BY M. Hallstrom	CHECKED K. Truong	
QUANTITIES	BY H. Dang	CHECKED K. Truong	

STATE OF CALIFORNIA
DEPARTMENT OF TRANSPORTATION

DIVISION OF MAINTENANCE
STRUCTURE MAINTENANCE DESIGN

BRIDGE NO. VARIOUS
POST MILE VARIES

ROUTE 5, 14, 58, 202, 204 BRIDGES
JOINT SEAL AND DECK REPAIR DETAILS

STRUCTURES MAINTENANCE DETAIL SHEET (ENGLISH) (REV. 09-01-10)

ORIGINAL SCALE IN INCHES FOR REDUCED PLANS 0 1 2 3

UNIT: 3488
PROJECT NUMBER & PHASE: 0600020509 1 CONTRACT NO.: 06-0M6201

DISREGARD PRINTS BEARING EARLIER REVISION DATES

REVISION DATES

SHEET 9 OF 11

FILE => 06-0m6201_09jointseal-deckrepair_07.dgn

USERNAME => s137417 DATE PLOTTED => 26-FEB-2013 TIME PLOTTED => 08:29

DIST	COUNTY	ROUTE	POST MILES TOTAL PROJECT	SHEET No.	TOTAL SHEETS
06	Ker,Kin	5,14,58, 202,204	Var	17	18

REGISTERED CIVIL ENGINEER 12-11-12 DATE

2-19-13
PLANS APPROVAL DATE

REGISTERED PROFESSIONAL ENGINEER HUBERT DANG No. C 69174 Exp. 6-30-14 CIVIL STATE OF CALIFORNIA

The State of California or its officers or agents shall not be responsible for the accuracy or completeness of electronic copies of this plan sheet.

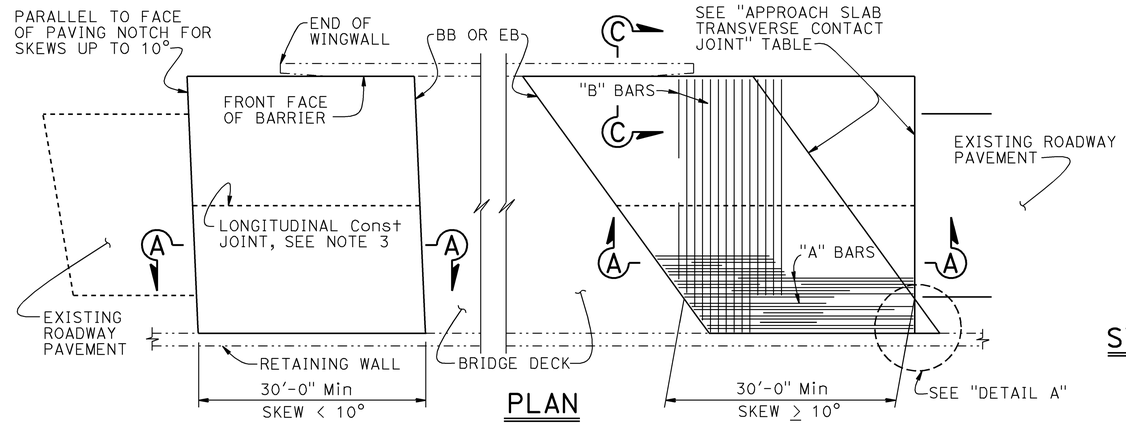

PLAN
1" = 10'

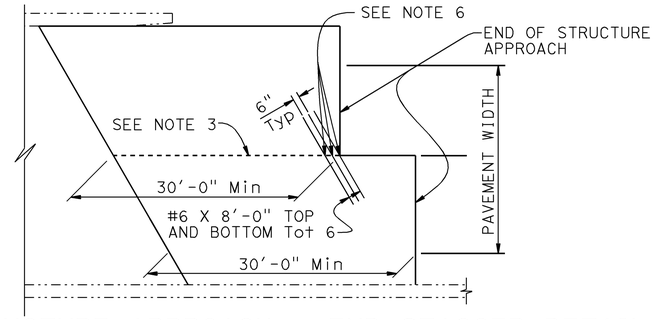

STRUCTURE APPROACH - END STAGGER DETAIL
NO SCALE

APPROACH SLAB TRANSVERSE CONTACT JOINT		
APPROACH SKEW	WITH AC ROADWAY PAVEMENT	WITH PCC ROADWAY PAVEMENT
< 10°	PARALLEL TO FACE OF PN	PARALLEL TO FACE OF PAVING NOTCH
10° - 45°	PARALLEL TO FACE OF PN USE "DETAIL A"	STAGGER LINES 24' TO 36' APART
> 45°	PARALLEL TO FACE OF PN USE "DETAIL A"	STAGGER AT EACH LANE LINE

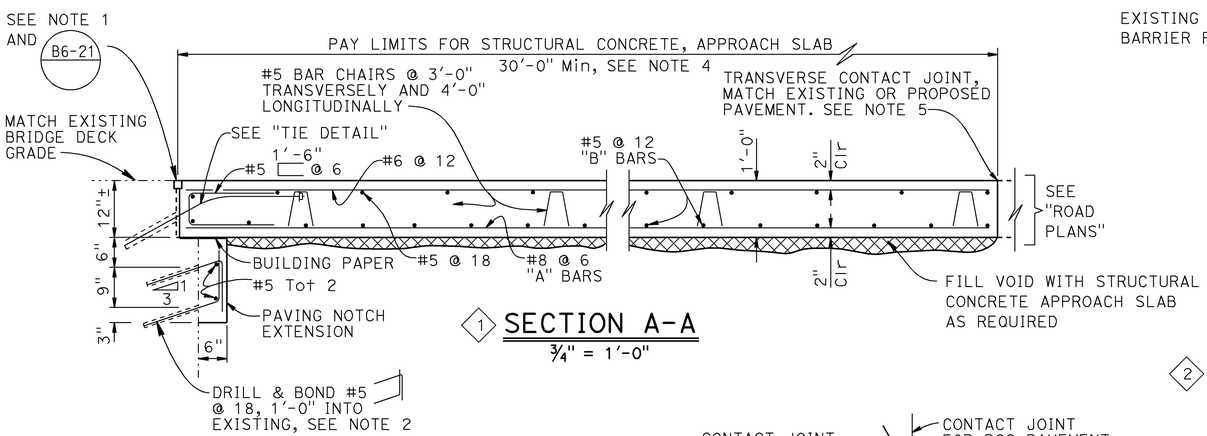

1 SECTION A-A
¾" = 1'-0"

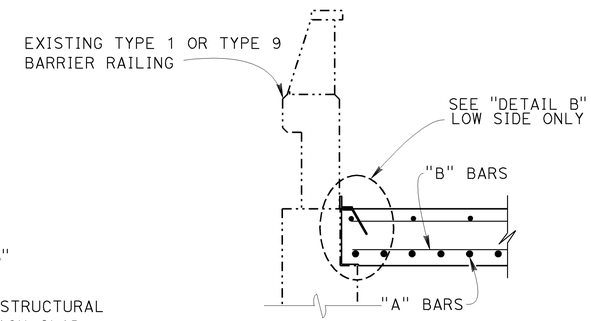

1 SECTION C-C
¾" = 1'-0"

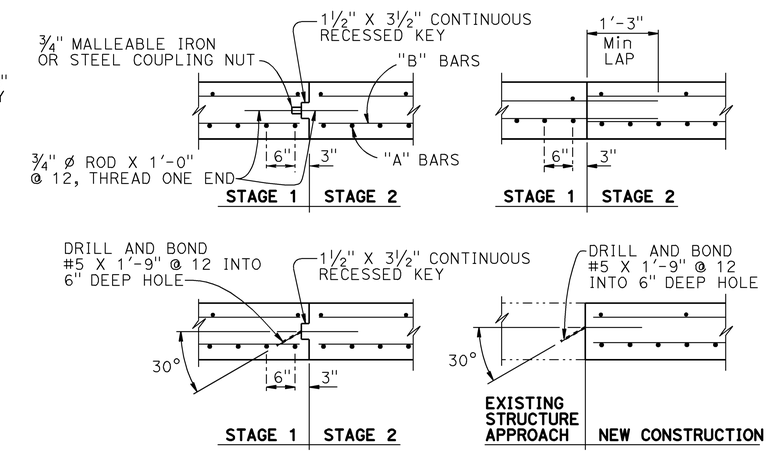

1 LONGITUDINAL CONSTRUCTION JOINT ALTERNATIVES
¾" = 1'-0"

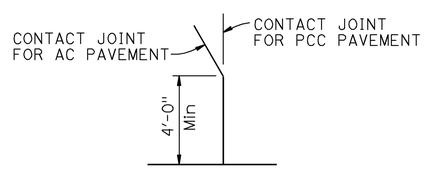

1 DETAIL A
No Scale

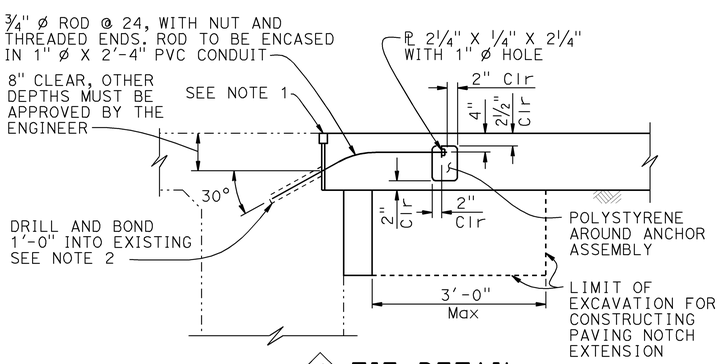

1 TIE DETAIL
¾" = 1'-0"

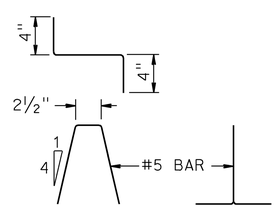

1 BAR CHAIR DETAIL
1½" = 1'-0"

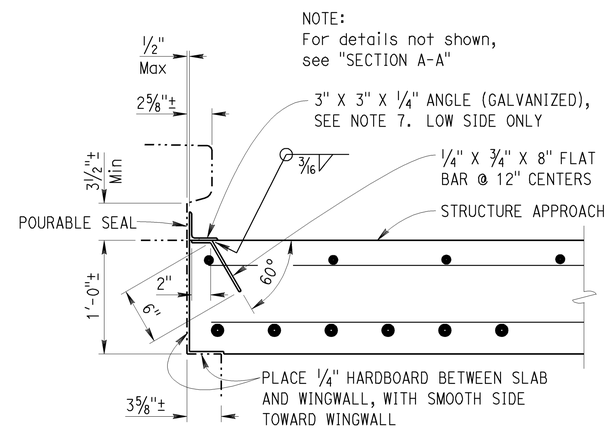

NOTE:
For details not shown, see "SECTION A-A"

1 DETAIL B
1½" = 1'-0"

1 NOTES:

1. For details not shown or noted, see "GENERAL PLAN No. 1". Adjust bar reinforcement to clear a sawcut for sealed joint, when required.
2. Space to avoid existing prestress anchorages and main reinforcement.
3. Longitudinal construction joints, when permitted by the Engineer, shall be located on lane lines.
4. Transverse contact joint shall be a minimum of 5'-0" from an existing or constructed weakened plane joint.
5. For transverse contact joint with new PCC paving. Refer to Revised Standard Plan RSP P10.
6. Couplers are required for stage construction.
7. End angle at end of wingwall or end of structure approach as applicable.

SPECIAL DETAILS

REVISED STANDARD DRAWING

FILE NO. xs3-150

APPROVAL DATE

1 DETAIL OR NOTE REVISED
2 DETAIL OR NOTE DELETED

STATE OF CALIFORNIA
DEPARTMENT OF TRANSPORTATION

DIVISION OF ENGINEERING SERVICES

BRIDGE No. VARIOUS
POST MILE VARIES

ROUTE 5, 14, 58, 202, 204 BRIDGES
STRUCTURE APPROACH TYPE R(30D)

STRUCTURES MAINTENANCE GENERAL PLAN SHEET (ENGLISH) (REV. 09-01-10)

ORIGINAL SCALE IN INCHES FOR REDUCED PLANS 0 1 2 3

UNIT: 3488
PROJECT NUMBER & PHASE: 0600020509 1
CONTRACT No.: 06-0M6201

DISREGARD PRINTS BEARING EARLIER REVISION DATES

REVISION DATES

SHEET 10 OF 11

FILE => 06-0m6201_10xs3-150.dgn

USERNAME => s137417 DATE PLOTTED => 26-FEB-2013 TIME PLOTTED => 08:30

DIST	COUNTY	ROUTE	POST MILES TOTAL PROJECT	SHEET No.	TOTAL SHEETS
06	Ker,Kin	5,14,58, 202,204	Var	18	18

REGISTERED CIVIL ENGINEER 12-11-12 DATE

2-19-13
PLANS APPROVAL DATE

REGISTERED PROFESSIONAL ENGINEER HUBERT DANG No. C 69174 Exp. 6-30-14 CIVIL STATE OF CALIFORNIA

The State of California or its officers or agents shall not be responsible for the accuracy or completeness of electronic copies of this plan sheet.

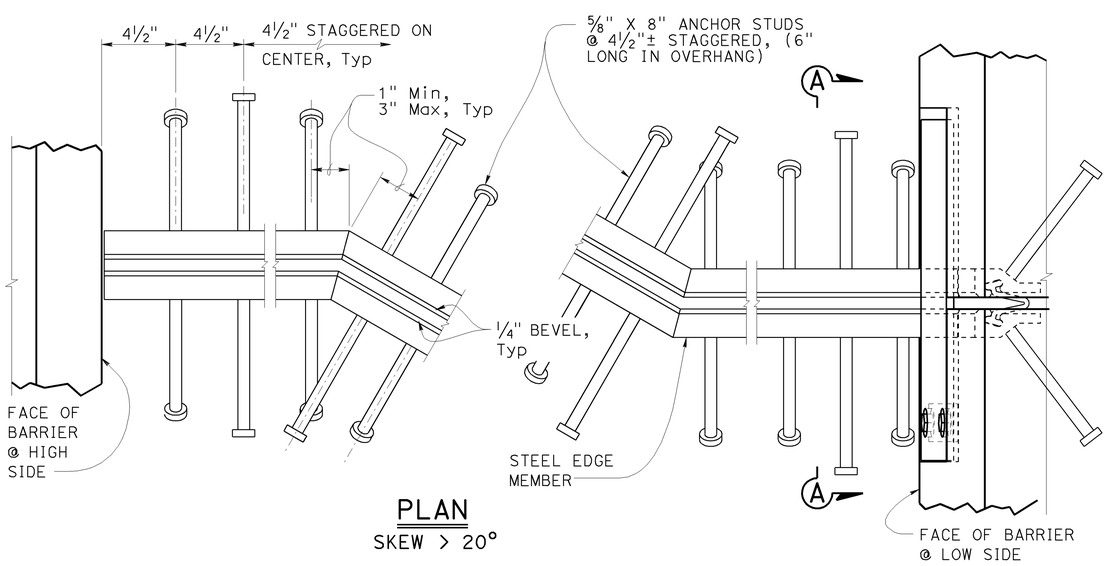

PLAN
SKEW > 20°

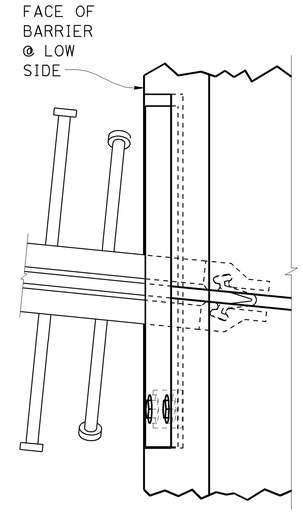

PLAN
SKEW ≤ 20°

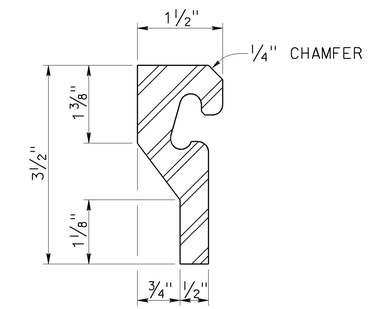

STEEL EDGE MEMBER

NOTES:

1. Alternatively, fillet or full penetration welds may be used at anchor studs.
2. Alternate types of anchor studs may be permitted subject to the approval by the Engineer
3. Joint seal assembly to be used in conjunction with closure pour. (See other sheets for limits). Closure pour shall not be placed until final deck surface is within the tolerances specified
4. Use joint at crown of roadway, at any change in traverse slope in deck and at changes in horizontal direction. Place other joints at or near lanes. All metal parts to be painted or galvanized after fabrication
5. Sheet Neoprene shall be fabricated in one continuous piece and shall be fabricated to bend around corners. Field splices of the neoprene are not allowed.
6. Insert assembly or expansion anchorage for ⅝" x 1¾" bolts. Use installation bolts extended ½" minimum past nut and coat with bond breaker, after concrete has cured, remove installation bolts, install A325 bolts and sheet neoprene
7. Sidewalk Detail similar to Barrier Detail on low side at both sides if the roadway is crowned or if the difference in elevation between the ends of the seal is 0.5′ or less
8. a_c, a_s, are the thermal expansion coefficients for concrete and steel respectively.

JOINT INFORMATION			"a" DIMENSIONS		
LOCATION	MOVEMENT RATING (MR)	SKEW	WINTER	SPRING & FALL	SUMMER

* TO SET MINIMUM JOINT OPENING "W"

$$\text{"W"} = \begin{cases} \tfrac{1}{2}\text{"} + [(\text{Max Str temperature in F°}) - (\text{actual Str temperature in F°})] * (a_c \text{ or } a_s)(12)(\text{contributory L in feet}) \\ \tfrac{1}{2}\text{" Minimum} \\ a_c = 0.0000060 \\ a_s = 0.0000065 \end{cases}$$

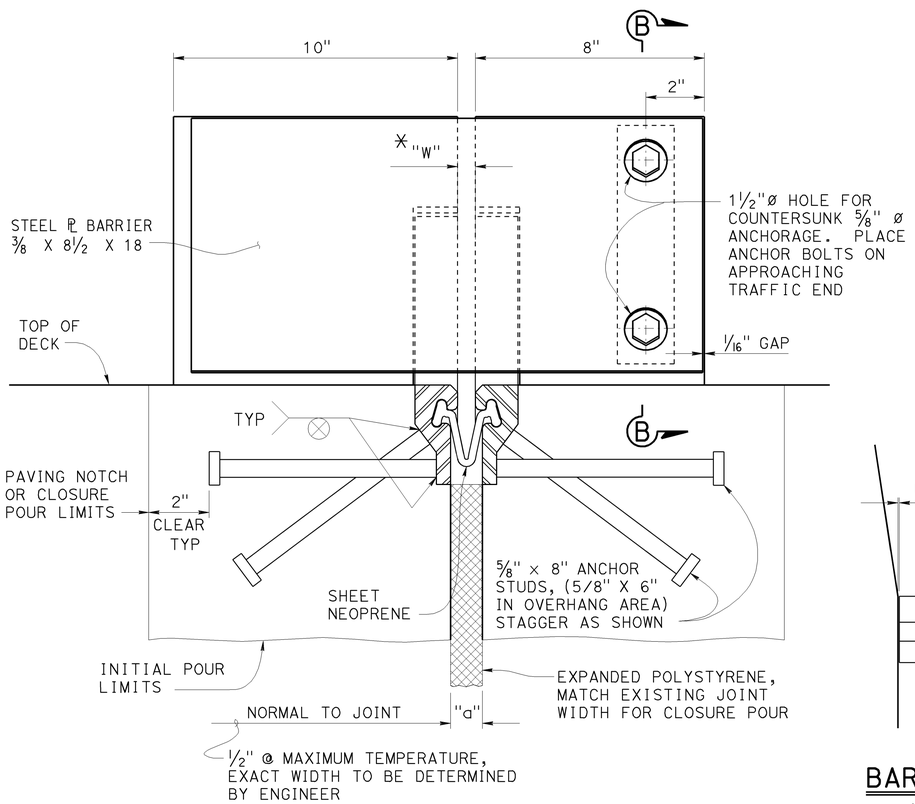

SECTION A-A

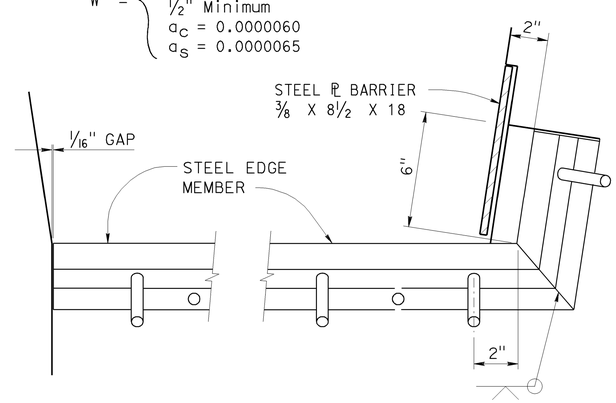

BARRIER DETAIL HIGH SIDE

BARRIER DETAIL LOW SIDE

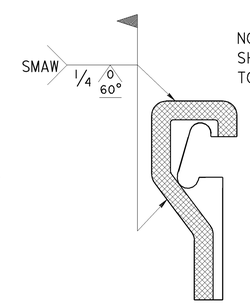

NOTE:
SHADED AREAS TO BE WELDED

FIELD WELD DETAIL

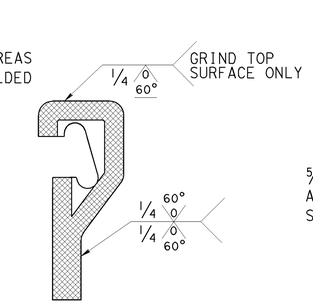

SHOP WELD DETAIL

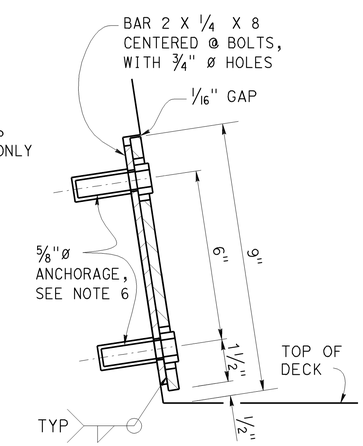

SECTION B-B

NO SCALE

STANDARD DRAWING
FILE NO. xs8-010
APPROVAL DATE June 2012

STATE OF CALIFORNIA
DEPARTMENT OF TRANSPORTATION

DIVISION OF ENGINEERING SERVICES

BRIDGE NO. VARIOUS
POST MILE VARIES

ROUTE 5, 14, 58, 202, 204 BRIDGES
JOINT SEAL ASSEMBLY
MAXIMUM MOVEMENT RATING = 4"

DS OSD 2147A (ENGLISH STANDARD DRAWING "XS" BORDER REV. (02-02-11)

ORIGINAL SCALE IN INCHES FOR REDUCED PLANS 0 1 2 3

UNIT: 3488
PROJECT NUMBER & PHASE: 0600020509 1
CONTRACT NO.: 06-0M6201

DISREGARD PRINTS BEARING EARLIER REVISION DATES

REVISION DATES 2/17/12 2/22/12 5/30/12 6/21/12 SHEET 11 OF 11

FILE => 06-0m6201_11xs8-010.dgn

USERNAME => s137417 DATE PLOTTED => 26-FEB-2013 TIME PLOTTED => 08:30