Dist	COUNTY	ROUTE	POST MILES TOTAL PROJECT	SHEET No.	TOTAL SHEETS
06	Fre	168	R36.0	1	70

ACSTPE-P168(058)E

STATE OF CALIFORNIA
DEPARTMENT OF TRANSPORTATION

PROJECT PLANS FOR CONSTRUCTION ON
STATE HIGHWAY

IN FRESNO COUNTY
ABOUT 11 MILES EAST OF PRATHER
AT MAYNARD MUNGER VISTA POINT

TO BE SUPPLEMENTED BY STANDARD PLANS DATED MAY 2010

INDEX OF PLANS

SHEET No.	DESCRIPTION
1	TITLE AND LOCATION MAP
2-5	TYPICAL CROSS SECTIONS
6	LAYOUT
7-23	CONSTRUCTION DETAILS
24-30	DRAINAGE PLANS, PROFILES, DETAILS AND QUANTITIES
31	CONSTRUCTION AREA SIGNS
32	TRAFFIC HANDLING PLANS AND QUANTITIES
33	PAVEMENT DELINEATION, SIGN PLANS AND QUANTITIES
34-35	SUMMARY OF QUANTITIES
36	RETAINING WALL No. 1 PLAN, TYPICAL SECTION AND DETAILS
37	RETAINING WALL No. 2 PLAN, TYPICAL SECTION AND DETAILS
38-40	EROSION CONTROL PLANS AND QUANTITIES
41-54	REVISED STANDARD PLANS

BUILDING PLANS

55-58	ARCHITECTURAL PLANS
59-70	STRUCTURAL PLANS

THE STANDARD PLANS LIST APPLICABLE TO THIS CONTRACT IS INCLUDED IN THE NOTICE TO BIDDERS AND SPECIAL PROVISIONS BOOK.

LOCATION MAP

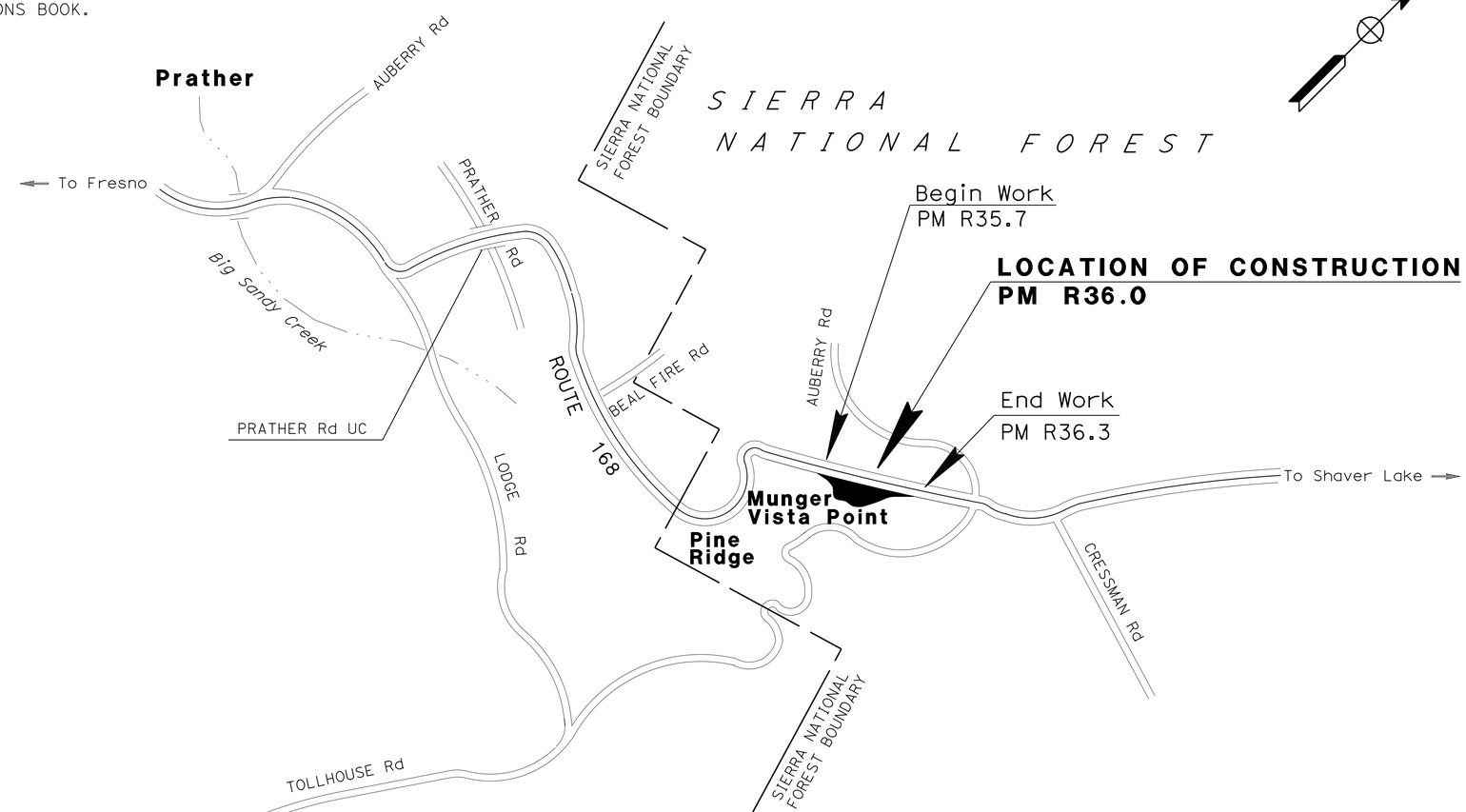

NO SCALE

LICENSED LANDSCAPE ARCHITECT

January 12, 2015

PLANS APPROVAL DATE

THE STATE OF CALIFORNIA OR ITS OFFICERS OR AGENTS SHALL NOT BE RESPONSIBLE FOR THE ACCURACY OR COMPLETENESS OF SCANNED COPIES OF THIS PLAN SHEET.

LICENSED LANDSCAPE ARCHITECT — RICHARD B. COLE — STATE OF CALIFORNIA — Signature — Renewal Date 06/30/16 — Date 07/29/14

PROJECT MANAGER: SUZIE HOLDRIDGE

SENIOR LANDSCAPE ARCHITECT: BRAD COLE

THE CONTRACTOR SHALL POSSESS THE CLASS (OR CLASSES) OF LICENSE AS SPECIFIED IN THE "NOTICE TO BIDDERS."

CONTRACT No.	06-0M0204
PROJECT ID	0600020389

LAST REVISION 12-03-14 | DATE PLOTTED => 09-JAN-2015 | TIME PLOTTED => 12:46

Dist	COUNTY	ROUTE	POST MILES TOTAL PROJECT	SHEET No.	TOTAL SHEETS
06	Fre	168	R36.0	2	70

LICENSED LANDSCAPE ARCHITECT

1-12-15

PLANS APPROVAL DATE

LICENSED LANDSCAPE ARCHITECT RICHARD B. COLE No. 3128 Expiration Date 06/30/16 Renewal Date 08/01/13 Date STATE OF CALIFORNIA

THE STATE OF CALIFORNIA OR ITS OFFICERS OR AGENTS SHALL NOT BE RESPONSIBLE FOR THE ACCURACY OR COMPLETENESS OF SCANNED COPIES OF THIS PLAN SHEET.

NOTES:

1) FOR RETAINING WALL DETAILS, SEE RETAINING WALL PLANS.
2) DIMENSIONS OF THE PAVEMENT (STRUCTURAL SECTIONS) ARE SUBJECT TO TOLERENCES SPECIFIED IN THE STANDARD SPECIFICATIONS.
3) EXACT LOCATIONS OF HMA DIKE (TYPE A) ARE SHOWN ON THE LAYOUTS AND THE SUMMARY OF QUANTITY SHEETS.
4) FOR ACCURATE RIGHT OF WAY DATA, CONTACT RIGHT OF WAY ENGINEERING AT THE DISTRICT OFFICE.

PAVEMENT CLIMATE REGION

LOW MOUNTAIN

ABBREVIATIONS:

GB - GRADE BREAK
SW - SIDEWALK
TC - TOP OF CURB/DIKE

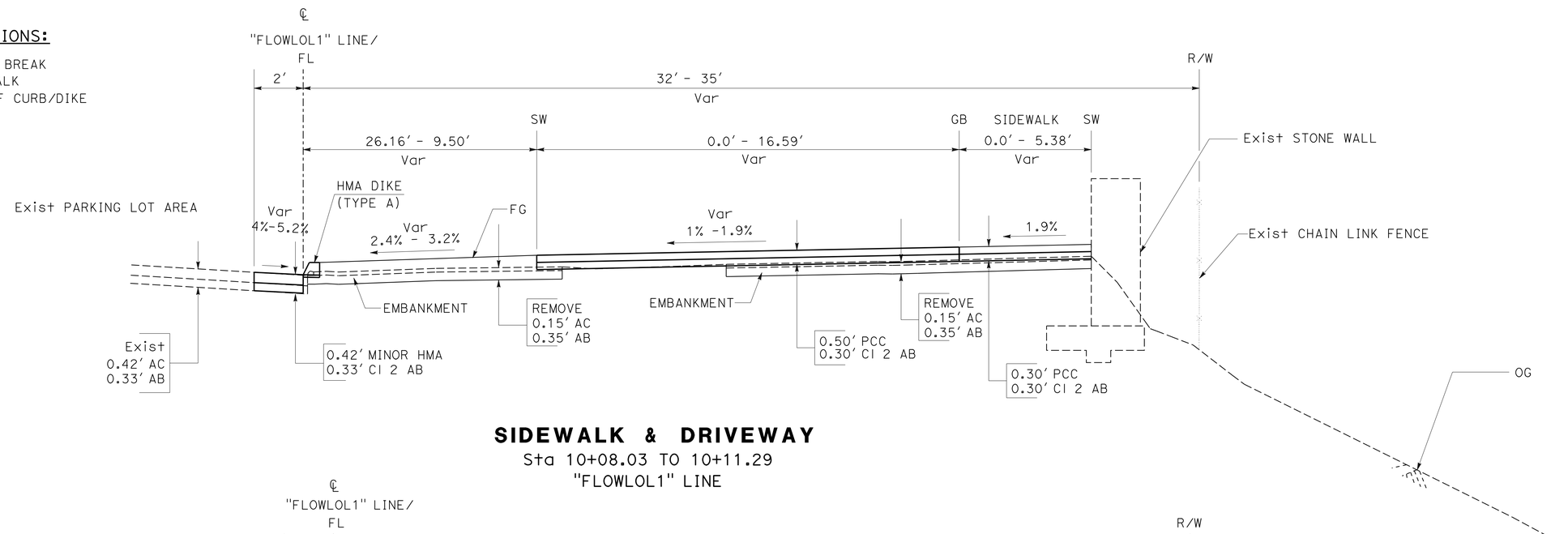

SIDEWALK & DRIVEWAY

Sta 10+08.03 TO 10+11.29
"FLOWLOL1" LINE

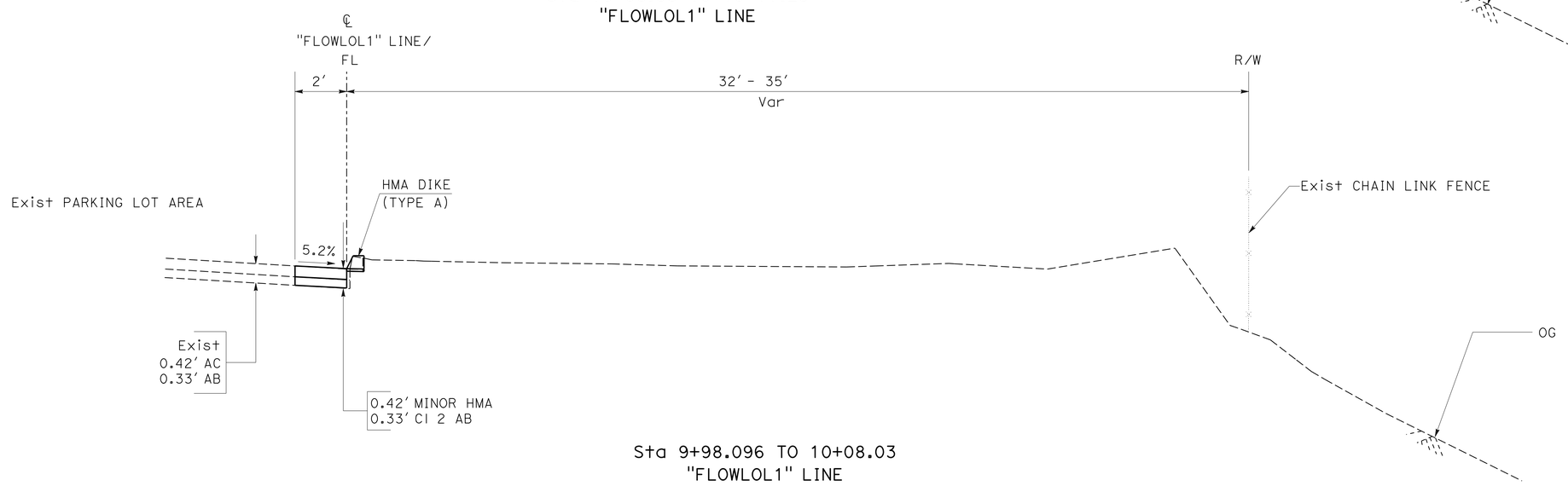

Sta 9+98.096 TO 10+08.03
"FLOWLOL1" LINE

TYPICAL CROSS SECTION

NO SCALE

X-1

STATE OF CALIFORNIA - DEPARTMENT OF TRANSPORTATION
Caltrans® LANDSCAPE ARCHITECTURE

SENIOR LANDSCAPE ARCHITECT: BRAD COLE
CALCULATED-DESIGNED BY: RAYMOND SEGURA
CHECKED BY: DAVID MARTIN
REVISED BY
DATE REVISED

LAST REVISION 01-05-15
DATE PLOTTED => 09-JAN-2015
TIME PLOTTED => 12:46

Dist	COUNTY	ROUTE	POST MILES TOTAL PROJECT	SHEET No.	TOTAL SHEETS
06	Fre	168	R36.0	3	70

LICENSED LANDSCAPE ARCHITECT

1-12-15
PLANS APPROVAL DATE

LICENSED LANDSCAPE ARCHITECT RICHARD B. COLE No. 3128 Expiration Date 06/30/16 Renewal Date 08/01/13 Date STATE OF CALIFORNIA

THE STATE OF CALIFORNIA OR ITS OFFICERS OR AGENTS SHALL NOT BE RESPONSIBLE FOR THE ACCURACY OR COMPLETENESS OF SCANNED COPIES OF THIS PLAN SHEET.

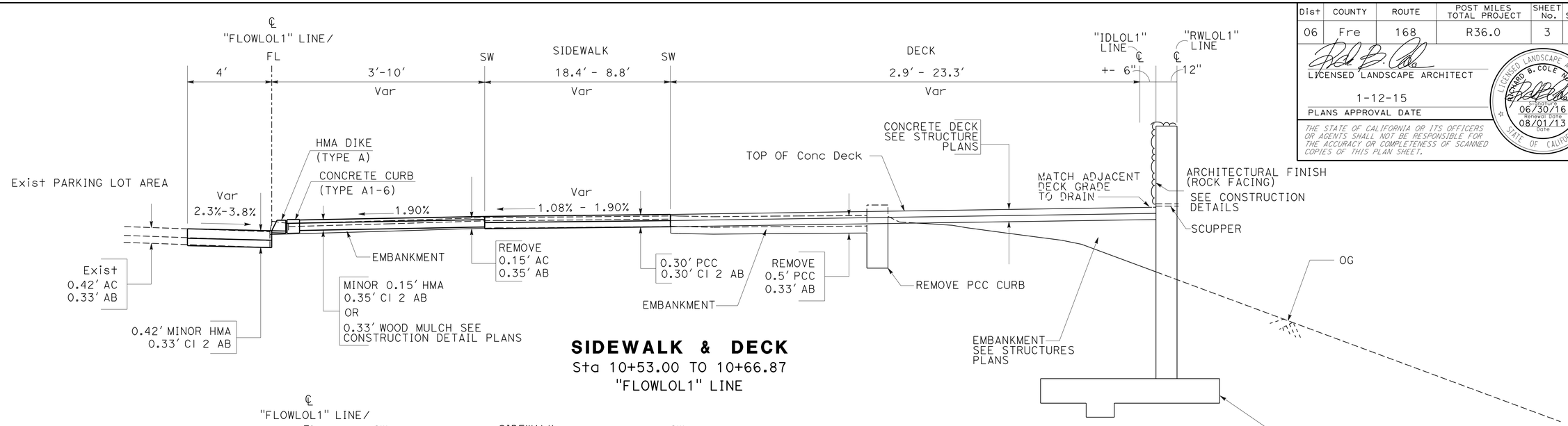

SIDEWALK & DECK
Sta 10+53.00 TO 10+66.87
"FLOWLOL1" LINE

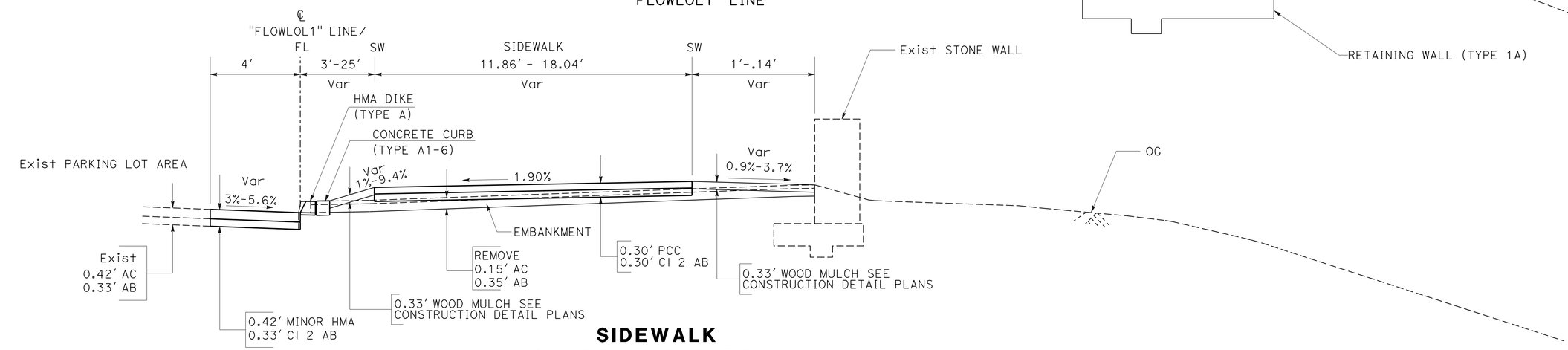

SIDEWALK
Sta 10+28.43 TO 10+53.00
"FLOWLOL1" LINE

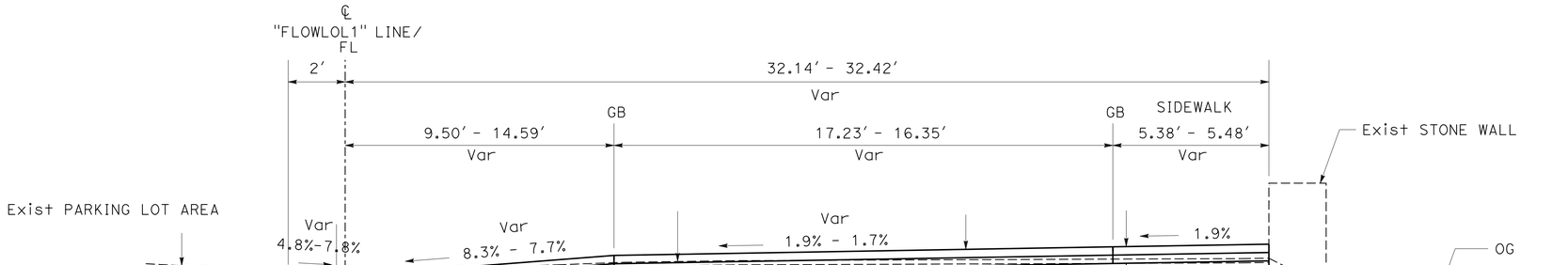

SIDEWALK & DRIVEWAY
Sta 10+11.29 TO 10+28.43
"FLOWLOL1" LINE

TYPICAL CROSS SECTION

NO SCALE

X-2

STATE OF CALIFORNIA - DEPARTMENT OF TRANSPORTATION
Caltrans® LANDSCAPE ARCHITECTURE

SENIOR LANDSCAPE ARCHITECT: BRAD COLE
CALCULATED-DESIGNED BY: RAYMOND SEGURA
CHECKED BY: DAVID MARTIN
REVISED BY
DATE REVISED

LAST REVISION 01-06-15
DATE PLOTTED => 09-JAN-2015
TIME PLOTTED => 12:46

Dist	COUNTY	ROUTE	POST MILES TOTAL PROJECT	SHEET No.	TOTAL SHEETS
06	Fre	168	R36.0	4	70

LICENSED LANDSCAPE ARCHITECT

1-12-15

PLANS APPROVAL DATE

LICENSED LANDSCAPE ARCHITECT RICHARD B. COLE No. 3125 Expiration Date 06/30/16 Renewal Date 07/29/14 Date STATE OF CALIFORNIA

THE STATE OF CALIFORNIA OR ITS OFFICERS OR AGENTS SHALL NOT BE RESPONSIBLE FOR THE ACCURACY OR COMPLETENESS OF SCANNED COPIES OF THIS PLAN SHEET.

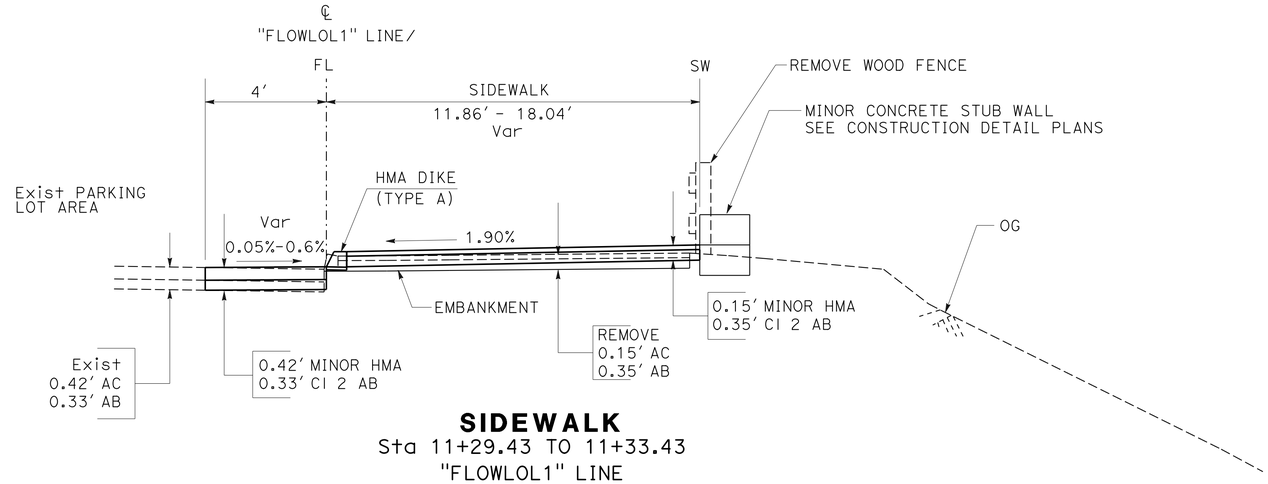

SIDEWALK
Sta 11+29.43 TO 11+33.43
"FLOWLOL1" LINE

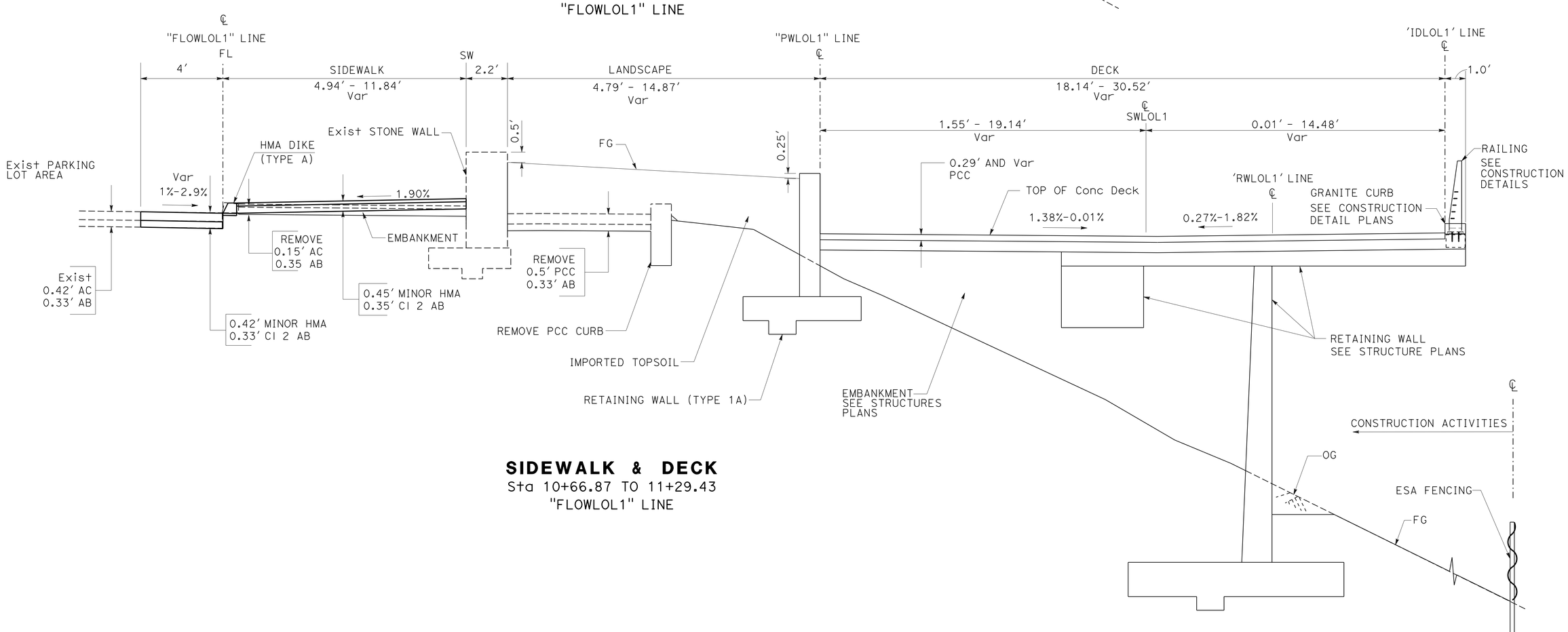

SIDEWALK & DECK
Sta 10+66.87 TO 11+29.43
"FLOWLOL1" LINE

TYPICAL CROSS SECTION

NO SCALE

X-3

REVISED BY	DATE REVISED

CALCULATED-DESIGNED BY	CHECKED BY
RAYMOND SEGURA	DAVID MARTIN

SENIOR LANDSCAPE ARCHITECT: BRAD COLE

STATE OF CALIFORNIA - DEPARTMENT OF TRANSPORTATION
Caltrans® LANDSCAPE ARCHITECTURE

LAST REVISION 12-29-14 | DATE PLOTTED => 09-JAN-2015 | TIME PLOTTED => 12:46

Dist	COUNTY	ROUTE	POST MILES TOTAL PROJECT	SHEET No.	TOTAL SHEETS
06	Fre	168	R36.0	5	70

LICENSED LANDSCAPE ARCHITECT

1-12-15

PLANS APPROVAL DATE

LICENSED LANDSCAPE ARCHITECT — RICHARD B. COLE No. 3128 — Expiration Date 06/30/16 — Renewal Date 08/01/13 — STATE OF CALIFORNIA

THE STATE OF CALIFORNIA OR ITS OFFICERS OR AGENTS SHALL NOT BE RESPONSIBLE FOR THE ACCURACY OR COMPLETENESS OF SCANNED COPIES OF THIS PLAN SHEET.

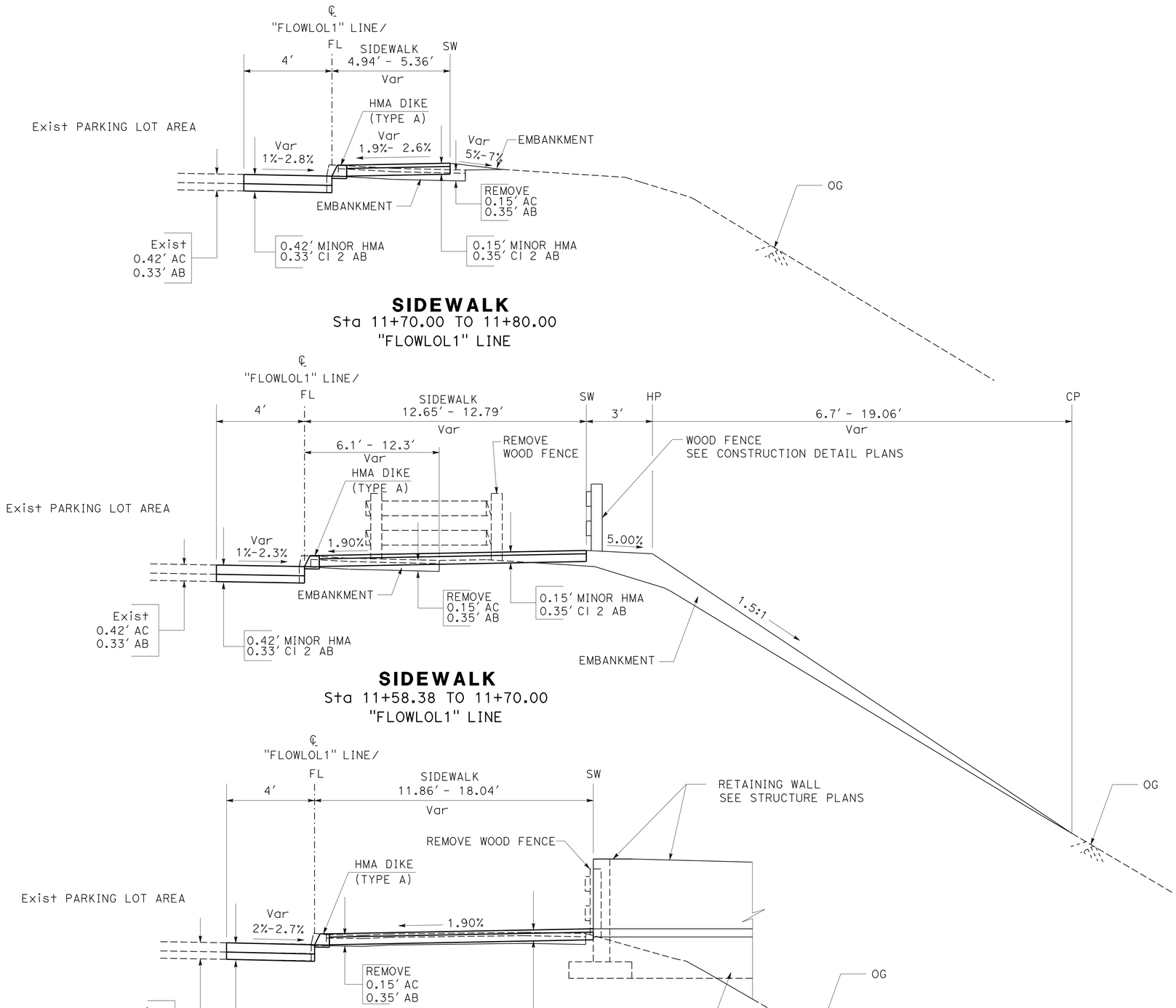

TYPICAL CROSS SECTION

NO SCALE

X-4

STATE OF CALIFORNIA - DEPARTMENT OF TRANSPORTATION
Caltrans® LANDSCAPE ARCHITECTURE

SENIOR LANDSCAPE ARCHITECT: BRAD COLE
CALCULATED-DESIGNED BY: RAYMOND SEGURA
CHECKED BY: DAVID MARTIN
REVISED BY / DATE REVISED

LAST REVISION 01-06-15 | DATE PLOTTED => 09-JAN-2015 | TIME PLOTTED => 12:46

Dist	COUNTY	ROUTE	POST MILES TOTAL PROJECT	SHEET No.	TOTAL SHEETS
06	Fre	168	R36.0	6	70

LICENSED LANDSCAPE ARCHITECT

1-12-15
PLANS APPROVAL DATE

LICENSED LANDSCAPE ARCHITECT RICHARD B. COLE No. 3125 Renewal Date 06/30/16 Date 07/29/14 STATE OF CALIFORNIA

THE STATE OF CALIFORNIA OR ITS OFFICERS OR AGENTS SHALL NOT BE RESPONSIBLE FOR THE ACCURACY OR COMPLETENESS OF SCANNED COPIES OF THIS PLAN SHEET.

NOTES:

1) FOR ALIGNMENT DATA ON RWLOL1, PWLOL1, IDLOL1, SWALE1, SEE CONSTRUCTION DETAIL SHEETS.
2) FOR EXACT LOCATION OF CHAIN LINK FENCE (TYPE CL-6) SEE CONSTRUCTION DETAIL SHEET C-7.
3) FOR EXACT LOCATION OF TIMBER FENCE, SEE CONSTRUCTION DETAIL SHEET C-7.
4) RELOCATE BENCHES FROM Sta 10+06 TO Sta 10+80
5) RELOCATE TRASH RECEPTACLE FROM Sta 11+21 TO 11+31

LEGEND:

◎ SNOW POLE SLEEVE
---------- CLEARING & GRUBBING
xx——xx——TSF- TEMPORARY SILT FENCE
Exist ROCK WALL TO REMAIN

CURVE DATA

No.	R	Δ	T	L	N	E
1	70.00′	11°37′05"	7.12′	14.19′	2268762.820	6454029.963
2	20.00′	14°18′55"	2.51′	5.00′	2268761.037	6454040.655
3	90.00′	8°36′55"	6.78′	13.53′	2268762.332	6454055.833
4	120.00′	5°43′43"	6.00′	12.00′	2268767.087	6454075.697
5	100.00′	5°43′55"	5.01′	10.00′	2268773.273	6454093.457
6	120.00′	5°29′26"	5.75′	11.50′	2268781.900	6454111.994
7	47.75′	58°11′36"	26.57′	48.50′	2268724.240	6454035.037

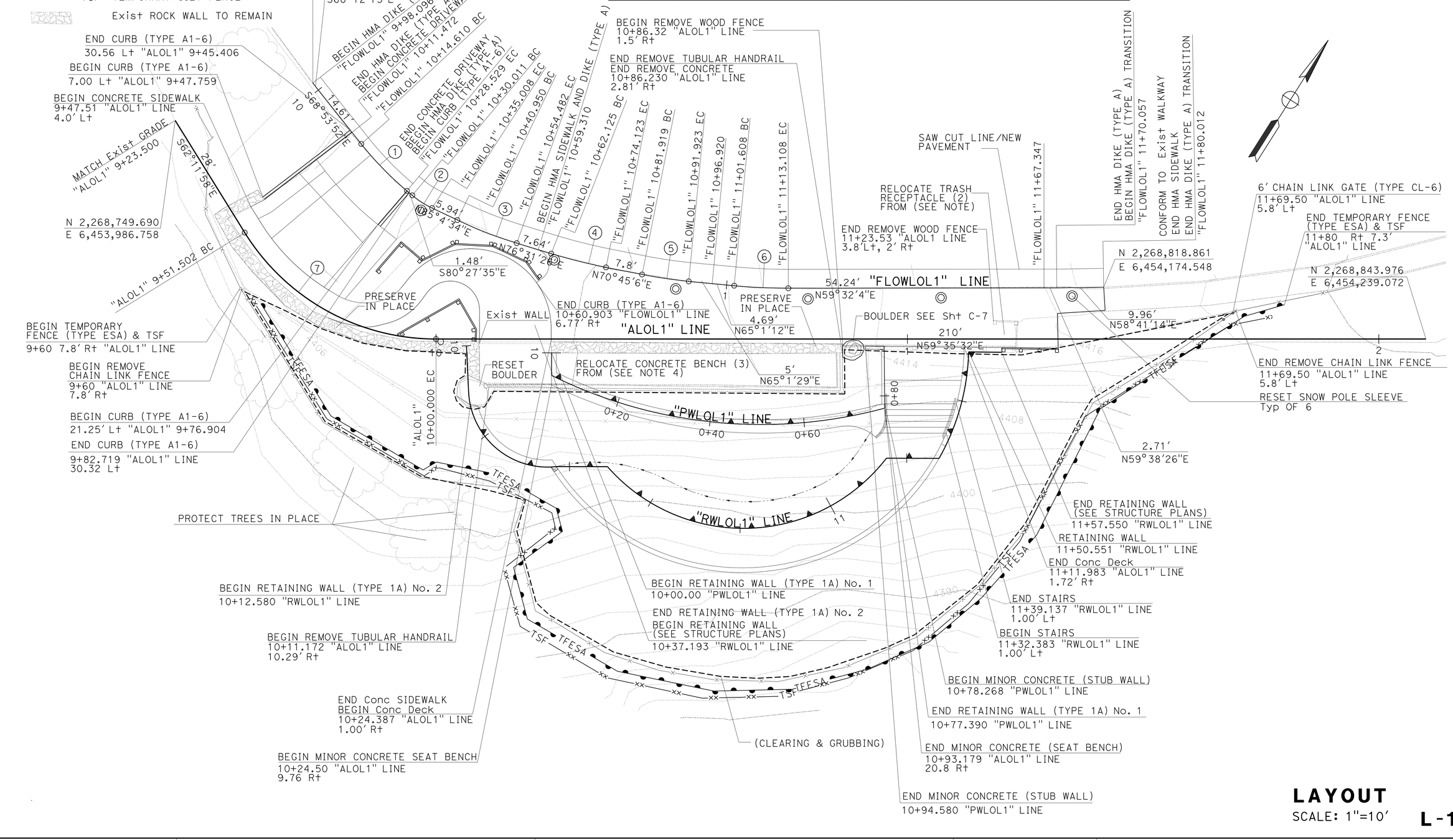

LAYOUT

SCALE: 1"=10′

L-1

STATE OF CALIFORNIA - DEPARTMENT OF TRANSPORTATION
Caltrans® LANDSCAPE ARCHITECTURE

SENIOR LANDSCAPE ARCHITECT: BRAD COLE
CALCULATED-DESIGNED BY: RAYMOND SEGURA
CHECKED BY: RICHARD COLE
REVISED BY / DATE REVISED

LAST REVISION 12-29-14 | DATE PLOTTED => 09-JAN-2015 | TIME PLOTTED => 12:46

Dist	COUNTY	ROUTE	POST MILES TOTAL PROJECT	SHEET No.	TOTAL SHEETS
06	Fre	168	R36.0	7	70

LICENSED LANDSCAPE ARCHITECT

1-12-15

PLANS APPROVAL DATE

LICENSED LANDSCAPE ARCHITECT DAVID R. MARTIN #5039 Expiration Date 03/31/15 Renewal Date 08/01/13 Date STATE OF CALIFORNIA

THE STATE OF CALIFORNIA OR ITS OFFICERS OR AGENTS SHALL NOT BE RESPONSIBLE FOR THE ACCURACY OR COMPLETENESS OF SCANNED COPIES OF THIS PLAN SHEET.

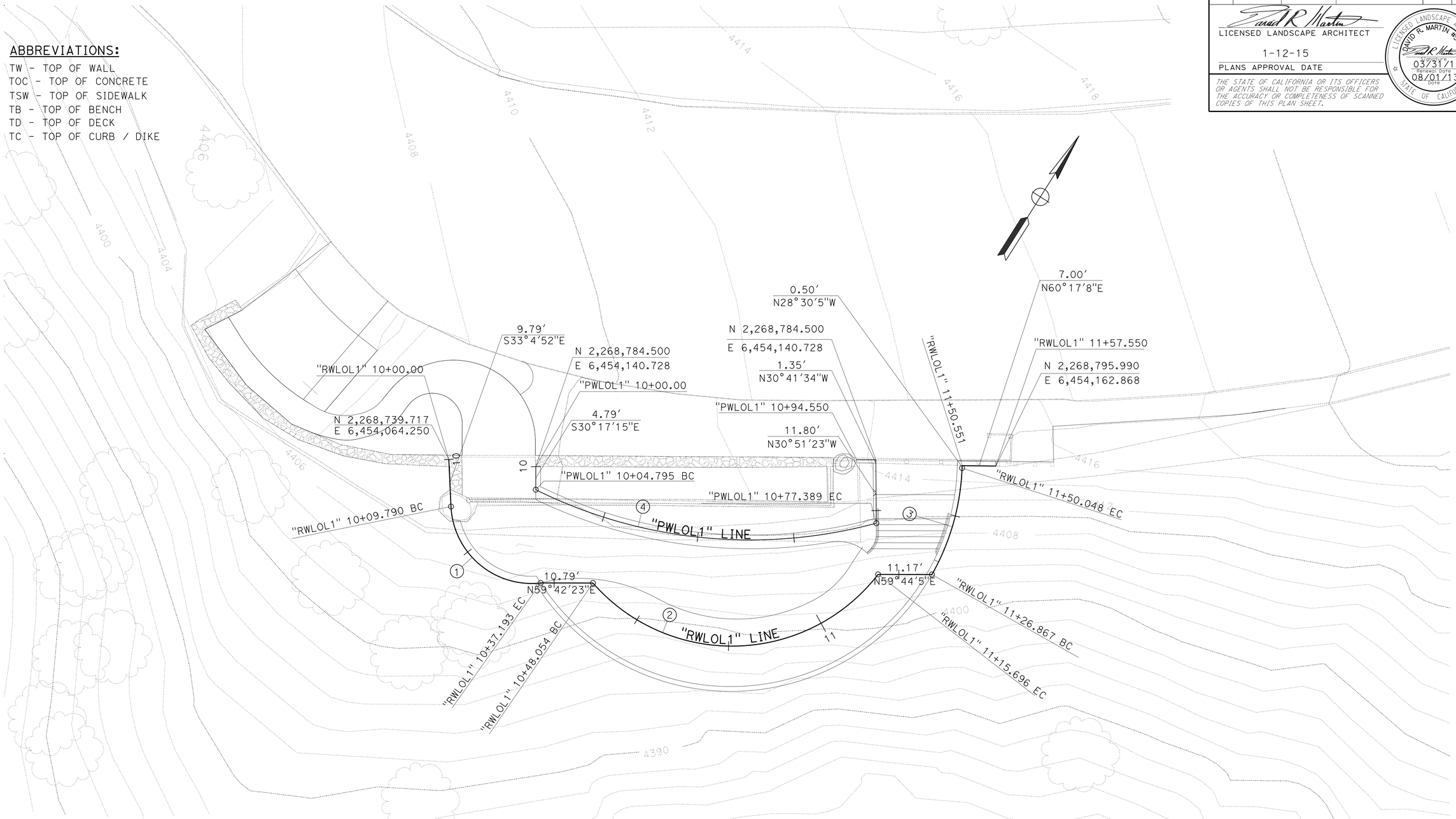

CURVE DATA (RWLOL1)

No.	R	Δ	T	L	N	E
1	16.75′	93°44′09"	17.88′	27.40′	2268716.533	6454079.353
2	38.33′	101°06′08"	46.59′	67.64′	2268718.021	6454147.242
3	48.50′	27°23′06"	11.82′	23.18′	2268781.675	6454162.628

CURVE DATA (PWLOL1)

No.	R	Δ	T	L	N	E
4	100.26′	41°29′13"	37.97′	72.59′	2268746.110	6454120.872

CONSTRUCTION DETAILS

SCALE: 1"=10′

C-1

STATE OF CALIFORNIA - DEPARTMENT OF TRANSPORTATION

Caltrans® LANDSCAPE ARCHITECTURE

SENIOR LANDSCAPE ARCHITECT: BRAD COLE

CALCULATED-DESIGNED BY: RAYMOND SEGURA

CHECKED BY: DAVID MARTIN

REVISED BY

DATE REVISED

LAST REVISION: DATE PLOTTED => 09-JAN-2015 TIME PLOTTED => 12:46

01-06-15

Dist	COUNTY	ROUTE	POST MILES TOTAL PROJECT	SHEET No.	TOTAL SHEETS
06	Fre	168	R36.0	8	70

LICENSED LANDSCAPE ARCHITECT

1-12-15
PLANS APPROVAL DATE

LICENSED LANDSCAPE ARCHITECT DAVID R. MARTIN #5039 Expiration Date 03/31/15 Renewal Date 08/01/13 Date STATE OF CALIFORNIA

THE STATE OF CALIFORNIA OR ITS OFFICERS OR AGENTS SHALL NOT BE RESPONSIBLE FOR THE ACCURACY OR COMPLETENESS OF SCANNED COPIES OF THIS PLAN SHEET.

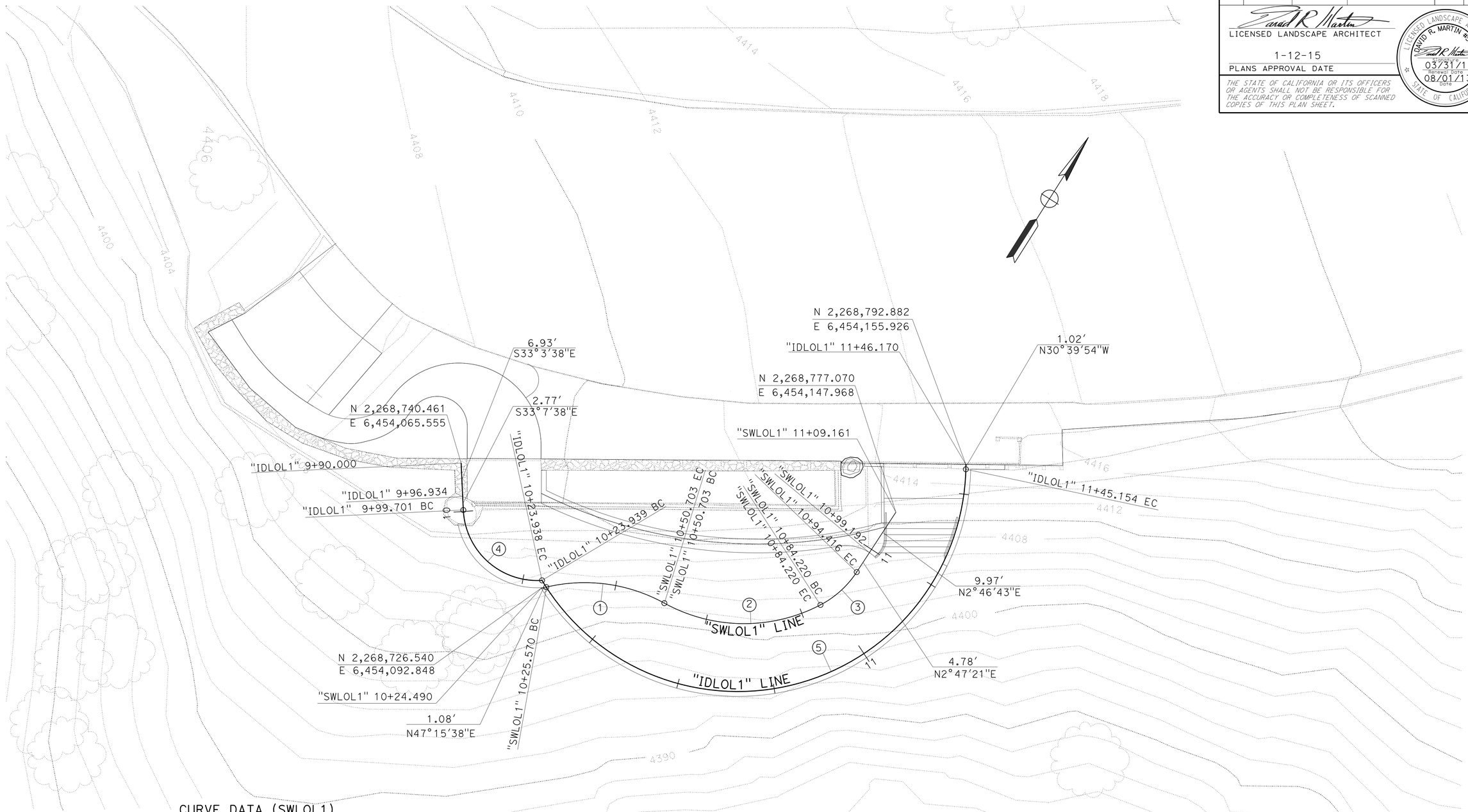

CURVE DATA (SWLOL1)

No.	R	Δ	T	L	N	E
1	34.00′	42°21′12"	13.17′	25.13′	2268736.379	6454103.140
2	34.00′	56°28′55"	18.26′	33.52′	2268737.229	6454134.563
3	20.00′	29°12′36"	5.21′	10.20′	2268757.137	6454146.999

CURVE DATA (IDLOL1)

No.	R	Δ	T	L	N	E
4	15.25′	91°03′39"	15.54′	24.24′	2268719.316	6454079.330
5	47.00′	147°46′07"	162.67′	121.22′	2268649.721	6454234.763

CONSTRUCTION DETAILS

SCALE: 1"=10′

C-2

STATE OF CALIFORNIA - DEPARTMENT OF TRANSPORTATION
Caltrans® LANDSCAPE ARCHITECTURE

SENIOR LANDSCAPE ARCHITECT: BRADE COLE
CALCULATED-DESIGNED BY: RAYMOND SEGURA
CHECKED BY: DAVID MARTIN
REVISED BY
DATE REVISED

LAST REVISION 12-03-14
DATE PLOTTED => 09-JAN-2015
TIME PLOTTED => 12:46

Dist	COUNTY	ROUTE	POST MILES TOTAL PROJECT	SHEET No.	TOTAL SHEETS
06	Fre	168	R36.0	9	70

LICENSED LANDSCAPE ARCHITECT

1-12-15

PLANS APPROVAL DATE

LICENSED LANDSCAPE ARCHITECT DAVID R. MARTIN #5039 Expiration Date 03/31/15 Renewal Date 08/01/13 Date STATE OF CALIFORNIA

THE STATE OF CALIFORNIA OR ITS OFFICERS OR AGENTS SHALL NOT BE RESPONSIBLE FOR THE ACCURACY OR COMPLETENESS OF SCANNED COPIES OF THIS PLAN SHEET.

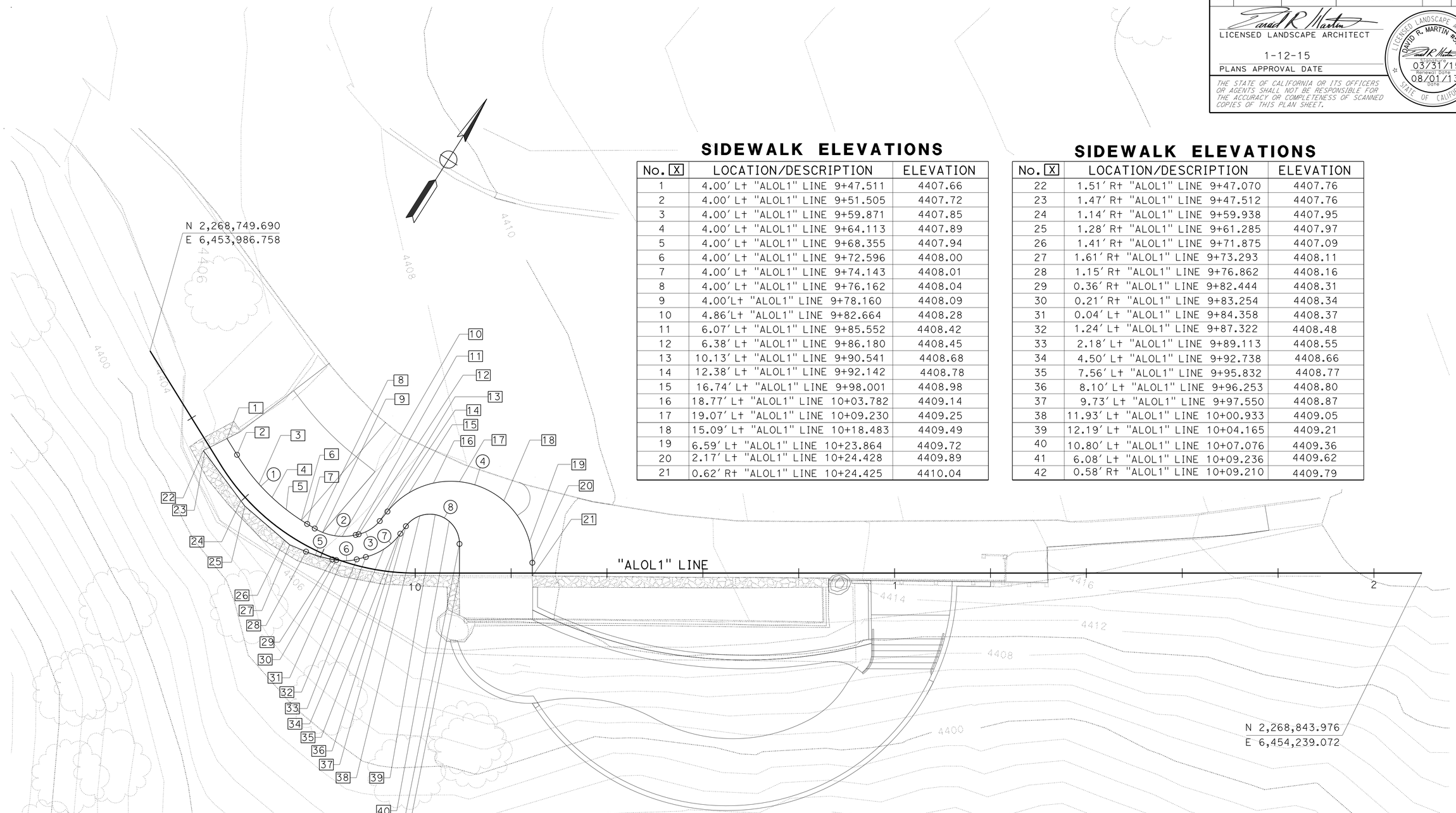

SIDEWALK ELEVATIONS

No. X	LOCATION/DESCRIPTION	ELEVATION
1	4.00′ L+ "ALOL1" LINE 9+47.511	4407.66
2	4.00′ L+ "ALOL1" LINE 9+51.505	4407.72
3	4.00′ L+ "ALOL1" LINE 9+59.871	4407.85
4	4.00′ L+ "ALOL1" LINE 9+64.113	4407.89
5	4.00′ L+ "ALOL1" LINE 9+68.355	4407.94
6	4.00′ L+ "ALOL1" LINE 9+72.596	4408.00
7	4.00′ L+ "ALOL1" LINE 9+74.143	4408.01
8	4.00′ L+ "ALOL1" LINE 9+76.162	4408.04
9	4.00′L+ "ALOL1" LINE 9+78.160	4408.09
10	4.86′L+ "ALOL1" LINE 9+82.664	4408.28
11	6.07′ L+ "ALOL1" LINE 9+85.552	4408.42
12	6.38′ L+ "ALOL1" LINE 9+86.180	4408.45
13	10.13′ L+ "ALOL1" LINE 9+90.541	4408.68
14	12.38′ L+ "ALOL1" LINE 9+92.142	4408.78
15	16.74′ L+ "ALOL1" LINE 9+98.001	4408.98
16	18.77′ L+ "ALOL1" LINE 10+03.782	4409.14
17	19.07′ L+ "ALOL1" LINE 10+09.230	4409.25
18	15.09′ L+ "ALOL1" LINE 10+18.483	4409.49
19	6.59′ L+ "ALOL1" LINE 10+23.864	4409.72
20	2.17′ L+ "ALOL1" LINE 10+24.428	4409.89
21	0.62′ R+ "ALOL1" LINE 10+24.425	4410.04

SIDEWALK ELEVATIONS

No. X	LOCATION/DESCRIPTION	ELEVATION
22	1.51′ R+ "ALOL1" LINE 9+47.070	4407.76
23	1.47′ R+ "ALOL1" LINE 9+47.512	4407.76
24	1.14′ R+ "ALOL1" LINE 9+59.938	4407.95
25	1.28′ R+ "ALOL1" LINE 9+61.285	4407.97
26	1.41′ R+ "ALOL1" LINE 9+71.875	4407.09
27	1.61′ R+ "ALOL1" LINE 9+73.293	4408.11
28	1.15′ R+ "ALOL1" LINE 9+76.862	4408.16
29	0.36′ R+ "ALOL1" LINE 9+82.444	4408.31
30	0.21′ R+ "ALOL1" LINE 9+83.254	4408.34
31	0.04′ L+ "ALOL1" LINE 9+84.358	4408.37
32	1.24′ L+ "ALOL1" LINE 9+87.322	4408.48
33	2.18′ L+ "ALOL1" LINE 9+89.113	4408.55
34	4.50′ L+ "ALOL1" LINE 9+92.738	4408.66
35	7.56′ L+ "ALOL1" LINE 9+95.832	4408.77
36	8.10′ L+ "ALOL1" LINE 9+96.253	4408.80
37	9.73′ L+ "ALOL1" LINE 9+97.550	4408.87
38	11.93′ L+ "ALOL1" LINE 10+00.933	4409.05
39	12.19′ L+ "ALOL1" LINE 10+04.165	4409.21
40	10.80′ L+ "ALOL1" LINE 10+07.076	4409.36
41	6.08′ L+ "ALOL1" LINE 10+09.236	4409.62
42	0.58′ R+ "ALOL1" LINE 10+09.210	4409.79

CURVE DATA FOR SIDEWALK RETURNS

No. X	BC	EC	R	Δ	T	L
1	4.00′ L+ "ALOL1" LINE 9+51.505	4.00′ L+ "ALOL1" LINE 9+74.143	43.75′	27°09′53"	10.57′	20.74′
2	4.00′ L+ "ALOL1" LINE 9+76.162	6.07′ L+ "ALOL1" LINE 9+85.552	11.50′	44°10′38"	4.67′	8.87′
3	6.38′ L+ "ALOL1" LINE 9+86.180	10.13′ L+ "ALOL1" LINE 9+90.541	8.00′	37°54′39"	2.75′	5.29′
4	12.38′ L+ "ALOL1" LINE 9+92.142	2.17′ L+ "ALOL1" LINE 10+24.428	17.00′	141°03′34"	48.09′	41.85′
5	1.15′ R+ "ALOL1" LINE 9+76.862	0.36′ R+ "ALOL1" LINE 9+82.444	26.00′	12°38′11"	2.88′	5.73′
6	0.21′ R+ "ALOL1" LINE 9+83.254	1.24′ L+ "ALOL1" LINE 9+87.322	10.00′	24°41′07"	2.19′	4.31′
7	2.18′ L+ "ALOL1" LINE 9+89.113	8.10′ L+ "ALOL1" LINE 9+96.253	13.00′	39°02′05"	4.61′	8.86′
8	9.73′ L+ "ALOL1" LINE 9+97.550	6.08′ L+ "ALOL1" LINE 10+09.236	6.20′	143°39′51"	18.89′	15.55′

CONSTRUCTION DETAILS (PCC SIDEWALK)

SCALE: 1"=10′

C-3

STATE OF CALIFORNIA - DEPARTMENT OF TRANSPORTATION

Caltrans® LANDSCAPE ARCHITECTURE

SENIOR LANDSCAPE ARCHITECT: BRAD COLE

CALCULATED-DESIGNED BY: RAYMOND SEGURA

CHECKED BY: DAVID MARTIN

REVISED BY / DATE REVISED

LAST REVISION 12-03-14 | DATE PLOTTED => 09-JAN-2015 | TIME PLOTTED => 12:46

Dist	COUNTY	ROUTE	POST MILES TOTAL PROJECT	SHEET No.	TOTAL SHEETS
06	Fre	168	R36.0	10	70

LICENSED LANDSCAPE ARCHITECT

1-12-15
PLANS APPROVAL DATE

LICENSED LANDSCAPE ARCHITECT DAVID R. MARTIN #5088 Expiration Date 03/31/15 Renewal Date 08/01/13 Date STATE OF CALIFORNIA

THE STATE OF CALIFORNIA OR ITS OFFICERS OR AGENTS SHALL NOT BE RESPONSIBLE FOR THE ACCURACY OR COMPLETENESS OF SCANNED COPIES OF THIS PLAN SHEET.

ELEVATIONS

No. X	LOCATION/DESCRIPTION	ELEVATION TC	ELEVATION FL
1	"FLOWLOL1" LINE Sta 9+98.096	4406.75	4406.25
2	"FLOWLOL1" LINE Sta 10+00.00	4406.79	4406.29
3	"FLOWLOL1" LINE Sta 10+11.472	4407.05	4406.55
4	"FLOWLOL1" LINE Sta 10+14.610	-	4406.60
5	"FLOWLOL1" LINE Sta 10+17.659	-	4406.67
6	"FLOWLOL1" LINE Sta 10+20.136	-	4406.72
7	"FLOWLOL1" LINE Sta 10+25.524	-	4406.86
8	"FLOWLOL1" LINE Sta 10+28.529	4407.47	4406.97
9	"FLOWLOL1" LINE Sta 10+30.011	4407.53	4407.03
10	"FLOWLOL1" LINE Sta 10+31.844	4407.66	4407.16
11	"FLOWLOL1" LINE Sta 10+33.356	4407.73	4407.23
12	"FLOWLOL1" LINE Sta 10+35.008	4407.85	4407.35
13	"FLOWLOL1" LINE Sta 10+40.950	4408.15	4407.65
14	"FLOWLOL1" LINE Sta 10+47.256	4408.47	4407.97
15	"FLOWLOL1" LINE Sta 10+54.482	4408.90	4408.40
16	"FLOWLOL1" LINE Sta 10+59.310	4409.18	4408.68
17	"FLOWLOL1" LINE Sta 10+60.376	4409.24	4408.74
18	"FLOWLOL1" LINE Sta 10+62.125	4409.41	4408.91

ELEVATIONS

No. X	LOCATION/DESCRIPTION	ELEVATION TC	ELEVATION FL
19	"FLOWLOL1" LINE Sta 10+74.123	4410.15	4409.65
20	"FLOWLOL1" LINE Sta 10+75.173	4410.22	4409.72
21	"FLOWLOL1" LINE Sta 10+81.919	4410.70	4410.20
22	"FLOWLOL1" LINE Sta 10+91.923	4411.41	4410.91
23	"FLOWLOL1" LINE Sta 10+96.920	4411.75	4411.25
24	"FLOWLOL1" LINE Sta 11+01.608	4412.08	4411.58
25	"FLOWLOL1" LINE Sta 11+13.108	4412.83	4412.33
26	"FLOWLOL1" LINE Sta 11+24.595	4413.55	4413.05
27	"FLOWLOL1" LINE Sta 11+33.439	4414.16	4413.66
28	"FLOWLOL1" LINE Sta 11+50.367	4414.98	4414.48
29	"FLOWLOL1" LINE Sta 11+58.384	4415.44	4414.94
30	"FLOWLOL1" LINE Sta 11+67.347	4415.50	4415.50
31	"FLOWLOL1" LINE Sta 11+70.057	4416.20	4415.70
32	"FLOWLOL1" LINE Sta 11+80.012	4416.79	4416.29

ELEVATIONS

No. X	LOCATION/DESCRIPTION	ELEVATION
33	"FLOWLOL1" LINE Sta 10+54.482	4408.90
34	"FLOWLOL1" LINE Sta 10+59.310	4409.18
35	3.49′ Rt "FLOWLOL1" LINE Sta 10+62.506	4409.50
36	5.69′ Rt "FLOWLOL1" LINE Sta 10+61.739	4409.55
37	6.77′ Rt "FLOWLOL1" LINE Sta 10+60.903	4409.58

ELEVATIONS

No. X	LOCATION/DESCRIPTION	ELEVATION
38	21.09′ Lt "ALOL1" LINE 9+46.355	4407.34
39	21.38′ Lt "ALOL1" LINE 9+49.326	4407.39
40	21.76′ Lt "ALOL1" LINE 9+53.463	4407.45
41	21.99′ Lt "ALOL1" LINE 9+59.469	4407.51
42	21.88′ Lt "ALOL1" LINE 9+68.289	4407.61
43	21.26′ Lt "ALOL1" LINE 9+76.904	4407.69
44	19.89′ Lt "ALOL1" LINE 9+85.385	4407.81
45	1.35′ Rt "ALOL1" LINE 9+71.877	4408.10
46	4.00′ Lt "ALOL1" LINE 9+72.596	4408.00
47	4.96′ Lt "ALOL1" LINE 9+72.744	4408.00
48	10.55′ Lt "ALOL1" LINE 9+73.756	4407.89
49	16.03′ Lt "ALOL1" LINE 9+75.095	4407.79
50	21.25′ Lt "ALOL1" LINE 9+76.904	4407.69
51	30.32′ Lt "ALOL1" LINE 9+82.719	4406.97
52	1.15′ Rt "ALOL1" LINE 9+47.070	4407.76
53	7.00′ Lt "ALOL1" LINE 9+47.759	4407.61
54	21.09′ Lt "ALOL1" LINE 9+46.355	4407.34
55	30.56′ Lt "ALOL1" LINE 9+45.406	4406.55
56	1.15′ Rt "ALOL1" LINE 9+76.865	4408.16
57	3.99′ Lt "ALOL1" LINE 9+78.161	4408.09
58	9.44′ Lt "ALOL1" LINE 9+79.927	4407.99
59	14.72′ Lt "ALOL1" LINE 9+82.224	4407.91
60	19.89′ Lt "ALOL1" LINE 9+85.385	4407.81

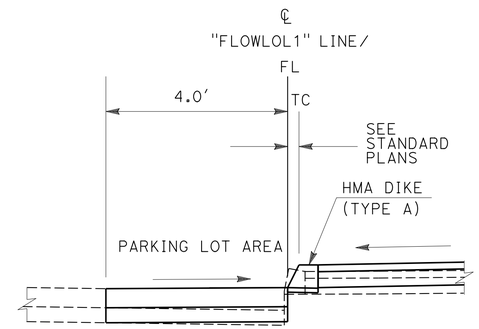

DETAIL

NO SCALE

NOTE: (THIS SHEET ONLY)

OFFSET DIMENSIONS IN TABLE ARE TO FL FOR REFERENCES TO "FLOWLOL1" LINE.

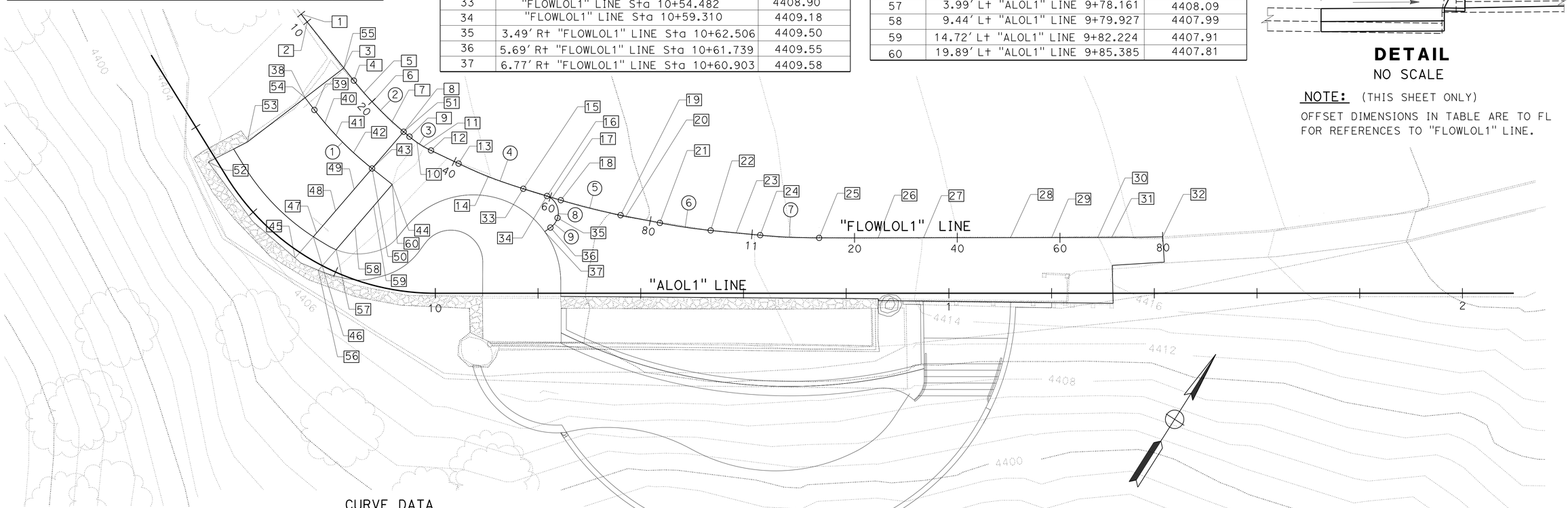

CURVE DATA

No. X	BC	EC	R	Δ	T	L
1	21.38′ Lt "FLOWLOL1" LINE 9+49.326	21.26′ Lt "FLOWLOL1" LINE 9+76.904	64.35′	14°17′15"	8.07′	16.05′
2	"FLOWLOL1" LINE Sta 10+14.610	"FLOWLOL1" LINE Sta 10+28.529	70.00′	11°23′35"	6.98′	13.92′
3	"FLOWLOL1" LINE Sta 10+30.011	"FLOWLOL1" LINE Sta 10+35.008	20.00′	14°18′55"	2.51′	5.00′
4	"FLOWLOL1" LINE Sta 10+40.950	"FLOWLOL1" LINE Sta 10+54.482	90.00′	8°36′55"	6.78′	13.53′
5	"FLOWLOL1" LINE Sta 10+62.125	"FLOWLOL1" LINE Sta 10+74.123	120.00′	5°43′43"	6.00′	12.00′
6	"FLOWLOL1" LINE Sta 10+81.919	"FLOWLOL1" LINE Sta 10+91.923	100.00′	5°43′55"	5.01′	10.00′
7	"FLOWLOL1" LINE Sta 11+01.608	"FLOWLOL1" LINE Sta 11+13.108	120.00′	5°29′26"	5.75′	11.50′
8	18.94′ Lt "FLOWLOL1" LINE 10+21.745	14.68′ Lt "FLOWLOL1" LINE 10+23.796	3.50′	85°10′03"	3.22′	5.20′
9	12.79′ Lt "FLOWLOL1" LINE 10+22.412	14.68′ Lt "FLOWLOL1" LINE 10+23.796	3.50′	38°58′53"	1.24′	2.38′

CONSTRUCTION DETAILS

SCALE: 1"=10′

C-4

STATE OF CALIFORNIA - DEPARTMENT OF TRANSPORTATION
Caltrans® LANDSCAPE ARCHITECTURE

SENIOR LANDSCAPE ARCHITECT: BRAD COLE
CALCULATED-DESIGNED BY: RAYMOND SEGURA
CHECKED BY: DAVID MARTIN
REVISED BY / DATE REVISED

LAST REVISION 01-05-15
DATE PLOTTED => 09-JAN-2015
TIME PLOTTED => 12:46

Dist	COUNTY	ROUTE	POST MILES TOTAL PROJECT	SHEET No.	TOTAL SHEETS
06	Fre	168	R36.0	11	70

LICENSED LANDSCAPE ARCHITECT

1-12-15
PLANS APPROVAL DATE

LICENSED LANDSCAPE ARCHITECT
DAVID R. MARTIN #5039
Expiration Date 03/31/15
Renewal Date 07/29/14
Date
STATE OF CALIFORNIA

THE STATE OF CALIFORNIA OR ITS OFFICERS OR AGENTS SHALL NOT BE RESPONSIBLE FOR THE ACCURACY OR COMPLETENESS OF SCANNED COPIES OF THIS PLAN SHEET.

STUB WALL ELEVATIONS

No. X	LOCATION/DESCRIPTION	ELEVATION TOC	ELEVATION TSW
1	13.79′ Rt "ALOL1" LINE 10+95.173	4415.66	4414.66
2	8.72′ Rt "ALOL1" LINE 10+95.133	4415.53	4414.56
3	1.52′ Rt "ALOL1" LINE 10+95.080	4415.38	4414.38
4	1.47′ Rt "ALOL1" LINE 10+91.071	4415.10	4414.10

SWALE ELEVATIONS

No. X	LOCATION/DESCRIPTION	ELEVATION TD
5	"SWLOL1" LINE Sta 10+24.490	4410.23
6	"SWLOL1" LINE Sta 10+25.566	4410.23
7	"SWLOL1" LINE Sta 10+40.925	4410.52
8	"SWLOL1" LINE Sta 10+50.703	4410.64
9	"SWLOL1" LINE Sta 10+54.160	4410.68
10	"SWLOL1" LINE Sta 10+66.749	4410.84
11	"SWLOL1" LINE Sta 10+79.323	4411.00
12	"SWLOL1" LINE Sta 10+84.220	4411.06
13	"SWLOL1" LINE Sta 10+92.094	4411.16
14	"SWLOL1" LINE Sta 10+94.416	4411.19
15	"SWLOL1" LINE Sta 10+99.192	4411.25

SEAT BENCH ELEVATIONS

No. X	LOCATION/DESCRIPTION	ELEVATION TB	ELEVATION TD
16	"PWLOL1" LINE Sta 10+04.797	4411.64	4410.14
17	1.83′ Rt "PWLOL1" LINE Sta 10+05.683	4411.66	4410.16
18	1.83′ Rt "PWLOL1" LINE Sta 10+18.325	4411.89	4410.39
19	1.83′ Rt "PWLOL1" LINE Sta 10+31.936	4412.14	4410.64
20	1.83′ Rt "PWLOL1" LINE Sta 10+47.062	4412.43	4410.93
21	1.83′ Rt "PWLOL1" LINE Sta 10+62.213	4412.68	4411.18
22	1.83′ Rt "PWLOL1" LINE Sta 10+67.102	4412.73	4411.23
23	2.12′ Rt "PWLOL1" LINE Sta 10+69.605	4412.75	4411.25
24	5.42′ Rt "PWLOL1" LINE Sta 10+74.047	4412.77	4411.27
25	4.84′ Rt "PWLOL1" LINE Sta 10+75.012	4412.79	4411.29
26	1.98′ Rt "PWLOL1" LINE Sta 10+76.879	4412.82	4411.32
27	"PWLOL1" LINE Sta 10+77.390	4412.83	4411.33

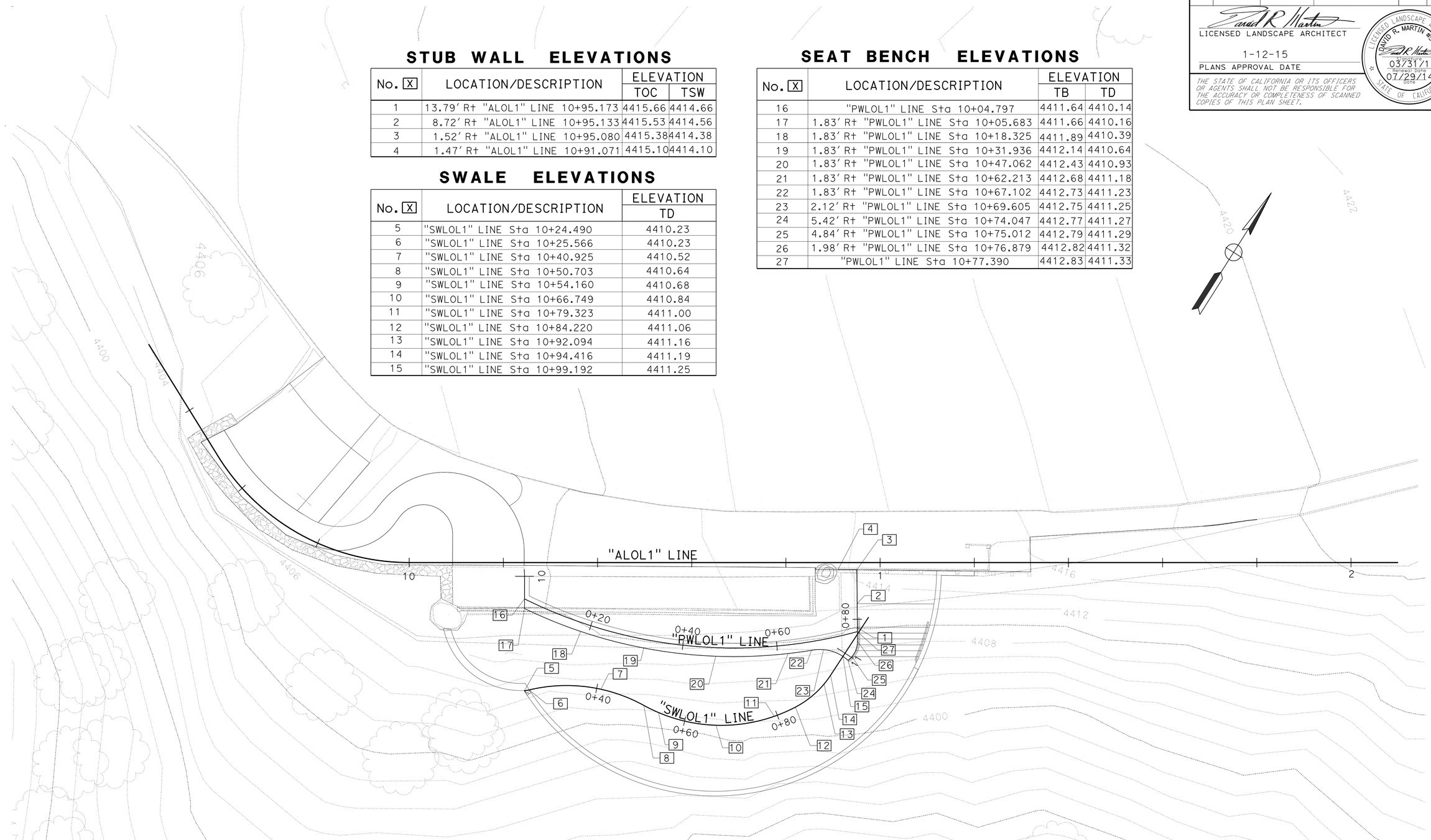

CONSTRUCTION DETAILS

SCALE: 1"=10′

C-5

STATE OF CALIFORNIA - DEPARTMENT OF TRANSPORTATION
Caltrans® LANDSCAPE ARCHITECTURE

SENIOR LANDSCAPE ARCHITECT: BRAD COLE
CALCULATED-DESIGNED BY: RAYMOND SEGURA
CHECKED BY: DAVID MARTIN
REVISED BY
DATE REVISED

LAST REVISION 12-03-14
DATE PLOTTED => 09-JAN-2015
TIME PLOTTED => 12:46

Dist	COUNTY	ROUTE	POST MILES TOTAL PROJECT	SHEET No.	TOTAL SHEETS
06	Fre	168	R36.0	12	70

LICENSED LANDSCAPE ARCHITECT

1-12-15

PLANS APPROVAL DATE

LICENSED LANDSCAPE ARCHITECT DAVID R. MARTIN #5039 Expiration Date 03/31/15 Renewal Date 08/01/13 Date STATE OF CALIFORNIA

THE STATE OF CALIFORNIA OR ITS OFFICERS OR AGENTS SHALL NOT BE RESPONSIBLE FOR THE ACCURACY OR COMPLETENESS OF SCANNED COPIES OF THIS PLAN SHEET.

DECK ELEVATIONS

No. X	LOCATION/DESCRIPTION	ELEVATION TD
1	0.035' Lt "RWLOL1" LINE Sta 10+37.184	4410.23
2	"RWLOL1" LINE Sta 10+48.054	4410.44
3	"RWLOL1" LINE Sta 10+51.064	4410.50
4	"RWLOL1" LINE Sta 10+65.832	4410.72
5	"RWLOL1" LINE Sta 10+80.646	4410.91
6	"RWLOL1" LINE Sta 10+95.297	4411.08
7	"RWLOL1" LINE Sta 11+09.965	4411.24
8	"RWLOL1" LINE Sta 11+15.696	4411.32
9	"RWLOL1" LINE Sta 11+26.867	4411.53

DECK ELEVATIONS

No. X	LOCATION/DESCRIPTION	ELEVATION TD
10	"IDLOL1" LINE Sta 10+02.737	4409.96
11	"IDLOL1" LINE Sta 10+11.821	4410.13
12A	"IDLOL1" LINE Sta 10+23.939	4410.24
12B	"IDLOL1" LINE Sta 10+24.498	4410.24
13	"IDLOL1" LINE Sta 10+25.583	4410.23
14	"IDLOL1" LINE Sta 10+36.537	4410.43
15	"IDLOL1" LINE Sta 10+54.544	4410.78
16	"IDLOL1" LINE Sta 10+72.605	4411.02
17	"IDLOL1" LINE Sta 10+90.482	4411.20
18	"IDLOL1" LINE Sta 11+08.334	4411.38
19	"IDLOL1" LINE Sta 11+21.423	4411.52
20	"IDLOL1" LINE Sta 11+24.893	4411.56
21	"IDLOL1" LINE Sta 11+27.392	4411.58
22	"IDLOL1" LINE Sta 11+34.008	4414.92
23	"IDLOL1" LINE Sta 11+45.154	4414.95
24	"IDLOL1" LINE Sta 11+46.170	4415.21
25	"IDLOL1" LINE Sta 11+39.082	4414.87

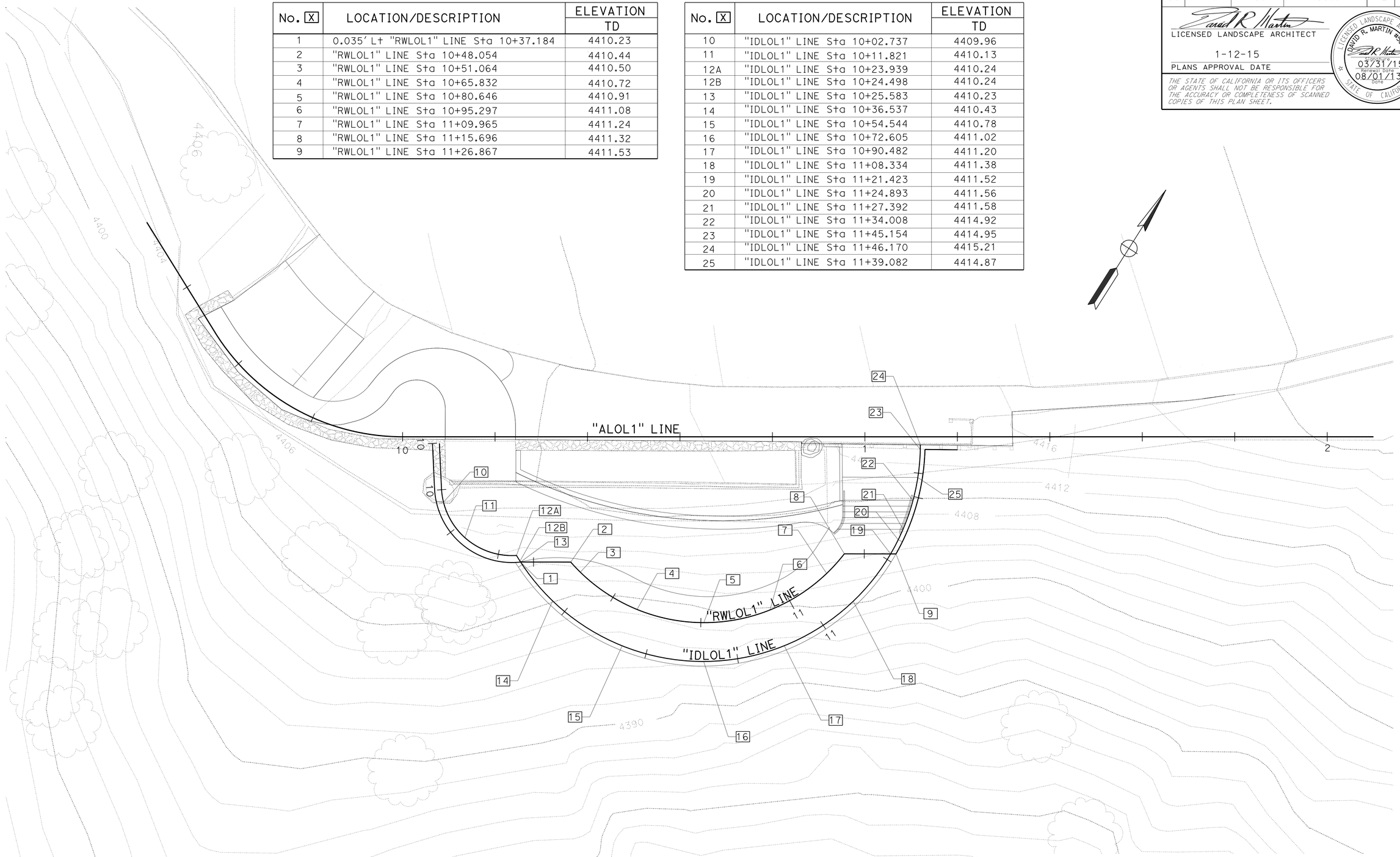

CONSTRUCTION DETAILS

SCALE: 1"=10'

C-6

STATE OF CALIFORNIA - DEPARTMENT OF TRANSPORTATION

Caltrans LANDSCAPE ARCHITECTURE

SENIOR LANDSCAPE ARCHITECT: BRADE COLE

CALCULATED-DESIGNED BY: RAYMOND SEGURA

CHECKED BY: DAVID MARTIN

REVISED BY

DATE REVISED

LAST REVISION 12-03-14

DATE PLOTTED => 09-JAN-2015

TIME PLOTTED => 12:46

Dist	COUNTY	ROUTE	POST MILES TOTAL PROJECT	SHEET No.	TOTAL SHEETS
06	Fre	168	R36.0	13	70

LICENSED LANDSCAPE ARCHITECT

1-12-15

PLANS APPROVAL DATE

LICENSED LANDSCAPE ARCHITECT RICHARD B. COLE No. 3126 Signature 06/30/16 Renewal Date 07/30/14 Date STATE OF CALIFORNIA

THE STATE OF CALIFORNIA OR ITS OFFICERS OR AGENTS SHALL NOT BE RESPONSIBLE FOR THE ACCURACY OR COMPLETENESS OF SCANNED COPIES OF THIS PLAN SHEET.

NOTES (THIS SHEET ONLY):

FOR SECTION DETAILS SEE SHEETS C-8, C-9 AND C-17.

LEGEND (THIS SHEET ONLY):

- C-1, C-2 — GRANITE SEAT ROCK (SEE SHEET Q-2 FOR SIZES)
- BOULDER
- EXPANSION JOINT (Typ)
- CONTROL JOINT (Typ)
- CONTROL JOINT (MATCH STRUCTURES "CJ", SEE ST1-1)
- CHAIN LINK FENCE (TYPE CL-6)
- CHAIN LINK GATE (TYPE CL-6)
- TRASH RECEPTACLE
- BENCH

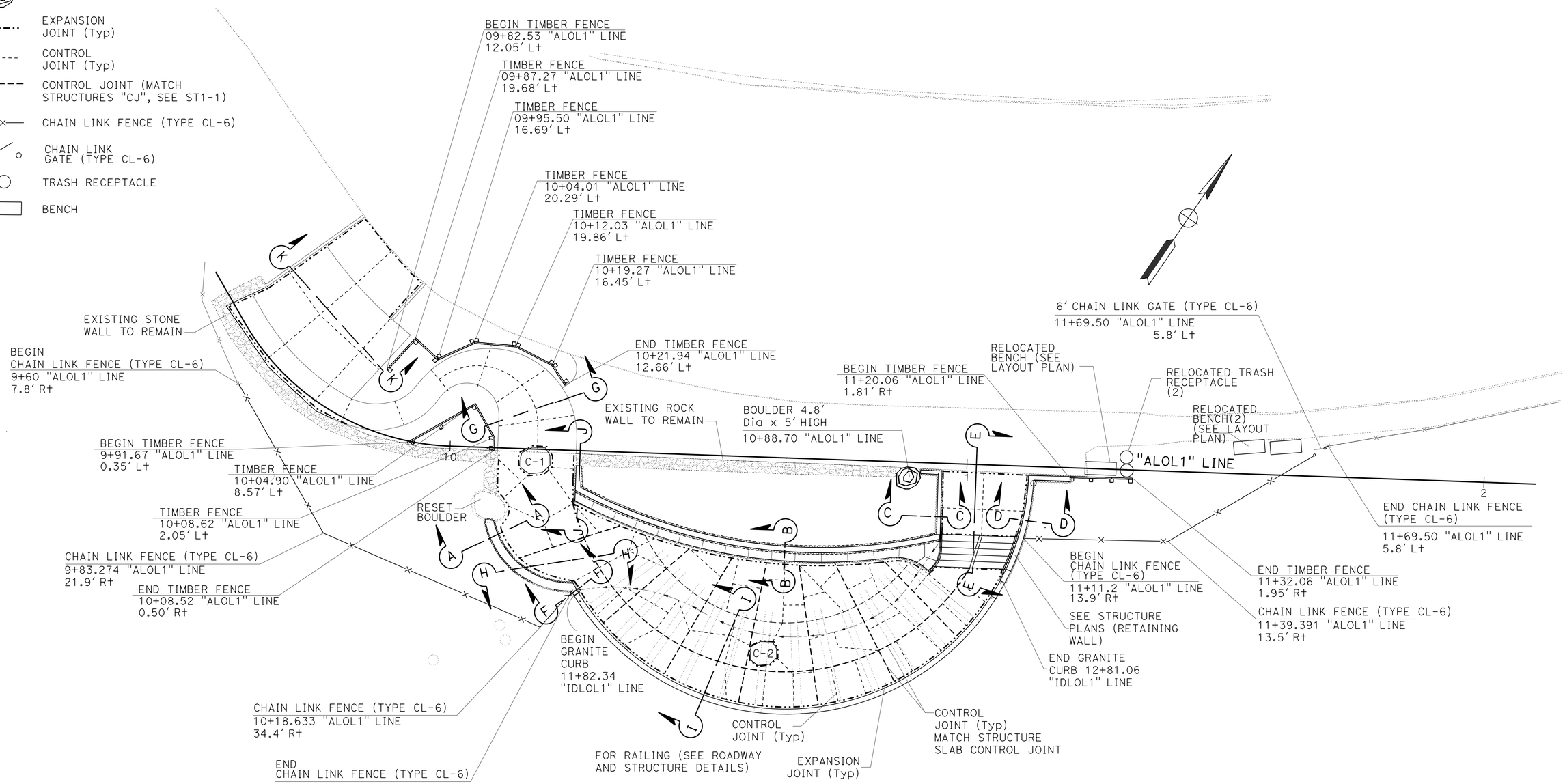

CONSTRUCTION DETAILS

SCALE: 1"=10'

C-7

REVISED BY | DATE REVISED

DAVID MARTIN | RICHARD COLE

CALCULATED-DESIGNED BY | CHECKED BY

SENIOR LANDSCAPE ARCHITECT | BRAD COLE

STATE OF CALIFORNIA - DEPARTMENT OF TRANSPORTATION

Caltrans® LANDSCAPE ARCHITECTURE

LAST REVISION 01-06-15 | DATE PLOTTED => 09-JAN-2015 | TIME PLOTTED => 12:46

Dist	COUNTY	ROUTE	POST MILES TOTAL PROJECT	SHEET No.	TOTAL SHEETS
06	Fre	168	R36.0	14	70

LICENSED LANDSCAPE ARCHITECT

1-12-15
PLANS APPROVAL DATE

LICENSED LANDSCAPE ARCHITECT RICHARD B. COLE No. 3128 Expiration Date 06/30/16 Renewal Date 07/31/14 STATE OF CALIFORNIA

THE STATE OF CALIFORNIA OR ITS OFFICERS OR AGENTS SHALL NOT BE RESPONSIBLE FOR THE ACCURACY OR COMPLETENESS OF SCANNED COPIES OF THIS PLAN SHEET.

LEGEND (THIS SHEET ONLY):

STANDARD PLAN SHEET NO.

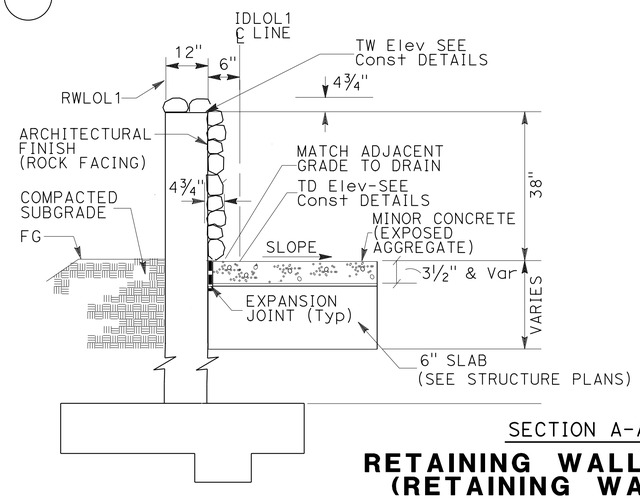

SECTION A-A

RETAINING WALL (TYPE 1A) (RETAINING WALL NO. 2)

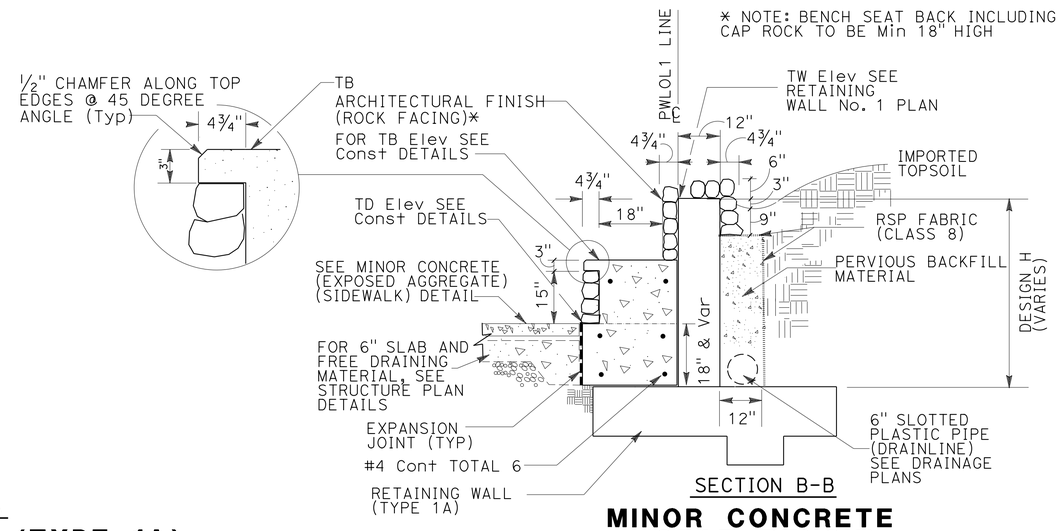

SECTION B-B

MINOR CONCRETE (SEAT BENCH)

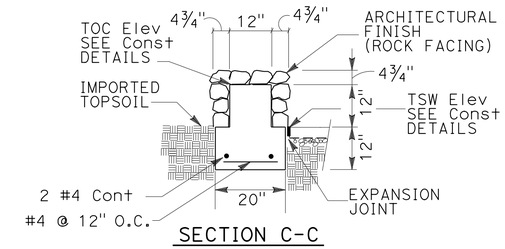

SECTION C-C

MINOR CONCRETE (STUB WALL)

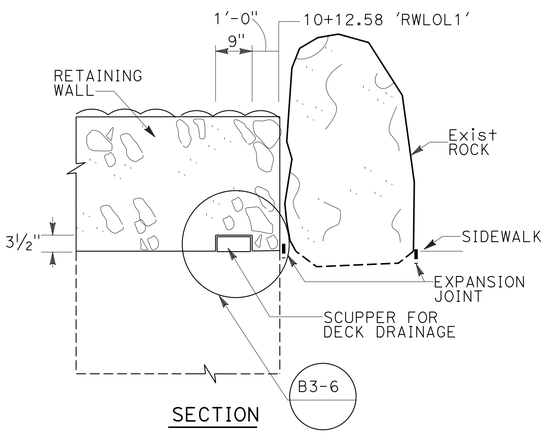

SECTION

RETAINING WALL No.2 UTILITY OPENING

(SCUPPER DETAIL)

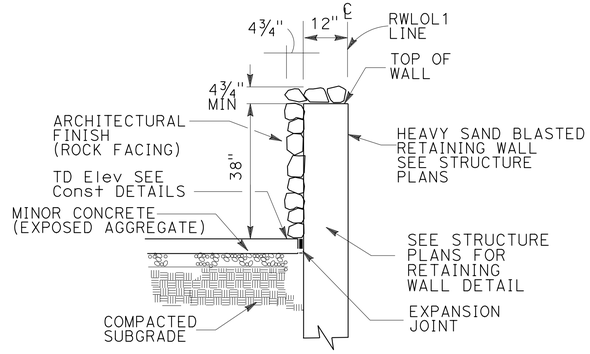

SECTION D-D

RETAINING WALL

(SEE STRUCTURE PLANS)

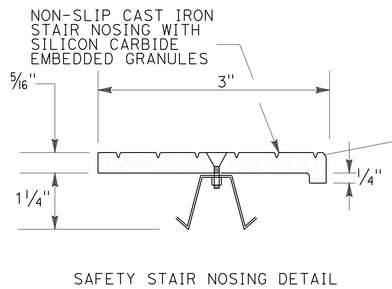

SAFETY STAIR NOSING DETAIL

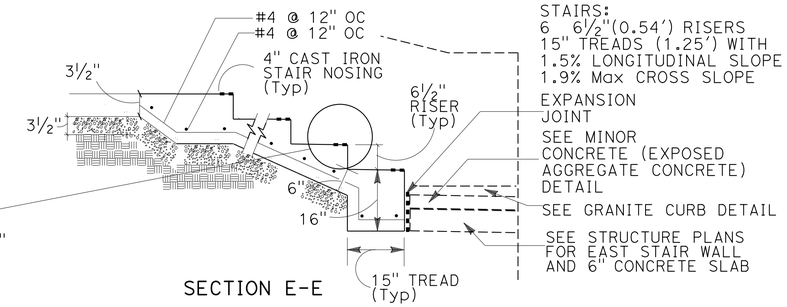

SECTION E-E

MINOR CONCRETE (STAIRS)

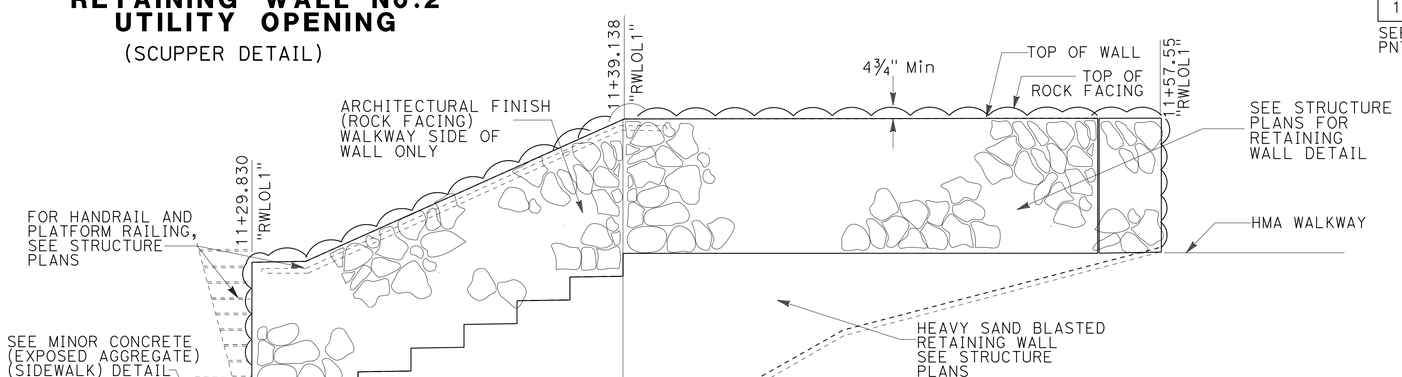

ARCHITECTURAL FINISH ROCK FACING

(EAST FACING)

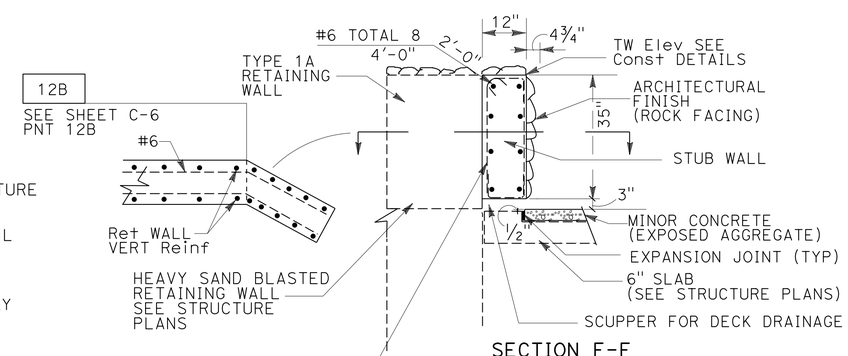

SECTION F-F

MINOR CONCRETE STUB WALL

CONSTRUCTION DETAILS

NO SCALE

C-8

STATE OF CALIFORNIA - DEPARTMENT OF TRANSPORTATION
Caltrans® LANDSCAPE ARCHITECTURE

SENIOR LANDSCAPE ARCHITECT: BRAD COLE
CALCULATED-DESIGNED BY: DAVID MARTIN
CHECKED BY: RICHARD COLE
REVISED BY
DATE REVISED

LAST REVISION 01-06-15
DATE PLOTTED => 09-JAN-2015
TIME PLOTTED => 12:46

Dist	COUNTY	ROUTE	POST MILES TOTAL PROJECT	SHEET No.	TOTAL SHEETS
06	Fre	168	R36.0	15	70

LICENSED LANDSCAPE ARCHITECT

1-12-15
PLANS APPROVAL DATE

LICENSED LANDSCAPE ARCHITECT RICHARD B. COLE No. 3126 Registration 06/30/16 Renewal Date 08/01/14 Date STATE OF CALIFORNIA

THE STATE OF CALIFORNIA OR ITS OFFICERS OR AGENTS SHALL NOT BE RESPONSIBLE FOR THE ACCURACY OR COMPLETENESS OF SCANNED COPIES OF THIS PLAN SHEET.

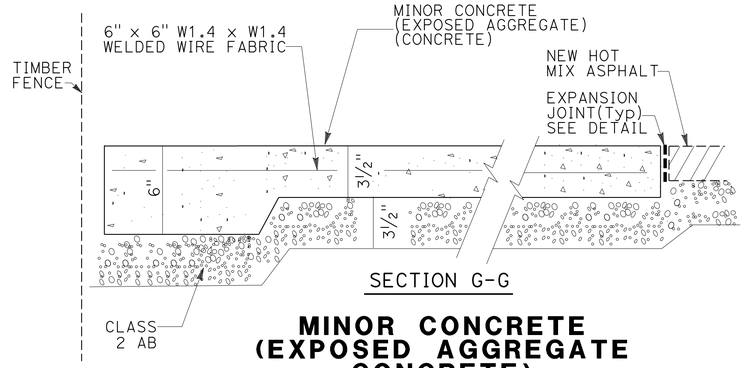

SECTION G-G

MINOR CONCRETE (EXPOSED AGGREGATE CONCRETE)

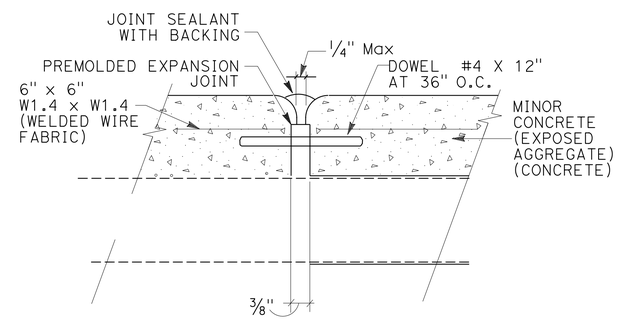

SECTION

MINOR CONCRETE (EXPOSED AGGREGATE CONCRETE) EXPANSION JOINT

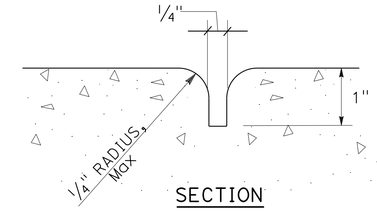

SECTION

CONTROL JOINT

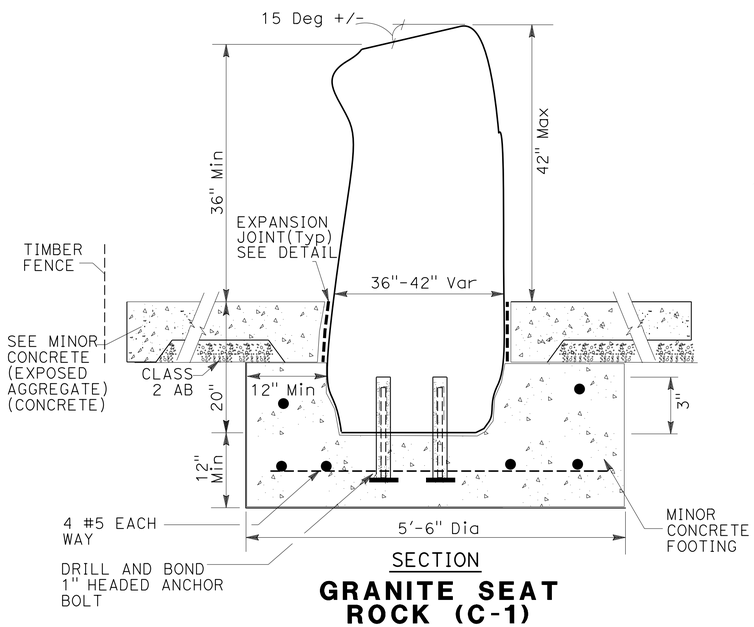

SECTION

GRANITE SEAT ROCK (C-1)

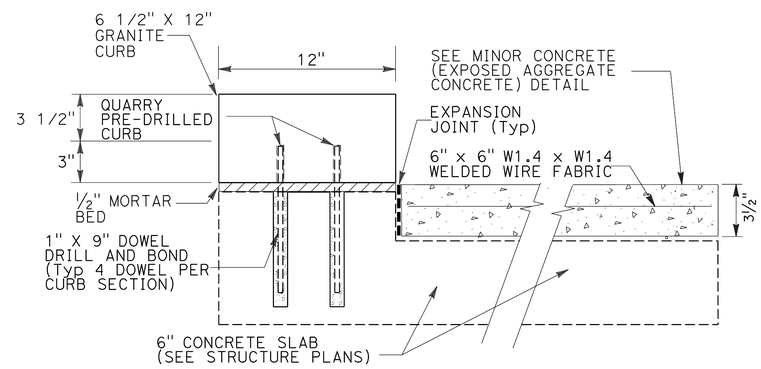

DETAIL 'A'

GRANITE CURB

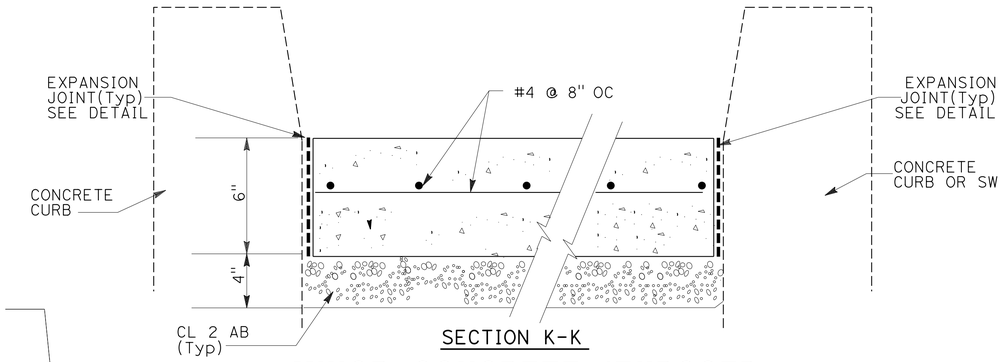

SECTION K-K

MINOR CONCRETE (EXPOSED AGGREGATE CONCRETE) (PARKING STALL)

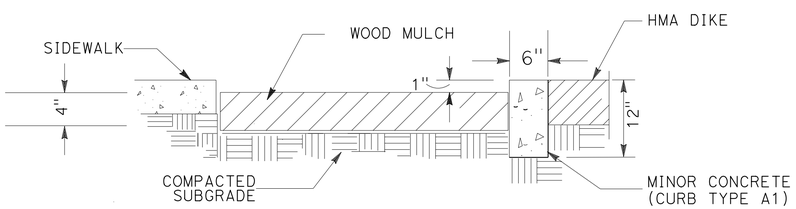

SECTION

WOOD MULCH

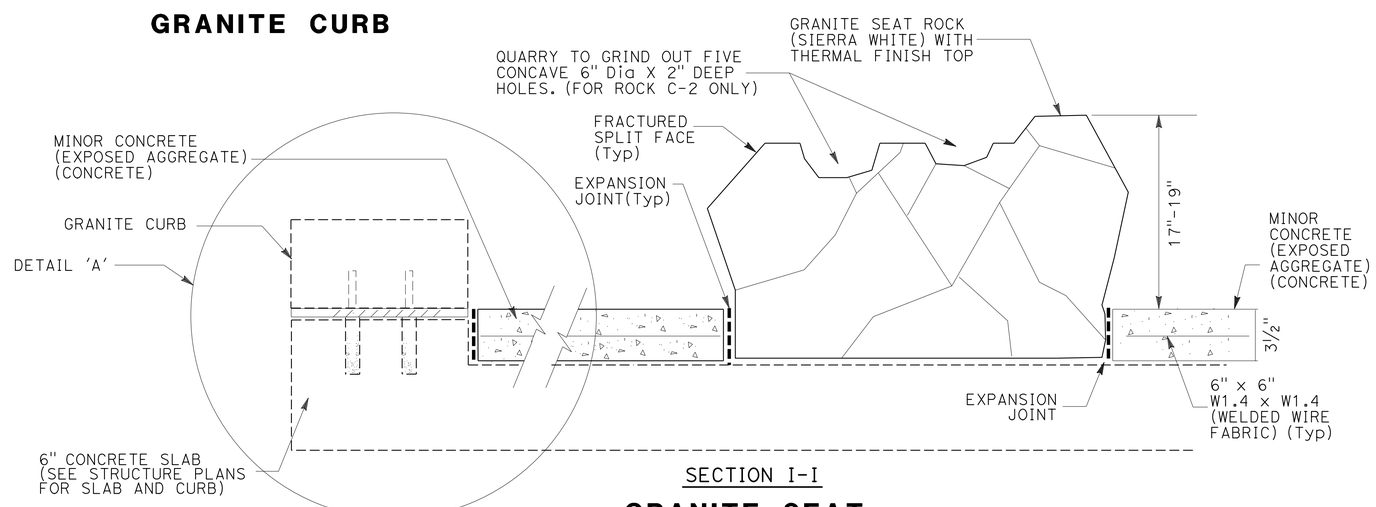

SECTION I-I

GRANITE SEAT ROCK (C-2)

CONSTRUCTION DETAILS

NO SCALE

C-9

STATE OF CALIFORNIA - DEPARTMENT OF TRANSPORTATION
Caltrans LANDSCAPE ARCHITECTURE

SENIOR LANDSCAPE ARCHITECT: BRAD COLE
CALCULATED-DESIGNED BY: DAVID MARTIN
CHECKED BY: RICHARD COLE
REVISED BY
DATE REVISED

LAST REVISION 12-29-14
DATE PLOTTED => 09-JAN-2015
TIME PLOTTED => 12:46

Dist	COUNTY	ROUTE	POST MILES TOTAL PROJECT	SHEET No.	TOTAL SHEETS
06	Fre	168	R36.0	16	70

LICENSED LANDSCAPE ARCHITECT

1-12-15

PLANS APPROVAL DATE

LICENSED LANDSCAPE ARCHITECT RICHARD B. COLE No. 3128 Expiration Date 06/30/16 Renewal Date 08/01/13 Date STATE OF CALIFORNIA

THE STATE OF CALIFORNIA OR ITS OFFICERS OR AGENTS SHALL NOT BE RESPONSIBLE FOR THE ACCURACY OR COMPLETENESS OF SCANNED COPIES OF THIS PLAN SHEET.

NOTE:

SEE STRUCTURE PLANS AND CONSTRUCTION DETAILS FOR RAILING DETAILS.

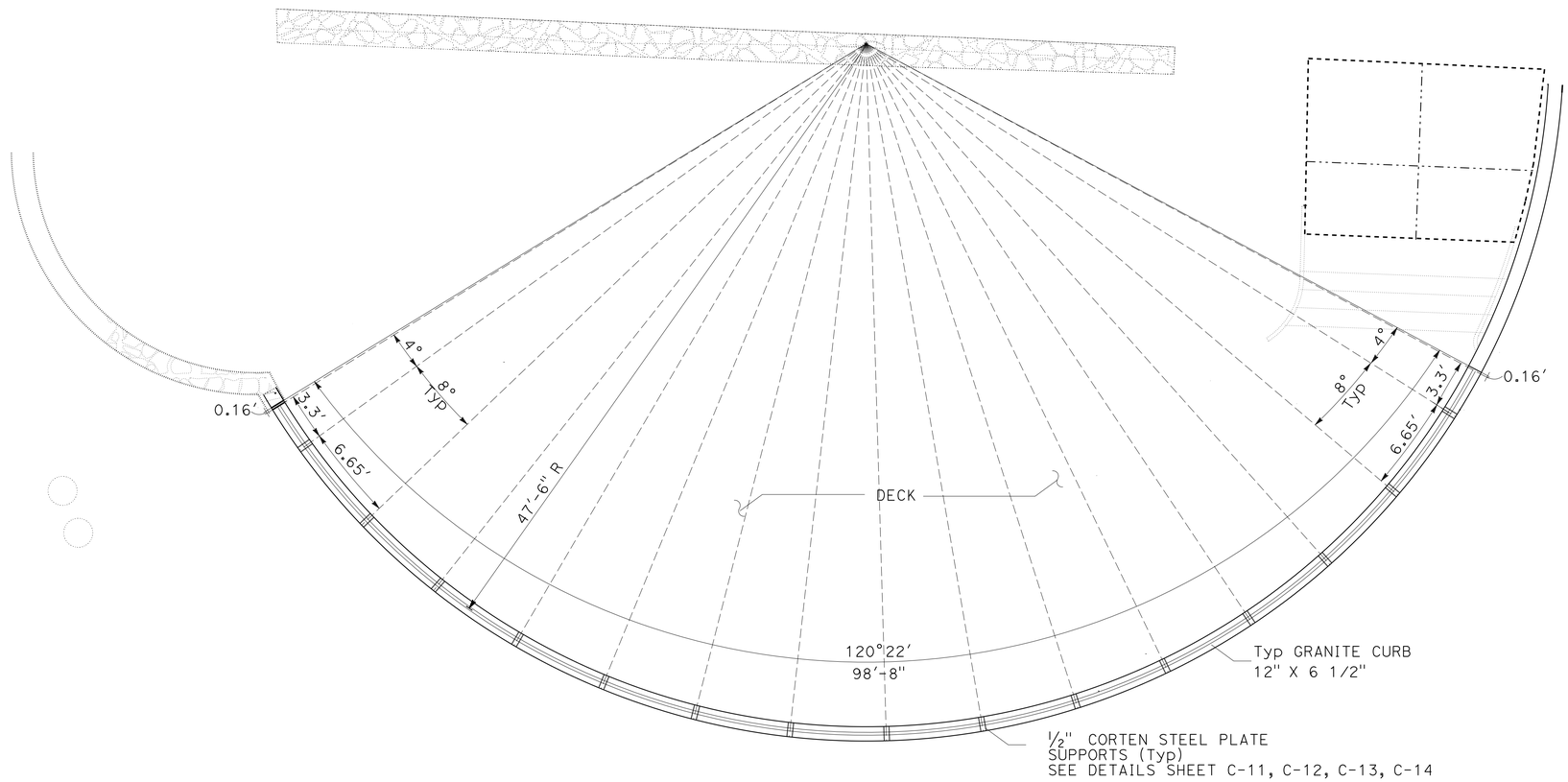

RAILING PLAN

CONSTRUCTION DETAILS

NO SCALE

C-10

STATE OF CALIFORNIA - DEPARTMENT OF TRANSPORTATION

Caltrans® LANDSCAPE ARCHITECTURE

SENIOR LANDSCAPE ARCHITECT: BRAD COLE

CALCULATED-DESIGNED BY: RICHARD COLE

CHECKED BY: DAVID MARTIN

REVISED BY

DATE REVISED

LAST REVISION 12-29-14 | DATE PLOTTED => 09-JAN-2015 | TIME PLOTTED => 12:46

Dist	COUNTY	ROUTE	POST MILES TOTAL PROJECT	SHEET No.	TOTAL SHEETS
06	Fre	168	R36.0	17	70

LICENSED LANDSCAPE ARCHITECT

1-12-15
PLANS APPROVAL DATE

LICENSED LANDSCAPE ARCHITECT
RICHARD B. COLE No. 3128
Expiration Date 06/30/16
Renewal Date 10/15/14
Date
STATE OF CALIFORNIA

THE STATE OF CALIFORNIA OR ITS OFFICERS OR AGENTS SHALL NOT BE RESPONSIBLE FOR THE ACCURACY OR COMPLETENESS OF SCANNED COPIES OF THIS PLAN SHEET.

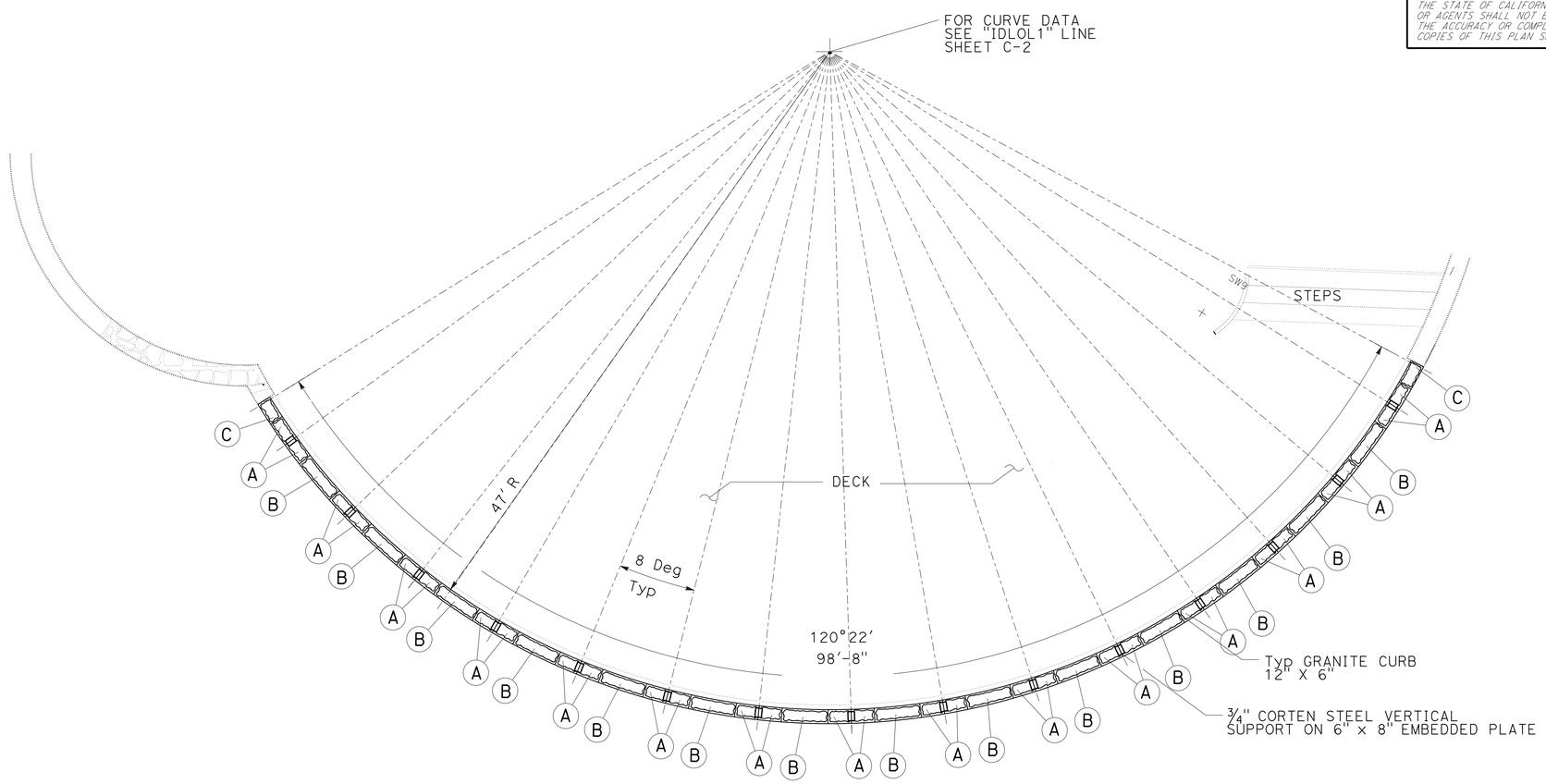

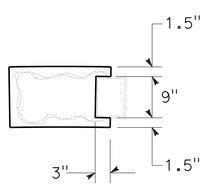

DETAIL A

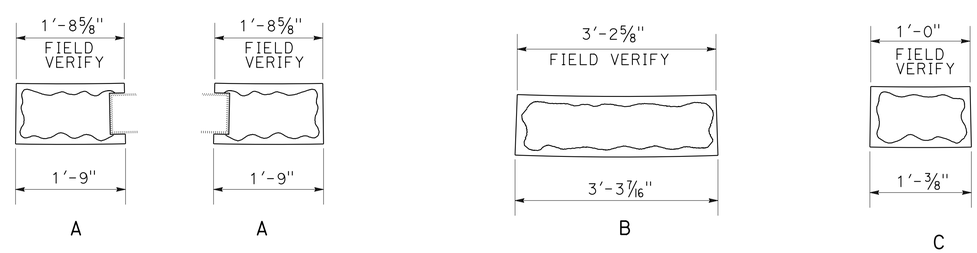

SEE DETAIL A

* ALLOWS FOR ¾" GROUT JOINT (+-1/4")

GRANITE CURB DETAIL

CONSTRUCTION DETAILS

NO SCALE

C-11

STATE OF CALIFORNIA - DEPARTMENT OF TRANSPORTATION
Caltrans® LANDSCAPE ARCHITECTURE

SENIOR LANDSCAPE ARCHITECT: BRAD COLE
CALCULATED-DESIGNED BY: RICHARD COLE
CHECKED BY: DAVID MARTIN
REVISED BY
DATE REVISED

LAST REVISION 12-02-14
DATE PLOTTED => 09-JAN-2015
TIME PLOTTED => 12:46

Dist	COUNTY	ROUTE	POST MILES TOTAL PROJECT	SHEET No.	TOTAL SHEETS
06	Fre	168	R36.0	18	70

LICENSED LANDSCAPE ARCHITECT

1-12-15
PLANS APPROVAL DATE

LICENSED LANDSCAPE ARCHITECT
RICHARD B. COLE No. 3125
Revision Date 06/30/16
Renewal Date 08/01/13
Date
STATE OF CALIFORNIA

THE STATE OF CALIFORNIA OR ITS OFFICERS OR AGENTS SHALL NOT BE RESPONSIBLE FOR THE ACCURACY OR COMPLETENESS OF SCANNED COPIES OF THIS PLAN SHEET.

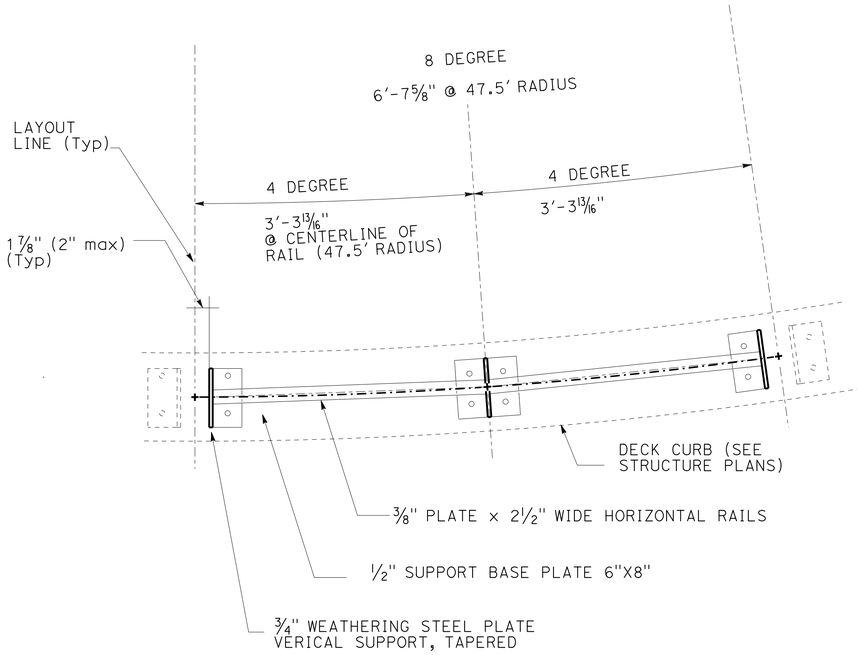

PLAN

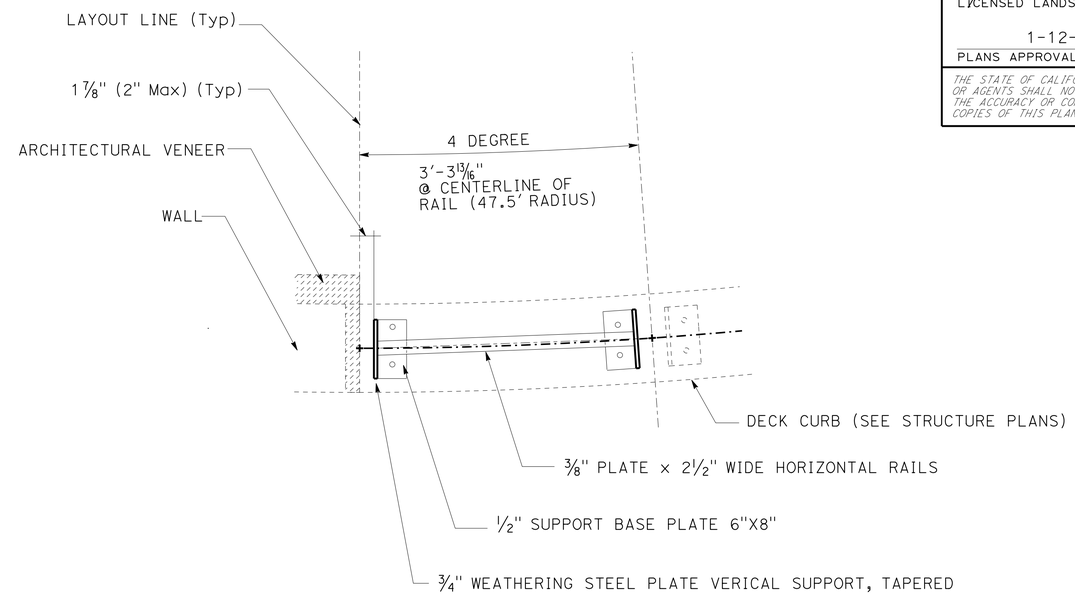

PLAN

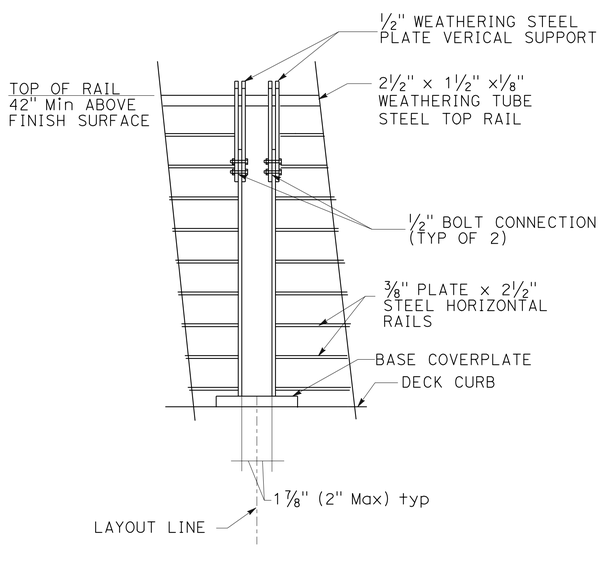

FRONT ELEVATION

RAILING (A)

(SEE STRUCTURES PLANS FOR RAILING)

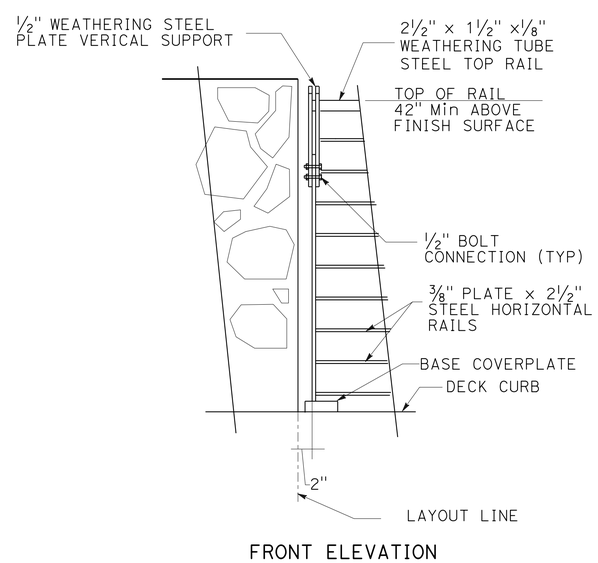

FRONT ELEVATION

RAILING (B)

(SEE STRUCTURES PLANS FOR RAILING)

CONSTRUCTION DETAILS

NO SCALE

C-12

STATE OF CALIFORNIA - DEPARTMENT OF TRANSPORTATION
Caltrans® LANDSCAPE ARCHITECTURE

SENIOR LANDSCAPE ARCHITECT: BRAD COLE

CALCULATED-DESIGNED BY: RICHARD COLE
CHECKED BY: DAVID MARTIN

REVISED BY | DATE REVISED

LAST REVISION 01-06-15
DATE PLOTTED => 09-JAN-2015
TIME PLOTTED => 12:46

Dist	COUNTY	ROUTE	POST MILES TOTAL PROJECT	SHEET No.	TOTAL SHEETS
06	Fre	168	R36.0	19	70

LICENSED LANDSCAPE ARCHITECT

1-12-15

PLANS APPROVAL DATE

LICENSED LANDSCAPE ARCHITECT RICHARD B. COLE No. 2522 06/30/16 Renewal Date 08/01/13 Date STATE OF FLORIDA

THE STATE OF CALIFORNIA OR ITS OFFICERS OR AGENTS SHALL NOT BE RESPONSIBLE FOR THE ACCURACY OR COMPLETENESS OF SCANNED COPIES OF THIS PLAN SHEET.

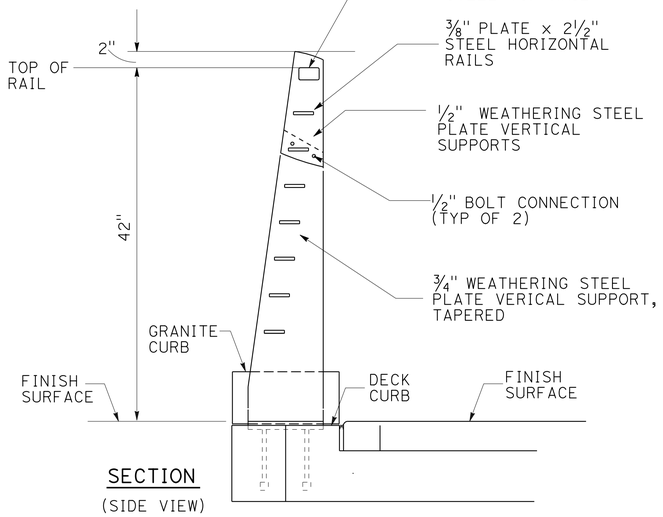

SECTION

(SIDE VIEW)

RAILING

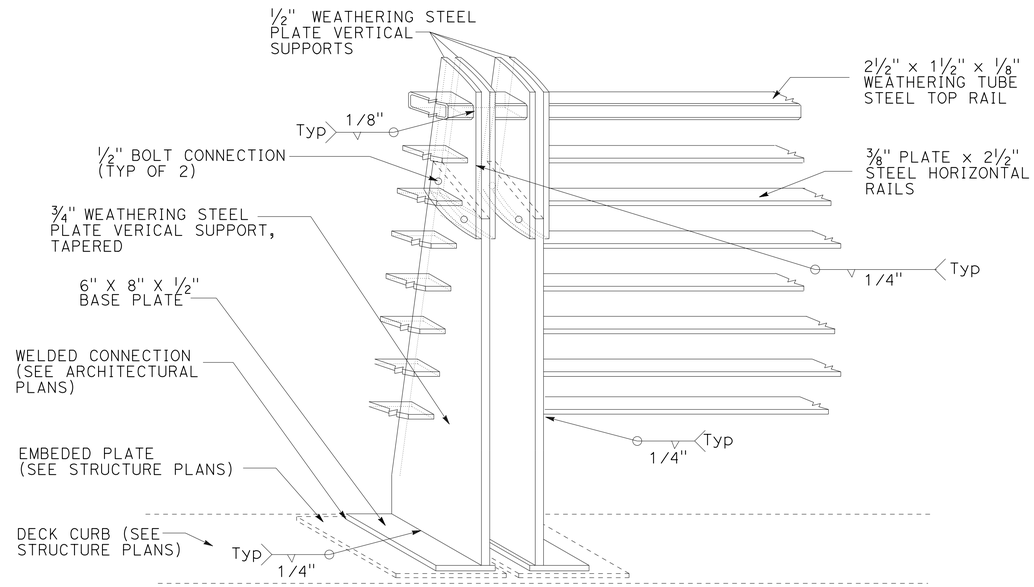

ISOMETRIC

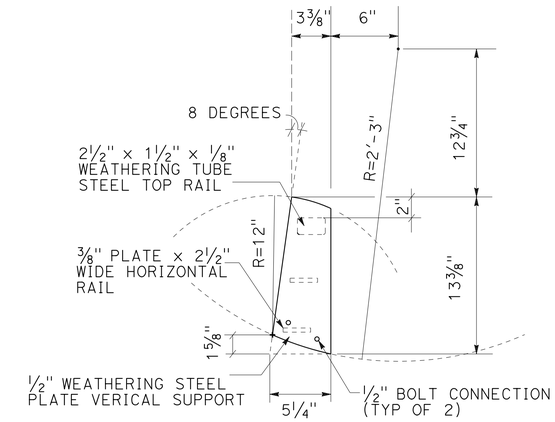

DETAIL SECTION

(VERTICAL - TOP)

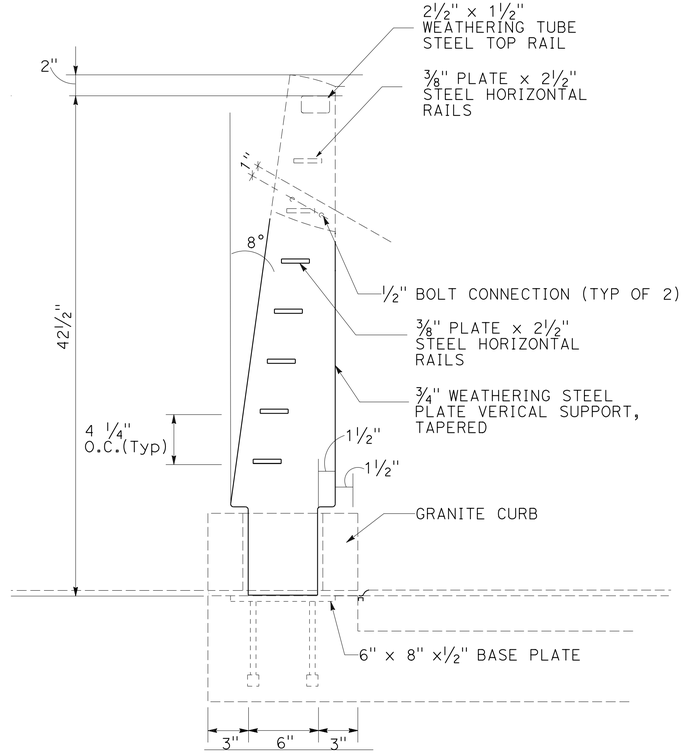

DETAIL SECTION

(VERTICAL - BOTTOM)

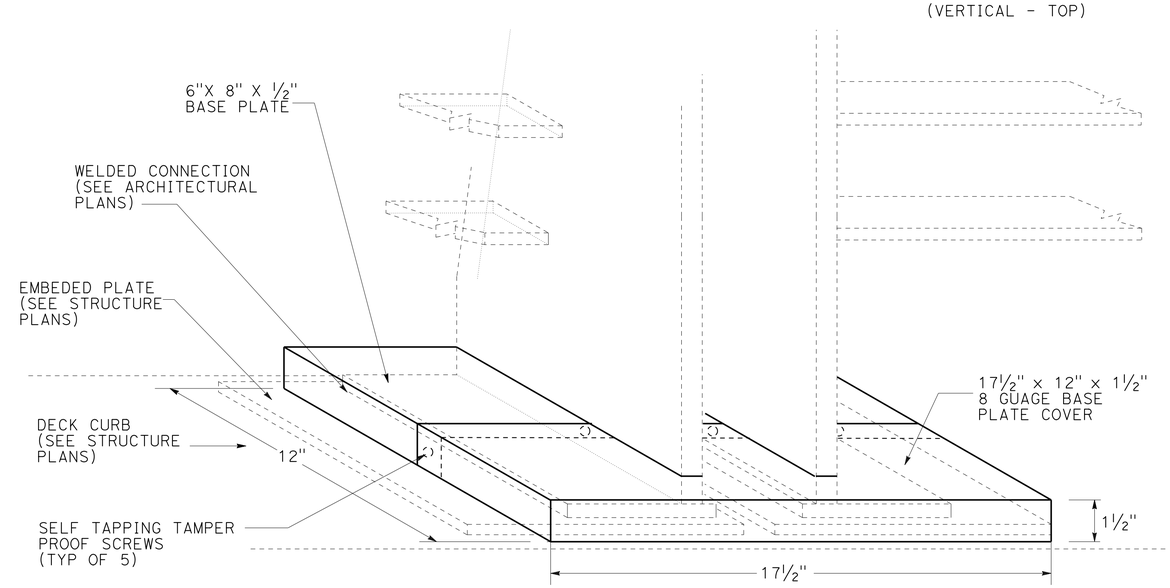

ISOMETRIC

BASE COVERPLATE

CONSTRUCTION DETAILS

NO SCALE

C-13

STATE OF CALIFORNIA - DEPARTMENT OF TRANSPORTATION

Caltrans® LANDSCAPE ARCHITECTURE

SENIOR LANDSCAPE ARCHITECT: BRAD COLE

CALCULATED-DESIGNED BY: RAYMOND SEGURA

CHECKED BY: DAVID MARTIN

REVISED BY

DATE REVISED

LAST REVISION 01-06-15

DATE PLOTTED => 09-JAN-2015

TIME PLOTTED => 12:46

Dist	COUNTY	ROUTE	POST MILES TOTAL PROJECT	SHEET No.	TOTAL SHEETS
06	Fre	168	R36.0	20	70

LICENSED LANDSCAPE ARCHITECT

1-12-15

PLANS APPROVAL DATE

LICENSED LANDSCAPE ARCHITECT RICHARD B. COLE No. 2522 06/30/16 Renewal Date 08/01/13 Date STATE OF CALIFORNIA

THE STATE OF CALIFORNIA OR ITS OFFICERS OR AGENTS SHALL NOT BE RESPONSIBLE FOR THE ACCURACY OR COMPLETENESS OF SCANNED COPIES OF THIS PLAN SHEET.

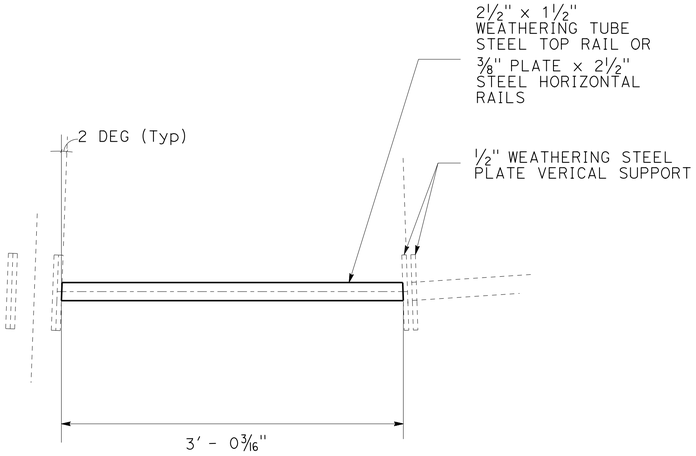

PLAN

HORIZONTAL RAIL (TOP)

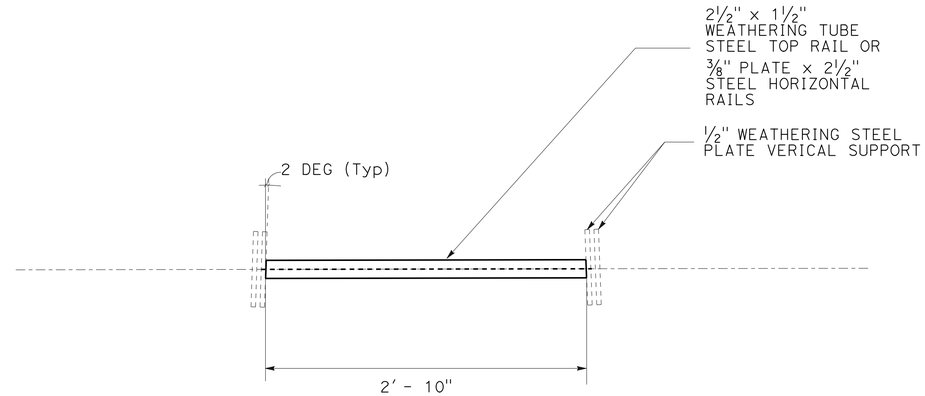

PLAN

HORIZONTAL RAIL (TOP)

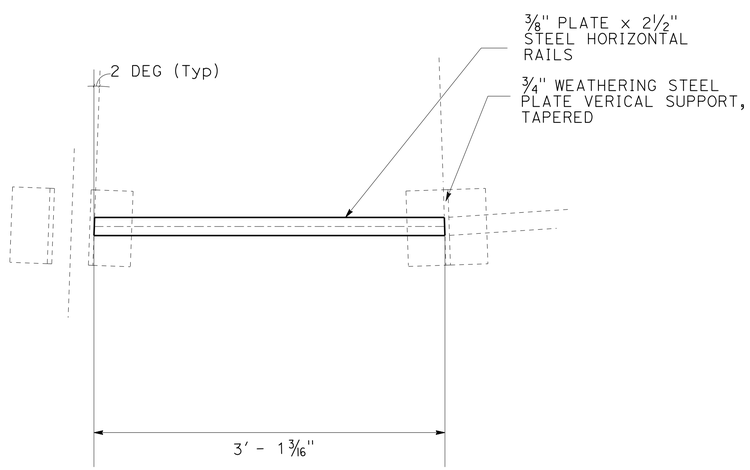

PLAN

HORIZONTAL RAIL (BOTTOM)

RAILING (A)

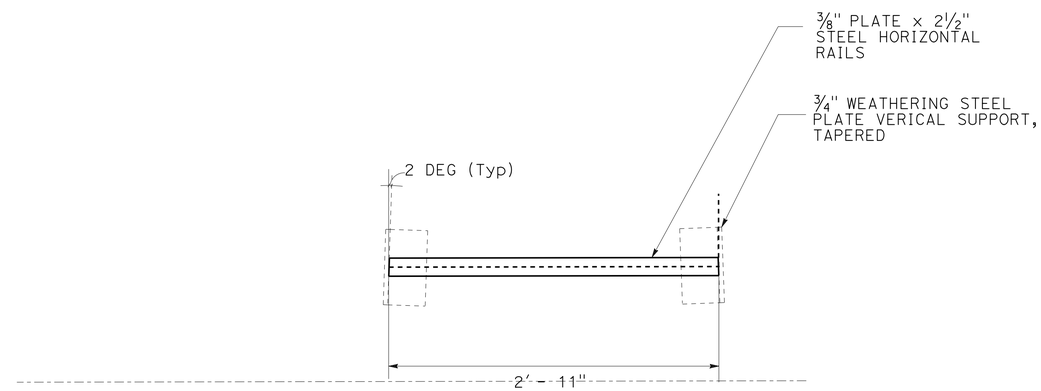

PLAN

HORIZONTAL RAIL (BOTTOM)

RAILING (B)

CONSTRUCTION DETAILS

NO SCALE

C-14

STATE OF CALIFORNIA - DEPARTMENT OF TRANSPORTATION

Caltrans® LANDSCAPE ARCHITECTURE

SENIOR LANDSCAPE ARCHITECT: BRAD COLE

CALCULATED-DESIGNED BY: RAYMOND SEGURA

CHECKED BY: RICHARD COLE

REVISED BY

DATE REVISED

LAST REVISION 01-06-15

DATE PLOTTED => 09-JAN-2015

TIME PLOTTED => 12:46

Dist	COUNTY	ROUTE	POST MILES TOTAL PROJECT	SHEET No.	TOTAL SHEETS
06	Fre	168	R36.0	21	70

LICENSED LANDSCAPE ARCHITECT

1-12-15

PLANS APPROVAL DATE

LICENSED LANDSCAPE ARCHITECT DAVID R. MARTIN #5039 Expiration Date 03/31/15 Renewal Date 07/15/13 Date STATE OF CALIFORNIA

THE STATE OF CALIFORNIA OR ITS OFFICERS OR AGENTS SHALL NOT BE RESPONSIBLE FOR THE ACCURACY OR COMPLETENESS OF SCANNED COPIES OF THIS PLAN SHEET.

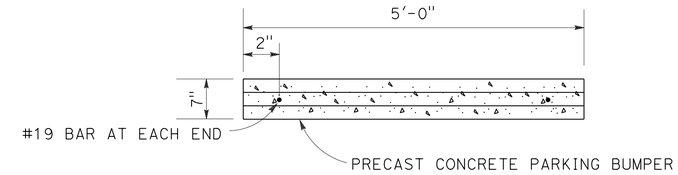

PLAN

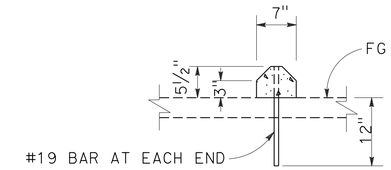

SECTION

PARKING BUMPER (PRECAST CONCRETE)

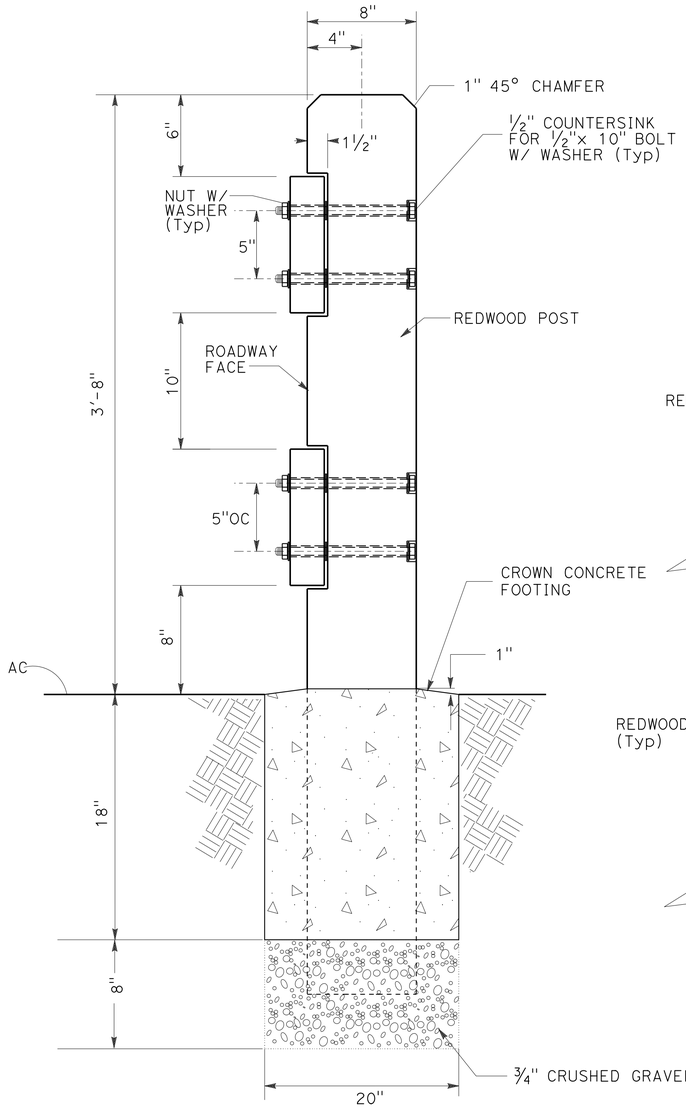

SECTION

TIMBER FENCE

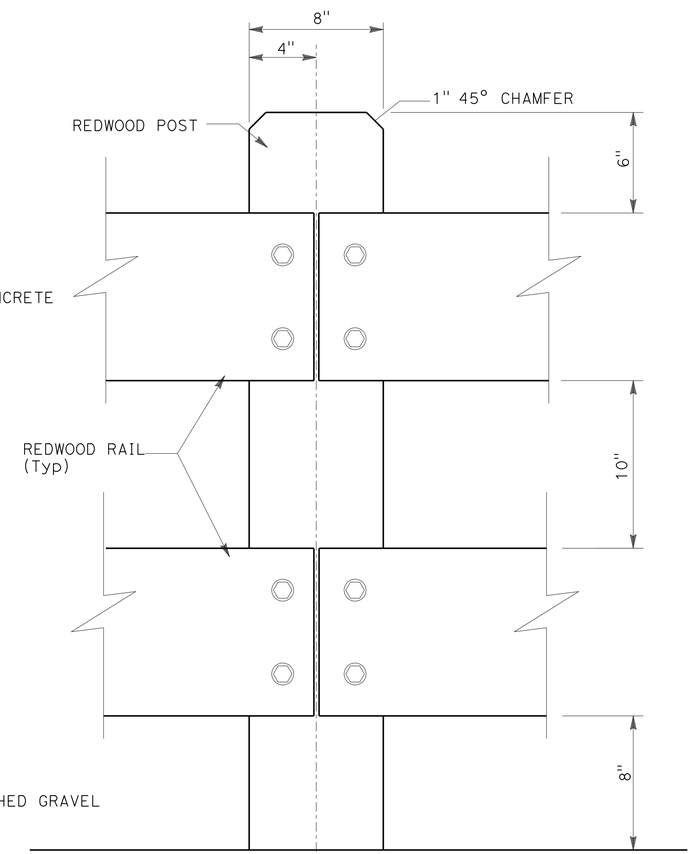

ELEVATION

SNOW POST SLEEVE (Exist)
FOR INFORMATION ONLY

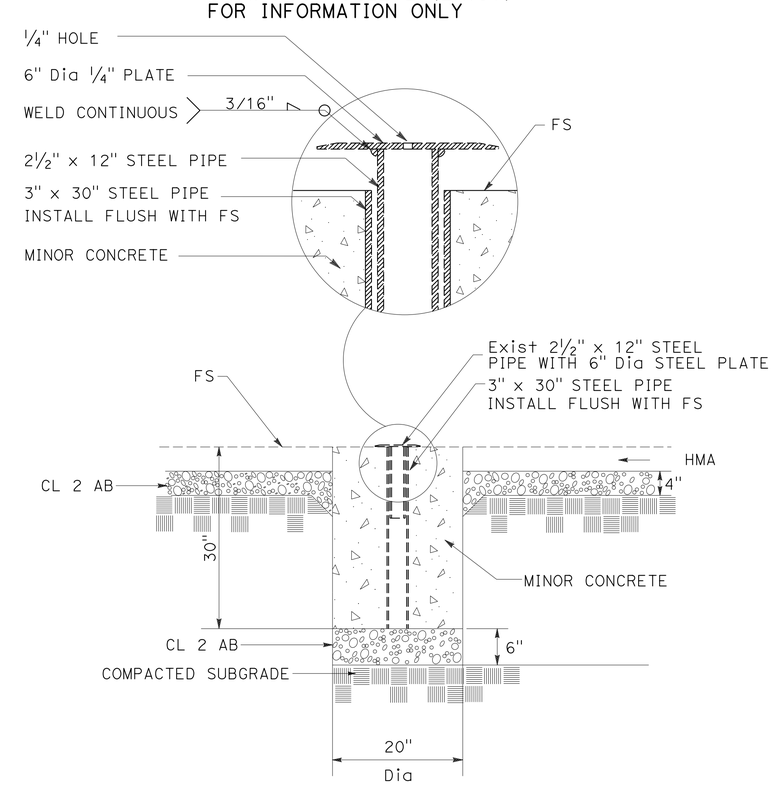

SECTION

RESET SNOW POLE SLEEVE DETAIL

CONSTRUCTION DETAILS

NO SCALE

C-15

STATE OF CALIFORNIA - DEPARTMENT OF TRANSPORTATION
Caltrans® LANDSCAPE ARCHITECTURE

SENIOR LANDSCAPE ARCHITECT: BRAD COLE
CALCULATED-DESIGNED BY: RAYMOND SEGURA
CHECKED BY: DAVID MARTIN
REVISED BY
DATE REVISED

LAST REVISION 12-29-14
DATE PLOTTED => 09-JAN-2015
TIME PLOTTED => 12:46

Dist	COUNTY	ROUTE	POST MILES TOTAL PROJECT	SHEET No.	TOTAL SHEETS
06	Fre	168	R36.0	22	70

LICENSED LANDSCAPE ARCHITECT

1-12-15
PLANS APPROVAL DATE

LICENSED LANDSCAPE ARCHITECT RICHARD B. COLE No. 2522 Renewal Date 06/30/16 Date 08/01/13 STATE OF CALIFORNIA

THE STATE OF CALIFORNIA OR ITS OFFICERS OR AGENTS SHALL NOT BE RESPONSIBLE FOR THE ACCURACY OR COMPLETENESS OF SCANNED COPIES OF THIS PLAN SHEET.

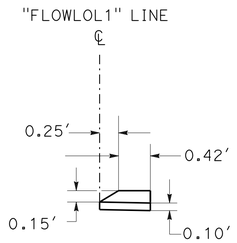

ASPHALT CONCRETE DIKE (TYPE A) MODIFIED

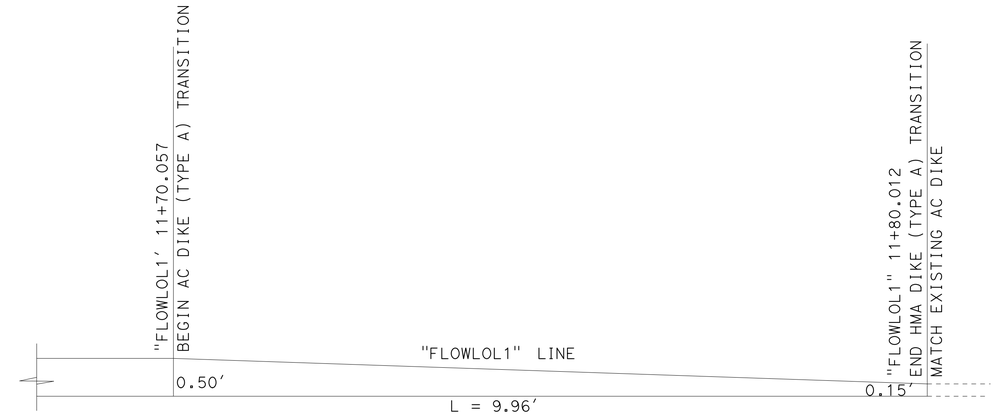

DIKE TRANSITION DETAIL "A"

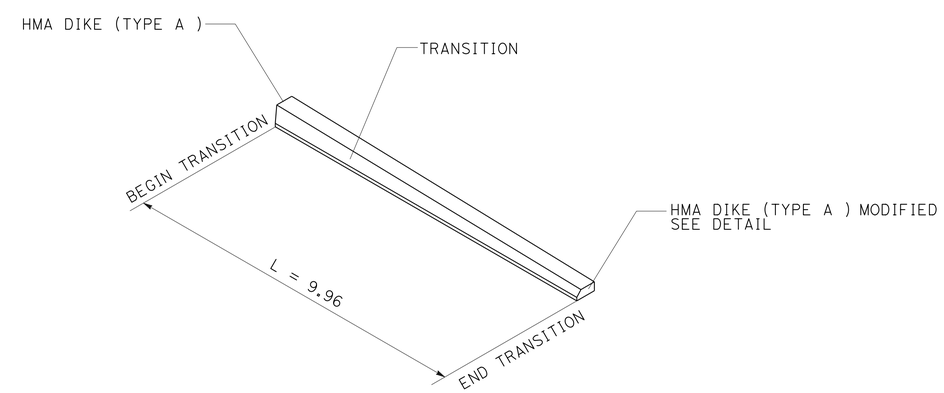

HMA DIKE (TYPE A) TRANSITION

CONSTRUCTION DETAILS

NO SCALE

C-16

REVISED BY | DATE REVISED

RAYMOND SEGURA | RICHARD COLE

CALCULATED-DESIGNED BY | CHECKED BY

SENIOR LANDSCAPE ARCHITECT | BRAD COLE

STATE OF CALIFORNIA - DEPARTMENT OF TRANSPORTATION

Caltrans® LANDSCAPE ARCHITECTURE

LAST REVISION 12-02-14 | DATE PLOTTED => 09-JAN-2015 | TIME PLOTTED => 12:46

Dist	COUNTY	ROUTE	POST MILES TOTAL PROJECT	SHEET No.	TOTAL SHEETS
06	Fre	168	R36.0	23	70

REGISTERED CIVIL ENGINEER 08-05-13 DATE

1-12-15
PLANS APPROVAL DATE

REGISTERED PROFESSIONAL ENGINEER JASON D. CASTILLO No. 61168 Exp. 6-30-15 CIVIL STATE OF CALIFORNIA

THE STATE OF CALIFORNIA OR ITS OFFICERS OR AGENTS SHALL NOT BE RESPONSIBLE FOR THE ACCURACY OR COMPLETENESS OF SCANNED COPIES OF THIS PLAN SHEET.

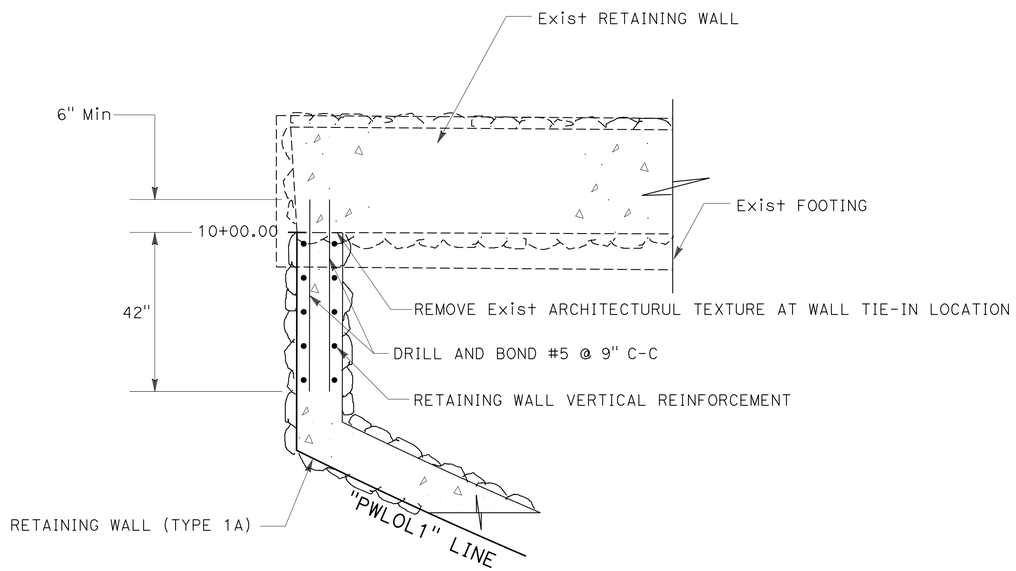

SECTION L-L

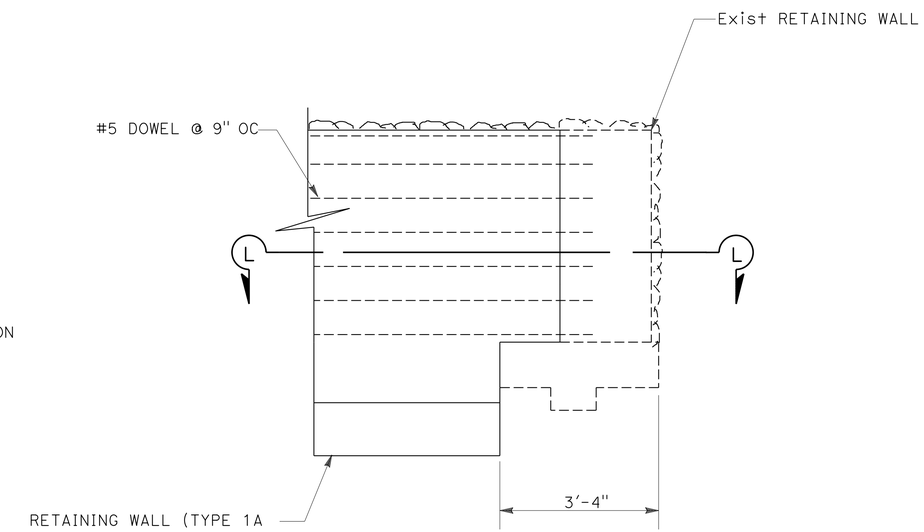

SECTION J-J

RETAINING WALL TIE-IN TO EXISTING WALL

CONSTRUCTION DETAILS

NO SCALE

C-17

STATE OF CALIFORNIA - DEPARTMENT OF TRANSPORTATION
DESIGN
Caltrans

FUNCTIONAL SUPERVISOR: FOAD AL-HAMDANI
CALCULATED-DESIGNED BY: JASON CASTILLO
CHECKED BY
REVISED BY
DATE REVISED

LAST REVISION 01-05-15 | DATE PLOTTED => 09-JAN-2015 | TIME PLOTTED => 12:46

Dist	COUNTY	ROUTE	POST MILES TOTAL PROJECT	SHEET No.	TOTAL SHEETS
06	Fre	168	R36.0	24	70

LICENSED LANDSCAPE ARCHITECT

1-12-15
PLANS APPROVAL DATE

LICENSED LANDSCAPE ARCHITECT
DAVID R. MARTIN #5094
Signature
3/31/15
Renewal Date
08/01/13
Date
STATE OF CALIFORNIA

THE STATE OF CALIFORNIA OR ITS OFFICERS OR AGENTS SHALL NOT BE RESPONSIBLE FOR THE ACCURACY OR COMPLETENESS OF SCANNED COPIES OF THIS PLAN SHEET.

TEMPORARY DRAINAGE INLET PROTECTION

N 2,268,747.438
E 6,453,824.933

NOTE:

FOR TEMP FENCE (TYPE ESA) LOCATION SEE LAYOUT SHEET

LEGEND:

CENTER LINE SWALE (SEE LAYOUT SHEET)

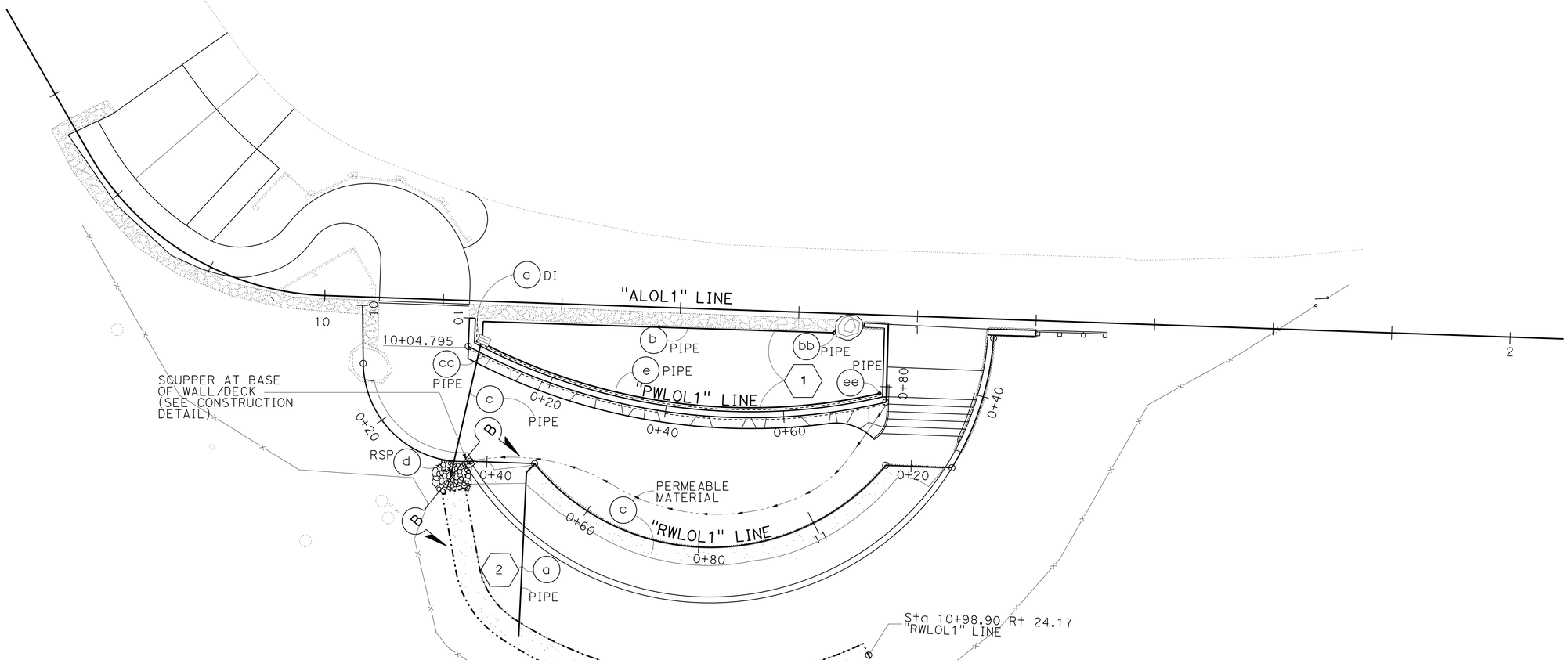

DRAINAGE PLAN

SCALE: 1"=10'

D-1

APPROVED FOR DRAINAGE WORK ONLY

STATE OF CALIFORNIA - DEPARTMENT OF TRANSPORTATION
Caltrans® LANDSCAPE ARCHITECTURE

SENIOR LANDSCAPE ARCHITECT: BRAD COLE
CALCULATED-DESIGNED BY: DAVID MARTIN
CHECKED BY: RAYMOND SEGURA
REVISED BY
DATE REVISED

LAST REVISION 01-05-15
DATE PLOTTED => 09-JAN-2015
TIME PLOTTED => 12:46

Dist	COUNTY	ROUTE	POST MILES TOTAL PROJECT	SHEET No.	TOTAL SHEETS
06	Fre	168	R36.0	25	70

LICENSED LANDSCAPE ARCHITECT

1-12-15
PLANS APPROVAL DATE

LICENSED LANDSCAPE ARCHITECT DAVID R. MARTIN #5093 STATE OF CALIFORNIA
Expiration Date 3/31/15
Renewal Date 07/18/13
Date

THE STATE OF CALIFORNIA OR ITS OFFICERS OR AGENTS SHALL NOT BE RESPONSIBLE FOR THE ACCURACY OR COMPLETENESS OF SCANNED COPIES OF THIS PLAN SHEET.

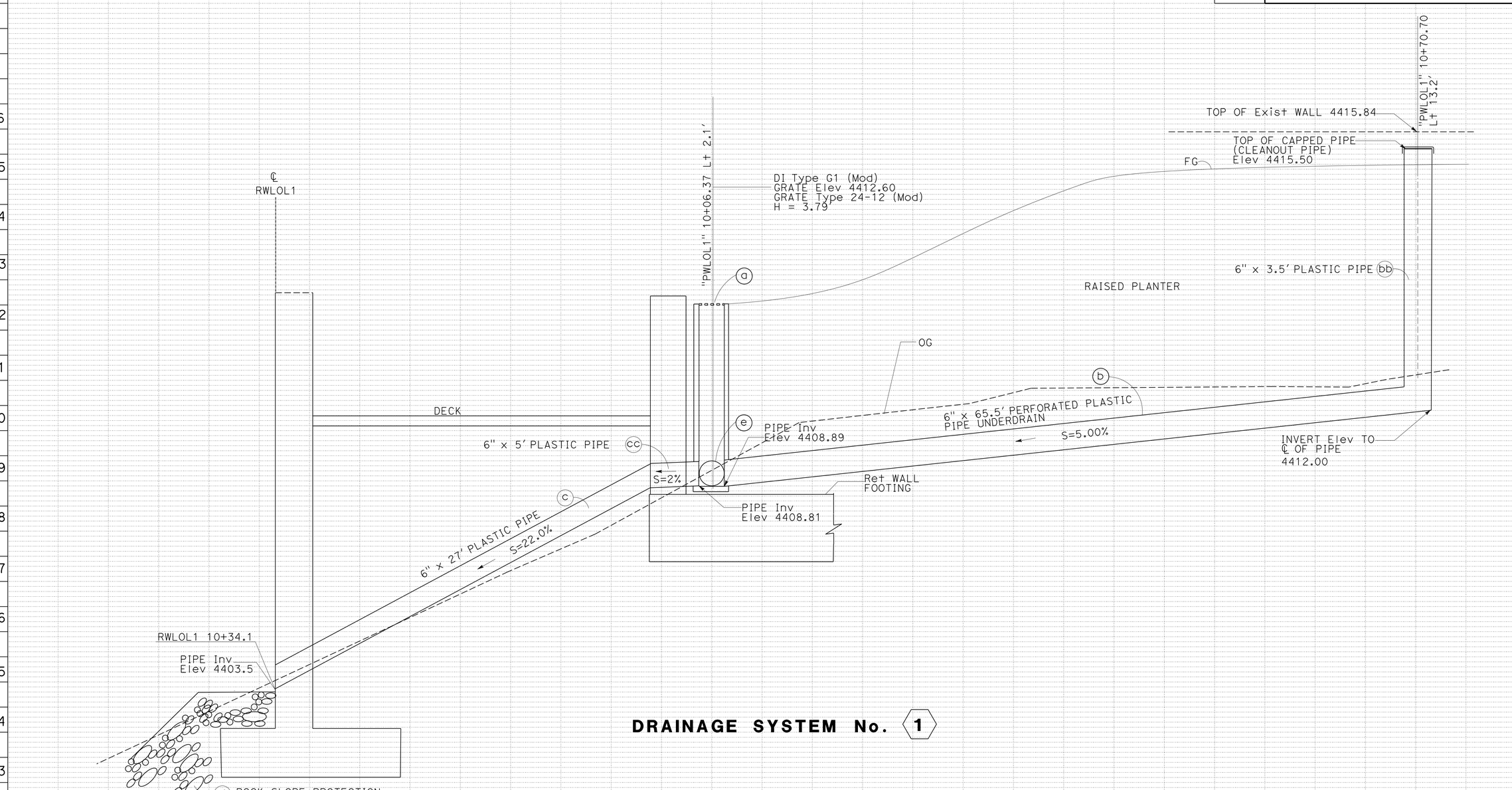

DRAINAGE SYSTEM No. 1

DRAINAGE PROFILES

SCALE: Horz 1"=10'
Vert 1"=1'

DP-1

STATE OF CALIFORNIA - DEPARTMENT OF TRANSPORTATION
Caltrans LANDSCAPE ARCHITECTURE

SENIOR LANDSCAPE ARCHITECT: BRAD COLE
CALCULATED-DESIGNED BY: DAVID MARTIN
CHECKED BY: RICHARD COLE
REVISED BY
DATE REVISED

LAST REVISION 01-06-15
DATE PLOTTED => 09-JAN-2015
TIME PLOTTED => 12:46

Dist	COUNTY	ROUTE	POST MILES TOTAL PROJECT	SHEET No.	TOTAL SHEETS
06	Fre	168	R36.0	26	70

David R Martin

1-12-15
PLANS APPROVAL DATE

LICENSED LANDSCAPE ARCHITECT
DAVID R. MARTIN #5039
David R Martin
Signature
3/31/15
Renewal Date
07/18/13
Date
STATE OF CALIFORNIA

THE STATE OF CALIFORNIA OR ITS OFFICERS OR AGENTS SHALL NOT BE RESPONSIBLE FOR THE ACCURACY OR COMPLETENESS OF SCANNED COPIES OF THIS PLAN SHEET.

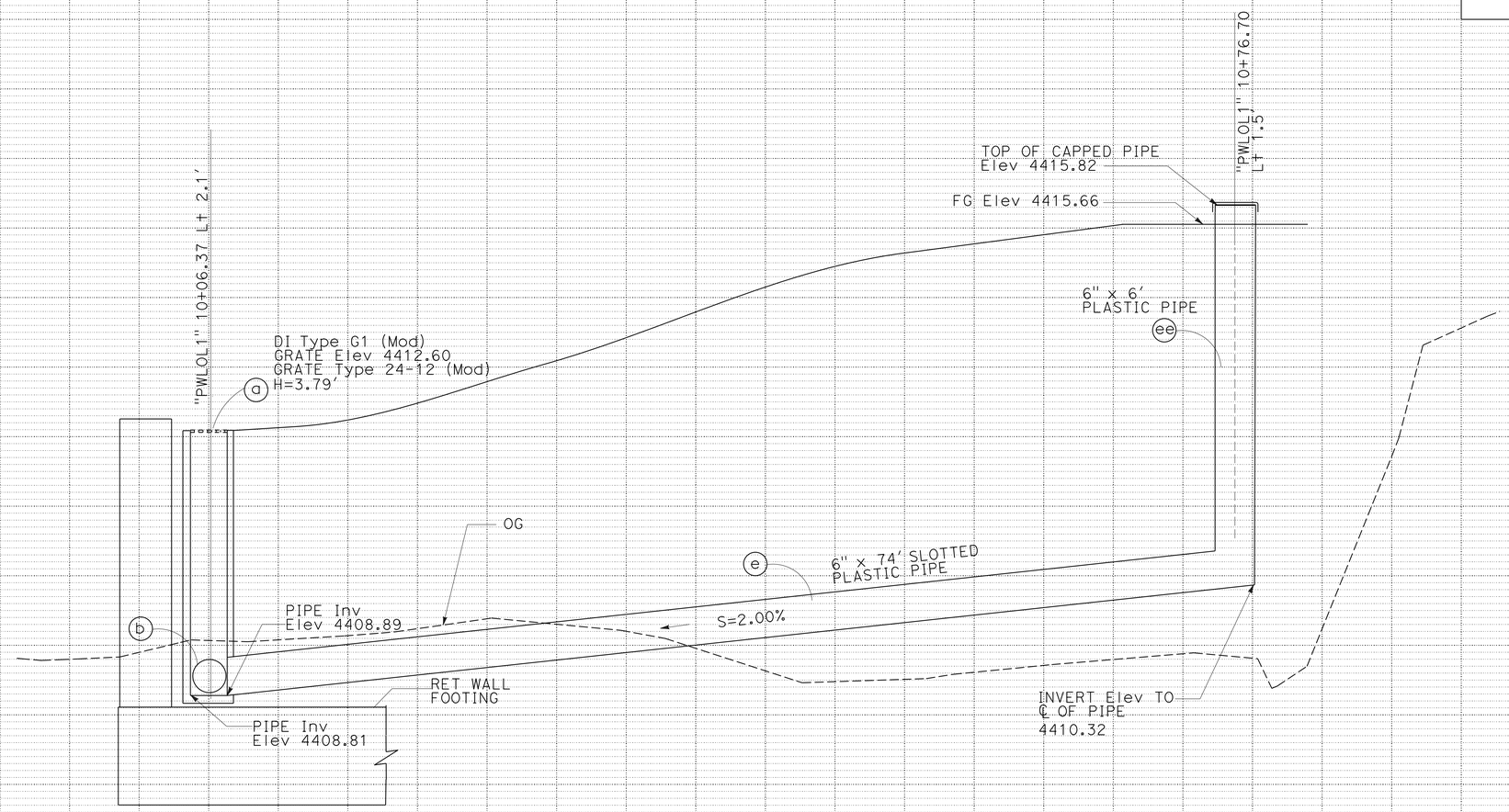

DRAINAGE SYSTEM No. 1

DRAINAGE PROFILES
DP-2

SCALE: Horz 1"=10'
Vert 1"=1'

REVISED BY | DATE REVISED
DAVID MARTIN | RICHARD COLE
CALCULATED-DESIGNED BY | CHECKED BY
SENIOR LANDSCAPE ARCHITECT
BRAD COLE
STATE OF CALIFORNIA - DEPARTMENT OF TRANSPORTATION
Caltrans LANDSCAPE ARCHITECTURE

LAST REVISION 12-29-14 | DATE PLOTTED => 09-JAN-2015 | TIME PLOTTED => 12:46

Dist	COUNTY	ROUTE	POST MILES TOTAL PROJECT	SHEET No.	TOTAL SHEETS
06	Fre	168	R36.0	27	70

LICENSED LANDSCAPE ARCHITECT

1-12-15
PLANS APPROVAL DATE

LICENSED LANDSCAPE ARCHITECT
DAVID R. MARTIN #5039
Expiration Date 03/31/15
Renewal Date 07/18/13
Date
STATE OF CALIFORNIA

THE STATE OF CALIFORNIA OR ITS OFFICERS OR AGENTS SHALL NOT BE RESPONSIBLE FOR THE ACCURACY OR COMPLETENESS OF SCANNED COPIES OF THIS PLAN SHEET.

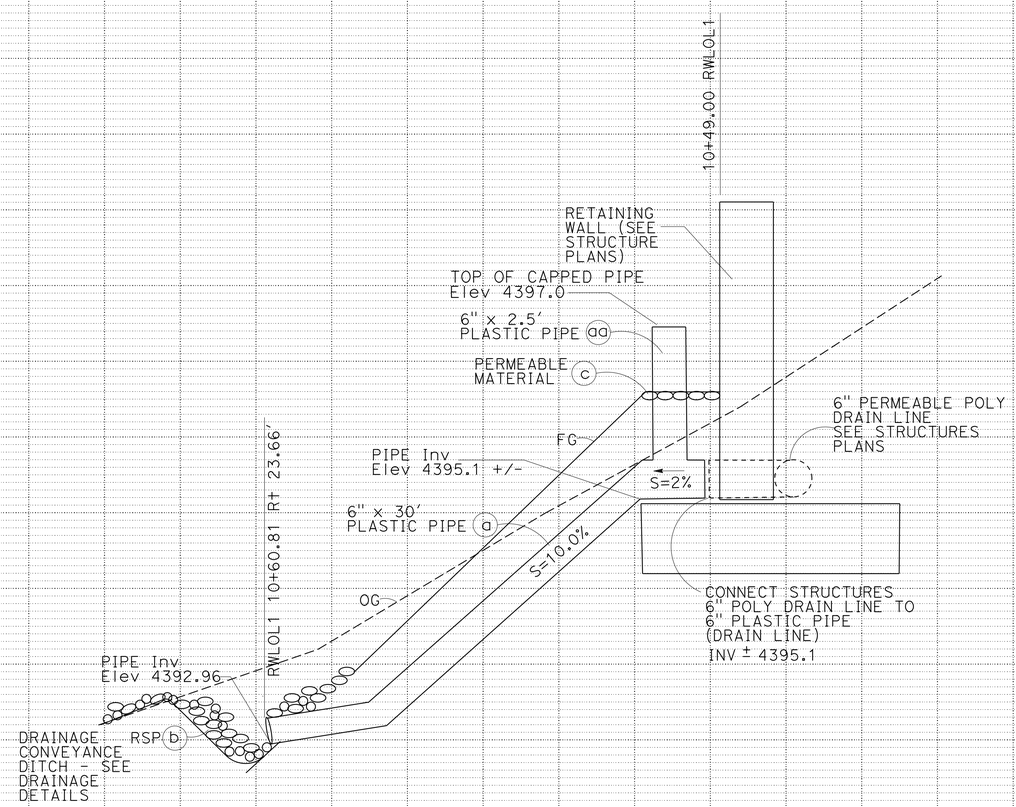

DRAINAGE SYSTEM No. 2

DRAINAGE PROFILES

NO SCALE

DP-3

STATE OF CALIFORNIA - DEPARTMENT OF TRANSPORTATION
Caltrans® LANDSCAPE ARCHITECTURE

SENIOR LANDSCAPE ARCHITECT: BRAD COLE
CALCULATED-DESIGNED BY: DAVID MARTIN
CHECKED BY: RICHARD COLE
REVISED BY
DATE REVISED

LAST REVISION 01-06-15
DATE PLOTTED => 09-JAN-2015
TIME PLOTTED => 12:46

Dist	COUNTY	ROUTE	POST MILES TOTAL PROJECT	SHEET No.	TOTAL SHEETS
06	Fre	168	R36.0	28	70

LICENSED LANDSCAPE ARCHITECT

1-12-15

PLANS APPROVAL DATE

LICENSED LANDSCAPE ARCHITECT DAVID R. MARTIN #5039 Signature 3/31/15 Renewal Date 7/15/13 Date STATE OF CALIFORNIA

THE STATE OF CALIFORNIA OR ITS OFFICERS OR AGENTS SHALL NOT BE RESPONSIBLE FOR THE ACCURACY OR COMPLETENESS OF SCANNED COPIES OF THIS PLAN SHEET.

NOTES:

1) FOR DETAILS NOT SHOWN SEE STANDARD PLAN SHEET RSP D73 AND RSP D77A.

2) VERIFY ALL CONTROLLING FIELD DIMENSIONS PRIOR TO ORDERING OR FABRICATING ANY MATERIAL.

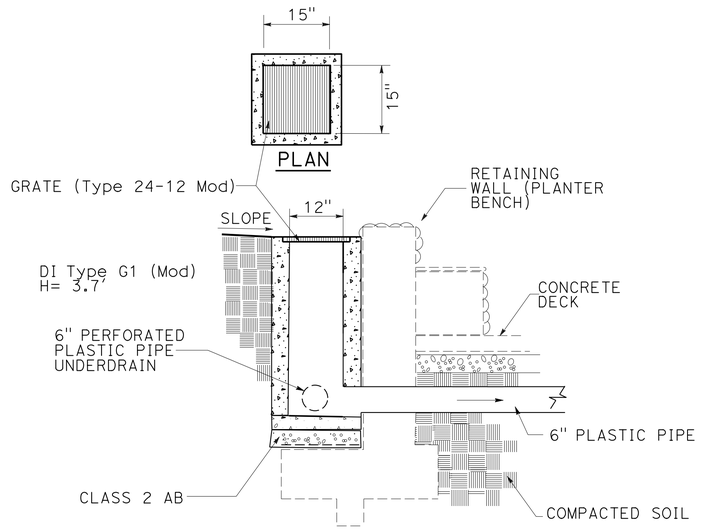

SECTION A-A

DRAIN INLET

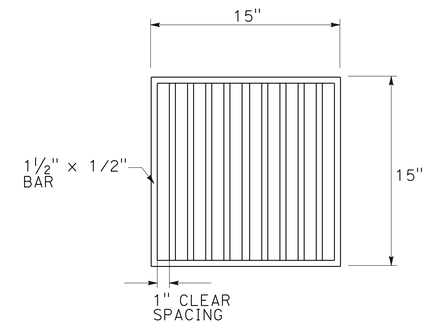

GRATE (Type 24-12x Mod)

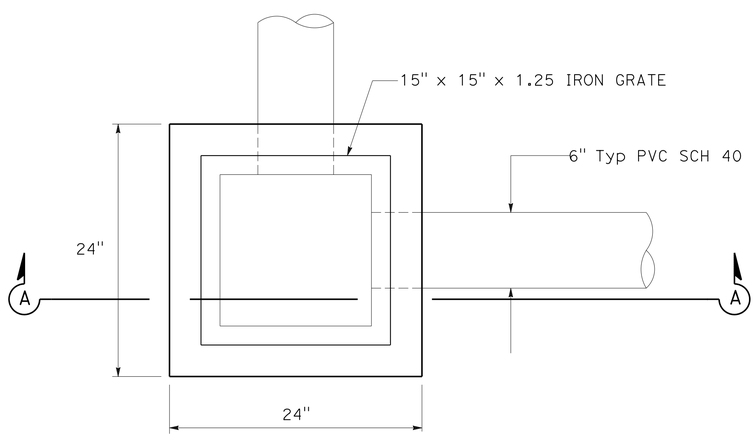

PLAN VIEW

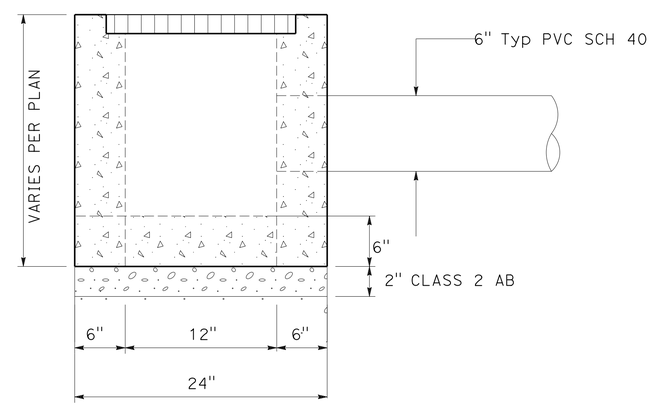

ELEVATION VIEW

DI Type G1 (Mod)

DRAINAGE SYSTEM 1 a

DRAINAGE DETAILS

NO SCALE

DD-1

STATE OF CALIFORNIA - DEPARTMENT OF TRANSPORTATION

Caltrans® LANDSCAPE ARCHITECTURE

SENIOR LANDSCAPE ARCHITECT: BRAD COLE

CALCULATED-DESIGNED BY: RAYMOND SEGURA

CHECKED BY: DAVID MARTIN

REVISED BY

DATE REVISED

LAST REVISION 12-29-14

DATE PLOTTED => 09-JAN-2015

TIME PLOTTED => 12:46

Dist	COUNTY	ROUTE	POST MILES TOTAL PROJECT	SHEET No.	TOTAL SHEETS
06	Fre	168	R36.0	29	70

LICENSED LANDSCAPE ARCHITECT

1-12-15

PLANS APPROVAL DATE

LICENSED LANDSCAPE ARCHITECT DAVID R. MARTIN #5039 Expiration Date 03/31/15 Renewal Date 07/15/13 Date STATE OF CALIFORNIA

THE STATE OF CALIFORNIA OR ITS OFFICERS OR AGENTS SHALL NOT BE RESPONSIBLE FOR THE ACCURACY OR COMPLETENESS OF SCANNED COPIES OF THIS PLAN SHEET.

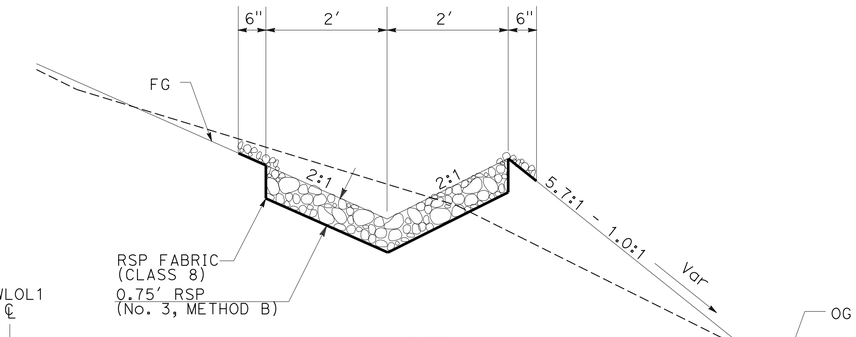

DETAIL A

DRAINAGE CONVEYANCE DITCH

DRAINAGE SYSTEM 2 b

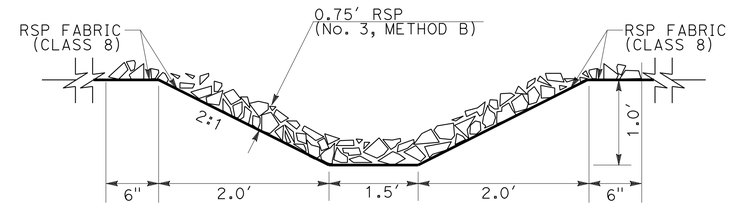

SECTION B-B

DRAINAGE SYSTEM 1 d

ROCK SLOPE PROTECTION

(ROCK ENERGY DISSIPATOR)

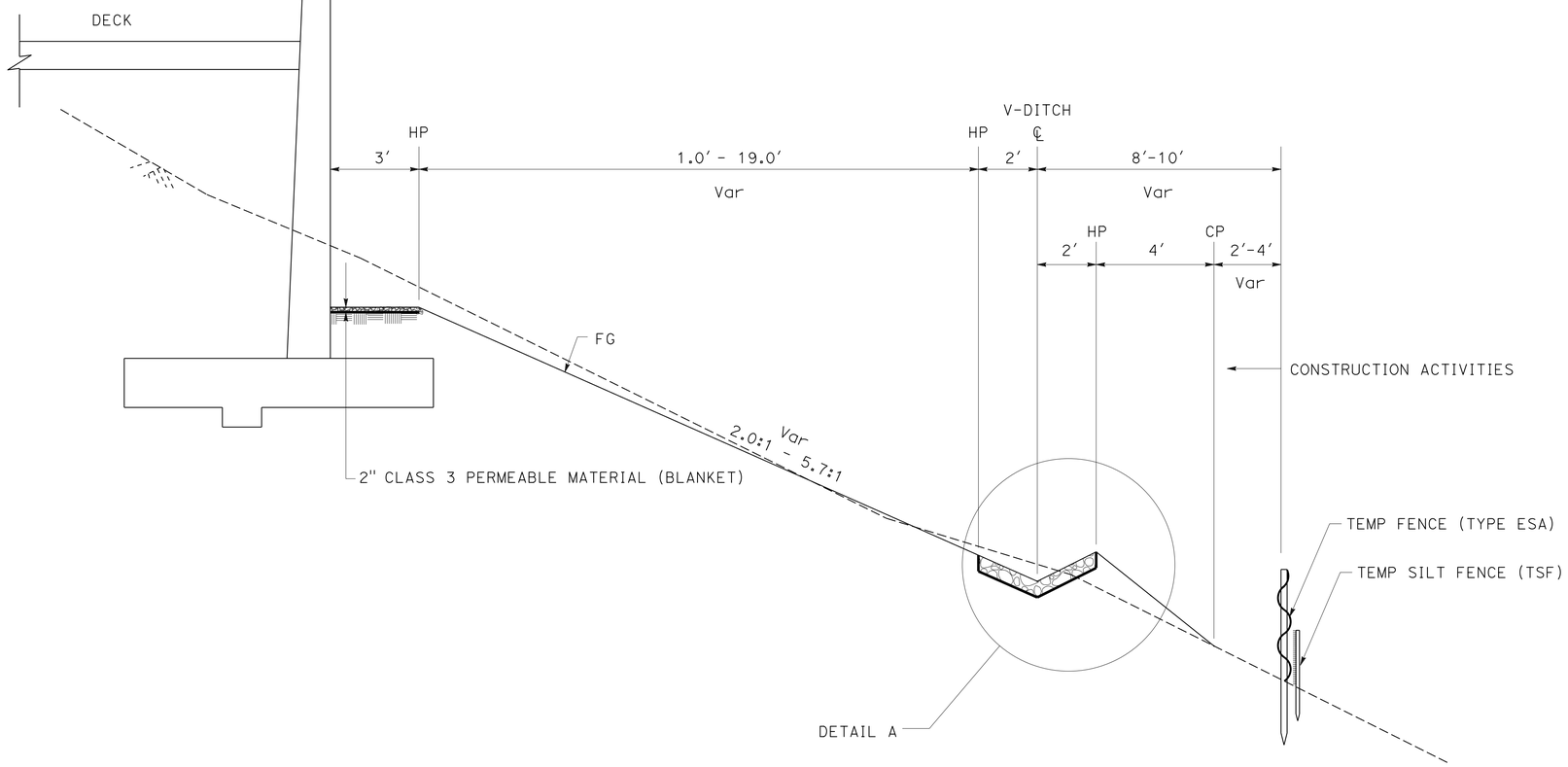

DRAINAGE DITCH TYPICAL

DRAINAGE DETAILS

NO SCALE

DD-2

STATE OF CALIFORNIA - DEPARTMENT OF TRANSPORTATION

Caltrans® LANDSCAPE ARCHITECTURE

SENIOR LANDSCAPE ARCHITECT: BRAD COLE

CALCULATED-DESIGNED BY: RAYMOND SEGURA

CHECKED BY: DAVID MARTIN

REVISED BY

DATE REVISED

LAST REVISION 01-06-15

DATE PLOTTED => 09-JAN-2015

TIME PLOTTED => 12:46

Dist	COUNTY	ROUTE	POST MILES TOTAL PROJECT	SHEET No.	TOTAL SHEETS
06	Fre	168	R36.0	30	70

LICENSED LANDSCAPE ARCHITECT

1-12-15
PLANS APPROVAL DATE

LICENSED LANDSCAPE ARCHITECT
DAVID R. MARTIN #5039
Signature
3/31/15
Renewal Date
7/15/13
Date
STATE OF CALIFORNIA

THE STATE OF CALIFORNIA OR ITS OFFICERS OR AGENTS SHALL NOT BE RESPONSIBLE FOR THE ACCURACY OR COMPLETENESS OF SCANNED COPIES OF THIS PLAN SHEET.

DRAINAGE QUANTITIES

DRAINAGE PLAN SHEET No.	DRAINAGE SYSTEM No. ⬡	DRAINAGE UNIT ○	MINOR CONCRETE (MINOR STRUCTURE)	RSP FABRIC (CLASS 8)	MISCELLANEOUS IRON AND STEEL	FRAME & GRATE (N) (TYPE 24-12 MOD)	6" PERFORATED PLASTIC PIPE UNDERDRAIN	6" PLASTIC PIPE	ROCK SLOPE PROTECTION (No. 3, METHOD B)	CLASS 3 PERMEABLE MATERIAL (BLANKET)	DESCRIPTION	STATION	DRAINAGE SYSTEM ITEM ○
			CY	SQYD	LB	EA	LF	LF	CY	CY			
D-1	1	a	0.4		66	1					TYPE GI Mod DI	10+06.00 2' Lt "PWLOL1"	a
		b					65.5				6" SPP		b
		bb						3.5			6" PP		bb
		c						27			6" PP		c
		cc						5			6" PP		cc
		d		5.4					1.4		7' x 7' x 9" RSP	10+34.1 Rt 2.80' "RWLOL1"	d
		e		62			74				SEE C-8 SEC. B-B, 6" SPP		e
		ee						6			6" PP		ee
	2	a						30			6" PP		a
		aa						2.5			6" PP		aa
		b		67					14.3		86' x 6' x 9" RSP	10+34.86 Rt 5.1' TO 10+98.9 Rt 24.17 "RWLOL1"	b
		c								1.6	88' x 3' x 2" Perm Mtl	10+37.2 TO 10+25.0 "RWLOL1"	c
	TOTAL		*0.4	134.4	66		139.5	74	15.7	1.6			

* QUANTITY INCLUDED IN Misc CONSTRUCTION TABLE SEE Q-1 SHEET

STATE OF CALIFORNIA - DEPARTMENT OF TRANSPORTATION
Caltrans® LANDSCAPE ARCHITECTURE

SENIOR LANDSCAPE ARCHITECT: BRAD COLE
CALCULATED-DESIGNED BY: DAVID MARTIN
CHECKED BY: RICHARD COLE
REVISED BY
DATE REVISED

DRAINAGE QUANTITIES
DQ-1

LAST REVISION 01-06-15
DATE PLOTTED => 09-JAN-2015
TIME PLOTTED => 12:46

Dist	COUNTY	ROUTE	POST MILES TOTAL PROJECT	SHEET No.	TOTAL SHEETS
06	Fre	168	R36.0	31	70

Hassan Taha 01-05-15
REGISTERED CIVIL ENGINEER DATE

1-12-15
PLANS APPROVAL DATE

REGISTERED PROFESSIONAL ENGINEER
HASSAN M. TAHA
No. 60130
Exp. 06/30/16
CIVIL
STATE OF CALIFORNIA

THE STATE OF CALIFORNIA OR ITS OFFICERS OR AGENTS SHALL NOT BE RESPONSIBLE FOR THE ACCURACY OR COMPLETENESS OF SCANNED COPIES OF THIS PLAN SHEET.

NOTES: 1. FOR ADDITIONAL CONSTRUCTION AREA SIGNS SEE SHEET TH-1.
2. EXACT SIGN LOCATIONS TO BE DETERMINED BY THE ENGINEER.

STATIONARY MOUNTED CONSTRUCTION AREA SIGNS

SIGN No.	SIGN CODE	SIGN MESSAGE	PANEL SIZE	No. OF POST AND SIZE	No. OF SIGNS
A	W20-1	ROAD WORK AHEAD	36" x 36"	1 - 6" x 6"	2
B	G20-2	END ROAD WORK	36" x 18"	1 - 4" x 4"	2
C	TYPE II FUNDING SIGN	CONSTRUCTION FUNDING	132" x 84"	2 - TYPE M LAMINATED	2

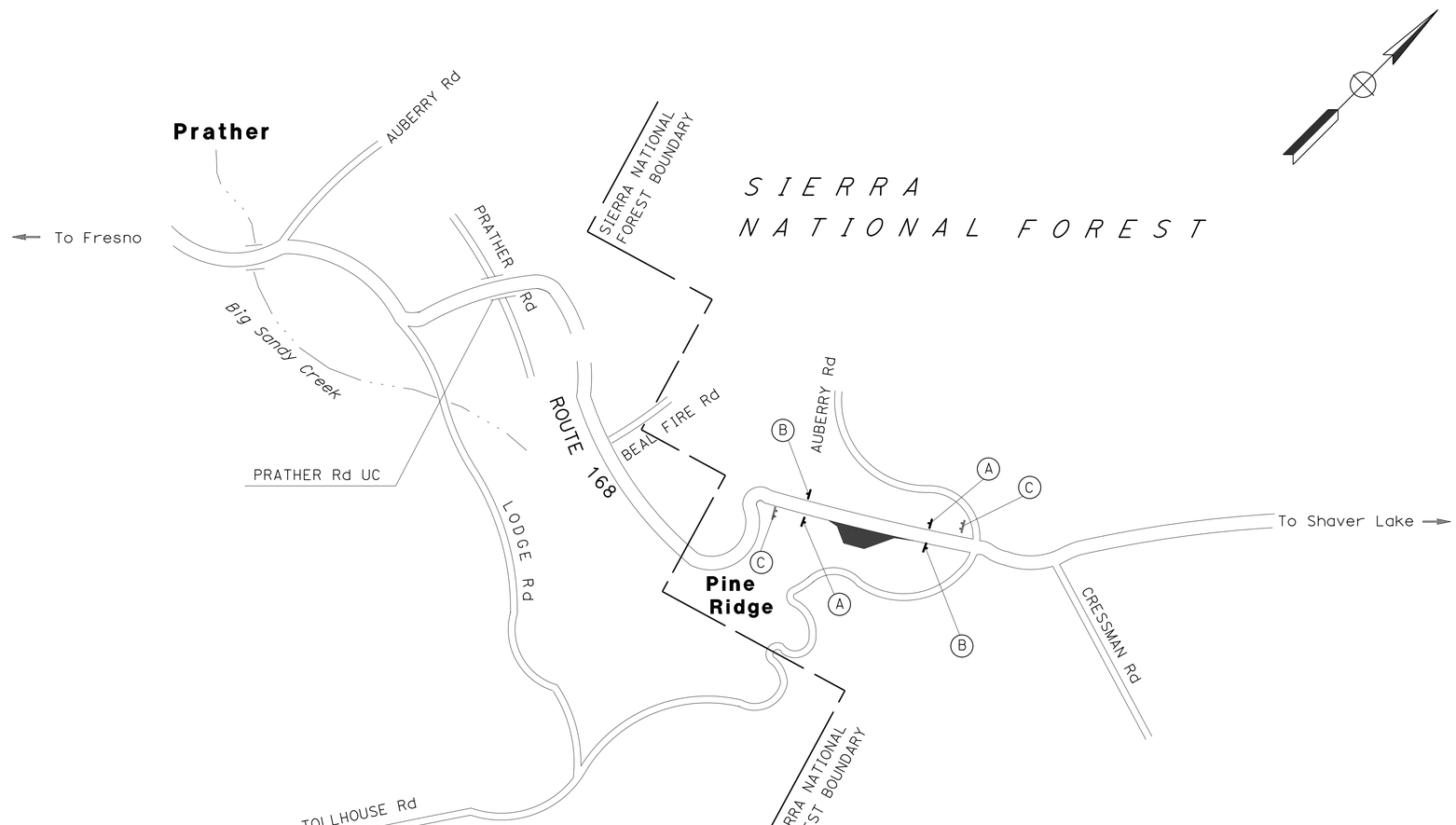

APPROVED FOR CONSTRUCTION AREA SIGN WORK ONLY

CONSTRUCTION AREA SIGNS

CS-1

STATE OF CALIFORNIA - DEPARTMENT OF TRANSPORTATION
Caltrans
TRAFFIC DESIGN

FUNCTIONAL SUPERVISOR: MOHAMMED QATAMI
CALCULATED-DESIGNED BY: VANIK POGOSYAN
CHECKED BY: HASSAN TAHA
REVISED BY
DATE REVISED

LAST REVISION 01-05-15
DATE PLOTTED => 09-JAN-2015
TIME PLOTTED => 12:47

Dist	COUNTY	ROUTE	POST MILES TOTAL PROJECT	SHEET No.	TOTAL SHEETS
06	Fre	168	R36.0	32	70

Hassan Taha 01-05-15
REGISTERED CIVIL ENGINEER DATE

1-12-15
PLANS APPROVAL DATE

REGISTERED PROFESSIONAL ENGINEER HASSAN M. TAHA No. 60130 Exp. 06/30/16 CIVIL STATE OF CALIFORNIA

THE STATE OF CALIFORNIA OR ITS OFFICERS OR AGENTS SHALL NOT BE RESPONSIBLE FOR THE ACCURACY OR COMPLETENESS OF SCANNED COPIES OF THIS PLAN SHEET.

LEGEND:

- CHANNELIZER (SURFACE MOUNTED)
- BARRICADES TYPE III

NOTES:

1. FOR ADDITIONAL CONSTRUCTION AREA SIGNS SEE SHEET CS-1.
2. EXACT SIGN LOCATIONS TO BE DETERMINED BY THE ENGINEER.

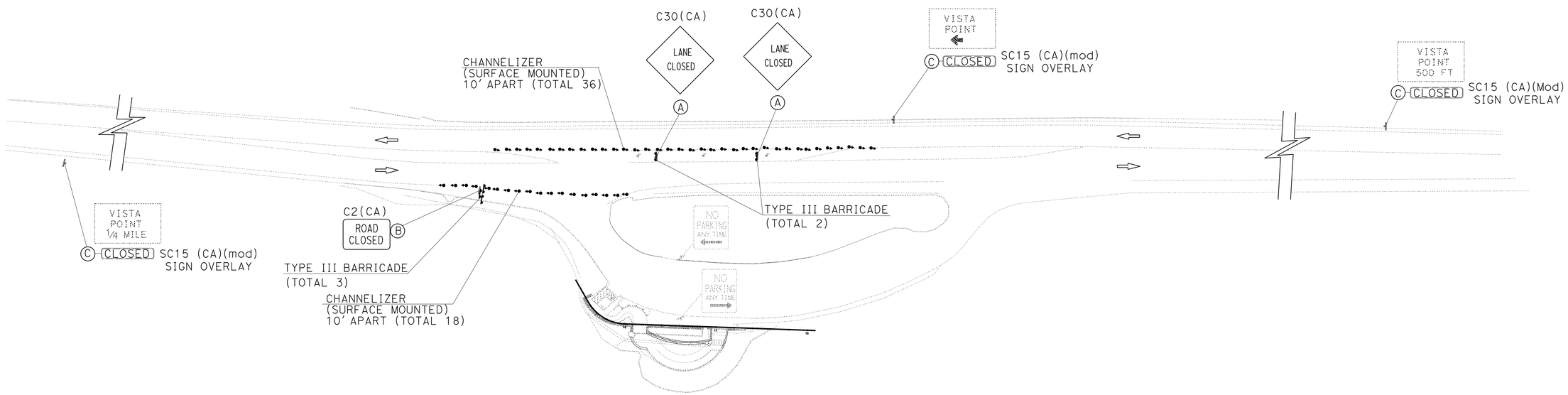

STATIONARY MOUNTED CONSTRUCTION AREA SIGNS (TRAFFIC HANDLING)

SHEET No.	SIGN No.	SIGN CODE	SIGN MESSAGE	POST SIZE	PANEL SIZE	No. of SIGNS	INSTALL SIGN OVERLAY
TH-1	A	C30(CA)	LANE CLOSED	ON BARRICADE	36" x 36"	2	
	B	C2(CA)	ROAD CLOSED	ON BARRICADE	48" x 30"	1	
	C	SC15(CA) (Mod)	VISTA POINT "CLOSED"		42" x 18"		3

CHANNELIZER (SURFACE MOUNTED)

SHEET No.	EA
TH-1	54

TYPE III BARRICADE

SHEET No.	EA
TH-1	5

APPROVED FOR TRAFFIC HANDLING PLAN WORK ONLY

TRAFFIC HANDLING PLAN AND QUANTITIES

NO SCALE

TH-1

STATE OF CALIFORNIA - DEPARTMENT OF TRANSPORTATION
Caltrans® TRAFFIC DESIGN

FUNCTIONAL SUPERVISOR: MOHAMMED QATAMI
CALCULATED-DESIGNED BY: VANIK POGOSYAN
CHECKED BY: HASSAN TAHA
REVISED BY
DATE REVISED

LAST REVISION 01-05-15 | DATE PLOTTED => 09-JAN-2015 | TIME PLOTTED => 12:47

Dist	COUNTY	ROUTE	POST MILES TOTAL PROJECT	SHEET No.	TOTAL SHEETS
06	Fre	168	R36.0	33	70

Hassan Taha 01-05-15
REGISTERED CIVIL ENGINEER DATE

1-12-15
PLANS APPROVAL DATE

REGISTERED PROFESSIONAL ENGINEER
HASSAN M. TAHA
No. 60130
Exp. 06/30/16
CIVIL
STATE OF CALIFORNIA

THE STATE OF CALIFORNIA OR ITS OFFICERS OR AGENTS SHALL NOT BE RESPONSIBLE FOR THE ACCURACY OR COMPLETENESS OF SCANNED COPIES OF THIS PLAN SHEET.

LEGEND:

- DISABLED PERSONS PARKING PAINTED PAVEMENT MARKING
- ● RELOCATE ROADSIDE SIGN

NOTE:

FOR DETAIL SEE REVISED STANDARD PLAN A90A.

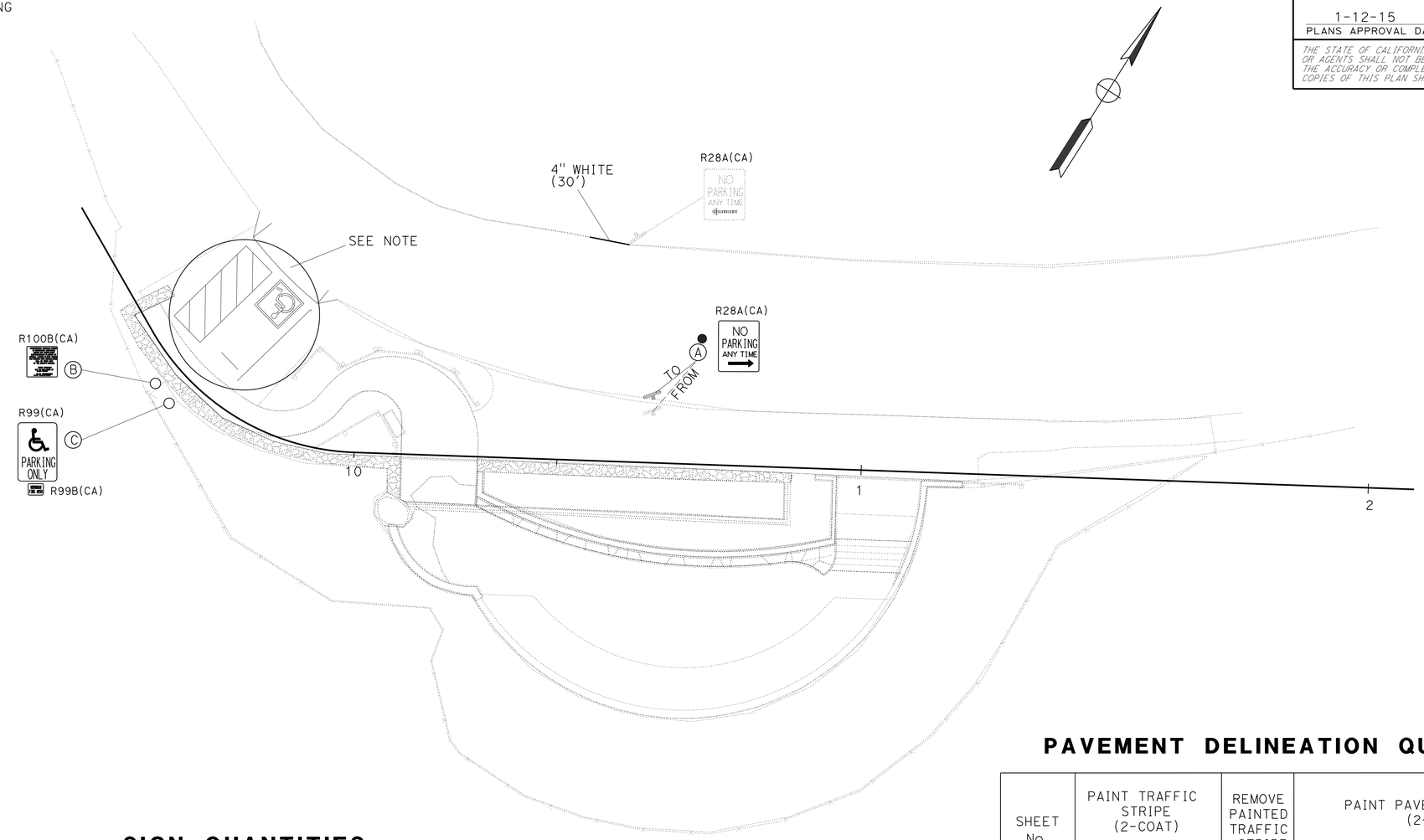

SIGN QUANTITIES

SHEET No.	SIGN No.	SIGN CODE	SIGN MESSAGE	No. OF POST AND SIZE	PANEL SIZE	BACKGROUND SHEETING COLOR	BACKGROUND Retroreflectivity ASTM TYPE	LEGEND SHEETING COLOR	LEGEND Retroreflectivity ASTM TYPE	STANDARD GRAFFITI FILM	FURNISH SINGLE SHEET ALUMINUM SIGN (0.063"-UNFRAMED) SQFT	ROADSIDE SIGN-ONE POST EA	RELOCATE ROADSIDE SIGN EA
PD-1	A	R28A(CA)	NO PARKING ANY TIME	1 - 4" x 4"	24" x 24"	WHITE	III	BLACK		X	4.00	1	1
	B	R100B(CA)	DISABLED TOW-AWAY										
	C	R99(CA)	ACCESSIBLE PARKING ONLY	1 - 4" x 4"	18" x 12"	BLUE	III	WHITE	IV	X	1.50	1	
		R99B(CA)	MINIMUM FINE $250		9" x 12"	BLUE	III	WHITE	IV	X	0.75		
										TOTAL	6.25	2	1

PAVEMENT DELINEATION QUANTITIES

SHEET No.	PAINT TRAFFIC STRIPE (2-COAT) 4" WHITE LF	REMOVE PAINTED TRAFFIC STRIPE LF	PAINT PAVEMENT MARKING (2-COAT) DESCRIPTION	WHITE SQFT	BLUE SQFT
PD-1	30	30	1-NO PARKING	2	
			1-HANDICAP PARKING SYMBOL	9	14
TOTAL	30	30		25	

APPROVED FOR PAVEMENT DELINEATION AND SIGN PLAN WORK ONLY

PAVEMENT DELINEATION AND SIGN PLAN AND QUANTITIES

NO SCALE

PD-1

STATE OF CALIFORNIA - DEPARTMENT OF TRANSPORTATION
Caltrans® TRAFFIC DESIGN

FUNCTIONAL SUPERVISOR: MOHAMMED QATAMI
CALCULATED-DESIGNED BY: VANIK POGOSYAN
CHECKED BY: HASSAN TAHA
REVISED BY
DATE REVISED

LAST REVISION 01-05-15
DATE PLOTTED => 09-JAN-2015
TIME PLOTTED => 12:47

Dist	COUNTY	ROUTE	POST MILES TOTAL PROJECT	SHEET No.	TOTAL SHEETS
06	Fre	168	R36.0	34	70

LICENSED LANDSCAPE ARCHITECT

1-12-15
PLANS APPROVAL DATE

LICENSED LANDSCAPE ARCHITECT DAVID R. MARTIN #5094 SIGNED 3/31/15 RETIREMENT DATE 07/18/13 DATE STATE OF CALIFORNIA

THE STATE OF CALIFORNIA OR ITS OFFICERS OR AGENTS SHALL NOT BE RESPONSIBLE FOR THE ACCURACY OR COMPLETENESS OF SCANNED COPIES OF THIS PLAN SHEET.

NOTE:

(N) - NOT A SEPARATE PAY ITEM, FOR INFORMATION ONLY

MISCELLANEOUS CONSTRUCTION

LOCATION	DESCRIPTION	MINOR CONCRETE (MISCELLANEOUS CONSTRUCTION)		MINOR CONCRETE (MINOR STRUCTURE)		MINOR CONCRETE (EXPOSED AGGREGATE CONCRETE)		BAR REINF STEEL (EPOXY COATED) (N)	WELDED WIRE MESH (EPOXY COATED) (N)	Misc IRON AND STEEL	CLASS 2 AB	REMOVE CONCRETE		REMARKS
												SIDEWALK	CURB	
		CY	LF (N)	CY	LF (N)	SQFT	(N) CY	LB	LB	LB	CY	SQYD	CY	
Sta 10+04.79 TO 10+77.39 'PWLOL1' LINE	SEAT BENCH			18.6	73			318.6						SEE Sec B-B ON Sht C-8
Sta 10+95.40 TO 11+12.0 'ALOL1' LINE	STAIRS					92	4.0	152.3		261	1.0			SEE Sec E-E ON Sht C-8
Sta 9+47.51 TO 11+11.98 'ALOL1' LINE	SIDEWALK, DECK					3030	33		790		11.6			SEE Sec G-G ON Sht C-9
Sta 10+11.47 TO 10+28.53 'FLOWLOLI' LINE	DRIVEWAY					630	11.7	1,090			7.8			SEE Sec K-K ON Sht C-9
Sta 9+45.4 TO 9+47.51 'ALOL1' LINE	CONCRETE CURB (TYPE A1-6)	0.5	23											
Sta 9+76.90 TO 9+82.72 'ALOL1' LINE		0.2	10											
Sta 10+28.52 TO 10+60.90 'FLOWLOL1' LINE		0.9	39.7											
Sta 10+78.27 TO 10+94.58 'PWLOL1' LINE	STUB WALL			1.5	15.6			38.7						SEE Sec C-C ON Sht C-8
Sta 10+09.00 TO 10+86.00 'ALOL1' LINE	REMOVE CONCRETE											60	9.4	
FROM DRAINAGE QUANTITIES	FRAME AND GRATE									66				
FROM DRAINAGE QUANTITIES	DRAINAGE INLET			0.4										
TOTAL		1.6		20.5		3752				327	20.4*	60	9.4	

* INCLUDED IN ROADWAY QUANTITIES TABLE

ROADWAY QUANTITIES

LOCATION	DESCRIPTION	ROADWAY EXCAVATION	EMBANKMENT (N)	MINOR HMA	CLASS 2 AB	PLACE HMA DIKE (TYPE A)	IMPORTED TOPSOIL	TACK COAT (N)
		CY	CY	TON	CY	LF	CY	TON
9+98.096 TO 11+80.012 "FLOWLOL1"	SIDEWALK, DIKE, GUTTER	86.4	22.9	53.5	40.9	165		0.04
10+95.4 TO 11+12.0 "ALOL1"	STAIRS	0.6	38.4		1.0			
10+10.00 TO 10+37.2 "RWLOL1"	SIDEWALK ENTRY AREA	5.8	5.0		3.4			
10+00.00 TO 10+77.390 "PWLOL1"	PLANTER WALL						51.2	
10+00.00 TO 11+57.50 "RWLOL1"	SLOPE GRADING; V-DITCH	36.4	32.9					
FROM MISCELLANEOUS CONSTRUCTION TABLE	MISCELLANEOUS CONSTRUCTION				20.4			
	TOTAL	129.2		53.5	65.7	165	51.2	

RETAINING WALL QUANTITIES

LOCATION		EMBANKMENT (N)	STRUCTURE BACKFILL (RETAINING WALL)	STRUCTURE EXCAVATION (RETAINING WALL)	LEAN CONCRETE BACKFILL	STRUCTURAL CONCRETE, RETAINING WALL	BAR REINFORCING STEEL (EPOXY COATED)	PERVIOUS BACKFILL MATERIAL (N)	REMARKS
FROM	TO	CY	CY	CY	CY	CY	LB	CY	
10+12.580	10+37.192 "RWLOL1" LINE	52.0	52.0	105.9	51	20.8	4180.9	9.4	RETAINING WALL No. 2 SEE SECTION A-A
10+36.07	10+36.65 "RWLOL1" LINE					0.2	19.8		STUB WALL, SECTION F-F (Rt WALL No. 2)
9+98.497	10+77.390 "PWLOL1" LINE	93.4	93.4	66.0		42.8	5214.3	21	RETAINING WALL No. 1 SEE SECTION B-B
	TOTAL		145.4	171.9	51	63.8	9415		

ARCHITECTURAL FINISH (ROCK FACING)

LOCATION	SQFT	TON (N)	REMARKS
			RETAINING WALL SECTION
10+12.580 TO 10+37.264 "RWLOL1" LINE	95.1	3.8	SECTION A-A
9+98.497 TO 10+77.390 "PWLOL1" LINE	490	19.6	SECTION B-B
11+29.83 TO 11+57.550 "RWLOL1" LINE	164.7	6.6	SECTION D-D
10+91.10 TO 10+94.90 "ALOL1" LINE	58.7	2.4	SECTION C-C
10+36.07 TO 10+36.65 "RWLOL1" LINE	6.5	0.38	SECTION F-F
TOTAL	818		

REMOVAL QUANTITIES

LOCATION	REMOVE TUBULAR HANDRAIL		REMOVE WOOD FENCE		REMOVE PARKING BUMPER	REMOVE CHAIN LINK FENCE
	LF	(N) LB	(N) EA	LF	EA	LF
10+11.172 "ALOL1" LINE 10.29' Rt TO 10+86.23 "ALOL1" LINE 2.81 Rt	83	3122				
10+86.32 "ALOL1" LINE 1.5' Rt TO 11+23.53 "ALOL1" LINE Lt 3.8', Rt 2'			8	48		
EXISTING DRIVEWAY					1	
9+60 "ALOL1" LINE 7.8' Rt TO 11+69.50 "ALOL1" LINE, 5.8' Lt						240
TOTAL	83		48		1	240

RESET SNOW POST SLEEVE

LOCATION	EA	MINOR CONCRETE	CLASS 2 AB
		CY (N)	CY (N)
Sta 9+93.27 to 11+ 34.8 'ALOL1' LINE	6	1.0	0.5

GRANITE CURB

LOCATION	QUANTITY
	LF
11+82.34 TO 12+81.06 "IDLOL1" LINE	100

SUMMARY OF QUANTITIES
Q-1

REVISED BY | DATE REVISED
DAVID MARTIN | RAYMOND SEGURA
CALCULATED-DESIGNED BY | CHECKED BY
SENIOR LANDSCAPE ARCHITECT
BRAD COLE

STATE OF CALIFORNIA - DEPARTMENT OF TRANSPORTATION
Caltrans LANDSCAPE ARCHITECTURE

LAST REVISION 01-06-15 | DATE PLOTTED => 09-JAN-2015 | TIME PLOTTED => 12:47

Dist	COUNTY	ROUTE	POST MILES TOTAL PROJECT	SHEET No.	TOTAL SHEETS
06	Fre	168	R36.0	35	70

LICENSED LANDSCAPE ARCHITECT

1-12-15
PLANS APPROVAL DATE

LICENSED LANDSCAPE ARCHITECT
DAVID R. MARTIN #5039
Signature
3/31/15
Renewal Date
07/17/14
Date
STATE OF CALIFORNIA

THE STATE OF CALIFORNIA OR ITS OFFICERS OR AGENTS SHALL NOT BE RESPONSIBLE FOR THE ACCURACY OR COMPLETENESS OF SCANNED COPIES OF THIS PLAN SHEET.

GRANITE SEAT ROCK

TYPE	LOCATION		TON	SIZE W x L X H
	Sta	OFFSET		Ft (N)
C-1	10+16.81	2.5 Rt "ALOL1" LINE	4.7	3.5' x 3' x 5.3'
C-2	10+61.1	38.4 Rt "ALOL1" LINE	1.4	2.5' x 3.5' x 1.8'
TOTAL			6.1	

TIMBER FENCE

LOCATION	LF	POST (N)	RAIL (N)	CONCRETE (N)	CLASS 2 AB (N)
		EA	LF	CY	CY
9+82.533 TO 10+21.734 "ALOL1" LINE	55	11	110	1.7	0.5
9+91.822 TO 10+08.521 "ALOL1" LINE	18	5	36	0.8	0.2
11+20.058 TO 11+32.056 "ALOL1" LINE	12	4	24	0.6	0.16
TOTAL	85				

CHAIN LINK FENCE

LOCATION	CHAIN LINK FENCE (TYPE CL-6)	6' CHAIN LINK GATE (TYPE CL-6)
	LF	EA
9+60 TO 11+69.5 "ALOL1" LINE	150	1

TEMPORARY FENCE (TYPE ESA)

LOCATION	LF
11+20.058 TO 11+32.056 "ALOL1" LINE	306

TEMPORARY WATER POLLUTION CONTROL

LOCATION		TEMPORARY DRAINAGE INLET PROTECTION	TEMPORARY SILT FENCE
N	E	EA	LF
2268747.438	6453824.933	1	
11+20.058 TO 11+32.056 "ALOL1" LINE			306
TOTAL		1	306

RELOCATE TRASH RECEPTACLE

LOCATION	EA
11+21.00 TO 11+31.00 "ALOL1" LINE	2

RELOCATE BENCH

LOCATION	EA
10+32.00 TO 11+26.00 "ALOL1" LINE	1
10+52.00 TO 11+54.50 "ALOL1" LINE	1
10+76.00 TO 11+63.00 "ALOL1" LINE	1
TOTAL	3

GRANITE BOULDER

LOCATION		GRANITE BOULDER		RESET BOULDER
	SIZE W x L X H	EA	TON (N)	
10+88.70 "ALOL1" LINE	4.2' X 4.8' X 5'	1	8.5	
10+07.00 "ALOL1" LINE Rt 11.0				1
TOTAL		1		1

SUMMARY OF QUANTITIES

Q-2

STATE OF CALIFORNIA - DEPARTMENT OF TRANSPORTATION
Caltrans® LANDSCAPE ARCHITECTURE

SENIOR LANDSCAPE ARCHITECT: BRAD COLE
CALCULATED-DESIGNED BY: DAVID MARTIN
CHECKED BY: RICHARD COLE
REVISED BY
DATE REVISED

LAST REVISION 01-05-15
DATE PLOTTED => 09-JAN-2015
TIME PLOTTED => 12:47

Dist	COUNTY	ROUTE	POST MILES TOTAL PROJECT	SHEET No.	TOTAL SHEETS
06	Fre	168	R36.0	36	70

REGISTERED CIVIL ENGINEER 8-05-13 DATE

1-12-15
PLANS APPROVAL DATE

REGISTERED PROFESSIONAL ENGINEER JASON D. CASTILLO No. 61168 Exp. 6-30-15 CIVIL STATE OF CALIFORNIA

THE STATE OF CALIFORNIA OR ITS OFFICERS OR AGENTS SHALL NOT BE RESPONSIBLE FOR THE ACCURACY OR COMPLETENESS OF SCANNED COPIES OF THIS PLAN SHEET.

NOTE:

FOR ALIGNMENT DATA SEE SHEET C-1.

ABBREVIATIONS:

TW - TOP OF WALL

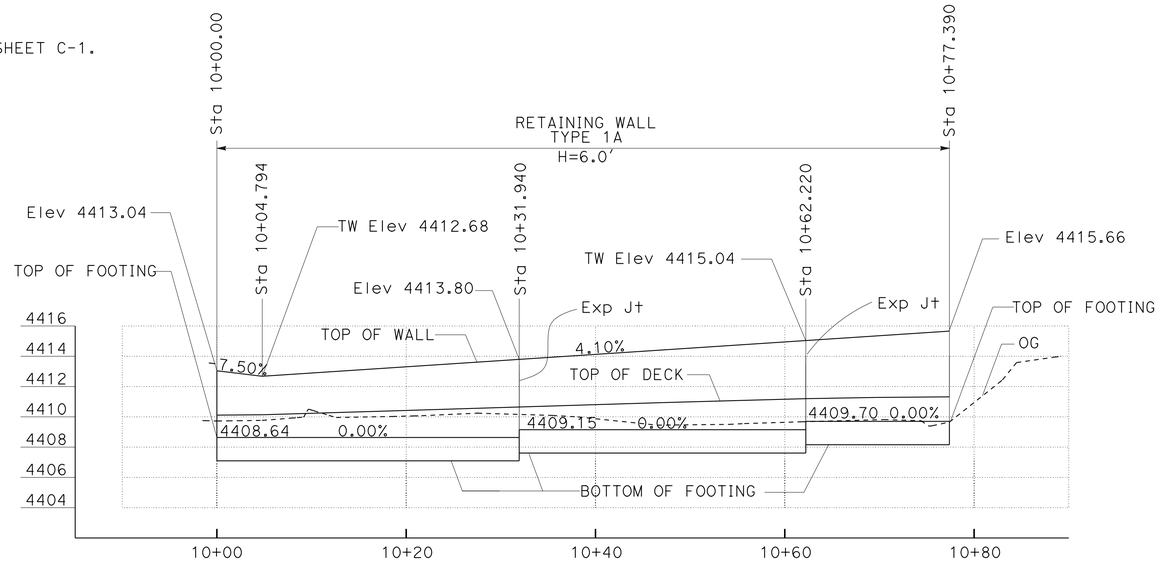

ELEVATION

SCALE: Horiz 1"=20'
Vert 1"=2.5'

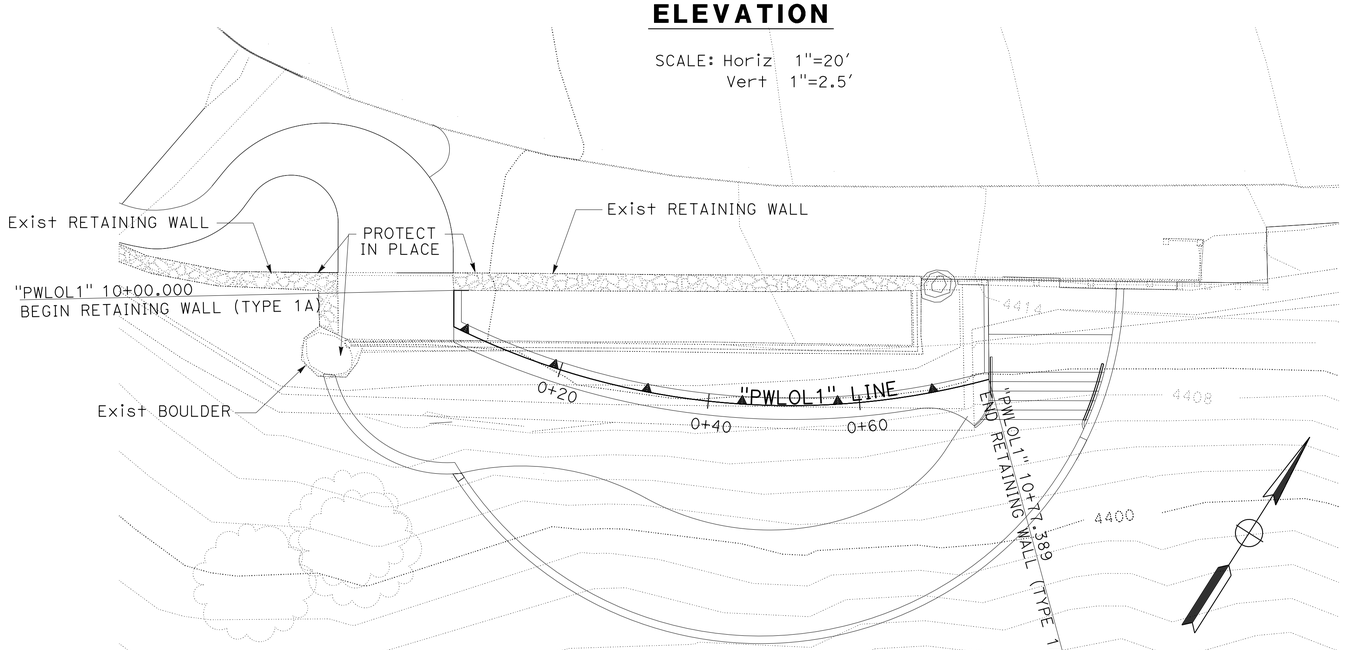

PLAN

SCALE: 1"=20'

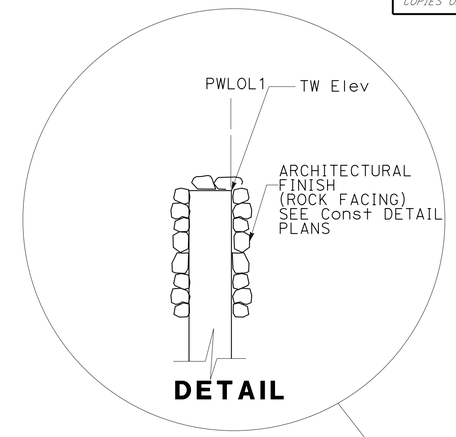

DETAIL

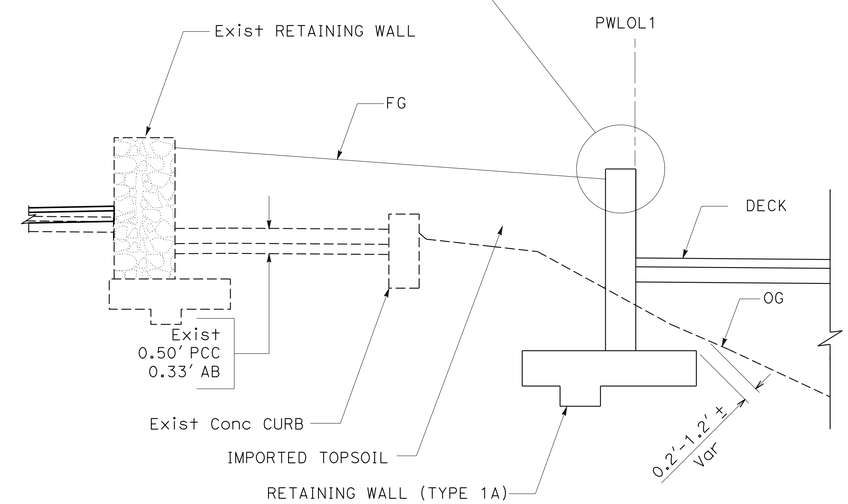

SEE TYPICAL CROSS SECTION
SHEETS FOR MORE INFORMATION

TYPICAL SECTION

NO SCALE

MATERIALS

REINFORCED CONCRETE: fy = 60,000 PSI (EPOXY COATED REBAR)

STRUCTURAL STEEL: (ALLOWABLE STRENGTH DESIGN):	WIDE FLANGE	Fy = 50 KSI
	CHANNELS, ANGLES & MISC. SHAPES	Fy = 36 KSI
	PLATES	Fy = 36 KSI
	HOLLOW STRUCTURAL SECTION (HSS)	Fy = 46 KSI

APPROVED FOR RETAINING WALL WORK ONLY

RETAINING WALL PLAN
(RETAINING WALL No. 1)

SCALE AS SHOWN

R-1

STATE OF CALIFORNIA - DEPARTMENT OF TRANSPORTATION
Caltrans
DESIGN

FUNCTIONAL SUPERVISOR: FOAD AL-HAMDANI
CALCULATED-DESIGNED BY: RAYMOND SEGURA
CHECKED BY: JASON CASTILLO
REVISED BY
DATE REVISED

LAST REVISION 12-30-14
DATE PLOTTED => 09-JAN-2015
TIME PLOTTED => 12:47

Dist	COUNTY	ROUTE	POST MILES TOTAL PROJECT	SHEET No.	TOTAL SHEETS
06	Fre	168	R36.0	37	70

Jason D. Castillo 8-05-13
REGISTERED CIVIL ENGINEER DATE

1-12-15
PLANS APPROVAL DATE

REGISTERED PROFESSIONAL ENGINEER JASON D. CASTILLO No. 61168 Exp. 6-30-15 CIVIL STATE OF CALIFORNIA

THE STATE OF CALIFORNIA OR ITS OFFICERS OR AGENTS SHALL NOT BE RESPONSIBLE FOR THE ACCURACY OR COMPLETENESS OF SCANNED COPIES OF THIS PLAN SHEET.

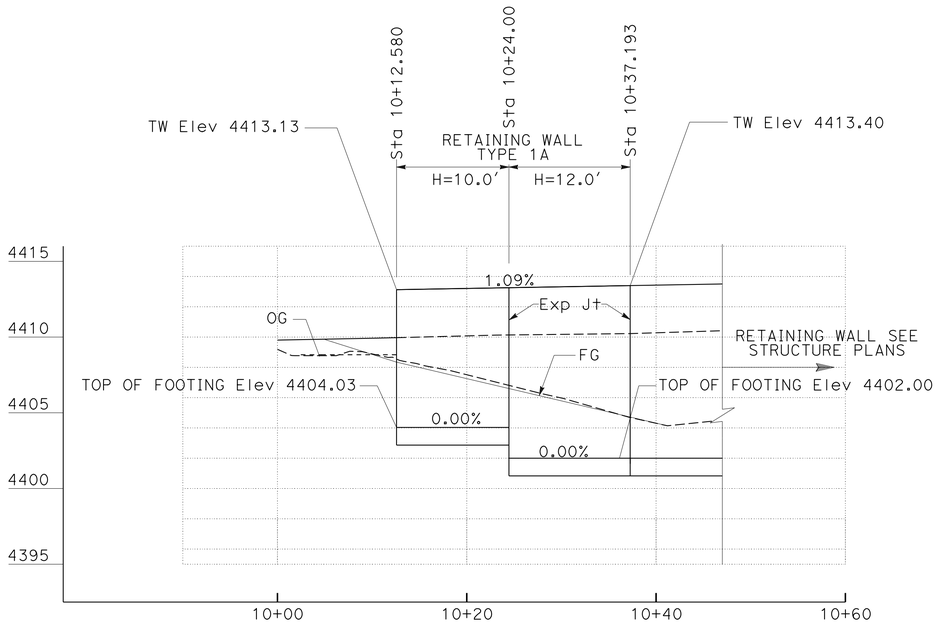

ELEVATION

SCALE: Horiz 1"=20'
Vert 1"=2:5'

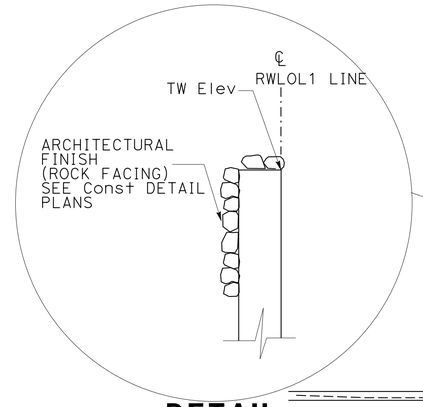

DETAIL

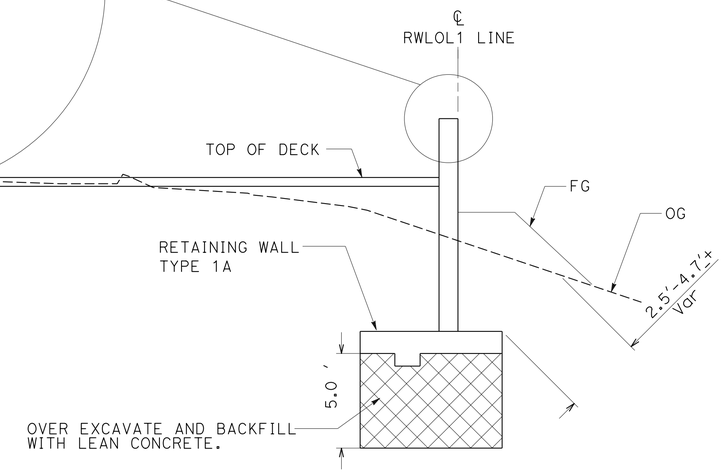

TYPICAL SECTION

NO SCALE

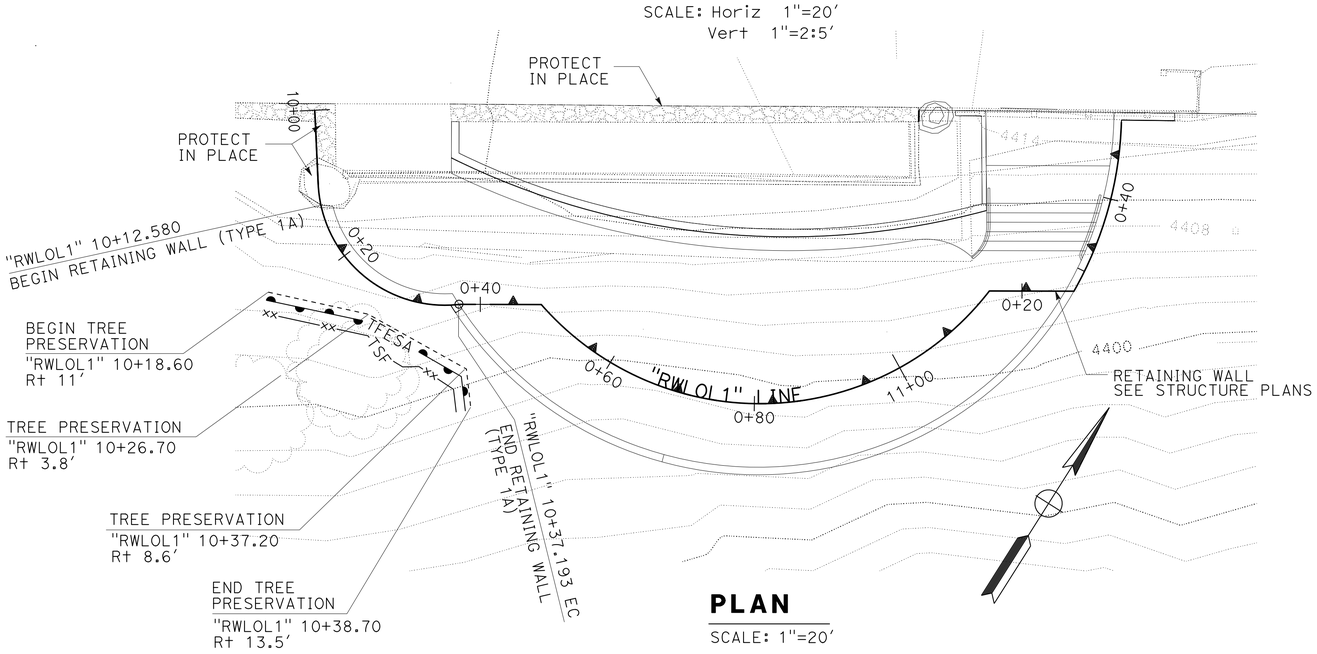

PLAN

SCALE: 1"=20'

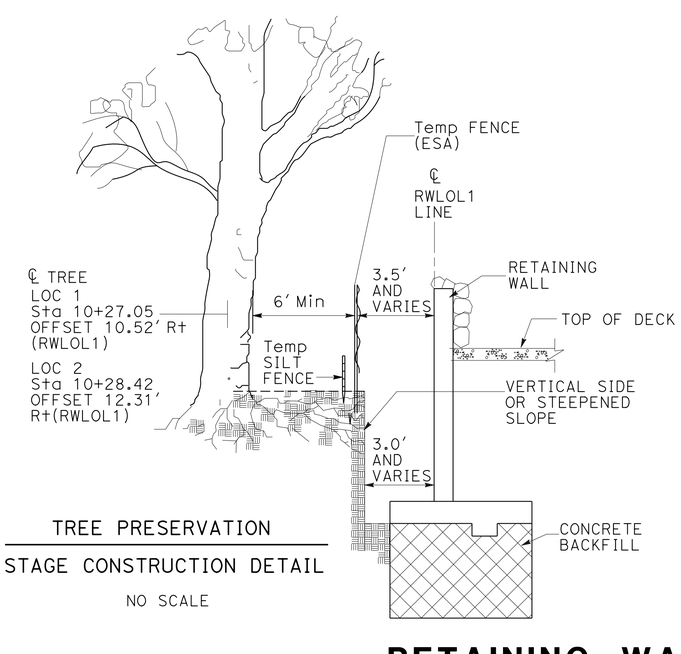

TREE PRESERVATION

STAGE CONSTRUCTION DETAIL

NO SCALE

RETAINING WALL PLAN
(RETAINING WALL No. 2)

SCALE AS SHOWN

R-2

APPROVED FOR RETAINING WALL WORK ONLY

STATE OF CALIFORNIA - DEPARTMENT OF TRANSPORTATION
DESIGN
FUNCTIONAL SUPERVISOR: FOAD AL-HAMDANI
CALCULATED-DESIGNED BY: RAYMOND SEGURA
CHECKED BY: JASON CASTILLO
REVISED BY
DATE REVISED

LAST REVISION 12-31-14
DATE PLOTTED => 09-JAN-2015
TIME PLOTTED => 12:47

Dist	COUNTY	ROUTE	POST MILES TOTAL PROJECT	SHEET No.	TOTAL SHEETS
06	Fre	168	R36.0	38	70

LICENSED LANDSCAPE ARCHITECT

1-12-15
PLANS APPROVAL DATE

LICENSED LANDSCAPE ARCHITECT
DAVID R. MARTIN #5094
Signature
3/31/15
Renewal Date
7/15/13
Date
STATE OF CALIFORNIA

THE STATE OF CALIFORNIA OR ITS OFFICERS OR AGENTS SHALL NOT BE RESPONSIBLE FOR THE ACCURACY OR COMPLETENESS OF SCANNED COPIES OF THIS PLAN SHEET.

FIBER ROLLS

SEQUENCE	ITEM	MATERIAL		REMARKS
		DESCRIPTION	TYPE	
IN EC TYPE 1 FIBER ROLLS MUST BE INSTALLED BEFORE SEEDING	FIBER ROLLS	FIBER ROLL	8" TO 10" Dia	Type 1 FIBER ROLL INSTALLATION

EROSION CONTROL

SEQUENCE	ITEM	APPLICATION RATE
STEP 1	FIBER ROLL	——
STEP 2	EROSION CONTROL (DRY SEED)	30 LB/ACRE

SEED MIX

BOTANICAL NAME (COMMON NAME)	PERCENT GERMINATION (MINIMUM)	POUNDS PURE LIVE SEED PER ACRE (SLOPE MEASUREMENT)
BROMUS CARINATUS [1] [2] (CALIFORNIA BROME)	75	5
ELYMUS GLAUCUS [1] [2] (BLUE WILDRYE)	40	9
LASTHENIA CALIFORNICA (DWARF GOLDFIELDS)	35	1
LAYIA PLATYGLOSSA (TIDY TIPS))	46	2
LOTUS PURSHIANUS (SPANISH LOTUS)	46	2
NASSELLA CERNUA [1] [2] (NODDING NEEDLEGRASS)	46	5
TRIFOLIUM WILLDENOVII (TOMCAT CLOVER)	53	3
VULPIA MICROSTACHYS (SMALL FESCUE)	53	3

1 SEED SOURCE FROM *FRESNO or MADERA* COUNTY ONLY.

2 SEED SOURCE FROM ABOVE THE 2500 FOOT ELEVATION LEVEL.

EROSION CONTROL LEGEND
ECL-1

STATE OF CALIFORNIA - DEPARTMENT OF TRANSPORTATION
Caltrans® LANDSCAPE ARCHITECTURE

SENIOR LANDSCAPE ARCHITECT: BRAD COLE
CALCULATED-DESIGNED BY: RAYMOND SEGURA
CHECKED BY: DAVID MARTIN
REVISED BY
DATE REVISED

LAST REVISION 12-02-14
DATE PLOTTED => 09-JAN-2015
TIME PLOTTED => 12:47

Dist	COUNTY	ROUTE	POST MILES TOTAL PROJECT	SHEET No.	TOTAL SHEETS
06	Fre	168	R36.0	39	70

LICENSED LANDSCAPE ARCHITECT

1-12-15
PLANS APPROVAL DATE

LICENSED LANDSCAPE ARCHITECT
DAVID R. MARTIN #5039
Signature
3/31/15
Renewal date
08/02/13
Date
STATE OF CALIFORNIA

THE STATE OF CALIFORNIA OR ITS OFFICERS OR AGENTS SHALL NOT BE RESPONSIBLE FOR THE ACCURACY OR COMPLETENESS OF SCANNED COPIES OF THIS PLAN SHEET.

NOTE:

FOR TEMPORARY FENCE (TYPE ESA) AND TEMPORARY SILT FENCE LOCATION, SEE LAYOUT SHEET.

LEGEND:

FR FIBER ROLL

EROSION CONTROL (DRY SEED)

WOOD MULCH LIMIT

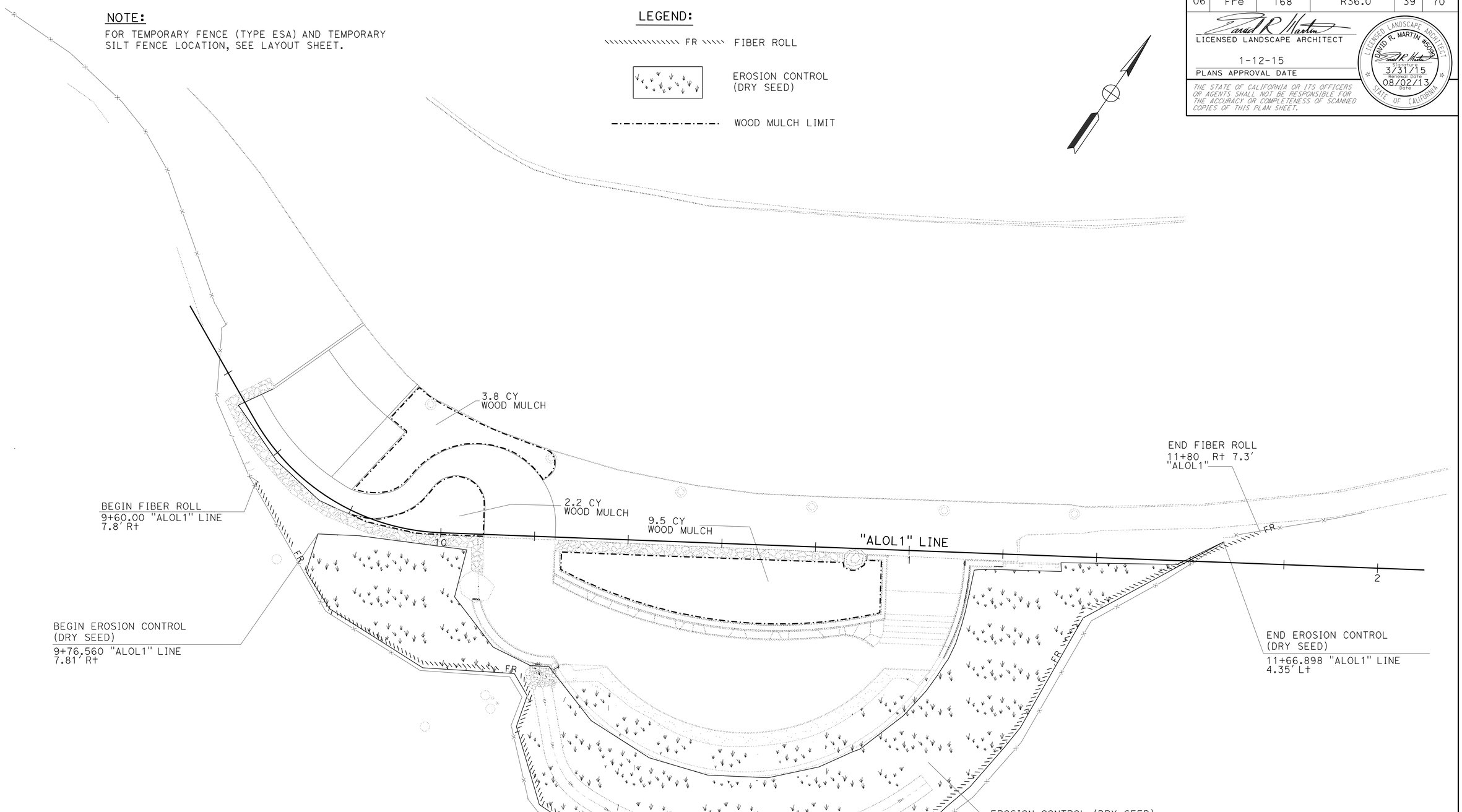

APPROVED FOR EROSION CONTROL WORK ONLY

EROSION CONTROL PLAN
EC-1

SCALE: 1"=10'

STATE OF CALIFORNIA - DEPARTMENT OF TRANSPORTATION
Caltrans® LANDSCAPE ARCHITECTURE

SENIOR LANDSCAPE ARCHITECT: BRAD COLE

CALCULATED-DESIGNED BY: RAYMOND SEGURA
CHECKED BY: DAVID MARTIN

REVISED BY
DATE REVISED

LAST REVISION 12-30-14
DATE PLOTTED => 09-JAN-2015
TIME PLOTTED => 12:47

Dist	COUNTY	ROUTE	POST MILES TOTAL PROJECT	SHEET No.	TOTAL SHEETS
06	Fre	168	R36.0	40	70

LICENSED LANDSCAPE ARCHITECT

1-12-15
PLANS APPROVAL DATE

THE STATE OF CALIFORNIA OR ITS OFFICERS OR AGENTS SHALL NOT BE RESPONSIBLE FOR THE ACCURACY OR COMPLETENESS OF SCANNED COPIES OF THIS PLAN SHEET.

LICENSED LANDSCAPE ARCHITECT
DAVID R. MARTIN #5039
Registration Date 3/31/15
Renewal Date 7/17/13
STATE OF CALIFORNIA

EROSION CONTROL

SHEET	EROSION CONTROL (DRY SEED)	FIBER ROLLS	WOOD MULCH	
	SQFT	LF	CY	(N) SQFT
EC-1	4126	294	15.5	1300

(N) - NOT A SEPARATE PAY ITEM, FOR INFORMATION ONLY

EROSION CONTROL QUANTITIES

ECQ-1

STATE OF CALIFORNIA - DEPARTMENT OF TRANSPORTATION
Caltrans® LANDSCAPE ARCHITECTURE

SENIOR LANDSCAPE ARCHITECT: BRAD COLE

CALCULATED-DESIGNED BY: DAVID MARTIN
CHECKED BY: RICHARD COLE

REVISED BY
DATE REVISED

LAST REVISION 12-30-14
DATE PLOTTED => 09-JAN-2015
TIME PLOTTED => 12:47

M

Maint	MAINTENANCE
Max	MAXIMUM
MB	METAL BEAM
MBB	METAL BEAM BARRIER
MBGR	METAL BEAM GUARD RAILING
Med	MEDIAN
MGS	MIDWEST GUARDRAIL SYSTEM
MH	MANHOLE
Min	MINIMUM
Misc	MISCELLANEOUS
Misc I & S	MISCELLANEOUS IRON AND STEEL
Mkr	MARKER
Mod	MODIFIED,
	MODIFY
Mon	MONUMENT
MP	METAL PLATE
MPGR	METAL PLATE GUARD RAILING
MR	MOVEMENT RATING
MSE	MECHANICALLY STABILIZED EMBANKMENT
Mt	MOUNTAIN, MOUNT
Mtl	MATERIAL
MVP	MAINTENANCE VEHICLE PULLOUT

N

N	NORTH
NB	NORTHBOUND
No.	NUMBER (MUST HAVE PERIOD)
Nos.	NUMBERS (MUST HAVE PERIOD)
NPS	NOMINAL PIPE SIZE
NS	NEAR SIDE
NSP	NEW STANDARD PLAN
NTS	NOT TO SCALE

O

Oblr	OBLITERATE
OC	OVERCROSSING
OD	OUTSIDE DIAMETER
OF	OUTSIDE FACE
OG	ORIGINAL GROUND
OGAC	OPEN GRADED ASPHALT CONCRETE
OGFC	OPEN GRADED FRICTION COURSE
OH	OVERHEAD
OHWM	ORDINARY HIGH WATER MARK
O-O	OUT TO OUT
Opp	OPPOSITE
OSD	OVERSIDE DRAIN

P

P	PAGE
PAP	PERFORATED ALUMINUM PIPE
PB	PULL BOX
PC	POINT OF CURVATURE,
	PRECAST
PCC	POINT OF COMPOUND CURVE,
	PORTLAND CEMENT CONCRETE
PCMS	PORTABLE CHANGEABLE MESSAGE SIGN
PCP	PERFORATED CONCRETE PIPE,
	PRESTRESSED CONCRETE PIPE
PCVC	POINT OF COMPOUND VERTICAL CURVE
PEC	PERMIT TO ENTER AND CONSTRUCT
Ped	PEDESTRIAN
Ped OC	PEDESTRIAN OVERCROSSING
Ped UC	PEDESTRIAN UNDERCROSSING
Perm Mtl	PERMEABLE MATERIAL

P continued

PG	PROFILE GRADE
PI	POINT OF INTERSECTION
PJP	PARTIAL JOINT PENETRATION
Pkwy	PARKWAY
ℙL,PL	PLATE
P/L	PROPERTY LINE
PM	POST MILE,
	TIME FROM NOON TO MIDNIGHT
PN	PAVING NOTCH
POC	POINT OF HORIZONTAL CURVE
POT	POINT OF TANGENT
POVC	POINT OF VERTICAL CURVE
PP	PIPE PILE,
	PLASTIC PIPE,
	POWER POLE
PPL	PREFORMED PERMEABLE LINER
PPP	PERFORATED PLASTIC PIPE
PRC	POINT OF REVERSE CURVE
PRF	PAVEMENT REINFORCING FABRIC
PRVC	POINT OF REVERSE VERTICAL CURVE
PS&E	PLANS, SPECIFICATIONS AND ESTIMATES
PS, P/S	PRESTRESSED
PSP	PERFORATED STEEL PIPE
PT	POINT OF TANGENCY
PVC	POLYVINYL CHLORIDE
Pvmt	PAVEMENT

Q

Qty	QUANTITY

R

R	RADIUS
R & D	REMOVE AND DISPOSE
R & S	REMOVE AND SALVAGE
R/C	RATE OF CHANGE
RCA	REINFORCED CONCRETE ARCH
RCB	REINFORCED CONCRETE BOX
RCP	REINFORCED CONCRETE PIPE
RCPA	REINFORCED CONCRETE PIPE ARCH
Rd	ROAD
Reinf	REINFORCED,
	REINFORCEMENT,
	REINFORCING
Rel	RELOCATE
Repl	REPLACEMENT
Ret	RETAINING
Rev	REVISED, REVISION
Rdwy	ROADWAY
RHMA	RUBBERIZED HOT MIX ASPHALT
Riv	RIVER
RM	ROAD-MIXED
RP	RADIUS POINT,
	REFERENCE POINT
RR	RAILROAD
RSP	ROCK SLOPE PROTECTION,
	REVISED STANDARD PLAN
Rt	RIGHT
Rte	ROUTE
RW	REDWOOD,
	RETAINING WALL
R/W	RIGHT OF WAY
Rwy	RAILWAY

S

S	SOUTH,
	SUPPLEMENT
SAE	STRUCTURE APPROACH EMBANKMENT
Salv	SALVAGE
SAPP	STRUCTURAL ALUMINUM PLATE PIPE
SB	SOUTHBOUND
SC	SAND CUSHION
SCSP	SLOTTED CORRUGATED STEEL PIPE
SD	STORM DRAIN
Sec	SECOND,
	SECTION
Sep	SEPARATION
SG	SUBGRADE
Shld	SHOULDER
Sht	SHEET
Sim	SIMILAR
℄	STATION LINE
SM	SELECTED MATERIAL
Spec	SPECIAL,
	SPECIFICATIONS
SPP	SLOTTED PLASTIC PIPE
SS	SLOPE STAKE
SSBM	STRAP AND SADDLE BRACKET METHOD
SSD	STRUCTURAL SECTION DRAIN
SSPA	STRUCTURAL STEEL PLATE ARCH
SSPP	STRUCTURAL STEEL PLATE PIPE
SSPPA	STRUCTURAL STEEL PLATE PIPE ARCH
SSRP	STEEL SPIRAL RIB PIPE
St	STREET
Sta	STATION
STBB	SINGLE THRIE BEAM BARRIER
Std	STANDARD
Str	STRUCTURE
Surf	SURFACING
SW	SIDEWALK,
	SOUND WALL
Swr	SEWER
Sym	SYMMETRICAL
S4S	SURFACE 4 SIDES

T

T	SEMI-TANGENT
Tan	TANGENT
TBB	THRIE BEAM BARRIER
Tbr	TIMBER
TC	TOP OF CURB
TCB	TRAFFIC CONTROL BOX
TCE	TEMPORARY CONSTRUCTION EASEMENT
Tel	TELEPHONE
Temp	TEMPORARY
TG	TOP OF GRADE
Tot	TOTAL
TP	TELEPHONE POLE
TPB	TREATED PERMEABLE BASE
TPM	TREATED PERMEABLE MATERIAL
Trans	TRANSITION

T continued

TS	TRANSVERSE,
	TRAFFIC SIGNAL,
	TUBULAR STEEL
Typ	TYPICAL

U

UC	UNDERCROSSING
UD	UNDERDRAIN
UG	UNDERGROUND
UON	UNLESS OTHERWISE NOTED
UP	UNDERPASS

V

V	VALVE,
	DESIGN SPEED
Var	VARIABLE,
	VARIES
VC	VERTICAL CURVE
VCP	VITRIFIED CLAY PIPE
Vert	VERTICAL
Via	VIADUCT
Vol	VOLUME

W

W	WEST,
	WIDTH
WB	WESTBOUND
WH	WEEP HOLE
WM	WIRE MESH
WS	WATER SURFACE
WSP	WELDED STEEL PIPE
Wt	WEIGHT
WV	WATER VALVE
WW	WINGWALL
WWLOL	WINGWALL LAYOUT LINE

X

X Sec	CROSS SECTION
Xing	CROSSING

Y

Yr	YEAR
Yrs	YEARS

Dist	COUNTY	ROUTE	POST MILES TOTAL PROJECT	SHEET No.	TOTAL SHEETS
06	Fre	168	R36.0	41	70

Grace M. Tsushima
REGISTERED CIVIL ENGINEER

July 19, 2013
PLANS APPROVAL DATE

REGISTERED PROFESSIONAL ENGINEER
Grace M. Tsushima
No. C49814
Exp. 9-30-14
CIVIL
STATE OF CALIFORNIA

THE STATE OF CALIFORNIA OR ITS OFFICERS OR AGENTS SHALL NOT BE RESPONSIBLE FOR THE ACCURACY OR COMPLETENESS OF SCANNED COPIES OF THIS PLAN SHEET.

TO ACCOMPANY PLANS DATED 1-12-15

2010 REVISED STANDARD PLAN RSP A10B

UNIT OF MEASUREMENT SYMBOLS:

Some of the symbols used in the project plan quantity tables and in the Bid Item List are:

TABLE A

SYMBOL USED	DEFINITIONS
ACRE	ACRE
CF	CUBIC FOOT
CY	CUBIC YARD
EA	EACH
GAL	GALLON
LB	POUND
LF	LINEAR FOOT
SQFT	SQUARE FOOT
SQYD	SQUARE YARD
STA	100 FEET
TAB	TABLET
TON	2,000 POUNDS

Some of the symbols used in the plans other than in the project plan quantity tables are:

TABLE B

SYMBOL USED	DEFINITIONS
ksi	KIPS PER SQUARE INCH
ksf	KIPS PER SQUARE FOOT
psi	POUNDS PER SQUARE INCH
psf	POUNDS PER SQUARE FOOT
lb/ft^3, pcf	POUNDS PER CUBIC FOOT
tsf	TONS PER SQUARE FOOT
mph, MPH *	MILES PER HOUR
ø	NOMINAL DIAMETER
oz	OUNCE
lb	POUND
kip	1,000 POUNDS
cal	CALORIE
ft	FOOT OR FEET
gal	GALLON

* For use on a sign panel only

STATE OF CALIFORNIA
DEPARTMENT OF TRANSPORTATION

ABBREVIATIONS (SHEET 2 OF 2)

NO SCALE

RSP A10B DATED JULY 19, 2013 SUPERSEDES STANDARD PLAN A10B DATED MAY 20, 2011 - PAGE 2 OF THE STANDARD PLANS BOOK DATED 2010.

REVISED STANDARD PLAN RSP A10B

6-7-13

Dist	COUNTY	ROUTE	POST MILES TOTAL PROJECT	SHEET No.	TOTAL SHEETS
06	Fre	168	R36.0	42	70

REGISTERED CIVIL ENGINEER

October 19, 2012
PLANS APPROVAL DATE

REGISTERED PROFESSIONAL ENGINEER
Roberta L. McLaughlin
No. C40375
Exp. 3-31-13
CIVIL
STATE OF CALIFORNIA

THE STATE OF CALIFORNIA OR ITS OFFICERS OR AGENTS SHALL NOT BE RESPONSIBLE FOR THE ACCURACY OR COMPLETENESS OF SCANNED COPIES OF THIS PLAN SHEET.

NOTE: TO ACCOMPANY PLANS DATED 1-12-15

Minor variations in dimensions may be accepted by the Engineer.

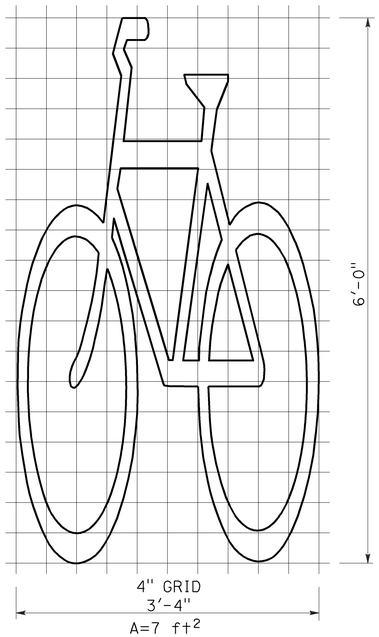

BIKE LANE SYMBOL WITHOUT PERSON

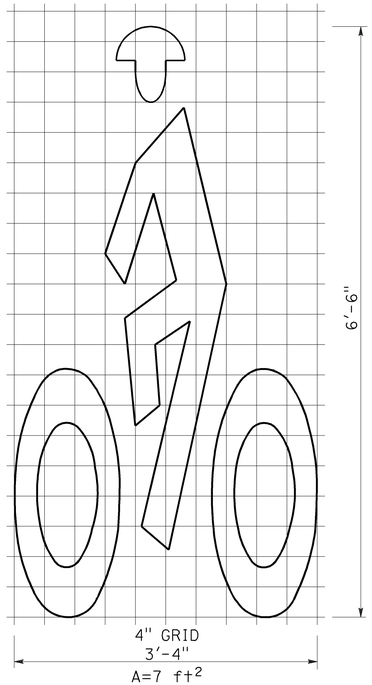

BIKE LANE SYMBOL WITH PERSON

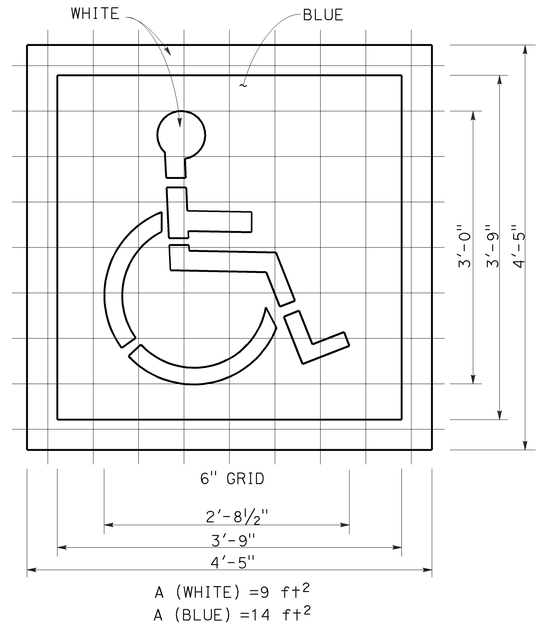

INTERNATIONAL SYMBOL OF ACCESSIBILITY (ISA) MARKING

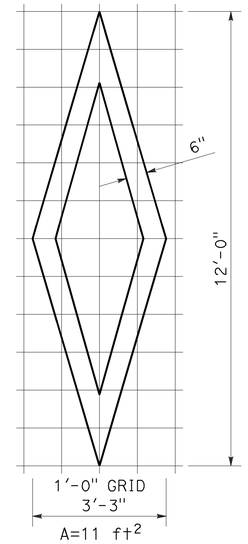

DIAMOND SYMBOL

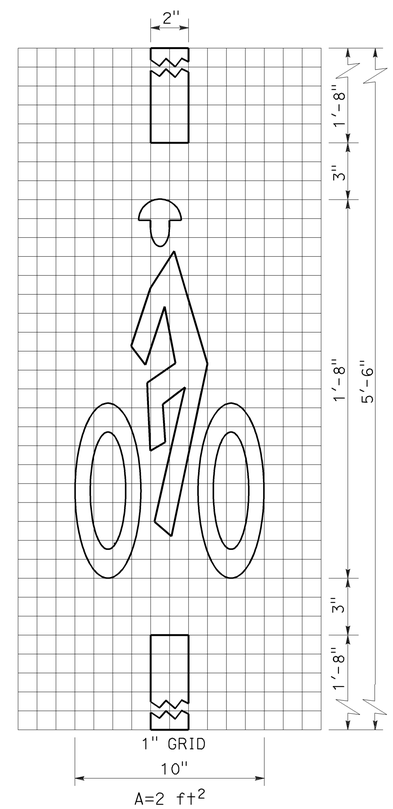

BICYCLE LOOP DETECTOR SYMBOL

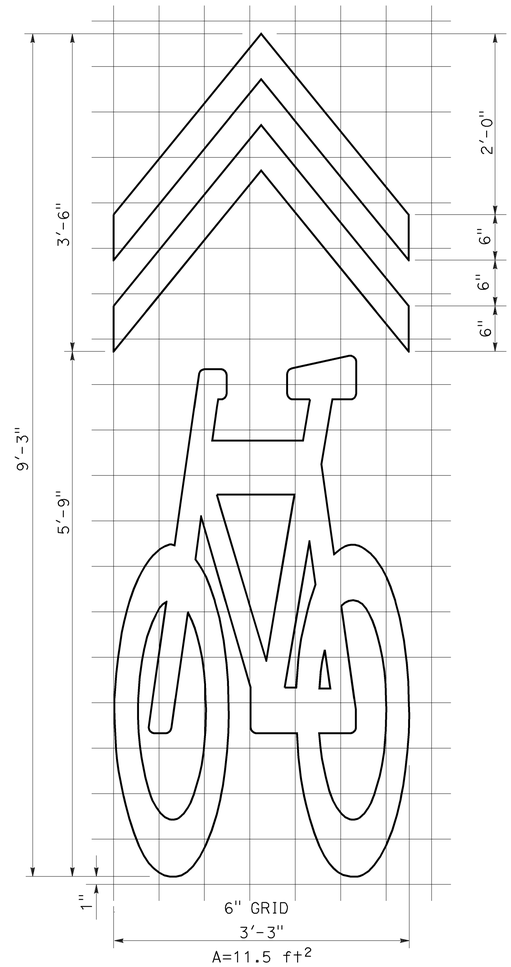

SHARED ROADWAY BICYCLE MARKING

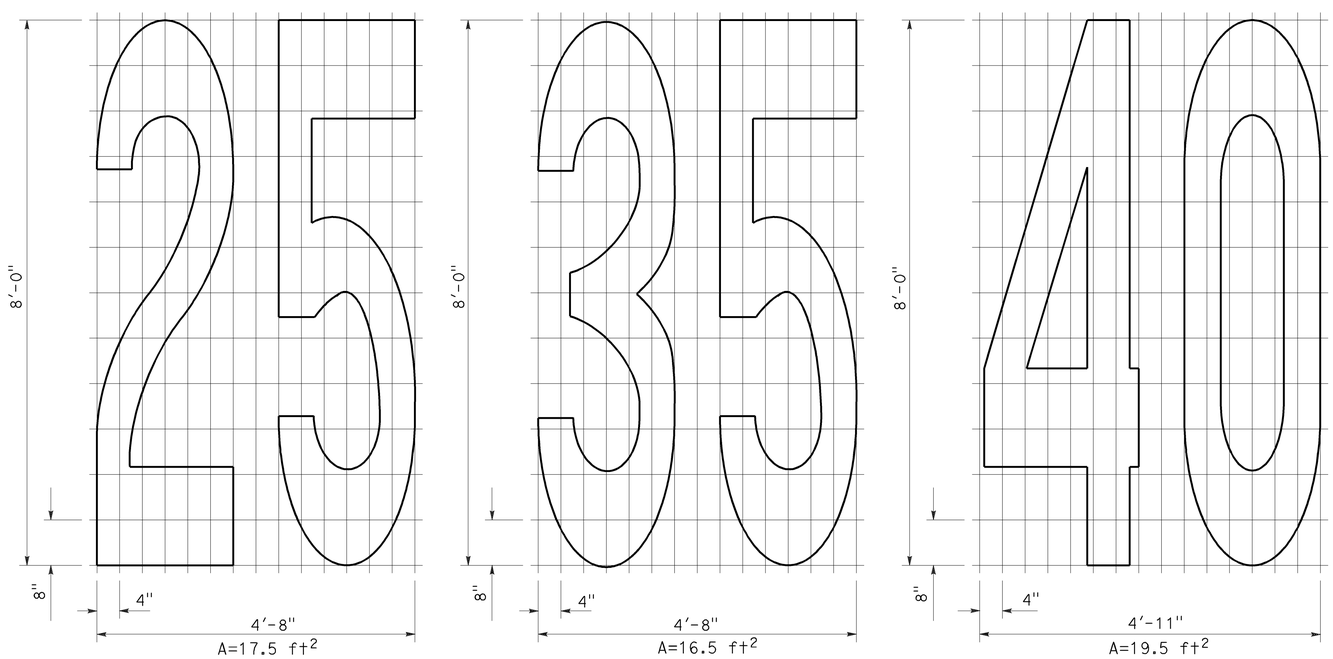

NUMERALS

STATE OF CALIFORNIA
DEPARTMENT OF TRANSPORTATION

PAVEMENT MARKINGS SYMBOLS AND NUMERALS

NO SCALE

RSP A24C DATED OCTOBER 19, 2012 SUPERSEDES STANDARD PLAN A24C DATED MAY 20, 2011 - PAGE 15 OF THE STANDARD PLANS BOOK DATED 2010.

REVISED STANDARD PLAN RSP A24C

2010 REVISED STANDARD PLAN RSP A24C

6-28-12

Dist	COUNTY	ROUTE	POST MILES TOTAL PROJECT	SHEET No.	TOTAL SHEETS
06	Fre	168	R36.0	43	70

REGISTERED CIVIL ENGINEER

July 19, 2013
PLANS APPROVAL DATE

REGISTERED PROFESSIONAL ENGINEER Michael Janzen No. 44788 Exp. 03-31-14 CIVIL STATE OF CALIFORNIA

THE STATE OF CALIFORNIA OR ITS OFFICERS OR AGENTS SHALL NOT BE RESPONSIBLE FOR THE ACCURACY OR COMPLETENESS OF SCANNED COPIES OF THIS PLAN SHEET.

TO ACCOMPANY PLANS DATED 1-12-15

2010 REVISED STANDARD PLAN RSP A87A

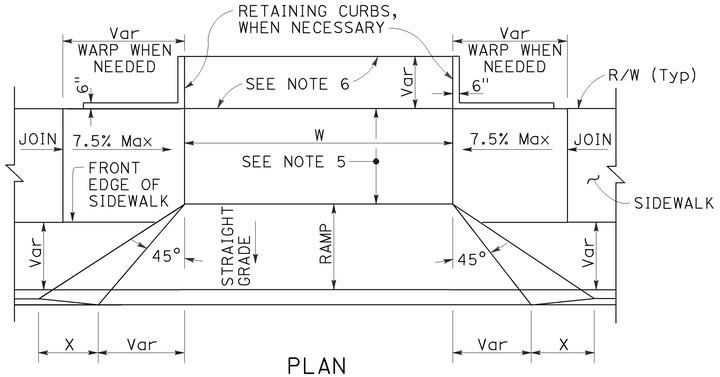

PLAN

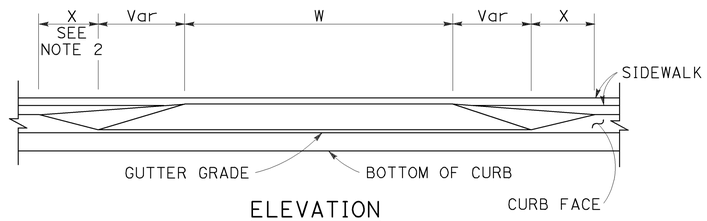

ELEVATION

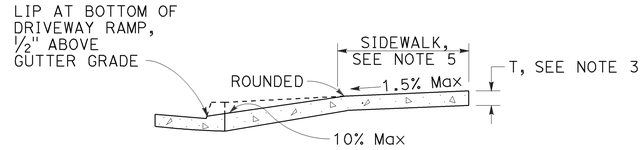

CASE A

Typical driveway, sidewalk not depressed

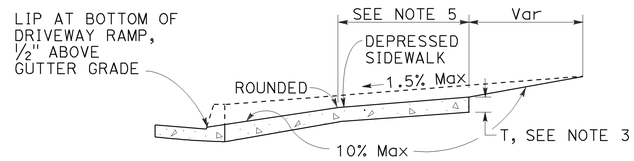

CASE B

Driveway with depressed sidewalk

SECTIONS

DRIVEWAYS

TABLE A

CURB TYPE	DIMENSIONS			
	"H1"	"H2"	"W1"	"W2"
A1-6	1'-2"	6"	7½"	1½"
A1-8	1'-4"	8"	8"	2"
A2-6	1'-0"	6"	2'-7½"	1½"
A2-8	1'-2"	8"	2'-8"	2"
A3-6	6"	5"	7¼"	1¼"
A3-8	8"	7"	7¾"	1¾"
B1-4	1'-0"	4"	7½"	2½"
B1-6	1'-2"	6"	9"	4"
B2-4	10"	4"	2'-7½"	2½"
B2-6	1'-0"	6"	2'-9"	4"
B3-4	4"	3"	7"	2"
B3-6	6"	5"	8½"	3½"
D-4	10"	4"	1'-6"	1'-1"
D-6	1'-0"	6"	2'-2"	1'-9"

CURB QUANTITIES

TYPE	CUBIC YARDS PER LINEAR FOOT
A1-6	0.02585
A1-8	0.03084
A2-6	0.05903
A2-8	0.06379
A3-6	0.01036
A3-8	0.01435
B1-4	0.02185
B1-6	0.02930
B2-4	0.05515
B2-6	0.06171
B3-4	0.00641
B3-6	0.01074
B4	0.05709
D-4	0.04083
D-6	0.06804
E	0.06661

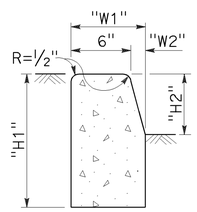

TYPE A1 CURBS

See Table A

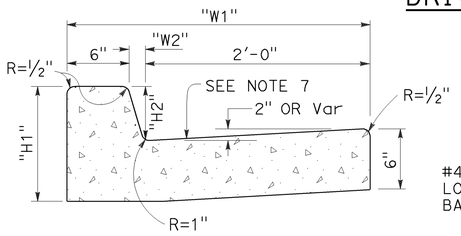

TYPE A2 CURBS

See Table A

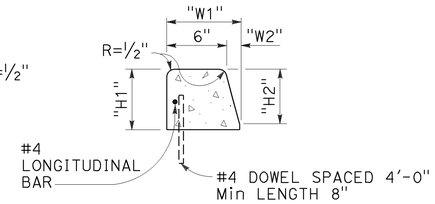

TYPE A3 CURBS

Superimposed on existing pavement
See Table A

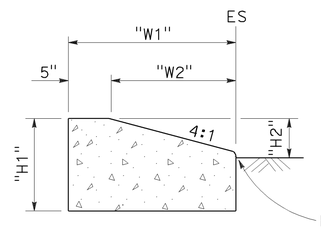

TYPE D CURBS

See Table A

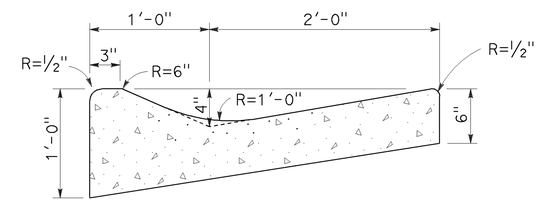

TYPE E CURB

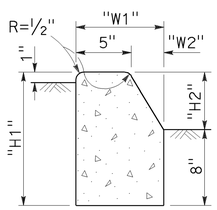

TYPE B1 CURBS

See Table A

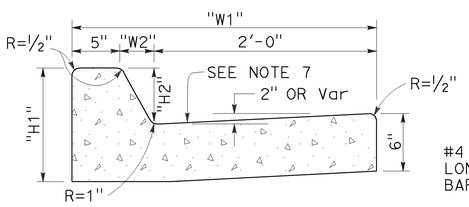

TYPE B2 CURBS

See Table A

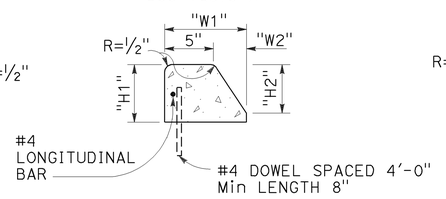

TYPE B3 CURBS

Superimposed on existing pavement
See Table A

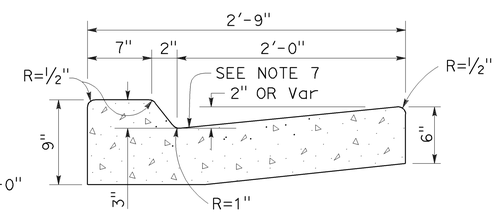

TYPE B4 CURBS

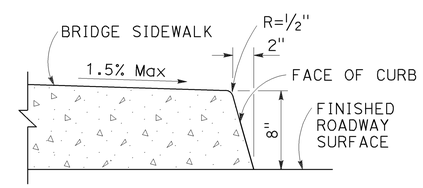

TYPE H CURB

On Bridges

CURBS

NOTES:

1. Case A driveway section typically applies.
2. X=3'-0" except for curb heights over 10" where 4:1 slopes shall be used on curb slope.
3. Sidewalk and ramp thickness "T" at driveway shall be 4" for residental and 6" for commercial.
4. Difference in slope of the driveway ramp and the slope of a line between the gutter and a point on the roadway 5'-0" from gutter line shall not exceed 15%. Reduce driveway ramp slope, not gutter slope, where required.
5. Minimum width of clear passageway for sidewalk shall be 4'-2".
6. Retaining curbs and acquisition of construction easement may be necessary for narrow sidewalks or curb heights in excess of 6".
7. Across the pedestrian route at curb ramp locations, the gutter pan slope shall not exceed 1" of depth for each 2'-0" of width.

STATE OF CALIFORNIA
DEPARTMENT OF TRANSPORTATION

CURBS AND DRIVEWAYS

NO SCALE

RSP A87A DATED JULY 19, 2013 SUPERSEDES STANDARD PLAN A87A DATED MAY 20, 2011 - PAGE 119 OF THE STANDARD PLANS BOOK DATED 2010.

REVISED STANDARD PLAN RSP A87A

7-8-13

Dist	COUNTY	ROUTE	POST MILES TOTAL PROJECT	SHEET No.	TOTAL SHEETS
06	Fre	168	R36.0	44	70

REGISTERED CIVIL ENGINEER

July 19, 2013
PLANS APPROVAL DATE

REGISTERED PROFESSIONAL ENGINEER
Michael Janzen
No. 44788
Exp. 03-31-14
CIVIL
STATE OF CALIFORNIA

THE STATE OF CALIFORNIA OR ITS OFFICERS OR AGENTS SHALL NOT BE RESPONSIBLE FOR THE ACCURACY OR COMPLETENESS OF SCANNED COPIES OF THIS PLAN SHEET.

TO ACCOMPANY PLANS DATED 1-12-15

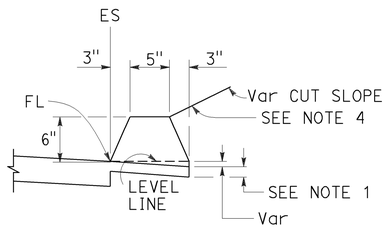

TYPE A
See Note 3

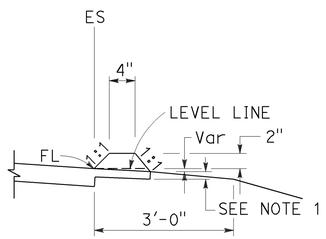

TYPE C

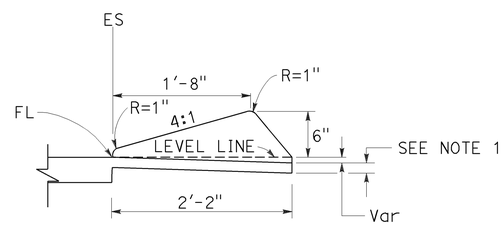

TYPE D

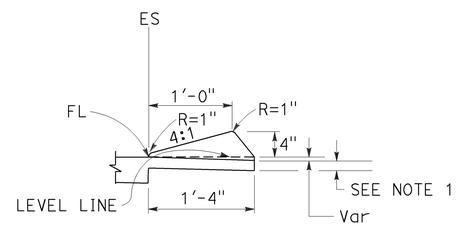

TYPE E

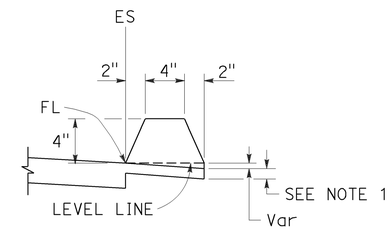

TYPE F
See Note 5

DIKES

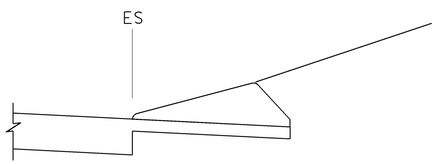

CASE C-1
Cut Slope

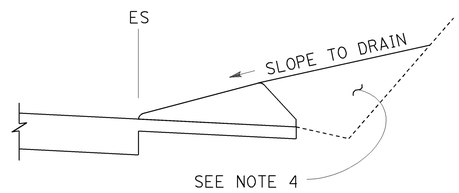

CASE C-2
Cut Slope

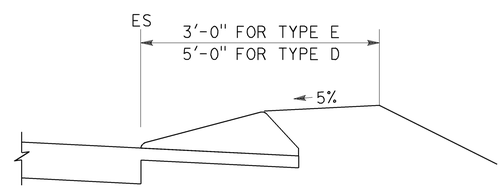

CASE F

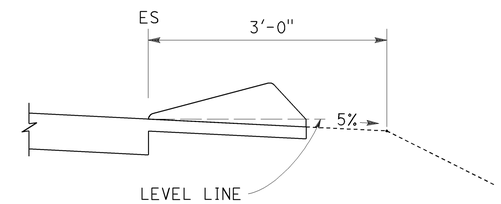

CASE R
See Note 2

TYPE D AND E BACKFILL DETAILS

NOTES:

1. For HMA shoulders only, extend top layer of HMA placed on the shoulder under dike with no joint at the ES. For projects with OGFC shoulders, do not extend OGFC under dike. See project plans for modified dike detail.
2. Case R applies to retrofit only projects where restrictive conditions do not provide enough width for Case F backfill.
3. Type A dike only to be used where restrictive slope conditions do not provide enough width to use Type D or Type E dike.
4. Fill and compact with excavated material to top of dike.
5. Use Type F dike, where dike is required with guard railing installations. See Revised Standard Plan RSP A77N4 for dike positioning details.

DIKE QUANTITIES

TYPE	CUBIC YARDS PER LINEAR FOOT
A	0.0135
C	0.0038
D	0.0293
E	0.0130
F	0.0066

Quantities based on 5% cross slope.

STATE OF CALIFORNIA
DEPARTMENT OF TRANSPORTATION

HOT MIX ASPHALT DIKES

NO SCALE

RSP A87B DATED JULY 19, 2013 SUPERSEDES STANDARD PLAN A87B DATED MAY 20, 2011 - PAGE 120 OF THE STANDARD PLANS BOOK DATED 2010.

REVISED STANDARD PLAN RSP A87B

2010 REVISED STANDARD PLAN RSP A87B

6-27-13

Dist	COUNTY	ROUTE	POST MILES TOTAL PROJECT	SHEET No.	TOTAL SHEETS
06	Fre	168	R36.0	45	70

REGISTERED CIVIL ENGINEER

March 21, 2014
PLANS APPROVAL DATE

REGISTERED PROFESSIONAL ENGINEER Hector David Cordova No. C41957 Exp. 3-31-14 CIVIL STATE OF CALIFORNIA

THE STATE OF CALIFORNIA OR ITS OFFICERS OR AGENTS SHALL NOT BE RESPONSIBLE FOR THE ACCURACY OR COMPLETENESS OF SCANNED COPIES OF THIS PLAN SHEET.

TO ACCOMPANY PLANS DATED 1-12-15

2010 REVISED STANDARD PLAN RSP A88A

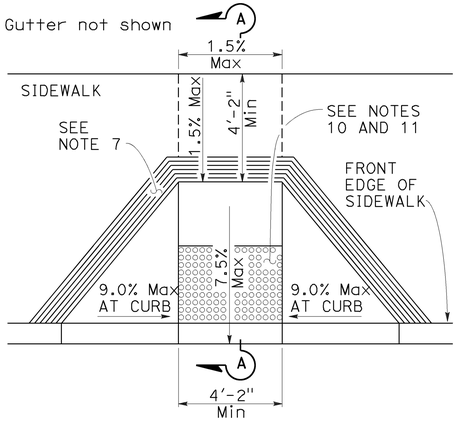

CASE A

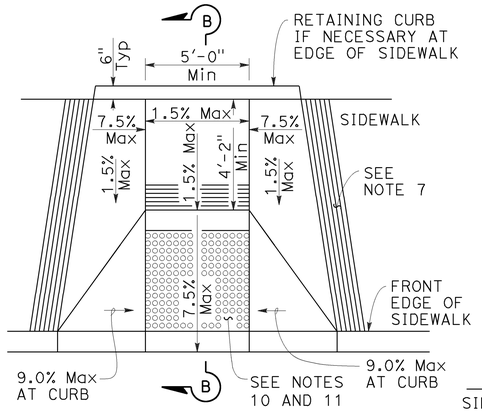

CASE B

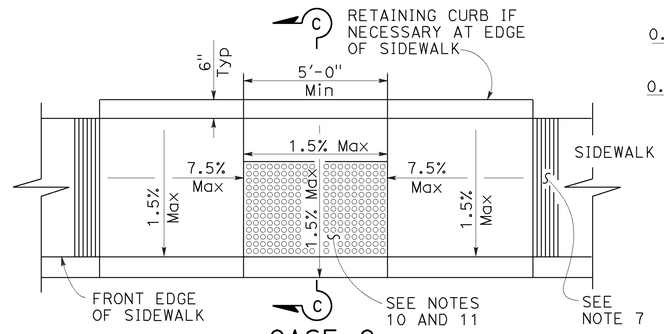

CASE C

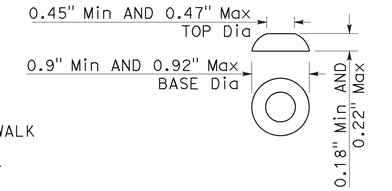

RAISED TRUNCATED DOME

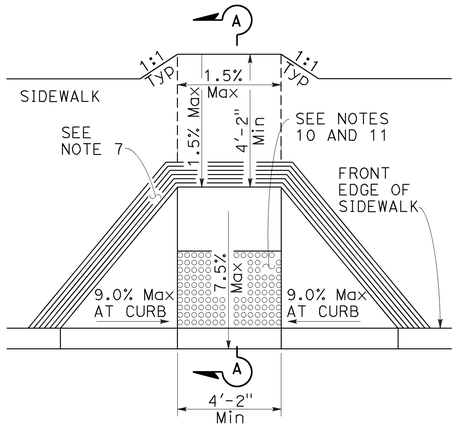

CASE D

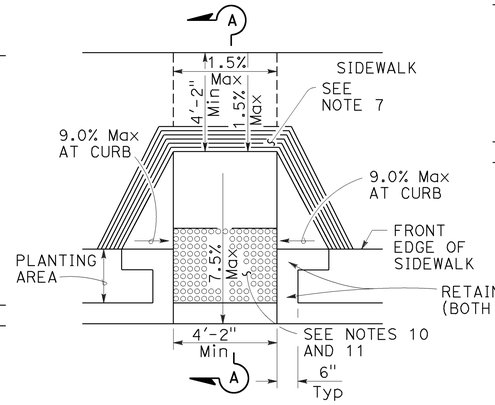

CASE E

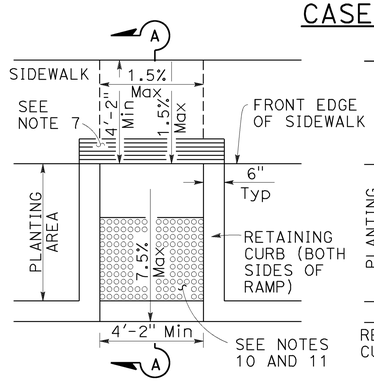

CASE F

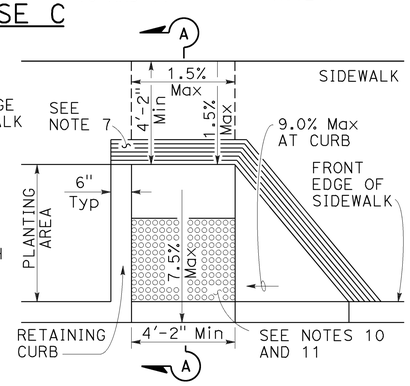

CASE G

See Note 4

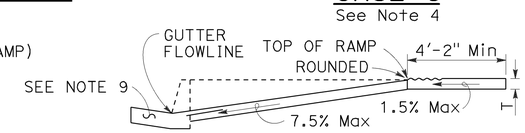

SECTION A-A

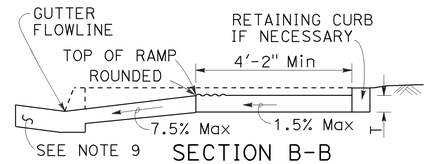

SECTION B-B

Depress entire sidewalk as required

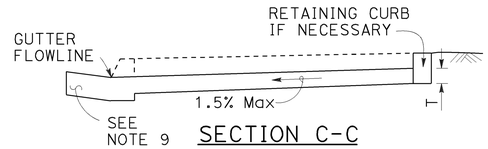

SECTION C-C

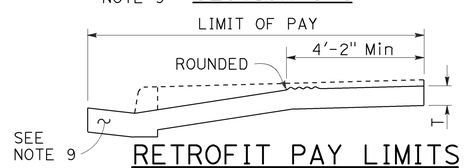

RETROFIT PAY LIMITS

Existing curb and sidewalk

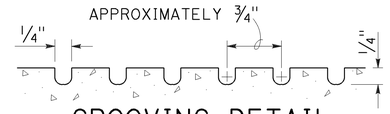

GROOVING DETAIL

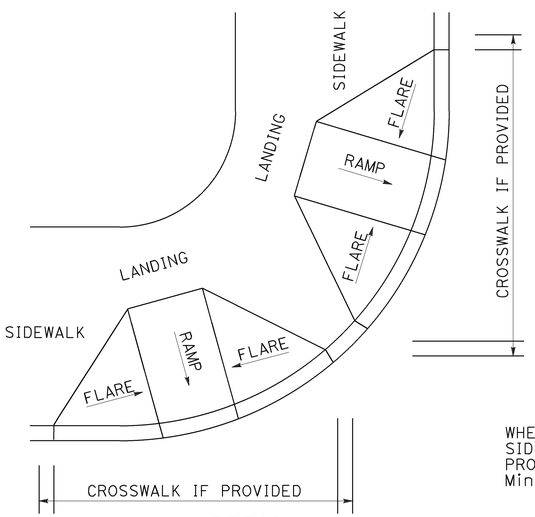

DETAIL A

TYPICAL TWO-RAMP CORNER INSTALLATION

See Note 1

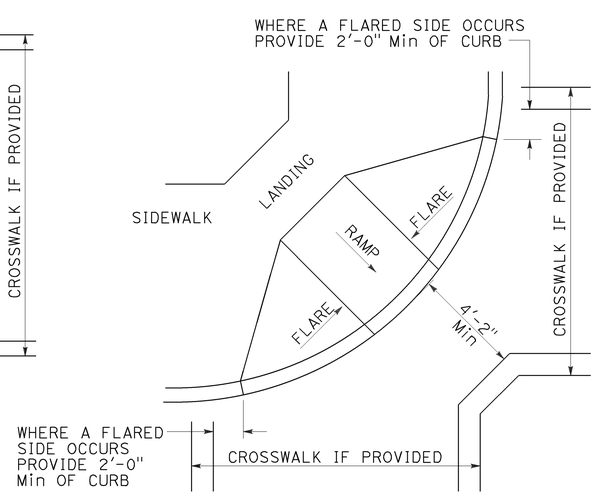

DETAIL B

TYPICAL ONE-RAMP CORNER INSTALLATION

See Notes 1 and 3

NOTES:

1. As site conditions dictate, Case A through Case G curb ramps may be used for corner installations similar to those shown in Detail A and Detail B. The case of curb ramps used in Detail A do not have to be the same. Case A through Case G curb ramps also may be used at mid block locations, as site conditions dictate.
2. If distance from curb to back of sidewalk is too short to accommodate ramp and 4'-2" platform (landing) as shown in Case A, the sidewalk may be depressed longitudinally as in Case B, or C or may be widened as in Case D.
3. When ramp is located in center of curb return, crosswalk configuration must be similar to that shown for Detail B.
4. As site conditions dictate, the retaining curb side and the flared side of the Case G ramp shall be constructed in reversed position.
5. If located on a curve, the sides of the ramp need not be parallel, but the minimum width of the ramp shall be 4'-2".
6. Side slope of ramp flares vary uniformly from a maximum of 9.0% at curb to conform with longitudinal sidewalk slope adjacent to top of the ramp, except in Case C and Case F.
7. The curb ramp shall be outlined, as shown, with a 1'-0" wide border with 1/4" grooves approximately 3/4" on center. See grooving detail.
8. Transitions from ramps and landing to walks, gutters or streets shall be flush (no lip) and free of abrupt changes.
9. Counter slopes of adjoining gutters and road surfaces immediately adjacent to and within 24 inches of the curb ramp shall not be steeper than 1:20 (5.0%). Gutter pan slope shall not exceed 1" of depth for each 2'-0" of width.
10. Curb ramps shall have a detectable warning surface that extends the full width and 3'-0" depth of the ramp. A 4'-0" wide detectable warning surface may be used on a 4'-2" wide curb ramp. Detectable Warning Surfaces shall conform to the requirements in the Standard Specifications.
11. The edge of the detectable warning surface nearest the street shall be between 6" and 8" from the gutter flowline.
12. Sidewalk and ramp thickness, "T", shall be 3 1/2" minimum.
13. Utility pull boxes, manholes, vaults and all other utility facilities within the boundaries of the curb ramp will be relocated or adjusted to grade by the owner prior to, or in conjunction with, curb ramp construction.
14. Detectable warning surface may have to be cut to allow removal of utility covers while maintaining full detectable warning width and depth.

RAISED TRUNCATED DOME PATTERN (IN-LINE)

DETECTABLE WARNING SURFACE

See Note 10

STATE OF CALIFORNIA
DEPARTMENT OF TRANSPORTATION

CURB RAMP DETAILS

NO SCALE

RSP A88A DATED MARCH 21, 2014 SUPERSEDES RSP A88A DATED JULY 19, 2013 AND STANDARD PLAN A88A DATED MAY 20, 2011 - PAGE 121 OF THE STANDARD PLANS BOOK DATED 2010.

REVISED STANDARD PLAN RSP A88A

2-25-14

Dist	COUNTY	ROUTE	POST MILES TOTAL PROJECT	SHEET No.	TOTAL SHEETS
06	Fre	168	R36.0	46	70

H. David Cordova
REGISTERED CIVIL ENGINEER

March 21, 2014
PLANS APPROVAL DATE

REGISTERED PROFESSIONAL ENGINEER
Hector David Cordova
No. C41957
Exp. 3-31-14
CIVIL
STATE OF CALIFORNIA

THE STATE OF CALIFORNIA OR ITS OFFICERS OR AGENTS SHALL NOT BE RESPONSIBLE FOR THE ACCURACY OR COMPLETENESS OF SCANNED COPIES OF THIS PLAN SHEET.

TO ACCOMPANY PLANS DATED 1-12-15

Gutter not shown

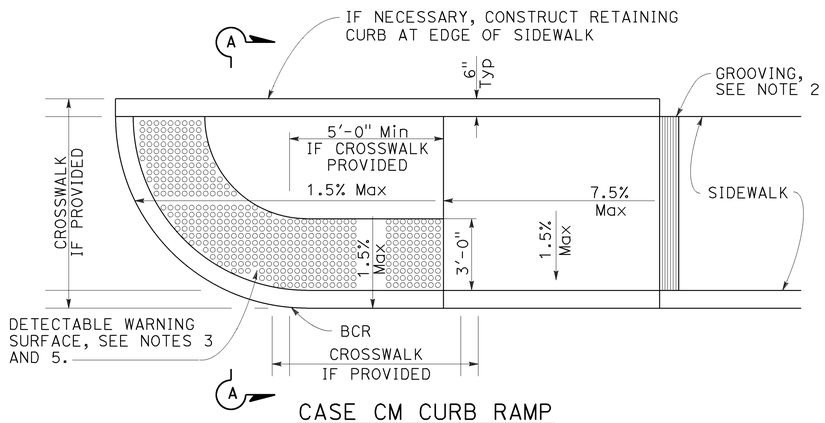

CASE CM CURB RAMP

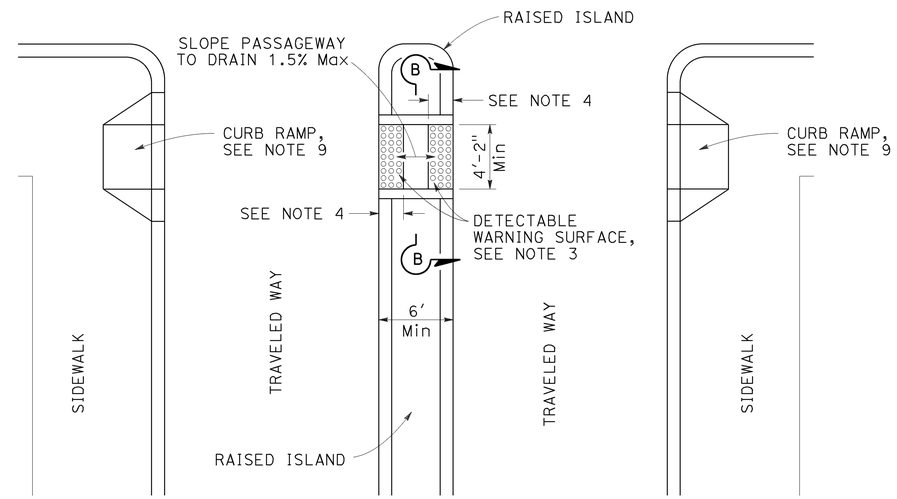

TYPE A PASSAGEWAY

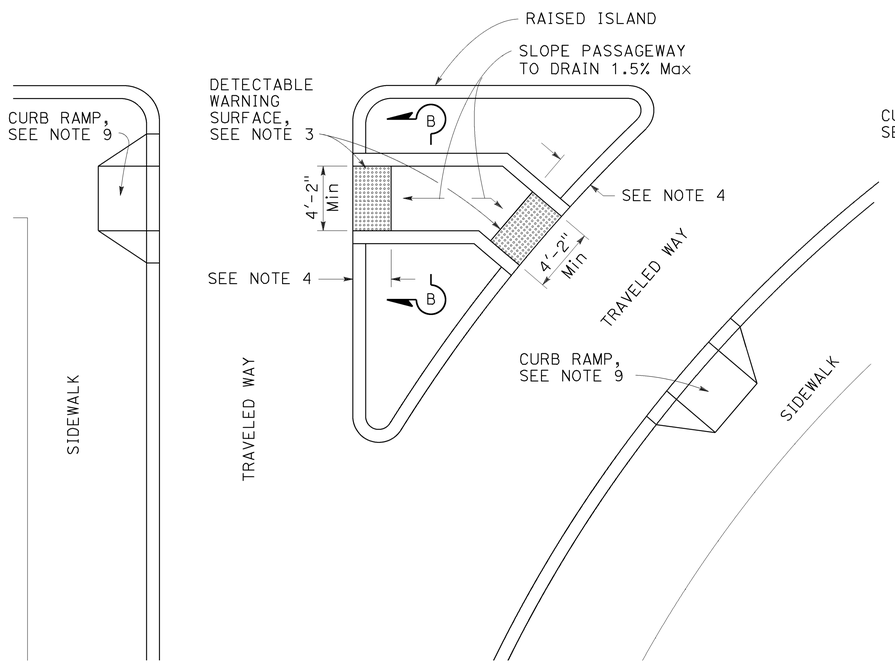

TYPE B PASSAGEWAY

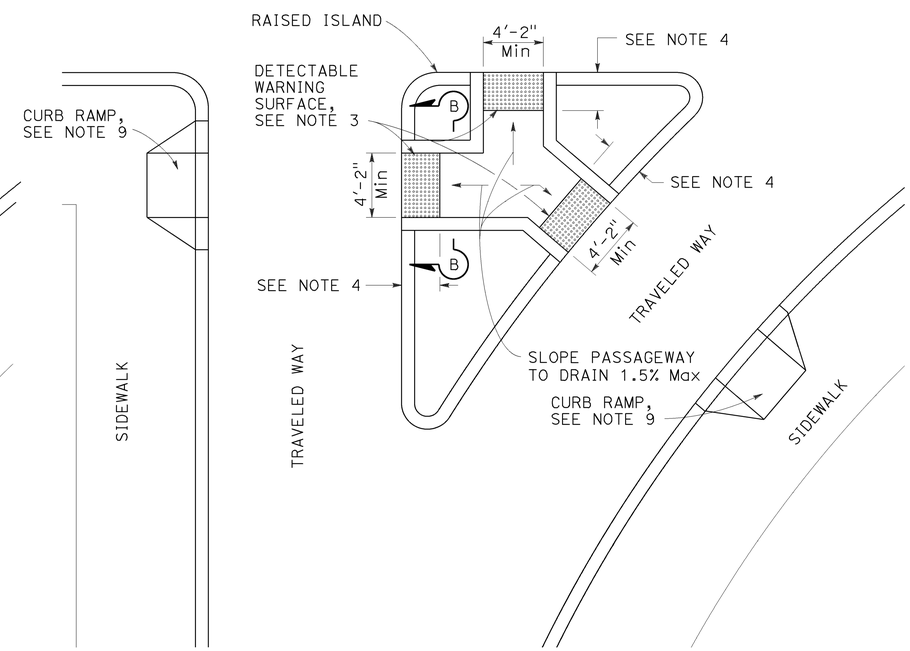

TYPE C PASSAGEWAY

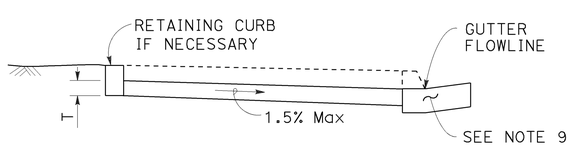

SECTION A-A

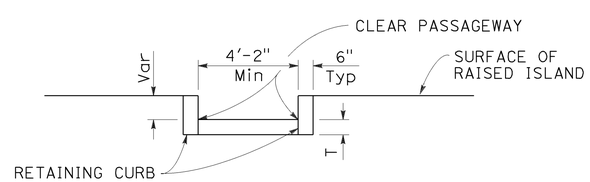

SECTION B-B

NOTES:

1. Sidewalk, ramp and passageway thickness, "T", shall be 3½" minimum.
2. For details of grooving used with Case CM curb ramp, see Revised Standard Plan RSP A88A.
3. For details of detectable warning surfaces, see Revised Standard Plan RSP A88A.
4. Where an island passageway length is greater than or equal to 6'-0", but less than 8'-0", each detectable warning surface shall extend the full width and 2'-0" depth of the passageway length. Where an island passageway length is greater than or equal to 8'-0", each detectable warning surface shall extend the full width and 3'-0" depth of the passageway length. A 4'-0" wide detectable warning surface may be used on a 4'-2" wide island passageway.
5. For Case CM curb ramp, the edge of the detectable warning surface nearest the street shall be between 6" and 8" from the gutter flowline.
6. Transitions from ramps to walks, gutters or streets shall be flush (no lip) and free of abrupt changes.
7. Utility pull boxes, manholes, vaults and all other utility facilities within the boundaries of the curb ramp will be relocated or adjusted to grade by the owner prior to, or in conjunction with, curb ramp construction.
8. Detectable warning surface may have to be cut to allow removal of utility covers while maintaining full detectable warning width and depth.
9. For additional curb ramp details, see Revised Standard Plan RSP A88A.

STATE OF CALIFORNIA
DEPARTMENT OF TRANSPORTATION

CURB RAMP AND ISLAND PASSAGEWAY DETAILS

NO SCALE

RSP A88B DATED MARCH 21, 2014 SUPERSEDES RSP A88B DATED JULY 19, 2013 AND STANDARD PLAN A88B DATED MAY 20, 2011 - PAGE 122 OF THE STANDARD PLANS BOOK DATED 2010.

REVISED STANDARD PLAN RSP A88B

2010 REVISED STANDARD PLAN RSP A88B

2-25-14

Dist	COUNTY	ROUTE	POST MILES TOTAL PROJECT	SHEET No.	TOTAL SHEETS
06	Fre	168	R36.0	47	70

REGISTERED CIVIL ENGINEER

July 19, 2013
PLANS APPROVAL DATE

Hector David Cordova No. C41957 Exp. 3-31-14 CIVIL STATE OF CALIFORNIA REGISTERED PROFESSIONAL ENGINEER

THE STATE OF CALIFORNIA OR ITS OFFICERS OR AGENTS SHALL NOT BE RESPONSIBLE FOR THE ACCURACY OR COMPLETENESS OF SCANNED COPIES OF THIS PLAN SHEET.

TO ACCOMPANY PLANS DATED 1-12-15

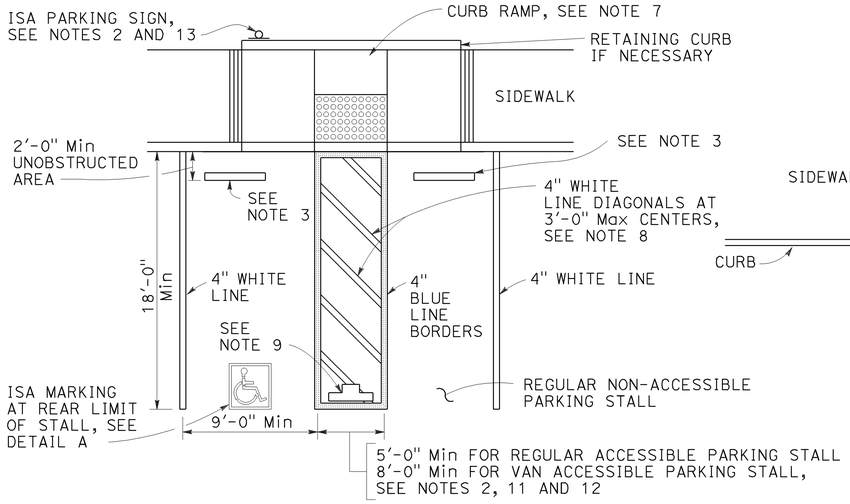

SINGLE PARKING STALL

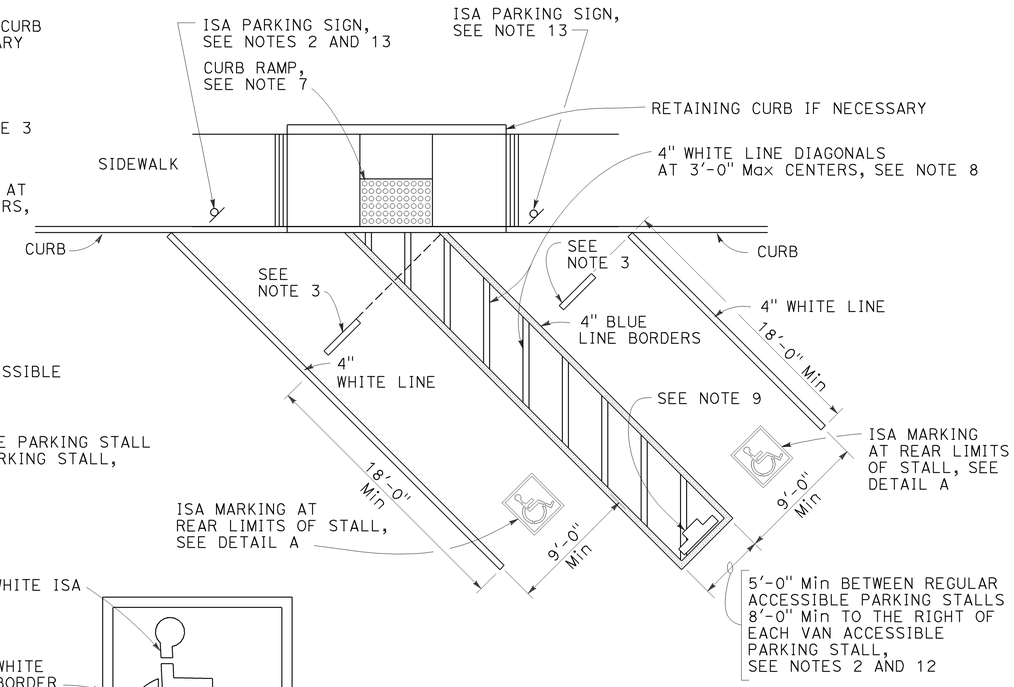

DIAGONAL DOUBLE PARKING STALLS

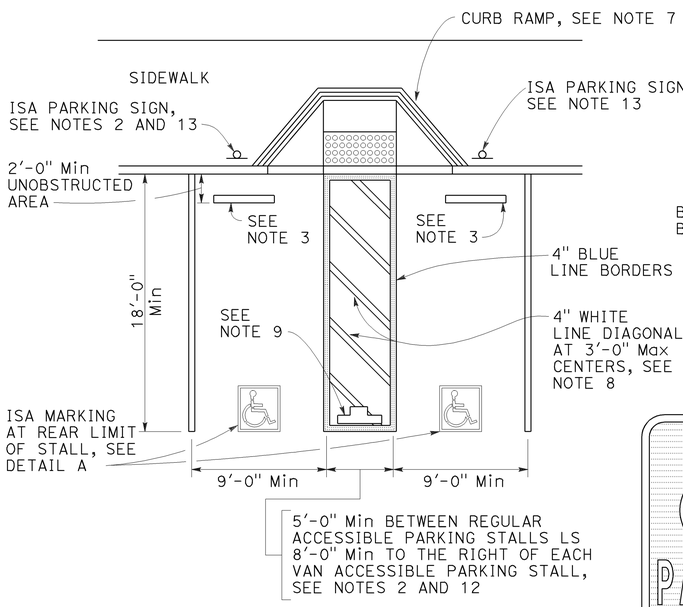

DOUBLE PARKING STALL

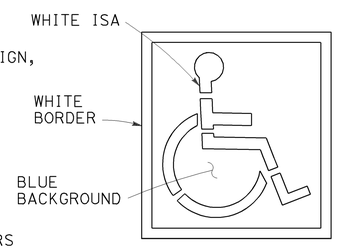

ISA MARKING
See Revised Std Plan RSP A24C

DETAIL A

TABLE A

TOTAL NUMBER OF PARKING SPACES PROVIDED IN PARKING FACILITY	MINIMUM NUMBER OF REQUIRED ACCESSIBLE PARKING SPACES
1-25	1
26-50	2
51-75	3
76-100	4
101-150	5
151-200	6
201-300	7
301-400	8
401-500	9
501-1000	2 PERCENT OF TOTAL
1001 AND OVER	20 PLUS 1 FOR EACH 100 OR FRACTION THEREOF OVER 1000

SIGN R99 (CA)

SIGN R99C (CA)
See Note 6

PLAQUE R99B (CA)

SIGN R99 (CA) with PLAQUE R99B (CA)
See Note 6

SIGN R100B (CA)
See Note 10

SIGN R7-8b
See Notes 2 and 6

OFF-STREET PARKING SIGNS
(Parking lot or garage)
See Note 6

NOTES:

1. Accessible parking spaces serving a particular building shall be located on the shortest accessible route of travel from adjacent parking to an accessible entrance. In parking facilities that do not serve a particular building, accessible parking shall be located on the shortest accessible route of travel to an accessible pedestrian entrance of the parking facility.
2. One in every six accessible off-street parking stalls, but not less than one, shall be served by an accessible aisle of 8'-0" minimum width and shall be signed van accessible. The R7-8b sign shall be mounted below the R99B (CA) plaque or the R99C (CA) sign.
3. In each parking stall, a curb or parking bumper shall be provided if required to prevent encroachment of vehicles over the required width of walkways. Parking stalls shall be so located that persons with disabilities are not compelled to wheel or walk behind parked vehicles other than their own. For more parking bumper requirements, see the Special Provisions.
4. Parking spaces and access aisles shall be level with surface slopes not exceeding 1.5% in all directions.
5. Table A shall be used to determine the required number of accessible parking stalls in each parking lot or garage.
6. Where Plaque R99B (CA), Sign R99C (CA) or Sign R7-8b are installed, the bottom of the sign or plaque panel shall be a minimum of 7'-0" above the surrounding surface.
7. Curb ramps shall conform to the details shown on Revised Standard Plan RSP A88A.
8. Blue paint, instead of white may be used for marking accessibility aisles in areas where snow may cause white markings to not be visible.
9. The words "NO PARKING", shall be painted in white letters no less than 1'-0" high and located so that it is visible to traffic enforcement officials. See Revised Standard Plan RSP A90B for details of the "NO PARKING" pavement marking.
10. A R100B (CA) sign shall be posted in a conspicuous place at each entrance to off-street parking facilities or immediately adjacent to and visible from each stall. The sign shall include the address where the towed vehicle may be reclaimed and the telephone number of the local traffic law enforcement agency.
11. Where a single (non-van) accessible parking space is provided, the loading and unloading access aisle shall be on the passenger side of the vehicle as the vehicle is going forward into the parking space.
12. Where a van accessible parking space is provided, the loading and unloading access aisle shall be 8'-0" wide minimum, and shall be on the passenger side of the vehicle as the vehicle is going forward into the parking space.
13. Accessible Parking Only Sign shall be Sign R99C (CA) or Sign R99 (CA) with Plaque R99B (CA).

LEGEND

ISA = International Symbol of Accessibility

STATE OF CALIFORNIA
DEPARTMENT OF TRANSPORTATION

ACCESSIBLE PARKING OFF-STREET

NO SCALE

RSP A90A DATED JULY 19, 2013 SUPERSEDES STANDARD PLAN A90A
DATED MAY 20, 2011 - PAGE 123 OF THE STANDARD PLANS BOOK DATED 2010.

REVISED STANDARD PLAN RSP A90A

2010 REVISED STANDARD PLAN RSP A90A

7-8-13

TO ACCOMPANY PLANS DATED 1-12-15

Dist	COUNTY	ROUTE	POST MILES TOTAL PROJECT	SHEET No.	TOTAL SHEETS
06	Fre	168	R36.0	48	70

REGISTERED CIVIL ENGINEER

October 19, 2012
PLANS APPROVAL DATE

REGISTERED PROFESSIONAL ENGINEER Glenn DeCou No. C34547 Exp. 9-30-13 CIVIL STATE OF CALIFORNIA

THE STATE OF CALIFORNIA OR ITS OFFICERS OR AGENTS SHALL NOT BE RESPONSIBLE FOR THE ACCURACY OR COMPLETENESS OF SCANNED COPIES OF THIS PLAN SHEET.

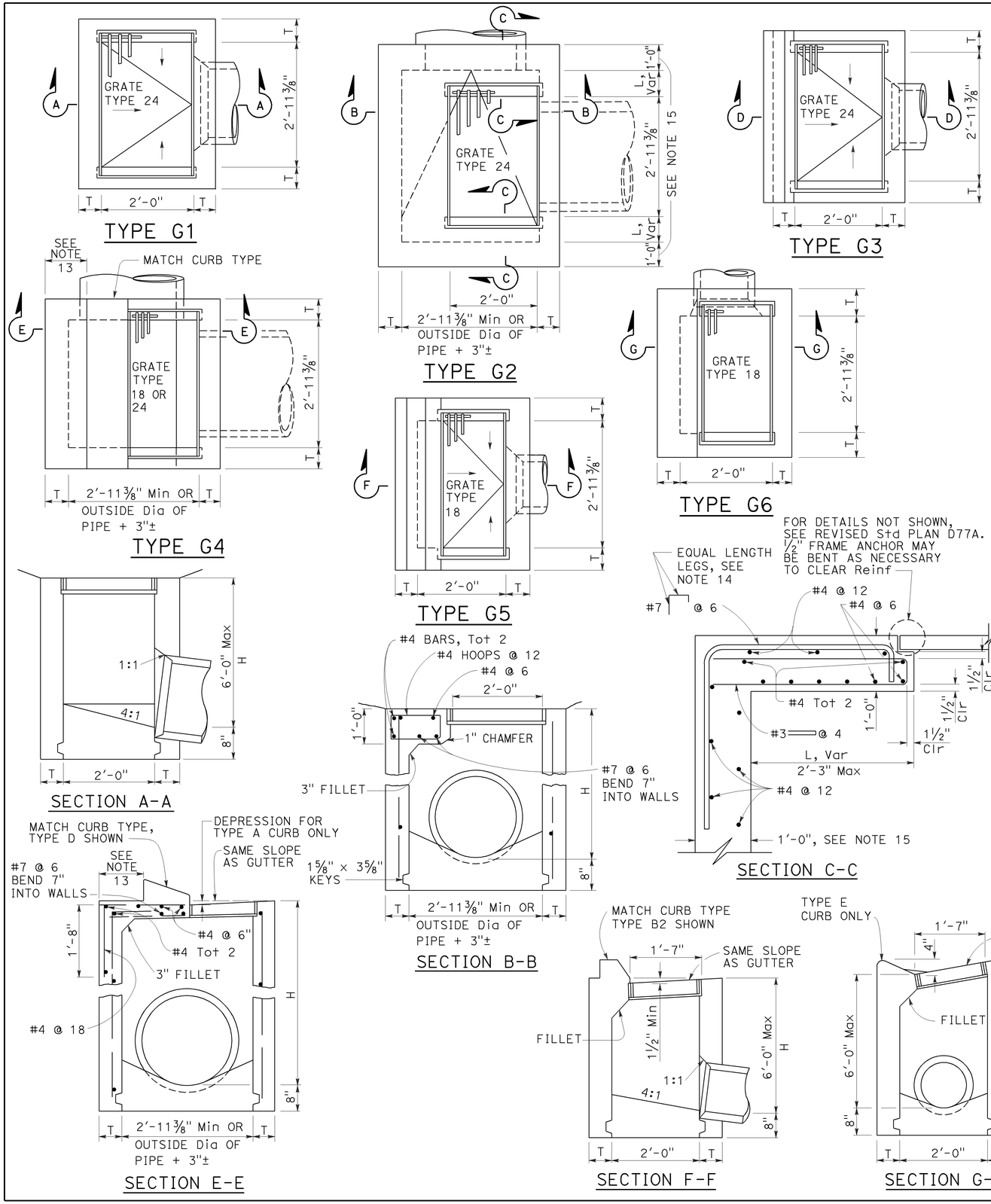

NOTES:

1. "H" is the difference in elevation between the outlet pipe flow line and the normal gutter grade line undepressed.
2. For "T" wall thickness, see Table A below.
3. Wall reinforcing not required when "H" is 8'-0" or less and the unsupported width or length is 7'-0" or less. Walls exceeding these limits shall be reinforced with #4 bars @ 1'-6" ± centers placed 1½" clear to inside of box unless otherwise shown.
4. Inlet bottom reinforcing not required. See Standard Plan D74C for alternative reinforced bottom and alternative half round bottom.
5. Steps-None required where "H" is less than 2'-6". Where "H" is 2'-6" or more, install steps with lowest rung 1'-0" above the floor and highest rung not more than 6" below top of inlet. The distance between steps shall not exceed 1'-0" and shall be uniform throughout the length of the wall. Place steps in the wall without an opening. Steps inserts may be substituted for the bar steps. Step inserts shall comply with State Industrial Safety requirements. See Standard Plan D74C for step details.
6. Details shown apply to both metal and concrete pipe.
7. Pipe(s) can be placed in any wall.
8. Curb section shall match adjacent curb.
9. Basin floors shall have wood trowel finish and a minimum slope of 12:3 from all directions toward outlet pipe.
10. Set inlet so that grate bars are parallel to direction of principal surface flow.
11. See Revised Standard Plans D77A and D77B for grate and frame details and weights of miscellaneous iron and steel.
12. See Standard Plan D78A for gutter depression details.
13. This dimenison will vary with different grates, curbs types, box width and wall thickness.
14. Bar may be rotated as necessary to clear opening. Where "L" is 6" or less, bar may be omitted.
15. Where "L" is 6" or less, wall thickness shall be as shown in Table A.
16. Cast-in-place inlets to be formed around all pipes/stubs intersecting the inlet, and concrete poured in one continuous operation. Precast inlets shall have mortared connections conforming to details for Type GCP Inlet shown on Standard Plan D75B. See Standard Specifications for mortar composition.

TABLE A

CONCRETE QUANTITIES				
TYPE	H=3'-0" TO 8'-0" (T=6")		H=8'-1" TO 20'-0" (T=8")	
	H=3'-0" (CY)	ADDITIONAL PCC PER FOOT (CY)	H=8'-1" (CY)	ADDITIONAL PCC PER FOOT (CY)
G-1	0.95	0.220	See Note A	SEE NOTE A
G-2*	1.31	0.255	3.50	0.357
G-3	1.03	0.220	See Note A	SEE NOTE A
G-4* (TYPE 24)	1.27	0.255	3.48	0.357
G-4* (TYPE 18)	1.30	0.255	3.50	0.357
G-5	1.02	0.220	SEE NOTE A	SEE NOTE A
G-6	1.04	0.220	SEE NOTE A	SEE NOTE A

TABLE BASED ON 8" FLOOR SLAB. NO DEDUCTIONS ARE TO BE MADE TO THESE QUANTITIES BECAUSE OF PIPE OPENINGS, DIFFERENT FLOOR ALTERNATIVES OR DIFFERENT CURB TYPES. * QUANTITIES FOR TYPE G-2 AND G-4 INLETS BASED ON THE MINIMUM INTERIOR DIMENSIONS.

NOTE A:

Maximum allowable height 6'-0".

STATE OF CALIFORNIA
DEPARTMENT OF TRANSPORTATION

DRAINAGE INLETS

NO SCALE

RSP D73 DATED OCTOBER 19, 2012 SUPERSEDES STANDARD PLAN D73 DATED MAY 20, 2011 - PAGE 156 OF THE STANDARD PLANS BOOK DATED 2010.

REVISED STANDARD PLAN RSP D73

2010 REVISED STANDARD PLAN RSP D73

7-19-12

Dist	COUNTY	ROUTE	POST MILES TOTAL PROJECT	SHEET No.	TOTAL SHEETS
06	Fre	168	R36.0	49	70

Raymond Don Tsztoo
REGISTERED CIVIL ENGINEER

April 19, 2013
PLANS APPROVAL DATE

REGISTERED PROFESSIONAL ENGINEER Raymond Don Tsztoo No. C37332 Exp. 6-30-14 CIVIL STATE OF CALIFORNIA

THE STATE OF CALIFORNIA OR ITS OFFICERS OR AGENTS SHALL NOT BE RESPONSIBLE FOR THE ACCURACY OR COMPLETENESS OF SCANNED COPIES OF THIS PLAN SHEET.

TO ACCOMPANY PLANS DATED 1-12-15

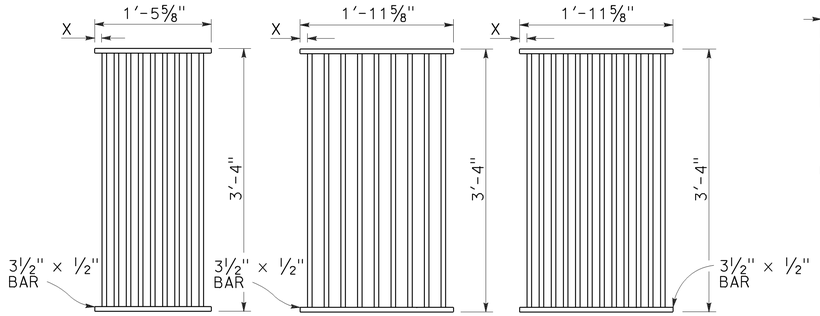

TYPE 18-9

1⅜" Clear spacing. Use within the roadbed on highways where bicycles and pedestrians are excluded.

TYPE 24-9

2" Clear spacing. Use in locations off the roadbed on all types of highways.

TYPE 24-12

1⅜" Clear spacing. Use within the roadbed on highways where bicycles and pedestrians are excluded.

RECTANGULAR GRATE DETAILS

(See table below)

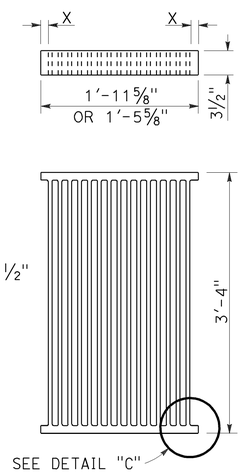

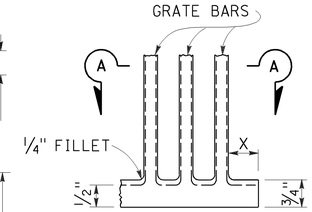

DETAIL "C"

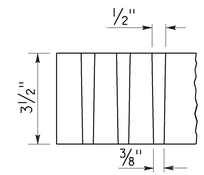

SECTION A-A

ALTERNATIVE CAST DUCTILE IRON GRATE OR CAST CARBON STEEL GRATE

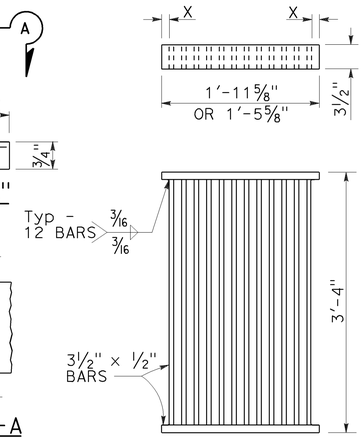

ALTERNATIVE WELDED GRATE

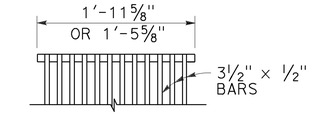

CAST END BLOCK

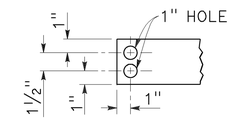

END OF BAR

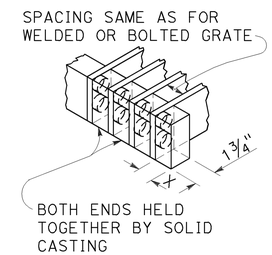

ALTERNATIVE CAST DUCTILE IRON OR CAST CARBON STEEL END BLOCK GRATE

NOTES:

1. Grate type numbers refer to approximate width of grate in inches and number of bars, respectively.
2. Contractor has the option of using cast ductile iron, cast carbon steel, welded, bolted, or cast end block grate.
3. Rounded top of bars optional on all grates.
4. Pipe inlets with a grate shall be placed so that bars parallel direction of principle surface flow.
5. Complete joint penetration butt welds may be substituted for the fillet welds on all anchors.
6. Standard square, hexagon, round or equivalent headed anchors may be substituted for the right angle hooks on the anchors shown on this plan.
7. Grate and frame weights are based on welded grates (weights of face angles, steps, protection bars, etc. are not included).
8. Connect chain to grate and frame only at locations shown on the plans. When chain is required, do not use cast ductile iron grates.

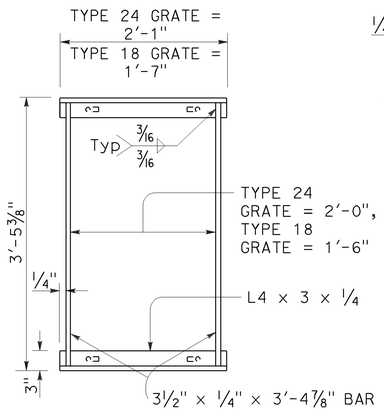

TYPICAL FRAME

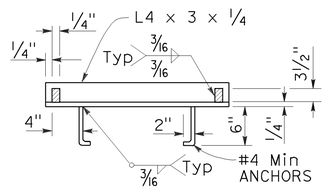

CROSS SECTION

(Thru frame)

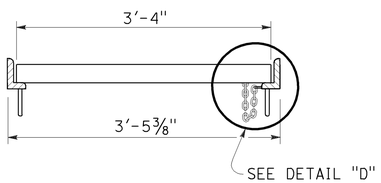

LONGITUDINAL SECTION

(Thru frame and grate)

RECTANGULAR FRAME DETAILS

(For all rectangular grates)

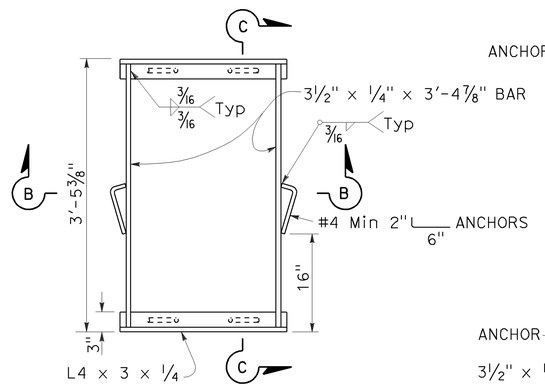

TYPICAL FRAME

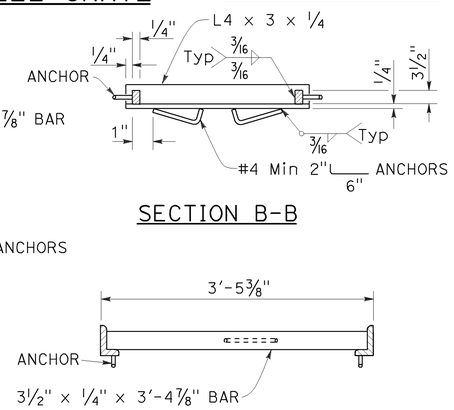

SECTION B-B

SECTION C-C

ALTERNATIVE ANCHOR FOR RECTANGULAR FRAME

(For details not shown, See Rectangular Frame Details)

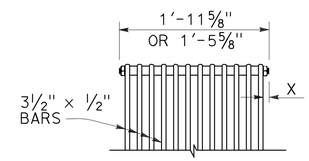

BOLTED END BLOCK

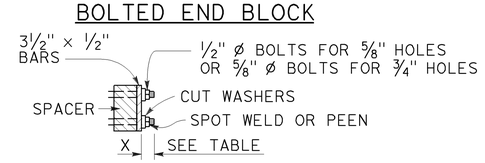

BOLTING DETAIL

ALTERNATIVE BOLTED GRATE

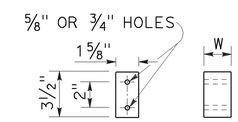

BAR SPACER

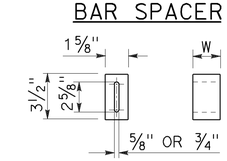

ALTERNATIVE SPACER

W = 1⅜" or 2"

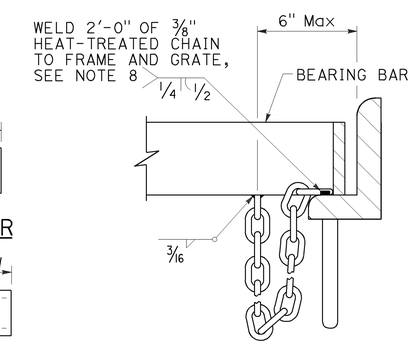

DETAIL "D"

(Steel grates only)

GRATE BAR SPACING TABLE

TYPE	No. OF BARS	CLEAR BAR SPACING	X
18-9	9	1⅜"	1 1/16"
24-9	9	2"	1 9/16"
24-12	12	1⅜"	1¼"

INLET TYPE	COVER TYPE	WEIGHT LB
OS	PLATE	174
OL-7	PLATE	170
OL-10	PLATE	170
OL-14	PLATE	170
OL-21	PLATE	170
OCP	PLATE	112
OCPI	PLATE	112
OCPI	REDWOOD	42
OMP	PLATE	177
OMPI	PLATE	177

INLET TYPE	GRATE TYPE	No. OF GRATES	WEIGHT LB
GDO	24-12	2	634
GOL-7	24-12	1	326
GOL-10	24-12	1	326
GO,G1,G2,G3,G4 (TYPE 24)	24-9	1	263
	24-12	1	326
G4 (TYPE 18),G5,G6	18-9	1	249
GT1	18-9	2	498
GT2	18-9	2	498
GT3	24-12	2	652
GT4	24-12	2	652
TRASH RACK			22
GRATE CHAIN			3

BASIS FOR Misc IRON & STEEL FINAL PAY WEIGHTS FOR DRAINAGE INLETS

(See Note 7)

STATE OF CALIFORNIA
DEPARTMENT OF TRANSPORTATION

GRATE DETAILS No. 1

NO SCALE

RSP D77A DATED APRIL 19, 2013 SUPERSEDES RSP D77A DATED JULY 20, 2012 AND STANDARD PLAN D77A DATED MAY 20, 2011 - PAGE 164 OF THE STANDARD PLANS BOOK DATED 2010.

REVISED STANDARD PLAN RSP D77A

2010 REVISED STANDARD PLAN RSP D77A

4-4-13

Dist	COUNTY	ROUTE	POST MILES TOTAL PROJECT	SHEET No.	TOTAL SHEETS
06	Fre	168	R36.0	50	70

Gregory A. Balzer
LICENSED LANDSCAPE ARCHITECT

July 19, 2013
PLANS APPROVAL DATE

LICENSED LANDSCAPE ARCHITECT
Gregory A. Balzer 2516
06-28-13
Renewal Date
2-28-15
Renewal Date
7-19-13
Date
STATE OF CALIFORNIA

THE STATE OF CALIFORNIA OR ITS OFFICERS OR AGENTS SHALL NOT BE RESPONSIBLE FOR THE ACCURACY OR COMPLETENESS OF SCANNED COPIES OF THIS PLAN SHEET.

TO ACCOMPANY PLANS DATED 1-12-15

A

AB	AGGREGATE BASE
ABS	ACRYLONITRILE-BUTADIENE-STYRENE
AC	ASPHALT CONCRETE
ACC	ARMOR-CLAD CONDUCTORS
Adj	ADJACENT/ADJUSTABLE
AIC	AUXILIARY IRRIGATION CONTROLLER
Alt	ALTERNATIVE
AMEND	AMENDMENT
ARV	AIR RELEASE VALVE
AUTO	AUTOMATIC
AUX	AUXILIARY
AVB	ATMOSPHERIC VACUUM BREAKER

B

B&B	BALLED AND BURLAPPED
B/B	BRASS/BRONZE
B/B/PL	BRASS/BRONZE/PLASTIC
B/PL	BRASS/PLASTIC
BFM	BONDED FIBER MATRIX
Bit Ctd	BITUMINOUS COATED
BP	BOOSTER PUMP
BPA	BACKFLOW PREVENTER ASSEMBLY
BPE	BACKFLOW PREVENTER ENCLOSURE
BV	BALL VALVE

C

C	CONDUIT
CAP	CORRUGATED ALUMINUM PIPE
CARV	COMBINATION AIR RELEASE VALVE
CB	COUPLING BAND
CCA	CAM COUPLER ASSEMBLY
CEC	CONTROLLER ENCLOSURE CABINET
CHDPE	CORRUGATED HIGH DENSITY POLYETHYLENE
CL	CHAIN LINK
CNC	CONTROL AND NEUTRAL CONDUCTORS
Conc	CONCRETE
CP	COPPER PIPE
CS	COMPOST SOCK
CSP	CORRUGATED STEEL PIPE
CST	CENTER STRIP
CV	CHECK VALVE

D

Dia	DIAMETER
DIP	DUCTILE IRON PIPE
DIT	DRIP IRRIGATION TUBING
DG	DECOMPOSED GRANITE
DN	DIAMETER NOMINAL
DVA	DRIP VALVE ASSEMBLY

E

EC	EROSION CONTROL
ECTC	EROSION CONTROL TECHNOLOGY COUNCIL
Elect	ELECTRIC/ELECTRICAL
Elev	ELEVATION
ELL	ELBOW
ENCL	ENCLOSURE
EP	EDGE OF PAVEMENT
ES	EDGE OF SHOULDER
EST	END STRIP
ESTB	ESTABLISHMENT
ETW	EDGE OF TRAVELED WAY

F

F	FULL CIRCLE
F/P	FULL/PART CIRCLE
FCV	FLOW CONTROL VALVE
FERT	FERTILIZER
FG	FINISHED GRADE
FH	FLEXIBLE HOSE
FIPT	FEMALE IRON PIPE THREAD
FIS	FERTILIZER INJECTOR SYSTEM
FL	FLOW LINE
FR	FIBER ROLL
FS	FLOW SENSOR
FSC	FLOW SENSOR CABLE
FV	FLUSH VALVE

G

Galv	GALVANIZED
GARV	GARDEN VALVE
GARVA	GARDEN VALVE ASSEMBLY
GM	GRAVEL MULCH
GPH	GALLONS PER HOUR
GPM	GALLONS PER MINUTE
GSP	GALVANIZED STEEL PIPE
GV	GATE VALVE

H

H	HALF CIRCLE
HDPE	HIGH DENSITY POLYETHYLENE
HP	HORSEPOWER/HINGE POINT
HPL	HIGH PRESSURE LINE
Hwy	HIGHWAY

I

IC	IRRIGATION CONTROLLER
ICC	IRRIGATION CONTROLLER(S) IN CONTROLLER ENCLOSURE CABINET
ID	INSIDE DIAMETER
IFS	IRRIGATION FILTRATION SYSTEM
IPS	IRON PIPE SIZE
IPT	IRON PIPE THREAD
Irr	IRRIGATION

L

L	LENGTH

M

Max	MAXIMUM
MBGR	METAL BEAM GUARD RAILING
MCV	MANUAL CONTROL VALVE
MIC	MASTER IRRIGATION CONTROLLER
Min	MINIMUM
MIPT	MALE IRON PIPE THREAD
Misc	MISCELLANEOUS
Mtl	MATERIAL
MVP	MAINTENANCE VEHICLE PULLOUT

N

NCN	NO COMMON NAME
NL	NOZZLE LINE
No.	NUMBER
NPT	NATIONAL PIPE THREAD

O

O/C	ON CENTER
OD	OUTSIDE DIAMETER
OL	OVERLAP

P

P	PART CIRCLE
PB	PULL BOX
PCC	PORTLAND CEMENT CONCRETE
PE	POLYETHYLENE
Pkt	PACKET
PL	PLASTIC
PLS	PURE LIVE SEED
PLT	PLANT/PLANTING
PLT ESTB	PLANT ESTABLISHMENT
PM	POST MILE
PR	PRESSURE RATED
PRLV	PRESSURE RELIEF VALVE
PRV	PRESSURE REGULATING VALVE
PVC	POLYVINYL CHLORIDE
Pvmt	PAVEMENT

Q

Q	QUARTER CIRCLE
QCV	QUICK COUPLING VALVE

R

R	RADIUS
RCP	REINFORCED CONCRETE PIPE
RCV	REMOTE CONTROL VALVE
RCVM	REMOTE CONTROL VALVE (MASTER)
RCVMF	REMOTE CONTROL VALVE (MASTER) W/FLOW SENSOR
RCVP	REMOTE CONTROL VALVE W/PRESSURE REGULATOR
RCW	RECYCLED WATER
RECP	ROLLED EROSION CONTROL PRODUCT
REQ	REQUIRED
RICS	REMOTE IRRIGATION CONTROL SYSTEM
R/W	RIGHT OF WAY

S

S	SLIP
SCH	SCHEDULE
SF	STATE-FURNISHED
Shld	SHOULDER
Sq	SQUARE
SST	SIDE STRIP
Sta	STATION
Std	STANDARD
SW	SIDEWALK/SOUND WALL

T

T	THIRD CIRCLE/THREAD
TLS	TRUCK LOADING STANDPIPE
TQ	THREE QUARTER CIRCLE
TRM	TURF REINFORCEMENT MAT
TT	TWO-THIRDS CIRCLE
TWSA	TREE WELL SPRINKLER ASSEMBLY
Typ	TYPICAL

U

UG	UNDERGROUND

W

W	WIDTH
W/	WITH
WM	WATER METER
WS	WYE STRAINER
WSA	WYE STRAINER ASSEMBLY
WSP	WELDED STEEL PIPE
WWM	WELDED WIRE MESH

NOTE:

For additional abbreviations, see Standard Plans A10A and A10B.

STATE OF CALIFORNIA
DEPARTMENT OF TRANSPORTATION

LANDSCAPE AND EROSION CONTROL ABBREVIATIONS

NO SCALE

RSP H1 DATED JULY 19, 2013 SUPERSEDES STANDARD PLAN H1 DATED MAY 20, 2011 - PAGE 218 OF THE STANDARD PLANS BOOK DATED 2010.

REVISED STANDARD PLAN RSP H1

2010 REVISED STANDARD PLAN RSP H1

6-28-13

Dist	COUNTY	ROUTE	POST MILES TOTAL PROJECT	SHEET No.	TOTAL SHEETS
06	Fre	168	R36.0	51	70

REGISTERED CIVIL ENGINEER

July 19, 2013
PLANS APPROVAL DATE

REGISTERED PROFESSIONAL ENGINEER
Gurinderpal Bhullar
No. C48815
Exp. 9-30-14
CIVIL
STATE OF CALIFORNIA

THE STATE OF CALIFORNIA OR ITS OFFICERS OR AGENTS SHALL NOT BE RESPONSIBLE FOR THE ACCURACY OR COMPLETENESS OF SCANNED COPIES OF THIS PLAN SHEET.

TO ACCOMPANY PLANS DATED 1-12-15

2010 REVISED STANDARD PLAN RSP T9

TABLE 1

TAPER LENGTH CRITERIA AND CHANNELIZING DEVICE SPACING

SPEED (S)	MINIMUM TAPER LENGTH * FOR WIDTH OF OFFSET 12 FEET (W)				MAXIMUM CHANNELIZING DEVICE SPACING		
					X	Y	Z **
	TANGENT 2L	MERGING L	SHIFTING L/2	SHOULDER L/3	TAPER	TANGENT	CONFLICT
mph	ft	ft	ft	ft	ft	ft	ft
20	160	80	40	27	20	40	10
25	250	125	63	42	25	50	12
30	360	180	90	60	30	60	15
35	490	245	123	82	35	70	17
40	640	320	160	107	40	80	20
45	1080	540	270	180	45	90	22
50	1200	600	300	200	50	100	25
55	1320	660	330	220	55	110	27
60	1440	720	360	240	60	120	30
65	1560	780	390	260	65	130	32
70	1680	840	420	280	70	140	35

* - For other offsets, use the following merging taper length formula for L:
For speed of 40 mph or less, $L = WS^2/60$
For speed of 45 mph or more, $L = WS$

Where: L = Taper length in feet
W = Width of offset in feet
S = Posted speed limit, off-peak 85th-percentile speed prior to work starting, or the anticipated operating speed in mph

** - Use for taper and tangent sections where there are no pavement markings or where there is a conflict between existing pavement markings and channelizers (CA).

TABLE 2

LONGITUDINAL BUFFER SPACE AND FLAGGER STATION SPACING

SPEED *	Min D **	DOWNGRADE Min D ***		
		-3%	-6%	-9%
mph	ft	ft	ft	ft
20	115	116	120	126
25	155	158	165	173
30	200	205	215	227
35	250	257	271	287
40	305	315	333	354
45	360	378	400	427
50	425	446	474	507
55	495	520	553	593
60	570	598	638	686
65	645	682	728	785
70	730	771	825	891

* - Speed is posted speed limit, off-peak 85th-percentile speed prior to work starting, or the anticipated operating speed in mph

** - Longitudinal buffer space or flagger station spacing

*** - Use on sustained downgrade steeper than -3 percent and longer than 1 mile.

TABLE 3

ADVANCE WARNING SIGN SPACING

ROAD TYPE	DISTANCE BETWEEN SIGNS *		
	A	B	C
	ft	ft	ft
URBAN - 25 mph OR LESS	100	100	100
URBAN - MORE THAN 25 mph TO 40 mph	250	250	250
URBAN - MORE THAN 40 mph	350	350	350
RURAL	500	500	500
EXPRESSWAY / FREEWAY	1000	1500	2640

* - The distances are approximate, are intended for guidance purposes only, and should be applied with engineering judgment. These distances should be adjusted by the Engineer for field conditions, if necessary, by increasing or decreasing the recommmended distances.

STATE OF CALIFORNIA
DEPARTMENT OF TRANSPORTATION

TRAFFIC CONTROL SYSTEM TABLES FOR LANE AND RAMP CLOSURES

NO SCALE

RSP T9 DATED JULY 19, 2013 SUPERSEDES RSP T9 DATED APRIL 19, 2013 THAT SUPPLEMENTS THE STANDARD PLANS BOOK DATED 2010.

REVISED STANDARD PLAN RSP T9

4-30-13

Dist	COUNTY	ROUTE	POST MILES TOTAL PROJECT	SHEET No.	TOTAL SHEETS
06	Fre	168	R36.0	52	70

REGISTERED CIVIL ENGINEER

April 19, 2013
PLANS APPROVAL DATE

REGISTERED PROFESSIONAL ENGINEER Gurinderpal Bhullar No. C48815 Exp. 9-30-14 CIVIL STATE OF CALIFORNIA

THE STATE OF CALIFORNIA OR ITS OFFICERS OR AGENTS SHALL NOT BE RESPONSIBLE FOR THE ACCURACY OR COMPLETENESS OF SCANNED COPIES OF THIS PLAN SHEET.

TO ACCOMPANY PLANS DATED 1-12-15

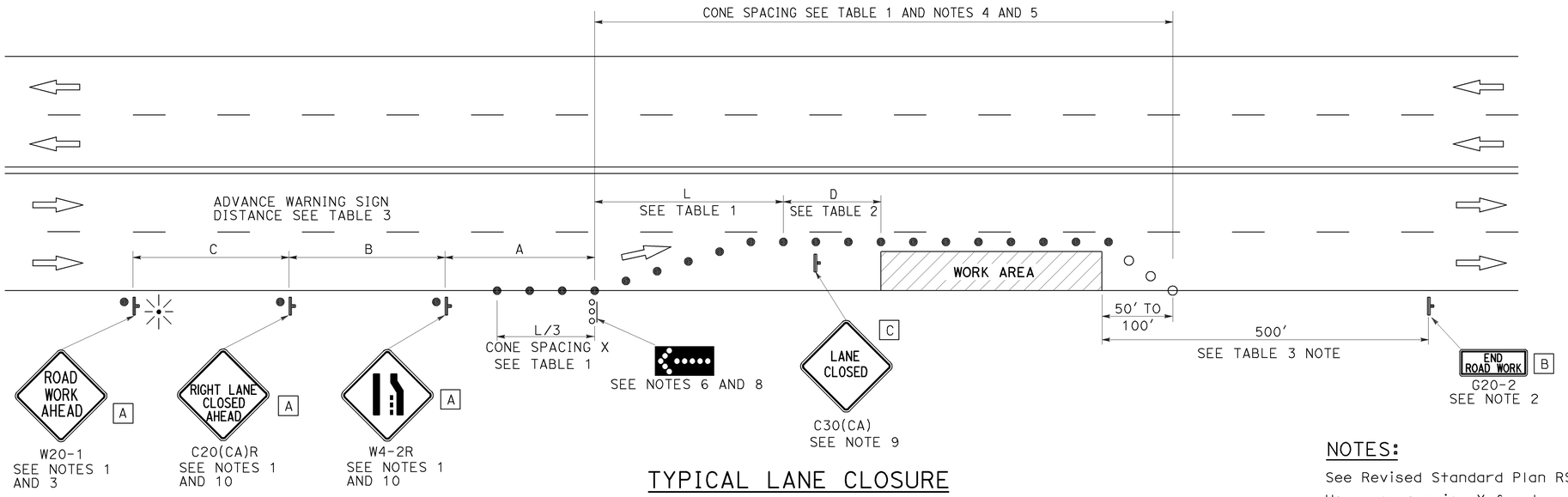

TYPICAL LANE CLOSURE

NOTES:

See Revised Standard Plan RSP T9 for tables.

Use cone spacing X for taper segment, Y for tangent segment or Z for conflict situations, as approriate, per Table 1, unless X, Y, or Z cone spacing is shown on this sheet.

Unless otherwise specified in the special provisions, all temporary warning signs shall have black legend on fluorescent orange background.

California codes are designated by (CA). Otherwise, Federal (MUTCD) codes are shown.

LEGEND

- ● TRAFFIC CONE
- ○ TRAFFIC CONE (OPTIONAL TAPER)
- TEMPORARY TRAFFIC CONTROL SIGN
- FLASHING ARROW SIGN (FAS)
- FAS SUPPORT OR TRAILER
- PORTABLE FLASHING BEACON

SIGN PANEL SIZE (Min)

A	48" x 48"
B	36" x 18"
C	30" x 30"

NOTES:

1. Each advance warning sign shall be equipped with at least two flags for daytime closure. Each flag shall be at least 16" x 16" in size and shall be orange or fluorescent red-orange in color. Flashing beacons shall be placed at the locations indicated for lane closure during hours of darkness.
2. A G20-2 "END ROAD WORK" sign, as appropriate, shall be placed at the end of the lane closure unless the end of work area is obvious, or ends within a larger project's limits.
3. If the W20-1 sign would follow within 2000' of a stationary W20-1 or G20-1 "ROAD WORK NEXT _____ MILES", use a C20(CA) sign for the first advance warning sign.
4. All cones used for lane closures during the hours of darkness shall be fitted with retroreflective bands (or sleeves) as specified in the specifications.
5. Portable delineators, placed at one-half the spacing indicated for traffic cones, may be used instead of cones for daytime closures only.
6. Flashing arrow sign shall be either Type I or Type II.
7. For approach speeds over 50 mph, use the "Traffic Control System for Lane Closure On Freeways And Expressways" plan for lane closure details and requirements.
8. A minimum 1500' of sight distance shall be provided where possible for vehicles approaching the first flashing arrow sign. Lane closures shall not begin at the top of crest vertical curve or on a horizontal curve.
9. Place a C30(CA) sign every 2000' throughout length of lane closure.
10. Median lane closures shall conform to the details as shown except that C20(CA)L and W4-2L signs shall be used.
11. At least one person shall be assigned to provide full time maintenance of traffic control devices for lane closure unless, otherwise directed by the Engineer.

STATE OF CALIFORNIA
DEPARTMENT OF TRANSPORTATION

TRAFFIC CONTROL SYSTEM FOR LANE CLOSURE ON MULTILANE CONVENTIONAL HIGHWAYS

NO SCALE

RSP T11 DATED APRIL 19, 2013 SUPERSEDES STANDARD PLAN T11 DATED MAY 20, 2011 - PAGE 239 OF THE STANDARD PLANS BOOK DATED 2010.

REVISED STANDARD PLAN RSP T11

2010 REVISED STANDARD PLAN RSP T11

4-2-13

Dist	COUNTY	ROUTE	POST MILES TOTAL PROJECT	SHEET No.	TOTAL SHEETS
06	Fre	168	R36.0	53	70

REGISTERED CIVIL ENGINEER

April 20, 2012
PLANS APPROVAL DATE

REGISTERED PROFESSIONAL ENGINEER Gary Wang No. C58298 Exp. 6-30-12 CIVIL STATE OF CALIFORNIA

THE STATE OF CALIFORNIA OR ITS OFFICERS OR AGENTS SHALL NOT BE RESPONSIBLE FOR THE ACCURACY OR COMPLETENESS OF SCANNED COPIES OF THIS PLAN SHEET.

TO ACCOMPANY PLANS DATED 1-12-15

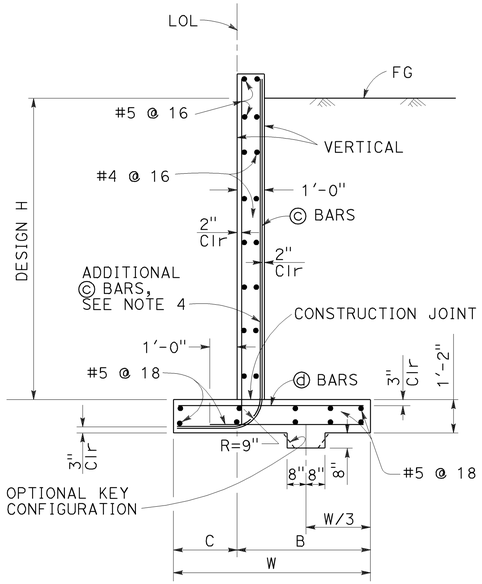

SPREAD FOOTING SECTION

Place concrete in toe against undisturbed material, except as permitted by the Engineer.

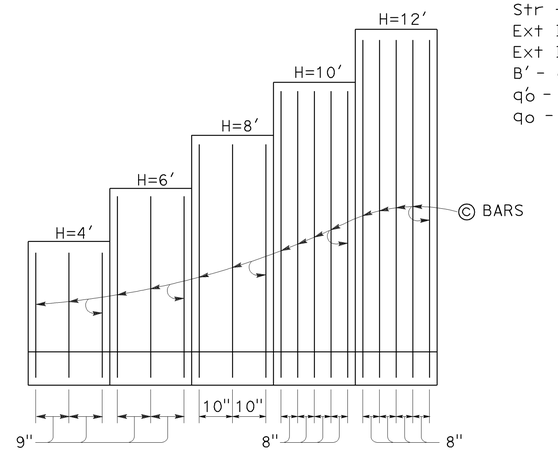

ELEVATION

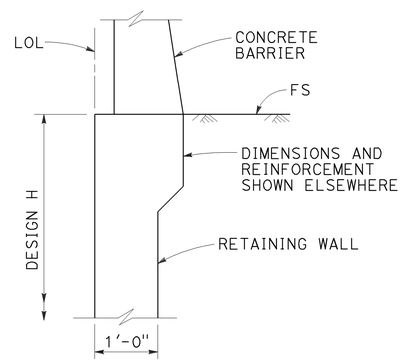

STEM HAUNCH DETAIL

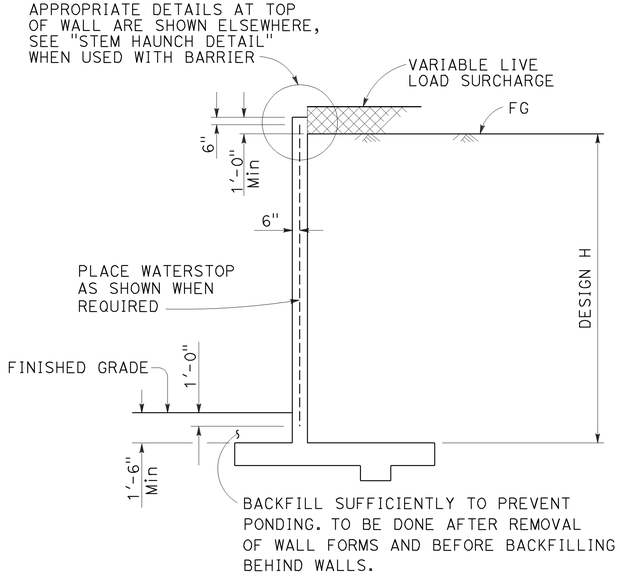

DESIGN SECTION

TABLE OF REINFORCING STEEL, DIMENSIONS AND DATA					
DESIGN H	4'	6'	8'	10'	12'
W	7'-0"	7'-0"	7'-3"	7'-5"	8'-2"
C	2'-3"	2'-3"	2'-3"	2'-5"	2'-7"
B	4'-9"	4'-9"	5'-0"	5'-0"	5'-7"
© BARS	#6 @ 9	#6 @ 9	#7 @ 10	#7 @ 8	#7 @ 8
ⓓ BARS	#5 @ 9	#5 @ 9	#6 @ 10	#7 @ 8	#7 @ 8
Ser: B', q_o'	6.7, 0.8	6.7, 1.0	6.3, 1.3	5.8, 1.6	6.2, 1.9
Str: B', q_o	6.6, 1.6	5.2, 1.7	3.7, 2.2	2.8, 3.3	3.0, 3.9
Ext I: B', q_o	5.6, 0.9	4.8, 1.4	4.1, 2.0	3.1, 3.2	2.7, 4.5
Ext II: B', q_o	2.8, 1.9	2.7, 2.5	2.8, 3.0	2.6, 3.7	3.4, 3.6

SYMBOLS:

Ser - service limit state I
Str - strength limit state I
Ext I - extreme event limit state I
Ext II - extreme event limit state II
B' - effective footing width (ft)
q_o' - net bearing stress (ksf), OG assumed to be FG at toe
q_o - gross uniform bearing stress (ksf)

DESIGN CONDITIONS:

Design H may be exceeded by 6" before going to the next size. Special footing design is required where foundation material is incapable of supporting bearing stress listed in the table.

DESIGN NOTES:

DESIGN: AASHTO LRFD Bridge Design Specifications, 4th Edition with California Amendments

LS: Varied surcharge on level ground surface

DC: Stem Architectural Treatment of thickness up to 6" of concrete (75 psf) considered

CT: 54 kip transverse force applied at He = 32", distributed over 10 feet at the top of wall and 1 : 1 distribution down and outward. Distribution below footing taken no less than 40'.

SEISMIC: $k_h = 0.2$
$k_v = 0.0$

SOIL: $\phi = 34°$
$\gamma = 120$ pcf

REINFORCED CONCRETE: f'c = 3,600 psi
fy = 60,000 psi

LOAD COMBINATIONS AND LIMIT STATES:

Service I	Q = 1.00DC+1.00EV+1.00EH+1.00LS
Strength I	Q = αDC+βEV+ηEH+1.75LS
Extreme I	Q = 1.00DC+1.00EV+1.00EH+1.00EQD+1.00EQE
Extreme II	Q = 1.00DC+1.00EV+1.00EH+1.00CT

Where:

Q:	Force Effects
α:	1.25 or 0.90, Whichever Controls Design
β:	1.35 or 1.00, Whichever Controls Design
η:	1.50 or 0.90, Whichever Controls Design
DC:	Dead Load of Structure Components
EH:	Horizontal Earth Fill Pressure
EV:	Vertical Earth Pressure from Earth Fill Weight
LS:	Live Load Surcharge
EQE:	Seismic Earth Pressure
EQD:	Soil and Structural and Nonstructural Components Inertia
CT:	Vehicular Collision Force

NOTES:

1. For details not shown and drainage notes see RSP B3-5
2. For wall stem joint details see B0-3 3-3 and B0-3 3-4
3. At © bars:
   H ≤ 6', no splices are allowed within 1'-8" above the top of footing.
   H > 6', no splices are allowed within H/4 above the top of footing.
4. Provide #6 @ 8" © bars in addition to tabulated © bars over a distance of 8'-0" measured from all expansion joints, begin wall and end wall location.

STATE OF CALIFORNIA
DEPARTMENT OF TRANSPORTATION

RETAINING WALL TYPE 1A (CASE 1)

NO SCALE

RSP B3-3A DATED APRIL 20, 2012 SUPPLEMENTS THE STANDARD PLANS BOOK DATED 2010.

REVISED STANDARD PLAN RSP B3-3A

2010 REVISED STANDARD PLAN RSP B3-3A

Dist	COUNTY	ROUTE	POST MILES TOTAL PROJECT	SHEET No.	TOTAL SHEETS
06	Fre	168	R36.0	54	70

REGISTERED CIVIL ENGINEER

April 20, 2012
PLANS APPROVAL DATE

REGISTERED PROFESSIONAL ENGINEER Gary Wang No. C58298 Exp. 6-30-12 CIVIL STATE OF CALIFORNIA

THE STATE OF CALIFORNIA OR ITS OFFICERS OR AGENTS SHALL NOT BE RESPONSIBLE FOR THE ACCURACY OR COMPLETENESS OF SCANNED COPIES OF THIS PLAN SHEET.

TO ACCOMPANY PLANS DATED 1-12-15

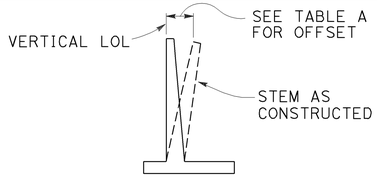

APPROXIMATE WALL OFFSET VALUES

Values for offseting forms to be determined by the Engineer.

TABLE A

H	OFFSET
4'-12'	H/200
14'-16'	H/160
18'-20'	H/140
22'-24'	H/130
26'-36'	2½"

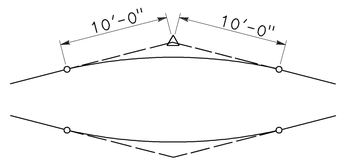

20'-0" VC AT TOP OF WALL SLOPE CHANGE

Where shown on the plans

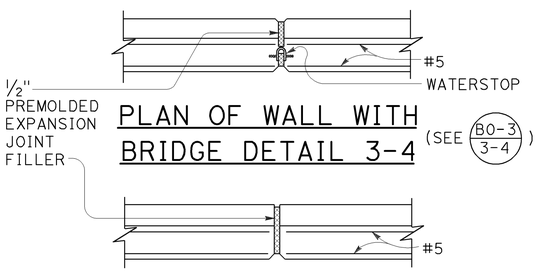

PLAN OF WALL WITH BRIDGE DETAIL 3-4

(SEE B0-3 / 3-4)

PLAN OF WALL WITH EXPANSION JOINT ONLY

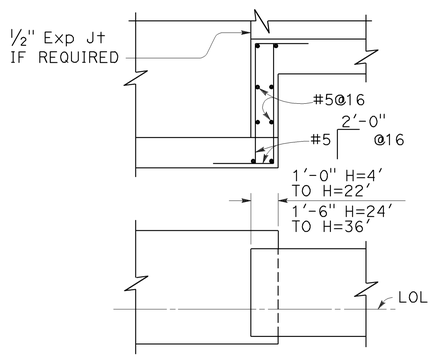

FOOTING STEP

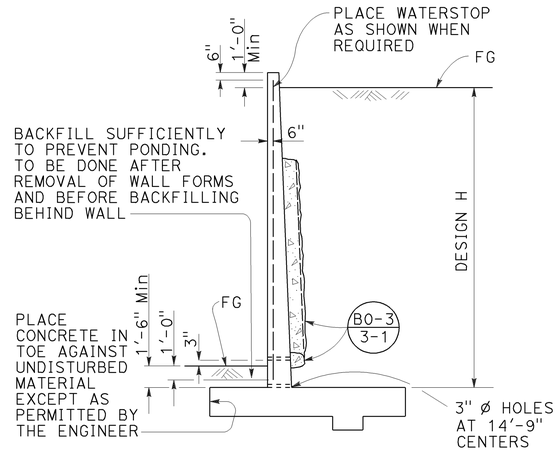

DESIGN AND DRAINAGE

DESIGN CONDITIONS:

Design "H" may be exceeded by 6" before going to the next size. Special footing design is required where foundation material is incapable of supporting bearing stress listed in table

Return wall not required unless shown elsewhere

DESIGN NOTES:

DESIGN: AASHTO LRFD Bridge Design Specifications, 4th edition with California Amendments

LIVE LOAD: Surcharge on level ground surface

SOIL: ϕ = 34°
γ = 120 pcf

REINFORCED CONCRETE: fy = 60,000 psi
fc' = 3,600 psi

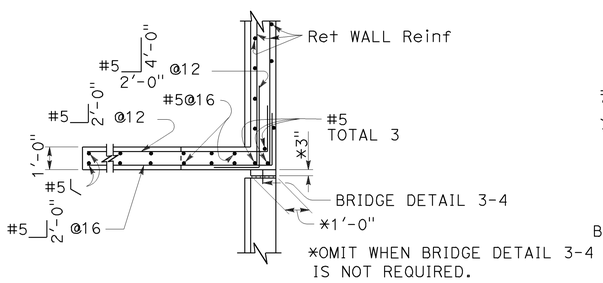

PLAN
(For return wall Type "A")

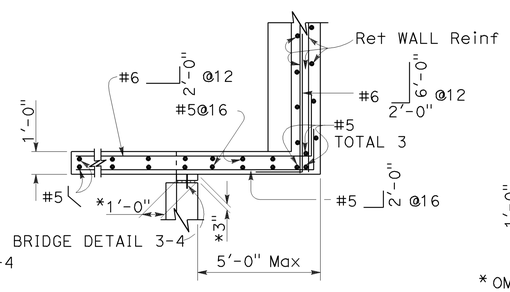

PLAN
(For return wall Type "B")

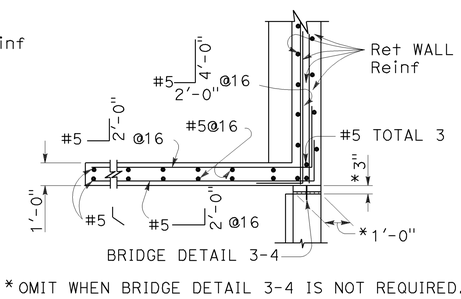

PLAN
(For return wall Type "C")

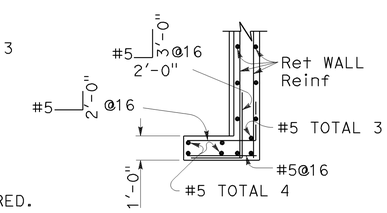

PLAN
(For return wall Type "D")

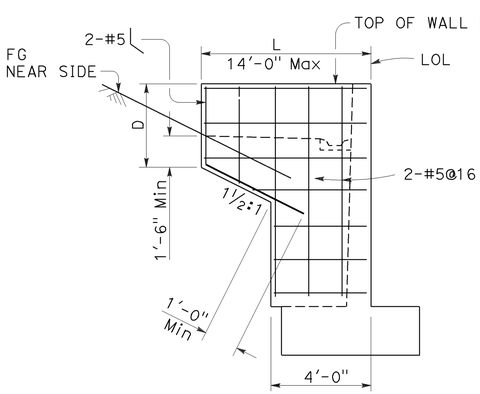

ELEVATION
RETURN WALL TYPE "A"
Use where H=8' or less

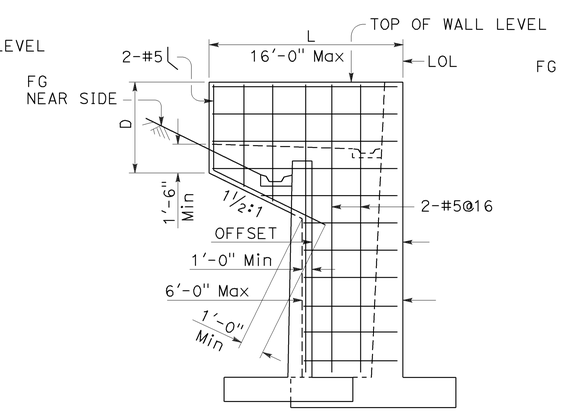

ELEVATION
RETURN WALL TYPE "B"
Use where H=10' or more on offset walls

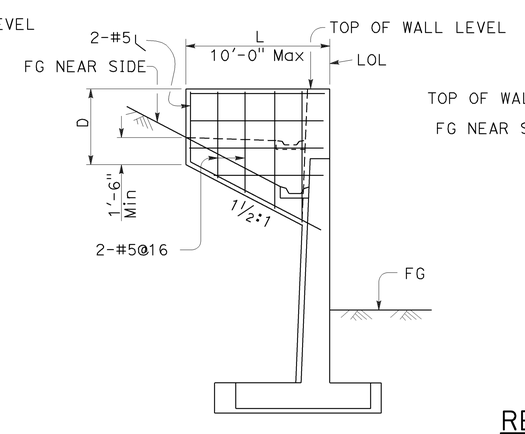

ELEVATION
RETURN WALL TYPE "C"
Use where H=10' or more on straight walls

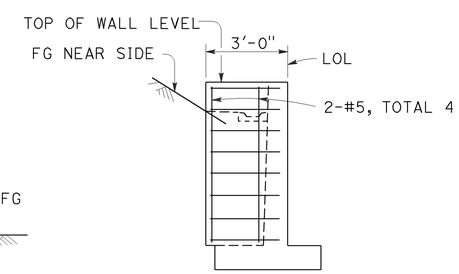

ELEVATION
RETURN WALL TYPE "D"
Use where H=6' or less

STATE OF CALIFORNIA
DEPARTMENT OF TRANSPORTATION

RETAINING WALL DETAILS No. 1

NO SCALE

RSP B3-5 DATED APRIL 20, 2012 SUPERSEDES STANDARD PLAN B3-5
DATED MAY 20, 2011 - PAGE 277 OF THE STANDARD PLANS BOOK DATED 2010.

REVISED STANDARD PLAN RSP B3-5

2010 REVISED STANDARD PLAN RSP B3-5

ARCHITECTURAL ABBREVIATIONS

&	AND
∟	ANGLE
℄	CENTER LINE
∅	DIAMETER OR ROUND
□	SQUARE
d	PENNY
°	DEGREE
A/C	AIR CONDITIONING
AC	ASPHALT CONCRETE
AB	ANCHOR BOLT
ABV	ABOVE
ACOUS	ACOUSTICAL
ADA	AMERICANS WITH DISABILITIES ACT
ADJ	ADJUSTABLE
ALT	ALTERNATE
ALUM	ALUMINUM
APA	AMERICAN PLYWOOD ASSOCIATION
ARCH	ARCHITECTURAL, ARCHITECT
ASPH	ASPHALT
BD	BOARD
BIT	BITUMINOUS
BLDG	BUILDING
BLK	BLOCK
BLKG	BLOCKING
BM	BEAM
BN	BOUNDARY NAILING
BOT	BOTTOM
BR	BRIDGE
BTWN	BETWEEN
BUR	BUILT-UP-ROOFING
CJ	CONTROL JOINT
CL	CHAIN LINK
CAB	CABINET
CB	CATCH BASIN
CEM	CEMENT
CER	CERAMIC
CIP	CAST IN PLACE
CKBD	CHALKBOARD
CLG	CEILING
CMU	CONCRETE MASONRY UNIT
CLO	CLOSET
CLR	CLEAR
COL	COLUMN
CONC	CONCRETE
CONN	CONNECTION
CONST	CONSTRUCTION
CONT	CONTINUOUS
CORR	CORRIDOR
CPT	CARPET
CT	CERAMIC TILE
CTR	CENTER
CTSK	COUNTERSUNK
CY	CUBIC YARD
DBL	DOUBLE
DEPT	DEPARTMENT
DET	DETAIL
DF	DOUGLAS FIR
DIA	DIAMETER
DIM	DIMENSION
DN	DOWN
DP	DEEP
DR	DOOR
DS	DOWNSPOUT
DWG	DRAWING
DWR	DRAWER
(E)	EXISTING
E	EAST
EA	EACH
EHD	ELECTRIC HAND DRYER
EJ	EXPANSION JOINT
EL	ELEVATION (HEIGHT)
ELECT	ELECTRICAL
ELEV	ELEVATION (VIEW)
ELVR	ELEVATOR
EMER	EMERGENCY
ENCL	ENCLOSURE
EQ	EQUAL
EPB	ELECTRICAL PANELBOARD
EQUIP	EQUIPMENT
ESCL	ESCALATOR
EWC	ELECTRIC WATER COOLER
EXP	EXPANSION
EXPO	EXPOSED, EXPOSURE
EXT	EXTERIOR
FD	FLOOR DRAIN
FDN	FOUNDATION
FE	FIRE EXTINGUISHER
FEC	FIRE EXTINGUISHER CABINET
FG	FINISH GRADE
FH	FIRE HYDRANT
FHC	FIRE HOSE CABINET
FHMS	FLATHEAD METAL SCREW
FHWS	FLATHEAD WOOD SCREW
FIN	FINISH
FJ	FLOOR JOIST
FLASH	FLASHING
FLR	FLOOR
FLUOR	FLUORESCENT
FOC	FACE OF CONCRETE
FOF	FACE OF FINISH
FOM	FACE OF MASONRY
FOS	FACE OF STUD
FRP	FIBERGLASS REINFORCED PANEL
FT	FEET, FOOT
FTG	FOOTING
FURR	FURRING
FWY	FREEWAY
GA	GAUGE
GAL	GALLON
GALV	GALVANIZED
GB	GRAB BAR
GI	GALVANIZED IRON
GL	GLASS
GLM	GLUE LAMINATED MEMBER
GLZ	GLAZING
GR	GRADE
GSM	GALVANIZED SHEET METAL
GYBD	GYPSUM BOARD
GYP SHTG	GYPSUM SHEATHING
HB	HOSE BIB
HC	HOLLOW CORE
HD	HEAD, HOLD DOWN
HDR	HEADER
HDWD	HARDWOOD
HDWR	HARDWARE
HEX	HEXAGONAL
HF	HEMLOCK-FIR
HGR	HANGER
HM	HOLLOW METAL
HORIZ	HORIZONTAL
HP	HIGH POINT
HR	HOUR
HSB	HIGH STRENGTH BOLT
HT	HEIGHT
HVAC	HEATING, VENTILATING, AIR CONDITIONING
HWY	HIGHWAY
ID	INSIDE DIAMETER
IN	INCH
INSUL	INSULATION
INT	INTERIOR
ISA	INTERNATIONAL SYMBOL OF ACCESSIBILITY
JAN	JANITOR
JB	JUNCTION BOX
JH	JOIST HANGER
JST	JOIST
JT	JOINT
KIT	KITCHEN
LAB	LABORATORY
LAV	LAVATORY
LBF	POUND FORCE
LBS	POUNDS
LF	LINEAR FEET
LKR	LOCKER
LPG	LIQUIFIED PETROLEUM GAS
LS	LAG SCREW
M	METER
MAT	MATERIAL
MAX	MAXIMUM
MB	MACHINE BOLT
MBR	MEMBER
MECH	MECHANICAL
MEMB	MEMBRANE
MET	METAL
MFR	MANUFACTURER
MH	MAN HOLE
MIN	MINIMUM
MIR	MIRROR
MISC	MISCELLANEOUS
MIW	MALLEABLE IRON WASHER
MM	MILLIMETER
MO	MASONRY OPENING
MTD	MOUNTED
MUL	MULLION
N	NORTH
ND	NAPKIN DISPOSAL
NIC	NOT IN CONTRACT
NO	NUMBER
NOM	NOMINAL
NTS	NOT TO SCALE
NA	NOT APPLICABLE
OBSC	OBSCURE
OC	ON CENTER
OD	OUTSIDE DIAMETER
OFF	OFFICE
OH	OPPOSITE HAND
OHD	OVERHEAD
OHWS	OVALHEAD WOOD SCREW
OPNG	OPENING
OPP	OPPOSITE
OPT	OPTION, OPTIONAL
P	PITCH
PB	POST BASE
PC	POST CAP
PCC	PORTLAND CEMENT CONCRETE
PH	PHILLIPS HEAD
PL	PLATE
PLAM	PLASTIC LAMINATE
PLAS	PLASTER
PLWD	PLYWOOD
PMF	PRESSED METAL FRAME
POT	PATH OF TRAVEL
PR	PAIR
PRTN	PARTITION
PT	POINT
PTD	PAPER TOWEL DISPENSER
PTD/R	COMBINATION PTD & WASTE RECEPTACLE
PVC	POLYVINYL CHLORIDE
PWB	PREFABRICATED WOOD I BEAM
QT	QUARRY TILE
(R)	RELOCATED
R	RADIUS, RISER
R/W	RIGHT OF WAY
RD	ROOF DRAIN
RDWD	REDWOOD
REF	REFERENCE
REFG	REFRIGERATOR
REINF	REINFORCED(ING)
REQ	REQUIRED
RFG	ROOFING
RFSWN	ROUGHSAWN
RH	ROUND HEAD
RHWS	ROUNDHEAD WOOD SCREW
RJ	ROOF JOIST
RM	ROOM
RO	ROUGH OPENING
RSWN	RESAWN
RTE	ROUTE
RWL	RAINWATER LEADER
S	SOUTH
SC	SOLID CORE
SCHED	SCHEDULE
SD	SOAP DISPENSER
SDST	SELF DRILLING SELF TAPPING
SF	SQUARE FEET
SM	SQUARE METER
SH	SHELF
SHWR	SHOWER
SHT	SHEET
SHTG	SHEATHING
SIM	SIMILAR
SMS	SHEET METAL SCREW
SOHD	SECTIONAL OVERHEAD DOOR
SPEC	SPECIFICATION
SPS	STRUCTURAL PLYWOOD SHEATHING
SQ	SQUARE
SRRA	SAFETY ROADSIDE REST AREA
SS	SERVICE SINK
SST	STAINLESS STEEL
STA	STATION
STAG	STAGGER
STD	STANDARD
STL	STEEL
STOR	STORAGE
STRUC	STRUCTURAL
SUSP	SUSPENDED
T	TREAD
T&G	TONGUE & GROOVE
TB	TOLL BOOTH
TEL	TELEPHONE
TEMP	TEMPERED
TER	TERRAZZO
THK	THICK
THLD	THRESHOLD
TJ	TOOLED JOINT
TKBD	TACKBOARD
TN	TOE NAIL
TOC	TOP OF CURB OR CONCRETE
TOP	TOP OF PAVEMENT
TOS	TOE OF SLOPE
TOT	TOTAL
TOW	TOP OF WALL
TS	TUBULAR STEEL
TSCD	TOILET SEAT COVER DISPENSER
TTD	TOILET TISSUE DISPENSER
TYP	TYPICAL
UNF	UNFINISHED
UON	UNLESS OTHERWISE NOTED
UR	URINAL
VAR	VARIES
VCT	VINYL COMPOSITION TILE
VERT	VERTICAL
VEST	VESTIBULE
VR	VENT RISER
VTR	VENT THROUGH ROOF
W	WEST
W/	WITH
W/O	WITHOUT
WC	WATER CLOSET
WD	WOOD
WDW	WINDOW
WH	WATER HEATER
WP	WORKING POINT
WR	WATER RESISTANT
WSCT	WAINSCOT
WT	WEIGHT
WTPR	WATERPROOFING
WWF	WELDED WIRE FABRIC
YD	YARD

SYMBOLS

EARTH
AC PAVING
CONCRETE
SAND/MORTAR/PLASTER
BATT INSULATION
SOUND INSULATION
RIGID INSULATION
STEEL
PLYWOOD
CONTINUOUS WOOD FRAMING
WOOD BLOCKING
FINISH WOOD

102 — ROOM DESIGNATION
3 — DOOR DESIGNATION
A — WINDOW DESIGNATION
L2 — LOUVER DESIGNATION
ELEVATION
C / A-2 — SECTION LETTER / SHEET NUMBER
2 / A-5 — DETAIL NUMBER / SHEET NUMBER
2 — DETAIL NUMBER / SAME SHEET
A / 1 — GRID LINE (LETTER IN ONE DIRECTION, NUMBERS IN OTHER DIRECTION)

A / D 102 B / C — ROOM DESIGNATION AND WALL NUMBER/LETTER FOR FINISH SCHEDULE

DIST.	COUNTY	ROUTE	POST MILES TOTAL PROJECT	SHEET NO.	TOTAL SHEETS
06	Fre	168	R36.0	55	70

LICENSED ARCHITECT — DATE 10-1-14
LICENSED ARCHITECT M. R. FRASER No. C-7739 Exp. 04-30-15 STATE OF CALIFORNIA
PLANS APPROVAL DATE 1-12-15

The State of California or its officers or agents shall not be responsible for the accuracy or completeness of electronic copies of this plan sheet.

ACCESSIBILITY DESIGN APPROVAL STAMP
DOT / DES / OTA
PROJECT ID 06000203891
Reviewed by: Y. A. WANG
Date: 07-12-13

GENERAL NOTES

1. The contractor shall verify all controlling dimensions and field conditions before ordering or fabricating any materials or assemblies.
2. The contractor shall notify the engineer in writing of any discrepancies between these plans and actual measurements or field conditions.

DESIGN CRITERIA

THE BUILDING WORK FOR THIS PROJECT HAS BEEN DESIGN TO CONFORM TO
THE 2010 EDITION OF TITLE 24, CALIFORNIA CODE OF REGULATIONS:
PART 2 - CALIFORNIA BUILDING CODE 2010,
PART 9 - CALIFORNIA FIRE CODE 2010,
PART 11 - CALIFORNIA GREEN BUILDING STANDARDS
2010 ADA STANDARDS

BUILDING DATA THIS PROJECT IS IN COMPLIANCE

	OCCUPANCY	CONSTRUCTION TYPE	NUMBER OF STORIES	BUILDING HEIGHT	BUILDING AREA	AREA OF PROJECT	ALLOWABLE AREA	AREA OR HEIGHT INCREACES	FIRE SPRINKLERED	FIRE ALARM	OTHER FIRE PROTECTION SYSTEMS IF ANY	SMOKE CONTROL SYSTEM	OCCUPANT LOAD
VIEWING PLATFORM	A-5	V-B	1	12'-0"	2500 S.F.	2500 S.F.	9000 S.F.	NO	NOT REQ'D	NOT REQ'D	NO	NOT REQ'D	500

DESIGN	BY Martin Fraser	CHECKED Don Alsey	
DETAILS	BY Martin Fraser	CHECKED Don Alsey	
QUANTITIES	BY	CHECKED	

STATE OF CALIFORNIA
DEPARTMENT OF TRANSPORTATION

DIVISION OF ENGINEERING SERVICES
ARCHITECTURAL AND STRUCTURAL DESIGN

BRIDGE NO. X
POST MILE X

MAYNARD MUNGER MEMORIAL
VISTA POINT
OBSERVATION DECK
ARCH ABBREVIATIONS/BUILDING DATA

SHEET A0-1

a0-1.dgn
TAEMWW Imperial Rev. 7/10 15-JAN-2015 08:55
ORIGINAL SCALE IN INCHES FOR REDUCED PLANS 0 1 2 3
UNIT 3581
PROJECT NUMBER & PHASE 06000203891
EA 06-0M0201
DISREGARD PRINTS BEARING EARLIER REVISION DATES
REVISION DATES (PRELIMINARY STAGE ONLY) SHEET OF
15-JAN-2015 08:55 a0-1.dgn

DIST.	COUNTY	ROUTE	POST MILES TOTAL PROJECT	SHEET NO.	TOTAL SHEETS
06	Fre	168	R36.0	56	70

LICENSED ARCHITECT — DATE 10-1-14

LICENSED ARCHITECT M. R. FRASER No. C-7739 Exp. 04-30-15 STATE OF CALIFORNIA

1-12-15
PLANS APPROVAL DATE

The State of California or its officers or agents shall not be responsible for the accuracy or completeness of electronic copies of this plan sheet.

ACCESSIBILITY DESIGN APPROVAL STAMP
DOT / DES / OTA
PROJECT ID
06000203891
Reviewed by: Y. A. WANG
Date: 07-12-13

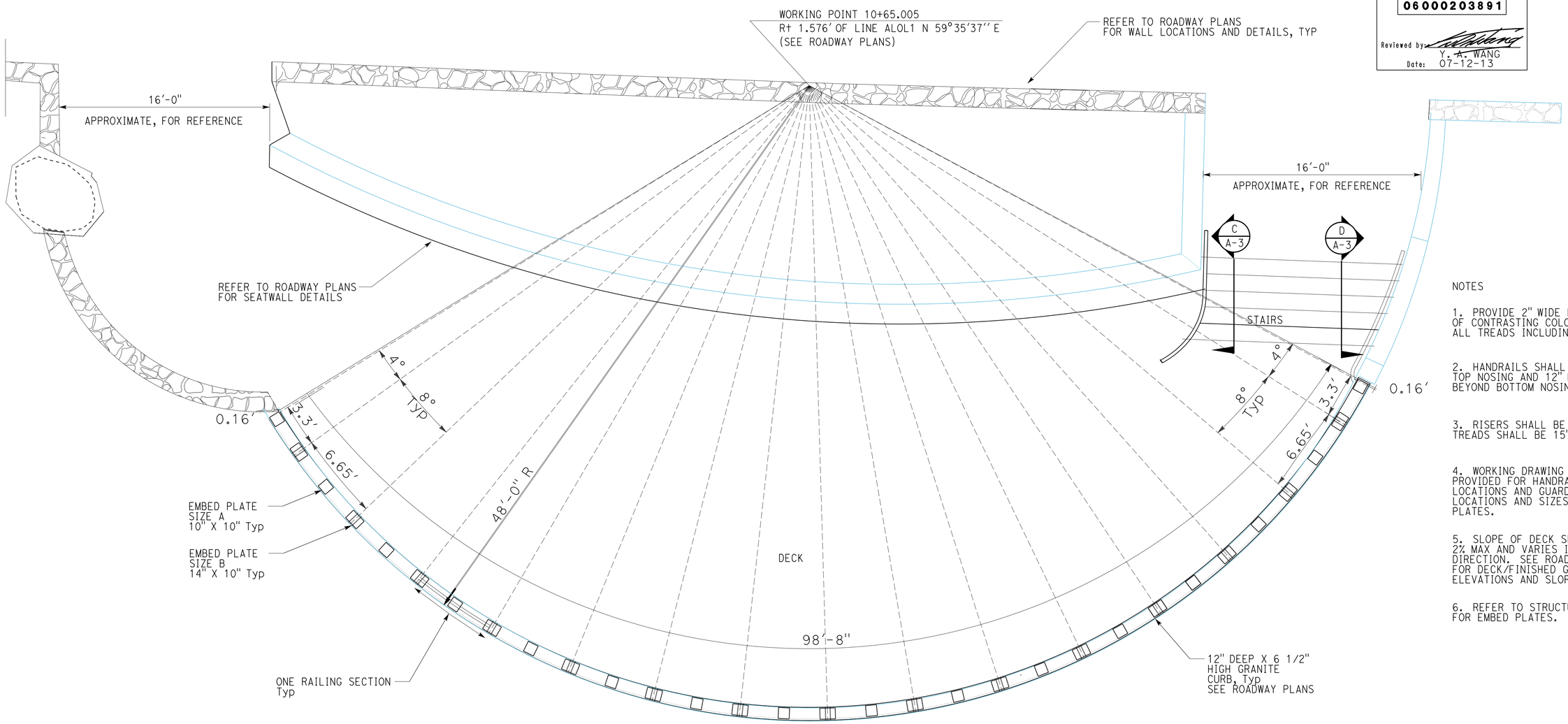

A DECK PLAN

1/4" = 1'-0"

NOTES

1. PROVIDE 2" WIDE FULL WIDTH STRIP OF CONTRASTING COLOR 1" FROM NOSE OF ALL TREADS INCLUDING UPPER APPROACH.

2. HANDRAILS SHALL EXTEND 12" BEYOND TOP NOSING AND 12" PLUS TREAD WIDTH BEYOND BOTTOM NOSING.

3. RISERS SHALL BE 6½" TREADS SHALL BE 15".

4. WORKING DRAWING SHALL BE PROVIDED FOR HANDRAILS, SUPPORT LOCATIONS AND GUARD, INCLUDING LOCATIONS AND SIZES OF EMBED PLATES.

5. SLOPE OF DECK SHALL BE 2% MAX AND VARIES IN ANY DIRECTION. SEE ROADWAY PLANS FOR DECK/FINISHED GRADE ELEVATIONS AND SLOPES.

6. REFER TO STRUCTURAL SHEETS FOR EMBED PLATES.

	BY	CHECKED
DESIGN	Martin Fraser	Don Alsey
DETAILS	Martin Fraser	Don Alsey
QUANTITIES		

STATE OF CALIFORNIA
DEPARTMENT OF TRANSPORTATION

DIVISION OF ENGINEERING SERVICES
ARCHITECTURAL AND STRUCTURAL DESIGN

BRIDGE NO. X
POST MILE X

MAYNARD MUNGER MEMORIAL VISTA POINT
OBSERVATION DECK
OBSERVAION DECK

SHEET **A-1**

A-1.dgn
TAEMWW Imperial Rev. 7/10 15-JAN-2015 08:55

ORIGINAL SCALE IN INCHES FOR REDUCED PLANS 0 1 2 3

UNIT 3581
PROJECT NUMBER & PHASE 06000203891
EA 06-0M0201

DISREGARD PRINTS BEARING EARLIER REVISION DATES →
REVISION DATES (PRELIMINARY STAGE ONLY)
SHEET X OF X

15-JAN-2015 08:55
A-1.dgn

DIST.	COUNTY	ROUTE	POST MILES TOTAL PROJECT	SHEET NO.	TOTAL SHEETS
06	Fre	168	R36.0	57	70

LICENSED ARCHITECT — DATE 10-1-14

LICENSED ARCHITECT M. R. FRASER No. C-7739 Exp. 04-30-15 STATE OF CALIFORNIA

1-12-15
PLANS APPROVAL DATE

The State of California or its officers or agents shall not be responsible for the accuracy or completeness of electronic copies of this plan sheet.

ACCESSIBILITY DESIGN APPROVAL STAMP
DOT / DES / OTA

PROJECT ID
06000203891

Reviewed by: Y. A. WANG
Date: 07-12-13

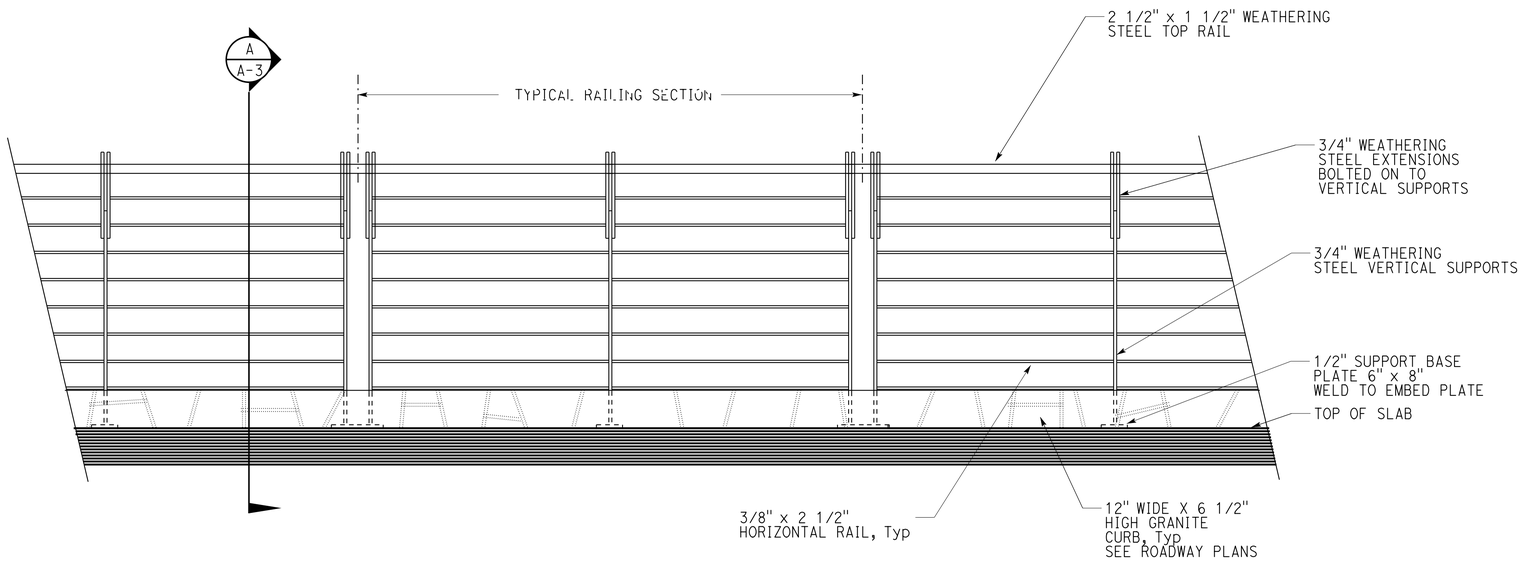

(A) RAILING ELEVATION - FROM PLATFORM

1" = 1'-0"

	BY	CHECKED
DESIGN	Martin Fraser	Don Alsey
DETAILS	Martin Fraser	Don Alsey
QUANTITIES		

STATE OF CALIFORNIA
DEPARTMENT OF TRANSPORTATION

DIVISION OF ENGINEERING SERVICES
ARCHITECTURAL AND STRUCTURAL DESIGN

BRIDGE NO. X
POST MILE X

MAYNARD MUNGER MEMORIAL VISTA POINT
OBSERVATION DECK
RAILING ELEVATION

SHEET **A-2**

A-2.dgn
TAEMWW Imperial Rev. 7/10 15-JAN-2015 08:55

ORIGINAL SCALE IN INCHES FOR REDUCED PLANS 0 1 2 3

UNIT 3581
PROJECT NUMBER & PHASE 06000203891
EA 06-0M0201

DISREGARD PRINTS BEARING EARLIER REVISION DATES
REVISION DATES (PRELIMINARY STAGE ONLY) SHEET OF

15-JAN-2015 08:55
A-2.dgn

DIST.	COUNTY	ROUTE	POST MILES TOTAL PROJECT	SHEET NO.	TOTAL SHEETS
06	Fre	168	R36.0	58	70

LICENSED ARCHITECT — 10-1-14 DATE

LICENSED ARCHITECT M. R. FRASER No. C-7739 Exp. 04-30-15 STATE OF CALIFORNIA

1-12-15
PLANS APPROVAL DATE

The State of California or its officers or agents shall not be responsible for the accuracy or completeness of electronic copies of this plan sheet.

ACCESSIBILITY DESIGN APPROVAL STAMP
DOT / DES / OTA
PROJECT ID 06000203891
Reviewed by: Y. A. WANG
Date: 07-12-13

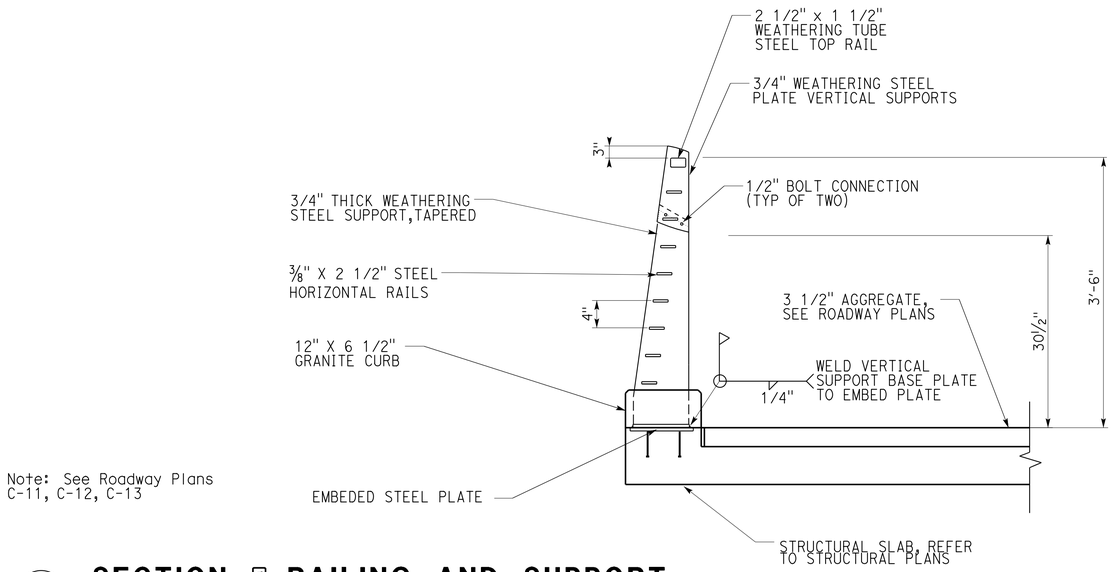

Note: See Roadway Plans C-11, C-12, C-13

A SECTION @ RAILING AND SUPPORT

1" = 1'-0"

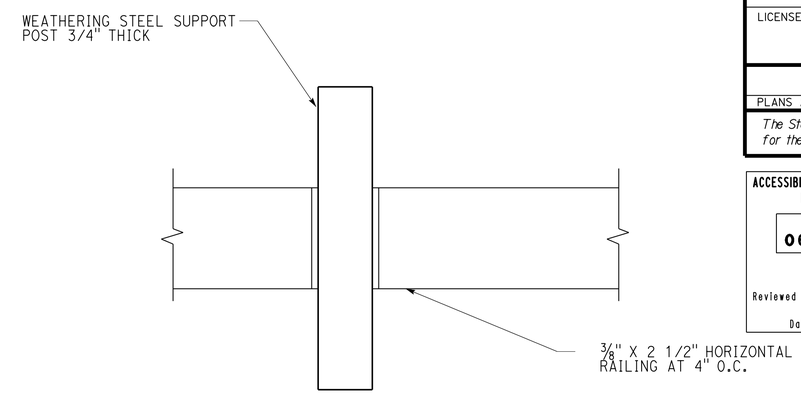

B SECTION @ SUPPORT POST

2 " = 1'-0"

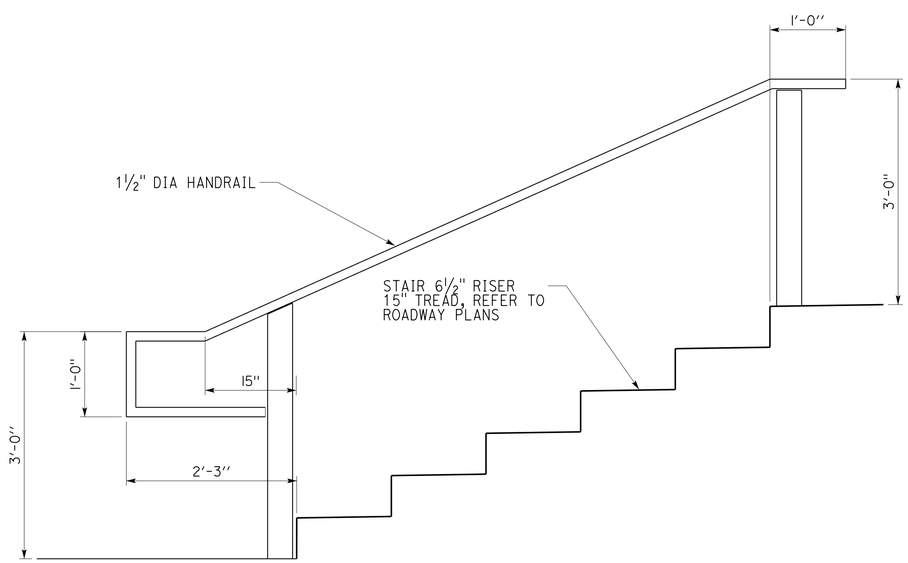

C HANDRAIL AT STAIRS

1" = 1'-0"

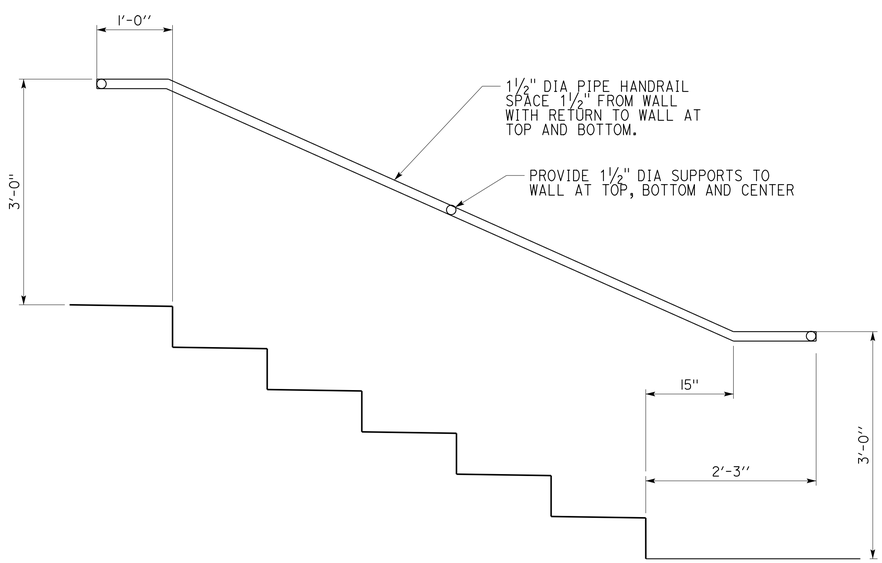

D HANDRAIL AT WALL

1" = 1'-0"

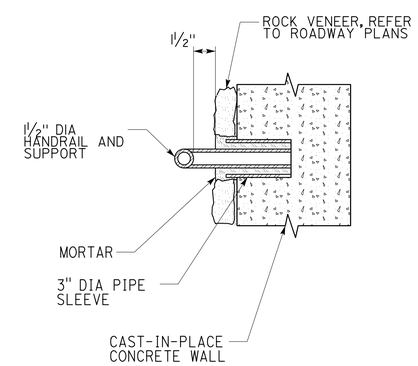

E HANDRAIL SUPPORT

2 " = 1'-0"

DESIGN	BY Martin Fraser	CHECKED Don Alsey	STATE OF CALIFORNIA DEPARTMENT OF TRANSPORTATION	DIVISION OF ENGINEERING SERVICES ARCHITECTURAL AND STRUCTURAL DESIGN	BRIDGE NO. X
DETAILS	BY Martin Fraser	CHECKED Don Alsey			POST MILE X
QUANTITIES	BY	CHECKED			

MAYNARD MUNGER MEMORIAL VISTA POINT
OBSERVATION DECK
DETAILS

SHEET A-3

A-3.dgn
TAEMWW Imperial Rev. 7/10 15-JAN-2015 08:55

ORIGINAL SCALE IN INCHES FOR REDUCED PLANS 0 1 2 3

UNIT 3581
PROJECT NUMBER & PHASE 06000203891
EA 06-0M0201

DISREGARD PRINTS BEARING EARLIER REVISION DATES →
REVISION DATES (PRELIMINARY STAGE ONLY) SHEET OF

15-JAN-2015 08:55
A-3.dgn

DIST.	COUNTY	ROUTE	POST MILES TOTAL PROJECT	SHEET NO.	TOTAL SHEETS
06	Fre	168	R36.0	59	70

William Rocha Jr. 10-17-2014
REGISTERED CIVIL ENGINEER DATE

REGISTERED PROFESSIONAL ENGINEER
William Rocha, Jr.
No. 59791
Exp. 12-31-15
CIVIL
STATE OF CALIFORNIA

1-12-15
PLANS APPROVAL DATE

The State of California or its officers or agents shall not be responsible for the accuracy or completeness of scanned copies of this plan sheet.

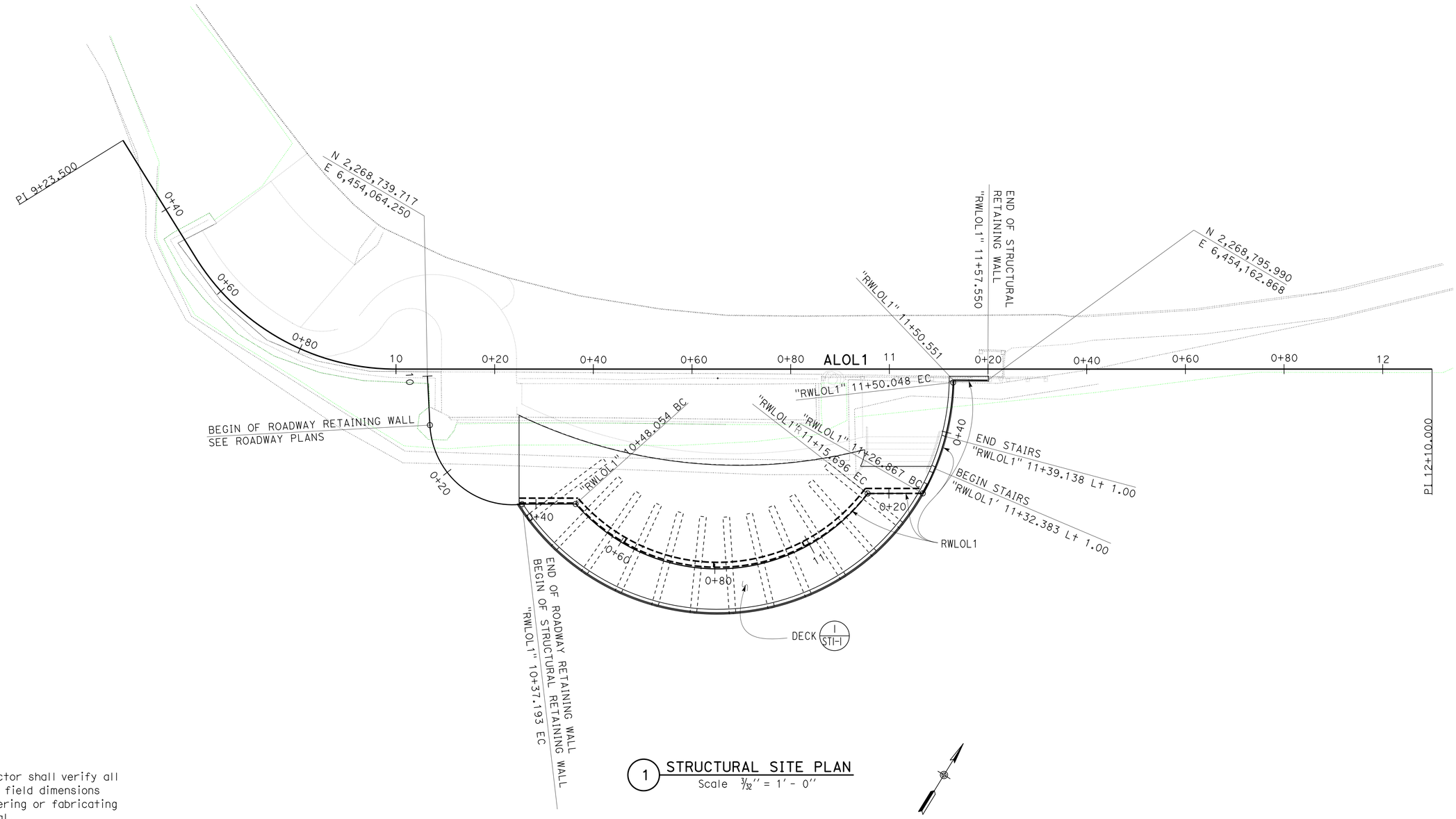

1 STRUCTURAL SITE PLAN
Scale 3/32" = 1' - 0"

NOTE:
The Contractor shall verify all controlling field dimensions before ordering or fabricating any material.

	BY	CHECKED
DESIGN	Bill Rocha	Edgardo Isidro
DETAILS	Aleksey Serin	Bill Rocha
QUANTITIES		

STATE OF CALIFORNIA
DEPARTMENT OF TRANSPORTATION

DIVISION OF ENGINEERING SERVICES
ARCHITECTURAL AND STRUCTURAL DESIGN

BRIDGE NO.
POST MILE R 36.0

MAYNARD MUNGER MEMORIAL VISTA POINT
OBSERVATION DECK
STRUCTURAL SITE PLAN

SHEET ST-0

TAEMWW Imperial Rev. 7/10

ORIGINAL SCALE IN INCHES FOR REDUCED PLANS 0 1 2 3

UNIT 3581
PROJECT NUMBER & PHASE 06000203891
EA 0M0201

DISREGARD PRINTS BEARING EARLIER REVISION DATES → 05-28-13 07-11-13 11-20-14

REVISION DATES (PRELIMINARY STAGE ONLY) SHEET OF

J:\PSE_AADD\Pse_2015_AADD\DISTRICT_06\06-0M0201\Structures\st0_00a_SITE.dgn 15-JAN-2015 08:55

DIST.	COUNTY	ROUTE	POST MILES TOTAL PROJECT	SHEET NO.	TOTAL SHEETS
06	Fre	168	R36.0	60	70

REGISTERED CIVIL ENGINEER — DATE: 10-17-2014

REGISTERED PROFESSIONAL ENGINEER — William Rocha, Jr. No. 59791 Exp. 12-31-15 CIVIL — STATE OF CALIFORNIA

1-12-15
PLANS APPROVAL DATE

The State of California or its officers or agents shall not be responsible for the accuracy or completeness of scanned copies of this plan sheet.

ABBREVIATIONS

AAD	ADHESIVE ANCHORAGE DEVICE
AB	ANCHOR BOLT
AC	ASPHALT CONCRETE
Alt	ALTERNATE
APA	AMERICAN PLYWOOD ASSOCIATION
APC	ALTERNATIVE PIPE CULVERT
Bldg	BUILDING
Blkg	BLOCKING
BN	BOUNDARY NAILING
Btm	BOTTOM
CB	CARRIAGE BOLT
CIDH	CAST IN DRILLED HOLE
CJ	CONTROL JOINT
Clr	CLEAR
CMU	CONCRETE MASONRY UNIT
Conc	CONCRETE
Const	CONSTRUCTION
Cont	CONTINUOUS
CP	COMPLETE PENETRATION WELD
Dbl	DOUBLE
DF	DOUGLAS FIR
Dia	DIAMETER
DIP	DUSTILE IRON PIPE
DN	DIAMETER NOMINAL
do	DITTO
(E)	EXISTING
Ea	EACH
EL	ELEVATION
Elec	ELECTRICAL
Embed	EMBEDMENT
EN	EDGE NAIL
Eq	EQUAL
Exp	EXPANSION
FDGM	FREE DRAINING GRANULAR MATERIAL
FG	FINISH GRADE
FL	FLOW LINE
Flr	FLOOR
FN	FACE (FIELD) NAIL
FOC	FACE OF CONCRETE
FOM	FACE OF MASONRY
FOS	FACE OF STUD
Ftg	FOOTING
Ga	GAGE
Galv	GALVANIZED
GLM	GLUE LAMINATED MEMBER
Gyp Bd	GYPSUM BOARD
HD	HOLDOWN
Hex	HEXAGON
Horiz	HORIZONTAL
HSB	HIGH STRENGTH BOLT
HSS	HOLLOW STRUCTURAL SECTION
Jt	JOINT
LOL	LAYOUT LINE
LVL	LAMINATED VENEER LUMBER
m	METER
Max	MAXIMUM
MEA	MECHANICAL EXPANSION ANCHOR
Mech	MECHANICAL
Mfr	MANUFACTURER
mm	MILLIMETER
Min	MINIMUM
MIW	MALLEABLE IRON WASHER
OC	ON CENTER
OG	ORIGINAL GRADE
OH	OPPOSITE HAND
Opt	OPTIONAL
P	PITCH
PDF	POWER DRIVEN FASTENER
Plwd	PLAWOOD
PT	PRESSURE TREATED
PW	PUDDLE WELD
PWB	PREFABRICATED WOOD I BEAM
RCP	REINFORCED CONCRETE PIPE
Reinf	REINFORCED, REINFORCING
Req'd	REQUIRED
SDSTS	SELF DRILL, SELF TAP SCREW
Sim	SIMILAR
SPS	STRUCTURAL PLYWOOD SHEATHING
Sq	SQUARE
Stagg	STAGGERED
Std	STANDARD
SW	STUD WELD
Sym	SYMMETRICAL
T&G	TONGUE-AND-GROOVE
TN	TOE NAIL
TS	TUBE STEEL
Typ	TYPICAL
UON	UNLESS OTHERWISE NOTED
Vert	VERTICAL

SYMBOLS

- BLOCKING IN SECTION OR ELEVATION
- CONTINUOUS MEMBER IN SECTION
- END OF MEMBER
- BEARING WALL
- SHEAR WALL
- X XXXX — LENGTH; SHEARWALL SCHEDULE SYMBOL; REFERENCE
- GLUE LAMINATED MEMBER SECTION
- NORTH ARROW
- X STX-X — PARTIAL SECTION CUT
- X STX-X — FULL SECTION CUT
- X — REVISION CALLOUT
- A — GRID LINE INDICATOR
- ℄ — CENTER LINE
- ⅊ — STATION LINE
- ℙ — STEEL PLATE
- Ø — DIAMETER
- ⌑ — SQUARE
- CMU WALL ON PLAN VIEWS
- DROPPED SLAB ON PLAN VIEWS
- REINFORCED CONCRETE
- SAND
- STRUCTURE BACKFILL
- STRUCTURE EXCAVATION
- ORIGINAL GROUND
- LIMITS OF STRUCTURE BACKFILL (SHOWN ON PLAN VIEWS)
- FREE DRAINING GRANULAR MATERIAL
- X — BOTTOM OF FOOTING
- ELEVATION OR WORKING POINT
- EXISTING FEATURES
- HOLDOWN, Typ — Simpson / USP / Equal (MANUFACTURERS ARE THOSE NOTED IN THE ORDER SHOWN)
- FRAME CONNECTOR — Simpson / USP / Equal (MANUFACTURERS ARE THOSE NOTED IN THE ORDER SHOWN)
- 3 5b ST-1 — DETAIL NUMBER OR NOTE NUMBER; ADDITIONAL REFERENCE (IF REQUIRED); SHEET NUMBER

NOTE: SPECIFIC DETAILS OR NOTES ON OTHER SHEETS SHALL PREVAIL OVER STANDARD DETAILS AND NOTES ON THIS SHEET

STANDARD DRAWING

FILE NO. XS-25-0 | DESIGN BY Sean Samad | CHECKED Joe Orlando | APPROVED R.E. Travis
DRAWING DATE 1-04 | DETAILS BY Peter F. von Sauvage, II | CHECKED Joe Orlando | DESIGN SUPERVISOR
SUBMITTED BY Sean Samad, DESIGN ENGINEER

STATE OF CALIFORNIA DEPARTMENT OF TRANSPORTATION

DIVISION OF ENGINEERING SERVICES ARCHITECTURAL AND STRUCTURAL DESIGN

BRIDGE NO. | POST MILE R 36.0

MAYNARD MUNGER MEMORIAL VISTA POINT

LEGEND

SHEET ST-1

TAEMWW Imperial Rev. 7/10

ORIGINAL SCALE IN INCHES FOR REDUCED PLANS 0 1 2 3

UNIT 3581
PROJECT NUMBER & PHASE 06000203891
EA 0M0201

DISREGARD PRINTS BEARING EARLIER REVISION DATES → 1-16-04 04-27-12

REVISION DATES (PRELIMINARY STAGE ONLY) | SHEET | OF

st0_01.dgn

15-JAN-2015 08:55

DIST.	COUNTY	ROUTE	POST MILES TOTAL PROJECT	SHEET NO.	TOTAL SHEETS
06	Fre	168	R36.0	61	70

REGISTERED CIVIL ENGINEER — DATE 10-17-2014

REGISTERED PROFESSIONAL ENGINEER — William Rocha, Jr. — No. 59791 — Exp. 12-31-15 — CIVIL — STATE OF CALIFORNIA

1-12-15
PLANS APPROVAL DATE

The State of California or its officers or agents shall not be responsible for the accuracy or completeness of scanned copies of this plan sheet.

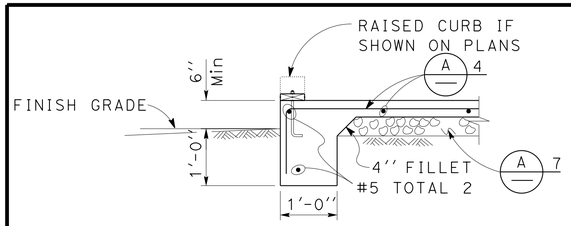

1 EXTERIOR FOOTING
NO SCALE

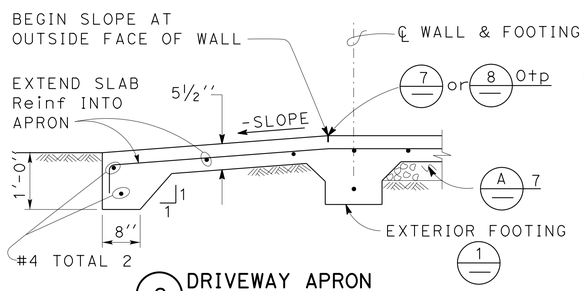

2 DRIVEWAY APRON
NO SCALE

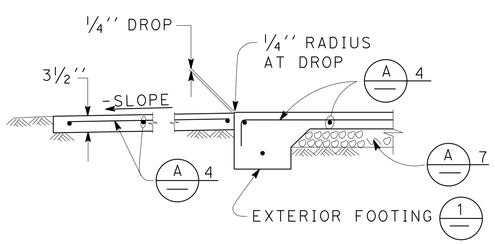

3 WALKWAY APRON
NO SCALE

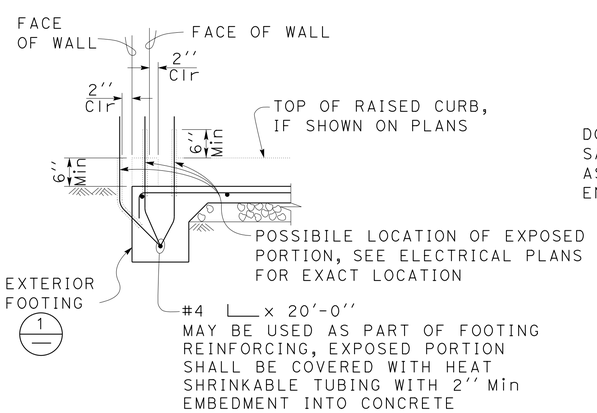

4 GROUND BAR DETAIL
NO SCALE

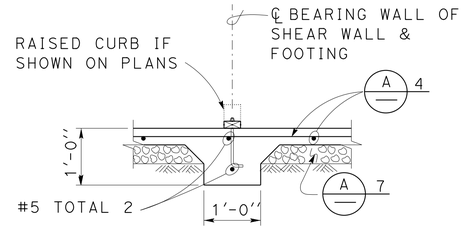

5 INTERIOR FOOTING
NO SCALE

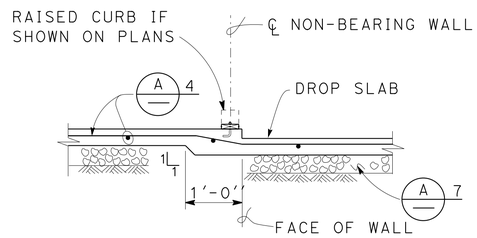

6 DROP SLAB AT NON-BEARING WALL
NO SCALE

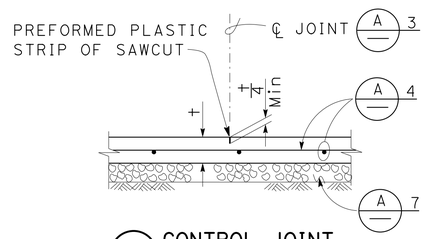

7 CONTROL JOINT
NO SCALE

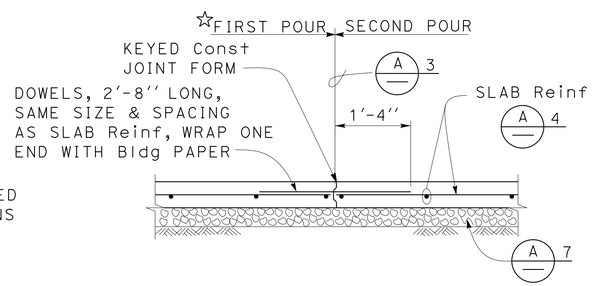

☆Slab concrete may be poured continuously across the Control Joint, to cover as large an area as practical.

8 CONTRACTION JOINT
NO SCALE

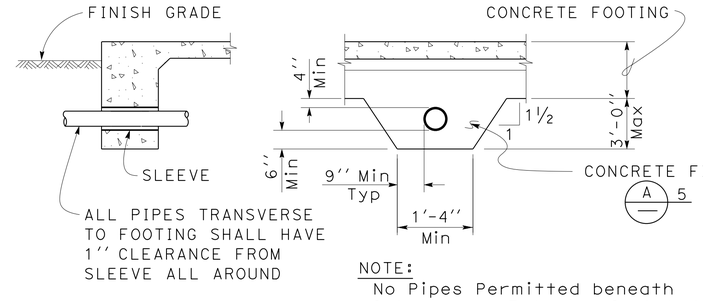

NOTE:
No Pipes Permitted beneath Interior or Exterior Isolated Footing.

9 PIPE DETAILS THROUGH FOOTING
NO SCALE

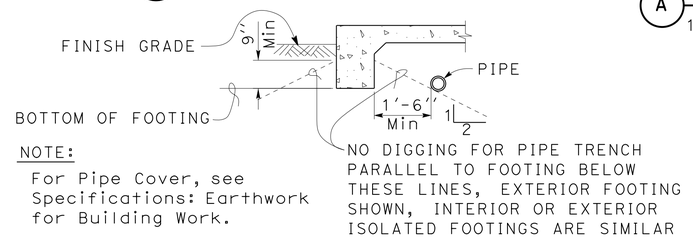

NOTE:
For Pipe Cover, see Specifications: Earthwork for Building Work.

10 PIPE DETAILS PARALLEL TO FOOTING
NO SCALE

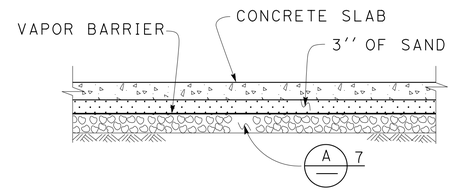

11 MOISTURE BARRIER
NO SCALE

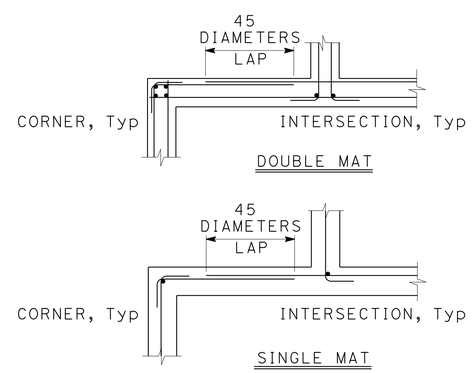

12 CORNER/INTERSECTION REINF SPLICE, TYPICAL
NO SCALE

A CONCRETE NOTES

1. The following minimum concrete cover shall be provided for reinforcement.

	Minimum Cover
a. Concrete cast against and permanently exposed to earth	3''
b. Concrete exposed to earth or weather but cast in forms:	
#6 thru #18 bars	2''
#5 bar and smaller, W31 or D31 Wire, and smaller	1½''
c. Concrete not exposed to weather or in contact with ground: Slabs, Walls and Joists:	
#14 and #18 Bar	1½''
#11 Bar and smaller	¾''
Beams and Columns: Primary Reinforcement, Ties, Stirrups and Spirals	1½''

2. Splices in continuous reinforcement as in Walls, Wall Footings, etc. #8 or smaller shall have a lap of 45 diameters and the splices in adjacent bars shall not be less than 5'-0'' apart.

   Continuous Bars in spandrels, Wall Beams, etc. shall lap Top Bars at center of span and Bottom Bars at supports.

3. Contraction Joints and Control Joints shall divide slab into areas not exceeding 25 square yards without reentrant corners and with length to width ratios not exceeding 1.5 to 1. Joint spacing shall not exceed 15'-0''.

4.

Slab Thickness (t)		Reinforcement
3½''	#3 @ 18	Each way, place in center of Slab
5½''	#4 @ 18	Each way, place in center of Slab

5. Concrete fill is to be placed before Footing is poured. Make the same width as the Footing and the full width of the Pipe trench. Concrete fill not required for pipes less than 2'' diameter for pipes more than 3'-0'' below bottom of footing.

6. See Mechanical and Architectural Plans for size and locations of pipe, vents, ducts and other similar openings. See Electrical Plans for conduits and outlet boxes in floors, walls, etc.

7. Place 4'' of free draining granular material under slabs.

NOTE: SPECIFIC DETAILS OR NOTES ON OTHER SHEETS SHALL PREVAIL OVER STANDARD DETAILS AND NOTES ON THIS SHEET

STANDARD DRAWING

FILE NO. XS-25-1	DESIGN BY Sean Sewell	CHECKED Joe Sandoz	APPROVED R E Travis
DRAWING DATE 1-04	DETAILS BY Peter F. von Sauvey, III	CHECKED	DESIGN SUPERVISOR
	SUBMITTED BY Sean Sewell, DESIGN ENGINEER		

STATE OF CALIFORNIA DEPARTMENT OF TRANSPORTATION

DIVISION OF ENGINEERING SERVICES ARCHITECTURAL AND STRUCTURAL DESIGN

BRIDGE NO. — POST MILE R 36.0

MAYNARD MUNGER MEMORIAL VISTA POINT

CONCRETE STANDARD

SHEET ST-2

TAEMWW Imperial Rev. 7/10

SCALE: ALL DIMENSIONS ARE IN MILLIMETERS UNLESS OTHERWISE NOTED.

ORIGINAL SCALE IN INCHES FOR REDUCED PLANS 0 1 2 3

UNIT 3581
PROJECT NUMBER & PHASE 06000203891
EA 0M0201

DISREGARD PRINTS BEARING EARLIER REVISION DATES → 1-16-04 11-14-05 04-27-12

REVISION DATES (PRELIMINARY STAGE ONLY) SHEET OF

15-JAN-2015 08:55

st0_02.dgn

DIST	COUNTY	Rte	POST MILES TOTAL PROJECT	SHEET No.	TOTAL SHEETS
06	Fre	168	R36.0	62	70

Thomas N. Song 1-7-15
REGISTERED CIVIL ENGINEER DATE

1-12-15
PLANS APPROVAL DATE

REGISTERED PROFESSIONAL ENGINEER Thomas Song No. C69325 Exp. 6-30-16 CIVIL STATE OF CALIFORNIA

The State of California or its officers or agents shall not be responsible for the accuracy or completeness of electronic copies of this plan sheet.

This LOTB sheet was prepared in accordance with the Caltrans Soil & Rock Logging, Classification, & Presentation Manual (2010 Edition).
See 2010 Standard Plans A10F and A10G for Soil Legend, and A10H for Rock Legend.

BENCH MARK

Top of boring elevation estimated from Maynard Munger Memorial Vista Point retaining wall deck Construction Details, Sheet C-1
NGVD 29

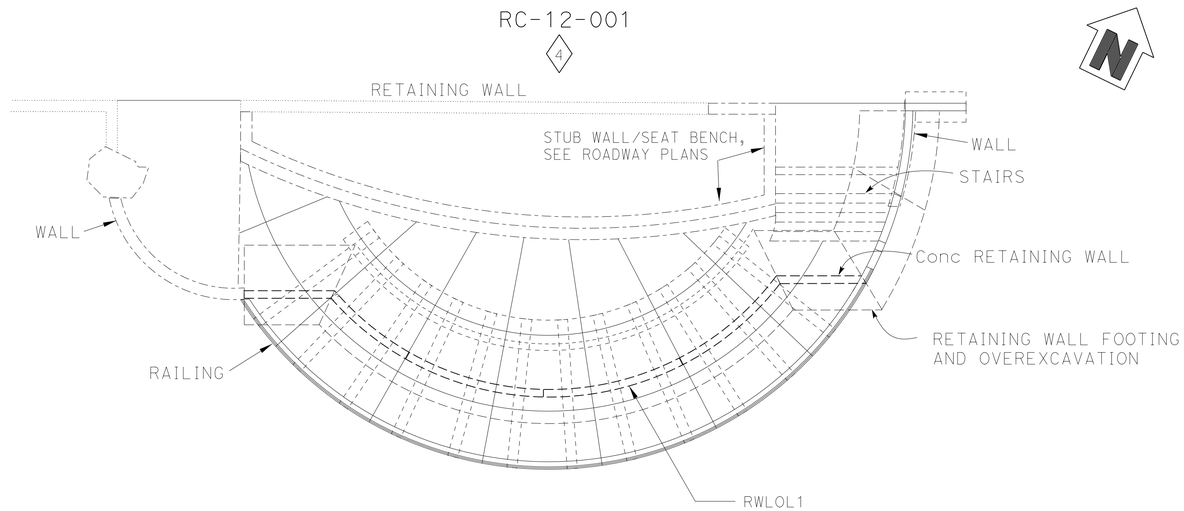

PLAN
1" = 10'

Note: No groundwater encountered during field investigation.

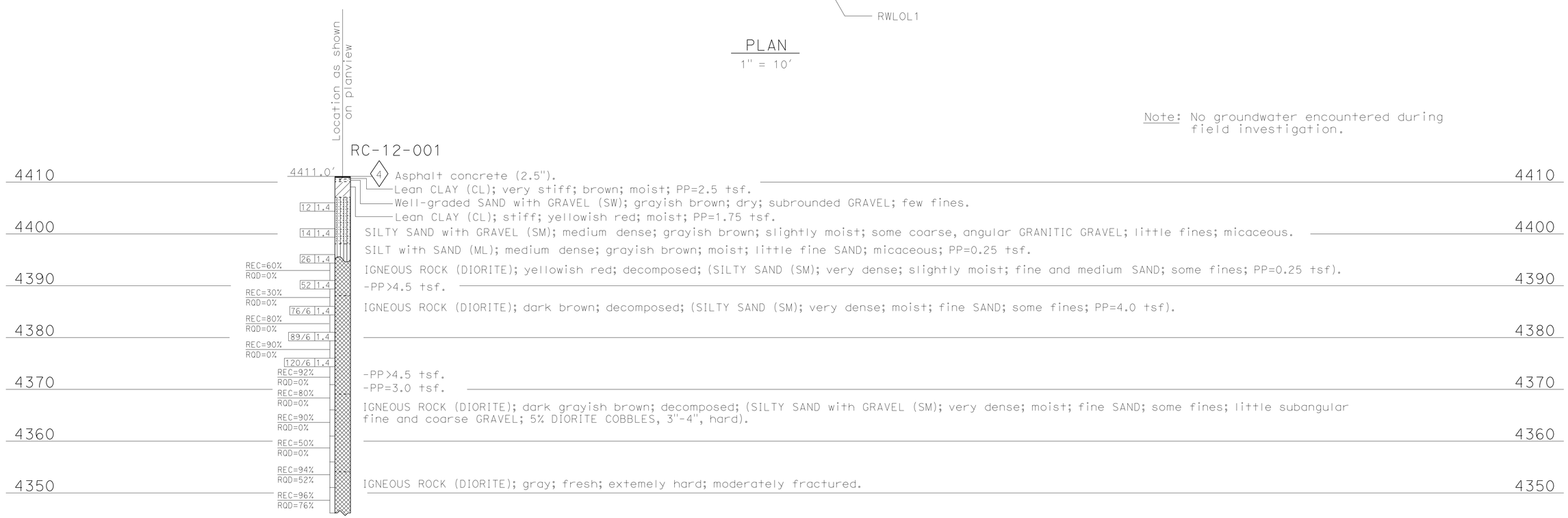

PROFILE
Horiz: 1" = 10'
Vert: 1" = 10'

ENGINEERING SERVICES	MATERIALS AND GEOTECHNICAL SERVICES	STATE OF CALIFORNIA DEPARTMENT OF TRANSPORTATION	DIVISION OF ENGINEERING SERVICES STRUCTURE DESIGN DESIGN BRANCH X	BRIDGE NO. / POST MILE R36.0	MAYNARD MUNGER MEMORIAL VISTA POINT LOG OF TEST BORINGS
FUNCTIONAL SUPERVISOR	DRAWN BY: W. Tang, I-G-Remmen	FIELD INVESTIGATION BY:			
NAME: Q. Huang	CHECKED BY: A. Barrie	T. Alderman			

OGS CIVIL LOG OF TEST BORINGS SHEET
ORIGINAL SCALE IN INCHES FOR REDUCED PLANS 0 1 2 3
UNIT: 3643
PROJECT NUMBER & PHASE: 06000203891 CONTRACT NO.: 06-0M0204
DISREGARD PRINTS BEARING EARLIER REVISION DATES → REVISION DATES 10-18-12 04-26-13 11-21-14 01-07-15 SHEET X OF X
FILE => st0_Log01_of_01.dgn

USERNAME => s113541 DATE PLOTTED => 15-JAN-2015 TIME PLOTTED => 08:55

PROJECT DESIGN CRITERIA

The building work on this project has been designed to conform to the 2010 California Building Code

LOADS

SEISMIC: Occupancy Category = II
Importance Factor I = 1.0
Site Soil Class = D
S_S = 0.536 S_I = 0.213
S_{DS} = 0.500 S_{DI} = 0.284
Seismic Design Category = D

Seismic Force-Resisting System:

See Foundation Report for stability Analysis.

WIND: Basic Wind Speed = 85 mph I = 1.0
λ = 1.21 P_S30 = +13.9 -23.3
K_Zt = 1.0

Wind Pressure on Components and Cladding = -40 psf

LIVE LOAD: Deck = 100 psf (Assembly Area-Lobbies)

SNOW LOAD: C_e = .9 C_t = 1.0 I = 1.0
P_g = 75 psf
P_f = 43.3 psf

MATERIALS

REINFORCED CONCRETE: (Ultimate Strength Design) :
f'c = 3, 600 psi
f_y = 60, 000 psi (Epoxy Coated Rebar)

Use freeze and thaw concrete, see specifications.

STRUCTURAL STEEL: (Allowable Strength Design) :

Wide Flange	F_y = 50 ksi
Channels, Angles & Misc. Shapes	F_y = 36 ksi
Plates	F_y = 36 ksi
Hollow Structural Section (HSS)	F_y = 46 ksi

FOUNDATION:
Soils report dated : October 25, 2012
Allowable Soil Pressure (DL+LL): = 2,500 psf (service)

For Soil Classification, see Log of Test Boring Sheets.

DETAIL NOTES

1. For Concrete see: ''Concrete Standard''
2. All bolts shall be hex head machine bolts, with hex head nuts; unless otherwise noted.
3. All lock washers shall be helical spring lock washers.
4. All Miscellaneous Metal to be hot-dip galvanized after fabrication, UON.

DIST.	COUNTY	ROUTE	POST MILES TOTAL PROJECT	SHEET NO.	TOTAL SHEETS
06	Fre	168	R36.0	63	70

William Rocha Jr. 10-17-2014
REGISTERED CIVIL ENGINEER DATE

REGISTERED PROFESSIONAL ENGINEER William Rocha, Jr. No. 59791 Exp. 12-31-15 CIVIL STATE OF CALIFORNIA

1-12-15
PLANS APPROVAL DATE

The State of California or its officers or agents shall not be responsible for the accuracy or completeness of scanned copies of this plan sheet.

	BY	CHECKED
DESIGN	Bill Rocha	Edgardo Isidro
DETAILS	Aleksey Serin	Bill Rocha
QUANTITIES		

STATE OF CALIFORNIA
DEPARTMENT OF TRANSPORTATION

DIVISION OF ENGINEERING SERVICES
ARCHITECTURAL AND STRUCTURAL DESIGN

BRIDGE NO.
POST MILE R 36.0

MAYNARD MUNGER MEMORIAL VISTA POINT
OBSERVATION DECK
DESIGN CRITERIA AND DETAIL NOTES

SHEET **ST1-0**

TAEMWW Imperial Rev. 7/10

ORIGINAL SCALE IN INCHES FOR REDUCED PLANS 0 1 2 3

UNIT 3581
PROJECT NUMBER & PHASE 06000203891
EA 0M0201

DISREGARD PRINTS BEARING EARLIER REVISION DATES → 05-01-12 09-18-12 03-13-13

REVISION DATES (PRELIMINARY STAGE ONLY) SHEET OF

J:\PSE_AADD\Pse_2015_AADD\DISTRICT_06\06-0M0201\Structures\st1_00.dgn

15-JAN-2015 08:55

DIST.	COUNTY	ROUTE	POST MILES TOTAL PROJECT	SHEET NO.	TOTAL SHEETS
06	Fre	168	R36.0	64	70

REGISTERED CIVIL ENGINEER — DATE 10-17-2014

REGISTERED PROFESSIONAL ENGINEER William Rocha, Jr. No. 59791 Exp. 12-31-15 CIVIL STATE OF CALIFORNIA

1-12-15
PLANS APPROVAL DATE

The State of California or its officers or agents shall not be responsible for the accuracy or completeness of scanned copies of this plan sheet.

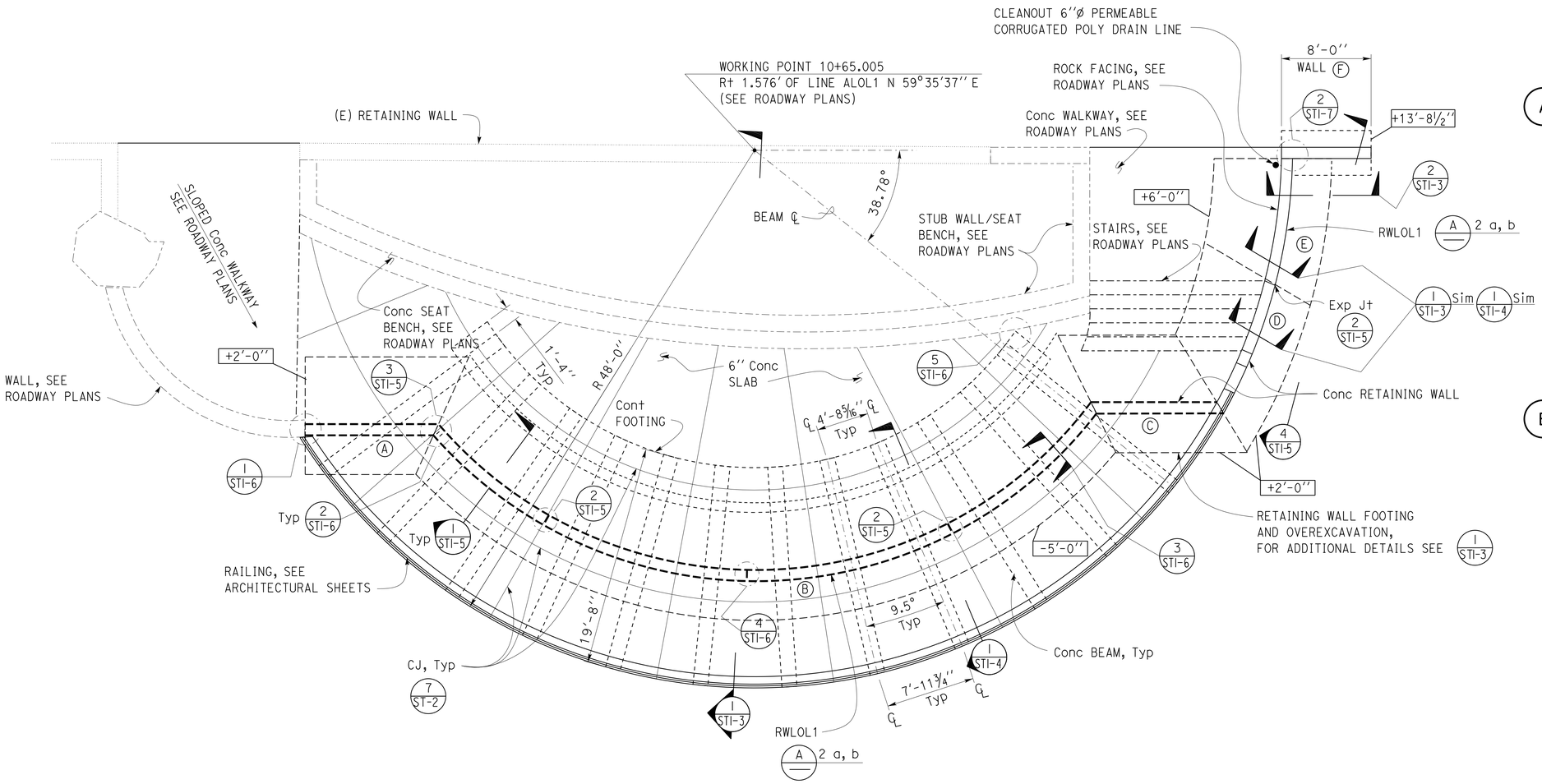

1 DECK FOUNDATION PLAN

Scale 3/16" = 1'-0"

Elevation 4400.00 = Datum 0'-0"

A DESIGN NOTES:

1. Refer to Roadway plans for all finished slab elevations and additional layout information.
2. Retaining Wall Types:
   a. A, B, C, D, E, and F see sheets ST1-2 for retaining wall Elevation and Layout
   b. see roadway plans for retaining wall layout line(RWLOL1) information.
3. Top of Deck to be 2% Max Slope in any direction. see roadway plans for deck/finish grade elevation and slopes.

B SYMBOLS:

0'-0" TOP OF FOOTING ELEVATION

NOTE:
The Contractor shall verify all controlling field dimensions before ordering or fabricating any material.

DESIGN ENGINEER	DESIGN	BY Bill Rocha	CHECKED Edgardo Isidro
	DETAILS	BY Aleksey Serin	CHECKED Bill Rocha
	QUANTITIES	BY	CHECKED

STATE OF CALIFORNIA DEPARTMENT OF TRANSPORTATION

DIVISION OF ENGINEERING SERVICES ARCHITECTURAL AND STRUCTURAL DESIGN

BRIDGE NO.
POST MILE R 36.0

MAYNARD MUNGER MEMORIAL VISTA POINT

OBSERVATION DECK — DECK FOUNDATION PLAN

SHEET ST1-1

TAEMWW Imperial Rev. 7/10

ORIGINAL SCALE IN INCHES FOR REDUCED PLANS 0 1 2 3

UNIT 3581
PROJECT NUMBER & PHASE 06000203891
EA 0M0201

DISREGARD PRINTS BEARING EARLIER REVISION DATES → 12-30-14

REVISION DATES (PRELIMINARY STAGE ONLY) 03-13-13 04-03-13 05-21-13 07-01-13 07-11-13 07-19-13 09-11-14

SHEET OF

J:\PSE_AADD\Pse_2015_AADD\DISTRICT_06\06-0M0201\Structures\st1_01.dgn

15-JAN-2015 08:55

DIST.	COUNTY	ROUTE	POST MILES TOTAL PROJECT	SHEET NO.	TOTAL SHEETS
06	Fre	168	R36.0	65	70

William Rocha Jr. 10-17-2014
REGISTERED CIVIL ENGINEER DATE

REGISTERED PROFESSIONAL ENGINEER William Rocha, Jr. No. 59791 Exp. 12-31-15 CIVIL STATE OF CALIFORNIA

1-12-15
PLANS APPROVAL DATE

The State of California or its officers or agents shall not be responsible for the accuracy or completeness of scanned copies of this plan sheet.

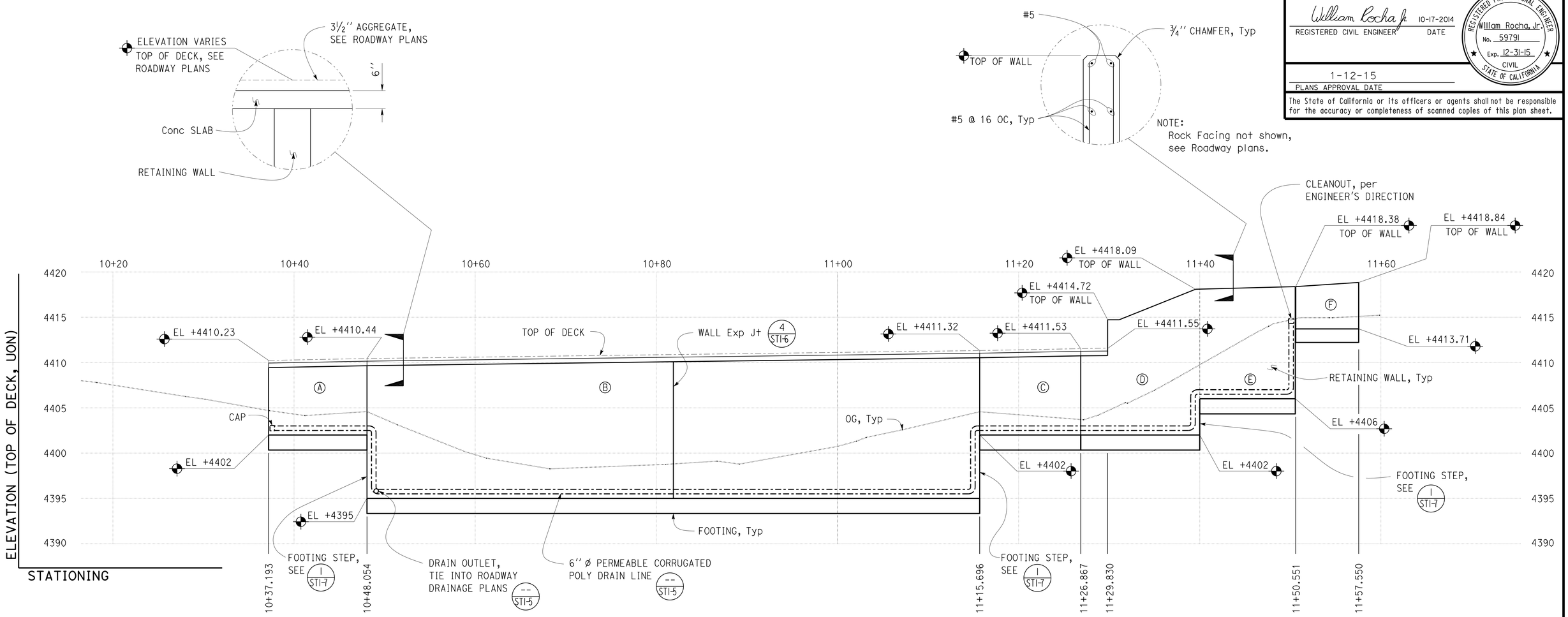

1 RETAINING WALL ELEVATION AND LAYOUT ALONG RWLOL1
Scale 3/16'' = 1' - 0''

NOTE:
The Contractor shall verify all controlling field dimensions before ordering or fabricating any material.

	BY	CHECKED
DESIGN	Bill Rocha	Edgardo Isidro
DETAILS	Aleksey Serin	Bill Rocha
QUANTITIES		

STATE OF CALIFORNIA
DEPARTMENT OF TRANSPORTATION

DIVISION OF ENGINEERING SERVICES
ARCHITECTURAL AND STRUCTURAL DESIGN

BRIDGE NO.
POST MILE R 36.0

MAYNARD MUNGER MEMORIAL VISTA POINT
OBSERVATION DECK
WALL ELEVATION AND LAYOUT

SHEET ST1-2

TAEMWW Imperial Rev. 7/10

ORIGINAL SCALE IN INCHES FOR REDUCED PLANS 0 1 2 3

UNIT 3581
PROJECT NUMBER & PHASE 06000203891
EA 0M0201

DISREGARD PRINTS BEARING EARLIER REVISION DATES
REVISION DATES (PRELIMINARY STAGE ONLY) SHEET OF
03-05-13 04-18-13 04-24-13 05-23-13 06-06-13 07-01-13 07-11-13 07-19-13

J:\PSE_AADD\Pse_2015_AADD\DISTRICT_06\06-0M0201\Structures\st1_02.dgn

15-JAN-2015 08:55

DIST.	COUNTY	ROUTE	POST MILES TOTAL PROJECT	SHEET NO.	TOTAL SHEETS
06	Fre	168	R36.0	66	70

William Rocha Jr. 10-17-2014
REGISTERED CIVIL ENGINEER DATE

REGISTERED PROFESSIONAL ENGINEER William Rocha, Jr. No. 59791 Exp. 12-31-15 CIVIL STATE OF CALIFORNIA

1-12-15
PLANS APPROVAL DATE

The State of California or its officers or agents shall not be responsible for the accuracy or completeness of scanned copies of this plan sheet.

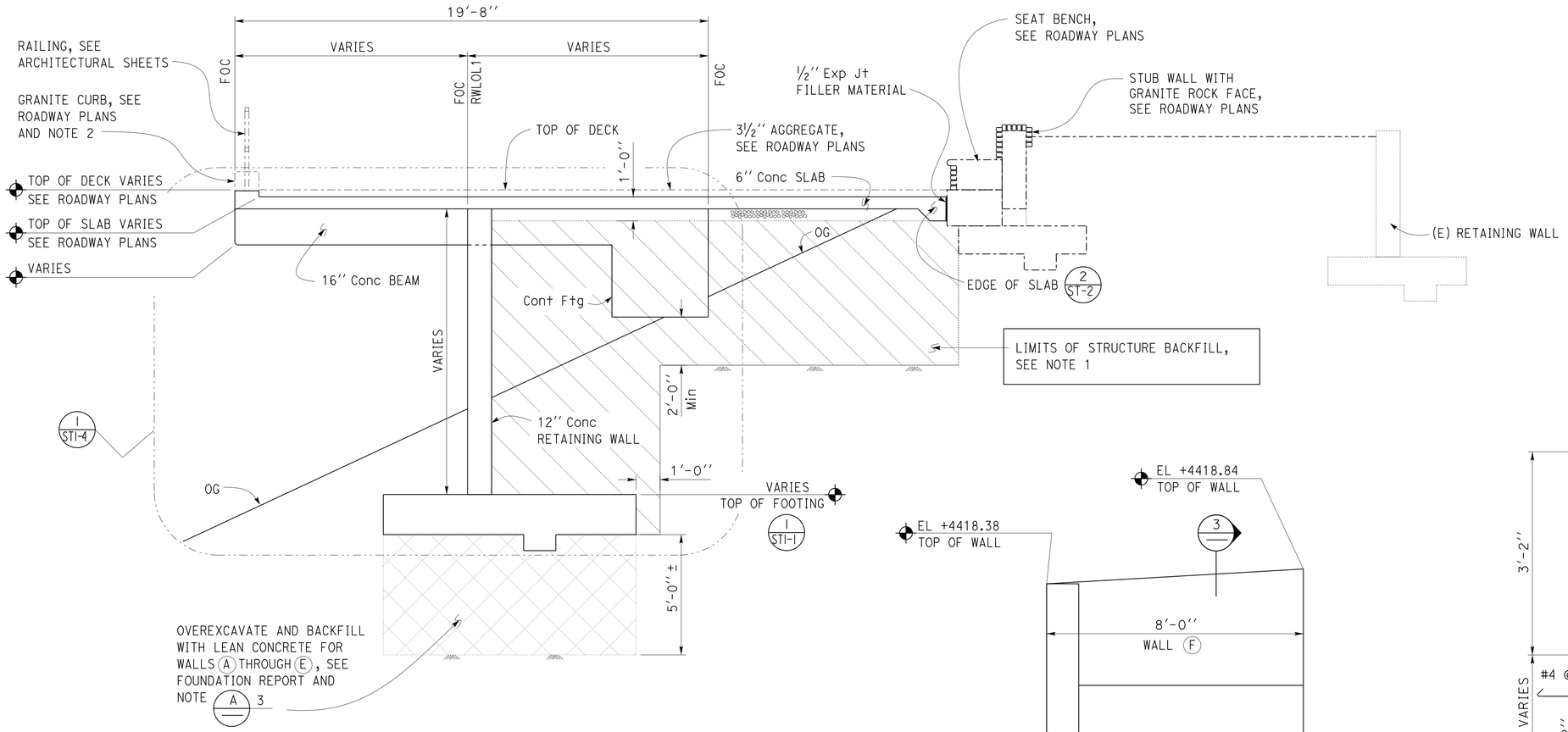

1 MAIN SECTION
Scale 3/8" = 1' - 0"

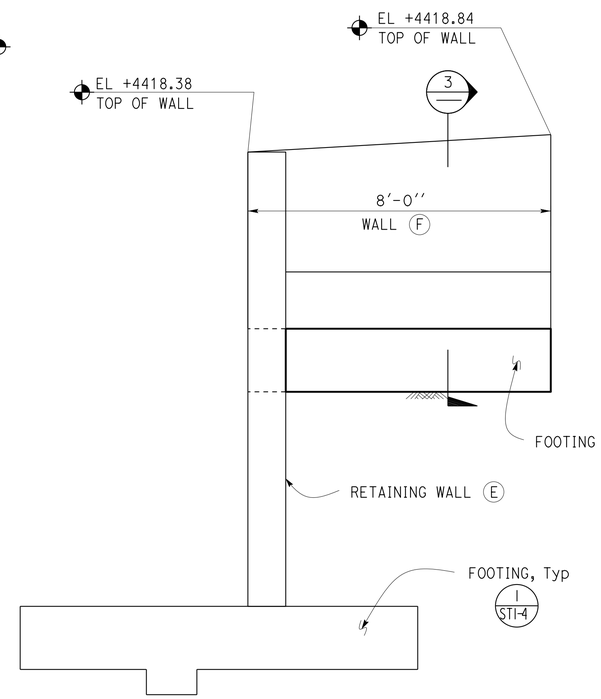

2 WALL F ELEVATION
Scale ½" = 1' - 0"

A NOTES:

1. Add Structure Backfill as shown, compacted to 95 percent relative compaction.
2. Contractor not to damage (E) reinforcement in slab for curb and railing post connection.
3. Prior to Excavation for Retaining wall foundation, State Geotech Engineer needs to be present for inspection.

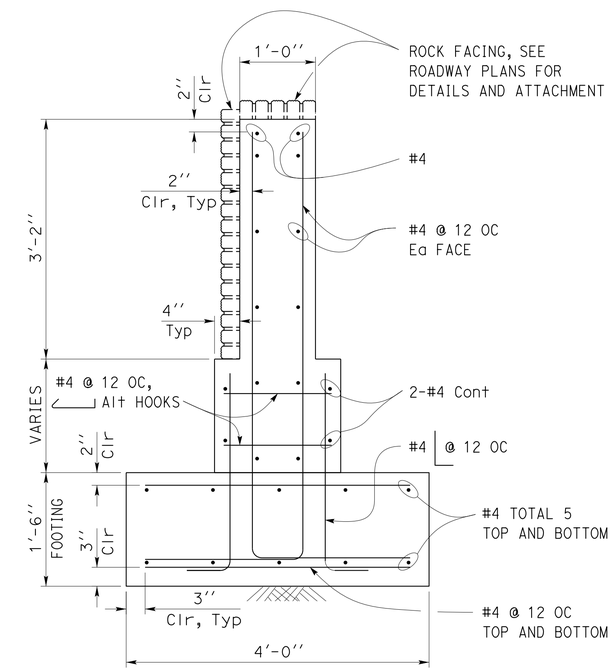

3 WALL F SECTION
Scale 1" = 1' - 0"

NOTE:
The Contractor shall verify all controlling field dimensions before ordering or fabricating any material.

	BY	CHECKED
DESIGN	Bill Rocha	Edgardo Isidro
DETAILS	Aleksey Serin	Bill Rocha
QUANTITIES		

STATE OF CALIFORNIA
DEPARTMENT OF TRANSPORTATION

DIVISION OF ENGINEERING SERVICES
ARCHITECTURAL AND STRUCTURAL DESIGN

BRIDGE NO.
POST MILE R 36.0

MAYNARD MUNGER MEMORIAL VISTA POINT

OBSERVATION DECK

MAIN SECTION

SHEET ST1-3

TAEMWW Imperial Rev. 7/10

ORIGINAL SCALE IN INCHES FOR REDUCED PLANS 0 1 2 3

UNIT 3581
PROJECT NUMBER & PHASE 06000203891
EA 0M0201

DISREGARD PRINTS BEARING EARLIER REVISION DATES
REVISION DATES (PRELIMINARY STAGE ONLY) 06-06-13 07-01-13 07-11-13 07-19-13 09-11-14 10-16-14 03-05-13 05-22-13
SHEET OF

J:\PSE_AADD\Pse_2015_AADD\DISTRICT_06\06-0M0201\Structures\st1_03.dgn

15-JAN-2015 08:55

DIST.	COUNTY	ROUTE	POST MILES TOTAL PROJECT	SHEET NO.	TOTAL SHEETS
06	Fre	168	R36.0	67	70

REGISTERED CIVIL ENGINEER — DATE 10-17-2014

REGISTERED PROFESSIONAL ENGINEER William Rocha, Jr. No. 59791 Exp. 12-31-15 CIVIL STATE OF CALIFORNIA

1-12-15
PLANS APPROVAL DATE

The State of California or its officers or agents shall not be responsible for the accuracy or completeness of scanned copies of this plan sheet.

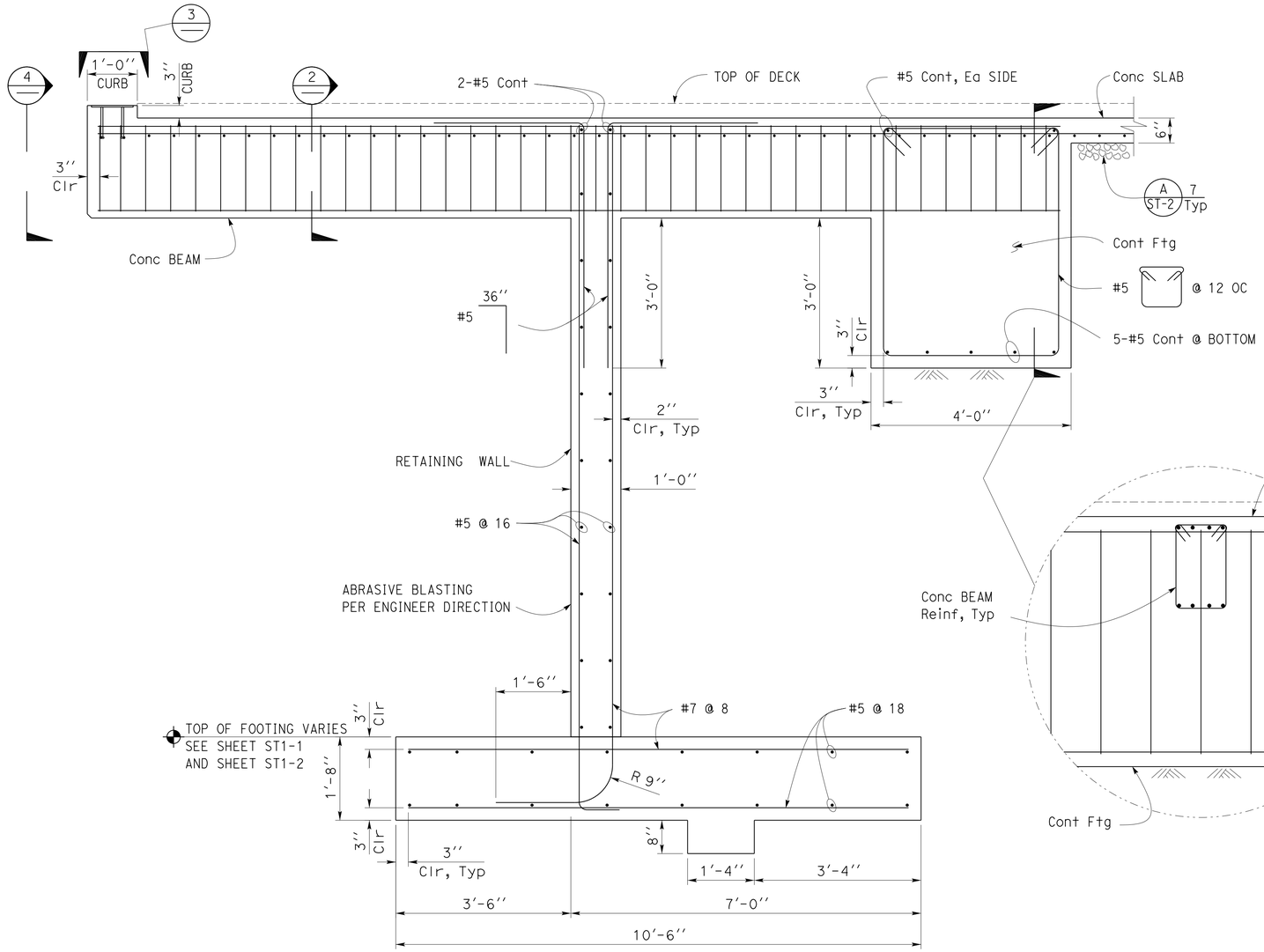

NOTES:
1. For Granite curb installation see Roadway plans.
2. Railing not shown, see Architectural sheets.
3. All Footing and Retaining Wall details typical, UON

NOTE:
The Contractor shall verify all controlling field dimensions before ordering or fabricating any material.

1 TYPICAL SECTION
Scale 3/4'' = 1' - 0''

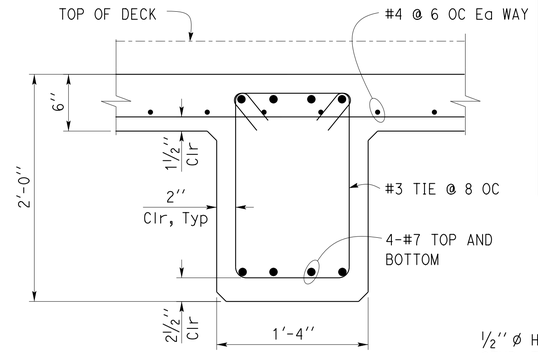

2 BEAM/SLAB SECTION
Scale 1 ½''= 1' - 0''

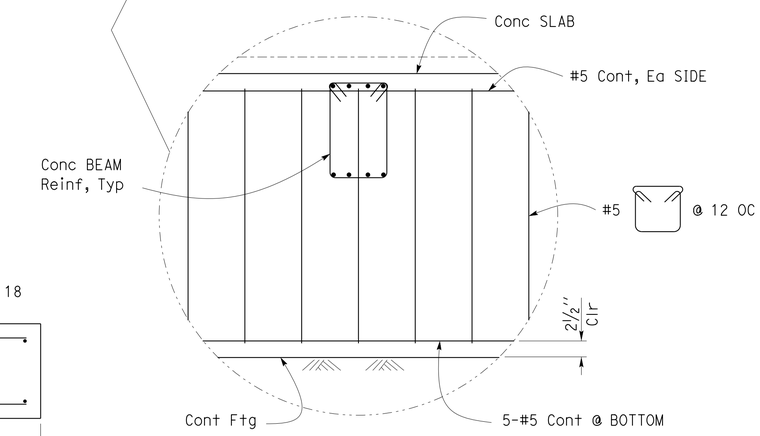

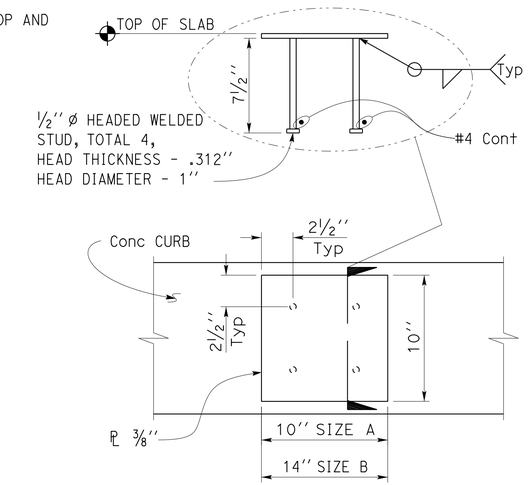

NOTE:
See Architectural Sheets for placement.

3 EMBED PLATE FOR RAILING POST
Scale 2'' = 1' - 0''

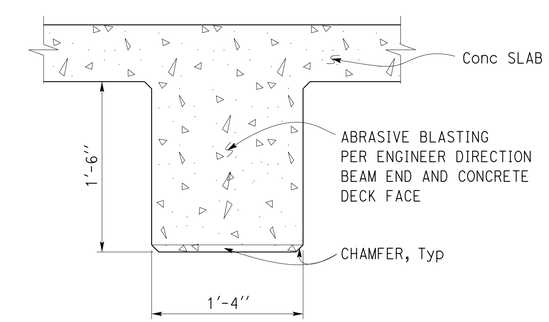

4 BEAM FACE ELEVATION
Scale 1 ½''= 1' - 0''

DESIGN	BY Bill Rocha	CHECKED Edgardo Isidro	
DETAILS	BY Aleksey Serin	CHECKED Bill Rocha	
QUANTITIES	BY	CHECKED	

STATE OF CALIFORNIA
DEPARTMENT OF TRANSPORTATION

DIVISION OF ENGINEERING SERVICES
ARCHITECTURAL AND STRUCTURAL DESIGN

BRIDGE NO.
POST MILE R 36.0

MAYNARD MUNGER MEMORIAL VISTA POINT
OBSERVATION DECK
REINFORCEMENT DETAILS

SHEET ST1-4

TAEMWW Imperial Rev. 7/10

ORIGINAL SCALE IN INCHES FOR REDUCED PLANS 0 1 2 3

UNIT 3581
PROJECT NUMBER & PHASE 06000203891
EA 0M0201

DISREGARD PRINTS BEARING EARLIER REVISION DATES
REVISION DATES (PRELIMINARY STAGE ONLY) 09-11-14 04-18-13 04-23-13 05-13-13 06-06-13 07-01-13 07-11-13 07-19-13
SHEET OF

J:\PSE_AADD\Pse_2015_AADD\DISTRICT_06\06-0M0201\Structures\st1_04.dgn

15-JAN-2015 08:55

DIST.	COUNTY	ROUTE	POST MILES TOTAL PROJECT	SHEET NO.	TOTAL SHEETS
06	Fre	168	R36.0	68	70

REGISTERED CIVIL ENGINEER — DATE 10-17-2014

REGISTERED PROFESSIONAL ENGINEER William Rocha, Jr. No. 59791 Exp. 12-31-15 CIVIL STATE OF CALIFORNIA

1-12-15
PLANS APPROVAL DATE

The State of California or its officers or agents shall not be responsible for the accuracy or completeness of scanned copies of this plan sheet.

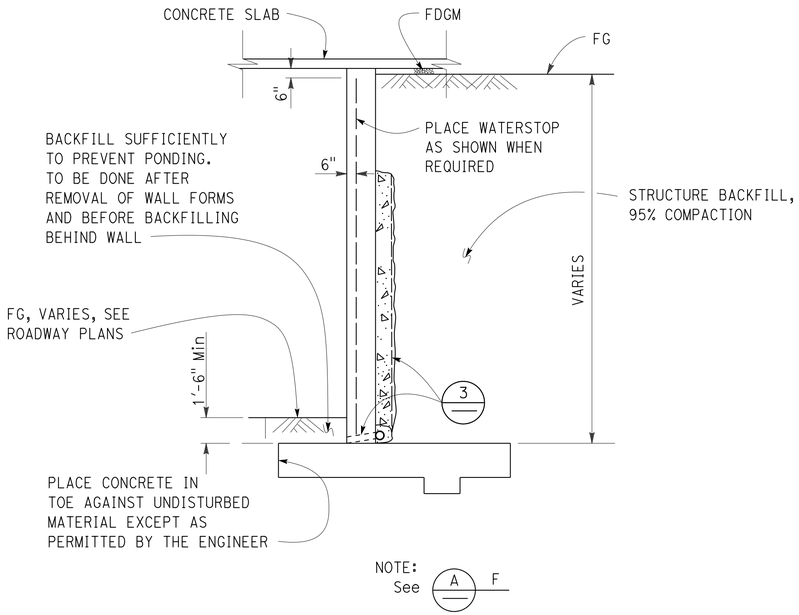

1 RETAINING WALL DETAIL
No Scale

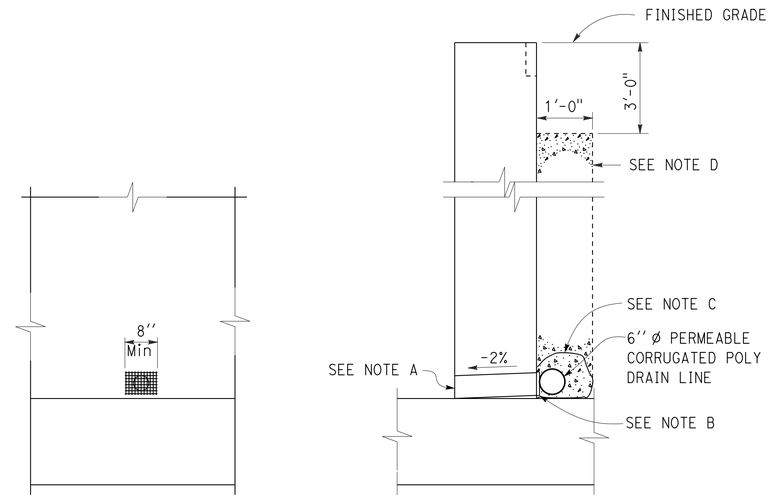

3 DRAIN OUTLET AND PERVIOUS BACKFILL
No Scale

A NOTES:

A. 6" * PVC Drain, tie into Roadway drainage, see Roadway plans.

B. 8" square aluminum or galvanized steel wire 1/4" mesh hardware cloth, minimum wire diameter 0.025". Anchor firmly to backface.

C. One cubic foot pervious backfill material in a nonwoven filter fabric, securely tied around drain line.

D. Pervious backfill material continuous behind retaining wall or abutment.

E. Avoid Rebar if using dowels to attach, Roadway ledger to any retaining walls.

F. Typical for walls A through E.

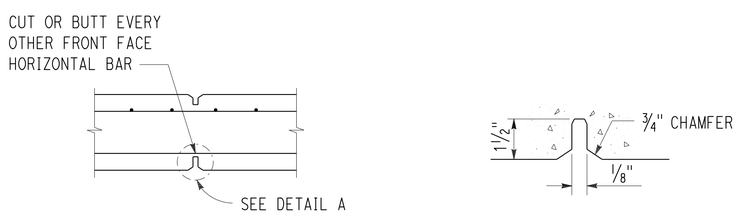

NOTE:
Joint may be formed with 1/8" hardboard and cut back to the root of the chamfer on the exposed face.

2 EXPANSION JOINT DETAIL
No Scale

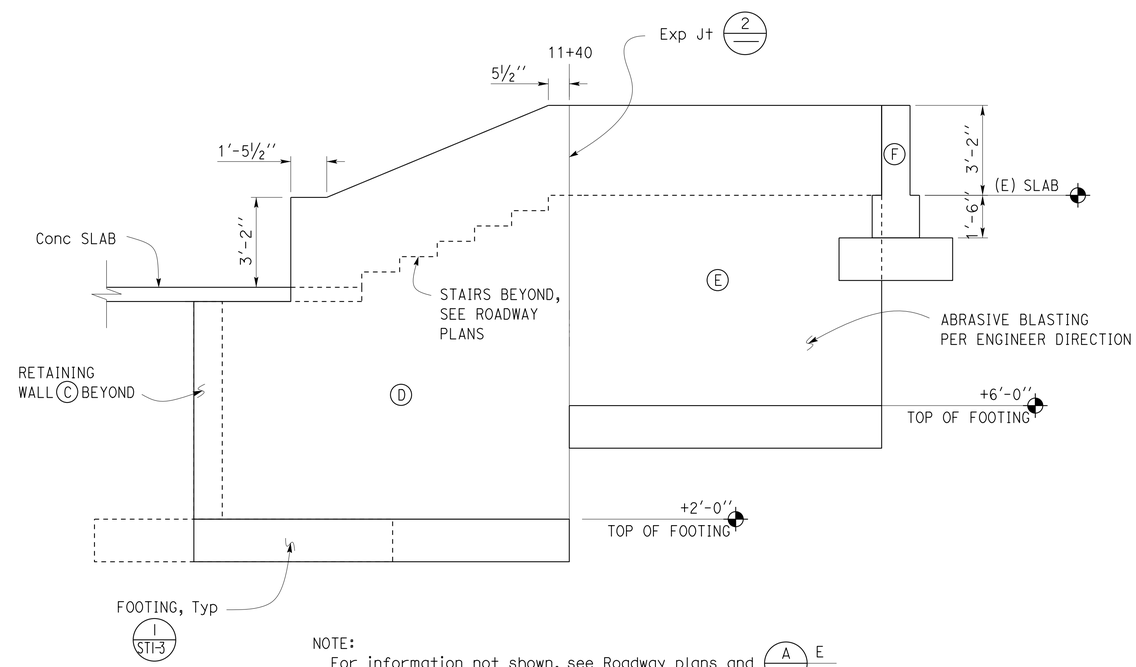

NOTE:
For information not shown, see Roadway plans and A E

4 RETAINING WALL D ELEVATION
No Scale

NOTE:
The Contractor shall verify all controlling field dimensions before ordering or fabricating any material.

	BY	CHECKED
DESIGN	Bill Rocha	Edgardo Isidro
DETAILS	Aleksey Serin	Bill Rocha
QUANTITIES		

STATE OF CALIFORNIA
DEPARTMENT OF TRANSPORTATION

DIVISION OF ENGINEERING SERVICES
ARCHITECTURAL AND STRUCTURAL DESIGN

BRIDGE NO.
POST MILE R 36.0

MAYNARD MUNGER MEMORIAL VISTA POINT
OBSERVATION DECK
RETAINING WALL DETAILS

SHEET ST1-5

TAEMWW Imperial Rev. 7/10

ORIGINAL SCALE IN INCHES FOR REDUCED PLANS 0 1 2 3

UNIT 3581
PROJECT NUMBER & PHASE 06000203891
EA 0M0201

DISREGARD PRINTS BEARING EARLIER REVISION DATES

REVISION DATES (PRELIMINARY STAGE ONLY) SHEET OF
01-31-13 02-15-13 02-28-13 04-18-13 04-23-13 04-26-13 05-22-13 06-07-13 07-11-13 07-19-13

J:\PSE_AADD\Pse_2015_AADD\DISTRICT_06\06-0M0201\Structures\st1_05.dgn

15-JAN-2015 08:55

DIST.	COUNTY	ROUTE	POST MILES TOTAL PROJECT	SHEET NO.	TOTAL SHEETS
06	Fre	168	R36.0	69	70

William Rocha Jr. 10-17-2014
REGISTERED CIVIL ENGINEER DATE

REGISTERED PROFESSIONAL ENGINEER William Rocha, Jr. No. 59791 Exp. 12-31-15 CIVIL STATE OF CALIFORNIA

1-12-15
PLANS APPROVAL DATE

The State of California or its officers or agents shall not be responsible for the accuracy or completeness of scanned copies of this plan sheet.

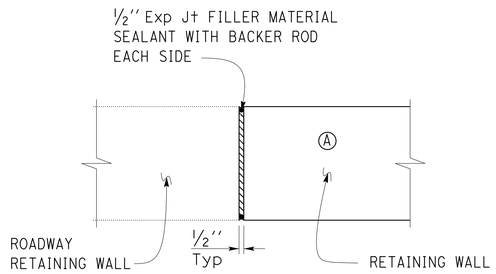

1 ROADWAY RETAINING WALL TO RETAINING A WALL DETAIL
Scale 1 1/2''= 1' - 0''

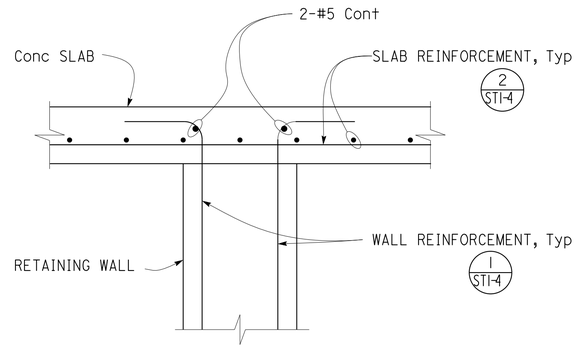

3 SECTION
Scale 1 1/2''= 1' - 0''

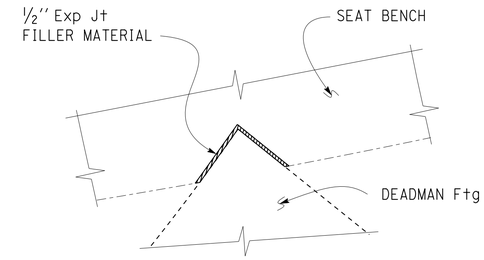

5 FOOTING DETAIL
Scale 1''= 1' - 0''

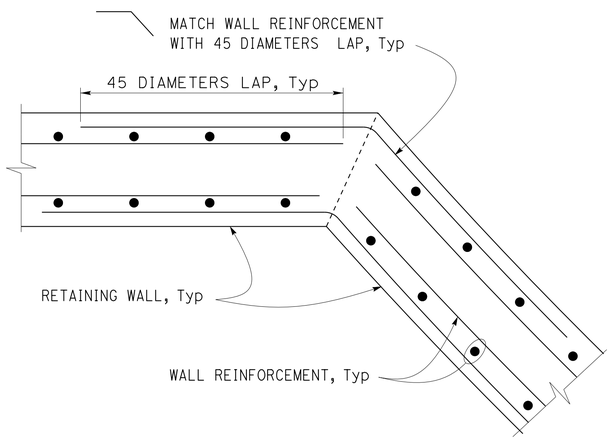

2 WALL INTERSECTION DETAIL
Scale 1 1/2''= 1' - 0''

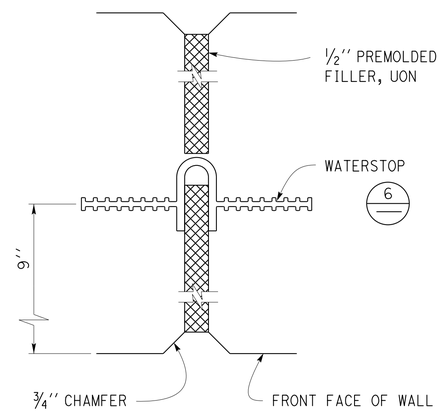

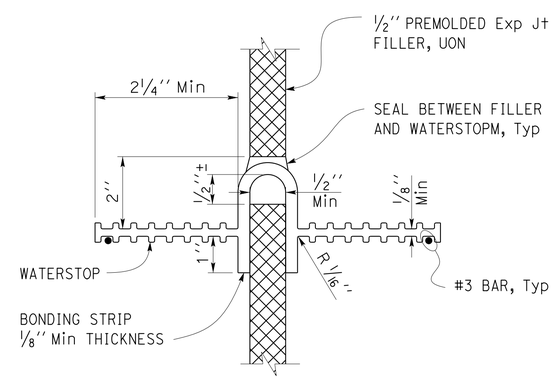

NOTES:

1. Holes will be permitted in the outer 1/2'' of the web for wire, rings, etc. Tie web to #3 reinforcing bar @ 12 maximum intervals to support the waterstop in proper position during concrete placement. Alternative detail may be submitted for approval of the Engineer.

2. Waterstop to have 5 or more pairs of raised ribs to provide 0.1 square inches minimum rib cross-section area on each half of the waterstop.

4 WALL EXPANSION JOINT DETAIL
No Scale

6 WATERSTOP DETAIL
No Scale

NOTE:
The Contractor shall verify all controlling field dimensions before ordering or fabricating any material.

	BY	CHECKED
DESIGN	Bill Rocha	Edgardo Isidro
DETAILS	Aleksey Serin	Bill Rocha
QUANTITIES		

STATE OF CALIFORNIA
DEPARTMENT OF TRANSPORTATION

DIVISION OF ENGINEERING SERVICES
ARCHITECTURAL AND STRUCTURAL DESIGN

BRIDGE NO.
POST MILE R 36.0

MAYNARD MUNGER MEMORIAL VISTA POINT
OBSERVATION DECK
RETAINING WALL CONNECTION DETAILS

SHEET ST1-6

TAEMWW Imperial Rev. 7/10

ORIGINAL SCALE IN INCHES FOR REDUCED PLANS 0 1 2 3

UNIT 3581
PROJECT NUMBER & PHASE 06000203891
EA 0M0201

DISREGARD PRINTS BEARING EARLIER REVISION DATES → 03-04-13 03-05-13 03-14-13 03-22-13 07-19-13

REVISION DATES (PRELIMINARY STAGE ONLY) SHEET OF

J:\PSE_AADD\Pse_2015_AADD\DISTRICT_06\06-0M0201\Structures\st1_06.dgn

15-JAN-2015 08:55

DIST.	COUNTY	ROUTE	POST MILES TOTAL PROJECT	SHEET NO.	TOTAL SHEETS
06	Fre	168	R36.0	70	70

William Rocha Jr. 10-17-2014
REGISTERED CIVIL ENGINEER DATE

REGISTERED PROFESSIONAL ENGINEER
William Rocha, Jr.
No. 59791
Exp. 12-31-15
CIVIL
STATE OF CALIFORNIA

1-12-15
PLANS APPROVAL DATE

The State of California or its officers or agents shall not be responsible for the accuracy or completeness of scanned copies of this plan sheet.

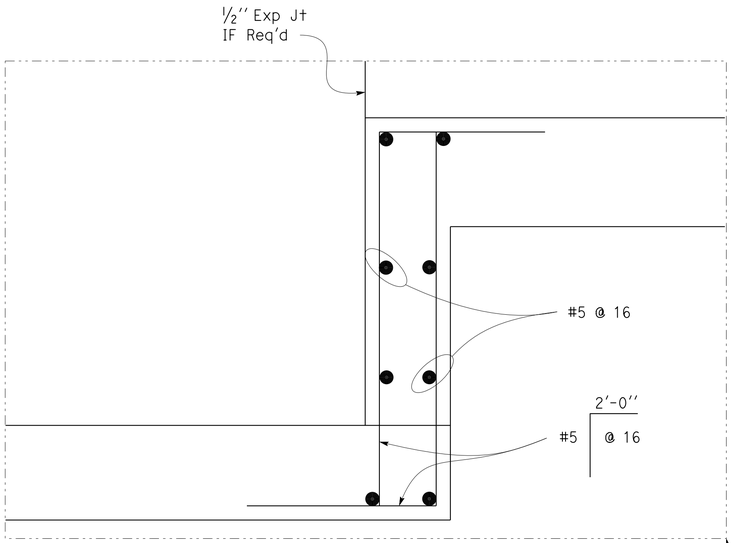

SECTION

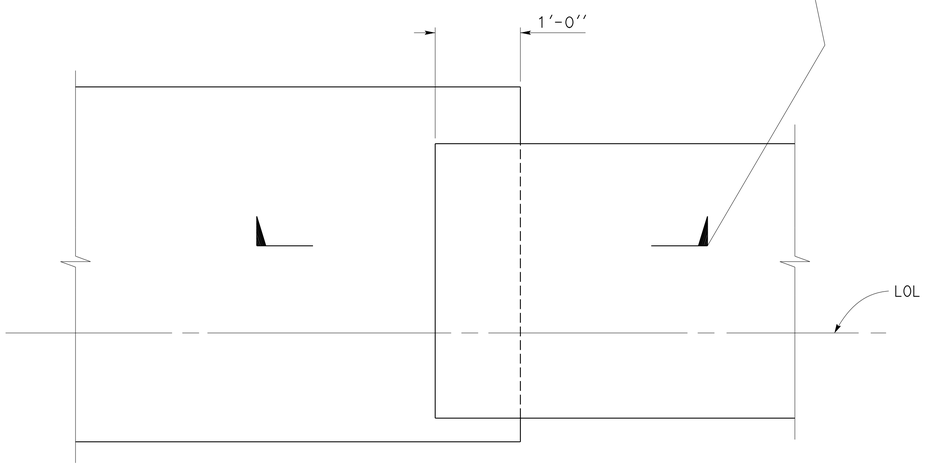

PLAN

1 FOOTING STEP DETAIL
No Scale

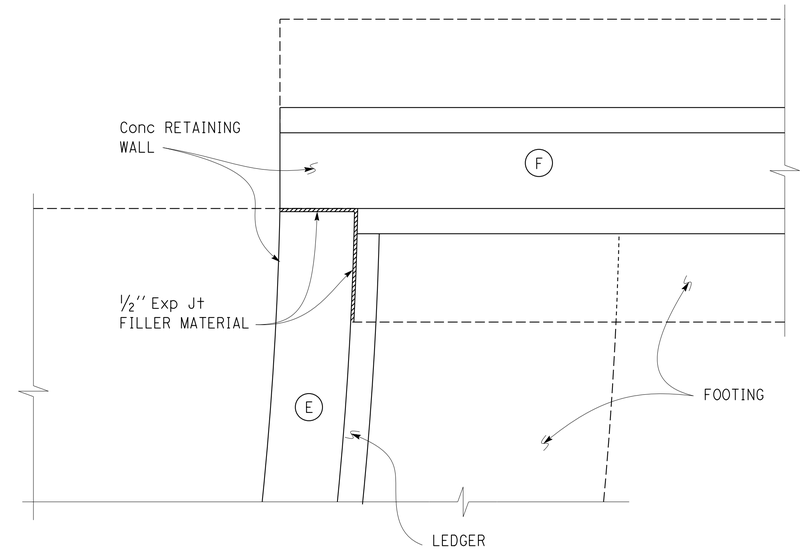

2 FOOTING DETAIL
Scale 1'' = 1' - 0''

NOTE:
The Contractor shall verify all controlling field dimensions before ordering or fabricating any material.

	BY	CHECKED
DESIGN	Bill Rocha	Edgardo Isidro
DETAILS	Aleksey Serin	Bill Rocha
QUANTITIES		

STATE OF CALIFORNIA
DEPARTMENT OF TRANSPORTATION

DIVISION OF ENGINEERING SERVICES
ARCHITECTURAL AND STRUCTURAL DESIGN

BRIDGE NO.
POST MILE R 36.0

MAYNARD MUNGER MEMORIAL VISTA POINT
OBSERVATION DECK
RETAINING WALL CONNECTION DETAILS

SHEET ST1-7

TAEMWW Imperial Rev. 7/10

ORIGINAL SCALE IN INCHES FOR REDUCED PLANS 0 1 2 3

UNIT 3581
PROJECT NUMBER & PHASE 06000203891

DISREGARD PRINTS BEARING EARLIER REVISION DATES → 07-01-13 07-19-13 12-30-14

REVISION DATES (PRELIMINARY STAGE ONLY) SHEET OF

EA 0M0201

J:\PSE_AADD\Pse_2015_AADD\DISTRICT_06\06-0M0201\Structures\st1_07.dgn

15-JAN-2015 08:55