STATE OF CALIFORNIA

DEPARTMENT OF TRANSPORTATION

ACSTP-X019(023)E

Dist	COUNTY	ROUTE	POST MILES TOTAL PROJECT	SHEET No.	TOTAL SHEETS
06	Fre	168,180	R0.8/R10.5, R54.2/R62.9	1	79

INDEX OF PLANS

SHEET No.	DESCRIPTION
1	TITLE AND LOCATION MAP
2	CONSTRUCTION DETAILS AND QUANTITIES
3	CONSTRUCTION AREA SIGNS
4	PLANT LIST
5-16	PLANTING PLANS
17-27	IRRIGATION PLANS
28	SPRINKLER SCHEDULE AND DETAILS
29-66	ELECTRICAL PLANS
67-79	REVISED AND NEW STANDARD PLANS

THE STANDARD PLANS LIST APPLICABLE TO THIS CONTRACT IS INCLUDED IN THE NOTICE TO BIDDERS AND SPECIAL PROVISIONS BOOK.

PROJECT PLANS FOR CONSTRUCTION ON STATE HIGHWAY

IN FRESNO COUNTY IN FRESNO ON ROUTE 168 FROM ROUTE 180 TO DEWOLF AVENUE AND ON ROUTE 180 FROM MARKS AVENUE TO CLOVIS AVENUE

TO BE SUPPLEMENTED BY STANDARD PLANS DATED MAY 2006

LOCATIONS OF CONSTRUCTION

VEHICLE DETECTION SYSTEM LOCATIONS

Loc No.	COUNTY	ROUTE	DIRECTION	PM	LOCATION
1	Fre	180	WB	R54.20	MARKS Ave
2	Fre	180	WB	R56.20	SR 99
3	Fre	180	EB	R56.57	SR 99-180
4	Fre	180	NA	R57.02	BROADWAY Ave
5	Fre	180	NA	R57.16	FULTON St
6	Fre	180	NA	R58.20	FRESNO St
7	Fre	180	WB, EB	R60.37	MAPLE Ave
8	Fre	180	NA	R61.48	WILLOW Ave
9	Fre	180	EB	R61.82	N PEACH Ave
10	Fre	180	WB	R62.07	N PEACH Ave
11	Fre	180	EB	R62.87	CLOVIS Ave
12	Fre	168	NA	R0.79	FLORADORA Ave
13	Fre	168	NA	R2.16	DAKOTA Ave
14	Fre	168	WB	R2.90	ASHLAN Ave
15	Fre	168	NA	R3.28	GETTYSBURG Ave
16	Fre	168	WB, EB	R4.88	BARSTOW Ave
17	Fre	168	WB, EB	R5.07	BULLARD Ave
18	Fre	168	WB	R6.15	SIERRA Ave
19	Fre	168	WB	R6.68	HERNDON Ave
20	Fre	168	WB	R7.30	SUNNYSIDE Ave
21	Fre	168	WB	R7.82	FOWLER Ave
22	Fre	168	WB, EB	R8.29	ARMSTRONG Ave
23	Fre	168	EB	R8.95	TEMPERANCE Ave
24	Fre	168	WB, EB	R9.36	LOCAN Ave
25	Fre	168	WB	R10.50	DE WOLF Ave

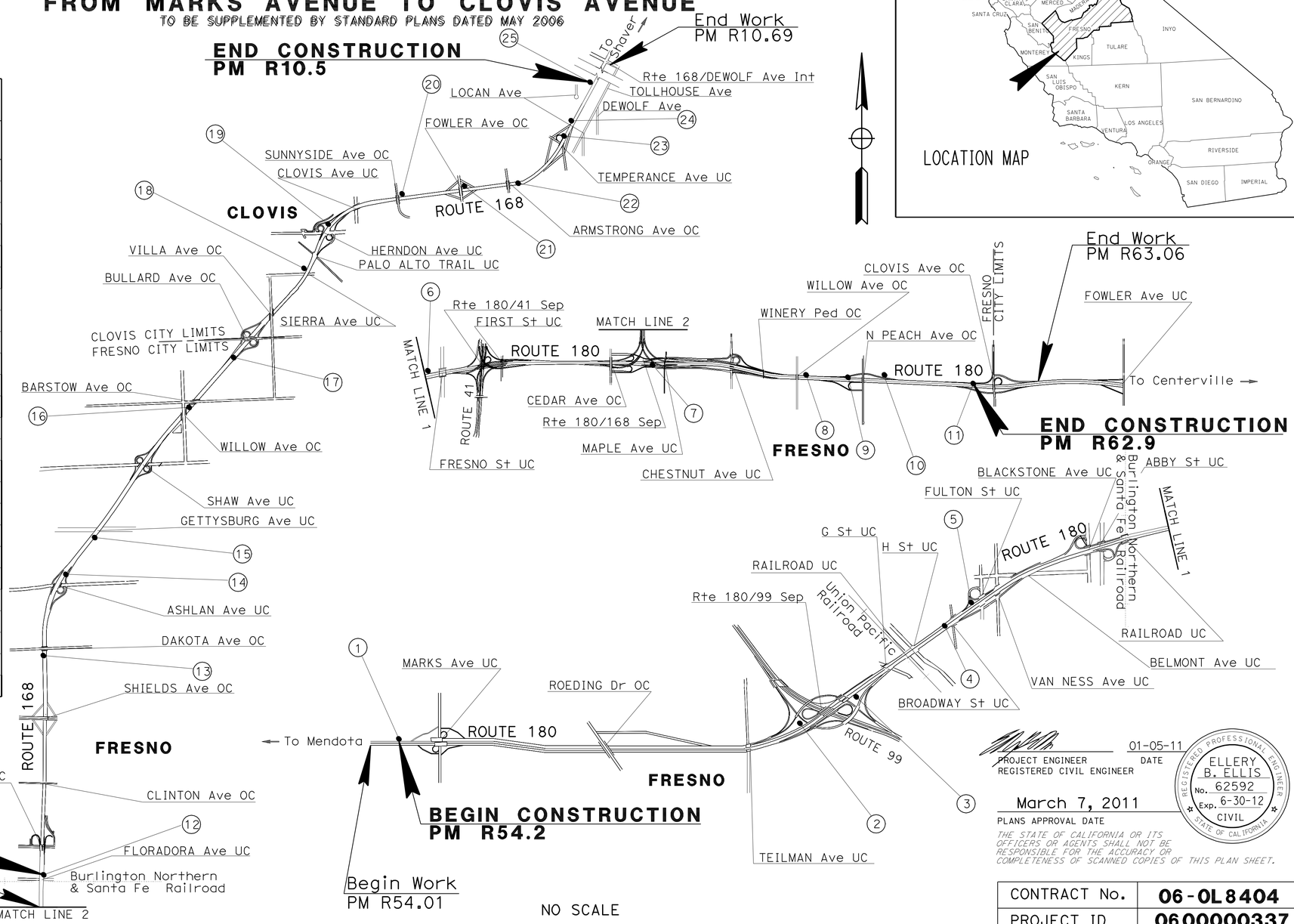

LOCATION MAP

PROJECT MANAGER: EMAD ABI-RACHED

DESIGN ENGINEER: THANH NGUYEN

PROJECT ENGINEER REGISTERED CIVIL ENGINEER — 01-05-11 DATE

REGISTERED PROFESSIONAL ENGINEER ELLERY B. ELLIS No. 62592 Exp. 6-30-12 CIVIL STATE OF CALIFORNIA

March 7, 2011
PLANS APPROVAL DATE

THE STATE OF CALIFORNIA OR ITS OFFICERS OR AGENTS SHALL NOT BE RESPONSIBLE FOR THE ACCURACY OR COMPLETENESS OF SCANNED COPIES OF THIS PLAN SHEET.

THE CONTRACTOR SHALL POSSESS THE CLASS (OR CLASSES) OF LICENSE AS SPECIFIED IN THE "NOTICE TO BIDDERS."

CONTRACT No.	06-0L8404
PROJECT ID	0600000337

LAST REVISION 01-10-11 — DATE PLOTTED => 23-MAR-2011 TIME PLOTTED => 06:18

Dist	COUNTY	ROUTE	POST MILES TOTAL PROJECT	SHEET No.	TOTAL SHEETS
06	Fre	168,180	R0.8/R10.5, R54.2/R62.9	2	79

03-01-11
REGISTERED CIVIL ENGINEER DATE

3-7-11
PLANS APPROVAL DATE

REGISTERED PROFESSIONAL ENGINEER ELLERY B. ELLIS No. 62592 Exp. 6-30-12 STATE OF CALIFORNIA

THE STATE OF CALIFORNIA OR ITS OFFICERS OR AGENTS SHALL NOT BE RESPONSIBLE FOR THE ACCURACY OR COMPLETENESS OF ELECTRONIC COPIES OF THIS PLAN SHEET.

NOTES:

1. IN SLOPES FLATTER THAN 3:1, MVDS POLE SHALL BE A MINIMUM OF 30′ FROM EDGE OF TRAVEL WAY. IN SLOPES STEEPER THAN 3:1 A MINIMUM OF 5 FEET VERTICAL CLEARANCE SHOULD BE PROVIDED ABOVE THE HINGE POINT OF CUT SLOPE.
2. EXISTING UTILITY FACILITIES HAVE NOT BEEN POSITIVELY IDENTIFIED.
3. MVDS POLE SHALL BE A MINIMUM OF 30′ FROM ANY CMS SIGN, SIGN STRUCTURE WITH A PILE FOUNDATION, BRIDGE FOUNDATION OR AS DIRECTED BY THE ENGINEER.
4. FOR SOME LOCATIONS, MORE THAN ONE CASE MAY APPLY.

ABBREVIATION:

MVDS MICROWAVE VEHICLE DETECTION SYSTEM

TYPICAL MVDS PLACEMENT CASE DETAILS

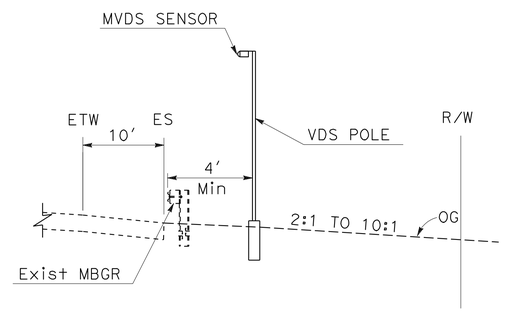

CASE 1

Rte 180 (LOCATION 3)

Rte 168 (LOCATIONS 18, 19)

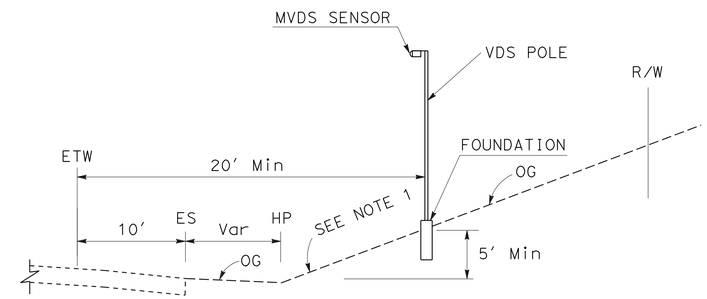

CASE 3

Rte 180 (LOCATIONS 2, 10)

Rte 168 (LOCATIONS 20, 21)

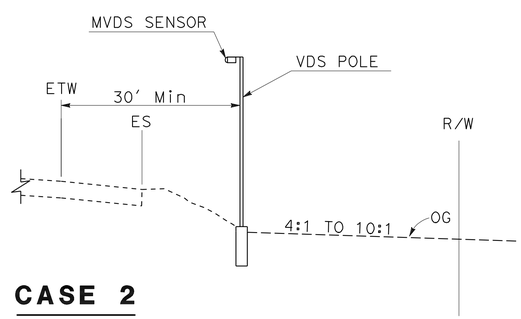

CASE 2

Rte 180 (LOCATION 1)
Rte 168 (LOCATION 25)

TEMPORARY DRAINAGE INLET PROTECTION

LOCATIONS	EA
3	1
6	1
9	1
TOTAL	3

CONSTRUCTION DETAILS AND QUANTITIES

NO SCALE

C-1

REVISED BY | DATE REVISED
CALCULATED-DESIGNED BY R. VERNON | CHECKED BY E. ELLIS
FUNCTIONAL SUPERVISOR THANH NGUYEN
STATE OF CALIFORNIA - DEPARTMENT OF TRANSPORTATION
Caltrans DESIGN

LAST REVISION 03-01-11 | DATE PLOTTED => 10-MAR-2011 | TIME PLOTTED => 07:15

Dist	COUNTY	ROUTE	POST MILES TOTAL PROJECT	SHEET No.	TOTAL SHEETS
06	Fre	168,180	R0.8/R10.5, R54.2/R62.9	3	79

REGISTERED CIVIL ENGINEER DATE 06-08-10

PLANS APPROVAL DATE 3-7-11

REGISTERED PROFESSIONAL ENGINEER HASSAN M. TAHA No. 60130 Exp. 06/30/12 CIVIL STATE OF CALIFORNIA

THE STATE OF CALIFORNIA OR ITS OFFICERS OR AGENTS SHALL NOT BE RESPONSIBLE FOR THE ACCURACY OR COMPLETENESS OF ELECTRONIC COPIES OF THIS PLAN SHEET.

STATIONARY MOUNTED CONSTRUCTION AREA SIGNS

SIGN No.	SIGN CODE	PANEL SIZE	SIGN MESSAGE	No. OF POSTS	POST SIZE	No. OF SIGNS
A	W20-1	48" x 48"	ROAD WORK AHEAD	1	4" x 6"	29
B	G20-2	48" x 24"	END ROAD WORK	1	4" x 4"	4

NOTE: LOCATIONS OF CONSTRUCTION AREA SIGNS SHOWN ARE APPROXIMATE, EXACT LOCATIONS WILL BE DETERMINED BY THE ENGINEER.

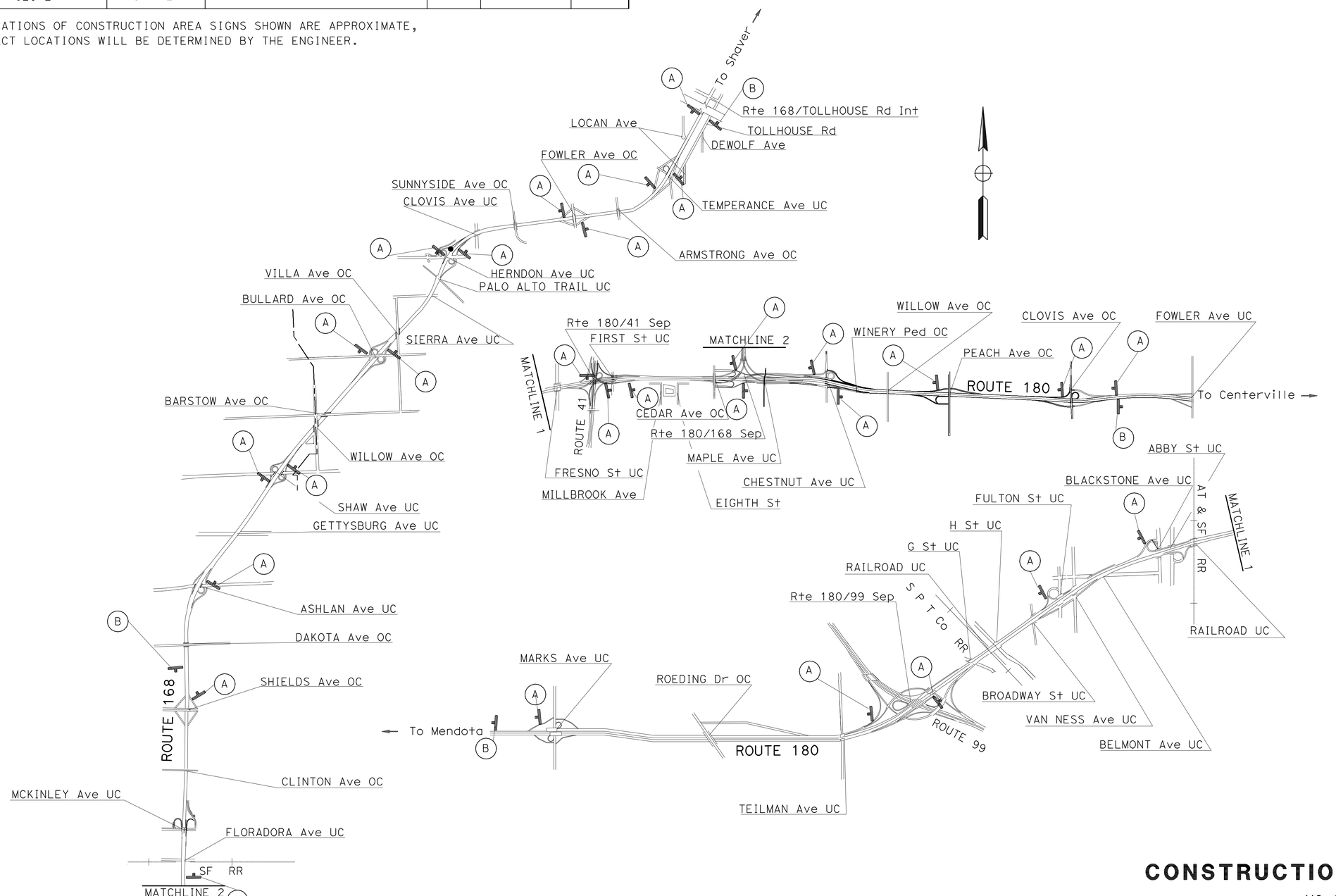

CONSTRUCTION AREA SIGNS

NO SCALE

CS-1

THIS PLAN ACCURATE FOR CONSTRUCTION AREA SIGN ONLY.

STATE OF CALIFORNIA - DEPARTMENT OF TRANSPORTATION

Caltrans 06-TRAFFIC DESIGN

FUNCTIONAL SUPERVISOR: MOHAMMED QATAMI

CALCULATED-DESIGNED BY: ALI SHABAZZ

CHECKED BY: HASSAN TAHA

REVISED BY

DATE REVISED

LAST REVISION 06-08-10

DATE PLOTTED => 14-MAR-2011

TIME PLOTTED => 11:05

Dist	COUNTY	ROUTE	POST MILES TOTAL PROJECT	SHEET No.	TOTAL SHEETS
06	Fre	168,180	R0.8/R10.5, R54.2/R62.9	4	79

LICENSED LANDSCAPE ARCHITECT

3-7-11
PLANS APPROVAL DATE

LICENSED LANDSCAPE ARCHITECT
RICHARD B. COLE No. 3425
Expiration Date 06/30/12
Renewal Date 06/15/10
Date
STATE OF CALIFORNIA

THE STATE OF CALIFORNIA OR ITS OFFICERS OR AGENTS SHALL NOT BE RESPONSIBLE FOR THE ACCURACY OR COMPLETENESS OF SCANNED COPIES OF THIS PLAN SHEET.

ABBREVIATIONS:

AMEND — AMENDMENT
B & B — BALLED AND BURLAPPED
Dia — DIAMETER
EA — EACH
lb — POUND
Oz. — OUNCE
Ft — FOOT/FEET
SQFT — SQUARE FEET
CF — CUBIC FEET
Max — MAXIMUM
Min — MINIMUM
NCN — NO COMMON NAME
No. — NUMBER
Pkt — PACKET
PLT ESTB — PLANT ESTABLISHMENT
Pvmt — PAVEMENT
R/W — RIGHT OF WAY
SF — STATE-FURNISHED
TRVD — TRAVELED

LEGEND:

EXISTING VEGETATION TO REMAIN

AREA MULCH/ROADSIDE CLEARING LIMIT

PLANT LIST AND PLANTING SPECIFICATIONS

PLANT GROUP	PLANT No.	SYMBOL	BOTANICAL NAME	COMMON NAME	SIZE	QUANTITY EACH	HOLE SIZE (INCH) Dia	HOLE SIZE (INCH) DEPTH	BASIN TYPE	IRON SULFATE	SOIL AMEND ①	COMMERCIAL FERTILIZER ① PLANTING	COMMERCIAL FERTILIZER ① PLT ESTB	BASIN MULCH ①	STAKING	PLANTING LIMITS MINIMUM DISTANCE (Ft) FROM TRVD WAY	Pvmt	FENCE	WALL	PAVED DITCH	EARTH DITCH	ON CENTER (Ft)	REMARKS
A	1		ACACIA REDOLENS	PROSTRATE ACACIA	No. 1	18	⑨	②	II	-	0.35 CF	1 Pkt	0.25 lb	2.0 CF	-	-	20	20	20	20	22	13	SHRUB ⑫
	2		CISTUS 'SUNSET'	SUNSET ROCKROSE	No. 1	46	⑨	②	II	-	0.35 CF	1 Pkt	0.25 lb	2.0 CF	-	-	6	6	6	6	6	5	SHRUB ⑫
	3		LANTANA MONTEVIDENSIS	TRAILING LANTANA	No. 1	2	⑨	②	II	-	0.35 CF	1 Pkt	0.25 lb	2.0 CF	-	-	6	6	6	6	8	3	SHRUB ⑫
	4		MYOPORUM PARVIFOLIUM 'PUTAH CREEK'	MYOPORUM	No. 1	69	⑨	②	II	-	0.35 CF	1 Pkt	0.25 lb	2.0 CF	-	-	10	7	7	8.5	8.5	6	SHRUB ⑫
	5		ROSA BANKSIAE 'ALBA PLENA'	BANKS' WHITE ROSE	No. 1	27	⑨	②	II	-	0.35 CF	1 Pkt	0.25 lb	2.0 CF	-	-	10	7	7	8.5	8.5	6	SHRUB ⑫

APPLICABLE WHEN CIRCLED:

① - QUANTITIES SHOWN ARE "PER PLANT" UNLESS SHOWN AS SQFT OR SQYD APPLICATION RATES.
② - SUFFICIENT TO RECEIVE ROOT BALL AND ROOT PROTECTOR WHERE SPECIFIED.
3 - DOES NOT APPLY TO MULCH AREAS.
4 - AS SHOWN ON PLANS.
5 - UNLESS OTHERWISE SHOWN ON PLANS.
6 - SEE DETAIL.
7 - SEE SPECIAL PROVISIONS.
8 - SEE STANDARD SPECIFICATIONS.
⑨ - TWICE THE ROOT BALL DIAMETER.
⑩ - ROOT PROTECTOR REQUIRED.
⑪ - REQUIRED.
⑫ - TRIANGULAR SPACING.

NOTE:

UNDERLINED PORTIONS OF BOTANICAL NAME INDICATE ABBREVIATIONS USED ON PLANTING PLANS.

MULCH

DESCRIPTION	QUANTITY (CY)
BASIN MULCH	12
AREA MULCH	373
TOTAL	385

PLANT LIST

STATE OF CALIFORNIA - DEPARTMENT OF TRANSPORTATION
Caltrans
LANDSCAPE ARCHITECTURE

SENIOR LANDSCAPE ARCHITECT: ELBERT COX
CALCULATED-DESIGNED BY: RAYMOND SEGURA
CHECKED BY: RICHARD COLE
REVISED BY
DATE REVISED

LAST REVISION 01-11-11
DATE PLOTTED => 09-MAR-2011
TIME PLOTTED => 17:13

Dist	COUNTY	ROUTE	POST MILES TOTAL PROJECT	SHEET No.	TOTAL SHEETS
06	Fre	168,180	R0.8/R10.5, R54.2/R62.9	5	79

LICENSED LANDSCAPE ARCHITECT

3-7-11
PLANS APPROVAL DATE

LICENSED LANDSCAPE ARCHITECT
RICHARD B. COLE No. 3125
Expiration Date 06/30/12
Renewal Date 06/15/10
Date
STATE OF CALIFORNIA

THE STATE OF CALIFORNIA OR ITS OFFICERS OR AGENTS SHALL NOT BE RESPONSIBLE FOR THE ACCURACY OR COMPLETENESS OF SCANNED COPIES OF THIS PLAN SHEET.

NOTE:

FOR ACCURATE RIGHT OF WAY AND ACCESS DATA, CONTACT RIGHT OF WAY ENGINEERING AT THE DISTRICT OFFICE.

LEGEND

AREA MULCH

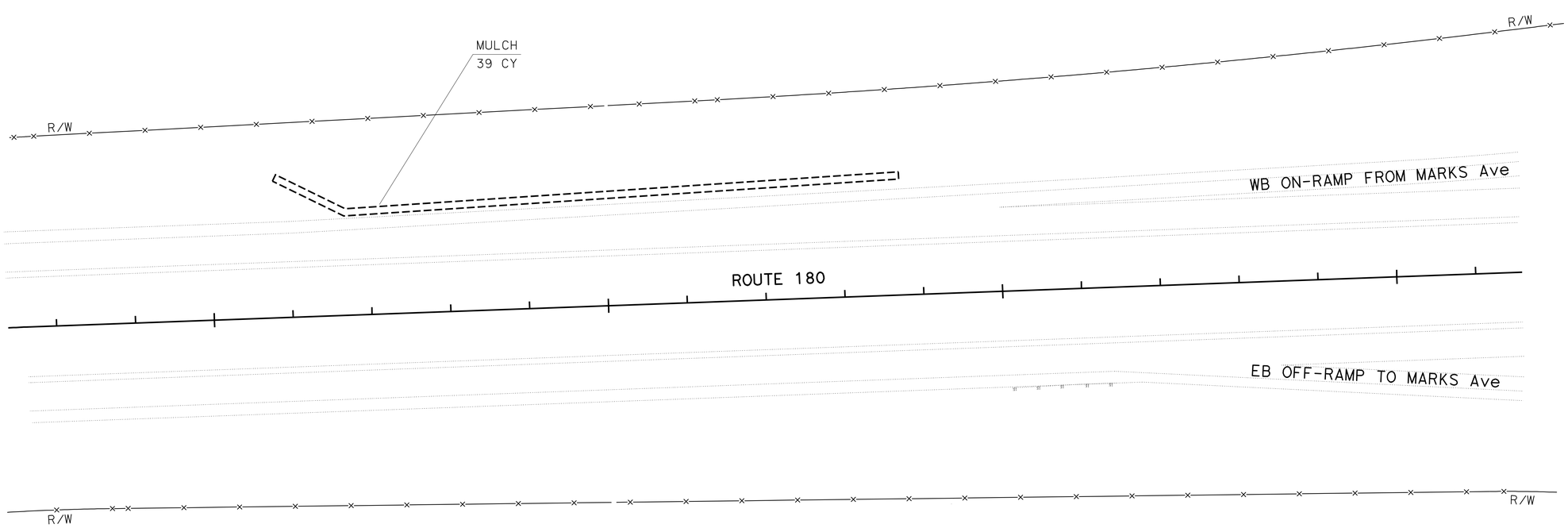

PM 54.20

PLANTING PLAN
(LOCATION 1)
SCALE: 1" = 50'

PP-1

THIS PLAN IS ACCURATE FOR PLANTING WORK ONLY.

STATE OF CALIFORNIA - DEPARTMENT OF TRANSPORTATION
Caltrans
LANDSCAPE ARCHITECTURE

SENIOR LANDSCAPE ARCHITECT: ELBERT COX
CALCULATED-DESIGNED BY: RAYMOND SEGURA
CHECKED BY: RICHARD COLE
REVISED BY
DATE REVISED

LAST REVISION 01-11-11
DATE PLOTTED => 09-MAR-2011
TIME PLOTTED => 17:14

Dist	COUNTY	ROUTE	POST MILES TOTAL PROJECT	SHEET No.	TOTAL SHEETS
06	Fre	168,180	R0.8/R10.5, R54.2/R62.9	6	79

LICENSED LANDSCAPE ARCHITECT

3-7-11
PLANS APPROVAL DATE

LICENSED LANDSCAPE ARCHITECT
RICHARD B. COLE No. 3128
Expiration Date 06/30/12
Renewal Date 06/15/10
Date
STATE OF CALIFORNIA

THE STATE OF CALIFORNIA OR ITS OFFICERS OR AGENTS SHALL NOT BE RESPONSIBLE FOR THE ACCURACY OR COMPLETENESS OF SCANNED COPIES OF THIS PLAN SHEET.

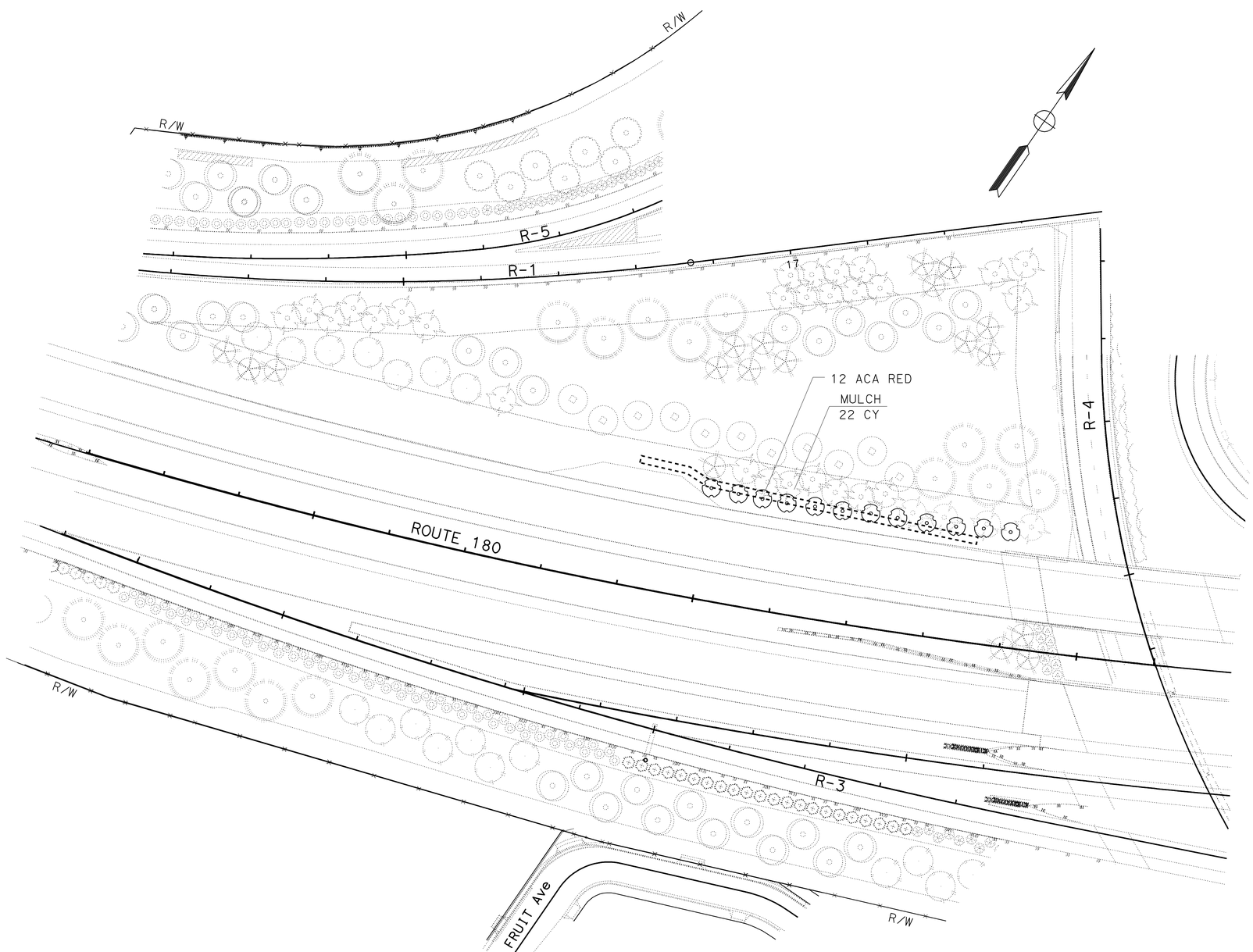

PM 56.20

PLANTING PLAN
(LOCATION 2)
SCALE: 1" = 50'

PP-2

THIS PLAN IS ACCURATE FOR PLANTING WORK ONLY.

REVISED BY | DATE REVISED

RAYMOND SEGURA | CALCULATED-DESIGNED BY

RICHARD COLE | CHECKED BY

SENIOR LANDSCAPE ARCHITECT

ELBERT COX

STATE OF CALIFORNIA - DEPARTMENT OF TRANSPORTATION

Caltrans

LANDSCAPE ARCHITECTURE

LAST REVISION 01-11-11 | DATE PLOTTED => 09-MAR-2011 | TIME PLOTTED => 17:14

Dist	COUNTY	ROUTE	POST MILES TOTAL PROJECT	SHEET No.	TOTAL SHEETS
06	Fre	168,180	R0.8/R10.5, R54.2/R62.9	7	79

LICENSED LANDSCAPE ARCHITECT

3-7-11
PLANS APPROVAL DATE

LICENSED LANDSCAPE ARCHITECT
RICHARD B. COLE No. 3125
Expiration Date 06/30/12
Renewal Date 06/15/10
Date
STATE OF CALIFORNIA

THE STATE OF CALIFORNIA OR ITS OFFICERS OR AGENTS SHALL NOT BE RESPONSIBLE FOR THE ACCURACY OR COMPLETENESS OF SCANNED COPIES OF THIS PLAN SHEET.

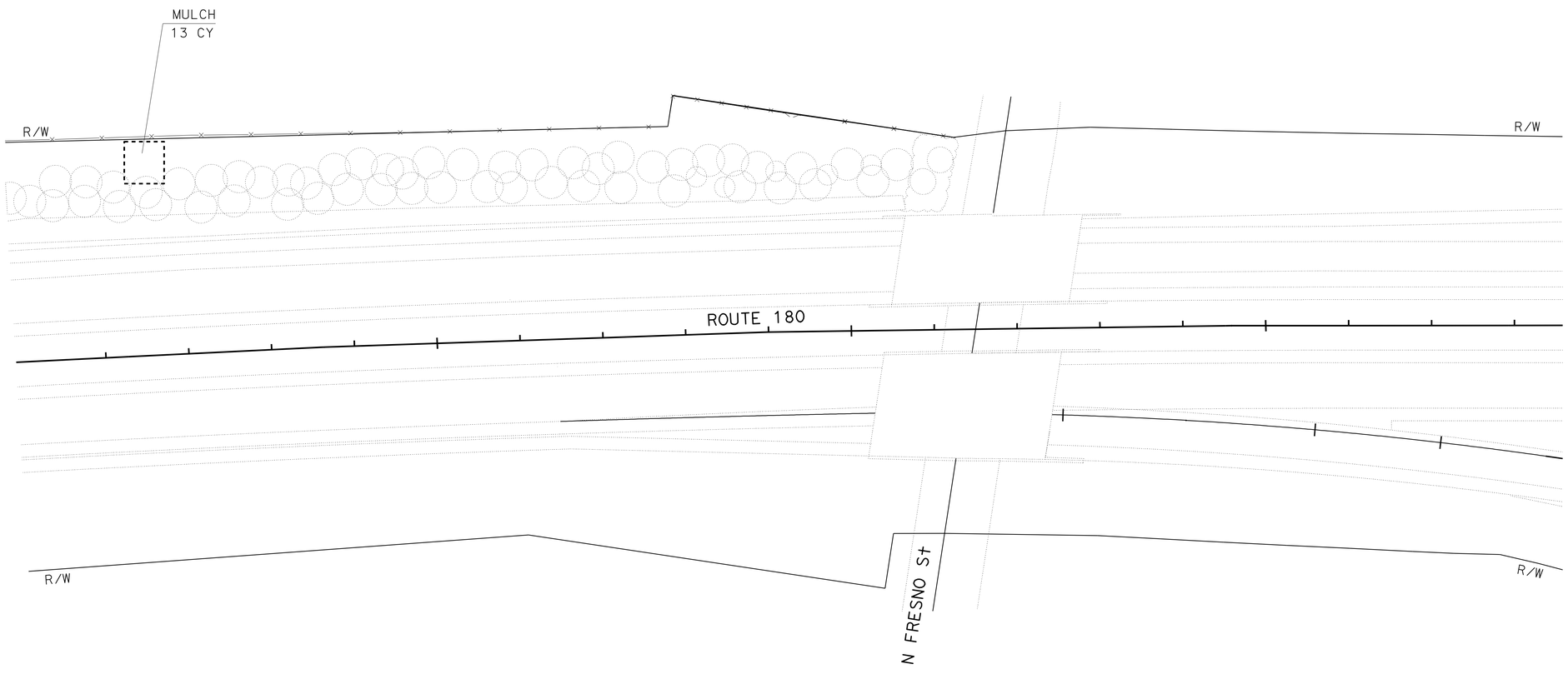

PM 58.20

PLANTING PLAN
(LOCATION 6)
SCALE: 1" = 50'

PP-3

THIS PLAN IS ACCURATE FOR PLANTING WORK ONLY.

STATE OF CALIFORNIA - DEPARTMENT OF TRANSPORTATION
Caltrans®
LANDSCAPE ARCHITECTURE

SENIOR LANDSCAPE ARCHITECT: ELBERT COX
CALCULATED-DESIGNED BY: RAYMOND SEGURA
CHECKED BY: RICHARD COLE
REVISED BY
DATE REVISED

LAST REVISION 01-11-11
DATE PLOTTED => 09-MAR-2011
TIME PLOTTED => 17:14

Dist	COUNTY	ROUTE	POST MILES TOTAL PROJECT	SHEET No.	TOTAL SHEETS
06	Fre	168,180	R0.8/R10.5, R54.2/R62.9	8	79

LICENSED LANDSCAPE ARCHITECT

3-7-11
PLANS APPROVAL DATE

LICENSED LANDSCAPE ARCHITECT
RICHARD B. COLE No. 3128
Expiration Date 06/30/12
Renewal Date 06/15/10
Date
STATE OF CALIFORNIA

THE STATE OF CALIFORNIA OR ITS OFFICERS OR AGENTS SHALL NOT BE RESPONSIBLE FOR THE ACCURACY OR COMPLETENESS OF SCANNED COPIES OF THIS PLAN SHEET.

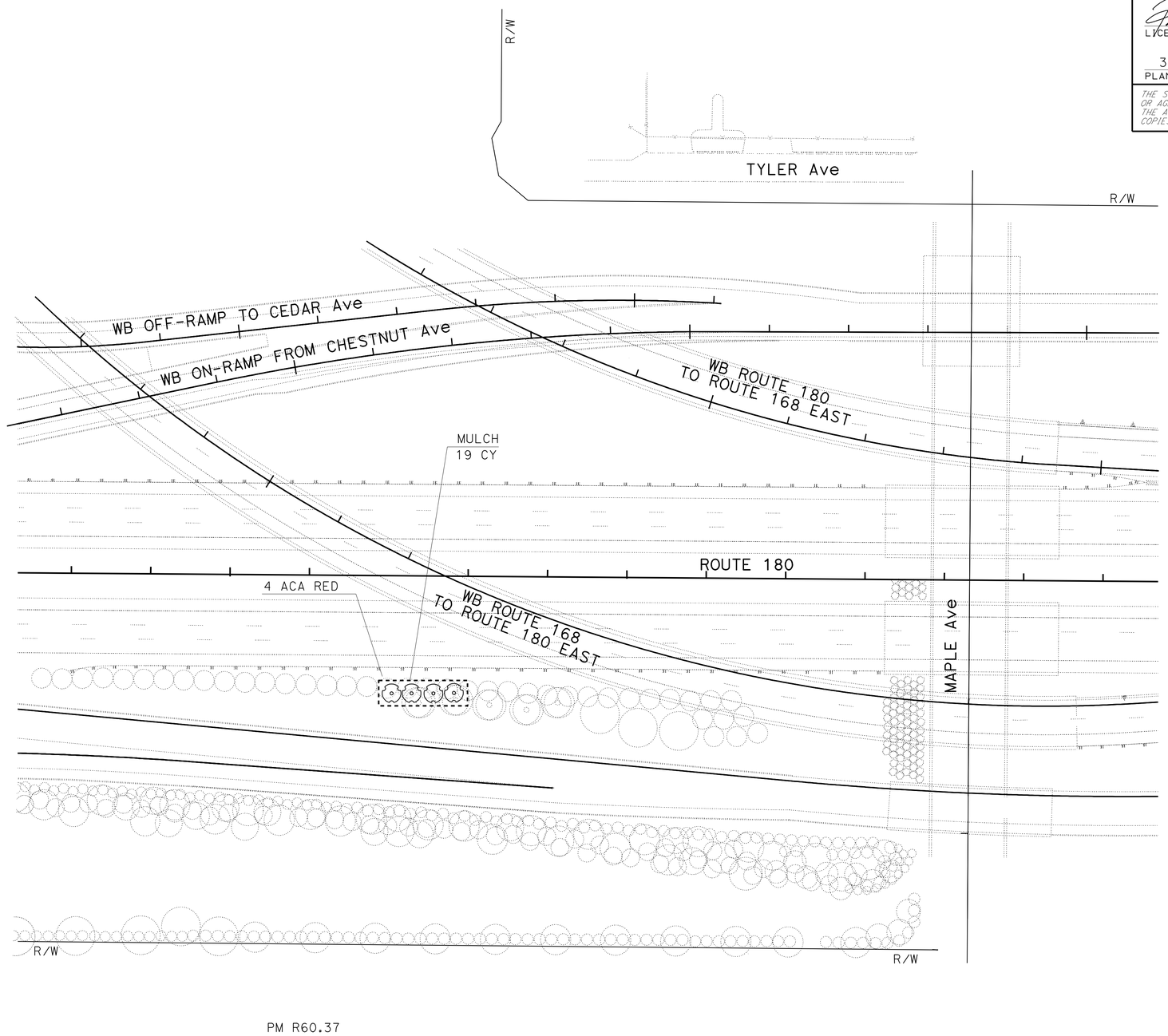

THIS PLAN IS ACCURATE FOR PLANTING WORK ONLY.

PLANTING PLAN
(LOCATION 7)
SCALE: 1" = 50'

PP-4

STATE OF CALIFORNIA - DEPARTMENT OF TRANSPORTATION
Caltrans®
LANDSCAPE ARCHITECTURE

SENIOR LANDSCAPE ARCHITECT: ELBERT COX
CALCULATED-DESIGNED BY: RAYMOND SEGURA
CHECKED BY: RICHARD COLE
REVISED BY
DATE REVISED

LAST REVISION 01-11-11
DATE PLOTTED => 09-MAR-2011
TIME PLOTTED => 17:14

Dist	COUNTY	ROUTE	POST MILES TOTAL PROJECT	SHEET No.	TOTAL SHEETS
06	Fre	168,180	R0.8/R10.5, R54.2/R62.9	9	79

LICENSED LANDSCAPE ARCHITECT

3-7-11
PLANS APPROVAL DATE

LICENSED LANDSCAPE ARCHITECT
RICHARD B. COLE No. 3128
Expiration Date 06/30/12
Renewal Date 06/15/10
Date
STATE OF CALIFORNIA

THE STATE OF CALIFORNIA OR ITS OFFICERS OR AGENTS SHALL NOT BE RESPONSIBLE FOR THE ACCURACY OR COMPLETENESS OF SCANNED COPIES OF THIS PLAN SHEET.

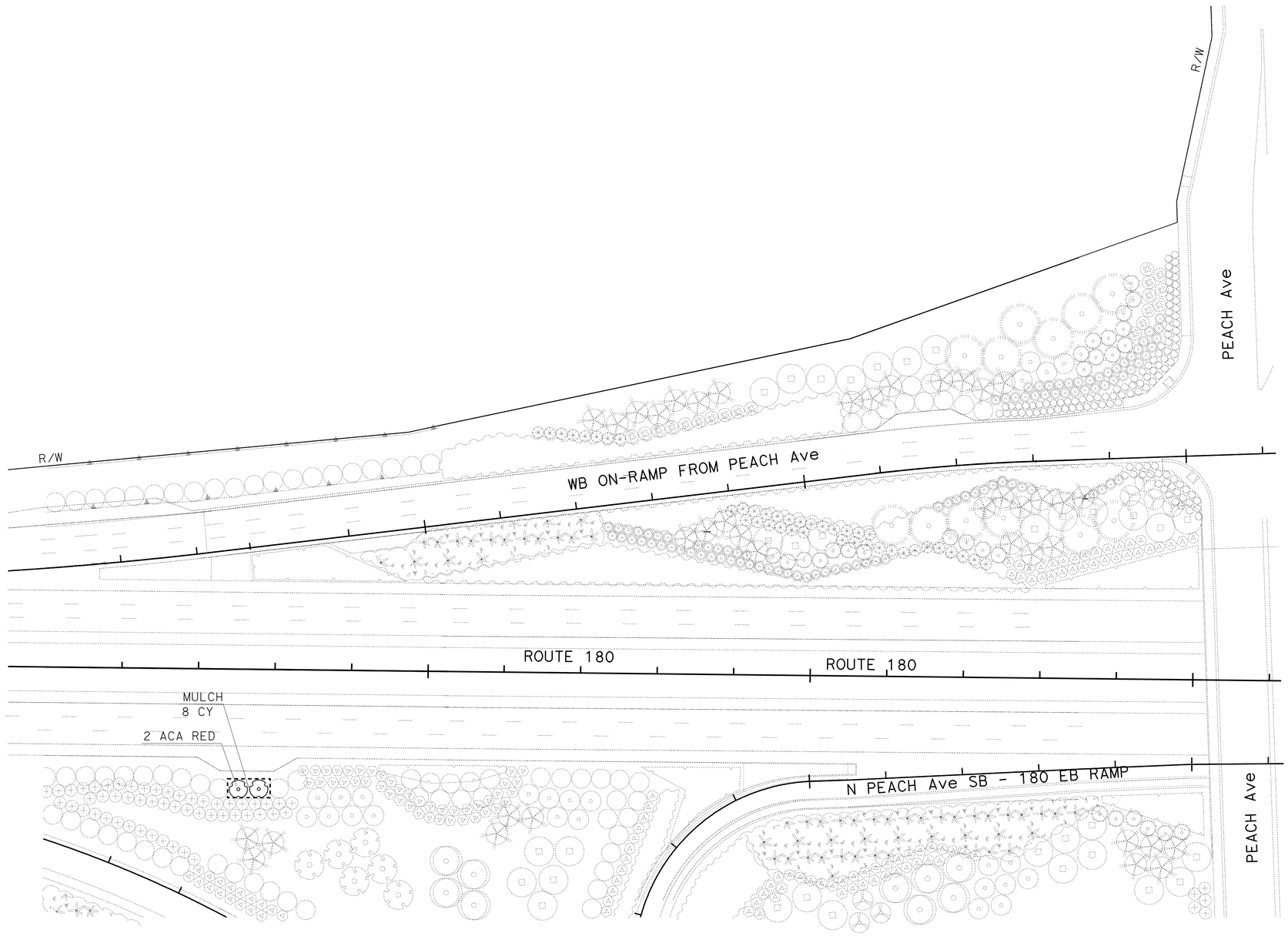

PM 61.82

THIS PLAN ACCURATE FOR PLANTING WORK ONLY

PLANTING PLAN
(LOCATION 9)
SCALE: 1" = 50'

PP-5

STATE OF CALIFORNIA - DEPARTMENT OF TRANSPORTATION
Caltrans®
LANDSCAPE ARCHITECTURE

SENIOR LANDSCAPE ARCHITECT: ELBERT COX
CALCULATED-DESIGNED BY: RAYMOND SEGURA
CHECKED BY: RICHARD COLE
REVISED BY
DATE REVISED

LAST REVISION 01-11-11
DATE PLOTTED => 09-MAR-2011
TIME PLOTTED => 17:14

Dist	COUNTY	ROUTE	POST MILES TOTAL PROJECT	SHEET No.	TOTAL SHEETS
06	Fre	168,180	R0.8/R10.5, R54.2/R62.9	10	79

LICENSED LANDSCAPE ARCHITECT

3-7-11
PLANS APPROVAL DATE

LICENSED LANDSCAPE ARCHITECT
RICHARD B. COLE No. 3128
Expiration Date 06/30/12
Renewal Date 06/15/10
Date
STATE OF CALIFORNIA

THE STATE OF CALIFORNIA OR ITS OFFICERS OR AGENTS SHALL NOT BE RESPONSIBLE FOR THE ACCURACY OR COMPLETENESS OF SCANNED COPIES OF THIS PLAN SHEET.

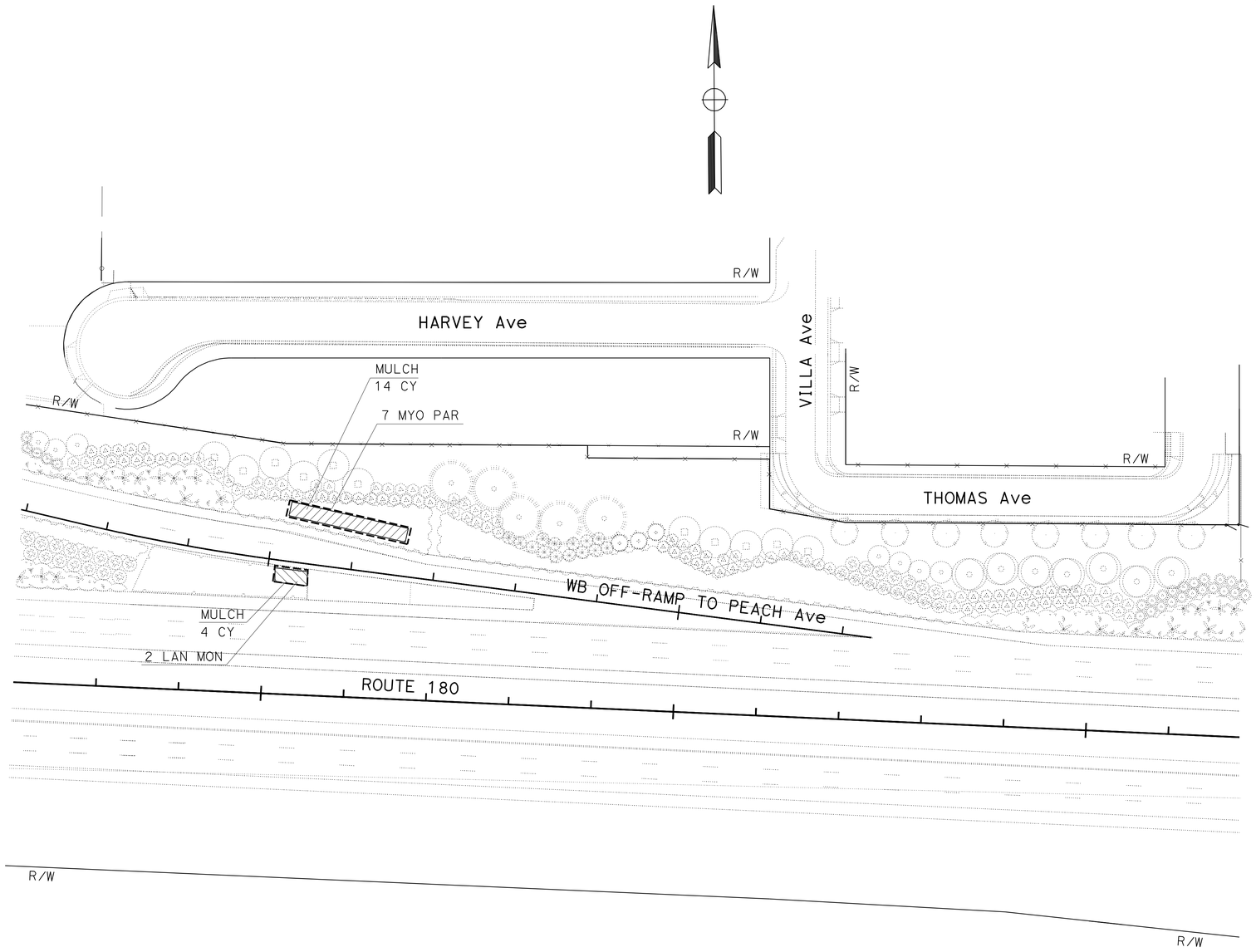

PM 62.07

THIS PLAN IS ACCURATE FOR PLANTING WORK ONLY.

PLANTING PLAN
(LOCATION 10)
SCALE: 1" = 50'

PP-6

STATE OF CALIFORNIA - DEPARTMENT OF TRANSPORTATION
Caltrans®
LANDSCAPE ARCHITECTURE

SENIOR LANDSCAPE ARCHITECT: ELBERT COX
CALCULATED-DESIGNED BY: RAYMOND SEGURA
CHECKED BY: RICHARD COLE
REVISED BY
DATE REVISED

LAST REVISION 01-11-11
DATE PLOTTED => 09-MAR-2011
TIME PLOTTED => 17:14

Dist	COUNTY	ROUTE	POST MILES TOTAL PROJECT	SHEET No.	TOTAL SHEETS
06	Fre	168,180	R0.8/R10.5, R54.2/R62.9	11	79

LICENSED LANDSCAPE ARCHITECT

3-7-11
PLANS APPROVAL DATE

LICENSED LANDSCAPE ARCHITECT
RICHARD B. COLE No. 3128
Expiration Date 06/30/08
Renewal Date 06/15/10
Date
STATE OF CALIFORNIA

THE STATE OF CALIFORNIA OR ITS OFFICERS OR AGENTS SHALL NOT BE RESPONSIBLE FOR THE ACCURACY OR COMPLETENESS OF SCANNED COPIES OF THIS PLAN SHEET.

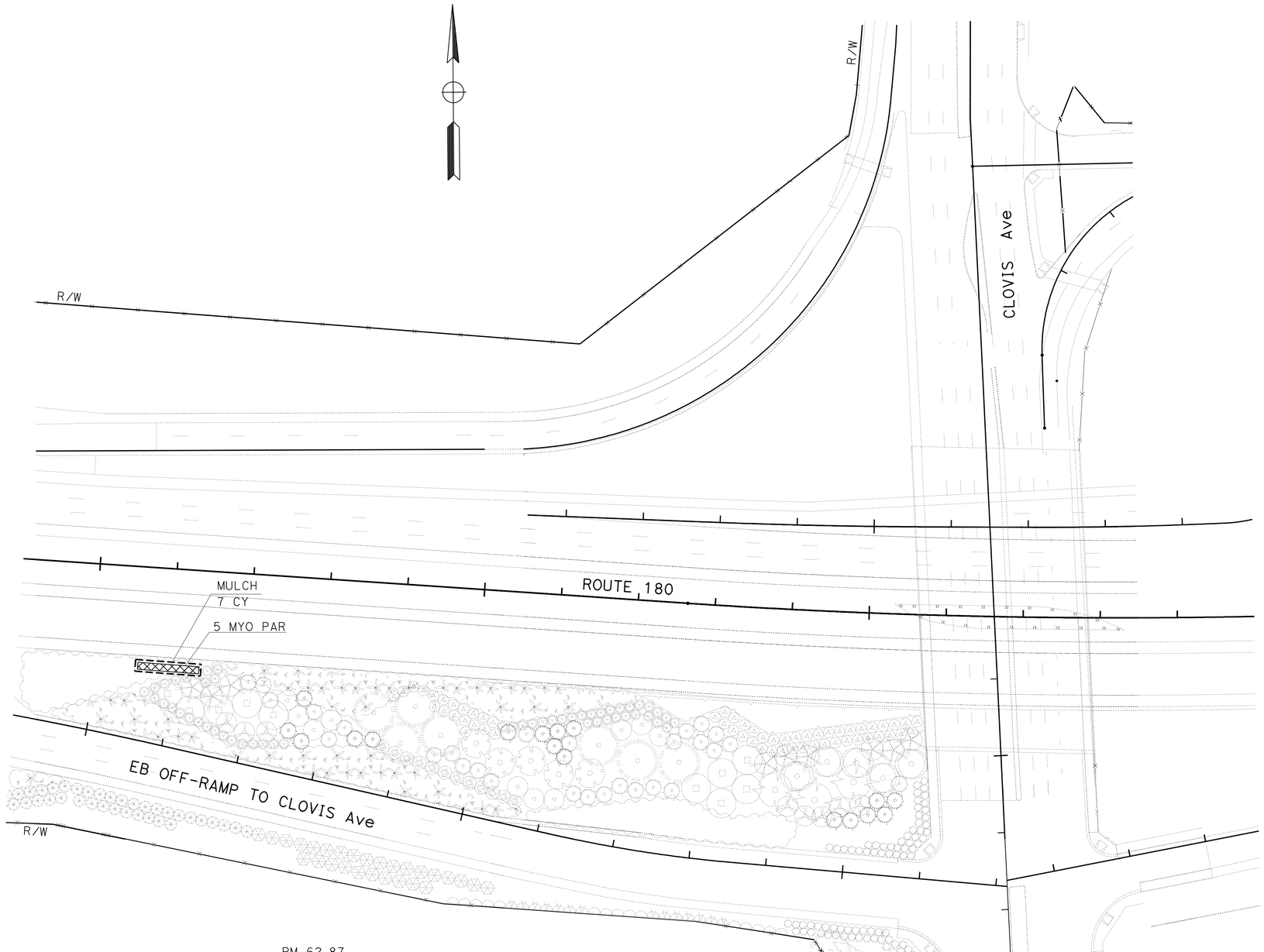

THIS PLAN IS ACCURATE FOR PLANTING WORK ONLY.

PLANTING PLAN
(LOCATION 11)
SCALE: 1" = 50'

PP-7

STATE OF CALIFORNIA - DEPARTMENT OF TRANSPORTATION
Caltrans®
LANDSCAPE ARCHITECTURE

SENIOR LANDSCAPE ARCHITECT: ELBERT COX
CALCULATED-DESIGNED BY: RAYMOND SEGURA
CHECKED BY: RICHARD COLE
REVISED BY
DATE REVISED

LAST REVISION 01-11-11
DATE PLOTTED => 09-MAR-2011
TIME PLOTTED => 17:15

Dist	COUNTY	ROUTE	POST MILES TOTAL PROJECT	SHEET No.	TOTAL SHEETS
06	Fre	168,180	R0.8/R10.5, R54.2/R62.9	12	79

LICENSED LANDSCAPE ARCHITECT

3-7-11
PLANS APPROVAL DATE

LICENSED LANDSCAPE ARCHITECT
RICHARD B. COLE No. 3125
Expiration Date 06/30/12
Renewal Date 06/15/10
Date
STATE OF CALIFORNIA

THE STATE OF CALIFORNIA OR ITS OFFICERS OR AGENTS SHALL NOT BE RESPONSIBLE FOR THE ACCURACY OR COMPLETENESS OF SCANNED COPIES OF THIS PLAN SHEET.

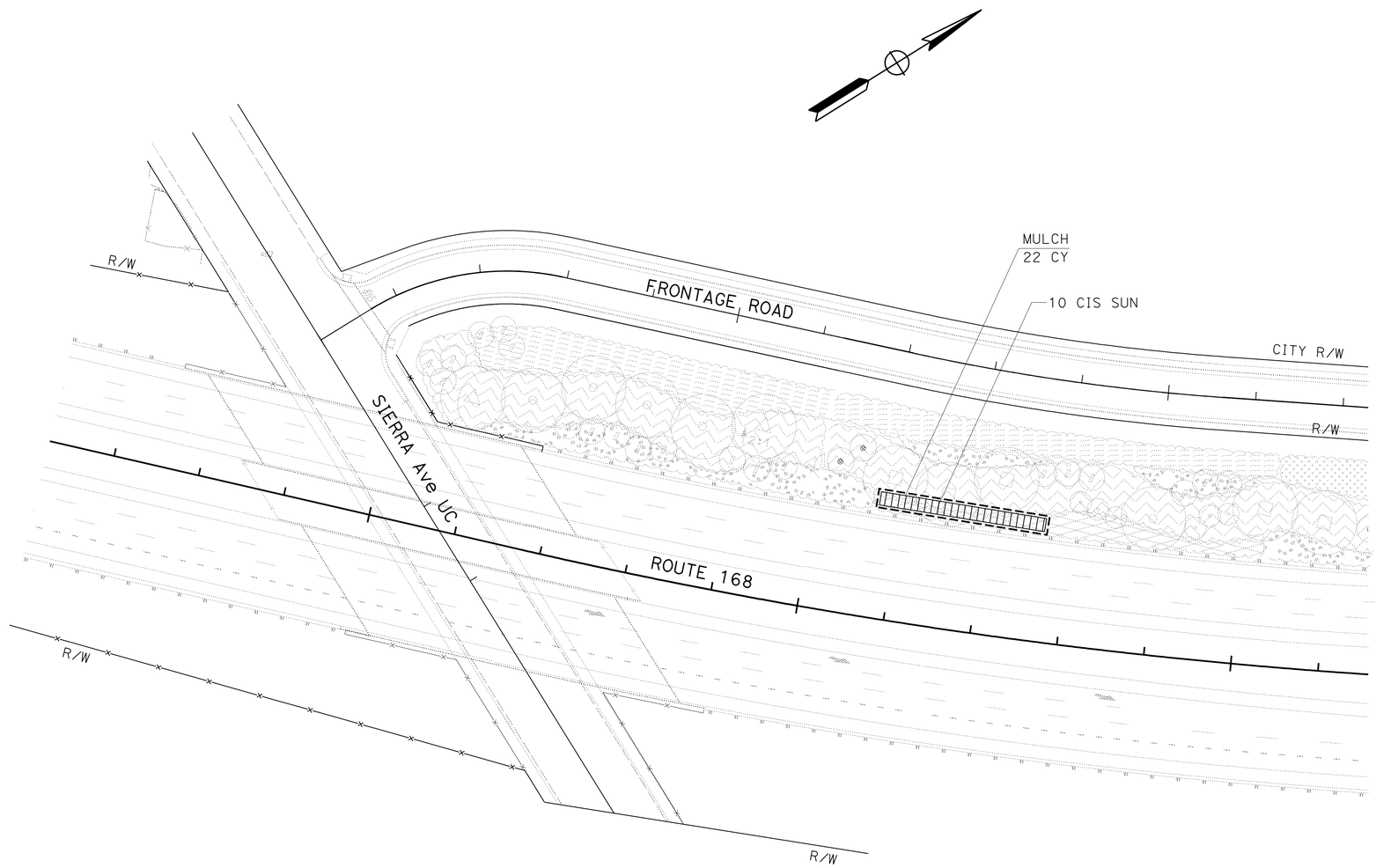

PM 6.15

PLANTING PLAN
(LOCATION 18)
SCALE: 1" = 50'

PP-8

THIS PLAN IS ACCURATE FOR PLANTING WORK ONLY.

STATE OF CALIFORNIA - DEPARTMENT OF TRANSPORTATION
Caltrans®
LANDSCAPE ARCHITECTURE

SENIOR LANDSCAPE ARCHITECT: ELBERT COX
CALCULATED-DESIGNED BY: RAYMOND SEGURA
CHECKED BY: RICHARD COLE
REVISED BY
DATE REVISED

LAST REVISION 01-11-11
DATE PLOTTED => 09-MAR-2011
TIME PLOTTED => 17:15

Dist	COUNTY	ROUTE	POST MILES TOTAL PROJECT	SHEET No.	TOTAL SHEETS
06	Fre	168,180	R0.8/R10.5, R54.2/R62.9	13	79

LICENSED LANDSCAPE ARCHITECT

3-7-11
PLANS APPROVAL DATE

LICENSED LANDSCAPE ARCHITECT
RICHARD B. COLE No. 3125
Expiration Date 06/30/12
Renewal Date 06/15/10
Date
STATE OF CALIFORNIA

THE STATE OF CALIFORNIA OR ITS OFFICERS OR AGENTS SHALL NOT BE RESPONSIBLE FOR THE ACCURACY OR COMPLETENESS OF SCANNED COPIES OF THIS PLAN SHEET.

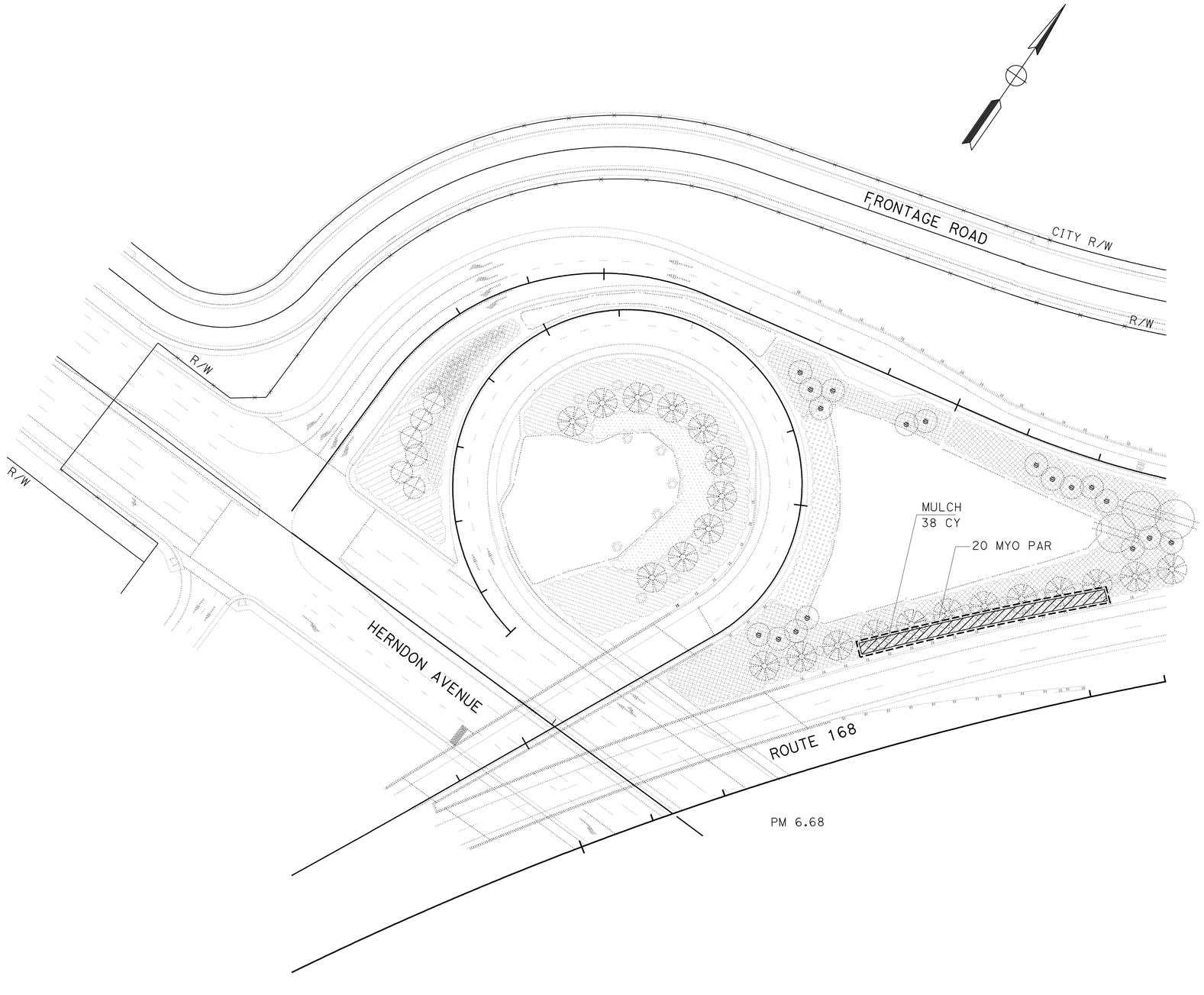

THIS PLAN IS ACCURATE FOR PLANTING WORK ONLY.

PLANTING PLAN
(LOCATION 19)
SCALE: 1" = 50'

PP-9

REVISED BY	
DATE REVISED	
RAYMOND SEGURA	
RICHARD COLE	
CALCULATED-DESIGNED BY	
CHECKED BY	
SENIOR LANDSCAPE ARCHITECT	
ELBERT COX	

STATE OF CALIFORNIA - DEPARTMENT OF TRANSPORTATION
Caltrans®
LANDSCAPE ARCHITECTURE

LAST REVISION 01-11-11
DATE PLOTTED => 09-MAR-2011
TIME PLOTTED => 17:15

Dist	COUNTY	ROUTE	POST MILES TOTAL PROJECT	SHEET No.	TOTAL SHEETS
06	Fre	168,180	R0.8/R10.5, R54.2/R62.9	14	79

LICENSED LANDSCAPE ARCHITECT

3-7-11
PLANS APPROVAL DATE

LICENSED LANDSCAPE ARCHITECT
RICHARD B. COLE No. 3125
Expiration Date 06/30/12
Renewal Date 06/15/10
Date
STATE OF CALIFORNIA

THE STATE OF CALIFORNIA OR ITS OFFICERS OR AGENTS SHALL NOT BE RESPONSIBLE FOR THE ACCURACY OR COMPLETENESS OF SCANNED COPIES OF THIS PLAN SHEET.

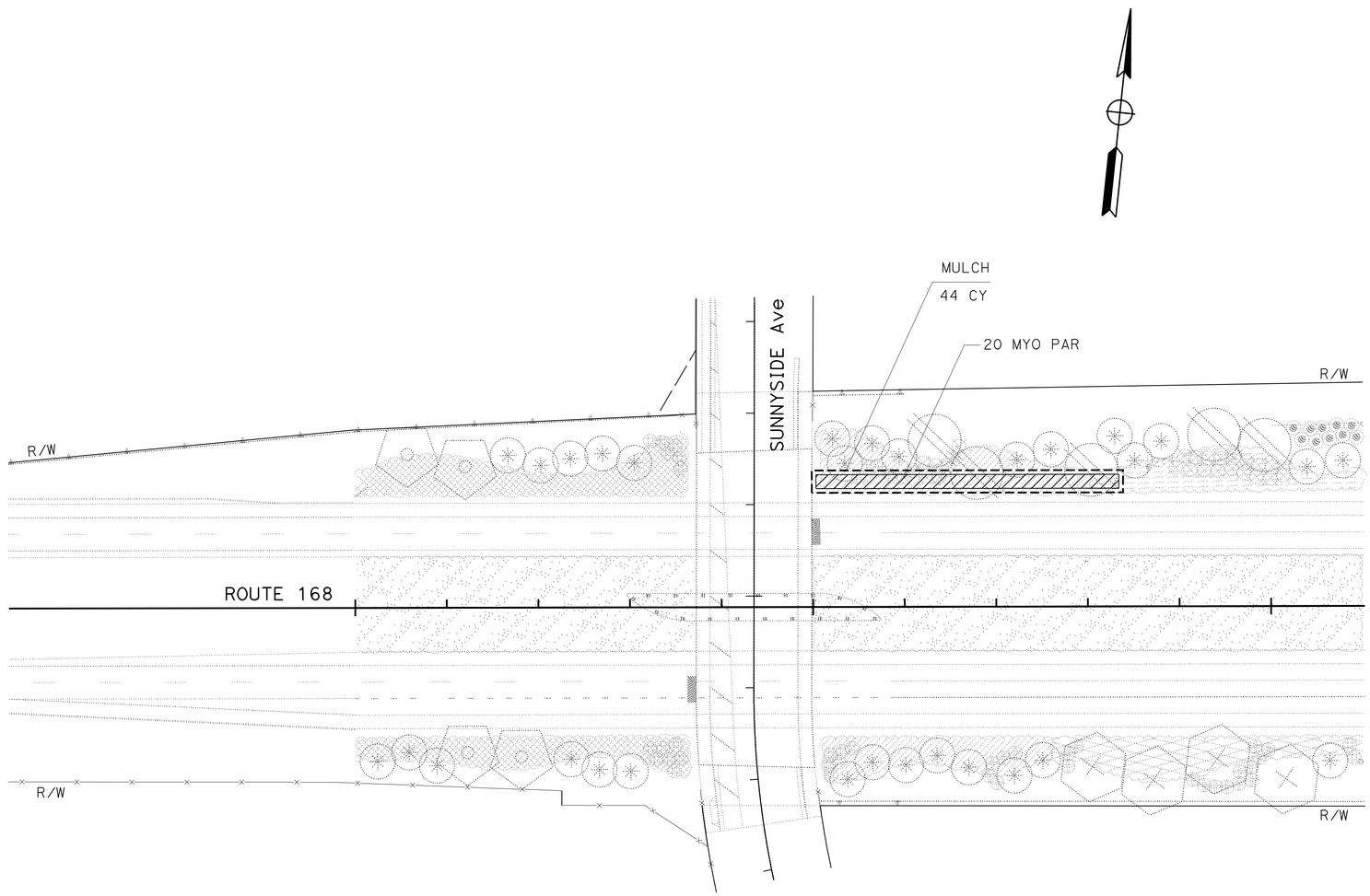

PM R7.30

PLANTING PLAN
(LOCATION 20)
SCALE: 1" = 50'

PP-10

THIS PLAN IS ACCURATE FOR PLANTING WORK ONLY.

STATE OF CALIFORNIA - DEPARTMENT OF TRANSPORTATION
Caltrans
LANDSCAPE ARCHITECTURE

SENIOR LANDSCAPE ARCHITECT: ELBERT COX
CALCULATED-DESIGNED BY: RAYMOND SEGURA
CHECKED BY: RICHARD COLE
REVISED BY
DATE REVISED

LAST REVISION 01-11-11
DATE PLOTTED => 09-MAR-2011
TIME PLOTTED => 17:15

Dist	COUNTY	ROUTE	POST MILES TOTAL PROJECT	SHEET No.	TOTAL SHEETS
06	Fre	168,180	R0.8/R10.5, R54.2/R62.9	15	79

LICENSED LANDSCAPE ARCHITECT

3-7-11
PLANS APPROVAL DATE

LICENSED LANDSCAPE ARCHITECT
RICHARD B. COLE No. 3125
Expiration Date 06/30/12
Renewal Date 06/15/10
Date
STATE OF CALIFORNIA

THE STATE OF CALIFORNIA OR ITS OFFICERS OR AGENTS SHALL NOT BE RESPONSIBLE FOR THE ACCURACY OR COMPLETENESS OF SCANNED COPIES OF THIS PLAN SHEET.

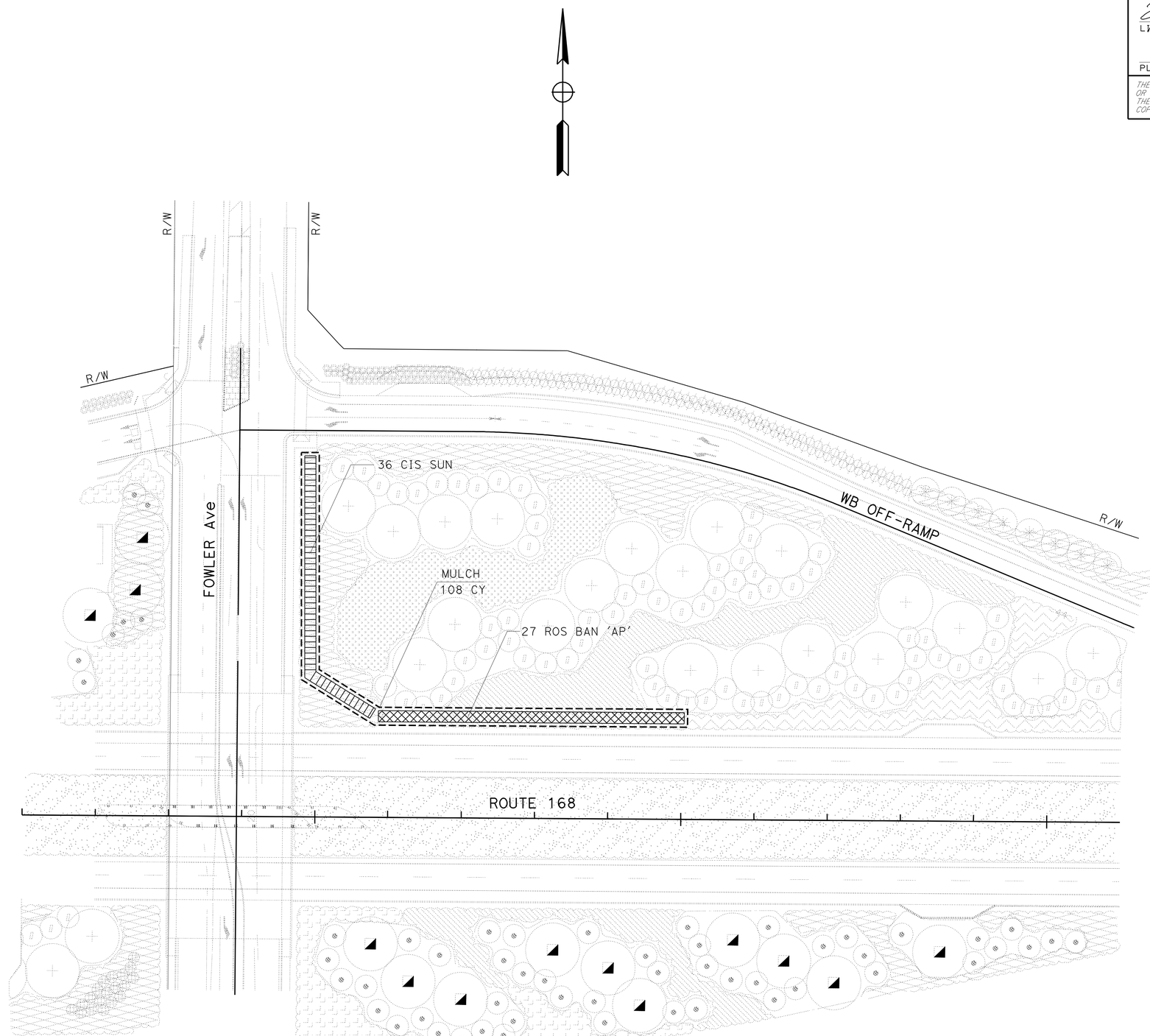

PM R7.82

THIS PLAN IS ACCURATE FOR PLANTING WORK ONLY.

PLANTING PLAN
(LOCATION 21)
SCALE: 1" = 50'

PP-11

STATE OF CALIFORNIA - DEPARTMENT OF TRANSPORTATION
Caltrans®
LANDSCAPE ARCHITECTURE

SENIOR LANDSCAPE ARCHITECT: ELBERT COX
CALCULATED-DESIGNED BY: RAYMOND SEGURA
CHECKED BY: RICHARD COLE
REVISED BY
DATE REVISED

LAST REVISION 01-11-11
DATE PLOTTED => 09-MAR-2011
TIME PLOTTED => 17:15

Dist	COUNTY	ROUTE	POST MILES TOTAL PROJECT	SHEET No.	TOTAL SHEETS
06	Fre	168,180	R0.8/R10.5, R54.2/R62.9	16	79

LICENSED LANDSCAPE ARCHITECT

3-7-11
PLANS APPROVAL DATE

LICENSED LANDSCAPE ARCHITECT
RICHARD B. COLE No. 3125
Expiration Date 06/30/12
Renewal Date 06/15/10
Date
STATE OF CALIFORNIA

THE STATE OF CALIFORNIA OR ITS OFFICERS OR AGENTS SHALL NOT BE RESPONSIBLE FOR THE ACCURACY OR COMPLETENESS OF SCANNED COPIES OF THIS PLAN SHEET.

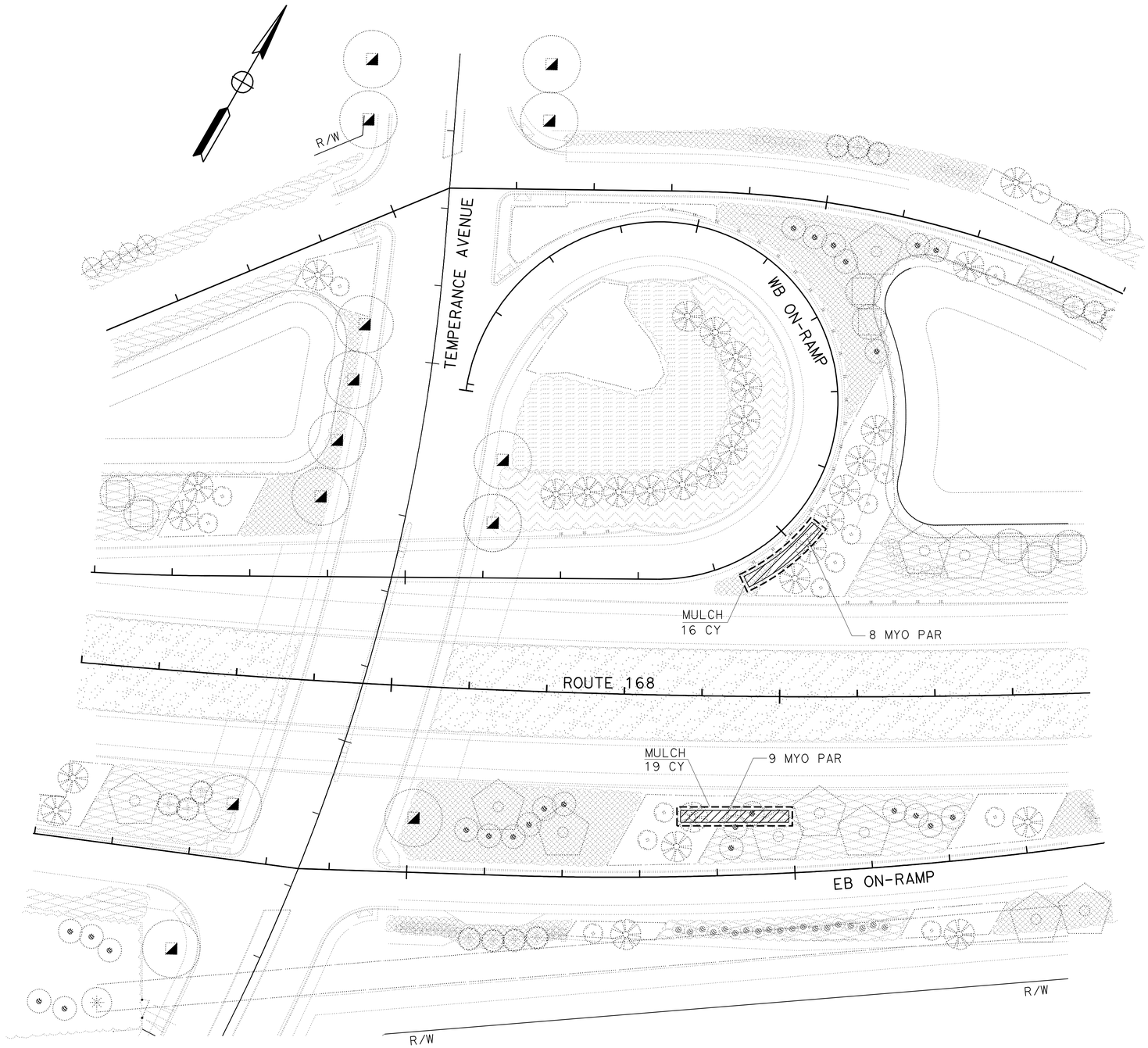

PM R8.95

PLANTING PLAN
(LOCATION 23)

SCALE: 1" = 50'

PP-12

THIS PLAN IS ACCURATE FOR PLANTING WORK ONLY.

STATE OF CALIFORNIA - DEPARTMENT OF TRANSPORTATION
Caltrans®
LANDSCAPE ARCHITECTURE

SENIOR LANDSCAPE ARCHITECT: ELBERT COX
CALCULATED-DESIGNED BY: RAYMOND SEGURA
CHECKED BY: RICHARD COLE
REVISED BY
DATE REVISED

LAST REVISION 01-11-11
DATE PLOTTED => 09-MAR-2011
TIME PLOTTED => 17:15

Dist	COUNTY	ROUTE	POST MILES TOTAL PROJECT	SHEET No.	TOTAL SHEETS
06	Fre	168,180	R0.8/R10.5, R54.2/R62.9	17	79

LICENSED LANDSCAPE ARCHITECT

3-7-11
PLANS APPROVAL DATE

LICENSED LANDSCAPE ARCHITECT
RICHARD B. COLE No. 3125
Expiration Date 06/30/12
Renewal Date 06/15/10
Date
STATE OF CALIFORNIA

THE STATE OF CALIFORNIA OR ITS OFFICERS OR AGENTS SHALL NOT BE RESPONSIBLE FOR THE ACCURACY OR COMPLETENESS OF SCANNED COPIES OF THIS PLAN SHEET.

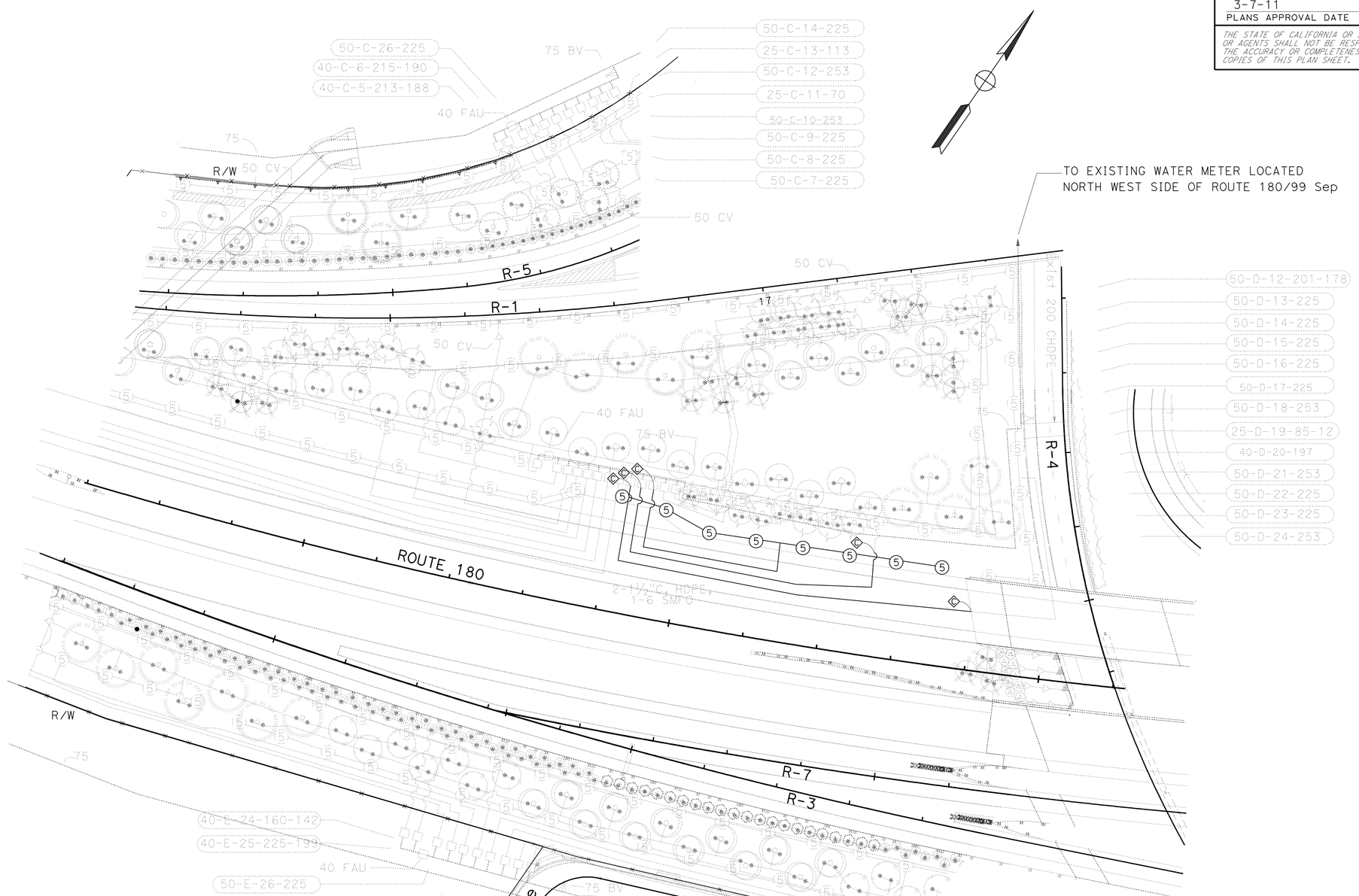

PM 56.20

THIS PLAN IS ACCURATE FOR IRRIGATION WORK ONLY.

IRRIGATION PLAN
(LOCATION 2)

SCALE: 1" = 50'

IP-1

STATE OF CALIFORNIA - DEPARTMENT OF TRANSPORTATION
Caltrans
LANDSCAPE ARCHITECTURE

SENIOR LANDSCAPE ARCHITECT: ELBERT COX

CALCULATED-DESIGNED BY: RAYMOND SEGURA
CHECKED BY: RICHARD COLE

REVISED BY
DATE REVISED

LAST REVISION 01-11-11
DATE PLOTTED => 16-MAR-2011
TIME PLOTTED => 11:05

Dist	COUNTY	ROUTE	POST MILES TOTAL PROJECT	SHEET No.	TOTAL SHEETS
06	Fre	168,180	R0.8/R10.5, R54.2/R62.9	18	79

LICENSED LANDSCAPE ARCHITECT

3-7-11
PLANS APPROVAL DATE

LICENSED LANDSCAPE ARCHITECT
RICHARD B. COLE No. 3125
Expiration Date 06/30/12
Renewal Date 06/15/10
Date
STATE OF CALIFORNIA

THE STATE OF CALIFORNIA OR ITS OFFICERS OR AGENTS SHALL NOT BE RESPONSIBLE FOR THE ACCURACY OR COMPLETENESS OF SCANNED COPIES OF THIS PLAN SHEET.

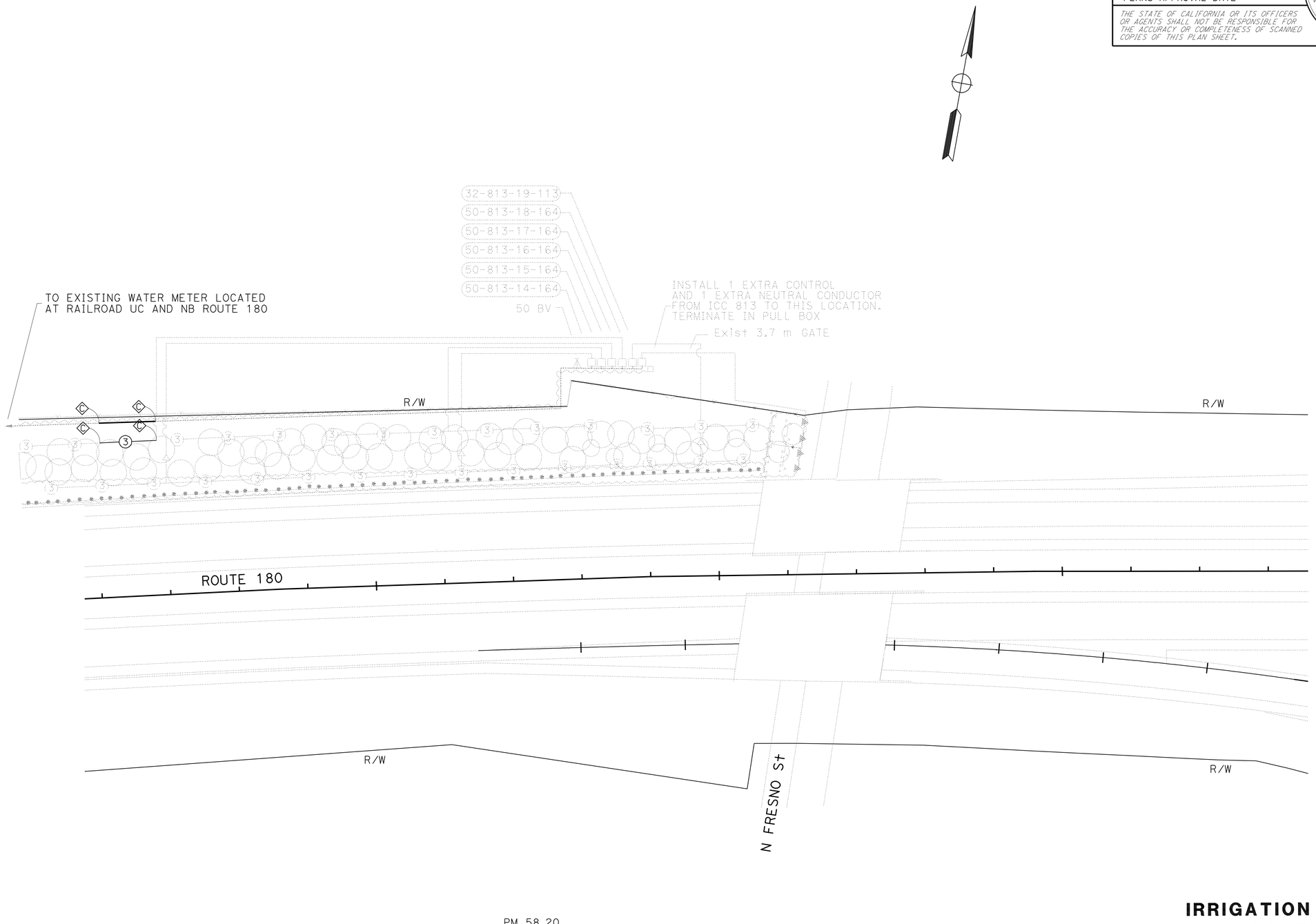

PM 58.20

IRRIGATION PLAN (LOCATION 6)

SCALE: 1" = 50'

IP-2

STATE OF CALIFORNIA - DEPARTMENT OF TRANSPORTATION
Caltrans®
LANDSCAPE ARCHITECTURE

SENIOR LANDSCAPE ARCHITECT: ELBERT COX
CALCULATED-DESIGNED BY: RAYMOND SEGURA
CHECKED BY: RICHARD COLE
REVISED BY
DATE REVISED

LAST REVISION 01-11-11
DATE PLOTTED => 16-MAR-2011
TIME PLOTTED => 11:05

Dist	COUNTY	ROUTE	POST MILES TOTAL PROJECT	SHEET No.	TOTAL SHEETS
06	Fre	168,180	R0.8/R10.5, R54.2/R62.9	19	79

LICENSED LANDSCAPE ARCHITECT

3-7-11
PLANS APPROVAL DATE

LICENSED LANDSCAPE ARCHITECT
RICHARD B. COLE No. 3125
Expiration Date 06/30/12
Renewal Date 06/15/10
Date
STATE OF CALIFORNIA

THE STATE OF CALIFORNIA OR ITS OFFICERS OR AGENTS SHALL NOT BE RESPONSIBLE FOR THE ACCURACY OR COMPLETENESS OF SCANNED COPIES OF THIS PLAN SHEET.

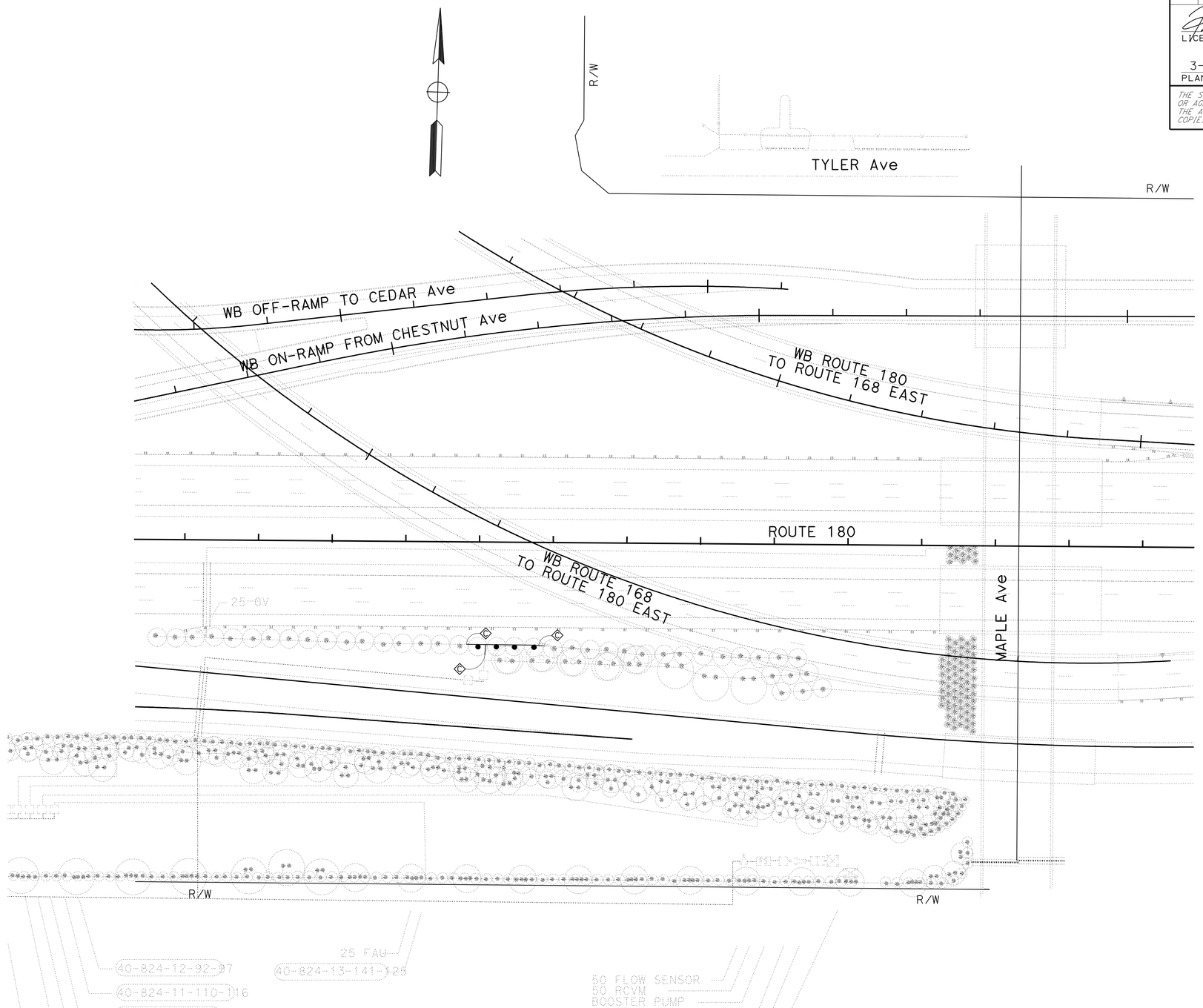

THIS PLAN IS ACCURATE FOR IRRIGATION WORK ONLY.

IRRIGATION PLAN (LOCATION 7)

IP-3

SCALE: 1" = 50'

STATE OF CALIFORNIA - DEPARTMENT OF TRANSPORTATION
Caltrans®
LANDSCAPE ARCHITECTURE

SENIOR LANDSCAPE ARCHITECT: ELBERT COX
CALCULATED-DESIGNED BY: RAYMOND SEGURA
CHECKED BY: RICHARD COLE
REVISED BY
DATE REVISED

LAST REVISION 01-11-11
DATE PLOTTED => 16-MAR-2011
TIME PLOTTED => 10:36

Dist	COUNTY	ROUTE	POST MILES TOTAL PROJECT	SHEET No.	TOTAL SHEETS
06	Fre	168,180	R0.8/R10.5, R54.2/R62.9	20	79

LICENSED LANDSCAPE ARCHITECT

3-7-11
PLANS APPROVAL DATE

LICENSED LANDSCAPE ARCHITECT
RICHARD B. COLE No. 3125
Expiration Date 06/30/12
Renewal Date 06/15/10
Date
STATE OF CALIFORNIA

THE STATE OF CALIFORNIA OR ITS OFFICERS OR AGENTS SHALL NOT BE RESPONSIBLE FOR THE ACCURACY OR COMPLETENESS OF SCANNED COPIES OF THIS PLAN SHEET.

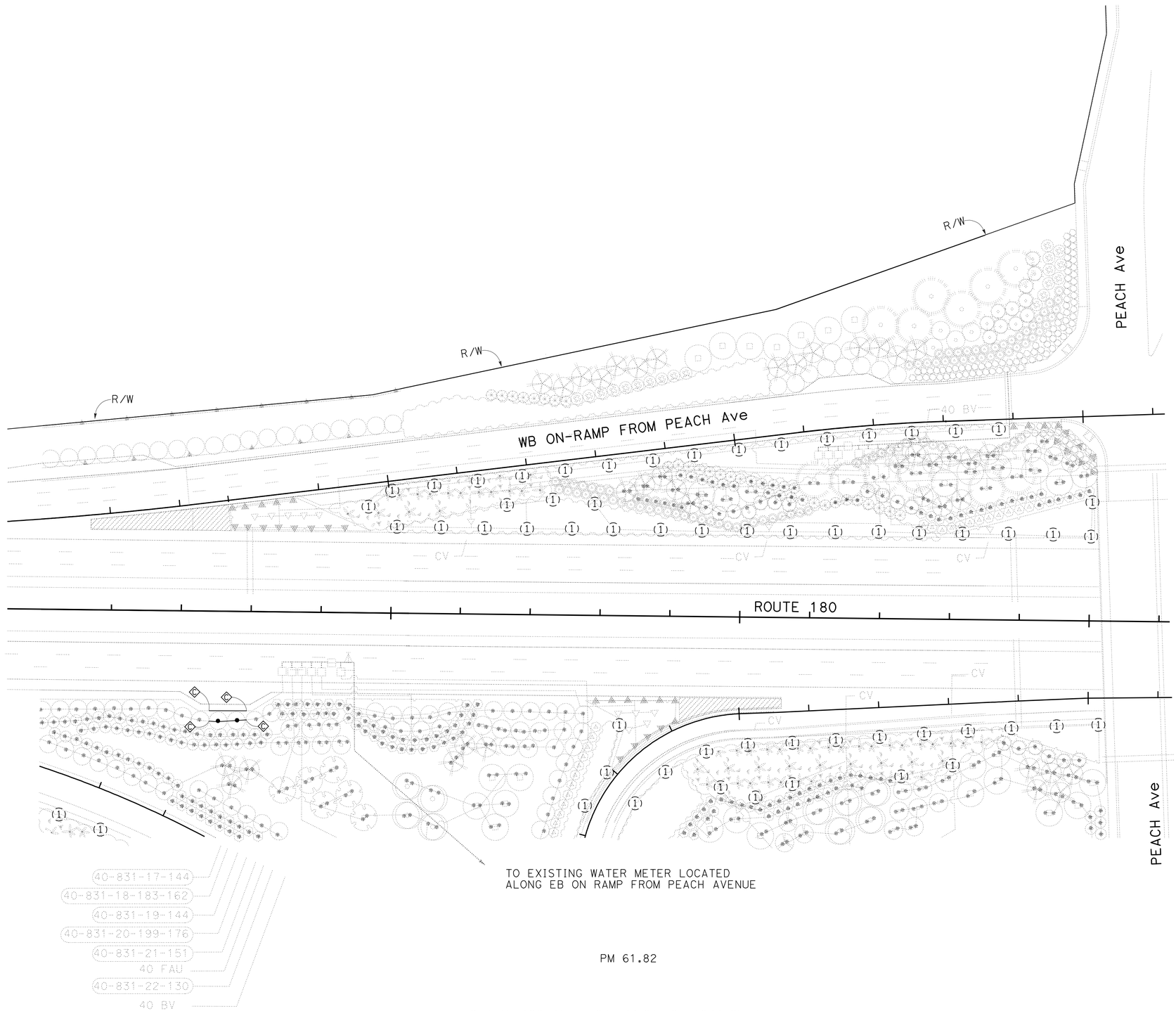

PM 61.82

THIS PLAN ACCURATE FOR IRRIGATION WORK ONLY

IRRIGATION PLAN
(LOCATION 9)

SCALE: 1" = 50'

IP-4

STATE OF CALIFORNIA - DEPARTMENT OF TRANSPORTATION
Caltrans®
LANDSCAPE ARCHITECTURE

SENIOR LANDSCAPE ARCHITECT: ELBERT COX
CALCULATED-DESIGNED BY: RAYMOND SEGURA
CHECKED BY: RICHARD COLE
REVISED BY
DATE REVISED

LAST REVISION 01-11-11
DATE PLOTTED => 16-MAR-2011
TIME PLOTTED => 10:36

Dist	COUNTY	ROUTE	POST MILES TOTAL PROJECT	SHEET No.	TOTAL SHEETS
06	Fre	168,180	R0.8/R10.5, R54.2/R62.9	21	79

LICENSED LANDSCAPE ARCHITECT

3-7-11
PLANS APPROVAL DATE

LICENSED LANDSCAPE ARCHITECT
RICHARD B. COLE No. 3125
Expiration Date 06/30/12
Renewal Date 06/15/10
Date
STATE OF CALIFORNIA

THE STATE OF CALIFORNIA OR ITS OFFICERS OR AGENTS SHALL NOT BE RESPONSIBLE FOR THE ACCURACY OR COMPLETENESS OF SCANNED COPIES OF THIS PLAN SHEET.

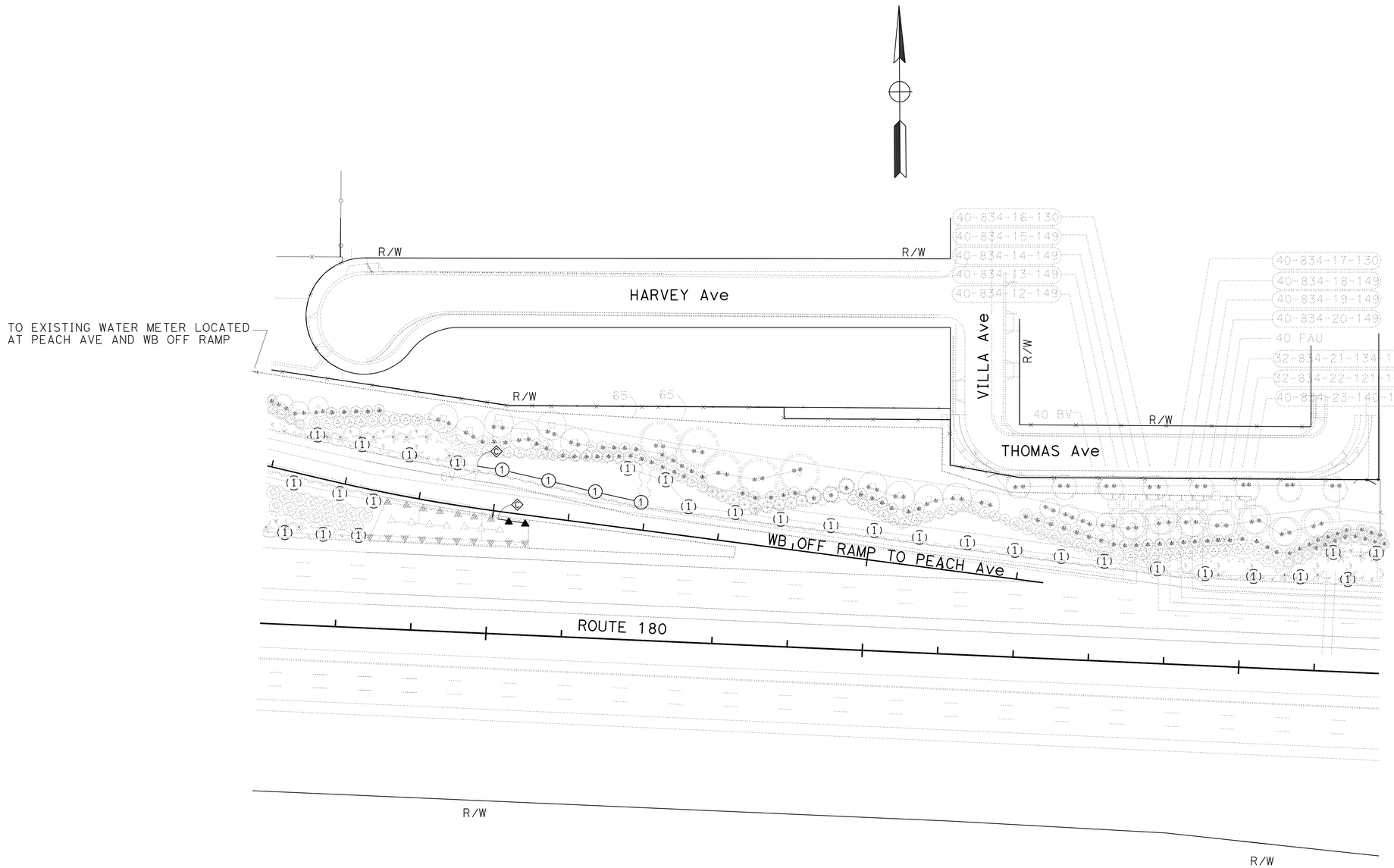

PM 62.07

THIS PLAN IS ACCURATE FOR IRRIGATION WORK ONLY.

IRRIGATION PLAN
(LOCATION 10)

SCALE: 1" = 50'

IP-5

STATE OF CALIFORNIA - DEPARTMENT OF TRANSPORTATION
Caltrans®
LANDSCAPE ARCHITECTURE

SENIOR LANDSCAPE ARCHITECT: ELBERT COX
CALCULATED-DESIGNED BY: RAYMOND SEGURA
CHECKED BY: RICHARD COLE
REVISED BY
DATE REVISED

LAST REVISION 01-11-11
DATE PLOTTED => 16-MAR-2011
TIME PLOTTED => 10:37

Dist	COUNTY	ROUTE	POST MILES TOTAL PROJECT	SHEET No.	TOTAL SHEETS
06	Fre	168,180	R0.8/R10.5, R54.2/R62.9	22	79

LICENSED LANDSCAPE ARCHITECT

3-7-11
PLANS APPROVAL DATE

LICENSED LANDSCAPE ARCHITECT
RICHARD B. COLE No. 3125
Expiration Date 06/30/12
Renewal Date 06/15/10
Date
STATE OF CALIFORNIA

THE STATE OF CALIFORNIA OR ITS OFFICERS OR AGENTS SHALL NOT BE RESPONSIBLE FOR THE ACCURACY OR COMPLETENESS OF SCANNED COPIES OF THIS PLAN SHEET.

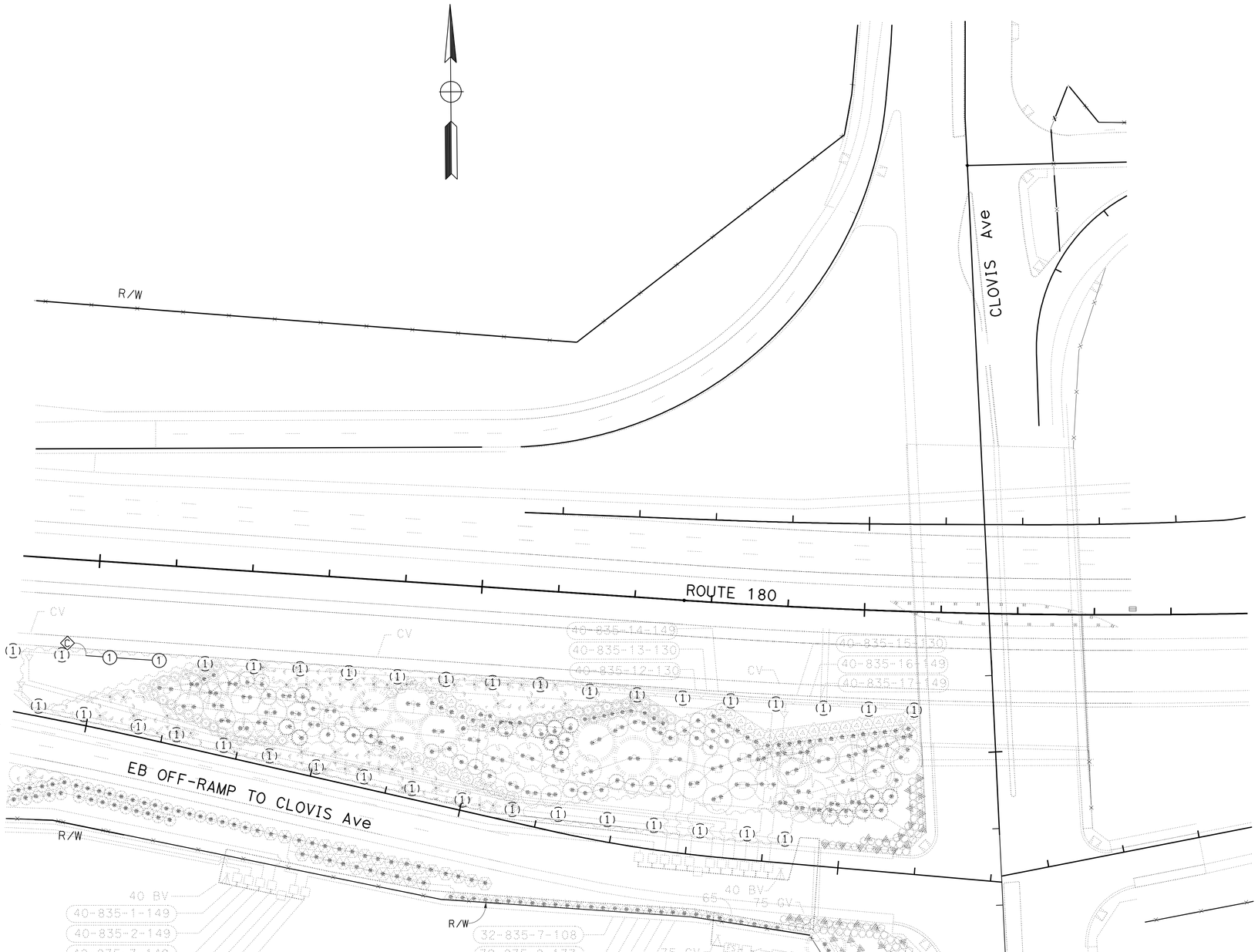

IRRIGATION PLAN
(LOCATION 11)
IP-6

SCALE: 1" = 50'

THIS PLAN IS ACCURATE FOR IRRIGATION WORK ONLY.

STATE OF CALIFORNIA - DEPARTMENT OF TRANSPORTATION
Caltrans
LANDSCAPE ARCHITECTURE

SENIOR LANDSCAPE ARCHITECT: ELBERT COX
CALCULATED-DESIGNED BY: RAYMOND SEGURA
CHECKED BY: RICHARD COLE
REVISED BY
DATE REVISED

LAST REVISION 01-11-11
DATE PLOTTED => 16-MAR-2011
TIME PLOTTED => 10:37

Dist	COUNTY	ROUTE	POST MILES TOTAL PROJECT	SHEET No.	TOTAL SHEETS
06	Fre	168,180	R0.8/R10.5, R54.2/R62.9	23	79

LICENSED LANDSCAPE ARCHITECT

3-7-11
PLANS APPROVAL DATE

LICENSED LANDSCAPE ARCHITECT
RICHARD B. COLE No. 3128
Expiration Date 06/30/12
Renewal Date 06/15/10
Date
STATE OF CALIFORNIA

THE STATE OF CALIFORNIA OR ITS OFFICERS OR AGENTS SHALL NOT BE RESPONSIBLE FOR THE ACCURACY OR COMPLETENESS OF SCANNED COPIES OF THIS PLAN SHEET.

NOTE:

EXISTING 2" WATER METER ON 3" SERVICE
LOCATED AT HERNDON AVE WEST BOUND OFF-RAMP

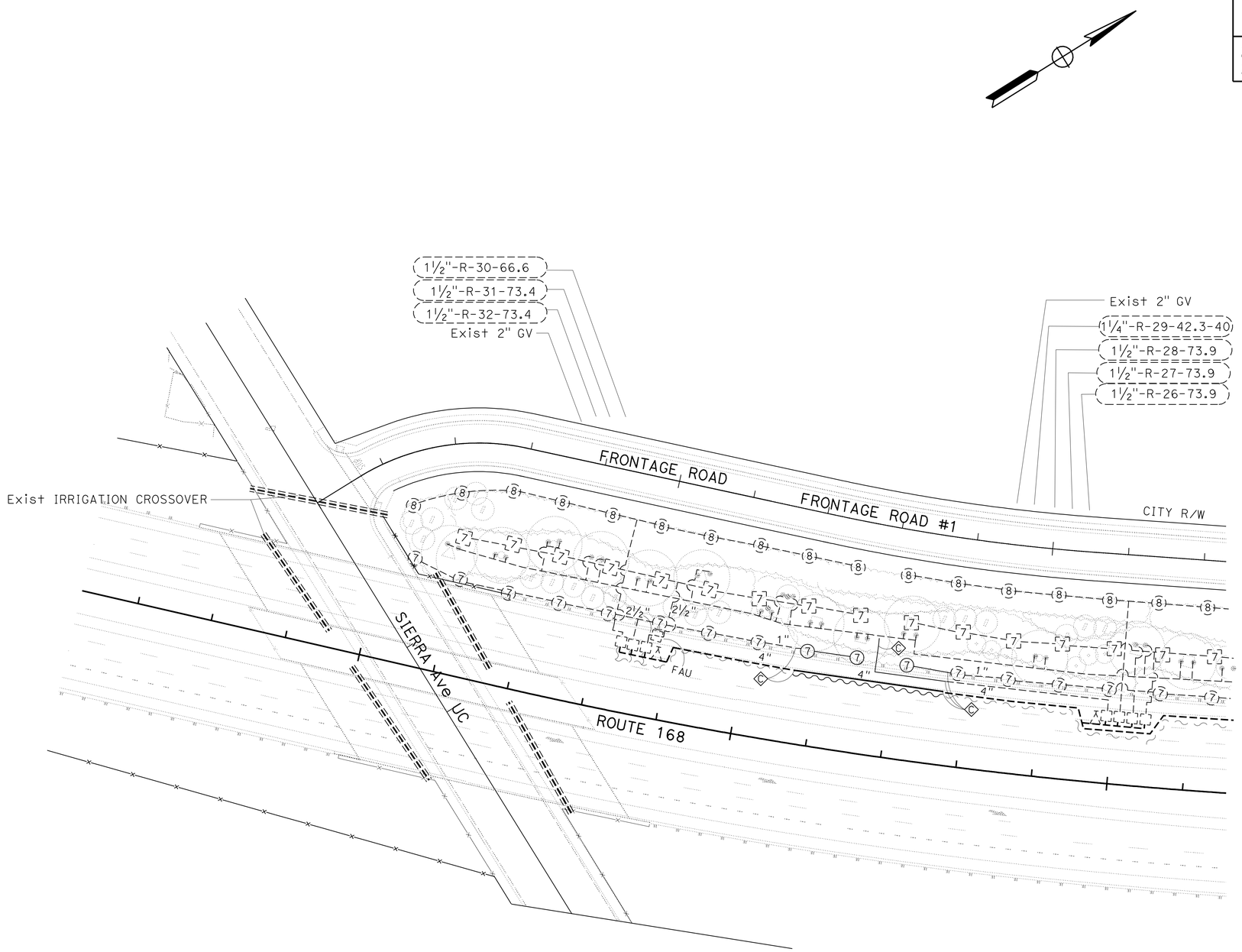

PM 6.15

THIS PLAN IS ACCURATE FOR IRRIGATION WORK ONLY.

IRRIGATION PLAN
(LOCATION 18)

SCALE: 1" = 50'

IP-7

REVISED BY	DATE REVISED

CALCULATED-DESIGNED BY
CHECKED BY

SENIOR LANDSCAPE ARCHITECT
ELBERT COX

RAYMOND SEGURA
RICHARD COLE

STATE OF CALIFORNIA - DEPARTMENT OF TRANSPORTATION
Caltrans
LANDSCAPE ARCHITECTURE

LAST REVISION 01-11-11
DATE PLOTTED => 16-MAR-2011
TIME PLOTTED => 10:37

Dist	COUNTY	ROUTE	POST MILES TOTAL PROJECT	SHEET No.	TOTAL SHEETS
06	Fre	168,180	R0.8/R10.5, R54.2/R62.9	24	79

LICENSED LANDSCAPE ARCHITECT

3-7-11
PLANS APPROVAL DATE

LICENSED LANDSCAPE ARCHITECT
RICHARD B. COLE No. 2828
Expiration Date 06/30/12
Renewal Date 06/15/10
Date
STATE OF CALIFORNIA

THE STATE OF CALIFORNIA OR ITS OFFICERS OR AGENTS SHALL NOT BE RESPONSIBLE FOR THE ACCURACY OR COMPLETENESS OF SCANNED COPIES OF THIS PLAN SHEET.

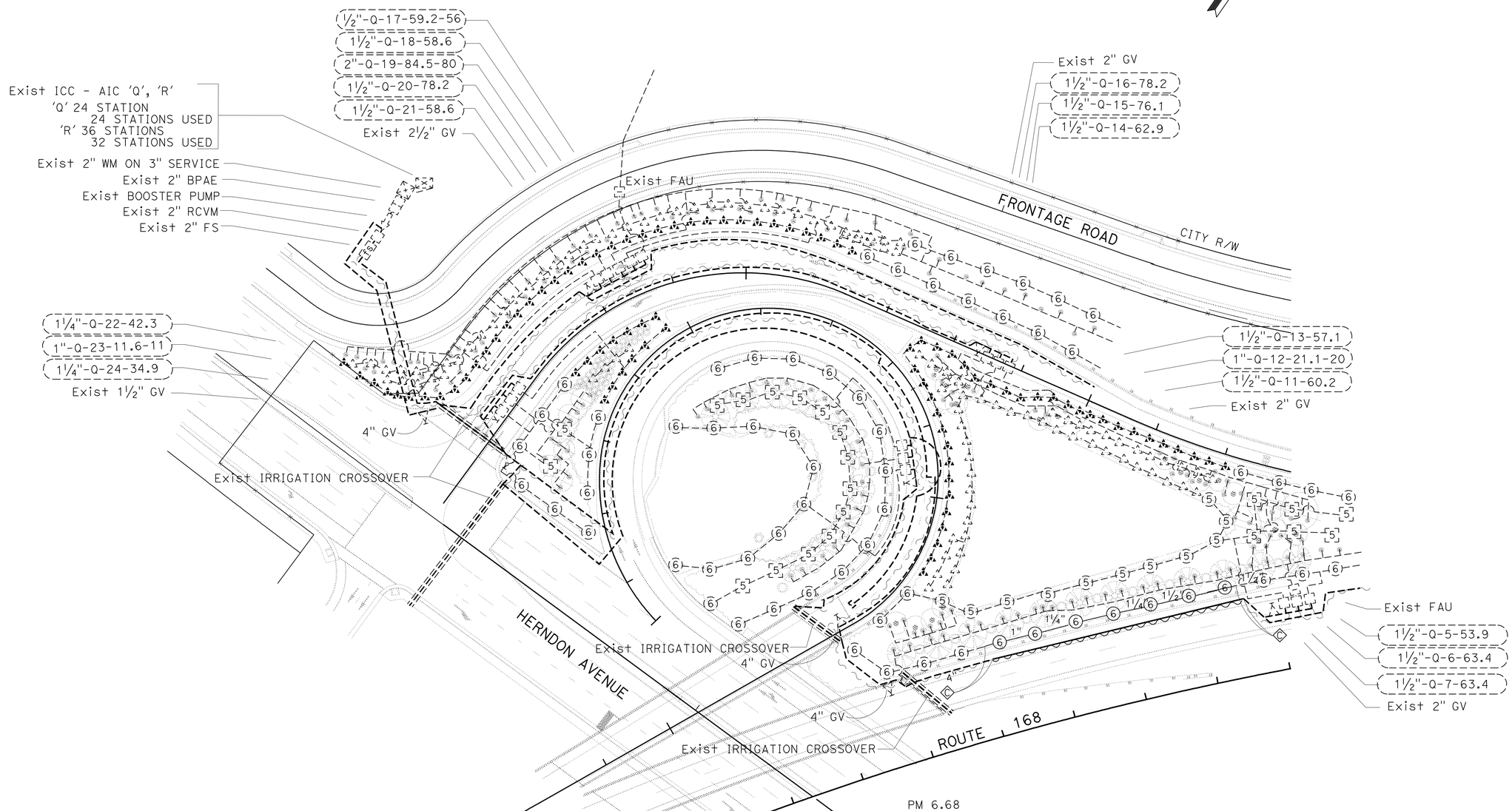

IRRIGATION PLAN
(LOCATION 19)

THIS PLAN IS ACCURATE FOR IRRIGATION WORK ONLY.

SCALE: 1" = 50'

IP-8

STATE OF CALIFORNIA - DEPARTMENT OF TRANSPORTATION
Caltrans
LANDSCAPE ARCHITECTURE

SENIOR LANDSCAPE ARCHITECT: ELBERT COX
CALCULATED-DESIGNED BY: RAYMOND SEGURA
CHECKED BY: RICHARD COLE
REVISED BY
DATE REVISED

LAST REVISION 01-11-11
DATE PLOTTED => 16-MAR-2011
TIME PLOTTED => 10:37

Dist	COUNTY	ROUTE	POST MILES TOTAL PROJECT	SHEET No.	TOTAL SHEETS
06	Fre	168,180	R0.8/R10.5, R54.2/R62.9	25	79

LICENSED LANDSCAPE ARCHITECT

3-7-11
PLANS APPROVAL DATE

LICENSED LANDSCAPE ARCHITECT
RICHARD B. COLE No. 3125
Expiration Date 06/30/12
Renewal Date 06/15/10
Date
STATE OF CALIFORNIA

THE STATE OF CALIFORNIA OR ITS OFFICERS OR AGENTS SHALL NOT BE RESPONSIBLE FOR THE ACCURACY OR COMPLETENESS OF SCANNED COPIES OF THIS PLAN SHEET.

NOTE:

EXISTING 2" WATER METER ON 3" SERVICE
LOCATED AT NORTH WEST CORNER OF FOWLER AVE

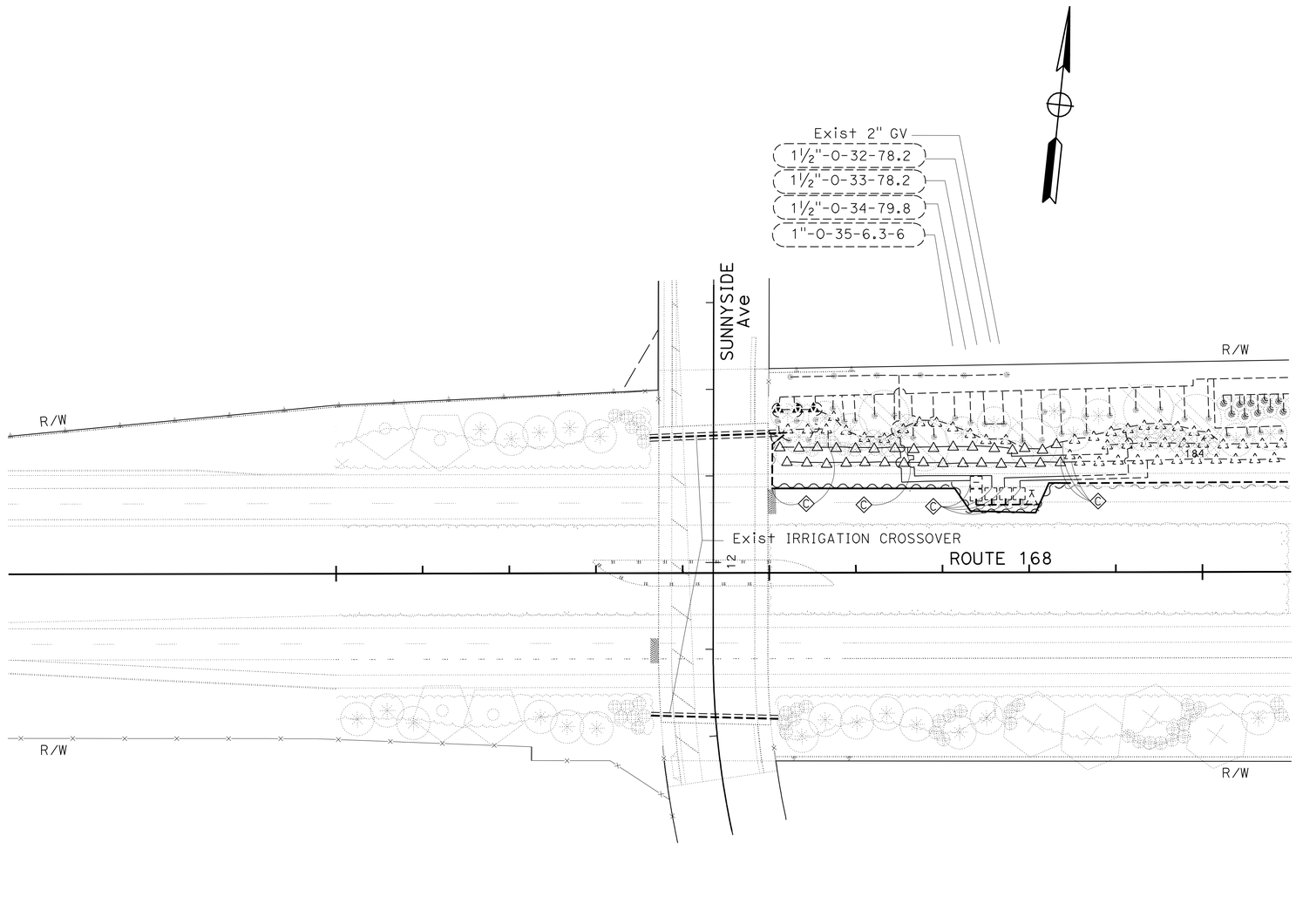

IRRIGATION PLAN
(LOCATION 20)

THIS PLAN IS ACCURATE FOR IRRIGATION WORK ONLY.

SCALE: 1"=50'

IP-9

STATE OF CALIFORNIA - DEPARTMENT OF TRANSPORTATION
Caltrans
LANDSCAPE ARCHITECTURE

SENIOR LANDSCAPE ARCHITECT: ELBERT COX
CALCULATED-DESIGNED BY: RAYMOND SEGURA
CHECKED BY: RICHARD COLE
REVISED BY
DATE REVISED

LAST REVISION 01-11-11
DATE PLOTTED => 16-MAR-2011
TIME PLOTTED => 10:37

Dist	COUNTY	ROUTE	POST MILES TOTAL PROJECT	SHEET No.	TOTAL SHEETS
06	Fre	168,180	R0.8/R10.5, R54.2/R62.9	26	79

LICENSED LANDSCAPE ARCHITECT

3-7-11
PLANS APPROVAL DATE

LICENSED LANDSCAPE ARCHITECT
RICHARD B. COLE No. 3125
Expiration Date 06/30/12
Renewal Date 06/15/10
Date
STATE OF CALIFORNIA

THE STATE OF CALIFORNIA OR ITS OFFICERS OR AGENTS SHALL NOT BE RESPONSIBLE FOR THE ACCURACY OR COMPLETENESS OF SCANNED COPIES OF THIS PLAN SHEET.

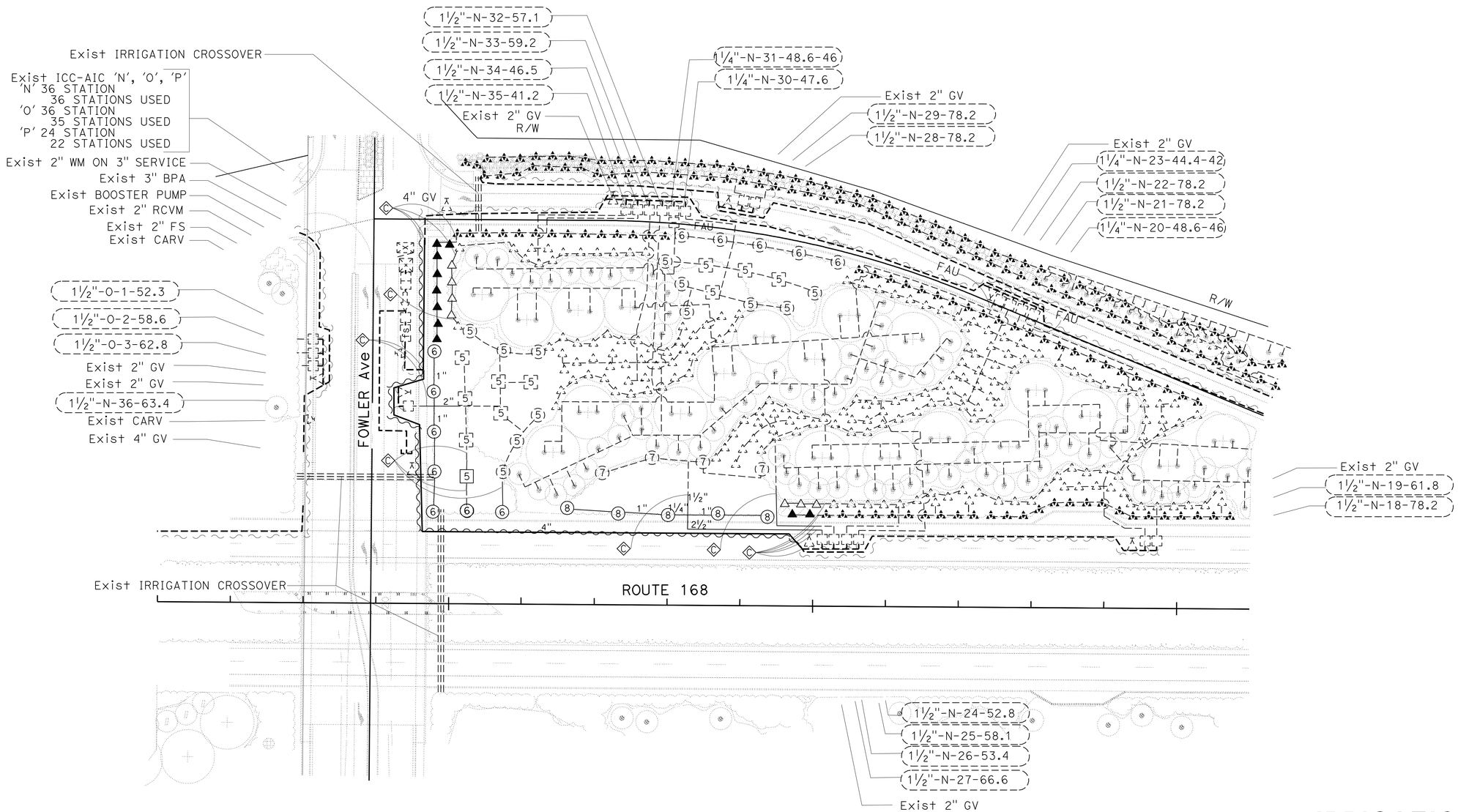

THIS PLAN IS ACCURATE FOR IRRIGATION WORK ONLY.

IRRIGATION PLAN
(LOCATION 21)

SCALE: 1"=50'

IP-10

STATE OF CALIFORNIA - DEPARTMENT OF TRANSPORTATION
Caltrans
LANDSCAPE ARCHITECTURE

SENIOR LANDSCAPE ARCHITECT: ELBERT COX
CALCULATED-DESIGNED BY: RAYMOND SEGURA
CHECKED BY: RICHARD COLE
REVISED BY
DATE REVISED

LAST REVISION 01-11-11
DATE PLOTTED => 16-MAR-2011
TIME PLOTTED => 10:37

Dist	COUNTY	ROUTE	POST MILES TOTAL PROJECT	SHEET No.	TOTAL SHEETS
06	Fre	168,180	R0.8/R10.5, R54.2/R62.9	27	79

LICENSED LANDSCAPE ARCHITECT

3-7-11
PLANS APPROVAL DATE

LICENSED LANDSCAPE ARCHITECT
RICHARD B. COLE No. 3125
Expiration Date 06/30/12
Renewal Date 06/15/10
Date
STATE OF CALIFORNIA

THE STATE OF CALIFORNIA OR ITS OFFICERS OR AGENTS SHALL NOT BE RESPONSIBLE FOR THE ACCURACY OR COMPLETENESS OF SCANNED COPIES OF THIS PLAN SHEET.

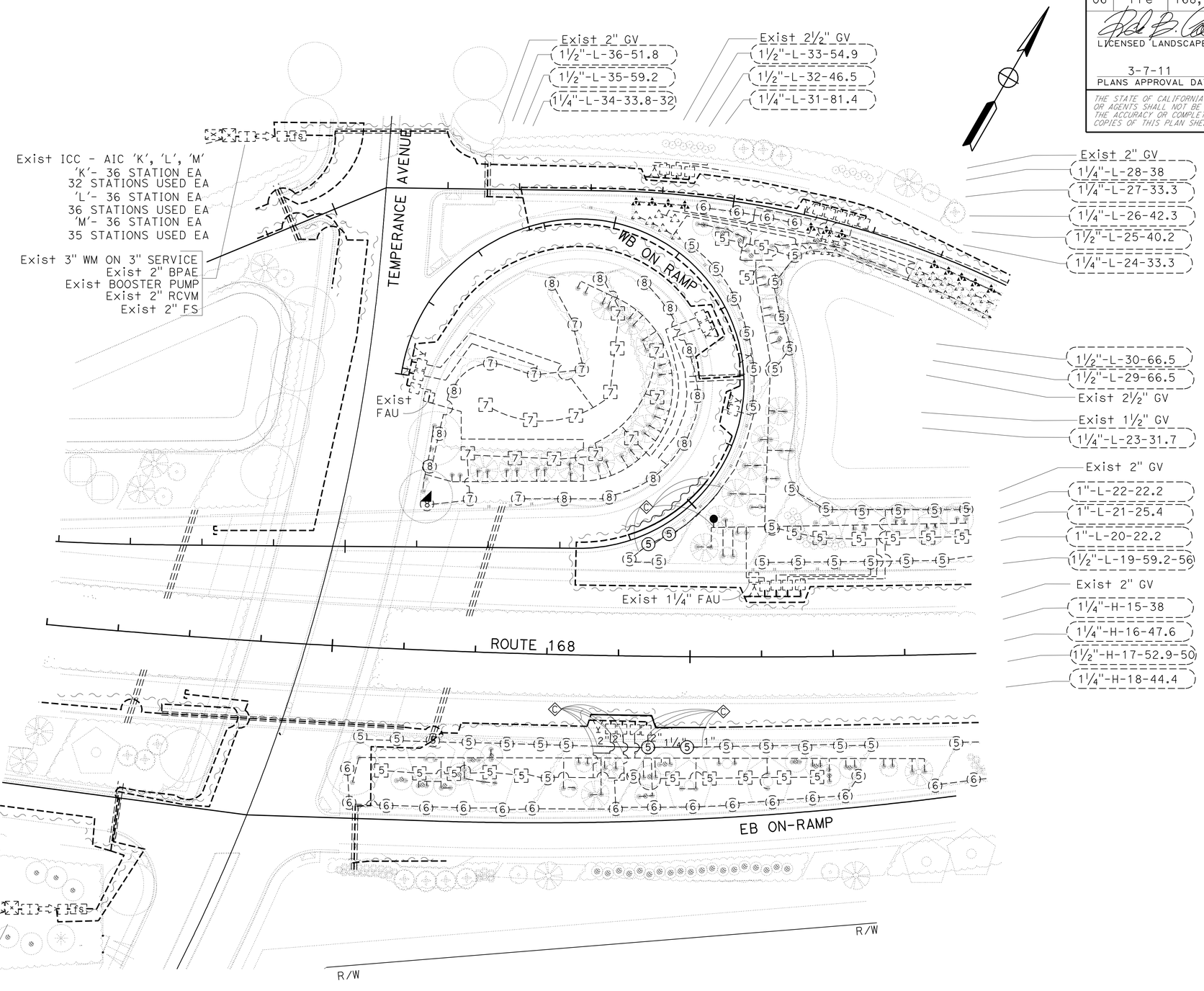

THIS PLAN IS ACCURATE FOR IRRIGATION WORK ONLY.

SCALE: 1"=50'

IRRIGATION PLAN
(LOCATION 23)

IP-11

REVISED BY	
DATE REVISED	
RAYMOND SEGURA	
RICHARD COLE	
CALCULATED-DESIGNED BY	
CHECKED BY	
SENIOR LANDSCAPE ARCHITECT	
ELBERT COX	

STATE OF CALIFORNIA - DEPARTMENT OF TRANSPORTATION
Caltrans
LANDSCAPE ARCHITECTURE

LAST REVISION 01-11-11
DATE PLOTTED => 16-MAR-2011
TIME PLOTTED => 0:38

Dist	COUNTY	ROUTE	POST MILES TOTAL PROJECT	SHEET No.	TOTAL SHEETS
06	Fre	168,180	R0.8/R10.5, R54.2/R62.9	28	79

LICENSED LANDSCAPE ARCHITECT

3-7-11
PLANS APPROVAL DATE

LICENSED LANDSCAPE ARCHITECT — RICHARD B. COLE No. 3125 — Expiration Date 06/30/12 — Renewal Date 06/15/10 — Date — STATE OF CALIFORNIA

THE STATE OF CALIFORNIA OR ITS OFFICERS OR AGENTS SHALL NOT BE RESPONSIBLE FOR THE ACCURACY OR COMPLETENESS OF SCANNED COPIES OF THIS PLAN SHEET.

SPRINKLER SCHEDULE

SYMBOL	TYPE	DESCRIPTION	SPRAY PATTERN	OPERATING PRESSURE (PSI)	PRESSURE COMPENSATING	PLUS/MINUS 5% ② DISCHARGE: GALLONS PER MINUTE (GPM)	DISCHARGE: GALLONS PER HOUR (GPH)	RADIUS (Ft)	WIDTH x LENGTH (Ft)	MATERIAL	INLET CONNECTION (NPT INCH)	POSITIVE-LOCKING ADJ ARC STOP	BACKSPLASH PREVENTER	DIFFUSER PIN	DISTANCE CONTROL FLAP	ADJ DISCHARGE	RISER: TYPE	RISER MATERIAL: PLASTIC	RISER MATERIAL: GALVANIZED	RISER: SIZE (IPS INCH)	RISER: HEIGHT (INCH)	RISER: FLOW SHUTOFF DEVICE	⑤ SWING JOINT (TYPE)	RISER SUPPORT	SPRINKLER PROTECTOR (TYPE)	REMARKS
①	A-1	SIDE IMPACT	P	50	-	5.0	-	41	-	B/B	½	X	X	X	X	X	IV	-	X	½	30	X	II	-	-	
③	A-3	ROTOR	H	40	-	1.3	-	24	-	PL	½	-	-	-	-	X	I	X	-	½	-	-	I	-	-	4" POP-UP
⑤	A-5	ROTOR	ADJ	35	X	1.3	-	32	-	PL	½	-	-	-	-	X	II	X	-	½	36	-	I	X	-	SHRUB MODEL
⑥	A-6	ROTOR	ADJ	35	X	1.3	-	32	-	PL	½	-	-	-	-	X	-	-	-	-	-	-	I	-	-	12" POP-UP
⑦	A-7	ROTOR	ADJ	35	X	6.8	-	47	-	PL	½	-	-	-	-	X	II	X	-	½	36	-	I	X	-	SHRUB MODEL
⑧	A-8	ROTOR	ADJ	35	X	6.8	-	47	-	PL	½	-	-	-	-	X	-	-	-	-	-	-	I	-	-	12" POP-UP
△	B-1	SHRUB SPRAY	H/Q	30	X	1.8 / 0.9	-	15	-	PL	½	-	-	-	-	X	II	X	-	½	12	-	I	-	-	
▲	B-2	SHRUB SPRAY	H	30	X	1.3	-	12	-	PL	½	-	-	-	-	-	VI	X	-	½	-	-	-	-	-	
●	C-3	SHRUB SPRAY	Q	30	X	0.2	-	8	-	PL	½	-	-	-	-	-	V	-	-	½	-	-	-	-	-	

X IN BOX DENOTES REQUIREMENT

APPLICABLE WHEN CIRCLED BELOW:

1 - See Special Provisions.
② - If a pressure compensating device is specified, the discharge and radii shown reflect its use.
3 - Arc Stop shall be fitted with a nut and bolt.
4 - Vinyl-coated cast iron housing.
5 - Swing Joints required adjacent to shoulders, curbs, sidewalks, and dikes.
6 - Unless otherwise shown on plans.

ABBREVIATIONS:

F — full circle
P — part circle
F/P — full/part circle
Q — quarter circle
T — third circle
H — half circle
TT — two third circle
TQ — three quarter circle
CST — center strip
SST — side strip
EST — end strip
Ft — feet/foot
GPM — gallons per minute
GPH — gallons per hour
Adj — adjustable
PL — plastic
B/B — brass/bronze
B/PL — brass/plastic
B/B/PL — brass/bronze/plastic
NPT — national pipe thread
IPS — iron pipe size
PSI — pounds per square inch

LATERAL SUPPLY SIDE PIPE SIZING CHART

No. OF HEADS BY TYPE						PIPE SIZE (INCH)
A-1	B-2 (15' R) F	B-2 (15' R) P	B-2 (12' R) F	B-2 (12' R) P	C-3	
1	1-2	1-4	1-5	1-11	1-16	¾
2	3-4	5-7	6-8	12-17	17-36	1
3-4	5-6	8-12	9-15	18-30	37-64	1¼
5-6	7-8	13-16	16-19	31-38	65-96	1½
7-9	9-13	17-26	20-31	39-63	97-160	2
	14-19	27-37				2½

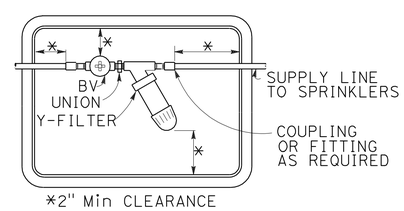

FILTER ASSEMBLY UNIT
PLAN

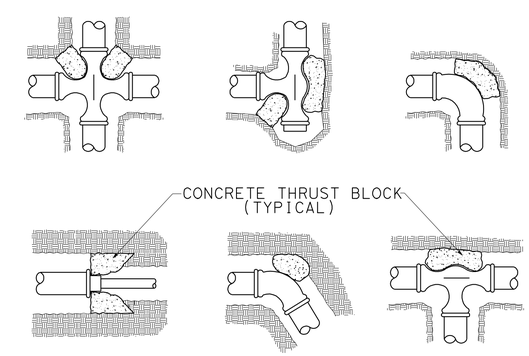

TYPICAL THRUST BLOCK

SPRINKLER SCHEDULE AND DETAILS
LD-1

STATE OF CALIFORNIA - DEPARTMENT OF TRANSPORTATION
Caltrans®
LANDSCAPE ARCHITECTURE

SENIOR LANDSCAPE ARCHITECT: ELBERT COX
CALCULATED-DESIGNED BY: RAYMOND SEGURA
CHECKED BY: RICHARD COLE
REVISED BY
DATE REVISED

LAST REVISION 01-11-11
DATE PLOTTED => 09-MAR-2011
TIME PLOTTED => 16:20

Dist	COUNTY	ROUTE	POST MILES TOTAL PROJECT	SHEET No.	TOTAL SHEETS
06	Fre	168,180	R0.8/R10.5, R54.2/R62.9	29	79

REGISTERED ELECTRICAL ENGINEER 01-05-11 DATE

3-7-11
PLANS APPROVAL DATE

REGISTERED PROFESSIONAL ENGINEER MONA N. ATTALLAH No. 18407 Exp. 6-30-12 ELECTRICAL STATE OF CALIFORNIA

THE STATE OF CALIFORNIA OR ITS OFFICERS OR AGENTS SHALL NOT BE RESPONSIBLE FOR THE ACCURACY OR COMPLETENESS OF SCANNED COPIES OF THIS PLAN SHEET.

NOTES: (FOR THIS SHEET ONLY)

1 Exist 120/240 V, 1Ø, 3-WIRE, TYPE III-AF SERVICE EQUIPMENT ENCLOSURE WITH THE FOLLOWING CIRCUIT BREAKERS:

CTID No. 06421800054311L

AMPERES	VOLTS	POLES	NAMEPLATE	METER	PHOTOELECTRIC CONTROL TYPE
100	240	2	MAIN BREAKER	YES	———
40	240	2	HIGHWAY LIGHTING	YES	IV
30	240	2	SIGN ILLUMINATION	YES	LC3 SIGN CONTROL
15	120	1	SPARE	YES	———
* 20	120	1	MVDS	YES	———

* ADD CB & NAMEPLATE

2 VDS TYPE 35 POLE AT 32′ FROM ETW, SEE DETAIL A ON SHEET E-27. SEE SHEET SES-1 AND SES-2 FOR POLE DETAILS.

3 INSTALL SPLICE CLOSURE IN SPLICE VAULT. REFER TO SHEETS E-31 THRU E-36 FOR FIBER BREAKOUT DETAILS.

4. ALL Exist FIBER OPTIC CONDUITS ARE 6-1½"C, 144 SMFO, UNLESS OTHERWISE NOTED.

5. FOR FIBER OPTIC CONDUIT INSTALLATION DETAILS, REFER TO SHEET E-30.

6. ALL PULL BOXES SHALL BE No. 5(E) UNLESS OTHERWISE NOTED.

7. FOR ACCURATE RIGHT OF WAY DATA, CONTACT RIGHT OF WAY ENGINEERING AT THE DISTRICT OFFICE.

8. FOR MVDS CASE DETAILS, SEE SHEET C-1.

LEGEND:

V Exist SPLICE VAULT

Exist CONDUIT RUN

ABBREVIATIONS:

AT&T	AMERICAN TELEPHONE AND TELEGRAPH
CTID	CALTRANS IDENTIFICATION
EQG	EQUIPMENT GROUND
HDPE	HIGH DENSITY POLYETHYLENE
MVDS	MICROWAVE VEHICLE DETECTION SYSTEM
PG&E	PACIFIC GAS AND ELECTRIC COMPANY
SMFO	SINGLE MODE FIBER OPTIC CABLE
TCS	TRAFFIC COUNT STATION
STC	SCREENED TRANSMISSION CABLE
VCS	VEHICLE CLASSIFICATION STATION
smfo	Exist SINGLE MODE FIBER OPTIC CABLE
PV	PHOTOVOLTAIC

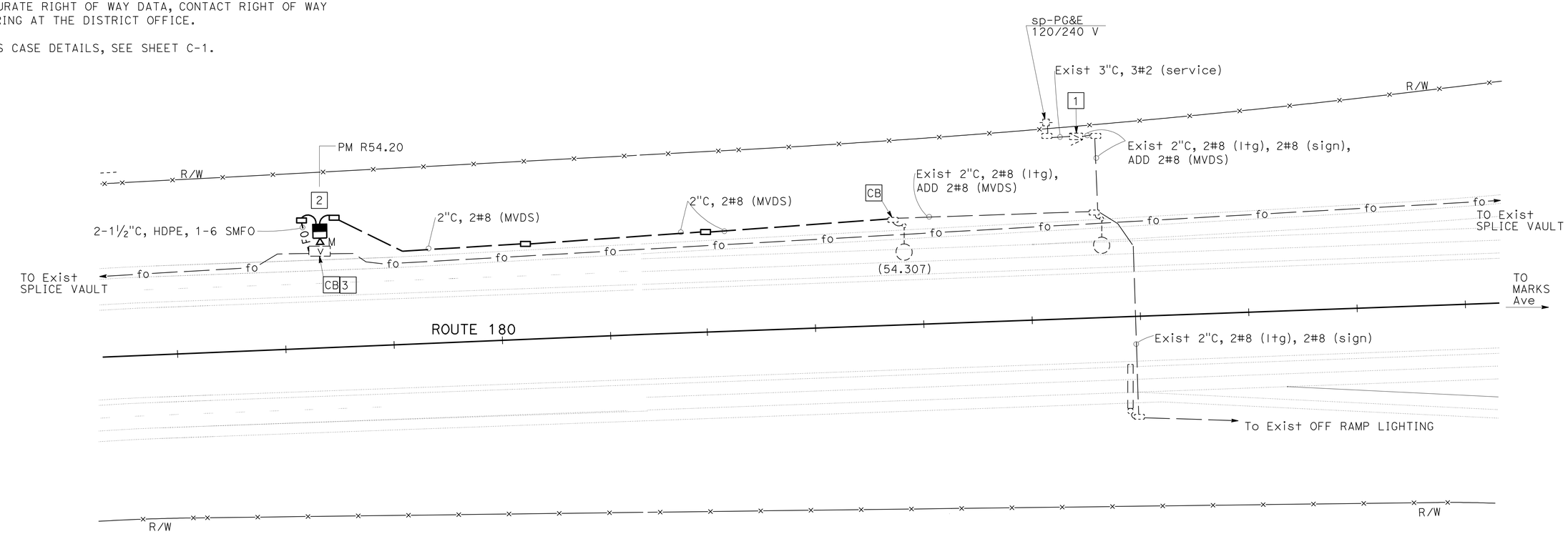

FIBER OPTIC SYSTEM
MICROWAVE VEHICLE DETECTION SYSTEM
(LOCATION 1)

THIS PLAN IS ACCURATE FOR ELECTRICAL WORK ONLY.

SCALE: 1" = 50′

E-1

STATE OF CALIFORNIA - DEPARTMENT OF TRANSPORTATION
Caltrans® ELECTRICAL DESIGN

FUNCTIONAL SUPERVISOR: ALI BAKHDOUD
CALCULATED-DESIGNED BY: MONA ATTALLAH
CHECKED BY: DANIEL VO
REVISED BY
DATE REVISED

LAST REVISION 11-19-10
DATE PLOTTED => 09-MAR-2011
TIME PLOTTED => 16:20

Dist	COUNTY	ROUTE	POST MILES TOTAL PROJECT	SHEET No.	TOTAL SHEETS
06	Fre	168,180	R0.8/R10.5, R54.2/R62.9	30	79

Mona Attallah 01-05-11
REGISTERED ELECTRICAL ENGINEER DATE

3-7-11
PLANS APPROVAL DATE

REGISTERED PROFESSIONAL ENGINEER MONA N. ATTALLAH No. 18407 Exp. 6-30-12 ELECTRICAL STATE OF CALIFORNIA

THE STATE OF CALIFORNIA OR ITS OFFICERS OR AGENTS SHALL NOT BE RESPONSIBLE FOR THE ACCURACY OR COMPLETENESS OF SCANNED COPIES OF THIS PLAN SHEET.

NOTES: (FOR THIS SHEET ONLY)

1 Exist 120/240 V, 1Ø, 3-WIRE, TYPE III-CF SERVICE EQUIPMENT ENCLOSURE WITH THE FOLLOWING CIRCUIT BREAKERS:

CTID No. 0642180R056190T

AMPERES	VOLTS	POLES	NAMEPLATE	METER	PHOTOELECTRIC CONTROL TYPE
100	240	2	MAIN BREAKER	NO	———
40	120	1	FLASHING BEACON (FUTURE)	NO	———
——	——	——	4 SPACES	NO	———

CTID No. 0642180R056190L

AMPERES	VOLTS	POLES	NAMEPLATE	METER	PHOTOELECTRIC CONTROL TYPE
100	240	2	MAIN BREAKER	YES	———
40	240	2	SIGN ILLUMINATION	YES	LC3 SIGN CONTROL
40	240	2	HIGHWAY LIGHTING	YES	TYPE IV
30	120	1	FLASHING BEACON	YES	———
* 20	120	1	MVDS	YES	———

* ADD CB & NAMEPLATE

2 VDS TYPE 35 POLE AT 32′ FROM ETW, SEE DETAIL A ON SHEET E-27. SEE SHEET SES-1 AND SES-2 FOR POLE DETAILS.

3 INSTALL SPLICE CLOSURE IN SPLICE VAULT. REFER TO SHEETS E-31 THRU E-36 FOR FIBER BREAKOUT DETAILS.

4. ALL Exist FIBER OPTIC CONDUITS ARE 6-1½"C, 144 SMFO, UNLESS OTHERWISE NOTED.

5. FOR FIBER OPTIC CONDUIT INSTALLATION DETAILS, REFER TO SHEET E-30.

6. ALL PULL BOXES SHALL BE No. 5(E) UNLESS OTHERWISE NOTED.

7. FOR ACCURATE RIGHT OF WAY DATA, CONTACT RIGHT OF WAY ENGINEERING AT THE DISTRICT OFFICE.

8. FOR MVDS CASE DETAILS, SEE SHEET C-1.

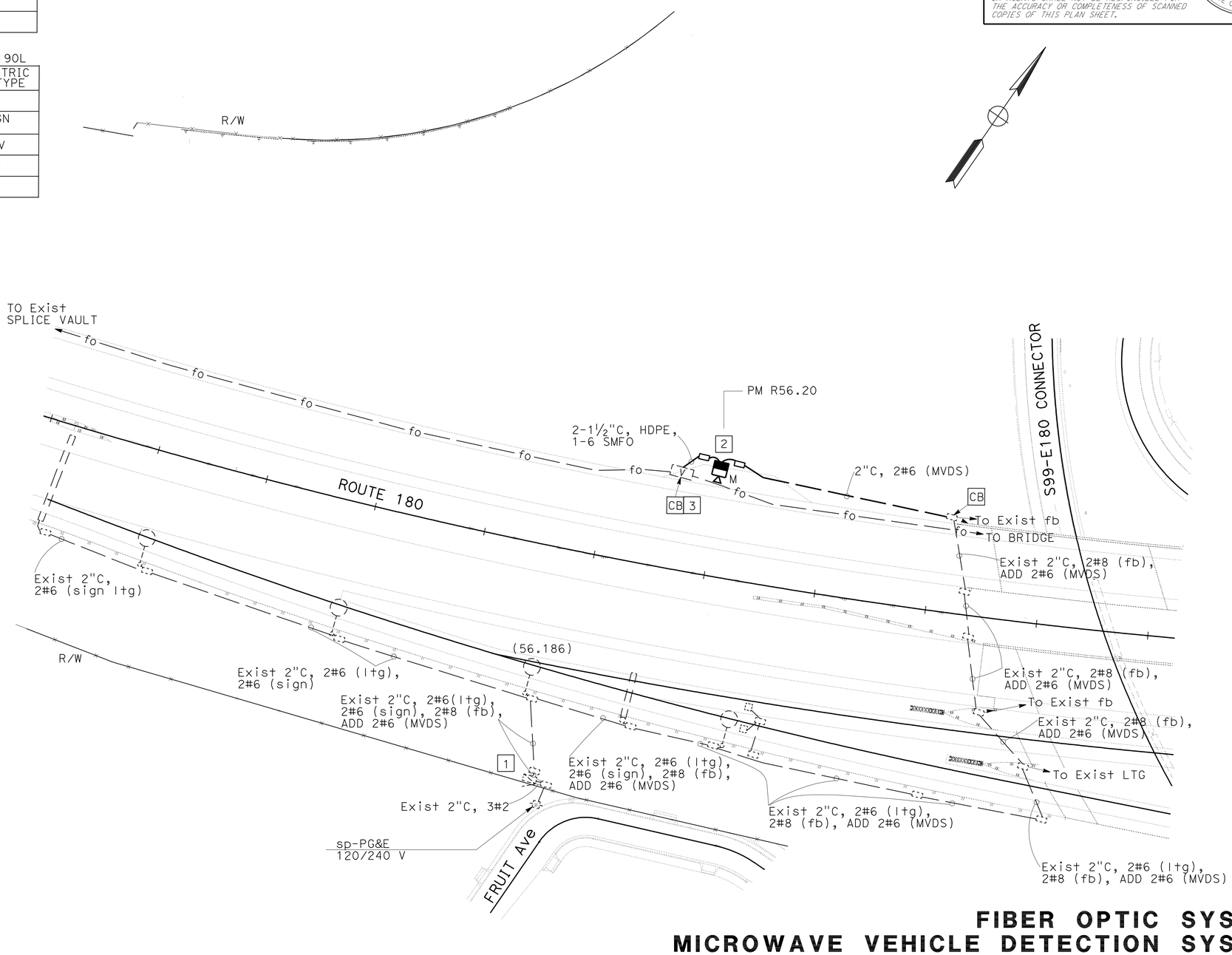

FIBER OPTIC SYSTEM
MICROWAVE VEHICLE DETECTION SYSTEM
(LOCATION 2)

THIS PLAN IS ACCURATE FOR ELECTRICAL WORK ONLY.

SCALE: 1" = 50′

E-2

STATE OF CALIFORNIA - DEPARTMENT OF TRANSPORTATION
Caltrans® ELECTRICAL DESIGN

FUNCTIONAL SUPERVISOR: ALI BAKHDOUD
CALCULATED-DESIGNED BY: MONA ATTALLAH
CHECKED BY: DANIEL VO
REVISED BY
DATE REVISED

LAST REVISION 11-19-10
DATE PLOTTED => 09-MAR-2011
TIME PLOTTED => 16:20

Dist	COUNTY	ROUTE	POST MILES TOTAL PROJECT	SHEET No.	TOTAL SHEETS
06	Fre	168,180	R0.8/R10.5, R54.2/R62.9	31	79

REGISTERED ELECTRICAL ENGINEER 00-00-00 DATE

3-7-11
PLANS APPROVAL DATE

REGISTERED PROFESSIONAL ENGINEER MONA N. ATTALLAH No. 18407 Exp. 6-30-12 ELECTRICAL STATE OF CALIFORNIA

THE STATE OF CALIFORNIA OR ITS OFFICERS OR AGENTS SHALL NOT BE RESPONSIBLE FOR THE ACCURACY OR COMPLETENESS OF SCANNED COPIES OF THIS PLAN SHEET.

NOTES: (FOR THIS SHEET ONLY)

1. Exist 120/240 V, 1ø, 3-WIRE, TYPE III-AF SERVICE EQUIPMENT ENCLOSURE.
2. VDS TYPE 30 POLE AT 17′ FROM ETW, SEE DETAILS ON SHEET E-28. SEE SHEET SES-1 AND SES-2 FOR POLE DETAILS.
3. ALL PULL BOXES SHALL BE No. 5(E) UNLESS OTHERWISE NOTED.
4. ALL Exist FIBER OPTIC CONDUITS ARE 4"C, 48 SMFO, UNLESS OTHERWISE NOTED.
5. FOR ACCURATE RIGHT OF WAY DATA, CONTACT RIGHT OF WAY ENGINEERING AT THE DISTRICT OFFICE.
6. FOR MVDS CASE DETAILS, SEE SHEET C-1.

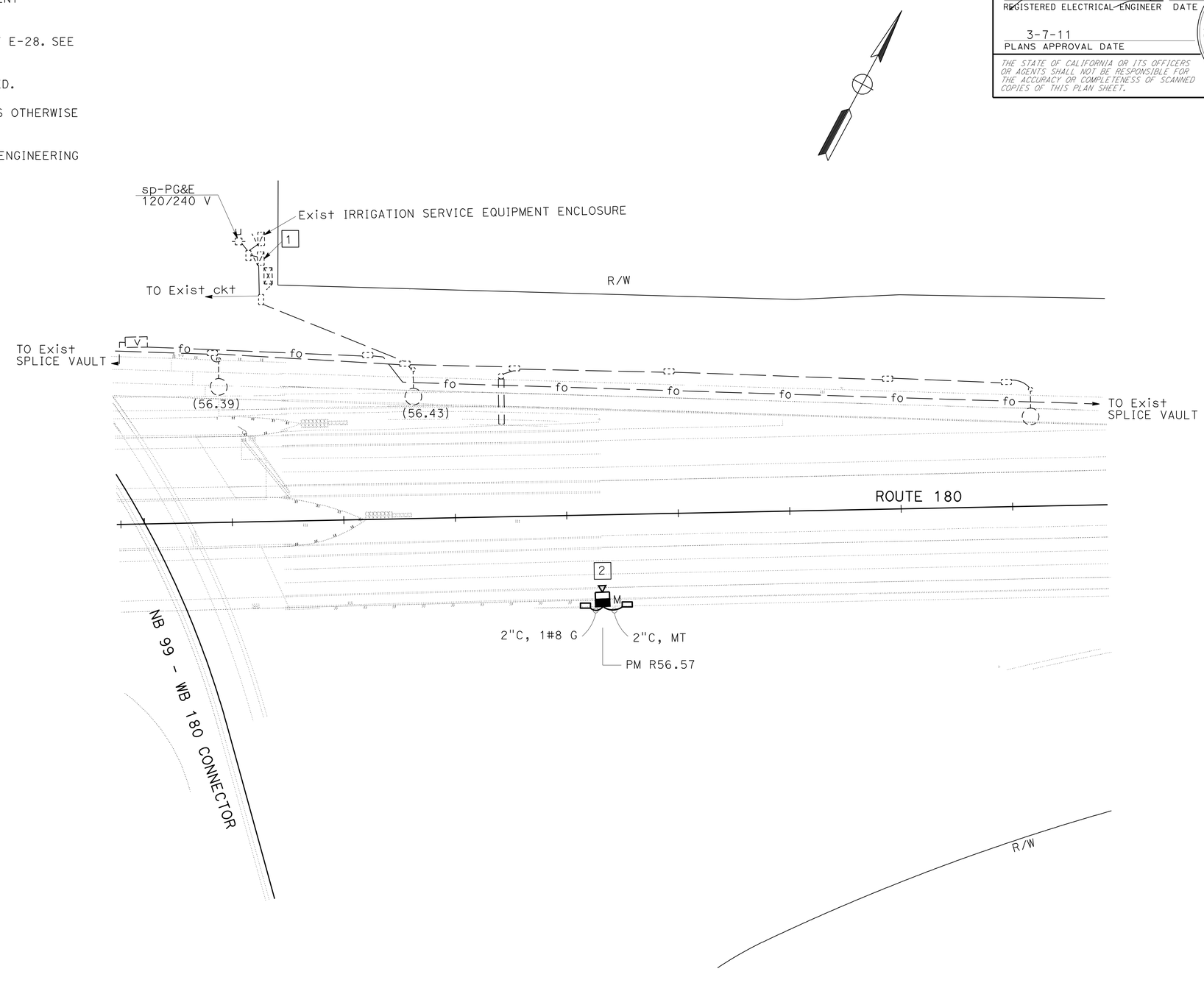

MICROWAVE VEHICLE DETECTION SYSTEM
(LOCATION 3)

THIS PLAN IS ACCURATE FOR ELECTRICAL WORK ONLY.

SCALE: 1" = 50′

E-3

STATE OF CALIFORNIA - DEPARTMENT OF TRANSPORTATION
Caltrans® ELECTRICAL DESIGN

FUNCTIONAL SUPERVISOR: ALI BAKHDOUD
CALCULATED-DESIGNED BY: MONA ATTALLAH
CHECKED BY: DANIEL VO
REVISED BY
DATE REVISED

LAST REVISION 01-10-11
DATE PLOTTED => 11-MAR-2011
TIME PLOTTED => 14:22

Dist	COUNTY	ROUTE	POST MILES TOTAL PROJECT	SHEET No.	TOTAL SHEETS
06	Fre	168,180	R0.8/R10.5, R54.2/R62.9	32	79

REGISTERED ELECTRICAL ENGINEER 01-05-11 DATE

3-7-11
PLANS APPROVAL DATE

REGISTERED PROFESSIONAL ENGINEER MONA N. ATTALLAH No. 18407 Exp. 6-30-12 ELECTRICAL STATE OF CALIFORNIA

THE STATE OF CALIFORNIA OR ITS OFFICERS OR AGENTS SHALL NOT BE RESPONSIBLE FOR THE ACCURACY OR COMPLETENESS OF SCANNED COPIES OF THIS PLAN SHEET.

NOTES: (FOR THIS SHEET ONLY)

1. Exist 120/240 V, 1Ø, 3-WIRE, TYPE III-AF SERVICE EQUIPMENT ENCLOSURE.
2. Exist MODEL 334 CABINET FOR TMS. INSTALL STATE-FURNISHED MODEL 2070 CONTROLLER UNIT AND CENTRAL CONTROL SYSTEM.
3. INSTALL SPLICE CLOSURE IN SPLICE VAULT. REFER TO SHEETS E-31 THRU E-36 FOR FIBER BREAKOUT DETAILS.
4. ALL Exist FIBER OPTIC CONDUITS ARE 4"C, 48 SMFO , UNLESS OTHERWISE NOTED.
5. FOR ACCURATE RIGHT OF WAY DATA, CONTACT RIGHT OF WAY ENGINEERING AT THE DISTRICT OFFICE.

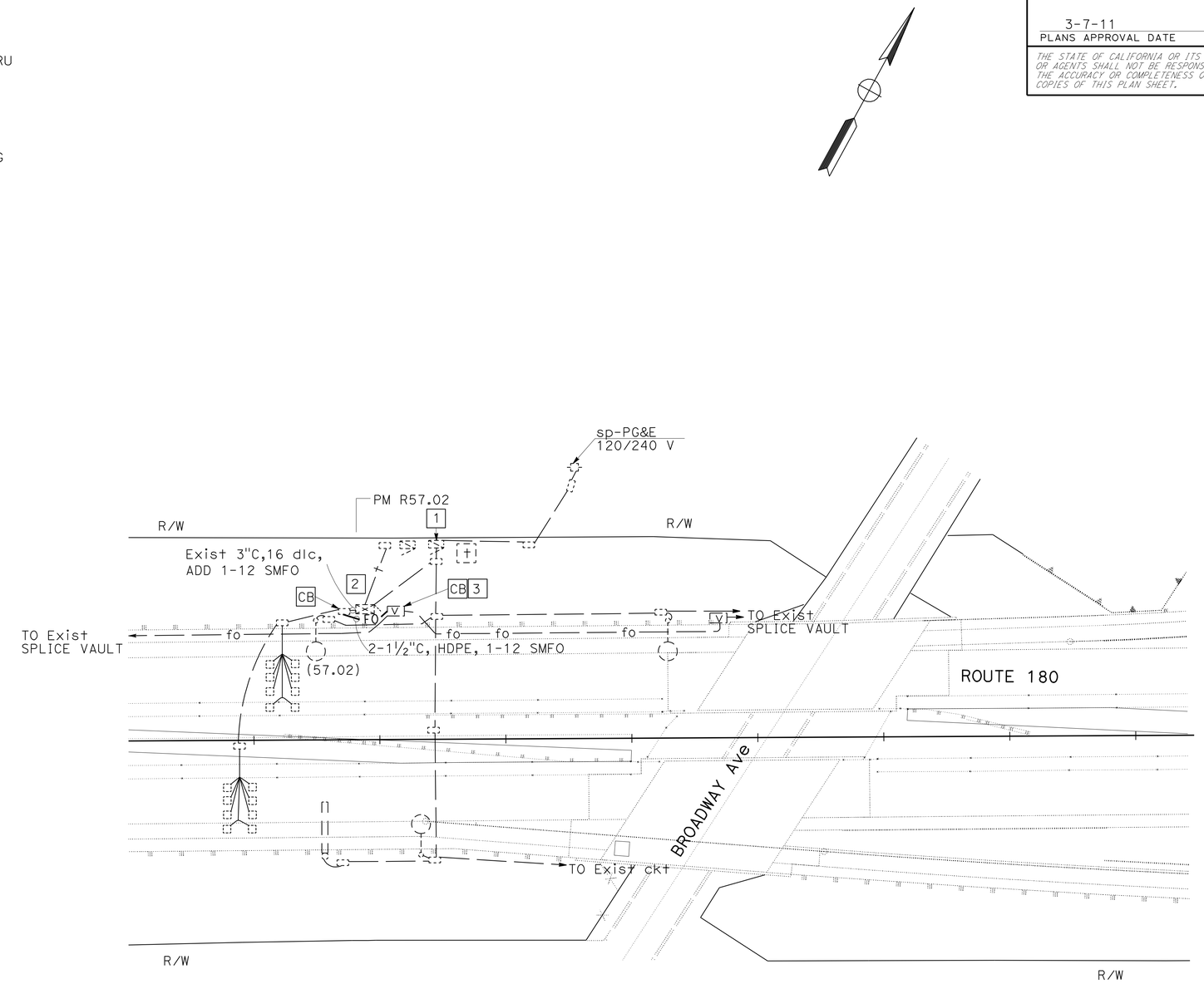

FIBER OPTIC SYSTEM
MODIFY TRAFFIC MONITORING STATION
(LOCATION 4)

THIS PLAN IS ACCURATE FOR ELECTRICAL WORK ONLY.

SCALE: 1" = 50'

E-4

STATE OF CALIFORNIA - DEPARTMENT OF TRANSPORTATION
Caltrans® ELECTRICAL DESIGN

FUNCTIONAL SUPERVISOR: ALI BAKHDOUD
CALCULATED-DESIGNED BY: MONA ATTALLAH
CHECKED BY: DANIEL VO
REVISED BY
DATE REVISED

LAST REVISION 11-19-10
DATE PLOTTED => 11-MAR-2011
TIME PLOTTED => 14:14

Dist	COUNTY	ROUTE	POST MILES TOTAL PROJECT	SHEET No.	TOTAL SHEETS
06	Fre	168,180	R0.8/R10.5, R54.2/R62.9	33	79

REGISTERED ELECTRICAL ENGINEER 01-05-11 DATE

3-7-11
PLANS APPROVAL DATE

REGISTERED PROFESSIONAL ENGINEER MONA N. ATTALLAH No. 18407 Exp. 6-30-12 ELECTRICAL STATE OF CALIFORNIA

THE STATE OF CALIFORNIA OR ITS OFFICERS OR AGENTS SHALL NOT BE RESPONSIBLE FOR THE ACCURACY OR COMPLETENESS OF SCANNED COPIES OF THIS PLAN SHEET.

NOTES: (FOR THIS SHEET ONLY)

1. Exist 120/240 V, 1Ø, 3-WIRE, TYPE III-AF SERVICE EQUIPMENT ENCLOSURE.
2. INSTALL SPLICE CLOSURE IN SPLICE VAULT. REFER TO SHEETS E-31 THRU E-36 FOR FIBER BREAKOUT DETAILS.
3. INSTALL CENTRAL CONTROL SYSTEM.
4. ALL Exist FIBER OPTIC CONDUITS ARE 4"C, 48 SMFO, UNLESS OTHERWISE NOTED.
5. FOR ACCURATE RIGHT OF WAY DATA, CONTACT RIGHT OF WAY ENGINEERING AT THE DISTRICT OFFICE.

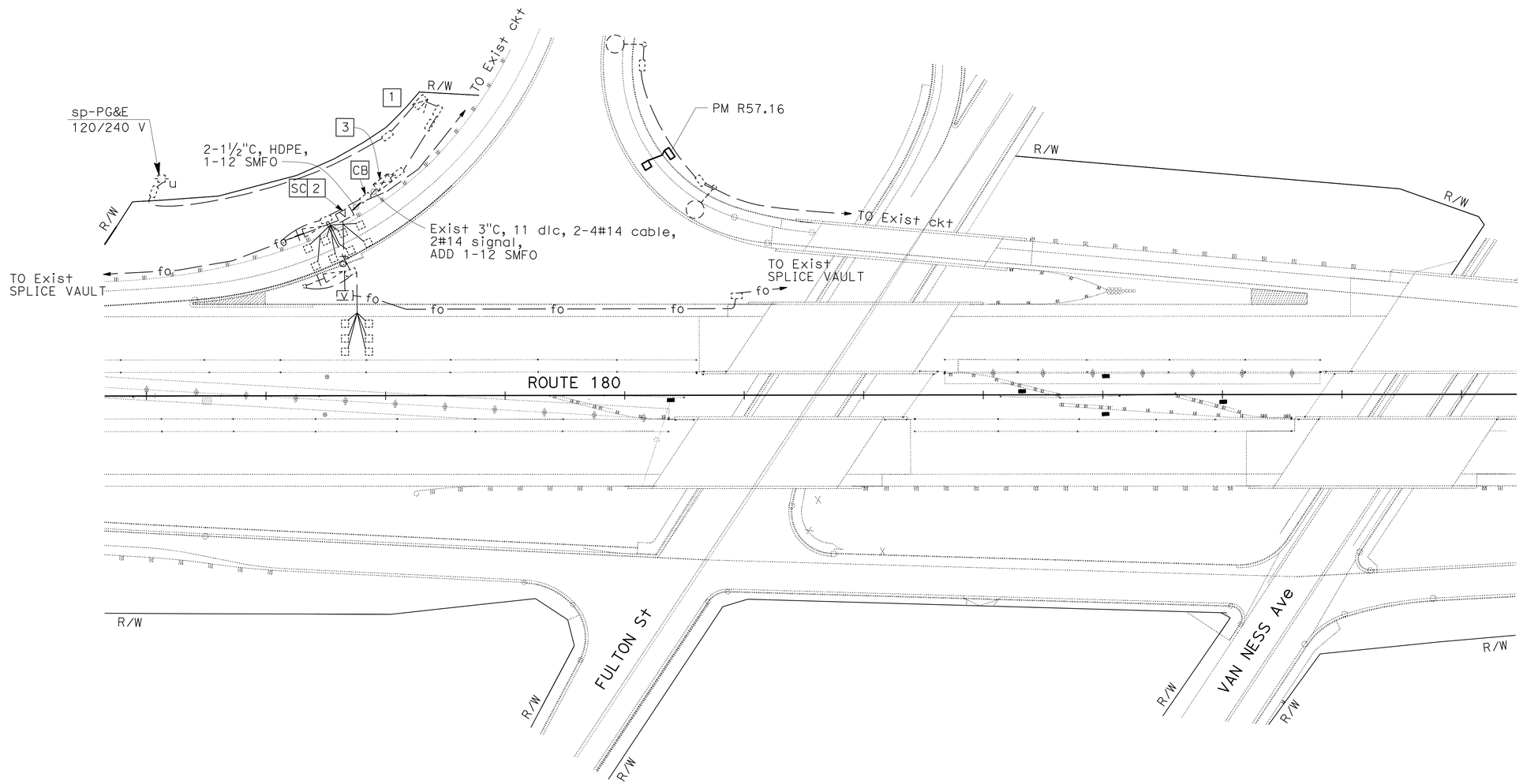

THIS PLAN IS ACCURATE FOR ELECTRICAL WORK ONLY.

FIBER OPTIC SYSTEM DETECTOR LOOP (LOCATION 5)

SCALE: 1" = 50'

E-5

STATE OF CALIFORNIA - DEPARTMENT OF TRANSPORTATION
Caltrans® ELECTRICAL DESIGN

FUNCTIONAL SUPERVISOR: ALI BAKHDOUD
CALCULATED-DESIGNED BY: MONA ATTALLAH
CHECKED BY: DANIEL VO
REVISED BY
DATE REVISED

LAST REVISION 11-19-10
DATE PLOTTED => 09-MAR-2011
TIME PLOTTED => 18:22

Dist	COUNTY	ROUTE	POST MILES TOTAL PROJECT	SHEET No.	TOTAL SHEETS
06	Fre	168,180	R0.8/R10.5, R54.2/R62.9	34	79

Mona Attallah 01-05-11
REGISTERED ELECTRICAL ENGINEER DATE

3-7-11
PLANS APPROVAL DATE

REGISTERED PROFESSIONAL ENGINEER MONA N. ATTALLAH No. 18407 Exp. 6-30-12 ELECTRICAL STATE OF CALIFORNIA

THE STATE OF CALIFORNIA OR ITS OFFICERS OR AGENTS SHALL NOT BE RESPONSIBLE FOR THE ACCURACY OR COMPLETENESS OF SCANNED COPIES OF THIS PLAN SHEET.

NOTES: (FOR THIS SHEET ONLY)

1. Exist 120/240 V, 1Ø, 3-WIRE, TYPE III-AF SERVICE EQUIPMENT ENCLOSURE.
2. INSTALL STATE-FURNISHED MODEL 2070 CONTROLLER AND CENTRAL CONTROL SYSTEM ASSEMBLY FOR TMS. TERMINATE 1-12 SMFO TO CENTRAL CONTROL SYSTEM.
3. ALL Exist FIBER OPTIC CONDUITS ARE 4"C, 3-1½" INNERDUCT, 144 SMFO, UNLESS OTHERWISE NOTED.
4. FOR ACCURATE RIGHT OF WAY DATA, CONTACT RIGHT OF WAY ENGINEERING AT THE DISTRICT OFFICE.
5. ALL PULL BOXES SHALL BE No. 5(E) UNLESS OTHERWISE NOTED.
6. SPLICE 1-12 SMFO TO EXISTING 144 SMFO TO FIBERS 1-6 IN THE VAULT TO REPLCE EXISTING 1-125 SMFO.

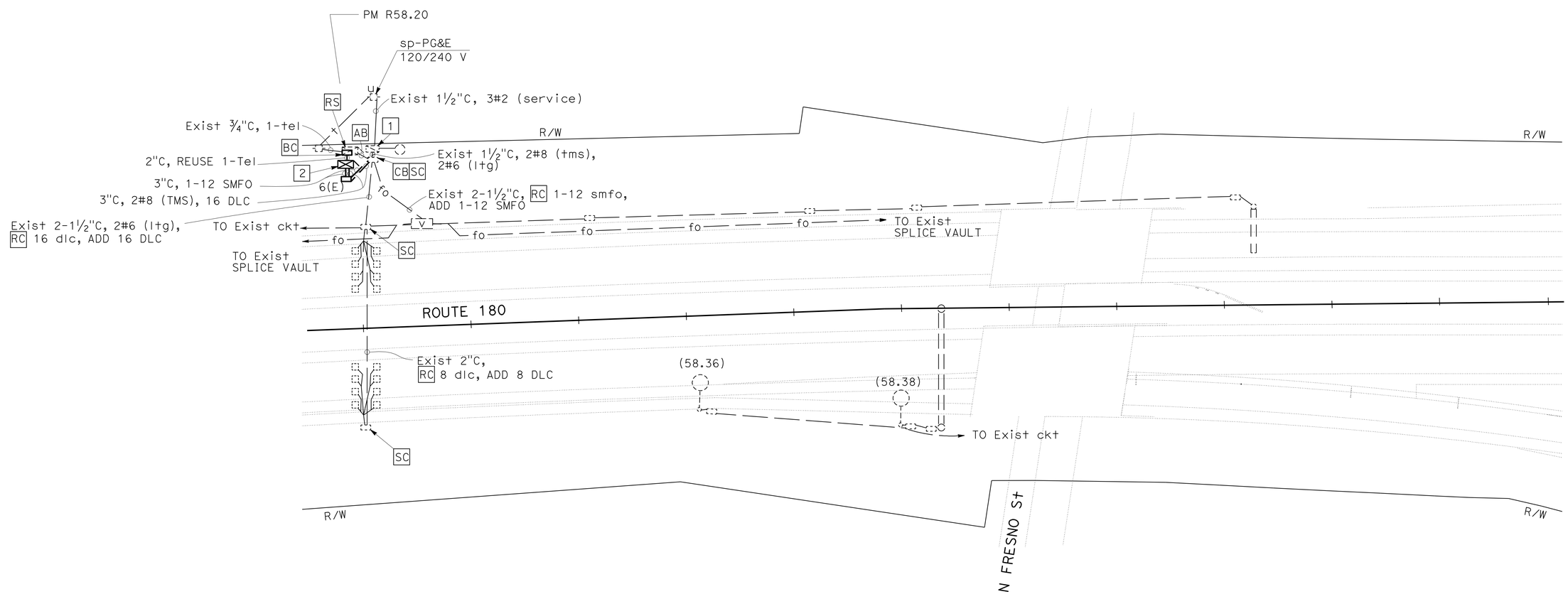

THIS PLAN IS ACCURATE FOR ELECTRICAL WORK ONLY.

FIBER OPTIC SYSTEM
MODIFY TRAFFIC MONITORING STATION
(LOCATION 6)

SCALE: 1" = 50'

E-6

STATE OF CALIFORNIA - DEPARTMENT OF TRANSPORTATION
Caltrans® ELECTRICAL DESIGN

FUNCTIONAL SUPERVISOR: ALI BAKHDOUD
CALCULATED-DESIGNED BY: MONA ATTALLAH
CHECKED BY: DANIEL VO
REVISED BY
DATE REVISED

LAST REVISION 11-19-10
DATE PLOTTED => 09-MAR-2011
TIME PLOTTED => 18:22

Dist	COUNTY	ROUTE	POST MILES TOTAL PROJECT	SHEET No.	TOTAL SHEETS
06	Fre	168,180	R0.8/R10.5, R54.2/R62.9	35	79

REGISTERED ELECTRICAL ENGINEER 01-05-11 DATE

3-7-11
PLANS APPROVAL DATE

REGISTERED PROFESSIONAL ENGINEER MONA N. ATTALLAH No. 18407 Exp. 6-30-12 ELECTRICAL STATE OF CALIFORNIA

THE STATE OF CALIFORNIA OR ITS OFFICERS OR AGENTS SHALL NOT BE RESPONSIBLE FOR THE ACCURACY OR COMPLETENESS OF SCANNED COPIES OF THIS PLAN SHEET.

NOTES: (FOR THIS SHEET ONLY)

1. Exist 120/240 V, 1ø, 3 WIRE, TYPE III-AF SERVICE EQUIPMENT ENCLOSURE WITH THE FOLLOWING CIRCUIT BREAKERS:

CTID No. 06421800060351

AMPERES	VOLTS	POLES	NAMEPLATE	METER	PHOTOELECTRIC CONTROL TYPE
100	240	2	MAIN BREAKER	YES	———
70	240	2	EEE	YES	———
40	240	2	SIGN LIGHTING (FUTURE USE)	YES	———
20	120	1	SPARE	YES	———
60	120	1	CCTV	YES	———
* 40	120	1	TMS	YES	———

* ADD CB AND NAMEPLATE

2. INSTALL STATE-FURNISHED MODEL 2070 CONTROLLER ASSEMBLY AND CENTRAL CONTROL SYSTEM FOR TMS.

3. INDUCTIVE LOOP DETECTORS SHALL BE PLACED AND IDENTIFIED AS SHOWN IN DETAIL A ON SHEET E-26.
THE CONTRACTOR SHALL TERMINATE DLC AT LOWER INPUT PANEL (TB2) IN MODEL 334 CABINET AS SHOWN IN DETAIL A ON SHEET E-26.

4. REFER TO SHEETS E-31 THRU E-36 FOR FIBER BREAKOUT DETAILS.

5. ALL Exist FIBER OPTIC CONDUITS ARE 6-1½"C, 1-144 SMFO, UNLESS OTHERWISE NOTED.

6. FOR FIBER OPTIC CONDUIT INSTALLATION DETAILS, REFER TO SHEET E-30.

7. ALL PULL BOXES SHALL BE No. 5(E) UNLESS OTHERWISE NOTED.

8. FOR ACCURATE RIGHT OF WAY DATA, CONTACT RIGHT OF WAY ENGINEERING AT THE DISTRICT OFFICE.

CONDUIT AND CONDUCTOR SCHEDULE

CONDUCTOR DESIGNATION		CONDUIT RUN NUMBER AND SIZE		
AWG	CIRCUIT	1	2	3
		2"	2"	2"
#2	334-cctv cabinet	2	2	2
#4	EEE	3		
#6	TMS	*2	*2	*2

* ADD

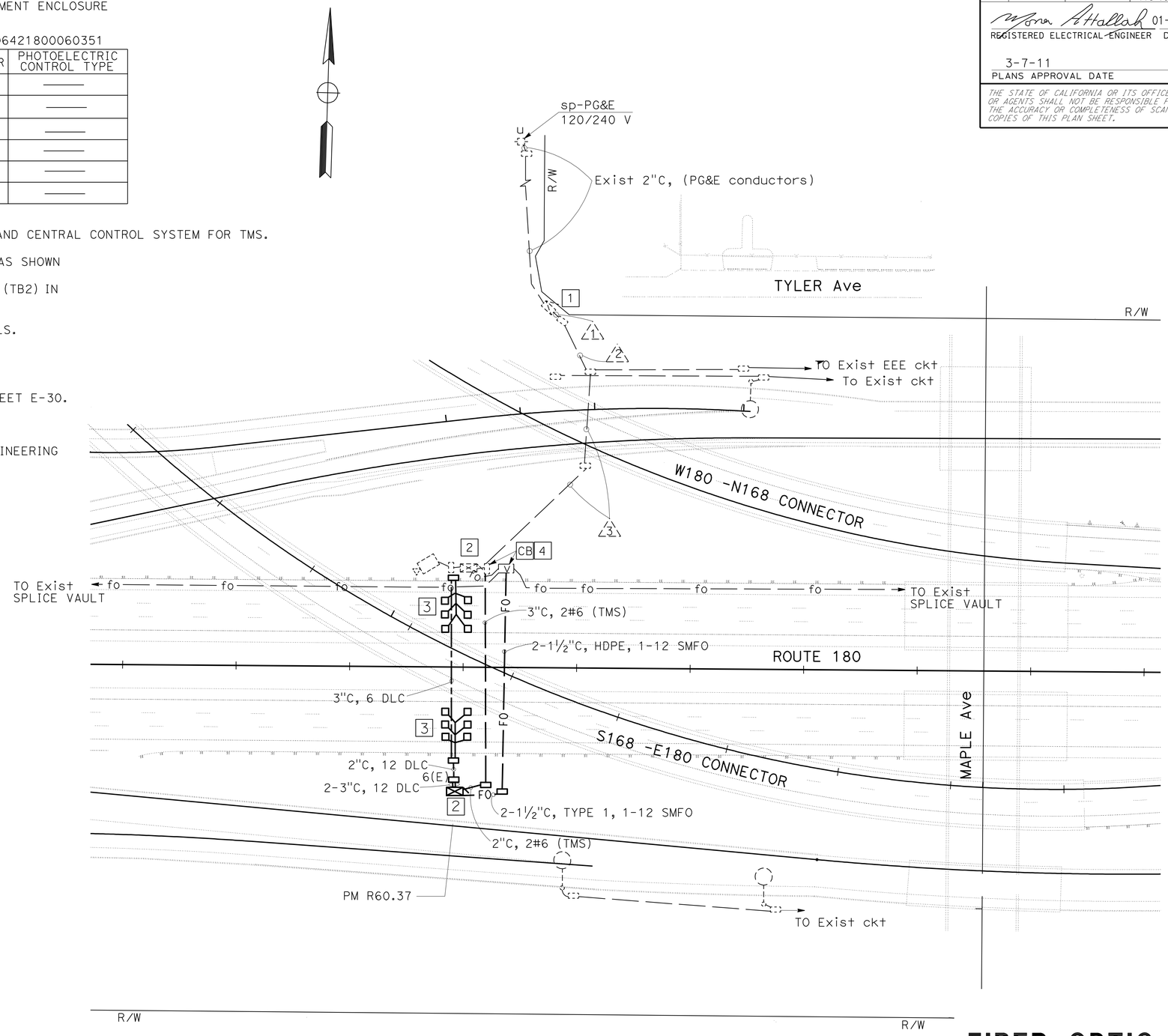

THIS PLAN IS ACCURATE FOR ELECTRICAL WORK ONLY.

FIBER OPTIC SYSTEM TRAFFIC MONITORING STATION (LOCATION 7)

SCALE: 1" = 50'

E-7

STATE OF CALIFORNIA - DEPARTMENT OF TRANSPORTATION
Caltrans® ELECTRICAL DESIGN

FUNCTIONAL SUPERVISOR: ALI BAKHDOUD
CALCULATED-DESIGNED BY: MONA ATTALLAH
CHECKED BY: DANIEL VO
REVISED BY
DATE REVISED

LAST REVISION 11-19-10
DATE PLOTTED => 09-MAR-2011
TIME PLOTTED => 18:22

Dist	COUNTY	ROUTE	POST MILES TOTAL PROJECT	SHEET No.	TOTAL SHEETS
06	Fre	168,180	R0.8/R10.5, R54.2/R62.9	36	79

REGISTERED ELECTRICAL ENGINEER 01-05-11 DATE

3-7-11
PLANS APPROVAL DATE

REGISTERED PROFESSIONAL ENGINEER MONA N. ATTALLAH No. 18407 Exp. 6-30-12 ELECTRICAL STATE OF CALIFORNIA

THE STATE OF CALIFORNIA OR ITS OFFICERS OR AGENTS SHALL NOT BE RESPONSIBLE FOR THE ACCURACY OR COMPLETENESS OF SCANNED COPIES OF THIS PLAN SHEET.

NOTES: (FOR THIS SHEET ONLY)

1. Exist 120/240 V, 1ø, 3-WIRE, TYPE III-CF SERVICE EQUIPMENT ENCLOSURE.
2. Exist MODEL 334 CABINET FOR TMS. INSTALL STATE-FURNISHED MODEL 2070 CONTROLLER UNIT.
3. ALL Exist FIBER OPTIC CONDUITS ARE 6-1½"C, 1-144 SMFO, UNLESS OTHERWISE NOTED.
4. FOR ACCURATE RIGHT OF WAY DATA, CONTACT RIGHT OF WAY ENGINEERING AT THE DISTRICT OFFICE.

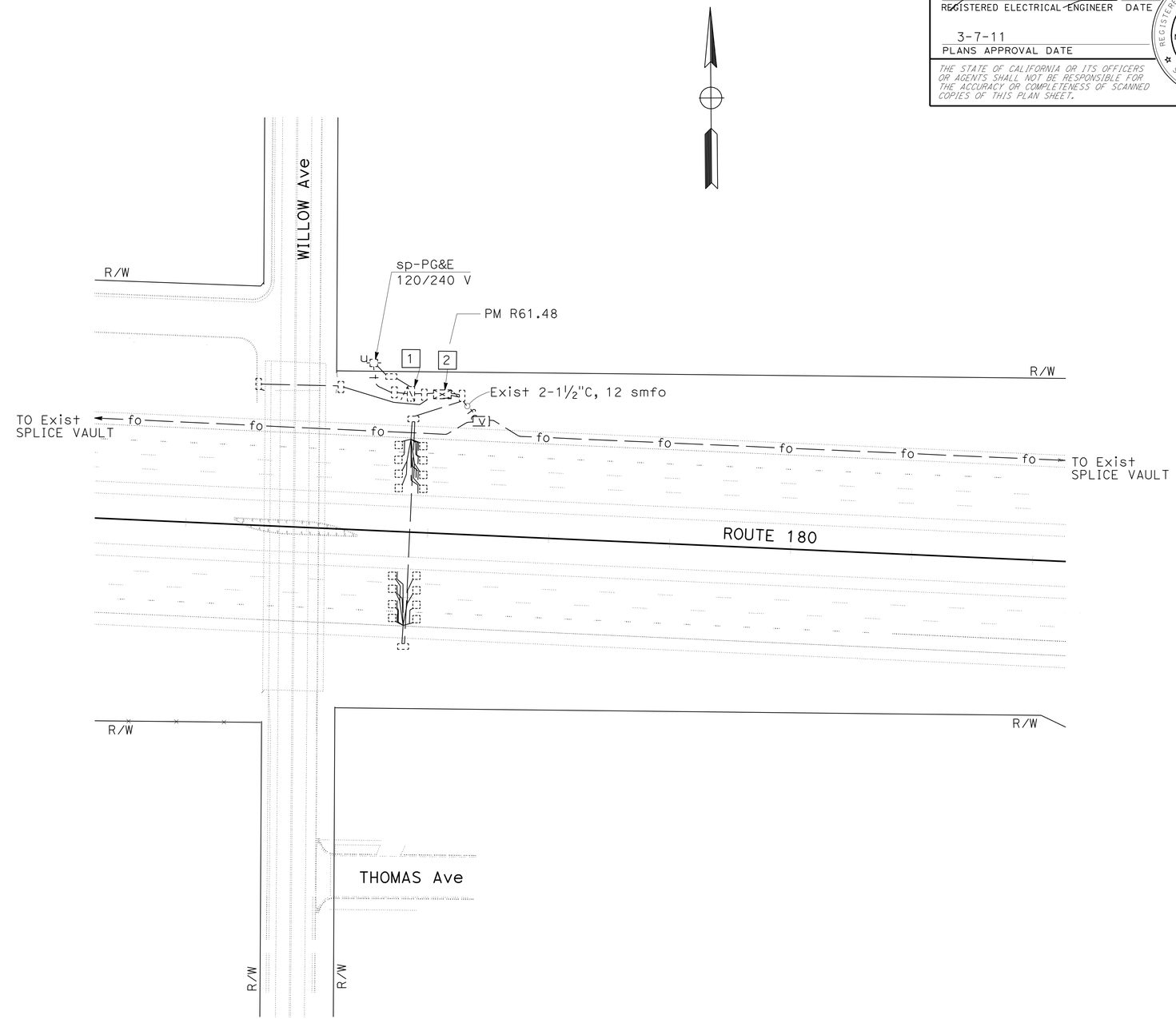

MODIFY TRAFFIC MONITORING STATION (LOCATION 8)

SCALE: 1" = 50'

E-8

THIS PLAN IS ACCURATE FOR ELECTRICAL WORK ONLY.

STATE OF CALIFORNIA - DEPARTMENT OF TRANSPORTATION
Caltrans ELECTRICAL DESIGN

FUNCTIONAL SUPERVISOR: ALI BAKHDOUD
CALCULATED-DESIGNED BY: MONA ATTALLAH
CHECKED BY: DANIEL VO
REVISED BY / DATE REVISED

LAST REVISION 11-19-10
DATE PLOTTED => 09-MAR-2011
TIME PLOTTED => 18:22

Dist	COUNTY	ROUTE	POST MILES TOTAL PROJECT	SHEET No.	TOTAL SHEETS
06	Fre	168,180	R0.8/R10.5, R54.2/R62.9	37	79

REGISTERED ELECTRICAL ENGINEER 00-00-00 DATE

3-7-11
PLANS APPROVAL DATE

REGISTERED PROFESSIONAL ENGINEER MONA N. ATTALLAH No. 18407 Exp. 6-30-12 ELECTRICAL STATE OF CALIFORNIA

THE STATE OF CALIFORNIA OR ITS OFFICERS OR AGENTS SHALL NOT BE RESPONSIBLE FOR THE ACCURACY OR COMPLETENESS OF SCANNED COPIES OF THIS PLAN SHEET.

NOTES: (FOR THIS SHEET ONLY)

1. INDUCTIVE LOOP DETECTORS SHALL BE PLACED AND IDENTIFIED AS SHOWN IN DETAIL A ON SHEET E-26.
   THE CONTRACTOR SHALL TERMINATE DLC AT LOWER INPUT PANEL (TB2) IN MODEL 334 CABINET AS IN DETAIL A SHOWN ON SHEET E-26.
2. ALL PULL BOXES SHALL BE No. 5(E) UNLESS OTHERWISE NOTED.
3. ALL Exist FIBER OPTIC CONDUITS ARE 6-1½"C, 1-144 SMFO, UNLESS OTHERWISE NOTED.
4. FOR ACCURATE RIGHT OF WAY DATA, CONTACT RIGHT OF WAY ENGINEERING AT THE DISTRICT OFFICE.

CONDUIT AND CONDUCTOR SCHEDULE

CONDUCTOR DESIGNATION			CONDUIT RUN NUMBER AND SIZE		
CABLE TYPE	POLE	PHASE	1 2-3"	2 2"	3 *3"
AWG	CIRCUIT				
#4	334-rm cabinet		2		
#6	334-cctv cabinet				
#6	lighting				
	12CSC		1		
	5CSC		4		
	DETECTORS-DLC				
demand #1			1		
passage #1			1		
demand #2			1		
passage #2			1		
demand hov			1		
passage hov			1		
que #1, #2, hov			1		
WB mainline			6	6	
EB mainline			*6	*6	*6
	TOTAL		19	12	6

* ADD

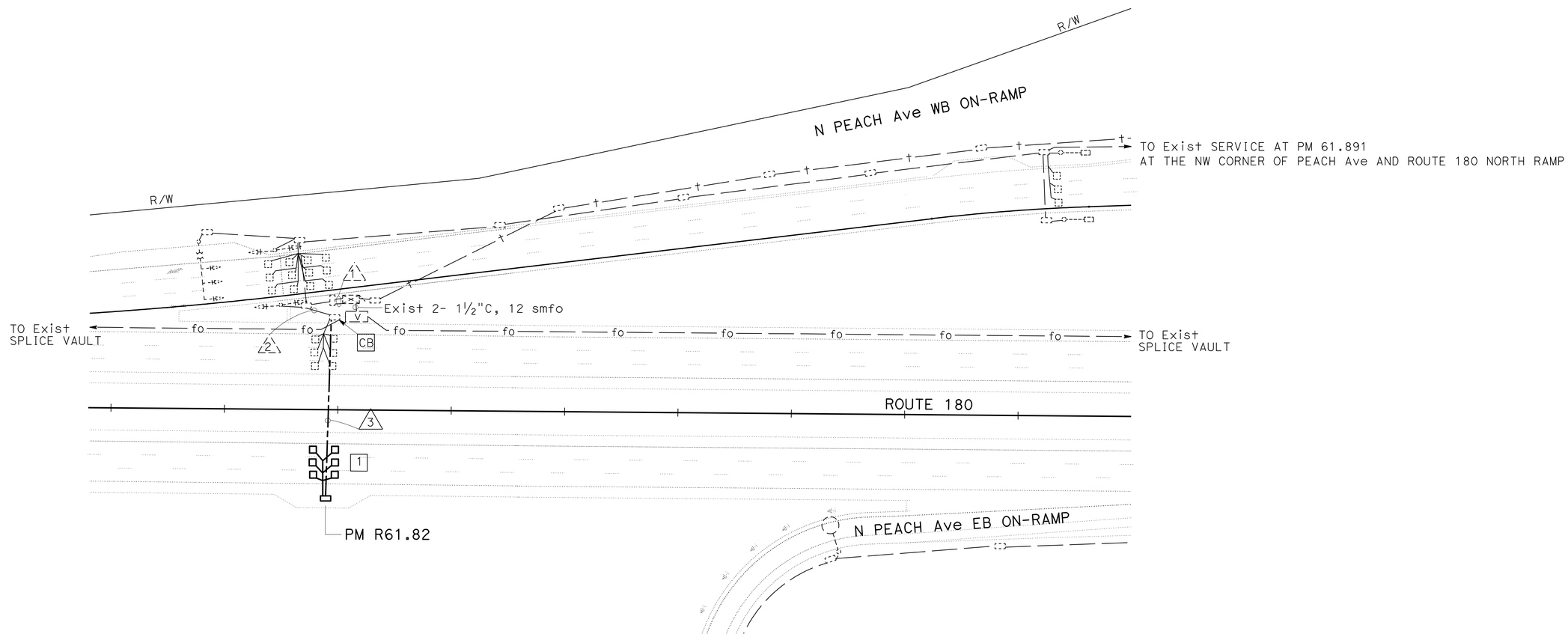

MODIFY RAMP METERING SYSTEM
(LOCATION 9)

THIS PLAN IS ACCURATE FOR ELECTRICAL WORK ONLY.

SCALE: 1" = 50'

E-9

STATE OF CALIFORNIA - DEPARTMENT OF TRANSPORTATION
Caltrans® ELECTRICAL DESIGN

FUNCTIONAL SUPERVISOR: ALI BAKHDOUD
CALCULATED-DESIGNED BY: MONA ATTALLAH
CHECKED BY: DANIEL VO
REVISED BY
DATE REVISED

LAST REVISION 01-10-11
DATE PLOTTED => 14-MAR-2011
TIME PLOTTED => 11:05

Dist	COUNTY	ROUTE	POST MILES TOTAL PROJECT	SHEET No.	TOTAL SHEETS
06	Fre	168,180	R0.8/R10.5, R54.2/R62.9	38	79

REGISTERED ELECTRICAL ENGINEER 01-05-11 DATE

3-7-11
PLANS APPROVAL DATE

REGISTERED PROFESSIONAL ENGINEER MONA N. ATTALLAH No. 18407 Exp. 6-30-12 ELECTRICAL STATE OF CALIFORNIA

THE STATE OF CALIFORNIA OR ITS OFFICERS OR AGENTS SHALL NOT BE RESPONSIBLE FOR THE ACCURACY OR COMPLETENESS OF SCANNED COPIES OF THIS PLAN SHEET.

NOTES: (FOR THIS SHEET ONLY)

1 Exist 120/240 V, 1 ø, 3-WIRE, TYPE III-CF SERVICE EQUIPMENT ENCLOSURE WITH THE FOLLOWING CIRCUIT BREAKERS:

CTID No. 06421800062191G

AMPERES	VOLTS	POLES	NAMEPLATE	METER	PHOTOELECTRIC CONTROL TYPE
100	240	2	MAIN BREAKER	YES	———
40	240	2	BOOSTER PUMP (FUTURE)	YES	———
50	240	2	SPARE	YES	———

CTID No. 06421800062191L

AMPERES	VOLTS	POLES	NAMEPLATE	METER	PHOTOELECTRIC CONTROL TYPE
100	240	2	MAIN BREAKER	YES	———
40	240	2	HIGHWAY LIGHTING	YES	IV
30	240	2	SIGN ILLUMINATION	YES	LC3 SIGN CONTROL
* 20	120	1	MVDS	YES	———

* CHANGENAME PLATE TO MVDS

2 VDS TYPE 35 POLE AT 32′ FROM ETW, SEE DETAIL A ON SHEET E-27. SEE SHEET SES-1 AND SES-2 FOR POLE DETAILS.

3 INSTALL SPLICE CLOSURE IN SPLICE VAULT. REFER TO SHEETS E-31 THRU E-36 FOR FIBER BREAKOUT DETAILS.

4. ALL Exist FIBER OPTIC CONDUITS ARE 6-1½"C, 1-144 SMFO UNLESS OTHERWISE NOTED.

5. FOR FIBER OPTIC CONDUIT INSTALLATION DETAILS, REFER TO SHEET E-30.

6. ALL PULL BOXES SHALL BE No. 5(E) UNLESS OTHERWISE NOTED.

7. FOR ACCURATE RIGHT OF WAY DATA, CONTACT RIGHT OF WAY ENGINEERING AT THE DISTRICT OFFICE.

8. FOR MVDS CASE DETAILS SEE SHEET C-1.

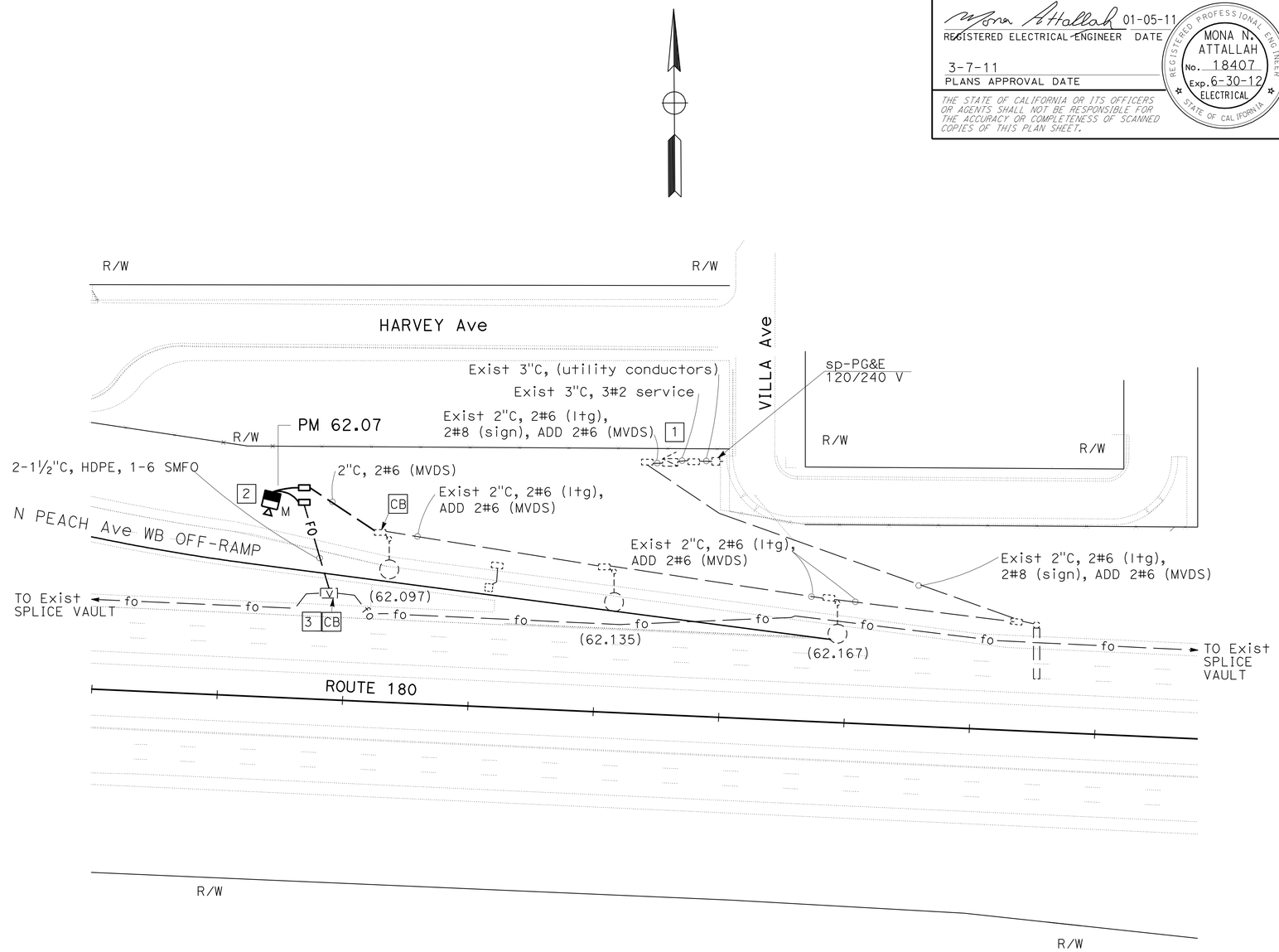

FIBER OPTIC SYSTEM
MICROWAVE VEHICLE DETECTION SYSTEM
(LOCATION 10)

THIS PLAN IS ACCURATE FOR ELECTRICAL WORK ONLY.

SCALE: 1" = 50′

E-10

STATE OF CALIFORNIA - DEPARTMENT OF TRANSPORTATION
Caltrans® ELECTRICAL DESIGN

FUNCTIONAL SUPERVISOR: ALI BAKHDOUD
CALCULATED-DESIGNED BY: MONA ATTALLAH
CHECKED BY: DANIEL VO
REVISED BY
DATE REVISED

LAST REVISION 11-19-10
DATE PLOTTED => 14-MAR-2011
TIME PLOTTED => 11:05

Dist	COUNTY	ROUTE	POST MILES TOTAL PROJECT	SHEET No.	TOTAL SHEETS
06	Fre	168,180	R0.8/R10.5, R54.2/R62.9	39	79

REGISTERED ELECTRICAL ENGINEER — DATE 00-00-00

3-7-11
PLANS APPROVAL DATE

REGISTERED PROFESSIONAL ENGINEER — MONA N. ATTALLAH — No. 18407 — Exp. 6-30-12 — ELECTRICAL — STATE OF CALIFORNIA

THE STATE OF CALIFORNIA OR ITS OFFICERS OR AGENTS SHALL NOT BE RESPONSIBLE FOR THE ACCURACY OR COMPLETENESS OF SCANNED COPIES OF THIS PLAN SHEET.

NOTES: (FOR THIS SHEET ONLY)

1. Exist 120/240 V, 1Ø, 3-WIRE, TYPE III-CF SERVICE EQUIPMENT ENCLOSURE.
2. INDUCTIVE LOOP DETECTORS SHALL BE PLACED AND IDENTIFIED AS SHOWN IN DETAIL A ON SHEET E-26.
   THE CONTRACTOR SHALL TERMINATE DLC AT LOWER INPUT PANEL (TB2) IN MODEL 334 CABINET AS SHOWN IN DETAIL A ON SHEET E-26.
3. ALL Exist FIBER OPTIC CONDUITS ARE 6-1½"C, 1-144 SMFO, UNLESS OTHERWISE NOTED.
4. ALL PULL BOXES SHALL BE No. 5(E) UNLESS OTHERWISE NOTED.
5. FOR ACCURATE RIGHT OF WAY DATA, CONTACT RIGHT OF WAY ENGINEERING AT THE DISTRICT OFFICE.

CONDUIT AND CONDUCTOR SCHEDULE

CONDUCTOR DESIGNATION			CONDUIT RUN NUMBER AND SIZE				
CABLE TYPE	POLE	PHASE	1	2	3	4	5
			2-3"	2"	2"	2"	*3"
AWG	CIRCUIT						
#6	334-rm cabinet		2				
	5CSC		4	2	1		
DETECTORS-DLC							
demand #1			1	1			
passage #1			1	1			
demand #2			1	1			
passage #2			1	1			
que #1, #2			1				
WB mainline			6	6	6	6	
EB mainline			*6	*6	*6	*6	*6
TOTAL			17	16	12	12	6

* ADD

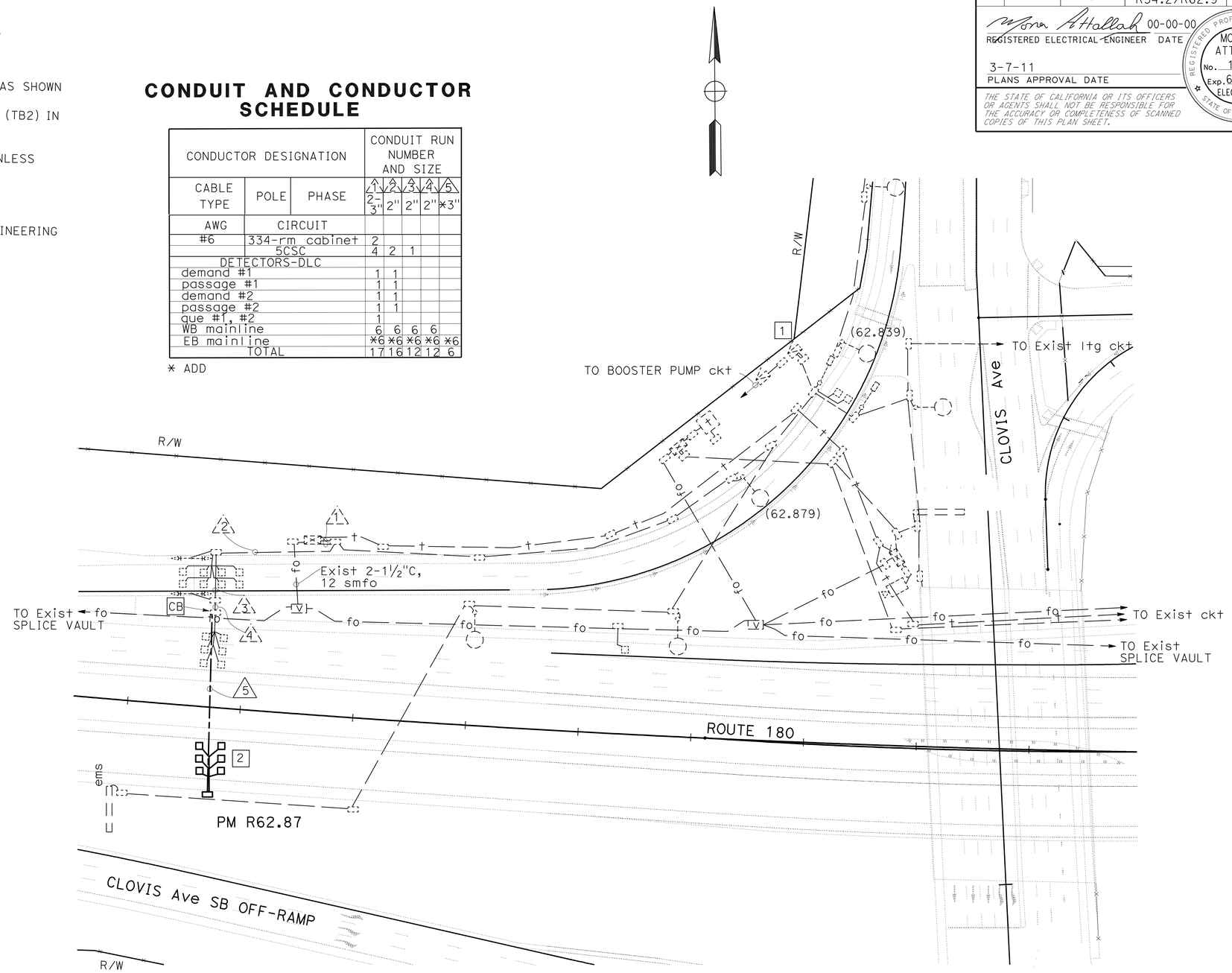

MODIFY RAMP METERING SYSTEM (LOCATION 11)

THIS PLAN IS ACCURATE FOR ELECTRICAL WORK ONLY.

SCALE: 1" = 50'

E-11

STATE OF CALIFORNIA - DEPARTMENT OF TRANSPORTATION
Caltrans® ELECTRICAL DESIGN

FUNCTIONAL SUPERVISOR: ALI BAKHDOUD
CALCULATED-DESIGNED BY: MONA ATTALLAH
CHECKED BY: DANIEL VO
REVISED BY / DATE REVISED

LAST REVISION 01-10-11
DATE PLOTTED => 14-MAR-2011
TIME PLOTTED => 11:05

Dist	COUNTY	ROUTE	POST MILES TOTAL PROJECT	SHEET No.	TOTAL SHEETS
06	Fre	168,180	R0.8/R10.5, R54.2/R62.9	40	79

01-05-11
REGISTERED ELECTRICAL ENGINEER DATE

3-7-11
PLANS APPROVAL DATE

REGISTERED PROFESSIONAL ENGINEER HASHIM KHALID No. 18054 Exp. 6/30/11 ELECTRICAL STATE OF CALIFORNIA

THE STATE OF CALIFORNIA OR ITS OFFICERS OR AGENTS SHALL NOT BE RESPONSIBLE FOR THE ACCURACY OR COMPLETENESS OF SCANNED COPIES OF THIS PLAN SHEET.

NOTES: (FOR THIS SHEET ONLY)

1 Exist 120/240 V, 1Ø, 3-WIRE, TYPE III-AF SERVICE EQUIPMENT ENCLOSURE WITH THE FOLLOWING CIRCUIT BREAKERS:

CTID No. 06421800058000L

AMPERES	VOLTS	POLES	NAME PLATE	METER	NOTES
100	240	3	MAIN BREAKER	YES/NO	
70	120	1	SIGNAL	YES	RC CB
70	120	1	CCTV	YES	
20	120	1	TDC	YES	
40	120	1	TMS	YES	ADD CB

2 Exist MODEL 334 CABINET FOR TMS, INSTALL STATE-FURNISHED MODEL 2070 CONTROLLER UNIT.

3. FOR ACCURATE RIGHT OF WAY DATA, CONTACT RIGHT OF WAY ENGINEERING AT THE DISTRICT OFFICE.

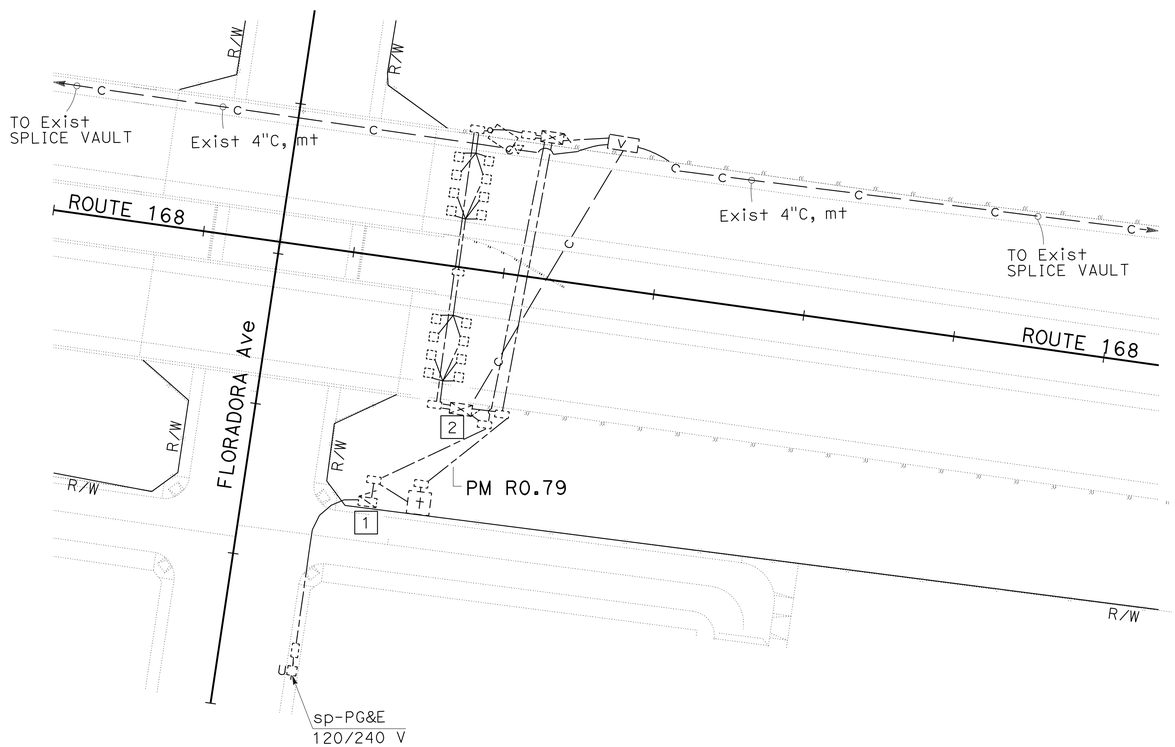

THIS PLAN IS ACCURATE FOR ELECTRICAL WORK ONLY.

MODIFY TRAFFIC MONITORING STATION (LOCATION 12)

SCALE: 1" = 50'

E-12

STATE OF CALIFORNIA - DEPARTMENT OF TRANSPORTATION
Caltrans® ELECTRICAL DESIGN

FUNCTIONAL SUPERVISOR: ALI BAKHDOUD
CALCULATED-DESIGNED BY: HASHIM KHALID
CHECKED BY: DANIEL VO
REVISED BY
DATE REVISED

LAST REVISION 11-19-10 | DATE PLOTTED => 11-MAR-2011 | TIME PLOTTED => 14:31

Dist	COUNTY	ROUTE	POST MILES TOTAL PROJECT	SHEET No.	TOTAL SHEETS
06	Fre	168,180	R0.8/R10.5, R54.2/R62.9	41	79

REGISTERED ELECTRICAL ENGINEER 01-05-11 DATE

3-7-11
PLANS APPROVAL DATE

REGISTERED PROFESSIONAL ENGINEER HASHIM KHALID No. 18054 Exp. 6/30/11 ELECTRICAL STATE OF CALIFORNIA

THE STATE OF CALIFORNIA OR ITS OFFICERS OR AGENTS SHALL NOT BE RESPONSIBLE FOR THE ACCURACY OR COMPLETENESS OF SCANNED COPIES OF THIS PLAN SHEET.

NOTES: (FOR THIS SHEET ONLY)

1. Exist 120/240 V, 1ø, 3-WIRE, TYPE III-AF SERVICE EQUIPMENT ENCLOSURE.
2. Exist MODEL 334 CABINET FOR TMS, INSTALL STATE-FURNISHED MODEL 2070 CONTROLLER UNIT.
3. FOR ACCURATE RIGHT OF WAY DATA, CONTACT RIGHT OF WAY ENGINEERING AT THE DISTRICT OFFICE.

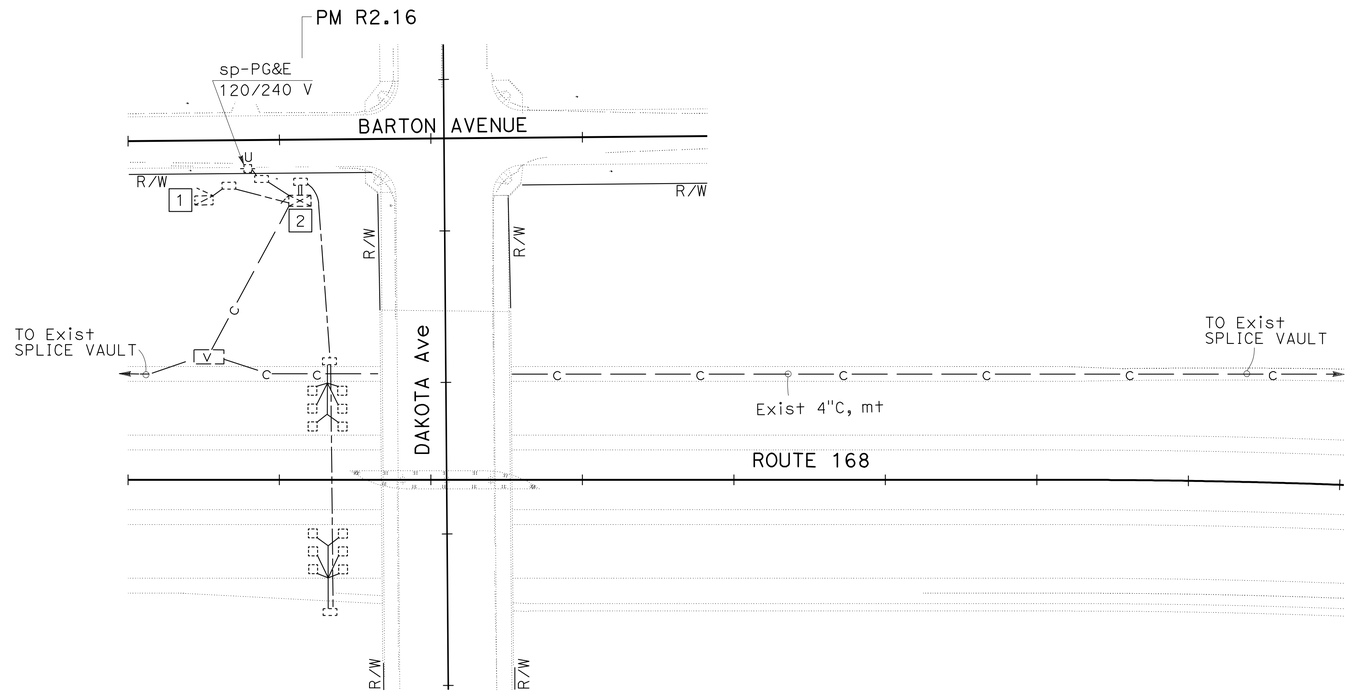

THIS PLAN IS ACCURATE FOR ELECTRICAL WORK ONLY.

MODIFY TRAFFIC MONITORING STATION
(LOCATION 13)

SCALE: 1" = 50'

E-13

STATE OF CALIFORNIA - DEPARTMENT OF TRANSPORTATION
Caltrans® **ELECTRICAL DESIGN**

FUNCTIONAL SUPERVISOR: ALI BAKHDOUD
CALCULATED-DESIGNED BY: HASHIM KHALID
CHECKED BY: DANIEL VO
REVISED BY
DATE REVISED

LAST REVISION 11-19-10
DATE PLOTTED => 11-MAR-2011
TIME PLOTTED => 14:07

Dist	COUNTY	ROUTE	POST MILES TOTAL PROJECT	SHEET No.	TOTAL SHEETS
06	Fre	168,180	R0.8/R10.5, R54.2/R62.9	42	79

REGISTERED ELECTRICAL ENGINEER 01-05-11 DATE

3-7-11
PLANS APPROVAL DATE

REGISTERED PROFESSIONAL ENGINEER HASHIM KHALID No. 18054 Exp. 6/30/11 ELECTRICAL STATE OF CALIFORNIA

THE STATE OF CALIFORNIA OR ITS OFFICERS OR AGENTS SHALL NOT BE RESPONSIBLE FOR THE ACCURACY OR COMPLETENESS OF SCANNED COPIES OF THIS PLAN SHEET.

NOTES: (FOR THIS SHEET ONLY)

1. Exist 120/240 V, 1ø, 3-WIRE, TYPE III-AF SERVICE EQUIPMENT ENCLOSURE.
2. Exist MODEL 334 CABINET FOR TMS, INSTALL STATE-FURNISHED MODEL 2070 CONTROLLER UNIT.
3. INDUCTIVE LOOP DETECTORS SHALL BE PLACED AND IDENTIFIED AS SHOWN IN DETAIL A ON SHEET E-26. THE CONTRACTOR SHALL TERMINATE DLC AT LOWER INPUT PANEL (TB2) IN MODEL 334 CABINET AS SHOWN IN DETAIL A, ON SHEET E-26.
4. ALL PULL BOXES SHALL BE No. 5(E) UNLESS OTHERWISE NOTED.
5. FOR ACCURATE RIGHT OF WAY DATA, CONTACT RIGHT OF WAY ENGINEERING AT THE DISTRICT OFFICE.

CONDUIT AND CONDUCTOR SCHEDULE

CONDUCTOR DESIGNATION		CONDUIT RUN NUMBER AND SIZE					
CABLE/ AWG	CIRCUIT	1	2	3	4	5	6
		2"	3"	2"	2"	3"	2"
#4	334-C CABINET	2	2	2	2		
#6	LIGHTING	2	2	2			
#8	TELEPHONE CABINET	2					
3CSC						2	
DETECTOR - DLC							
DEMAND					2	2	
PASSAGE					2	2	
WB MAINLINE					6	6	
EB MAINLINE					*6	*6	*6

* ADD

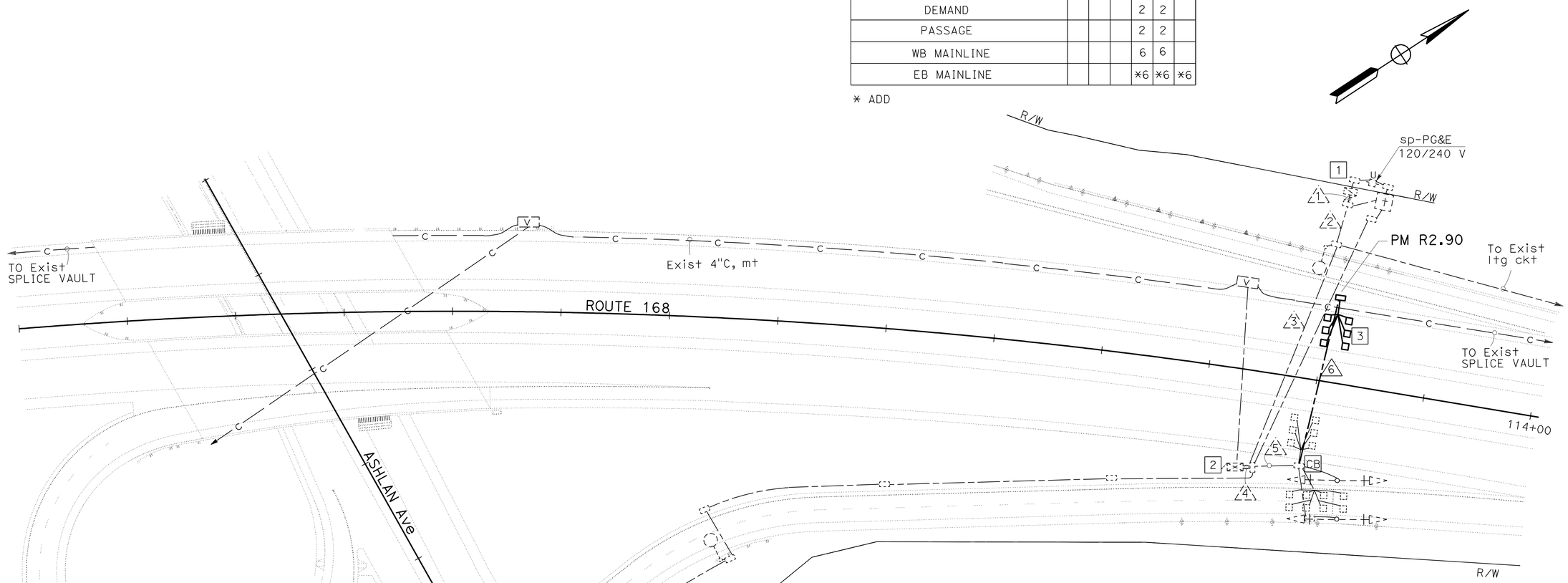

THIS PLAN IS ACCURATE FOR ELECTRICAL WORK ONLY.

MODIFY RAMP METERING SYSTEM
(LOCATION 14)

SCALE: 1" = 50'

E-14

STATE OF CALIFORNIA - DEPARTMENT OF TRANSPORTATION
Caltrans® ELECTRICAL DESIGN

FUNCTIONAL SUPERVISOR: ALI BAKHDOUD
CALCULATED-DESIGNED BY: HASHIM KHALID
CHECKED BY: DANIEL VO
REVISED BY
DATE REVISED

LAST REVISION 01-10-11
DATE PLOTTED => 11-MAR-2011
TIME PLOTTED => 14:42

Dist	COUNTY	ROUTE	POST MILES TOTAL PROJECT	SHEET No.	TOTAL SHEETS
06	Fre	168,180	R0.8/R10.5, R54.2/R62.9	43	79

01-05-11
REGISTERED ELECTRICAL ENGINEER DATE

3-7-11
PLANS APPROVAL DATE

REGISTERED PROFESSIONAL ENGINEER
HASHIM KHALID
No. 18054
Exp. 6/30/11
ELECTRICAL
STATE OF CALIFORNIA

THE STATE OF CALIFORNIA OR ITS OFFICERS OR AGENTS SHALL NOT BE RESPONSIBLE FOR THE ACCURACY OR COMPLETENESS OF SCANNED COPIES OF THIS PLAN SHEET.

NOTES: (FOR THIS SHEET ONLY)

1. Exist 120/240 V, 1Ø, 3-WIRE, TYPE III-AF SERVICE EQUIPMENT ENCLOSURE.
2. Exist MODEL 334 CABINET FOR TMS, INSTALL STATE-FURNISHED MODEL 2070 CONTROLLER UNIT.
3. FOR ACCURATE RIGHT OF WAY DATA, CONTACT RIGHT OF WAY ENGINEERING AT THE DISTRICT OFFICE.

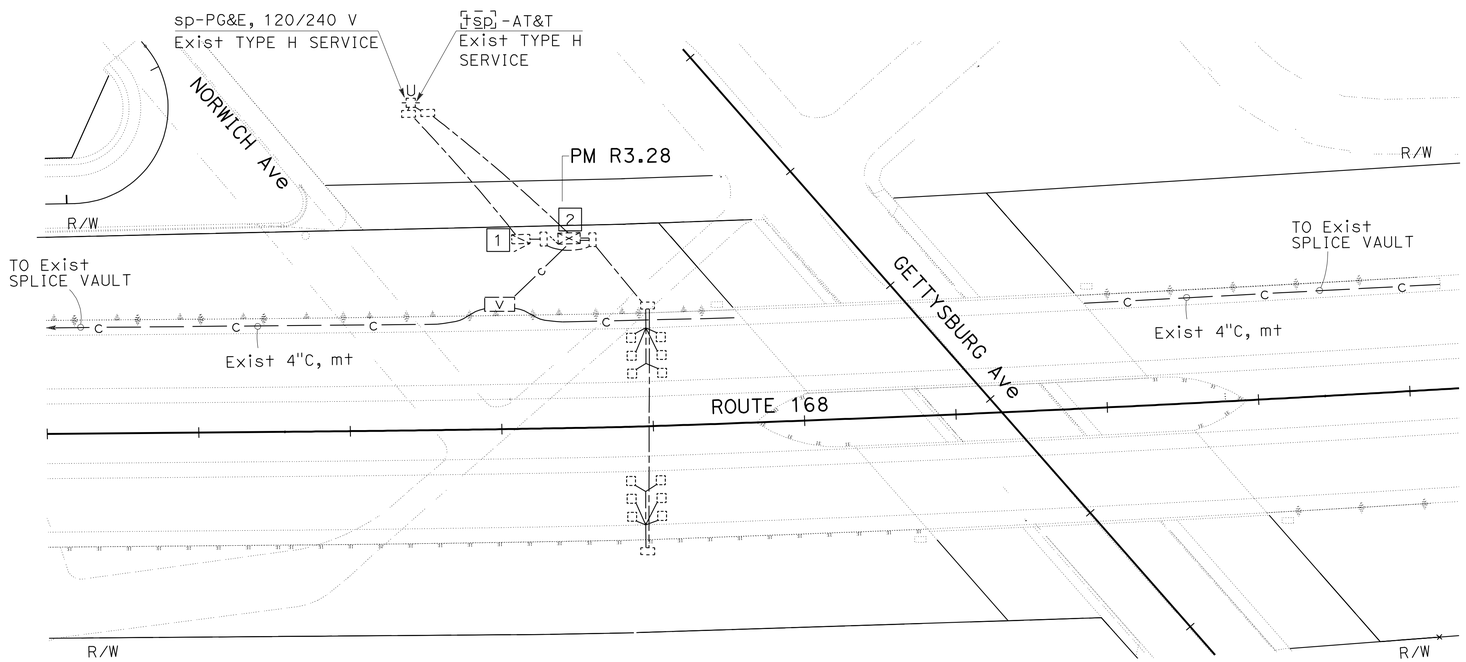

MODIFY TRAFFIC MONITORING STATION
(LOCATION 15)

THIS PLAN IS ACCURATE FOR ELECTRICAL WORK ONLY.

SCALE: 1" = 50'

E-15

STATE OF CALIFORNIA - DEPARTMENT OF TRANSPORTATION
Caltrans® ELECTRICAL DESIGN

FUNCTIONAL SUPERVISOR: ALI BAKHDOUD
CALCULATED-DESIGNED BY: HASHIM KHALID
CHECKED BY: DANIEL VO
REVISED BY
DATE REVISED

LAST REVISION 11-19-10
DATE PLOTTED => 11-MAR-2011
TIME PLOTTED => 14:31

Dist	COUNTY	ROUTE	POST MILES TOTAL PROJECT	SHEET No.	TOTAL SHEETS
06	Fre	168,180	R0.8/R10.5, R54.2/R62.9	44	79

REGISTERED ELECTRICAL ENGINEER 01-05-11 DATE

PLANS APPROVAL DATE 3-7-11

REGISTERED PROFESSIONAL ENGINEER HASHIM KHALID No. 18054 Exp. 6/30/11 ELECTRICAL STATE OF CALIFORNIA

THE STATE OF CALIFORNIA OR ITS OFFICERS OR AGENTS SHALL NOT BE RESPONSIBLE FOR THE ACCURACY OR COMPLETENESS OF SCANNED COPIES OF THIS PLAN SHEET.

NOTES: (FOR THIS SHEET ONLY)

1. Exist 120/240 V, 1ø, 3-WIRE, TYPE III-AF SERVICE EQUIPMENT ENCLOSURE.
2. Exist MODEL 334 CABINET FOR VCS, FURNISH AND INSTALL AUTOMATED TRAFFIC COUNTER.
3. AB Exist LOOP CONDUCTORS AND PIEZO AXLE SENSORS.
4. INDUCTIVE LOOP CONDUCTORS AND PIEZO AXLE SENSORS SHALL BE PLACED AND IDENTIFIED AS SHOWN IN DETAILS B AND C ON SHEET E-26.
5. ALL PULL BOXES SHALL BE No. 5(E) UNLESS OTHERWISE NOTED.
6. FOR ACCURATE RIGHT OF WAY DATA, CONTACT RIGHT OF WAY ENGINEERING AT THE DISTRICT OFFICE.

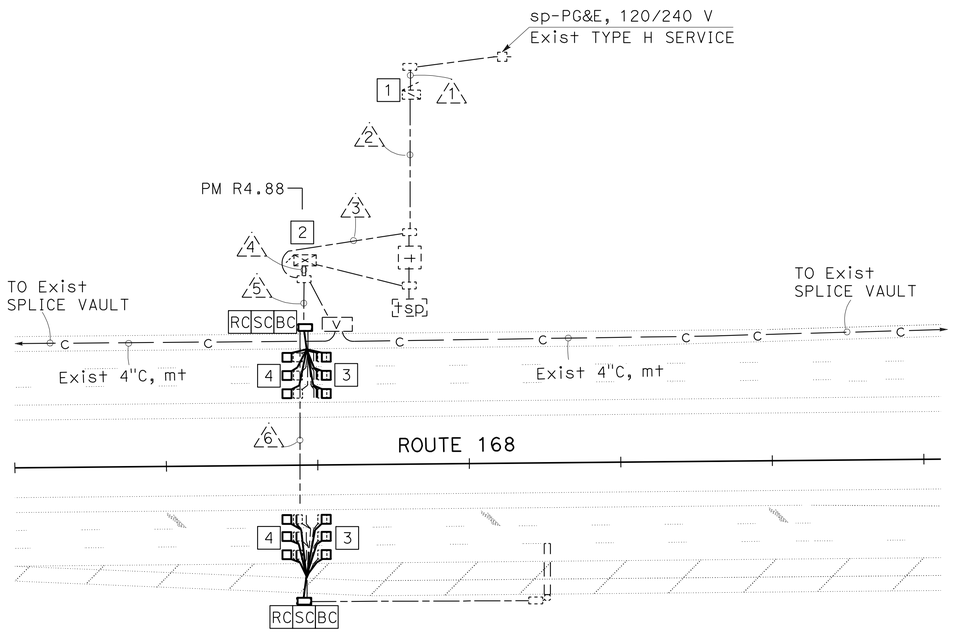

CONDUIT AND CONDUCTOR SCHEDULE

CONDUCTOR DESIGNATION		CONDUIT RUN NUMBER AND SIZE					
CABLE/ AWG	CIRCUIT	1 2"	2 2"	3 2"	4 3"	5 3"	6 3"
#2	SERVICE	3					
#8	TMS		2	2	2		
#8	SIGN		2	2		2	2
#8	TELEPHONE CABINET		2				
WB MAINLINE DLC					#6 *6	#6 *6	
EB MAINLINE DLC					#6 *6	#6 *6	#6 *6
WB STC					#3 *3	#3 *3	
EB STC					#3 *3	#3 *3	#3 *3

* ADD
# RC

MODIFY VEHICLE CLASSIFICATION STATION (LOCATION 16)

SCALE: 1" = 50'

E-16

THIS PLAN IS ACCURATE FOR ELECTRICAL WORK ONLY.

REVISED BY | DATE REVISED

HASHIM KHALID | DANIEL VO

CALCULATED-DESIGNED BY | CHECKED BY

FUNCTIONAL SUPERVISOR: ALI BAKHDOUD

STATE OF CALIFORNIA - DEPARTMENT OF TRANSPORTATION

Caltrans® ELECTRICAL DESIGN

LAST REVISION 11-19-10 | DATE PLOTTED => 10-MAR-2011 | TIME PLOTTED => 07:59

Dist	COUNTY	ROUTE	POST MILES TOTAL PROJECT	SHEET No.	TOTAL SHEETS
06	Fre	168,180	R0.8/R10.5, R54.2/R62.9	45	79

REGISTERED ELECTRICAL ENGINEER 01-05-11 DATE

PLANS APPROVAL DATE 3-7-11

REGISTERED PROFESSIONAL ENGINEER HASHIM KHALID No. 18054 Exp. 6/30/11 ELECTRICAL STATE OF CALIFORNIA

THE STATE OF CALIFORNIA OR ITS OFFICERS OR AGENTS SHALL NOT BE RESPONSIBLE FOR THE ACCURACY OR COMPLETENESS OF SCANNED COPIES OF THIS PLAN SHEET.

NOTES: (FOR THIS SHEET ONLY)

1. Exist 120/240 V, 1ø, 3-WIRE, TYPE III-AF SERVICE EQUIPMENT ENCLOSURE.
2. Exist MODEL 334 CABINET FOR TMS, INSTALL STATE-FURNISHED MODEL 2070 CONTROLLER UNIT.
3. AB Exist LOOP CONDUCTORS.
4. INDUCTIVE LOOP DETECTORS SHALL BE PLACED AND IDENTIFIED AS SHOWN IN DETAIL A ON SHEET E-26.
   THE CONTRACTOR SHALL TERMINATE DLC AT LOWER INPUT PANEL (TB2) IN MODEL 334 CABINET AS SHOWN IN DETAIL A, ON SHEET E-26.
5. ALL PULL BOXES SHALL BE No. 5(E) UNLESS OTHERWISE NOTED.
6. FOR ACCURATE RIGHT OF WAY DATA, CONTACT RIGHT OF WAY ENGINEERING AT THE DISTRICT OFFICE.

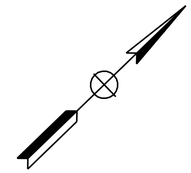

CONDUIT AND CONDUCTOR SCHEDULE

CONDUCTOR DESIGNATION		CONDUIT RUN NUMBER AND SIZE				
CABLE/ AWG	CIRCUIT	1 2"	2 2"	3 2"	4 2"	5 2"
#4	334-CABINET	2	2			
#4	LIGHTING	2				
#6	SIGN LIGHTING	2				
#12	TELEPHONE CABINET	2				
DETECTOR - DLC					14	6

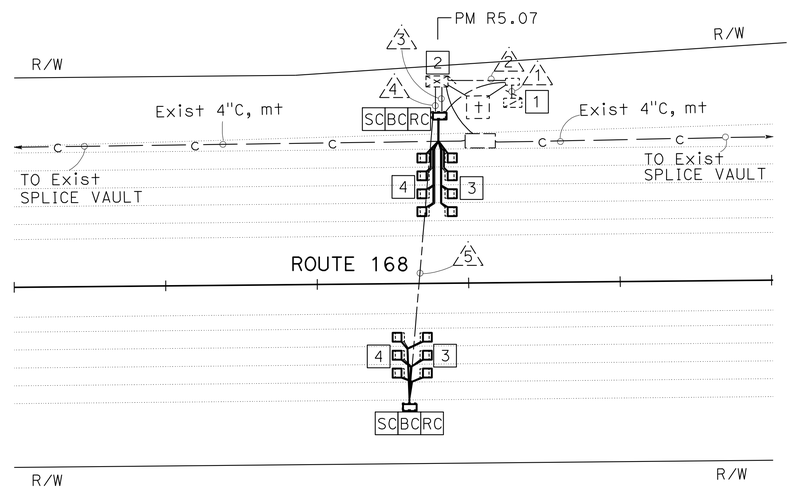

MODIFY TRAFFIC MONITORING STATION (LOCATION 17)

SCALE: 1" = 50'

THIS PLAN IS ACCURATE FOR ELECTRICAL WORK ONLY.

E-17

STATE OF CALIFORNIA - DEPARTMENT OF TRANSPORTATION
Caltrans ELECTRICAL DESIGN

FUNCTIONAL SUPERVISOR: ALI BAKHDOUD
CALCULATED-DESIGNED BY: HASHIM KHALID
CHECKED BY: DANIEL VO
REVISED BY / DATE REVISED

LAST REVISION 11-19-10 | DATE PLOTTED => 11-MAR-2011 | TIME PLOTTED => 14:44

Dist	COUNTY	ROUTE	POST MILES TOTAL PROJECT	SHEET No.	TOTAL SHEETS
06	Fre	168,180	R0.8/R10.5, R54.2/R62.9	46	79

REGISTERED ELECTRICAL ENGINEER 01-05-11 DATE

PLANS APPROVAL DATE 3-7-11

REGISTERED PROFESSIONAL ENGINEER HASHIM KHALID No. 18054 Exp. 6/30/11 ELECTRICAL STATE OF CALIFORNIA

THE STATE OF CALIFORNIA OR ITS OFFICERS OR AGENTS SHALL NOT BE RESPONSIBLE FOR THE ACCURACY OR COMPLETENESS OF SCANNED COPIES OF THIS PLAN SHEET.

NOTES: (FOR THIS SHEET ONLY)

1 Exist 120/240 V, 1ø, 3-WIRE, TYPE III-AF SERVICE EQUIPMENT ENCLOSURE WITH THE FOLLOWING CIRCUIT BREAKERS:

CTID No. 06421800058000L

AMPERES	VOLTS	POLES	NAMEPLATE	METER	PHOTOELECTRIC CONTROL TYPE
200	240	4	MAIN BREAKER	YES/NO	——
30	120	1	TMS	YES	——
20	120	1	TDC	YES	——
30	240	2	SIGN	NO	——
70	120	1	CMS CABINET	YES	——
40	240	2	HWY LTG	NO	IV
80	120	1	CMS	YES	——
* 20	120	1	MVDS	YES	——

* ADD CB AND NAMEPLATE

2 VDS TYPE 30 POLE AT 18′ FROM ETW, SEE DETAIL B ON SHEET E-27. SEE SHEET SES-1 AND SES-2 FOR POLE DETAILS.

3. ALL PULL BOXES SHALL BE No. 5(E) UNLESS OTHERWISE NOTED.
4. FOR COMMUNICATION CONDUIT INSTALLATION DETAILS, REFER TO SHEET E-30.
5. FOR ACCURATE RIGHT OF WAY DATA, CONTACT RIGHT OF WAY ENGINEERING AT THE DISTRICT OFFICE.
6. FOR MVDS CASE DETAILS SEE SHEET C-1.

CONDUIT AND CONDUCTOR SCHEDULE

CONDUCTOR DESIGNATION		CONDUIT RUN NUMBER AND SIZE						
CABLE/ AWG	CIRCUIT	1 4"	2 4"	3 3"	4 2"	5 3"	6 2"	7 2"
#4	TMS 334 CABINET	2	2					
#4	CMS CABINET	2						
#8	TELEPHONE CABINET	2						
#2	CMS LAMP	4					4	
#2	LAMPS NEUTRAL	2					2	
#6	SIGN ILLUMINATION	2	2	2	2	2		
#6	HIGHWAY LIGHTING	2	2	2	2	2		
#8	MVDS	*2	*2					*2
DETECTOR - DLC				5	4	2		
STC				10	8	4		

* ADD

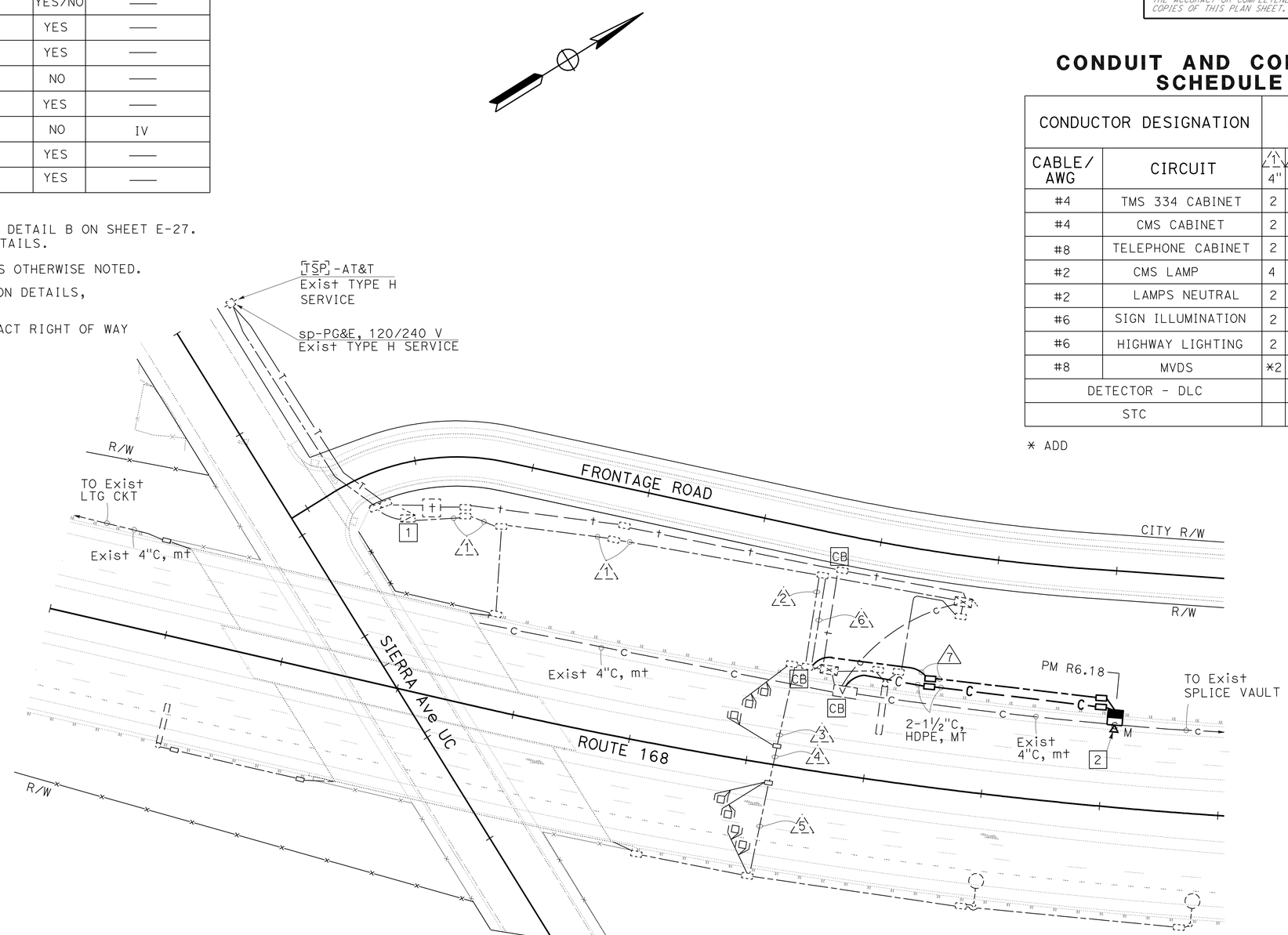

FIBER OPTIC SYSTEM
MICROWAVE VEHICLE DETECTION SYSTEM
(LOCATION 18)

SCALE: 1" = 50′

E-18

THIS PLAN IS ACCURATE FOR ELECTRICAL WORK ONLY.

STATE OF CALIFORNIA - DEPARTMENT OF TRANSPORTATION
Caltrans® **ELECTRICAL DESIGN**

FUNCTIONAL SUPERVISOR: ALI BAKHDOUD
CALCULATED-DESIGNED BY: HASHIM KHALID
CHECKED BY: DANIEL VO
REVISED BY
DATE REVISED

LAST REVISION 11-19-10
DATE PLOTTED => 10-MAR-2011
TIME PLOTTED => 08:09

Dist	COUNTY	ROUTE	POST MILES TOTAL PROJECT	SHEET No.	TOTAL SHEETS
06	Fre	168,180	R0.8/R10.5, R54.2/R62.9	47	79

REGISTERED ELECTRICAL ENGINEER 01-05-11 DATE

PLANS APPROVAL DATE 3-7-11

REGISTERED PROFESSIONAL ENGINEER HASHIM KHALID No. 18054 Exp. 6/30/11 ELECTRICAL STATE OF CALIFORNIA

THE STATE OF CALIFORNIA OR ITS OFFICERS OR AGENTS SHALL NOT BE RESPONSIBLE FOR THE ACCURACY OR COMPLETENESS OF SCANNED COPIES OF THIS PLAN SHEET.

NOTES: (FOR THIS SHEET ONLY)

1 Exist 120/240 V, 1ø, 3-WIRE, TYPE III-AF SERVICE EQUIPMENT ENCLOSURE WITH THE FOLLOWING CIRCUIT BREAKERS:

AMPERES	VOLTS	POLES	NAMEPLATE	METER	PHOTOELECTRIC CONTROL TYPE
100	240	3	MAIN BREAKER	YES/NO	
70	120	1	RAMP METERING	YES	
40	240	2	HIGHWAY LIGHTING	NO	IV
20	120	1	TELEPHONE DEMARCATION CABINET	YES	
30	240	2	SIGN ILLUMINATION	NO	LC3 SIGN CONTROL
70	120	1	CLOSED CIRCUIT TV	YES	
30	120	1	SOFFIT LIGHTING	NO	V
70	120	1	RAMP METERING (LOOP)	YES	
15	120	1	CONTROL	YES	
* 20	120	1	MVDS	YES	

* ADD CB AND NAMEPLATE

2 Exist MODEL 334 CABINET FOR CMS.

3 VDS TYPE 30 POLE AT 18′ FROM ETW, SEE DETAIL B ON SHEET E-27. SEE SHEET SES-1 AND SES-2 FOR POLE DETAILS.

4. ALL PULL BOXES SHALL BE No. 5(E) UNLESS OTHERWISE NOTED.

5. FOR COMMUNICATION CONDUIT INSTALLATION DETAILS, REFER TO SHEET E-30.

6. FOR ACCURATE RIGHT OF WAY DATA, CONTACT RIGHT OF WAY ENGINEERING AT THE DISTRICT OFFICE.

7. FOR MVDS CASE DETAILS SEE SHEET C-1.

CONDUIT AND CONDUCTOR SCHEDULE

CONDUCTOR DESIGNATION		CONDUIT RUN NUMBER AND SIZE											
CABLE/ AWG	CIRCUIT	1 3"	2 3"	3 3"	4 2"	5 2"	6 4"	7 3"	8 3"	9 3"	10 3"	11 3"	12 3"
#1	SERVICE	3											
#6	RAMP METERING		2	2	2	2	2						
#4	RAMP METERING LOOP		2										
#6	HIGHWAY LIGHTING		2	2	2	2							
#4	HIGHWAY LIGHTING		2										
#6	SIGN ILLUMINATION		4	2	2	2		2					
#6	SOFFIT LIGHTING		3	3	3	3		3	3	3			
#6	CCTV CABINET		2	2									
5-CSC					2	2	4	2					
#6	MVDS		*2	*2	*2	*2		*2	*2	*2	*2	*2	*2
DETECTOR - DLC													
DEMAND #1							1	1					
PASSAGE #1							1	1					
DEMAND #2							1	1	1				
PASSAGE #2							1	1	1				
QUEUE #1-#2					1	1	1						
MAINLINE							4	4	4	4	4		

* ADD

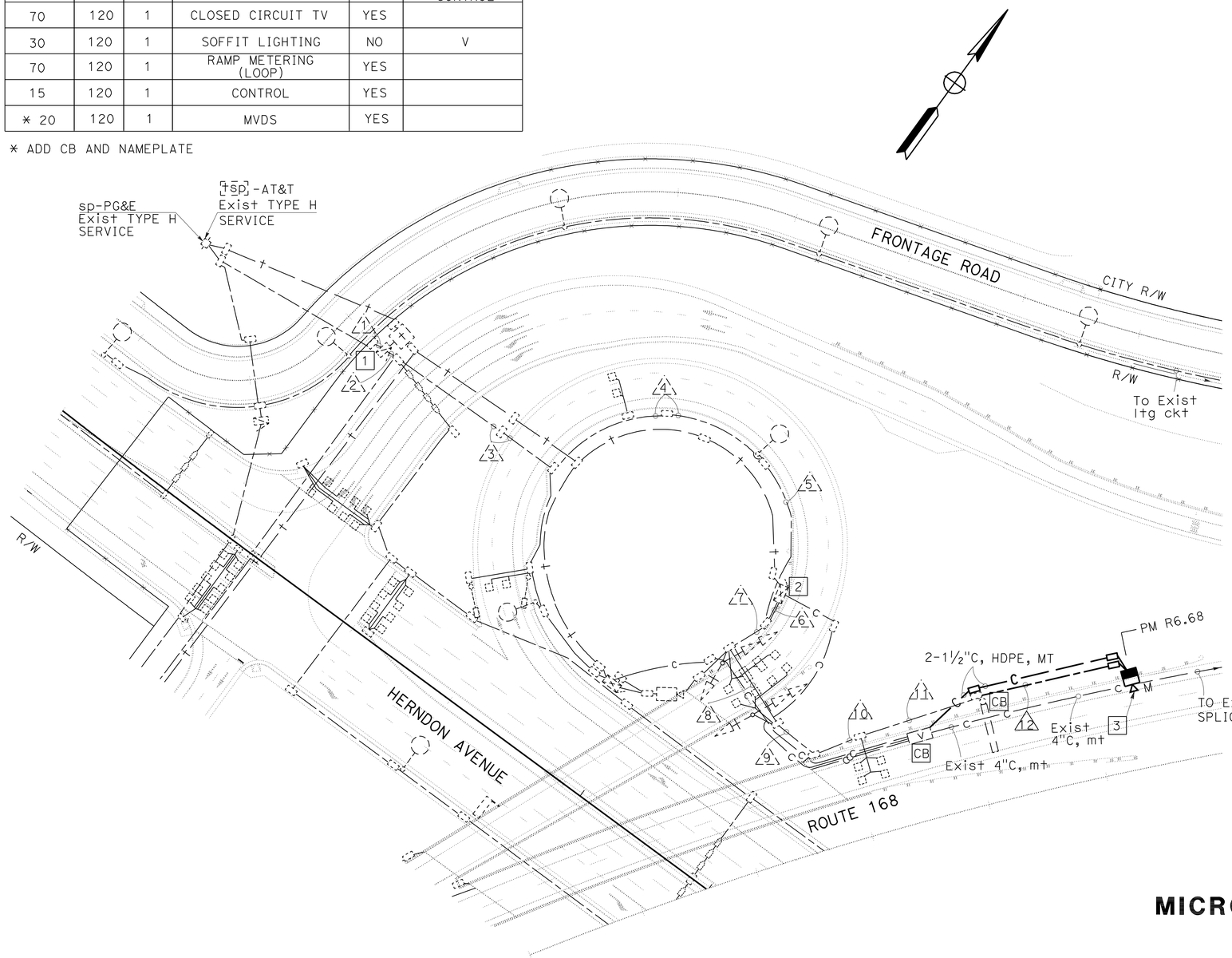

THIS PLAN IS ACCURATE FOR ELECTRICAL WORK ONLY.

FIBER OPTIC SYSTEM
MICROWAVE VEHICLE DETECTION SYSTEM
(LOCATION 19)

SCALE: 1" = 50′

E-19

STATE OF CALIFORNIA - DEPARTMENT OF TRANSPORTATION
Caltrans® ELECTRICAL DESIGN

FUNCTIONAL SUPERVISOR: ALI BAKHDOUD
CALCULATED-DESIGNED BY: HASHIM KHALID
CHECKED BY: DANIEL VO
REVISED BY
DATE REVISED

LAST REVISION 11-16-10 | DATE PLOTTED => 14-MAR-2011 | TIME PLOTTED => 11:06

Dist	COUNTY	ROUTE	POST MILES TOTAL PROJECT	SHEET No.	TOTAL SHEETS
06	Fre	168,180	R0.8/R10.5, R54.2/R62.9	48	79

REGISTERED ELECTRICAL ENGINEER 01-05-11 DATE

3-7-11
PLANS APPROVAL DATE

REGISTERED PROFESSIONAL ENGINEER HASHIM KHALID No. 18054 Exp. 6/30/11 ELECTRICAL STATE OF CALIFORNIA

THE STATE OF CALIFORNIA OR ITS OFFICERS OR AGENTS SHALL NOT BE RESPONSIBLE FOR THE ACCURACY OR COMPLETENESS OF SCANNED COPIES OF THIS PLAN SHEET.

NOTES: (FOR THIS SHEET ONLY)

1 Exist 120/240 V, 1Ø, 3-WIRE, TYPE III-AF SERVICE EQUIPMENT ENCLOSURE WITH THE FOLLOWING CIRCUIT BREAKERS:

AMPERES	VOLTS	POLES	NAMEPLATE	METER	PHOTOELECTRIC CONTROL TYPE	NOTES
100	240	3	MAIN BREAKER	YES/NO		
20	120	1	TELEPHONE DEMARCATION CABINET	YES		
20	120	1	TRAFFIC MONITORING	YES		RC CB
30	240	2	SIGN ILLUMINATION	NO	LC3 SIGN CONTROL	
40	120	1	TRAFFIC MONITORING	YES		ADD CB
* 20	120	1	MVDS	YES		

* ADD CB AND NAMEPLATE

2 VDS TYPE 35 POLE AT 25′ FROM ETW, SEE DETAIL B ON SHEET E-27. SEE SHEET SES-1 AND SES-2 FOR POLE DETAILS.

3. ALL PULL BOXES SHALL BE No. 5(E) UNLESS OTHERWISE NOTED.
4. FOR COMMUNICATION CONDUIT INSTALLATION DETAILS, REFER TO SHEET E-30.
5. FOR ACCURATE RIGHT OF WAY DATA, CONTACT RIGHT OF WAY ENGINEERING AT THE DISTRICT OFFICE.
6. FOR MVDS CASE DETAILS SEE SHEET C-1.

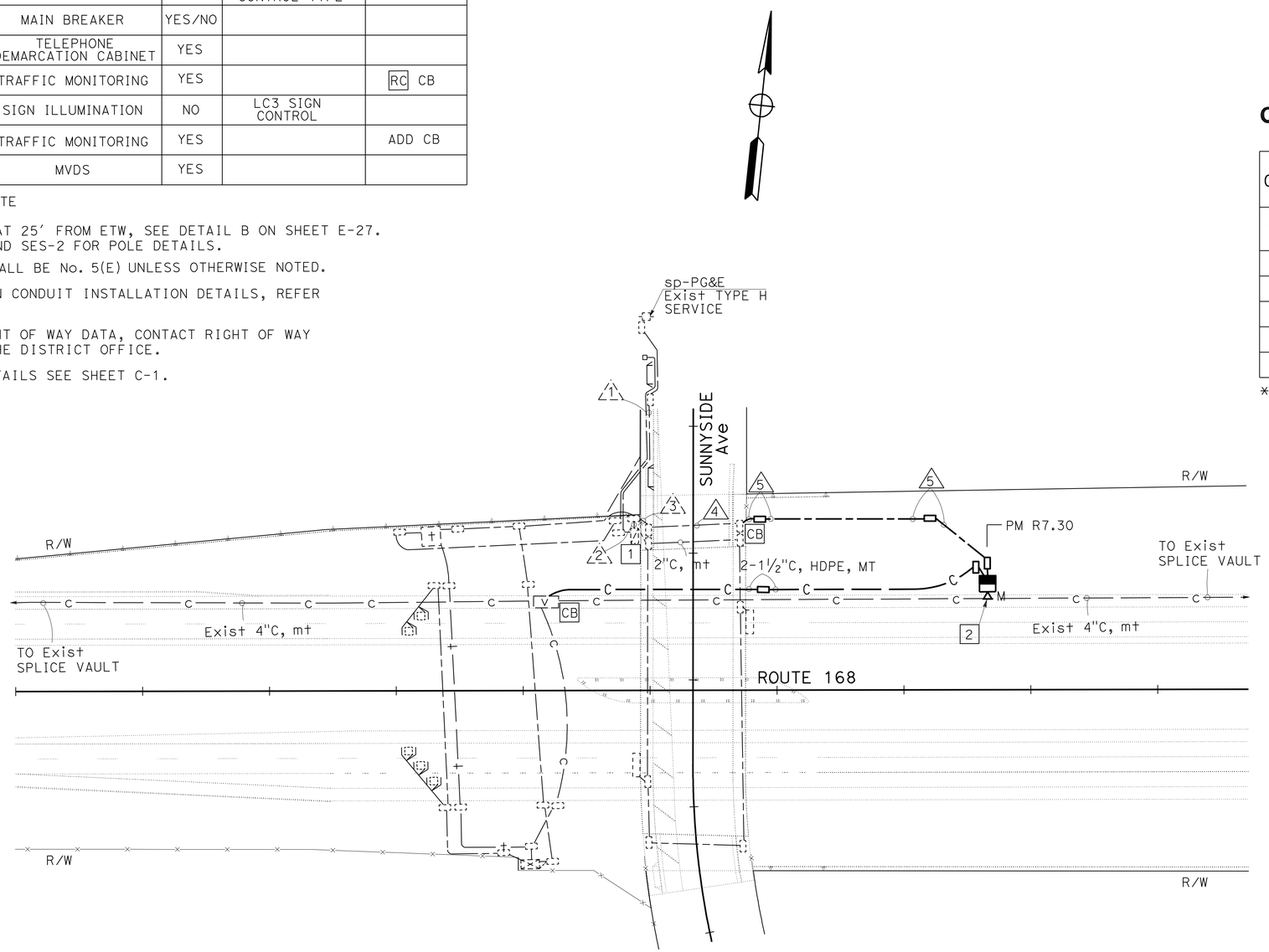

CONDUIT AND CONDUCTOR SCHEDULE

CONDUCTOR DESIGNATION		CONDUIT RUN NUMBER AND SIZE				
CABLE/ AWG	CIRCUIT	1	2	3	4	5
		2"	2"	2"	2"	2"
#2	SERVICE	3				
#6	SIGN ILLUMINATION		2	2		
#6	334-CABINET		2			
#12	TELEPHONE CABINET		2			
#8	MVDS		*2	*2	*2	*2

* ADD

FIBER OPTIC SYSTEM
MICROWAVE VEHICLE DETECTION SYSTEM
(LOCATION 20)

THIS PLAN IS ACCURATE FOR ELECTRICAL WORK ONLY.

SCALE: 1" = 50′

E-20

STATE OF CALIFORNIA - DEPARTMENT OF TRANSPORTATION
Caltrans® ELECTRICAL DESIGN

FUNCTIONAL SUPERVISOR: ALI BAKHDOUD
CALCULATED-DESIGNED BY: HASHIM KHALID
CHECKED BY: DANIEL VO
REVISED BY
DATE REVISED

LAST REVISION 11-19-10
DATE PLOTTED => 14-MAR-2011
TIME PLOTTED => 11:06

Dist	COUNTY	ROUTE	POST MILES TOTAL PROJECT	SHEET No.	TOTAL SHEETS
06	Fre	168,180	R0.8/R10.5, R54.2/R62.9	49	79

REGISTERED ELECTRICAL ENGINEER 01-05-11 DATE

PLANS APPROVAL DATE 3-7-11

REGISTERED PROFESSIONAL ENGINEER HASHIM KHALID No. 18054 Exp. 6/30/11 ELECTRICAL STATE OF CALIFORNIA

THE STATE OF CALIFORNIA OR ITS OFFICERS OR AGENTS SHALL NOT BE RESPONSIBLE FOR THE ACCURACY OR COMPLETENESS OF SCANNED COPIES OF THIS PLAN SHEET.

NOTES: (FOR THIS SHEET ONLY)

1 Exist 120/240 V, 1ø, 3-WIRE, TYPE III-AF SERVICE EQUIPMENT ENCLOSURE WITH THE FOLLOWING CIRCUIT BREAKERS:

AMPERES	VOLTS	POLES	NAME PLATE	METER	PHOTOELECTRIC CONTROL TYPE
100	240	3	MAIN BREAKER	YES/NO	-
70	120	1	RAMP METERING	YES	-
70	120	1	CCTV	YES	-
20	120	1	TDC	YES	-
40	240	2	HIGHWAY LIGHTING	NO	IV
30	240	2	SIGN ILLUMINATION	NO	LC3 SIGN CONTROL
* 30	120	1	MVDS	YES	-

* ADD CB AND NAME PLATE

2 VDS TYPE 35 POLE AT 32′ FROM ETW, SEE DETAIL B ON SHEET E-27. SEE SHEET SES-1 AND SES-2 FOR POLE DETAILS.

3. ALL PULL BOXES SHALL BE No. 5(E) UNLESS OTHERWISE NOTED.
4. FOR COMMUNICATION CONDUIT INSTALLATION DETAILS, REFER TO SHEET E-30.
5. FOR ACCURATE RIGHT OF WAY DATA, CONTACT RIGHT OF WAY ENGINEERING AT THE DISTRICT OFFICE.
6. FOR MVDS CASE DETAILS SEE SHEET C-1.

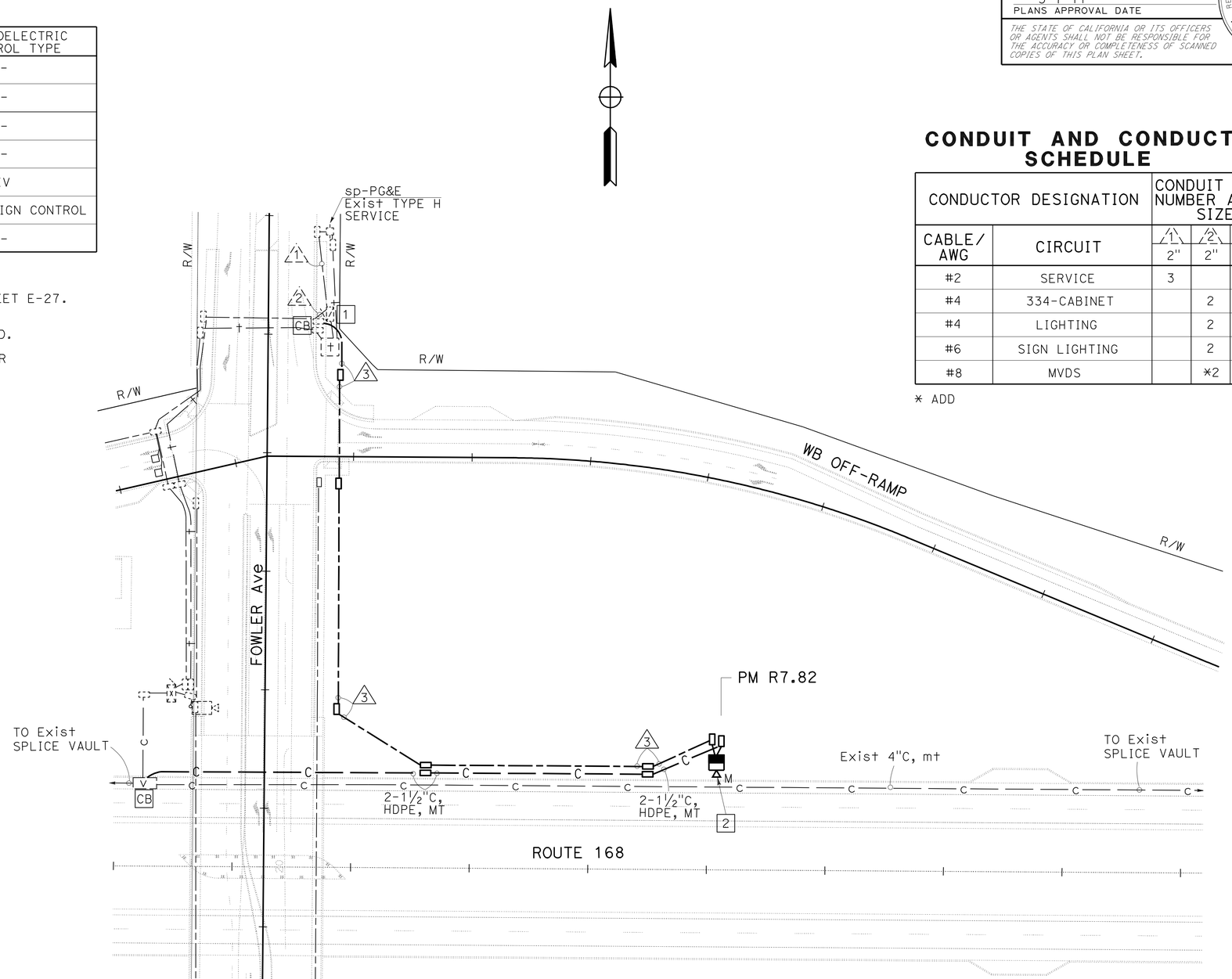

CONDUIT AND CONDUCTOR SCHEDULE

CONDUCTOR DESIGNATION		CONDUIT RUN NUMBER AND SIZE		
CABLE/ AWG	CIRCUIT	1 2"	2 2"	3 2"
#2	SERVICE	3		
#4	334-CABINET		2	
#4	LIGHTING		2	
#6	SIGN LIGHTING		2	
#8	MVDS		*2	*2

* ADD

FIBER OPTIC SYSTEM
MICROWAVE VEHICLE DETECTION SYSTEM
(LOCATION 21)

THIS PLAN IS ACCURATE FOR ELECTRICAL WORK ONLY.

SCALE: 1" = 50′

E-21

STATE OF CALIFORNIA - DEPARTMENT OF TRANSPORTATION
Caltrans® ELECTRICAL DESIGN

FUNCTIONAL SUPERVISOR: ALI BAKHDOUD
CALCULATED-DESIGNED BY: HASHIM KHALID
CHECKED BY: DANIEL VO
REVISED BY
DATE REVISED

LAST REVISION 11-19-10
DATE PLOTTED => 10-MAR-2011
TIME PLOTTED => 08:11

Dist	COUNTY	ROUTE	POST MILES TOTAL PROJECT	SHEET No.	TOTAL SHEETS
06	Fre	168,180	R0.8/R10.5, R54.2/R62.9	50	79

01-05-11
REGISTERED ELECTRICAL ENGINEER DATE

3-7-11
PLANS APPROVAL DATE

REGISTERED PROFESSIONAL ENGINEER HASHIM KHALID No. 18054 Exp. 6/30/11 ELECTRICAL STATE OF CALIFORNIA

THE STATE OF CALIFORNIA OR ITS OFFICERS OR AGENTS SHALL NOT BE RESPONSIBLE FOR THE ACCURACY OR COMPLETENESS OF SCANNED COPIES OF THIS PLAN SHEET.

NOTES: (FOR THIS SHEET ONLY)

1. Exist 120/240 V, 1Ø, 3-WIRE, TYPE III-AF SERVICE EQUIPMENT ENCLOSURE.
2. Exist MODEL 334 CABINET FOR TMS. INSTALL STATE-FURNISHED MODEL 2070 CONTROLLER UNIT.
3. AB Exist LOOP CONDUCTORS.
4. INDUCTIVE LOOP DETECTORS SHALL BE PLACED AND IDENTIFIED AS SHOWN IN DETAIL A ON SHEET E-26.
   CONTRACTOR SHALL TERMINATE DLC AT LOWER INPUT PANEL (TB2) IN MODEL 334 CABINET AS SHOWN IN DETAIL A, ON SHEET E-26.
5. ALL PULL BOXES SHALL BE No. 5(E) UNLESS OTHERWISE NOTED.
6. FOR ACCURATE RIGHT OF WAY DATA, CONTACT RIGHT OF WAY ENGINEERING AT THE DISTRICT OFFICE.

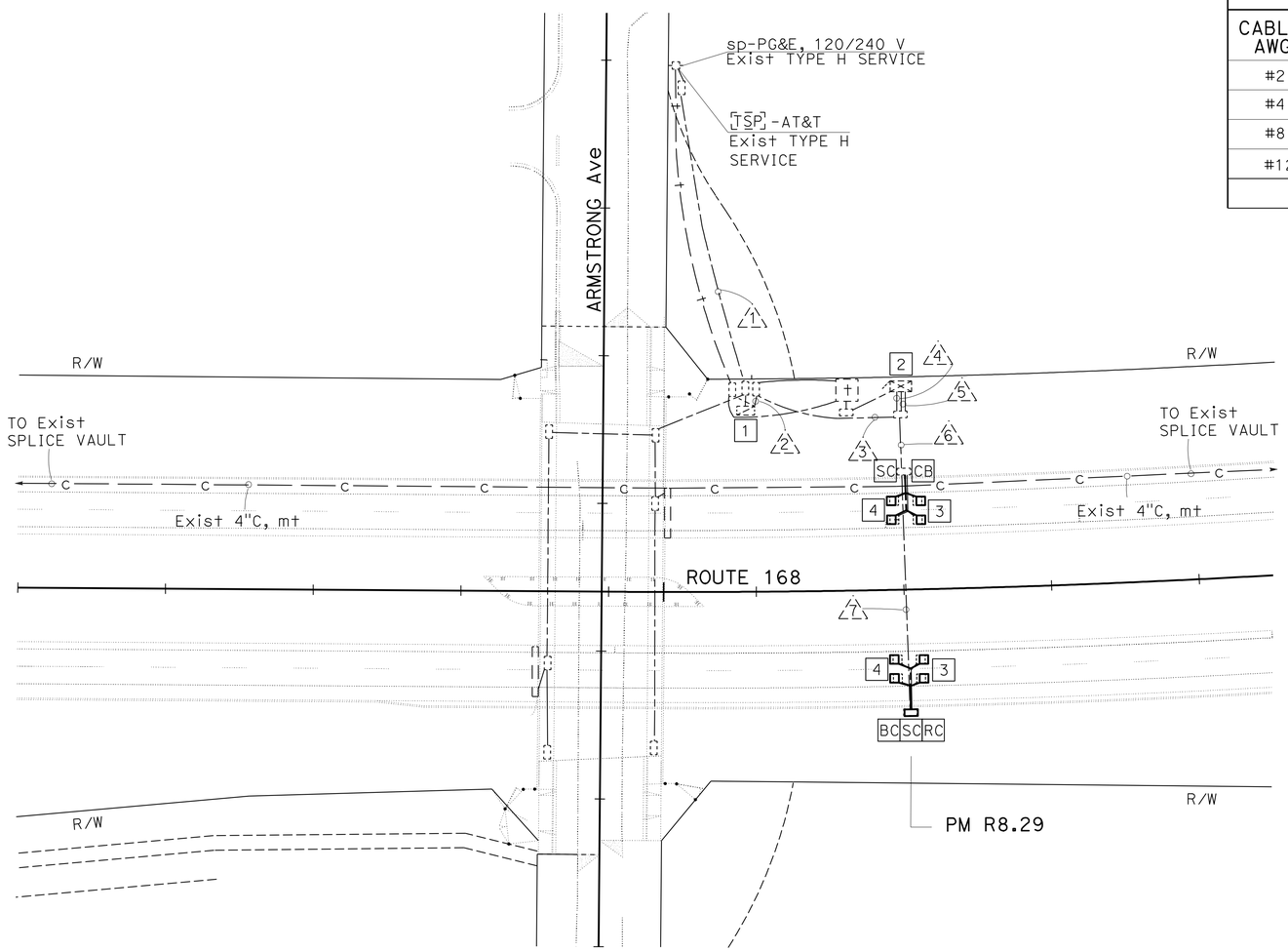

CONDUIT AND CONDUCTOR SCHEDULE

CONDUCTOR DESIGNATION		CONDUIT RUN NUMBER AND SIZE						
CABLE/ AWG	CIRCUIT	1 2"	2 3"	3 2"	4 2"	5 2-2"	6 2"	7 2"
#2	SERVICE	3						
#4	334-CABINET		2	2	2			
#8	SIGN LIGHTING		2					
#12	TELEPHONE CABINET		2					
DETECTOR - DLC						8	8	4

MODIFY TRAFFIC MONITORING STATION
(LOCATION 22)

SCALE: 1" = 50'

E-22

THIS PLAN IS ACCURATE FOR ELECTRICAL WORK ONLY.

STATE OF CALIFORNIA - DEPARTMENT OF TRANSPORTATION
Caltrans® ELECTRICAL DESIGN

FUNCTIONAL SUPERVISOR: ALI BAKHDOUD
CALCULATED-DESIGNED BY: HASHIM KHALID
CHECKED BY: DANIEL VO
REVISED BY
DATE REVISED

LAST REVISION 10-29-10
DATE PLOTTED => 10-MAR-2011
TIME PLOTTED => 08:11

Dist	COUNTY	ROUTE	POST MILES TOTAL PROJECT	SHEET No.	TOTAL SHEETS
06	Fre	168,180	R0.8/R10.5, R54.2/R62.9	51	79

REGISTERED ELECTRICAL ENGINEER 01-05-11 DATE

PLANS APPROVAL DATE 3-7-11

REGISTERED PROFESSIONAL ENGINEER HASHIM KHALID No. 18054 Exp. 6/30/11 ELECTRICAL STATE OF CALIFORNIA

THE STATE OF CALIFORNIA OR ITS OFFICERS OR AGENTS SHALL NOT BE RESPONSIBLE FOR THE ACCURACY OR COMPLETENESS OF SCANNED COPIES OF THIS PLAN SHEET.

NOTES: (FOR THIS SHEET ONLY)

1. Exist 120/240 V, 1Ø, 3-WIRE, TYPE III-AF SERVICE EQUIPMENT ENCLOSURE.
2. INSTALL STATE-FURNISHED MODEL 2070 CONTROLLER ASSEMBLY FOR TMS.
3. INDUCTIVE LOOP DETECTORS SHALL BE PLACED AND IDENTIFIED AS SHOWN IN DETAIL A ON SHEET E-26.
   THE CONTRACTOR SHALL TERMINATE DLC AT LOWER INPUT PANEL (TB2) IN MODEL 334 CABINET AS SHOWN IN DETAIL A, ON SHEET E-26.

5. ALL PULL BOXES SHALL BE No. 5(E) UNLESS OTHERWISE NOTED.
6. FOR ACCURATE RIGHT OF WAY DATA, CONTACT RIGHT OF WAY ENGINEERING AT THE DISTRICT OFFICE.

CONDUIT AND CONDUCTOR SCHEDULE

CONDUCTOR DESIGNATION		CONDUIT RUN NUMBER AND SIZE							
CABLE/ AWG	CIRCUIT	1	2	3	4	5	6	7	8
		3"	2"	2"	2"	2"	2-3"	2"	2"
#2	SERVICE	3							
#6	HIGHWAY LIGHTING		2						
#6	SIGN LIGHTING		2	2					
#4	CCTV CABINET		2						
#10	SOFFITS		2	2					
#8	RAMP METER		*2	*2	*2	*2	*2		
DETECTOR - DLC									
DEMAND						1	2		
PASSAGE						1	2		
QUEUE						1	1		
MAINLINE								4	
							*4	*4	*4

* ADD

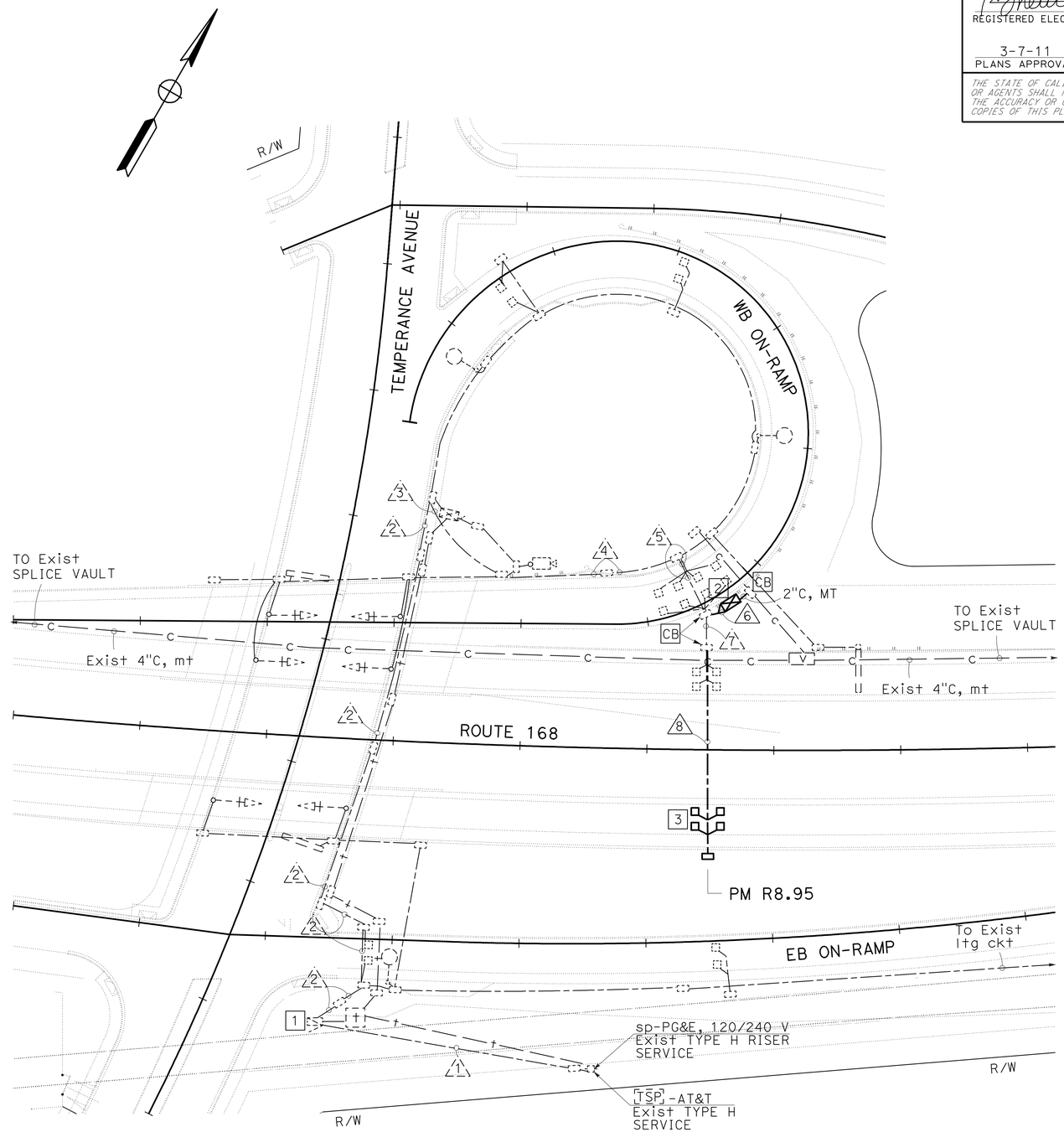

MODIFY RAMP METERING SYSTEM

(LOCATION 23)

SCALE: 1" = 50'

E-23

THIS PLAN IS ACCURATE FOR ELECTRICAL WORK ONLY.

STATE OF CALIFORNIA - DEPARTMENT OF TRANSPORTATION

Caltrans ELECTRICAL DESIGN

FUNCTIONAL SUPERVISOR: ALI BAKHDOUD

CALCULATED-DESIGNED BY: HASHIM KHALID

CHECKED BY: DANIEL VO

REVISED BY

DATE REVISED

LAST REVISION 11-19-10 | DATE PLOTTED => 10-MAR-2011 | TIME PLOTTED => 08:11

Dist	COUNTY	ROUTE	POST MILES TOTAL PROJECT	SHEET No.	TOTAL SHEETS
06	Fre	168,180	R0.8/R10.5, R54.2/R62.9	52	79

REGISTERED ELECTRICAL ENGINEER 01-05-11 DATE

PLANS APPROVAL DATE 3-7-11

REGISTERED PROFESSIONAL ENGINEER HASHIM KHALID No. 18054 Exp. 6/30/11 ELECTRICAL STATE OF CALIFORNIA

THE STATE OF CALIFORNIA OR ITS OFFICERS OR AGENTS SHALL NOT BE RESPONSIBLE FOR THE ACCURACY OR COMPLETENESS OF SCANNED COPIES OF THIS PLAN SHEET.

NOTES: (FOR THIS SHEET ONLY)

1. Exist 120/240 V, 1Ø, 3-WIRE, TYPE III-AF SERVICE EQUIPMENT ENCLOSURE.
2. Exist MODEL 334 CABINET FOR TMS. INSTALL STATE-FURNISHED MODEL 2070 CONTROLLER UNIT.
3. AB Exist LOOP CONDUCTORS.
4. INDUCTIVE LOOP DETECTORS SHALL BE PLACED AND IDENTIFIED AS SHOWN IN DETAIL A ON SHEET E-26. THE CONTRACTOR SHALL TERMINATE DLC AT LOWER INPUT PANEL (TB2) IN MODEL 334 CABINET AS SHOWN IN DETAIL A, ON SHEET E-26.
5. ALL PULL BOXES SHALL BE No. 5(E) UNLESS OTHERWISE NOTED.
6. FOR ACCURATE RIGHT OF WAY DATA, CONTACT RIGHT OF WAY ENGINEERING AT THE DISTRICT OFFICE.

CONDUIT AND CONDUCTOR SCHEDULE

CONDUCTOR DESIGNATION		CONDUIT RUN NUMBER AND SIZE				
CABLE / AWG	CIRCUIT	1 2"	2 3"	3 2"	4 3"	5 3"
#2	SERVICE	3				
#8	334-CABINET		2	2		
DETECTOR - DLC					8	4

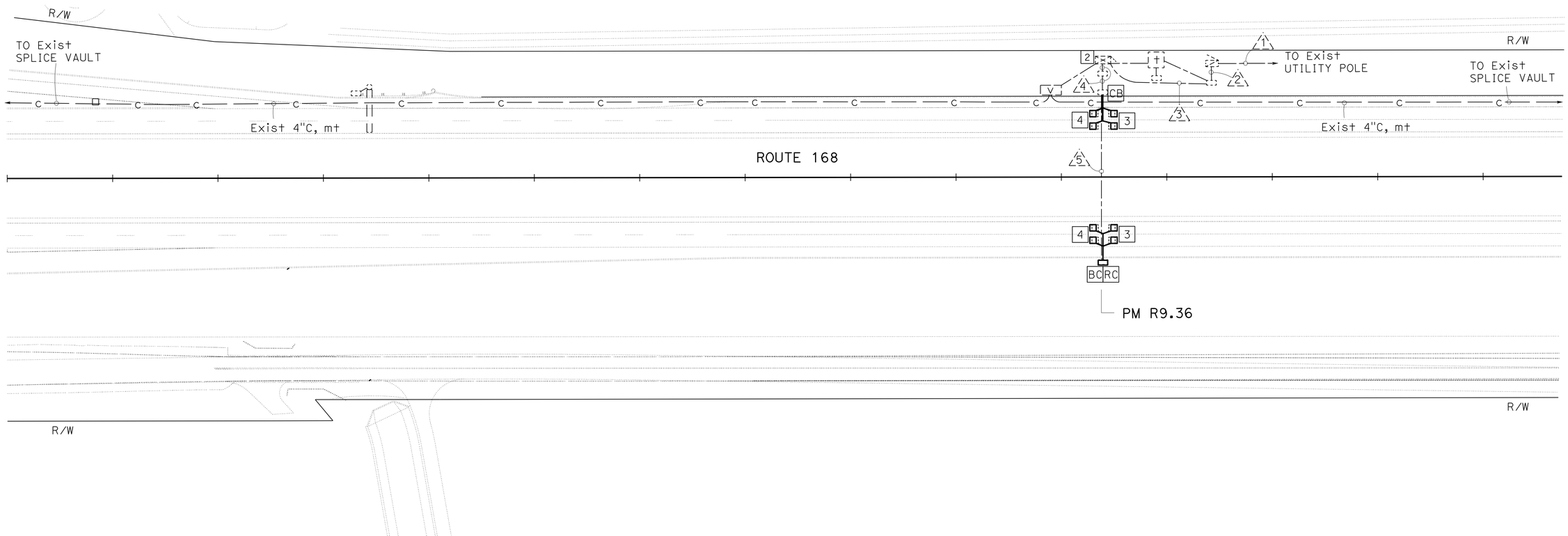

MODIFY TRAFFIC MONITORING STATION (LOCATION 24)

THIS PLAN IS ACCURATE FOR ELECTRICAL WORK ONLY.

SCALE: 1" = 50'

E-24

STATE OF CALIFORNIA - DEPARTMENT OF TRANSPORTATION

Caltrans® ELECTRICAL DESIGN

FUNCTIONAL SUPERVISOR: ALI BAKHDOUD

CALCULATED-DESIGNED BY: HASHIM KHALID

CHECKED BY: DANIEL VO

REVISED BY / DATE REVISED

LAST REVISION 11-19-10 DATE PLOTTED => 11-MAR-2011 TIME PLOTTED => 15:07

Dist	COUNTY	ROUTE	POST MILES TOTAL PROJECT	SHEET No.	TOTAL SHEETS
06	Fre	168,180	R0.8/R10.5, R54.2/R62.9	53	79

01-05-11
REGISTERED ELECTRICAL ENGINEER DATE

3-7-11
PLANS APPROVAL DATE

REGISTERED PROFESSIONAL ENGINEER
HASHIM KHALID
No. 18054
Exp. 6/30/11
ELECTRICAL
STATE OF CALIFORNIA

THE STATE OF CALIFORNIA OR ITS OFFICERS OR AGENTS SHALL NOT BE RESPONSIBLE FOR THE ACCURACY OR COMPLETENESS OF SCANNED COPIES OF THIS PLAN SHEET.

NOTES: (FOR THIS SHEET ONLY)

1. VDS TYPE 40 POLE AT 42′ FROM ETW, SEE DETAILS ON SHEET E-28. SEE SHEET SES-1 AND SES-2 FOR POLE DETAILS.
2. FOR ACCURATE RIGHT OF WAY DATA, CONTACT RIGHT OF WAY ENGINEERING AT THE DISTRICT OFFICE.
3. FOR MVDS CASE DETAILS SEE SHEET C-1.
4. ALL PULL BOXES SHALL BE No. 5(E) UNLESS OTHERWISE NOTED.

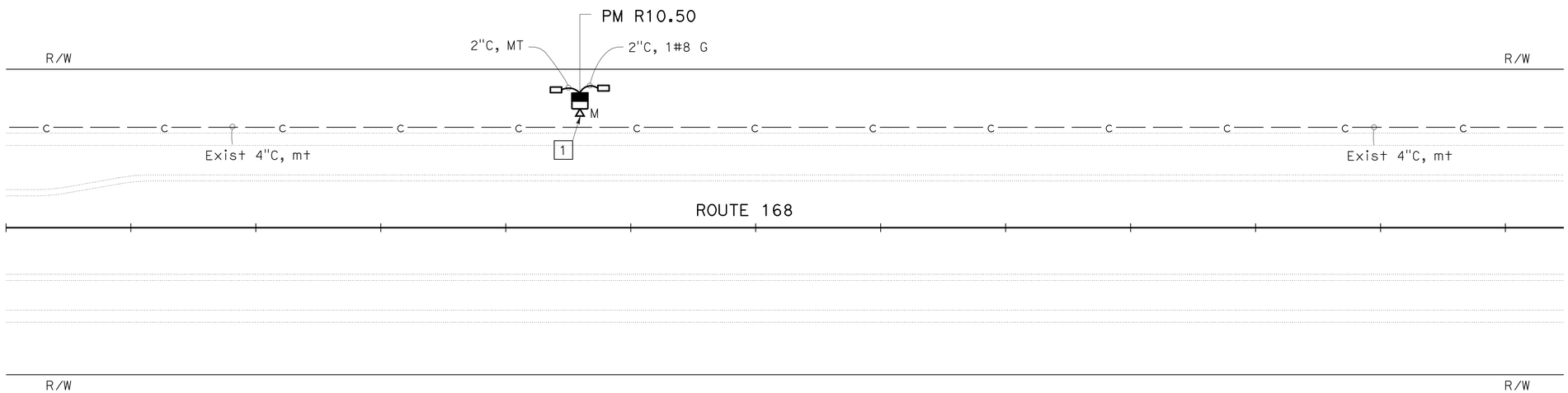

MICROWAVE VEHICLE DETECTION SYSTEM
(LOCATION 25)
E-25

THIS PLAN IS ACCURATE FOR ELECTRICAL WORK ONLY.

SCALE: 1" = 50′

STATE OF CALIFORNIA - DEPARTMENT OF TRANSPORTATION
Caltrans® ELECTRICAL DESIGN

FUNCTIONAL SUPERVISOR: ALI BAKHDOUD
CALCULATED-DESIGNED BY: HASHIM KHALID
CHECKED BY: DANIEL VO
REVISED BY
DATE REVISED

LAST REVISION 11-19-10
DATE PLOTTED => 11-MAR-2011
TIME PLOTTED => 14:15

Dist	COUNTY	ROUTE	POST MILES TOTAL PROJECT	SHEET No.	TOTAL SHEETS
06	Fre	168,180	R0.8/R10.5, R54.2/R62.9	54	79

REGISTERED ELECTRICAL ENGINEER 01-05-11 DATE

3-7-11
PLANS APPROVAL DATE

REGISTERED PROFESSIONAL ENGINEER HASHIM KHALID No. 18054 Exp. 6/30/11 ELECTRICAL STATE OF CALIFORNIA

THE STATE OF CALIFORNIA OR ITS OFFICERS OR AGENTS SHALL NOT BE RESPONSIBLE FOR THE ACCURACY OR COMPLETENESS OF SCANNED COPIES OF THIS PLAN SHEET.

DLC IDENTIFICATION

D-L-N

DIRECTION OF TRAFFIC
N - NORTHBOUND
S - SOUTHBOUND
E - EASTBOUND
W - WESTBOUND

1 - ENTERING
2 - LEAVING
LANE NUMBER

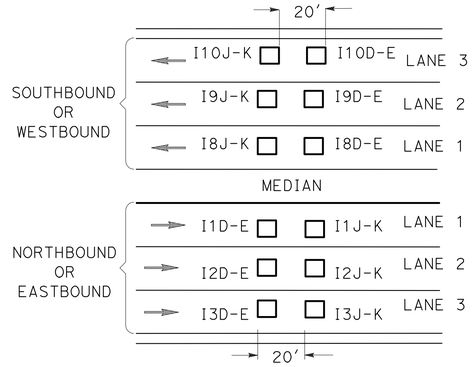

DLC TERMINATION (TB2)

I - INPUT PANEL (TB2)
DETECTOR ASSIGNMENT
1 - NORTHBOUND/EASTBOUND LANE 1
2 - NORTHBOUND/EASTBOUND LANE 2
3 - NORTHBOUND/EASTBOUND LANE 3
4 - NORTHBOUND/EASTBOUND LANE 4
5 - NORTHBOUND/EASTBOUND LANE 5
6 - NORTHBOUND/EASTBOUND LANE 6
7 - NORTHBOUND/EASTBOUND LANE 7
8 - SOUTHBOUND/WESTBOUND LANE 1
9 - SOUTHBOUND/WESTBOUND LANE 2
10 - SOUTHBOUND/WESTBOUND LANE 3
11 - SOUTHBOUND/WESTBOUND LANE 4
12 - SOUTHBOUND/WESTBOUND LANE 5
13 - SOUTHBOUND/WESTBOUND LANE 6
14 - SOUTHBOUND/WESTBOUND LANE 7

I1D-E

D-E - ENTERING
J-K - LEAVING

TMS DLC IDENTIFICATION AND TERMINATION DETAIL A

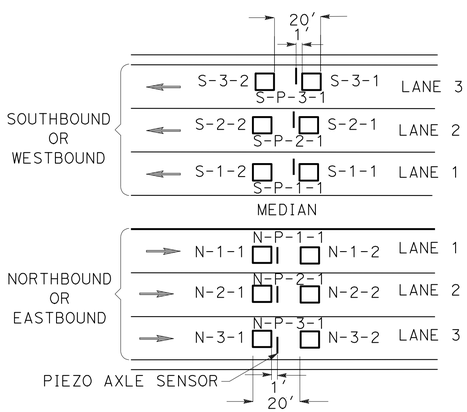

DLC IDENTIFICATION

D-L-N

DIRECTION OF TRAFFIC
N - NORTHBOUND
S - SOUTHBOUND
E - EASTBOUND
W - WESTBOUND

1 - ENTERING
2 - LEAVING
LANE NUMBER

PIEZO AXLE SENSOR IDENTIFICATION

D-P-L-1

DIRECTION OF TRAFFIC
N - NORTHBOUND
S - SOUTHBOUND
E - EASTBOUND
W - WESTBOUND
1 - FOR ALL PIEZO AXLE SENSORS
LANE NUMBER
P - PIEZO AXLE SENSOR

CENSUS DLC AND PIEZO AXLE SENSOR IDENTIFICATION DETAIL B

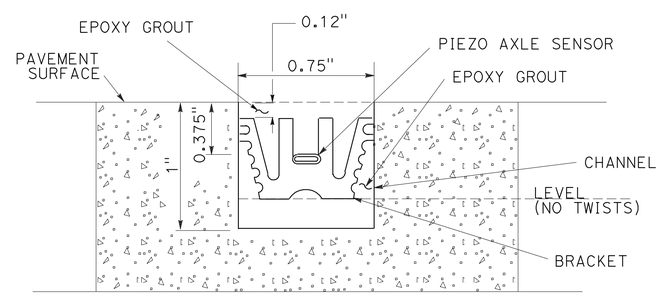

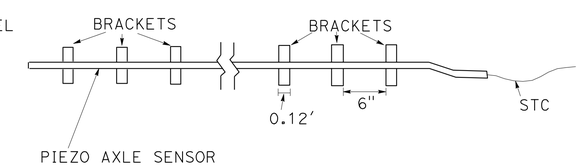

PIEZO AXLE SENSOR INSTALLATION DETAIL C

TRAFFIC MONITORING STATION

NO SCALE

E-26

THIS PLAN IS ACCURATE FOR ELECTRICAL WORK ONLY.

STATE OF CALIFORNIA - DEPARTMENT OF TRANSPORTATION
Caltrans® ELECTRICAL DESIGN

FUNCTIONAL SUPERVISOR: ALI BAKHDOUD
CALCULATED-DESIGNED BY: HASHIM KHALID
CHECKED BY: DANIEL VO
REVISED BY
DATE REVISED

LAST REVISION 11-19-10 | DATE PLOTTED => 10-MAR-2011 | TIME PLOTTED => 08:11

Dist	COUNTY	ROUTE	POST MILES TOTAL PROJECT	SHEET No.	TOTAL SHEETS
06	Fre	168,180	R0.8/R10.5, R54.2/R62.9	55	79

REGISTERED ELECTRICAL ENGINEER 01-05-11 DATE

3-7-11
PLANS APPROVAL DATE

REGISTERED PROFESSIONAL ENGINEER HASHIM KHALID No. 18054 Exp. 6/30/11 ELECTRICAL STATE OF CALIFORNIA

THE STATE OF CALIFORNIA OR ITS OFFICERS OR AGENTS SHALL NOT BE RESPONSIBLE FOR THE ACCURACY OR COMPLETENESS OF SCANNED COPIES OF THIS PLAN SHEET.

NOTES: (FOR THIS SHEET ONLY)

1. FAN CAPACITY SHALL BE 25 CUBIC FEET PER MINUTE.
2. FAN CIRCUIT SHALL BE FUSED AT 125 PERCENT OF THE FAN MOTOR CAPACITY.
3. POWER SUPPLY PER MANUFACTURER'S RECOMMENDATIONS.
4. REFER TO SHEETS SES-1 AND SES-2 FOR POLE REQUIREMENTS.

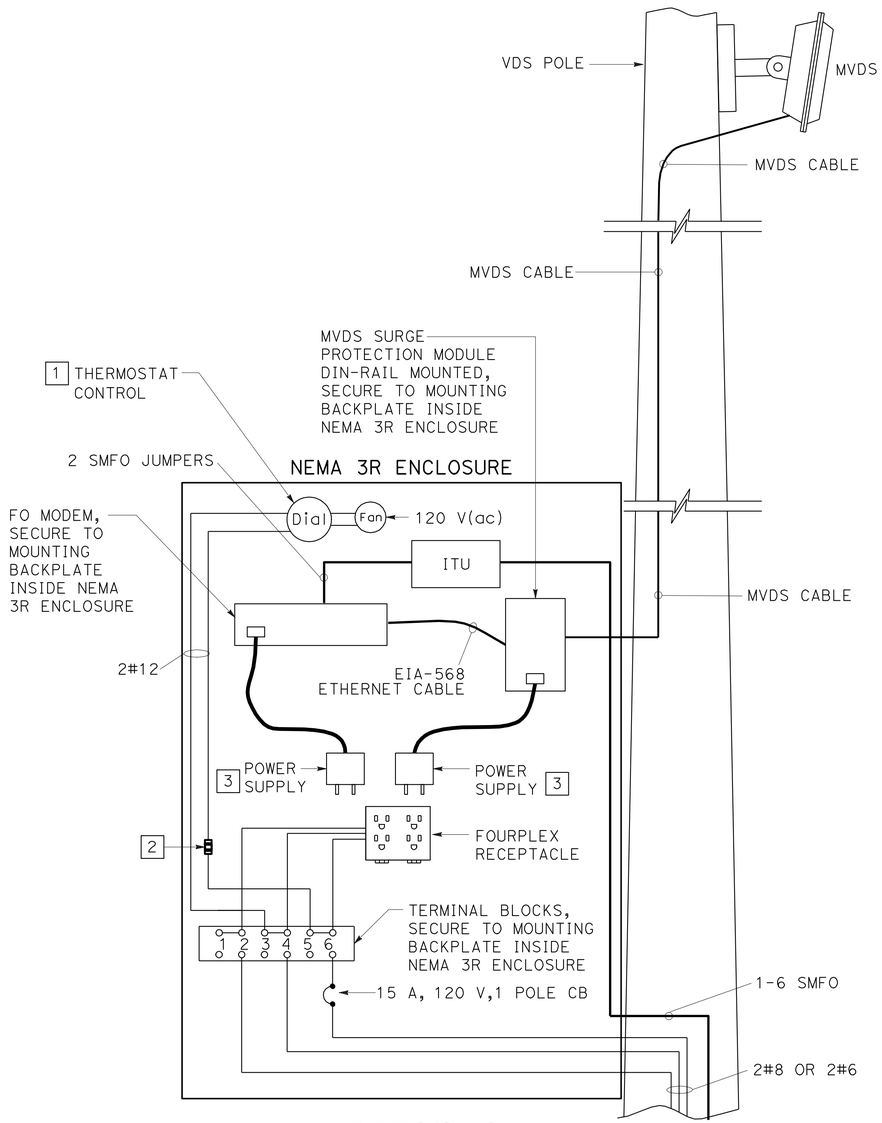

DETAIL A
MVDS LOCATIONS 1,2 AND 10

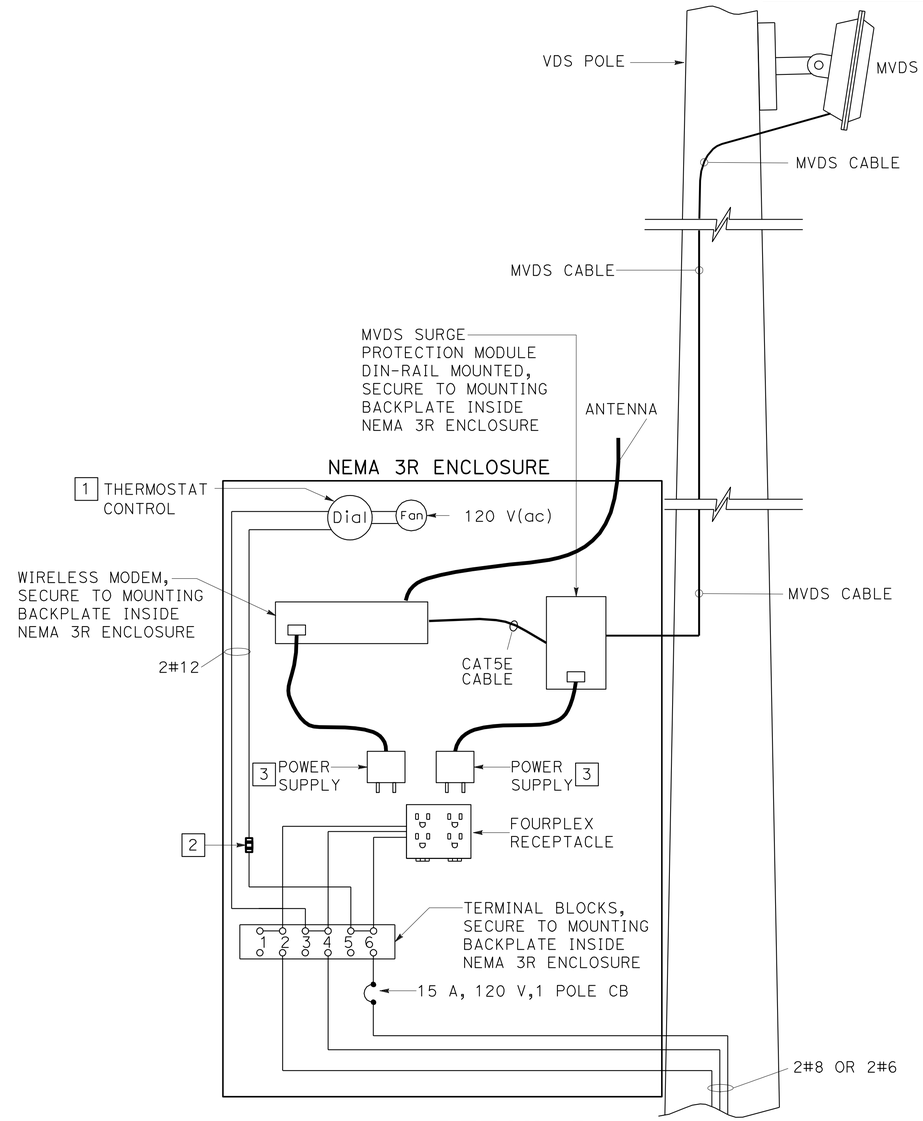

DETAIL B
MVDS LOCATIONS 18,19,20 AND 21

MICROWAVE VEHICLE DETECTION SYSTEM

THIS PLAN IS ACCURATE FOR ELECTRICAL WORK ONLY.

NO SCALE

E-27

STATE OF CALIFORNIA - DEPARTMENT OF TRANSPORTATION
Caltrans® ELECTRICAL DESIGN

FUNCTIONAL SUPERVISOR: ALI BAKHDOUD
CALCULATED-DESIGNED BY: HASHIM KHALID
CHECKED BY: DANIEL VO
REVISED BY
DATE REVISED

LAST REVISION 11-19-10
DATE PLOTTED => 11-MAR-2011
TIME PLOTTED => 14:38

Dist	COUNTY	ROUTE	POST MILES TOTAL PROJECT	SHEET No.	TOTAL SHEETS
06	Fre	168,180	R0.8/R10.5, R54.2/R62.9	56	79

REGISTERED ELECTRICAL ENGINEER 01-05-11 DATE

PLANS APPROVAL DATE 3-7-11

REGISTERED PROFESSIONAL ENGINEER HASHIM KHALID No. 18054 Exp. 6/30/11 ELECTRICAL STATE OF CALIFORNIA

THE STATE OF CALIFORNIA OR ITS OFFICERS OR AGENTS SHALL NOT BE RESPONSIBLE FOR THE ACCURACY OR COMPLETENESS OF SCANNED COPIES OF THIS PLAN SHEET.

NOTE:

1. SEE SHEET E-29 FOR NEMA 3R ENCLOSURE DETAILS.

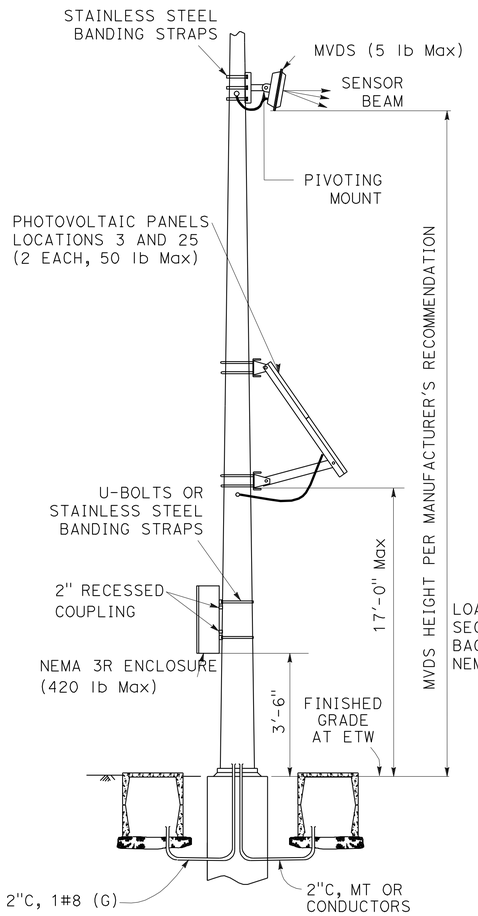

DETAIL A

MVDS LOCATIONS 3 AND 25

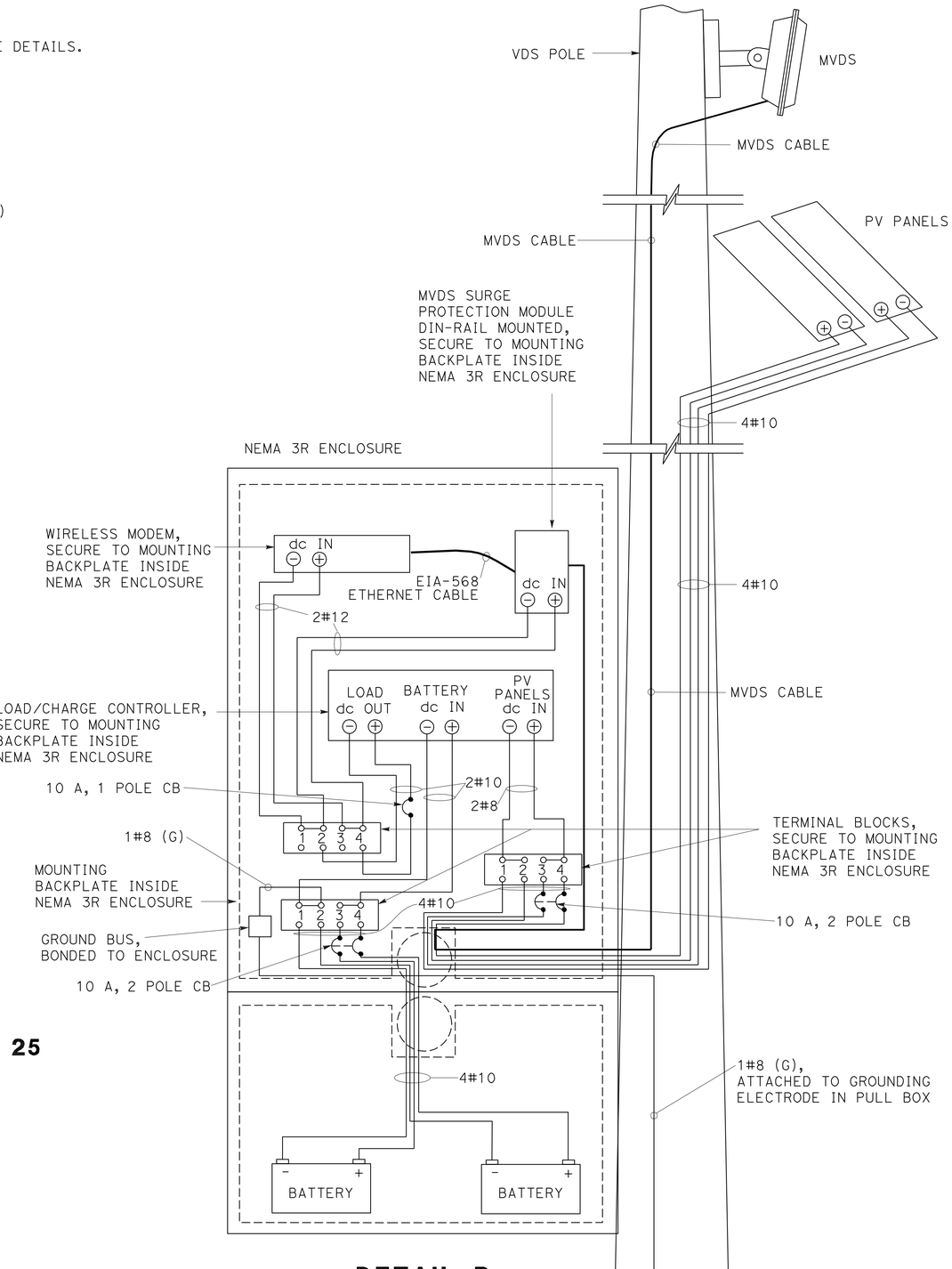

DETAIL B

MVDS LOCATIONS 3 AND 25

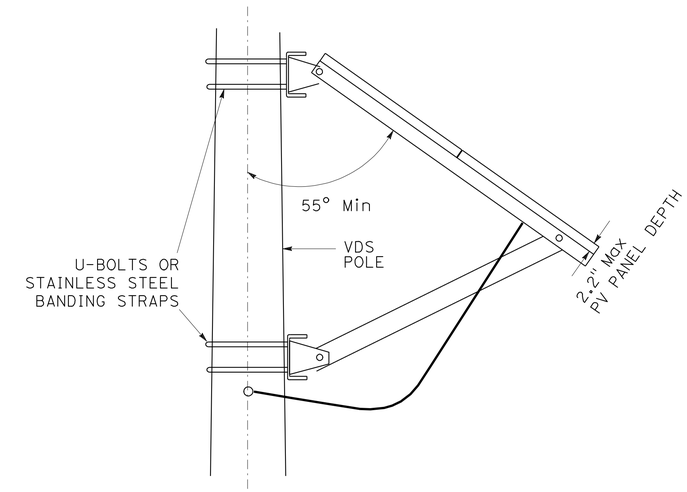

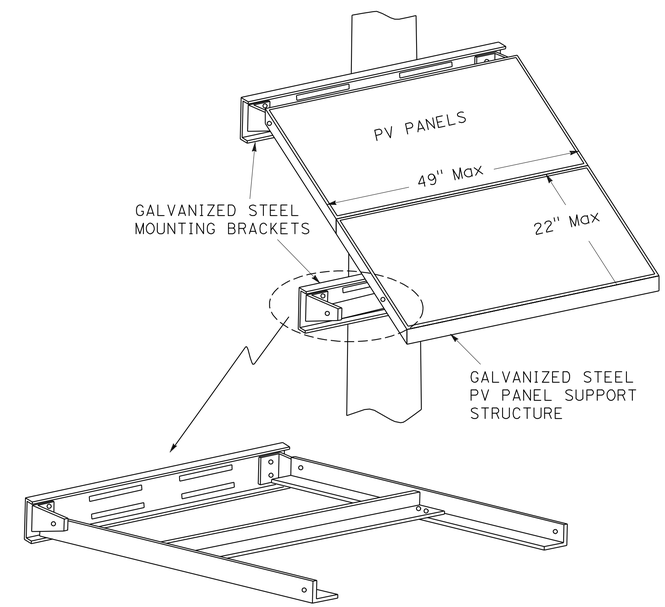

DETAIL C

THIS PLAN IS ACCURATE FOR ELECTRICAL WORK ONLY.

MICROWAVE VEHICLE DETECTION SYSTEM

NO SCALE

E-28

STATE OF CALIFORNIA - DEPARTMENT OF TRANSPORTATION

Caltrans

ELECTRICAL DESIGN

FUNCTIONAL SUPERVISOR: ALI BAKHDOUD

CALCULATED-DESIGNED BY: HASHIM KHALID

CHECKED BY: DANIEL VO

REVISED BY

DATE REVISED

LAST REVISION 11-19-10

DATE PLOTTED => 11-MAR-2011

TIME PLOTTED => 14:39

Dist	COUNTY	ROUTE	POST MILES TOTAL PROJECT	SHEET No.	TOTAL SHEETS
06	Fre	168,180	R0.8/R10.5, R54.2/R62.9	57	79

REGISTERED ELECTRICAL ENGINEER 01-05-11 DATE

PLANS APPROVAL DATE 3-7-11

REGISTERED PROFESSIONAL ENGINEER HASHIM KHALID No. 18054 Exp. 6/30/11 ELECTRICAL STATE OF CALIFORNIA

THE STATE OF CALIFORNIA OR ITS OFFICERS OR AGENTS SHALL NOT BE RESPONSIBLE FOR THE ACCURACY OR COMPLETENESS OF SCANNED COPIES OF THIS PLAN SHEET.

NOTES: (FOR THIS SHEET ONLY)

1. ALUMINUM SHELF REQUIRED TO PROVIDE SEPARATION OF THE EQUIPMENT AND BATTERY COMPARTMENTS. THE SHELF EDGE SHALL EXTEND TO ALL FOUR ENCLOSURE WALLS. SPACES BETWEEN THE SHELF AND ENCLOSURE WALLS SHALL BE SEALED.
2. FILTERED VENTILATION LOUVERS.
3. ALUMINUM SHELF REQUIRED FOR EQUIPMENT. 2" SPACE BETWEEN SHELF AND ENCLOSURE BACK WALL REQUIRED.
4. THREE POINT LOCKING SYSTEM SHALL BE INTEGRATED WITH DOOR HANDLE. ROLLERS SHALL BE USED IN CONJUNCTION WITH THE THREE POINT LOCKING SYSTEM.
5. DOOR HINGE.
6. INSTALL ANTENNA (FOR LOCATIONS NOT HAVING FIBER).
7. BACK MOUNTING PLATE
8. INSTALL ANTENNA CABLE (FOR LOCATIONS NOT HAVING FIBER)
9. DOOR HANDLE TO ENCLOSURE PADLOCK LATCH.
10. SEAL OPENING AROUND CONDUCTORS.
11. THE CONTRACTOR SHALL VERIFY ALL CONTROLLING FIELD DIMENSIONS BEFORE ORDERING OR FABRICATING MATERIAL.

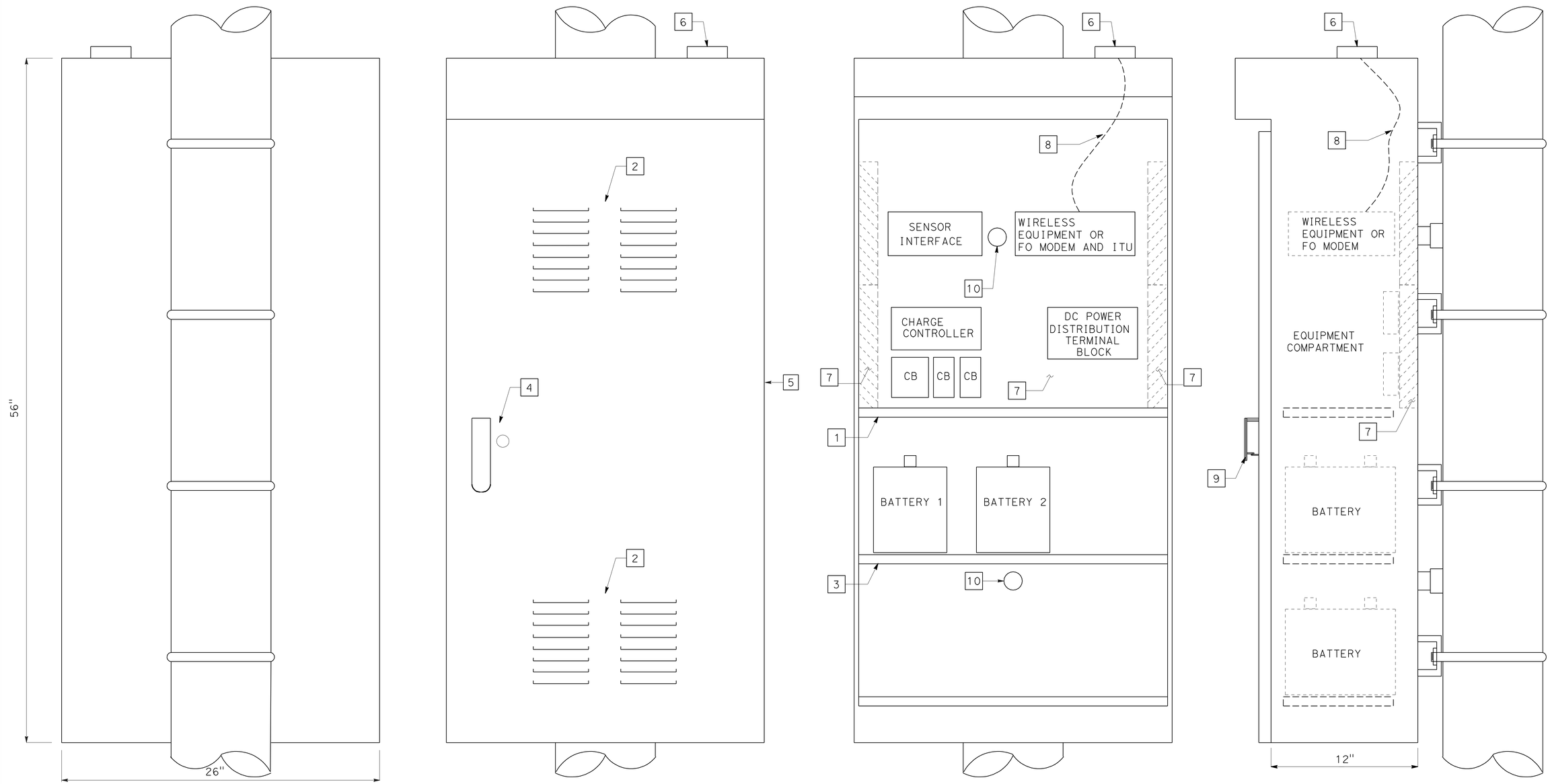

NEMA 3R ENCLOSURE

MICROWAVE VEHICLE DETECTION SYSTEM

THIS PLAN IS ACCURATE FOR ELECTRICAL WORK ONLY.

NO SCALE

E-29

STATE OF CALIFORNIA - DEPARTMENT OF TRANSPORTATION

Caltrans

ELECTRICAL DESIGN

FUNCTIONAL SUPERVISOR: ALI BAKHDOUD

CALCULATED-DESIGNED BY: HASHIM KHALID

CHECKED BY: DANIEL VO

REVISED BY

DATE REVISED

LAST REVISION | DATE PLOTTED => 10-MAR-2011 | TIME PLOTTED => 07:40

11-19-10

Dist	COUNTY	ROUTE	POST MILES TOTAL PROJECT	SHEET No.	TOTAL SHEETS
06	Fre	168,180	R0.8/R10.5, R54.2/R62.9	58	79

REGISTERED ELECTRICAL ENGINEER 01-05-11 DATE

3-7-11
PLANS APPROVAL DATE

REGISTERED PROFESSIONAL ENGINEER MONA N. ATTALLAH No. 18407 Exp. 6-30-12 ELECTRICAL STATE OF CALIFORNIA

THE STATE OF CALIFORNIA OR ITS OFFICERS OR AGENTS SHALL NOT BE RESPONSIBLE FOR THE ACCURACY OR COMPLETENESS OF SCANNED COPIES OF THIS PLAN SHEET.

NOTES: (FOR THIS SHEET ONLY)

1. ANY FIBER OPTIC CONDUIT INSTALLED WITHIN 3′ OF GUARD RAILING SHALL BE 55" MINIMUM DEPTH TO TOP OF CONDUIT.
   ALL FIBER OPTIC CONDUITS SHALL BE FITTED WITH UNDERGROUND RATED CONDUIT
2. SPACERS AT INCREMENTS OF 5′.

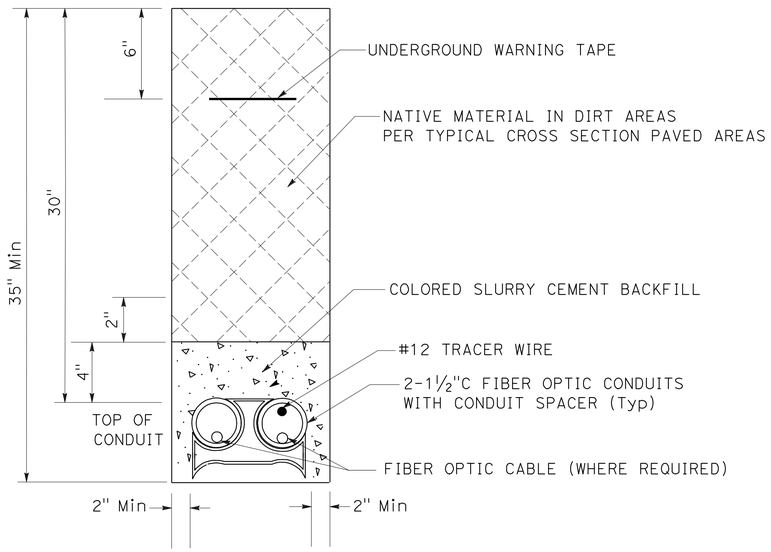

TRENCH IN DIRT/PAVEMENT DETAIL
2-1½" HDPE CONDUIT
DETAIL A

CONDUIT SPACER (Typ)

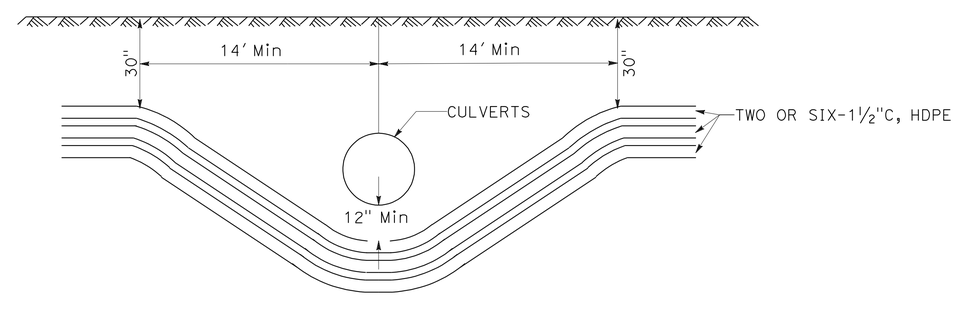

HDPE CONDUIT
DETAIL B

THIS PLAN IS ACCURATE FOR ELECTRICAL WORK ONLY.

NO SCALE

FIBER OPTIC SYSTEM

E-30

STATE OF CALIFORNIA - DEPARTMENT OF TRANSPORTATION
Caltrans® **ELECTRICAL DESIGN**

FUNCTIONAL SUPERVISOR: ALI BAKHDOUD
CALCULATED-DESIGNED BY: MONA ATTALLAH
CHECKED BY: DANIEL VO
REVISED BY
DATE REVISED

LAST REVISION 11-19-10
DATE PLOTTED => 10-MAR-2011
TIME PLOTTED => 07:40

Dist	COUNTY	ROUTE	POST MILES TOTAL PROJECT	SHEET No.	TOTAL SHEETS
06	Fre	168,180	R0.8/R10.5, R54.2/R62.9	59	79

REGISTERED ELECTRICAL ENGINEER 01-05-11 DATE

3-7-11
PLANS APPROVAL DATE

REGISTERED PROFESSIONAL ENGINEER MONA N. ATTALLAH No. 18407 Exp. 6-30-12 ELECTRICAL STATE OF CALIFORNIA

THE STATE OF CALIFORNIA OR ITS OFFICERS OR AGENTS SHALL NOT BE RESPONSIBLE FOR THE ACCURACY OR COMPLETENESS OF SCANNED COPIES OF THIS PLAN SHEET.

LEGEND:

- — — EXISTING ELEMENT
- ● SPLICE FIBER TO FIBER
- × CUT END OF FIBER
- ▫ SC CONNECTOR ON NEW FDU OR ITU

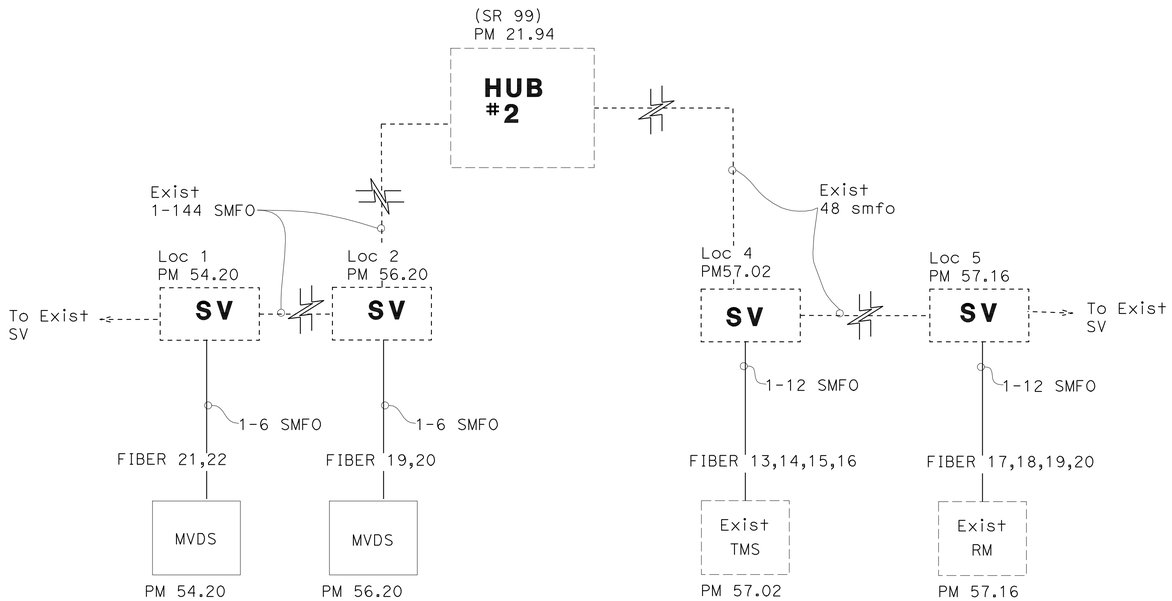

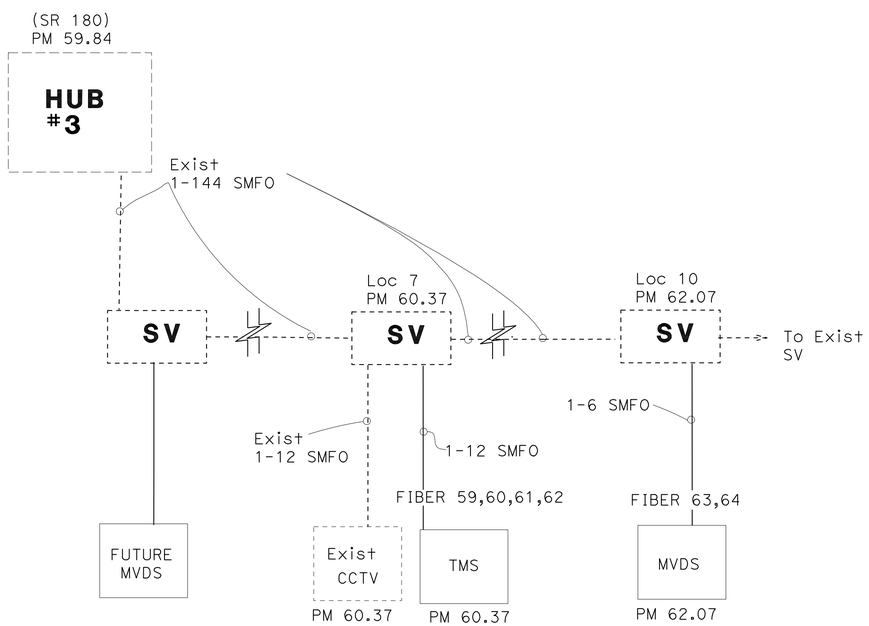

ABBREVIATIONS:

FDU	FIBER DISTRIBUTION UNIT	BL	BLUE
FO	FIBER OPTIC	OR	ORANGE
FOM	FIBER OPTIC MODEM (SF)	GR	GREEN
ITU	INTERCONNECT TERMINATION UNIT	BR	BROWN
MUX	MULTIPLEXER (SF)	SL	SLATE
RX	RECEIVE	WT	WHITE
SC	COMPRESSION CONNECTOR	RD	RED
(SF)	STATE-FURNISHED	BK	BLACK
SMFO	SINGLE MODE FIBER OPTIC CABLE	YL	YELLOW
SV	SPLICE VAULT	VL	VIOLET
TCVR	VIDEO TRANSCEIVER (SF)	RS	ROSE
TX	TRANSMIT	AQ	AQUA

THIS PLAN IS ACCURATE FOR ELECTRICAL WORK ONLY.

NO SCALE

FIBER OPTIC SYSTEM

E-31

REVISED BY | DATE REVISED
MONA ATTALLAH | DANIEL VO
CALCULATED-DESIGNED BY | CHECKED BY
FUNCTIONAL SUPERVISOR: ALI BAKHDOUD

STATE OF CALIFORNIA - DEPARTMENT OF TRANSPORTATION
Caltrans® ELECTRICAL DESIGN

LAST REVISION | DATE PLOTTED => 14-MAR-2011 | TIME PLOTTED => 11:06
11-19-10

Dist	COUNTY	ROUTE	POST MILES TOTAL PROJECT	SHEET No.	TOTAL SHEETS
06	Fre	168,180	R0.8/R10.5, R54.2/R62.9	60	79

REGISTERED ELECTRICAL ENGINEER 01-05-11 DATE

3-7-11
PLANS APPROVAL DATE

REGISTERED PROFESSIONAL ENGINEER MONA N. ATTALLAH No. 18407 Exp. 6-30-12 ELECTRICAL STATE OF CALIFORNIA

THE STATE OF CALIFORNIA OR ITS OFFICERS OR AGENTS SHALL NOT BE RESPONSIBLE FOR THE ACCURACY OR COMPLETENESS OF SCANNED COPIES OF THIS PLAN SHEET.

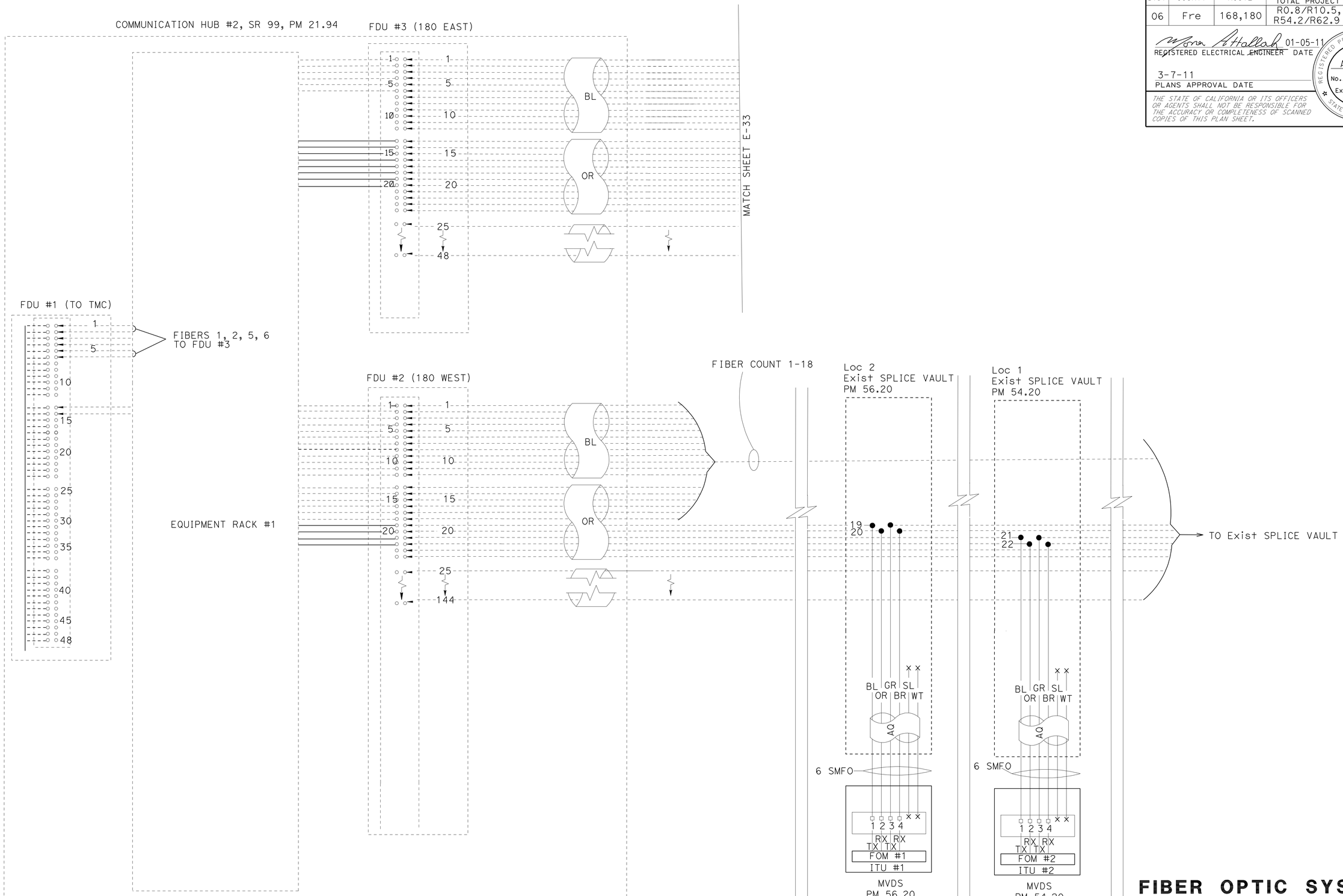

THIS PLAN IS ACCURATE FOR ELECTRICAL WORK ONLY.

NO SCALE

FIBER OPTIC SYSTEM

E-32

STATE OF CALIFORNIA - DEPARTMENT OF TRANSPORTATION
Caltrans ELECTRICAL DESIGN

FUNCTIONAL SUPERVISOR: ALI BAKHDOUD
CALCULATED-DESIGNED BY: MONA ATTALLAH
CHECKED BY: DANIEL VO
REVISED BY
DATE REVISED

LAST REVISION DATE PLOTTED => 11-MAR-2011
TIME PLOTTED => 14:15

Dist	COUNTY	ROUTE	POST MILES TOTAL PROJECT	SHEET No.	TOTAL SHEETS
06	Fre	168,180	R0.8/R10.5, R54.2/R62.9	61	79

REGISTERED ELECTRICAL ENGINEER 01-05-11 DATE

3-7-11
PLANS APPROVAL DATE

REGISTERED PROFESSIONAL ENGINEER MONA N. ATTALLAH No. 18407 Exp. 6-30-12 ELECTRICAL STATE OF CALIFORNIA

THE STATE OF CALIFORNIA OR ITS OFFICERS OR AGENTS SHALL NOT BE RESPONSIBLE FOR THE ACCURACY OR COMPLETENESS OF SCANNED COPIES OF THIS PLAN SHEET.

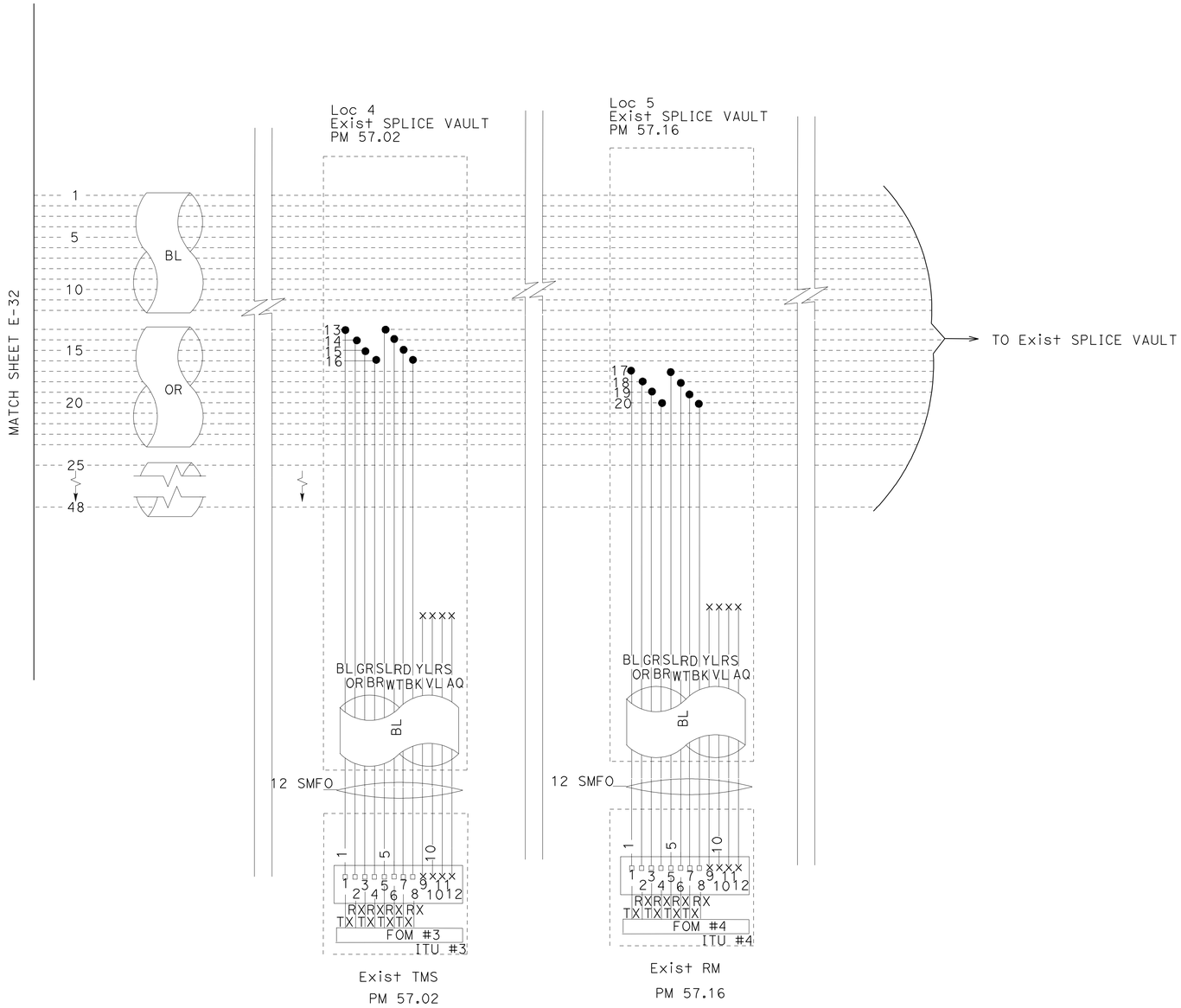

FIBER CABLE BREAKOUT

THIS PLAN IS ACCURATE FOR ELECTRICAL WORK ONLY.

FIBER OPTIC SYSTEM
E-33

NO SCALE

STATE OF CALIFORNIA - DEPARTMENT OF TRANSPORTATION
Caltrans® ELECTRICAL DESIGN

FUNCTIONAL SUPERVISOR: ALI BAKHDOUD
MONA ATTALLAH | DANIEL VO
CALCULATED-DESIGNED BY | CHECKED BY
REVISED BY | DATE REVISED

LAST REVISION 11-19-10 | DATE PLOTTED => 10-MAR-2011 | TIME PLOTTED => 08:07

Dist	COUNTY	ROUTE	POST MILES TOTAL PROJECT	SHEET No.	TOTAL SHEETS
06	Fre	168,180	R0.8/R10.5, R54.2/R62.9	62	79

REGISTERED ELECTRICAL ~~ENGINEER~~ DATE 01-05-11

3-7-11
PLANS APPROVAL DATE

REGISTERED PROFESSIONAL ENGINEER MONA N. ATTALLAH No. 18407 Exp. 6-30-12 ELECTRICAL STATE OF CALIFORNIA

THE STATE OF CALIFORNIA OR ITS OFFICERS OR AGENTS SHALL NOT BE RESPONSIBLE FOR THE ACCURACY OR COMPLETENESS OF SCANNED COPIES OF THIS PLAN SHEET.

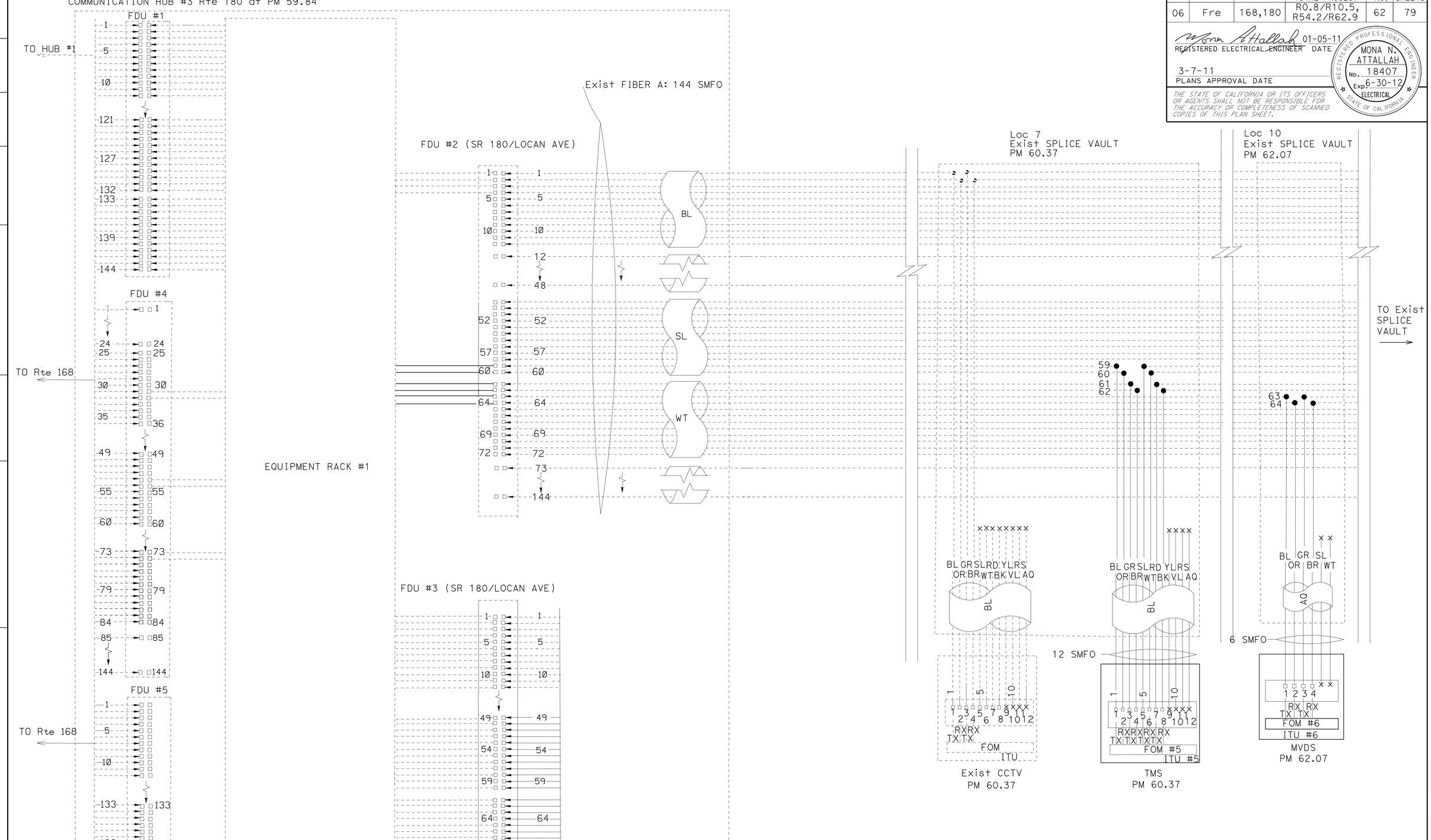

FIBER OPTIC SYSTEM

E-34

THIS PLAN IS ACCURATE FOR ELECTRICAL WORK ONLY.

NO SCALE

STATE OF CALIFORNIA - DEPARTMENT OF TRANSPORTATION
Caltrans® ELECTRICAL DESIGN

FUNCTIONAL SUPERVISOR: ALI BAKHDOUD
CALCULATED-DESIGNED BY: MONA ATTALLAH
CHECKED BY: DANIEL VO
REVISED BY
DATE REVISED

LAST REVISION 11-19-10
DATE PLOTTED => 10-MAR-2011
TIME PLOTTED => 08:07

Dist	COUNTY	ROUTE	POST MILES TOTAL PROJECT	SHEET No.	TOTAL SHEETS
06	Fre	168,180	R0.8/R10.5, R54.2/R62.9	63	79

REGISTERED ELECTRICAL ~~ENGINEER~~ DATE 01-05-11

3-7-11
PLANS APPROVAL DATE

REGISTERED PROFESSIONAL ENGINEER MONA N. ATTALLAH No. 18407 Exp 6-30-12 ELECTRICAL STATE OF CALIFORNIA

THE STATE OF CALIFORNIA OR ITS OFFICERS OR AGENTS SHALL NOT BE RESPONSIBLE FOR THE ACCURACY OR COMPLETENESS OF SCANNED COPIES OF THIS PLAN SHEET.

NOTES:

1. ALL SMFO JUMPERS SHALL BE TERMINATED WITH SC COMPRESSION TYPE CONNECTORS.
2. STATE-FURNISHED MATERIAL IN THE HUB WILL BE INSTALLED BY STATE FORCES.

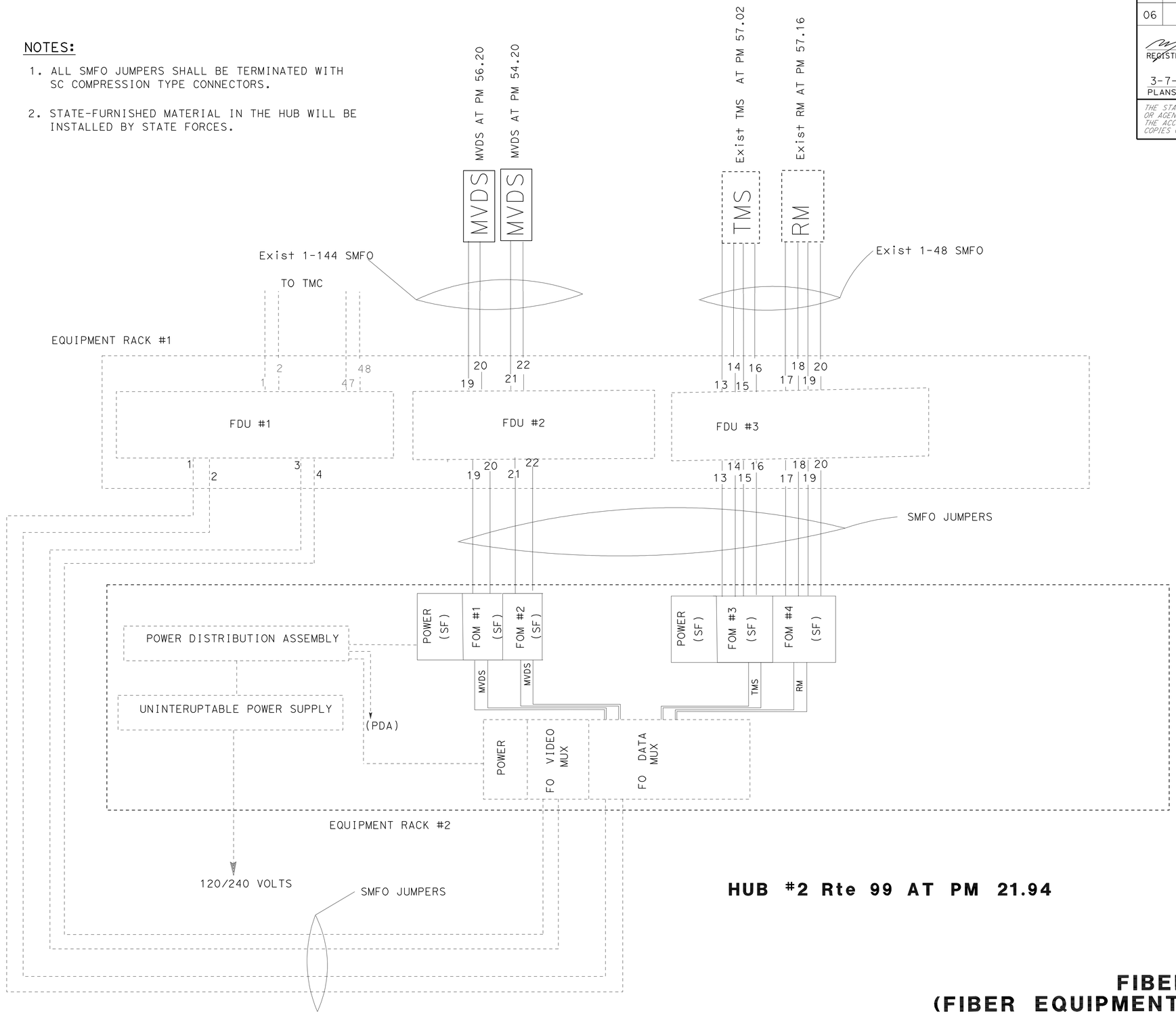

HUB #2 Rte 99 AT PM 21.94

FIBER OPTIC SYSTEM (FIBER EQUIPMENT RACK DETAILS)

THIS PLAN IS ACCURATE FOR ELECTRICAL WORK ONLY.

NO SCALE

E-35

STATE OF CALIFORNIA - DEPARTMENT OF TRANSPORTATION
Caltrans® ELECTRICAL DESIGN

FUNCTIONAL SUPERVISOR: ALI BAKHDOUD
CALCULATED-DESIGNED BY: MONA ATTALLAH
CHECKED BY: DANIEL VO
REVISED BY
DATE REVISED

LAST REVISION DATE PLOTTED => 10-MAR-2011
11-19-10 TIME PLOTTED => 08:07

Dist	COUNTY	ROUTE	POST MILES TOTAL PROJECT	SHEET No.	TOTAL SHEETS
06	Fre	168,180	R0.8/R10.5, R54.2/R62.9	64	79

REGISTERED ELECTRICAL ENGINEER 01-05-11 DATE

3-7-11
PLANS APPROVAL DATE

REGISTERED PROFESSIONAL ENGINEER MONA N. ATTALLAH No. 18407 Exp. 6-30-12 ELECTRICAL STATE OF CALIFORNIA

THE STATE OF CALIFORNIA OR ITS OFFICERS OR AGENTS SHALL NOT BE RESPONSIBLE FOR THE ACCURACY OR COMPLETENESS OF SCANNED COPIES OF THIS PLAN SHEET.

NOTES:

1. ALL SMFO JUMPERS TO BE TERMINATED WITH SC COMPRESSION TYPE CONNECTORS.
2. STATE-FURNISHED MATERIAL IN THE HUB WILL BE INSTALLED BY STATE FORCES.

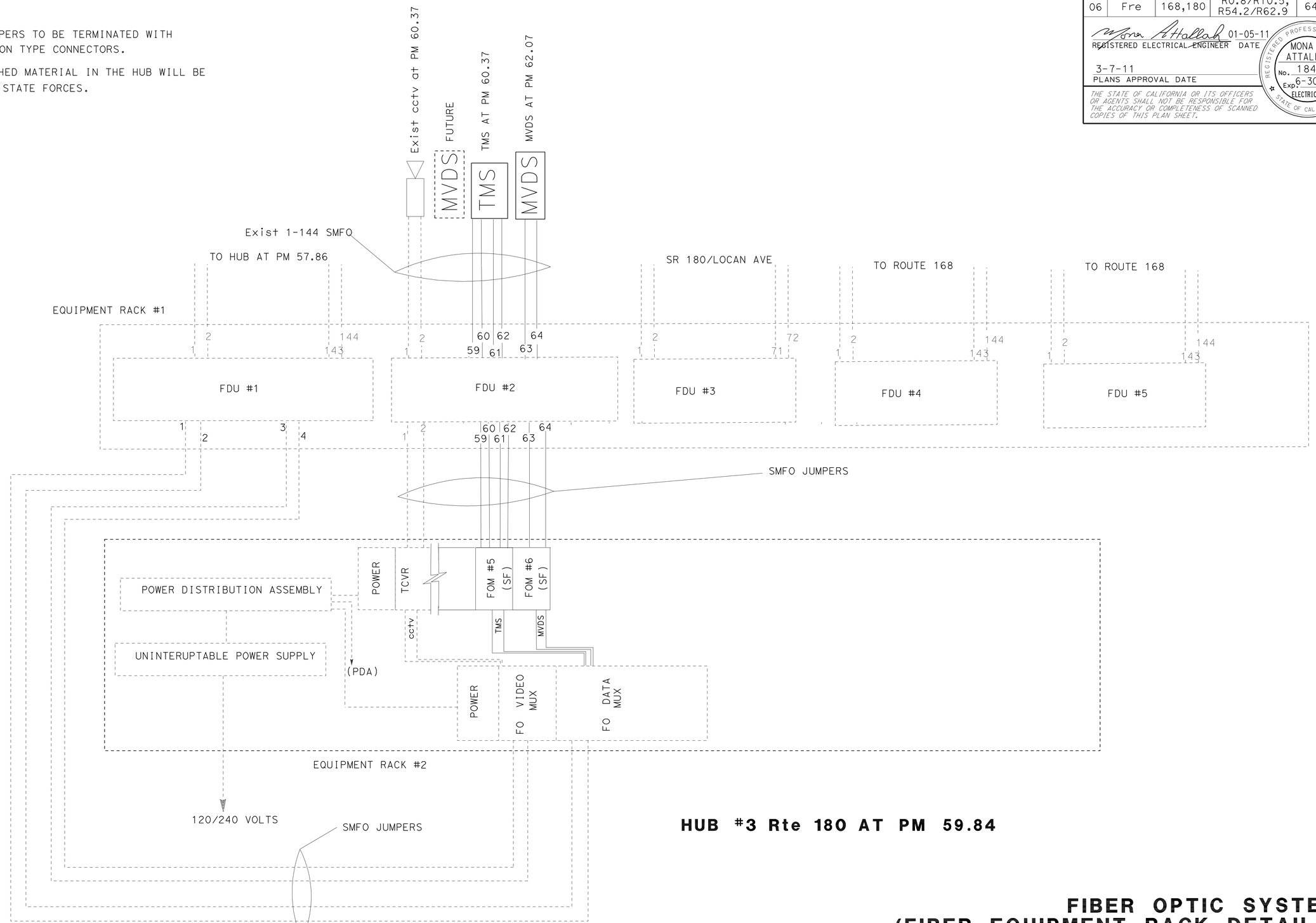

HUB #3 Rte 180 AT PM 59.84

FIBER OPTIC SYSTEM (FIBER EQUIPMENT RACK DETAILS)

NO SCALE

E-36

THIS PLAN IS ACCURATE FOR ELECTRICAL WORK ONLY.

STATE OF CALIFORNIA - DEPARTMENT OF TRANSPORTATION
Caltrans
ELECTRICAL DESIGN

FUNCTIONAL SUPERVISOR: ALI BAKHDOUD
CALCULATED-DESIGNED BY: MONA ATTALLAH
CHECKED BY: DANIEL VO
REVISED BY
DATE REVISED

LAST REVISION 11-19-10
DATE PLOTTED => 10-MAR-2011
TIME PLOTTED => 08:07

DIST	COUNTY	ROUTE	POST MILES TOTAL PROJECT	SHEET No	TOTAL SHEETS
06	Fre	168,180	R0.8/R10.5, R54.2/R62.9	65	79

Devang K. Vora 9/1/10
REGISTERED CIVIL ENGINEER DATE

3-7-11
PLANS APPROVAL DATE

REGISTERED PROFESSIONAL ENGINEER
DEVANG VORA
No. C76546
Exp. 12/31/10
CIVIL
STATE OF CALIFORNIA

The State of California or its officers or agents shall not be responsible for the accuracy or completeness of electronic copies of this plan sheet.

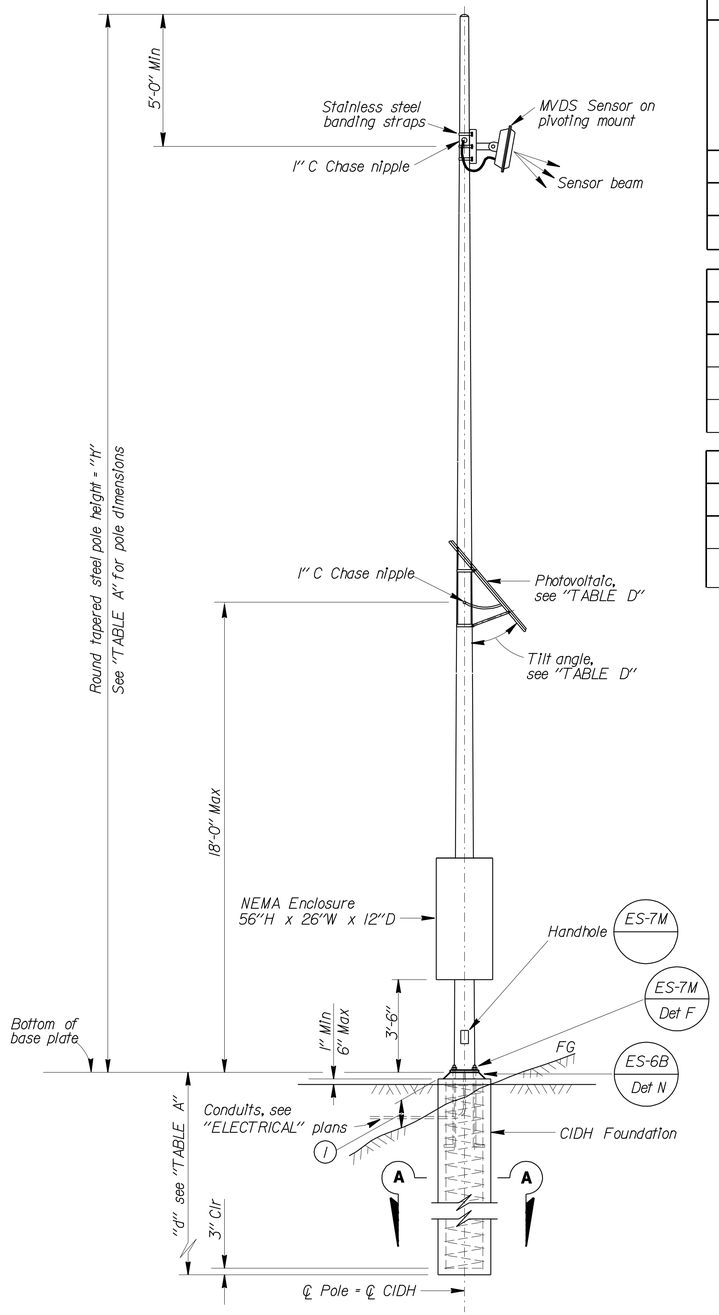

ELEVATION

TABLE A											
POLE TYPE	POLE DATA				BASE PLATE DATA				"d" 2'-0" Ø CIDH Pile		STRUCTURAL STEEL LBS PLUS 3.5% GALVANIZING
	HEIGHT "H"	Min OD		THICKNESS	"C"	THICKNESS	ANCHOR BOLTS				
		BASE	TOP				SIZE	BC = BOLT CIRCLE	LEVEL GROUND	SLOPING GROUND	
VDS 30	30'	8"	3 7/8"	0.1793"	1'-1"	1"	1 1/4" x 3'-0" x 4"	1'-1"	9'-0"	11'-0"	475
VDS 35	35'	8 5/8"	3 7/8"	0.1793"	1'-1"	1"	1 1/4" x 3'-0" x 4"	1'-1"	10'-0"	12'-0"	550
VDS 40	40'	9 3/8"	3 7/8"	0.1793"	1'-1"	1"	1 1/4" x 3'-0" x 4"	1'-1"	10'-0"	12'-0"	650

TABLE B		
ATTACHMENT	MOUNTING HEIGHT	WEIGHT LIMITS (MAX)
Enclosure	3'-6" Max bottom Clr	420 lbs
Photovoltaic	18'-0" Max	50 lbs
MVDS	5'-0" Min from top	10 lbs

TABLE C		
SPREAD FOOTING		
GROUND	FOOTING SIZE LENGTH x WIDTH x DEPTH	REINFORCEMENT TOP & BOTTOM
Level	6'-0" x 6'-0" x 1'-6"	7 - #4
Sloping	7'-0" x 7'-0" x 1'-6"	8 - #4

TABLE D	
PHOTOVOLTAIC PANEL LIMITS	
PANEL SIZE	TILT ANGLE
15 ft^2 Max	45° Min

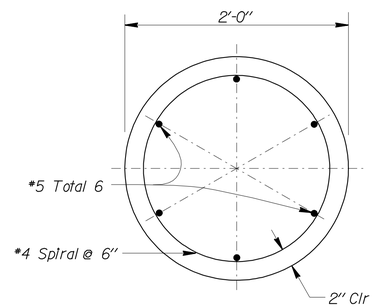

SECTION A-A

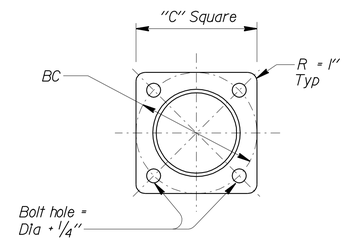

BASE PLATE

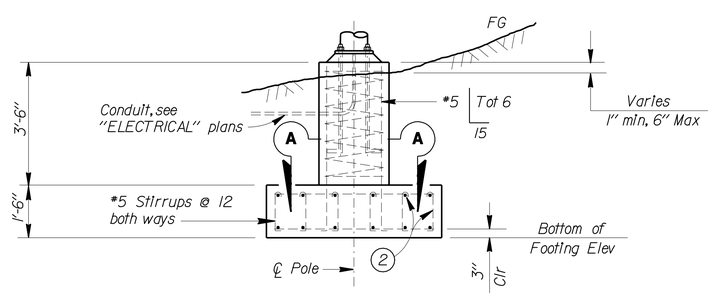

ALTERNATIVE FOOTING ELEVATION

STANDARD PLAN SHEET No.

DETAIL No.

ABBREVIATIONS:

MVDS = Microwave Vehicle Detection System
VDS = Vehicle Detection System

DESIGN NOTES:

SPECIFICATIONS

Design : AASHTO Standard Specifications for Structural Supports for Highway Signs, Luminaires and Traffic Signals dated 2001.

LOADING

Wind Loadings: 100 mph

UNIT STRESSES

Structural steel: fy = 48,000 psi tapered steel pole
fy = 36,000 psi unless otherwise noted.

Anchor bolts = A307
Reinforced concrete: f'_c = 3,600 psi
fy = 60,000 psi

NOTES:

1. See "ELECTRICAL" plans for pole locations.
2. All steel shall be galvanized after fabrication.
3. During pole erection the pole shall be raked as necessary with the use of leveling nuts to provide a plumb pole axis.
4. The foundation shall be treated as level ground condition if the slope inclination is flatter than 4H:1V.
5. Foundation design is based on AASHTO 2001 article 13.6 Broms' approximate procedure assuming a cohesionless material. The angle of internal friction used is 30 degrees and unit weight of soil used is 120 lb/ft^3.
6. For details not shown, see 2006 "STANDARD PLANS" and 2006 "REVISED STANDARD PLANS".
7. The Contractor shall verify all controlling field dimensions before ordering or fabricating any material.

(1) 1'-3" Max for sloped finished grade.

(2) #5 Bars and #5 stirrups (Top and bottom) to run both longitudinal and transverse directions.

NO SCALE

BRANCH CHIEF Jeffrey B Woody

	BY	CHECKED
DESIGN	DEVANG VORA	ELISEO LOPEZ
DETAILS	R. YEE	DEVANG VORA
QUANTITIES		

STATE OF CALIFORNIA
DEPARTMENT OF TRANSPORTATION

DIVISION OF ENGINEERING SERVICES
DESIGN AND TECHNICAL SERVICES
SPECIAL DESIGNS BRANCH A

BRIDGE NO.
POST MILE

MICROWAVE VEHICLE DETECTION SYSTEM
POST DETAILS No. 1

SES-1

(ENGLISH) SPECIAL DESIGNS BRANCH BORDER SHEET (REV. 7-1-09)

ORIGINAL SCALE IN INCHES FOR REDUCED PLANS 0 1 2 3

UNIT 3620
PROJECT NUMBER & PHASE 0600000337-1

DISREGARD PRINTS BEARING EARLIER REVISION DATES 9/1/10

REVISION DATES | SHEET | OF

EA 06-0L8401

FILE => 2010sd/06-0L8401/ses1.dgn

ses-1.dgn

USERNAME => trlenard DATE PLOTTED => 10-MAR-2011 TIME PLOTTED => 08:07

DIST	COUNTY	ROUTE	POST MILES TOTAL PROJECT	SHEET No	TOTAL SHEETS
06	Fre	168,180	R0.8/R10.5, R54.2/R62.9	66	79

REGISTERED CIVIL ENGINEER Devang K. Vora DATE 9/1/10

3-7-11
PLANS APPROVAL DATE

REGISTERED PROFESSIONAL ENGINEER DEVANG VORA No. C76546 Exp. 12/31/10 CIVIL STATE OF CALIFORNIA

The State of California or its officers or agents shall not be responsible for the accuracy or completeness of electronic copies of this plan sheet.

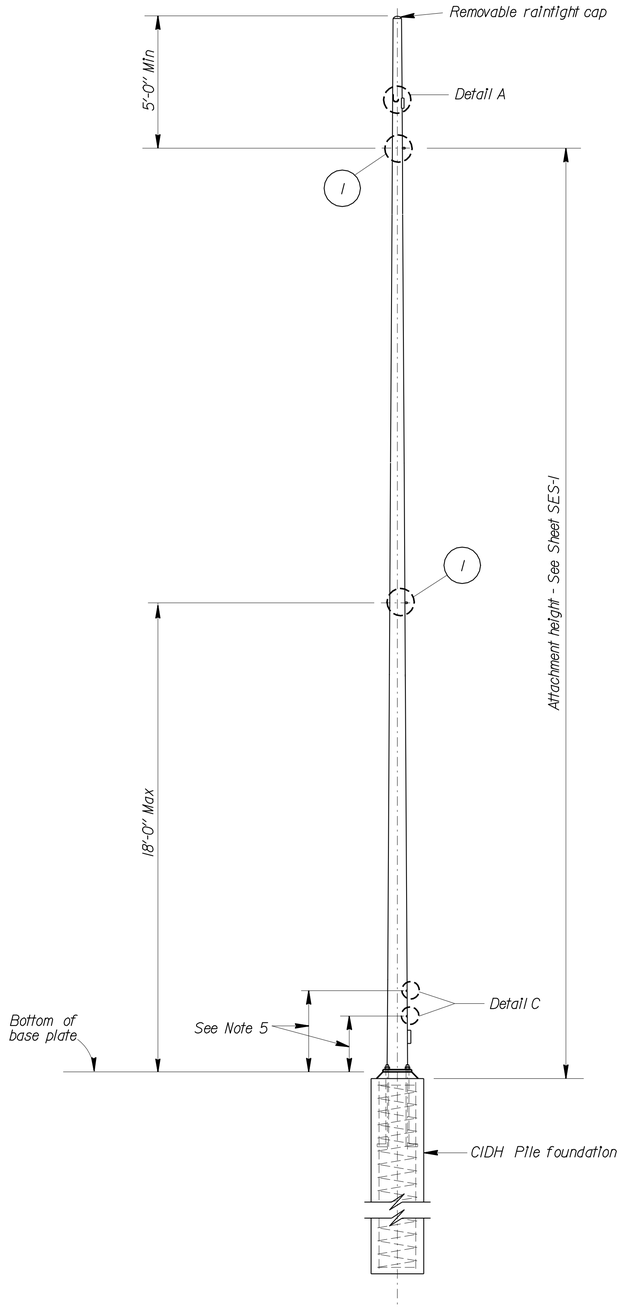

ELEVATION

1 Drill and tap for 1" chase nipple and plug with raintight plugs. 1" chase nipple per attachment per pole. See "DETAIL B".

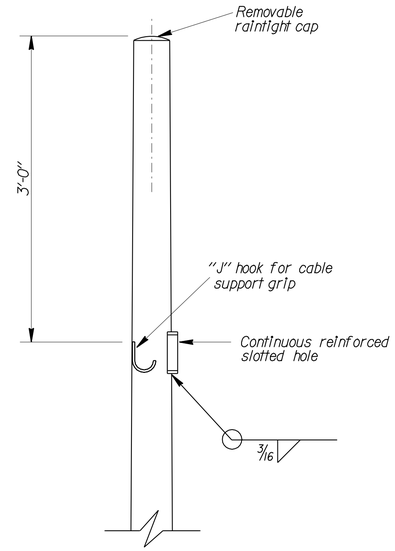

DETAIL A

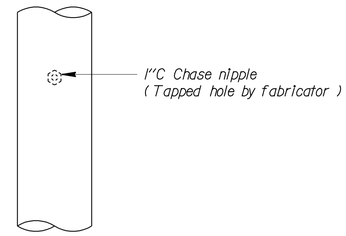

DETAIL B

TYPICAL ELECTRICAL ACCESS DETAIL

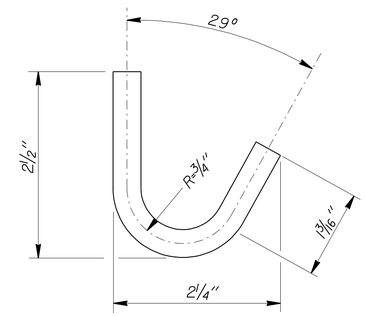

DETAIL D

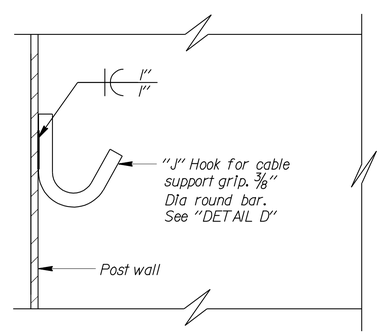

J HOOK DETAIL

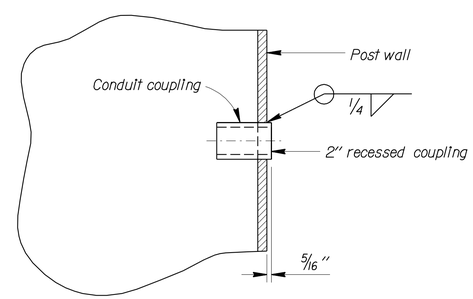

2" RECESSED COUPLING DETAIL C (TYPICAL)

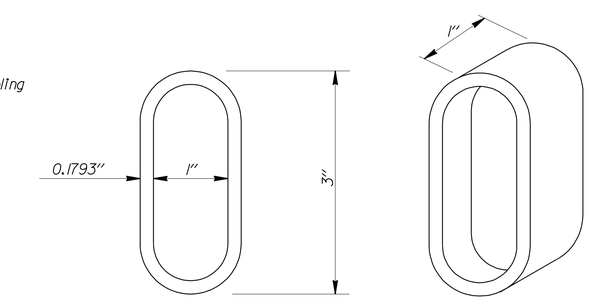

SLOTTED HOLE

NOTES:

1. Place all couplings on the same side of pole.
2. Chase nipples and slotted hole have a raintight plug. Plug should only be removed if chase nipple or slotted hole is used.
3. The chase nipples shall be 1'-0" min vertical clearance from the slotted hole and not on the same side as the slotted hole.
4. For attachment details, see sheet SES-1.
5. Coupling location above ground and spacing shall be verified to match choice of enclosure, prior to fabrication.
6. All attachments, unless otherwise noted, shall be mounted to pole with stainless steel straps or other method without drilling holes in pole. Enclosure may require drilling through post for mounting. Method of mounting enclosure will require Engineer's approval.
7. The Contractor shall verify all controlling field dimensions before ordering of fabricating any material.

NO SCALE

BRANCH CHIEF Geoffrey B Woody

	BY	CHECKED
DESIGN	DEVANG VORA	ELISEO LOPEZ
DETAILS	R. YEE	DEVANG VORA
QUANTITIES		

STATE OF CALIFORNIA DEPARTMENT OF TRANSPORTATION

DIVISION OF ENGINEERING SERVICES DESIGN AND TECHNICAL SERVICES SPECIAL DESIGNS BRANCH A

BRIDGE NO.
POST MILE

MICROWAVE VEHICLE DETECTION SYSTEM
POST DETAILS NO. 2

SES-2

(ENGLISH) SPECIAL DESIGNS BRANCH BORDER SHEET (REV. 7-1-09)

ORIGINAL SCALE IN INCHES FOR REDUCED PLANS 0 1 2 3

UNIT 3620
PROJECT NUMBER & PHASE 0600000337-1

DISREGARD PRINTS BEARING EARLIER REVISION DATES

REVISION DATES 9/1/10

SHEET OF

EA 06-0L8401

FILE => 2010sd/06-0L8401/ses2.dgn

USERNAME => trlenard DATE PLOTTED => 10-MAR-2011 TIME PLOTTED => 08:07

DIST	COUNTY	ROUTE	POST MILES TOTAL PROJECT	SHEET NO.	TOTAL SHEETS
06	Fre	168,180	R0.8/R10.5, R54.2/R62.9	67	79

Gregory A. Balzer
LICENSED LANDSCAPE ARCHITECT

June 5, 2009
PLANS APPROVAL DATE

LICENSED LANDSCAPE ARCHITECT
Gregory A. Balzer 2516
10 January
2-28-11
Renewal Date
5-14-09
Date
STATE OF CALIFORNIA

The State of California or its officers or agents shall not be responsible for the accuracy or completeness of electronic copies of this plan sheet.

To accompany plans dated 3-7-11

A

AB	aggregate base
ABS	acrylonitrile-butadiene-styrene
AC	asphalt concrete
Adj	adjacent/adjustable
AIC	auxiliary irrigation controller
Alt	alternative
AMEND	amendment
ARV	air release valve
AUTO	automatic
AUX	auxiliary
AVB	atmospheric vacuum breaker

B

B&B	balled and burlapped
B/B	brass/bronze
B/B/PL	brass/bronze/plastic
B/PL	brass/plastic
BFM	bonded fiber matrix
Bit Ctd	bituminous coated
BP	booster pump
BPA	backflow preventer assembly
BPAE	backflow preventer assembly in enclosure
BPE	backflow preventer enclosure
BV	ball valve

C

CAP	corrugated aluminum pipe
CARV	combination air release valve
CCA	cam coupler assembly
CEC	controller enclosure cabinet
CHDPE	corrugated high density polyethylene
CL	chain link
CNC	control and neutral conductors
Conc	concrete
Cond	conduit
CSP	corrugated steel pipe
CST	center strip
CV	check valve

D

Dia	diameter
DIP	ductile iron pipe
DN	diameter nominal

E

EA	each
Elect	electric/electrical
Elev	elevation
ENCL	enclosure
EP	edge of pavement
ES	edge of shoulder
EST	end strip
ESTB	establishment
ETW	edge of traveled way

F

F	full circle
F/P	full/part circle
FAU	filter assembly unit
FCV	flow control valve
FERT	fertilizer
FG	finished grade
FIPT	female iron pipe thread
FIS	fertilizer injector system
FL	flow line
FM	flow monitor
FS	flow sensor
Ft	foot/feet
FV	flush valve

G

GAL	Gallon(s)
Galv	galvanized
GARV	garden valve
GPH	gallons per hour
GPM	gallons per minute
GSP	galvanized steel pipe
GV	gate valve

H

H	half circle
HB	hose bib
HDPE	high density polyethylene
HP	horsepower/hinge point
HPL	high pressure line
Hwy	highway

I

IC	irrigation controller
ICC	irrigation controller(s) in controller enclosure cabinet
ID	inside diameter
In	inches
IFS	irrigation filtration system
IPS	iron pipe size
IPT	iron pipe thread
Irr	irrigation

L

L	length
LF	linear foot

M

Max	maximum
MBGR	metal beam guard railing
MCV	manual control valve
MIC	master irrigation controller
Min	minimum
MIPT	male iron pipe thread
Misc	miscellaneous
Mtl	material
MVP	maintenance vehicle pullout

N

NCN	no common name
NL	nozzle line
No.	number
NPT	national pipe thread

O

O/C	on center
OD	outside diameter
Oz	ounce

P

P	part circle
PB	pull box
PCC	portland cement concrete
PE	polyethylene
Pkt	packet
PL	plastic
PLT	plant/planting
PLT ESTB	plant establishment
PM	post mile
PR	pressure rated
PRLV	pressure relief valve
PSFM	polymer stabilized fiber matrix
PSI	pounds per square inch
PRV	pressure reducing valve
PVC	polyvinyl chloride
Pvmt	pavement

Q

Q	quarter circle
QCV	quick coupling valve

R

R	radius
RCP	reinforced concrete pipe
RCV	remote control valve
RCVM	remote control valve (master)
RCVMF	remote control valve (master) w/ flow meter
RCW	recycled/reclaimed water
RECP	rolled erosion control product
REQ	required
R/W	right of way

S

S	slip
SCC	sprinkler control conduit
SCH	schedule
SF	state-furnished
Shld	shoulder
SQFT	square foot/feet
SQYD	square yard(s)
SST	side strip
Sta	station
Std	standard
SW	sidewalk/sound wall

T

T	third circle/thread
TLS	truck loading standpipe
TQ	three quarter circle
TRM	turf reinforcement mat
TRVD	traveled
TT	two third circle
Typ	typical

U

UG	underground

V

VAU	valve assembly unit

W

W	width
W/	with
WM	water meter
WS	wye strainer
WSP	welded steel pipe
WWM	welded wire mesh

NOTE:

FOR ADDITIONAL ABBREVIATIONS, SEE STANDARD PLANS A10A AND A10B.

STATE OF CALIFORNIA
DEPARTMENT OF TRANSPORTATION

PLANTING AND IRRIGATION ABBREVIATIONS

NO SCALE

RSP H1 DATED JUNE 5, 2009 SUPERSEDES STANDARD PLAN H1
DATED MAY 1, 2006 - PAGE 201 OF THE STANDARD PLANS BOOK DATED MAY 2006.

REVISED STANDARD PLAN RSP H1

2006 REVISED STANDARD PLAN RSP H1

DIST	COUNTY	ROUTE	POST MILES TOTAL PROJECT	SHEET NO.	TOTAL SHEETS
06	Fre	168,180	R0.8/R10.5, R54.2/R62.9	68	79

LICENSED LANDSCAPE ARCHITECT

June 5, 2009
PLANS APPROVAL DATE

The State of California or its officers or agents shall not be responsible for the accuracy or completeness of electronic copies of this plan sheet.

Gregory A. Balzer 2516 — 10 January 2-28-11 Renewal Date 5-14-09 Date — LICENSED LANDSCAPE ARCHITECT — STATE OF CALIFORNIA

To accompany plans dated 3-7-11

EXISTING	PROPOSED	ITEM DESCRIPTION
		WATER METER (WM)
		BACKFLOW PREVENTER ASSEMBLY (BPA)
		BACKFLOW PREVENTER ASSEMBLY IN ENCLOSURE (BPAE)
		BACKFLOW PREVENTER ENCLOSURE (BPE)
		BOOSTER PUMP (BP)
		TRUCK LOADING STANDPIPE (TLS)
FS	FS	FLOW SENSOR (FS)
X	X	MASTER IRRIGATION CONTROLLER (MIC)
		AUXILIARY IRRIGATION CONTROLLER (AIC)
		IRRIGATION CONTROLLER (IC)/ IRRIGATION CONTROLLER (IC) (BATTERY) IRRIGATION CONTROLLER (IC) (SOLAR)
		IRRIGATION CONTROLLER(S) IN CONTROLLER ENCLOSURE CABINET (ICC)
		CONTROL AND NEUTRAL CONDUCTORS (CNC)
SCC	SCC	SPRINKLER CONTROL CONDUIT (SCC)
		IRRIGATION CROSSOVER
		EXTEND IRRIGATION CROSSOVER
		IRRIGATION SLEEVE
dip	DIP	DUCTILE IRON PIPE (SUPPLY LINE) (MAIN) (DIP)
		GALVANIZED STEEL PIPE (SUPPLY LINE) (MAIN) (GSP)
		GALVANIZED STEEL PIPE (SUPPLY LINE) (LATERAL) (GSP)
		PLASTIC PIPE (PR 200) (SUPPLY LINE) (MAIN)
		PLASTIC PIPE (PR 200) (SUPPLY LINE) (LATERAL)
		PLASTIC PIPE (IRRIGATION LINE)
		REMOTE CONTROL VALVE (RCV) REMOTE CONTROL VALVE (MASTER) (RCVM) REMOTE CONTROL VALVE (MASTER) W/FLOW METER (RCVMF)
		MANUAL CONTROL VALVE (MCV)
		VALVE ASSEMBLY UNIT (VAU)
		WYE STRAINER (WS)
		FILTER ASSEMBLY UNIT (FAU)
		GATE VALVE (GV)
		BALL VALVE (BV)

EXISTING	PROPOSED	ITEM DESCRIPTION
		QUICK COUPLING VALVE (QCV)
		CAM COUPLER ASSEMBLY (CCA)
		PRESSURE REDUCING VALVE (PRV)
		PRESSURE RELIEF VALVE (PRLV)
		FLOW CONTROL VALVE (FCV)
		COMBINATION AIR RELEASE VALVE (CARV)
		CHECK VALVE (CV)
		FLUSH VALVE (FV)
		NOZZLE LINE W/TURNING UNION
		IRRIGATION SYSTEM
		IRRIGATION SYSTEM TO BE REMOVED
		CHAIN LINK GATE
		QUICK COUPLING VALVE W/SPRINKLER PROTECTOR
3	3	SPRINKLER W/SPRINKLER PROTECTOR
	C	CONNECT TO EXISTING SYSTEM
		CAP
		CAP EXISTING

VALVE CODE

RCV SIZE
IRRIGATION CONTROLLER
CONTROLLER STATION
VALVE IN PARALLEL (IF APPLICABLE)
GPM
QUANTITY OF SPRINKLERS (WHEN SHOWN)

* 2½"-A-2b-40 -60

MCV SIZE
VALVE NUMBER
GPM
QUANTITY OF TYPE SPRINKLERS (WHEN SHOWN)

* 2"-3-30 -50

* VALVE CODES FOR EXISTING VALVES ARE SHOWN IN A DASHED ENCLOSURE.

STATE OF CALIFORNIA
DEPARTMENT OF TRANSPORTATION

PLANTING AND IRRIGATION SYMBOLS

NO SCALE

RSP H2 DATED JUNE 5, 2009 SUPERSEDES RSP H2 DATED MARCH 7, 2008 AND STANDARD PLAN H2 DATED MAY 1, 2006 - PAGE 202 OF THE STANDARD PLANS BOOK DATED MAY 2006.

REVISED STANDARD PLAN RSP H2

2006 REVISED STANDARD PLAN RSP H2

DIST	COUNTY	ROUTE	POST MILES TOTAL PROJECT	SHEET NO.	TOTAL SHEETS
06	Fre	168,180	R0.8/R10.5, R54.2/R62.9	69	79

LICENSED LANDSCAPE ARCHITECT

June 5, 2009
PLANS APPROVAL DATE

LICENSED LANDSCAPE ARCHITECT
Gregory A. Balzer 2516
10 Expiration
2-28-11
Renewal Date
5-14-09
Date
STATE OF CALIFORNIA

The State of California or its officers or agents shall not be responsible for the accuracy or completeness of electronic copies of this plan sheet.

To accompany plans dated 3-7-11

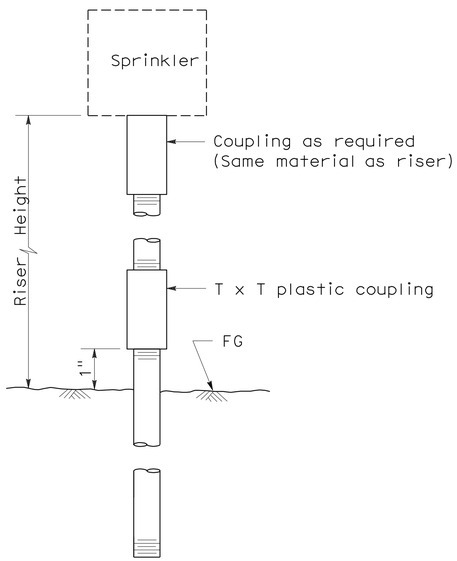

ELEVATION
RISER TYPE I

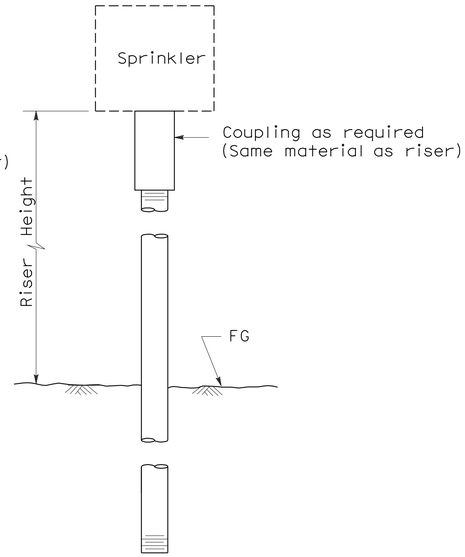

ELEVATION
RISER TYPE II

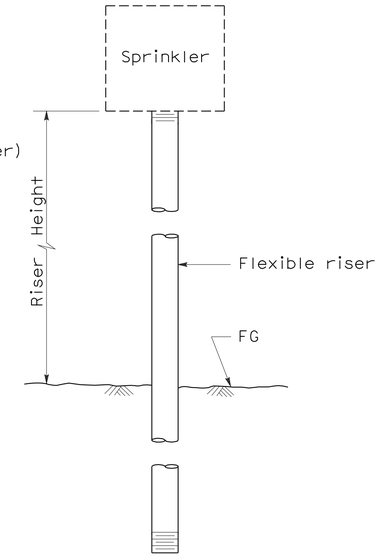

ELEVATION
RISER TYPE III

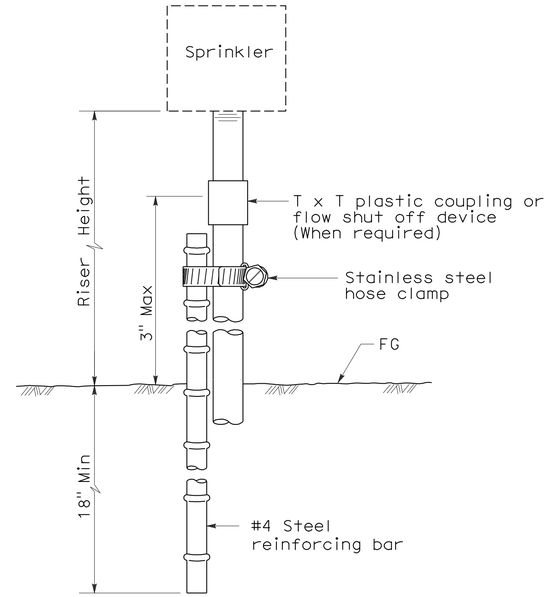

ELEVATION
RISER TYPE IV

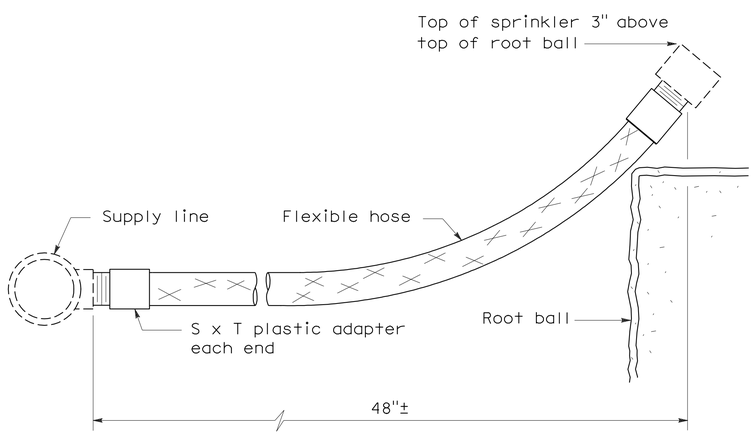

ELEVATION
RISER TYPE V

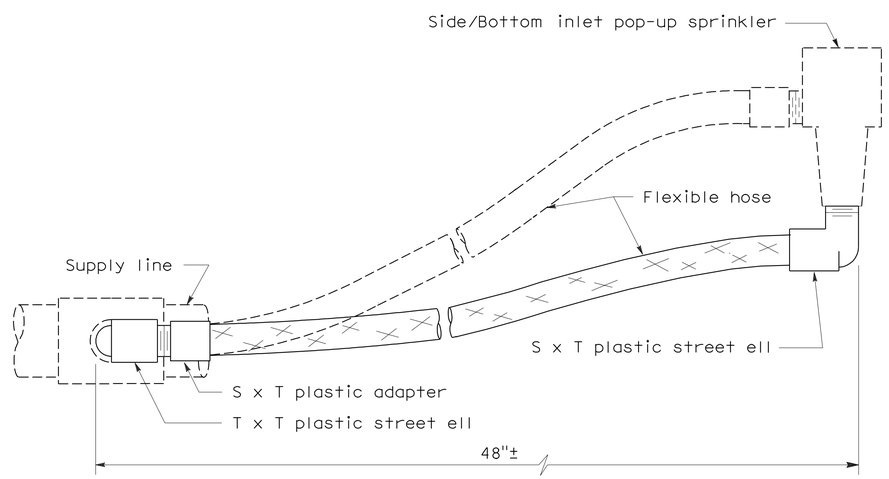

ELEVATION
RISER TYPE VI

STATE OF CALIFORNIA
DEPARTMENT OF TRANSPORTATION

PLANTING AND IRRIGATION DETAILS

NO SCALE

RSP H5 DATED JUNE 5, 2009 SUPERSEDES STANDARD PLAN H5
DATED MAY 1, 2006 - PAGE 205 OF THE STANDARD PLANS BOOK DATED MAY 2006.

REVISED STANDARD PLAN RSP H5

2006 REVISED STANDARD PLAN RSP H5

5-28-09

DIST	COUNTY	ROUTE	POST MILES TOTAL PROJECT	SHEET NO.	TOTAL SHEETS
06	Fre	168,180	R0.8/R10.5, R54.2/R62.9	70	79

Randell D. Hiatt
REGISTERED CIVIL ENGINEER

June 6, 2008
PLANS APPROVAL DATE

REGISTERED PROFESSIONAL ENGINEER
Randell D. Hiatt
No. C50200
Exp. 6-30-09
CIVIL
STATE OF CALIFORNIA

The State of California or its officers or agents shall not be responsible for the accuracy or completeness of electronic copies of this plan sheet.

To accompany plans dated 3-7-11

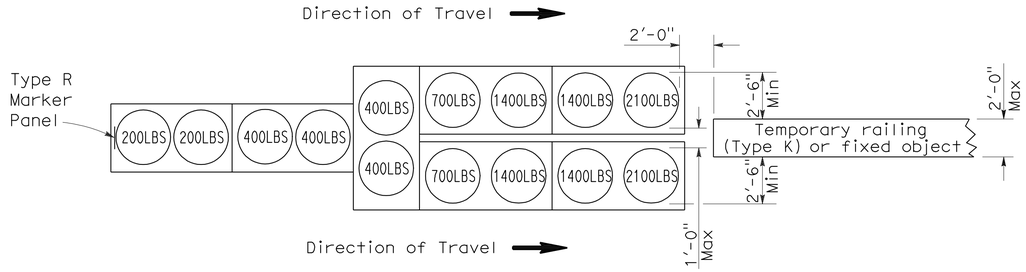

ARRAY 'TU14'

Approach speed 45 mph or more

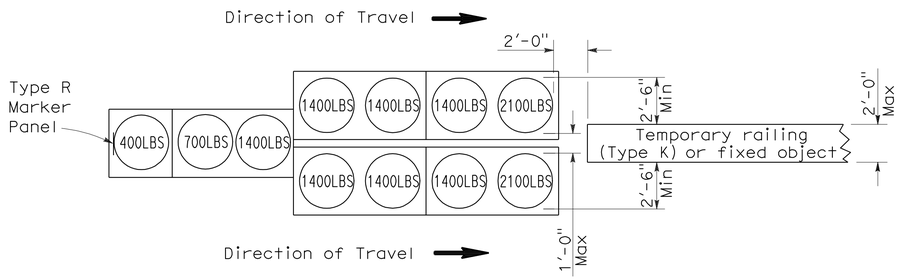

ARRAY 'TU11'

Approach speed less than 45 mph

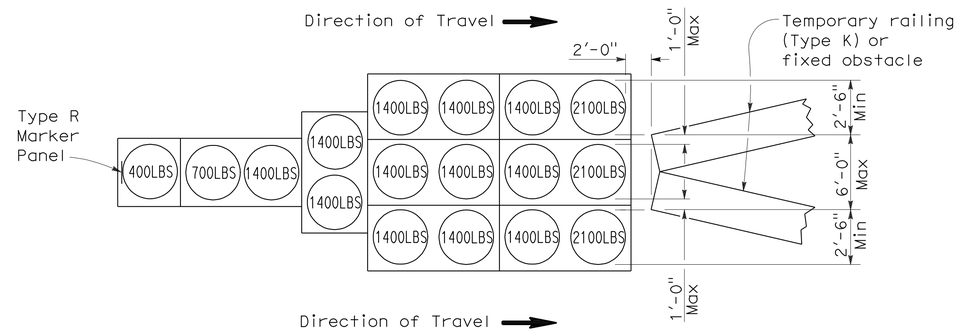

ARRAY 'TU17'

Approach speed less than 45 mph

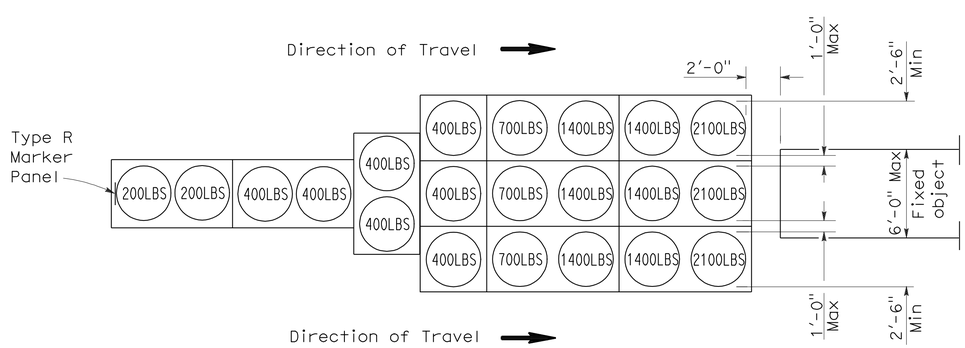

ARRAY 'TU21'

Approach speed 45 mph or more

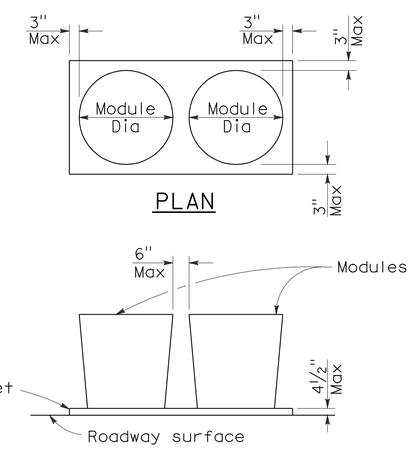

PLAN

ELEVATION

CRASH CUSHION PALLET DETAIL

See Note 7

NOTES:

1. (XXX) Indicates sand filled module location and weight of sand in pounds for each module. Module spacing is based on the greater diameter of the module.
2. All sand weights are nominal.
3. Temporary crash cushion arrays shall not encroach on the traveled way.
4. Place the top of Type R marker panel 1" below the module lid.
5. Refer to Standard Plan A73B for marker details.
6. Approach speeds indicated conform to NCHRP 350 Report criteria.
7. Use of pallets is optional.

STATE OF CALIFORNIA
DEPARTMENT OF TRANSPORTATION

TEMPORARY CRASH CUSHION, SAND FILLED (UNIDIRECTIONAL)

NO SCALE

RSP T1A DATED JUNE 6, 2008 SUPERSEDES STANDARD PLAN T1A
DATED MAY 1, 2006 - PAGE 211 OF THE STANDARD PLANS BOOK DATED MAY 2006.

REVISED STANDARD PLAN RSP T1A

2006 REVISED STANDARD PLAN RSP T1A

DIST	COUNTY	ROUTE	POST MILES TOTAL PROJECT	SHEET NO.	TOTAL SHEETS
06	Fre	168,180	R0.8/R10.5, R54.2/R62.9	71	79

Randell D. Hiatt
REGISTERED CIVIL ENGINEER

June 6, 2008
PLANS APPROVAL DATE

REGISTERED PROFESSIONAL ENGINEER
Randell D. Hiatt
No. C50200
Exp. 6-30-09
CIVIL
STATE OF CALIFORNIA

The State of California or its officers or agents shall not be responsible for the accuracy or completeness of electronic copies of this plan sheet.

To accompany plans dated 3-7-11

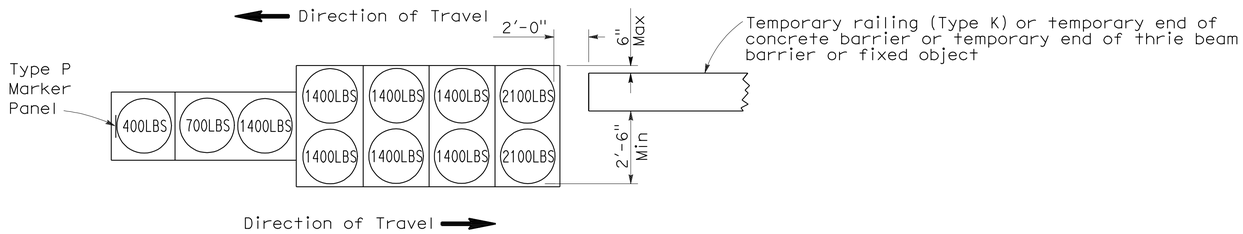

ARRAY 'TB11'

Approach speed less than 45 mph

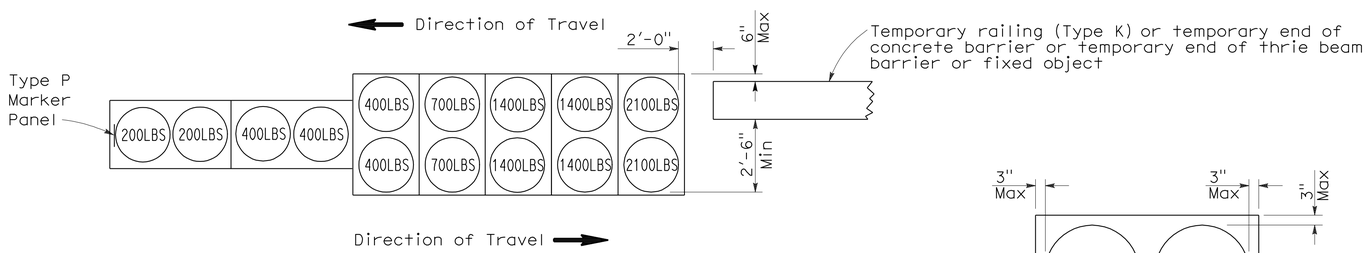

ARRAY 'TB14'

Approach speed 45 mph or more

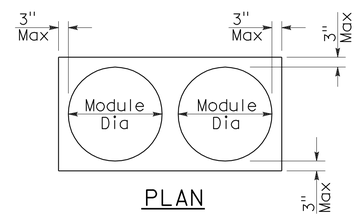

PLAN

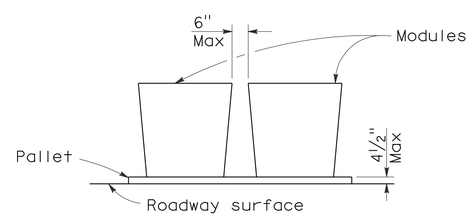

ELEVATION

CRASH CUSHION PALLET DETAIL

See Note 7

NOTES:

1. (XXX) Indicates sand filled module location and weight of sand in pounds for each module. Module spacing is based on the greater diameter of the module.
2. All sand weights are nominal.
3. Temporary crash cushion arrays shall not encroach on the traveled way.
4. Place the Type P marker panel so that the bottom of the panel rests upon the pallet.
5. Refer to Standard Plan A73B for marker details.
6. Approach speeds indicated conform to NCHRP 350 Report criteria.
7. Use of pallets is optional.

STATE OF CALIFORNIA
DEPARTMENT OF TRANSPORTATION

TEMPORARY CRASH CUSHION, SAND FILLED (BIDIRECTIONAL)

NO SCALE

RSP T1B DATED JUNE 6, 2008 SUPERSEDES STANDARD PLAN T1B
DATED MAY 1, 2006 - PAGE 212 OF THE STANDARD PLANS BOOK DATED MAY 2006.

REVISED STANDARD PLAN RSP T1B

2006 REVISED STANDARD PLAN RSP T1B

5-15-08

DIST	COUNTY	ROUTE	POST MILES TOTAL PROJECT	SHEET NO.	TOTAL SHEETS
06	Fre	168,180	R0.8/R10.5, R54.2/R62.9	72	79

Randell D. Hiatt
REGISTERED CIVIL ENGINEER

June 6, 2008
PLANS APPROVAL DATE

REGISTERED PROFESSIONAL ENGINEER
Randell D. Hiatt
No. C50200
Exp. 6-30-09
CIVIL
STATE OF CALIFORNIA

The State of California or its officers or agents shall not be responsible for the accuracy or completeness of electronic copies of this plan sheet.

To accompany plans dated 3-7-11

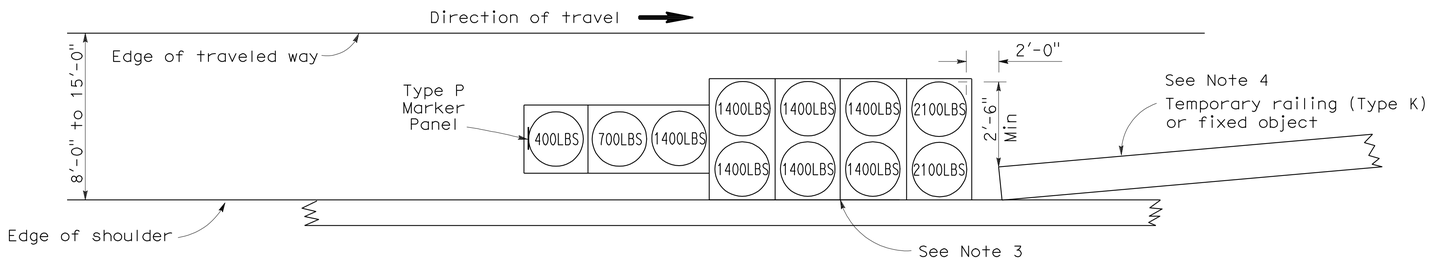

ARRAY 'TS11'

Approach speed less than 45 mph
See Note 9

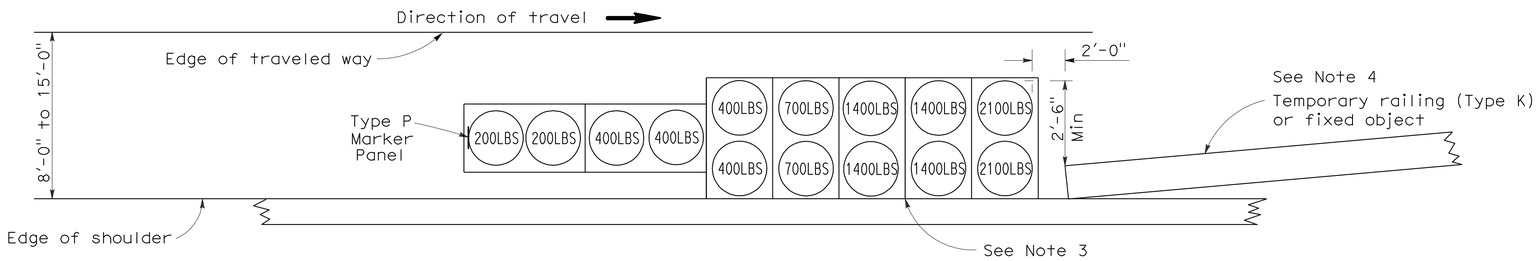

ARRAY 'TS14'

Approach speed 45 mph or more
See Note 9

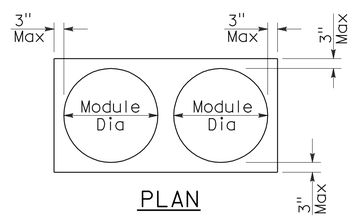

PLAN

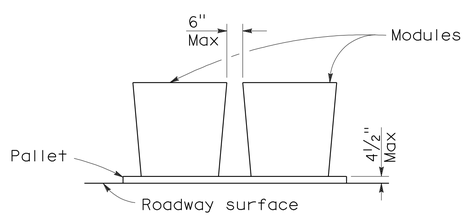

ELEVATION

CRASH CUSHION PALLET DETAIL

See Note 11

NOTES:

1. (XXX) Indicates sand filled module location and weight of sand in pounds for each module. Module spacing is based on the greater diameter of the module.
2. All sand weights are nominal.
3. The temporary crash cushion arrays shown on this plan shall be used only in locations where there will be traffic on one side of the temporary crash cushion array.
4. If the fixed object or approach end of the temporary railing is less than 15'-0" from the edge of traveled way, a temporary crash cushion is required in a construction or work zone.
5. Temporary crash cushion arrays shall not encroach on the traveled way.
6. Arrays for median shoulders shall conform to details shown on this plan for outside shoulders.
7. Place the Type P marker panel so that the bottom of the panel rests upon the pallet and faces traffic.
8. Refer to Standard Plan A73B for marker details.
9. For shoulder widths less than 8'-0", appropriate approved crash cushion protection, other than sand filled modules, shall be provided at fixed objects and at approach ends of temporary railing. The specific type of crash cushion shall be as shown on the project plans or as specified in the Special Provisions, or if not shown on the project plans or specified in the Special Provisions, shall be as approved by the Engineer.
10. Approach speeds indicated conform to NCHRP 350 Report criteria.
11. Use of pallets is optional.

STATE OF CALIFORNIA
DEPARTMENT OF TRANSPORTATION

TEMPORARY CRASH CUSHION, SAND FILLED (SHOULDER INSTALLATIONS)

NO SCALE

RSP T2 DATED JUNE 6, 2008 SUPERSEDES STANDARD PLAN T2
DATED MAY 1, 2006 - PAGE 213 OF THE STANDARD PLANS BOOK DATED MAY 2006.

REVISED STANDARD PLAN RSP T2

2006 REVISED STANDARD PLAN RSP T2

DIST	COUNTY	ROUTE	POST MILES TOTAL PROJECT	SHEET NO.	TOTAL SHEETS
06	Fre	168,180	R0.8/R10.5, R54.2/R62.9	73	79

LICENSED LANDSCAPE ARCHITECT

August 15, 2008
PLANS APPROVAL DATE

The State of California or its officers or agents shall not be responsible for the accuracy or completeness of electronic copies of this plan sheet.

LICENSED LANDSCAPE ARCHITECT — Robert B. Schott 3625 — Signature — 11-04-08 Renewal Date — 08-11-08 Date — STATE OF CALIFORNIA

To accompany plans dated 3-7-11

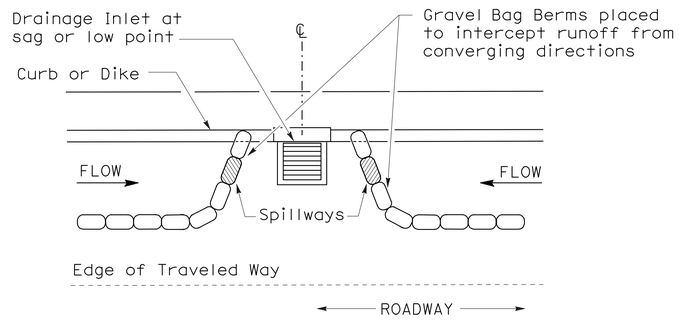

PLAN

CONFIGURATION FOR SAG POINT INLET (GRAVEL BAG BERM)

GRAVEL BAG BERM (TYPE 3A) SPACING TABLE

SLOPE OF ROADWAY (PERCENT)	1 to 3.9	4 to 5.9	6 to 7.9	8 to 10	10+
INTERVAL BETWEEN BERM	100′	75′	50′	25′	12′

For slope of less than 1%, install barriers only if erosion/sediment is prevalent

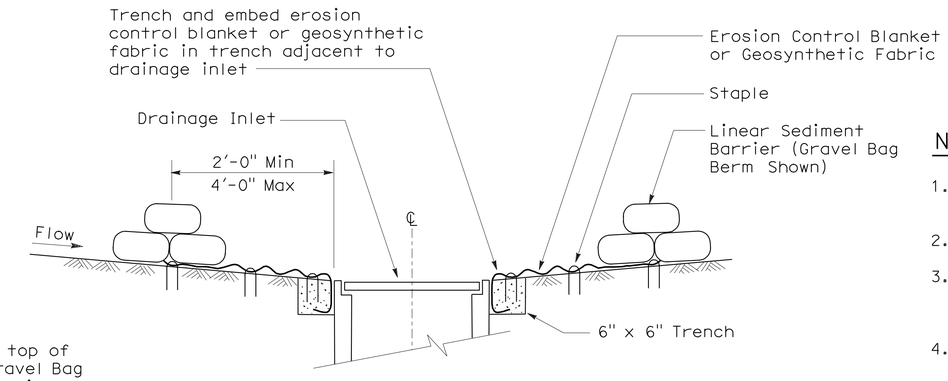

SECTION A-A

NOTES:

1. Place safety cones adjacent to drainage inlet protection.
2. Dimensions may vary to fit field conditions.
3. Install a minimum of 3 gravel bag berms upstream of each drainage inlet to be protected.
4. Position erosion control blanket or geosynthetic fabric at edge of concrete apron and secure in trench.
5. Erosion control blanket or geosynthetic fabric is not required if the area adjacent to the drainage inlet is vegetated or paved.

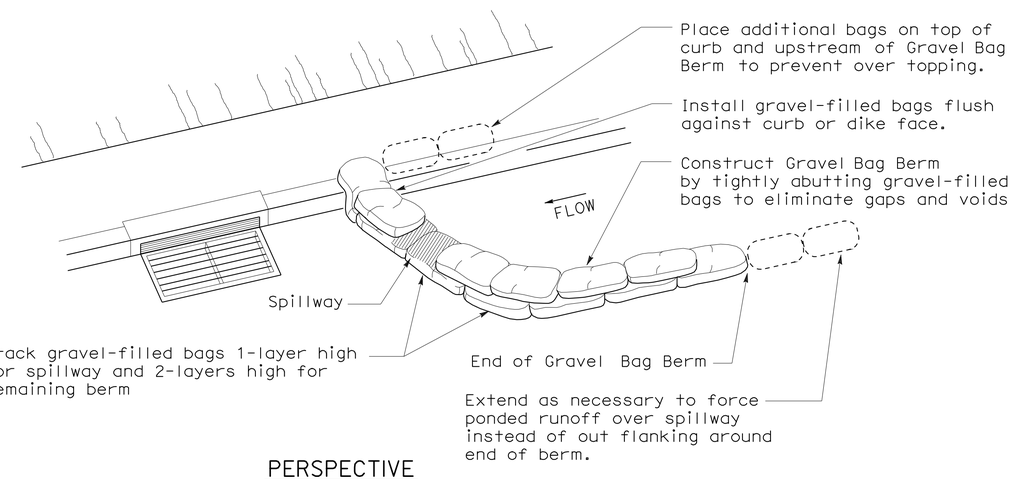

PERSPECTIVE

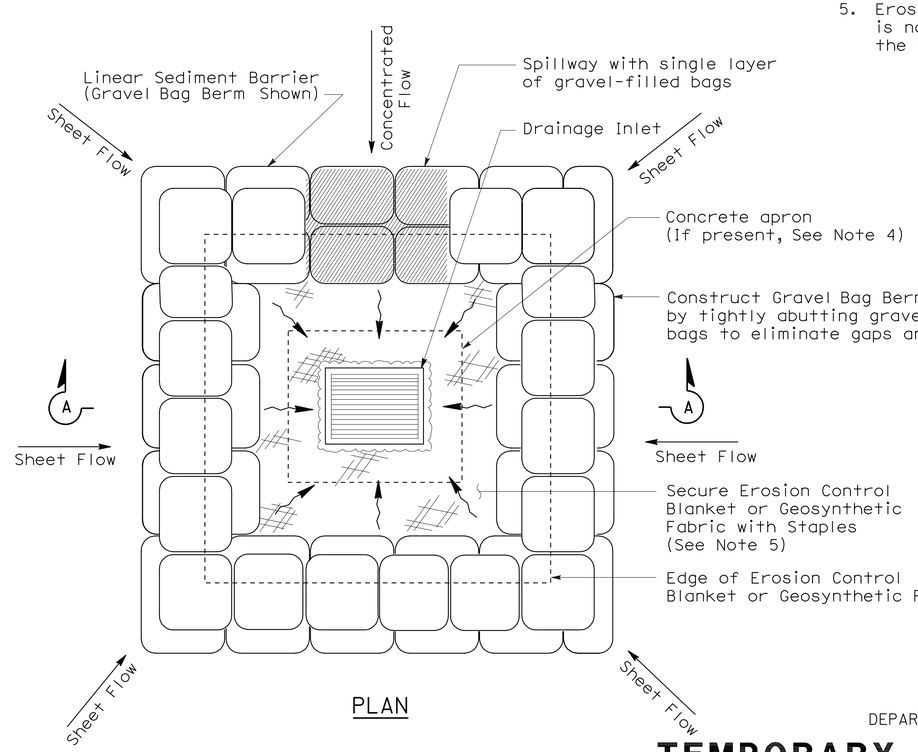

PLAN

TEMPORARY DRAINAGE INLET PROTECTION (TYPE 3B)

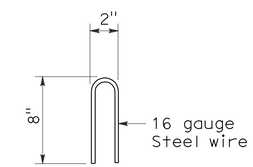

STAPLE DETAIL

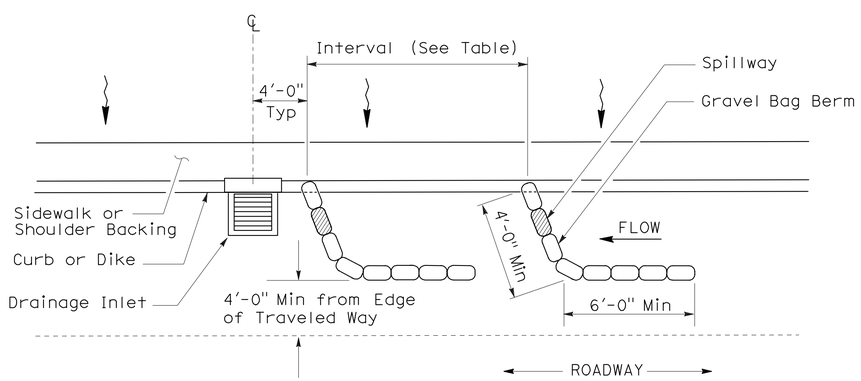

PLAN

TEMPORARY DRAINAGE INLET PROTECTION (TYPE 3A) (GRAVEL BAG BERM)

STATE OF CALIFORNIA
DEPARTMENT OF TRANSPORTATION

TEMPORARY WATER POLLUTION CONTROL DETAILS (TEMPORARY DRAINAGE INLET PROTECTION)

NO SCALE

NSP T62 DATED AUGUST 15, 2008 SUPPLEMENTS THE STANDARD PLANS BOOK DATED MAY 2006.

NEW STANDARD PLAN NSP T62

2006 NEW STANDARD PLAN NSP T62

7-11-08

DIST	COUNTY	ROUTE	POST MILES TOTAL PROJECT	SHEET NO.	TOTAL SHEETS
06	Fre	168,180	R0.8/R10.5, R54.2/R62.9	74	79

LICENSED LANDSCAPE ARCHITECT

August 15, 2008
PLANS APPROVAL DATE

The State of California or its officers or agents shall not be responsible for the accuracy or completeness of electronic copies of this plan sheet.

LICENSED LANDSCAPE ARCHITECT — Robert B. Schott — Signature — 11-04-08 Renewal Date — 08-11-08 Date — STATE OF CALIFORNIA

To accompany plans dated 3-7-11

FLEXIBLE SEDIMENT BARRIER SPACING TABLE

SLOPE OF ROADWAY (PERCENT)	0 to 0.9	1 to 1.9	2 to 2.9	3 to 4	5+
INTERVAL BETWEEN BARRIERS	50′	35′	30′	25′	20′
ANGLE FROM FACE OF CURB	70°	70°	70°	45°	45°
SUGGESTED BARRIER LENGTH	6′	6′	6′	6′	6′

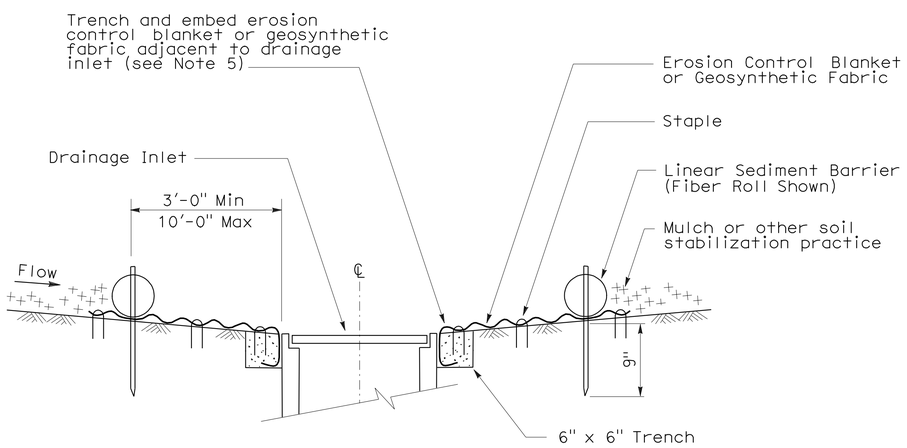

SECTION A-A

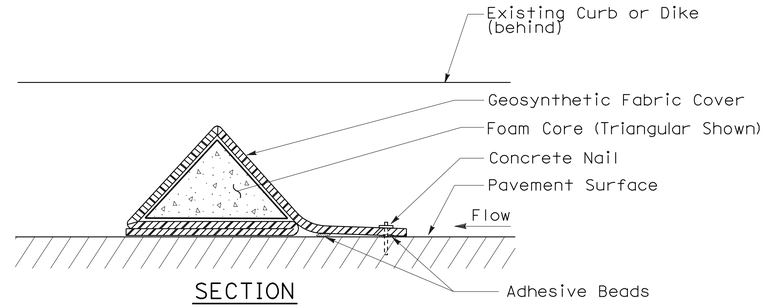

SECTION

FLEXIBLE SEDIMENT BARRIER DETAIL (FOAM BARRIER SHOWN)

NOTES:

1. See Standard Plan T51 for Temporary Silt Fence.
2. Dimensions may vary to fit field conditions.
3. Install a minimum of 3 flexible sediment barriers upstream of each drainage inlet to be protected.
4. Position erosion control blanket or geosynthetic fabric at edge of concrete apron and secure in trench.
5. Erosion control blanket or geosynthetic fabric is not required if the area adjacent to the drainage inlet is vegetated.

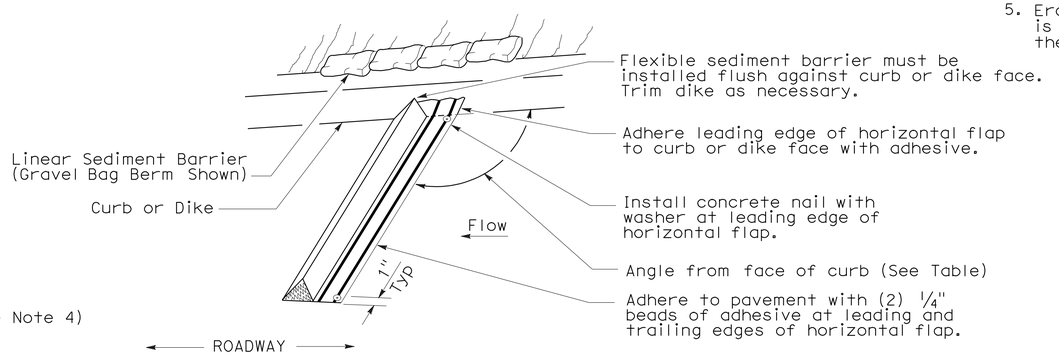

PERSPECTIVE

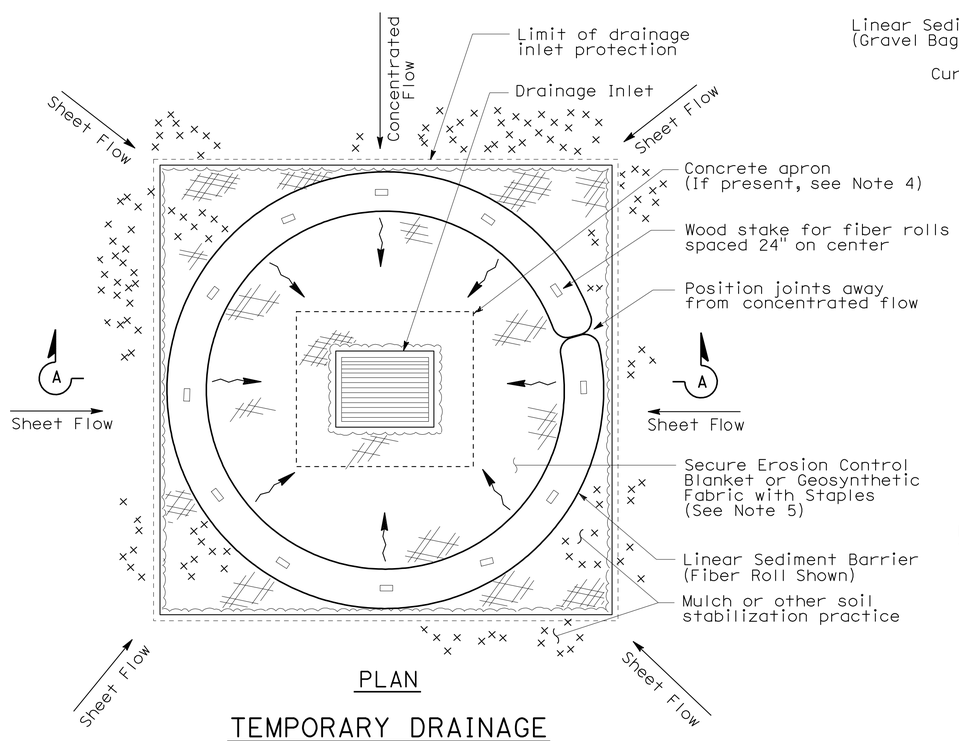

PLAN

TEMPORARY DRAINAGE INLET PROTECTION (TYPE 4A)

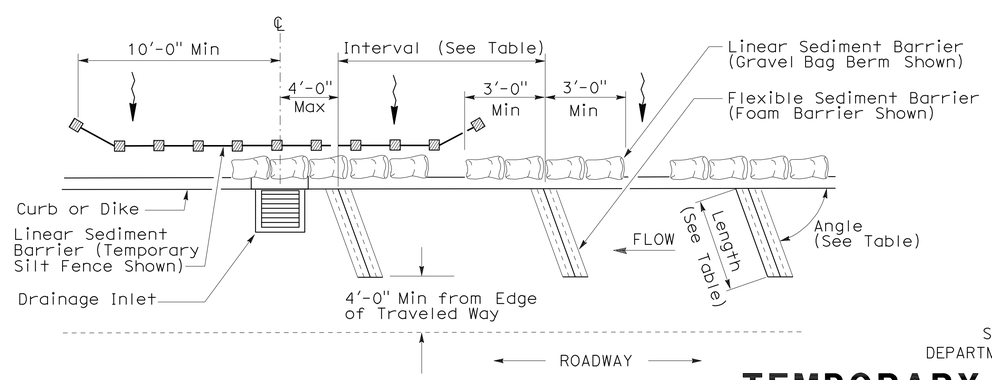

PLAN

TEMPORARY DRAINAGE INLET PROTECTION (TYPE 4B) FLEXIBLE SEDIMENT BARRIER

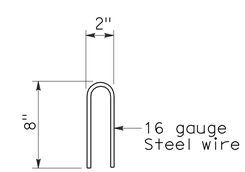

STAPLE DETAIL

STATE OF CALIFORNIA
DEPARTMENT OF TRANSPORTATION

TEMPORARY WATER POLLUTION CONTROL DETAILS (TEMPORARY DRAINAGE INLET PROTECTION)

NO SCALE

NSP T63 DATED AUGUST 15, 2008 SUPPLEMENTS THE STANDARD PLANS BOOK DATED MAY 2006.

NEW STANDARD PLAN NSP T63

2006 NEW STANDARD PLAN NSP T63

7-11-08

DIST	COUNTY	ROUTE	POST MILES TOTAL PROJECT	SHEET NO.	TOTAL SHEETS
06	Fre	168,180	R0.8/R10.5, R54.2/R62.9	75	79

LICENSED LANDSCAPE ARCHITECT

August 15, 2008
PLANS APPROVAL DATE

LICENSED LANDSCAPE ARCHITECT — Robert B. Schott — Signature — 11-04-08 Renewal Date — 08-11-08 Date — STATE OF CALIFORNIA

The State of California or its officers or agents shall not be responsible for the accuracy or completeness of electronic copies of this plan sheet.

To accompany plans dated 3-7-11

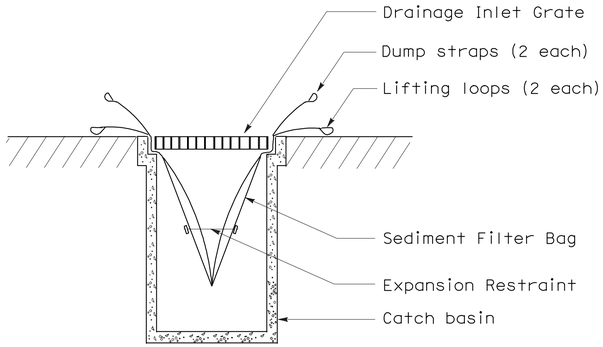

SECTION B-B

SEDIMENT FILTER BAG DETAIL

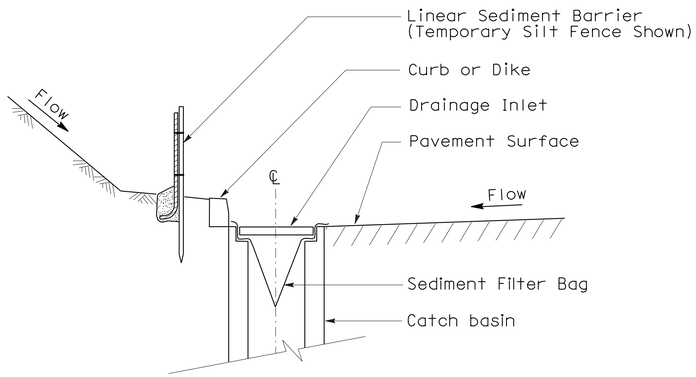

SECTION A-A

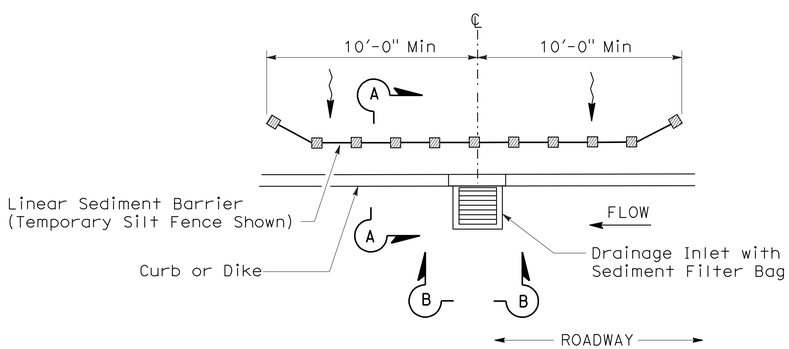

PLAN

TEMPORARY DRAINAGE INLET PROTECTION (TYPE 5) (SEDIMENT FILTER BAG)

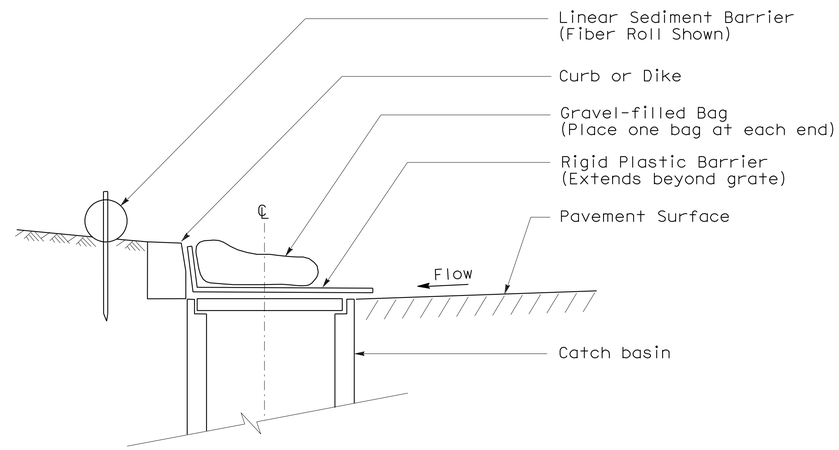

SECTION

TEMPORARY DRAINAGE INLET PROTECTION (TYPE 6A) (CATCH BASIN WITH GRATE)

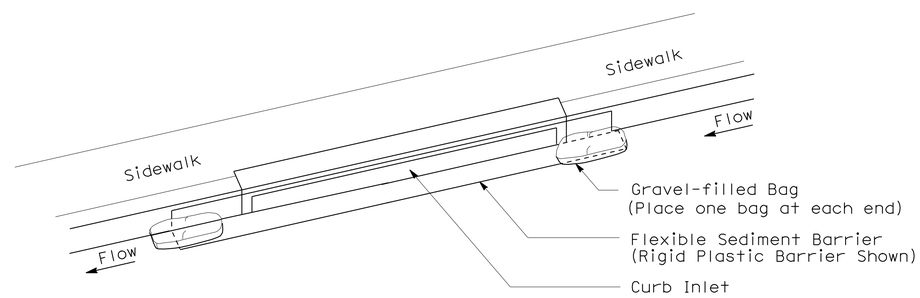

PERSPECTIVE

TEMPORARY DRAINAGE INLET PROTECTION (TYPE 6B) (CURB INLET WITHOUT GRATE)

NOTES:

1. See Standard Plan T51 for Temporary Silt Fence.
2. Dimensions may vary to fit field conditions.

STATE OF CALIFORNIA
DEPARTMENT OF TRANSPORTATION

TEMPORARY WATER POLLUTION CONTROL DETAILS (TEMPORARY DRAINAGE INLET PROTECTION)

NO SCALE

NSP T64 DATED AUGUST 15, 2008 SUPPLEMENTS THE STANDARD PLANS BOOK DATED MAY 2006.

NEW STANDARD PLAN NSP T64

2006 NEW STANDARD PLAN NSP T64

DIST	COUNTY	ROUTE	POST MILES TOTAL PROJECT	SHEET NO.	TOTAL SHEETS
06	Fre	168,180	R0.8/R10.5, R54.2/R62.9	76	79

REGISTERED ELECTRICAL ENGINEER

October 5, 2007
PLANS APPROVAL DATE

REGISTERED PROFESSIONAL ENGINEER Jeffery G. McRae No. E14512 Exp. 6-30-08 ELECTRICAL STATE OF CALIFORNIA

The State of California or its officers or agents shall not be responsible for the accuracy or completeness of electronic copies of this plan sheet.

To accompany plans dated 3-7-11

ELECTROLIERS

STANDARD TYPES
15, 15D
15 STRUCTURE
21, 21D STRUCTURE
30
31
32
35
36-20A

High mast light pole

Double Arm lighting standard

Existing electrolier

Electrolier foundation (Future installation)

NOTES:

1. Luminaires shall be 310 W HPS when installed on Type 21, 21D, 30, 31, 32, 35 and 36-20A Standards, unless otherwise specified. Luminaires shall be 200 W HPS when installed on other type standards or poles, unless otherwise specified.
2. Luminaires shall be the cutoff type, ANSI Type Ⅲ medium cutoff lighting distribution, unless otherwise specified.
3. Variations noted adjacent to symbol on project plans.

Electrolier (see project notes or project plans)

Luminaire on wood pole

STANDARD NOTES:

- AB — Abandon. If applied to conduit, remove conductors.
- BC — Install pull box in existing conduit run.
- BP — Pedestrian barricade, type as indicated on plan.
- CB — Install conduit into existing pull box.
- CC — Connect new and existing conduit. Remove existing conductors and install conductors as indicated.
- CF — Conduit to remain for future use. Remove conductors. Install pull wire or rope.
- DH — Detector handhole.
- FA — Foundation to be abandoned.
- IS — Install sign on signal mast arm.
- NS — No slip base on standard.
- PEC — Photoelectric control.
- PEU — Photoelectric unit.
- RC — Equipment or material to be removed and become the property of the Contractor.
- RE — Remove electrolier, fuses and ballast. Tape ends of conductors.
- RL — Relocate equipment.
- RR — Remove and reuse equipment.
- RS — Remove and salvage equipment.
- SC — Splice new to existing conductors.
- SD — Service disconnect.
- SF — Standard to remain for future use. Remove luminaire, pole conductors, fuses and ballast.
- TSP — Telephone service point.

ABBREVIATIONS AND EQUIPMENT DESIGNATIONS

PROPOSED	EXISTING	
BBS	bbs	Battery backup system
BC	bc	Bolt circle
C	C	Conduit
CCTV	cctv	Closed circuit television
CKT	ckt	Circuit
CMS	cms	Changeable message sign
DLC	dlc	Loop detector lead-in cable
EMS	ems	Extinguishable message sign
EVC	evc	Emergency vehicle cable
EVD	evd	Emergency vehicle detector
FB	fb	Flashing beacon
FBCA	fbca	Flashing beacon control assembly
FBS	fbs	Flashing beacon with slip base
FO	fo	Fiber optic
G	G	Ground (Equipment Grounding Conductor)
GFCI	GFCI	Ground fault circuit interrupt
HAR	har	Highway advisory radio
HEX	hex	Hexagonal
HPS	hps	High pressure sodium
IISNS	iisns	Internally illuminated street name sign
ISL	isl	Induction sign lighting
LED	led	Light emitting diode
LMA	lma	Luminaire mast arm
LPS	lps	Low pressure sodium
LTG	ltg	Lighting
LUM	lum	Luminaire
MAT	mat	Mast arm mounting vehicle signal faces, top attachment
MAS	mas	Mast arm mounting vehicle signal faces, side attachment
MAS-4A	mas-4A	Mast arm mounting vehicle signal faces, side attachment - 4 signal section
MAS-4B	mas-4B	
MAS-4C	mas-4C	
MAS-5A	mas-5A	Mast arm mounting vehicle signal faces, side attachment - 5 signal section
MAS-5B	mas-5B	
MC	mc	Mercury contactor
M/M	m/m	Multiple to multiple transformer
MT	mt	Conduit with pull wire or rope only
MTG	mtg	Mounting
	mv	Mercury vapor lighting fixture
N	N	Neutral (Grounded Conductor)
NC	NC	Normally closed
NO	NO	Normally open
PB	pb	Pull box
PEC	pec	Photoelectric control (Type Ⅰ, Ⅱ, Ⅲ, Ⅳ or Ⅴ as shown)
PED	ped	Pedestrian
PEU	peu	Photoelectric unit
PPB	ppb	Pedestrian push button
RL		Relocated equipment
RM	rm	Ramp metering
SB	sb	Slip base
SIC	sic	Signal interconnect cable
SIG	sig	Signal
SMA	sma	Signal mast arm
SNS	sns	Street name sign
SP	sp	Service point
TDC	tdc	Telephone demarcation cabinet
TMS	tms	Traffic monitoring station
TOS	tos	Traffic Operations System
VEH	veh	Vehicle
XFMR	xfmr	Transformer
COMM	comm	Communication
RWIS	rwis	Roadway weather information system

SOFFIT AND WALL MOUNTED LUMINAIRES

Pendant, 70 W HPS unless otherwise specified.

Flush, 70 W HPS unless otherwise specified.

Wall surface, 70 W HPS unless otherwise specified.

Existing soffit or wall luminaire to remain unmodified.

Existing soffit or wall luminaire to be modified as specified.

NOTE:

Arrow indicates "street side" of luminaire.

STATE OF CALIFORNIA
DEPARTMENT OF TRANSPORTATION

ELECTRICAL SYSTEMS (SYMBOLS AND ABBREVIATIONS)

NO SCALE

RSP ES-1A DATED OCTOBER 5, 2007 SUPERSEDES STANDARD PLAN ES-1A DATED MAY 1, 2006 - PAGE 400 OF THE STANDARD PLANS BOOK DATED MAY 2006.

REVISED STANDARD PLAN RSP ES-1A

2006 REVISED STANDARD PLAN RSP ES-1A

DIST	COUNTY	ROUTE	POST MILES TOTAL PROJECT	SHEET NO.	TOTAL SHEETS
06	Fre	168,180	R0.8/R10.5, R54.2/R62.9	77	79

REGISTERED ELECTRICAL ENGINEER

October 5, 2007
PLANS APPROVAL DATE

REGISTERED PROFESSIONAL ENGINEER
Jeffery G. McRae
No. E14512
Exp. 6-30-08
ELECTRICAL
STATE OF CALIFORNIA

The State of California or its officers or agents shall not be responsible for the accuracy or completeness of electronic copies of this plan sheet.

To accompany plans dated 3-7-11

CONDUIT

PROPOSED	EXISTING	
		Lighting Conduit, unless otherwise indicated or noted
		Traffic signal conduit
C	c	Communication conduit
T	t	Telephone conduit
F	f	Fire alarm conduit
FO	fo	Fiber optic conduit
		Conduit termination (RSP ES-9A C)
R	r	Conduit riser in/on structure or service pole

SERVICE EQUIPMENT

PROPOSED	EXISTING	
OH	oh	Overhead lines
U	U	Wood pole "U" indicates utility owned
		Pole guy with anchor
		Utility transformer - ground mounted
III		Service equipment enclosure type
		Service equipment enclosure door indicates front of enclosure
T	t	Telephone demarcation cabinet

POLE-MOUNTED SERVICE DESIGNATION

Type of installation

TYPE H SERVICE - 28'-10" ← Pole height above grade

ILLUMINATED OVERHEAD SIGN

PROPOSED	EXISTING	
		Overhead sign - Single post
		Overhead sign - Two post
		Overhead sign - Mounted on structure
		Overhead sign with electrolier

SIGNAL EQUIPMENT

PROPOSED	EXISTING	
		Pedestrian signal face
		Pedestrian push button post
		Pedestrian barricade
		Vehicle signal face (with backplate, 3-Section: red, yellow and green)
		Vehicle signal face with angle visors
PV	PV	Modifications of basic symbols: "L" indicates all non-arrow sections louvered "LG" indicates louvered green section only "PV" indicates 12" programmed visibility sections "8" indicates all 8" sections (only when specified)
		Type 15TS and Vehicle signal face
		Vehicle signal face with red, yellow and green left arrow sections
		Vehicle signal face with red and yellow sections and up green arrow
		Vehicle signal face (5 Section) with red, yellow and green sections and yellow and green right arrows
		Type 1 Standard and attached vehicle signal faces
		Standard with signal mast arm only and attached vehicle signal faces and internally illuminated street name sign
		Type 33 Standard, Left-turn vehicle signal face and sign
		Standard with luminaire and signal mast arms and attached vehicle signal faces
		Cantilever flashing beacon Type 9 Frame, with a sign unless otherwise specified or indicated
		Type 15-FBS Standard with two vehicle signal face sections with lens, backplate and visor with a sign
R	Y	Flashing beacon. One vehicle signal face section with lens, backplate and visor. "R" indicates red indication, "Y" indicates yellow indication
		Controller assembly. Door indicates front of cabinet

SIGNAL EQUIPMENT Cont

PROPOSED	EXISTING	
		Guard post
		Type 1 Standard with "Meter On" sign
		Emergency Vehicle detector

NOTES:

1. All signal sections shall be 12" unless shown otherwise.
2. Signal heads shall be provided with backplates unless shown otherwise.
3. Signal indication shall be LED.

STATE OF CALIFORNIA
DEPARTMENT OF TRANSPORTATION

ELECTRICAL SYSTEMS (SYMBOLS AND ABBREVIATIONS)

NO SCALE

RSP ES-1B DATED OCTOBER 5, 2007 SUPERCEDES STANDARD PLAN ES-1B
DATED MAY 1, 2006 - PAGE 401 OF THE STANDARD PLANS BOOK DATED MAY 2006.

REVISED STANDARD PLAN RSP ES-1B

2006 REVISED STANDARD PLAN RSP ES-1B

DIST	COUNTY	ROUTE	POST MILES TOTAL PROJECT	SHEET NO.	TOTAL SHEETS
06	Fre	168,180	R0.8/R10.5, R54.2/R62.9	78	79

REGISTERED ELECTRICAL ENGINEER

October 5, 2007
PLANS APPROVAL DATE

REGISTERED PROFESSIONAL ENGINEER Jeffery G. McRae No. E14512 Exp. 6-30-08 ELECTRICAL STATE OF CALIFORNIA

The State of California or its officers or agents shall not be responsible for the accuracy or completeness of electronic copies of this plan sheet.

To accompany plans dated 3-7-11

EQUIPMENT IDENTIFICATION

ILLUMINATED SIGN IDENTIFICATION NUMBER:

Sign No. 12345

10 ISL SCI 1.0

- Sign number - Place on post or structure
- Transformer rating (kVA)
- Lighting control type
- Number and type of fixtures

Do NOT place on standard or structure

ELECTROLIER OR EQUIPMENT IDENTIFICATION NUMBER:

12345 - 15'-0"

- Mast arm length, if shown. Do not place on standard or structure.
- Equipment number - Place on standard or structure. Existing equipment numbers are shown in parenthesis

CONDUIT AND CONDUCTOR IDENTIFICATION:

1½"C, 2#10, 15#14, 2 DLC

- Number and size of conductors and cables
- Size of conduit in inches

Ø1, Ø2, Ø2P, etc.	Traffic phase identification for signal faces, detectors and phase diagrams
1 2 3	Project note numbers
A B C	Equipment description, installation or item numbers
1 2 3	Conduit run numbers

SIGNAL AND LIGHTING STANDARD (TYPICAL DESIGNATION):

19A - 3 - 100

- Wind velocity = 100 mph
- Case 3 arm loading
- Standard type
- Standard Plan sheet number
- Detail number or letter

MISCELLANEOUS EQUIPMENT

PROPOSED	EXISTING	
CMS	cms	Changeable message sign
		Closed circuit television camera
		Highway advisory radio pole and antenna
EMS	ems	Extinguishable message sign
M V	m v	Detection device M = Microwave sensor V = Video image sensor

WIRING DIAGRAM LEGEND

P	Pole
CB	Circuit breaker
A	Ampere
V	Volt
M	Metered
UM	Unmetered
NB	Neutral bus
GB	Ground bus
G	Equipment grounding conductor
N	Grounded conductor (Neutral)

- External conductor
- Conductor or bus
- Tie point
- Contactor coil
- Contactor, Contact NO
- Terminal blocks
- Contactor, Contact NC
- Enclosure bond
- Grounding electrode
- Circuit breaker
- Receptacle

PULL BOXES

PROPOSED EXISTING

Pull box-No. 5 unless otherwise indicated or noted.

3 9A(21)

Pull box-Additional designations or descriptions

3	= No. 3½ pull box
5	= No. 5 pull box
6	= No. 6 pull box
7	= No. 7 (Ceiling pull box)
8	= No. 8 (Pendant soffit pull box)
9	= No. 9 pull box
9A	= No. 9A pull box

(C) = Communications pull box
(E) = Pull box with extension
(S) = Sprinkler control pull box
(21) = Anchor bolts and conduit for future installation of Type 21 Standard
(T) = Traffic pull box

VEHICLE DETECTORS

5 J 9 U

- U = Upper
- L = Lower
- Slot number in input file
- Input file (I or J)
- Phase

PROPOSED EXISTING

	Type A detector loop. Outline of sawcut shown.
	Type B detector loop. Outline of sawcut shown.
	Type C detector loop. Outline of sawcut shown.
	Type D detector loop. Outline of sawcut shown.
	Type E detector loop. Outline of sawcut shown.
	Type Q detector loop. Outline of sawcut shown.
	Magnetic detector
DH dh	Detector handhole
	Microwave or video detection zone

STATE OF CALIFORNIA
DEPARTMENT OF TRANSPORTATION

ELECTRICAL SYSTEMS (SYMBOLS AND ABBREVIATIONS)

NO SCALE

RSP ES-1C DATED OCTOBER 5, 2007 SUPERCEDES STANDARD PLAN ES-1C DATED MAY 1, 2006 - PAGE 402 OF THE STANDARD PLANS BOOK DATED MAY 2006.

REVISED STANDARD PLAN RSP ES-1C

2006 REVISED STANDARD PLAN RSP ES-1C

DIST	COUNTY	ROUTE	POST MILES TOTAL PROJECT	SHEET NO.	TOTAL SHEETS
06	Fre	168,180	R0.8/R10.5, R54.2/R62.9	79	79

REGISTERED ELECTRICAL ENGINEER

October 5, 2007
PLANS APPROVAL DATE

REGISTERED PROFESSIONAL ENGINEER Jeffery G. McRae No. E14512 Exp. 6-30-08 ELECTRICAL STATE OF CALIFORNIA

The State of California or its officers or agents shall not be responsible for the accuracy or completeness of electronic copies of this plan sheet.

To accompany plans dated 3-7-11

LOOP INSTALLATION PROCEDURE

1. Loops shall be centered in lanes.
2. Saw slots in pavement for loop conductors as shown in details.
3. Distance between side of loop and a lead-in saw cut from adjacent detectors shall be 2'-0" minimum. Distance between lead-in saw cuts shall be 6" minimum.
4. Bottom of saw slot shall be smooth with no sharp edges.
5. Slots shall be washed until clean, blown out and thoroughly dried before installing loop conductors.
6. Adjacent loops on the same sensor unit channel shall be wound in opposite directions.
7. Identify and tag loop circuit pairs in the pull box with loop number, start (S) and finish (F) of conductor. Identify and tag lead-in-cable with sensor number and phase.
8. Install loop conductor in slot using a 3/16" to 1/4" thick wood paddle. Hold loop conductors with wood paddles (at the bottom of the sawed slot) during sealant placement.
9. No more than 2 twisted pairs shall be installed in one sawed slot.
10. Allow additional 5'-0" of slack length of conductor for the lead-in run to pull box.
11. The additional length of each conductor for each loop shall be twisted together into a pair (6 turns per 3'-4" minimum) before being placed in the slot and conduit leading to pull box.
12. Test each loop circuit for continuity, circuit resistance and insulation resistance at the pull box before filling slots.
13. Fill slots as shown in details.
14. Splice loop conductors to lead-in-cable. Splices shall be soldered.
15. End of lead-in-cable and Type 2 loop conductor shall be waterproofed prior to installing in conduit to prevent moisture from entering the cable.
16. Lead-in-cable shall not be spliced between the pull box and the controller cabinet terminals.
17. Test each loop circuit for continuity, circuit resistance and insulation resistance at the controller cabinet location.
18. Where loop conductors are not to be spliced to a lead-in-cable, the ends of the conductors shall be taped and waterproofed with electrical insulating coating.

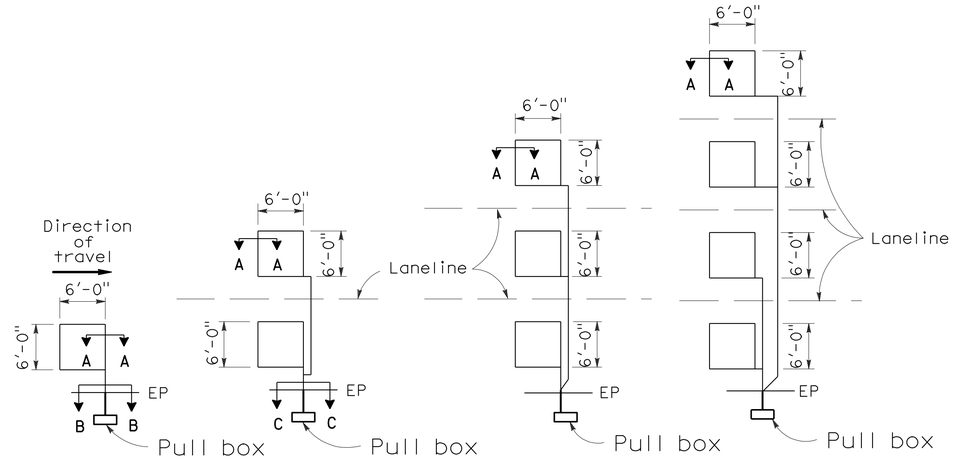

TYPE 1A INSTALLATION | TYPE 2A INSTALLATION | TYPE 3A INSTALLATION | TYPE 4A INSTALLATION

SAWCUT DETAILS

(Type A loop detector configurations illustrated)

1. 1A thru 4A = 1 Type A loop configuration in each lane.
2. 1B thru 4B = 1 Type B loop configuration in each lane.
3. 1C = 1 Type C loop configuration entering lanes as required.
4. 1D thru 4D = 1 Type D loop configuration in each lane.
5. 1E thru 4E = 1 Type E loop configuration in each lane.
6. 1Q thru 4Q = 1 Type Q loop configuration in each lane. (Use Type A, B, C, D, E or Q loop detector configurations only when specified or shown on plans)

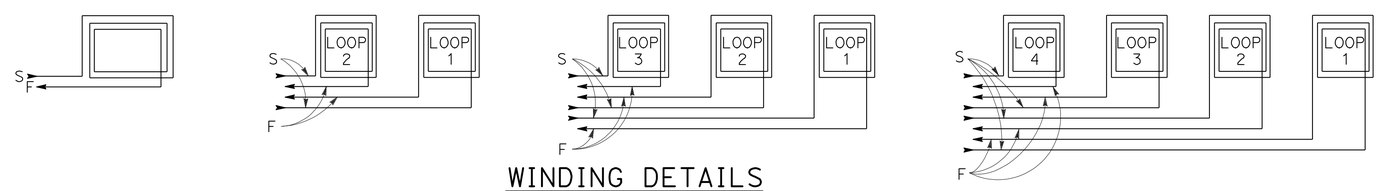

WINDING DETAILS

See Notes 6 and 7

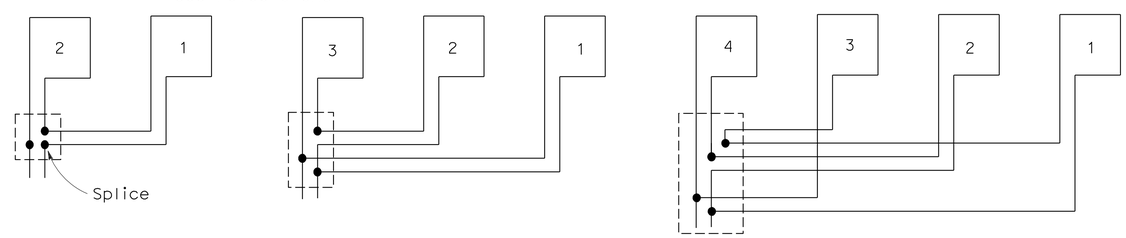

TYPICAL LOOP CONNECTIONS

(Dashed lines represent the pull box)

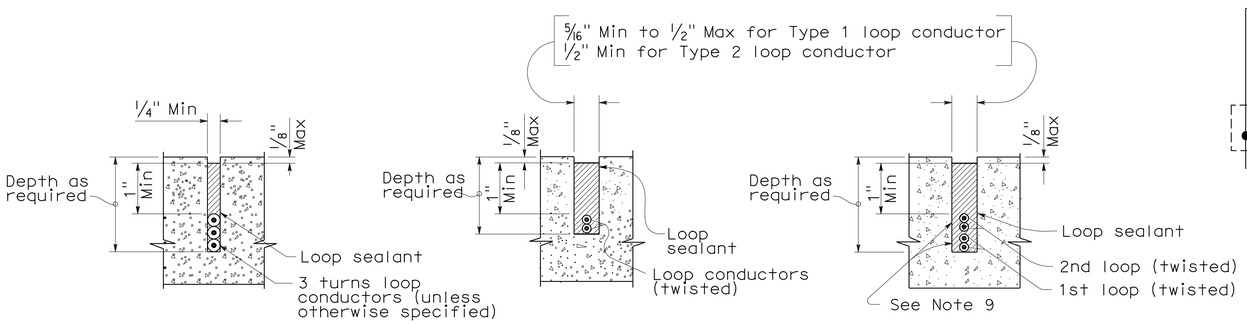

SECTION A-A | SECTION B-B | SECTION C-C

SLOT DETAILS - TYPE 1 AND TYPE 2 LOOP CONDUCTOR

STATE OF CALIFORNIA
DEPARTMENT OF TRANSPORTATION

ELECTRICAL SYSTEMS (DETECTORS)

NO SCALE

RSP ES-5A DATED OCTOBER 5, 2007 SUPERCEDES STANDARD PLAN ES-5A DATED MAY 1, 2006 - PAGE 423 OF THE STANDARD PLANS BOOK DATED MAY 2006.

REVISED STANDARD PLAN RSP ES-5A

2006 REVISED STANDARD PLAN RSP ES-5A