Dist	COUNTY	ROUTE	POST MILES TOTAL PROJECT	SHEET No.	TOTAL SHEETS
06	Ker	99	24.6	1	53

STATE OF CALIFORNIA

ACHSNH-P099(568)E

DEPARTMENT OF TRANSPORTATION

PROJECT PLANS FOR CONSTRUCTION ON

STATE HIGHWAY

IN KERN COUNTY
IN BAKERSFIELD
AT CALIFORNIA AVENUE UNDERCROSSING

TO BE SUPPLEMENTED BY STANDARD PLANS DATED 2010

INDEX OF PLANS

SHEET No.	DESCRIPTION
1	TITLE AND LOCATION MAP
2-5	TYPICAL CROSS SECTIONS
6	LAYOUT
7	SUPERELEVATION DIAGRAM
8-10	CONSTRUCTION DETAILS
11-14	DRAINAGE PLAN, PROFILE, DETAILS AND QUANTITIES
15	UTILITY PLAN
16	CONSTRUCTION AREA SIGNS
17-18	TRAFFIC HANDLING PLAN
19	PAVEMENT DELINEATION AND SIGN PLAN
20	PAVEMENT DELINEATION QUANTITIES
21	SIGN DETAILS AND QUANTITIES
22	SUMMARY OF QUANTITIES
23-24	PLANT LIST AND PLANTING PLAN
25-26	IRRIGATION REMOVAL PLAN AND IRRIGATION PLAN
27-28	LANDSCAPE DETAILS
29	ELECTRICAL LEGENDS, ABBREVIATIONS, LEGENDS AND SCHEDULES
30	ELECTRIC SERVICE (IRRIGATION)
31-32	MODIFIY SIGNAL AND LIGHTING
33	MODIFIY LIGHTING AND SIGN ILLUMINATION
34	TRAFFIC COUNT STATION
35-36	ELECTRICAL DETAILS AND QUANTITIES
37-39	TRAFFIC CONTROL SYSTEM
40-49	REVISED STANDARD PLANS

STRUCTURE PLANS

50-53 BRIDGE PLANS

THE STANDARD PLANS LIST APPLICABLE TO THIS CONTRACT IS INCLUDED IN THE NOTICE TO BIDDERS AND SPECIAL PROVISIONS BOOK.

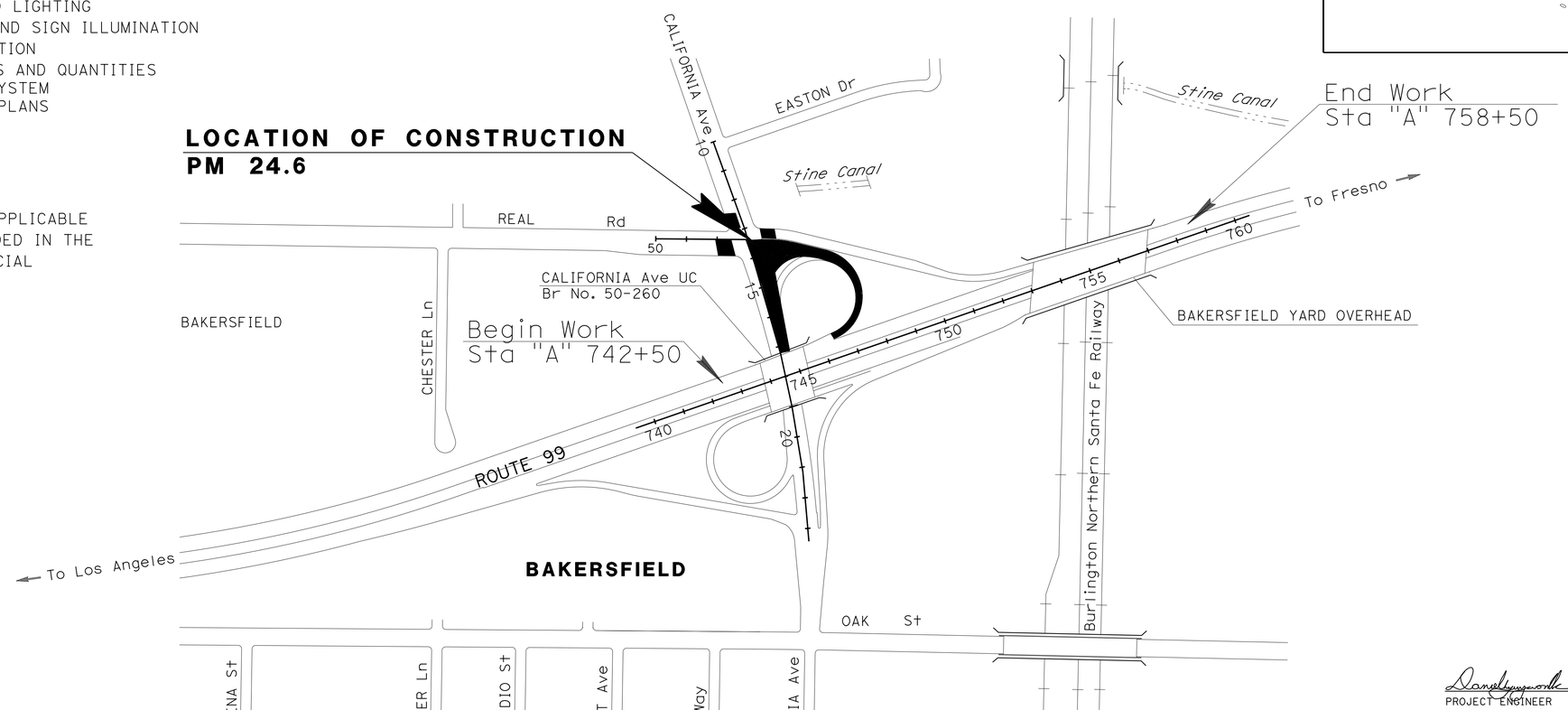

NO SCALE

THE CONTRACTOR SHALL POSSESS THE CLASS (OR CLASSES) OF LICENSE AS SPECIFIED IN THE "NOTICE TO BIDDERS."

PROJECT MANAGER: STEVE MILTON

DESIGN ENGINEER: NICHOLAS CHAN

PROJECT ENGINEER REGISTERED CIVIL ENGINEER — DATE: 08-16-12

REGISTERED PROFESSIONAL ENGINEER — DANIEL KYUNGWON HA — No. 62601 — Exp. 6/30/14 — CIVIL — STATE OF CALIFORNIA

February 11, 2013
PLANS APPROVAL DATE

THE STATE OF CALIFORNIA OR ITS OFFICERS OR AGENTS SHALL NOT BE RESPONSIBLE FOR THE ACCURACY OR COMPLETENESS OF SCANNED COPIES OF THIS PLAN SHEET.

CONTRACT No.	06-0L3904
PROJECT ID	0600000306

LAST REVISION 02-11-13

DATE PLOTTED => 27-MAR-2013
TIME PLOTTED => 14:19

Dist	COUNTY	ROUTE	POST MILES TOTAL PROJECT	SHEET No.	TOTAL SHEETS
06	Ker	99	24.6	2	53

REGISTERED CIVIL ENGINEER 08-16-12 DATE

2-11-13
PLANS APPROVAL DATE

REGISTERED PROFESSIONAL ENGINEER DANIEL KYUNGWON HA No. 62601 Exp. 6/30/14 CIVIL STATE OF CALIFORNIA

THE STATE OF CALIFORNIA OR ITS OFFICERS OR AGENTS SHALL NOT BE RESPONSIBLE FOR THE ACCURACY OR COMPLETENESS OF SCANNED COPIES OF THIS PLAN SHEET.

NOTES:

1. DIMENSIONS OF THE PAVEMENT STRUCTURES (STRUCTURAL SECTIONS) ARE SUBJECT TO TOLERANCES SPECIFIED IN THE STANDARD SPECIFICATIONS.
2. SUPERELEVATION AS SHOWN OR AS DIRECTED BY THE ENGINEER
3. FOR REMOVAL AND PLACEMENT OF HOT MIX ASPHALT DIKE (TYPE E), SEE LAYOUT SHEET
4. FOR LOCATIONS OF COLD PLANE ASPHALT CONCRETE PAVEMENT AND CONCRETE BARRIER, SEE LAYOUT SHEET

DESIGN DESIGNATION

2014	ADT	9600	TRUCKS (DHV)	10%
2034	ADT	10800	TRUCKS (ADT)	21%
DHV		980	TI	13
D		100%		

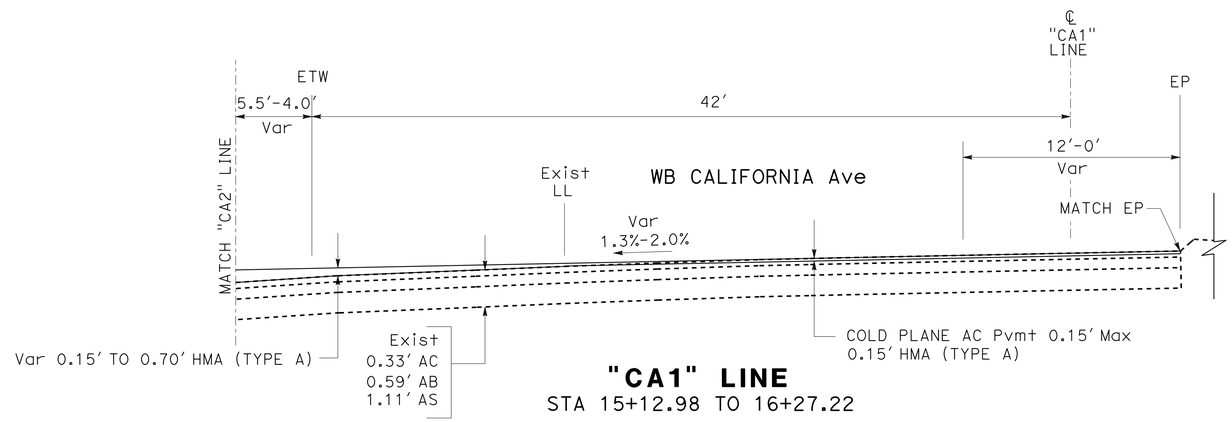

"CA1" LINE
STA 15+12.98 TO 16+27.22

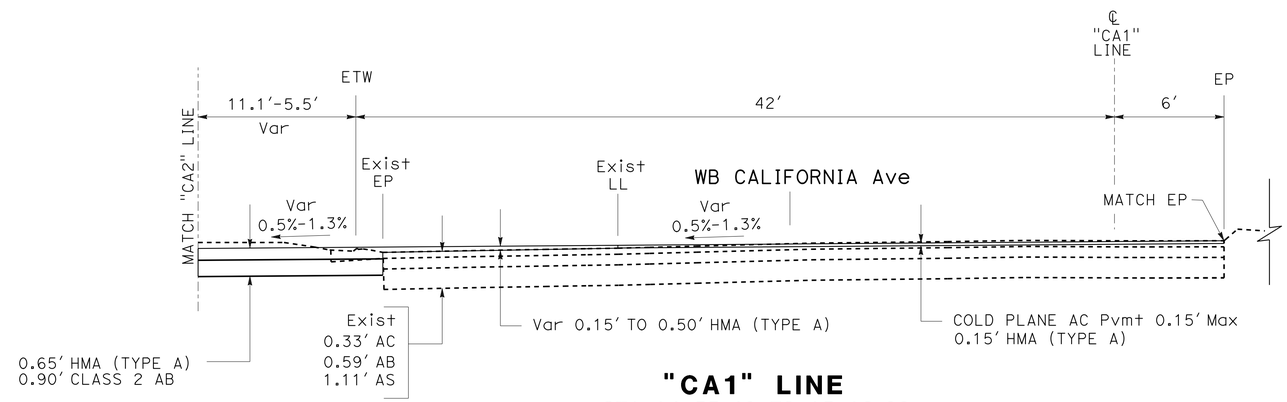

"CA1" LINE
STA 14+55.48 TO 15+12.98

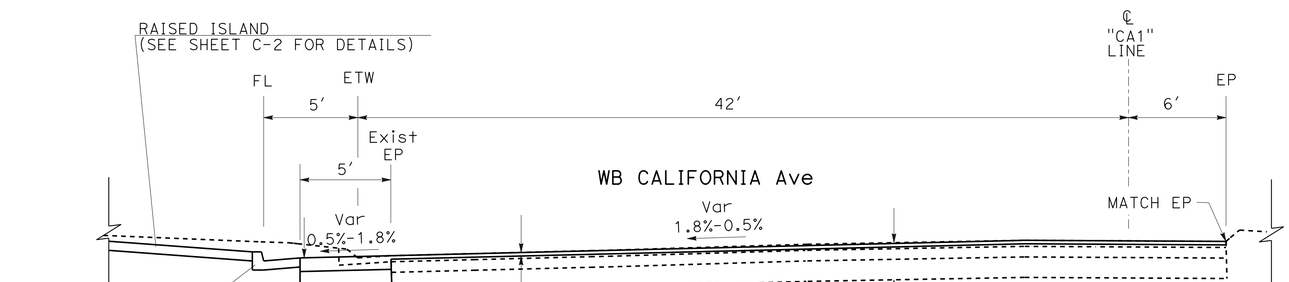

"CA1" LINE
STA 13+83.00 TO 14+55.48

TYPICAL CROSS SECTIONS

NO SCALE **X-1**

STATE OF CALIFORNIA - DEPARTMENT OF TRANSPORTATION
Caltrans® DESIGN

FUNCTIONAL SUPERVISOR: NICHOLAS CHAN
CALCULATED-DESIGNED BY: INDERPAL GILL
CHECKED BY: DANIEL HA
REVISED BY / DATE REVISED

LAST REVISION 11-29-12
DATE PLOTTED => 06-MAR-2013
TIME PLOTTED => 17:18

Dist	COUNTY	ROUTE	POST MILES TOTAL PROJECT	SHEET No.	TOTAL SHEETS
06	Ker	99	24.6	3	53

REGISTERED CIVIL ENGINEER 08-16-12 DATE

2-11-13
PLANS APPROVAL DATE

REGISTERED PROFESSIONAL ENGINEER DANIEL KYUNGWON HA No. 62601 Exp. 6/30/14 CIVIL STATE OF CALIFORNIA

THE STATE OF CALIFORNIA OR ITS OFFICERS OR AGENTS SHALL NOT BE RESPONSIBLE FOR THE ACCURACY OR COMPLETENESS OF SCANNED COPIES OF THIS PLAN SHEET.

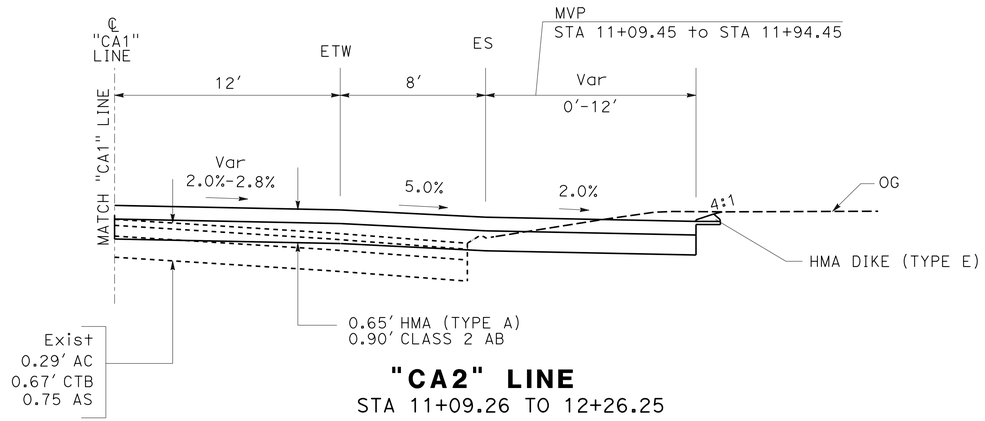

"CA2" LINE
STA 11+09.26 TO 12+26.25

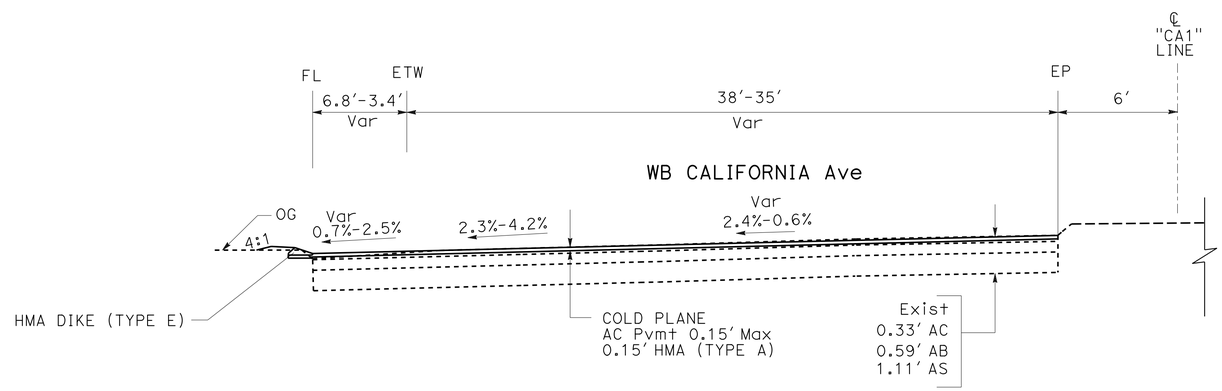

"CA1" LINE
STA 16+95.19 TO 17+34.18

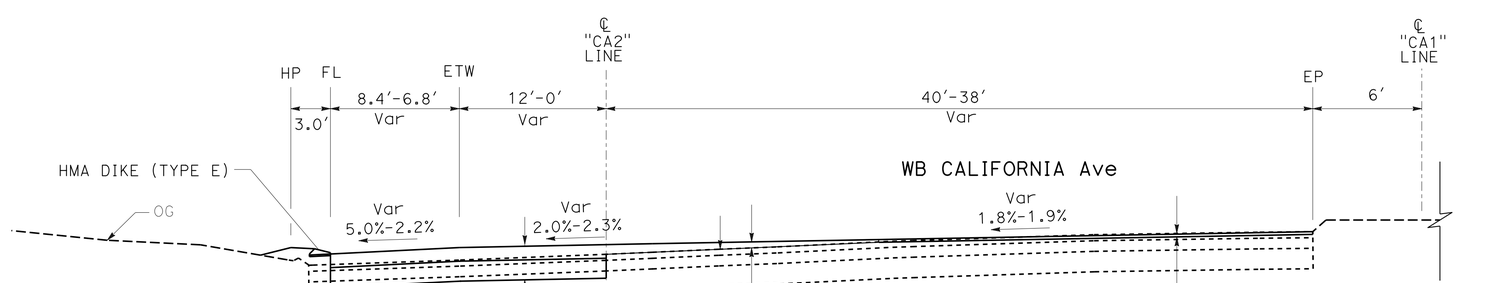

"CA1" LINE
STA 16+27.22 TO 16+95.19

TYPICAL CROSS SECTIONS

NO SCALE **X-2**

STATE OF CALIFORNIA - DEPARTMENT OF TRANSPORTATION
Caltrans®
DESIGN

FUNCTIONAL SUPERVISOR: NICHOLAS CHAN
CALCULATED-DESIGNED BY: INDERPAL GILL
CHECKED BY: DANIEL HA
REVISED BY
DATE REVISED

LAST REVISION 11-29-12
DATE PLOTTED => 06-MAR-2013
TIME PLOTTED => 17:18

Dist	COUNTY	ROUTE	POST MILES TOTAL PROJECT	SHEET No.	TOTAL SHEETS
06	Ker	99	24.6	4	53

REGISTERED CIVIL ENGINEER 08-16-12 DATE

2-11-13
PLANS APPROVAL DATE

REGISTERED PROFESSIONAL ENGINEER DANIEL KYUNGWON HA No. 62601 Exp. 6/30/14 CIVIL STATE OF CALIFORNIA

THE STATE OF CALIFORNIA OR ITS OFFICERS OR AGENTS SHALL NOT BE RESPONSIBLE FOR THE ACCURACY OR COMPLETENESS OF SCANNED COPIES OF THIS PLAN SHEET.

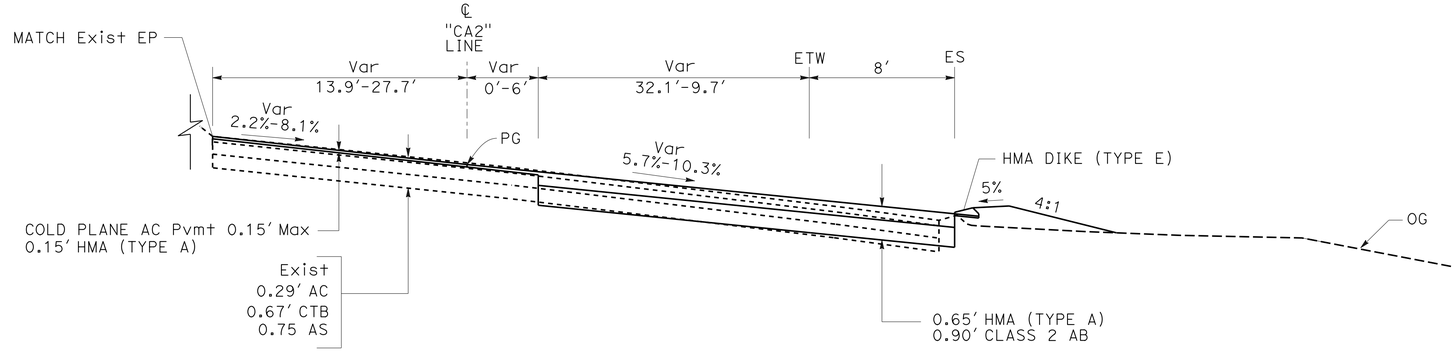

"CA2" LINE

STA 13+66.22 TO 15+20

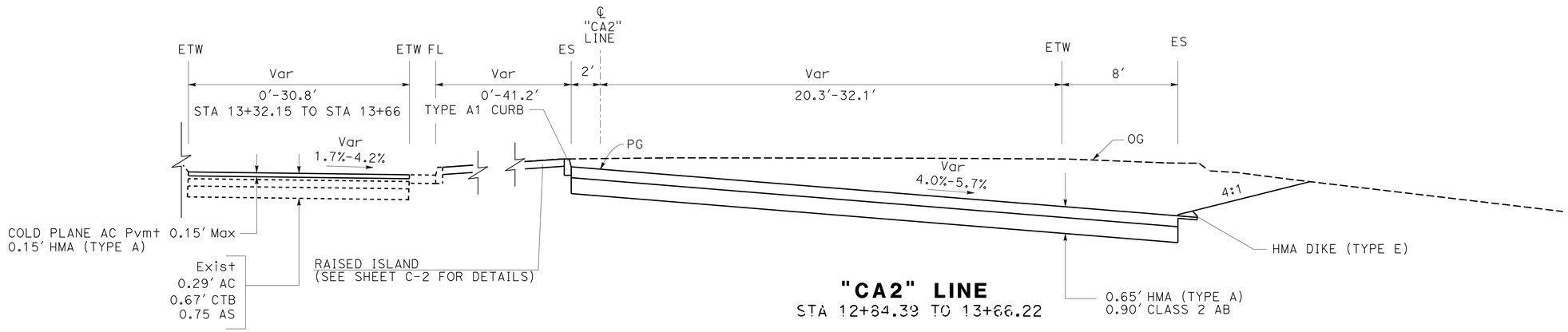

"CA2" LINE

STA 12+84.39 TO 13+66.22

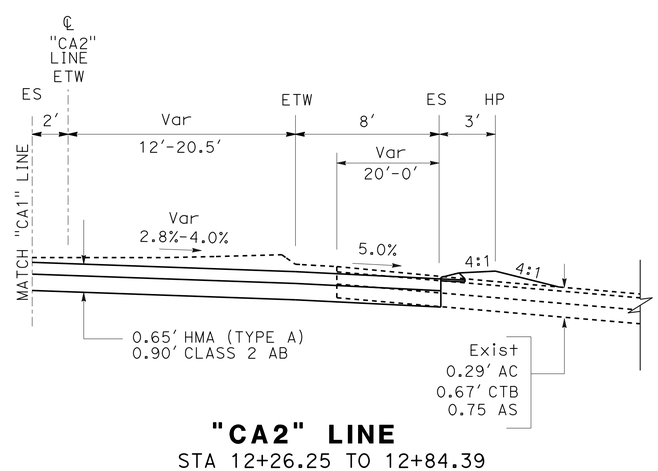

"CA2" LINE

STA 12+26.25 TO 12+84.39

TYPICAL CROSS SECTIONS

NO SCALE

X-3

STATE OF CALIFORNIA - DEPARTMENT OF TRANSPORTATION
Caltrans
DESIGN

FUNCTIONAL SUPERVISOR: NICHOLAS CHAN
CALCULATED-DESIGNED BY: INDERPAL GILL
CHECKED BY: DANIEL HA
REVISED BY
DATE REVISED

LAST REVISION 11-29-12
DATE PLOTTED => 06-MAR-2013
TIME PLOTTED => 17:18

Dist	COUNTY	ROUTE	POST MILES TOTAL PROJECT	SHEET No.	TOTAL SHEETS
06	Ker	99	24.6	5	53

REGISTERED CIVIL ENGINEER 08-16-12 DATE

2-11-13
PLANS APPROVAL DATE

REGISTERED PROFESSIONAL ENGINEER DANIEL KYUNGWON HA No. 62601 Exp. 6/30/14 CIVIL STATE OF CALIFORNIA

THE STATE OF CALIFORNIA OR ITS OFFICERS OR AGENTS SHALL NOT BE RESPONSIBLE FOR THE ACCURACY OR COMPLETENESS OF SCANNED COPIES OF THIS PLAN SHEET.

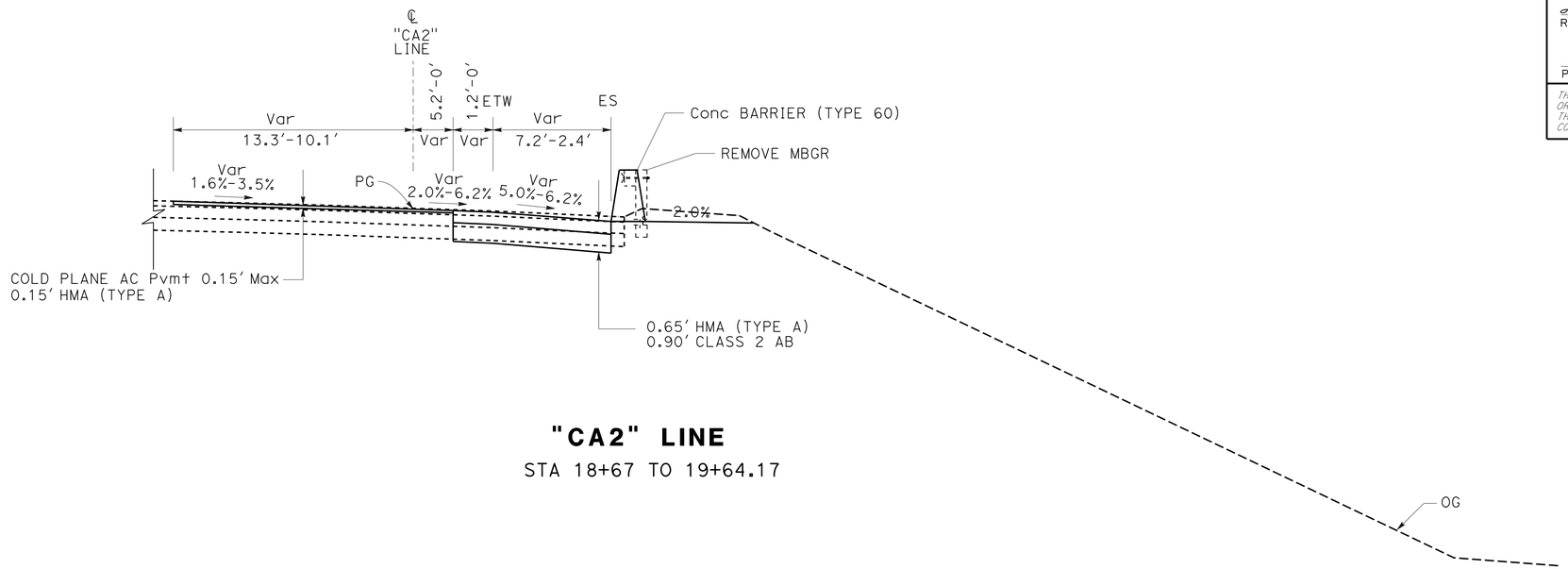

"CA2" LINE

STA 18+67 TO 19+64.17

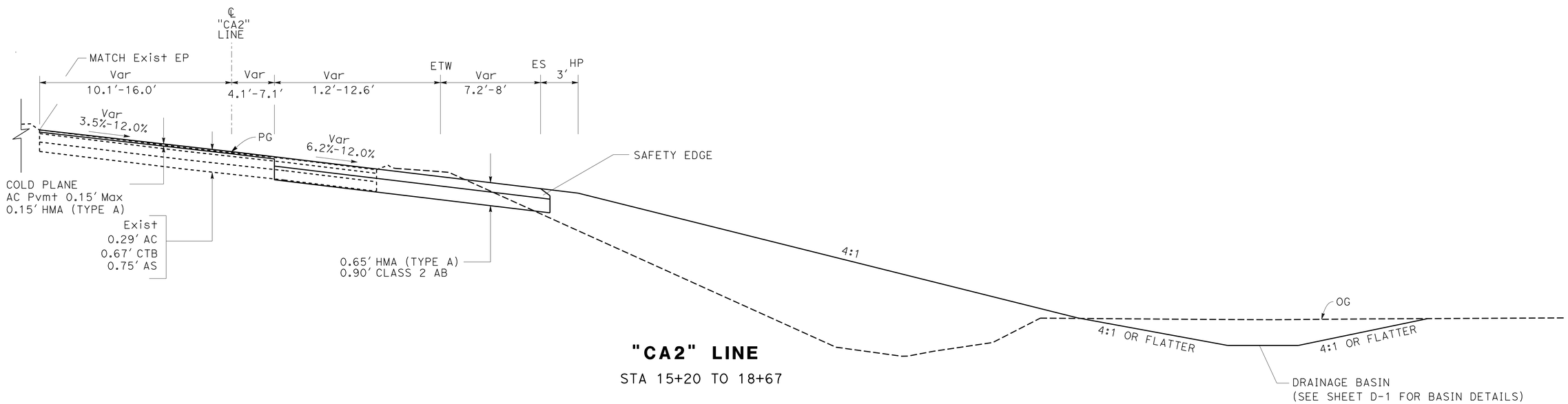

"CA2" LINE

STA 15+20 TO 18+67

TYPICAL CROSS SECTIONS

NO SCALE

X-4

STATE OF CALIFORNIA - DEPARTMENT OF TRANSPORTATION

Caltrans®

DESIGN

FUNCTIONAL SUPERVISOR: NICHOLAS CHAN

CALCULATED-DESIGNED BY: INDERPAL GILL

CHECKED BY: DANIEL HA

REVISED BY | DATE REVISED

LAST REVISION 11-29-12 | DATE PLOTTED => 06-MAR-2013 | TIME PLOTTED => 17:18

Dist	COUNTY	ROUTE	POST MILES TOTAL PROJECT	SHEET No.	TOTAL SHEETS
06	Ker	99	24.6	6	53

REGISTERED CIVIL ENGINEER 08-16-12 DATE

2-11-13
PLANS APPROVAL DATE

REGISTERED PROFESSIONAL ENGINEER DANIEL KYUNGWON HA No. 62601 Exp. 6/30/14 CIVIL STATE OF CALIFORNIA

THE STATE OF CALIFORNIA OR ITS OFFICERS OR AGENTS SHALL NOT BE RESPONSIBLE FOR THE ACCURACY OR COMPLETENESS OF SCANNED COPIES OF THIS PLAN SHEET.

NOTE:

FOR ACCURATE RIGHT OF WAY DATA, CONTACT RIGHT OF WAY ENGINEERING AT THE DISTRICT OFFICE.

LEGENDS

- COLD PLANE AC Pvmt 0.15' Max PLACE 0.15' HMA (TYPE A)
- REMOVE AC SURFACING
- PLACE 0.15'-0.70' HMA (TYPE A)
- ENVIRONMENTALLY SENSITIVE AREA (ESA)

CURVE DATA

No.	R	Δ	T	L
1	37.00'	19°18'38"	6.29'	12.47'
2	150.00'	19°27'39"	25.72'	50.95'
3	60.00'	103°21'34"	75.92'	108.24'
4	365.00'	12°22'34"	39.57'	78.84'
5	140.00'	144°56'21"	443.20'	354.15'
6	62.0'	102°18'58"	77.00'	110.72'
7	220.0'	22°48'27"	44.37'	87.57'

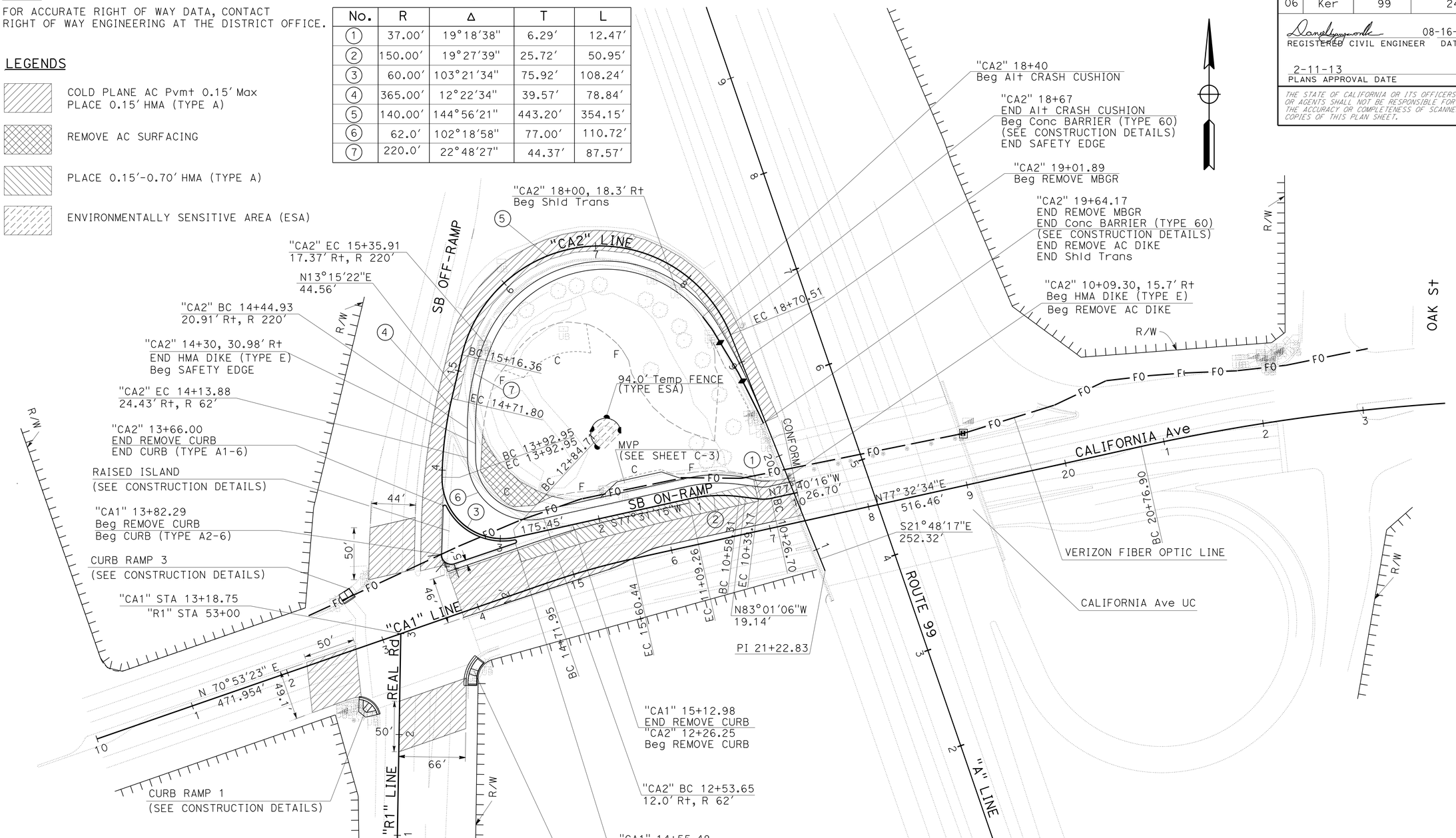

SCALE: 1"=50'

LAYOUT
L-1

STATE OF CALIFORNIA - DEPARTMENT OF TRANSPORTATION
Caltrans® DESIGN

FUNCTIONAL SUPERVISOR: NICHOLAS CHAN
CALCULATED-DESIGNED BY: INDERPAL GILL
CHECKED BY: DANIEL HA
REVISED BY / DATE REVISED

LAST REVISION 11-29-12 | DATE PLOTTED => 06-MAR-2013 | TIME PLOTTED => 17:18

Dist	COUNTY	ROUTE	POST MILES TOTAL PROJECT	SHEET No.	TOTAL SHEETS
06	Ker	99	24.6	7	53

REGISTERED CIVIL ENGINEER 08-16-12 DATE

2-11-13
PLANS APPROVAL DATE

REGISTERED PROFESSIONAL ENGINEER DANIEL KYUNGWON HA No. 62601 Exp. 6/30/14 CIVIL STATE OF CALIFORNIA

THE STATE OF CALIFORNIA OR ITS OFFICERS OR AGENTS SHALL NOT BE RESPONSIBLE FOR THE ACCURACY OR COMPLETENESS OF SCANNED COPIES OF THIS PLAN SHEET.

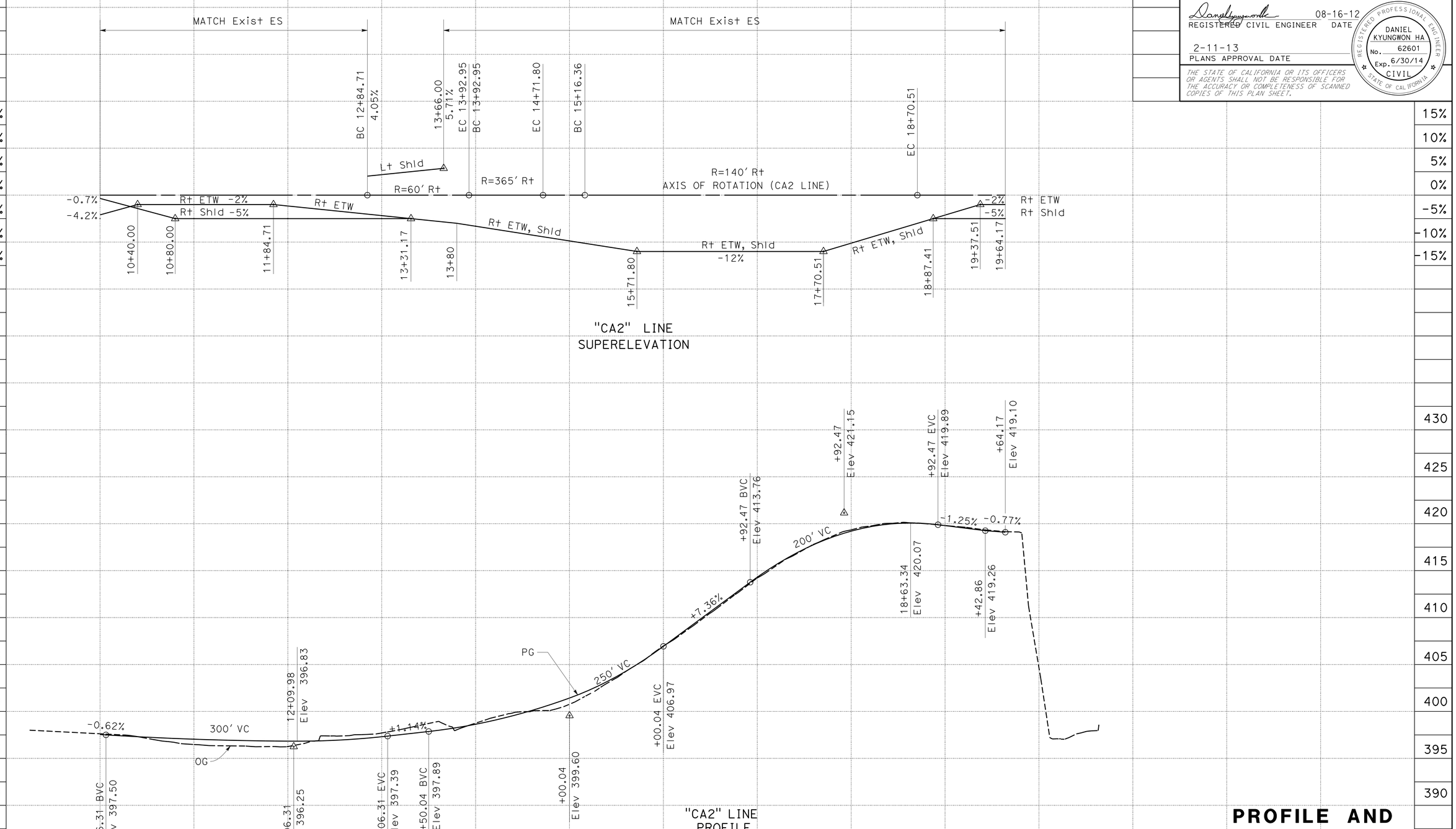

PROFILE AND SUPERELEVATION DIAGRAM

PS-1

SCALE : Horiz 1" : 100'
Vert 1" : 10'

STATE OF CALIFORNIA - DEPARTMENT OF TRANSPORTATION
Caltrans DESIGN

FUNCTIONAL SUPERVISOR: NICHOLAS CHAN
CALCULATED-DESIGNED BY: INDERPAL GILL
CHECKED BY: DANIEL HA
REVISED BY
DATE REVISED

LAST REVISION 11-29-12
DATE PLOTTED => 06-MAR-2013
TIME PLOTTED => 17:18

Dist	COUNTY	ROUTE	POST MILES TOTAL PROJECT	SHEET No.	TOTAL SHEETS
06	Ker	99	24.6	8	53

REGISTERED CIVIL ENGINEER 08-16-12 DATE

2-11-13
PLANS APPROVAL DATE

REGISTERED PROFESSIONAL ENGINEER DANIEL KYUNGWON HA No. 62601 Exp. 6/30/14 CIVIL STATE OF CALIFORNIA

THE STATE OF CALIFORNIA OR ITS OFFICERS OR AGENTS SHALL NOT BE RESPONSIBLE FOR THE ACCURACY OR COMPLETENESS OF SCANNED COPIES OF THIS PLAN SHEET.

LEGEND:

- Conc CURB (TYPE A2-6)
- REPLACE AC SURFACING (MATCH Exist THICKNESS, 0.5′ Min, 1′ WIDE, UNLESS OTHERWISE SHOWN)
- DETECTABLE WARNING SURFACE
- 1′ WIDE GROOVING BORDER

CURVE DATA

No.	R	Δ	T	L
1	19.5′	73°46′08"	14.63′	25.11′
2	35.0′	46°34′29"	15.06′	28.45′
3	20.0′	49°14′14"	9.16′	17.19′

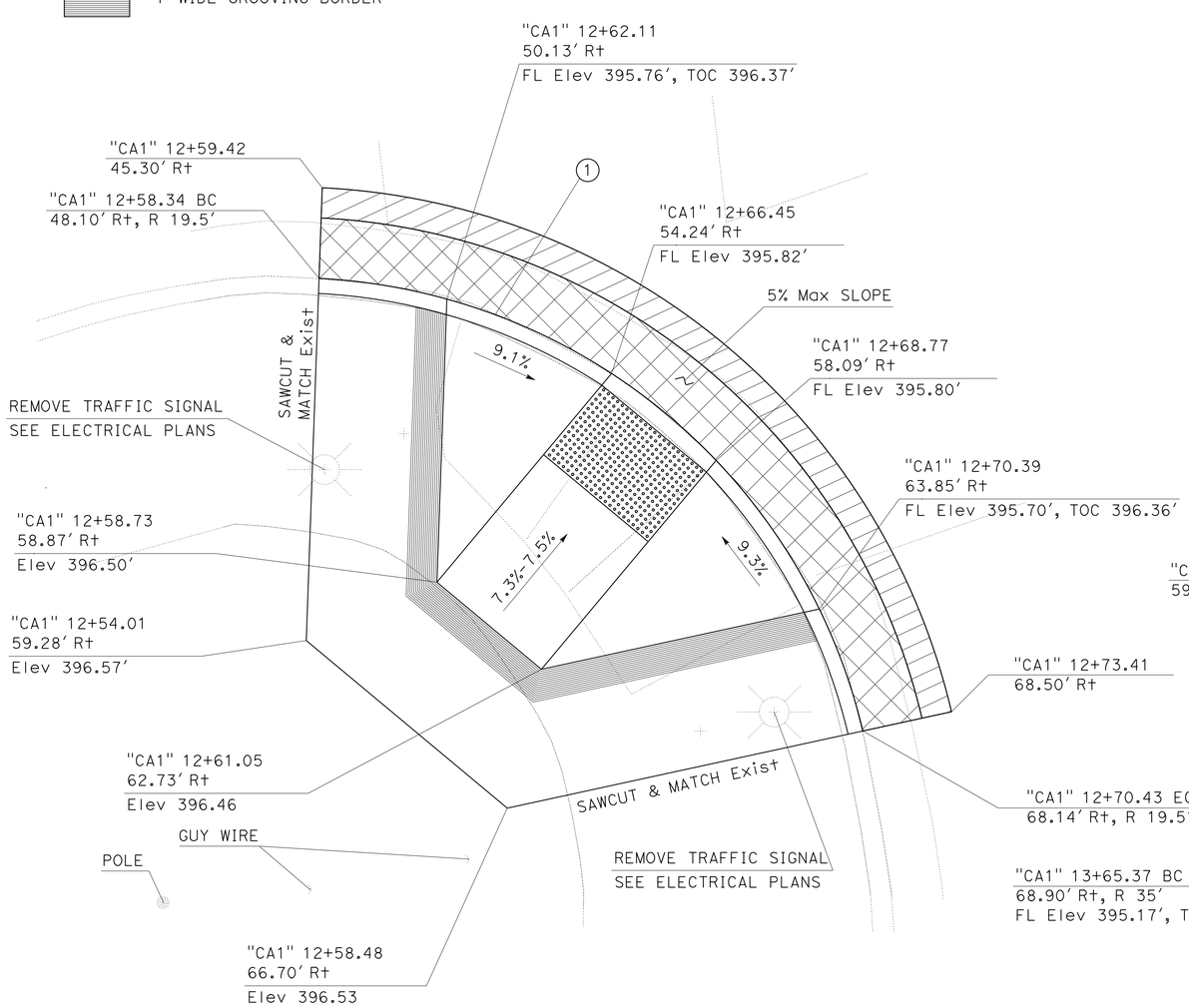

CURB RAMP 1 (CASE A)

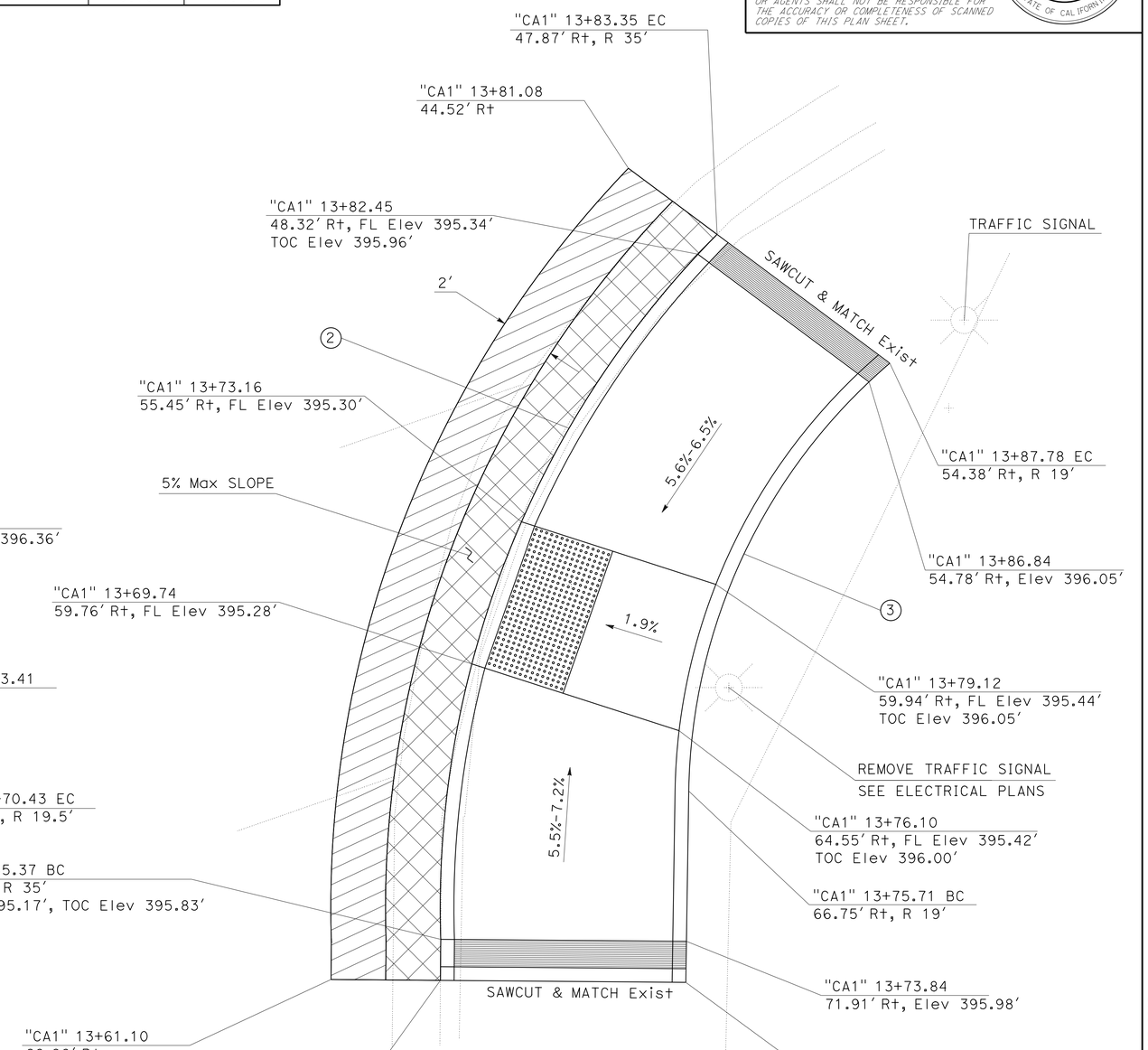

CURB RAMP 2 (CASE C Mod)

CONSTRUCTION DETAILS

NO SCALE

C-1

STATE OF CALIFORNIA - DEPARTMENT OF TRANSPORTATION
Caltrans® DESIGN

FUNCTIONAL SUPERVISOR: NICHOLAS CHAN
CALCULATED-DESIGNED BY: INDERPAL GILL
CHECKED BY: DANIEL HA
REVISED BY
DATE REVISED

LAST REVISION 11-29-12
DATE PLOTTED => 06-MAR-2013
TIME PLOTTED => 19:23

Dist	COUNTY	ROUTE	POST MILES TOTAL PROJECT	SHEET No.	TOTAL SHEETS
06	Ker	99	24.6	9	53

REGISTERED CIVIL ENGINEER 08-16-12 DATE

2-11-13
PLANS APPROVAL DATE

REGISTERED PROFESSIONAL ENGINEER DANIEL KYUNGWON HA No. 62601 Exp. 6/30/14 CIVIL STATE OF CALIFORNIA

THE STATE OF CALIFORNIA OR ITS OFFICERS OR AGENTS SHALL NOT BE RESPONSIBLE FOR THE ACCURACY OR COMPLETENESS OF SCANNED COPIES OF THIS PLAN SHEET.

CURVE DATA

No.	R	Δ	T	L
1	190.0′	3°51′05"	6.39′	12.77′
2	10.0′	109°27′02"	14.14′	19.10′
3	2.0′	172°16′01"	29.59′	6.01′
4	62.0′	74°35′46"	47.23′	80.72′
5	2.0′	150°39′26"	7.64′	5.26′

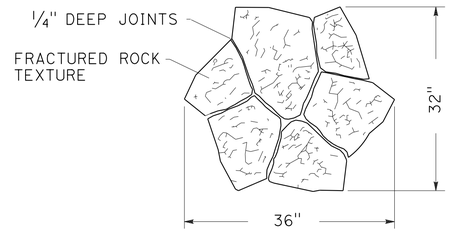

PLAN
STAMPED STONE PATTERN

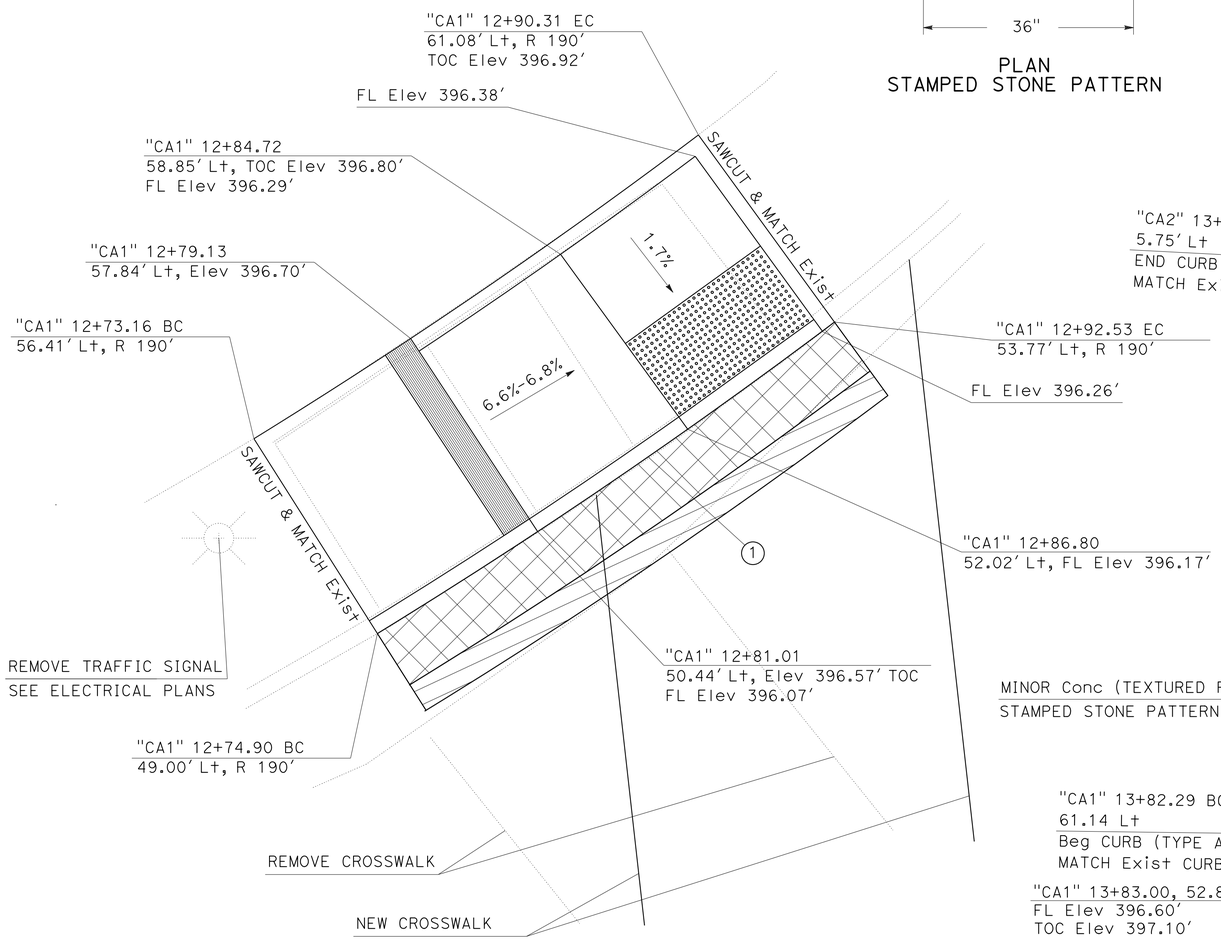

CURB RAMP 3 (CASE C Mod)

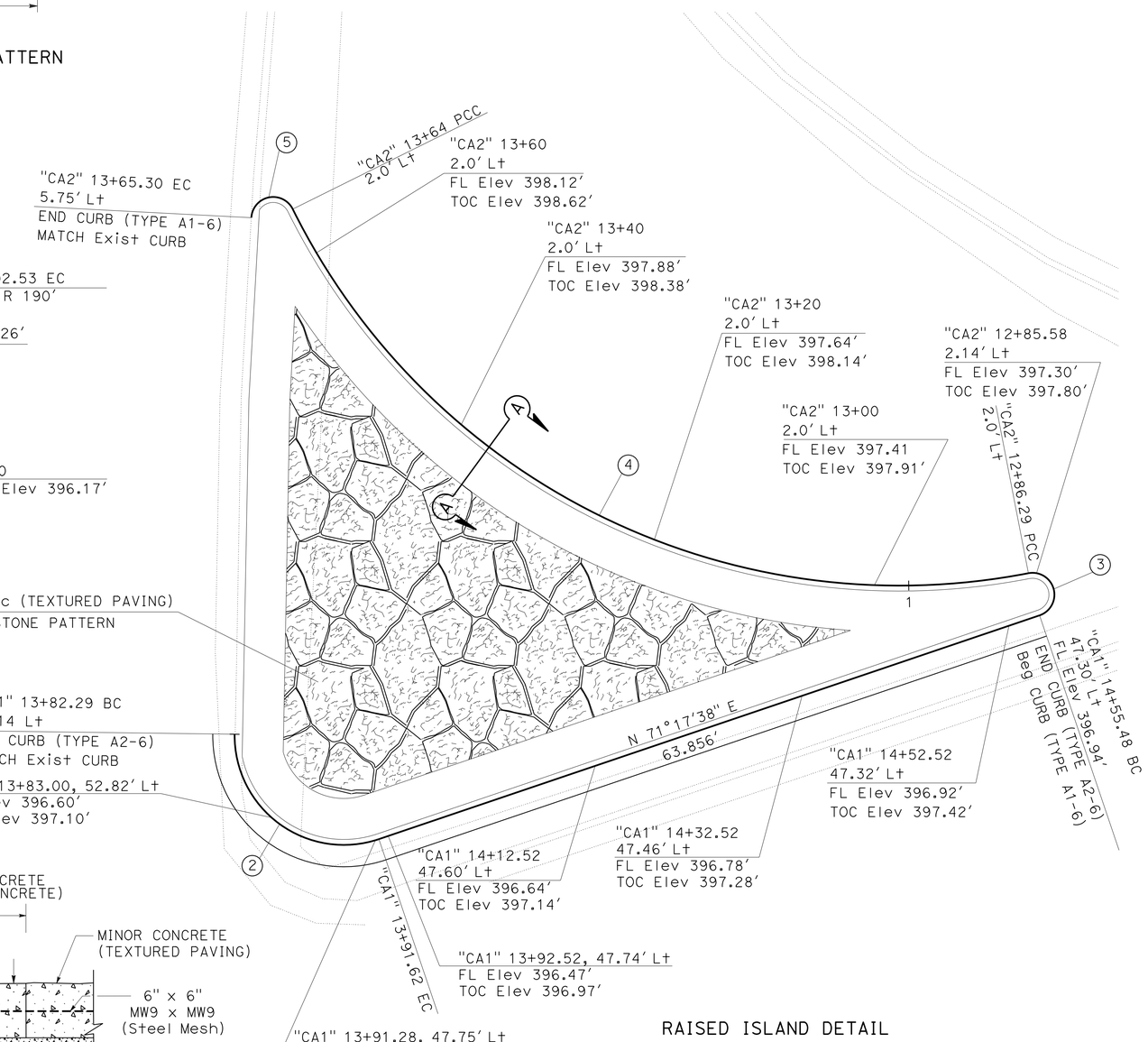

RAISED ISLAND DETAIL

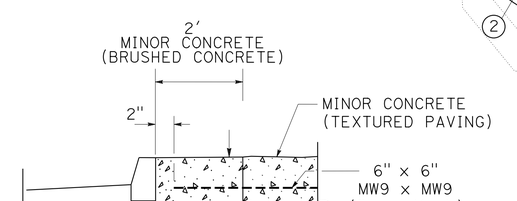

SECTION A-A

CONSTRUCTION DETAILS

NO SCALE

C-2

STATE OF CALIFORNIA - DEPARTMENT OF TRANSPORTATION
Caltrans DESIGN

FUNCTIONAL SUPERVISOR: NICHOLAS CHAN
CALCULATED-DESIGNED BY: INDERPAL GILL
CHECKED BY: DANIEL HA
REVISED BY
DATE REVISED

LAST REVISION 11-29-12
DATE PLOTTED => 06-MAR-2013
TIME PLOTTED => 17:18

Dist	COUNTY	ROUTE	POST MILES TOTAL PROJECT	SHEET No.	TOTAL SHEETS
06	Ker	99	24.6	10	53

REGISTERED CIVIL ENGINEER 08-16-12 DATE

2-11-13
PLANS APPROVAL DATE

REGISTERED PROFESSIONAL ENGINEER
DANIEL KYUNGWON HA
No. 62601
Exp. 6/30/14
CIVIL
STATE OF CALIFORNIA

THE STATE OF CALIFORNIA OR ITS OFFICERS OR AGENTS SHALL NOT BE RESPONSIBLE FOR THE ACCURACY OR COMPLETENESS OF SCANNED COPIES OF THIS PLAN SHEET.

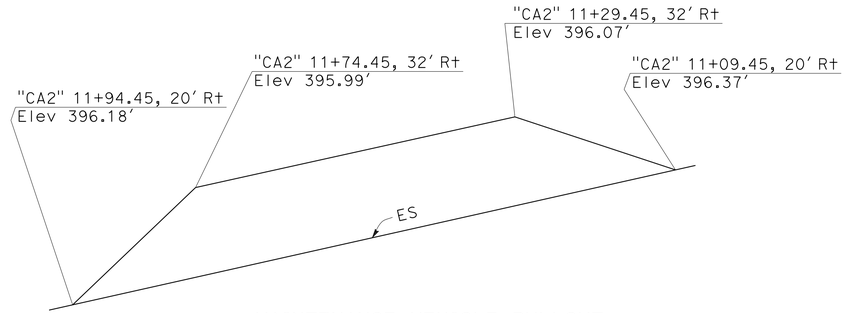

MAINTENANCE VEHICLE PULLOUT

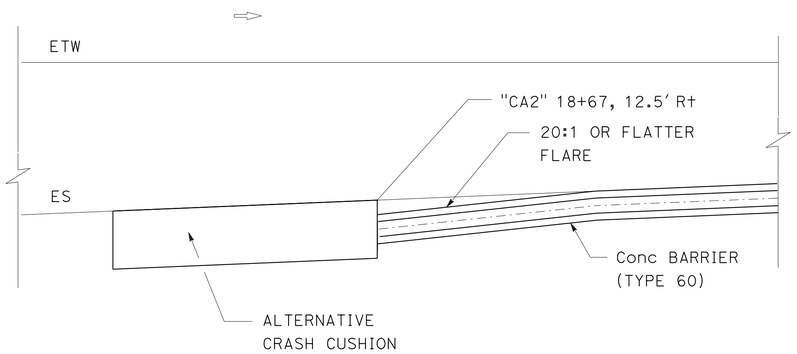

DETAIL A

CRASH CUSHION TO
Conc BARRIER Trans

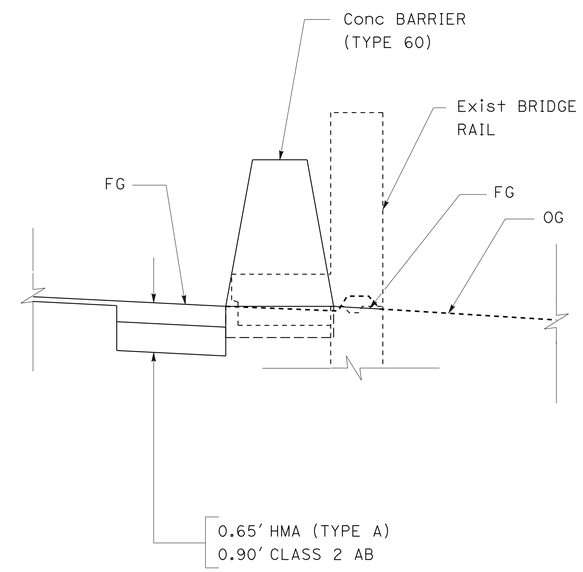

DETAIL B

Conc BARRIER AT
Exist Br RAIL

CONSTRUCTION DETAILS

NO SCALE

C-3

STATE OF CALIFORNIA - DEPARTMENT OF TRANSPORTATION
Caltrans
DESIGN

FUNCTIONAL SUPERVISOR: NICHOLAS CHAN
CALCULATED-DESIGNED BY: INDERPAL GILL
CHECKED BY: DANIEL HA
REVISED BY
DATE REVISED

LAST REVISION 11-29-12
DATE PLOTTED => 06-MAR-2013
TIME PLOTTED => 17:18

Dist	COUNTY	ROUTE	POST MILES TOTAL PROJECT	SHEET No.	TOTAL SHEETS
06	Ker	99	24.6	11	53

REGISTERED CIVIL ENGINEER 08-16-12 DATE

2-11-13
PLANS APPROVAL DATE

REGISTERED PROFESSIONAL ENGINEER DANIEL KYUNGWON HA No. 62601 Exp. 6/30/14 CIVIL STATE OF CALIFORNIA

THE STATE OF CALIFORNIA OR ITS OFFICERS OR AGENTS SHALL NOT BE RESPONSIBLE FOR THE ACCURACY OR COMPLETENESS OF SCANNED COPIES OF THIS PLAN SHEET.

LEGEND:

- (X) DRAINAGE SYSTEM NUMBER
- (×) DRAINAGE ITEM
- DIRECTION OF FLOW
- ROCK SLOPE PROTECTION
- ENVIRONMENTALLY SENSITIVE AREA (ESA)
- OSD OVERSIDE DRAIN

CURVE DATA

No.	R	Δ	T	L
1	40.0′	17°1′31"	5.99′	11.89′
2	140.0′	27°43′57"	34.56′	67.76′
3	100.0′	54°22′46"	51.37′	94.91′

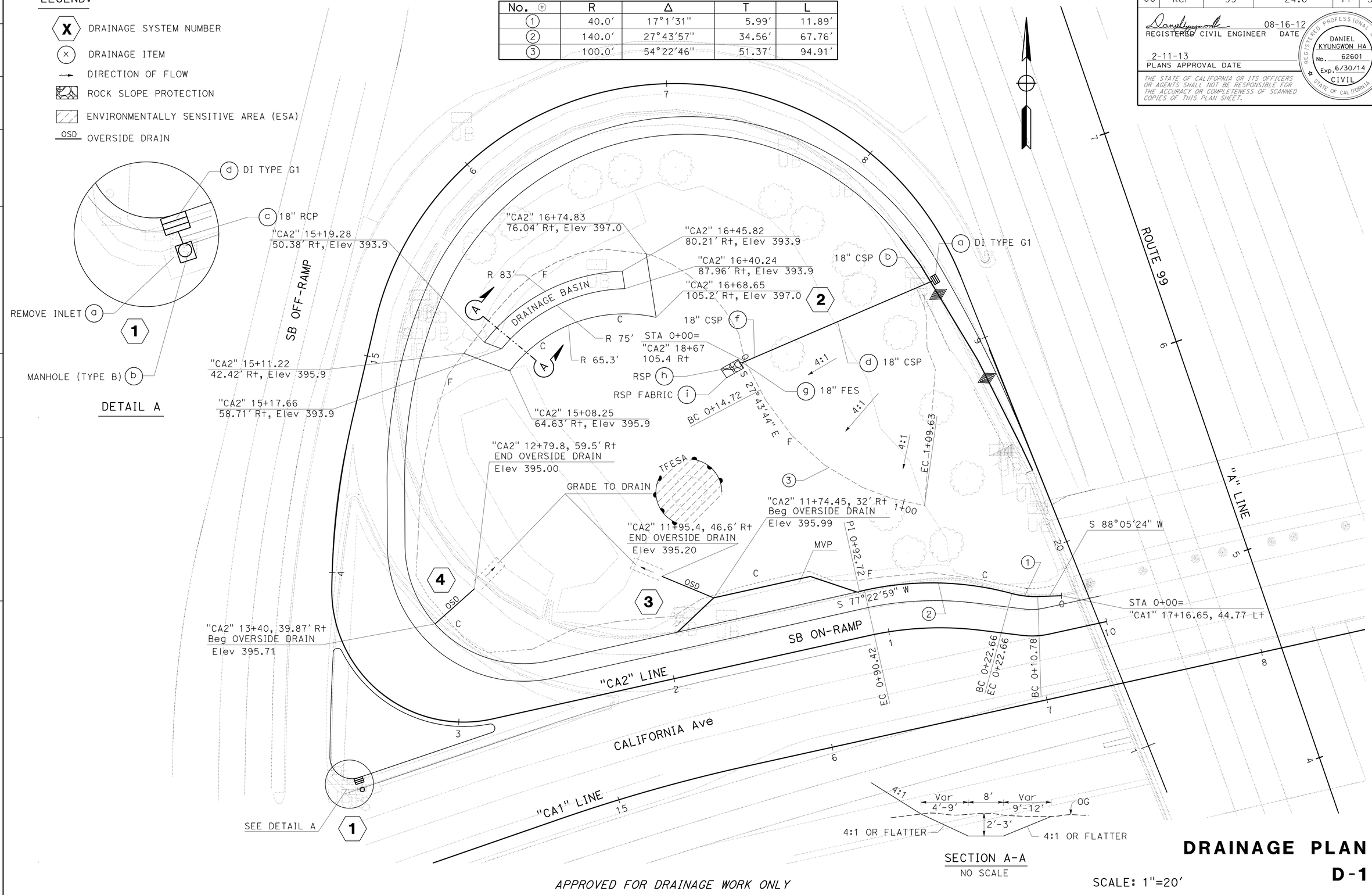

APPROVED FOR DRAINAGE WORK ONLY

SCALE: 1"=20′

DRAINAGE PLAN
D-1

REVISED BY	DATE REVISED
INDERPAL GILL	DANIEL HA
CALCULATED-DESIGNED BY	CHECKED BY
FUNCTIONAL SUPERVISOR	NICHOLAS CHAN

STATE OF CALIFORNIA - DEPARTMENT OF TRANSPORTATION
Caltrans
DESIGN

LAST REVISION 11-30-12 | DATE PLOTTED => 06-MAR-2013 | TIME PLOTTED => 17:18

Dist	COUNTY	ROUTE	POST MILES TOTAL PROJECT	SHEET No.	TOTAL SHEETS
06	Ker	99	24.6	12	53

REGISTERED CIVIL ENGINEER 08-16-12 DATE

2-11-13
PLANS APPROVAL DATE

REGISTERED PROFESSIONAL ENGINEER
DANIEL KYUNGWON HA
No. 62601
Exp. 6/30/14
CIVIL
STATE OF CALIFORNIA

THE STATE OF CALIFORNIA OR ITS OFFICERS OR AGENTS SHALL NOT BE RESPONSIBLE FOR THE ACCURACY OR COMPLETENESS OF SCANNED COPIES OF THIS PLAN SHEET.

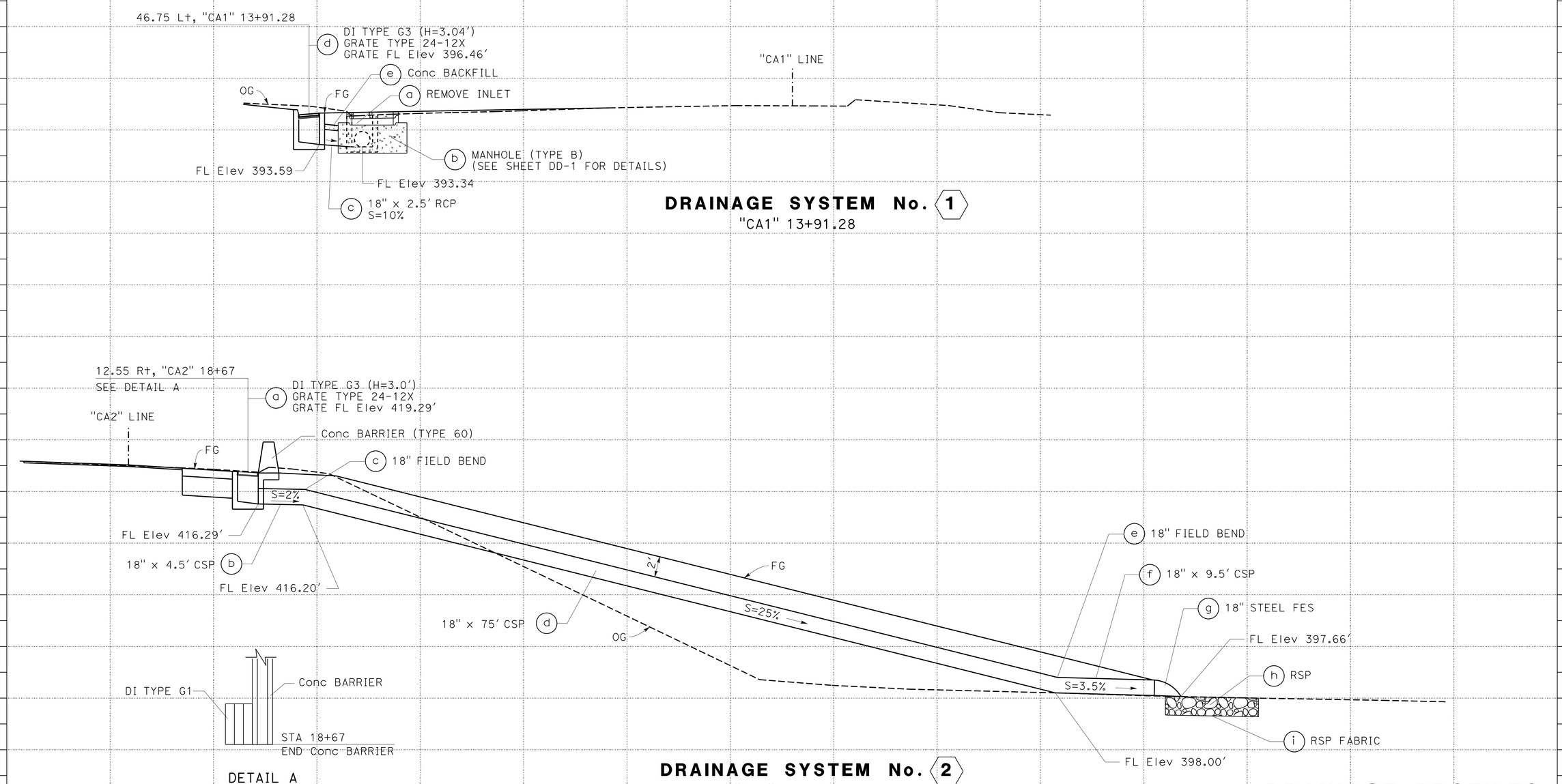

DRAINAGE PROFILES

SCALE: Horiz 1"=5'
Vert 1"=5'

DP-1

STATION		TOTAL
CY	Exc	
	Emb	

STATE OF CALIFORNIA - DEPARTMENT OF TRANSPORTATION
Caltrans®
DESIGN
FUNCTIONAL SUPERVISOR: NICHOLAS CHAN
CALCULATED-DESIGNED BY: INDERPAL GILL
CHECKED BY: DANIEL HA
REVISED BY
DATE REVISED

LAST REVISION 11-30-12
DATE PLOTTED => 06-MAR-2013
TIME PLOTTED => 17:18

Dist	COUNTY	ROUTE	POST MILES TOTAL PROJECT	SHEET No.	TOTAL SHEETS
06	Ker	99	24.6	13	53

REGISTERED CIVIL ENGINEER 08-16-12 DATE

2-11-13
PLANS APPROVAL DATE

REGISTERED PROFESSIONAL ENGINEER DANIEL KYUNGWON HA No. 62601 Exp. 6/30/14 CIVIL STATE OF CALIFORNIA

THE STATE OF CALIFORNIA OR ITS OFFICERS OR AGENTS SHALL NOT BE RESPONSIBLE FOR THE ACCURACY OR COMPLETENESS OF SCANNED COPIES OF THIS PLAN SHEET.

NOTES:

1) "D" REPRESENTS THE OUTSIDE DIAMETER OF THE PIPE CONNECTED TO FLARED END SECTION.
2) THE ROCK MATERIAL AND PLACEMENT METHOD SHALL CONFORM TO THE GRADING "BACKING No. 2" FOR METHOD "B" PLACEMENTS AS SPECIFIED IN SECTIONS 72-2.02 AND 72-2.03 OF THE STANDARD SPECIFICATIONS.
3) INTERIOR OF THE MANHOLE SHALL HAVE A SMOOTH TROWELED SURFACE.
4) ECCENTRIC CONES IN PAVED AREAS SHALL BE ORIENTED TO PLACE FRAMES AND COVERS AWAY FROM WHEEL TRACKS.

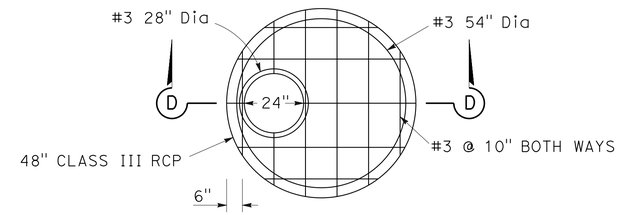

FLAT SLAB LID

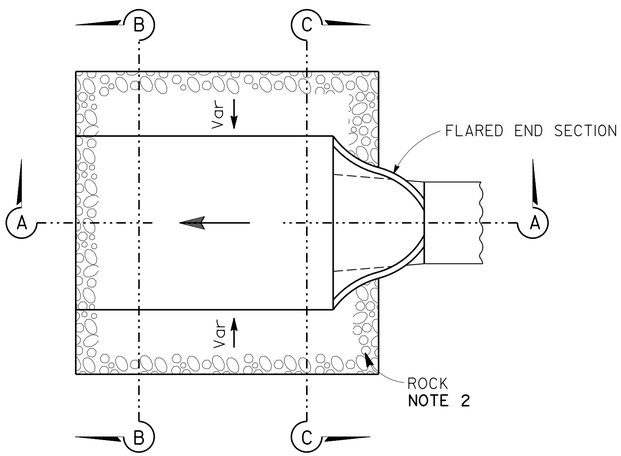

PLAN

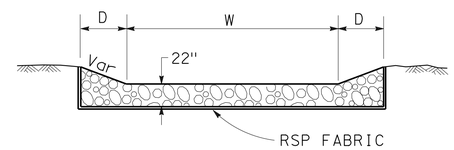

SECTION B-B

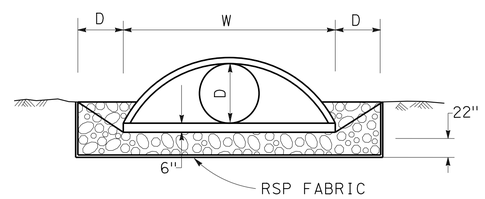

SECTION C-C

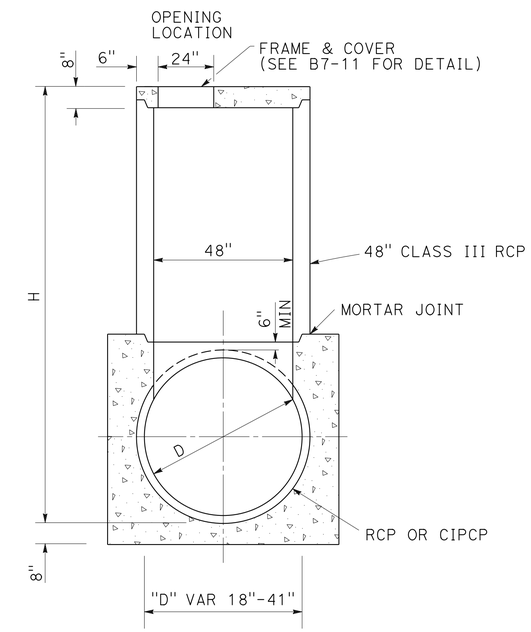

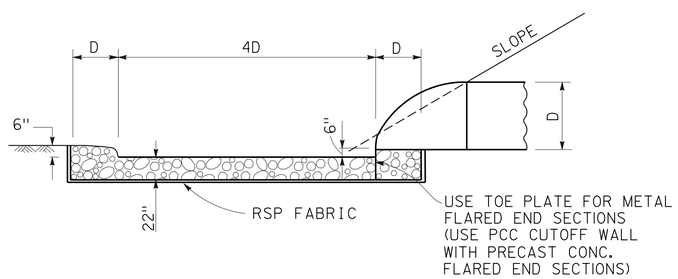

SECTION A-A

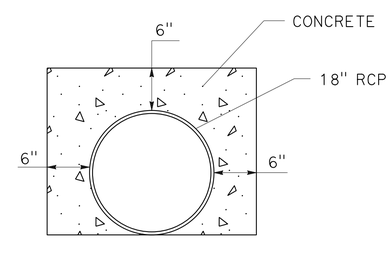

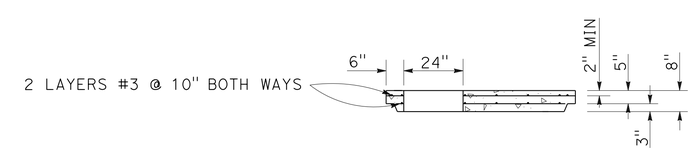

OPENING LOCATION AS REQUIRED

SECTION D-D

ROCK ENERGY DISSIPATOR

MINOR CONCRETE (BACKFILL)

MANHOLE (TYPE B)

DRAINAGE DETAILS
DD-1

NO SCALE

REVISED BY	DATE REVISED

CALCULATED-DESIGNED BY	CHECKED BY
INDERPAL GILL	DANIEL HA

FUNCTIONAL SUPERVISOR: NICHOLAS CHAN

STATE OF CALIFORNIA - DEPARTMENT OF TRANSPORTATION
Caltrans
DESIGN

LAST REVISION 08-30-12 | DATE PLOTTED => 06-MAR-2013 | TIME PLOTTED => 17:18

Dist	COUNTY	ROUTE	POST MILES TOTAL PROJECT	SHEET No.	TOTAL SHEETS
06	Ker	99	24.6	14	53

REGISTERED CIVIL ENGINEER 08-16-12 DATE

2-11-13
PLANS APPROVAL DATE

REGISTERED PROFESSIONAL ENGINEER
DANIEL KYUNGWON HA
No. 62601
Exp. 6/30/14
CIVIL
STATE OF CALIFORNIA

THE STATE OF CALIFORNIA OR ITS OFFICERS OR AGENTS SHALL NOT BE RESPONSIBLE FOR THE ACCURACY OR COMPLETENESS OF SCANNED COPIES OF THIS PLAN SHEET.

LEGEND:

D - DOWNDRAIN JOINT
S - STANDARD JOINT

DRAINAGE QUANTITIES

PLAN SHEET No.	DRAINAGE SYSTEM No. ⬡	DRAINAGE UNIT ○	DRAINAGE INLET: MINOR CONCRETE (MINOR STRUCTURE) CY	DRAINAGE INLET: HEIGHT OF INLET "H" (N) LF	DRAINAGE INLET: Misc IRON AND STEEL LB	REMOVE INLET EA	18" RCP LF	18" CSP (0.079" THICK) LF	18" STEEL FES EA	18" FIELD BEND (N) EA	MINOR CONCRETE (BACKFILL) CY	ROCK SLOPE PROTECTION (No. 1, TYPE B) CY	RSP FABRIC (CLASS 8) SQYD	HMA (TYPE A) * TON	48" PRECAST CONCRETE PIPE MANHOLE LF	JOINT CLASSIFICATION (N) EA	DESCRIPTION
D-1	1	a				1											REMOVE INLET
		b		3.4	235										3.4		MANHOLE (TYPE B), MANHOLE FRAME & COVER
		c					2.5									S	18" RCP
		d	1.03	3.0	239												DI TYPE G3, GRATE TYPE 24-12X
		e									0.3						CONCRETE BACKFILL
D-1	2	a	1.03	3.0	239												DI TYPE G3, GRATE TYPE 24-12X
		b						4.5								D	18" CSP
		c								1							18" FIELD BEND
		d						75.0								D	18" CSP
		e								1							18" FIELD BEND
		f						9.5								D	18" CSP
		g							1								18" STEEL FES
		h										3.6					ROCK SLOPE PROTECTION
		i											13.0				ROCK SLOPE PROTECTION FABRIC
D-1	3													1.5			HMA OVERSIDE DRAIN, Std PLAN D87D
D-1	4													1.5			HMA OVERSIDE DRAIN, Std PLAN D87D
TOTAL			2.06		713	1	2.5	89.0	1		0.3	3.6	13.0	3.0	3.4		

* SEE ROADWAY QUANTITIES TABLE FOR TOTAL HMA QUANTITY.

(N) - NOT A SEPARATE PAY ITEM, FOR INFORMATION ONLY

NO SCALE

DRAINAGE QUANTITIES
DQ-1

STATE OF CALIFORNIA - DEPARTMENT OF TRANSPORTATION
Caltrans
DESIGN

FUNCTIONAL SUPERVISOR: NICHOLAS CHAN
CALCULATED-DESIGNED BY: INDERPAL GILL
CHECKED BY: DANIEL HA
REVISED BY
DATE REVISED

LAST REVISION 08-30-12
DATE PLOTTED => 06-MAR-2013
TIME PLOTTED => 17:18

Dist	COUNTY	ROUTE	POST MILES TOTAL PROJECT	SHEET No.	TOTAL SHEETS
06	Ker	99	24.6	15	53

REGISTERED CIVIL ENGINEER 08-16-12 DATE

2-11-13
PLANS APPROVAL DATE

REGISTERED PROFESSIONAL ENGINEER DANIEL KYUNGWON HA No. 62601 Exp. 6/30/14 CIVIL STATE OF CALIFORNIA

THE STATE OF CALIFORNIA OR ITS OFFICERS OR AGENTS SHALL NOT BE RESPONSIBLE FOR THE ACCURACY OR COMPLETENESS OF SCANNED COPIES OF THIS PLAN SHEET.

NOTES:

1. FOR ACCURATE RIGHT OF WAY DATA, CONTACT RIGHT OF WAY ENGINEERING AT THE DISTRICT OFFICE.
2. UTILITY OWNERSHIP:
   GAS - PACIFIC GAS & ELECTRIC
   ELECTRICAL - PACIFIC GAS & ELECTRIC
   WATER - BAKERSFIELD DISTRICT
   TELEPHONE - PACIFIC BELL COMPANY
   FIBER OPTIC CABLE - VERIZON
   CATV- BRIGHT HOUSE NETWORKS
3. VERIZON FIBER OPTIC LOCATIONS HAVE BEEN VERIFIED BY POTHOLING ("CA1" 14+01 TO "CA1" 17+34)
4. VERIZON FIBER OPTIC LINES ARE TO BE LOWERED A MINIMUM OF 24" BELOW THE POSITIVE LOCATED ELEVATIONS BETWEEN STATIONS "CA1" 14+01 TO "CA1" 17+34 BY OTHERS.

LEGEND

Pothole Locations (Fiber Optic Lines 4" Dia PVC Pipe)

Concrete Encasement

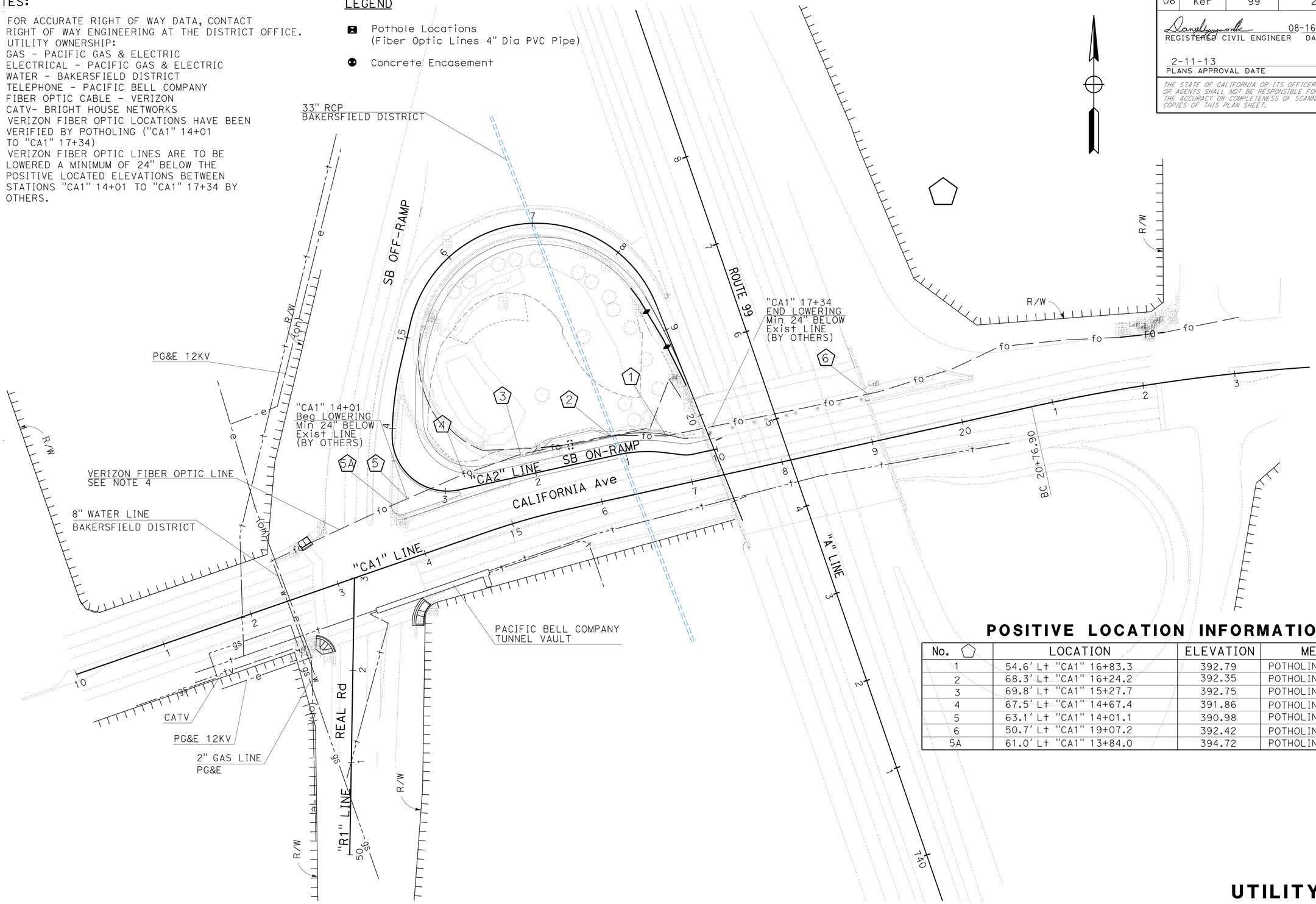

POSITIVE LOCATION INFORMATION

No. ⬠	LOCATION	ELEVATION	METHOD
1	54.6' Lt "CA1" 16+83.3	392.79	POTHOLING
2	68.3' Lt "CA1" 16+24.2	392.35	POTHOLING
3	69.8' Lt "CA1" 15+27.7	392.75	POTHOLING
4	67.5' Lt "CA1" 14+67.4	391.86	POTHOLING
5	63.1' Lt "CA1" 14+01.1	390.98	POTHOLING
6	50.7' Lt "CA1" 19+07.2	392.42	POTHOLING
5A	61.0' Lt "CA1" 13+84.0	394.72	POTHOLING

APPROVED FOR UTILITY INFORMATION ONLY

SCALE: 1"=50'

UTILITY PLAN
U-1

STATE OF CALIFORNIA - DEPARTMENT OF TRANSPORTATION
Caltrans®
DESIGN

FUNCTIONAL SUPERVISOR: NICHOLAS CHAN
CALCULATED-DESIGNED BY: INDERPAL GILL
CHECKED BY: DANIEL HA
REVISED BY
DATE REVISED

LAST REVISION 12-03-12
DATE PLOTTED => 06-MAR-2013
TIME PLOTTED => 17:18

Dist	COUNTY	ROUTE	POST MILES TOTAL PROJECT	SHEET No.	TOTAL SHEETS
06	Ker	99	24.6	16	53

Hassan Taha 10-23-12
REGISTERED CIVIL ENGINEER DATE

2-11-13
PLANS APPROVAL DATE

REGISTERED PROFESSIONAL ENGINEER HASSAN M. TAHA No. 60130 Exp. 06/30/14 CIVIL STATE OF CALIFORNIA

THE STATE OF CALIFORNIA OR ITS OFFICERS OR AGENTS SHALL NOT BE RESPONSIBLE FOR THE ACCURACY OR COMPLETENESS OF SCANNED COPIES OF THIS PLAN SHEET.

STATIONARY MOUNTED CONSTRUCTION AREA SIGNS

SIGN No.	SIGN CODE	PANEL SIZE	SIGN MESSAGE	No. OF POSTS	POST SIZE	No. OF SIGNS
A	W20-1	36" x 36"	ROAD WORK AHEAD	1	4" x 6"	3
B	G20-2	36" x 18"	END ROAD WORK	1	4" x 4"	2
C	W20-1	48" x 48"	ROAD WORK AHEAD	1	6" x 6"	1
D	G20-2	48" x 24"	END ROAD WORK	1	4" x 4"	1

NOTES:

1. ALL TEMPORARY WARNING SIGNS SHALL HAVE BLACK LEGEND ON FLUORESCENT ORANGE BACKGROUND
2. EXACT SIGN LOCATIONS TO BE DETERMINED BY THE ENGINEER
3. FOR ADDITIONAL CONSTRUCTION AREA SIGNS, REFER TO TRAFFIC HANDLING PLAN

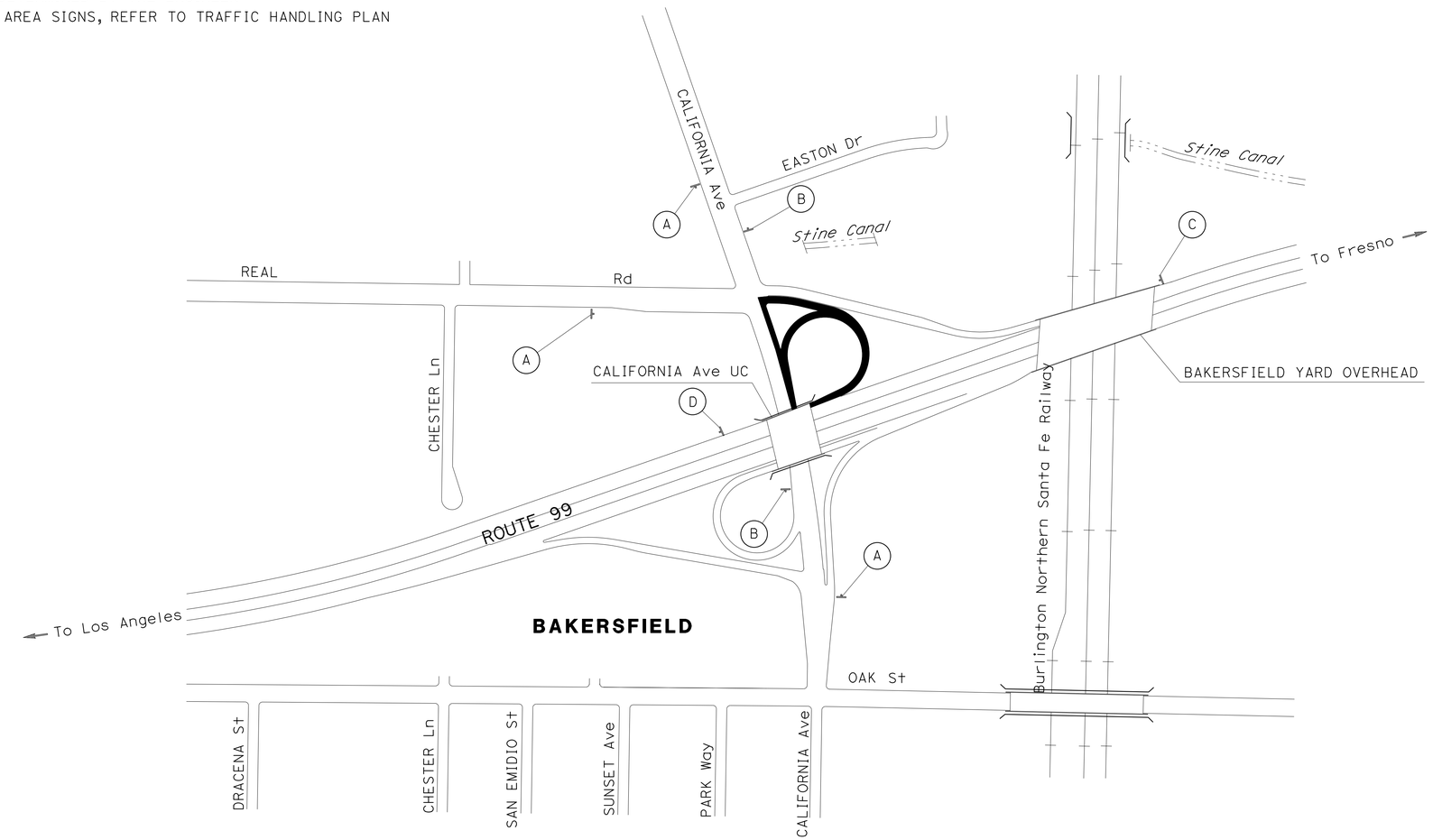

APPROVED FOR CONSTRUCTION AREA SIGN WORK ONLY

CONSTRUCTION AREA SIGNS

NO SCALE

CS-1

STATE OF CALIFORNIA - DEPARTMENT OF TRANSPORTATION
Caltrans
TRAFFIC DESIGN

FUNCTIONAL SUPERVISOR: MOHAMMED QATAMI
CALCULATED-DESIGNED BY: KEVIN NGUYEN
CHECKED BY: HASSAN TAHA
REVISED BY
DATE REVISED

LAST REVISION 09-11-12
DATE PLOTTED => 06-MAR-2013
TIME PLOTTED => 17:18

Dist	COUNTY	ROUTE	POST MILES TOTAL PROJECT	SHEET No.	TOTAL SHEETS
06	Ker	99	24.6	17	53

Hassan Taha 10-23-12
REGISTERED CIVIL ENGINEER DATE

2-11-13
PLANS APPROVAL DATE

REGISTERED PROFESSIONAL ENGINEER HASSAN M. TAHA No. 60130 Exp. 06/30/14 CIVIL STATE OF CALIFORNIA

THE STATE OF CALIFORNIA OR ITS OFFICERS OR AGENTS SHALL NOT BE RESPONSIBLE FOR THE ACCURACY OR COMPLETENESS OF SCANNED COPIES OF THIS PLAN SHEET.

NOTES: EXACT SIGN LOCATIONS TO BE DETERMINED BY THE ENGINEER

STATIONARY MOUNTED CONSTRUCTION AREA SIGNS

SIGN No.	SIGN CODE	PANEL SIZE	SIGN MESSAGE	No. OF POST AND SIZE	No. OF SIGNS
1	G28-1(CA)	21" x 18"	AS SHOWN ON PLAN	1-4" x 6"	1
	M3-3	26" x 12"			
	SC3(CA)	48" x 18"			
2	G28-1(CA)	21" x 18"	AS SHOWN ON PLAN	1-4" x 6"	3
	M3-3	24" x 12"			
	M4-10(L†)	30" x 24"			
3	M4-8a	24" x 18"	AS SHOWN ON PLAN	1-4" x 4"	1
4	W20-3	36" x 36"	AS SHOWN ON PLAN	1-4" x 6"	1
5	G28-1(CA)	21" x 18"	AS SHOWN ON PLAN	1-4" x 6"	1
	M3-3	24" x 12"			
	M4-10(R†)	30" x 24"			

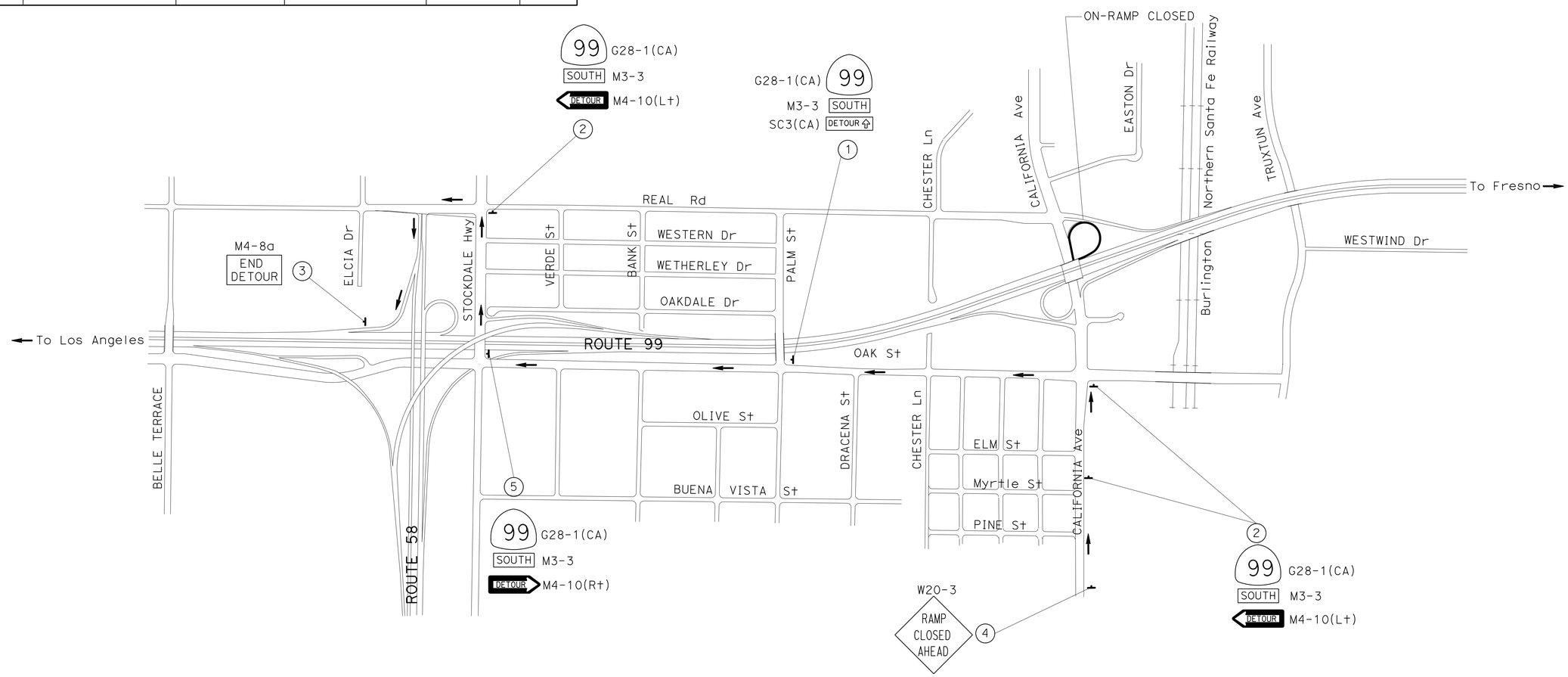

TRAFFIC HANDLING PLAN
(DETOUR DURING ROUTE 99 SB ON-RAMP CLOSURE)

APPROVED FOR CONSTRUCTION AREA SIGN WORK ONLY

NO SCALE

TH-1

STATE OF CALIFORNIA - DEPARTMENT OF TRANSPORTATION
Caltrans
TRAFFIC DESIGN

FUNCTIONAL SUPERVISOR: MOHAMMED QATAMI
CALCULATED-DESIGNED BY: KEVIN NGUYEN
CHECKED BY: HASSAN TAHA
REVISED BY
DATE REVISED

LAST REVISION 09-11-12
DATE PLOTTED => 06-MAR-2013
TIME PLOTTED => 17:18

Dist	COUNTY	ROUTE	POST MILES TOTAL PROJECT	SHEET No.	TOTAL SHEETS
06	Ker	99	24.6	18	53

Hassan Taha 10-23-12
REGISTERED CIVIL ENGINEER DATE

2-11-13
PLANS APPROVAL DATE

REGISTERED PROFESSIONAL ENGINEER HASSAN M. TAHA No. 60130 Exp. 06/30/14 CIVIL STATE OF CALIFORNIA

THE STATE OF CALIFORNIA OR ITS OFFICERS OR AGENTS SHALL NOT BE RESPONSIBLE FOR THE ACCURACY OR COMPLETENESS OF SCANNED COPIES OF THIS PLAN SHEET.

LEGEND:

- DIRECTION OF TRAFFIC
- CHANNELIZER (SURFACE MOUNTED)
- Temp RAILING (TYPE K)
- Temp CRASH CUSHION MODULE

SECTION A-A
NO SCALE

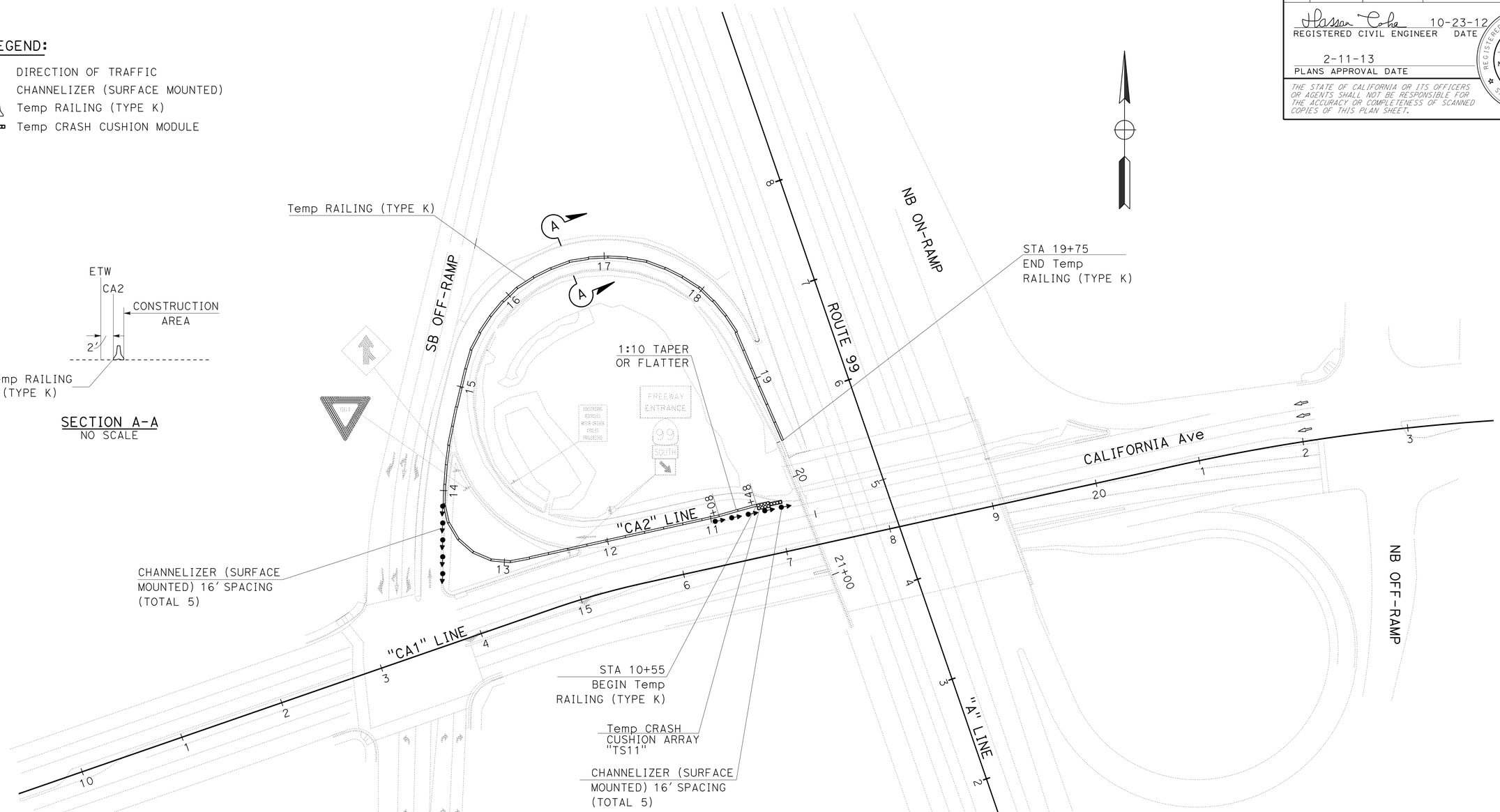

CHANNELIZER (SURFACE MOUNTED)

SHEET No.	EA
TH-1	10
TOTAL	10

TEMPORARY CRASH CUSHION MODULE

SHEET No.	TEMPORARY CRASH CUSHION TYPE "TS11" EA
TH-1	11
TOTAL	11

TEMPORARY RAILING (TYPE K)

SHEET No.	LOCATION STA TO STA		TEMPORARY RAILING (TYPE K) LF
TH-1	10+55	19+75	920
TOTAL			920

APPROVED FOR TRAFFIC HANDLING WORK ONLY

TRAFFIC HANDLING PLAN AND QUANTITIES

TH-2

REVISED BY | DATE REVISED
KEVIN NGUYEN | HASSAN TAHA
CALCULATED-DESIGNED BY | CHECKED BY
FUNCTIONAL SUPERVISOR: MOHAMMED QATAMI
STATE OF CALIFORNIA - DEPARTMENT OF TRANSPORTATION
Caltrans® TRAFFIC DESIGN

LAST REVISION 09-11-12 | DATE PLOTTED => 06-MAR-2013 | TIME PLOTTED => 17:18

Dist	COUNTY	ROUTE	POST MILES TOTAL PROJECT	SHEET No.	TOTAL SHEETS
06	Ker	99	24.6	19	53

Hassan Taha 10-23-12
REGISTERED CIVIL ENGINEER DATE

2-11-13
PLANS APPROVAL DATE

REGISTERED PROFESSIONAL ENGINEER HASSAN M. TAHA No. 60130 Exp. 06/30/14 CIVIL STATE OF CALIFORNIA

THE STATE OF CALIFORNIA OR ITS OFFICERS OR AGENTS SHALL NOT BE RESPONSIBLE FOR THE ACCURACY OR COMPLETENESS OF SCANNED COPIES OF THIS PLAN SHEET.

LEGEND:

- DIRECTION OF TRAFFIC
- XX TRAFFIC STRIPE DETAIL NUMBER
- LIMITS OF DESIGNATED TRAFFIC STRIPING DETAIL
- BRIDGE MOUNTED SIGN
- RESET ROADSIDE SIGN
- REMOVE ROADSIDE SIGN
- X ROADSIDE SIGN NUMBER
- ROADSIDE SIGN ONE POST
- TYPE I ARROW
- TYPE III ARROW
- TYPE IV ARROW
- SIGN MOUNTED ON BARRICADE
- SIGN MOUNTED ON MAST ARM

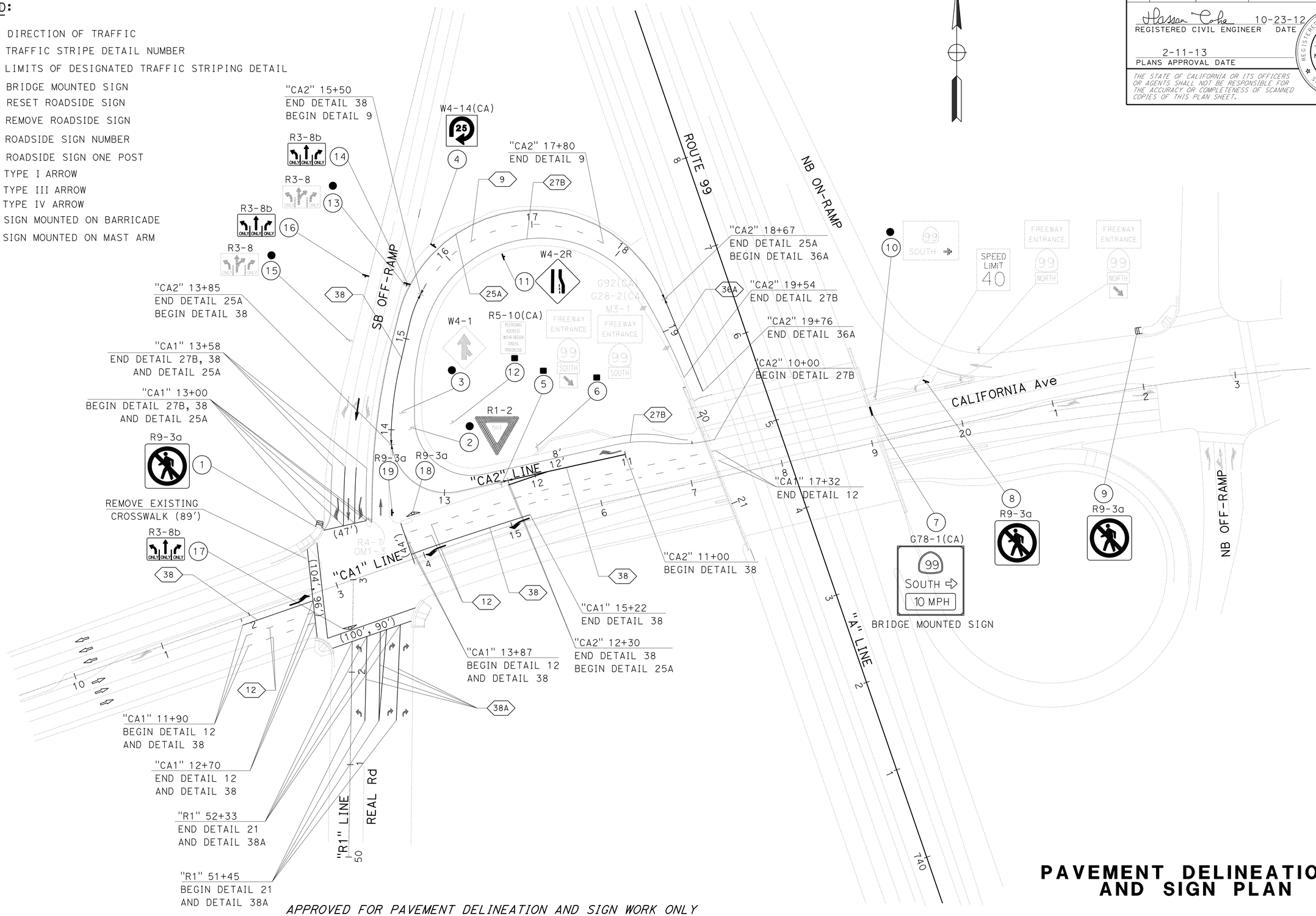

APPROVED FOR PAVEMENT DELINEATION AND SIGN WORK ONLY

PAVEMENT DELINEATION AND SIGN PLAN

PD-1

REVISED BY	DATE REVISED
KEVIN NGUYEN	HASSAN TAHA

CALCULATED-DESIGNED BY | CHECKED BY

FUNCTIONAL SUPERVISOR: MOHAMMED QATAMI

STATE OF CALIFORNIA - DEPARTMENT OF TRANSPORTATION

Caltrans® **TRAFFIC DESIGN**

LAST REVISION 09-11-12 | DATE PLOTTED => 06-MAR-2013 | TIME PLOTTED => 17:18

Dist	COUNTY	ROUTE	POST MILES TOTAL PROJECT	SHEET No.	TOTAL SHEETS
06	Ker	99	24.6	20	53

Hassan Taha 10-23-12
REGISTERED CIVIL ENGINEER DATE

2-11-13
PLANS APPROVAL DATE

REGISTERED PROFESSIONAL ENGINEER HASSAN M. TAHA No. 60130 Exp. 06/30/14 CIVIL STATE OF CALIFORNIA

THE STATE OF CALIFORNIA OR ITS OFFICERS OR AGENTS SHALL NOT BE RESPONSIBLE FOR THE ACCURACY OR COMPLETENESS OF SCANNED COPIES OF THIS PLAN SHEET.

PAVEMENT DELINEATION QUANTITIES

SHEET No.	LOCATION	STA TO STA	DETAIL No.	PAVEMENT MARKER (RETROREFLECTIVE) TYPE G	PAVEMENT MARKER (RETROREFLECTIVE) TYPE H	THERMOPLASTIC TRAFFIC STRIPE 8" SOLID	THERMOPLASTIC TRAFFIC STRIPE 4" SOLID	THERMOPLASTIC TRAFFIC STRIPE 4" (BROKEN 36-12)	THERMOPLASTIC TRAFFIC STRIPE 4" (BROKEN 17-7)	THERMOPLASTIC PAVEMENT MARKING		REMOVE THERMOPLASTIC PAVEMENT MARKING	
				EA	EA	LF	LF	LF	LF	DESCRIPTION	SQFT	DESCRIPTION	SQFT
PD-1	REAL ROAD	51+45 TO 52+33	21				176			6- TYPE III ARROW	252		
PD-1	REAL ROAD	51+45 TO 52+33	38A			176				6- TYPE IV ARROW	90		
PD-1	REAL ROAD	51+45 TO 52+33	38A			88				390 FT- CROSSWALK	390	89 FT- CROSSWALK	89
PD-1	REAL ROAD	51+45 TO 52+33	38A			88				2- TYPE I ARROW	62	1- TYPE II ARROW	45
PD-1	EB CALIFORNIA Ave	11+90 TO 12+70	12	3				80		2- LIMIT LINE	91		
PD-1	EB CALIFORNIA Ave	11+90 TO 12+70	12	3				80		1- TYPE I ARROW	25		
PD-1	EB CALIFORNIA Ave	11+90 TO 12+70	38	4		80							
PD-1	WB CALIFORNIA Ave	13+87 TO 15+22	38	7		135							
PD-1	WB CALIFORNIA Ave	13+87 TO 17+32	12	8				345					
PD-1	WB CALIFORNIA Ave	13+87 TO 17+32	12	8				345					
PD-1	ONRAMP	11+00 TO 12+30	38	6		130							
PD-1	ONRAMP	12+30 TO 13+85	25A		7		155						
PD-1	ONRAMP	13+85 TO 15+50	38	8		165							
PD-1	ONRAMP	15+50 TO 17+80	9	6					230				
PD-1	ONRAMP	10+00 TO 19+54	27B				954						
PD-1	ONRAMP	13+00 TO 18+67	25A		25		567						
PD-1	ONRAMP	18+67 TO 19+76	36A	6		109							
PD-1	OFFRAMP	13+00 TO 13+58	38	3		58							
PD-1	OFFRAMP	13+00 TO 13+58	38	3		58							
PD-1	OFFRAMP	13+00 TO 13+58	25A		3		58						
PD-1	OFFRAMP	13+00 TO 13+58	27B				58						
SUB-TOTAL				65	35	1087	1968	850	230		910		134
TOTAL				100		1087	1968	850	230		910		134

PAVEMENT DELINEATION QUANTITIES

PDQ-1

STATE OF CALIFORNIA - DEPARTMENT OF TRANSPORTATION
Caltrans® TRAFFIC DESIGN

FUNCTIONAL SUPERVISOR: MOHAMMED QATAMI
CALCULATED-DESIGNED BY: KEVIN NGUYEN
CHECKED BY: HASSAN TAHA
REVISED BY
DATE REVISED

LAST REVISION 09-11-12
DATE PLOTTED => 06-MAR-2013
TIME PLOTTED => 17:18

Dist	COUNTY	ROUTE	POST MILES TOTAL PROJECT	SHEET No.	TOTAL SHEETS
06	Ker	99	24.6	21	53

Hassan Taha 10-23-12
REGISTERED CIVIL ENGINEER DATE

2-11-13
PLANS APPROVAL DATE

REGISTERED PROFESSIONAL ENGINEER HASSAN M. TAHA No. 60130 Exp. 06/30/14 CIVIL STATE OF CALIFORNIA

THE STATE OF CALIFORNIA OR ITS OFFICERS OR AGENTS SHALL NOT BE RESPONSIBLE FOR THE ACCURACY OR COMPLETENESS OF SCANNED COPIES OF THIS PLAN SHEET.

ABBREVIATION:

R/B- RED/BLACK

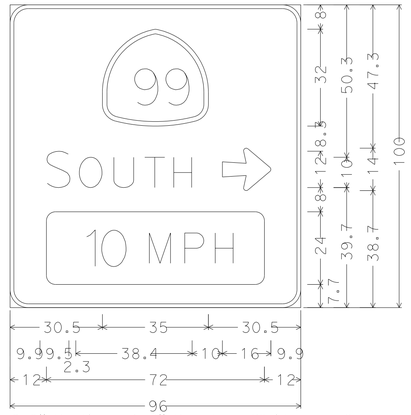

6.0" Radius, 1.3" Border, White on Green;
[SOUTH] E Mod;
Arrow 10CAP-1L - 16.0" O{;
Rounded Rectangle 3.0" Radius Yellow;

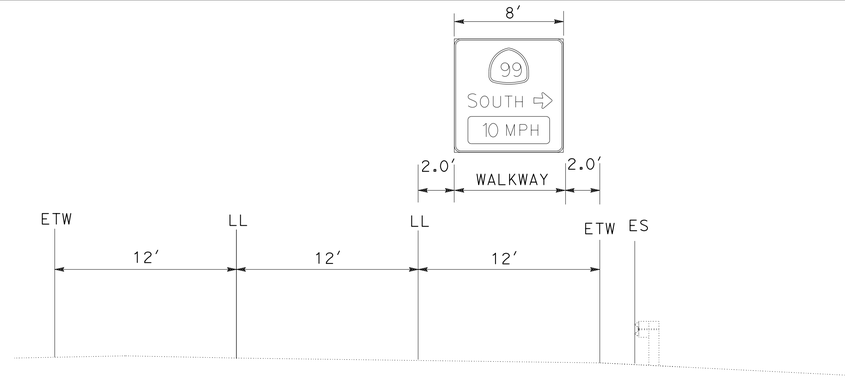

(7) INSTALL SIGN PANEL MOUNTED ON THE BRIDGE
FWBT ON CALIFORNIA Ave AT Sta 19+10

SIGN QUANTITIES

SHEET No.	SIGN No.	SIGN CODE	SIGN MESSAGE	PANEL SIZE	POST SIZE	SINGLE FACED	BACKGROUND SHEETING COLOR	BACKGROUND RETROREFLECTIVITY ASTM TYPE	LEGEND SHEETING COLOR	LEGEND RETROREFLECTIVITY ASTM TYPE	GRAFFITI FLOW STANDARD	GRAFFITI FLOW PREMIUM	FURNISHED SINGLE SHEET ALUMINUM SIGN UNFRAMED 0.063"	FURNISHED SINGLE SHEET ALUMINUM SIGN UNFRAMED 0.080"	ROADSIDE SIGN - ONE POST	ROADSIDE SIGN - TWO POST	REMOVE ROADSIDE SIGN	RESET ROADSIDE SIGN	MOUNTED ON BARRICADE (N)	SIGN MOUNTED ON MAST ARM (N) AND ON THE POLE	FURNISH LAMINATED PANEL SIGN (1"-TYPE A)	INSTALL SIGN STRUCTURE (BRIDE MOUNTED WITH WALKWAY)	FURNISH SIGN STRUCTURE (BRIDE MOUNTED WITH WALKWAY)
													SQFT	SQFT	EA	EA	EA	EA	EA	EA	SQFT	LB	LB
PD-1	1	R9-3(CA)	NO PEDESTRIAN CROSSING SYMBOL	18" x 18"		X	WHITE	III	R/B	III	X		2.25						1*				
PD-1	2	R1-2	YIELD SYMBOL														1						
PD-1	3	W4-1	MEGRE SYMBOL														1						
PD-1	4	W4-14(CA)	270 DEGREE LOOP AND SPEED LIMIT	60" x 60"	4" x 6"	X	YELLOW	III	BLACK		X			16.00		1							
PD-1	5	G92(CA), G28-2(CA), M3-1 M6-2	FREEWAY ENTRANCE															1					
PD-1	6	G92(CA), G28-2(CA), M3-1	FREEWAY ENTRANCE															1					
PD-1	7	G78-1(CA)	99 SOUTH, ARROW	96" x 100"		X	GREEN	VI	WHITE	VI		X									66.7	1320	1320
PD-1	8	R9-3(CA)	NO PEDESTRIAN CROSSING SYMBOL	18" x 18"	4" x 4"	X	WHITE	III	R/B	III	X		2.25		1								
PD-1	9	R9-3(CA)	NO PEDESTRIAN CROSSING SYMBOL	18" x 18"		X	WHITE	III	R/B	III	X		2.25						1*				
PD-1	10	G78-1(CA)	99 SOUTH, ARROW														1						
PD-1	11	W4-2R	MERGE SYMBOL	36" x 36"	4" x 6"	X							9.00		1								
PD-1	12	R5-10(CA)	PEDESTRIAN BICYCLES CYCLE...															1					
PD-1	13	R3-8	ADVANCE INTERSECTION LANE CONTROL														1						
PD-1	14	R3-8b	ADVANCE INTERSECTION LANE CONTROL	48" x 30"	4" x 6"	X	WHITE	III	BLACK	III	X		10.00		1								
PD-1	15	R3-8	ADVANCE INTERSECTION LANE CONTROL														1						
PD-1	16	R3-8b	ADVANCE INTERSECTION LANE CONTROL	48" x 30"	4" x 6"	X	WHITE	III	BLACK	III	X		10.00		1								
PD-1	17	R3-8b	ADVANCE INTERSECTION LANE CONTROL	48" x 30"		X	WHITE	III	BLACK	III	X		10.00							1*			
PD-1	18	R9-3(CA)	NO PEDESTRIAN CROSSING SYMBOL	18" x 18"		X	WHITE	III	R/B	III	X		2.25							1*			
PD-1	19	R9-3(CA)	NO PEDESTRIAN CROSSING SYMBOL	18" x 18"	4" x 4"	X	WHITE	III	R/B	III	X		2.25		1								
										TOTAL			50.25	16.00	5	1	5	3			66.7	1320	1320

NOTES: (N) NOT A SEPARATE PAY ITEM, FOR INFORMATION ONLY
* SEE ELECTRICAL PLANS FOR INSTALLATION

NO SCALE

SIGN DETAILS AND QUANTITIES
SD-1

REVISED BY	DATE REVISED	KEVIN NGUYEN	HASSAN TAHA	CALCULATED-DESIGNED BY	CHECKED BY	FUNCTIONAL SUPERVISOR	MOHAMMED QATAMI

STATE OF CALIFORNIA - DEPARTMENT OF TRANSPORTATION
Caltrans® TRAFFIC DESIGN

LAST REVISION 09-11-12 DATE PLOTTED => 06-MAR-2013 TIME PLOTTED => 17:18

Dist	COUNTY	ROUTE	POST MILES TOTAL PROJECT	SHEET No.	TOTAL SHEETS
06	Ker	99	24.6	22	53

REGISTERED CIVIL ENGINEER 08-16-12 DATE

2-11-13
PLANS APPROVAL DATE

REGISTERED PROFESSIONAL ENGINEER DANIEL KYUNGWON HA No. 62601 Exp. 6/30/14 CIVIL STATE OF CALIFORNIA

THE STATE OF CALIFORNIA OR ITS OFFICERS OR AGENTS SHALL NOT BE RESPONSIBLE FOR THE ACCURACY OR COMPLETENESS OF SCANNED COPIES OF THIS PLAN SHEET.

ROADWAY QUANTITIES

STATION	COLD PLANE AC Pvmt	HMA (TYPE A)	CLASS 2 AB	ROADWAY EXCAVATION	IMPORTED BORROW	REMOVE AC SURFACING	TACK COAT
	SQYD	TON	CY	CY	CY	SQFT	TON
"CA2" 13+32 TO "CA2" 19+64	1357	138.0					0.63
"CA1" 13+83 TO "CA1" 17+34.16	1277	343.0	71.6	160.0			1.20
"R1" 51+83 TO "R1" 52+33	368	38.0					0.19
"CA1" 12+17 TO "CA1" 12+67	278	28.0					0.14
SB OFF RAMP TERMINI	257	26.0					0.13
"CA2" 11+09.26 TO "CA2" 19+64		796.4	544.5	1626.0	4000.0		1.10
"CA2" 12+26.25 TO "CA2" 13+66				55.0			
RAISED ISLAND AND OVERSIDE DRAINS			13.0				
HMA DIKE		12.8					
"CA2" 12+00 TO "CA2" 14+60						1707.6	
TOTAL	3537	1382.2	629.1	1841.0	4000.0	1707.6	3.39

METAL BEAM GUARD RAILING

STATION	SIDE	REMOVE MBGR	TREATED WOOD WASTE
		LF	LB
"CA2" 19+01.89 TO "CA2" 19+64.17	R†	65	1090
TOTAL		65	1090

CONCRETE BARRIER

STATION	SIDE	(TYPE 60)
		LF
"CA2" 18+67 TO "CA2" 19+64.17	R†	98
TOTAL		98

ALTERNATIVE CRASH CUSHION

STATION	SIDE	ALTERNATIVE CRASH CUSHION
		EA
"CA2" 18+67	R†	1
TOTAL		1

HMA DIKE

STATION	SIDE	PLACE HMA DIKE (TYPE E)	HMA (TYPE A)	(N) REMOVE AC DIKE
		LF	TON	LF
"CA2" 10+09.30 TO "CA2" 19+64.17	R†			840
"CA2" 10+09.30 TO "CA2" 14+30	R†	372	9.8	
TOTAL		372	9.8 *	840

* SEE ROADWAY QUANTITIES TABLE FOR TOTAL HMA QUANTITY.

CURBS AND CURB RAMPS

STATION/LOCATION	SIDE	MINOR Conc (CURB & CURB RAMP)			MINOR Conc (BRUSHED CONCRETE)	MINOR Conc (TEXTURED PAVING)	REPLACE AC SURFACING	REMOVE CONCRETE	
		CURB A2-6	CURB A1-6	CURB RAMP				CURB RAMP	CURB
		CY	CY	CY	SQFT	CY	CY	CY	CY
"CA1" 13+82.29 TO 14+55.48	L†	4.9							
"CA1" 14+55.48 TO "CA2" 13+66	L†		2.4						
RAISED ISLAND					420	14.9			
CURB RAMP 1, SHEET C-1		1.6		5.3			0.6	5.3	1.6
CURB RAMP 2, SHEET C-1		1.9	0.6	6.9			1.2	6.9	1.9
CURB RAMP 3, SHEET C-2		1.1	0.5	3.1			0.4	3.1	1.1
TOTAL		28.3			420	14.9	2.2	19.9	

EROSION CONTROL

STATION	SIDE	TEMPORARY HYDROSEED	TEMPORARY FENCE (TYPE ESA)	Temp FIBER ROLL	Temp DI PROTECTION	Temp Const ENTRANCE
		SQYD	LF	LF	EA	EA
"CA2" 11+90.78	R†		94			
"CA2" 10+00 TO "CA2" 19+64	R†	2515		962		1
"CA1" 13+91.28	L†				1	
TOTAL		2515	94	962	1	1

SAFETY EDGE

STATION	SIDE	(N) SAFETY EDGE
		LF
"CA2" 14+30 TO "CA2" 18+40	R†	379
TOTAL		379

(N) - NOT A SEPARATE PAY ITEM, FOR INFORMATION ONLY

SUMMARY OF QUANTITIES
Q-1

STATE OF CALIFORNIA - DEPARTMENT OF TRANSPORTATION
Caltrans® DESIGN

FUNCTIONAL SUPERVISOR: NICHOLAS CHAN
CALCULATED-DESIGNED BY: INDERPAL GILL
CHECKED BY: DANIEL HA
REVISED BY / DATE REVISED

LAST REVISION 01-25-13 | DATE PLOTTED => 06-MAR-2013 | TIME PLOTTED => 17:18

Dist	COUNTY	ROUTE	POST MILES TOTAL PROJECT	SHEET No.	TOTAL SHEETS
06	Ker	99	24.6	23	53

Edward A. Hibbs
LICENSED LANDSCAPE ARCHITECT

2-11-13
PLANS APPROVAL DATE

LICENSED LANDSCAPE ARCHITECT — EDWARD A. HIBBS No. — Edward A. Hibbs — Expiration Date 2/28/14 — Renewal Date 11/30/12 Date — STATE OF CALIFORNIA

THE STATE OF CALIFORNIA OR ITS OFFICERS OR AGENTS SHALL NOT BE RESPONSIBLE FOR THE ACCURACY OR COMPLETENESS OF SCANNED COPIES OF THIS PLAN SHEET.

PLANT LIST AND PLANTING SPECIFICATIONS

PLANT GROUP	PLANT No.	SYMBOL	BOTANICAL NAME	COMMON NAME	SIZE	QUANTITY EACH	HOLE SIZE (INCH) Dia	HOLE SIZE (INCH) DEPTH	BASIN TYPE	IRON SULFATE ①	SOIL AMEND ①	COMMERCIAL FERTILIZER ① PLANTING	COMMERCIAL FERTILIZER ① PLT ESTB	BASIN MULCH (CY)	STAKING	PLANTING LIMITS MINIMUM DISTANCE (ft) FROM ETW	Pvmt	FENCE	WALL	PAVED DITCH	EARTH DITCH	ON CENTER (ft)	REMARKS
A	1		LAGERSTROEMIA INDICA TRI 'MUSKOGEE'	CRAPE MYRTLE - LAVENDER	No. 1	1	⑧	③	II ⑩	—	1/4 CF	1 Pkt	1/4 LB	1 CF	—	30	-	15	15	15	17	⑦	SHRUB ④
	2		LAGERSTROEMIA INDICA TRI 'NATCHEZ'	CRAPE MYRTLE - WHITE	No. 1	1	⑧	③	II ⑩	—	1/4 CF	1 Pkt	1/4 LB	1 CF	—	30	-	15	15	15	17	⑦	SHRUB ④
	3		LAGERSTROEMIA INDICA TRI 'TUSCARORA'	CRAPE MYRTLE - PINK	No. 1	1	⑧	③	II ⑩	—	1/4 CF	1 Pkt	1/4 LB	1 CF	—	30	-	15	15	15	17	⑦	SHRUB ④
B	4		QUERCUS LOBATA	VALLEY OAK	No. 5	7	⑧	③	II	—	1 CF	3 Pkt	3/8 LB	1 CF	⑨	30	-	20	20	20	22	⑦	TREE
	5		ROBINIA AMBIGUA 'IDAHOENSIS'	IDAHO LOCUST	No. 5	3	⑧	③	II	—	1 CF	3 Pkt	3/8 LB	1 CF ②	⑨	30	15	15	10	10	12	⑦	TREE
	6		LAGERSTROEMIA INDICA 'NATCHEZ'	CRAPE MYRTLE - WHITE	No. 5	3	⑧	③	II	—	1 CF	3 Pkt	3/8 LB	1 CF	⑨	30	-	15	15	15	17	⑦	TREE
	7		LAGERSTROEMIA INDICA 'TUSCARORA'	CRAPE MYRTLE - PINK	No. 5	2	⑧	③	II	—	1 CF	3 Pkt	3/8 LB	1 CF	⑨	30	-	15	15	15	17	⑦	TREE
H	8		CARPOBROTUS EDULIS	ICE PLANT	CUTTING	12,300	⑥	⑥	—	—	269 CY/ ACRE	10 LB/ 1000 SQFT	10 LB/ 1000 SQFT	—	—	-	6	6	6	6	8	1.5	GROUND COVER

APPLICABLE WHEN CIRCLED:

① - QUANTITIES SHOWN ARE "PER PLANT" UNLESS SHOWN AS SQFT OR SQYD APPLICATION RATES
② - BASIN MULCH IS INCLUDED WITH MULCH QUANTITIES SHOWN ON PLANTING PLAN
③ - SUFFICIENT TO RECEIVE ROOT BALL AND AMENDMENTS IF REQUIRED
④ - SEE DETAIL
5 - SEE SPECIAL PROVISIONS
⑥ - SEE STANDARD SPECIFICATIONS
⑦ - AS SHOWN ON PLANS
⑧ - TWICE THE ROOTBALL DIAMETER
⑨ - SEE STANDARD DETAIL
⑩ - BASIN AREA EQUIVALENT TO 36 INCHES IN DIAMETER
11 - ROOT BARRIER REQUIRED
12 - STATE-FURNISHED

LEGEND:

MULCH AREAS

ROADSIDE CLEARING AND PLT ESTB LIMITS (Typ)

NOTE:

UNDERLINED PORTIONS OF BOTANICAL NAME INDICATE ABBREVIATIONS USED ON PLANTING PLANS.

PLANT LIST PL-1

REVISED BY | DATE REVISED
ED HIBBS | HEIDI MISSLBECK
CALCULATED-DESIGNED BY | CHECKED BY
SENIOR LANDSCAPE ARCHITECT | BRAD COLE
STATE OF CALIFORNIA - DEPARTMENT OF TRANSPORTATION
Caltrans® LANDSCAPE ARCHITECTURE

LAST REVISION 11-30-12 | DATE PLOTTED => 06-MAR-2013 | TIME PLOTTED => 17:18

Dist	COUNTY	ROUTE	POST MILES TOTAL PROJECT	SHEET No.	TOTAL SHEETS
06	Ker	99	24.6	24	53

Edward A. Hibbs
LICENSED LANDSCAPE ARCHITECT

2-11-13
PLANS APPROVAL DATE

LICENSED LANDSCAPE ARCHITECT
EDWARD A. HIBBS No. 4
Edward A. Hibbs
Expiration Date
2/28/14
Renewal Date
11/30/12
Date
STATE OF CALIFORNIA

THE STATE OF CALIFORNIA OR ITS OFFICERS OR AGENTS SHALL NOT BE RESPONSIBLE FOR THE ACCURACY OR COMPLETENESS OF SCANNED COPIES OF THIS PLAN SHEET.

NOTES:

1. FOR ACCURATE RIGHT OF WAY DATA, CONTACT RIGHT OF WAY ENGINEERING AT THE DISTRICT OFFICE.

2. CULTIVATE A 2" DEPTH OF SOIL AMENDMENT INTO ALL AREAS TO BE PLANTED WITH CARPOBROTUS EDULIS.

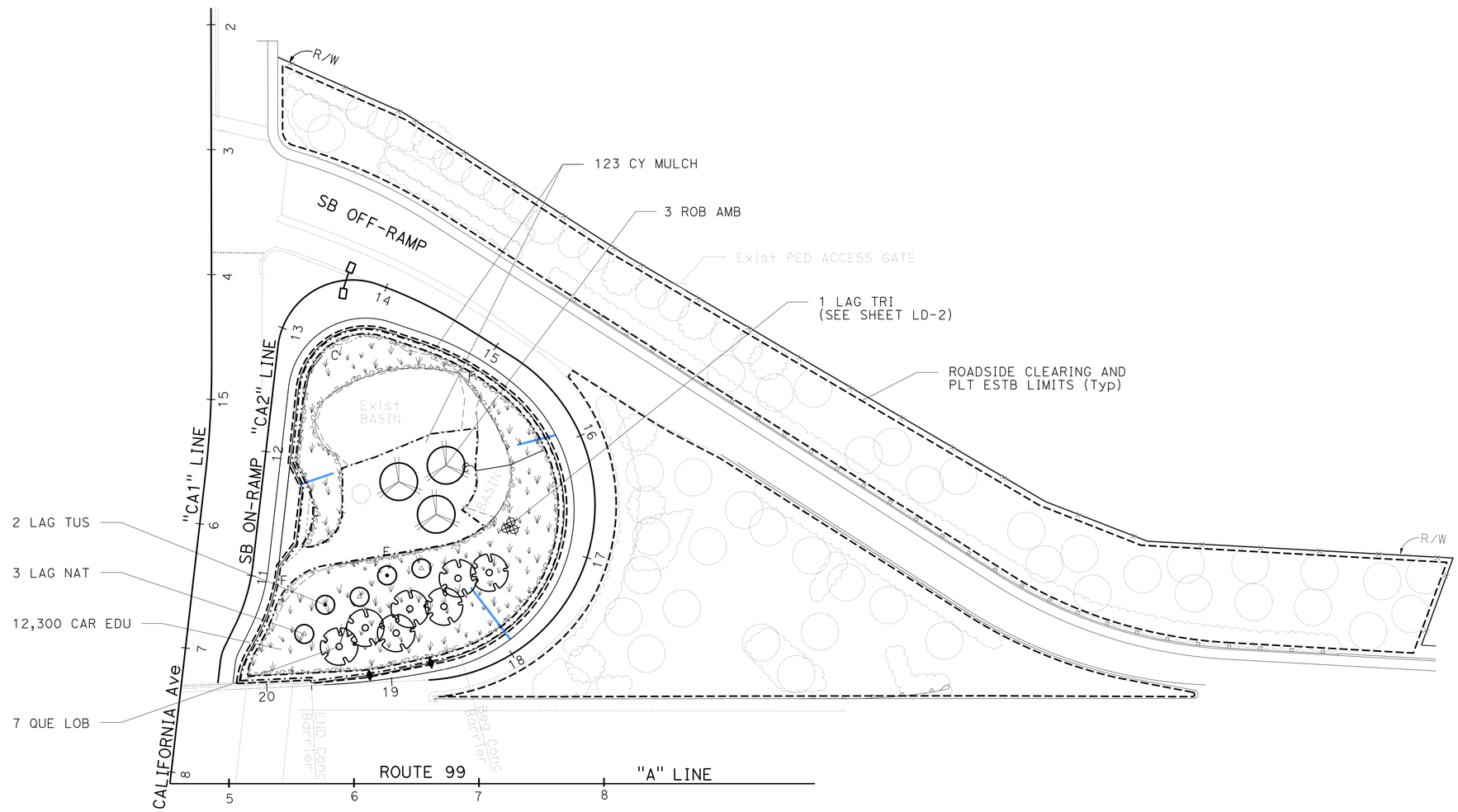

APPROVED FOR PLANTING WORK ONLY

SCALE: 1"=50'

PLANTING PLAN
PP-1

STATE OF CALIFORNIA - DEPARTMENT OF TRANSPORTATION
Caltrans® LANDSCAPE ARCHITECTURE

SENIOR LANDSCAPE ARCHITECT: BRAD COLE
CALCULATED-DESIGNED BY: ED HIBBS
CHECKED BY: HEIDI MISSLBECK
REVISED BY
DATE REVISED

LAST REVISION 12-03-12
DATE PLOTTED => 06-MAR-2013
TIME PLOTTED => 17:18

Dist	COUNTY	ROUTE	POST MILES TOTAL PROJECT	SHEET No.	TOTAL SHEETS
06	Ker	99	24.6	25	53

Edward A. Hibbs
LICENSED LANDSCAPE ARCHITECT

2-11-13
PLANS APPROVAL DATE

LICENSED LANDSCAPE ARCHITECT
EDWARD A. HIBBS No. 4
Edward A. Hibbs
Signature
2/28/14
Renewal Date
11/30/12
Date
STATE OF CALIFORNIA

THE STATE OF CALIFORNIA OR ITS OFFICERS OR AGENTS SHALL NOT BE RESPONSIBLE FOR THE ACCURACY OR COMPLETENESS OF SCANNED COPIES OF THIS PLAN SHEET.

NOTE:

FOR ACCURATE RIGHT OF WAY DATA, CONTACT RIGHT OF WAY ENGINEERING AT THE DISTRICT OFFICE.

ABBREVIATION:

BT BLADDER TANK

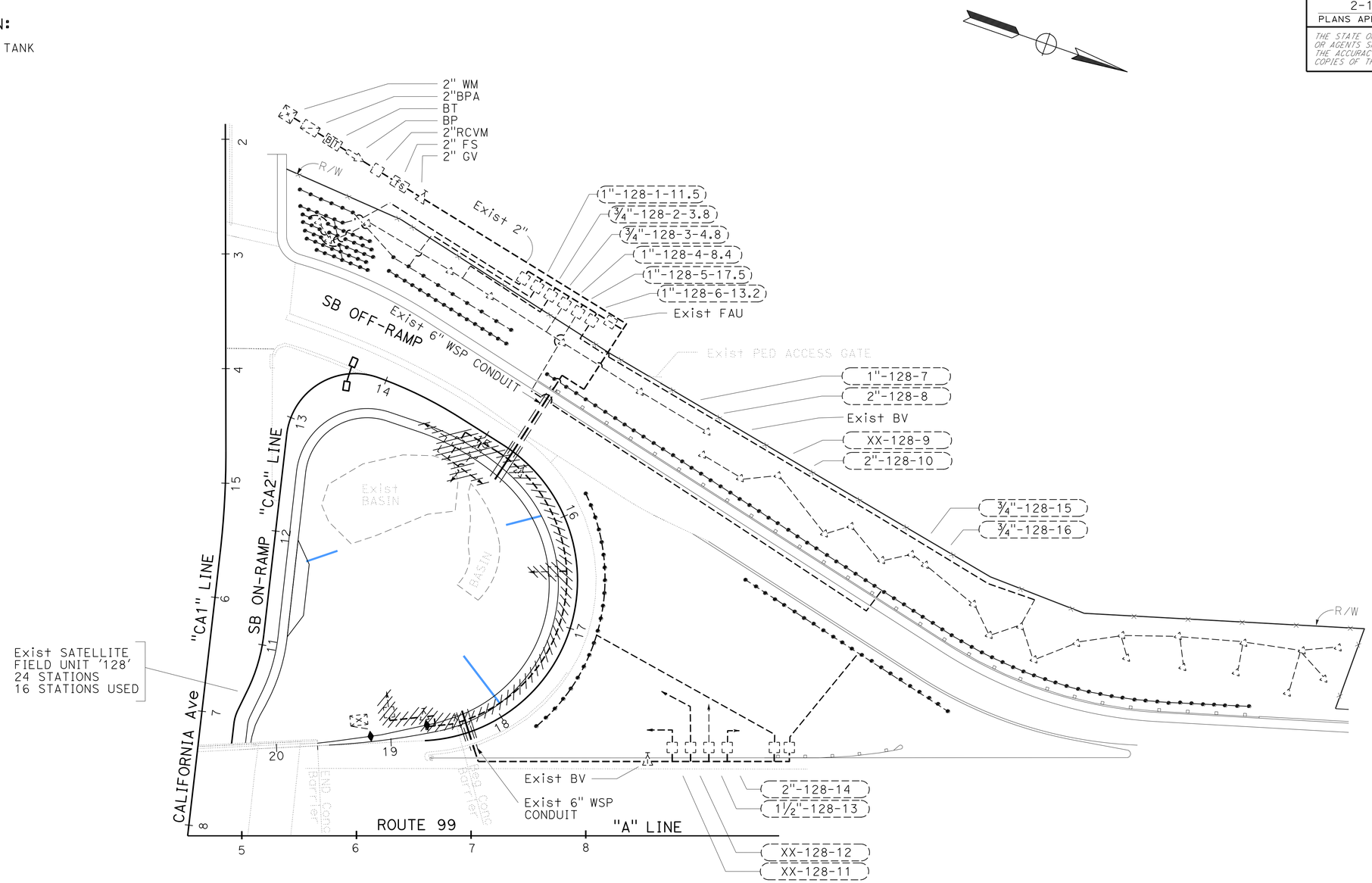

IRRIGATION REMOVAL PLAN

SCALE: 1"=50'

IRP-1

STATE OF CALIFORNIA - DEPARTMENT OF TRANSPORTATION
Caltrans® LANDSCAPE ARCHITECTURE

SENIOR LANDSCAPE ARCHITECT: BRAD COLE
CALCULATED-DESIGNED BY: HEIDI MISSLBECK
CHECKED BY: ED HIBBS
REVISED BY
DATE REVISED

LAST REVISION 12-03-12
DATE PLOTTED => 06-MAR-2013
TIME PLOTTED => 17:18

Dist	COUNTY	ROUTE	POST MILES TOTAL PROJECT	SHEET No.	TOTAL SHEETS
06	Ker	99	24.6	26	53

Edward A. Hibbs
LICENSED LANDSCAPE ARCHITECT

2-11-13
PLANS APPROVAL DATE

LICENSED LANDSCAPE ARCHITECT
EDWARD A. HIBBS No. 1
Edward A. Hibbs
Signature
2/28/14
Renewal Date
11/30/12
Date
STATE OF CALIFORNIA

THE STATE OF CALIFORNIA OR ITS OFFICERS OR AGENTS SHALL NOT BE RESPONSIBLE FOR THE ACCURACY OR COMPLETENESS OF SCANNED COPIES OF THIS PLAN SHEET.

NOTE:

FOR ACCURATE RIGHT OF WAY DATA, CONTACT RIGHT OF WAY ENGINEERING AT THE DISTRICT OFFICE.

BT BLADDER TANK

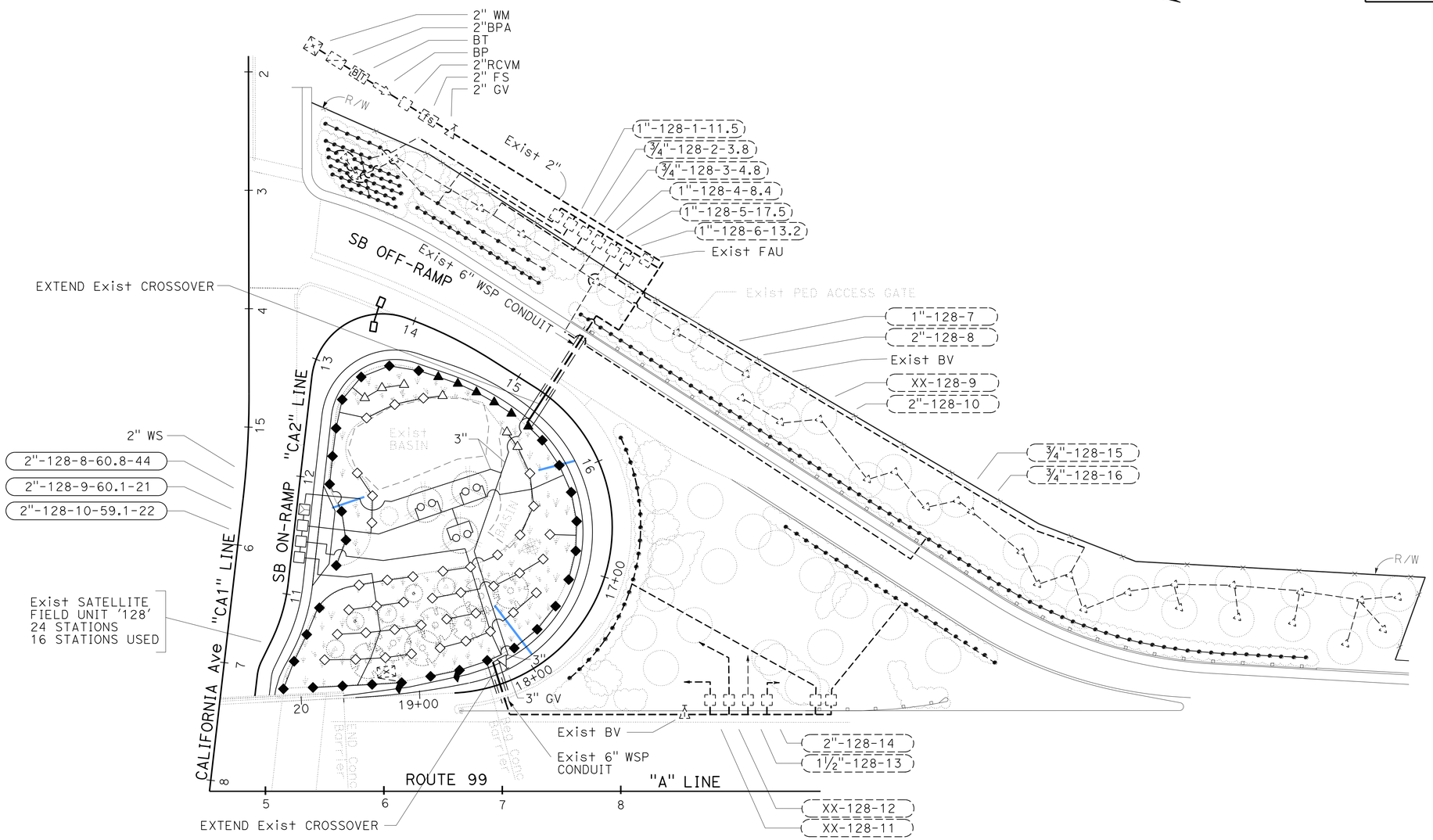

APPROVED FOR IRRIGATION WORK ONLY

SCALE: 1"=50'

IRRIGATION PLAN
IP-1

STATE OF CALIFORNIA - DEPARTMENT OF TRANSPORTATION
Caltrans® LANDSCAPE ARCHITECTURE

SENIOR LANDSCAPE ARCHITECT: BRAD COLE
CALCULATED-DESIGNED BY: ED HIBBS
CHECKED BY: HEIDI MISSLBECK
REVISED BY
DATE REVISED

LAST REVISION 12-03-12
DATE PLOTTED => 06-MAR-2013
TIME PLOTTED => 17:18

Dist	COUNTY	ROUTE	POST MILES TOTAL PROJECT	SHEET No.	TOTAL SHEETS
06	Ker	99	24.6	27	53

Edward A. Hibbs
LICENSED LANDSCAPE ARCHITECT

2-11-13
PLANS APPROVAL DATE

LICENSED LANDSCAPE ARCHITECT — EDWARD A. HIBBS No. 4 — Expiration Date 2/28/14 — Renewal Date 11/30/12 — STATE OF CALIFORNIA

THE STATE OF CALIFORNIA OR ITS OFFICERS OR AGENTS SHALL NOT BE RESPONSIBLE FOR THE ACCURACY OR COMPLETENESS OF SCANNED COPIES OF THIS PLAN SHEET.

SPRINKLER SCHEDULE

SYMBOL	TYPE	DESCRIPTION	SPRAY PATTERN	OPERATING PRESSURE (psi)	PRESSURE COMPENSATING	PLUS/MINUS 5% ② DISCHARGE GALLONS PER MINUTE (GPM)	GALLONS PER HOUR (GPH)	RADIUS (ft)	WIDTH x LENGTH (ft)	MATERIAL	INLET CONNECTION (NPT INCH)	POSITIVE-LOCKING Adj ARC STOP	BACKSPLASH PREVENTER	DIFFUSER PIN	DISTANCE CONTROL FLAP	Adj DISCHARGE	RISER TYPE	RISER MATERIAL PLASTIC	RISER MATERIAL GALVANIZED	RISER SIZE (IPS INCH)	RISER HEIGHT (INCH)	RISER FLOW SHUTOFF DEVICE	⑤ SWING JOINT (TYPE)	RISER SUPPORT	SPRINKLER PROTECTOR (TYPE)	REMARKS
△	B-5	MULTI-STREAM SPRAY ROTOR	H	40	X	0.74	-	20	-	PL	½	-	-	-	-	X	IV	X	-	½	18	-	I	X	-	⑦ ⑧
△	B-5	MULTI-STREAM SPRAY ROTOR	F	40	X	1.47	-	20	-	PL	½	-	-	-	-	X	IV	X	-	½	18	-	I	X	-	⑦ ⑧
◇	B-5	MULTI-STREAM SPRAY ROTOR	H	40	X	1.82	-	30	-	PL	½	-	-	-	-	X	IV	X	-	½	18	-	I	X	-	⑦ ⑧
◇	B-5	MULTI-STREAM SPRAY ROTOR	F	40	X	3.64	-	30	-	PL	½	-	-	-	-	X	IV	X	-	½	18	-	I	X	-	⑦ ⑧
▲	B-6	MULTI-STREAM SPRAY ROTOR	H	40	X	0.74	-	20	-	PL	½	-	-	-	-	X	VI	X	-	½	-	-	-	-	I	12" POPUP ⑦ ⑧
◆	B-6	MULTI-STREAM SPRAY ROTOR	Q	40	X	0.86	-	30	-	PL	½	-	-	-	-	X	VI	X	-	½	-	-	-	-	I	12" POPUP ⑦ ⑧
◆	B-6	MULTI-STREAM SPRAY ROTOR	H	40	X	1.82	-	30	-	PL	½	-	-	-	-	X	VI	X	-	½	-	-	-	-	I	12" POPUP ⑦ ⑧
○	C-2	FLOOD BUBBLER	-	30	X	0.25	-	-	-	PL	½	-	-	-	-	-	II	X	-	½	6	-	I	-	-	⑦ ⑧

X IN BOX DENOTES REQUIREMENT

APPLICABLE WHEN CIRCLED BELOW:

1 - SEE SPECIAL PROVISIONS.
② - IF A PRESSURE COMPENSATING DEVICE IS SPECIFIED, THE DISCHARGE AND RADII SHOWN REFLECT ITS USE.
3 - ARC STOP SHALL BE FITTED WITH A NUT AND BOLT.
4 - VINYL-COATED CAST IRON HOUSING.
5 - SWING JOINTS REQUIRED ADJACENT TO SHOULDERS, CURBS, SIDEWALKS, AND DIKES.
6 - UNLESS OTHERWISE SHOWN ON PLANS.
⑦ - MATCHED PRECIPATION RATE NOZZLES.
⑧ - SPRINKLER REQUIRES DRAIN CHECK VALVE AT LOW ELEVATIONS.

LATERAL PIPE SIZING CHART

GALLONS PER MINUTE	PIPE SIZE (*)
≤ 8	¾"
>8-≤13	1"
>13-≤23	1¼"
>23-≤32	1½"
>32-≤52	2"
>52-≤75	2½"

(*) UNLESS DESIGNATED OTHERWISE ON PLANS

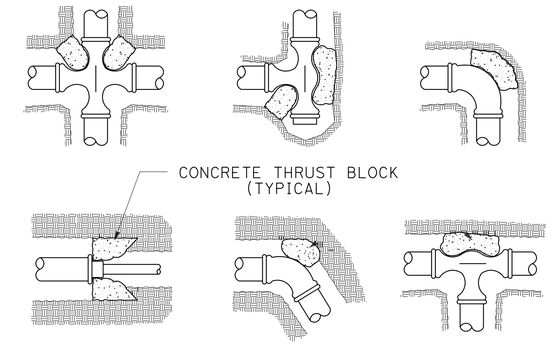

TYPICAL THRUST BLOCK

LANDSCAPE DETAILS
NO SCALE

LD-1

REVISED BY | DATE REVISED
ED HIBBS | HEIDI MISSLBECK
CALCULATED-DESIGNED BY | CHECKED BY
SENIOR LANDSCAPE ARCHITECT
BRAD COLE
STATE OF CALIFORNIA - DEPARTMENT OF TRANSPORTATION
Caltrans® LANDSCAPE ARCHITECTURE

LAST REVISION 11-30-12 | DATE PLOTTED => 06-MAR-2013 | TIME PLOTTED => 17:18

Dist	COUNTY	ROUTE	POST MILES TOTAL PROJECT	SHEET No.	TOTAL SHEETS
06	Ker	99	24.6	28	53

Edward A. Hibbs
LICENSED LANDSCAPE ARCHITECT

2-11-13
PLANS APPROVAL DATE

LICENSED LANDSCAPE ARCHITECT — EDWARD A. HIBBS No. — Expiration Date 2/28/14 — Renewal Date 11/30/12 Date — STATE OF CALIFORNIA

THE STATE OF CALIFORNIA OR ITS OFFICERS OR AGENTS SHALL NOT BE RESPONSIBLE FOR THE ACCURACY OR COMPLETENESS OF SCANNED COPIES OF THIS PLAN SHEET.

EXTEND IRRIGATION CROSSOVERS

LOCATION		SIDE		EXTEND CONDUIT		CB	OL	(N) WATER LINE CROSSOVER SIZE (INCH)	(N) SPRINKLER CONTROL CROSSOVER SIZE (INCH)
LINE	STATION	L+	R+	SIZE (INCH) 6					
				LENGTH (LF)					
RAMP	15+27	-	-	25		-	X	3	1-½
RAMP	18+31	-	-	15		-	X	3	1-½
TOTAL									

(N) - NOT A SEPARATE PAY ITEM FOR INFORMATION ONLY
X - DENOTES REQUIREMENT

ABBREVIATIONS:
CB - COUPLING BAND
OL - OVERLAP

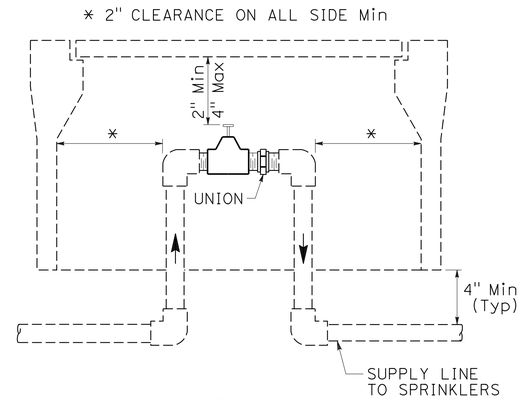

SECTION
VALVE

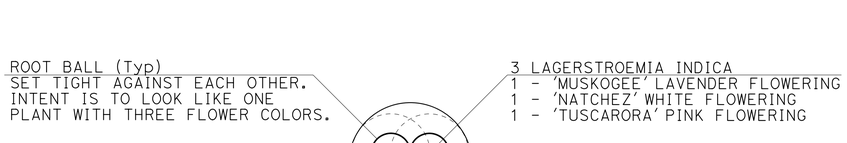

NOTE: EACH SYMBOL ON PLAN ( ) REPRESENTS 3 PLANTS AS NOTED ABOVE AND EACH PLANT MUST BE TAGGED WITH FULL BOTANICAL NAME

PLAN VIEW
LAGERSTROEMIA INDICA TRI DETAIL ( )

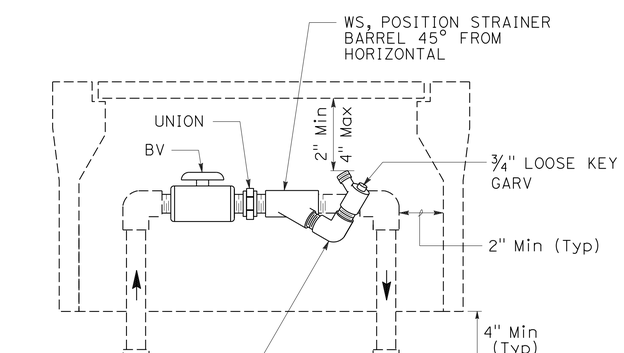

SECTION
WYE STRAINER

LANDSCAPE DETAILS
NO SCALE
LD-2

STATE OF CALIFORNIA - DEPARTMENT OF TRANSPORTATION
Caltrans® LANDSCAPE ARCHITECTURE
SENIOR LANDSCAPE ARCHITECT: BRAD COLE
CALCULATED-DESIGNED BY: ED HIBBS
CHECKED BY: HEIDI MISSLBECK
REVISED BY
DATE REVISED

LAST REVISION 11-30-12
DATE PLOTTED => 06-MAR-2013
TIME PLOTTED => 17:18

Dist	COUNTY	ROUTE	POST MILES TOTAL PROJECT	SHEET No.	TOTAL SHEETS
06	Ker	99	24.6	29	53

REGISTERED ELECTRICAL ENGINEER 1-02-13 DATE

2-11-13
PLANS APPROVAL DATE

REGISTERED PROFESSIONAL ENGINEER HASHIM KHALID No. 18054 Exp. 6/30/13 ELECTRICAL STATE OF CALIFORNIA

THE STATE OF CALIFORNIA OR ITS OFFICERS OR AGENTS SHALL NOT BE RESPONSIBLE FOR THE ACCURACY OR COMPLETENESS OF SCANNED COPIES OF THIS PLAN SHEET.

LEGEND: (FOR SHEETS E-1, E-2, AND E-3)

1 120/240 V, 1Ø, 3-WIRE, TYPE III-CF SERVICE EQUIPMENT ENCLOSURE WITH THE FOLLOWING CIRCUIT BREAKERS:

CTID No. 06500990024673T

AMPERES	VOLTS	POLES	NAMEPLATE	METER	PHOTOELECTRIC CONTROL TYPE
100	240	2	MAIN BREAKER	YES	————
50	120	1	TRAFFIC SIGNAL	YES	————
30	120	1	SPARE	YES	————
——	——	6	SPACE	——	————

CTID No. 06500990024673L

AMPERES	VOLTS	POLES	NAMEPLATE	METER	PHOTOELECTRIC CONTROL TYPE
100	240	2	MAIN BREAKER	YES	————
30	240	2	LIGHTING	YES	IV
30	240	2	INTERSECTION LIGHTING	YES	IV
30	240	2	SIGN LIGHTING (BRIDGE)	YES	LC3
15	120	1	FLASHING BEACON	YES	————
30	240	2	SPARE	YES	————
——	——	6	SPACE	——	————

2 DEPARTMENT FURNISHED MODEL 2070E CONTROLLER ASSEMBLY WITH BBS AND WIRELESS MODEM. INSTALL Exist EVD EQUIPMENT FROM SHEET E-2.

3 SEE DETAIL D ON SHEET E-7.

4 SEE DETAIL E ON SHEET E-7.

5 REFER TO SIGN PLANS FOR SIGN DETAILS.

6 RR EXISTING POLE MOUNTED TRAFFIC SIGNS.

7 RR EXISTING SIGNS MOUNTED ON TRAFFIC SIGNAL MAST ARM.

8 RR EXISTING D3 SIGN MOUNTED ON TRAFFIC SIGNAL MAST ARM.

CONDUIT AND CONDUCTOR SCHEDULE

CONDUCTOR DESIGNATION			CONDUIT RUN NUMBER AND SIZE									
CABLE TYPE	POLE	PHASE	1	2	3	4	5	6	7	8	9	10
			2-4"	4"	4"	4"	4"	4"	4"	4"	4"	4"
VEH-PED 12CSC	Ⓐ	1,2,2P	4 1 1	1 1								
	Ⓑ	1,6	4 1 1	1 1	1 1							
	Ⓒ	3,4,OVLA,4P	1	1	1	1						
	Ⓓ	3	1	1				1	1	1	1	1
	Ⓔ	5,6	1	1					1	1	1	1
	Ⓕ	2,5,2P	1	1						1	1	1
PPB 3CSC	Ⓖ	3,4	2 1 1	1 1							1 1	1 1
	Ⓗ	4,OVLA,4P	2 1 1	1 1								1 1
		TOTAL	8 4	8 4	2 1	1		1	2	3	4 1	5 2
AWG	CIRCUIT											
#6	SIG		2									
#8	INTERSECTION LIGHTING			2	2			2	2	2	2	2
#8	LIGHTING			2				2	2	2	2	2
#8	SIGN LIGHTING			2				2	2	2	2	2
#10	FLASHING BEACON			2	2	2						
sic			1	2						2	2	2
EVC			3	3	1					1	1	2
DLC		PHASE										
		Ø1	2	2					2	2	2	2
		Ø2	4	4								
		Ø2 ADV	1									
		Ø3	6	6							6	6
		Ø3 ADV	1	1							1	1
		Ø4	4	4	4	4						
		Ø4 ADV	1	1	1	1						
		Ø5	2	2								
		Ø6	4	4					4	4	4	4
		Ø6 ADV	1	1					1	1	1	1
		TOTAL	26	25	5	5			7	7	14	14

ABBREVIATIONS:

PG&E	PACIFIC GAS AND ELECTRIC COMPANY
PATC	PORTABLE AUTOMATED TRAFFIC COUNTER
BPE	BOOSTER PUMP ENCLOSURE
bpe	Exist BOOSTER PUMP ENCLOSURE

POLE AND EQUIPMENT SCHEDULE

No.	STANDARD TYPE	SMA	LMA	VEH SIG MTG MAST ARM	POLE	PED SIG MTG	PPB Ø	PPB ARROW	LED LUM	SPECIAL REQUIREMENTS
Ⓐ	1-A				TV-2-T	SP-1-T	4	→		
Ⓑ	29-5-100	55′	15′	MAS-4B MAS MAS	SV-1-T		4	←	165 W	F1=17′, F2=12′ INSTALL SIGNS REMOVED FROM POLE (b), SEE SHEET E-2. [5]
Ⓒ	1-A				TV-2-T	SP-1-T				
Ⓓ	24-4-100	35′	12′	MAS MAS	SV-1-T				165 W	F=23′ INSTALL SIGNS REMOVED FROM POLE (d), SEE SHEET E-2. [3] [5]
Ⓔ	1-A				TV-2-T					INSTALL SIGNS REMOVED FROM POLE (e) ,SEE SHEET E-2, AND INSTALL SIGN R9-3A. [5]
Ⓕ	29-5-100	50′	15′	MAS MAS MAS	SV-1-T	SP-1-T			165 W	F1=17′, F2=12′, INSTALL SIGN R9-3a INSTALL SIGNS REMOVED FROM POLE (f), SEE SHEET E-2. [5]
Ⓖ	1-A				TV-2-T		2	→		
Ⓗ	26-4-100	40′	12′	MAS-4B MAS	SV-1-T	SP-1-T	2	←	165 W	F=13′,INSTALL SIGN R3-8b-MOD INSTALL D3 SIGN REMOVED FROM POLE (h), SEE SHEET E-2. [3] [5]

APPROVED FOR ELECTRICAL WORK ONLY

NO SCALE

LEGEND, ABBREVIATIONS, AND SCHEDULES

E-1

STATE OF CALIFORNIA - DEPARTMENT OF TRANSPORTATION
Caltrans® ELECTRICAL DESIGN

FUNCTIONAL SUPERVISOR: ALI BAKHDOUD
CALCULATED-DESIGNED BY: YOHANNES CHALLA
CHECKED BY: HASHIM KHALID
REVISED BY / DATE REVISED

LAST REVISION 01-02-13 | DATE PLOTTED => 06-MAR-2013 | TIME PLOTTED => 17:18

Dist	COUNTY	ROUTE	POST MILES TOTAL PROJECT	SHEET No.	TOTAL SHEETS
06	Ker	99	24.6	30	53

REGISTERED ELECTRICAL ENGINEER 1-02-13 DATE

2-11-13
PLANS APPROVAL DATE

REGISTERED PROFESSIONAL ENGINEER HASHIM KHALID No. 18054 Exp. 6/30/13 ELECTRICAL STATE OF CALIFORNIA

THE STATE OF CALIFORNIA OR ITS OFFICERS OR AGENTS SHALL NOT BE RESPONSIBLE FOR THE ACCURACY OR COMPLETENESS OF SCANNED COPIES OF THIS PLAN SHEET.

NOTE: (FOR THIS SHEET ONLY)

1. FOR ACCURATE RIGHT OF WAY DATA, CONTACT RIGHT OF WAY ENGINEERING AT THE DISTRICT OFFICE.

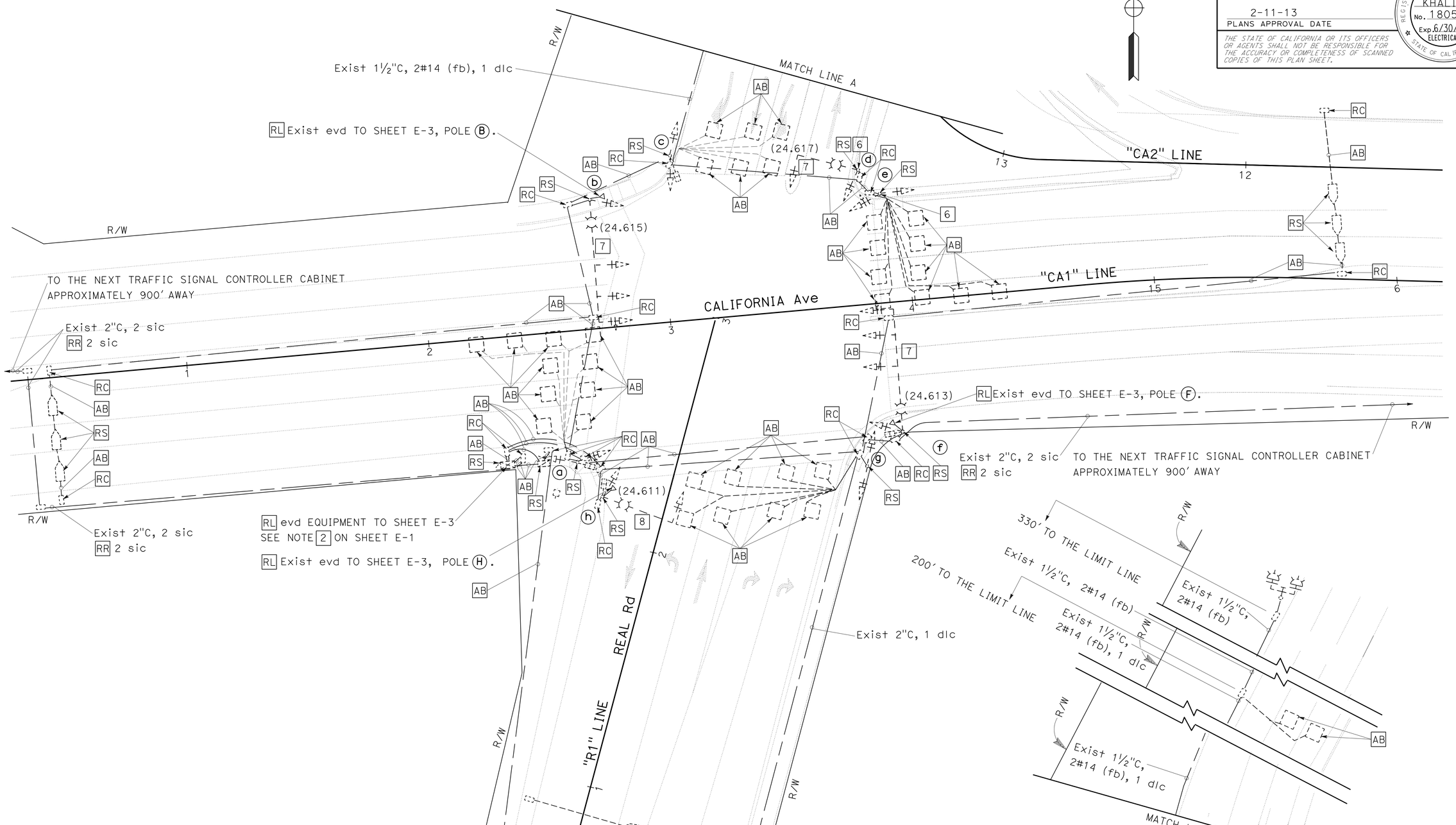

APPROVED FOR ELECTRICAL WORK ONLY

MODIFY SIGNAL AND LIGHTING

SCALE: 1"=20'

E-2

STATE OF CALIFORNIA - DEPARTMENT OF TRANSPORTATION
Caltrans® ELECTRICAL DESIGN

FUNCTIONAL SUPERVISOR: ALI BAKHDOUD
CALCULATED-DESIGNED BY: YOHANNES CHALLA
CHECKED BY: HASHIM KHALID
REVISED BY
DATE REVISED

LAST REVISION 01-02-13
DATE PLOTTED => 06-MAR-2013
TIME PLOTTED => 17:18

Dist	COUNTY	ROUTE	POST MILES TOTAL PROJECT	SHEET No.	TOTAL SHEETS
06	Ker	99	24.6	31	53

REGISTERED ELECTRICAL ENGINEER 1-02-13 DATE

2-11-13
PLANS APPROVAL DATE

REGISTERED PROFESSIONAL ENGINEER HASHIM KHALID No. 18054 Exp. 6/30/13 ELECTRICAL STATE OF CALIFORNIA

THE STATE OF CALIFORNIA OR ITS OFFICERS OR AGENTS SHALL NOT BE RESPONSIBLE FOR THE ACCURACY OR COMPLETENESS OF SCANNED COPIES OF THIS PLAN SHEET.

NOTES: (FOR THIS SHEET ONLY)

1. FOR ACCURATE RIGHT OF WAY DATA, CONTACT RIGHT OF WAY ENGINEERING AT THE DISTRICT OFFICE.
2. ALL PULL BOXES MUST BE No. 5(E) UNLESS OTHERWISE NOTED.

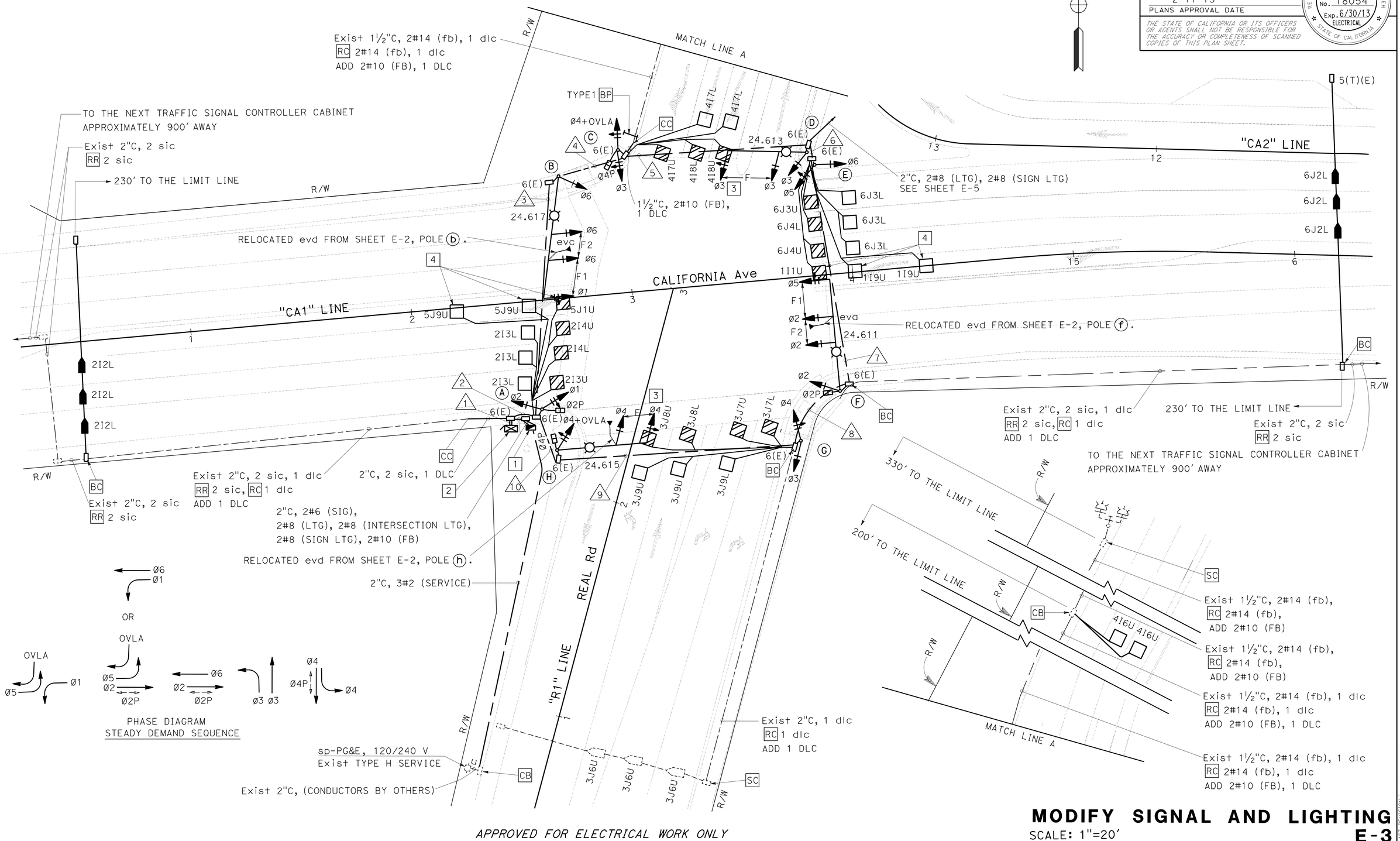

APPROVED FOR ELECTRICAL WORK ONLY

MODIFY SIGNAL AND LIGHTING

SCALE: 1"=20'

E-3

STATE OF CALIFORNIA - DEPARTMENT OF TRANSPORTATION
Caltrans® ELECTRICAL DESIGN

FUNCTIONAL SUPERVISOR: ALI BAKHDOUD
CALCULATED-DESIGNED BY: YOHANNES CHALLA
CHECKED BY: HASHIM KHALID
REVISED BY / DATE REVISED

LAST REVISION 01-02-13 | DATE PLOTTED => 06-MAR-2013 | TIME PLOTTED => 17:18

Dist	COUNTY	ROUTE	POST MILES TOTAL PROJECT	SHEET No.	TOTAL SHEETS
06	Ker	99	24.6	32	53

REGISTERED ELECTRICAL ENGINEER 1-02-13 DATE

2-11-13
PLANS APPROVAL DATE

REGISTERED PROFESSIONAL ENGINEER HASHIM KHALID No. 18054 Exp. 6/30/13 ELECTRICAL STATE OF CALIFORNIA

THE STATE OF CALIFORNIA OR ITS OFFICERS OR AGENTS SHALL NOT BE RESPONSIBLE FOR THE ACCURACY OR COMPLETENESS OF SCANNED COPIES OF THIS PLAN SHEET.

NOTES: (FOR THIS SHEET ONLY)

1. FOR ACCURATE RIGHT OF WAY DATA, CONTACT RIGHT OF WAY ENGINEERING AT THE DISTRICT OFFICE.
2. ALL PULL BOXES MUST BE No. 5(E) UNLESS OTHERWISE NOTED.

LEGEND: (FOR THIS SHEET ONLY)

1 120/240 V, 1ø, 3-WIRE, TYPE III-BF SERVICE EQUIPMENT ENCLOSURE WITH THE FOLLOWING CIRCUIT BREAKERS:
CTID No. 06500990024671G

AMPERES	VOLTS	POLES	NAMEPLATE	METER	SPECIAL REQUIREMENTS
100	240	2	MAIN BREAKER	YES	———
50	240	2	BOOSTER PUMP ENCLOSURE	YES	———
20	120	1	SPARE	YES	———
40	240	2	SPARE	YES	———

2 Exist 5 HP BOOSTER PUMP ENCLOSURE.

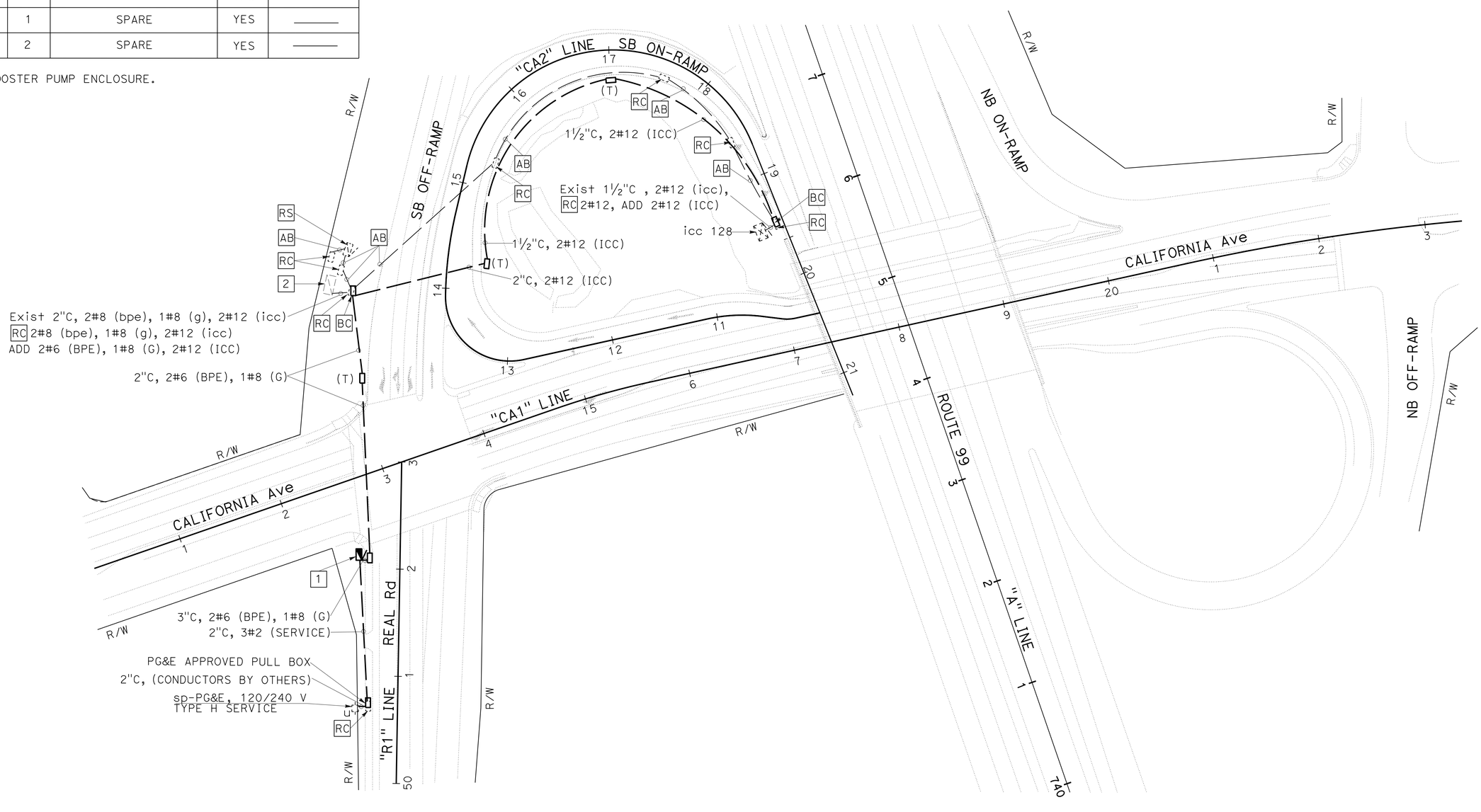

APPROVED FOR ELECTRICAL WORK ONLY

ELECTRIC SERVICE (IRRIGATION)

SCALE: 1"=50'

E-4

STATE OF CALIFORNIA - DEPARTMENT OF TRANSPORTATION
Caltrans® ELECTRICAL DESIGN

FUNCTIONAL SUPERVISOR: ALI BAKHDOUD
CALCULATED-DESIGNED BY: YOHANNES CHALLA
CHECKED BY: HASHIM KHALID
REVISED BY / DATE REVISED

LAST REVISION 01-02-13
DATE PLOTTED => 06-MAR-2013
TIME PLOTTED => 17:18

Dist	COUNTY	ROUTE	POST MILES TOTAL PROJECT	SHEET No.	TOTAL SHEETS
06	Ker	99	24.6	33	53

REGISTERED ELECTRICAL ENGINEER 1-02-13 DATE

2-11-13
PLANS APPROVAL DATE

REGISTERED PROFESSIONAL ENGINEER HASHIM KHALID No. 18054 Exp. 6/30/13 ELECTRICAL STATE OF CALIFORNIA

THE STATE OF CALIFORNIA OR ITS OFFICERS OR AGENTS SHALL NOT BE RESPONSIBLE FOR THE ACCURACY OR COMPLETENESS OF SCANNED COPIES OF THIS PLAN SHEET.

NOTES: (FOR THIS SHEET ONLY)

1. FOR ACCURATE RIGHT OF WAY DATA, CONTACT RIGHT OF WAY ENGINEERING AT THE DISTRICT OFFICE.
2. ALL PULL BOXES MUST BE No. 5 (E) UNLESS OTHERWISE NOTED.

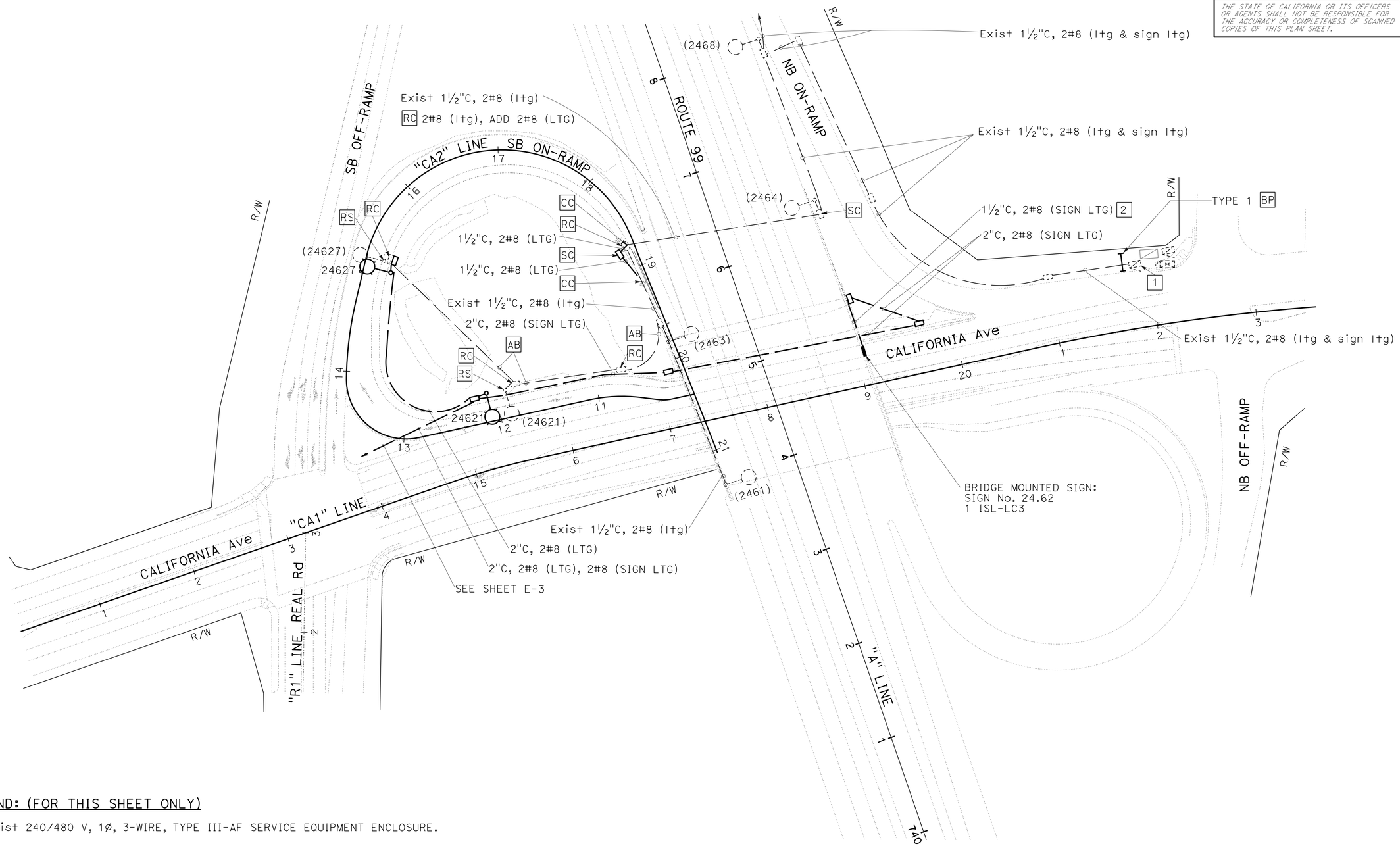

LEGEND: (FOR THIS SHEET ONLY)

1 Exist 240/480 V, 1Ø, 3-WIRE, TYPE III-AF SERVICE EQUIPMENT ENCLOSURE.

2 FOR 1½" ELECTRICAL CONDUIT INSTALLATION ON EXISTING BRIDGE, REFER TO STANDARD PLAN, B14-5, WITH "PIPE HANGER" PLACED EVERY 10′ AND LOCATION TO BE DETERMINED BY THE ENGINEER.

APPROVED FOR ELECTRICAL WORK ONLY

MODIFY LIGHTING AND SIGN ILLUMINATION

SCALE: 1"=50′

E-5

STATE OF CALIFORNIA - DEPARTMENT OF TRANSPORTATION
Caltrans® ELECTRICAL DESIGN

FUNCTIONAL SUPERVISOR: ALI BAKHDOUD
CALCULATED-DESIGNED BY: YOHANNES CHALLA
CHECKED BY: HASHIM KHALID
REVISED BY
DATE REVISED

LAST REVISION 01-02-13
DATE PLOTTED => 06-MAR-2013
TIME PLOTTED => 17:18

Dist	COUNTY	ROUTE	POST MILES TOTAL PROJECT	SHEET No.	TOTAL SHEETS
06	Ker	99	24.6	34	53

REGISTERED ELECTRICAL ENGINEER 1-02-13 DATE

2-11-13
PLANS APPROVAL DATE

REGISTERED PROFESSIONAL ENGINEER
HASHIM KHALID
No. 18054
Exp. 6/30/13
ELECTRICAL
STATE OF CALIFORNIA

THE STATE OF CALIFORNIA OR ITS OFFICERS OR AGENTS SHALL NOT BE RESPONSIBLE FOR THE ACCURACY OR COMPLETENESS OF SCANNED COPIES OF THIS PLAN SHEET.

NOTE: (FOR THIS SHEET ONLY)

1. FOR ACCURATE RIGHT OF WAY DATA, CONTACT RIGHT OF WAY ENGINEERING AT THE DISTRICT OFFICE.

LEGEND: (FOR THIS SHEET ONLY)

1 MODIFY TYPE B TDC WITH PATC, AND TERMINATE 2-DLC.
SEE SHEET E-7 FOR DETAILS.

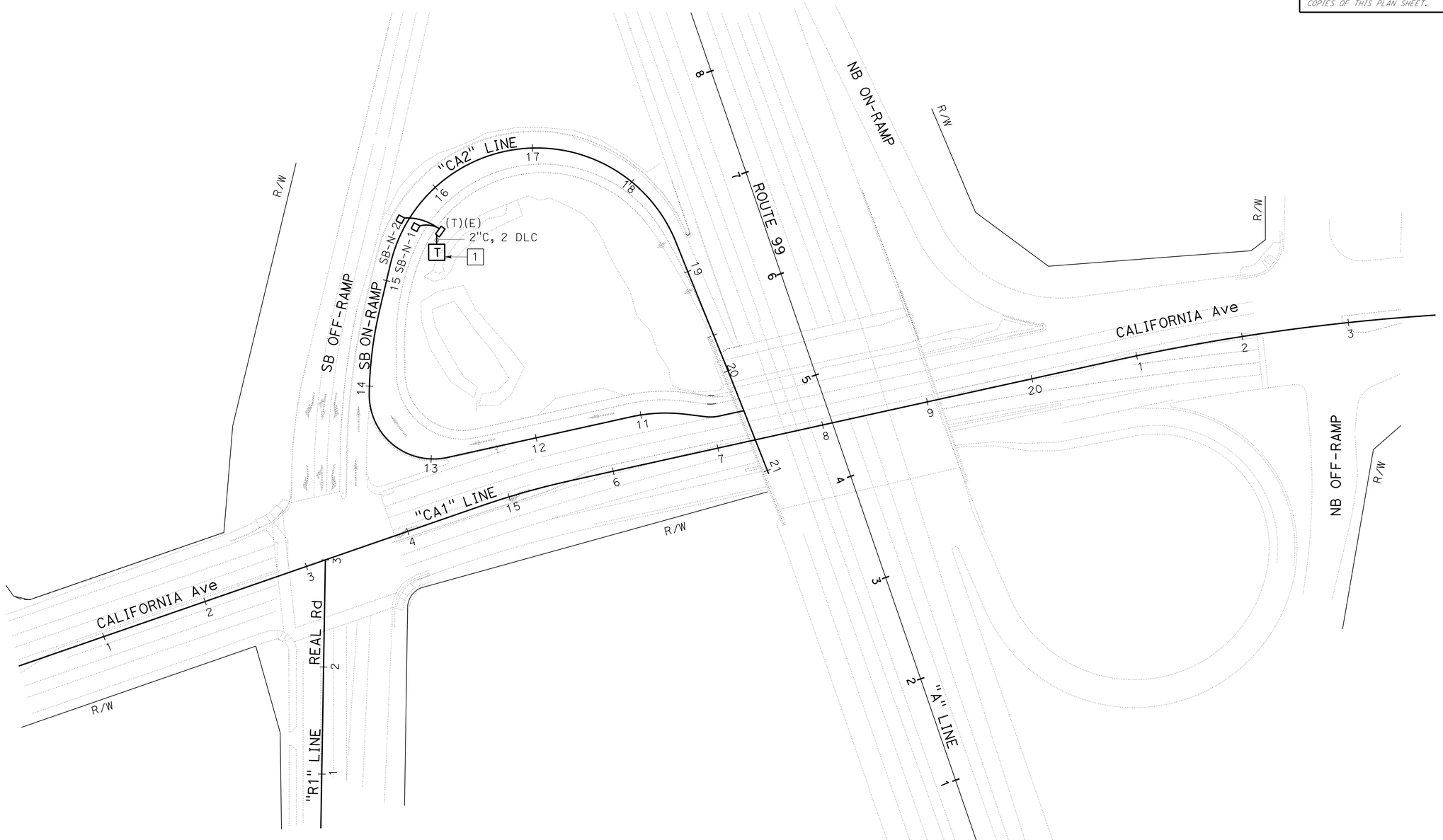

APPROVED FOR ELECTRICAL WORK ONLY

TRAFFIC COUNT STATION

SCALE: 1"=50'

E-6

STATE OF CALIFORNIA - DEPARTMENT OF TRANSPORTATION
Caltrans® **ELECTRICAL DESIGN**

FUNCTIONAL SUPERVISOR: ALI BAKHDOUD
CALCULATED-DESIGNED BY: YOHANNES CHALLA
CHECKED BY: HASHIM KHALID
REVISED BY
DATE REVISED

LAST REVISION 01-02-13
DATE PLOTTED => 06-MAR-2013
TIME PLOTTED => 17:19

Dist	COUNTY	ROUTE	POST MILES TOTAL PROJECT	SHEET No.	TOTAL SHEETS
06	Ker	99	24.6	35	53

REGISTERED ELECTRICAL ENGINEER 1-02-13 DATE

2-11-13
PLANS APPROVAL DATE

REGISTERED PROFESSIONAL ENGINEER HASHIM KHALID No. 18054 Exp. 6/30/13 ELECTRICAL STATE OF CALIFORNIA

THE STATE OF CALIFORNIA OR ITS OFFICERS OR AGENTS SHALL NOT BE RESPONSIBLE FOR THE ACCURACY OR COMPLETENESS OF SCANNED COPIES OF THIS PLAN SHEET.

NOTES:

1. FURNISH TYPE B TDC WITH A TERMINAL BLOCK, SHELF AND PATC. DIMENSIONS ARE NOMINAL.
2. AN APPROVED MASTIC OR CAULKING COMPOUND MUST BE PLACED ON THE FOUNDATION PRIOR TO PLACING THE CABINET TO SEAL OPENINGS BETWEEN THE BOTTOM OF THE CABINET AND THE FOUNDATION.
3. IN UNPAVED AREAS, A RAISED PCC PAD MUST BE PLACED IN FRONT OF THE TDC. PAD MUST BE 24"x22"x4" AND 2" ABOVE FINISHED GRADE.
4. CONDUIT MUST BE BONDED TO THE ENCLOSURE.
5. TYPE B TDC:
   a. MATERIAL MUST BE ANODIZED ALUMINUM (1/8" THICK).
   b. THE EXTERIOR DOOR MUST BE SIDE HUNG AND SECURED WITH A DRAW LATCH, LOCKABLE WITH A PADLOCK. THE PADLOCK HOLE MUST BE A MINIMUM DIAMETER OF 7/16" TO RECEIVE A PADLOCK.
   c. VENTILATION LOUVERS MUST BE LOCATED ON THE DOOR.
   d. FASTEN FIXED MOUNTING PANELS WITH NUTS, LOCK AND FLAT WASHERS TO 3/16" Ø x 1" STUDS WELDED TO ENCLOSURE.
   e. PATC ALUMINUM SHELF MUST BE ONE PIECE SECURED TO PLYWOOD PANEL WITH SCREWS. DIMENSIONS AS SHOWN ON DETAIL A.

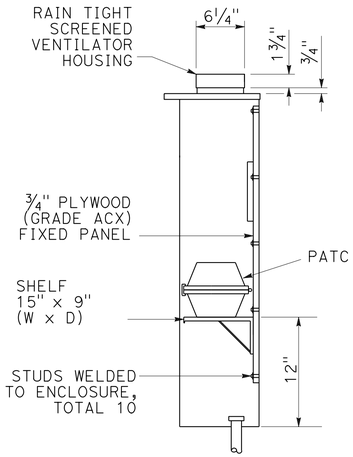

SECTION A-A

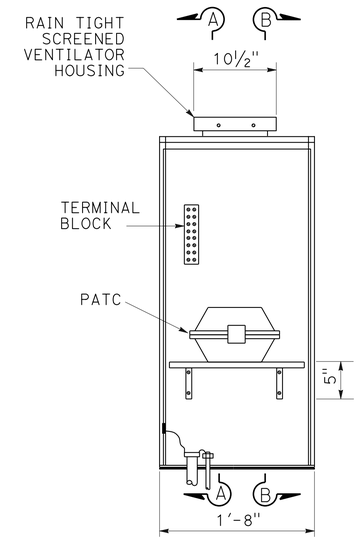

FRONT VIEW

INTERIOR DETAIL A

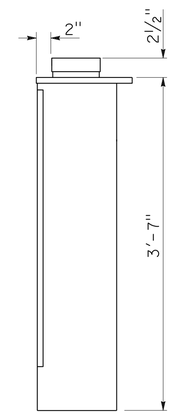

SECTION B-B

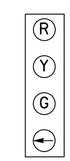

DETAIL D

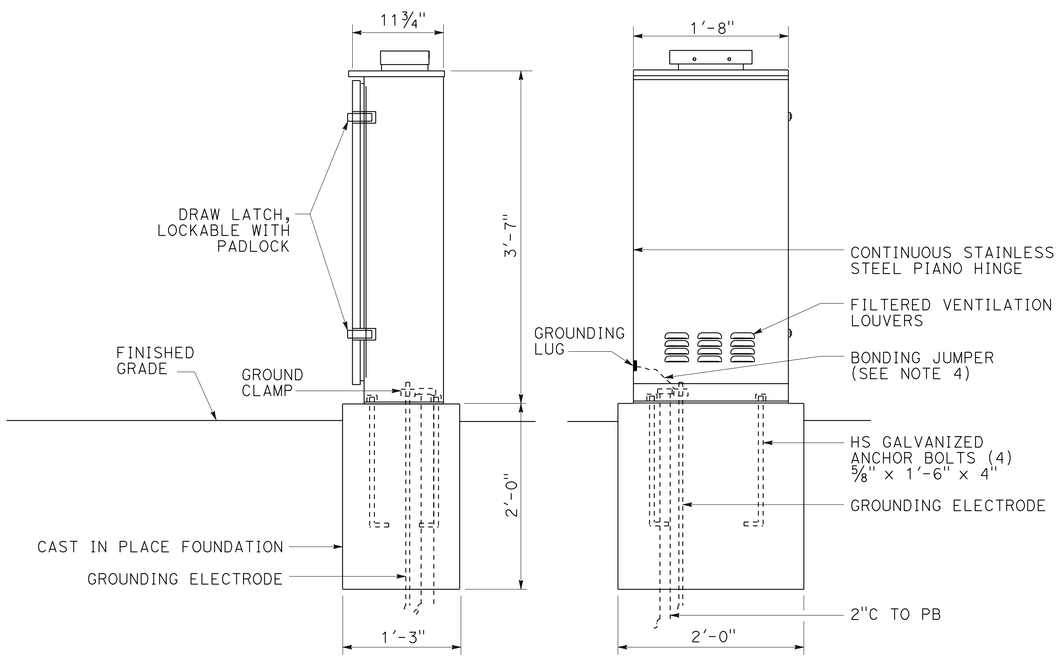

SIDE VIEW FRONT VIEW

EXTERIOR DETAIL B

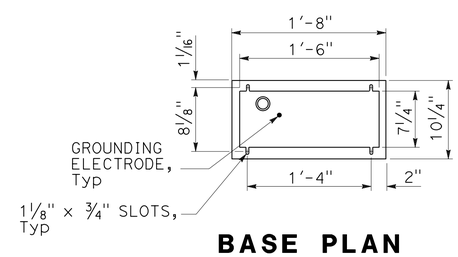

BASE PLAN DETAIL C

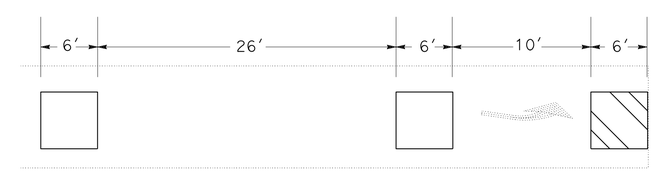

DETAIL E

ELECTRICAL DETAILS

NO SCALE

E-7

APPROVED FOR ELECTRICAL WORK ONLY

STATE OF CALIFORNIA - DEPARTMENT OF TRANSPORTATION
Caltrans® ELECTRICAL DESIGN

FUNCTIONAL SUPERVISOR: ALI BAKHDOUD
CALCULATED-DESIGNED BY: YOHANNES CHALLA
CHECKED BY: HASHIM KHALID
REVISED BY
DATE REVISED

LAST REVISION 01-02-13
DATE PLOTTED => 06-MAR-2013
TIME PLOTTED => 17:19

Dist	COUNTY	ROUTE	POST MILES TOTAL PROJECT	SHEET No.	TOTAL SHEETS
06	Ker	99	24.6	36	53

REGISTERED ELECTRICAL ENGINEER 1-02-13 DATE

2-11-13
PLANS APPROVAL DATE

REGISTERED PROFESSIONAL ENGINEER HASHIM KHALID No. 18054 Exp. 6/30/13 ELECTRICAL STATE OF CALIFORNIA

THE STATE OF CALIFORNIA OR ITS OFFICERS OR AGENTS SHALL NOT BE RESPONSIBLE FOR THE ACCURACY OR COMPLETENESS OF SCANNED COPIES OF THIS PLAN SHEET.

NOTE:
THE QUANTITIES ON THIS SHEET ARE FOR INFORMATION ONLY AND ARE NOT SEPARATE PAY ITEMS.

ELECTRIC SERVICE (IRRIGATION)

SHEET No.	No. 5 (E) PB EA	No. 5 (E)(T) PB EA	PG&E APPROVED PB EA	TYPE III-BF SERVICE EQUIPMENT ENCLOSURE EA	TYPE III-BF FOUNDATION EA	2"C TYPE 3 LF	2"C TYPE 1 LF	3"C TYPE 1 LF	1½"C TYPE 3 LF	No. 2 CONDUCTOR LF	No. 6 CONDUCTOR LF	No. 8 CONDUCTOR LF	No. 12 CONDUCTOR LF
E-4	3	3	1	1	1	550	10	20	450	435	570	300	1800

MODIFY SIGNAL AND LIGHTING

SHEET No.	No. 5 (E) PB EA	No. 5 (E)(T) PB EA	No. 6 (E) PB EA	2"C TYPE 3 LF	3"C TYPE 3 LF	4"C TYPE 3 LF	2"C TYPE 1 LF	4"C TYPE 1 LF	No. 2 CONDUCTOR LF	No. 6 CONDUCTOR LF	No. 8 CONDUCTOR LF	No. 10 CONDUCTOR LF	DLC LF	12CSC LF	3CSC LF	EVC LF	TYPE A DETECTOR LOOP EA	TYPE D DETECTOR LOOP EA	TYPE 1-A SIGNAL STANDARD EA	TYPE 1-A CIDH PILE EA
E-3	4	1	9	200	230	550	180	20	500	30	2470	1000	4000	1300	350	500	15	15	4	4

MODIFY SIGNAL AND LIGHTING

SHEET No.	POLE TYPE 24-4-100 WITH 35' SMA EA	POLE TYPE 24-4-100 CIDH PILE EA	POLE TYPE 26-4-100 WITH 40' SMA EA	POLE TYPE 26-4-100 CIDH PILE EA	POLE TYPE 29-5-100 WITH 50' SMA EA	POLE TYPE 29-5-100 CIDH PILE EA	POLE TYPE 29-5-100 WITH 55' SMA EA	POLE TYPE 29-5-100 CIDH PILE EA	TYPE 1 PEDESTRIAN BARRICADE EA	TYPE III-CF ENCLOSURE EA	TYPE III-CF FOUNDATION EA	MODEL 332L FOUNDATION EA
E-3	1	1	1	1	1	1	1	1	1	1	1	1

MODIFY LIGHTING AND SIGN ILLUMINATION

SHEET No.	No. 5(E) PB EA	1½"C TYPE 1 LF	1½"C TYPE 3 LF	2"C TYPE 3 LF	No. 8 CONDUCTOR LF	TYPE 15 ELECTROLIER EA	TYPE 15 CIDH PILE EA	INDUCTION SIGN LIGHTING FIXTURE EA	TYPE 1 PEDESTRIAN BARRICADE EA
E-5	6	80	100	900	4200	2	2	1	1

TRAFFIC COUNT STATION

SHEET No.	DLC LF	No. 5 (E) PB EA	TYPE B TDC (MODIFIED) EA	TYPE B TDC FOUNDATION EA	PATC EA	TYPE A DETECTOR LOOP EA	2"C TYPE 1 LF
E-6	40	1	1	1	1	2	10

ELECTRICAL QUANTITIES
E-8

STATE OF CALIFORNIA - DEPARTMENT OF TRANSPORTATION
Caltrans® ELECTRICAL DESIGN

FUNCTIONAL SUPERVISOR: ALI BAKHDOUD
CALCULATED-DESIGNED BY: YOHANNES CHALLA
CHECKED BY: HASHIM KHALID
REVISED BY
DATE REVISED

LAST REVISION 01-02-13
DATE PLOTTED => 06-MAR-2013
TIME PLOTTED => 17:19

Dist	COUNTY	ROUTE	POST MILES TOTAL PROJECT	SHEET No.	TOTAL SHEETS
06	Ker	99	24.6	37	53

REGISTERED CIVIL ENGINEER 12-7-12 DATE

2-11-13
PLANS APPROVAL DATE

REGISTERED PROFESSIONAL ENGINEER Gurinderpal Bhullar No. C48815 Exp. 9-30-14 CIVIL STATE OF CALIFORNIA

THE STATE OF CALIFORNIA OR ITS OFFICERS OR AGENTS SHALL NOT BE RESPONSIBLE FOR THE ACCURACY OR COMPLETENESS OF SCANNED COPIES OF THIS PLAN SHEET.

NOTES:

Unless otherwise specified in the special provisions, all temporary warning signs shall have black legend on orange background.

California code are designated by (CA). Otherwise, Federal (MUTCD) codes are shown.

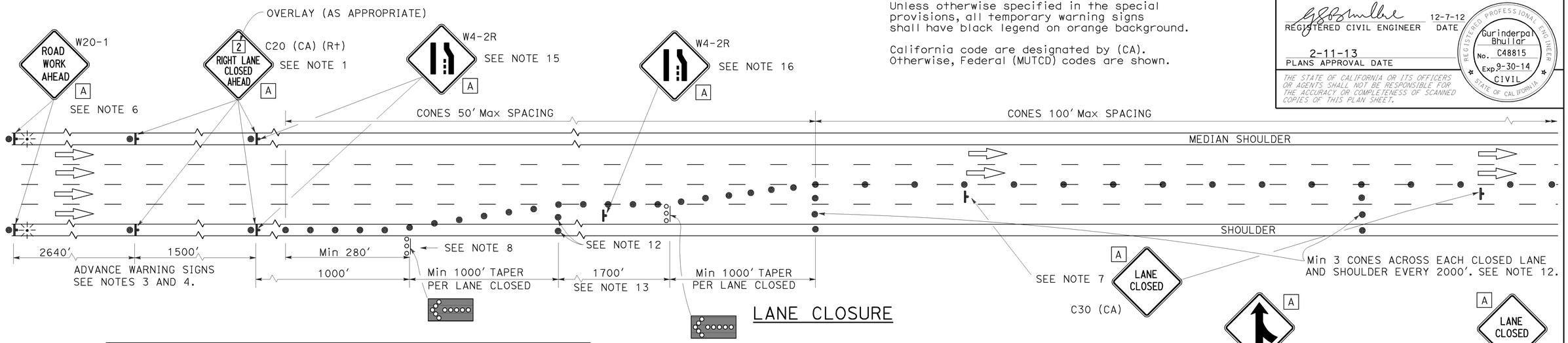

LANE CLOSURE

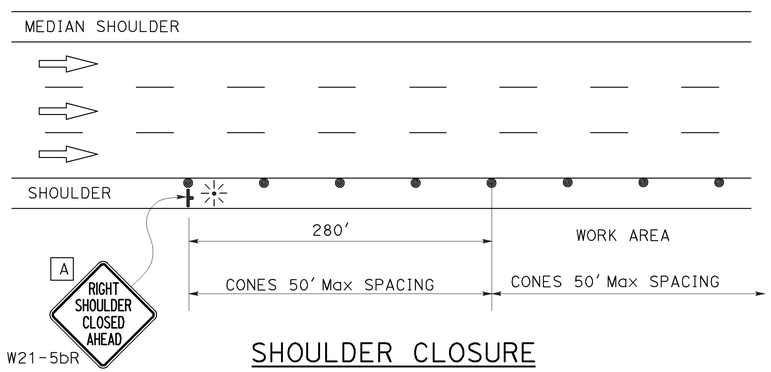

SHOULDER CLOSURE

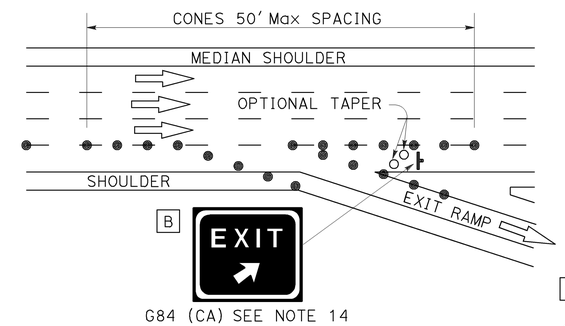

LANE CLOSURE AT EXIT RAMP

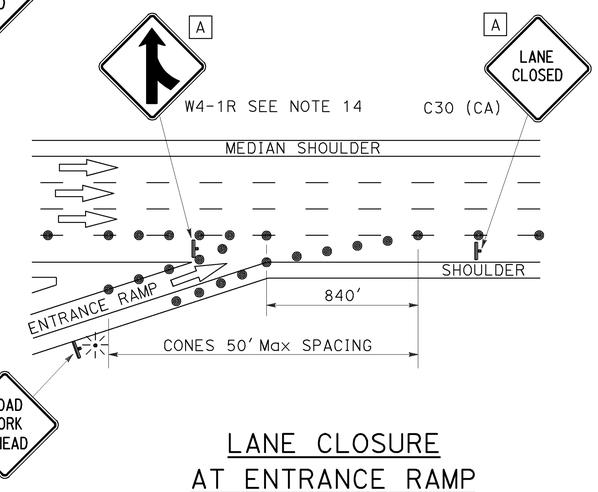

LANE CLOSURE AT ENTRANCE RAMP

NOTES:

1. Median lane closures shall conform to the details for outside lane closures except that C20 (CA) (Lt) signs shall be used.
2. At least one person shall be assigned to provide full time maintenance of traffic control devices for lane closures.
3. Duplicate sign installations are not required:
   a) On opposite shoulder if at least one-half of the available lanes remain open to traffic.
   b) In the median if the width of the median shoulder is less than 8' and the outside lanes are to be closed.
4. Each advance warning sign on each side of the roadway shall be equipped with at least two flags for daytime closure. Each flag shall be at least 16" x 16" in size and shall be orange or fluorescent red-orange in color. Flashing beacons shall be placed at the locations indicated for lane closure during hours of darkness.
5. A C14 (CA) "END ROAD WORK" sign, as appropriate, shall be placed at the end of the lane closure unless the end of work area is obvious or ends within a larger project's limits.
6. If the W20-1 sign would follow within 2000' of a stationary W20-1 or C11 (CA) "ROAD WORK NEXT _____ MILES", use a C20 (CA) sign for the first advance warning sign.
7. Place a C30 (CA) sign every 2000' throughout length of lane closure.
8. One flashing arrow sign for each lane closed. The first flashing arrow sign shall be Type I. All others may be either Type I or Type II.
9. A minimum 1500' of sight distance shall be provided where possible for vehicles approaching the first flashing arrow sign. Lane closures shall not begin at top of crest vertical curve or on a horizontal curve.
10. All cones used for lane closures during the hours of darkness shall be fitted with retroreflective bands (or sleeves) as specified in the specifications.
11. Portable delineators, placed at one-half the spacing indicated for traffic cones may be used instead of cones for daytime closures only.
12. Unless otherwise specified in the special provisions, a minimum of 3 cones shall be placed transversely across each closed lane and shoulder at each location where a taper across a traffic lane ends and every 2000' as shown on the "Lane Closure" detail. Two Type II barricades may be used instead of the 3 cones. The transverse alignment of the cones or barricades on the closed shoulder may be shifted from the transverse alignment to provide access to the work.
13. Unless otherwise specified in the special provisions, the 1700' tangent shown along lane lines shall be used between the 1000' tapers required for each closed traffic lane.
14. Unless otherwise specified in the special provisions, the G84 (CA) and W4-1 signs shall be used as shown.
15. When specified in the special provisions, a W4-2 "LANE ENDS" symbol sign is to be used in place of the C20 (CA) "RIGHT LANE CLOSED AHEAD" sign.
16. The W4-2 "LANE ENDS" symbol sign shown at this location is to be used where the W4-2 sign is used as advance warning as described in Note 15.

SIGN PANEL SIZE (Min)

A	48" x 48"
B	54" x 48"

LEGEND

- TRAFFIC CONE
- TRAFFIC CONE (OPTIONAL TAPER)
- TEMPORARY SIGN
- FLASHING ARROW SIGN (FAS)
- FAS SUPPORT OR TRAILER
- PORTABLE FLASHING BEACON

STATE OF CALIFORNIA
DEPARTMENT OF TRANSPORTATION

TRAFFIC CONTROL SYSTEM FOR LANE CLOSURE ON FREEWAYS AND EXPRESSWAYS

NO SCALE

TCS-1

REVISED BY | DATE REVISED | CALCULATED-DESIGNED BY | CHECKED BY | FUNCTIONAL SUPERVISOR

STATE OF CALIFORNIA - DEPARTMENT OF TRANSPORTATION

Caltrans

LAST REVISION 00-00-00 | DATE PLOTTED => 10-DEC-2012 | TIME PLOTTED => 09:45

Dist	COUNTY	ROUTE	POST MILES TOTAL PROJECT	SHEET No.	TOTAL SHEETS
06	Ker	99	24.6	38	53

REGISTERED CIVIL ENGINEER 12-7-12 DATE

2-11-13
PLANS APPROVAL DATE

REGISTERED PROFESSIONAL ENGINEER Gurinderpal Bhullar No. C48815 Exp. 9-30-14 CIVIL STATE OF CALIFORNIA

THE STATE OF CALIFORNIA OR ITS OFFICERS OR AGENTS SHALL NOT BE RESPONSIBLE FOR THE ACCURACY OR COMPLETENESS OF SCANNED COPIES OF THIS PLAN SHEET.

TYPICAL LANE CLOSURE

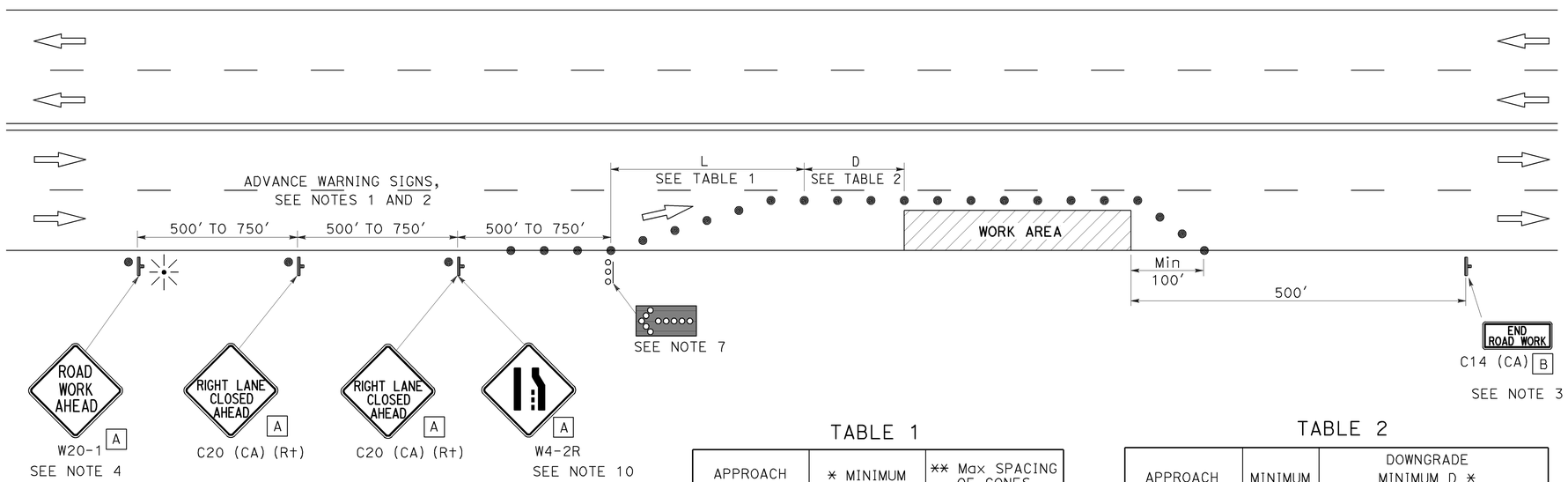

NOTES:

Unless otherwise specified in the special provisions, all temporary warning signs shall have black legend on orange background.

California code are designated by (CA). Otherwise, Federal (MUTCD) codes are shown.

LEGEND

- TRAFFIC CONE
- TEMPORARY SIGN
- FLASHING ARROW SIGN (FAS)
- FAS SUPPORT OR TRAILER
- PORTABLE FLASHING BEACON

SIGN PANEL SIZE (Min)

A 36" x 36"

B 36" x 18"

TABLE 1

APPROACH SPEED	* MINIMUM L	** Max SPACING OF CONES ALONG TAPER
mph	ft	ft
20 AND BELOW	80	20
25	125	25
30	180	30
35	245	35
40	320	40
45	540	45
50	600	50
Over 50	SEE NOTE 9	

* USE L FOR LANE WIDTHS LESS THAN OR EQUAL TO 12'.
** SEE NOTE 8.

TABLE 2

APPROACH SPEED	MINIMUM D	DOWNGRADE MINIMUM D *		
		-3%	-6%	-9%
mph	ft	ft	ft	ft
25 AND BELOW	155	158	165	173
30	200	205	215	227
35	250	257	271	287
40	305	315	333	354
45	360	378	400	427
50	425	446	474	507
OVER 50	SEE NOTE 9			

* USE ON SUSTAINED DOWNGRADE STEEPER THAN -3 PERCENT AND LONGER THAN 1 MILE.

NOTES:

1. Where approach speeds are low, advance warning signs may be placed at 300' spacing and placed closer in urban areas.
2. Each advance warning sign shall be equipped with at least two flags for daytime closure. Each flag shall be at least 16" x 16" in size and shall be orange or fluorescent red-orange in color. Flashing beacons shall be placed at the locations indicated for lane closure during hours of darkness.
3. A C14 (CA) "END ROAD WORK" sign, as appropriate, shall be placed at the end of the lane closure unless the end of work area is obvious, or ends within a larger project's limits.
4. If the W20-1 sign would follow within 2000' of a stationary W20-1 or C11 (CA) "ROAD WORK NEXT _____ MILES", use a C20 (CA) sign for the first advance warning sign.
5. All cones used for lane closures during the hours of darkness shall be fitted with retroreflective bands (or sleeves) as specified in the specifications.
6. Portable delineators, placed at one-half the spacing indicated for traffic cones, may be used instead of cones for daytime closures only.
7. Flashing arrow sign shall be either Type I or Type II.
8. The maximum spacing between cones along a tangent shall be 50' and along a taper shall be approximately as shown in Table 1.
9. For approach speeds over 50 mph, use the "Traffic Control System for Lane Closure On Freeways And Expressways" plan for lane closure details and requirements.
10. When specified in the special provisions, a W4-2 "LANE ENDS" symbol sign is to be used in place of the C20 (CA) "RIGHT LANE CLOSED AHEAD" sign.

STATE OF CALIFORNIA
DEPARTMENT OF TRANSPORTATION

TRAFFIC CONTROL SYSTEM FOR LANE CLOSURE ON MULTILANE CONVENTIONAL HIGHWAYS

NO SCALE

TCS-2

STATE OF CALIFORNIA - DEPARTMENT OF TRANSPORTATION

Caltrans

FUNCTIONAL SUPERVISOR | CALCULATED-DESIGNED BY | CHECKED BY | REVISED BY | DATE REVISED

LAST REVISION 00-00-00 | DATE PLOTTED => 10-DEC-2012 | TIME PLOTTED => 09:45

Dist	COUNTY	ROUTE	POST MILES TOTAL PROJECT	SHEET No.	TOTAL SHEETS
06	Ker	99	24.6	39	53

REGISTERED CIVIL ENGINEER 12-7-12 DATE

2-11-13
PLANS APPROVAL DATE

REGISTERED PROFESSIONAL ENGINEER Gurinderpal Bhullar No. C48815 Exp. 9-30-14 CIVIL STATE OF CALIFORNIA

THE STATE OF CALIFORNIA OR ITS OFFICERS OR AGENTS SHALL NOT BE RESPONSIBLE FOR THE ACCURACY OR COMPLETENESS OF SCANNED COPIES OF THIS PLAN SHEET.

TYPICAL RAMP CLOSURES

SIGN PANEL SIZE (Min)

- A 48" x 48"
- B 48" x 30"
- C 30" x 30"
- D 48" x 48" - SPEED OF 50 mph OR MORE
  36" x 36" - SPEED LESS THAN 50 mph
- E 48" x 36"

LEGEND

- TRAFFIC CONE
- TEMPORARY SIGN
- BARRICADES

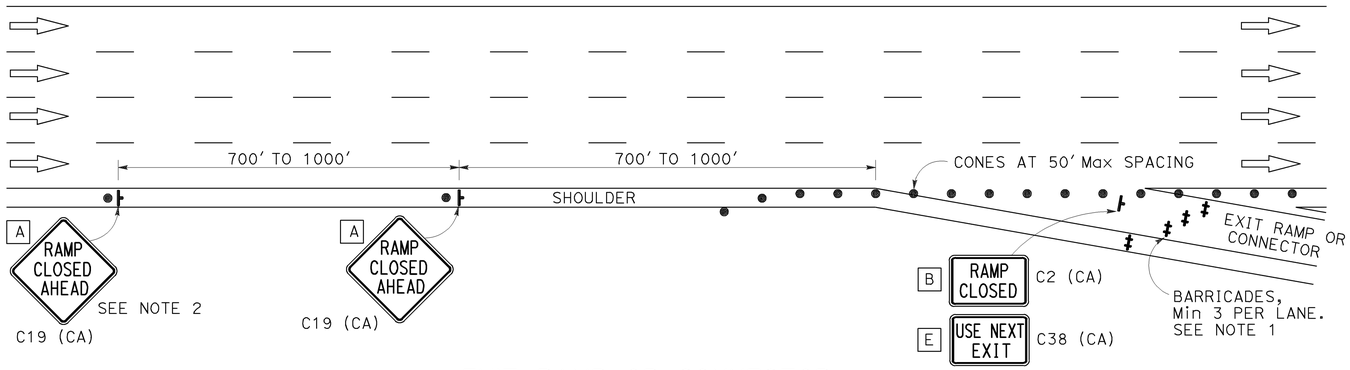

EXIT RAMP OR CONNECTOR

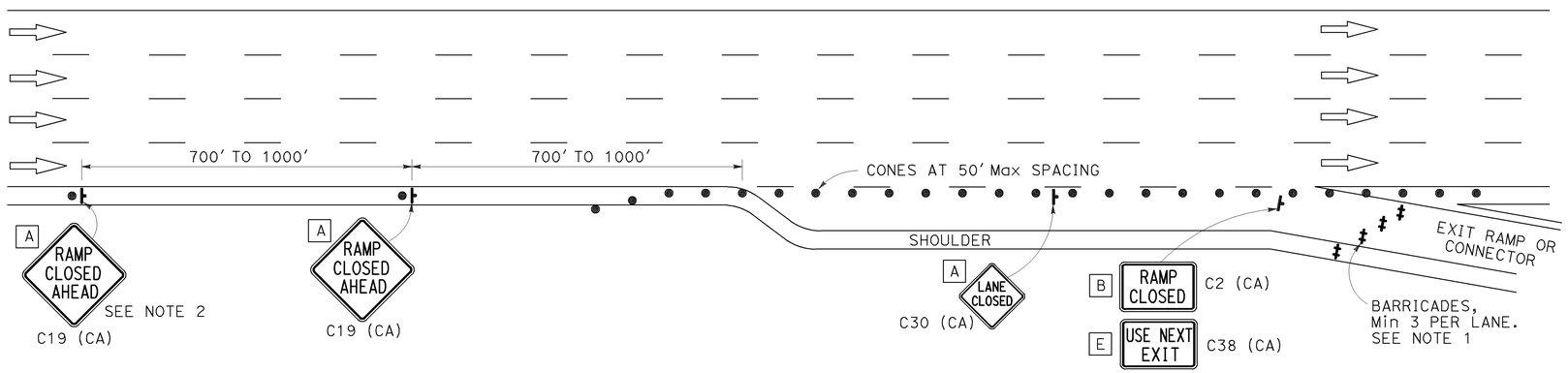

EXIT RAMP OR CONNECTOR WITH ADDITIONAL LANE

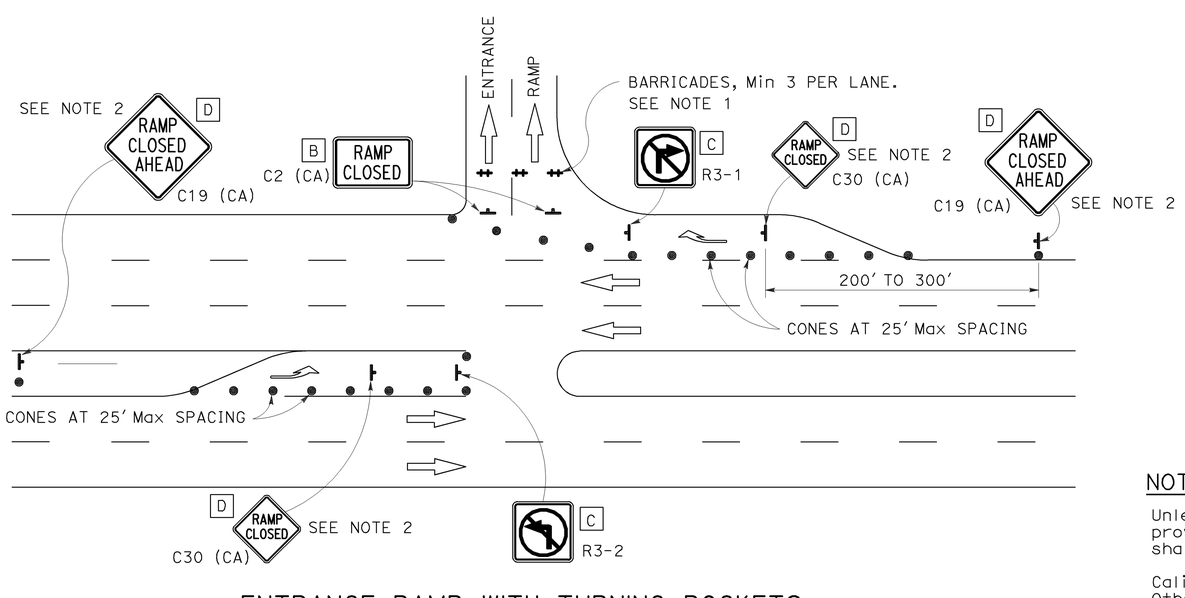

ENTRANCE RAMP WITH TURNING POCKETS

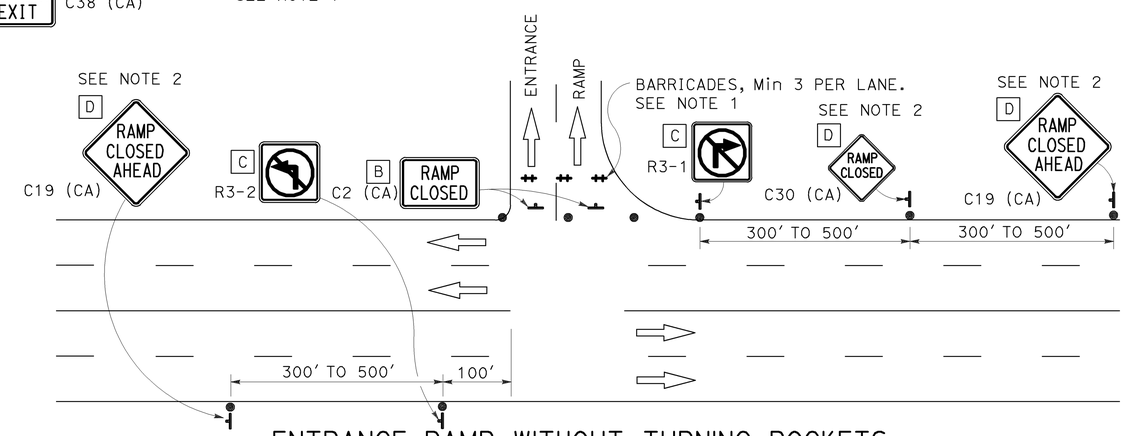

ENTRANCE RAMP WITHOUT TURNING POCKETS

NOTES:

1. Barricades shall be Type I, II, or III for closures lasting one week or less and Type III for closures lasting longer than one week.
2. In addition to placing the C19 (CA) "RAMP CLOSED AHEAD" and C30 (CA) "RAMP CLOSED" signs, black on orange overlay plates with the word "CLOSED" may be mounted, as directed by the Engineer, on all guide signs that refer to the closed ramp. The letter size on the overlay shall be the same as the guide sign.
3. Each advance C19 (CA) "RAMP CLOSED AHEAD" sign shall be equipped with at least two flags for daytime closure. Each flag shall be at least 16" x 16" in size and shall be orange or fluorescent red-orange in color.
4. All cones used for ramp closures during the hours of darkness shall be fitted with retroreflective bands (or sleeves) as specified in the specifications.
5. Portable delineators, placed at one-half the spacing indicated for traffic cones, may be used instead of cones for daytime ramp closures only.
6. At least one person shall be assigned to provide full time maintenance of traffic control devices, unless otherwise directed by the Engineer.
7. The existing "EXIT" sign in the gore area shall be covered during ramp closures.

NOTES:

Unless otherwise specified in the special provisions, all temporary warning signs shall have black legend on orange background.

California code are designated by (CA). Otherwise, Federal (MUTCD) codes are shown.

STATE OF CALIFORNIA
DEPARTMENT OF TRANSPORTATION

TRAFFIC CONTROL SYSTEM FOR RAMP CLOSURE

NO SCALE

TCS-3

STATE OF CALIFORNIA - DEPARTMENT OF TRANSPORTATION

Caltrans

FUNCTIONAL SUPERVISOR | CALCULATED-DESIGNED BY | CHECKED BY | REVISED BY | DATE REVISED

LAST REVISION 00-00-00 | DATE PLOTTED => 10-DEC-2012 | TIME PLOTTED => 09:45

Dist	COUNTY	ROUTE	POST MILES TOTAL PROJECT	SHEET No.	TOTAL SHEETS
06	Ker	99	24.6	40	53

REGISTERED CIVIL ENGINEER

April 20, 2012
PLANS APPROVAL DATE

REGISTERED PROFESSIONAL ENGINEER
Roberta L. McLaughlin
No. C40375
Exp. 3-31-13
CIVIL
STATE OF CALIFORNIA

THE STATE OF CALIFORNIA OR ITS OFFICERS OR AGENTS SHALL NOT BE RESPONSIBLE FOR THE ACCURACY OR COMPLETENESS OF SCANNED COPIES OF THIS PLAN SHEET.

TO ACCOMPANY PLANS DATED 2-11-13

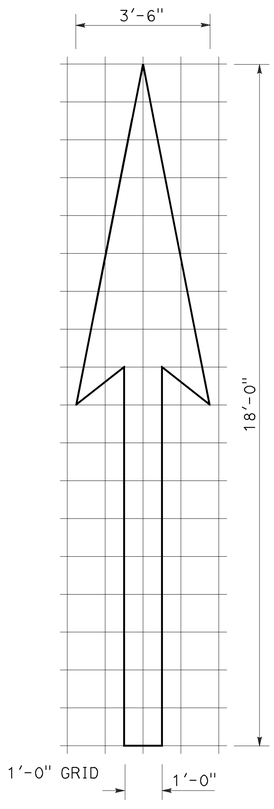

A=25 ft^2

TYPE I 18'-0" ARROW

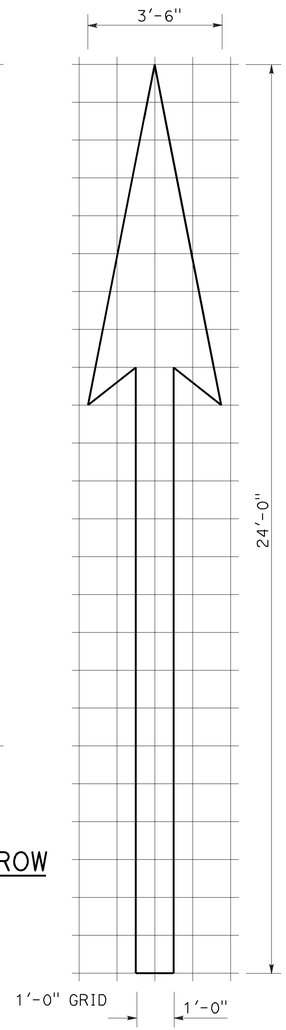

A=31 ft^2

TYPE I 24'-0" ARROW

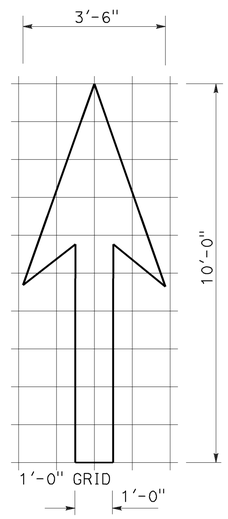

A=14 ft^2

TYPE I 10'-0" ARROW

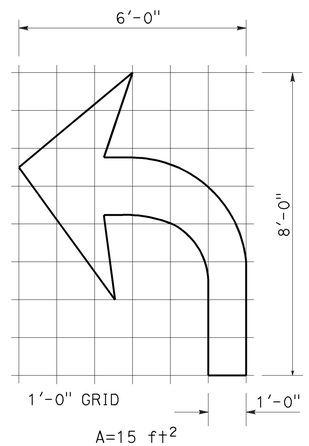

A=15 ft^2

TYPE IV (L) ARROW

(For Type IV (R) arrow, use mirror image)

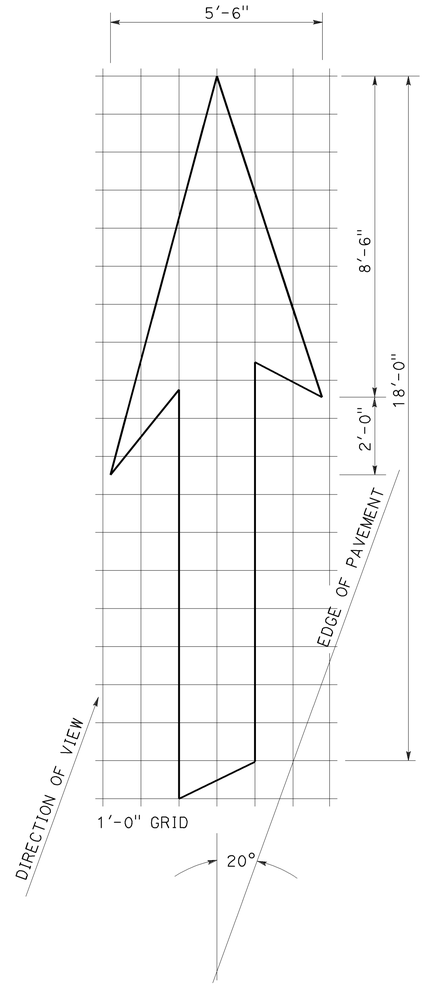

A=42 ft^2

TYPE VI ARROW

Right lane drop arrow
(For left lane, use mirror image)

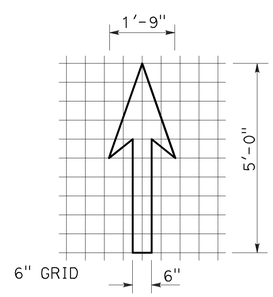

A=3.5 ft^2

BIKE LANE ARROW

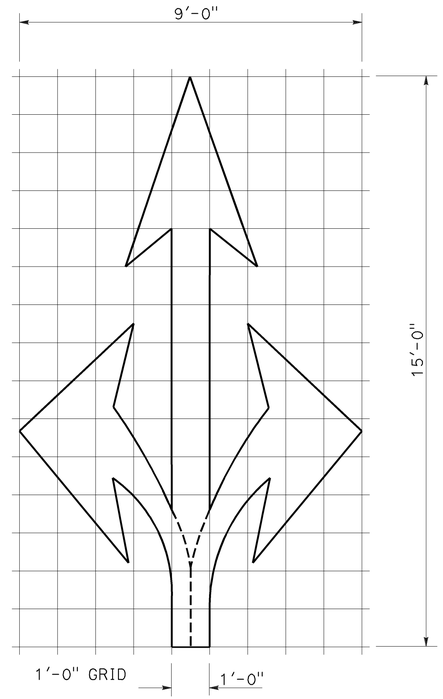

A=36 ft^2

TYPE VIII ARROW

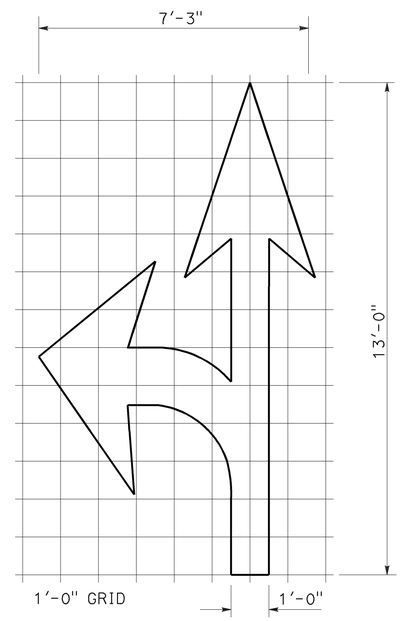

A=27 ft^2

TYPE VII (L) ARROW

(For Type VII (R) arrow, use mirror image)

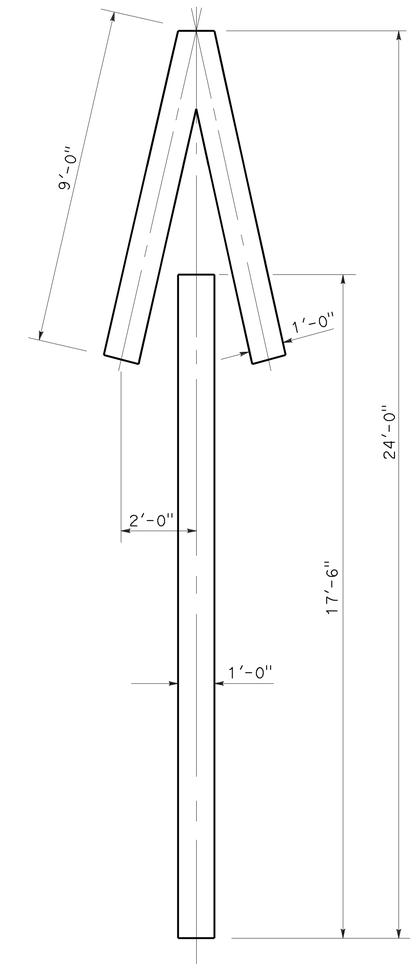

A=33 ft^2

TYPE V ARROW

NOTE:
Minor variations in dimensions may be accepted by the Engineer.

STATE OF CALIFORNIA
DEPARTMENT OF TRANSPORTATION

PAVEMENT MARKINGS ARROWS

NO SCALE

RSP A24A DATED APRIL 20, 2012 SUPERSEDES STANDARD PLAN A24A DATED MAY 20, 2011 - PAGE 13 OF THE STANDARD PLANS BOOK DATED 2010.

REVISED STANDARD PLAN RSP A24A

2010 REVISED STANDARD PLAN RSP A24A

3-14-12

Dist	COUNTY	ROUTE	POST MILES TOTAL PROJECT	SHEET No.	TOTAL SHEETS
06	Ker	99	24.6	41	53

REGISTERED CIVIL ENGINEER

July 20, 2012
PLANS APPROVAL DATE

REGISTERED PROFESSIONAL ENGINEER
Roberta L. McLaughlin
No. C40375
Exp. 3-31-13
CIVIL
STATE OF CALIFORNIA

THE STATE OF CALIFORNIA OR ITS OFFICERS OR AGENTS SHALL NOT BE RESPONSIBLE FOR THE ACCURACY OR COMPLETENESS OF SCANNED COPIES OF THIS PLAN SHEET.

TO ACCOMPANY PLANS DATED 2-11-13

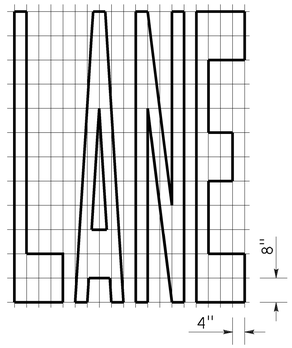

A=24 ft²

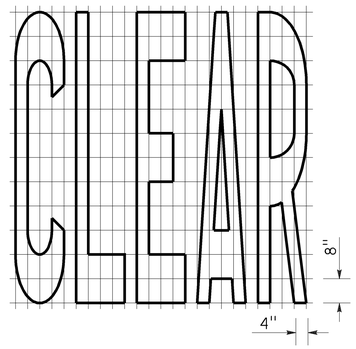

A=27 ft²

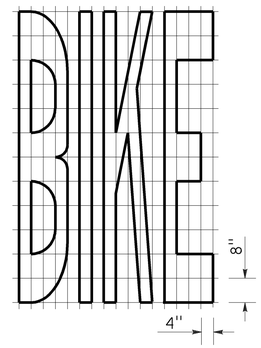

A=21 ft²

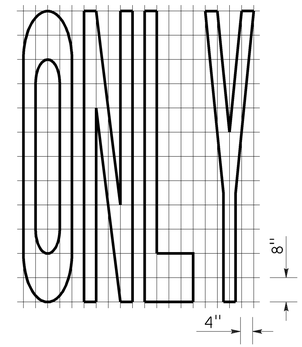

A=22 ft²

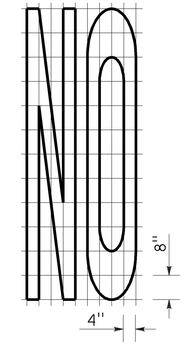

A=14 ft²

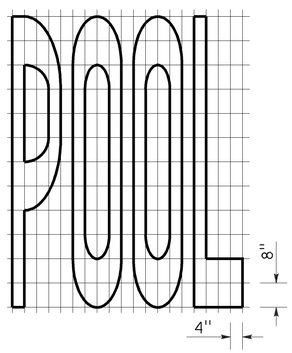

A=23 ft²

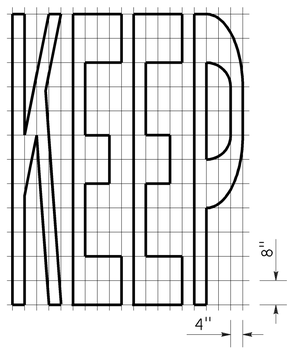

A=24 ft²

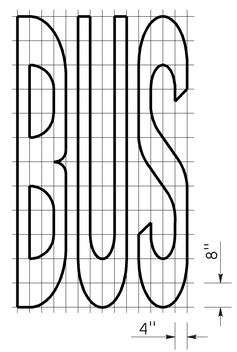

A=20 ft²

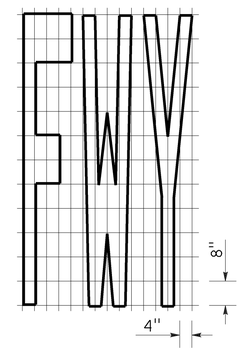

A=16 ft²

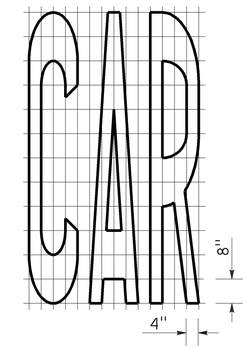

A=17 ft²

WORD MARKINGS			
ITEM	ft²	ITEM	ft²
LANE	24	NO	14
POOL	23	BIKE	21
CAR	17	BUS	20
CLEAR	27	ONLY	22
KEEP	24	FWY	16

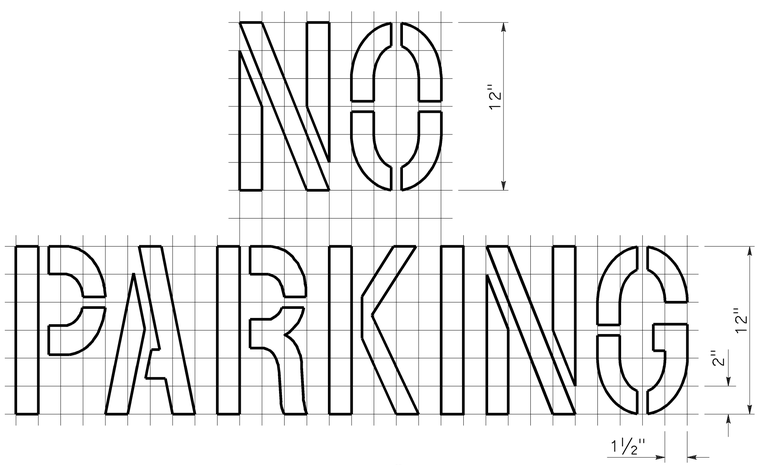

A=2 ft²
See Notes 6 and 7

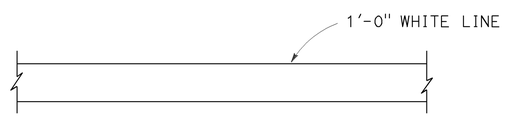

LIMIT LINE (STOP LINE)

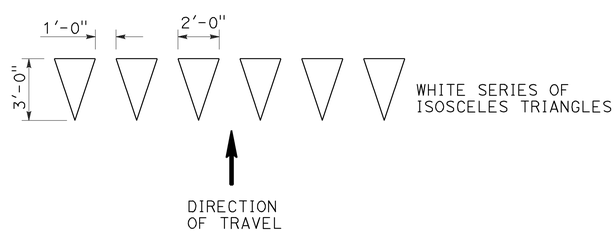

YIELD LINE

NOTES:

1. If a message consists of more than one word, it should read "UP", i.e., the first word should be nearest the driver.
2. The space between words should be at least four times the height of the characters for low speed roads, but not more than ten times the height of the characters. The space may be reduced appropriately where there is limited space because of local conditions.
3. Minor variations in dimensions may be accepted by the Engineer.
4. Portions of a letter, number or symbol may be separated by connecting segments not to exceed 2" in width.
5. The words "NO PARKING" pavement marking is to be used for parking facilities. For typical locations of markings, see Standard Plans A90A and A90B.
6. The words "NO PARKING", shall be painted in white letters no less than 1'-0" high on a contrasting background and located so that it is visible to traffic enforcement officials.

STATE OF CALIFORNIA
DEPARTMENT OF TRANSPORTATION

PAVEMENT MARKINGS WORDS, LIMIT AND YIELD LINES

NO SCALE

RSP A24E DATED JULY 20, 2012 SUPERSEDES STANDARD PLAN A24E
DATED MAY 20, 2011 - PAGE 17 OF THE STANDARD PLANS BOOK DATED 2010.

REVISED STANDARD PLAN RSP A24E

2010 REVISED STANDARD PLAN RSP A24E

6-12-12

Dist	COUNTY	ROUTE	POST MILES TOTAL PROJECT	SHEET No.	TOTAL SHEETS
06	Ker	99	24.6	42	53

REGISTERED CIVIL ENGINEER

July 20, 2012
PLANS APPROVAL DATE

REGISTERED PROFESSIONAL ENGINEER
Roberta L. McLaughlin
No. C40375
Exp. 3-31-13
CIVIL
STATE OF CALIFORNIA

THE STATE OF CALIFORNIA OR ITS OFFICERS OR AGENTS SHALL NOT BE RESPONSIBLE FOR THE ACCURACY OR COMPLETENESS OF SCANNED COPIES OF THIS PLAN SHEET.

TO ACCOMPANY PLANS DATED 2-11-13

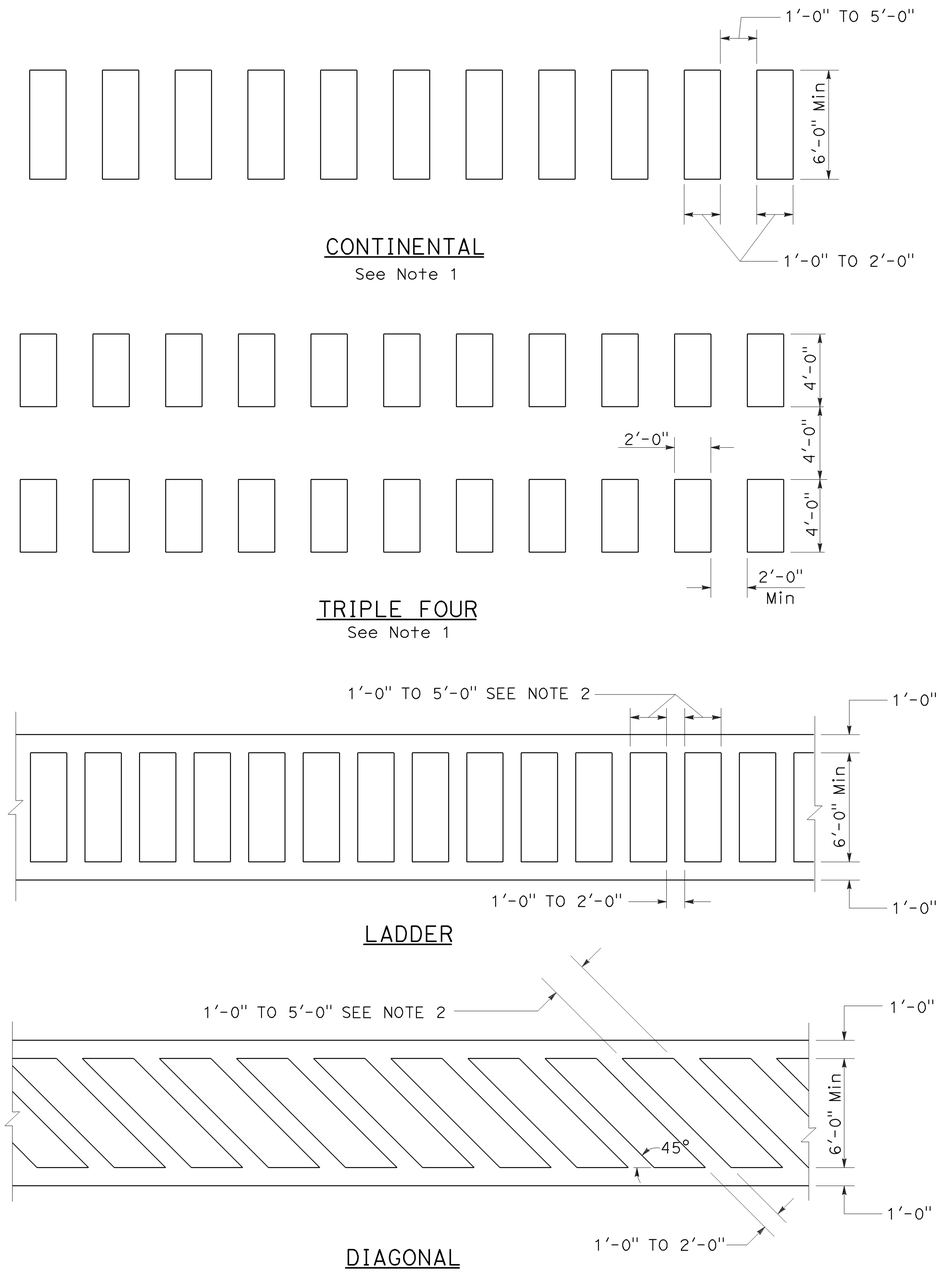

HIGHER VISIBILITY CROSSWALKS

NOTES:

1. Spaces between markings should be placed in wheel tracks of each lane.
2. Spacings not to exceed 2.5 times width of longitudinal line.
3. All crosswalk markings must be white except for those near schools must be yellow.

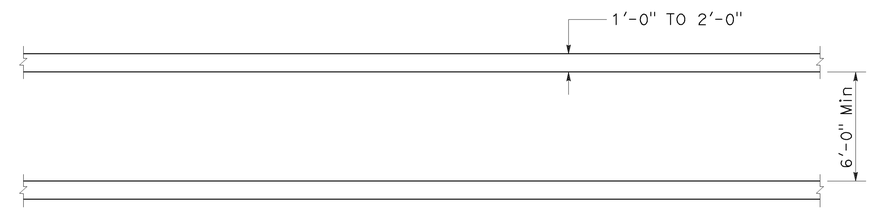

BASIC

STATE OF CALIFORNIA
DEPARTMENT OF TRANSPORTATION

PAVEMENT MARKINGS CROSSWALKS

NO SCALE

RSP A24F DATED JULY 20, 2012 SUPPLEMENTS THE STANDARD PLANS BOOK DATED 2010.

REVISED STANDARD PLAN RSP A24F

2010 REVISED STANDARD PLAN RSP A24F

6-28-12

DIST	COUNTY	ROUTE	POST MILES TOTAL PROJECT	SHEET No.	TOTAL SHEETS
06	Ker	99	24.6	43	53

REGISTERED CIVIL ENGINEER

January 20, 2012
PLANS APPROVAL DATE

REGISTERED PROFESSIONAL ENGINEER
Cornelis M. Hakim
No. C55610
Exp. 12-31-12
CIVIL
STATE OF CALIFORNIA

THE STATE OF CALIFORNIA OR ITS OFFICERS OR AGENTS SHALL NOT BE RESPONSIBLE FOR THE ACCURACY OR COMPLETENESS OF SCANNED COPIES OF THIS PLAN SHEET.

TO ACCOMPANY PLANS DATED 2-11-13

LEGEND:

- HMA PAVEMENT
- HMA OR CONCRETE PAVEMENT
- CONCRETE PAVEMENT

ABBREVIATIONS:

SE SAFETY EDGE
TT TOTAL THICKNESS OF SE
HW HINGE WIDTH, DISTANCE FROM ES OR EP TO HP

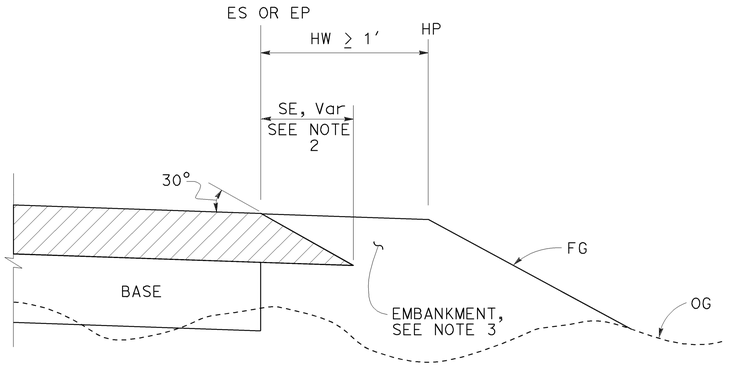

CASE K
Safety Edge - Fill Section, HW ≥ 1′

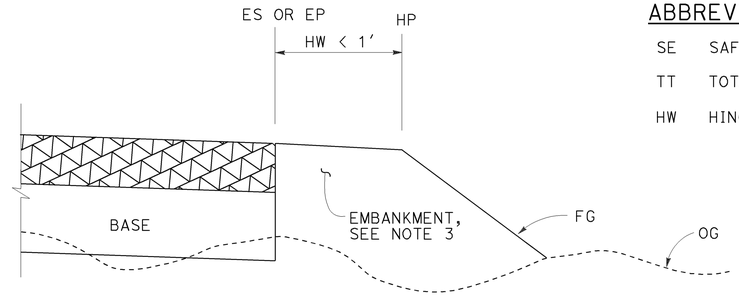

CASE L
Vertical Edge - Fill Section, HW < 1′

FILL SECTION

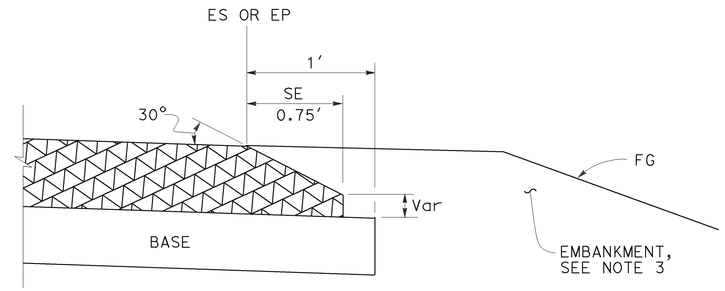

DETAIL "B"
For HMA pavement thickness more than 0.43′ or concrete pavement

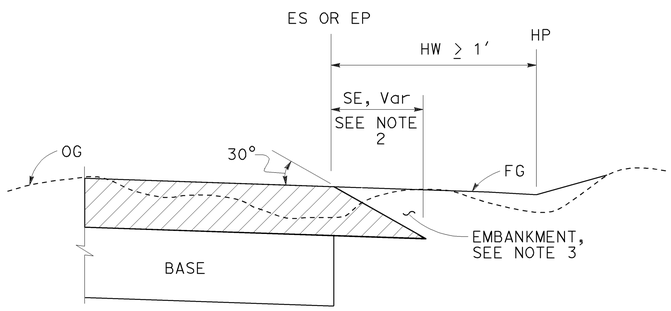

CASE M
Safety Edge - Cut Section, HW ≥ 1′

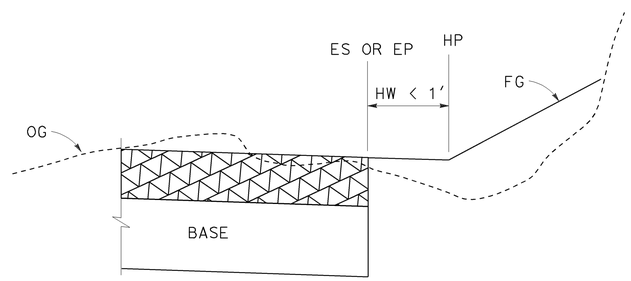

CASE N
Vertical Edge - Cut Section, HW < 1′

CUT SECTION

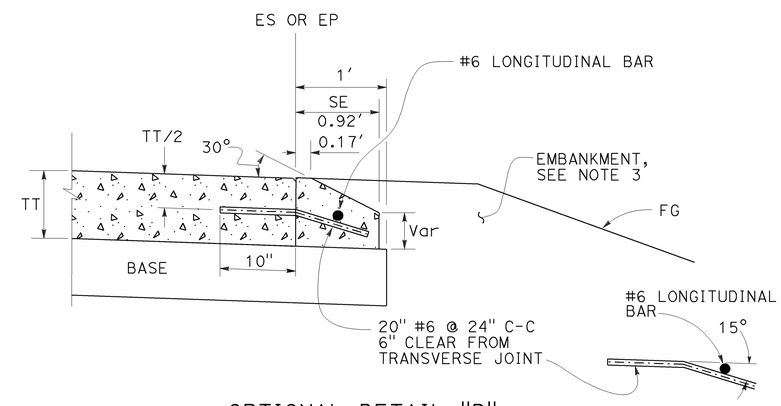

OPTIONAL DETAIL "B"
For concrete pavement
See Note 4

NOTES:

1. For limits of safety edge and vertical edge treatments, see Revised Standard Plan RSP P74
2. Details shown for HMA pavement thickness less than 0.43′. See Detail "B" for HMA pavement thickness more than 0.43′ or concrete pavement.
3. For locations and limits of embankment see project plans.
4. Safety edge transverse joint must match pavement transverse joint. End of #6 longitudinal bar must be 2" ±½" clear from transverse joint.
5. Safety edge is not needed in the area of MBGR, barrier, right turn lane and acceleration lane. See Revised Standard Plan RSP P74.

STATE OF CALIFORNIA
DEPARTMENT OF TRANSPORTATION

PAVEMENT EDGE TREATMENTS-NEW CONSTRUCTION

NO SCALE

RSP P76 DATED JANUARY 20, 2012 SUPPLEMENTS THE STANDARD PLANS BOOK DATED 2010.

REVISED STANDARD PLAN RSP P76

2010 REVISED STANDARD PLAN RSP P76

01-09-12

TO ACCOMPANY PLANS DATED 2-11-13

Dist	COUNTY	ROUTE	POST MILES TOTAL PROJECT	SHEET No.	TOTAL SHEETS
06	Ker	99	24.6	44	53

REGISTERED CIVIL ENGINEER

October 19, 2012
PLANS APPROVAL DATE

REGISTERED PROFESSIONAL ENGINEER Glenn DeCou No. C34547 Exp. 9-30-13 CIVIL STATE OF CALIFORNIA

THE STATE OF CALIFORNIA OR ITS OFFICERS OR AGENTS SHALL NOT BE RESPONSIBLE FOR THE ACCURACY OR COMPLETENESS OF SCANNED COPIES OF THIS PLAN SHEET.

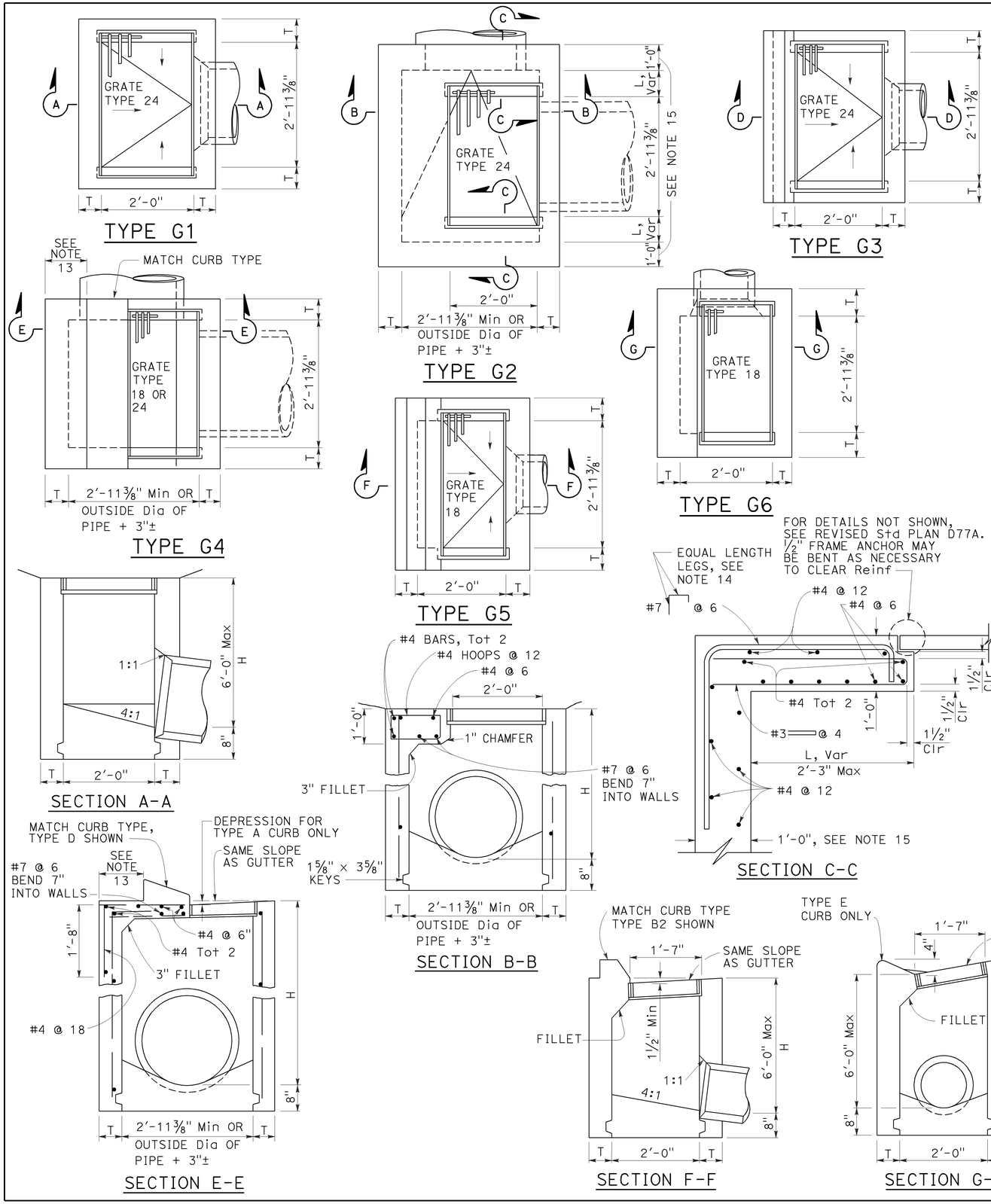

NOTES:

1. "H" is the difference in elevation between the outlet pipe flow line and the normal gutter grade line undepressed.
2. For "T" wall thickness, see Table A below.
3. Wall reinforcing not required when "H" is 8'-0" or less and the unsupported width or length is 7'-0" or less. Walls exceeding these limits shall be reinforced with #4 bars @ 1'-6" ± centers placed 1½" clear to inside of box unless otherwise shown.
4. Inlet bottom reinforcing not required. See Standard Plan D74C for alternative reinforced bottom and alternative half round bottom.
5. Steps-None required where "H" is less than 2'-6". Where "H" is 2'-6" or more, install steps with lowest rung 1'-0" above the floor and highest rung not more than 6" below top of inlet. The distance between steps shall not exceed 1'-0" and shall be uniform throughout the length of the wall. Place steps in the wall without an opening. Steps inserts may be substituted for the bar steps. Step inserts shall comply with State Industrial Safety requirements. See Standard Plan D74C for step details.
6. Details shown apply to both metal and concrete pipe.
7. Pipe(s) can be placed in any wall.
8. Curb section shall match adjacent curb.
9. Basin floors shall have wood trowel finish and a minimum slope of 12:3 from all directions toward outlet pipe.
10. Set inlet so that grate bars are parallel to direction of principal surface flow.
11. See Revised Standard Plans D77A and D77B for grate and frame details and weights of miscellaneous iron and steel.
12. See Standard Plan D78A for gutter depression details.
13. This dimenison will vary with different grates, curbs types, box width and wall thickness.
14. Bar may be rotated as necessary to clear opening. Where "L" is 6" or less, bar may be omitted.
15. Where "L" is 6" or less, wall thickness shall be as shown in Table A.
16. Cast-in-place inlets to be formed around all pipes/stubs intersecting the inlet, and concrete poured in one continuous operation. Precast inlets shall have mortared connections conforming to details for Type GCP Inlet shown on Standard Plan D75B. See Standard Specifications for mortar composition.

TABLE A

CONCRETE QUANTITIES				
TYPE	H=3'-0" TO 8'-0" (T=6")		H=8'-1" TO 20'-0" (T=8")	
	H=3'-0" (CY)	ADDITIONAL PCC PER FOOT (CY)	H=8'-1" (CY)	ADDITIONAL PCC PER FOOT (CY)
G-1	0.95	0.220	See Note A	SEE NOTE A
G-2*	1.31	0.255	3.50	0.357
G-3	1.03	0.220	See Note A	SEE NOTE A
G-4* (TYPE 24)	1.27	0.255	3.48	0.357
G-4* (TYPE 18)	1.30	0.255	3.50	0.357
G-5	1.02	0.220	SEE NOTE A	SEE NOTE A
G-6	1.04	0.220	SEE NOTE A	SEE NOTE A

TABLE BASED ON 8" FLOOR SLAB. NO DEDUCTIONS ARE TO BE MADE TO THESE QUANTITIES BECAUSE OF PIPE OPENINGS, DIFFERENT FLOOR ALTERNATIVES OR DIFFERENT CURB TYPES. * QUANTITIES FOR TYPE G-2 AND G-4 INLETS BASED ON THE MINIMUM INTERIOR DIMENSIONS.

NOTE A:

Maximum allowable height 6'-0".

STATE OF CALIFORNIA
DEPARTMENT OF TRANSPORTATION

DRAINAGE INLETS

NO SCALE

RSP D73 DATED OCTOBER 19, 2012 SUPERSEDES STANDARD PLAN D73 DATED MAY 20, 2011 - PAGE 156 OF THE STANDARD PLANS BOOK DATED 2010.

REVISED STANDARD PLAN RSP D73

2010 REVISED STANDARD PLAN RSP D73

7-19-12

Dist	COUNTY	ROUTE	POST MILES TOTAL PROJECT	SHEET No.	TOTAL SHEETS
06	Ker	99	24.6	45	53

Raymond Don Tsztoo
REGISTERED CIVIL ENGINEER

July 20, 2012
PLANS APPROVAL DATE

REGISTERED PROFESSIONAL ENGINEER Raymond Don Tsztoo No. C37332 Exp. 6-30-14 CIVIL STATE OF CALIFORNIA

THE STATE OF CALIFORNIA OR ITS OFFICERS OR AGENTS SHALL NOT BE RESPONSIBLE FOR THE ACCURACY OR COMPLETENESS OF SCANNED COPIES OF THIS PLAN SHEET.

TO ACCOMPANY PLANS DATED 2-11-13

2010 REVISED STANDARD PLAN RSP D77B

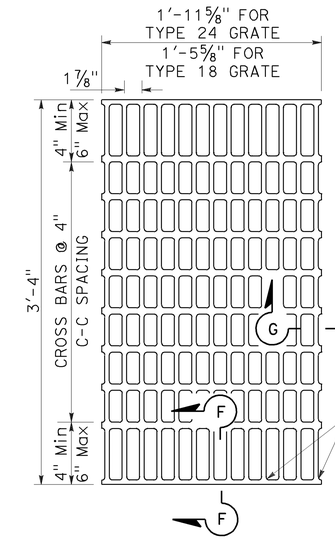

NOTES:

Bearing bars to be 3½" × ¼" bars on 1⅞" centers.

⅜"± ø Cross bars may be fillet welded, resistance welded or electroforged to bearing bars.

Weight of Type 24 grate = 141 LBS.

Weight of Type 18 grate = 107 LBS. (Type 24 grate shown).

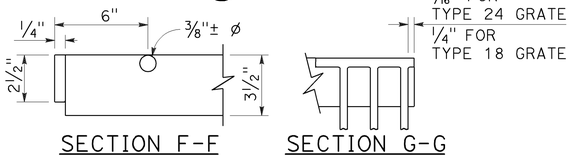

SECTION F-F SECTION G-G

TYPE 18-10 AND 24-13 GRATE

(Welded Steel)

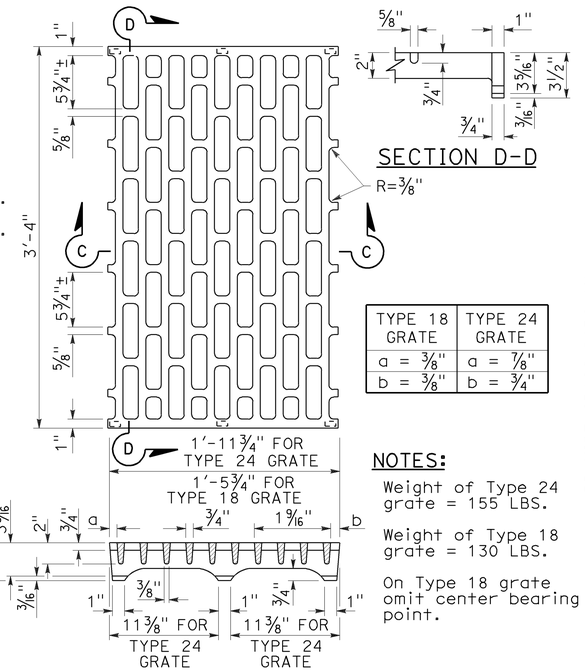

SECTION D-D

TYPE 18 GRATE	TYPE 24 GRATE
a = ⅜"	a = ⅞"
b = ⅜"	b = ¾"

NOTES:

Weight of Type 24 grate = 155 LBS.

Weight of Type 18 grate = 130 LBS.

On Type 18 grate omit center bearing point.

SECTION C-C

TYPE 18-8C AND 24-10C GRATE

(Cast ductile iron)

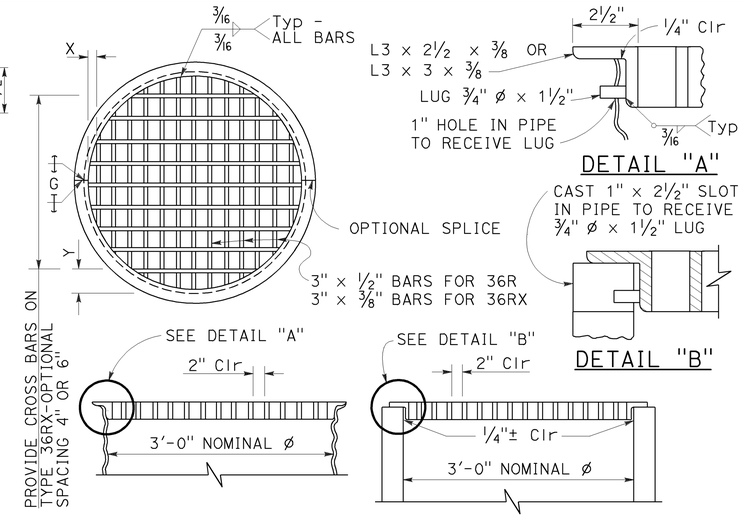

DETAIL "A"

DETAIL "B"

TYPE 36R AND 36RX GRATE DETAILS

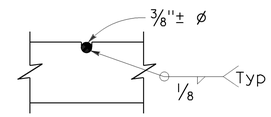

⅜"± ø Cross bars may be fillet welded, resistance welded or electroforged to bearing bars.

CROSS BAR DETAIL TYPE 36RX GRATE (WELDED STEEL)

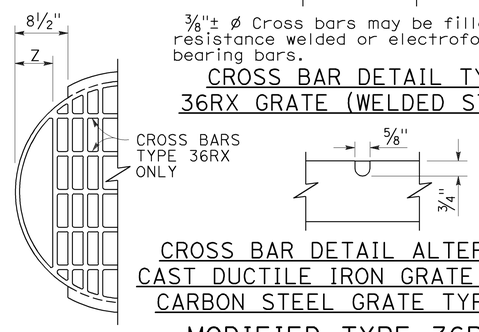

CROSS BAR DETAIL ALTERNATIVE CAST DUCTILE IRON GRATE OR CAST CARBON STEEL GRATE TYPE 36RX

MODIFIED TYPE 36R AND 36RX GRATE FOR ODI INLET

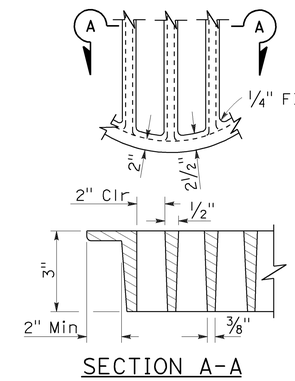

SECTION A-A

ALTERNATIVE CAST DUCTILE IRON GRATE OR CAST CARBON STEEL GRATE TYPE 36R AND 36RX

BASIS FOR Misc IRON AND STEEL FINAL PAY WEIGHTS FOR DRAINAGE INLETS

INLET TYPE	GRATE TYPE	No. OF GRATES	WEIGHT LB
GDO (SEE NOTE 4)	24-10C	2	391
	24-10S	2	456
	24-12X	2	473
	24-13	2	374
GO,GOL,G1,G2, G3,G4 (TYPE 24)	24-10C	1	202
	24-10S	1	229
	24-12X	1	239
	24-13	1	188
G4 (TYPE 18) G5,G6	18-8S	1	187
	18-9X	1	187
	18-10	1	149
GT1,GT2	18-8S	2	374
	18-9X	2	374
	18-10	2	298
GT3,GT4	24-10C	2	404
	24-10S	2	458
	24-12X	2	478
	24-13	2	376
ODI	36RX (Mod)	1	196
GMP,GCP,GCPI	36RX	1	215
ODI	36R (Mod)	1	220
GMP,GCP,GCPI	36R	1	236
TRASH RACK			22
GRATE CHAIN			3

NOTES:

1. When alternative grates are allowed - Final pay based on alternative with the lesser weight.
2. Use frame shown on Standard Plan D74A, D74B or RSP D77A as appropriate.
3. When Type 24-10S, 24-12X or 24-13 grates are used with GDO Inlets, a ¼" × 3½" × 3'-4⅞" steel bar shall be welded across the center of inlet frame to separate the individual grates.
4. See Revised Standard Plan RSP D77A for connecting chain to welded grate and frame. When chain is required, do not use cast ductile iron grate.

GRATE BAR SPACING TABLE

TYPE	No. OF BARS	CLEAR BAR SPACING	X	Y 4" SPACING	Y 6" SPACING	Z
36R	13	2"	2⅛"	-	-	-
36RX (STEEL)	15	2"	9/16"	3¾"	5¾"	-
36RX (CAST)	13	2"	2⅛"	3¾"	5¾"	-
36R Mod	12	2"	2⅛"	-	-	5"
36RX Mod (STEEL)	13	2"	9/16"	3¾"	5¾"	5 11/16"
36RX Mod (CAST)	12	2"	2⅛"	3¾"	5¾"	5"

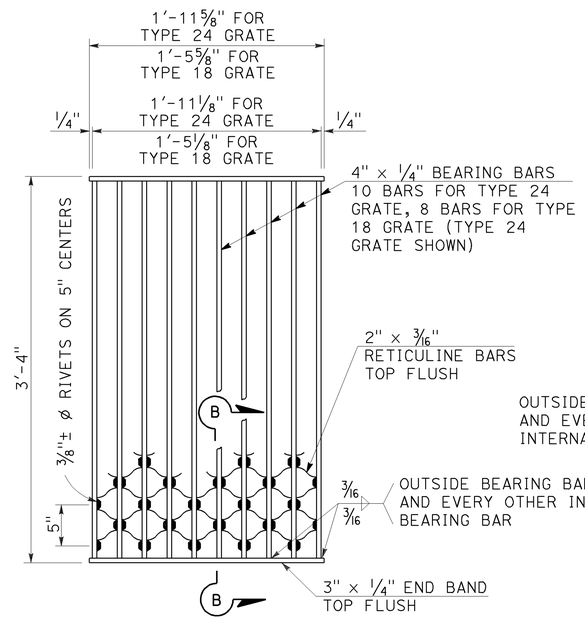

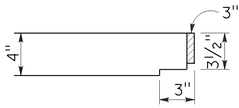

NOTES:

Weight of Type 24 grate = 182 LBS.
Weight of Type 18 grate = 145 LBS.

SECTION B-B

TYPE 18-8S AND 24-10S GRATE

(Welded Steel) Reticuline type

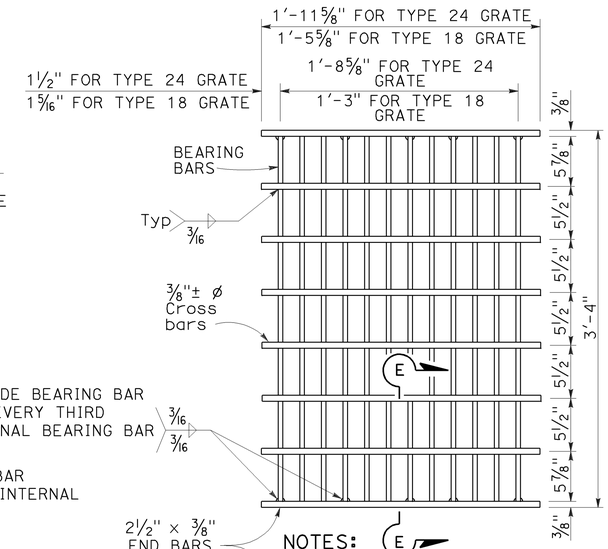

SECTION E-E

NOTES:

Bearing bars to be 3½" × ⅜" bars on 1⅞" centers.

12 Bars for Type 24 grate - 9 bars for Type 18 grates. (Type 24 grate shown).

Weight of Type 24 grate = 192 LBS.

Weight of Type 18 grate = 145 LBS.

⅜"± ø Cross bars may be fillet welded, resistance welded or electroforged to bearing bars.

TYPE 18-9X AND 24-12X GRATE

(Welded Steel)

STATE OF CALIFORNIA
DEPARTMENT OF TRANSPORTATION

BICYCLE TRAVERSABLE GRATE DETAILS

NO SCALE

RSP D77B DATED JULY 20, 2012 SUPERSEDES STANDARD PLAN D77B DATED MAY 20, 2011 - PAGE 165 OF THE STANDARD PLANS BOOK DATED 2010.

REVISED STANDARD PLAN RSP D77B

4-17-12

DIST	COUNTY	ROUTE	POST MILES TOTAL PROJECT	SHEET NO.	TOTAL SHEETS
06	Ker	99	24.6	46	53

REGISTERED ELECTRICAL ENGINEER

January 20, 2012
PLANS APPROVAL DATE

REGISTERED PROFESSIONAL ENGINEER Jeffery G. McRae No. E14512 Exp. 6-30-12 ELECTRICAL STATE OF CALIFORNIA

THE STATE OF CALIFORNIA OR ITS OFFICERS OR AGENTS SHALL NOT BE RESPONSIBLE FOR THE ACCURACY OR COMPLETENESS OF SCANNED COPIES OF THIS PLAN SHEET.

TO ACCOMPANY PLANS DATED 2-11-13

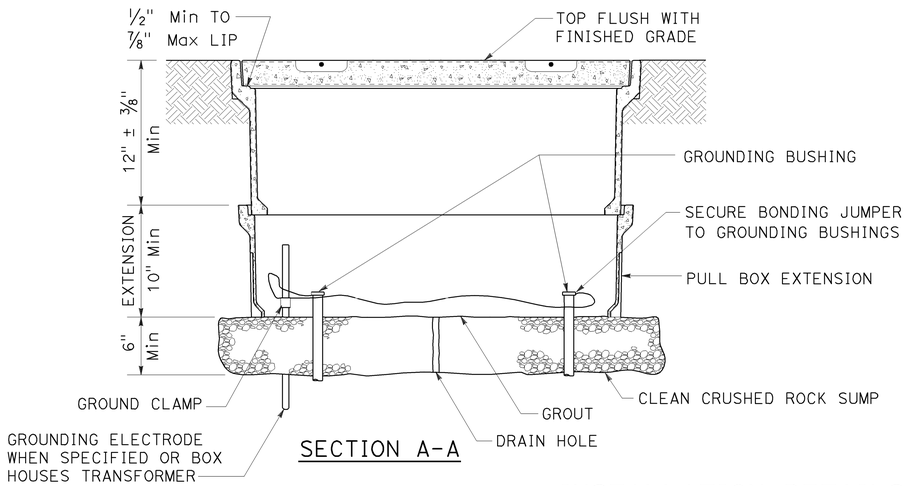

SECTION A-A

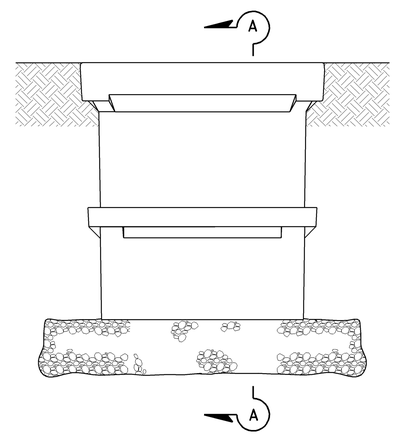

SIDE VIEW

INSTALLATION DETAILS

DETAIL A

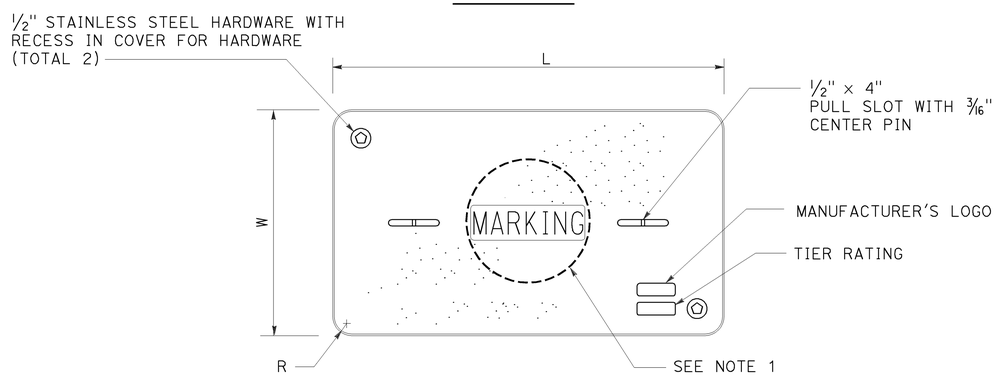

COVER TOP VIEW

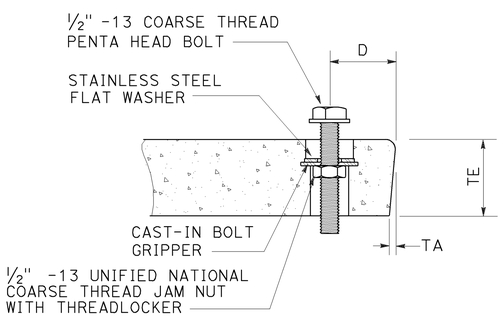

TYPICAL COVER CAPTIVE BOLT

OR SIMILAR

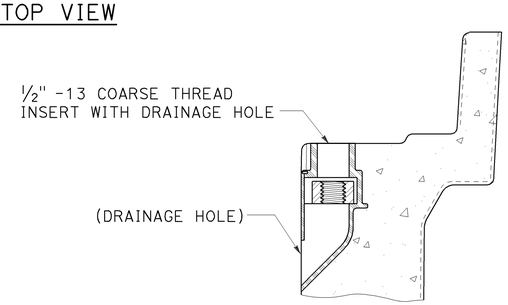

TYPICAL THREADED INSERT

OR SIMILAR

DIMENSION TABLE

PULL BOX	PULL BOX			COVER						
	MINIMUM DEPTH BOX	MINIMUM DEPTH EXTENSION	MAXIMUM WEIGHT	L	W	R	TE	TA	D	MAXIMUM WEIGHT
No. 3 1/2	12"	N/A	40 lb	1' - 3 3/8"	10 1/8"	1 3/8"	2"	1/8"	1 3/4"	30 lb
No. 5	12"	10"	55 lb	1' - 11 1/4"	1' - 1 3/4"	1 3/8"	2"	1/8"	1 3/4"	60 lb
No. 6	12"	10"	70 lb	2' - 6 1/2"	1' - 5 1/2"	1 3/8"	2"	1/8"	2"	85 lb

NOTES ON PULL BOXES:

1. Pull box covers must be marked as follows: "SERVICE" Service circuits between service point and service disconnect; "SPRINKLER-CONTROL" sprinkler control circuits, 50 V or less; "CALTRANS" on all pull boxes, except pull boxes marked "SPRINKLER-CONTROL"; and "TELEPHONE" Telephone service;

   A) No. 3 1/2 pull box.
      1) "SIGNAL" - Traffic signal circuits with or without street or sign lighting circuits.
      2) "ST LIGHTING" - Street or sign lighting circuits where voltage is under 600 V.

   B) No. 5, 6, 9 or 9A pull box.
      1) "TRAFFIC SIGNAL" - Traffic signal circuits with or without street or sign lighting circuits.
      2) "STREET LIGHTING" - Street or sign lighting circuits where voltage is under 600 V.
      3) "STREET LIGHTING-HIGH VOLTAGE" - Street or sign lighting circuits where voltage is above 600 V.
      4) "IRRIGATION" - Circuits to irrigation controller 120 V or more.
      5) "RAMP METER" - Ramp meter circuits.
      6) "COUNT STATION" - Count or speed monitor circuits.
      7) "COMMUNICATIONS" - Communication circuits.
      8) "TOS COMMUNICATIONS" - TOS communication line.
      9) "TOS POWER" - TOS power.
      10) "TDC POWER" - Telephone demarcation cabinet power.
      11) "CCTV" - Closed circuit television circuits.
      12) "TMS" - Traffic monitoring station circuits.
      13) "CMS" - Changeable message sign circuits.
      14) "HAR" - Highway advisory radio circuits.

2. The nominal dimensions of the opening in which the cover sets must be the same as the cover dimensions (L and W) plus 1/8" or greater.
3. Covers and boxes must be interchangeable with California Standard. When interchanged with a standard, the top surfaces must be flush within 1/8". Top outside radius of covers and pull boxes must have a 1/8" radius.
4. Pull box extension may be another pull box as long as the bottom edge of the pull box can fit into the cover opening.

STATE OF CALIFORNIA
DEPARTMENT OF TRANSPORTATION

ELECTRICAL SYSTEMS (PULL BOX)

NO SCALE

RSP ES-8A DATED JANUARY 20, 2012 SUPPLEMENTS THE STANDARD PLANS BOOK DATED 2010.

REVISED STANDARD PLAN RSP ES-8A

2010 REVISED STANDARD PLAN RSP ES-8A

01-09-12

DIST	COUNTY	ROUTE	POST MILES TOTAL PROJECT	SHEET NO.	TOTAL SHEETS
06	Ker	99	24.6	47	53

REGISTERED ELECTRICAL ENGINEER

January 20, 2012
PLANS APPROVAL DATE

REGISTERED PROFESSIONAL ENGINEER Jeffery G. McRae No. E14512 Exp. 6-30-12 ELECTRICAL STATE OF CALIFORNIA

THE STATE OF CALIFORNIA OR ITS OFFICERS OR AGENTS SHALL NOT BE RESPONSIBLE FOR THE ACCURACY OR COMPLETENESS OF SCANNED COPIES OF THIS PLAN SHEET.

TO ACCOMPANY PLANS DATED 2-11-13

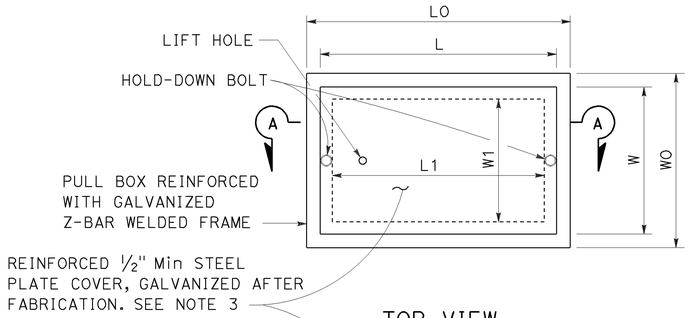

TOP VIEW

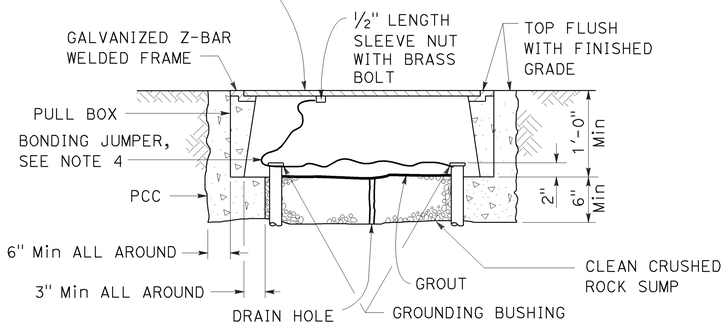

SECTION A-A

No. 3½(T), No. 5(T) AND No. 6(T) TRAFFIC PULL BOX

NOTES ON PULL BOXES:

1. Traffic pull box shall be provided with steel cover and special concrete footing. Steel cover shall have embossed non-skid pattern.
2. Steel reinforcing shall be as regularly used in the standard products of the respective manufacturer.
3. Pull box covers must be marked as follows: "SERVICE" Service circuits between service point and service disconnect; "SPRINKLER-CONTROL" Sprinkler control circuits, 50 V or less; "CALTRANS" On all pull boxes, except pull boxes marked "SPRINKLER-CONTROL"; and "TELEPHONE" Telephone service.
   A) No. 3½(T) pull box.
      1) "SIGNAL" - Traffic signal circuits with or without street or sign lighting circuits.
      2) "ST LIGHTING" - Street or sign lighting circuits where voltage is under 600 V.
   B) No. 5(T) or 6(T) pull box.
      1) "TRAFFIC SIGNAL" - Traffic signal circuits with or without street or sign lighting circuits.
      2) "STREET LIGHTING" - Street or sign lighting circuits where voltage is under 600 V.
      3) "STREET LIGHTING-HIGH VOLTAGE" - Street or sign lighting circuits where voltage is above 600 V.
      4) "IRRIGATION" - Circuits to irrigation controller 120 V or more.
      5) "RAMP METER" - Ramp meter circuits.
      6) "COUNT STATION" - Count or speed monitor circuits.
      7) "COMMUNICATION" - Communication circuits.
      8) "TOS COMMUNICATIONS" - TOS communications line.
      9) "TOS POWER" - TOS power.
      10) "TDC POWER" - Telephone demarcation cabinet power.
      11) "CCTV" - Closed circuit television circuits.
      12) "TMS" - Traffic monitoring station circuits.
      13) "CMS" - Changeable message sign circuits.
      14) "HAR" - Highway advisory radio circuits.
4. Bonding jumper for metal covers shall be 3' long, minimum.
5. The nominal dimensions of the opening in which the cover sets must be the same as the cover dimensions except the length and width dimensions shall be ⅛" greater.
6. Covers and boxes must be interchangeable with California standard male and female gages. When interchanged with a standard male or female gage, the top surfaces must be flush within ⅛".

DIMENSION TABLE

PULL BOX	BOX						COVER				
	MINIMUM * THICKNESS	MINIMUM DEPTH BOX AND EXTENSION	WO	LO	L1	W1	L **	W **	R	EDGE THICKNESS	EDGE TAPER
No. 3½(T)	1½"	1'-0"	1'-5"± 1"	1'-8⅞"±	1'-2½"±	10⅝"± 1"	1'-8"±	1'-1¾"±	0"	½"	NONE
No. 5(T)	1¾"	1'-0"	1'-11½"± 1"	2'-5½"±	1'-7"±	1'-1"± 1"	2'-3"±	1'-4"±	0"	½"	NONE
No. 6(T)	2"	1'-0"	2'-6"± 1"	2'-11½"±	1'-11½"±	1'-5"± 1"	2'-9"±	1'-8"±	0"	½"	NONE

* EXCLUDING CONDUIT WEB ** TOP DIMENSION

STATE OF CALIFORNIA
DEPARTMENT OF TRANSPORTATION

ELECTRICAL SYSTEMS (TRAFFIC RATED PULL BOX)

NO SCALE

RSP ES-8B DATED JANUARY 20, 2012 SUPPLEMENTS THE STANDARD PLANS BOOK DATED 2010.

REVISED STANDARD PLAN RSP ES-8B

2010 REVISED STANDARD PLAN RSP ES-8B

Dist	COUNTY	ROUTE	POST MILES TOTAL PROJECT	SHEET No.	TOTAL SHEETS
06	Ker	99	24.6	48	53

REGISTERED ELECTRICAL ENGINEER

July 20, 2012
PLANS APPROVAL DATE

REGISTERED PROFESSIONAL ENGINEER
Jeffery G. McRae
No. E14512
Exp. 6-30-14
ELECTRICAL
STATE OF CALIFORNIA

THE STATE OF CALIFORNIA OR ITS OFFICERS OR AGENTS SHALL NOT BE RESPONSIBLE FOR THE ACCURACY OR COMPLETENESS OF SCANNED COPIES OF THIS PLAN SHEET.

TO ACCOMPANY PLANS DATED 2-11-13

ISOFOOTCANDLE CURVE - MINIMUM

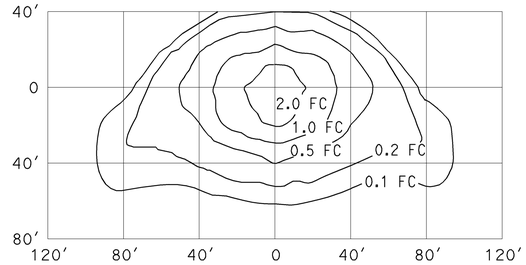

TYPE III MEDIUM CUTOFF

Cutoff Luminaire
34′ Mounting Height
Lamp operated at 22,000 lm
200-W high pressure sodium lamp
ANSI Designation S66

ISOFOOTCANDLE CURVE - MINIMUM

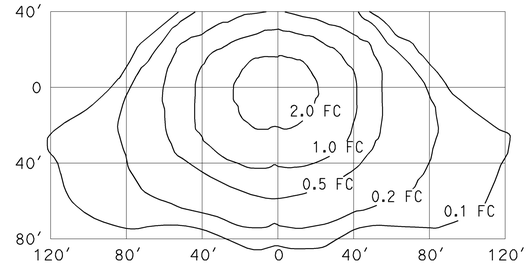

TYPE III MEDIUM CUTOFF

Cutoff Luminaire
40′ Mounting Height
Lamp operated at 37,000 lm
310-W high pressure sodium lamp
ANSI Designation S67

ISOFOOTCANDLE CURVE - MINIMUM

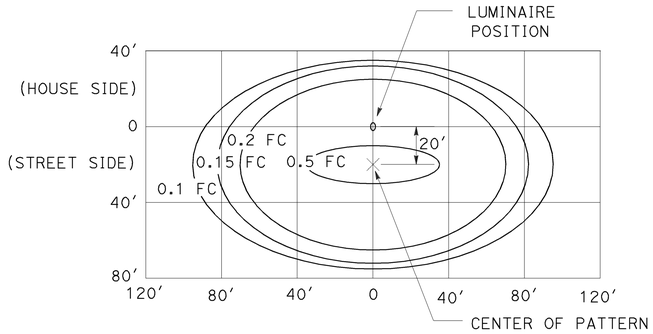

LED LUMINAIRE ROADWAY 1

200-W HPS Equivalent at 34′ Mounting Height

ISOFOOTCANDLE CURVE - MINIMUM

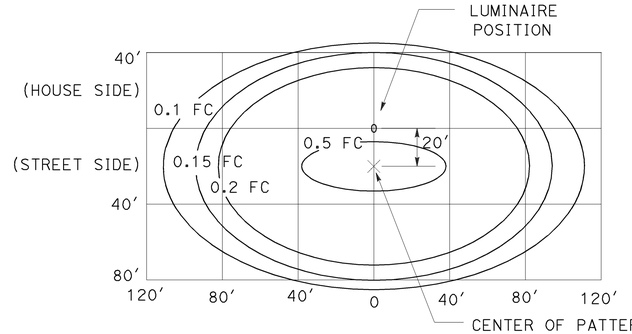

LED LUMINAIRE ROADWAY 2

310-W HPS Equivalent at 40′ Mounting Height

ISOFOOTCANDLE CURVE - MINIMUM

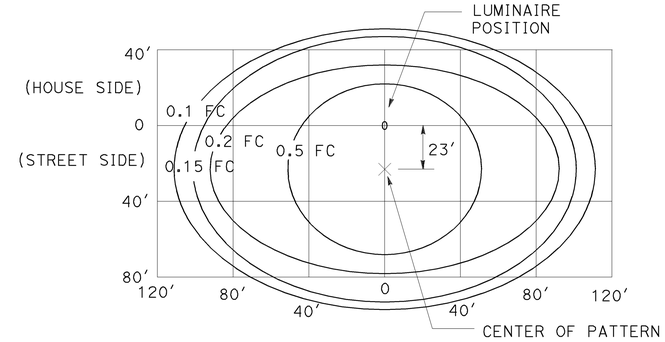

LED LUMINAIRE ROADWAY 4

400-W HPS Equivalent at 40′ Mounting Height

ISOFOOTCANDLE CURVE - MINIMUM

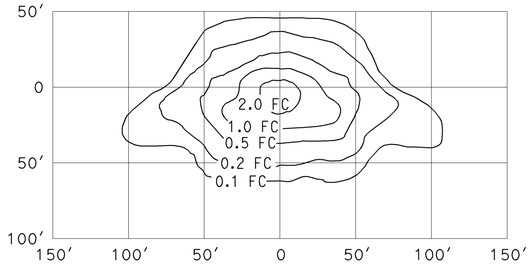

TYPE III MEDIUM CUTOFF

Cutoff Luminaire
30′ Mounting Height
Lamp operated at 16,000 lm
150-W high pressure sodium lamp
ANSI Designation S55

ISOFOOTCANDLE CURVE - MINIMUM

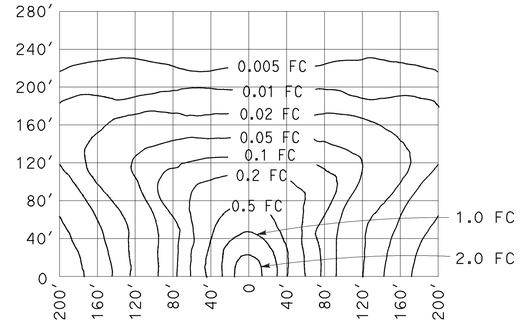

LOW PRESSURE SODIUM LUMINAIRE

40′ Mounting Height
Lamp operated at 33,000 lm
180-W low pressure sodium lamp

STATE OF CALIFORNIA
DEPARTMENT OF TRANSPORTATION

ELECTRICAL SYSTEMS (ISOFOOTCANDLE DIAGRAMS)

NO SCALE

RSP ES-10A DATED JULY 20, 2012 SUPPLEMENTS THE STANDARD PLANS BOOK DATED 2010.

REVISED STANDARD PLAN RSP ES-10A

2010 REVISED STANDARD PLAN RSP ES-10A

2-16-12

Dist	COUNTY	ROUTE	POST MILES TOTAL PROJECT	SHEET No.	TOTAL SHEETS
06	Ker	99	24.6	49	53

Jeffery G. McRae
REGISTERED ELECTRICAL ENGINEER

July 20, 2012
PLANS APPROVAL DATE

REGISTERED PROFESSIONAL ENGINEER
Jeffery G. McRae
No. E14512
Exp. 6-30-14
ELECTRICAL
STATE OF CALIFORNIA

THE STATE OF CALIFORNIA OR ITS OFFICERS OR AGENTS SHALL NOT BE RESPONSIBLE FOR THE ACCURACY OR COMPLETENESS OF SCANNED COPIES OF THIS PLAN SHEET.

TO ACCOMPANY PLANS DATED 2-11-13

ISOFOOTCANDLE CURVE - MINIMUM

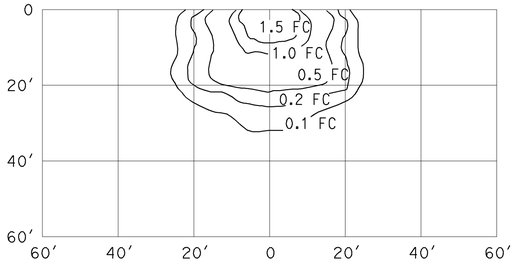

WALL LUMINAIRE
15′ Mounting Height
Lamp operated at 5,800 lm
70-W high pressure sodium lamp
ANSI Designation S62

ISOFOOTCANDLE CURVE - MINIMUM

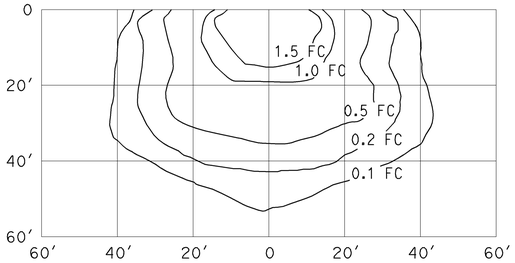

WALL LUMINAIRE
15′ Mounting Height
Lamp operated at 9,500 lm
100-W high pressure sodium lamp
ANSI Designation S54

ISOFOOTCANDLE CURVE - MINIMUM

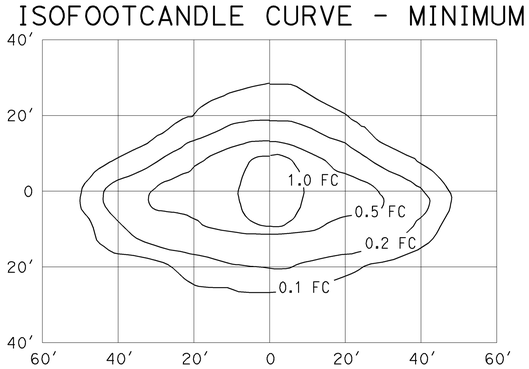

PENDANT SOFFIT LUMINAIRE
TYPE III SHORT
17′ Mounting Height
Lamp operated at 5,800 lm
70-W high pressure sodium lamp
ANSI Designation S62

ISOFOOTCANDLE CURVE - MINIMUM

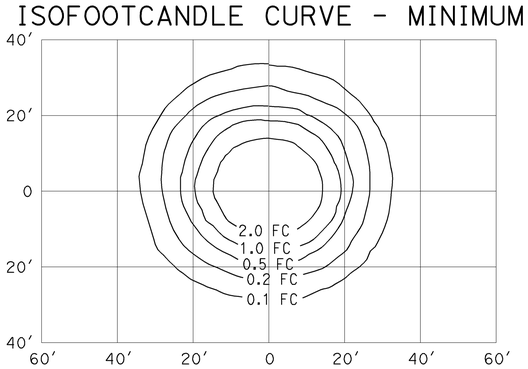

PENDANT SOFFIT LUMINAIRE
17′ Mounting Height
Lamp operated at 5,800 lm
70-W high pressure sodium lamp
ANSI Designation S62

ISOFOOTCANDLE CURVE - MINIMUM

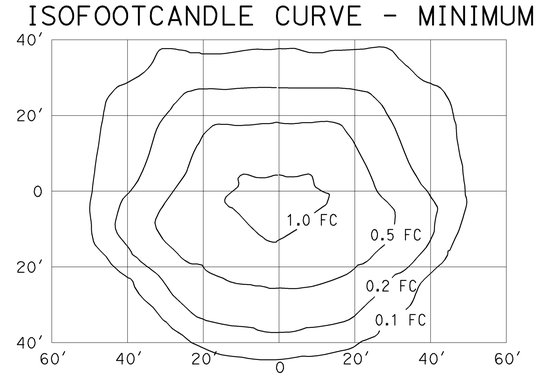

FLUSH SOFFIT LUMINAIRE
17′ Mounting Height
Lamp operated at 5,800 lm
70-W high pressure sodium lamp
ANSI Designation S62

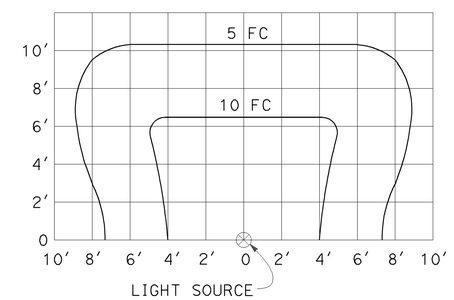

SIGN LIGHTING FIXTURE
ISOFOOTCANDLE DIAGRAM

NOTES:

1. Curves represent the minimum footcandle (FC) of initial illumination on a 10′-0" x 20′-0" panel.
2. The FC shown are with the fixture attached to the light fixture mounting channel which places the center of the source 4′-8" in front of panel and 1′-0" below the bottom edge.
3. Applicable lamp: 85-W fluorescent phosphor coated induction lamp.

STATE OF CALIFORNIA
DEPARTMENT OF TRANSPORTATION

ELECTRICAL SYSTEMS (ISOFOOTCANDLE DIAGRAMS)

NO SCALE

RSP ES-10B DATED JULY 20, 2012 SUPPLEMENTS THE STANDARD PLANS BOOK DATED 2010.

REVISED STANDARD PLAN RSP ES-10B

2010 REVISED STANDARD PLAN RSP ES-10B

DIST	COUNTY	ROUTE	POST MILES TOTAL PROJECT	SHEET No	TOTAL SHEETS
06	Ker	99	24.6	50	53

REGISTERED CIVIL ENGINEER — DATE 8/20/12

2-11-13
PLANS APPROVAL DATE

REGISTERED PROFESSIONAL ENGINEER — DEVANG VORA — No. C76546 — Exp. 12/31/12 — CIVIL — STATE OF CALIFORNIA

The State of California or its officers or agents shall not be responsible for the accuracy or completeness of electronic copies of this plan sheet.

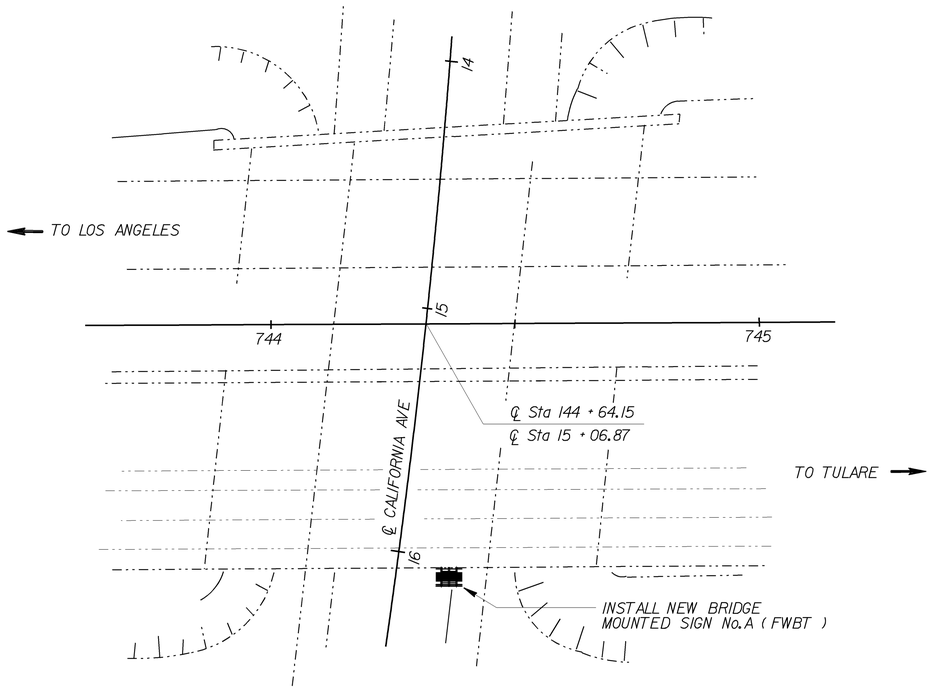

LOCATION PLAN

NOTE:

1. For sign location, see "SIGN PLANS".

STANDARD PLANS 2010

A10A ACRONYMS AND ABBREVIATIONS (SHEET 1 OF 2)
A10B ACRONYMS AND ABBREVIATIONS (SHEET 2 OF 2)

LEGEND

Existing structure
New structure

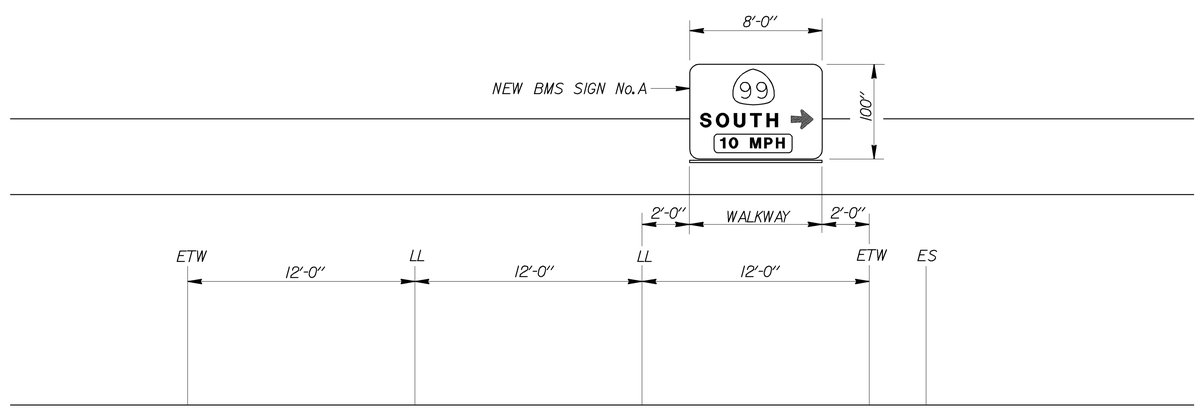

ELEVATION

NO SCALE

NOTE:
THE CONTRACTOR SHALL VERIFY ALL CONTROLLING FIELD DIMENSIONS BEFORE ORDERING OR FABRICATING ANY MATERIAL.

STANDARD PLAN SHEET No.
DETAIL No.

BRANCH CHIEF JEFF WOODY	DESIGN	BY JOHN DATILES	CHECKED DEVANG VORA
	DETAILS	BY R. YEE	CHECKED DEVANG VORA
	QUANTITIES	BY JOHN DATILES	CHECKED DEVANG VORA

STATE OF CALIFORNIA
DEPARTMENT OF TRANSPORTATION

DIVISION OF ENGINEERING SERVICES
DESIGN AND TECHNICAL SERVICES
SPECIAL DESIGNS BRANCH
A

BRIDGE NO. 50-260 R/L
POST MILE 24.6

CALIFORNIA AVENUE UNDERCROSSING
BRIDGE MOUNTED SIGN - LOCATION PLAN

SDS-1

(ENGLISH) SPECIAL DESIGNS BRANCH BORDER SHEET (REV. 7-1-09)

ORIGINAL SCALE IN INCHES FOR REDUCED PLANS 0 1 2 3

UNIT: 3619
PROJECT NUMBER & PHASE: 0600000306-1
CONTRACT NO.: 06-0L3901

DISREGARD PRINTS BEARING EARLIER REVISION DATES
REVISION DATES 9/11/12 10/3/12 10/3/12 3/1/13
SHEET OF

FILE => /2012sd/06-0L3901/sds-1.dgn

USERNAME => s115241 DATE PLOTTED => 28-NOV-2012 TIME PLOTTED => 06:36

DIST	COUNTY	ROUTE	POST MILES TOTAL PROJECT	SHEET No	TOTAL SHEETS
06	Ker	99	24.6	51	53

REGISTERED CIVIL ENGINEER 8/20/12 DATE

2-11-13
PLANS APPROVAL DATE

REGISTERED PROFESSIONAL ENGINEER DEVANG VORA No. C76546 Exp. 12/31/12 CIVIL STATE OF CALIFORNIA

The State of California or its officers or agents shall not be responsible for the accuracy or completeness of electronic copies of this plan sheet.

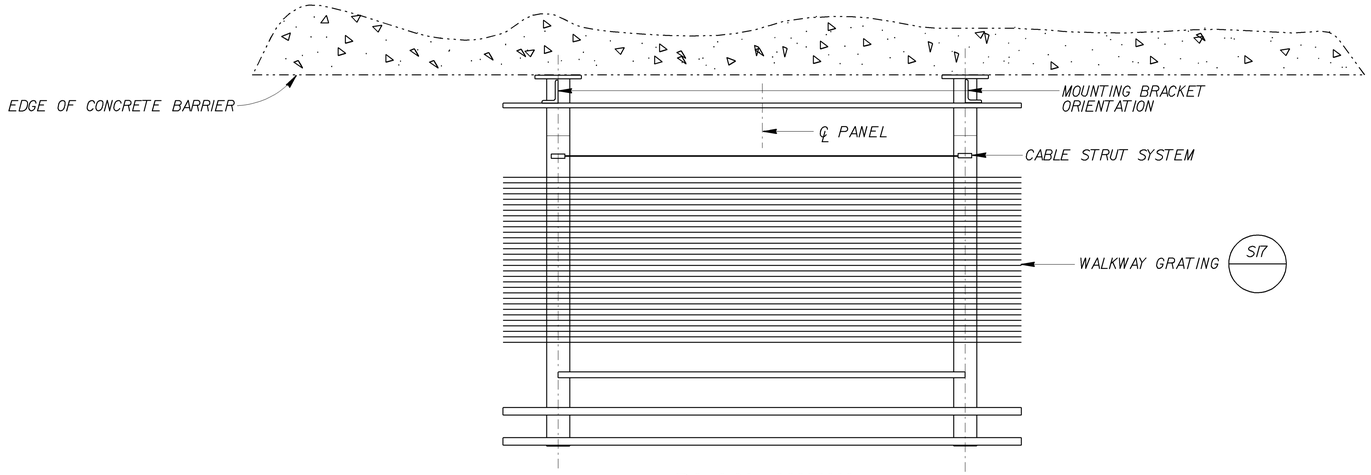

PLAN VIEW

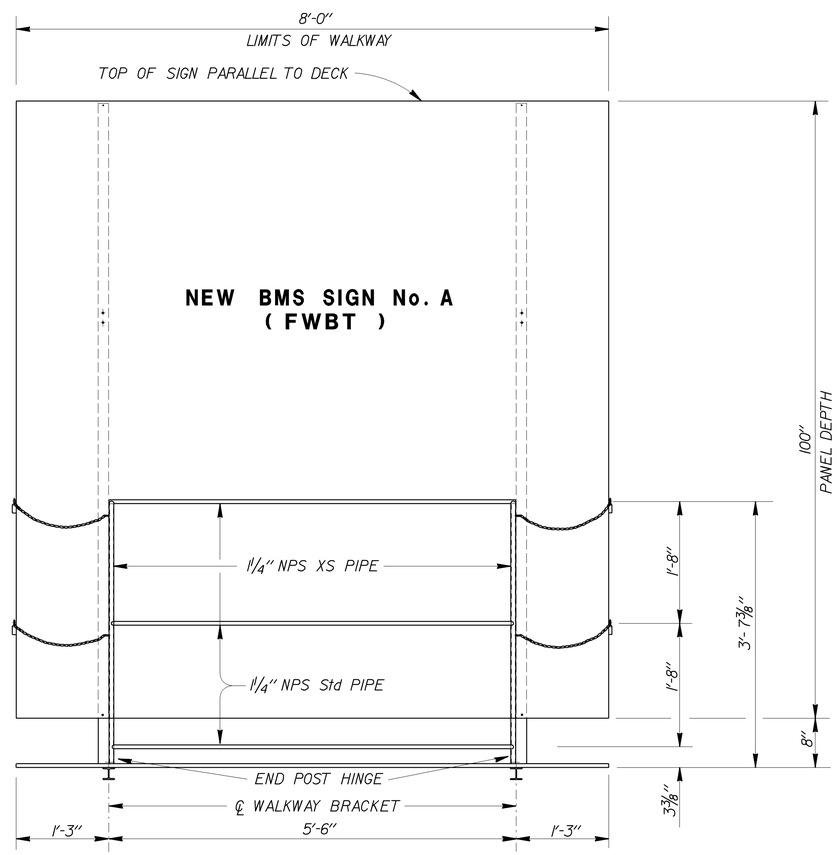

FRONT VIEW

NOTES:

1. For details not shown, see "TYPICAL DETAILS No. 1".
2. For details not shown, see "STANDARD PLANS 2010".
3. All high strength (HS) bolts shall be snug tightened.
4. Minimum size fillet weld is 1/4" or thickness or thinner part unless noted otherwise.
5. Structure shall be galvanized after fabrication.

NOTE:
THE CONTRACTOR SHALL VERIFY ALL CONTROLLING FIELD DIMENSIONS BEFORE ORDERING OR FABRICATING ANY MATERIAL.

STANDARD PLAN SHEET No.
DETAIL No.

NO SCALE

BRANCH CHIEF JEFF WOODY

	BY	CHECKED
DESIGN	JOHN DATILES	DEVANG VORA
DETAILS	R. YEE	DEVANG VORA
QUANTITIES	JOHN DATILES	DEVANG VORA

STATE OF CALIFORNIA
DEPARTMENT OF TRANSPORTATION

DIVISION OF ENGINEERING SERVICES
DESIGN AND TECHNICAL SERVICES
SPECIAL DESIGNS BRANCH A

BRIDGE NO. 50-260 R/L
POST MILE 24.6

CALIFORNIA AVENUE UNDERCROSSING
BRIDGE MOUNTED SIGN - SIGN ELEVATION

SDS-2

(ENGLISH) SPECIAL DESIGNS BRANCH BORDER SHEET (REV. 7-1-09)

ORIGINAL SCALE IN INCHES FOR REDUCED PLANS 0 1 2 3

UNIT: 3619
PROJECT NUMBER & PHASE: 0600000306-1
CONTRACT NO.: 06-0L3901

DISREGARD PRINTS BEARING EARLIER REVISION DATES → REVISION DATES 7/13/12 8/20/12 9/21/12 10/2/12

SHEET OF

FILE => /2012sd/06-0L3901/sds-2.dgn

USERNAME => s115241 DATE PLOTTED => 28-NOV-2012 TIME PLOTTED => 06:36

DIST	COUNTY	ROUTE	POST MILES TOTAL PROJECT	SHEET No	TOTAL SHEETS
06	Ker	99	24.6	52	53

REGISTERED CIVIL ENGINEER 8/20/12 DATE

2-11-13
PLANS APPROVAL DATE

REGISTERED PROFESSIONAL ENGINEER DEVANG VORA No. C76546 Exp. 12/31/12 CIVIL STATE OF CALIFORNIA

The State of California or its officers or agents shall not be responsible for the accuracy or completeness of electronic copies of this plan sheet.

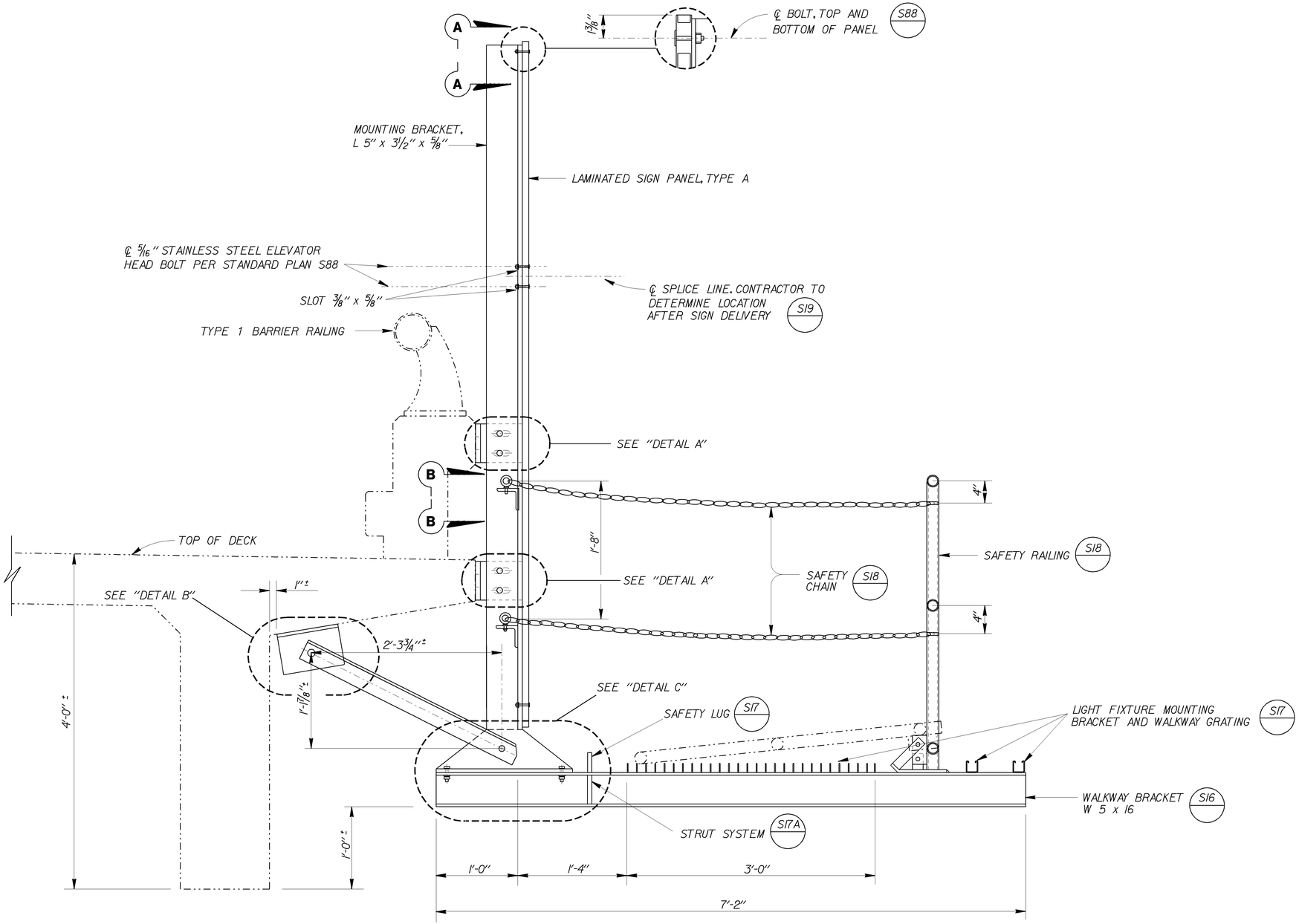

NOTE:
THE CONTRACTOR SHALL VERIFY ALL CONTROLLING FIELD DIMENSIONS BEFORE ORDERING OR FABRICATING ANY MATERIAL.

SIGN No. A (FWBT)

NO SCALE

STANDARD PLAN SHEET No.
DETAIL No.

BRANCH CHIEF JEFF WOODY	DESIGN	BY JOHN DATILES	CHECKED DEVANG VORA
	DETAILS	BY R. YEE	CHECKED DEVANG VORA
	QUANTITIES	BY JOHN DATILES	CHECKED DEVANG VORA

STATE OF CALIFORNIA
DEPARTMENT OF TRANSPORTATION

DIVISION OF ENGINEERING SERVICES
DESIGN AND TECHNICAL SERVICES
SPECIAL DESIGNS BRANCH
A

BRIDGE NO. 50-260 R/L
POST MILE 24.6

CALIFORNIA AVENUE UNDERCROSSING
BRIDGE MOUNTED SIGN - TYPICAL SECTION

SDS-3

(ENGLISH) SPECIAL DESIGNS BRANCH BORDER SHEET (REV. 7-1-09)

ORIGINAL SCALE IN INCHES FOR REDUCED PLANS 0 1 2 3

UNIT: 3619
PROJECT NUMBER & PHASE: 0600000306-1
CONTRACT NO.: 06-0L3901

DISREGARD PRINTS BEARING EARLIER REVISION DATES
REVISION DATES 7/13/12 7/13/12 8/20/12
SHEET OF

FILE => /2012sd/06-0L3901/sds-3.dgn

USERNAME => s115241 DATE PLOTTED => 28-NOV-2012 TIME PLOTTED => 06:37

DIST	COUNTY	ROUTE	POST MILES TOTAL PROJECT	SHEET No	TOTAL SHEETS
06	Ker	99	24.6	53	53

REGISTERED CIVIL ENGINEER 8/20/12 DATE

2-11-13
PLANS APPROVAL DATE

REGISTERED PROFESSIONAL ENGINEER DEVANG VORA No. C76546 Exp. 12/31/12 CIVIL STATE OF CALIFORNIA

The State of California or its officers or agents shall not be responsible for the accuracy or completeness of electronic copies of this plan sheet.

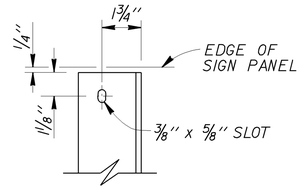

SECTION A-A

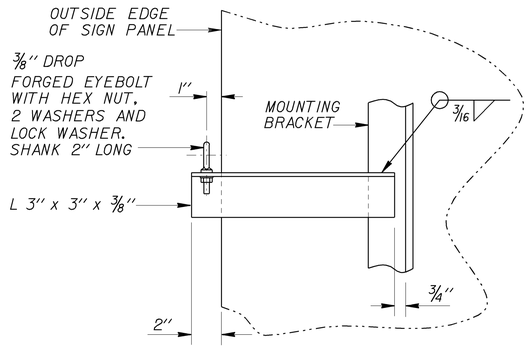

SECTION B-B

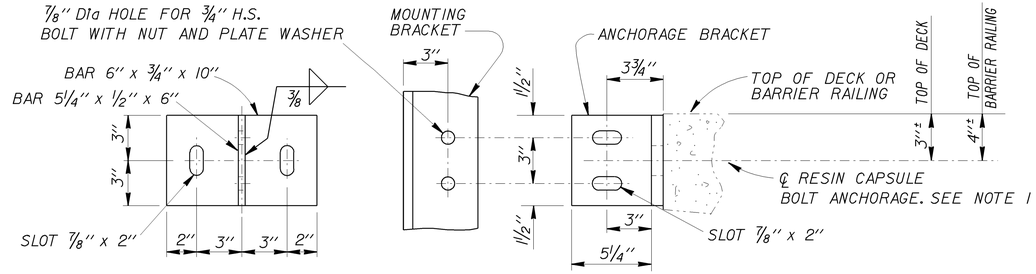

DETAIL A

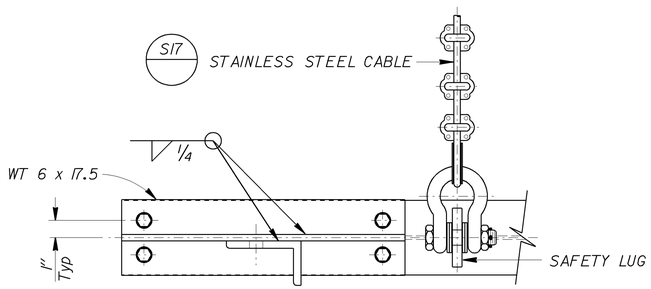

SECTION C-C

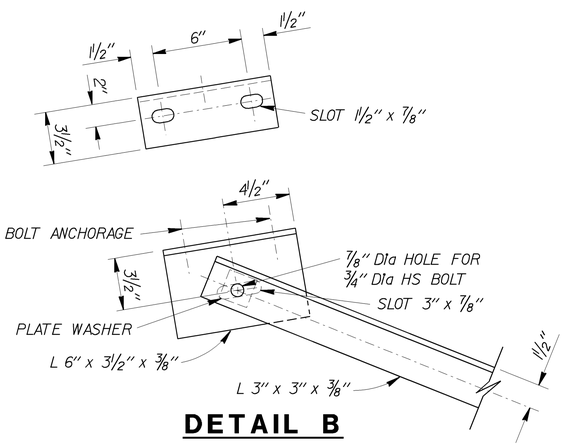

DETAIL B

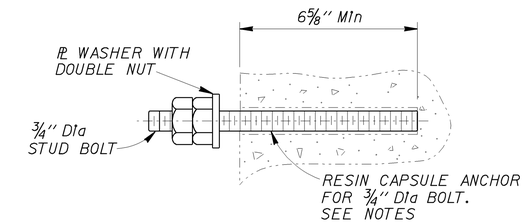

RESIN CAPSULE BOLT ANCHORAGE

NOTES:

1. Resin capsule bolt shall not interfere with existing railing anchorages.
2. Resin capsule anchorage is subject to approval of Engineer. Installation procedure shall comply with manufacturer's instructions.
3. Where new resin capsule bolt anchorage coincides with fence post or existing bridge mounted sign anchorage, adjust new mounting bracket to create a minimum distance of 6" measured from the centerline of nearest resin capsule bolt anchorage to the centerline fence post or centerline existing bridge mounted sign anchorage, or as approved by the Engineer.
4. Existing bridge mounted sign anchors shall be cut flush with edge of deck by mechanical means. Damage to concrete surface resulting from cut shall repaired at the Contractor's expense to the Engineers satisfaction. Cut ends of anchors shall be coated with 2 coats of zinc rich primer.
5. Resin capsule bolt anchors shall be installed in sound concrete free of cracks or delamination.

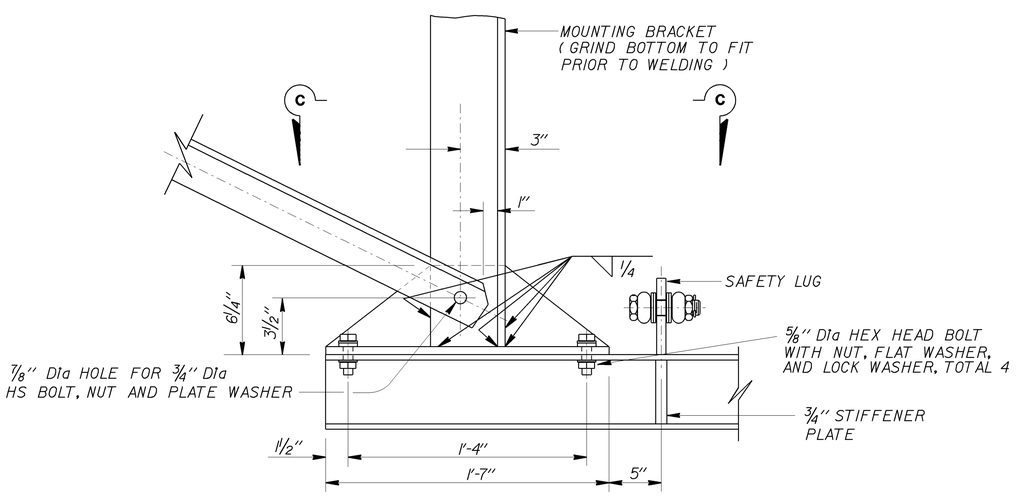

DETAIL C

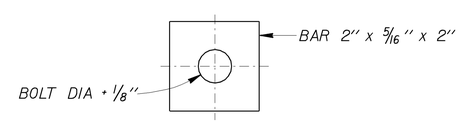

PLATE WASHER

FOR ALL SLOTTED HOLES

NOTE:
THE CONTRACTOR SHALL VERIFY ALL CONTROLLING FIELD DIMENSIONS BEFORE ORDERING OR FABRICATING ANY MATERIAL.

STANDARD PLAN SHEET No.
DETAIL No.

NO SCALE

BRANCH CHIEF JEFF WOODY

	BY	CHECKED
DESIGN	JOHN DATILES	DEVANG VORA
DETAILS	R. YEE	DEVANG VORA
QUANTITIES	JOHN DATILES	DEVANG VORA

STATE OF CALIFORNIA
DEPARTMENT OF TRANSPORTATION

DIVISION OF ENGINEERING SERVICES
DESIGN AND TECHNICAL SERVICES
SPECIAL DESIGNS BRANCH
A

BRIDGE NO. 50-260 R/L
POST MILE 24.6

CALIFORNIA AVENUE UNDERCROSSING
TYPICAL DETAILS No. 1

SDS-4

(ENGLISH) SPECIAL DESIGNS BRANCH BORDER SHEET (REV. 7-1-09)

ORIGINAL SCALE IN INCHES FOR REDUCED PLANS 0 1 2 3

UNIT: 3619
PROJECT NUMBER & PHASE: 0600000306-1
CONTRACT NO.: 06-0L3901

DISREGARD PRINTS BEARING EARLIER REVISION DATES

REVISION DATES 10/4/12 7/13/12 8/20/12 10/2/12

SHEET OF

FILE => /2012sd/06-0L3901/sds-4.dgn

USERNAME => s115241 DATE PLOTTED => 28-NOV-2012 TIME PLOTTED => 06:38