HSIMG-005-4(190)275E

Dist	COUNTY	ROUTE	POST MILES TOTAL PROJECT	SHEET No.	TOTAL SHEETS
06	Ker	5	69.6/73.1	1	41

STATE OF CALIFORNIA

DEPARTMENT OF TRANSPORTATION

PROJECT PLANS FOR CONSTRUCTION ON

STATE HIGHWAY

IN KERN COUNTY
NEAR LOST HILLS
FROM MAIN DRAIN ROAD OVERCROSSING
TO ROUTE 46/5 SEPARATION

TO BE SUPPLEMENTED BY STANDARD PLANS DATED MAY 2006

INDEX OF PLANS

SHEET No.	DESCRIPTION
1	TITLE AND LOCATION MAP
2	TYPICAL CROSS SECTIONS
3-15	LAYOUTS
16-21	CONSTRUCTION DETAILS
22	CONSTRUCTION AREA SIGNS
23	SUMMARY OF QUANTITIES
24-27	ELECTRICAL PLANS
28-41	REVISED AND NEW STANDARD PLANS

THE STANDARD PLANS LIST APPLICABLE TO THIS CONTRACT IS INCLUDED IN THE NOTICE TO BIDDERS AND SPECIAL PROVISIONS BOOK.

LOCATION MAP

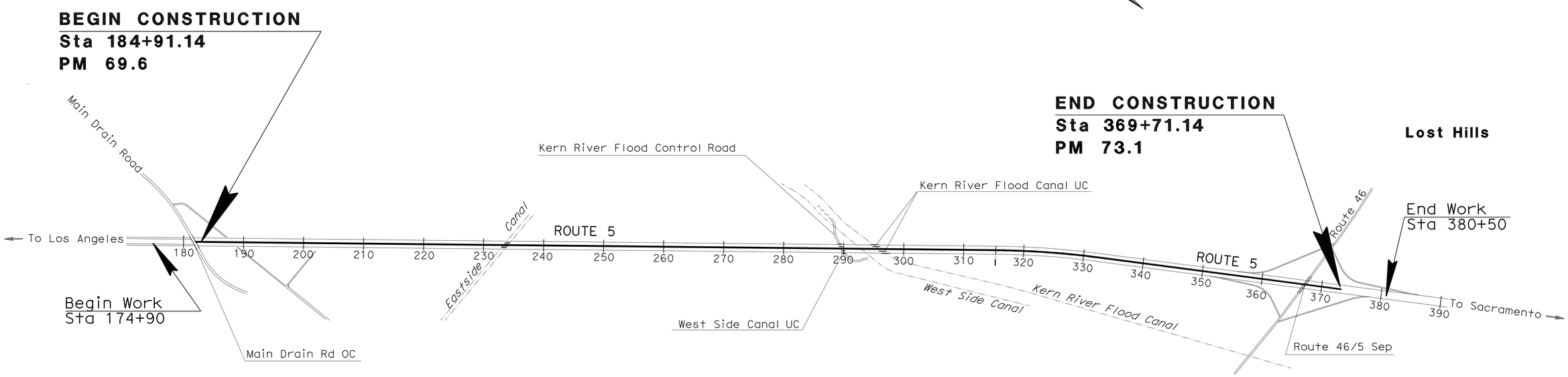

NO SCALE

Michael Lim 08-09-11
PROJECT ENGINEER DATE
REGISTERED CIVIL ENGINEER

September 6, 2011
PLANS APPROVAL DATE

REGISTERED PROFESSIONAL ENGINEER
MICHAEL LIM
No. 46718
Exp. 6/30/13
STATE OF CALIFORNIA

THE STATE OF CALIFORNIA OR ITS OFFICERS OR AGENTS SHALL NOT BE RESPONSIBLE FOR THE ACCURACY OR COMPLETENESS OF SCANNED COPIES OF THIS PLAN SHEET.

THE CONTRACTOR SHALL POSSESS THE CLASS (OR CLASSES) OF LICENSE AS SPECIFIED IN THE "NOTICE TO BIDDERS."

PROJECT MANAGER: Steven Milton
DESIGN ENGINEER: Lakachew Leyew

CONTRACT No.	06-0L2204
PROJECT ID	0600000295

LAST REVISION 08-09-11
DATE PLOTTED => 02-NOV-2011
TIME PLOTTED => 13:49

Dist	COUNTY	ROUTE	POST MILES TOTAL PROJECT	SHEET No.	TOTAL SHEETS
06	Ker	5	69.6/73.1	2	41

Michael Lim 08-09-11
REGISTERED CIVIL ENGINEER DATE

9-6-11
PLANS APPROVAL DATE

REGISTERED PROFESSIONAL ENGINEER
MICHAEL LIM
No. 46718
Exp 6/30/13
CIVIL
STATE OF CALIFORNIA

THE STATE OF CALIFORNIA OR ITS OFFICERS OR AGENTS SHALL NOT BE RESPONSIBLE FOR THE ACCURACY OR COMPLETENESS OF SCANNED COPIES OF THIS PLAN SHEET.

NOTES:

1. DIMENSIONS OF PAVEMENT STRUCTURES (STRUCTURAL SECTIONS) ARE SUBJECT TO TOLERANCES SPECIFIED IN THE STANDARD SPECIFICATIONS.
2. SEE LAYOUTS AND CONSTRUCTION DETAIL SHEETS FOR DETAILS OF THRIE BEAM ADJACENT TO OVERCROSSING STRUCTURES.
3. STATIONING SHOWN IS FOR CONSTRUCTION PUROPSE ONLY.

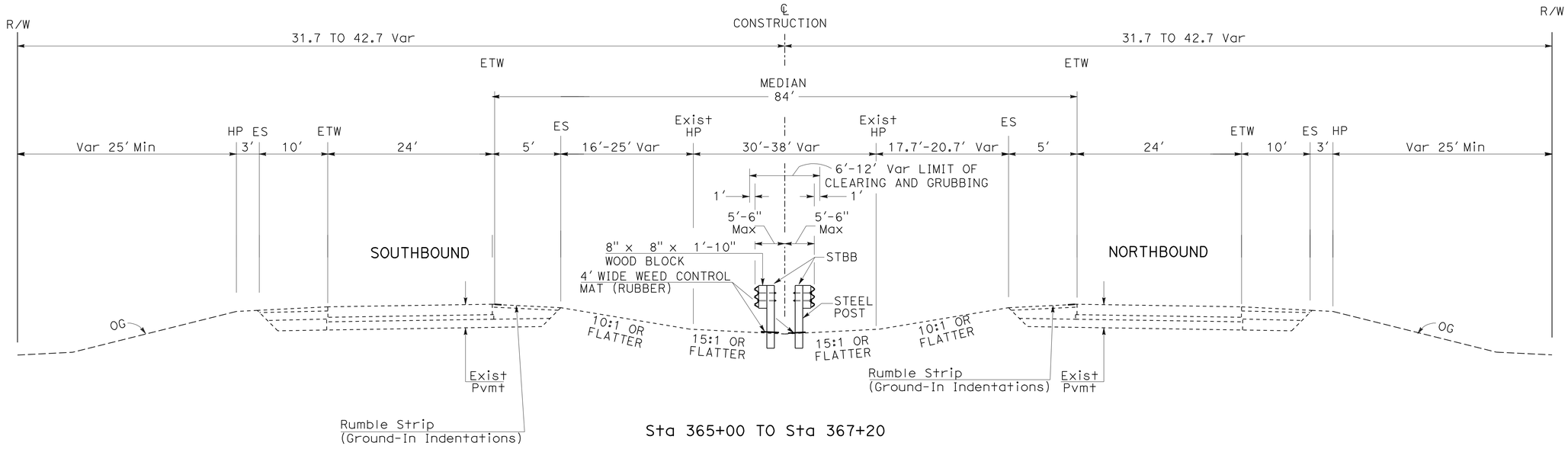

Sta 365+00 TO Sta 367+20

ROUTE 5

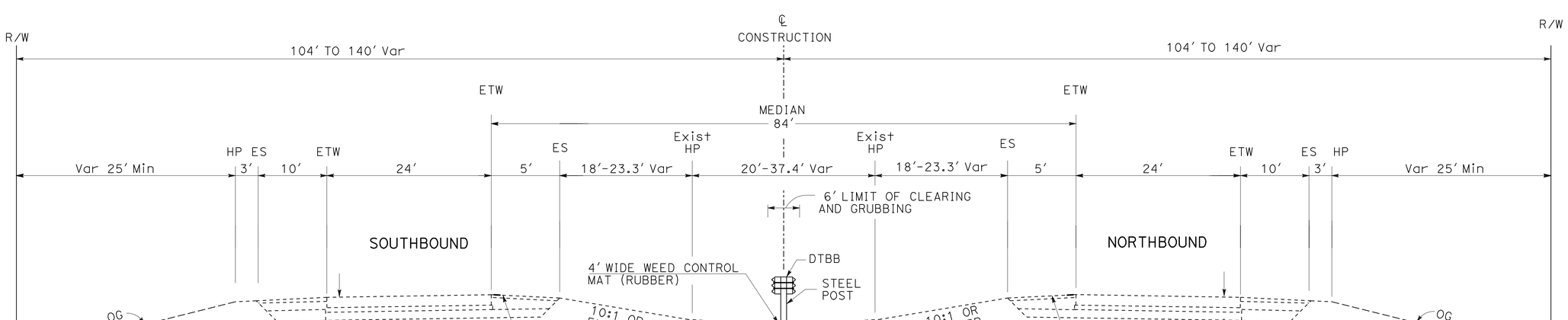

Sta 184+30.68 TO Sta 365+00

ROUTE 5

TYPICAL CROSS SECTIONS

NO SCALE

X-1

REVISED BY	DATE REVISED
MIKE LIM	

LAKACHEW LEYEW — MIKE LIM — CALCULATED-DESIGNED BY — CHECKED BY

FUNCTIONAL SUPERVISOR: MIKE LIM

STATE OF CALIFORNIA - DEPARTMENT OF TRANSPORTATION — DESIGN — Caltrans

LAST REVISION 06-08-11 | DATE PLOTTED => 08-SEP-2011 | TIME PLOTTED => 07:58

Dist	COUNTY	ROUTE	POST MILES TOTAL PROJECT	SHEET No.	TOTAL SHEETS
06	Ker	5	69.6/73.1	3	41

Michael Lim 08-09-11
REGISTERED CIVIL ENGINEER DATE

9-6-11
PLANS APPROVAL DATE

REGISTERED PROFESSIONAL ENGINEER
MICHAEL LIM
No. 46718
Exp. 6/30/13
CIVIL
STATE OF CALIFORNIA

THE STATE OF CALIFORNIA OR ITS OFFICERS OR AGENTS SHALL NOT BE RESPONSIBLE FOR THE ACCURACY OR COMPLETENESS OF SCANNED COPIES OF THIS PLAN SHEET.

NOTES:

1. FOR ACCURATE RIGHT OF WAY DATA, CONTACT RIGHT OF WAY ENGINEERING AT THE DISTRICT OFFICE.
2. LOCATIONS OF UTILITIES SHOWN ON THESE PLANS APPROXIMATE AND SHOULD VERIFIED BY THE CONTRACTORPRIOR TO CONSTRUCTION.
3. UTILITY OWNERSHIP ON THIS PROJECT IS AERIAL ELECTRIC- PG & E.

LEGEND:

: EROSION CONTROL (PSFM)

: DIRECTION OF TRAVEL

: 16′ x 84′ x 0.35′ EMERGENCY PASSAGEWAY

ABBREVIATION:

PSFM = POLYMER STABILIZED FIBER MATRIX

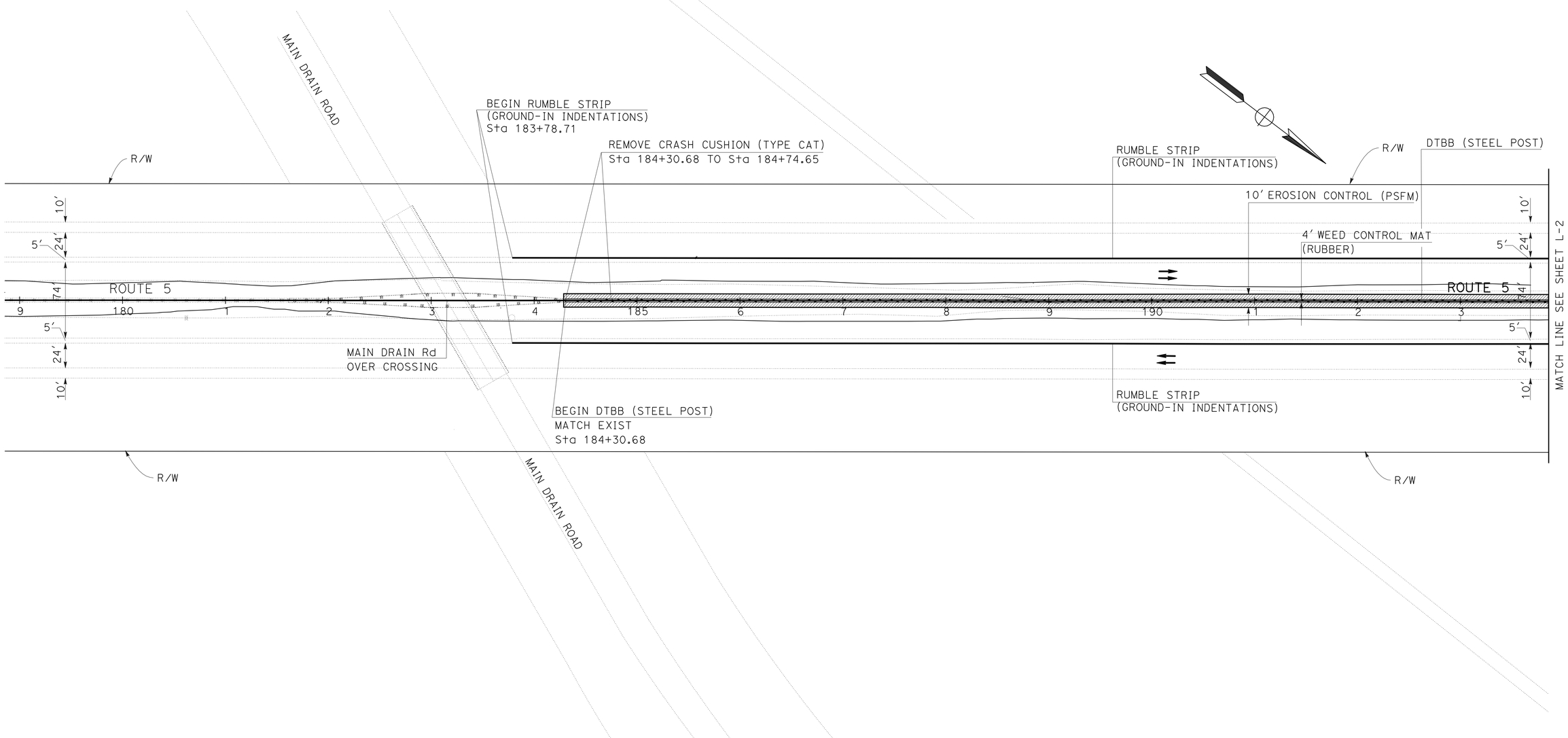

LAYOUT

SCALE: 1" = 50′ **L-1**

STATE OF CALIFORNIA - DEPARTMENT OF TRANSPORTATION
Caltrans®
DESIGN

FUNCTIONAL SUPERVISOR: MIKE LIM
CALCULATED-DESIGNED BY: LAKACHEW LEYEW
CHECKED BY: MIKE LIM
REVISED BY
DATE REVISED

LAST REVISION 06-08-11
DATE PLOTTED => 08-SEP-2011
TIME PLOTTED => 07:58

Dist	COUNTY	ROUTE	POST MILES TOTAL PROJECT	SHEET No.	TOTAL SHEETS
06	Ker	5	69.6/73.1	4	41

Michael Lim 08-09-11
REGISTERED CIVIL ENGINEER DATE

9-6-11
PLANS APPROVAL DATE

REGISTERED PROFESSIONAL ENGINEER
MICHAEL LIM
No. 46718
Exp 6/30/13
CIVIL
STATE OF CALIFORNIA

THE STATE OF CALIFORNIA OR ITS OFFICERS OR AGENTS SHALL NOT BE RESPONSIBLE FOR THE ACCURACY OR COMPLETENESS OF SCANNED COPIES OF THIS PLAN SHEET.

NOTE:

FOR ACCURATE RIGHT OF WAY DATA, CONTACT RIGHT OF WAY ENGINEERING AT THE DISTRICT OFFICE.

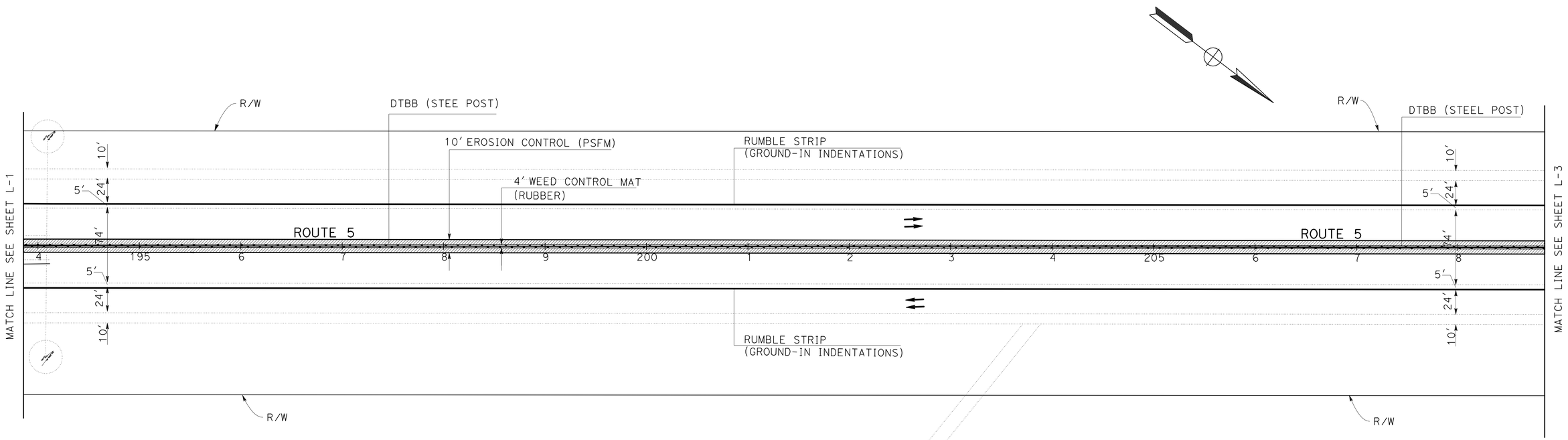

LAYOUT

SCALE: 1" = 50' **L - 2**

STATE OF CALIFORNIA - DEPARTMENT OF TRANSPORTATION
Caltrans
DESIGN

FUNCTIONAL SUPERVISOR: MIKE LIM
CALCULATED-DESIGNED BY: LAKACHEW LEYEW
CHECKED BY: MIKE LIM
REVISED BY
DATE REVISED

LAST REVISION 06-08-11
DATE PLOTTED => 08-SEP-2011
TIME PLOTTED => 07:58

Dist	COUNTY	ROUTE	POST MILES TOTAL PROJECT	SHEET No.	TOTAL SHEETS
06	Ker	5	69.6/73.1	5	41

Michael Lim 08-09-11
REGISTERED CIVIL ENGINEER DATE

9-6-11
PLANS APPROVAL DATE

REGISTERED PROFESSIONAL ENGINEER
MICHAEL LIM
No. 46718
Exp 6/30/13
CIVIL
STATE OF CALIFORNIA

THE STATE OF CALIFORNIA OR ITS OFFICERS OR AGENTS SHALL NOT BE RESPONSIBLE FOR THE ACCURACY OR COMPLETENESS OF SCANNED COPIES OF THIS PLAN SHEET.

NOTE:

FOR ACCURATE RIGHT OF WAY DATA, CONTACT RIGHT OF WAY ENGINEERING AT THE DISTRICT OFFICE.

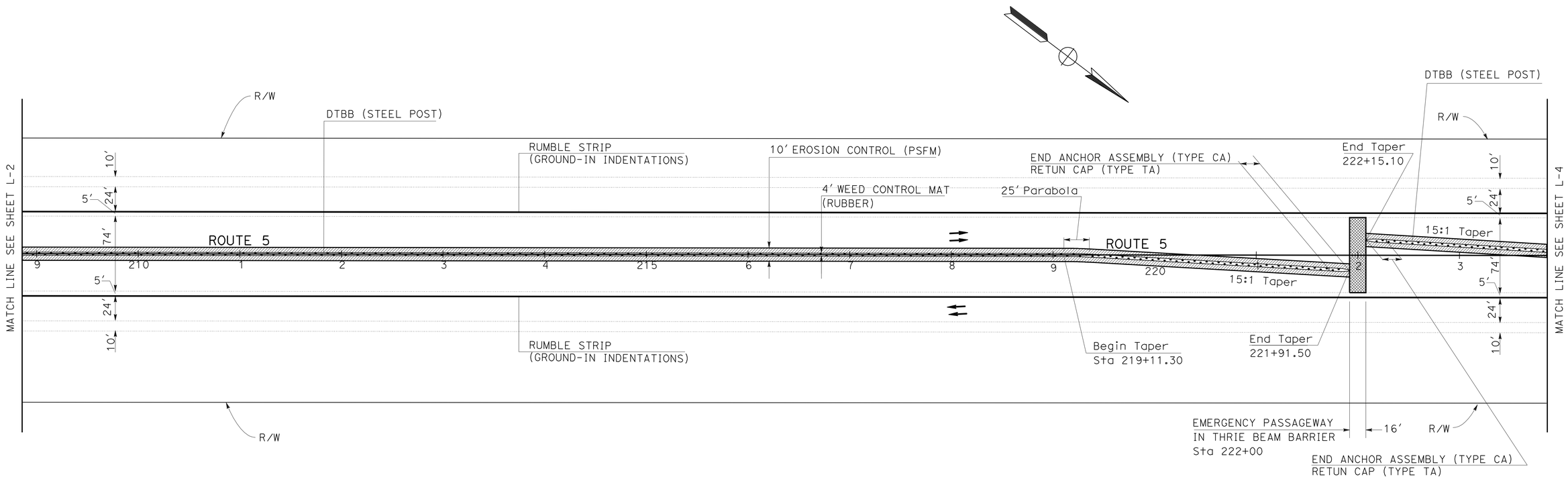

LAYOUT

SCALE: 1" = 50'

L-3

STATE OF CALIFORNIA - DEPARTMENT OF TRANSPORTATION
Caltrans®
DESIGN

FUNCTIONAL SUPERVISOR: MIKE LIM
CALCULATED-DESIGNED BY: LAKACHEW LEYEW
CHECKED BY: MIKE LIM
REVISED BY
DATE REVISED

LAST REVISION 06-08-11
DATE PLOTTED => 08-SEP-2011
TIME PLOTTED => 07:58

Dist	COUNTY	ROUTE	POST MILES TOTAL PROJECT	SHEET No.	TOTAL SHEETS
06	Ker	5	69.6/73.1	6	41

Michael Lim 08-09-11
REGISTERED CIVIL ENGINEER DATE

9-6-11
PLANS APPROVAL DATE

REGISTERED PROFESSIONAL ENGINEER
MICHAEL LIM
No. 46718
Exp 6/30/13
CIVIL
STATE OF CALIFORNIA

THE STATE OF CALIFORNIA OR ITS OFFICERS OR AGENTS SHALL NOT BE RESPONSIBLE FOR THE ACCURACY OR COMPLETENESS OF SCANNED COPIES OF THIS PLAN SHEET.

NOTE:

FOR ACCURATE RIGHT OF WAY DATA, CONTACT RIGHT OF WAY ENGINEERING AT THE DISTRICT OFFICE.

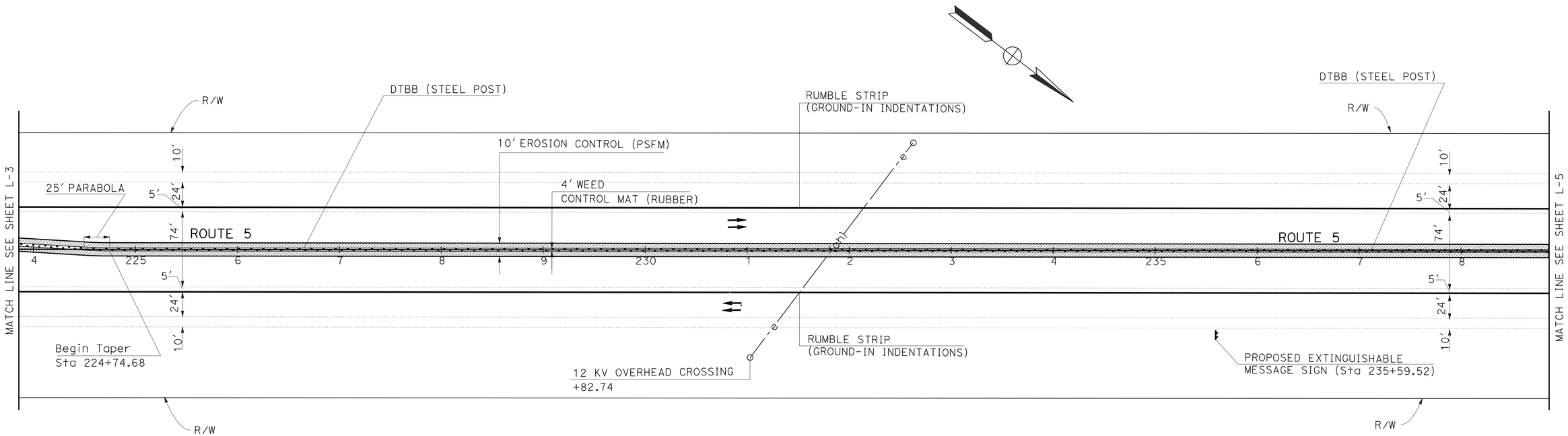

LAYOUT

SCALE: 1" = 50'

L-4

STATE OF CALIFORNIA - DEPARTMENT OF TRANSPORTATION
Caltrans
DESIGN

FUNCTIONAL SUPERVISOR: MIKE LIM
CALCULATED-DESIGNED BY: LAKACHEW LEYEW
CHECKED BY: MIKE LIM
REVISED BY
DATE REVISED

LAST REVISION 06-08-11
DATE PLOTTED => 08-SEP-2011
TIME PLOTTED => 07:58

Dist	COUNTY	ROUTE	POST MILES TOTAL PROJECT	SHEET No.	TOTAL SHEETS
06	Ker	5	69.6/73.1	7	41

Michael Lim 08-09-11
REGISTERED CIVIL ENGINEER DATE

9-6-11
PLANS APPROVAL DATE

REGISTERED PROFESSIONAL ENGINEER
MICHAEL LIM
No. 46718
Exp. 6/30/13
CIVIL
STATE OF CALIFORNIA

THE STATE OF CALIFORNIA OR ITS OFFICERS OR AGENTS SHALL NOT BE RESPONSIBLE FOR THE ACCURACY OR COMPLETENESS OF SCANNED COPIES OF THIS PLAN SHEET.

NOTE:

FOR ACCURATE RIGHT OF WAY DATA, CONTACT RIGHT OF WAY ENGINEERING AT THE DISTRICT OFFICE.

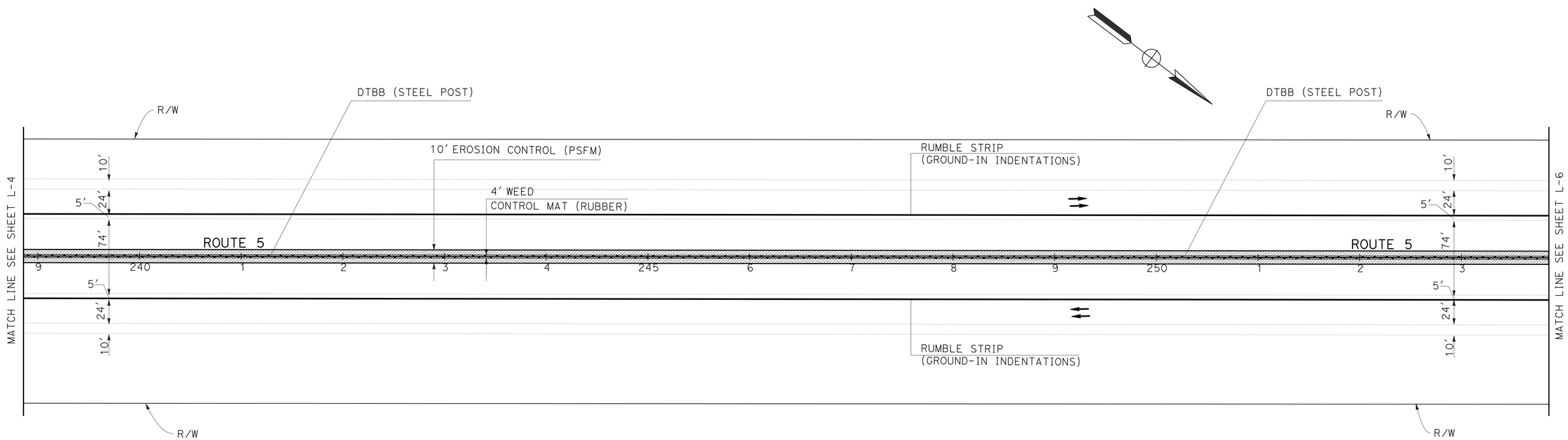

LAYOUT

SCALE: 1" = 50'

L - 5

LAKACHEW LEYEW	REVISED BY
MIKE LIM	DATE REVISED
CALCULATED-DESIGNED BY	
CHECKED BY	
FUNCTIONAL SUPERVISOR	
MIKE LIM	

STATE OF CALIFORNIA - DEPARTMENT OF TRANSPORTATION

Caltrans®

DESIGN

LAST REVISION 06-08-11 | DATE PLOTTED => 08-SEP-2011 | TIME PLOTTED => 07:59

Dist	COUNTY	ROUTE	POST MILES TOTAL PROJECT	SHEET No.	TOTAL SHEETS
06	Ker	5	69.6/73.1	8	41

Michael Lim 08-09-11
REGISTERED CIVIL ENGINEER DATE

9-6-11
PLANS APPROVAL DATE

REGISTERED PROFESSIONAL ENGINEER
MICHAEL LIM
No. 46718
Exp 6/30/13
CIVIL
STATE OF CALIFORNIA

THE STATE OF CALIFORNIA OR ITS OFFICERS OR AGENTS SHALL NOT BE RESPONSIBLE FOR THE ACCURACY OR COMPLETENESS OF SCANNED COPIES OF THIS PLAN SHEET.

NOTE:

FOR ACCURATE RIGHT OF WAY DATA, CONTACT RIGHT OF WAY ENGINEERING AT THE DISTRICT OFFICE.

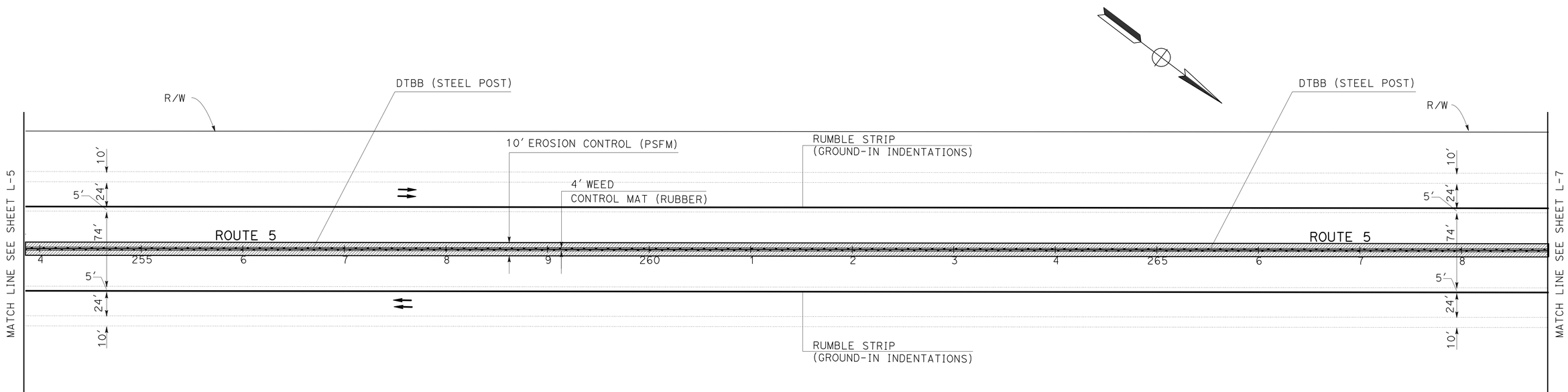

LAYOUT

SCALE: 1" = 50'

L-6

STATE OF CALIFORNIA - DEPARTMENT OF TRANSPORTATION
Caltrans
DESIGN

FUNCTIONAL SUPERVISOR: MIKE LIM
CALCULATED-DESIGNED BY: LAKACHEW LEYEW
CHECKED BY: MIKE LIM
REVISED BY
DATE REVISED

LAST REVISION 08-09-11
DATE PLOTTED => 08-SEP-2011
TIME PLOTTED => 07:59

Dist	COUNTY	ROUTE	POST MILES TOTAL PROJECT	SHEET No.	TOTAL SHEETS
06	Ker	5	69.6/73.1	9	41

Michael Lim 08-09-11
REGISTERED CIVIL ENGINEER DATE

9-6-11
PLANS APPROVAL DATE

REGISTERED PROFESSIONAL ENGINEER
MICHAEL LIM
No. 46718
Exp 6/30/13
CIVIL
STATE OF CALIFORNIA

THE STATE OF CALIFORNIA OR ITS OFFICERS OR AGENTS SHALL NOT BE RESPONSIBLE FOR THE ACCURACY OR COMPLETENESS OF SCANNED COPIES OF THIS PLAN SHEET.

NOTE: 1. FOR ACCURATE RIGHT OF WAY DATA, CONTACT RIGHT OF WAY ENGINEERING AT THE DISTRICT OFFICE

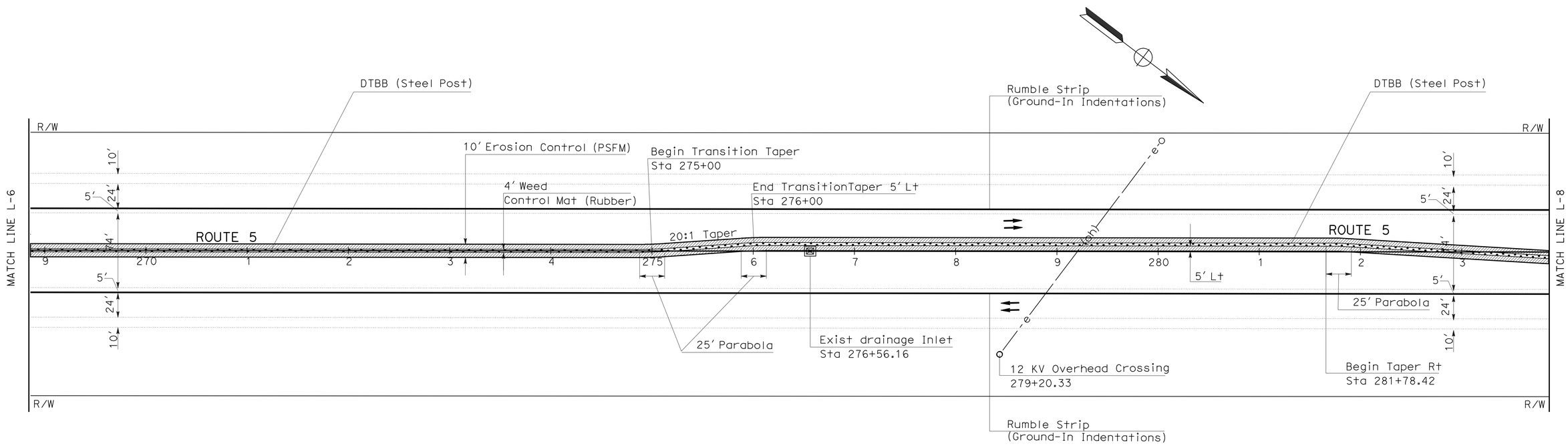

LAYOUT

L- 7

SCALE: 1" = 50'

STATE OF CALIFORNIA - DEPARTMENT OF TRANSPORTATION
Caltrans®
DESIGN

FUNCTIONAL SUPERVISOR: MIKE LIM
CALCULATED-DESIGNED BY: LAKACHEW LEYEW
CHECKED BY: MIKE LIM
REVISED BY
DATE REVISED

LAST REVISION DATE PLOTTED => 08-SEP-2011
TIME PLOTTED => 07:42
08-09-11

Dist	COUNTY	ROUTE	POST MILES TOTAL PROJECT	SHEET No.	TOTAL SHEETS
06	Ker	5	69.6/73.1	10	41

Michael Lim 08-09-11
REGISTERED CIVIL ENGINEER DATE

9-6-11
PLANS APPROVAL DATE

REGISTERED PROFESSIONAL ENGINEER
MICHAEL LIM
No. 46718
Exp 6/30/13
CIVIL
STATE OF CALIFORNIA

THE STATE OF CALIFORNIA OR ITS OFFICERS OR AGENTS SHALL NOT BE RESPONSIBLE FOR THE ACCURACY OR COMPLETENESS OF SCANNED COPIES OF THIS PLAN SHEET.

NOTE: 1. FOR ACCURATE RIGHT OF WAY DATA, CONTACT RIGHT OF WAY ENGINEERING AT THE DISTRICT OFFICE

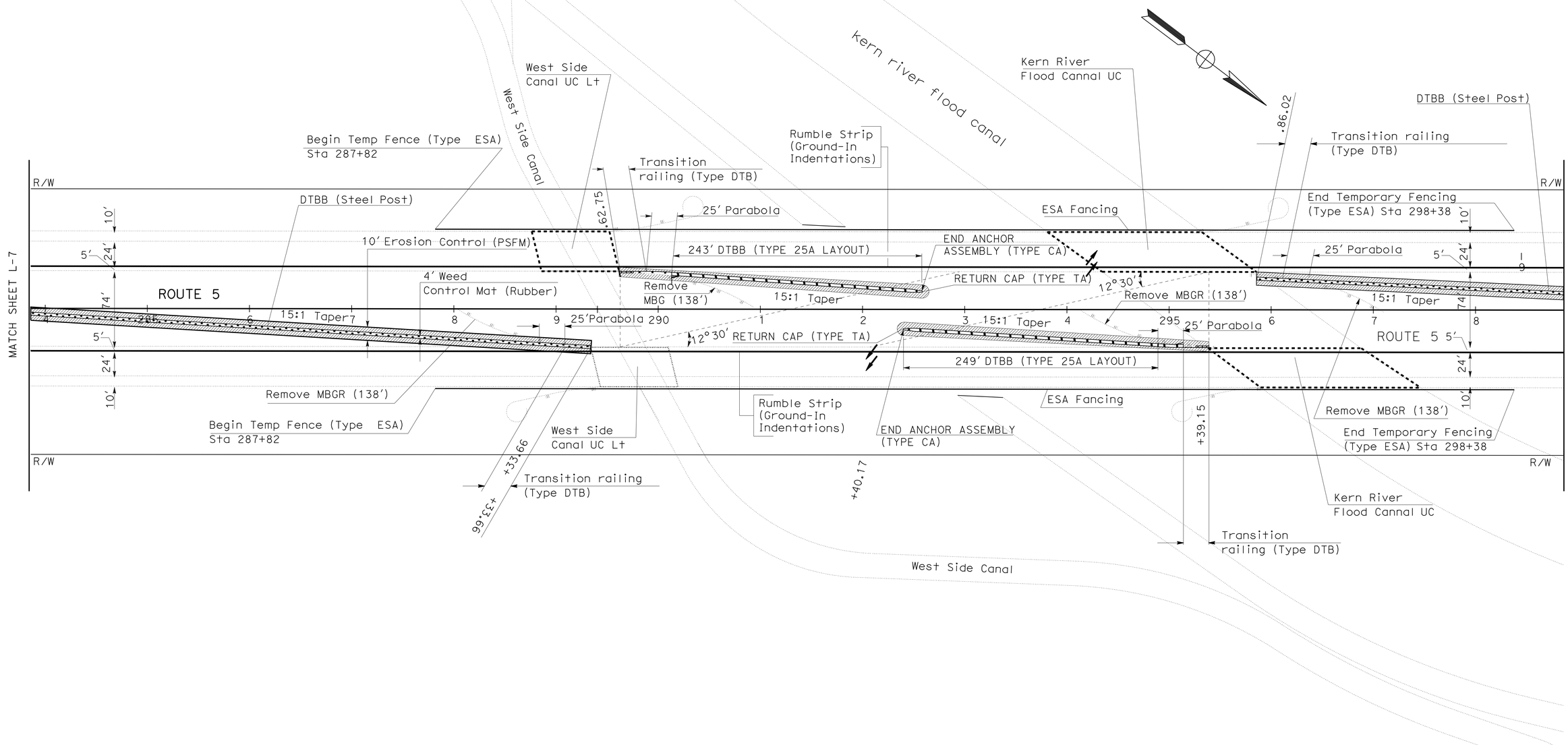

LAYOUT

L- 8

SCALE: 1" = 50'

STATE OF CALIFORNIA - DEPARTMENT OF TRANSPORTATION
DESIGN
Caltrans

FUNCTIONAL SUPERVISOR: MIKE LIM
CALCULATED-DESIGNED BY: LAKACHEW LEYEW
CHECKED BY: MIKE LIM
REVISED BY
DATE REVISED

LAST REVISION 06-08-11
DATE PLOTTED => 08-SEP-2011
TIME PLOTTED => 07:42

Dist	COUNTY	ROUTE	POST MILES TOTAL PROJECT	SHEET No.	TOTAL SHEETS
06	Ker	5	69.6/73.1	11	41

Michael Lim 08-09-11
REGISTERED CIVIL ENGINEER DATE

9-6-11
PLANS APPROVAL DATE

REGISTERED PROFESSIONAL ENGINEER
MICHAEL LIM
No. 46718
Exp 6/30/13
CIVIL
STATE OF CALIFORNIA

THE STATE OF CALIFORNIA OR ITS OFFICERS OR AGENTS SHALL NOT BE RESPONSIBLE FOR THE ACCURACY OR COMPLETENESS OF SCANNED COPIES OF THIS PLAN SHEET.

NOTE: 1. FOR ACCURATE RIGHT OF WAY DATA, CONTACT RIGHT OF WAY ENGINEERING AT THE DISTRICT OFFICE

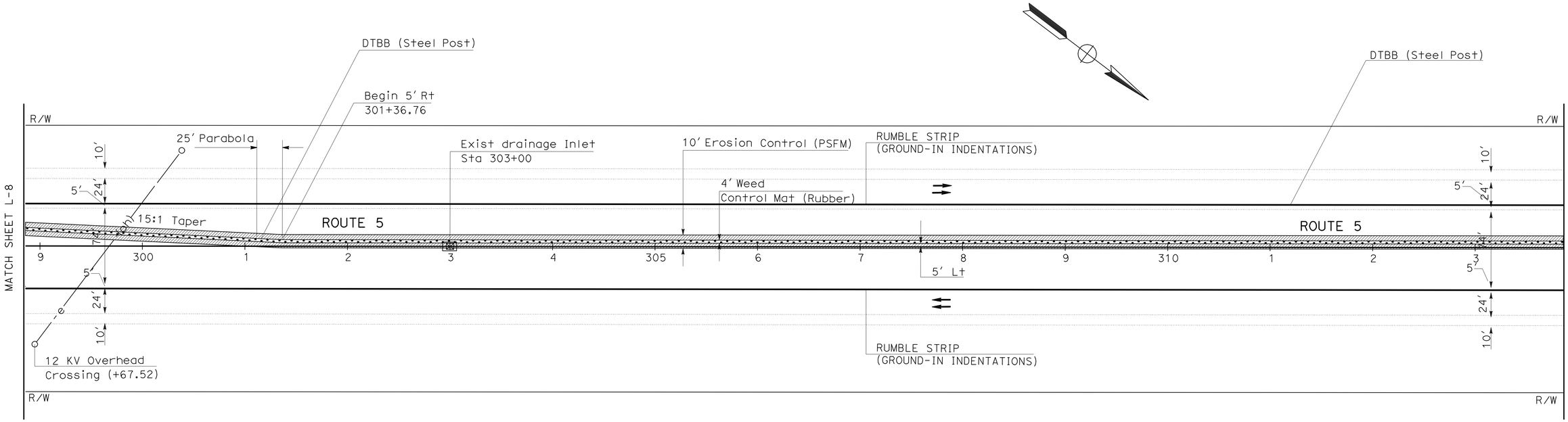

LAYOUT

L - 9

SCALE: 1" = 50'

STATE OF CALIFORNIA - DEPARTMENT OF TRANSPORTATION
Caltrans®
DESIGN

FUNCTIONAL SUPERVISOR: MIKE LIM
CALCULATED-DESIGNED BY: LAKACHEW LEYEW
CHECKED BY: MIKE LIM
REVISED BY
DATE REVISED

LAST REVISION 06-08-11
DATE PLOTTED => 08-SEP-2011
TIME PLOTTED => 07:43

Dist	COUNTY	ROUTE	POST MILES TOTAL PROJECT	SHEET No.	TOTAL SHEETS
06	Ker	5	69.6/73.1	12	41

Michael Lim 08-09-11
REGISTERED CIVIL ENGINEER DATE

9-6-11
PLANS APPROVAL DATE

REGISTERED PROFESSIONAL ENGINEER
MICHAEL LIM
No. 46718
Exp 6/30/13
CIVIL
STATE OF CALIFORNIA

THE STATE OF CALIFORNIA OR ITS OFFICERS OR AGENTS SHALL NOT BE RESPONSIBLE FOR THE ACCURACY OR COMPLETENESS OF SCANNED COPIES OF THIS PLAN SHEET.

NOTE: 1. FOR ACCURATE RIGHT OF WAY DATA, CONTACT RIGHT OF WAY ENGINEERING AT THE DISTRICT OFFICE

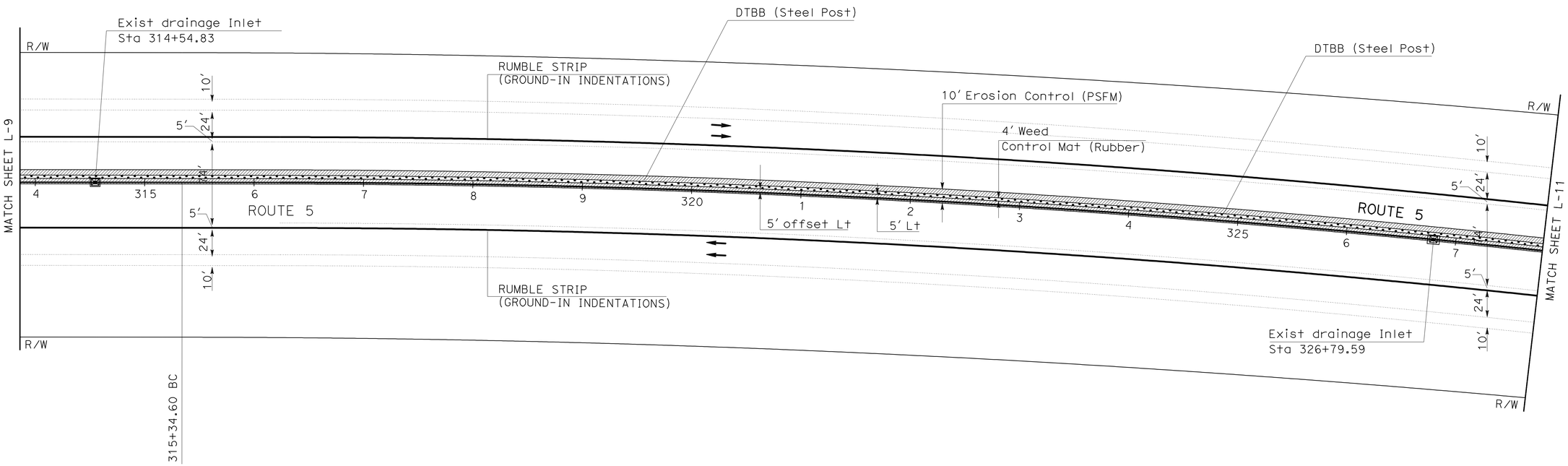

LAYOUT

L-10

SCALE: 1" = 50'

STATE OF CALIFORNIA - DEPARTMENT OF TRANSPORTATION
Caltrans®
DESIGN

FUNCTIONAL SUPERVISOR: MIKE LIM
CALCULATED-DESIGNED BY: LAKACHEW LEYEW
CHECKED BY: MIKE LIM
REVISED BY
DATE REVISED

LAST REVISION 06-08-11
DATE PLOTTED => 08-SEP-2011
TIME PLOTTED => 07:43

Dist	COUNTY	ROUTE	POST MILES TOTAL PROJECT	SHEET No.	TOTAL SHEETS
06	Ker	5	69.6/73.1	13	41

Michael Lim 08-09-11
REGISTERED CIVIL ENGINEER DATE

9-6-11
PLANS APPROVAL DATE

REGISTERED PROFESSIONAL ENGINEER
MICHAEL LIM
No. 46718
Exp 6/30/13
CIVIL
STATE OF CALIFORNIA

THE STATE OF CALIFORNIA OR ITS OFFICERS OR AGENTS SHALL NOT BE RESPONSIBLE FOR THE ACCURACY OR COMPLETENESS OF SCANNED COPIES OF THIS PLAN SHEET.

NOTE: 1. FOR ACCURATE RIGHT OF WAY DATA, CONTACT RIGHT OF WAY ENGINEERING AT THE DISTRICT OFFICE

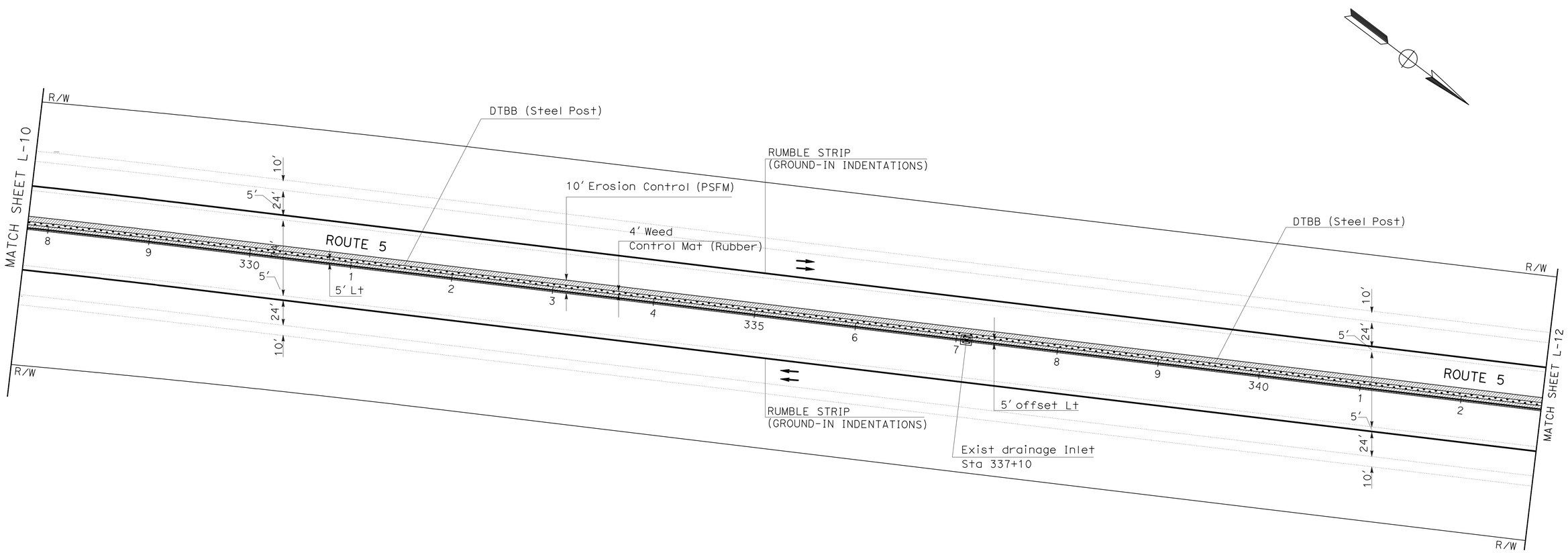

LAYOUT

L- 11

SCALE: 1" = 50'

STATE OF CALIFORNIA - DEPARTMENT OF TRANSPORTATION
Caltrans®
DESIGN

FUNCTIONAL SUPERVISOR: MIKE LIM
CALCULATED-DESIGNED BY: LAKACHEW LEYEW
CHECKED BY: MIKE LIM
REVISED BY
DATE REVISED

LAST REVISION 06-08-11
DATE PLOTTED => 08-SEP-2011
TIME PLOTTED => 07:43

Dist	COUNTY	ROUTE	POST MILES TOTAL PROJECT	SHEET No.	TOTAL SHEETS
06	Ker	5	69.6/73.1	14	41

Michael Lim 08-09-11
REGISTERED CIVIL ENGINEER DATE

9-6-11
PLANS APPROVAL DATE

REGISTERED PROFESSIONAL ENGINEER
MICHAEL LIM
No. 46718
Exp 6/30/13
CIVIL
STATE OF CALIFORNIA

THE STATE OF CALIFORNIA OR ITS OFFICERS OR AGENTS SHALL NOT BE RESPONSIBLE FOR THE ACCURACY OR COMPLETENESS OF SCANNED COPIES OF THIS PLAN SHEET.

NOTE: 1. FOR ACCURATE RIGHT OF WAY DATA, CONTACT RIGHT OF WAY ENGINEERING AT THE DISTRICT OFFICE

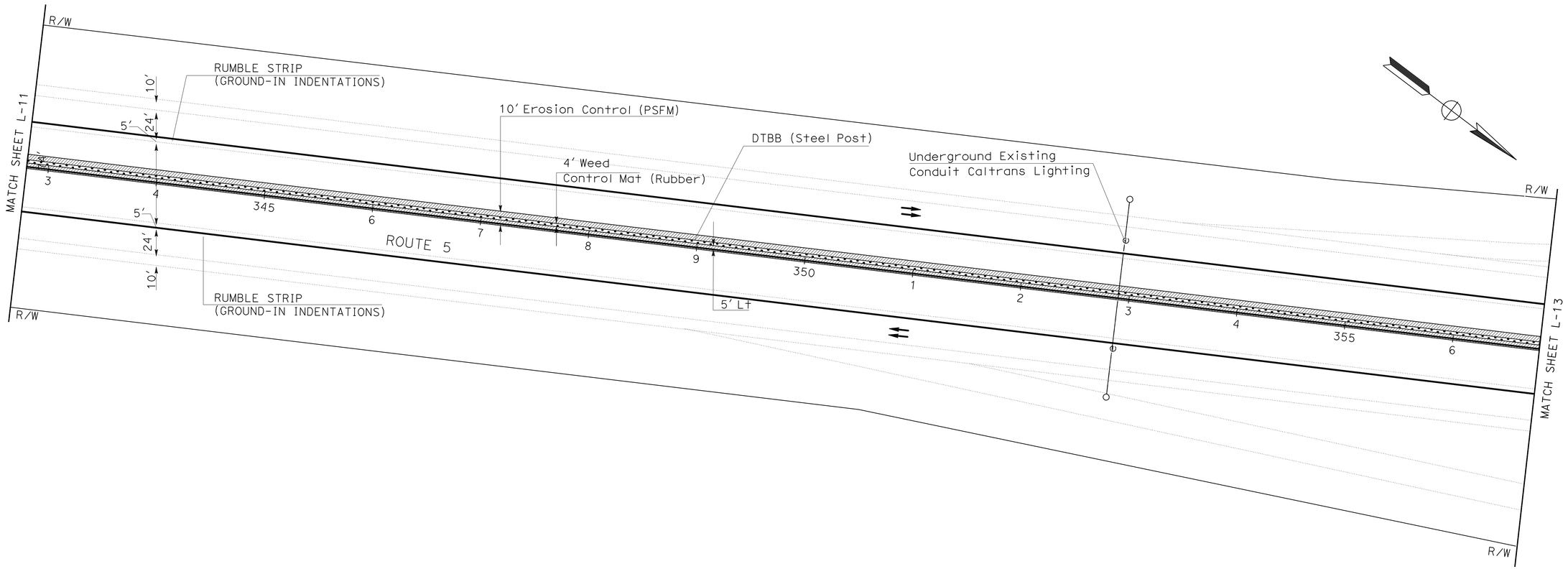

LAYOUT

L - 12

SCALE: 1" = 50'

STATE OF CALIFORNIA - DEPARTMENT OF TRANSPORTATION
Caltrans
DESIGN

FUNCTIONAL SUPERVISOR: MIKE LIM
CALCULATED-DESIGNED BY: LAKACHEW LEYEW
CHECKED BY: MIKE LIM
REVISED BY
DATE REVISED

LAST REVISION 06-08-11
DATE PLOTTED => 08-SEP-2011
TIME PLOTTED => 07:43

Dist	COUNTY	ROUTE	POST MILES TOTAL PROJECT	SHEET No.	TOTAL SHEETS
06	Ker	5	69.6/73.1	15	41

Michael Lim 08-09-11
REGISTERED CIVIL ENGINEER DATE

9-6-11
PLANS APPROVAL DATE

REGISTERED PROFESSIONAL ENGINEER
MICHAEL LIM
No. 46718
Exp 6/30/13
CIVIL
STATE OF CALIFORNIA

THE STATE OF CALIFORNIA OR ITS OFFICERS OR AGENTS SHALL NOT BE RESPONSIBLE FOR THE ACCURACY OR COMPLETENESS OF SCANNED COPIES OF THIS PLAN SHEET.

NOTE: 1. FOR ACCURATE RIGHT OF WAY DATA, CONTACT RIGHT OF WAY ENGINEERING AT THE DISTRICT OFFICE

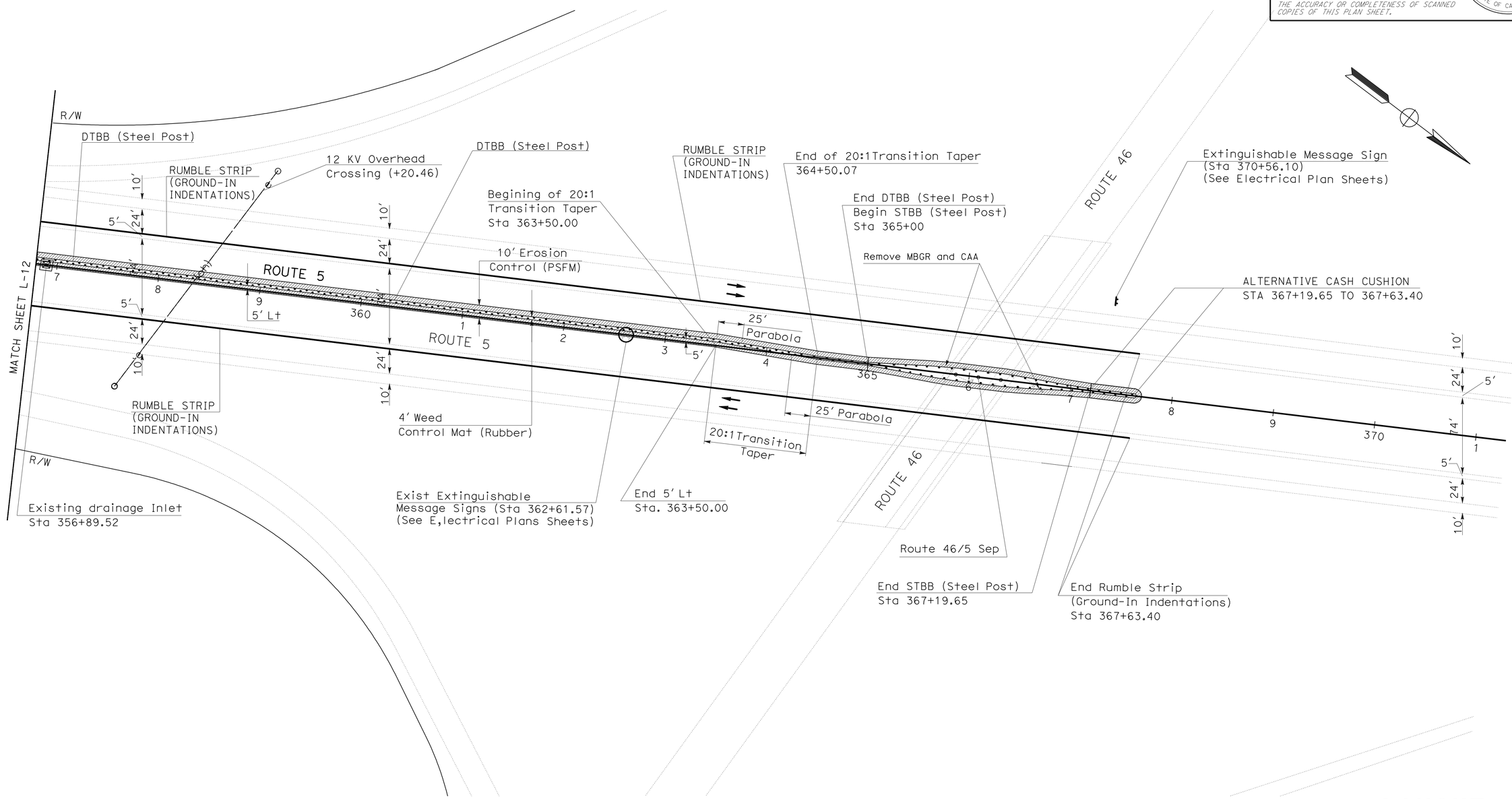

SCALE: 1" = 50'

LAYOUT

L - 13

REVISED BY	DATE REVISED
LAKACHEW LEYEW	
MIKE LIM	

CALCULATED-DESIGNED BY	CHECKED BY

FUNCTIONAL SUPERVISOR: MIKE LIM

STATE OF CALIFORNIA - DEPARTMENT OF TRANSPORTATION
Caltrans
DESIGN

LAST REVISION 06-08-11 | DATE PLOTTED => 08-SEP-2011 | TIME PLOTTED => 07:43

Dist	COUNTY	ROUTE	POST MILES TOTAL PROJECT	SHEET No.	TOTAL SHEETS
06	Ker	5	69.6/73.1	16	41

Michael Lim 08-09-11
REGISTERED CIVIL ENGINEER DATE

9-6-11
PLANS APPROVAL DATE

REGISTERED PROFESSIONAL ENGINEER
MICHAEL LIM
No. 46718
Exp 6/30/13
CIVIL
STATE OF CALIFORNIA

THE STATE OF CALIFORNIA OR ITS OFFICERS OR AGENTS SHALL NOT BE RESPONSIBLE FOR THE ACCURACY OR COMPLETENESS OF SCANNED COPIES OF THIS PLAN SHEET.

NOTES:

1. NESTED SINGLE THRIE BEAM RAILING DETAILS SHALL BE USED WHERE ONE POST CANNOT BE PLACED AT THE STANDARD SPACING DUE TO A CONFLICTING HIGHWAY FACILITY.
2. SEE STANDARD PLANS FOR DETAILS NOT SHOWN.

LEGEND

→ DIRECTION OF TRAFFIC

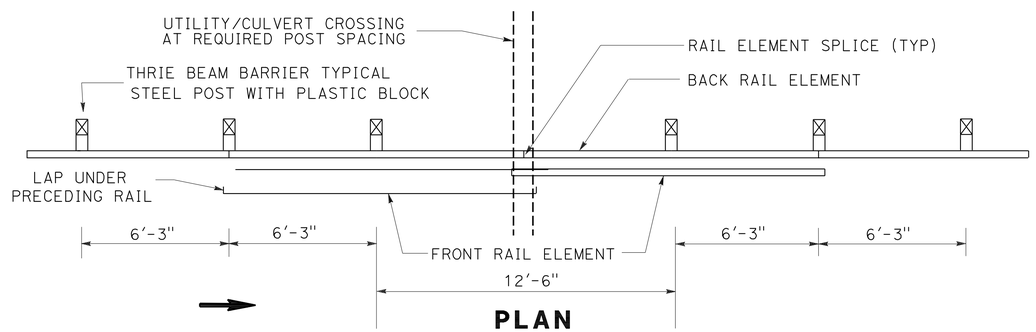

PLAN

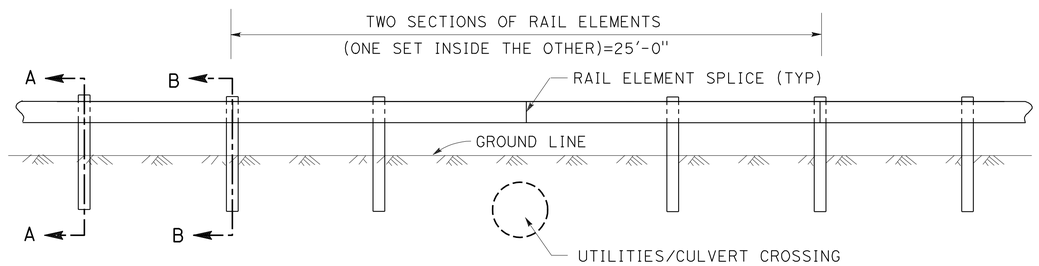

ELEVATION
NESTED SINGLE THRIE BEAM BARRIER
CASE 1 - SPLICE BETWEEN POSTS

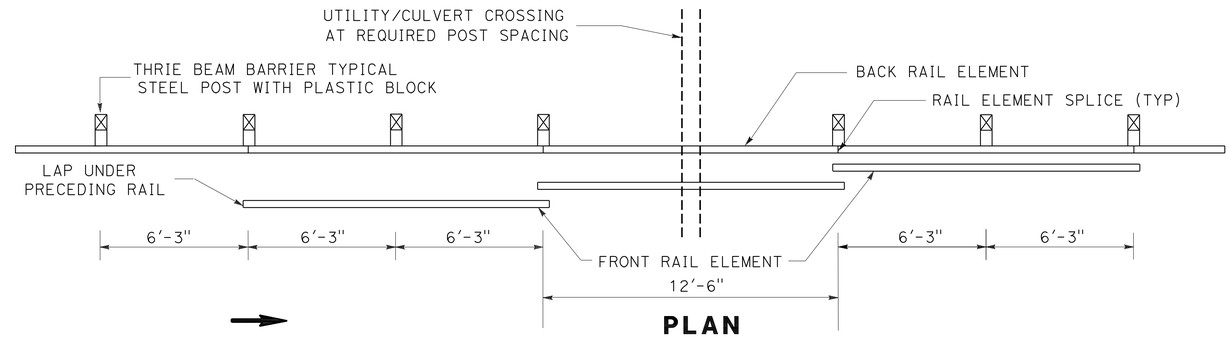

PLAN

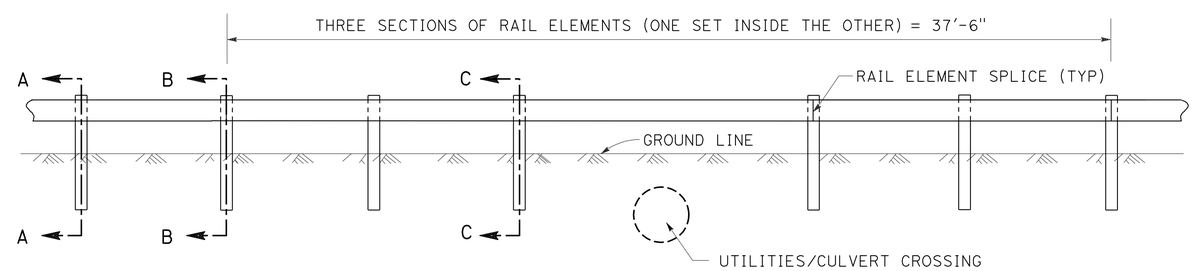

ELEVATION
NESTED SINGLE THRIE BEAM BARRIER
CASE 2 - SPLICE AT POSTS

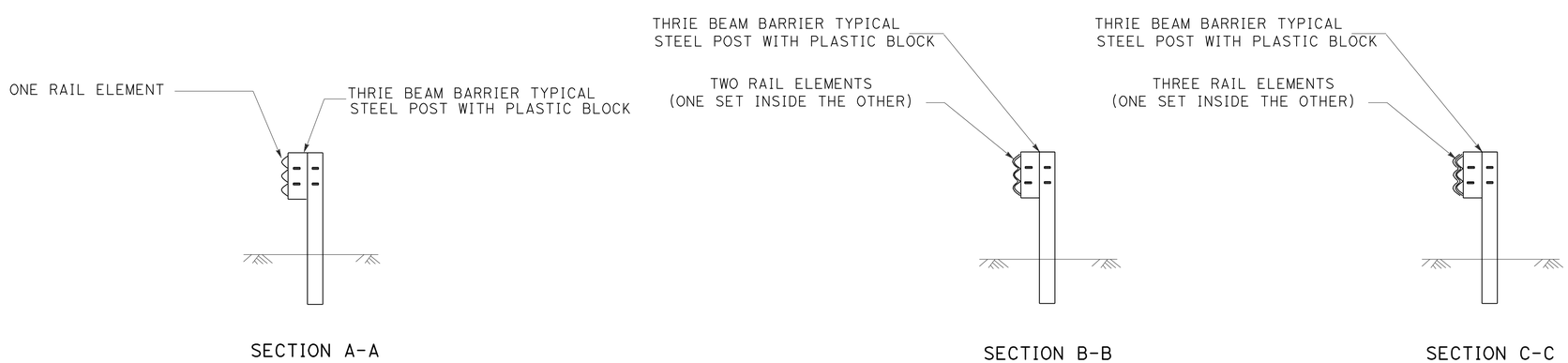

SECTION A-A

SECTION B-B

SECTION C-C

CONSTRUCTION DETAILS
LONG SPAN NESTED SINGLE THRIE BEAM BARRIER

C-1

NO SCALE

STATE OF CALIFORNIA - DEPARTMENT OF TRANSPORTATION
Caltrans®
DESIGN

FUNCTIONAL SUPERVISOR: MIKE LIM
CALCULATED-DESIGNED BY: LAKACHEW LEYEW
CHECKED BY: MIKE LIM
REVISED BY
DATE REVISED

LAST REVISION 06-08-11
DATE PLOTTED => 08-SEP-2011
TIME PLOTTED => 07:43

Dist	COUNTY	ROUTE	POST MILES TOTAL PROJECT	SHEET No.	TOTAL SHEETS
06	Ker	5	69.6/73.1	17	41

Michael Lim 08-09-11
REGISTERED CIVIL ENGINEER DATE

9-6-11
PLANS APPROVAL DATE

REGISTERED PROFESSIONAL ENGINEER MICHAEL LIM No. 46718 Exp 6/30/13 CIVIL STATE OF CALIFORNIA

THE STATE OF CALIFORNIA OR ITS OFFICERS OR AGENTS SHALL NOT BE RESPONSIBLE FOR THE ACCURACY OR COMPLETENESS OF SCANNED COPIES OF THIS PLAN SHEET.

NOTES:

1. NESTED DOUBLE THRIE BEAM RAILING DETAILS SHALL BE USED WHERE ONE POST CANNOT BE PLACED AT THE STANDARD SPACING DUE TO A CONFLICTING HIGHWAY FACILITY.
2. SEE STANDARD PLANS FOR DETAILS NOT SHOWN.

LEGEND

→ DIRECTION OF TRAFFIC

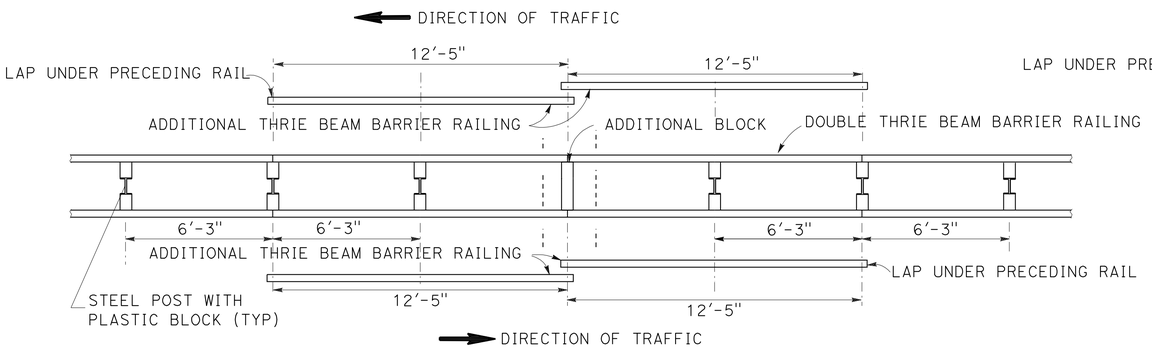

PLAN

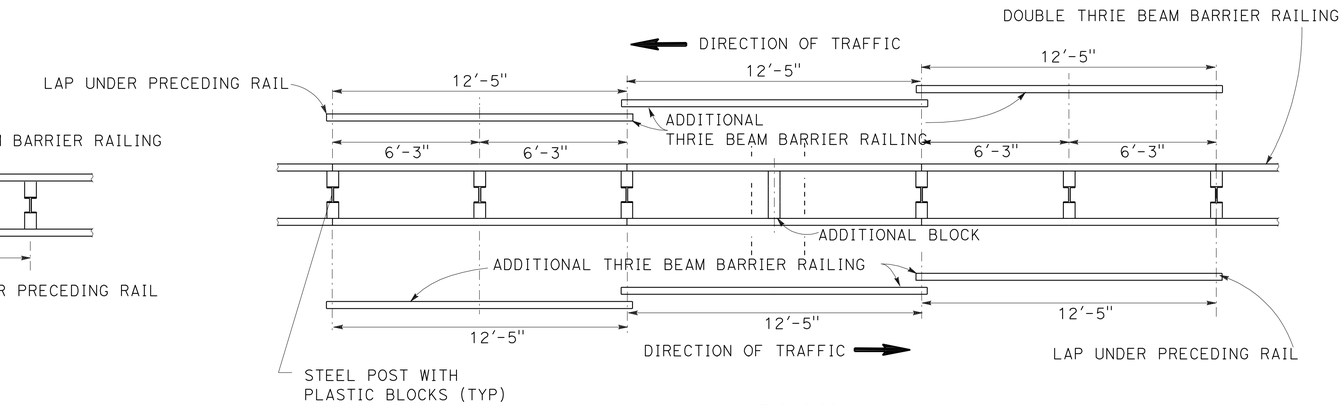

PLAN

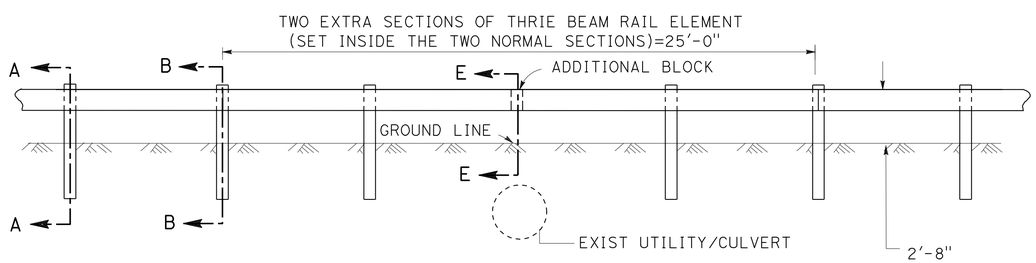

ELEVATION

CASE 1 - ONE POST OMITTED SPLICE IN CENTER
LONG SPAN NESTED DOUBLE THRIE BEAM

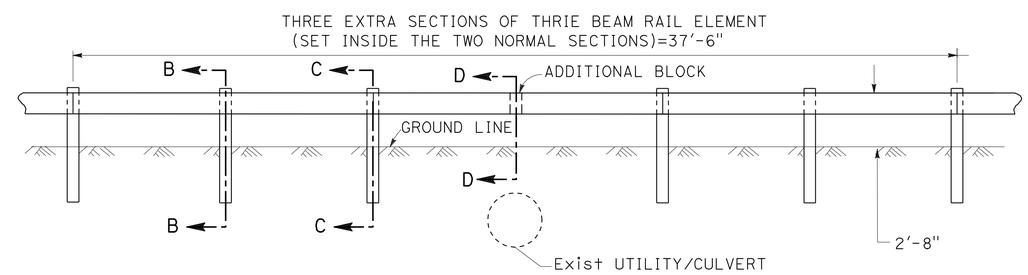

ELEVATION

CASE 2 - ONE POST OMITTED SPLICE AT POSTS
LONG SPAN NESTED DOUBLE THRIE BEAM

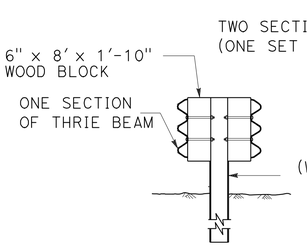

SECTION A-A

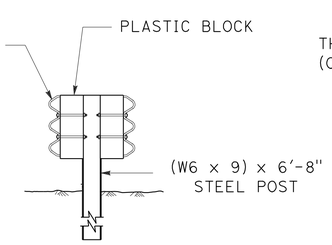

SECTION B-B

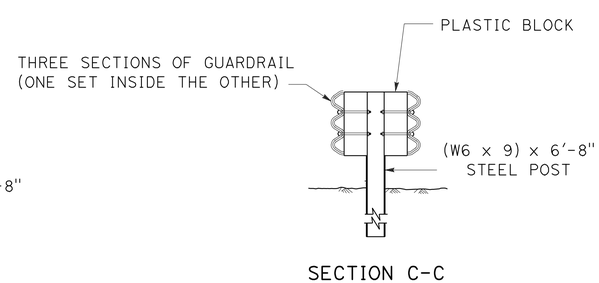

SECTION C-C

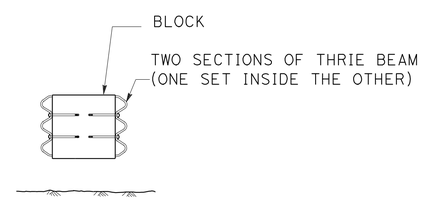

SECTION D-D

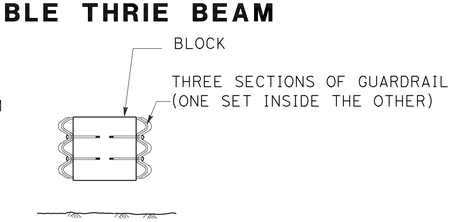

SECTION E-E

CONSTRUCTION DETAILS
LONG SPAN NESTED DOUBLE THRIE BEAM BARRIER

NO SCALE

C-2

REVISED BY	DATE REVISED

CALCULATED-DESIGNED BY: LAKACHEW LEYEW
CHECKED BY: MIKE LIM
FUNCTIONAL SUPERVISOR: MIKE LIM

STATE OF CALIFORNIA - DEPARTMENT OF TRANSPORTATION
Caltrans
DESIGN

LAST REVISION 06-08-11
DATE PLOTTED => 08-SEP-2011
TIME PLOTTED => 08:22

Dist	COUNTY	ROUTE	POST MILES TOTAL PROJECT	SHEET No.	TOTAL SHEETS
06	Ker	5	69.6/73.1	18	41

Michael Lim 08-09-11
REGISTERED CIVIL ENGINEER DATE

9-6-11
PLANS APPROVAL DATE

REGISTERED PROFESSIONAL ENGINEER
MICHAEL LIM
No. 46718
Exp 6/30/13
CIVIL
STATE OF CALIFORNIA

THE STATE OF CALIFORNIA OR ITS OFFICERS OR AGENTS SHALL NOT BE RESPONSIBLE FOR THE ACCURACY OR COMPLETENESS OF SCANNED COPIES OF THIS PLAN SHEET.

NOTES:

1. NESTED DOUBLE THRIE BEAM RAILING DETAILS SHALL BE USED WHERE TWO POSTS CANNOT BE PLACED AT THE STANDARD SPACING DUE TO A CONFLICTING HIGHWAY FACILITY.
2. SEE STANDARD PLANS FOR DETAILS NOT SHOWN.

LEGEND

→ DIRECTION OF TRAFFIC

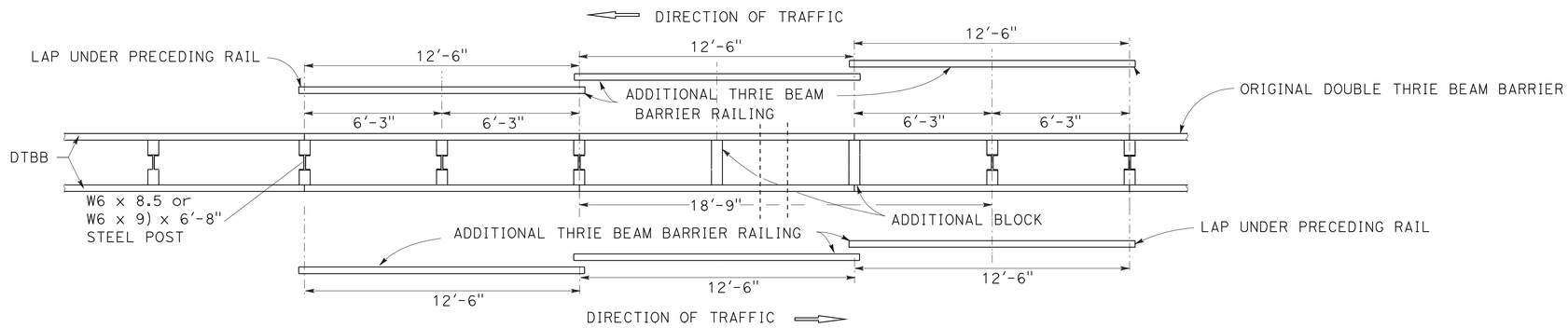

PLAN

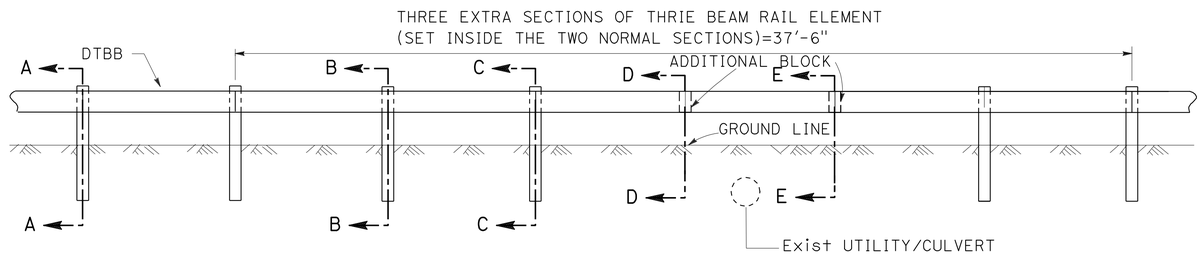

ELEVATION

CASE 3 - TWO POSTS OMITTED
LONG SPAN NESTED DOUBLE THRIE BEAM

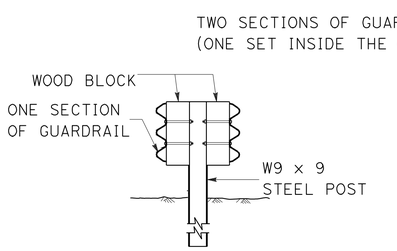

SECTION A-A

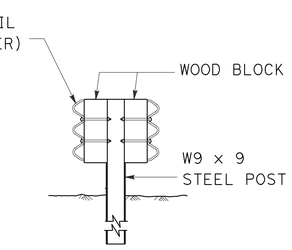

SECTION B-B

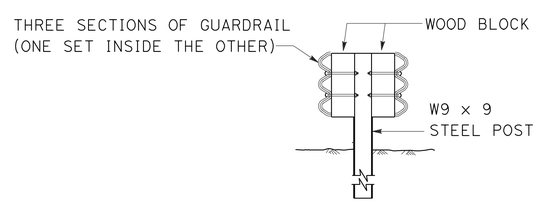

SECTION C-C

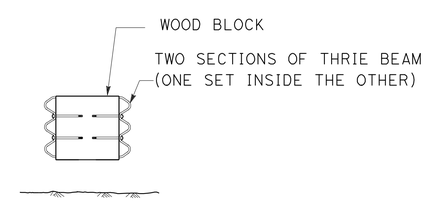

SECTION D-D

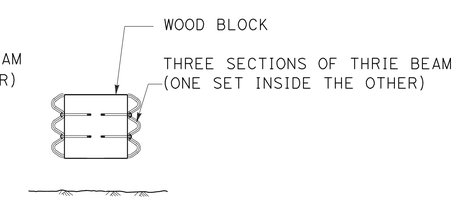

SECTION E-E

CONSTRUCTION DETAILS
LONG SPAN NESTED DOUBLE THRIE BEAM BARRIER

NO SCALE

C-3

STATE OF CALIFORNIA - DEPARTMENT OF TRANSPORTATION
Caltrans
DESIGN
FUNCTIONAL SUPERVISOR: MIKE LIM
CALCULATED-DESIGNED BY: LAKACHEW LEYEW
CHECKED BY: MIKE LIM
REVISED BY
DATE REVISED

LAST REVISION 08-09-11
DATE PLOTTED => 08-SEP-2011
TIME PLOTTED => 08:22

Dist	COUNTY	ROUTE	POST MILES TOTAL PROJECT	SHEET No.	TOTAL SHEETS
06	Ker	5	69.6/73.1	19	41

Michael Lim 08-09-11
REGISTERED CIVIL ENGINEER DATE

9-6-11
PLANS APPROVAL DATE

REGISTERED PROFESSIONAL ENGINEER
MICHAEL LIM
No. 46718
Exp 6/30/13
CIVIL
STATE OF CALIFORNIA

THE STATE OF CALIFORNIA OR ITS OFFICERS OR AGENTS SHALL NOT BE RESPONSIBLE FOR THE ACCURACY OR COMPLETENESS OF SCANNED COPIES OF THIS PLAN SHEET.

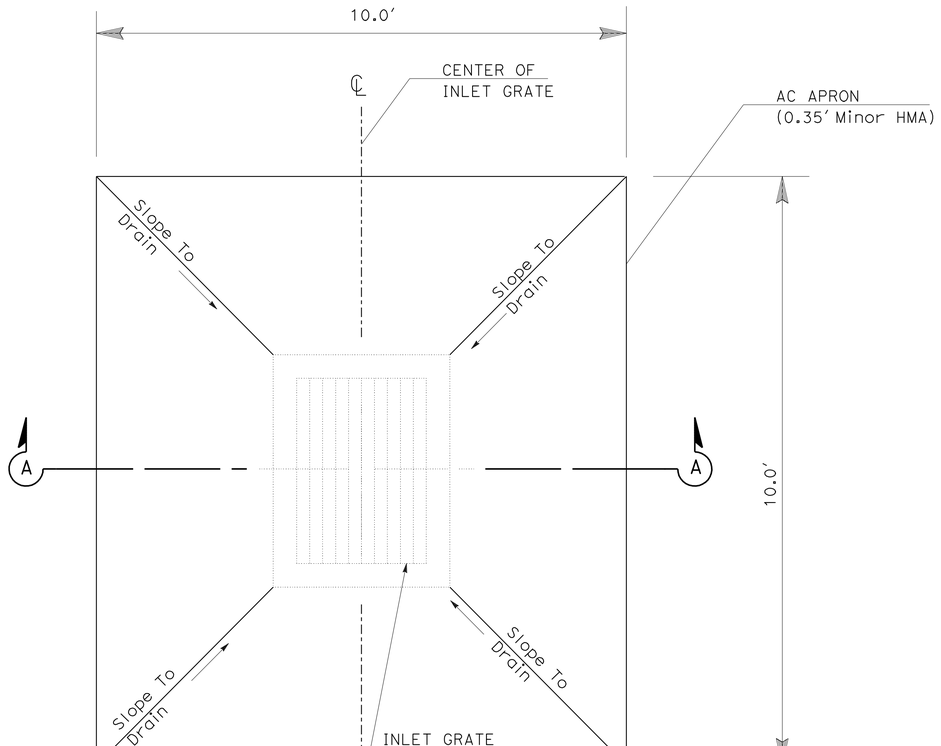

PLAN

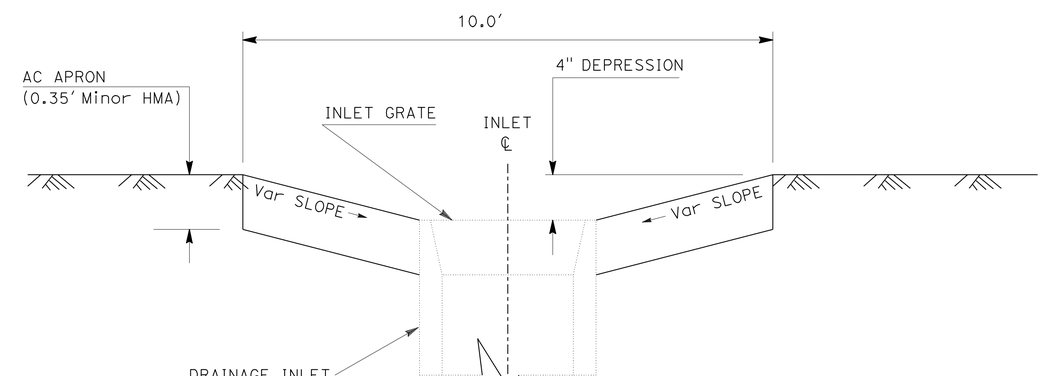

SECTION A-A

MEDIAN INLET AND AC APRON

(TYPE G1 DI)

CONSTRUCTION DETAILS

NO SCALE **C-4**

STATE OF CALIFORNIA - DEPARTMENT OF TRANSPORTATION
Caltrans® DESIGN

FUNCTIONAL SUPERVISOR: MIKE LIM
CALCULATED-DESIGNED BY: LAKACHEW LEYEW
CHECKED BY: MIKE LIM
REVISED BY
DATE REVISED

LAST REVISION 08-09-11
DATE PLOTTED => 08-SEP-2011
TIME PLOTTED => 08:22

Dist	COUNTY	ROUTE	POST MILES TOTAL PROJECT	SHEET No.	TOTAL SHEETS
06	Ker	5	69.6/73.1	20	41

Michael Lim 08-09-11
REGISTERED CIVIL ENGINEER DATE

9-6-11
PLANS APPROVAL DATE

REGISTERED PROFESSIONAL ENGINEER
MICHAEL LIM
No. 46718
Exp. 6/30/13
CIVIL
STATE OF CALIFORNIA

THE STATE OF CALIFORNIA OR ITS OFFICERS OR AGENTS SHALL NOT BE RESPONSIBLE FOR THE ACCURACY OR COMPLETENESS OF SCANNED COPIES OF THIS PLAN SHEET.

NOTES:

1. THE BRAKEMASTER SYSTEM MUST BE ATTACHED TO A 14" Min SECTION OF TRAFFIC BARRIER WITH PANEL ON BOTH SIDES OF 7.5" Min STEEL OR WOODEN POSTS AND BLOCKOUTS.
2. FOR GUARDRAIL TRANSITION SECTION, SEE MANUFACTURER'S DETAILS.
3. INSTALLATION TO COMPLY WITH MANUFACTURER'S INSTRUCTIONS.
4. FOR ADDITIONAL INFORMATION, SEE MANUFACTURER'S PLANS.

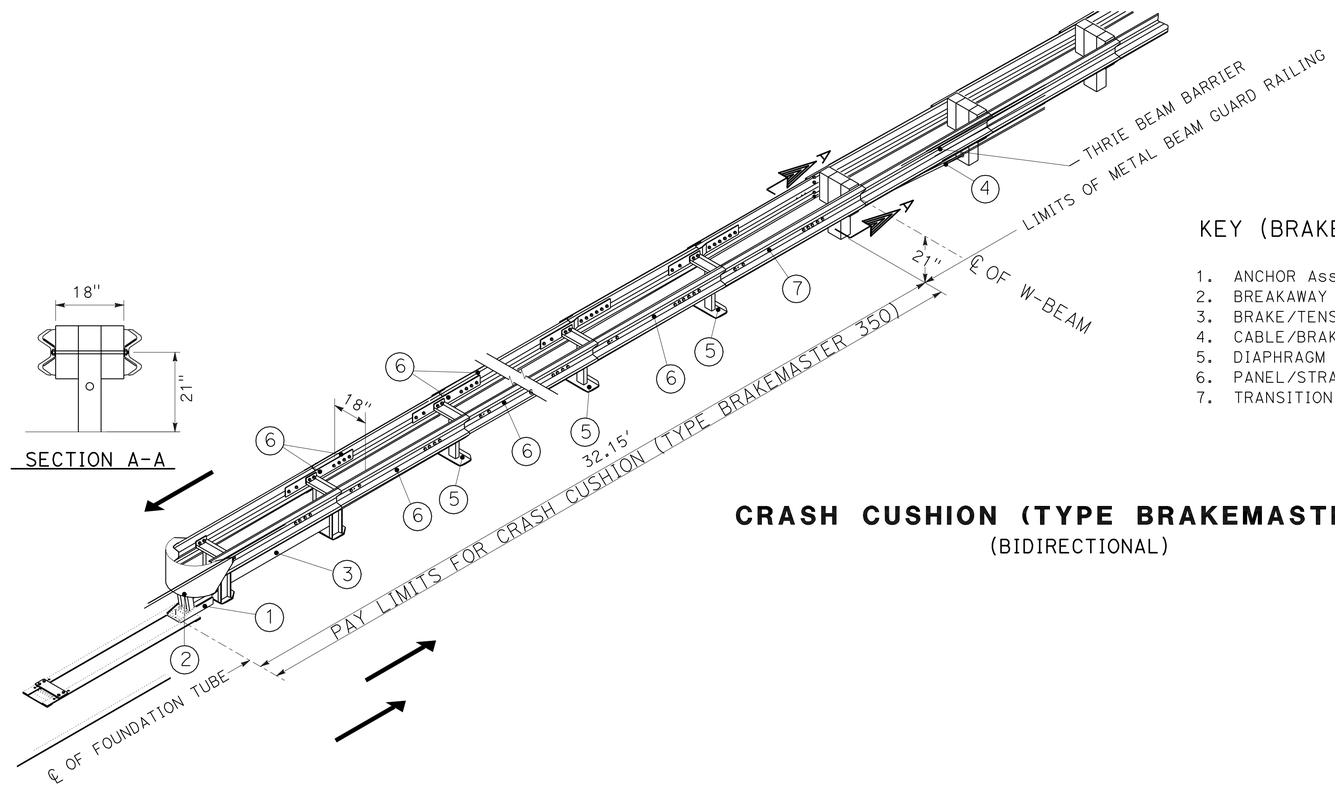

KEY (BRAKEMASTER SYSTEM)

1. ANCHOR Assy, FOUNDATION TUBE
2. BREAKAWAY Assy
3. BRAKE/TENSION SUPPORT Assy
4. CABLE/BRAKE Assy
5. DIAPHRAGM
6. PANEL/STRAP Assy
7. TRANSITION STRAP Assy

CRASH CUSHION (TYPE BRAKEMASTER 350)

(BIDIRECTIONAL)

CONSTRUCTION DETAILS

NO SCALE

C-5

STATE OF CALIFORNIA - DEPARTMENT OF TRANSPORTATION
Caltrans®
DESIGN

FUNCTIONAL SUPERVISOR: MIKE LIM
CALCULATED-DESIGNED BY: LAKACHEW LEYEW
CHECKED BY: MIKE LIM
REVISED BY
DATE REVISED

LAST REVISION 08-09-11
DATE PLOTTED => 08-SEP-2011
TIME PLOTTED => 08:22

Dist	COUNTY	ROUTE	POST MILES TOTAL PROJECT	SHEET No.	TOTAL SHEETS
06	Ker	5	69.6/73.1	21	41

Michael Lim 08-09-11
REGISTERED CIVIL ENGINEER DATE

9-6-11
PLANS APPROVAL DATE

REGISTERED PROFESSIONAL ENGINEER
MICHAEL LIM
No. 46718
Exp 6/30/13
CIVIL
STATE OF CALIFORNIA

THE STATE OF CALIFORNIA OR ITS OFFICERS OR AGENTS SHALL NOT BE RESPONSIBLE FOR THE ACCURACY OR COMPLETENESS OF SCANNED COPIES OF THIS PLAN SHEET.

NOTES:

1. OFFSET DIMENSIONS ARE SHOWN TO BLOCKOUTS, EXCEPT FOR POSTS 1 & 2. SECTION OF TRAFFIC BARRIER WITH PANEL ON BOTH SIDES OF 190 mm Min STEEL OR WOODEN POSTS AND BLOCKOUTS.
2. FOR GUARDRAIL TRANSITION SECTION, SEE MANUFACTURER'S DETAILS.
3. INSTALLATION TO COMPLY WITH MANUFACTURER'S INSTRUCTIONS.
4. FOR ADDITIONAL INFORMATION, SEE MANUFACTURER'S PLANS.

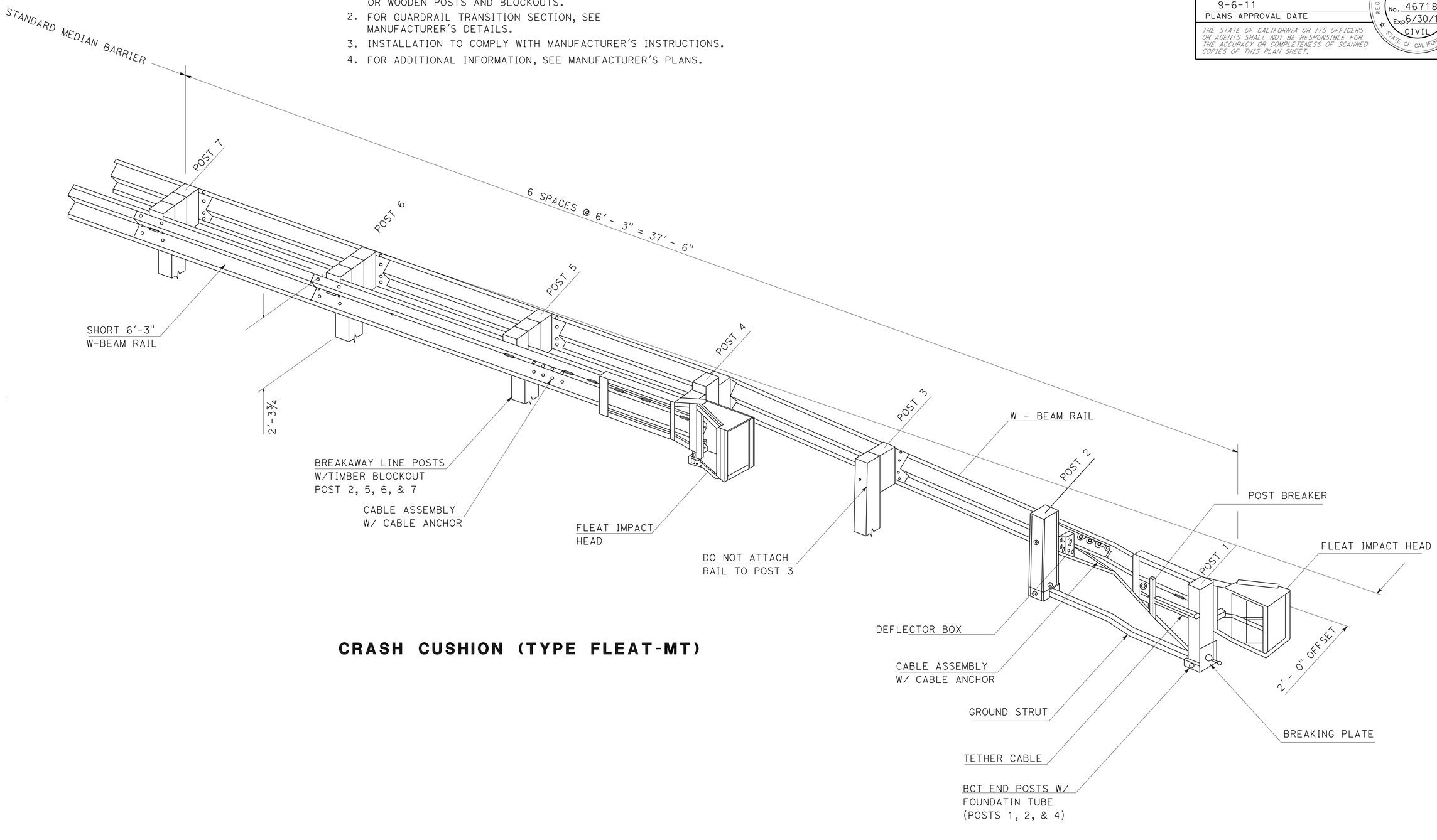

CRASH CUSHION (TYPE FLEAT-MT)

CONSTRUCTION DETAILS

NO SCALE

C-6

STATE OF CALIFORNIA - DEPARTMENT OF TRANSPORTATION
Caltrans
DESIGN

FUNCTIONAL SUPERVISOR: MIKE LIM
CALCULATED-DESIGNED BY: LAKACHEW LEYEW
CHECKED BY: MIKE LIM
REVISED BY
DATE REVISED

LAST REVISION 06-08-11
DATE PLOTTED => 08-SEP-2011
TIME PLOTTED => 08:22

Dist	COUNTY	ROUTE	POST MILES TOTAL PROJECT	SHEET No.	TOTAL SHEETS
06	Ker	5	69.6/73.1	22	41

Michael Lim 08-09-11
REGISTERED CIVIL ENGINEER DATE

9-6-11
PLANS APPROVAL DATE

REGISTERED PROFESSIONAL ENGINEER
MICHAEL LIM
No. 46718
Exp 6/30/13
CIVIL
STATE OF CALIFORNIA

THE STATE OF CALIFORNIA OR ITS OFFICERS OR AGENTS SHALL NOT BE RESPONSIBLE FOR THE ACCURACY OR COMPLETENESS OF SCANNED COPIES OF THIS PLAN SHEET.

STATIONARY MOUNTED CONSTRUCTION AREA SIGNS

SIGN No.	SIGN CODE	PANEL SIZE (INCH)	SIGN MESSAGE	No. OF POST AND SIZE (inch)	NUMBER OF SIGNS
A	G20-1	48" x 24"	ROAD WORK NEXT 4 MILES	1- 4" x 6"	2
B	W20-1	48" x 48"	ROAD WORK AHEAD	1- 6" x 6"	1
C	G20-2	48" x 24"	END ROAD WORK	1- 4" x 6"	2

NOTES: 1. SIGN LOCATIONS SHOWN ARE APPROXIMATE ONLY.
EXACT LOCATIONS TO BE DETERMINED BY THE ENGINEER.

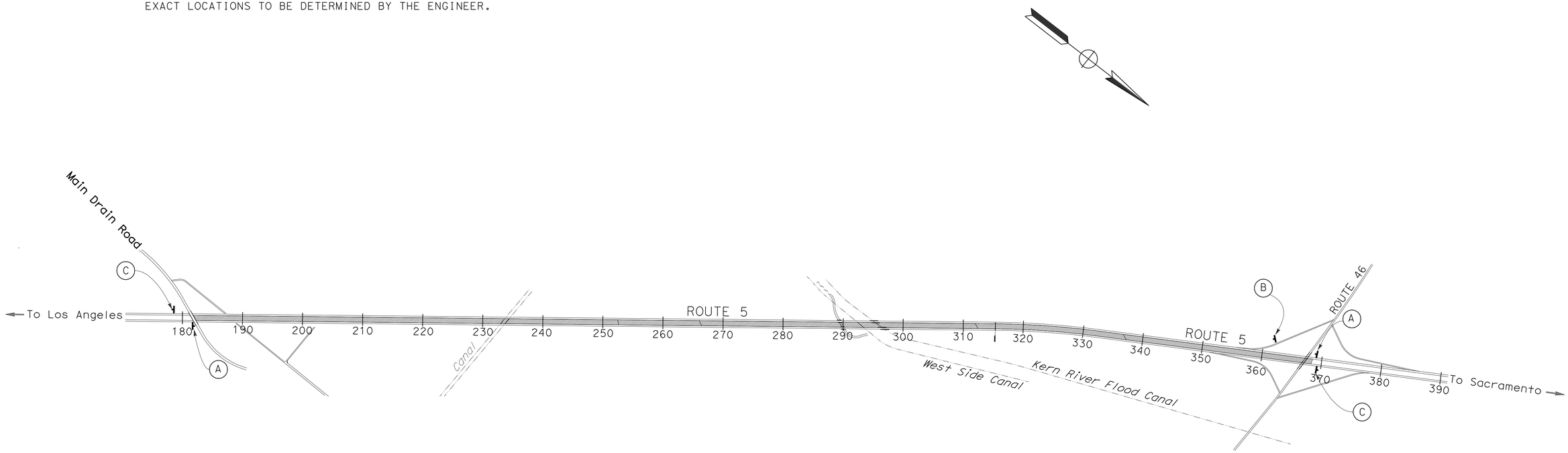

THIS PLAN ACCURATE FOR CONSTRUCTION AREA SIGNS ONLY

CONSTRUCTION AREA SIGNS

NO SCALE

CS-1

STATE OF CALIFORNIA - DEPARTMENT OF TRANSPORTATION
Caltrans
TRAFFIC DESIGN

FUNCTIONAL SUPERVISOR: MOHAMMED QATAMI
CALCULATED-DESIGNED BY: AMARJIT S DHILLON
CHECKED BY: HASSAN TAHA
REVISED BY
DATE REVISED

LAST REVISION 08-09-11
DATE PLOTTED => 08-SEP-2011
TIME PLOTTED => 08:22

Dist	COUNTY	ROUTE	POST MILES TOTAL PROJECT	SHEET No.	TOTAL SHEETS
06	Ker	5	69.6/73.1	23	41

Michael Lim 08-09-11
REGISTERED CIVIL ENGINEER DATE

9-6-11
PLANS APPROVAL DATE

REGISTERED PROFESSIONAL ENGINEER
MICHAEL LIM
No. 46718
Exp. 6/30/13
CIVIL
STATE OF CALIFORNIA

THE STATE OF CALIFORNIA OR ITS OFFICERS OR AGENTS SHALL NOT BE RESPONSIBLE FOR THE ACCURACY OR COMPLETENESS OF SCANNED COPIES OF THIS PLAN SHEET.

THRIE BEAM BARRIER

STATION	LOCATION	SINGLE THRIE BEAM BARRIER (STEEL POST)		DOUBLE THRIE BEAM BARRIER (STEEL POST)	ALTERNATIVE CRASH CUSHION SYSTEM	END ANCHOR ASSEMBLY (TYPE CA)	RETURN CAP (TYPE TA)	TRANSITION RAILING (TYPE DTB)
		LF		LF	EA	EA	EA	EA
		Rt	Lt					
184+30.68 TO 221+91.50	ROUTE 5 MEDIAN			3760.80				
222+07.10 TO 289+34.40	ROUTE 5 MEDIAN			6727.30				
289+62.32 TO 292+81.37	ROUTE 5 MEDIAN			329.10				
292+03.64 TO 295+39.89	ROUTE 5 MEDIAN			336.40				
295+79.13 TO 365+00.00	ROUTE 5 MEDIAN			6920.90				
365+00.00 TO 367+19.65	ROUTE 5 MEDIAN	219.70	219.70					
367+19.65 TO 367+63.00	ROUTE 46/ROUTE 5 OVERCROSSING				1			
221+71.65 TO 222+20.15	CHP EMERGENCY PASSWAY					2	2	
292.04.54 TO 292+77.07	KERN RIVER FLOOD CANAL ROAD					2	2	2
289+08.66 TO 290+13.21	WEST SIDE CANAL							2
SUBTOTAL		219.70	219.70					
TOTAL		439.40		18 074.50	1	4	4	4

RUMBLE STRIP

LOCATION	STA
South Bound Route 5 inside shoulder (Sta 183+78.71TO 367+63.40)	184.0
North Bound Route 5 inside shoulder (Sta 183+78.71TO 367+63.40)	184.0
TOTAL	368.0

WATER POLLUTION CONTROL

ITEM	EA	LF
Temporary Drainage Inlet Protection	6	
Temporary FencE (Type ESA) (SR 5 NB, at Kern River Flood Canal (Sta 287+82 TO Sta 298+38		1060
Temporary FencE(Type ESA) (SR 5 SB, at Kern River Flood Canal (Sta 287+82 TO Sta 298+38		1060
TOTAL	6	2120

METAL BEAM GUARD RAILING

LOCATION	STATION	REMOVE METAL BEAM GUARD RAILING	
		Rt	Lt
		LF	LF
ROUTE 46/ROUTE 5 OC	366+73.54+42 TO 365+71.10	107.0	107.0
AT WEST SIDE CANAL	288+08.70 TO 289+33.95	138.0	
AT WEST SIDE CANAL	289+62.83 TO 291+00.00		138.0
KERN RIVER FLOOD CANAL	294+13.89 TO 295+39.29	138.0	
KERN RIVER FLOOD CANAL	295+85.52 TO 297+10.05		138.0
SUBTOTAL		383.0	383.0
TOTAL		766.0	

MINOR HOT MIX ASPHALT

LOCATION	DESCRIPTION	MINOR HMA
		TON
276+56.16	Asphalt Concrete	0.33
303+00.00	Asphalt Concrete	0.33
314+54.83	Asphalt Concrete	0.33
326+79.59	Asphalt Concrete	0.33
337+10.00	Asphalt Concrete	0.33
356+89.52	Asphalt Concrete	0.33
TOTAL		2.00

ROADWAY QUANTITIES

LOCATION	DESCRIPTION	Class 2 AGGREGATE BASE	REMOVE CRASH CUSHION (TYPE CAT)
		CY	EA
303+00.00	Emergency Passway	30	1.0

WEED CONTROL MAT (RUBBER)

STATION	LOCATION	SQFT (N)	SQYD
184+30.68 TO 367+63.00	ROUTE 5	72 297.2	8033.0

EROSION CONTROL

LOCATION	(POLYMER STABILIZED FIBER MATRIX) (ACRE)	
	SQFT (N)	ACRE
184+31.00 TO 367+63.00	183 320.0	4.2
TOTAL	183 320.0	4.2

(N) NOT A SEPARATE PAY ITEM, FOR INFORMATION ONLY

SUMMARY OF QUANTITIES

Q-1

REVISED BY | DATE REVISED
LAKACHEW LEYEW | MIKE LIM
CALCULATED-DESIGNED BY | CHECKED BY
FUNCTIONAL SUPERVISOR | MIKE LIM
STATE OF CALIFORNIA - DEPARTMENT OF TRANSPORTATION
Caltrans
DESIGN

LAST REVISION 06-08-11 | DATE PLOTTED => 09-SEP-2011 | TIME PLOTTED => 10:23

Dist	COUNTY	ROUTE	POST MILES TOTAL PROJECT	SHEET No.	TOTAL SHEETS
06	Ker	5	69.6/73.1	24	41

REGISTERED ELECTRICAL ENGINEER 8/09/11 DATE

9-6-11
PLANS APPROVAL DATE

REGISTERED PROFESSIONAL ENGINEER DANIEL THANH VO No. 17408 Exp. 9/30/12 ELECTRICAL STATE OF CALIFORNIA

THE STATE OF CALIFORNIA OR ITS OFFICERS OR AGENTS SHALL NOT BE RESPONSIBLE FOR THE ACCURACY OR COMPLETENESS OF SCANNED COPIES OF THIS PLAN SHEET.

LEGEND: (FOR THIS SHEET ONLY)

1 Exist 120/240 V, 1Ø, 3-WIRE, TYPE III-AF SERVICE EQUIPMENT ENCLOSURE WITH THE FOLLOWING CIRCUIT BREAKERS:

CTID No. 06500050070500T

AMPERES	VOLTS	POLES	NAMEPLATE	METER	PHOTOELECTRIC CONTROL TYPE
200	240	2	MAIN	YES	——
80	120	1	CHANGABLE MESSAGE SIGN	YES	——
80	120	1	CHANGABLE MESSAGE SIGN	YES	——
80	120	1	CHANGABLE MESSAGE SIGN	YES	——
80	120	1	CHANGABLE MESSAGE SIGN	YES	——
40	120	1	334-C CABINET	YES	——
15	120	1	SCAN SYSTEM	YES	——
15	120	1	TELEPHONE CABINET	YES	——
15	120	1	VIS SENSOR	YES	——
30	120	1	CCTV	YES	——
20	120	1	EMS	YES	*

* ADD CB AND NAMEPLATE

2 SEE SHEET E-4 FOR EMS SIGN INSTALLATION.

3 INSTALL STATE-FURNISHED EMS CONTROLLER ASSEMBLY.

NOTES:

1. ALL PULL BOXES SHALL BE No. 5 WITH EXTENSION UNLESS OTHERWISE NOTED.
2. FOR ACCURATE RIGHT OF WAY DATA, CONTACT RIGHT OF WAY ENGINEERING AT THE DISTRICT OFFICE.

ABBREVIATIONS:

PG&E = PACIFIC GAS AND ELECTRIC COMPANY
ATT = AMERICAN TELEPHONE AND TELEGRAPH
CTID = CALTRANS IDENTIFICATION

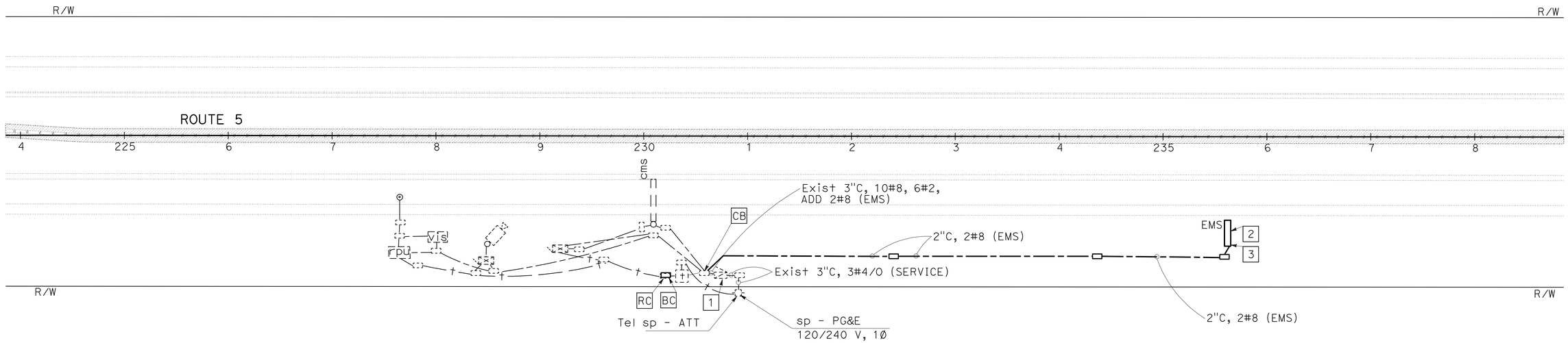

MODIFY EXTINGUISHABLE MESSAGE SIGN

SCALE: 1" = 50′

E-1

THIS PLAN IS ACCURATE FOR ELECTRICAL WORK ONLY.

REVISED BY | DATE REVISED
KARIM ABDOLLAHIAN | DANIEL VO
CALCULATED-DESIGNED BY | CHECKED BY
FUNCTIONAL SUPERVISOR: ALI BAKHDOUD

STATE OF CALIFORNIA - DEPARTMENT OF TRANSPORTATION
Caltrans® ELECTRICAL DESIGN

LAST REVISION 07-15-11 | DATE PLOTTED => 08-SEP-2011 | TIME PLOTTED => 07:56

Dist	COUNTY	ROUTE	POST MILES TOTAL PROJECT	SHEET No.	TOTAL SHEETS
06	Ker	5	69.6/73.1	25	41

REGISTERED ELECTRICAL ENGINEER 8/09/11 DATE

9-6-11
PLANS APPROVAL DATE

REGISTERED PROFESSIONAL ENGINEER DANIEL THANH VO No. 17408 Exp. 9/30/12 ELECTRICAL STATE OF CALIFORNIA

THE STATE OF CALIFORNIA OR ITS OFFICERS OR AGENTS SHALL NOT BE RESPONSIBLE FOR THE ACCURACY OR COMPLETENESS OF SCANNED COPIES OF THIS PLAN SHEET.

LEGEND: (FOR SHEET E-2 THROUGH E-3)

1 Exist 120/240 V, 1Ø, 3-WIRE, TYPE III-CF SERVICE EQUIPMENT ENCLOSURE WITH THE FOLLOWING CIRCUIT BREAKERS:

CTID No. 06500460052400T

AMPERES	VOLTS	POLES	NAMEPLATE	METER	PHOTOELECTRIC CONTROL TYPE
100	240	2	MAIN	YES	——
60	120	1	SIGNAL	YES	——
40	120	1	HAR	YES	——
20	120	1	EMS	YES	*
20	120	1	FLASHING BEACON	YES	——
40	120	1	COUNT STATION	YES	——

CTID No. 06500460052400L

AMPERES	VOLTS	POLES	NAMEPLATE	METER	PHOTOELECTRIC CONTROL TYPE
100	240	2	MAIN	YES	——
40	240	2	HIGHWAY LIGHTING	YES	IV
40	240	2	SPARE	YES	——

* RS Existing 15 A CB. ADD 20 A CB AND NAMEPLATE.

2 APPROXIMATE LOCATION OF EXISTING UNDERGROUND ELECTRICAL CONDUIT. PROTECT IN PLACE. EXACT LOCATION WILL BE DETERMINED IN THE FIELD BY THE ENGINEER.

3 SEE SHEET E-4 FOR EMS SIGN INSTALLATION.

4 INSTALL STATE-FURNISHED EMS CONTROLLER ASSEMBLY.

NOTES:

1. ALL PULL BOXES SHALL BE No. 5 WITH EXTENSION UNLESS OTHERWISE NOTED.
2. FOR ACCURATE RIGHT OF WAY DATA, CONTACT RIGHT OF WAY ENGINEERING AT THE DISTRICT OFFICE.

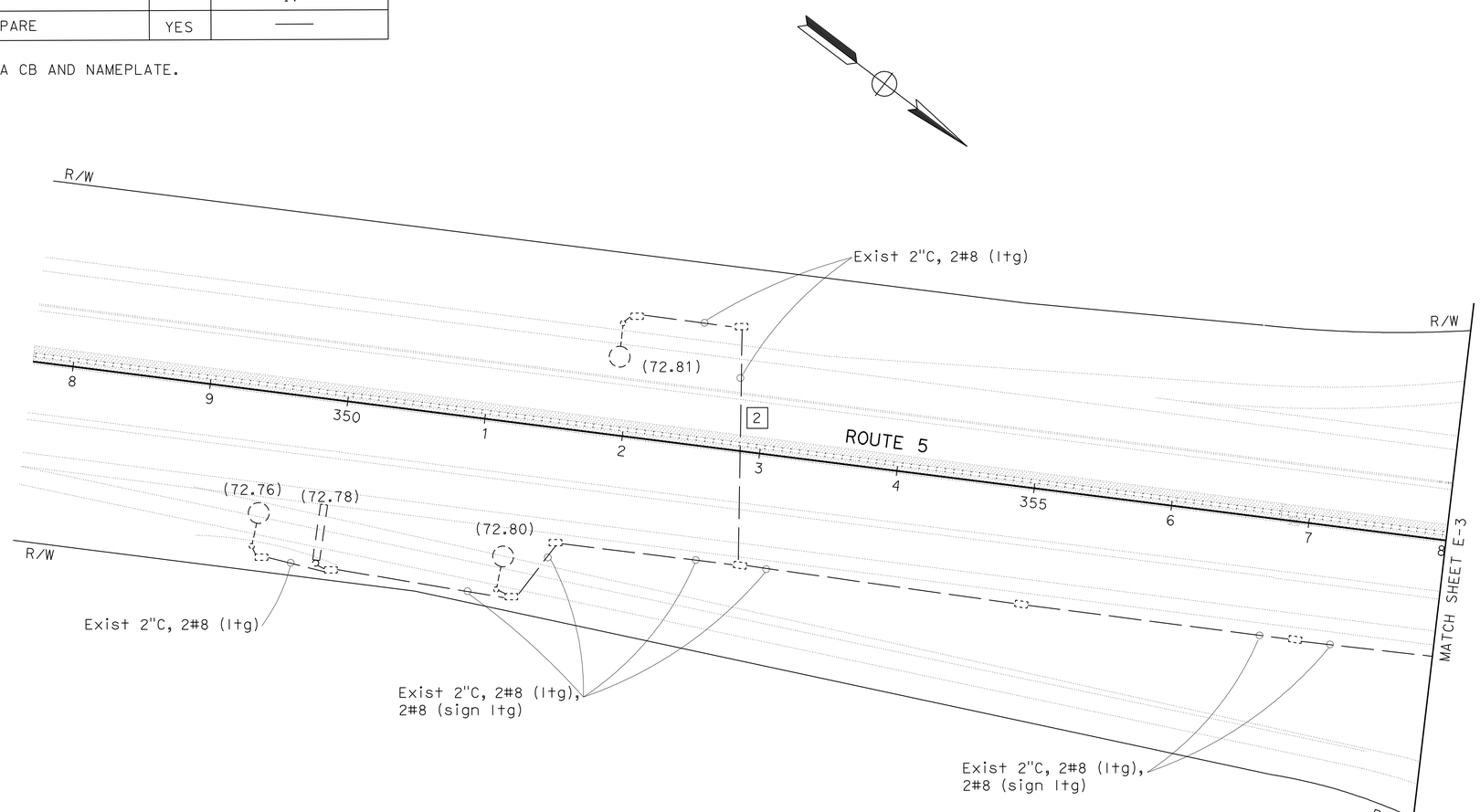

MODIFY EXTINGUISHABLE MESSAGE SIGN

SCALE: 1" = 50'

E-2

THIS PLAN IS ACCURATE FOR ELECTRICAL WORK ONLY.

STATE OF CALIFORNIA - DEPARTMENT OF TRANSPORTATION
Caltrans® ELECTRICAL DESIGN

FUNCTIONAL SUPERVISOR: ALI BAKHDOUD
CALCULATED-DESIGNED BY: KARIM ABDOLLAHIAN
CHECKED BY: DANIEL VO
REVISED BY
DATE REVISED

LAST REVISION 04-15-11
DATE PLOTTED => 08-SEP-2011
TIME PLOTTED => 07:56

Dist	COUNTY	ROUTE	POST MILES TOTAL PROJECT	SHEET No.	TOTAL SHEETS
06	Ker	5	69.6/73.1	26	41

REGISTERED ELECTRICAL ENGINEER 8/09/11 DATE

9-6-11
PLANS APPROVAL DATE

REGISTERED PROFESSIONAL ENGINEER DANIEL THANH VO No. 17408 Exp. 9/30/12 ELECTRICAL STATE OF CALIFORNIA

THE STATE OF CALIFORNIA OR ITS OFFICERS OR AGENTS SHALL NOT BE RESPONSIBLE FOR THE ACCURACY OR COMPLETENESS OF SCANNED COPIES OF THIS PLAN SHEET.

LEGEND: (SEE SHEET E-2)

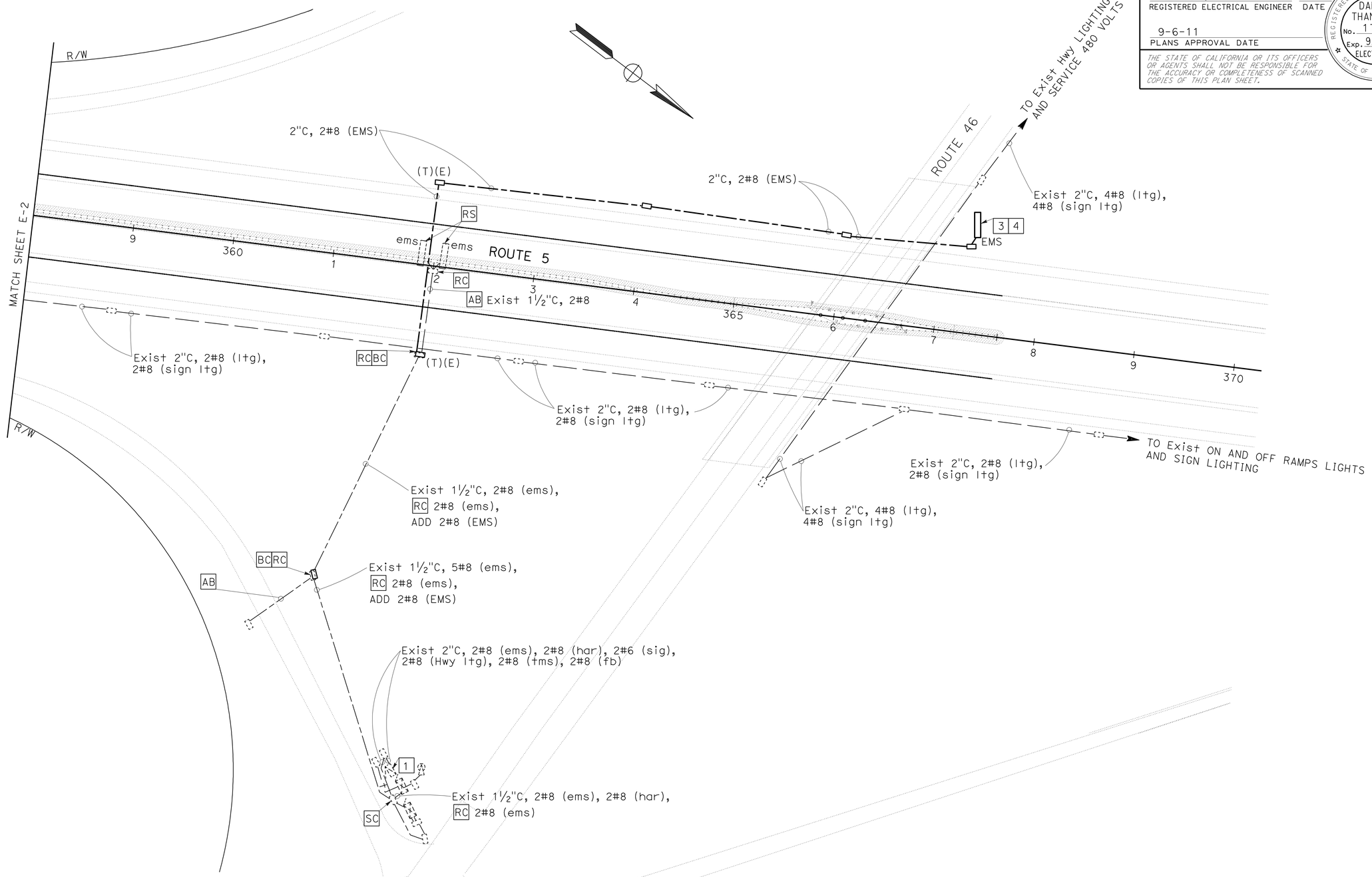

NOTES:

1. FOR ACCURATE RIGHT OF WAY DATA, CONTACT RIGHT OF WAY ENGINEERING AT THE DISTRICT OFFICE.

MODIFY EXTINGUISHABLE MESSAGE SIGN

SCALE: 1" = 50'

E-3

THIS PLAN IS ACCURATE FOR ELECTRICAL WORK ONLY.

STATE OF CALIFORNIA - DEPARTMENT OF TRANSPORTATION
Caltrans ELECTRICAL DESIGN

FUNCTIONAL SUPERVISOR: ALI BAKHDOUD
CALCULATED-DESIGNED BY: KARIM ABDOLLAHIAN
CHECKED BY: DANIEL VO
REVISED BY
DATE REVISED

LAST REVISION 07-15-11
DATE PLOTTED => 08-SEP-2011
TIME PLOTTED => 07:56

Dist	COUNTY	ROUTE	POST MILES TOTAL PROJECT	SHEET No.	TOTAL SHEETS
06	Ker	5	69.6/73.1	27	41

REGISTERED ELECTRICAL ENGINEER 8/09/13 DATE

9-6-11
PLANS APPROVAL DATE

REGISTERED PROFESSIONAL ENGINEER DANIEL THANH VO No. 17408 Exp. 9/30/12 ELECTRICAL STATE OF CALIFORNIA

THE STATE OF CALIFORNIA OR ITS OFFICERS OR AGENTS SHALL NOT BE RESPONSIBLE FOR THE ACCURACY OR COMPLETENESS OF SCANNED COPIES OF THIS PLAN SHEET.

NOTES:

1 EMS UNIT SHALL BE THE LED TYPE. SEE STANDARD PLAN RSP ES-14A FOR ADDITIONAL DETAILS.

2 THE OPERATING FREQUENCY SHALL BE AM 1610.

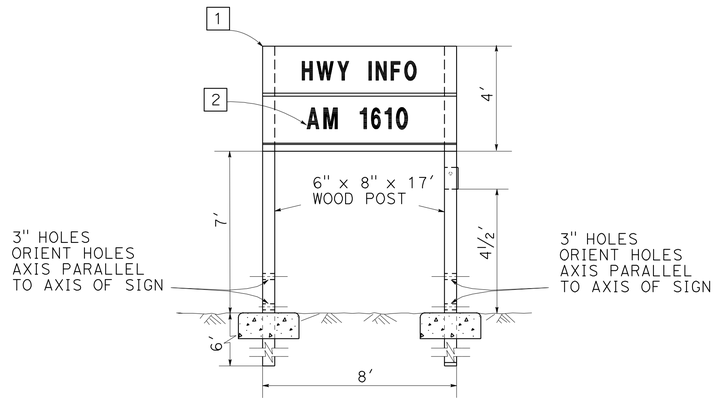

FRONT VIEW

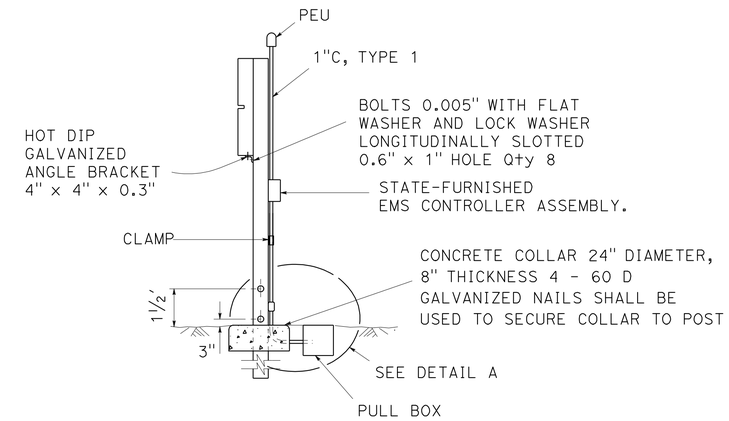

SIDE VIEW

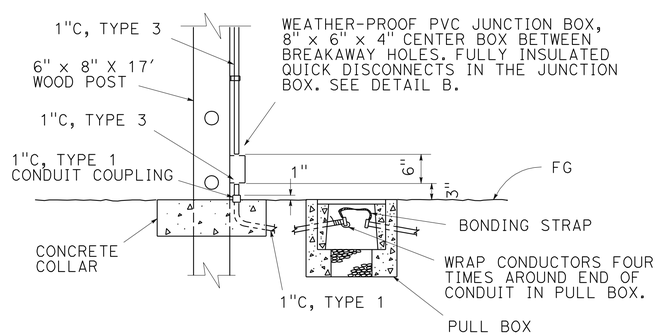

DETAIL A
CONDUIT BREAKAWAY

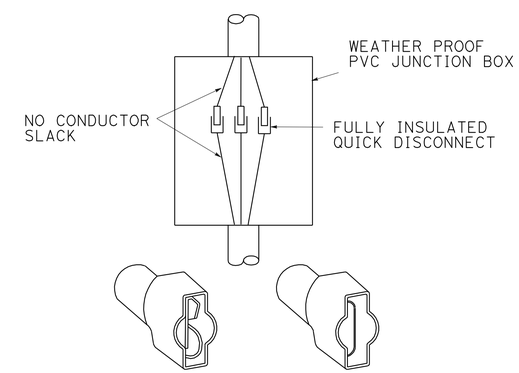

DETAIL B
FULLY INSULATED
QUICK DISCONNECTS

MODIFY EXTINGUISHABLE MESSAGE SIGN
(EXTINGUISHABLE MESSAGE SIGN INSTALLATION)

E-4

NO SCALE

THIS PLAN IS ACCURATE FOR ELECTRICAL WORK ONLY.

STATE OF CALIFORNIA - DEPARTMENT OF TRANSPORTATION
Caltrans 06-ELECTRICAL DESIGN

FUNCTIONAL SUPERVISOR: ALI BAKHDOUD
CALCULATED-DESIGNED BY: DANIEL VO
CHECKED BY: KARIM ABDOLLAHIAN
REVISED BY
DATE REVISED

LAST REVISION 07-15-11
DATE PLOTTED => 09-SEP-2011
TIME PLOTTED => 10:23

DIST	COUNTY	ROUTE	POST MILES TOTAL PROJECT	SHEET NO.	TOTAL SHEETS
06	Ker	5	69.6/73.1	28	41

Randell D. Hiatt
REGISTERED CIVIL ENGINEER

June 6, 2008
PLANS APPROVAL DATE

REGISTERED PROFESSIONAL ENGINEER
Randell D. Hiatt
No. C50200
Exp. 6-30-09
CIVIL
STATE OF CALIFORNIA

The State of California or its officers or agents shall not be responsible for the accuracy or completeness of electronic copies of this plan sheet.

To accompany plans dated 9-6-11

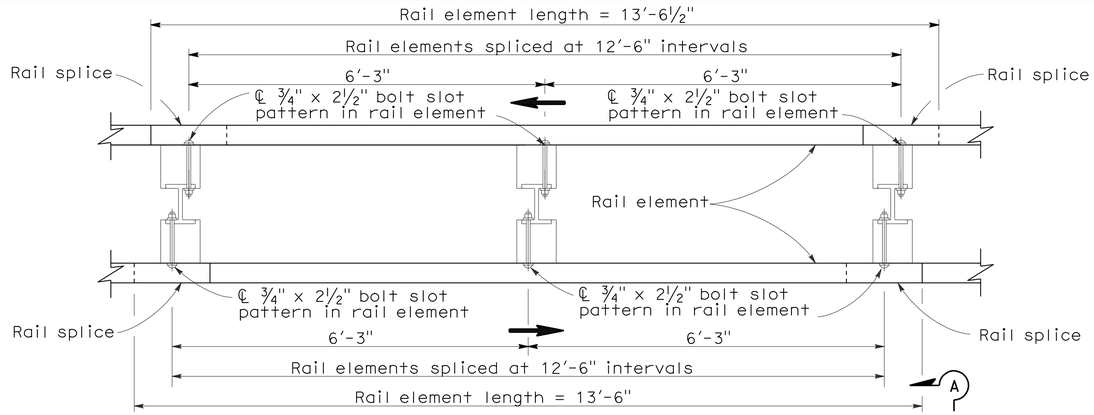

PLAN

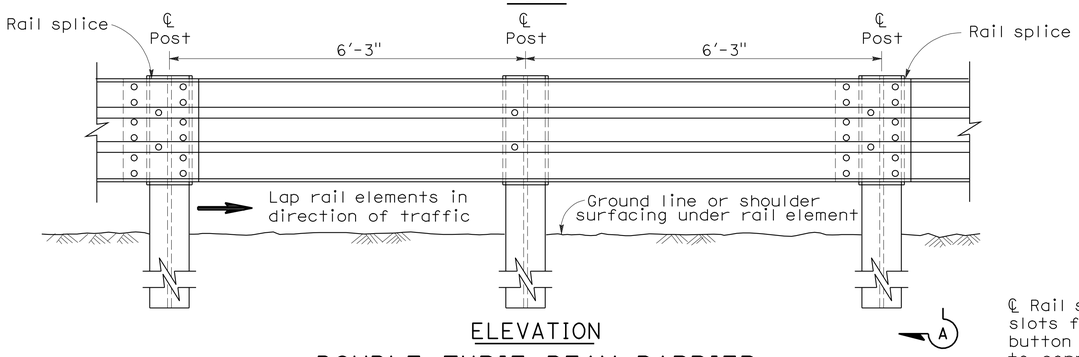

ELEVATION

DOUBLE THRIE BEAM BARRIER

(Steel post with notched wood or notched plastic blocks)
See Note 1

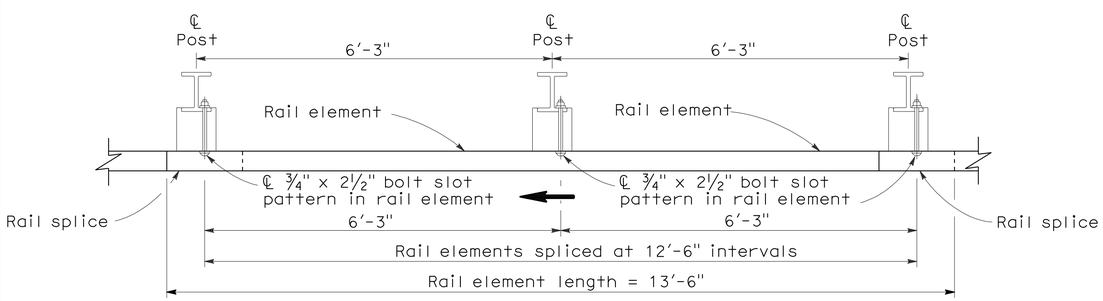

PLAN

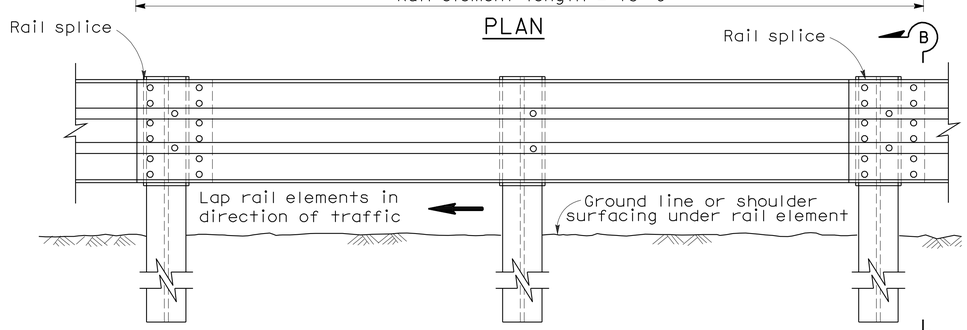

ELEVATION

SINGLE THRIE BEAM BARRIER

(Steel post with notched wood or notched plastic blocks)
See Note 1

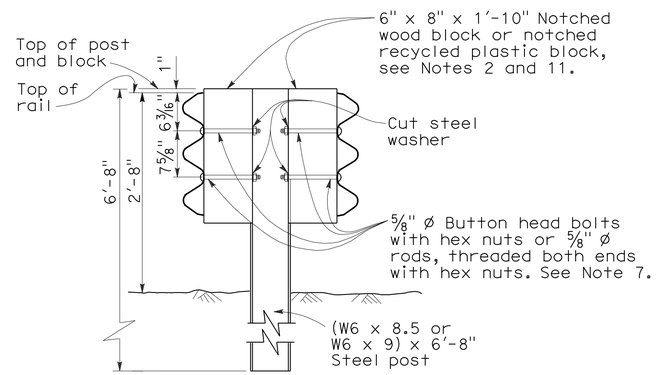

SECTION A-A

TYPICAL STEEL LINE POST INSTALLATION

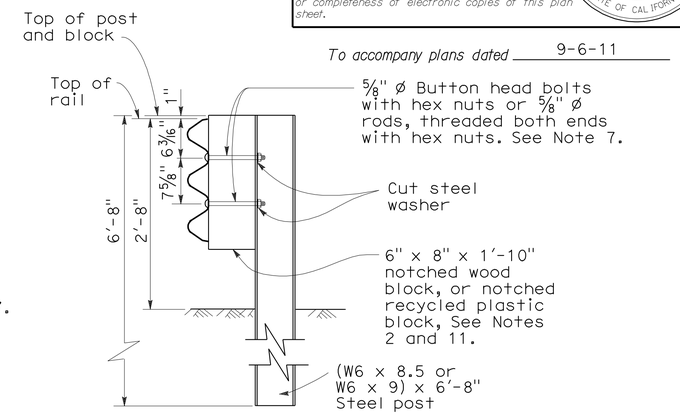

SECTION B-B

TYPICAL STEEL LINE POST INSTALLATION

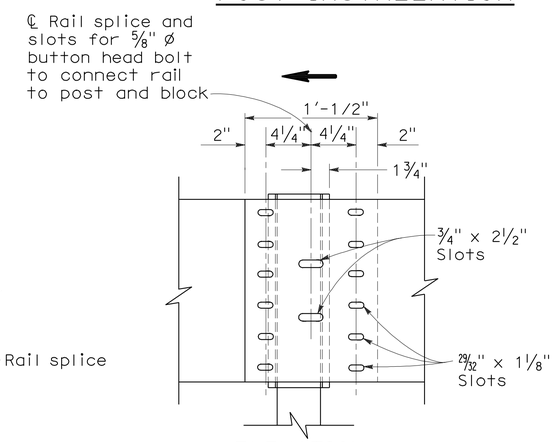

ELEVATION

RAIL ELEMENT SPLICE DETAIL

a) Connect the overlapped ends of the thrie beam rail elements with ⅝" ø x 1⅛" button head oval shoulder bolts inserted into the 29/32" x 1⅛" slots and bolted together with ⅝" ø x 1⅛" recessed hex nuts. Recess of hex nut points toward rail element. A total of 12 bolts and nuts are to be used at each rail splice connection.

b) The ends of the rail elements are to be overlapped in the direction of traffic (see details).

c) Where end cap is to be attached to the end of a rail element, a total of 4 of the above described splice bolts and nuts are to be used. Where a return cap is to be attached to the ends of rail elements, a total of 8 of the above described splice bolts and nuts are to be used.

NOTES:

1. For details of the cross section of the thrie beam rail element and details for wood post with wood block installations, see Standard Plan A78A.
2. For details of standard hardware, posts and blocks used to construct thrie beam barrier, see Revised Standard Plan RSP A78C1 and Standard Plan A78C2.
3. Thrie beam barrier post spacing to be 6'-3" center to center, except as otherwise noted.
4. Top of barrier rail to be 2'-8" above ground line or shoulder surfacing under the rail element.
5. For barrier end treatments and barrier connections, see Standard Plans A78E1, A78E2 and A78E3, Revised Standard Plans RSPs A78F1 and A78F2, Standard Plan A78G and Revised Standard Plan RSP A78H.
6. For connection to Concrete Barrier, see Revised Standard Plan RSP A78I.
7. Attach rail element to block and steel post with 2 bolts or rods on approaching traffic side of block and post web. No washer on rail face for rod or bolted connections to line post.
8. For details of thrie beam barrier on bridges, see Standard Plan A78D2. For details of thrie beam barrier at fixed objects, see Standard Plan A78D1.
9. Direction of traffic indicated by ⟶.
10. Notched face of block faces steel post.

STATE OF CALIFORNIA
DEPARTMENT OF TRANSPORTATION

THRIE BEAM BARRIER STANDARD BARRIER RAILING SECTION (STEEL POST WITH NOTCHED WOOD BLOCK OR NOTCHED RECYCLED PLASTIC BLOCK)

NO SCALE

RSP A78B DATED JUNE 6, 2008 SUPERSEDES STANDARD PLAN A78B DATED MAY 1, 2006 - PAGE 84 OF THE STANDARD PLANS BOOK DATED MAY 2006.

REVISED STANDARD PLAN RSP A78B

2006 REVISED STANDARD PLAN RSP A78B

5-14-08

DIST	COUNTY	ROUTE	POST MILES TOTAL PROJECT	SHEET No.	TOTAL SHEETS
06	Ker	5	69.6/73.1	29	41

Randell D. Hiatt
REGISTERED CIVIL ENGINEER

June 6, 2008
PLANS APPROVAL DATE

REGISTERED PROFESSIONAL ENGINEER
Randell D. Hiatt
No. C50200
Exp. 6-30-09
CIVIL
STATE OF CALIFORNIA

The State of California or its officers or agents shall not be responsible for the accuracy or completeness of electronic copies of this plan sheet.

To accompany plans dated 9-6-11

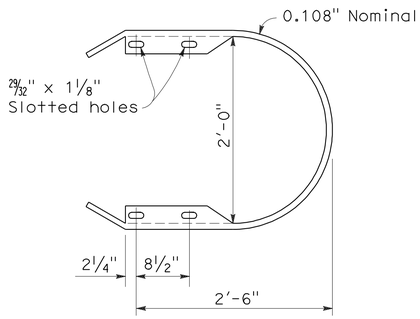

RETURN CAP
(TYPE TA)

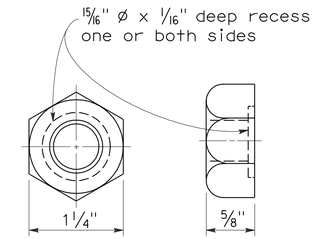

5/8" ø RECESS NUT

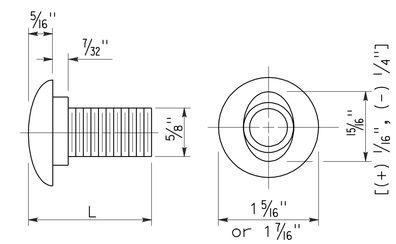

5/8" ø BUTTON HEAD BOLT

L	THREAD LENGTH
1 1/4"	full thread length
2"	full thread length
9 1/2"	4" Min thread length
18"	4" Min thread length

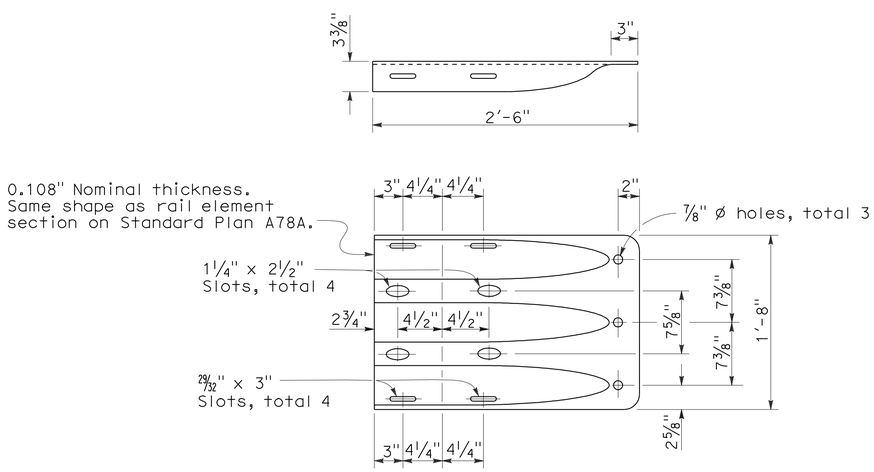

END CAP
(TYPE TC)

STATE OF CALIFORNIA
DEPARTMENT OF TRANSPORTATION

THRIE BEAM BARRIER STANDARD HARDWARE DETAILS

NO SCALE

RSP A78C1 DATED JUNE 6, 2008 SUPERSEDES STANDARD PLAN A78C1
DATED MAY 1, 2006 - PAGE 85 OF THE STANDARD PLANS BOOK DATED MAY 2006.

REVISED STANDARD PLAN RSP A78C1

2006 REVISED STANDARD PLAN RSP A78C1

4-21-08

DIST	COUNTY	ROUTE	POST MILES TOTAL PROJECT	SHEET NO.	TOTAL SHEETS
06	Ker	5	69.6/73.1	30	41

Randell D. Hiatt
REGISTERED CIVIL ENGINEER

June 6, 2008
PLANS APPROVAL DATE

REGISTERED PROFESSIONAL ENGINEER
Randell D. Hiatt
No. C50200
Exp. 6-30-09
CIVIL
STATE OF CALIFORNIA

The State of California or its officers or agents shall not be responsible for the accuracy or completeness of electronic copies of this plan sheet.

To accompany plans dated 9-6-11

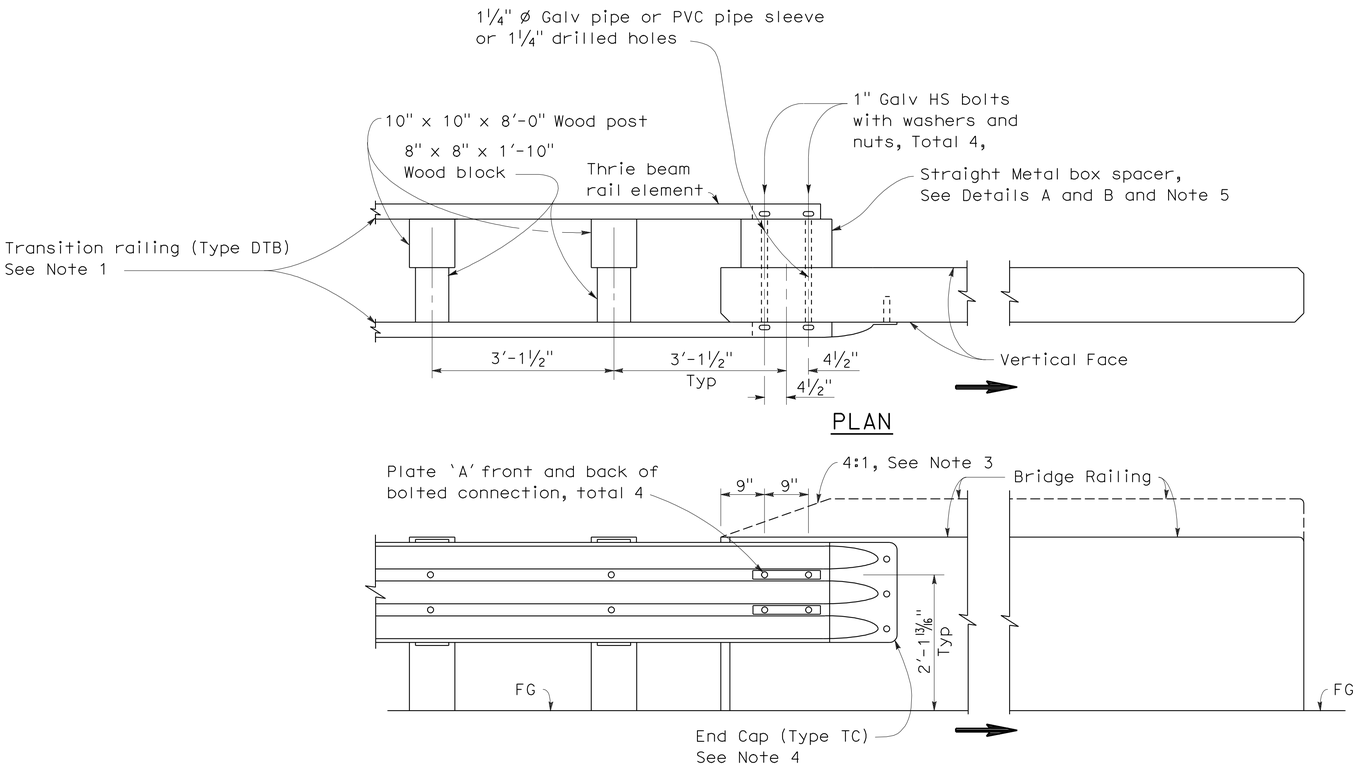

CONNECTION DETAIL 1A
See Note 2

DOUBLE THRIE BEAM BARRIER CONNECTION TO BRIDGE RAILING WITHOUT SIDEWALK

NOTES:

1. For additional details of Transition Railing (Type DTB), see Standard Plans A78K. Transition Railing (Type DTB) transitions the standard 12 gage double thrie beam barrier to a heavier gage double thrie beam railing section then to a heavier gage nested double thrie beam barrier section which then is connected to the concrete bridge railing.
2. For typical use of Connection Detail 1A, see Type 25A Connection Layout on Revised Standard Plan RSP A78H.
3. Where the height of the bridge railing exceeds the height of the thrie beam railing by more than 1" at Connection Detail 1A, taper the top of the end of the bridge railing at 4:1 to match the top elevation of the thrie beam railing.
4. For details of End Cap (Type TC), see Standard Plan A78C1.
5. See Standard Plan A78K for additional details regarding depth dimension for straight metal box spacer.
6. Direction of adjacent traffic indicated by ⟹.

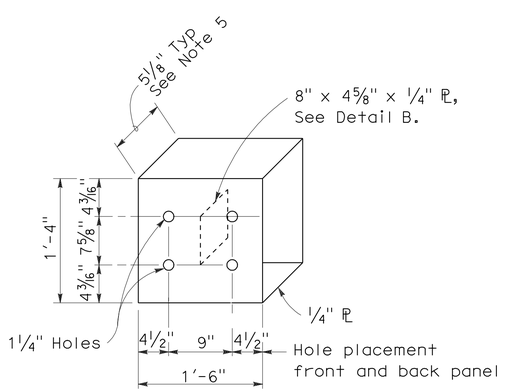

DETAIL A

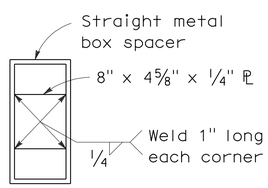

DETAIL B

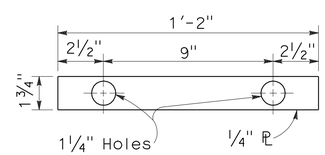

DETAIL C

STRAIGHT METAL BOX SPACER

PLATE 'A'

STATE OF CALIFORNIA
DEPARTMENT OF TRANSPORTATION

DOUBLE THRIE BEAM BARRIER CONNECTION TO BRIDGE RAILINGS WITHOUT SIDEWALKS

NO SCALE

RSP A78F1 DATED JUNE 6, 2008 SUPERSEDES STANDARD PLAN A78F1
DATED MAY 1, 2006 - PAGE 92 OF THE STANDARD PLANS BOOK DATED MAY 2006.

REVISED STANDARD PLAN RSP A78F1

2006 REVISED STANDARD PLAN RSP A78F1

12-10-07

DIST	COUNTY	ROUTE	POST MILES TOTAL PROJECT	SHEET NO.	TOTAL SHEETS
06	Ker	5	69.6/73.1	31	41

Randell D. Hiatt
REGISTERED CIVIL ENGINEER

June 6, 2008
PLANS APPROVAL DATE

REGISTERED PROFESSIONAL ENGINEER
Randell D. Hiatt
No. C50200
Exp. 6-30-09
CIVIL
STATE OF CALIFORNIA

The State of California or its officers or agents shall not be responsible for the accuracy or completeness of electronic copies of this plan sheet.

To accompany plans dated 9-6-11

NOTES:

1. Line post, blocks and hardware to be used are shown on Standard Plans A78A, A78B, A78C1, and A78C2.
2. Post spacing to be 6′-3″ center to center, except as otherwise noted.
3. Except as noted, line posts are 6″ x 8″ x 6′-0″ wood with 6″ x 8″ x 1′-10″ wood blocks. (W6 x 9) steel posts, 6′-8″ in length, with 6″ x 8″ x 1′-10″ notched wood blocks or notched recycled plastic blocks may be used for 6″ x 8″ x 6′-0″ wood posts with 6″ x 8″ x 1′-10″ wood blocks where applicable and when specified.
4. Direction of adjacent traffic indicated by ⟶.
5. For Transition Railing (Type DTB) details, see Standard Plan A78K.
6. The 15:1 or flatter flare is measured off of the edge of traveled way.

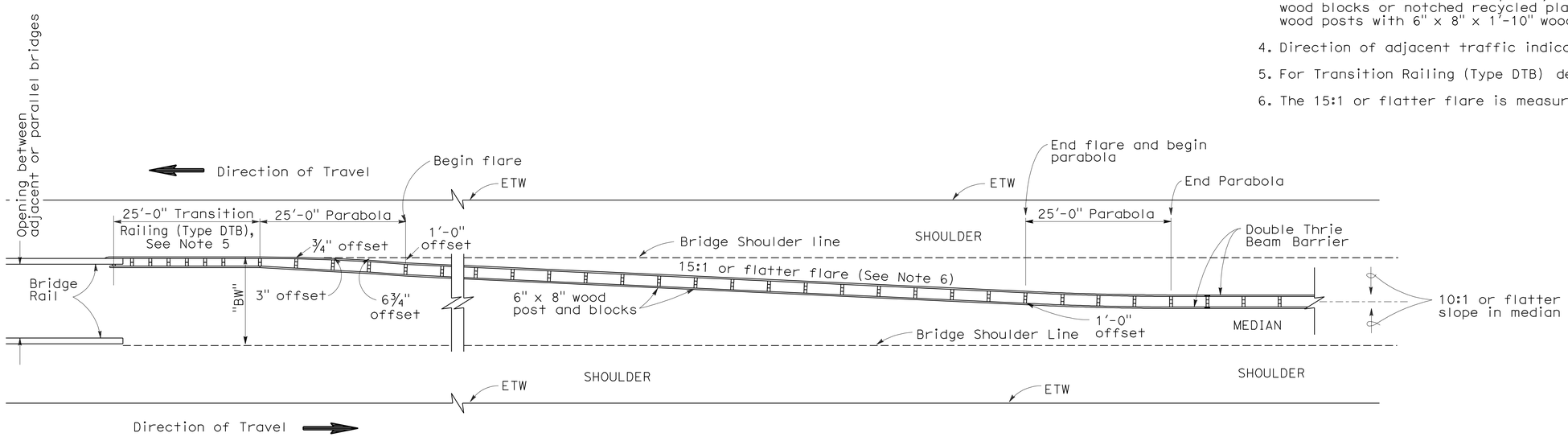

TYPE 25A CONNECTION LAYOUT

STATE OF CALIFORNIA
DEPARTMENT OF TRANSPORTATION

THRIE BEAM BARRIER TYPICAL LAYOUT FOR CONNECTION TO BRIDGE RAILING

RSP A78H DATED JUNE 6, 2008 SUPERSEDES STANDARD PLAN A78H
DATED MAY 1, 2006 - PAGE 95 OF THE STANDARD PLANS BOOK DATED MAY 2006.

REVISED STANDARD PLAN RSP A78H

2006 REVISED STANDARD PLAN RSP A78H

12-10-07

DIST	COUNTY	ROUTE	POST MILES TOTAL PROJECT	SHEET NO.	TOTAL SHEETS
06	Ker	5	69.6/73.1	32	41

Randell D. Hiatt
REGISTERED CIVIL ENGINEER

June 6, 2008
PLANS APPROVAL DATE

REGISTERED PROFESSIONAL ENGINEER
Randell D. Hiatt
No. C50200
Exp. 6-30-09
CIVIL
STATE OF CALIFORNIA

The State of California or its officers or agents shall not be responsible for the accuracy or completeness of electronic copies of this plan sheet.

To accompany plans dated 9-6-11

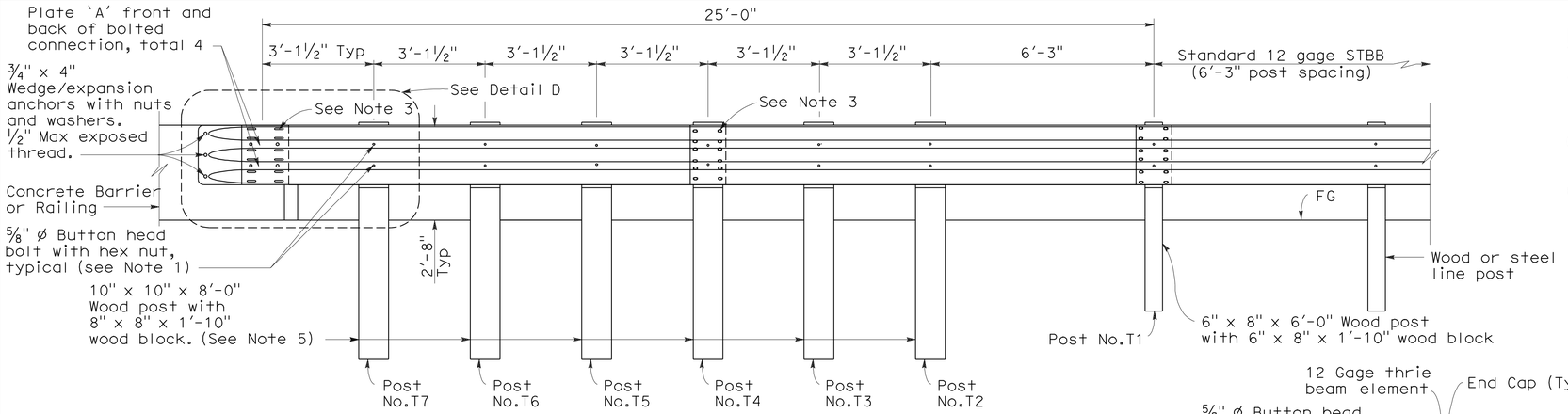

ELEVATION

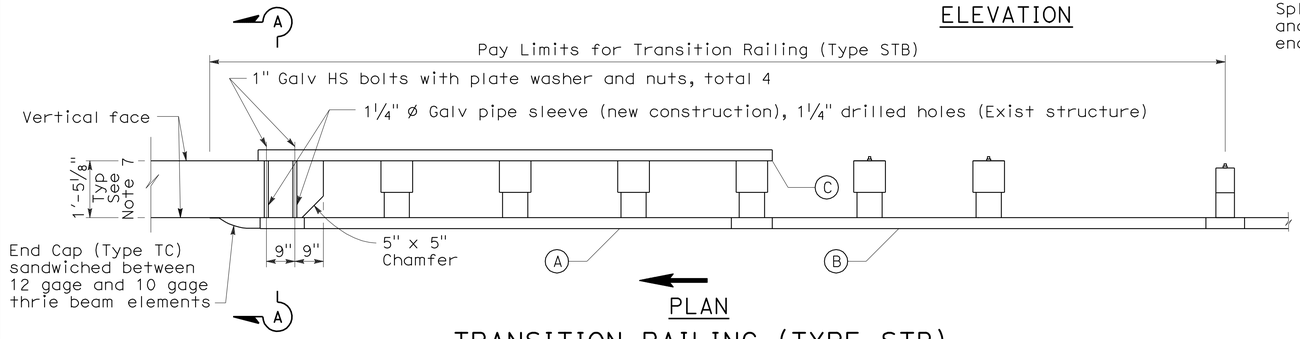

PLAN

TRANSITION RAILING (TYPE STB)

(No Blockout Attachment)

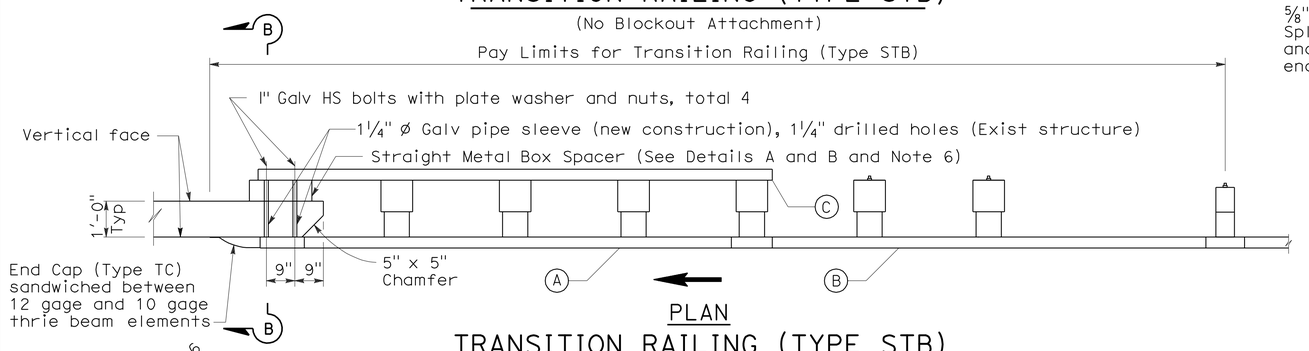

PLAN

TRANSITION RAILING (TYPE STB)

(Blockout Attachment)

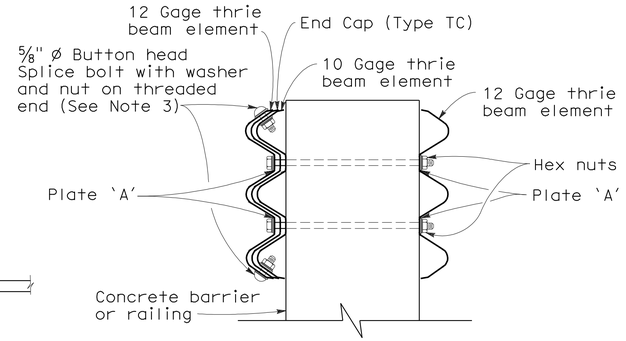

SECTION A-A

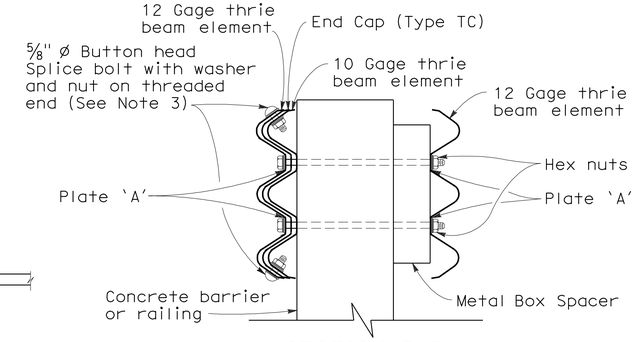

SECTION B-B

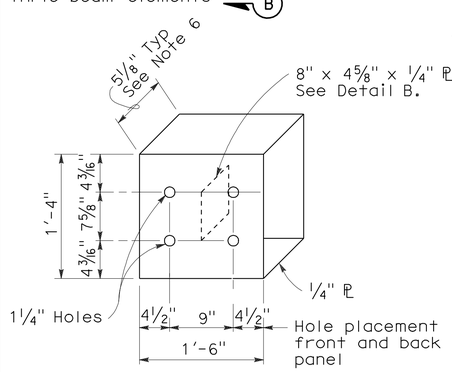

DETAIL A

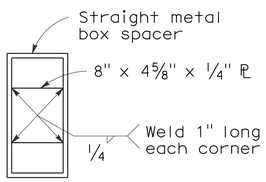

DETAIL B

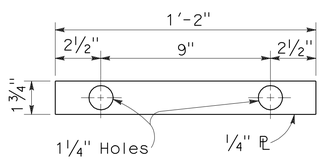

DETAIL C

STRAIGHT METAL BOX SPACER

PLATE 'A'

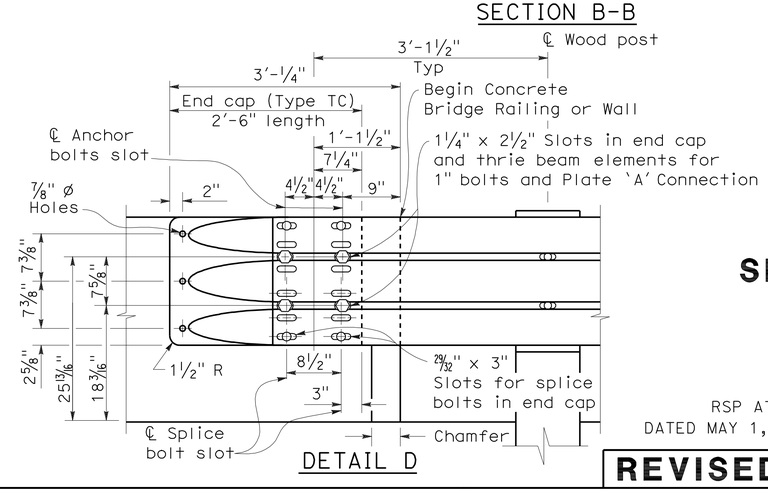

DETAIL D

LEGEND

(A) Nested thrie beam elements (one 12 gage element nested over one 10 gage element).

(B) One 10 gage thrie beam element.

(C) One 12 gage thrie beam element.

10 gage = 0.135" thick

12 gage = 0.108" thick

NOTES:

1. Use ⅝" ø Button head bolts and hex nuts for connection to posts. No washer on rail face for bolted connections to post.
2. The nested rail elements, end cap and single 10 gage thrie beam element, may be spliced together prior to bolting the elements to the wood post and concrete barrier or railing.
3. Exterior splice bolt holes for rail element splices at Post No.T4 and the connection to the concrete barrier or railing shall be the standard 29⁄32" x 1⅛" slot size. Interior splice bolt holes at these locations may be increased up to 1¼" ø. Only the top 2 and the bottom 2 splice bolts with washers and nuts are required for rail splices at Post No.T4 and the connection to the concrete barrier or railing.
4. Direction of adjacent traffic indicated by ⟶.
5. The top elevation of Post Nos.T2 through T7 shall not project more than 1" above the top elevation of the rail element.
6. The depth of the metal box spacer varies from the 5⅛" to 1½" and is dependent on the width of the concrete railing or wall. The combined dimension for the depth of the metal box spacer plus the width of railing or wall is typically 17⅛". Where the space between the backside of the concrete railing or wall and the rear thrie beam element is less than 1½" metal plates similar to Plate 'A' are to be used as spacers.
7. Where the width of the concrete railing or wall is greater than 17⅛", wood blocks are to be used to fill the space created between the backside of Post No.4 through No.7 and the rear thrie beam element. These wood blocks shall be 8" in width and 1'-2" in length. The dimension between the front thrie beam element and the rear thrie beam element is to match the width of the concrete railing or wall.
8. For details of End Cap (Type TC), see Revised Standard Plan RSP A78C1.

STATE OF CALIFORNIA
DEPARTMENT OF TRANSPORTATION

SINGLE THRIE BEAM BARRIER TRANSITION RAILING (TYPE STB)

NO SCALE

RSP A78J DATED JUNE 6, 2008 SUPERSEDES STANDARD PLAN A78J DATED MAY 1, 2006 - PAGE 97 OF THE STANDARD PLANS BOOK DATED MAY 2006.

REVISED STANDARD PLAN RSP A78J

2006 REVISED STANDARD PLAN RSP A78J

5-1-08

DIST	COUNTY	ROUTE	POST MILES TOTAL PROJECT	SHEET NO.	TOTAL SHEETS
06	Ker	5	69.6/73.1	33	41

Randell D. Hiatt
REGISTERED CIVIL ENGINEER

June 6, 2008
PLANS APPROVAL DATE

REGISTERED PROFESSIONAL ENGINEER
Randell D. Hiatt
No. C50200
Exp. 6-30-09
CIVIL
STATE OF CALIFORNIA

The State of California or its officers or agents shall not be responsible for the accuracy or completeness of electronic copies of this plan sheet.

To accompany plans dated 9-6-11

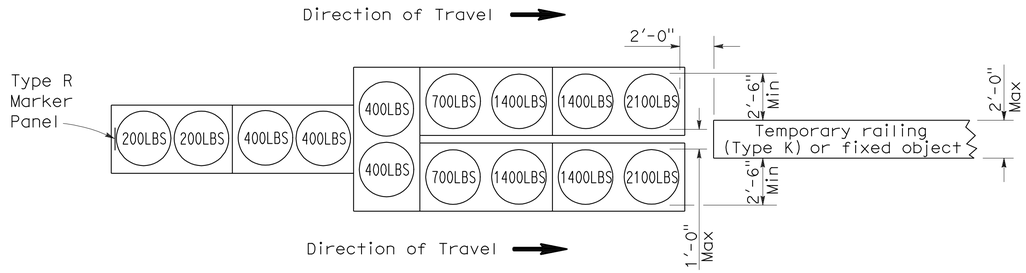

ARRAY `TU14'

Approach speed 45 mph or more

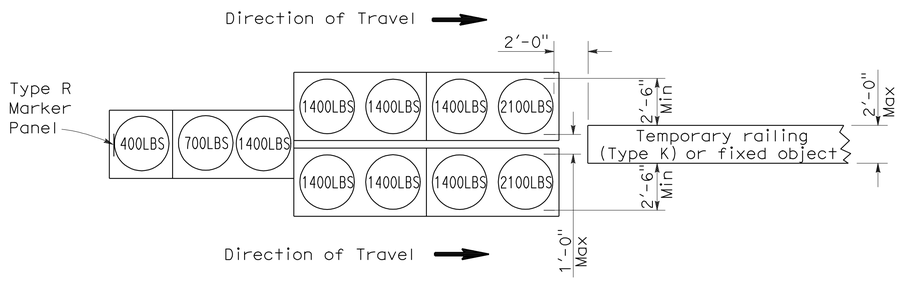

ARRAY `TU11'

Approach speed less than 45 mph

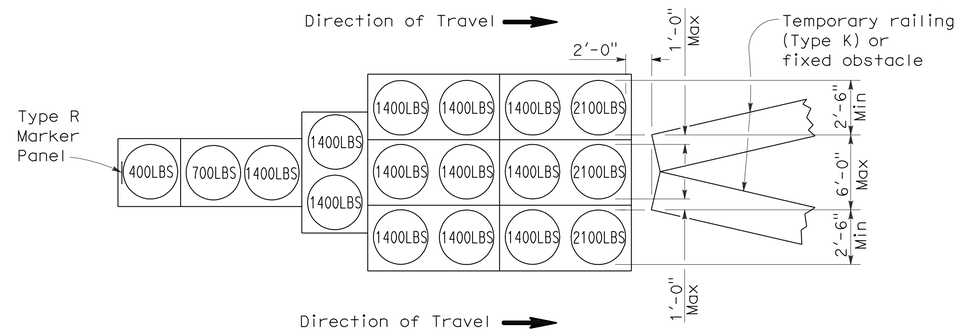

ARRAY `TU17'

Approach speed less than 45 mph

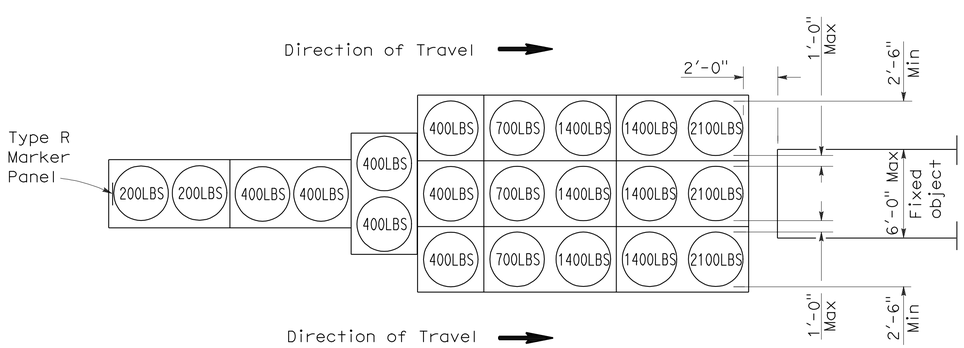

ARRAY `TU21'

Approach speed 45 mph or more

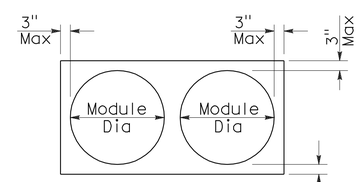

PLAN

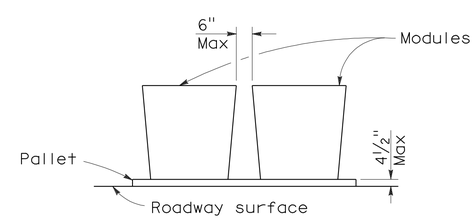

ELEVATION

CRASH CUSHION PALLET DETAIL

See Note 7

NOTES:

1. (XXX) Indicates sand filled module location and weight of sand in pounds for each module. Module spacing is based on the greater diameter of the module.
2. All sand weights are nominal.
3. Temporary crash cushion arrays shall not encroach on the traveled way.
4. Place the top of Type R marker panel 1" below the module lid.
5. Refer to Standard Plan A73B for marker details.
6. Approach speeds indicated conform to NCHRP 350 Report criteria.
7. Use of pallets is optional.

STATE OF CALIFORNIA
DEPARTMENT OF TRANSPORTATION

TEMPORARY CRASH CUSHION, SAND FILLED (UNIDIRECTIONAL)

NO SCALE

RSP T1A DATED JUNE 6, 2008 SUPERSEDES STANDARD PLAN T1A
DATED MAY 1, 2006 - PAGE 211 OF THE STANDARD PLANS BOOK DATED MAY 2006.

REVISED STANDARD PLAN RSP T1A

2006 REVISED STANDARD PLAN RSP T1A

5-15-08

DIST	COUNTY	ROUTE	POST MILES TOTAL PROJECT	SHEET NO.	TOTAL SHEETS
06	Ker	5	69.6/73.1	34	41

Randell D. Hiatt
REGISTERED CIVIL ENGINEER

June 6, 2008
PLANS APPROVAL DATE

REGISTERED PROFESSIONAL ENGINEER
Randell D. Hiatt
No. C50200
Exp. 6-30-09
CIVIL
STATE OF CALIFORNIA

The State of California or its officers or agents shall not be responsible for the accuracy or completeness of electronic copies of this plan sheet.

To accompany plans dated 9-6-11

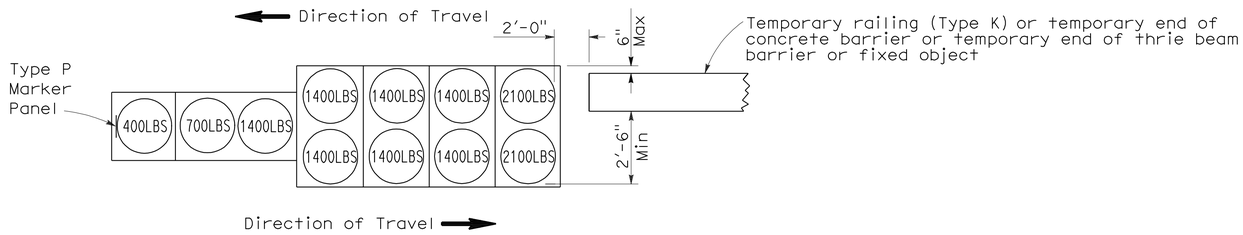

ARRAY 'TB11'

Approach speed less than 45 mph

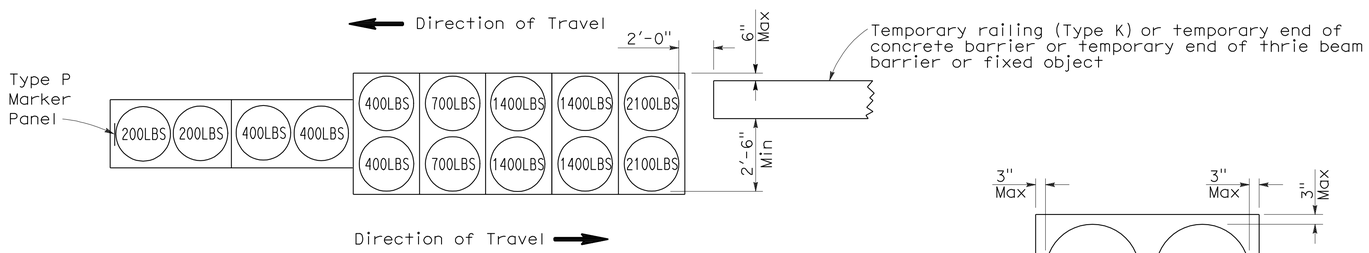

ARRAY 'TB14'

Approach speed 45 mph or more

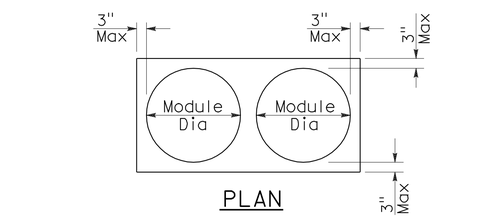

PLAN

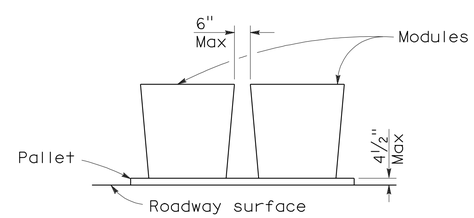

ELEVATION

CRASH CUSHION PALLET DETAIL

See Note 7

NOTES:

1. (XXX) Indicates sand filled module location and weight of sand in pounds for each module. Module spacing is based on the greater diameter of the module.
2. All sand weights are nominal.
3. Temporary crash cushion arrays shall not encroach on the traveled way.
4. Place the Type P marker panel so that the bottom of the panel rests upon the pallet.
5. Refer to Standard Plan A73B for marker details.
6. Approach speeds indicated conform to NCHRP 350 Report criteria.
7. Use of pallets is optional.

STATE OF CALIFORNIA
DEPARTMENT OF TRANSPORTATION

TEMPORARY CRASH CUSHION, SAND FILLED (BIDIRECTIONAL)

NO SCALE

RSP T1B DATED JUNE 6, 2008 SUPERSEDES STANDARD PLAN T1B
DATED MAY 1, 2006 - PAGE 212 OF THE STANDARD PLANS BOOK DATED MAY 2006.

REVISED STANDARD PLAN RSP T1B

2006 REVISED STANDARD PLAN RSP T1B

5-15-08

DIST	COUNTY	ROUTE	POST MILES TOTAL PROJECT	SHEET NO.	TOTAL SHEETS
06	Ker	5	69.6/73.1	35	41

Randell D. Hiatt
REGISTERED CIVIL ENGINEER

June 6, 2008
PLANS APPROVAL DATE

REGISTERED PROFESSIONAL ENGINEER
Randell D. Hiatt
No. C50200
Exp. 6-30-09
CIVIL
STATE OF CALIFORNIA

The State of California or its officers or agents shall not be responsible for the accuracy or completeness of electronic copies of this plan sheet.

To accompany plans dated 9-6-11

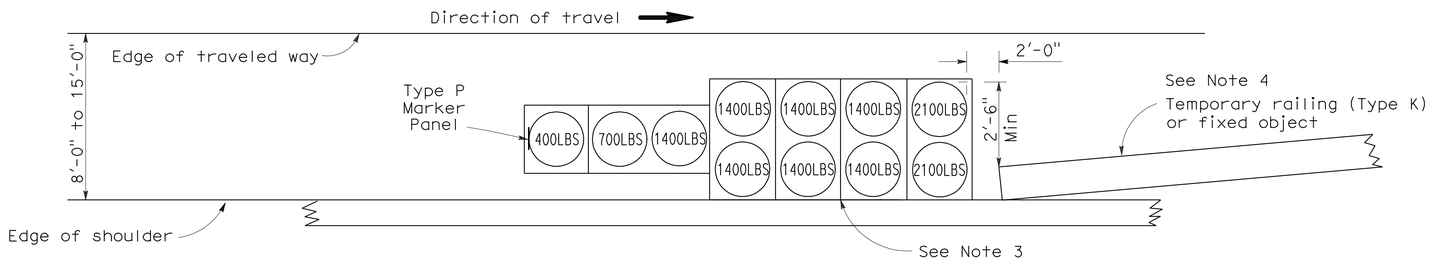

ARRAY 'TS11'

Approach speed less than 45 mph
See Note 9

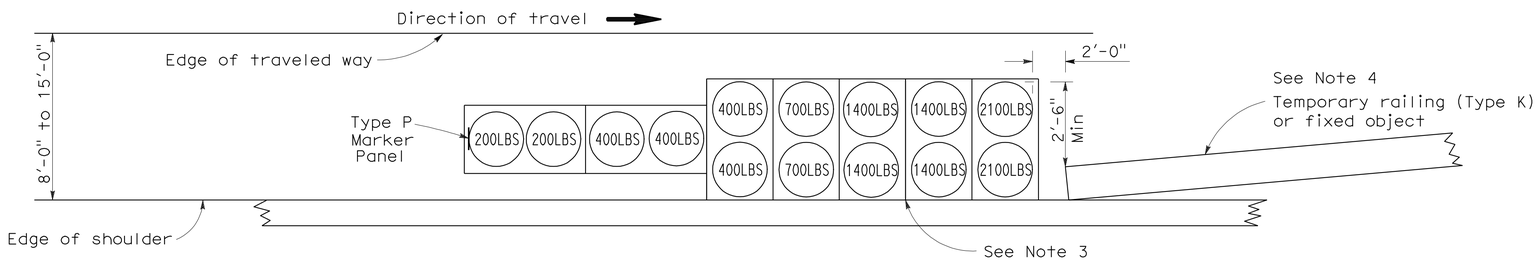

ARRAY 'TS14'

Approach speed 45 mph or more
See Note 9

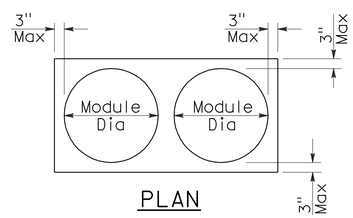

PLAN

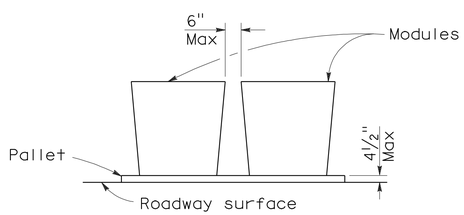

ELEVATION

CRASH CUSHION PALLET DETAIL

See Note 11

NOTES:

1. (XXX) Indicates sand filled module location and weight of sand in pounds for each module. Module spacing is based on the greater diameter of the module.
2. All sand weights are nominal.
3. The temporary crash cushion arrays shown on this plan shall be used only in locations where there will be traffic on one side of the temporary crash cushion array.
4. If the fixed object or approach end of the temporary railing is less than 15'-0" from the edge of traveled way, a temporary crash cushion is required in a construction or work zone.
5. Temporary crash cushion arrays shall not encroach on the traveled way.
6. Arrays for median shoulders shall conform to details shown on this plan for outside shoulders.
7. Place the Type P marker panel so that the bottom of the panel rests upon the pallet and faces traffic.
8. Refer to Standard Plan A73B for marker details.
9. For shoulder widths less than 8'-0", appropriate approved crash cushion protection, other than sand filled modules, shall be provided at fixed objects and at approach ends of temporary railing. The specific type of crash cushion shall be as shown on the project plans or as specified in the Special Provisions, or if not shown on the project plans or specified in the Special Provisions, shall be as approved by the Engineer.
10. Approach speeds indicated conform to NCHRP 350 Report criteria.
11. Use of pallets is optional.

STATE OF CALIFORNIA
DEPARTMENT OF TRANSPORTATION

TEMPORARY CRASH CUSHION, SAND FILLED (SHOULDER INSTALLATIONS)

NO SCALE

RSP T2 DATED JUNE 6, 2008 SUPERSEDES STANDARD PLAN T2
DATED MAY 1, 2006 - PAGE 213 OF THE STANDARD PLANS BOOK DATED MAY 2006.

REVISED STANDARD PLAN RSP T2

2006 REVISED STANDARD PLAN RSP T2

5-15-08

Dist	COUNTY	ROUTE	POST MILES TOTAL PROJECT	SHEET No.	TOTAL SHEETS
06	Ker	5	69.6/73.1	36	41

Randell D. Hiatt
REGISTERED CIVIL ENGINEER

May 20, 2011
PLANS APPROVAL DATE

REGISTERED PROFESSIONAL ENGINEER
Randell D. Hiatt
No. C50200
Exp. 6-30-11
CIVIL
STATE OF CALIFORNIA

The State of California or its officers or agents shall not be responsible for the accuracy or completeness of electronic copies of this plan sheet.

To accompany plans dated 9-6-11

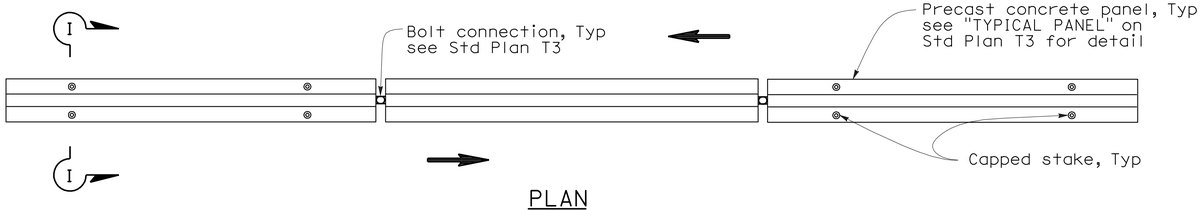

PLAN

RAILING STAKING CONFIGURATION FOR TWO-WAY TRAFFIC

See Note 1

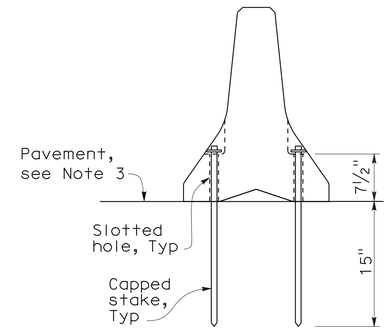

SECTION I-I

NOTES:

1. Where Type K Temporary Railing is placed as a temporary or long term barrier in two-way traffic on highways with less than 24" from the edge of traveled way, use four capped stakes per every other panel with end panels staked.
2. Where Type K Temporary Railing is placed 3" to 24" from the edge of an excavation on highways, use two capped stakes per panel along the traffic side.
3. Staked Type K Temporary Railing must be supported by at least 4" thick concrete, hot mix asphalt or existing asphalt concrete pavement.
4. The minimum yield strength for the washer must be 60,000 psi.
5. Direction of adjacent traffic indicated by ⟹.

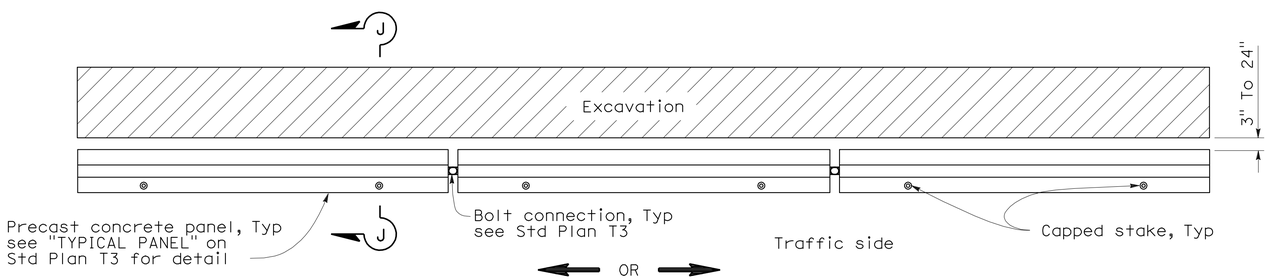

PLAN

RAILING STAKING CONFIGURATION ADJACENT TO AN EXCAVATION

See Note 2

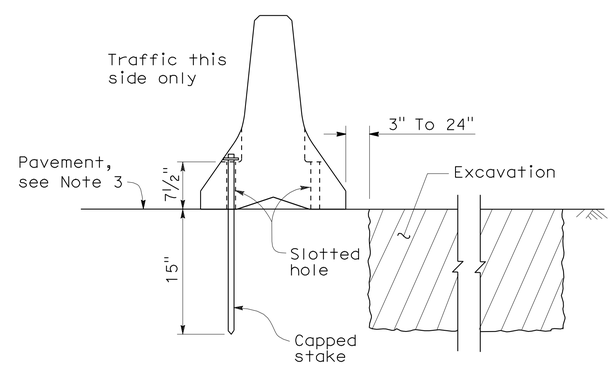

SECTION J-J

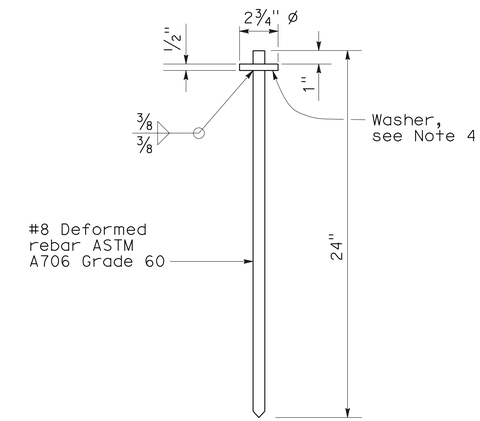

CAPPED STAKE DETAIL

STATE OF CALIFORNIA
DEPARTMENT OF TRANSPORTATION

TEMPORARY RAILING (TYPE K)

NO SCALE

NSP T3A DATED MAY 20, 2011 SUPPLEMENTS
THE STANDARD PLANS BOOK DATED MAY 2006.

NEW STANDARD PLAN NSP T3A

2006 NEW STANDARD PLAN NSP T3A

DIST	COUNTY	ROUTE	POST MILES TOTAL PROJECT	SHEET NO.	TOTAL SHEETS
06	Ker	5	69.6/73.1	37	41

LICENSED LANDSCAPE ARCHITECT

April 3, 2009
PLANS APPROVAL DATE

LICENSED LANDSCAPE ARCHITECT — ROBERT B. SCHOTT — 3025 — Signature — 11-30-10 Renewal Date — 2-25-09 Date — STATE OF CALIFORNIA

The State of California or its officers or agents shall not be responsible for the accuracy or completeness of electronic copies of this plan sheet.

To accompany plans dated 9-6-11

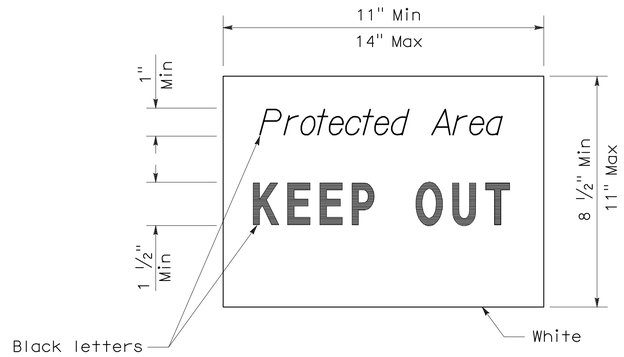

SIGN DETAIL

NOTE:

1. Temporary silt fence and temporary straw bale barrier shown for reference purposes only.

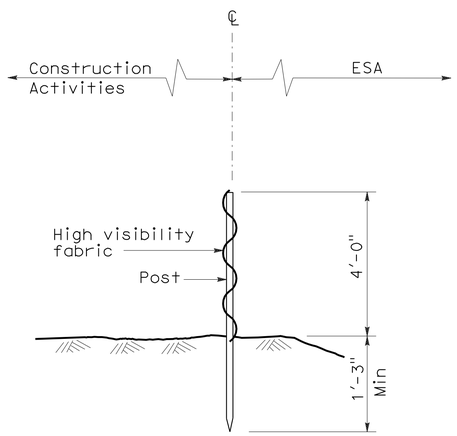

SECTION
TEMPORARY FENCE (TYPE ESA)

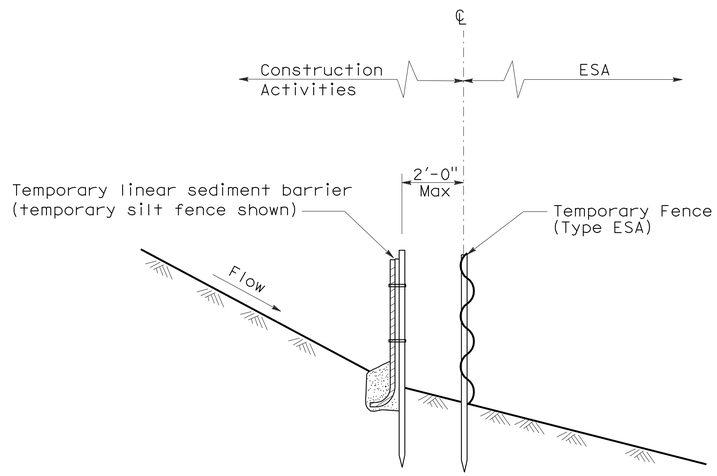

SECTION
PLACEMENT DETAIL
FOR TEMPORARY LINEAR SEDIMENT BARRIER
USED WITH TEMPORARY
FENCE (TYPE ESA)
(See Note 1)

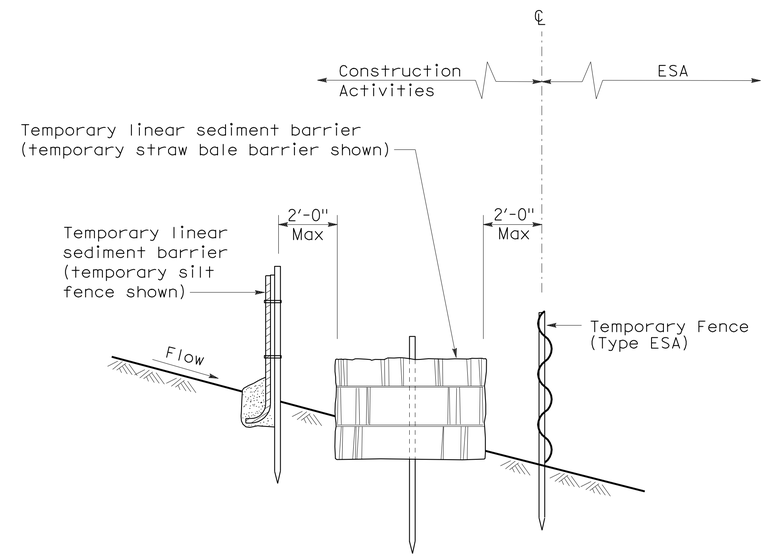

SECTION
PLACEMENT DETAIL
FOR TEMPORARY SILT FENCE
AND TEMPORARY STRAW BALE BARRIER
USED WITH TEMPORARY FENCE (TYPE ESA)
(See Note 1)

STATE OF CALIFORNIA
DEPARTMENT OF TRANSPORTATION

TEMPORARY WATER POLLUTION CONTROL DETAILS [TEMPORARY FENCE (TYPE ESA)]

NO SCALE

NSP T65 DATED APRIL 3, 2009 SUPPLEMENTS
THE STANDARD PLANS BOOK DATED MAY 2006.

NEW STANDARD PLAN NSP T65

2006 NEW STANDARD PLAN NSP T65

DIST	COUNTY	ROUTE	POST MILES TOTAL PROJECT	SHEET NO.	TOTAL SHEETS
06	Ker	5	69.6/73.1	38	41

REGISTERED ELECTRICAL ENGINEER

October 5, 2007
PLANS APPROVAL DATE

REGISTERED PROFESSIONAL ENGINEER Jeffery G. McRae No. E14512 Exp. 6-30-08 ELECTRICAL STATE OF CALIFORNIA

The State of California or its officers or agents shall not be responsible for the accuracy or completeness of electronic copies of this plan sheet.

To accompany plans dated 9-6-11

ELECTROLIERS

STANDARD TYPES
15, 15D
15 STRUCTURE
21, 21D STRUCTURE
30
31
32
35
36-20A

High mast light pole

Double Arm lighting standard

Existing electrolier

Electrolier foundation (Future installation)

NOTES:

1. Luminaires shall be 310 W HPS when installed on Type 21, 21D, 30, 31, 32, 35 and 36-20A Standards, unless otherwise specified. Luminaires shall be 200 W HPS when installed on other type standards or poles, unless otherwise specified.
2. Luminaires shall be the cutoff type, ANSI Type Ⅲ medium cutoff lighting distribution, unless otherwise specified.
3. Variations noted adjacent to symbol on project plans.

Electrolier (see project notes or project plans)

Luminaire on wood pole

STANDARD NOTES:

- AB — Abandon. If applied to conduit, remove conductors.
- BC — Install pull box in existing conduit run.
- BP — Pedestrian barricade, type as indicated on plan.
- CB — Install conduit into existing pull box.
- CC — Connect new and existing conduit. Remove existing conductors and install conductors as indicated.
- CF — Conduit to remain for future use. Remove conductors. Install pull wire or rope.
- DH — Detector handhole.
- FA — Foundation to be abandoned.
- IS — Install sign on signal mast arm.
- NS — No slip base on standard.
- PEC — Photoelectric control.
- PEU — Photoelectric unit.
- RC — Equipment or material to be removed and become the property of the Contractor.
- RE — Remove electrolier, fuses and ballast. Tape ends of conductors.
- RL — Relocate equipment.
- RR — Remove and reuse equipment.
- RS — Remove and salvage equipment.
- SC — Splice new to existing conductors.
- SD — Service disconnect.
- SF — Standard to remain for future use. Remove luminaire, pole conductors, fuses and ballast.
- TSP — Telephone service point.

ABBREVIATIONS AND EQUIPMENT DESIGNATIONS

PROPOSED	EXISTING	
BBS	bbs	Battery backup system
BC	bc	Bolt circle
C	C	Conduit
CCTV	cctv	Closed circuit television
CKT	ckt	Circuit
CMS	cms	Changeable message sign
DLC	dlc	Loop detector lead-in cable
EMS	ems	Extinguishable message sign
EVC	evc	Emergency vehicle cable
EVD	evd	Emergency vehicle detector
FB	fb	Flashing beacon
FBCA	fbca	Flashing beacon control assembly
FBS	fbs	Flashing beacon with slip base
FO	fo	Fiber optic
G	G	Ground (Equipment Grounding Conductor)
GFCI	GFCI	Ground fault circuit interrupt
HAR	har	Highway advisory radio
HEX	hex	Hexagonal
HPS	hps	High pressure sodium
IISNS	iisns	Internally illuminated street name sign
ISL	isl	Induction sign lighting
LED	led	Light emitting diode
LMA	lma	Luminaire mast arm
LPS	lps	Low pressure sodium
LTG	ltg	Lighting
LUM	lum	Luminaire
MAT	mat	Mast arm mounting vehicle signal faces, top attachment
MAS	mas	Mast arm mounting vehicle signal faces, side attachment
MAS-4A	mas-4A	Mast arm mounting vehicle signal faces, side attachment - 4 signal section
MAS-4B	mas-4B	
MAS-4C	mas-4C	
MAS-5A	mas-5A	Mast arm mounting vehicle signal faces, side attachment - 5 signal section
MAS-5B	mas-5B	
MC	mc	Mercury contactor
M/M	m/m	Multiple to multiple transformer
MT	mt	Conduit with pull wire or rope only
MTG	mtg	Mounting
	mv	Mercury vapor lighting fixture
N	N	Neutral (Grounded Conductor)
NC	NC	Normally closed
NO	NO	Normally open
PB	pb	Pull box
PEC	pec	Photoelectric control (Type Ⅰ, Ⅱ, Ⅲ, Ⅳ or Ⅴ as shown)
PED	ped	Pedestrian
PEU	peu	Photoelectric unit
PPB	ppb	Pedestrian push button
RL		Relocated equipment
RM	rm	Ramp metering
SB	sb	Slip base
SIC	sic	Signal interconnect cable
SIG	sig	Signal
SMA	sma	Signal mast arm
SNS	sns	Street name sign
SP	sp	Service point
TDC	tdc	Telephone demarcation cabinet
TMS	tms	Traffic monitoring station
TOS	tos	Traffic Operations System
VEH	veh	Vehicle
XFMR	xfmr	Transformer
COMM	comm	Communication
RWIS	rwis	Roadway weather information system

SOFFIT AND WALL MOUNTED LUMINAIRES

Pendant, 70 W HPS unless otherwise specified.

Flush, 70 W HPS unless otherwise specified.

Wall surface, 70 W HPS unless otherwise specified.

Existing soffit or wall luminaire to remain unmodified.

Existing soffit or wall luminaire to be modified as specified.

NOTE:

Arrow indicates "street side" of luminaire.

STATE OF CALIFORNIA
DEPARTMENT OF TRANSPORTATION

ELECTRICAL SYSTEMS (SYMBOLS AND ABBREVIATIONS)

NO SCALE

RSP ES-1A DATED OCTOBER 5, 2007 SUPERSEDES STANDARD PLAN ES-1A DATED MAY 1, 2006 - PAGE 400 OF THE STANDARD PLANS BOOK DATED MAY 2006.

REVISED STANDARD PLAN RSP ES-1A

2006 REVISED STANDARD PLAN RSP ES-1A

DIST	COUNTY	ROUTE	POST MILES TOTAL PROJECT	SHEET NO.	TOTAL SHEETS
06	Ker	5	69.6/73.1	39	41

REGISTERED ELECTRICAL ENGINEER

October 5, 2007
PLANS APPROVAL DATE

REGISTERED PROFESSIONAL ENGINEER Jeffery G. McRae No. E14512 Exp. 6-30-08 ELECTRICAL STATE OF CALIFORNIA

The State of California or its officers or agents shall not be responsible for the accuracy or completeness of electronic copies of this plan sheet.

To accompany plans dated 9-6-11

CONDUIT

PROPOSED	EXISTING	
		Lighting Conduit, unless otherwise indicated or noted
		Traffic signal conduit
C	c	Communication conduit
T	t	Telephone conduit
F	f	Fire alarm conduit
FO	fo	Fiber optic conduit
		Conduit termination (RSP ES-9A C)
R	r	Conduit riser in/on structure or service pole

SERVICE EQUIPMENT

PROPOSED	EXISTING	
OH	oh	Overhead lines
U	U	Wood pole "U" indicates utility owned
		Pole guy with anchor
		Utility transformer - ground mounted
III		Service equipment enclosure type
		Service equipment enclosure door indicates front of enclosure
T	t	Telephone demarcation cabinet

POLE-MOUNTED SERVICE DESIGNATION

Type of installation

TYPE H SERVICE - 28'-10" ← Pole height above grade

ILLUMINATED OVERHEAD SIGN

PROPOSED	EXISTING	
		Overhead sign - Single post
		Overhead sign - Two post
		Overhead sign - Mounted on structure
		Overhead sign with electrolier

SIGNAL EQUIPMENT

PROPOSED	EXISTING	
		Pedestrian signal face
		Pedestrian push button post
		Pedestrian barricade
		Vehicle signal face (with backplate, 3-Section: red, yellow and green)
		Vehicle signal face with angle visors
PV	PV	Modifications of basic symbols: "L" indicates all non-arrow sections louvered "LG" indicates louvered green section only "PV" indicates 12" programmed visibility sections "8" indicates all 8" sections (only when specified)
		Type 15TS and Vehicle signal face
		Vehicle signal face with red, yellow and green left arrow sections
		Vehicle signal face with red and yellow sections and up green arrow
		Vehicle signal face (5 Section) with red, yellow and green sections and yellow and green right arrows
		Type 1 Standard and attached vehicle signal faces
		Standard with signal mast arm only and attached vehicle signal faces and internally illuminated street name sign
		Type 33 Standard, Left-turn vehicle signal face and sign
		Standard with luminaire and signal mast arms and attached vehicle signal faces
		Cantilever flashing beacon Type 9 Frame, with a sign unless otherwise specified or indicated
		Type 15-FBS Standard with two vehicle signal face sections with lens, backplate and visor with a sign
R	Y	Flashing beacon. One vehicle signal face section with lens, backplate and visor. "R" indicates red indication, "Y" indicates yellow indication
		Controller assembly. Door indicates front of cabinet

SIGNAL EQUIPMENT Cont

PROPOSED	EXISTING	
		Guard post
		Type 1 Standard with "Meter On" sign
		Emergency Vehicle detector

NOTES:

1. All signal sections shall be 12" unless shown otherwise.
2. Signal heads shall be provided with backplates unless shown otherwise.
3. Signal indication shall be LED.

STATE OF CALIFORNIA
DEPARTMENT OF TRANSPORTATION

ELECTRICAL SYSTEMS (SYMBOLS AND ABBREVIATIONS)

NO SCALE

RSP ES-1B DATED OCTOBER 5, 2007 SUPERCEDES STANDARD PLAN ES-1B DATED MAY 1, 2006 - PAGE 401 OF THE STANDARD PLANS BOOK DATED MAY 2006.

REVISED STANDARD PLAN RSP ES-1B

2006 REVISED STANDARD PLAN RSP ES-1B

DIST	COUNTY	ROUTE	POST MILES TOTAL PROJECT	SHEET NO.	TOTAL SHEETS
06	Ker	5	69.6/73.1	40	41

REGISTERED ELECTRICAL ENGINEER

October 5, 2007
PLANS APPROVAL DATE

REGISTERED PROFESSIONAL ENGINEER Jeffery G. McRae No. E14512 Exp. 6-30-08 ELECTRICAL STATE OF CALIFORNIA

The State of California or its officers or agents shall not be responsible for the accuracy or completeness of electronic copies of this plan sheet.

To accompany plans dated 9-6-11

2006 REVISED STANDARD PLAN RSP ES-1C

EQUIPMENT IDENTIFICATION

ILLUMINATED SIGN IDENTIFICATION NUMBER:

Sign No. 12345 — Sign number - Place on post or structure

10 ISL SCI 1.0

- 1.0 — Transformer rating (kVA)
- SCI — Lighting control type
- ISL — Number and type of fixtures

Do NOT place on standard or structure

ELECTROLIER OR EQUIPMENT IDENTIFICATION NUMBER:

12345 - 15'-0"

- 15'-0" — Mast arm length, if shown. Do not place on standard or structure.
- 12345 — Equipment number - Place on standard or structure. Existing equipment numbers are shown in parenthesis

CONDUIT AND CONDUCTOR IDENTIFICATION:

1½"C, 2#10, 15#14, 2 DLC

- 2#10, 15#14, 2 DLC — Number and size of conductors and cables
- 1½"C — Size of conduit in inches

Ø1, Ø2, Ø2P, etc.	Traffic phase identification for signal faces, detectors and phase diagrams
1 2 3	Project note numbers
A B C	Equipment description, installation or item numbers
1 2 3	Conduit run numbers

SIGNAL AND LIGHTING STANDARD (TYPICAL DESIGNATION):

19A - 3 - 100

- 100 — Wind velocity = 100 mph
- 3 — Case 3 arm loading
- 19A — Standard type
- Standard Plan sheet number
- Detail number or letter

MISCELLANEOUS EQUIPMENT

PROPOSED	EXISTING	
CMS	cms	Changeable message sign
		Closed circuit television camera
		Highway advisory radio pole and antenna
EMS	ems	Extinguishable message sign
M V	m v	Detection device M = Microwave sensor V = Video image sensor

WIRING DIAGRAM LEGEND

P	Pole
CB	Circuit breaker
A	Ampere
V	Volt
M	Metered
UM	Unmetered
NB	Neutral bus
GB	Ground bus
G	Equipment grounding conductor
N	Grounded conductor (Neutral)

- External conductor
- Conductor or bus
- Tie point
- Contactor coil
- Contactor, Contact NO
- Terminal blocks
- Contactor, Contact NC
- Enclosure bond
- Grounding electrode
- Circuit breaker
- Receptacle

PULL BOXES

PROPOSED	EXISTING	
		Pull box-No. 5 unless otherwise indicated or noted.
3	9A(21)	Pull box-Additional designations or descriptions

3 = No. 3½ pull box
5 = No. 5 pull box
6 = No. 6 pull box
7 = No. 7 (Ceiling pull box)
8 = No. 8 (Pendant soffit pull box)
9 = No. 9 pull box
9A = No. 9A pull box

(C) = Communications pull box
(E) = Pull box with extension
(S) = Sprinkler control pull box
(21) = Anchor bolts and conduit for future installation of Type 21 Standard
(T) = Traffic pull box

VEHICLE DETECTORS

5 J 9 U

- U = Upper
- L = Lower
- Slot number in input file
- Input file (I or J)
- Phase

PROPOSED	EXISTING	
		Type A detector loop. Outline of sawcut shown.
		Type B detector loop. Outline of sawcut shown.
		Type C detector loop. Outline of sawcut shown.
		Type D detector loop. Outline of sawcut shown.
		Type E detector loop. Outline of sawcut shown.
		Type Q detector loop. Outline of sawcut shown.
		Magnetic detector
DH	dh	Detector handhole
		Microwave or video detection zone

STATE OF CALIFORNIA
DEPARTMENT OF TRANSPORTATION

ELECTRICAL SYSTEMS (SYMBOLS AND ABBREVIATIONS)

NO SCALE

RSP ES-1C DATED OCTOBER 5, 2007 SUPERCEDES STANDARD PLAN ES-1C DATED MAY 1, 2006 - PAGE 402 OF THE STANDARD PLANS BOOK DATED MAY 2006.

REVISED STANDARD PLAN RSP ES-1C

DIST	COUNTY	ROUTE	POST MILES TOTAL PROJECT	SHEET NO.	TOTAL SHEETS
06	Ker	5	69.6/73.1	41	41

REGISTERED ELECTRICAL ENGINEER

October 5, 2007
PLANS APPROVAL DATE

REGISTERED PROFESSIONAL ENGINEER
Jeffery G. McRae
No. E14512
Exp. 6-30-08
ELECTRICAL
STATE OF CALIFORNIA

The State of California or its officers or agents shall not be responsible for the accuracy or completeness of electronic copies of this plan sheet.

To accompany plans dated 9-6-11

2006 REVISED STANDARD PLAN RSP ES-14A

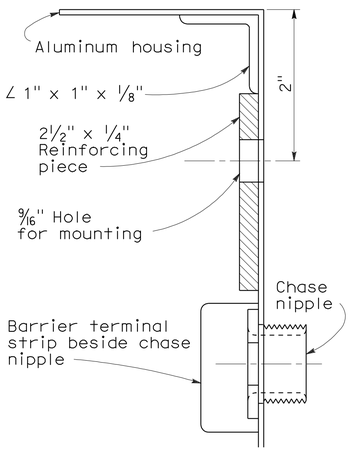

REINFORCING DETAIL

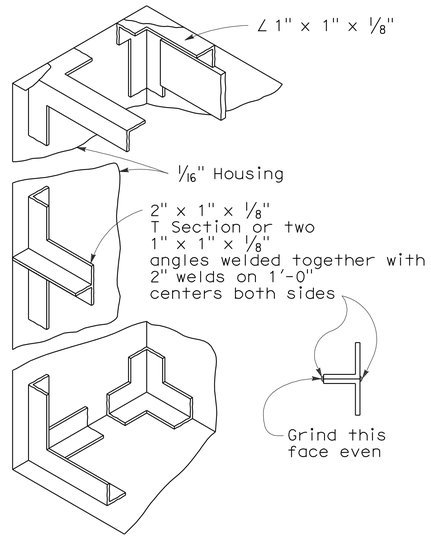

FRAMING DETAILS

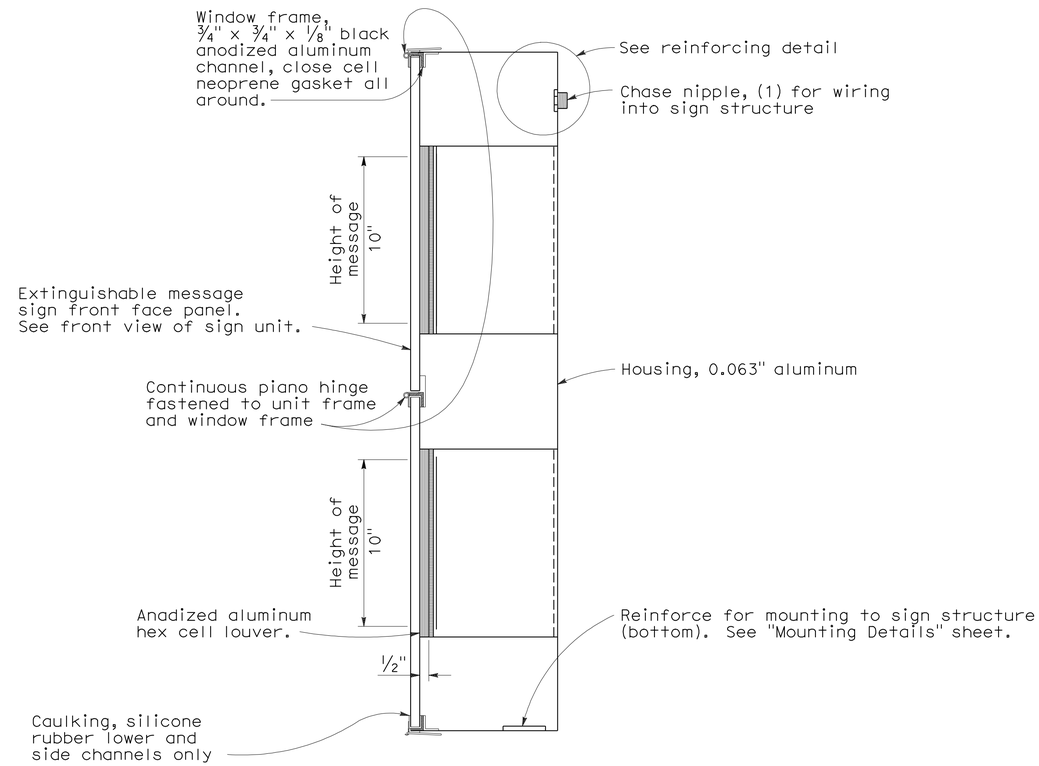

CROSS-SECTION OF SIGN

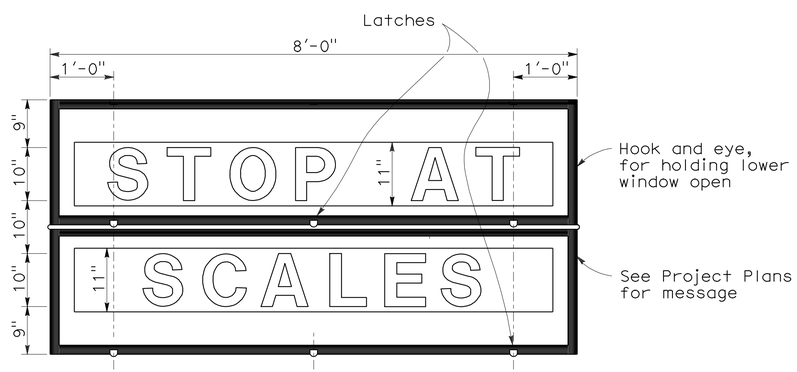

FRONT VIEW OF SIGN

Note:

See Wiring Notes and Symbols on Revised Standard Plan RSP ES-14B.

STATE OF CALIFORNIA
DEPARTMENT OF TRANSPORTATION

ELECTRICAL SYSTEMS (LED EXTINGUISHABLE MESSAGE SIGN 10" LETTERS)

NO SCALE

RSP ES-14A DATED OCTOBER 5, 2007 SUPERCEDES STANDARD PLAN ES-14A DATED MAY 1, 2006 - PAGE 466 OF THE STANDARD PLANS BOOK DATED MAY 2006.

REVISED STANDARD PLAN RSP ES-14A

8-17-07