Dist	COUNTY	ROUTE	POST MILES TOTAL PROJECT	SHEET No.	TOTAL SHEETS
06	Ker	119	4.7/8.5	1	56

ACHSSTP-P119(015)E

STATE OF CALIFORNIA
DEPARTMENT OF TRANSPORTATION

PROJECT PLANS FOR CONSTRUCTION ON
STATE HIGHWAY

IN KERN COUNTY
NEAR TAFT
FROM 0.2 MILE WEST OF AIRPORT ROAD
TO 0.3 MILE WEST OF LAKEVIEW WASH BRIDGE

TO BE SUPPLEMENTED BY STANDARD PLANS DATED MAY 2006

INDEX OF PLANS

SHEET No.	DESCRIPTION
1	TITLE AND LOCATION MAP
2	TYPICAL CROSS SECTIONS
3-11	LAYOUTS
12-19	CONSTRUCTION DETAILS
20	EROSION CONTROL QUANTITIES
21-25	DRAINAGE PROFILES, DETAILS AND QUANTITIES
26-34	UTILITY PLANS
35	CONSTRUCTION AREA SIGNS
36-44	PAVEMENT DELINEATION AND SIGN PLANS AND QUANTITIES
45-47	SUMMARY OF QUANTITIES
48-56	REVISED AND NEW STANDARD PLANS

THE STANDARD PLANS LIST APPLICABLE TO THIS CONTRACT IS INCLUDED IN THE NOTICE TO BIDDERS AND SPECIAL PROVISIONS BOOK.

LOCATION MAP

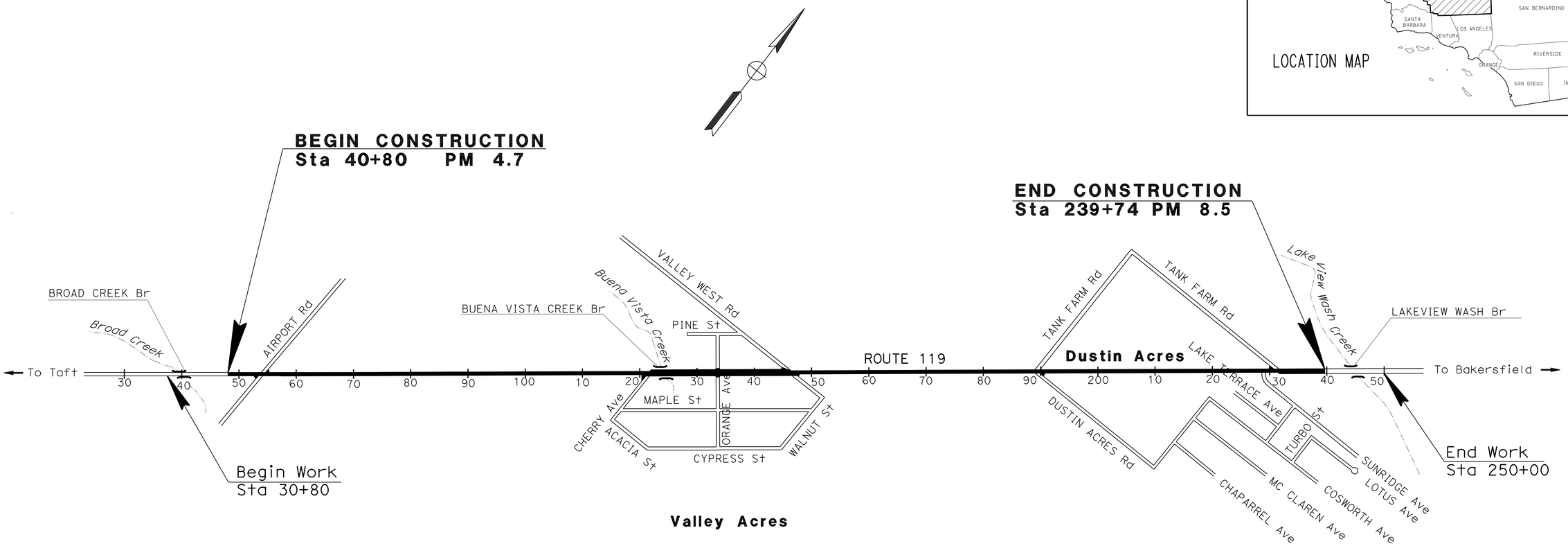

NO SCALE

12-15-10
PROJECT ENGINEER DATE
REGISTERED CIVIL ENGINEER

September 19, 2011
PLANS APPROVAL DATE

REGISTERED PROFESSIONAL ENGINEER
D S SANGHA
No. 59652
Exp. 12/31/12
CIVIL
STATE OF CALIFORNIA

THE STATE OF CALIFORNIA OR ITS OFFICERS OR AGENTS SHALL NOT BE RESPONSIBLE FOR THE ACCURACY OR COMPLETENESS OF SCANNED COPIES OF THIS PLAN SHEET.

PROJECT MANAGER STEVEN MILTON

DESIGN ENGINEER DAVID SANGHA

THE CONTRACTOR SHALL POSSESS THE CLASS (OR CLASSES) OF LICENSE AS SPECIFIED IN THE "NOTICE TO BIDDERS."

CONTRACT No.	06-0J5204
PROJECT ID	0600000187

LAST REVISION 12-15-10 DATE PLOTTED => 02-NOV-2011 TIME PLOTTED => 15:44

Dist	COUNTY	ROUTE	POST MILES TOTAL PROJECT	SHEET No.	TOTAL SHEETS
06	Ker	119	4.7/8.5	2	56

REGISTERED CIVIL ENGINEER 12-15-10 DATE

9-19-11
PLANS APPROVAL DATE

REGISTERED PROFESSIONAL ENGINEER D S SANGHA No. 59652 Exp.12/31/12 CIVIL STATE OF CALIFORNIA

THE STATE OF CALIFORNIA OR ITS OFFICERS OR AGENTS SHALL NOT BE RESPONSIBLE FOR THE ACCURACY OR COMPLETENESS OF SCANNED COPIES OF THIS PLAN SHEET.

NOTES:

1. DIMENSIONS OF THE PAVEMENT STRUCTURES (STRUCTURAL SECTIONS) ARE SUBJECT TO TOLERANCES SPECIFIED IN THE STANDARD SPECIFICATIONS.

2. FOR LOCAL ROAD TYPICAL SHOULDER WIDTH SEE CONSTRUCTION DETAILS SHEETS.

ABBREVIATION:

HMA: HOT MIX ASPHALT

DESIGN DESIGNATION (ROUTE 119)

ADT (2009) = 12,600
ADT (2019) = 15,600
ADT (2029) = 19,300
DHV = 1400
D = 60%
T = 22%

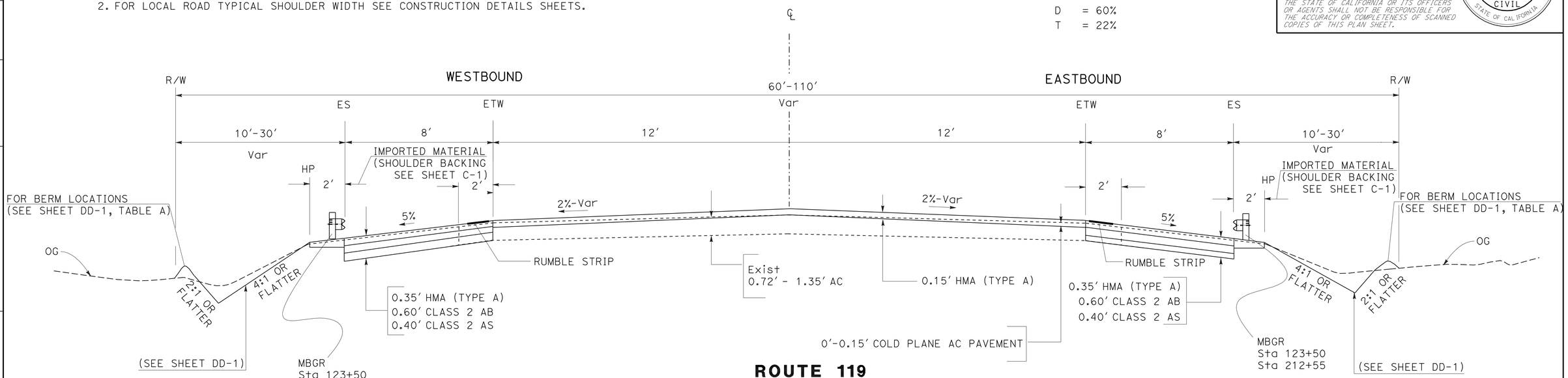

ROUTE 119

Sta 40+80.00 - 239+74.00

PM 4.7 - PM 8.5

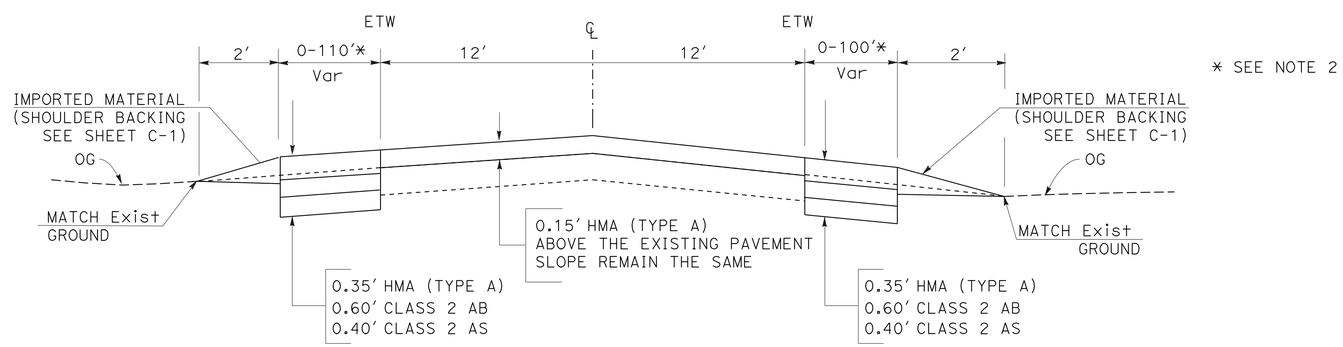

LOCAL ROADS TYPICAL

TYPICAL CROSS SECTIONS X-1

NO SCALE

STATE OF CALIFORNIA - DEPARTMENT OF TRANSPORTATION
DESIGN
FUNCTIONAL SUPERVISOR: DAVID SANGHA
CALCULATED-DESIGNED BY: AMRITPAL BADHESHA
CHECKED BY: LARRY CAO
REVISED BY
DATE REVISED

LAST REVISION 05-26-11
DATE PLOTTED => 02-NOV-2011
TIME PLOTTED => 15:44

Dist	COUNTY	ROUTE	POST MILES TOTAL PROJECT	SHEET No.	TOTAL SHEETS
06	Ker	119	4.7/8.5	3	56

REGISTERED CIVIL ENGINEER 05-26-11 DATE

9-19-11
PLANS APPROVAL DATE

REGISTERED PROFESSIONAL ENGINEER
D S SANGHA
No. 59652
Exp. 12/31/12
CIVIL
STATE OF CALIFORNIA

THE STATE OF CALIFORNIA OR ITS OFFICERS OR AGENTS SHALL NOT BE RESPONSIBLE FOR THE ACCURACY OR COMPLETENESS OF SCANNED COPIES OF THIS PLAN SHEET.

NOTES:

1. FOR ACCURATE RIGHT OF WAY DATA, CONTACT RIGHT OF WAY ENGINEERING AT THE DISTRICT OFFICE.
2. STATIONINGS ARE FOR CONSTRUCTION PURPOSES ONLY.

LEGEND:

TFESA — TEMPORARY FENCE (TYPE ESA)

FR — TEMPORARY FIBER ROLL

TEMPORARY HYDRAULIC MULCH (BONDED FIBER MATRIX)

DRAINAGE SYSTEM No.

DRAINAGE UNIT No.

COLD PLAN

ABBREVIATIONS:

THM - Temp HYDRAULIC MULCH
TFR - Temp FIBER ROLL
AFTS - ALTERNATIVE FLARED TERMINAL SYSTEM

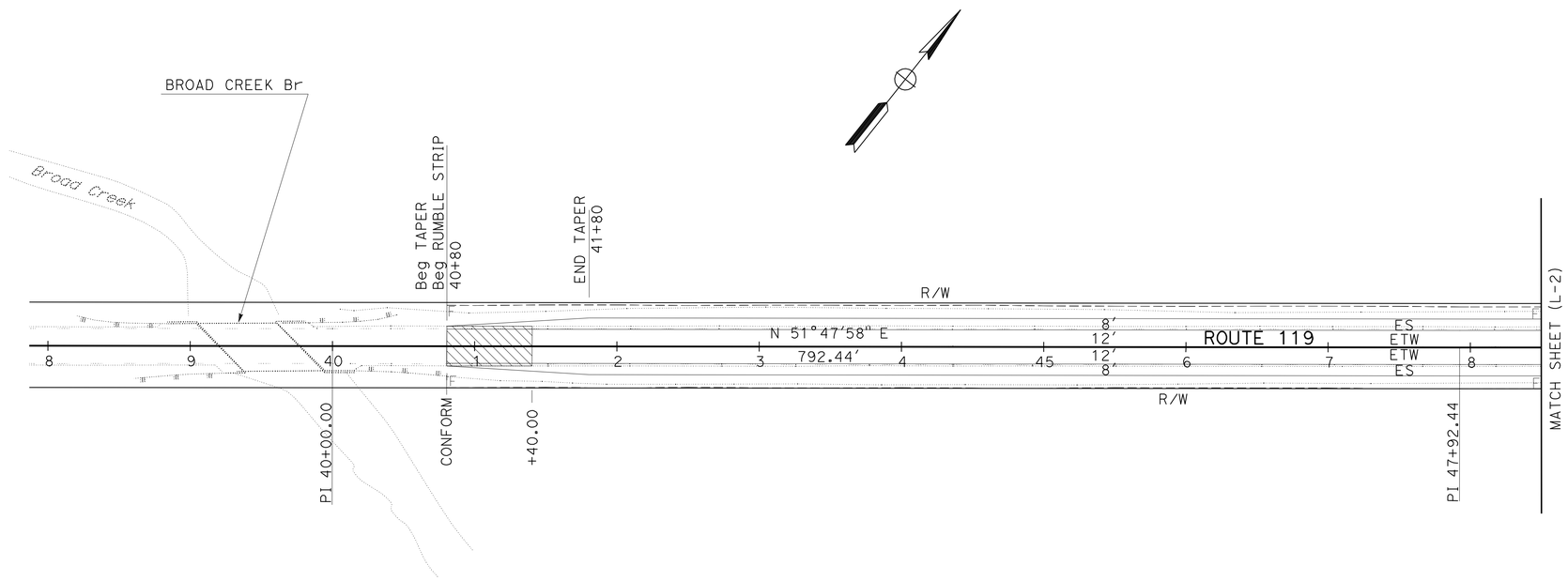

SCALE: 1" = 50'

LAYOUT L-1

STATE OF CALIFORNIA - DEPARTMENT OF TRANSPORTATION
Caltrans
DESIGN

FUNCTIONAL SUPERVISOR: DAVID SANGHA
CALCULATED-DESIGNED BY: LARRY CAO
CHECKED BY: AMRITPAL BADHESHA
REVISED BY
DATE REVISED

LAST REVISION 05-26-11
DATE PLOTTED => 02-NOV-2011
TIME PLOTTED => 15:44

Dist	COUNTY	ROUTE	POST MILES TOTAL PROJECT	SHEET No.	TOTAL SHEETS
06	Ker	119	4.7/8.5	4	56

REGISTERED CIVIL ENGINEER 05-26-11 DATE

9-19-11
PLANS APPROVAL DATE

REGISTERED PROFESSIONAL ENGINEER D S SANGHA No. 59652 Exp. 12/31/12 CIVIL STATE OF CALIFORNIA

THE STATE OF CALIFORNIA OR ITS OFFICERS OR AGENTS SHALL NOT BE RESPONSIBLE FOR THE ACCURACY OR COMPLETENESS OF SCANNED COPIES OF THIS PLAN SHEET.

NOTE:

FOR ACCURATE RIGHT OF WAY DATA, CONTACT RIGHT OF WAY ENGINEERING AT THE DISTRICT OFFICE.

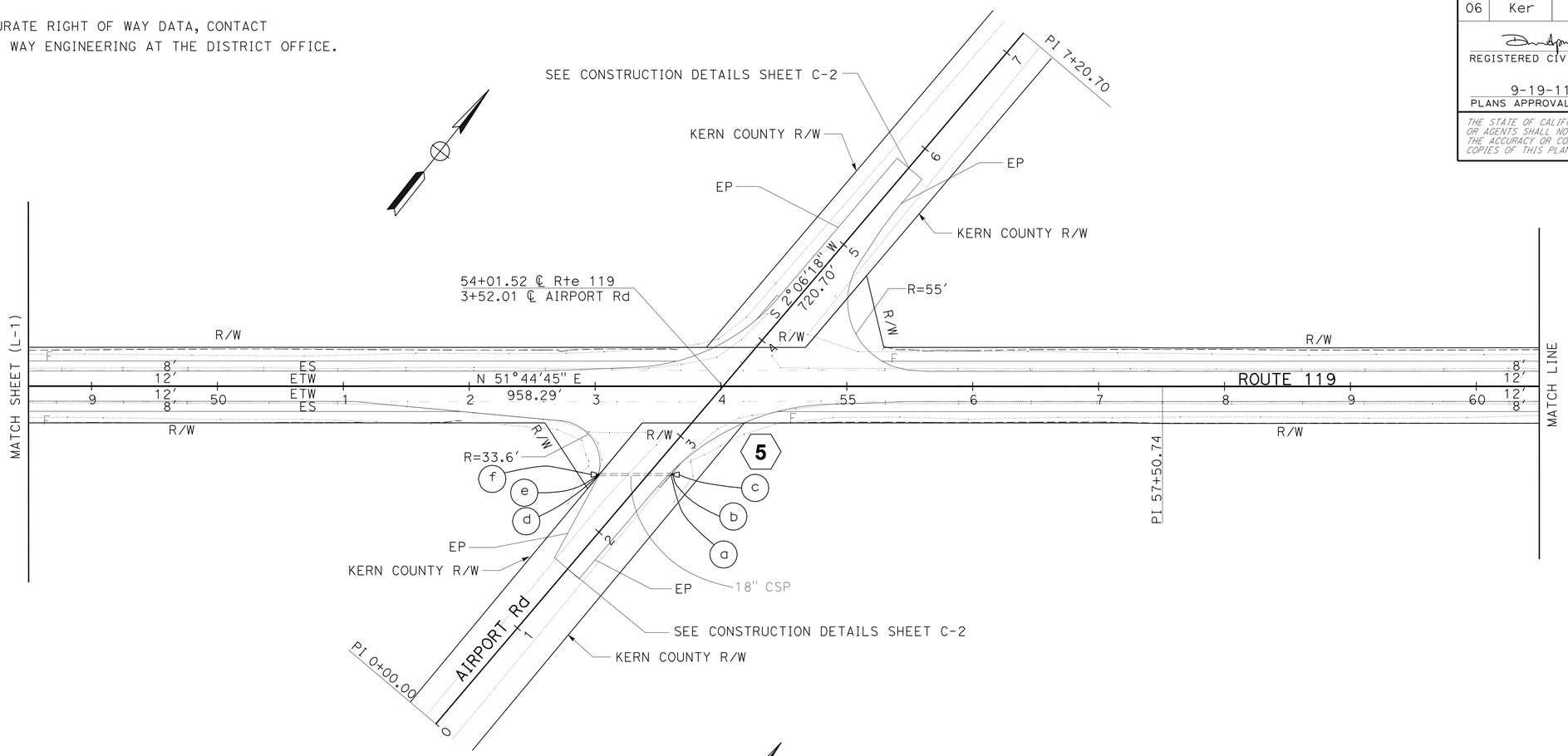

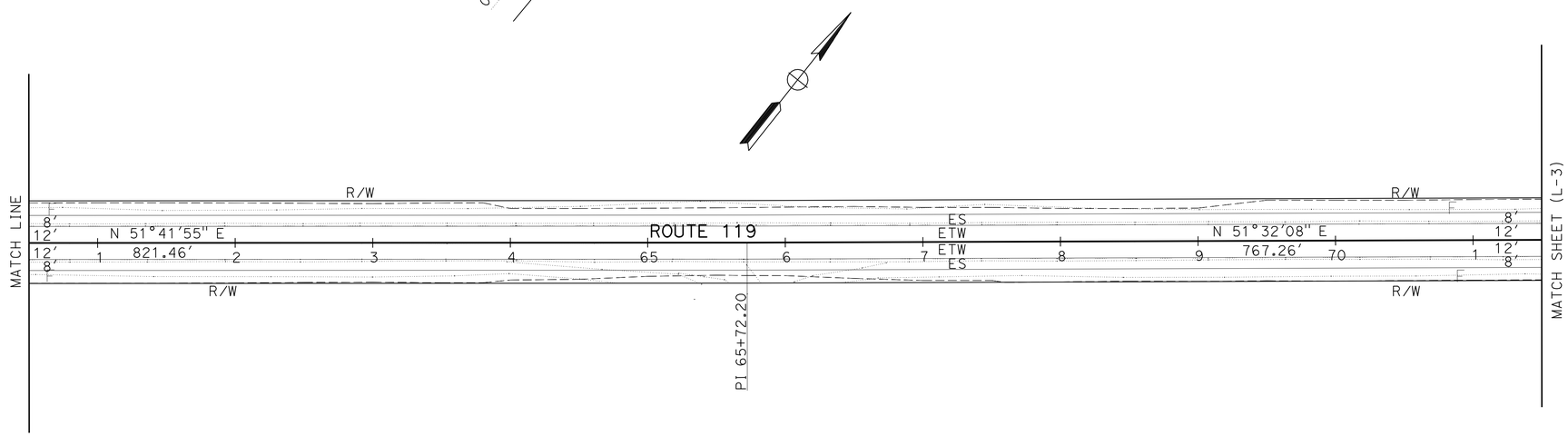

SCALE: 1" = 50'

LAYOUT L-2

REVISED BY	DATE REVISED

CALCULATED-DESIGNED BY	CHECKED BY
LARRY CAO	AMRITPAL BADHESHA

FUNCTIONAL SUPERVISOR: DAVID SANGHA

STATE OF CALIFORNIA - DEPARTMENT OF TRANSPORTATION

Caltrans

DESIGN

LAST REVISION 05-26-11 | DATE PLOTTED => 02-NOV-2011 | TIME PLOTTED => 15:45

Dist	COUNTY	ROUTE	POST MILES TOTAL PROJECT	SHEET No.	TOTAL SHEETS
06	Ker	119	4.7/8.5	5	56

REGISTERED CIVIL ENGINEER 05-26-11 DATE

9-19-11
PLANS APPROVAL DATE

REGISTERED PROFESSIONAL ENGINEER
D S SANGHA
No. 59652
Exp. 12/31/12
CIVIL
STATE OF CALIFORNIA

THE STATE OF CALIFORNIA OR ITS OFFICERS OR AGENTS SHALL NOT BE RESPONSIBLE FOR THE ACCURACY OR COMPLETENESS OF SCANNED COPIES OF THIS PLAN SHEET.

NOTE:

FOR ACCURATE RIGHT OF WAY DATA, CONTACT RIGHT OF WAY ENGINEERING AT THE DISTRICT OFFICE.

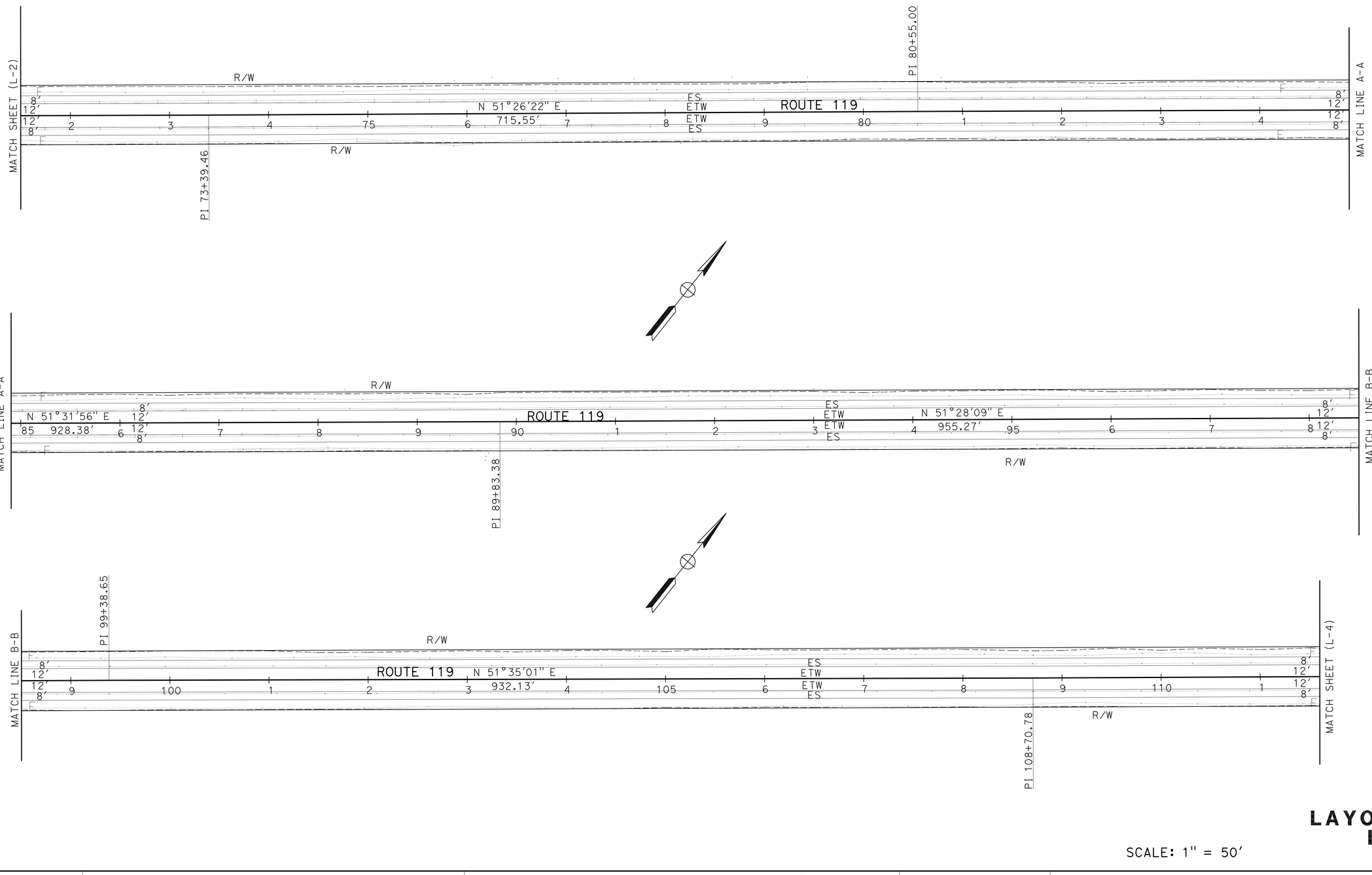

SCALE: 1" = 50'

LAYOUT L-3

REVISED BY	DATE REVISED
LARRY CAO	AMRITPAL BADHESHA
CALCULATED-DESIGNED BY	CHECKED BY
FUNCTIONAL SUPERVISOR	DAVID SANGHA

STATE OF CALIFORNIA - DEPARTMENT OF TRANSPORTATION

Caltrans

DESIGN

LAST REVISION 05-26-11 | DATE PLOTTED => 02-NOV-2011 | TIME PLOTTED => 15:45

Dist	COUNTY	ROUTE	POST MILES TOTAL PROJECT	SHEET No.	TOTAL SHEETS
06	Ker	119	4.7/8.5	6	56

REGISTERED CIVIL ENGINEER 05-26-11 DATE

9-19-11
PLANS APPROVAL DATE

REGISTERED PROFESSIONAL ENGINEER
D S SANGHA
No. 59652
Exp. 12/31/12
CIVIL
STATE OF CALIFORNIA

THE STATE OF CALIFORNIA OR ITS OFFICERS OR AGENTS SHALL NOT BE RESPONSIBLE FOR THE ACCURACY OR COMPLETENESS OF SCANNED COPIES OF THIS PLAN SHEET.

NOTE:

FOR ACCURATE RIGHT OF WAY DATA, CONTACT
RIGHT OF WAY ENGINEERING AT THE DISTRICT OFFICE.

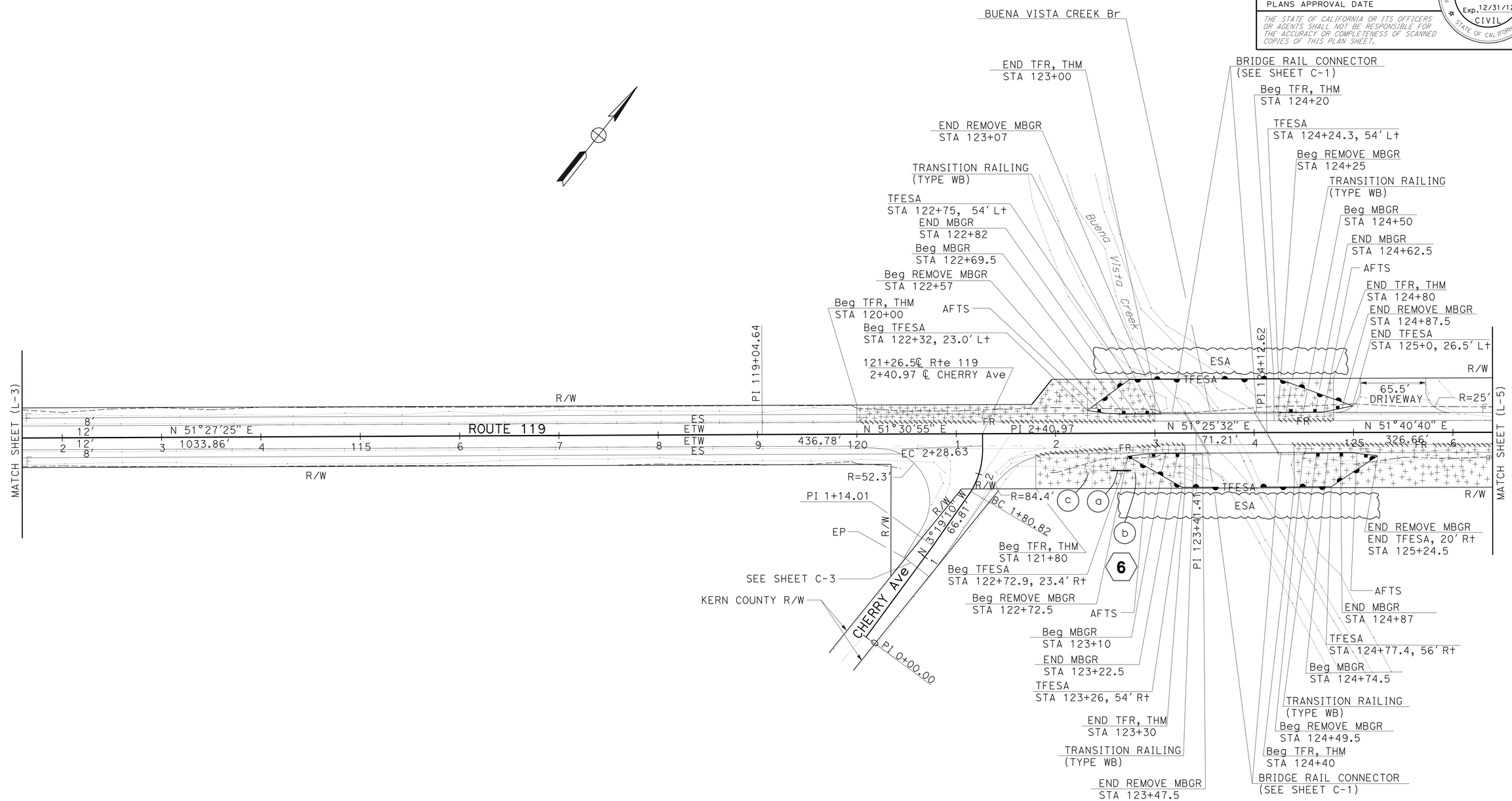

LAYOUT L-4

SCALE: 1" = 50'

STATE OF CALIFORNIA - DEPARTMENT OF TRANSPORTATION
Caltrans
DESIGN

FUNCTIONAL SUPERVISOR: DAVID SANGHA
CALCULATED-DESIGNED BY: AMRITPAL BADHESHA
CHECKED BY: LARRY CAO
REVISED BY
DATE REVISED

LAST REVISION 05-26-11
DATE PLOTTED => 02-NOV-2011
TIME PLOTTED => 15:45

Dist	COUNTY	ROUTE	POST MILES TOTAL PROJECT	SHEET No.	TOTAL SHEETS
06	Ker	119	4.7/8.5	7	56

REGISTERED CIVIL ENGINEER 05-26-11 DATE

9-19-11
PLANS APPROVAL DATE

REGISTERED PROFESSIONAL ENGINEER
D S SANGHA
No. 59652
Exp. 12/31/12
CIVIL
STATE OF CALIFORNIA

THE STATE OF CALIFORNIA OR ITS OFFICERS OR AGENTS SHALL NOT BE RESPONSIBLE FOR THE ACCURACY OR COMPLETENESS OF SCANNED COPIES OF THIS PLAN SHEET.

NOTE:

FOR ACCURATE RIGHT OF WAY DATA, CONTACT RIGHT OF WAY ENGINEERING AT THE DISTRICT OFFICE.

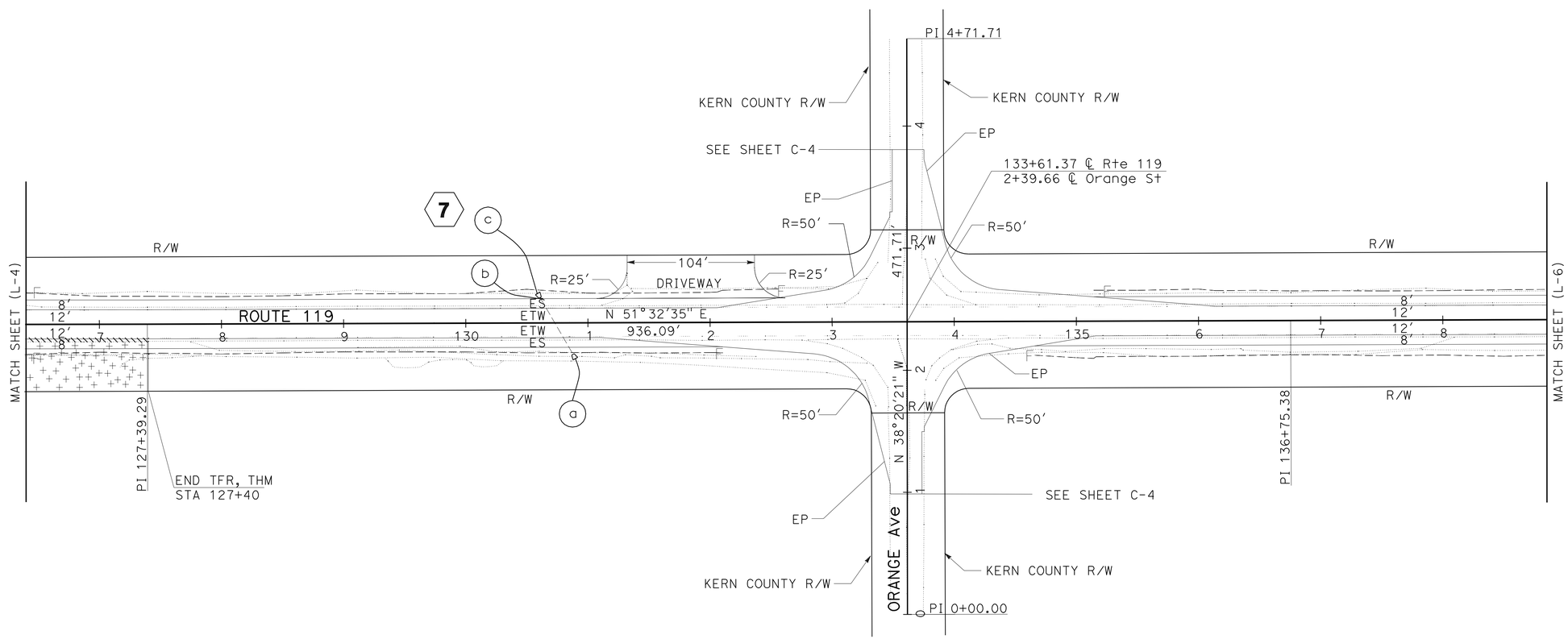

SCALE: 1" = 50'

LAYOUT L-5

STATE OF CALIFORNIA - DEPARTMENT OF TRANSPORTATION
Caltrans®
DESIGN

FUNCTIONAL SUPERVISOR: DAVID SANGHA
CALCULATED-DESIGNED BY: AMRITPAL BADHESHA
CHECKED BY: LARRY CAO
REVISED BY
DATE REVISED

LAST REVISION 05-26-11
DATE PLOTTED => 02-NOV-2011
TIME PLOTTED => 15:45

Dist	COUNTY	ROUTE	POST MILES TOTAL PROJECT	SHEET No.	TOTAL SHEETS
06	Ker	119	4.7/8.5	8	56

REGISTERED CIVIL ENGINEER 05-26-11 DATE

9-19-11
PLANS APPROVAL DATE

REGISTERED PROFESSIONAL ENGINEER
D S SANGHA
No. 59652
Exp. 12/31/12
CIVIL
STATE OF CALIFORNIA

THE STATE OF CALIFORNIA OR ITS OFFICERS OR AGENTS SHALL NOT BE RESPONSIBLE FOR THE ACCURACY OR COMPLETENESS OF SCANNED COPIES OF THIS PLAN SHEET.

NOTE:

FOR ACCURATE RIGHT OF WAY DATA, CONTACT RIGHT OF WAY ENGINEERING AT THE DISTRICT OFFICE.

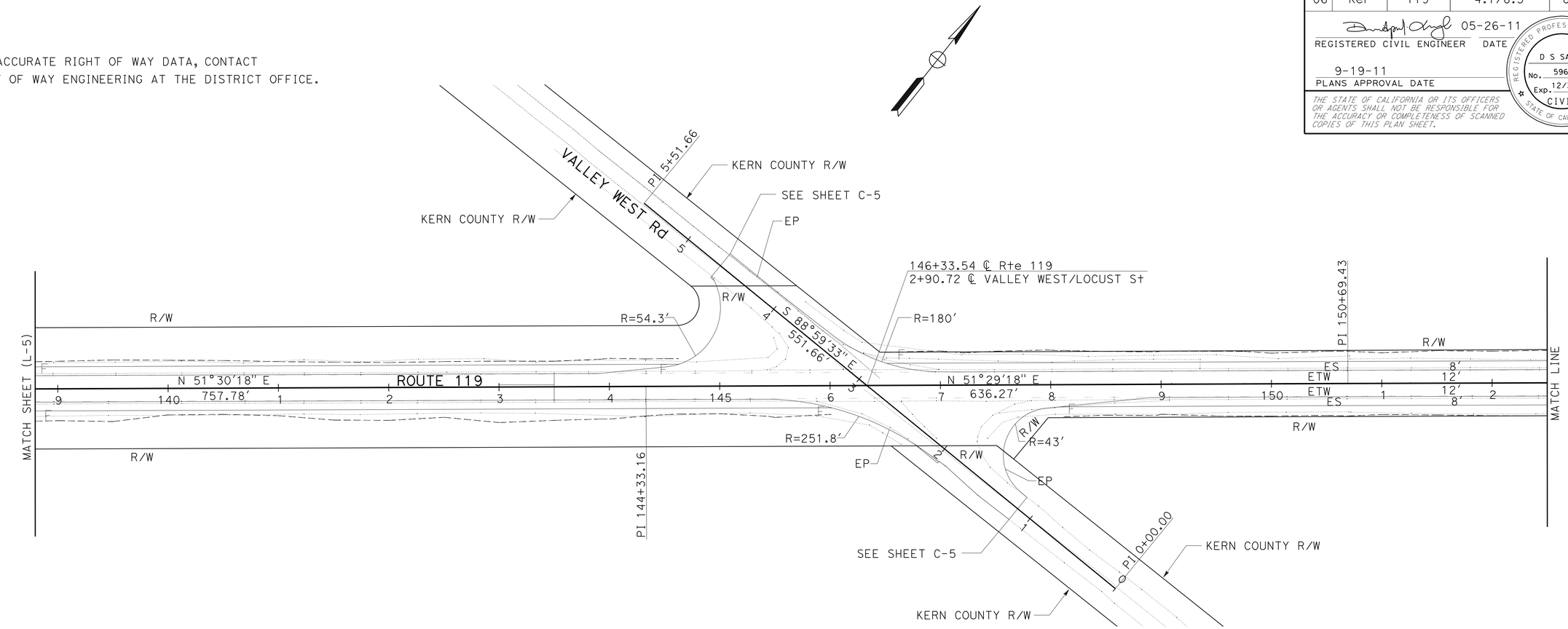

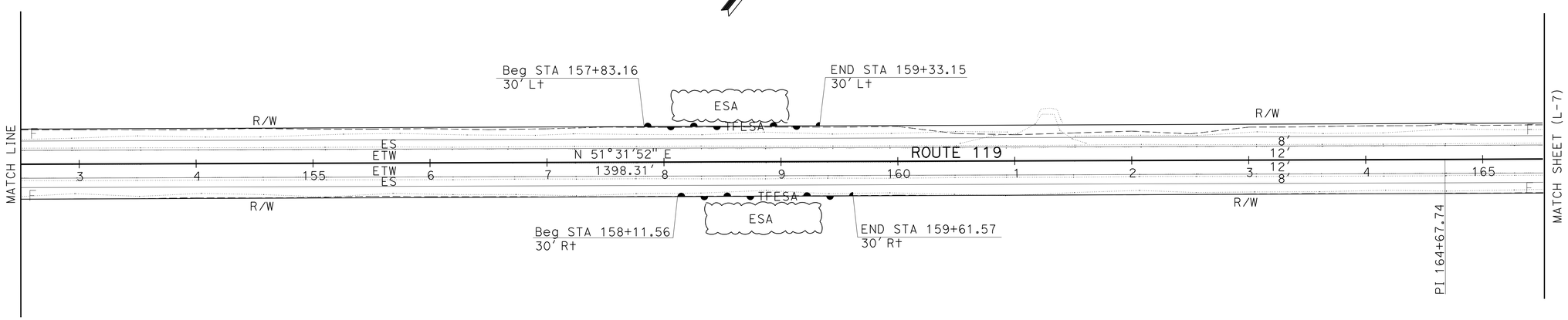

SCALE: 1″ = 50′

LAYOUT L-6

STATE OF CALIFORNIA - DEPARTMENT OF TRANSPORTATION
Caltrans®
DESIGN

FUNCTIONAL SUPERVISOR: DAVID SANGHA
CALCULATED-DESIGNED BY: AMRITPAL BADHESHA
CHECKED BY: LARRY CAO
REVISED BY
DATE REVISED

LAST REVISION 05-26-11
DATE PLOTTED => 02-NOV-2011
TIME PLOTTED => 15:45

Dist	COUNTY	ROUTE	POST MILES TOTAL PROJECT	SHEET No.	TOTAL SHEETS
06	Ker	119	4.7/8.5	9	56

REGISTERED CIVIL ENGINEER 05-26-11 DATE

9-19-11
PLANS APPROVAL DATE

REGISTERED PROFESSIONAL ENGINEER
D S SANGHA
No. 59652
Exp. 12/31/12
CIVIL
STATE OF CALIFORNIA

THE STATE OF CALIFORNIA OR ITS OFFICERS OR AGENTS SHALL NOT BE RESPONSIBLE FOR THE ACCURACY OR COMPLETENESS OF SCANNED COPIES OF THIS PLAN SHEET.

NOTE:

FOR ACCURATE RIGHT OF WAY DATA, CONTACT RIGHT OF WAY ENGINEERING AT THE DISTRICT OFFICE.

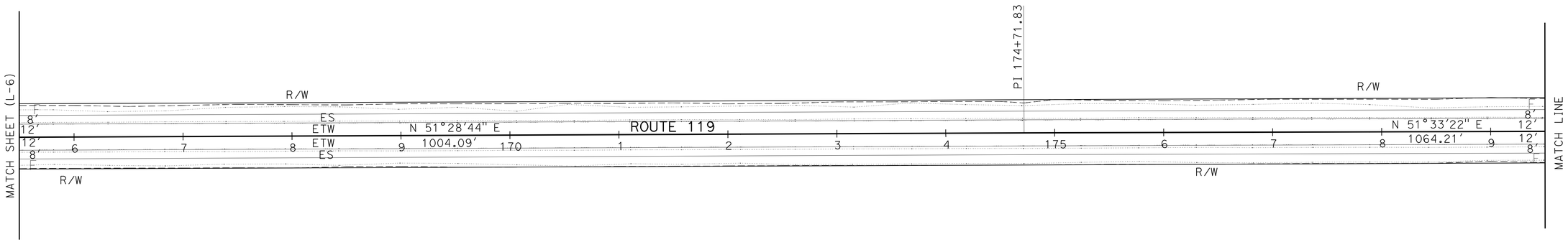

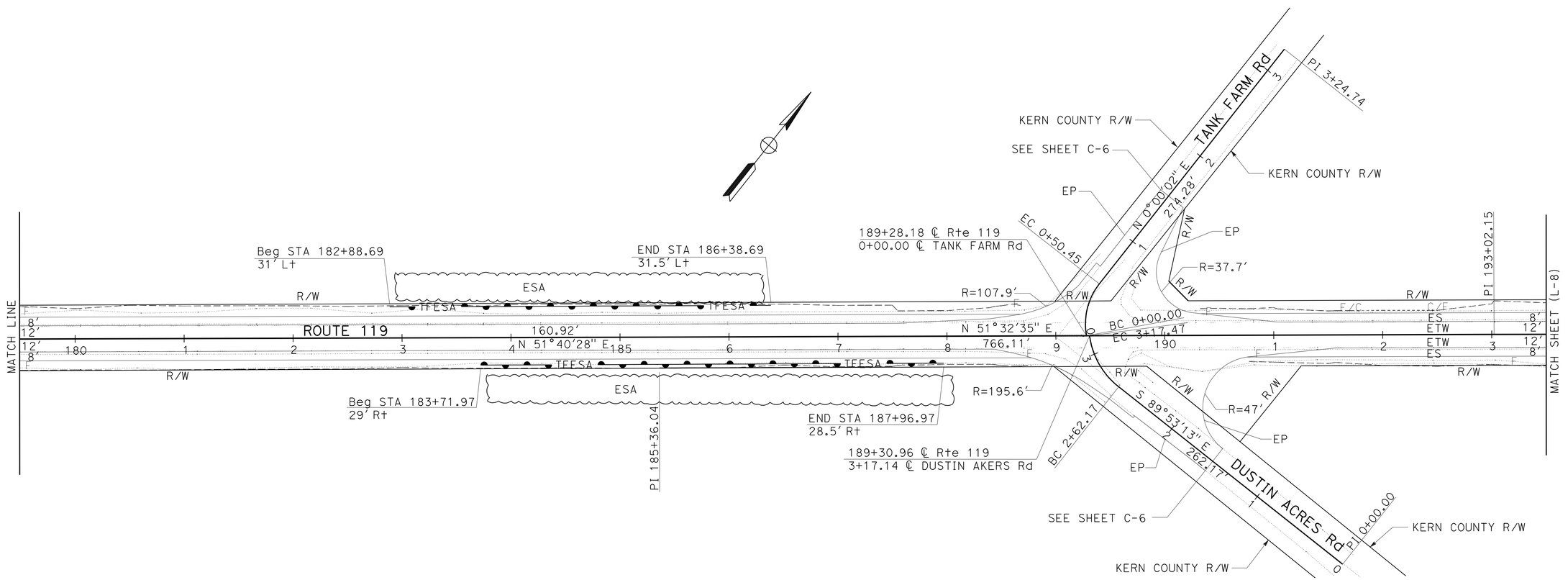

SCALE: 1" = 50'

LAYOUT L-7

STATE OF CALIFORNIA - DEPARTMENT OF TRANSPORTATION
DESIGN
Caltrans

FUNCTIONAL SUPERVISOR: DAVID SANGHA
CALCULATED-DESIGNED BY: AMRITPAL BADHESHA
CHECKED BY: LARRY CAO
REVISED BY
DATE REVISED

LAST REVISION 05-26-11
DATE PLOTTED => 02-NOV-2011
TIME PLOTTED => 15:45

Dist	COUNTY	ROUTE	POST MILES TOTAL PROJECT	SHEET No.	TOTAL SHEETS
06	Ker	119	4.7/8.5	10	56

REGISTERED CIVIL ENGINEER 05-26-11 DATE

9-19-11
PLANS APPROVAL DATE

REGISTERED PROFESSIONAL ENGINEER
D S SANGHA
No. 59652
Exp. 12/31/12
CIVIL
STATE OF CALIFORNIA

THE STATE OF CALIFORNIA OR ITS OFFICERS OR AGENTS SHALL NOT BE RESPONSIBLE FOR THE ACCURACY OR COMPLETENESS OF SCANNED COPIES OF THIS PLAN SHEET.

NOTE:

FOR ACCURATE RIGHT OF WAY DATA, CONTACT RIGHT OF WAY ENGINEERING AT THE DISTRICT OFFICE.

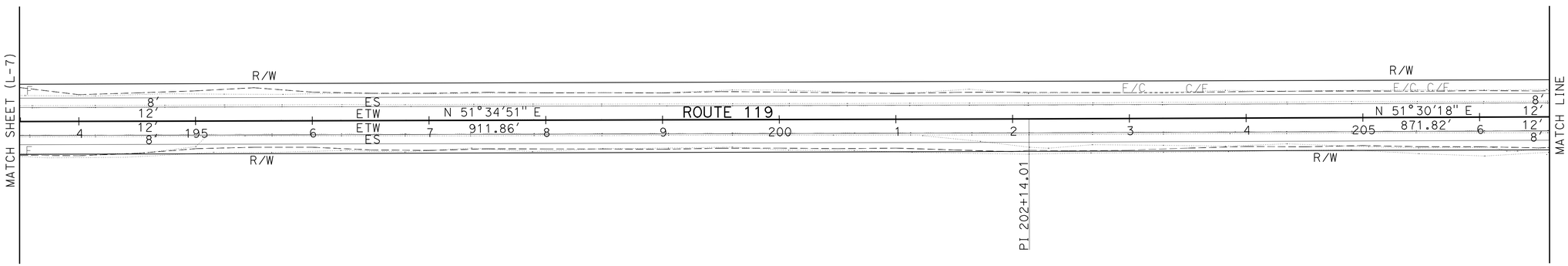

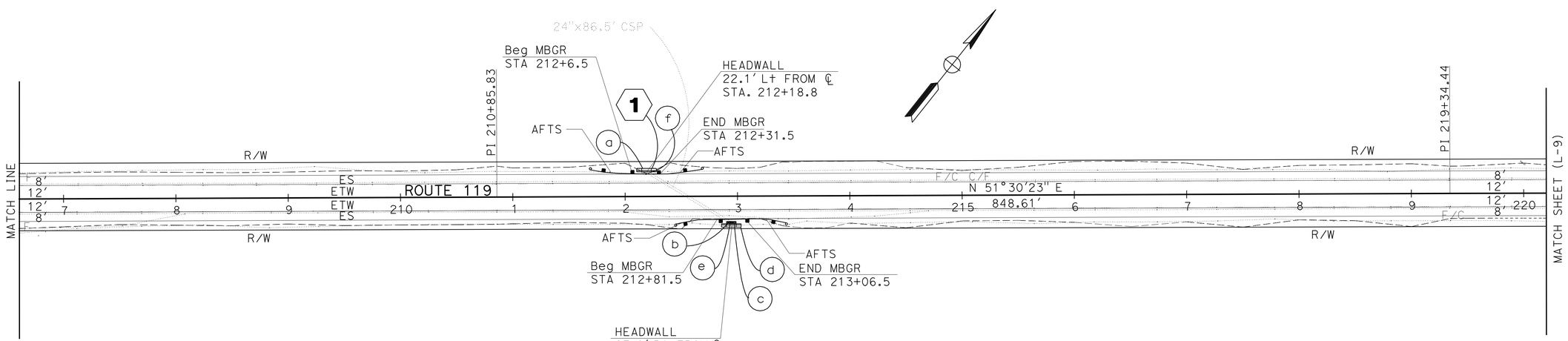

SCALE: 1" = 50'

LAYOUT L-8

STATE OF CALIFORNIA - DEPARTMENT OF TRANSPORTATION
Caltrans
DESIGN

FUNCTIONAL SUPERVISOR: DAVID SANGHA
CALCULATED-DESIGNED BY: LARRY CAO
CHECKED BY: AMRITPAL BADHESHA
REVISED BY
DATE REVISED

LAST REVISION 05-26-11
DATE PLOTTED => 02-NOV-2011
TIME PLOTTED => 15:45

Dist	COUNTY	ROUTE	POST MILES TOTAL PROJECT	SHEET No.	TOTAL SHEETS
06	Ker	119	4.7/8.5	11	56

REGISTERED CIVIL ENGINEER 05-26-11 DATE

9-19-11
PLANS APPROVAL DATE

REGISTERED PROFESSIONAL ENGINEER D S SANGHA No. 59652 Exp. 12/31/12 CIVIL STATE OF CALIFORNIA

THE STATE OF CALIFORNIA OR ITS OFFICERS OR AGENTS SHALL NOT BE RESPONSIBLE FOR THE ACCURACY OR COMPLETENESS OF SCANNED COPIES OF THIS PLAN SHEET.

NOTE:

FOR ACCURATE RIGHT OF WAY DATA, CONTACT RIGHT OF WAY ENGINEERING AT THE DISTRICT OFFICE.

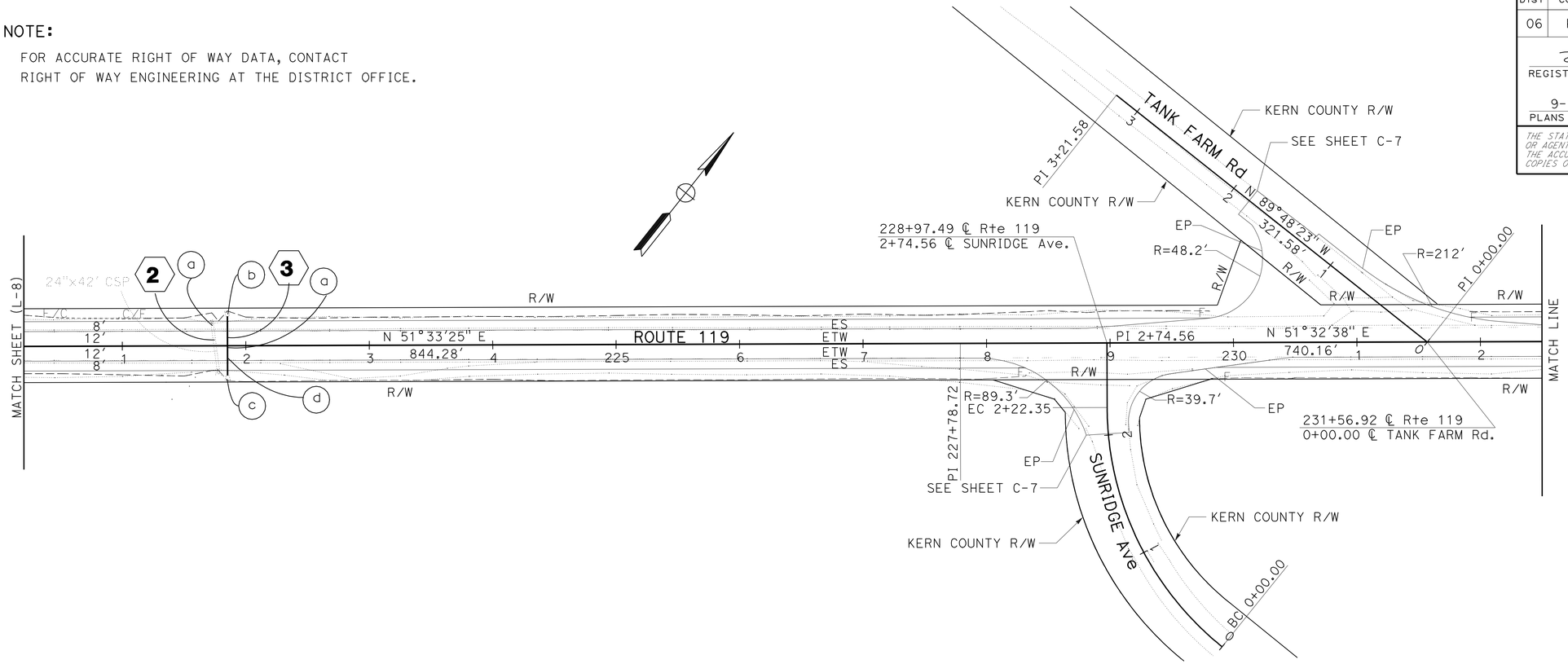

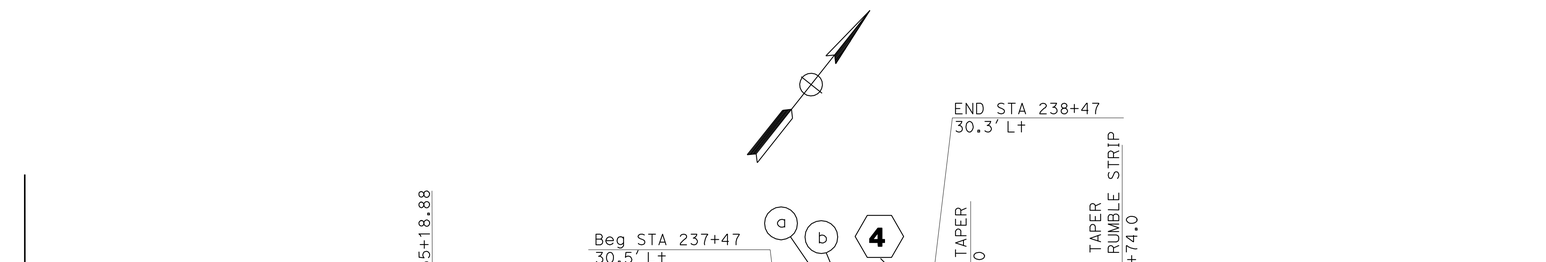

SCALE: 1" = 50'

LAYOUT L-9

STATE OF CALIFORNIA - DEPARTMENT OF TRANSPORTATION
Caltrans® DESIGN

FUNCTIONAL SUPERVISOR: DAVID SANGHA
CALCULATED-DESIGNED BY: LARRY CAO
CHECKED BY: AMRITPAL BADHESHA
REVISED BY
DATE REVISED

LAST REVISION 05-26-11
DATE PLOTTED => 02-NOV-2011
TIME PLOTTED => 15:45

Dist	COUNTY	ROUTE	POST MILES TOTAL PROJECT	SHEET No.	TOTAL SHEETS
06	Ker	119	4.7/8.5	12	56

REGISTERED CIVIL ENGINEER 05-26-11 DATE

9-19-11
PLANS APPROVAL DATE

REGISTERED PROFESSIONAL ENGINEER D S SANGHA No. 59652 Exp. 12/31/12 CIVIL STATE OF CALIFORNIA

THE STATE OF CALIFORNIA OR ITS OFFICERS OR AGENTS SHALL NOT BE RESPONSIBLE FOR THE ACCURACY OR COMPLETENESS OF SCANNED COPIES OF THIS PLAN SHEET.

NOTES:

1. FOR ACCURATE RIGHT OF WAY DATA, CONTACT RIGHT OF WAY ENGINEERING AT THE DISTRICT OFFICE.
2. STATIONINGS ARE FOR CONSTRUCTION PURPOSES ONLY.

LEGEND:

- 0 - 0.15′ COLD PLANE AC Pvmt 0.15′ HMA (Type A)
- STRUCTURAL SECTION HMA= 0.70′, AB= 0.80′, AS= 0.75′
- CONFORM FOR INTERSECTIONS
- DIRECTION OF TRAFFIC

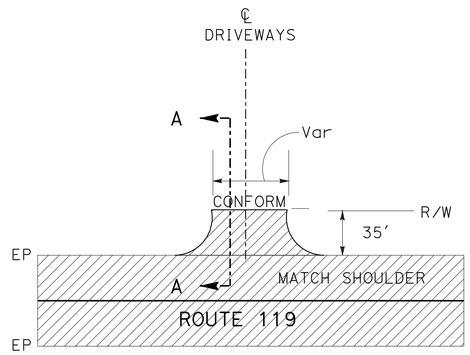

TYPICAL DRIVEWAY APPROACH

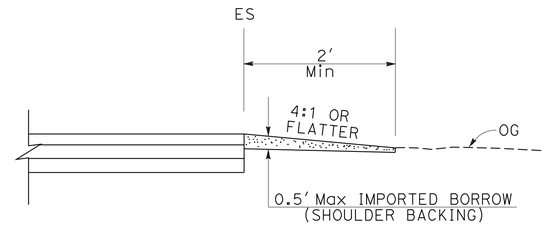

SHOULDER BACKING X-SECTION

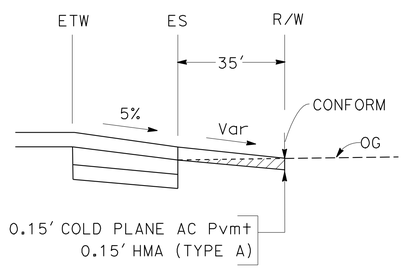

SECTION A-A

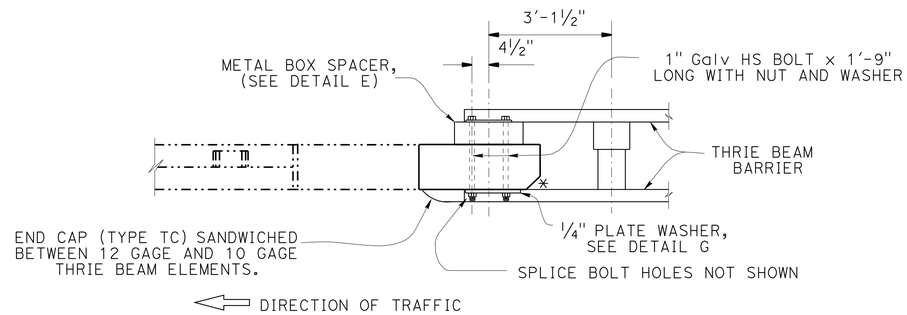

PLAN

* 5″ x 5″ CHAMFER

BRIDGE RAIL CONNECTOR (TYPE 1)

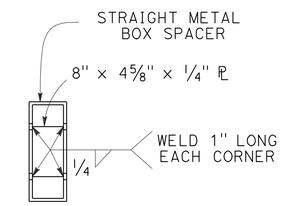

VIEW F-F

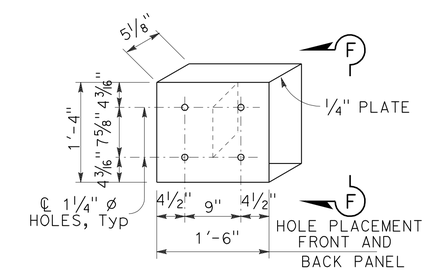

DETAIL E

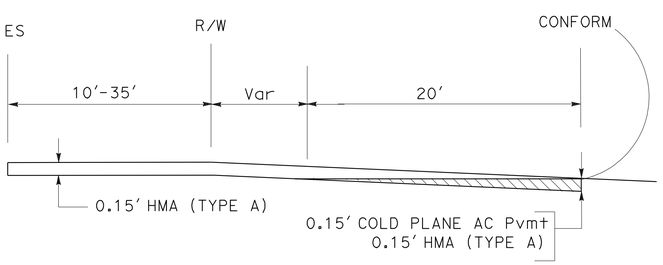

TYPICAL LONGITUDINAL LOCAL ROADS

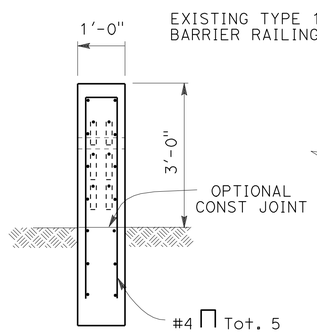

SECTION B-B

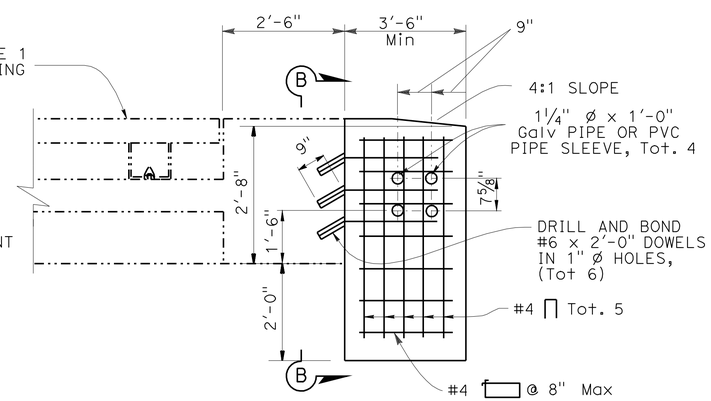

ELEVATION

TYPICAL SECTION
(TYPE 1 BARRIER)

BRIDGE RAIL CONNECTOR (TYPE 1)

NO SCALE

CONSTRUCTION DETAILS
C-1

STATE OF CALIFORNIA - DEPARTMENT OF TRANSPORTATION
DESIGN
Caltrans
FUNCTIONAL SUPERVISOR: DAVID SANGHA
CALCULATED-DESIGNED BY: AMRITPAL BADHESHA
CHECKED BY: LARRY CAO
REVISED BY
DATE REVISED

LAST REVISION 05-26-11
DATE PLOTTED => 02-NOV-2011
TIME PLOTTED => 15:45

Dist	COUNTY	ROUTE	POST MILES TOTAL PROJECT	SHEET No.	TOTAL SHEETS
06	Ker	119	4.7/8.5	13	56

REGISTERED CIVIL ENGINEER 12-15-10 DATE

9-19-11
PLANS APPROVAL DATE

REGISTERED PROFESSIONAL ENGINEER D S SANGHA No. 59652 Exp 12/31/12 CIVIL STATE OF CALIFORNIA

THE STATE OF CALIFORNIA OR ITS OFFICERS OR AGENTS SHALL NOT BE RESPONSIBLE FOR THE ACCURACY OR COMPLETENESS OF SCANNED COPIES OF THIS PLAN SHEET.

NOTE:

FOR ACCURATE RIGHT OF WAY DATA, CONTACT RIGHT OF WAY ENGINEERING AT THE DISTRICT OFFICE.

CURVE DATA

No.	R	Δ	T	L
1	159.63′	47°23′56"	70.07′	132.06′
2	54.87′	119°3′15"	93.25′	114.01′
3	33.63′	114°8′56"	51.93′	66.99′
4	184.91′	47°48′25"	81.96′	154.29′

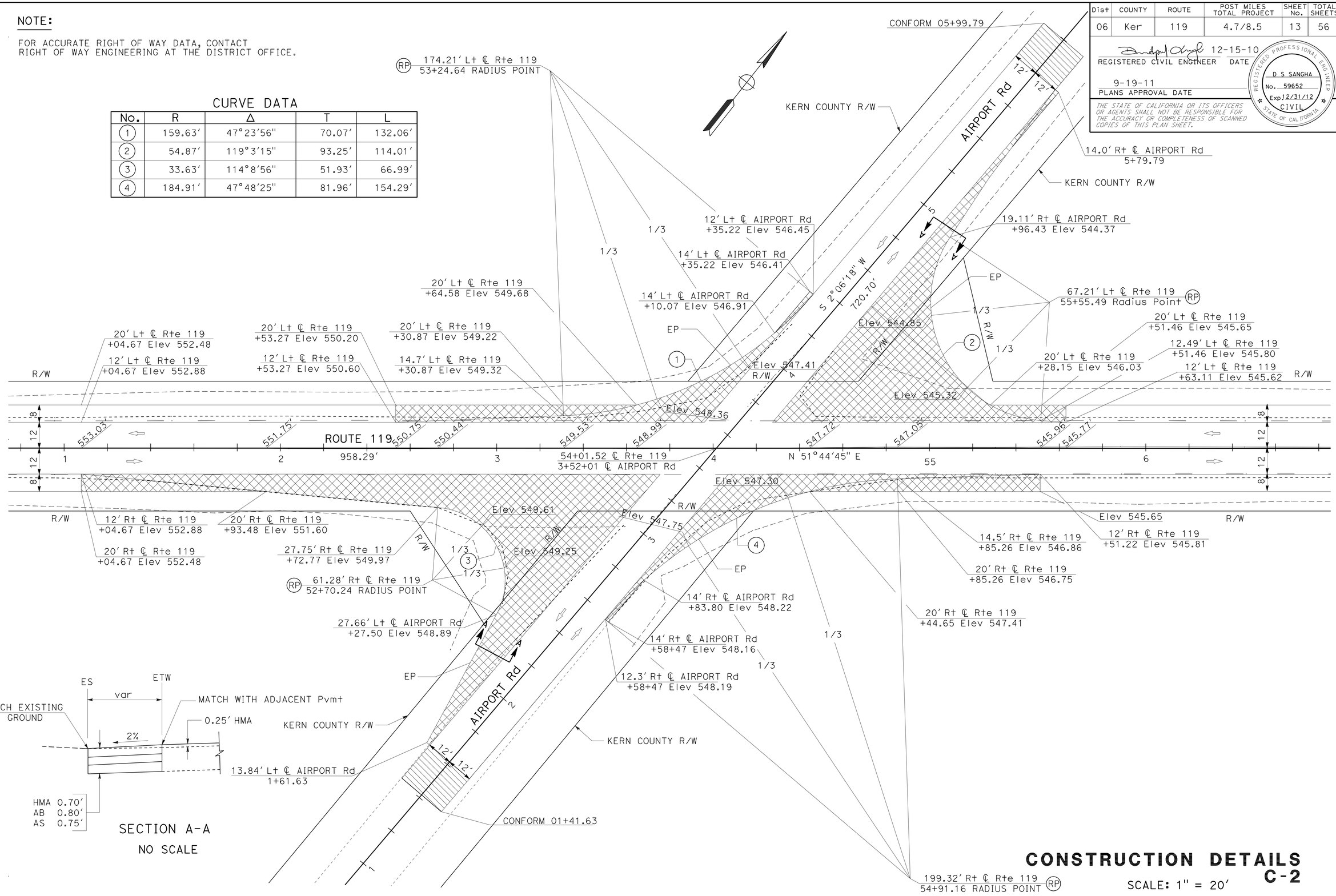

CONSTRUCTION DETAILS
C-2

SCALE: 1" = 20′

STATE OF CALIFORNIA - DEPARTMENT OF TRANSPORTATION
DESIGN
FUNCTIONAL SUPERVISOR: DAVID SANGHA
CALCULATED-DESIGNED BY: AMRITPAL BADHESHA
CHECKED BY: LARRY CAO
REVISED BY
DATE REVISED

LAST REVISION 12-15-10
DATE PLOTTED => 02-NOV-2011
TIME PLOTTED => 15:45

Dist	COUNTY	ROUTE	POST MILES TOTAL PROJECT	SHEET No.	TOTAL SHEETS
06	Ker	119	4.7/8.5	14	56

REGISTERED CIVIL ENGINEER 05-26-11 DATE

9-19-11
PLANS APPROVAL DATE

REGISTERED PROFESSIONAL ENGINEER D S SANGHA No. 59652 Exp. 12/31/12 CIVIL STATE OF CALIFORNIA

THE STATE OF CALIFORNIA OR ITS OFFICERS OR AGENTS SHALL NOT BE RESPONSIBLE FOR THE ACCURACY OR COMPLETENESS OF SCANNED COPIES OF THIS PLAN SHEET.

NOTE:

FOR ACCURATE RIGHT OF WAY DATA, CONTACT RIGHT OF WAY ENGINEERING AT THE DISTRICT OFFICE.

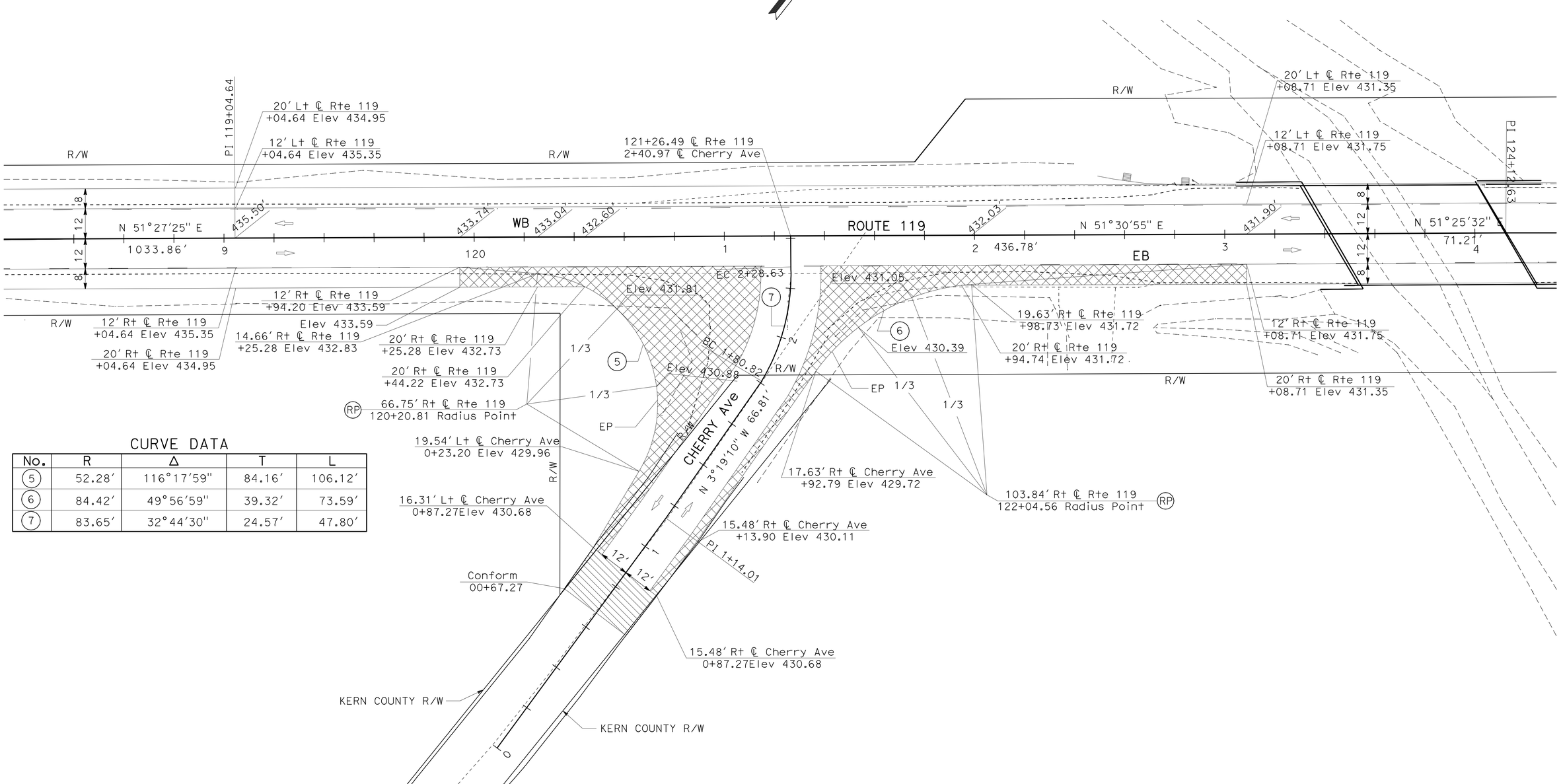

CURVE DATA

No.	R	Δ	T	L
5	52.28'	116°17'59"	84.16'	106.12'
6	84.42'	49°56'59"	39.32'	73.59'
7	83.65'	32°44'30"	24.57'	47.80'

CONSTRUCTION DETAILS

SCALE: 1" = 20'

C-3

STATE OF CALIFORNIA - DEPARTMENT OF TRANSPORTATION

Caltrans DESIGN

FUNCTIONAL SUPERVISOR: DAVID SANGHA

CALCULATED-DESIGNED BY: AMRITPAL BADHESHA

CHECKED BY: LARRY CAO

REVISED BY

DATE REVISED

LAST REVISION 05-26-11

DATE PLOTTED => 02-NOV-2011
TIME PLOTTED => 15:46

Dist	COUNTY	ROUTE	POST MILES TOTAL PROJECT	SHEET No.	TOTAL SHEETS
06	Ker	119	4.7/8.5	15	56

REGISTERED CIVIL ENGINEER 05-26-11 DATE

9-19-11
PLANS APPROVAL DATE

REGISTERED PROFESSIONAL ENGINEER D S SANGHA No. 59652 Exp. 12/31/12 CIVIL STATE OF CALIFORNIA

THE STATE OF CALIFORNIA OR ITS OFFICERS OR AGENTS SHALL NOT BE RESPONSIBLE FOR THE ACCURACY OR COMPLETENESS OF SCANNED COPIES OF THIS PLAN SHEET.

NOTE:

FOR ACCURATE RIGHT OF WAY DATA, CONTACT RIGHT OF WAY ENGINEERING AT THE DISTRICT OFFICE.

CURVE DATA

No.	R	Δ	T	L
8	50.00′	54°20′34″	25.66′	47.42′
9	50.00′	71°23′17″	35.92′	62.30′
10	50.00′	71°23′17″	35.92′	62.30′
11	50.00′	54°20′34″	25.66′	47.42′

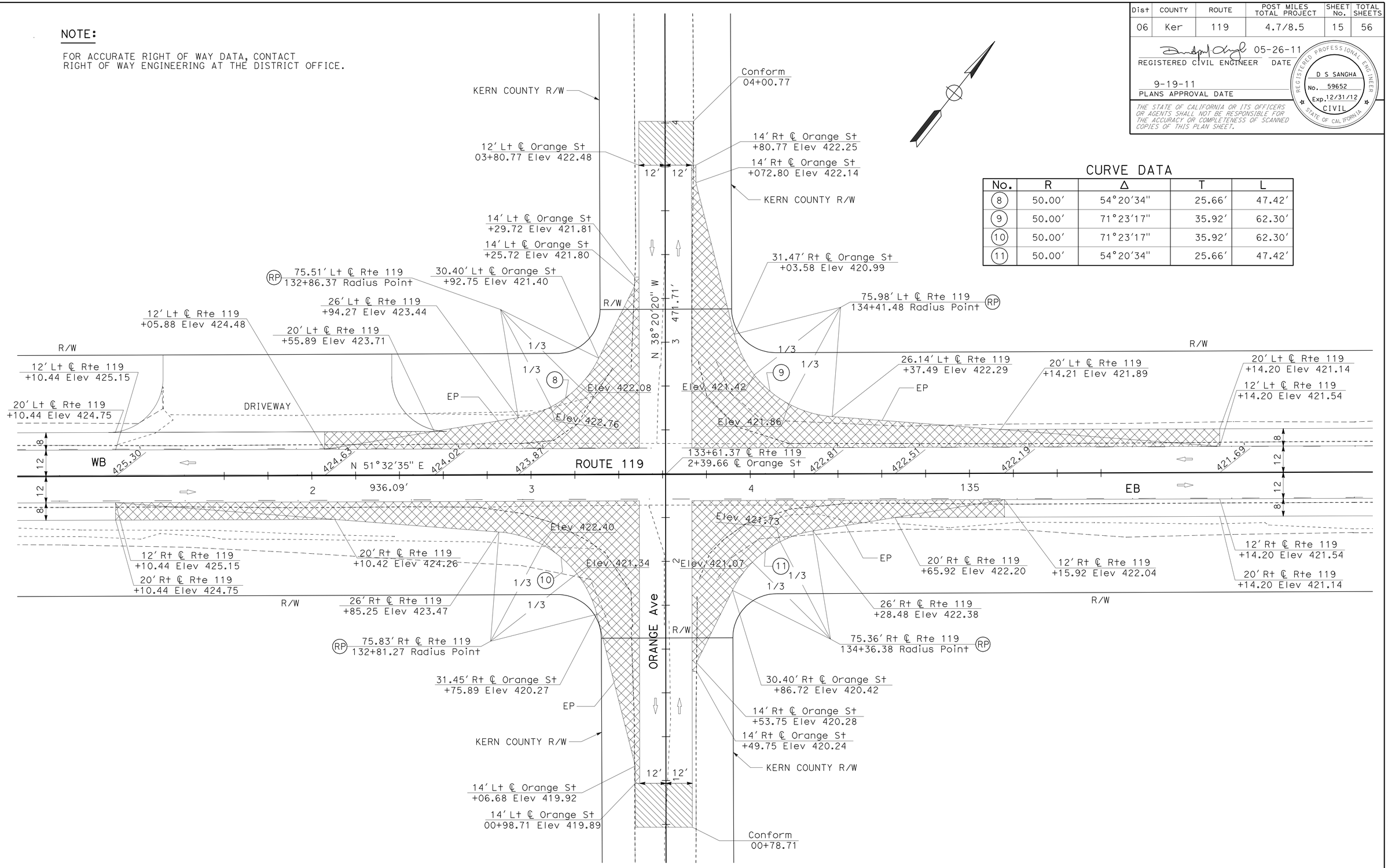

CONSTRUCTION DETAILS C-4

SCALE: 1″ = 20′

STATE OF CALIFORNIA - DEPARTMENT OF TRANSPORTATION
DESIGN
FUNCTIONAL SUPERVISOR: DAVID SANGHA
CALCULATED-DESIGNED BY: AMRITPAL BADHESHA
CHECKED BY: LARRY CAO
REVISED BY
DATE REVISED

LAST REVISION 05-26-11
DATE PLOTTED => 02-NOV-2011
TIME PLOTTED => 15:46

Dist	COUNTY	ROUTE	POST MILES TOTAL PROJECT	SHEET No.	TOTAL SHEETS
06	Ker	119	4.7/8.5	16	56

REGISTERED CIVIL ENGINEER 05-26-11 DATE

9-19-11
PLANS APPROVAL DATE

REGISTERED PROFESSIONAL ENGINEER D S SANGHA No. 59652 Exp. 12/31/12 CIVIL STATE OF CALIFORNIA

THE STATE OF CALIFORNIA OR ITS OFFICERS OR AGENTS SHALL NOT BE RESPONSIBLE FOR THE ACCURACY OR COMPLETENESS OF SCANNED COPIES OF THIS PLAN SHEET.

NOTE:

FOR ACCURATE RIGHT OF WAY DATA, CONTACT RIGHT OF WAY ENGINEERING AT THE DISTRICT OFFICE.

CURVE DATA

No.	R	Δ	T	L
12	54.33′	115°32′30"	86.17′	109.56′
13	162.18′	39°13′55"	57.80′	111.05′
14	251.80′	38°3′48"	86.86′	167.28′
15	42.99′	134°55′35"	103.61′	101.25′

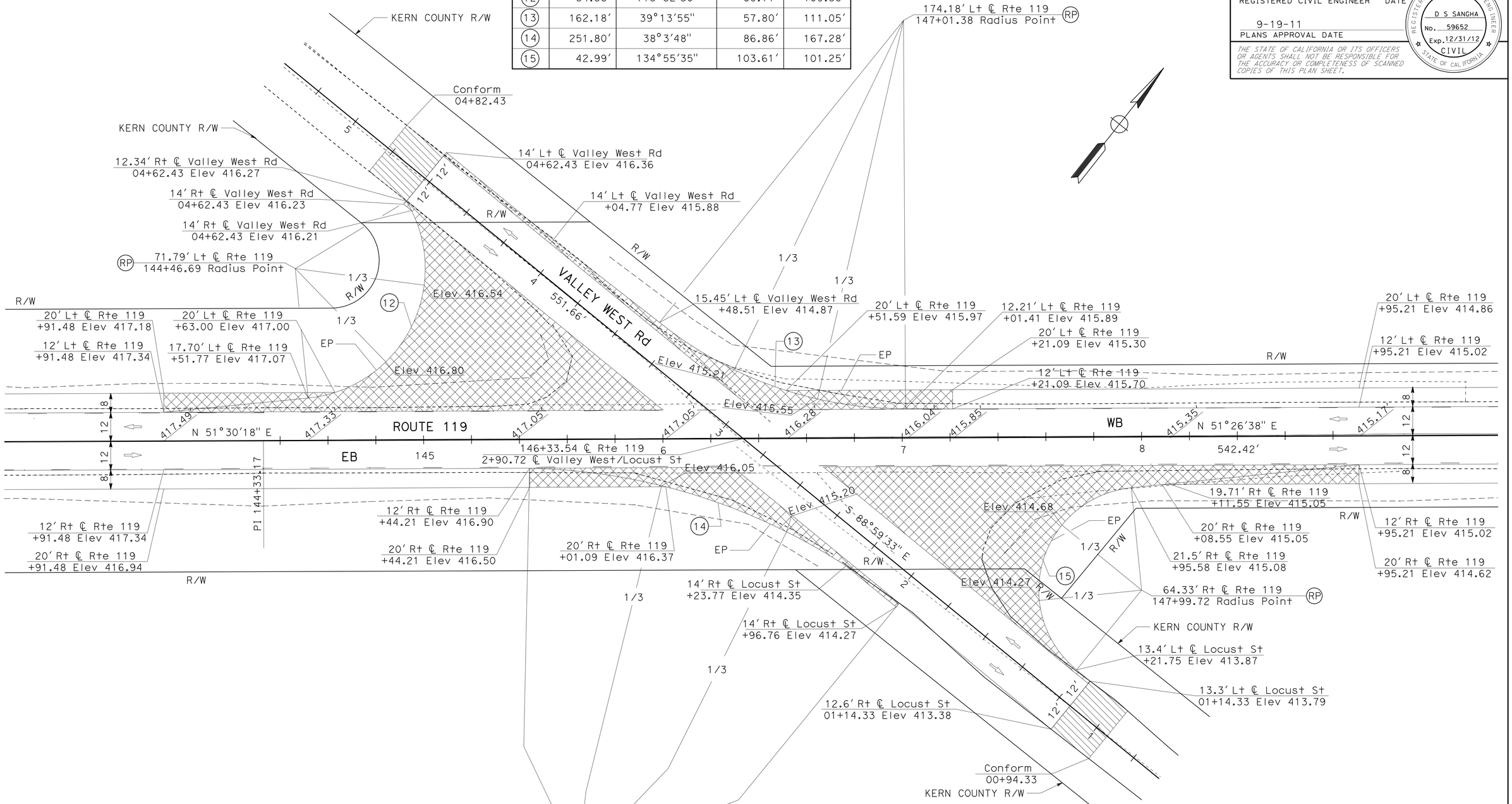

CONSTRUCTION DETAILS C-5

SCALE: 1" = 20′

STATE OF CALIFORNIA - DEPARTMENT OF TRANSPORTATION
DESIGN
FUNCTIONAL SUPERVISOR DAVID SANGHA
CALCULATED-DESIGNED BY AMRITPAL BADHESHA
CHECKED BY LARRY CAO
REVISED BY
DATE REVISED

LAST REVISION 05-26-11
DATE PLOTTED => 02-NOV-2011
TIME PLOTTED => 15:46

Dist	COUNTY	ROUTE	POST MILES TOTAL PROJECT	SHEET No.	TOTAL SHEETS
06	Ker	119	4.7/8.5	17	56

REGISTERED CIVIL ENGINEER 05-26-11 DATE

9-19-11
PLANS APPROVAL DATE

REGISTERED PROFESSIONAL ENGINEER D S SANGHA No. 59652 Exp. 12/31/12 CIVIL STATE OF CALIFORNIA

THE STATE OF CALIFORNIA OR ITS OFFICERS OR AGENTS SHALL NOT BE RESPONSIBLE FOR THE ACCURACY OR COMPLETENESS OF SCANNED COPIES OF THIS PLAN SHEET.

CURVE DATA

No.	R	Δ	T	L
16	107.98′	40°36′17″	39.95′	76.52′
17	37.76′	109°49′57″	53.76′	72.39′
18	195.66′	22°6′37″	38.23′	75.51′
19	47.20′	136°25′33″	118.08′	112.38′
20	59.52′	48°34′05″	26.85′	50.45′
21	71.57′	44°16′13″	29.11′	55.30′

NOTE:

FOR ACCURATE RIGHT OF WAY DATA, CONTACT RIGHT OF WAY ENGINEERING AT THE DISTRICT OFFICE.

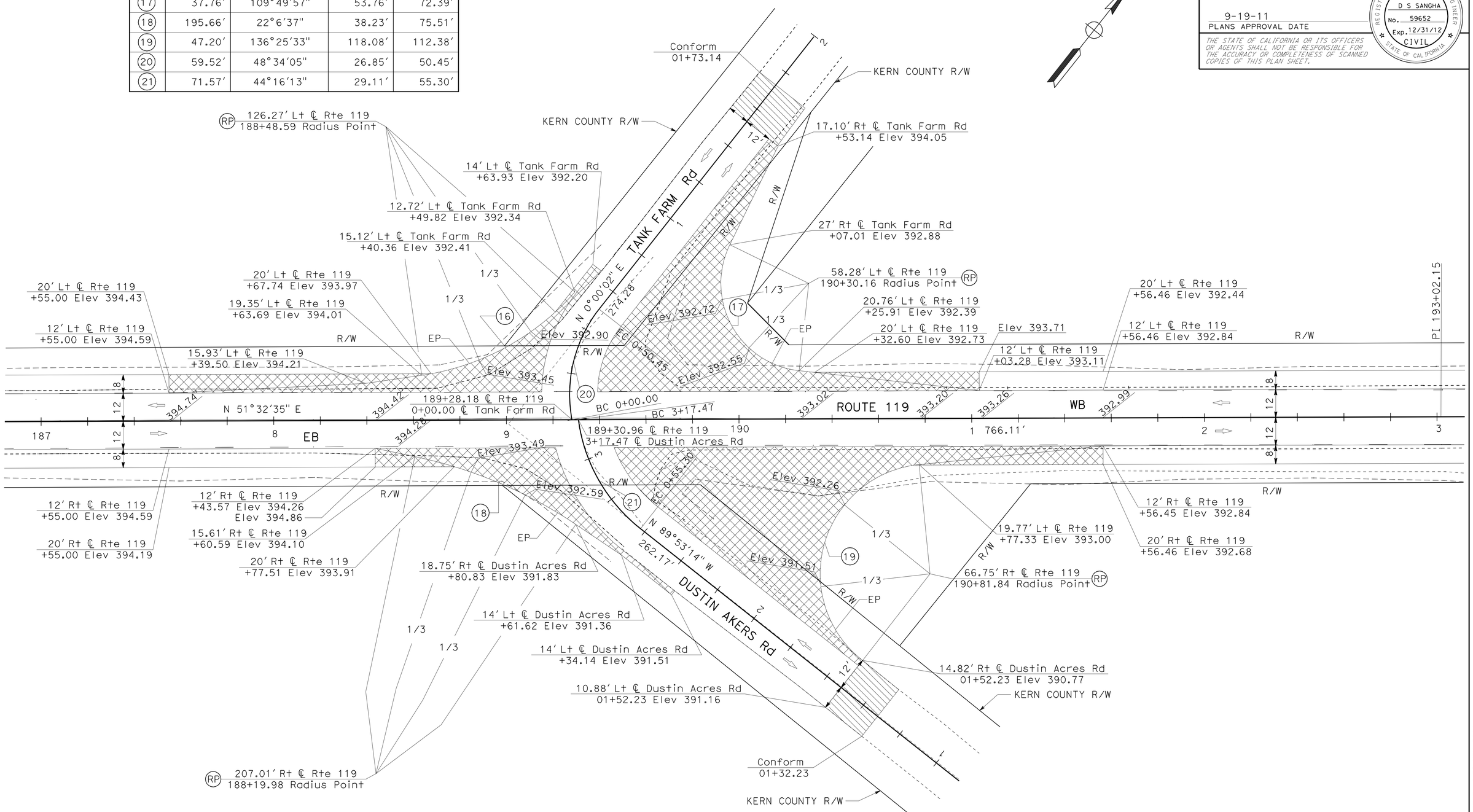

CONSTRUCTION DETAILS C-6

SCALE: 1″ = 20′

STATE OF CALIFORNIA - DEPARTMENT OF TRANSPORTATION
Caltrans
DESIGN

FUNCTIONAL SUPERVISOR: DAVID SANGHA
CALCULATED-DESIGNED BY: AMRITPAL BADHESHA
CHECKED BY: LARRY CAO
REVISED BY
DATE REVISED

LAST REVISION 05-26-11
DATE PLOTTED => 02-NOV-2011
TIME PLOTTED => 15:46

Dist	COUNTY	ROUTE	POST MILES TOTAL PROJECT	SHEET No.	TOTAL SHEETS
06	Ker	119	4.7/8.5	18	56

REGISTERED CIVIL ENGINEER 05-26-11 DATE

9-19-11
PLANS APPROVAL DATE

REGISTERED PROFESSIONAL ENGINEER D S SANGHA No. 59652 Exp. 12/31/12 CIVIL STATE OF CALIFORNIA

THE STATE OF CALIFORNIA OR ITS OFFICERS OR AGENTS SHALL NOT BE RESPONSIBLE FOR THE ACCURACY OR COMPLETENESS OF SCANNED COPIES OF THIS PLAN SHEET.

NOTE:

FOR ACCURATE RIGHT OF WAY DATA, CONTACT RIGHT OF WAY ENGINEERING AT THE DISTRICT OFFICE.

CURVE DATA

No.	R	Δ	T	L
22	48.24′	136°42′55"	121.57′	115.10′
23	212.02′	31°27′23"	59.71′	116.40′
24	89.31′	71°44′10"	64.58′	111.82′
25	39.75′	85°49′44"	36.95′	59.54′
26	250.00′	50°57′34"	119.14′	222.35′

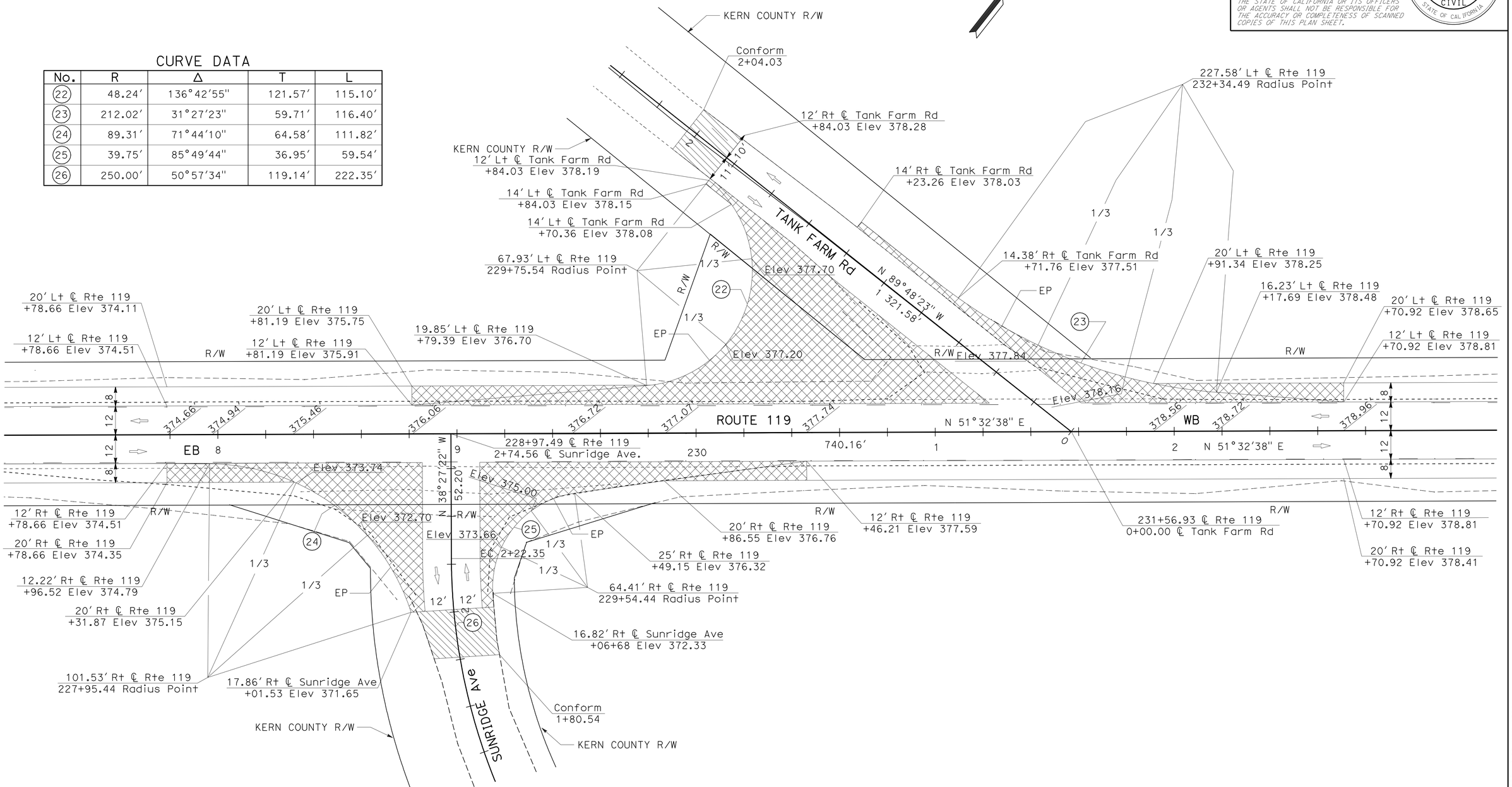

CONSTRUCTION DETAILS

SCALE: 1" = 20′

C-7

STATE OF CALIFORNIA - DEPARTMENT OF TRANSPORTATION
Caltrans
DESIGN

FUNCTIONAL SUPERVISOR: DAVID SANGHA
CALCULATED-DESIGNED BY: AMRITPAL BADHESHA
CHECKED BY: LARRY CAO
REVISED BY
DATE REVISED

LAST REVISION 05-26-11
DATE PLOTTED => 02-NOV-2011
TIME PLOTTED => 15:46

Dist	COUNTY	ROUTE	POST MILES TOTAL PROJECT	SHEET No.	TOTAL SHEETS
06	Ker	119	4.7/8.5	19	56

REGISTERED CIVIL ENGINEER 6-29-11 DATE

9-19-11
PLANS APPROVAL DATE

REGISTERED PROFESSIONAL ENGINEER D S SANGHA No. 59652 Exp. 12/31/12 CIVIL STATE OF CALIFORNIA

THE STATE OF CALIFORNIA OR ITS OFFICERS OR AGENTS SHALL NOT BE RESPONSIBLE FOR THE ACCURACY OR COMPLETENESS OF SCANNED COPIES OF THIS PLAN SHEET.

NOTES (THIS SHEET ONLY):

1. SEE MANUFACTURER PLANS FOR ADDITIONAL DETAILS AND DIMENSIONS NOT SHOWN.
2. SYSTEM TO BE INSTALLED PER MANUFACTURER SPECIFICATIONS.
3. ONLY TIGHTEN THE CABLE ASSEMBLIES USING THE NUTS AT THE CABLE BRACKET (SEE DETAIL D). DO NOT TIGHTEN THE CABLES AT THE FRONT OF THE GROUND ANCHOR.
4. WHEN DRIVING STEEL POST, ENSURE THAT A DRIVING CAP WITH TIMBER OR PLASTIC INSERT IS USED TO PREVENT DAMAGE TO THE GALVANIZING TO THE TOP OF THE STEEL POST.

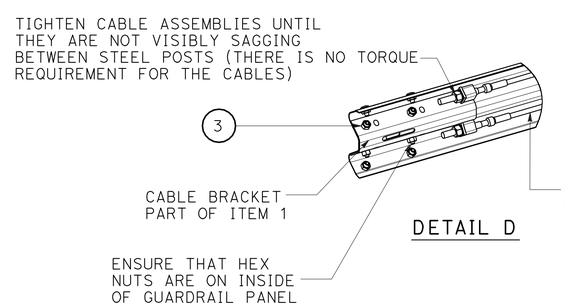

DETAIL D

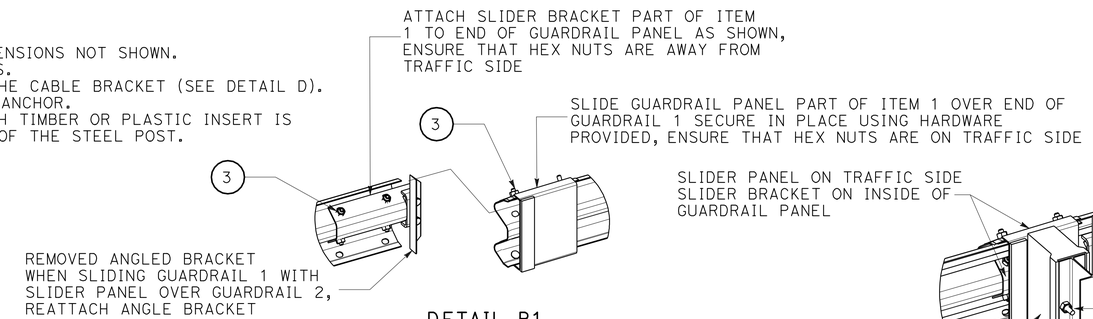

DETAIL B1

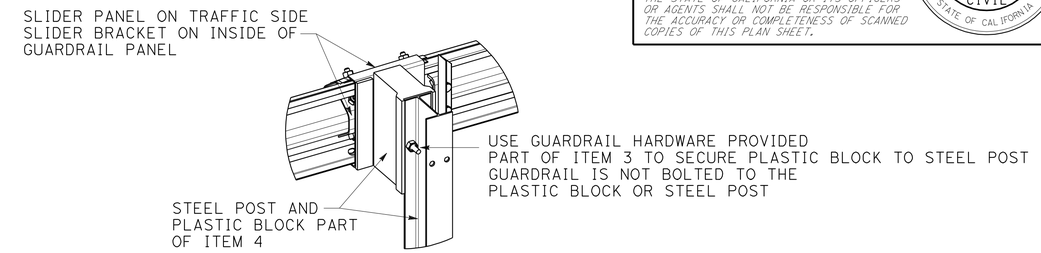

DETAIL B2

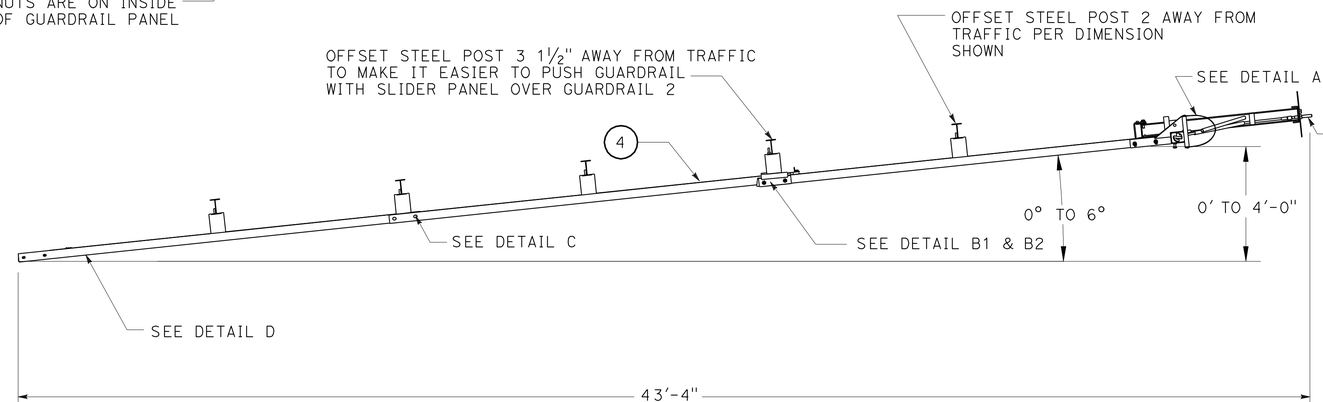

FLARED TERMINAL SYSTEM DETAIL

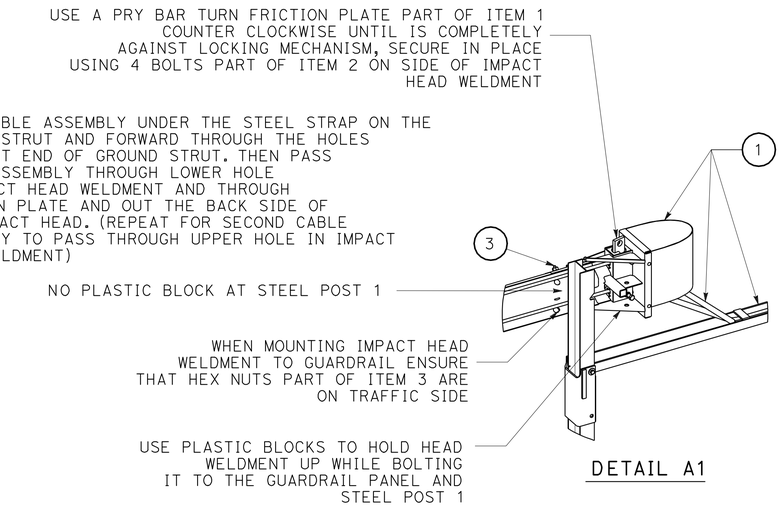

DETAIL A1

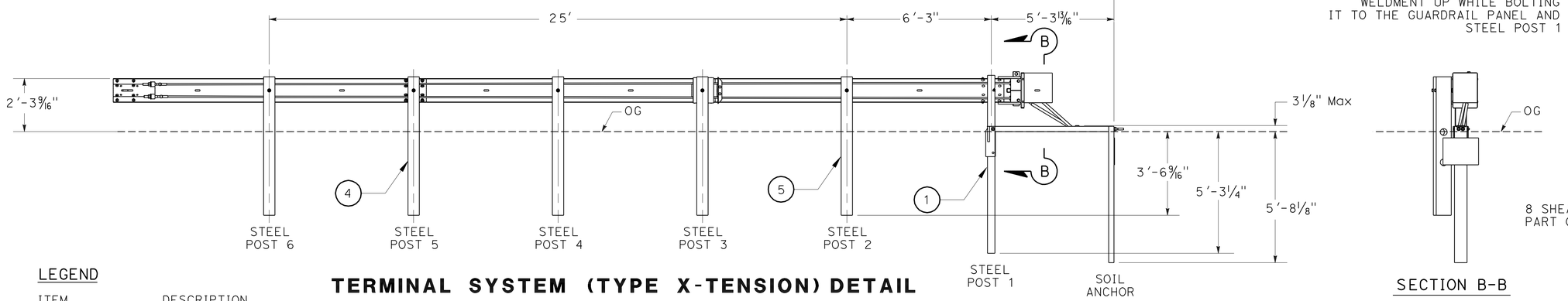

TERMINAL SYSTEM (TYPE X-TENSION) DETAIL

SECTION B-B

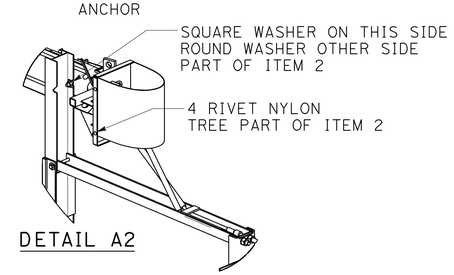

DETAIL A2

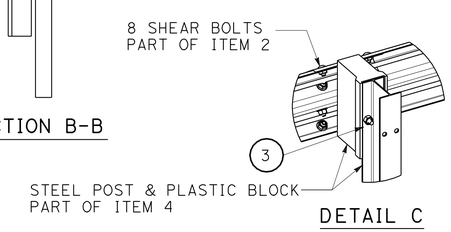

DETAIL C

LEGEND

ITEM	DESCRIPTION
1	TERMINAL SYSTEM (TYPE X-TENSION) COMPONENT KIT
2	TERMINAL SYSTEM (TYPE X-TENSION) HARDWARE KIT
3	TERMINAL SYSTEM (TYPE X-TENSION) SYSTEM HARDWARE KIT
4	TERMINAL SYSTEM (TYPE X-TENSION) GUARDRAIL COMPONENT KIT 3
5	TERMINAL SYSTEM (TYPE X-TENSION) I-BEAM POST

CONSTRUCTION DETAILS

NO SCALE

C-8

STATE OF CALIFORNIA - DEPARTMENT OF TRANSPORTATION
06-DESIGN
Caltrans

FUNCTIONAL SUPERVISOR: DAVID SANGHA
CALCULATED-DESIGNED BY: LARRY CAO
CHECKED BY: AMRITPAL BADHESHA
REVISED BY
DATE REVISED

LAST REVISION 06-29-11
DATE PLOTTED => 02-NOV-2011
TIME PLOTTED => 15:46

Dist	COUNTY	ROUTE	POST MILES TOTAL PROJECT	SHEET No.	TOTAL SHEETS
06	Ker	119	4.7/8.5	20	56

REGISTERED CIVIL ENGINEER 05-26-11 DATE

9-19-11
PLANS APPROVAL DATE

REGISTERED PROFESSIONAL ENGINEER D S SANGHA No. 59652 Exp. 12/31/12 CIVIL STATE OF CALIFORNIA

THE STATE OF CALIFORNIA OR ITS OFFICERS OR AGENTS SHALL NOT BE RESPONSIBLE FOR THE ACCURACY OR COMPLETENESS OF SCANNED COPIES OF THIS PLAN SHEET.

EROSION CONTROL (HYDROSEED)

	STATIONING	AREA	(N) FIBER (EROSION CONTROL)	(N) PURE LIVE SEED (EROSION CONTROL)	(N) COMMERCIAL FERTILIZER (EROSION CONTROL)	(N) STABILIZING EMULSION (EROSION CONTROL)
		ACRE	LB	LB	LB	LB
WESTBOUND	42+00 TO 53+50	0.79	553	20.15	158	197.50
	55+50 TO 58+40	0.20	140	5.10	40	50
	59+20 TO 63+80	0.32	224	8.16	64	80
	69+00 TO 111+50	2.93	2051	74.72	586	732.50
	112+50 TO 119+00	0.45	315	11.48	90	112.50
	147+00 TO 151+00	0.28	196	7.14	56	70
	152+50 TO 160+00	0.52	364	13.26	104	130
	162+50 TO 187+50	1.72	1204	43.86	344	430
	232+50 TO 239+75	0.50	350	12.75	100	125
EASTBOUND	42+00 TO PM 44+00	0.14	98	3.57	28	35
	44+60 TO PM 51+80	0.50	350	12.75	100	125
	54+60 TO PM 58+40	0.26	182	6.63	52	65
	59+20 TO PM 63+80	0.32	224	8.16	64	80
	67+60 TO PM 70+50	0.20	140	5.10	40	50
	71+50 TO PM 111+50	2.75	1925	70.13	550	687.50
	113+00 TO PM 119+00	0.40	280	10.20	80	100
	148+20 TO PM 151+00	0.19	133	4.45	38	47.50
	151+50 TO PM 164+00	0.86	602	21.93	172	215
	TOTAL	13.33	93.31	339.54	2666	3332.50

(N) NOT A SEPARATE PAY ITEM, FOR INFORMATION ONLY.

EROSION CONTROL QUANTITIES
ECQ-1

STATE OF CALIFORNIA - DEPARTMENT OF TRANSPORTATION
Caltrans DESIGN

FUNCTIONAL SUPERVISOR: DAVID SANGHA
CALCULATED-DESIGNED BY: LARRY CAO
CHECKED BY: AMRITPAL BADHESHA
REVISED BY
DATE REVISED

LAST REVISION 05-26-11
DATE PLOTTED => 02-NOV-2011
TIME PLOTTED => 15:46

Dist	COUNTY	ROUTE	POST MILES TOTAL PROJECT	SHEET No.	TOTAL SHEETS
06	Ker	119	4.7/8.5	21	56

REGISTERED CIVIL ENGINEER 05-26-11 DATE

9-19-11
PLANS APPROVAL DATE

REGISTERED PROFESSIONAL ENGINEER D S SANGHA No. 59652 Exp. 12/31/12 CIVIL STATE OF CALIFORNIA

THE STATE OF CALIFORNIA OR ITS OFFICERS OR AGENTS SHALL NOT BE RESPONSIBLE FOR THE ACCURACY OR COMPLETENESS OF SCANNED COPIES OF THIS PLAN SHEET.

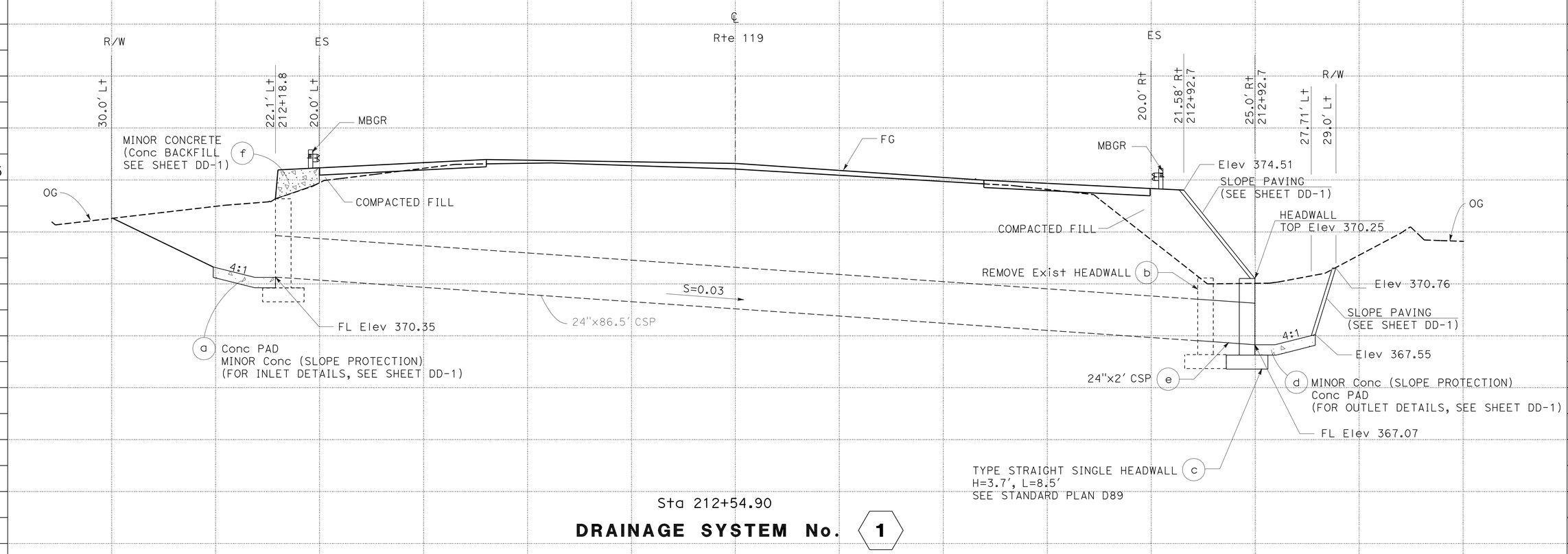

Sta 212+54.90

DRAINAGE SYSTEM No. 1

DRAINAGE PROFILES

SCALE: Horiz 1" = 10'
Vert 1" = 10'

DP-1

STATION	-30	-20	-10	0	10	20	30	TOTAL
CY Exc								
CY Emb								

STATE OF CALIFORNIA - DEPARTMENT OF TRANSPORTATION
Caltrans
DESIGN

FUNCTIONAL SUPERVISOR: DAVID SANGHA
CALCULATED-DESIGNED BY: AMRITPAL BADHESHA
CHECKED BY: LARRY CAO
REVISED BY
DATE REVISED

LAST REVISION 05-26-11
DATE PLOTTED => 02-NOV-2011
TIME PLOTTED => 15:46

Dist	COUNTY	ROUTE	POST MILES TOTAL PROJECT	SHEET No.	TOTAL SHEETS
06	Ker	119	4.7/8.5	22	56

REGISTERED CIVIL ENGINEER 05-26-11 DATE

9-19-11
PLANS APPROVAL DATE

REGISTERED PROFESSIONAL ENGINEER
D S SANGHA
No. 59652
Exp. 12/31/12
CIVIL
STATE OF CALIFORNIA

THE STATE OF CALIFORNIA OR ITS OFFICERS OR AGENTS SHALL NOT BE RESPONSIBLE FOR THE ACCURACY OR COMPLETENESS OF SCANNED COPIES OF THIS PLAN SHEET.

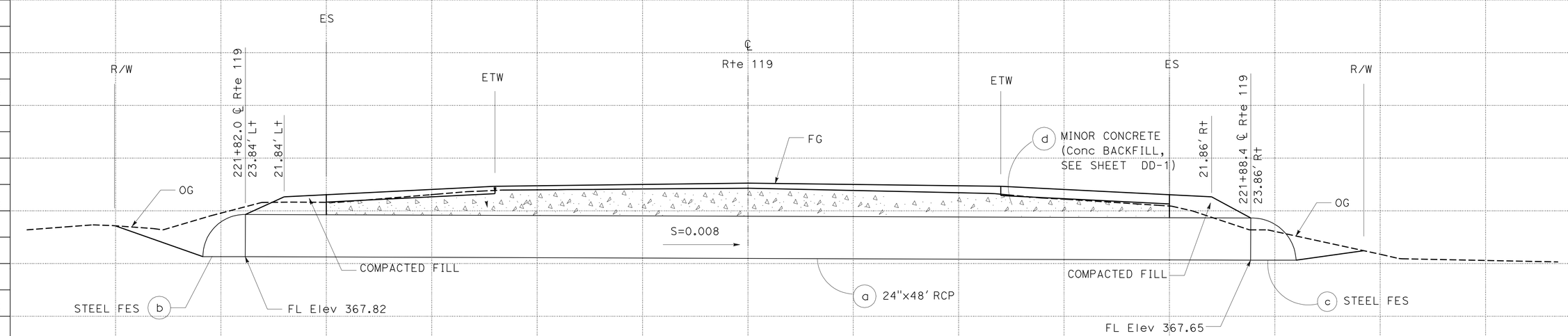

Sta 221+85.23

DRAINAGE SYSTEM No. 3

DRAINAGE PROFILES

SCALE: Horiz 1" = 10'
Vert 1" = 10'

DP-2

STATION	-30	-20	-10	0	10	20	30	TOTAL
CY Exc								
CY Emb								

STATE OF CALIFORNIA - DEPARTMENT OF TRANSPORTATION
Caltrans®
DESIGN

FUNCTIONAL SUPERVISOR: DAVID SANGHA
CALCULATED-DESIGNED BY: AMRITPAL BADHESHA
CHECKED BY: LARRY CAO
REVISED BY
DATE REVISED

LAST REVISION 05-26-11
DATE PLOTTED => 02-NOV-2011
TIME PLOTTED => 15:46

Dist	COUNTY	ROUTE	POST MILES TOTAL PROJECT	SHEET No.	TOTAL SHEETS
06	Ker	119	4.7/8.5	23	56

REGISTERED CIVIL ENGINEER 05-26-11 DATE

9-19-11
PLANS APPROVAL DATE

REGISTERED PROFESSIONAL ENGINEER
D S SANGHA
No. 59652
Exp. 12/31/12
CIVIL
STATE OF CALIFORNIA

THE STATE OF CALIFORNIA OR ITS OFFICERS OR AGENTS SHALL NOT BE RESPONSIBLE FOR THE ACCURACY OR COMPLETENESS OF SCANNED COPIES OF THIS PLAN SHEET.

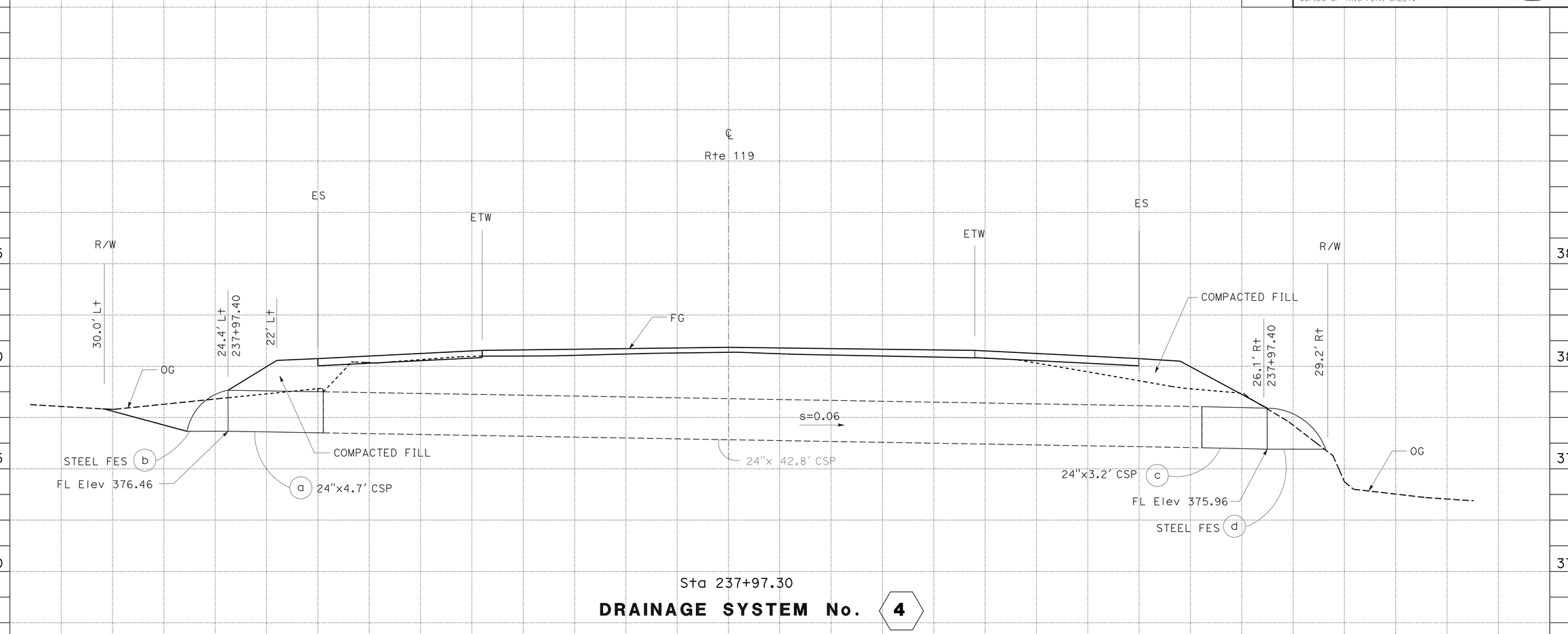

Sta 237+97.30

DRAINAGE SYSTEM No. 4

DRAINAGE PROFILES

SCALE: Horiz 1" = 10'
Vert 1" = 10'

DP-3

STATION	-30	-20	-10	0	10	20	30	TOTAL
CY Exc								
CY Emb								

STATE OF CALIFORNIA - DEPARTMENT OF TRANSPORTATION
Caltrans
DESIGN

FUNCTIONAL SUPERVISOR: DAVID SANGHA
CALCULATED-DESIGNED BY: LARRY CAO
CHECKED BY: AMRITPAL BADHESHA
REVISED BY
DATE REVISED

LAST REVISION 05-26-11
DATE PLOTTED => 02-NOV-2011
TIME PLOTTED => 15:46

Dist	COUNTY	ROUTE	POST MILES TOTAL PROJECT	SHEET No.	TOTAL SHEETS
06	Ker	119	4.7/8.5	24	56

REGISTERED CIVIL ENGINEER 05-26-11 DATE

9-19-11
PLANS APPROVAL DATE

REGISTERED PROFESSIONAL ENGINEER D S SANGHA No. 59652 Exp. 12/31/12 CIVIL STATE OF CALIFORNIA

THE STATE OF CALIFORNIA OR ITS OFFICERS OR AGENTS SHALL NOT BE RESPONSIBLE FOR THE ACCURACY OR COMPLETENESS OF SCANNED COPIES OF THIS PLAN SHEET.

TABLE A
DITCH AND BERM LOCATIONS

WESTBOUND	EASTBOUND
41+00 - 53+65	41+00 - 51+90
55+27 - 63+80	54+46 - 63+80
69+00 - 111+50	67+60 - 111+50
112+50 - 120+00	113+00 - 120+00
148+94 - 160+00	148+94 - 187+50
163+00 - 187+50	

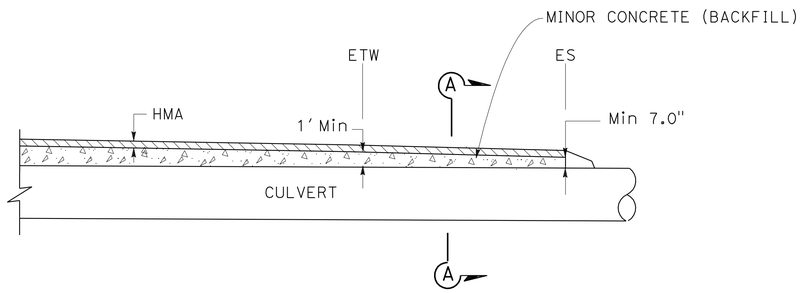

SYSTEM No. 3

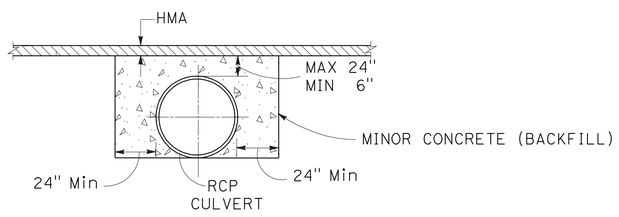

SECTION A-A

MINOR CONCRETE (BACKFILL) FOR REINFORCED CONCRETE CULVERT

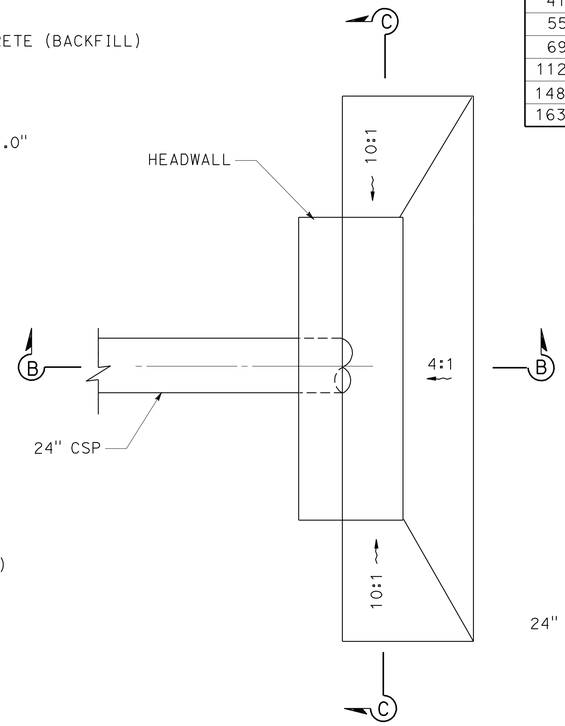

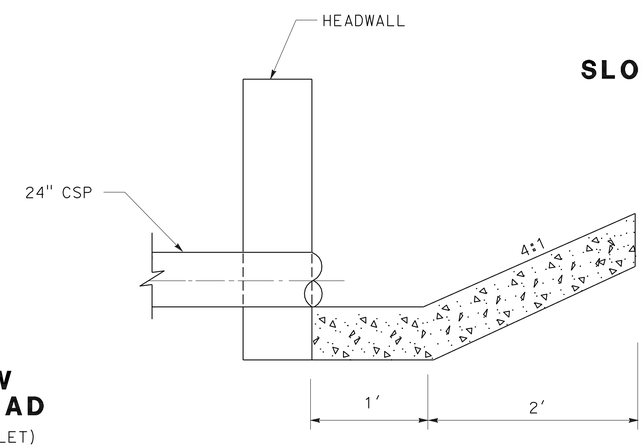

PLAN VIEW CONCRETE PAD
(FOR INLET AND OUTLET)

SECTION B-B

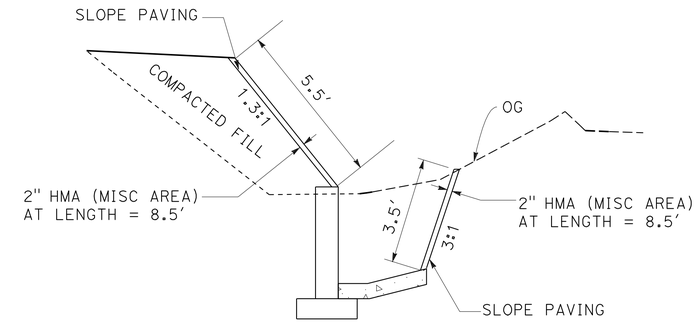

SLOPE PAVING DETAILS

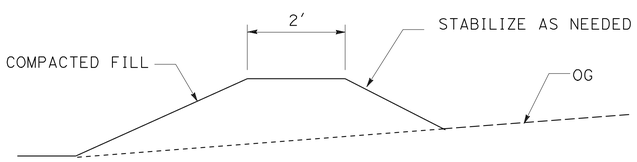

TYPICAL DIVERSION BERM
(SEE TABLE A FOR LOCATION)

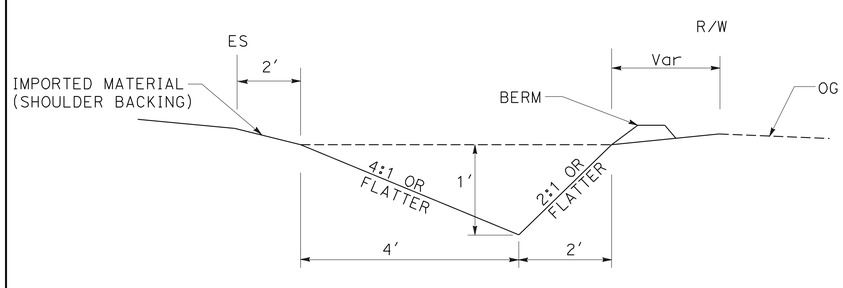

SIDE STORAGE DITCH
(SEE TABLE A FOR LOCATION)

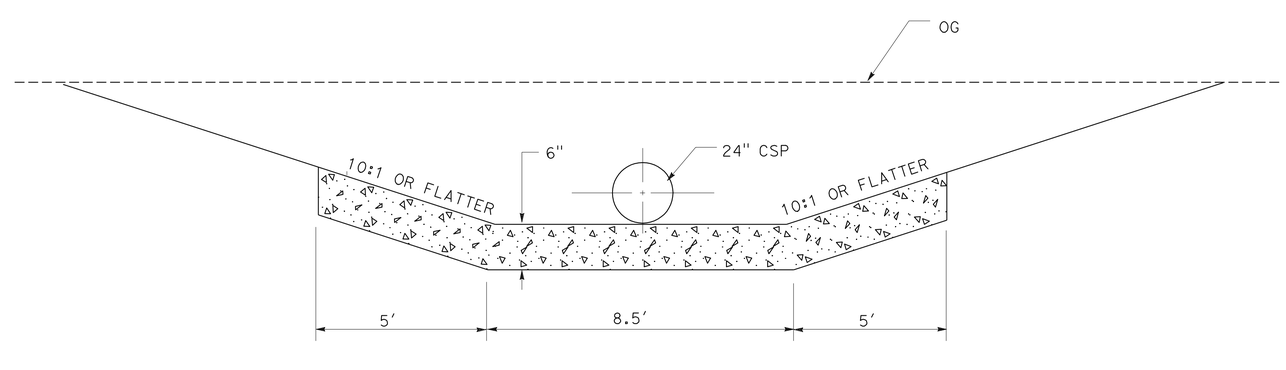

SECTION C-C

DRAINAGE DETAILS
NO SCALE

DD-1

REVISED BY	DATE REVISED
LARRY CAO	AMRITPAL BADHESHA
CALCULATED-DESIGNED BY	CHECKED BY
FUNCTIONAL SUPERVISOR	DAVID SANGHA

STATE OF CALIFORNIA - DEPARTMENT OF TRANSPORTATION
Caltrans® DESIGN

LAST REVISION 05-26-11
DATE PLOTTED => 02-NOV-2011
TIME PLOTTED => 15:47

Dist	COUNTY	ROUTE	POST MILES TOTAL PROJECT	SHEET No.	TOTAL SHEETS
06	Ker	119	4.7/8.5	25	56

REGISTERED CIVIL ENGINEER 12-15-10 DATE

9-19-11
PLANS APPROVAL DATE

REGISTERED PROFESSIONAL ENGINEER D S SANGHA No. 59652 Exp. 12/31/12 CIVIL STATE OF CALIFORNIA

THE STATE OF CALIFORNIA OR ITS OFFICERS OR AGENTS SHALL NOT BE RESPONSIBLE FOR THE ACCURACY OR COMPLETENESS OF SCANNED COPIES OF THIS PLAN SHEET.

DRAINAGE QUANTITIES

LAYOUT PLAN SHEET No.	DRAINAGE SYSTEM No. ⬡	DRAINAGE UNIT No. ○	24" REINFORCED CONCRETE PIPE (LF)	24" CONCRETE FES (EA)	24" STEEL FES (EA)	24" CORRIGATED STEEL PIPE (0.79" THICK) (LF)	18" STEEL FES (EA)	18" CORRIGATED STEEL PIPE (0.79" THICK) (LF)	MINOR CONCRETE (MINOR STRUCTURE) (CY)	MINOR CONCRETE (BACKFILL) (CY)	ABANDON CULVERT (EA)	REMOVE HEADWALL (EA)	MINOR CONCRETE (SLOPE PROTECTION) (CY)	(N) PLACE HMA (MISC AREA) (SQYD)	DESCRIPTION	STATION	DRAINAGE SYSTEM No. ⬡	DRAINAGE UNIT No. ○	LAYOUT PLAN SHEET No.
L-8	1	a											1		CONCRETE PAD	212+54.90	1	a	L-8
		b										1			REMOVE HEADWALL			b	
		c							1.2						CLASS 2 Conc (HEADWALL)			c	
		d											1		CONCRETE PAD			d	
		e				2									24" CSP			e	
		f								13.7					MINOR CONCRETE(BACK FILL)			f	
														SEE SHT Q-1	SLOPE PAVING	213+06.5			
L-9	2	a									1				ABANDON CULVERT 24"x42'	221+75.3	2	a	L-9
L-9	3	a	48												24" RCP	221+85.23	3	a	L-9
		b		1											24" CONCRETE FES			b	
		c		1											24" CONCRETE FES			c	
		d								25.5					MINOR CONCRETE(BACK FILL)			d	
L-9	4	a				4.7									24" CSP	237+97.30	4	a	L-9
		b			1										24" STEEL FES			b	
		c				3.2									24" CSP			c	
		d			1										24" STEEL FES			d	
L-2	5	a										1			REMOVE HEADWALL	AIRPORT Rd 2+60.00	5	a	L-2
		b						3							18" CSP, MATCH Exist SLOPE			b	
		c					1								18" STEEL FES			c	
		d										1			REMOVE HEADWALL			d	
		e						3							18" CSP, MATCH Exist SLOPE			e	
		f					1								18" STEEL FES			f	
L-4	6	a						20							18" CSP, MATCH Exist SLOPE	122+50.00	6	a	L-4
		b					1								18" STEEL FES			b	
		c					1								18" STEEL FES			c	
L-5	7	a					1								18" STEEL FES	130+73.00	7	a	L-5
		b										1			REMOVE HEADWALL			b	
		c					1								18" STEEL FES			c	
TOTAL			48	2	2	9.9	6	26	1.2	39.2	1	4	2						

STATE OF CALIFORNIA - DEPARTMENT OF TRANSPORTATION
Caltrans DESIGN

FUNCTIONAL SUPERVISOR: DAVID SANGHA
CALCULATED-DESIGNED BY: LARRY CAO
CHECKED BY: AMRITPAL BADHESHA
REVISED BY
DATE REVISED

DRAINAGE QUANTITIES
DQ-1

LAST REVISION 12-15-10
DATE PLOTTED => 02-NOV-2011
TIME PLOTTED => 15:47

Dist	COUNTY	ROUTE	POST MILES TOTAL PROJECT	SHEET No.	TOTAL SHEETS
06	Ker	119	4.7/8.5	26	56

REGISTERED CIVIL ENGINEER 09-09-11 DATE

9-19-11
PLANS APPROVAL DATE

REGISTERED PROFESSIONAL ENGINEER D S SANGHA No. 59652 Exp. 12/31/12 CIVIL STATE OF CALIFORNIA

THE STATE OF CALIFORNIA OR ITS OFFICERS OR AGENTS SHALL NOT BE RESPONSIBLE FOR THE ACCURACY OR COMPLETENESS OF SCANNED COPIES OF THIS PLAN SHEET.

NOTES:

1. FOR ACCURATE RIGHT OF WAY DATA, CONTACT RIGHT OF WAY ENGINEERING AT THE DISTRICT OFFICE.
2. LOCATIONS OF UTILITY FACILITIES SHOWN ON THE PLANS ARE APPROXIMATE AND SHALL BE VERIFIED BY THE CONTRACTOR PRIOR TO CONSTRUCTION.
3. UTILITY OWNERSHIP ON THIS PROJECT:

—— e —(oh) AERIAL ELECTRIC - PACIFIC GAS & ELECTRIC COMPANY (PG&E)
—— g —— NATURAL GAS - SOUTHERN CALIFORNIA GAS COMPANY
—— t (oh) AERIAL TELEPHONE - VERIZON
—— fo —(oh) AERIAL FIBER OPTIC - BRIGHT HOUSE NETWORKS
—— w —— WATER MAIN - WEST KERN COUNTY WATER DISTRICT
—— s —— SANITARY SEWER - KERN WATER DISTRICT
—— o —— OIL - INERGY SERVICE PIPELINE
CRIMSON PIPELINE/SHELL PETROLUEM COMPNAY PIPELINE
CHEVRON PIPELINE COMPANY
PLAINS EXPLORATION & PRODUCTION COMPANY

LEGEND:

⊗ POTHOLE NUMBER

ABBREVIATIONS:

RBO - RELOCATE BY OTHERS (SEE U-5)
RTG - RAISE TO GRADE (SEE U-4, U-5, U-6, U-7, & U-10)
OH - OVERHEAD
SO CAL - SOUTHERN CALIFORNIA GAS COMPANY
BHN - BRIGHT HOUSE NETWORKS
HP - HIGH PRESSURE
FO - FIBER OPTIC
WKWD - WEST KERN COUNTY WATER DISTRICT
TELE - TELEPHONE
PG&E - PACIFIC GAS AND ELECTRIC COMPANY

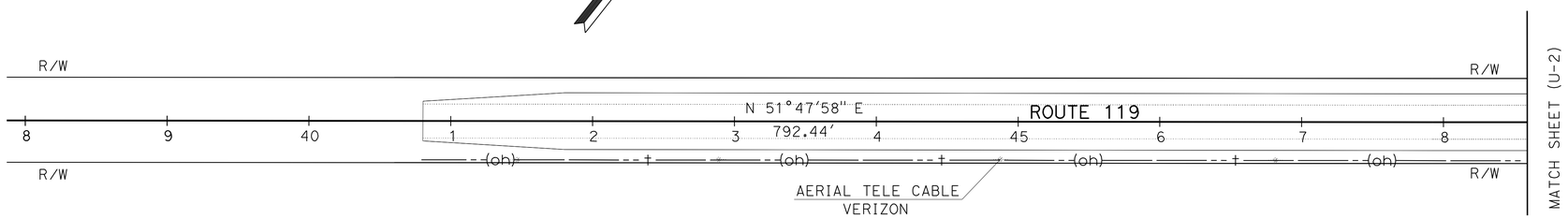

POTHOLE LOCATIONS

No.	STATION	LOCATION* Lt	LOCATION* Rt	ORIGINAL GROUND Elev TOP PIPE	ORIGINAL GROUND DEPTH	FINAL GRADE ELEVATION	CLEARANCE	UTILITY OWNER	UTILITY	Dia	No.
1	51+50.15	19.86'	-	547.01'	4.50'	551.80'	3.44'	SHELL	OIL LINES	10"	1
2	51+62.07	-	20.00'	546.00'	5.25'	551.84'	3.59'	CRIMSON	OIL LINES	10"	2
7	69+17.05	20.02'	-	512.55'	6.50'	519.33'	5.43'	CHEVRON	OIL LINES	8"	7
11	112+25.12	20.78'	-	441.28'	4.00'	445.75'	3.17'	SO CAL	OIL LINES	26"	11
12	112+38.63	-	20.59'	441.00'	4.00'	445.55'	3.23'	SO CAL	OIL LINES	26"	12
13	119+70.34	-	-	ABANDONED				UNKNOWN	OIL LINES	N/A	13
15	128+64.50	20.97'	-	421.16'	4.00'	425.26'	2.80'	WKWD	WATER LINE	6"	15
16	128+72.33	20.26'	-	420.81'	4.25'	425.25'	3.10'	SO CAL	GAS LINE	2"	16
18	2+70.00	-	16.47'	417.28'	4.50'	422.08'	2.52'	SO CAL	GAS LINE	2"	18
20	2+77.00	-	10.56'	418.75'	2.83'	421.89'	0.72'	WKWD	WATER LINE	8"	20
		-	-	420.13'	1.42'	421.89'	-0.66'	UNKNOWN	UNKNOWN	8"	
21	2+03.70	-	12.89'	417.79'	3.40'	421.51'	1.33'	WKWD	WATER LINE	8"	21
23	2+06.93	-	16.74'	418.74'	2.60'	421.62'	-0.07'	SO CAL	GAS LINE	2"	23
24	2+16.36	-	18.80'	418.91'	3.08'	422.24'	0.97'	SO CAL	GAS LINE	2"	24
26	146+36.12	-	31.72'	411.30'	3.33'	415.78'	2.23'	BHN	TELE	2"	26
	-	-	-	412.63'	2.00'	415.78'	0.90'	SO CAL	GAS LINE	2"	
27	146+42.22	-	36.25'	407.98'	6.50'	415.56'	5.43'	WKWD	WATER LINE	6"	27
28	147+72.33	-	20.31'	410.83'	3.42'	415.10'	2.02'	SO CAL	GAS LINE	2"	28
30	188+30.16	20.12'	-	385.46'	8.00'	394.07'	6.34'	CHEVRON	OIL LINE	6"	30
31	188+35.73	-	19.23'	385.38'	8.00'	393.85'	7.08'	CHEVRON	OIL LINE	6"	31
36	00+85.62	10.90'	-	388.70'	3.75'	392.70'	3.75'	WKWD	WATER LINE	6"	36
37	-	-	-	ABANDONED				CHEVRON	OIL LINE		37

POTHOLE LOCATIONS Cont

No.	STATION	LOCATION * Lt	LOCATION * Rt	ORIGINAL GROUND Elev TOP PIPE	ORIGINAL GROUND DEPTH	FINAL GRADE ELEVATION	CLEARANCE	UTILITY OWNER	UTILITY	Dia	No.
39	-	-	-	ABANDONED				CHEVRON	OIL LINE	8"	39
40	-	-	-	ABANDONED				CHEVRON	OIL LINE	8"	40
41	190+21.57	21.78'	-	387.38'	4.50'	392.55'	2.93'	WKWD	WATER LINE	6"	41
43	190+08.19	20.82'		387.76'	4.00'	392.56'	2.55'	SO CAL	GAS LINE	2"	43
45	00+55.30	-	20.10'	386.64'	3.75'	390.75'	3.88'	WKWD	WATER LINE	8"	45
46	00+60.00	-	22.90'	386.05'	4.50'	390.63'	4.29'	INERGY	OIL LINE	6"	46
48	190+21.48	-	30.00'	386.75'	4.50'	392.40'	3.40'	WKWD	WATER LINE	8"	48
50	214+63.53	-	20.10'	367.75'	5.42'	373.71'	4.61'	SO CAL	GAS LINE	2"	50
53	228+29.16	-	21.71'	369.81'	4.50'	374.93'	2.96'	SO CAL	GAS LINE	2"	53
54	228+47.13	-	35.74'	369.57'	3.50'	373.07'	3.46'	BHN	TELE	2"	54
55	229+28.00	-	35.64'	372.14'	2.25'	374.64'	1.72'	UNKNOWN	N/A		55
	-	-	-	371.10'	3.92'	374.64'	2.79'	BHN	TELE	2"	
	-	-	-	371.06'	3.33'	374.64'	2.83'	SO CAL	GAS LINE	2"	
60	229+93.47	27.44'	-	372.59'	3.33'	375.92'	1.89'	WKWD	WATER LINE	6"	60
61	-	-	-	ABANDONED				CHEVRON	OIL LINE	8"	61
64	0+93.39	21.59'	-	372.90'	4.00'	377.15'	1.91'	SO CAL	GAS LINE	0.5"	64
67	231+80.49	21.54'	-	373.58'	4.00'	377.58'	2.23'	PLAINS	OIL LINE	8"	67
70	236+45.91	-	27.91'	374.66'	3.75'	378.41'	3.29'	BHN	TELE	2"	70
71	233+62.87	-	22.51'	373.24'	3.83'	378.25'	3.87'	SO CAL	GAS LINE	2"	71
72	187+69.17	20.21'	-	385.80'	8.00'	394.05'	6.91'	PLAINS	OIL LINE	8"	72

* OFFSET FROM CENTER LINE

THIS PLAN ACCURATE FOR UTILITY INFORMATION ONLY

UTILITY PLAN
U-1

SCALE: 1" = 50'

STATE OF CALIFORNIA - DEPARTMENT OF TRANSPORTATION
DESIGN
Caltrans

FUNCTIONAL SUPERVISOR: DAVID SANGHA
CALCULATED-DESIGNED BY: AMRITPAL BADHESHA
CHECKED BY: LARRY CAO
REVISED BY / DATE REVISED

LAST REVISION 09-09-11 | DATE PLOTTED => 02-NOV-2011 | TIME PLOTTED => 15:47

Dist	COUNTY	ROUTE	POST MILES TOTAL PROJECT	SHEET No.	TOTAL SHEETS
06	Ker	119	4.7/8.5	27	56

REGISTERED CIVIL ENGINEER 09-14-11 DATE

9-19-11
PLANS APPROVAL DATE

REGISTERED PROFESSIONAL ENGINEER
D S SANGHA
No. 59652
Exp. 12/31/12
CIVIL
STATE OF CALIFORNIA

THE STATE OF CALIFORNIA OR ITS OFFICERS OR AGENTS SHALL NOT BE RESPONSIBLE FOR THE ACCURACY OR COMPLETENESS OF SCANNED COPIES OF THIS PLAN SHEET.

NOTE:

FOR ACCURATE RIGHT OF WAY DATA, CONTACT RIGHT OF WAY ENGINEERING AT THE DISTRICT OFFICE.

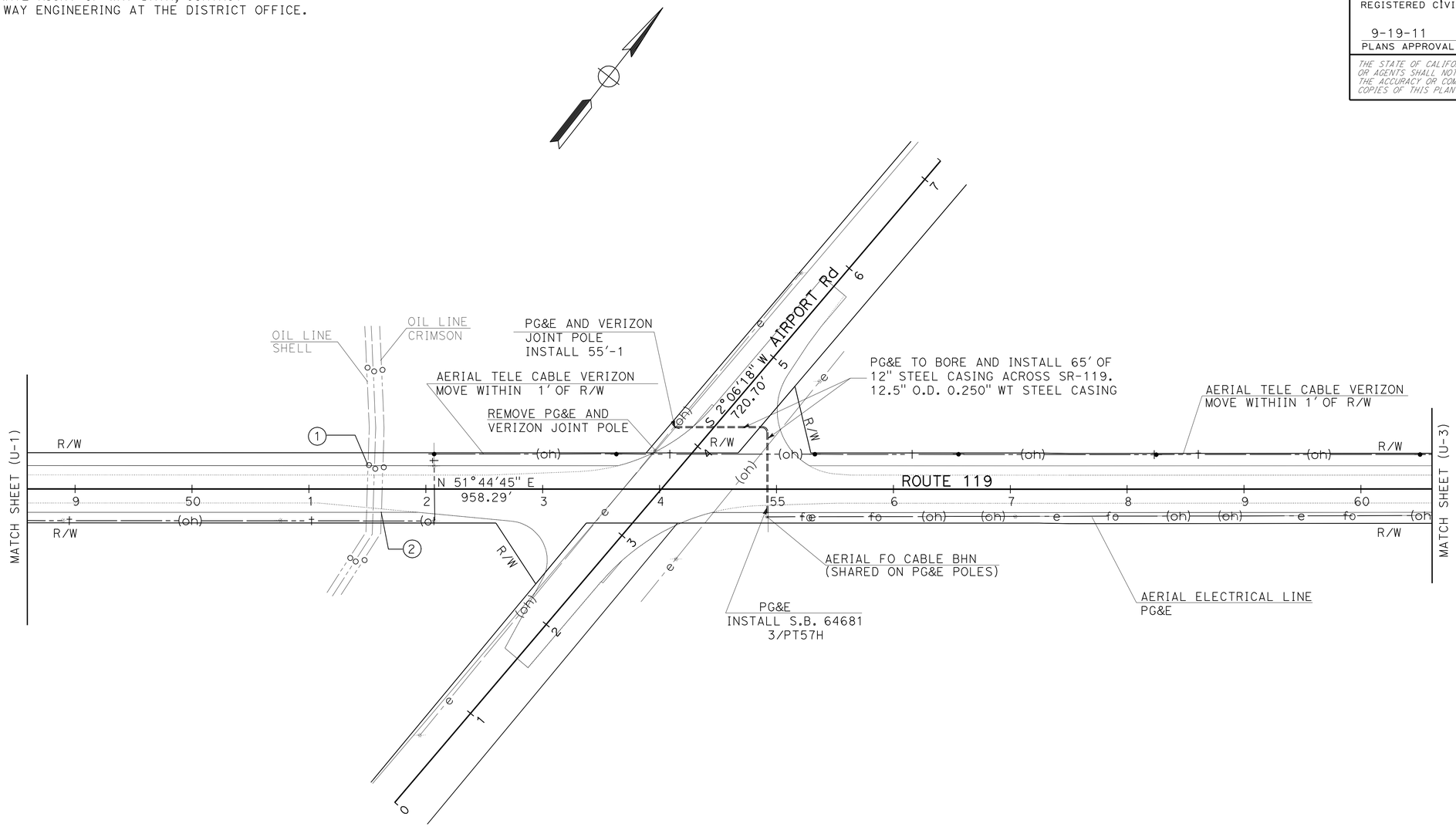

THIS PLAN ACCURATE FOR UTILITY INFORMATION ONLY

UTILITY PLAN U-2

SCALE: 1" = 50'

STATE OF CALIFORNIA - DEPARTMENT OF TRANSPORTATION
Caltrans
DESIGN

FUNCTIONAL SUPERVISOR: DAVID SANGHA
CALCULATED-DESIGNED BY: AMRITPAL BADHESHA
CHECKED BY: LARRY CAO
REVISED BY
DATE REVISED

LAST REVISION 09-14-11
DATE PLOTTED => 02-NOV-2011
TIME PLOTTED => 15:47

Dist	COUNTY	ROUTE	POST MILES TOTAL PROJECT	SHEET No.	TOTAL SHEETS
06	Ker	119	4.7/8.5	28	56

REGISTERED CIVIL ENGINEER 09-14-11 DATE

9-19-11
PLANS APPROVAL DATE

REGISTERED PROFESSIONAL ENGINEER
D S SANGHA
No. 59652
Exp. 12/31/12
CIVIL
STATE OF CALIFORNIA

THE STATE OF CALIFORNIA OR ITS OFFICERS OR AGENTS SHALL NOT BE RESPONSIBLE FOR THE ACCURACY OR COMPLETENESS OF SCANNED COPIES OF THIS PLAN SHEET.

NOTE:

FOR ACCURATE RIGHT OF WAY DATA, CONTACT
RIGHT OF WAY ENGINEERING AT THE DISTRICT OFFICE.

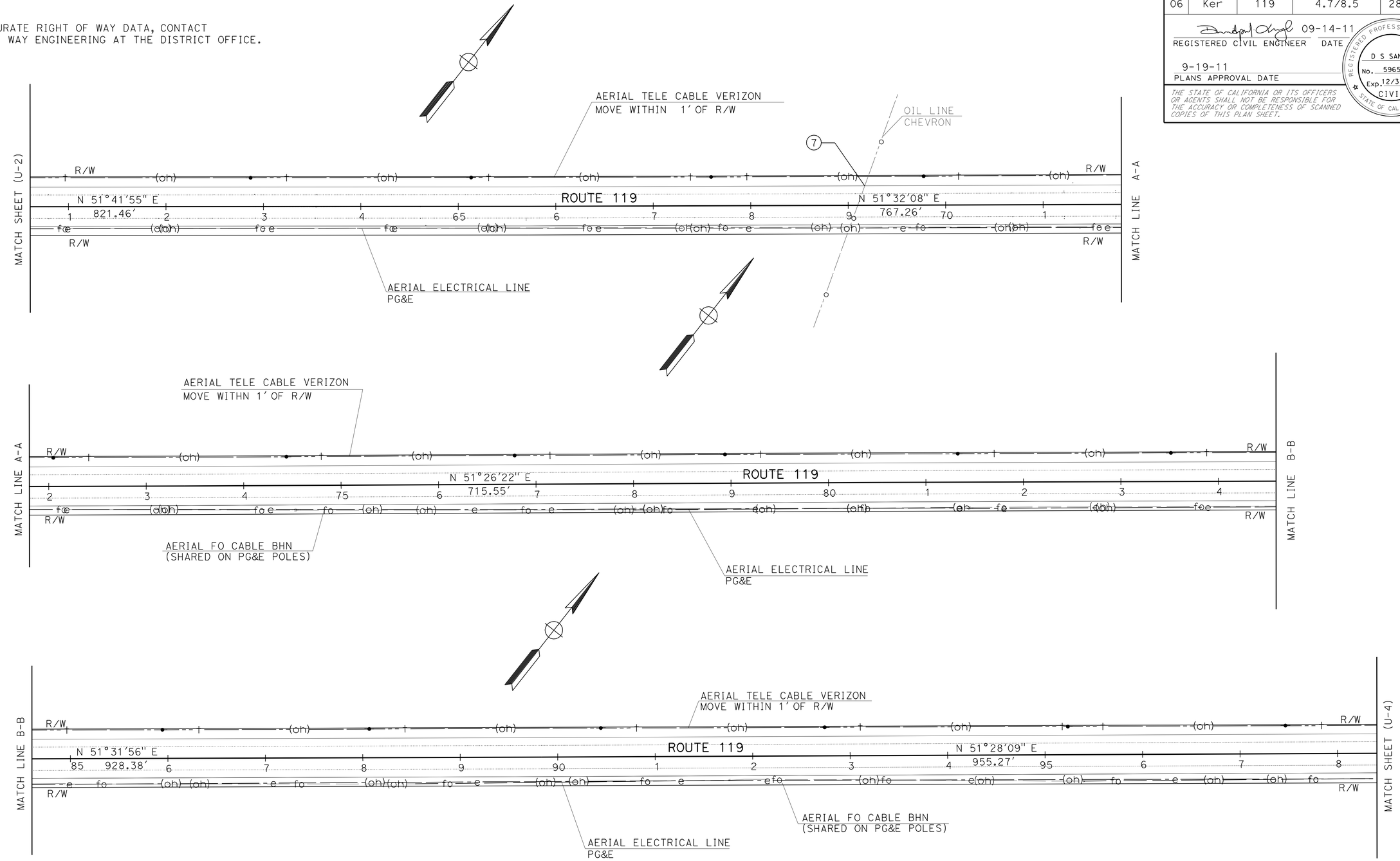

THIS PLAN ACCURATE FOR UTILITY INFORMATION ONLY

UTILITY PLAN

SCALE: 1" = 50'

U-3

REVISED BY	DATE REVISED

CALCULATED-DESIGNED BY	CHECKED BY
AMRITPAL BADHESHA	LARRY CAO

FUNCTIONAL SUPERVISOR: DAVID SANGHA

STATE OF CALIFORNIA - DEPARTMENT OF TRANSPORTATION

Caltrans®

DESIGN

LAST REVISION 09-14-11 | DATE PLOTTED => 02-NOV-2011 | TIME PLOTTED => 15:47

Dist	COUNTY	ROUTE	POST MILES TOTAL PROJECT	SHEET No.	TOTAL SHEETS
06	Ker	119	4.7/8.5	29	56

REGISTERED CIVIL ENGINEER 09-14-11 DATE

9-19-11
PLANS APPROVAL DATE

REGISTERED PROFESSIONAL ENGINEER
D S SANGHA
No. 59652
Exp. 12/31/12
CIVIL
STATE OF CALIFORNIA

THE STATE OF CALIFORNIA OR ITS OFFICERS OR AGENTS SHALL NOT BE RESPONSIBLE FOR THE ACCURACY OR COMPLETENESS OF SCANNED COPIES OF THIS PLAN SHEET.

NOTE:

FOR ACCURATE RIGHT OF WAY DATA, CONTACT RIGHT OF WAY ENGINEERING AT THE DISTRICT OFFICE.

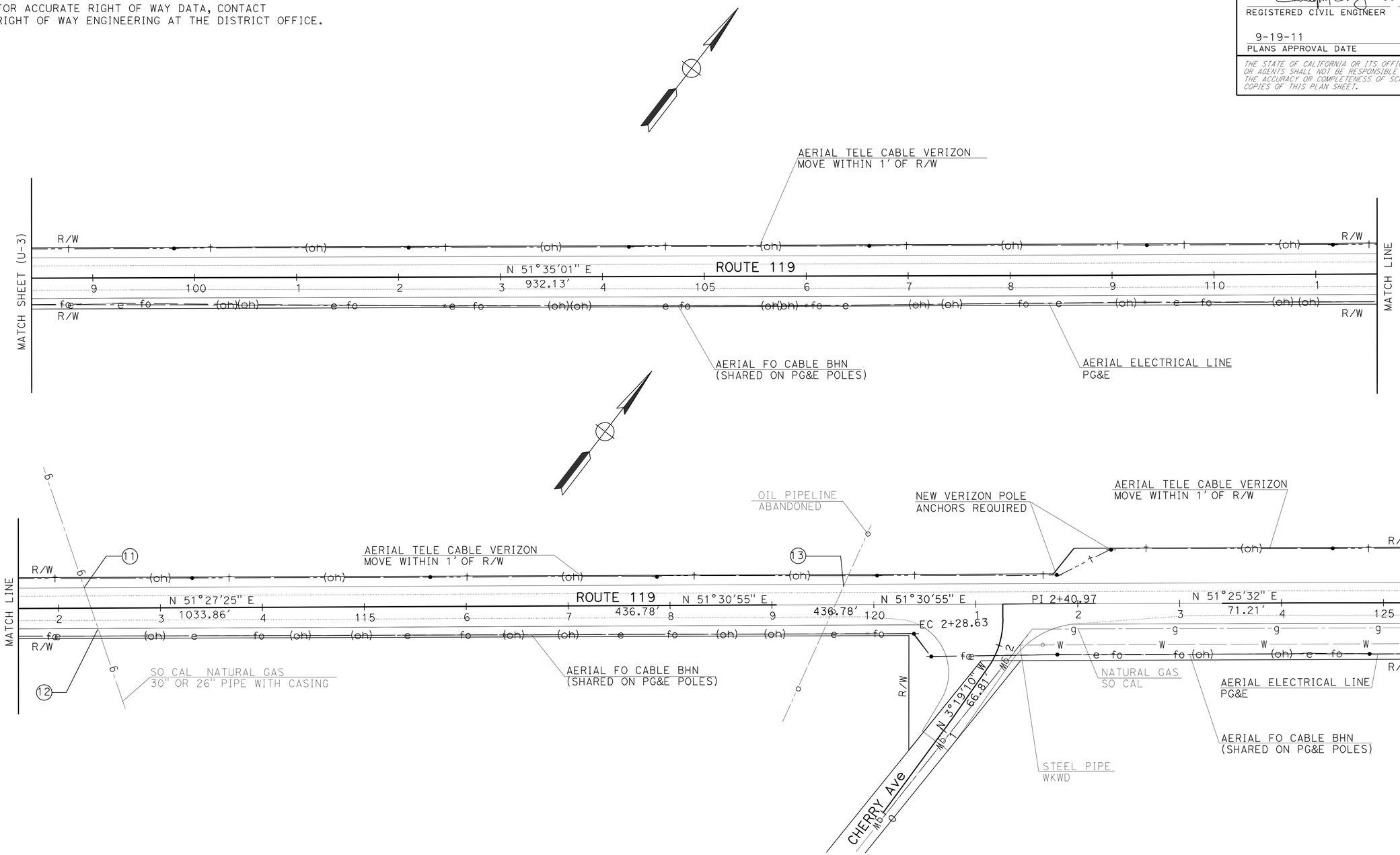

THIS PLAN ACCURATE FOR UTILITY INFORMATION ONLY

UTILITY PLAN

SCALE: 1" = 50'

U-4

STATE OF CALIFORNIA - DEPARTMENT OF TRANSPORTATION
Caltrans
DESIGN

FUNCTIONAL SUPERVISOR: DAVID SANGHA
CALCULATED-DESIGNED BY: AMRITPAL BADHESHA
CHECKED BY: LARRY CAO
REVISED BY
DATE REVISED

LAST REVISION 09-14-11
DATE PLOTTED => 02-NOV-2011
TIME PLOTTED => 15:48

Dist	COUNTY	ROUTE	POST MILES TOTAL PROJECT	SHEET No.	TOTAL SHEETS
06	Ker	119	4.7/8.5	30	56

REGISTERED CIVIL ENGINEER 09-14-11 DATE

9-19-11
PLANS APPROVAL DATE

REGISTERED PROFESSIONAL ENGINEER
D S SANGHA
No. 59652
Exp. 12/31/12
CIVIL
STATE OF CALIFORNIA

THE STATE OF CALIFORNIA OR ITS OFFICERS OR AGENTS SHALL NOT BE RESPONSIBLE FOR THE ACCURACY OR COMPLETENESS OF SCANNED COPIES OF THIS PLAN SHEET.

NOTE:

FOR ACCURATE RIGHT OF WAY DATA, CONTACT
RIGHT OF WAY ENGINEERING AT THE DISTRICT OFFICE.

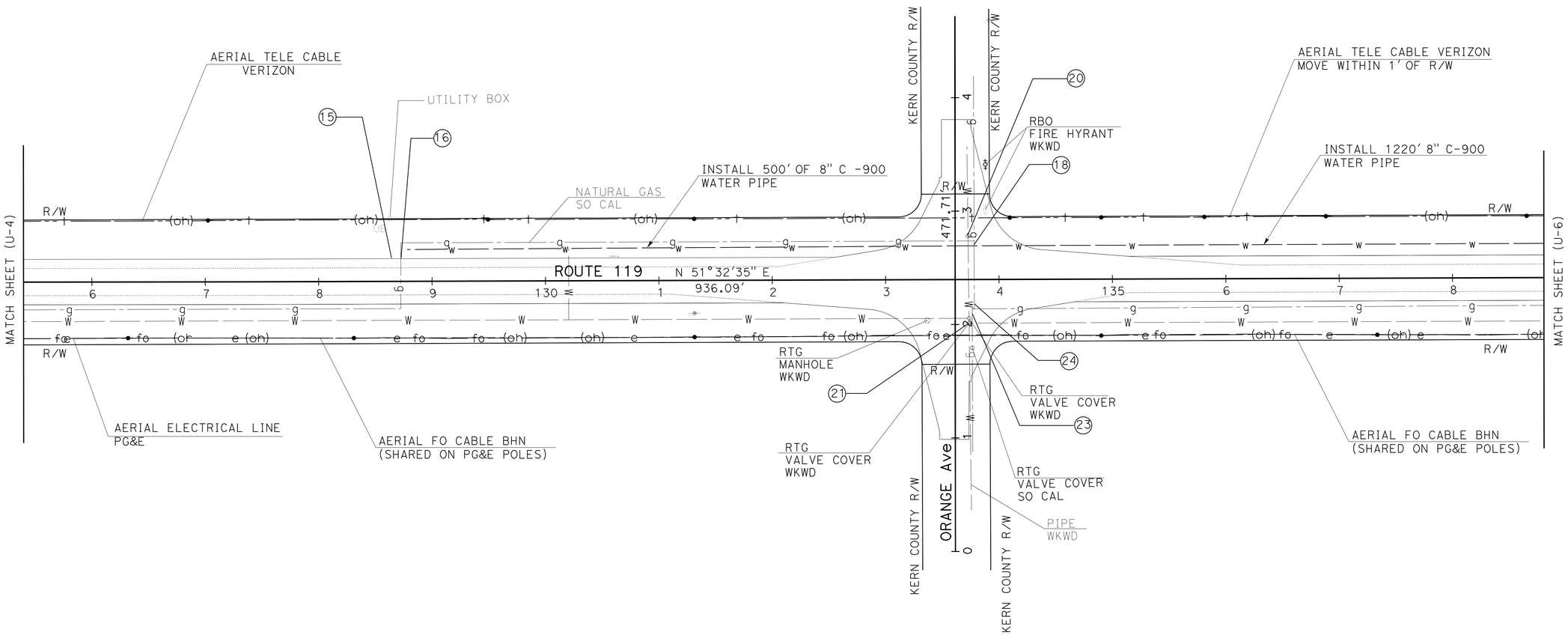

THIS PLAN ACCURATE FOR UTILITY INFORMATION ONLY

UTILITY PLAN

SCALE: 1" = 50'

U-5

STATE OF CALIFORNIA - DEPARTMENT OF TRANSPORTATION
Caltrans
DESIGN

FUNCTIONAL SUPERVISOR: DAVID SANGHA
CALCULATED-DESIGNED BY: AMRITPAL BADHESHA
CHECKED BY: LARRY CAO
REVISED BY
DATE REVISED

LAST REVISION 09-14-11
DATE PLOTTED => 02-NOV-2011
TIME PLOTTED => 15:48

Dist	COUNTY	ROUTE	POST MILES TOTAL PROJECT	SHEET No.	TOTAL SHEETS
06	Ker	119	4.7/8.5	31	56

REGISTERED CIVIL ENGINEER 09-14-11 DATE

9-19-11
PLANS APPROVAL DATE

REGISTERED PROFESSIONAL ENGINEER
D S SANGHA
No. 59652
Exp. 12/31/12
CIVIL
STATE OF CALIFORNIA

THE STATE OF CALIFORNIA OR ITS OFFICERS OR AGENTS SHALL NOT BE RESPONSIBLE FOR THE ACCURACY OR COMPLETENESS OF SCANNED COPIES OF THIS PLAN SHEET.

NOTE:

FOR ACCURATE RIGHT OF WAY DATA, CONTACT
RIGHT OF WAY ENGINEERING AT THE DISTRICT OFFICE.

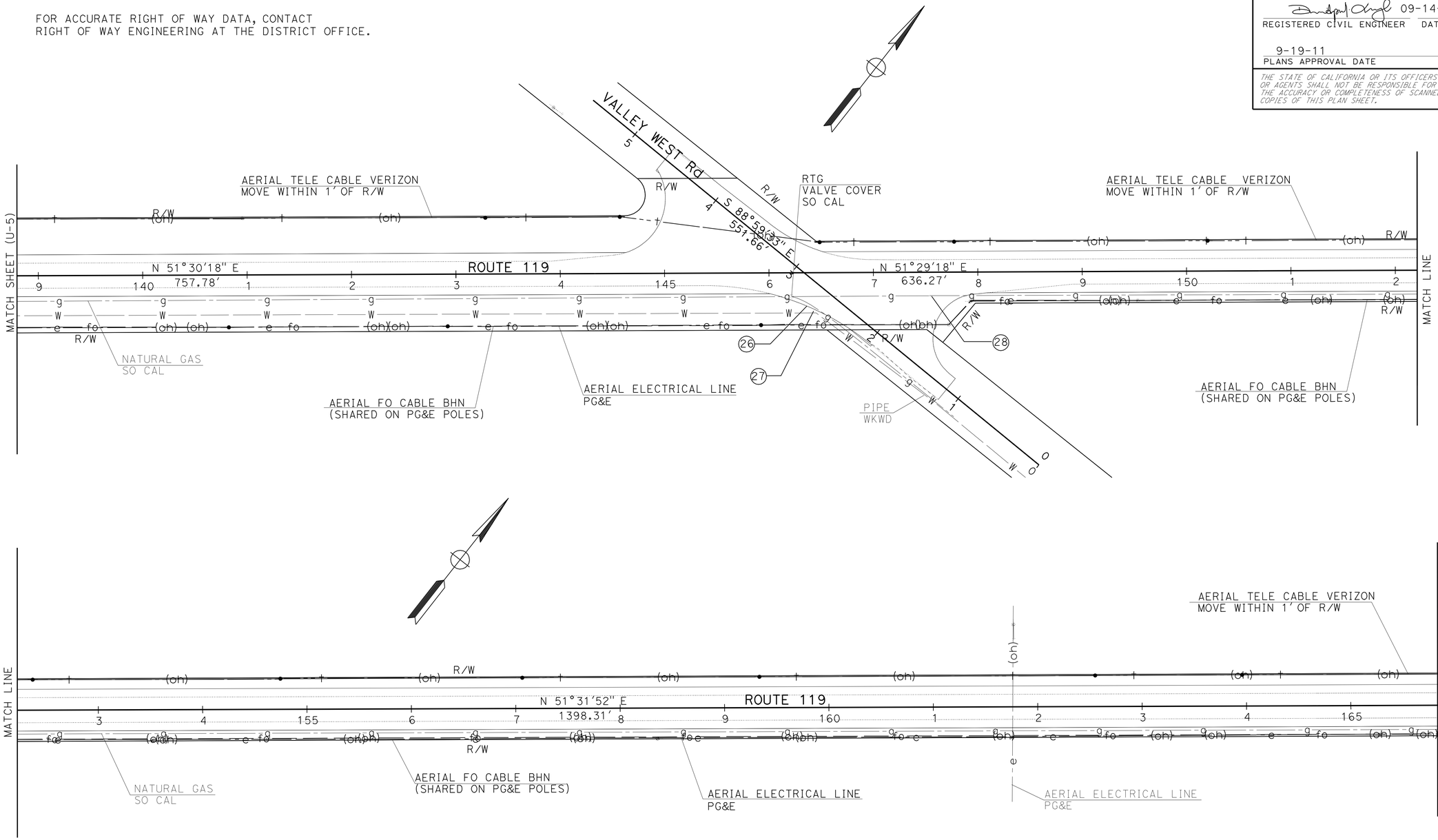

THIS PLAN ACCURATE FOR UTILITY INFORMATION ONLY

SCALE: 1" = 50'

UTILITY PLAN
U-6

STATE OF CALIFORNIA - DEPARTMENT OF TRANSPORTATION
Caltrans DESIGN

FUNCTIONAL SUPERVISOR: DAVID SANGHA
CALCULATED-DESIGNED BY: AMRITPAL BADHESHA
CHECKED BY: LARRY CAO
REVISED BY
DATE REVISED

LAST REVISION 09-14-11
DATE PLOTTED => 02-NOV-2011
TIME PLOTTED => 15:48

Dist	COUNTY	ROUTE	POST MILES TOTAL PROJECT	SHEET No.	TOTAL SHEETS
06	Ker	119	4.7/8.5	32	56

REGISTERED CIVIL ENGINEER 09-14-11 DATE

9-19-11
PLANS APPROVAL DATE

REGISTERED PROFESSIONAL ENGINEER
D S SANGHA
No. 59652
Exp. 12/31/12
CIVIL
STATE OF CALIFORNIA

THE STATE OF CALIFORNIA OR ITS OFFICERS OR AGENTS SHALL NOT BE RESPONSIBLE FOR THE ACCURACY OR COMPLETENESS OF SCANNED COPIES OF THIS PLAN SHEET.

NOTE:

FOR ACCURATE RIGHT OF WAY DATA, CONTACT
RIGHT OF WAY ENGINEERING AT THE DISTRICT OFFICE.

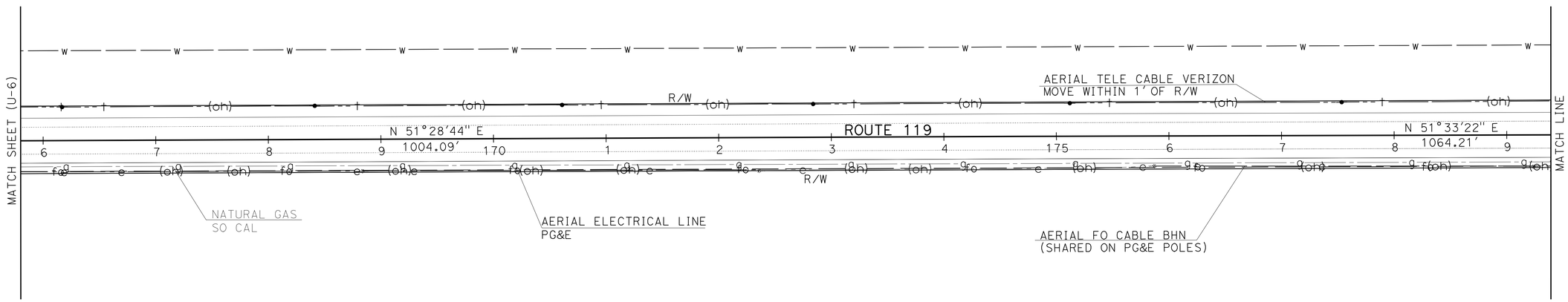

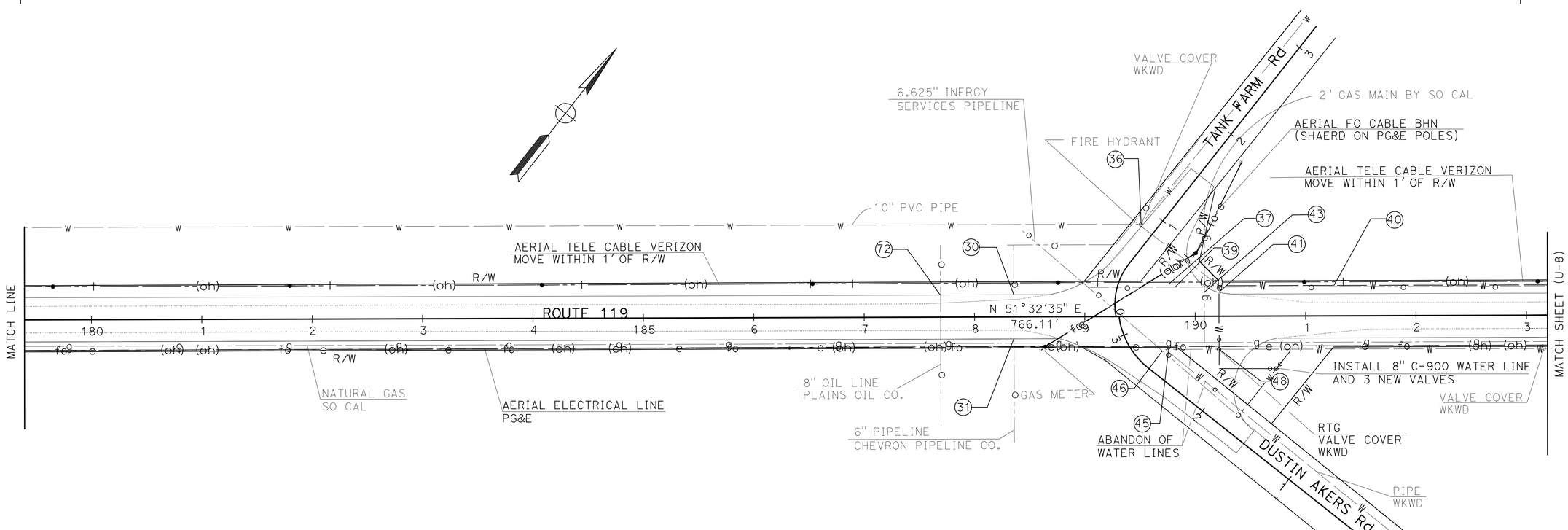

THIS PLAN ACCURATE FOR UTILITY INFORMATION ONLY

UTILITY PLAN
U-7

SCALE: 1" = 50'

STATE OF CALIFORNIA - DEPARTMENT OF TRANSPORTATION
Caltrans
DESIGN

FUNCTIONAL SUPERVISOR: DAVID SANGHA
CALCULATED-DESIGNED BY: AMRITPAL BADHESHA
CHECKED BY: LARRT CAO
REVISED BY
DATE REVISED

LAST REVISION 09-14-11
DATE PLOTTED => 02-NOV-2011
TIME PLOTTED => 15:48

Dist	COUNTY	ROUTE	POST MILES TOTAL PROJECT	SHEET No.	TOTAL SHEETS
06	Ker	119	4.7/8.5	33	56

REGISTERED CIVIL ENGINEER 09-09-11 DATE

9-19-11
PLANS APPROVAL DATE

REGISTERED PROFESSIONAL ENGINEER
D S SANGHA
No. 59652
Exp. 12/31/12
CIVIL
STATE OF CALIFORNIA

THE STATE OF CALIFORNIA OR ITS OFFICERS OR AGENTS SHALL NOT BE RESPONSIBLE FOR THE ACCURACY OR COMPLETENESS OF SCANNED COPIES OF THIS PLAN SHEET.

NOTE:

FOR ACCURATE RIGHT OF WAY DATA, CONTACT
RIGHT OF WAY ENGINEERING AT THE DISTRICT OFFICE.

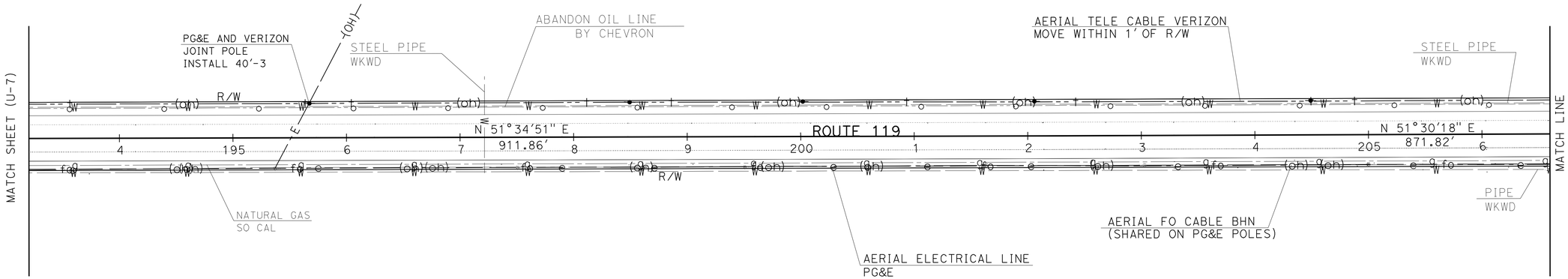

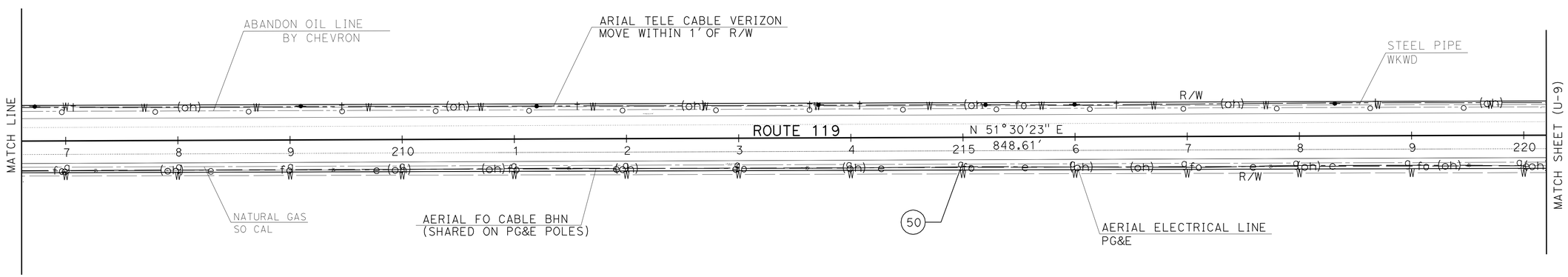

THIS PLAN ACCURATE FOR UTILITY INFORMATION ONLY

SCALE: 1" = 50'

UTILITY PLAN
U-8

REVISED BY	DATE REVISED
AMRITPAL BADHESHA	LARRY CAO

CALCULATED-DESIGNED BY	CHECKED BY

FUNCTIONAL SUPERVISOR
DAVID SANGHA

STATE OF CALIFORNIA - DEPARTMENT OF TRANSPORTATION
Caltrans
DESIGN

LAST REVISION 09-09-11
DATE PLOTTED => 02-NOV-2011
TIME PLOTTED => 15:48

Dist	COUNTY	ROUTE	POST MILES TOTAL PROJECT	SHEET No.	TOTAL SHEETS
06	Ker	119	4.7/8.5	34	56

REGISTERED CIVIL ENGINEER 09-09-11 DATE

9-19-11
PLANS APPROVAL DATE

REGISTERED PROFESSIONAL ENGINEER D S SANGHA No. 59652 Exp. 12/31/12 CIVIL STATE OF CALIFORNIA

THE STATE OF CALIFORNIA OR ITS OFFICERS OR AGENTS SHALL NOT BE RESPONSIBLE FOR THE ACCURACY OR COMPLETENESS OF SCANNED COPIES OF THIS PLAN SHEET.

NOTE:

FOR ACCURATE RIGHT OF WAY DATA, CONTACT
RIGHT OF WAY ENGINEERING AT THE DISTRICT OFFICE.

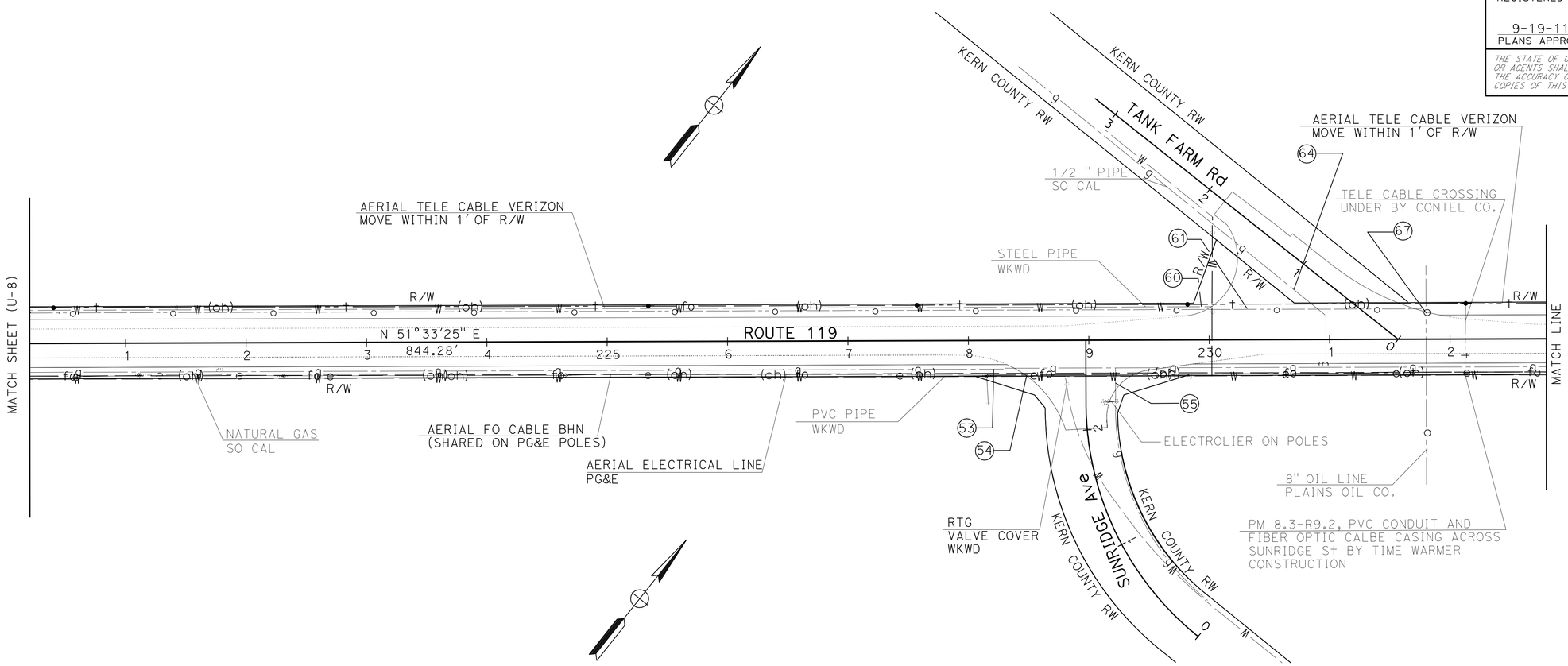

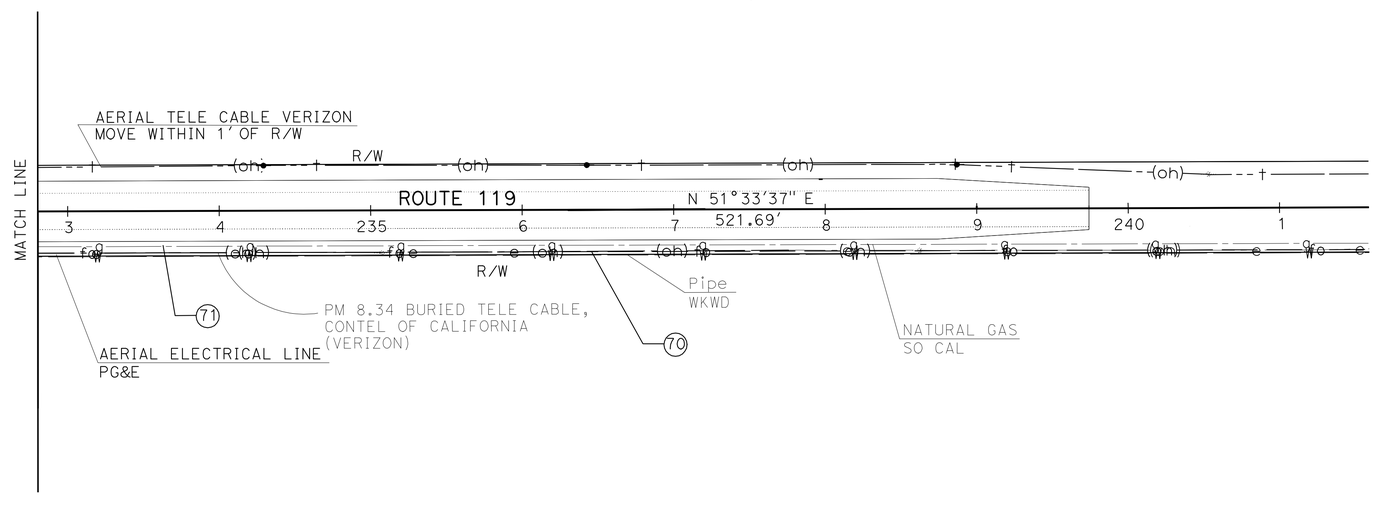

THIS PLAN ACCURATE FOR UTILITY INFORMATION ONLY

SCALE: 1" = 50'

UTILITY PLAN
U-9

REVISED BY	DATE REVISED
AMRITPAL BADHESHA	LARRY CAO

CALCULATED-DESIGNED BY	CHECKED BY

FUNCTIONAL SUPERVISOR: DAVID SANGHA

STATE OF CALIFORNIA - DEPARTMENT OF TRANSPORTATION
Caltrans
DESIGN

LAST REVISION 09-09-11 | DATE PLOTTED => 02-NOV-2011 | TIME PLOTTED => 15:48

Dist	COUNTY	ROUTE	POST MILES TOTAL PROJECT	SHEET No.	TOTAL SHEETS
06	Ker	119	4.7/8.5	35	56

Hassan Taha 06-29-10
REGISTERED CIVIL ENGINEER DATE

9-19-11
PLANS APPROVAL DATE

REGISTERED PROFESSIONAL ENGINEER HASSAN M. TAHA No. 60130 Exp. 06/30/12 CIVIL STATE OF CALIFORNIA

THE STATE OF CALIFORNIA OR ITS OFFICERS OR AGENTS SHALL NOT BE RESPONSIBLE FOR THE ACCURACY OR COMPLETENESS OF SCANNED COPIES OF THIS PLAN SHEET.

STATIONARY MOUNTED CONSTRUCTION AREA SIGNS

SIGN No.	SIGN CODE	PANEL SIZE	SIGN MESSAGE	No. OF POST AND SIZE	EACH
A	C23(CA)	48" x 48"	ROAD WORK AHEAD	1-6" x 6"	2
B	C23(CA)	36" x 36"	ROAD WORK AHEAD	1-4" x 4"	11
C	C14(CA)	48" x 24"	END ROAD WORK	1-4" x 6"	2
D	C40(CA)	108" x 42"	TRAFFIC FINES DOUBLED IN WORK ZONES	2-6" x 6"	2

NOTE: SIGN LOCATIONS SHOWN ARE APPROXIMATE. EXACT LOCATIONS TO BE DETERMINED BY THE ENGINEER.

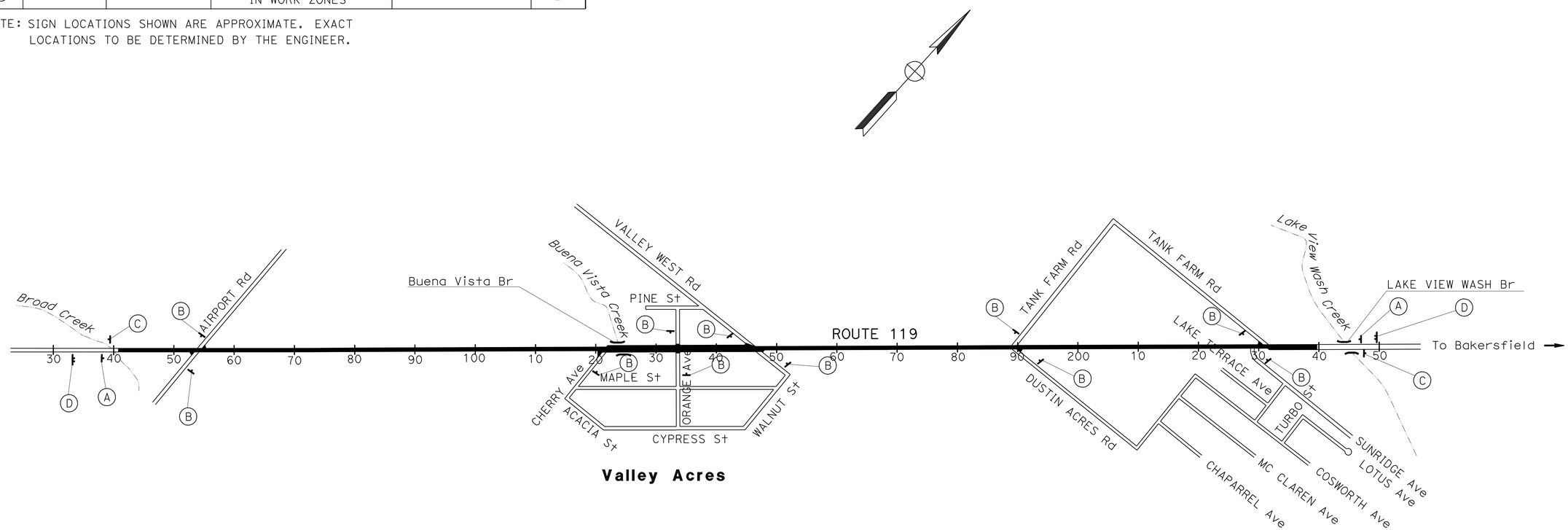

THIS PLAN ACCURATE FOR CONSTRUCTION AREA SIGN WORK ONLY.

CONSTRUCTION AREA SIGNS

NO SCALE

CS-1

STATE OF CALIFORNIA - DEPARTMENT OF TRANSPORTATION
Caltrans® TRAFFIC DESIGN

FUNCTIONAL SUPERVISOR: MOHAMMED QATAMI
CALCULATED-DESIGNED BY: ALICIA RODRIGUEZ
CHECKED BY: HASSAN TAHA
REVISED BY / DATE REVISED

LAST REVISION 09-27-10 | DATE PLOTTED => 02-NOV-2011 | TIME PLOTTED => 15:49

Dist	COUNTY	ROUTE	POST MILES TOTAL PROJECT	SHEET No.	TOTAL SHEETS
06	Ker	119	4.7/8.5	36	56

Hassan Taha 06-29-10
REGISTERED CIVIL ENGINEER DATE

9-19-11
PLANS APPROVAL DATE

REGISTERED PROFESSIONAL ENGINEER
HASSAN M. TAHA
No. 60130
Exp 06/30/12
CIVIL
STATE OF CALIFORNIA

THE STATE OF CALIFORNIA OR ITS OFFICERS OR AGENTS SHALL NOT BE RESPONSIBLE FOR THE ACCURACY OR COMPLETENESS OF SCANNED COPIES OF THIS PLAN SHEET.

LEGEND

- (XX) TRAFFIC STRIPE DETAIL No.
- LIMITS OF DESIGNATED TRAFFIC STRIPING DETAIL
- ● DELINEATOR (CLASS I) - TYPE E,F
- ROADSIDE SIGN ONE-POST
- ROADSIDE SIGN TWO-POST
- ■ REMOVE ROADSIDE SIGN
- ✳ RESET ROADSIDE SIGN
- S "STOP" PAVEMENT MARKING
- P "PED" PAVEMENT MARKING
- X "XING" PAVEMENT MARKING

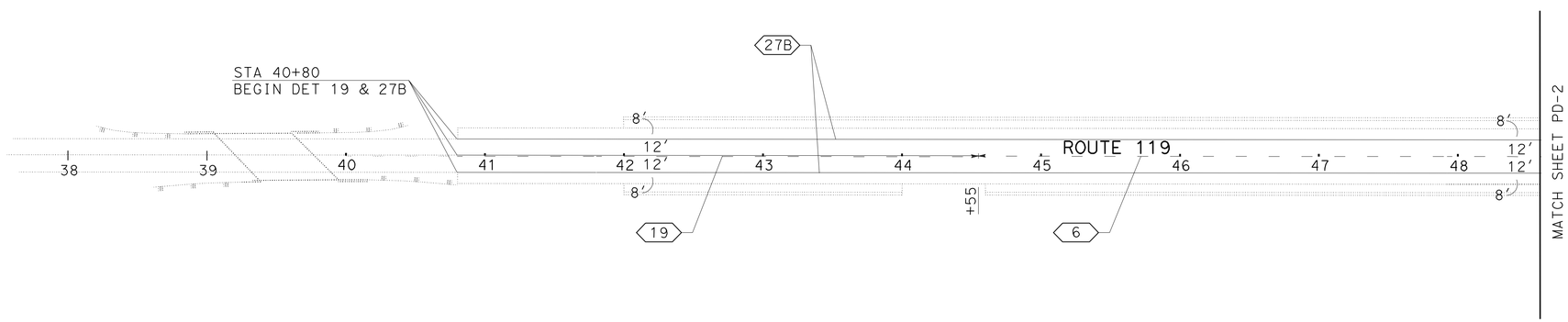

THIS PLAN ACCURATE FOR PAVEMENT DELINEATION & SIGN WORK ONLY.

PAVEMENT DELINEATION AND SIGN PLAN

SCALE: 1" = 50'

PD-1

REVISED BY	DATE REVISED

CALCULATED-DESIGNED BY: ALICIA RODRIGUEZ
CHECKED BY: HASSAN TAHA
FUNCTIONAL SUPERVISOR: MOHAMMED QATAMI

STATE OF CALIFORNIA - DEPARTMENT OF TRANSPORTATION
Caltrans® TRAFFIC DESIGN

LAST REVISION 09-27-10 | DATE PLOTTED => 02-NOV-2011 | TIME PLOTTED => 15:49

Dist	COUNTY	ROUTE	POST MILES TOTAL PROJECT	SHEET No.	TOTAL SHEETS
06	Ker	119	4.7/8.5	37	56

Hassan Taha 06-29-10
REGISTERED CIVIL ENGINEER DATE

9-19-11
PLANS APPROVAL DATE

REGISTERED PROFESSIONAL ENGINEER
HASSAN M. TAHA
No. 60130
Exp. 06/30/12
CIVIL
STATE OF CALIFORNIA

THE STATE OF CALIFORNIA OR ITS OFFICERS OR AGENTS SHALL NOT BE RESPONSIBLE FOR THE ACCURACY OR COMPLETENESS OF SCANNED COPIES OF THIS PLAN SHEET.

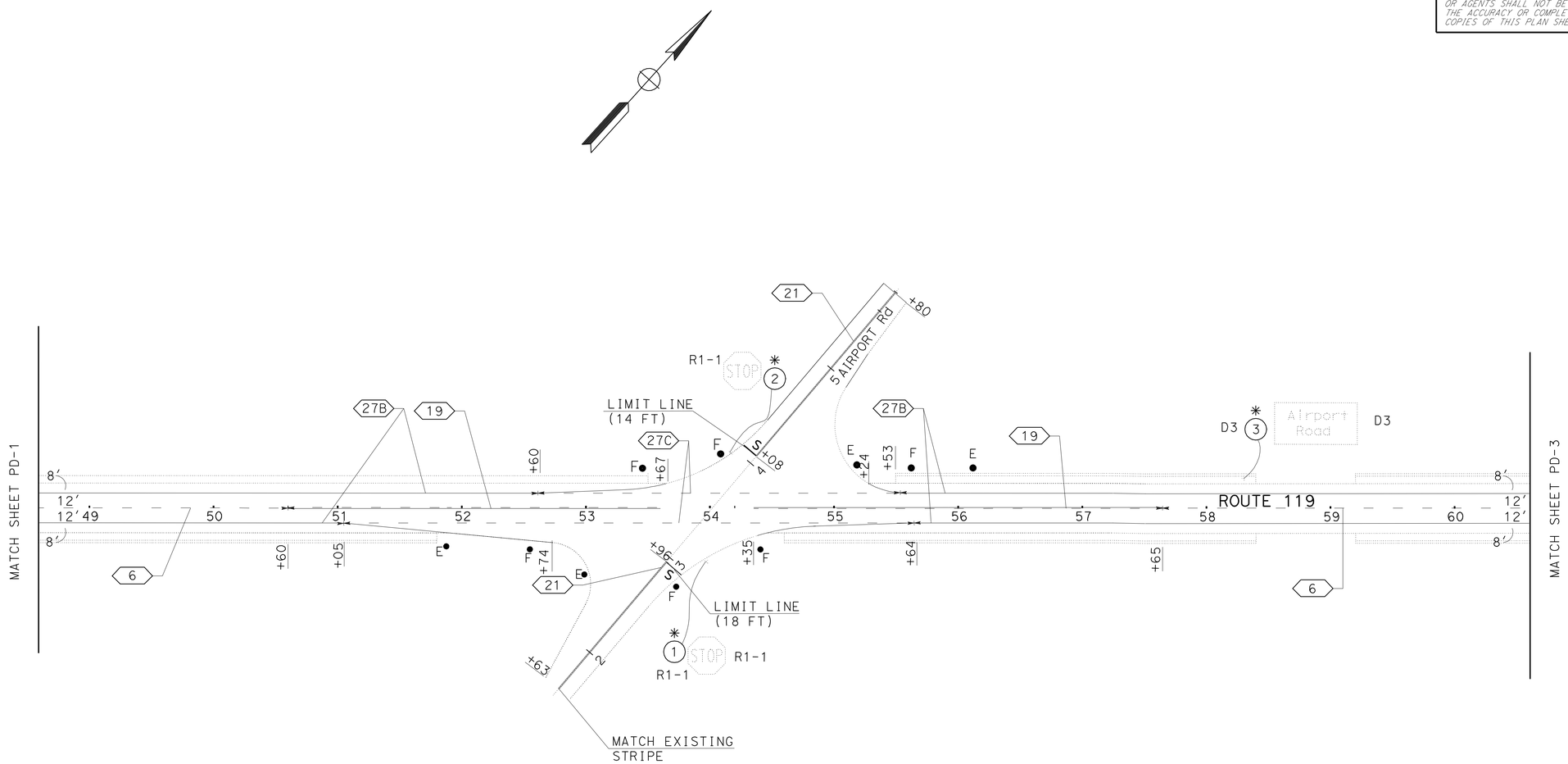

PAVEMENT DELINEATION AND SIGN PLAN

SCALE: 1" = 50'

PD-2

THIS PLAN ACCURATE FOR PAVEMENT DELINEATION & SIGN WORK ONLY.

REVISED BY	DATE REVISED

CALCULATED-DESIGNED BY: ALICIA RODRIGUEZ
CHECKED BY: HASSAN TAHA
FUNCTIONAL SUPERVISOR: MOHAMMED QATAMI

STATE OF CALIFORNIA - DEPARTMENT OF TRANSPORTATION
Caltrans TRAFFIC DESIGN

LAST REVISION 09-27-10 | DATE PLOTTED => 02-NOV-2011 | TIME PLOTTED => 15:49

Dist	COUNTY	ROUTE	POST MILES TOTAL PROJECT	SHEET No.	TOTAL SHEETS
06	Ker	119	4.7/8.5	38	56

Hassan Taha 06-29-10
REGISTERED CIVIL ENGINEER DATE

9-19-11
PLANS APPROVAL DATE

REGISTERED PROFESSIONAL ENGINEER HASSAN M. TAHA No. 60130 Exp. 06/30/12 CIVIL STATE OF CALIFORNIA

THE STATE OF CALIFORNIA OR ITS OFFICERS OR AGENTS SHALL NOT BE RESPONSIBLE FOR THE ACCURACY OR COMPLETENESS OF SCANNED COPIES OF THIS PLAN SHEET.

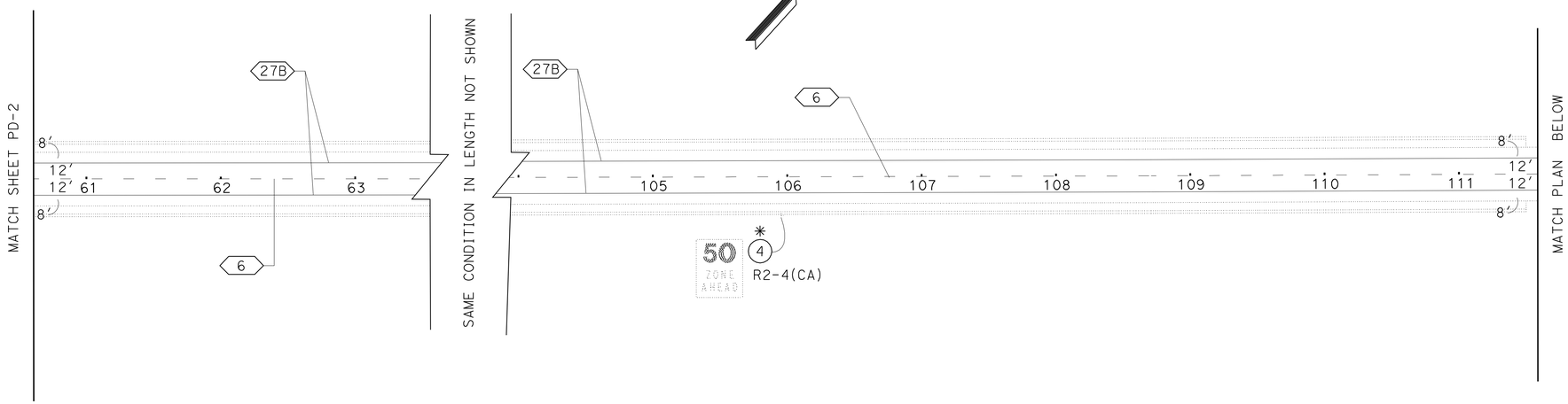

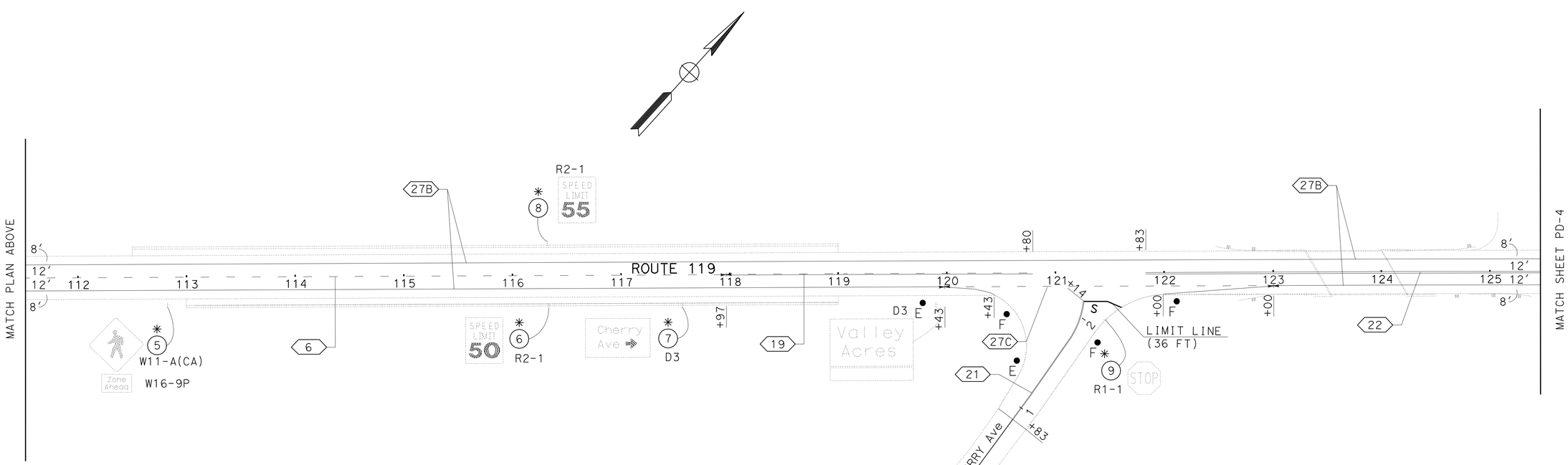

PAVEMENT DELINEATION AND SIGN PLAN

PD-3

SCALE: 1" = 50'

THIS PLAN ACCURATE FOR PAVEMENT DELINEATION & SIGN WORK ONLY.

STATE OF CALIFORNIA - DEPARTMENT OF TRANSPORTATION
Caltrans
TRAFFIC DESIGN

FUNCTIONAL SUPERVISOR: MOHAMMED QATAMI
CALCULATED-DESIGNED BY: ALICIA RODRIGUEZ
CHECKED BY: HASSAN TAHA
REVISED BY
DATE REVISED

LAST REVISION 09-27-10
DATE PLOTTED => 02-NOV-2011
TIME PLOTTED => 16:05

Dist	COUNTY	ROUTE	POST MILES TOTAL PROJECT	SHEET No.	TOTAL SHEETS
06	Ker	119	4.7/8.5	39	56

Hassan Taha 06-29-10
REGISTERED CIVIL ENGINEER DATE

9-19-11
PLANS APPROVAL DATE

REGISTERED PROFESSIONAL ENGINEER HASSAN M. TAHA No. 60130 Exp 06/30/12 CIVIL STATE OF CALIFORNIA

THE STATE OF CALIFORNIA OR ITS OFFICERS OR AGENTS SHALL NOT BE RESPONSIBLE FOR THE ACCURACY OR COMPLETENESS OF SCANNED COPIES OF THIS PLAN SHEET.

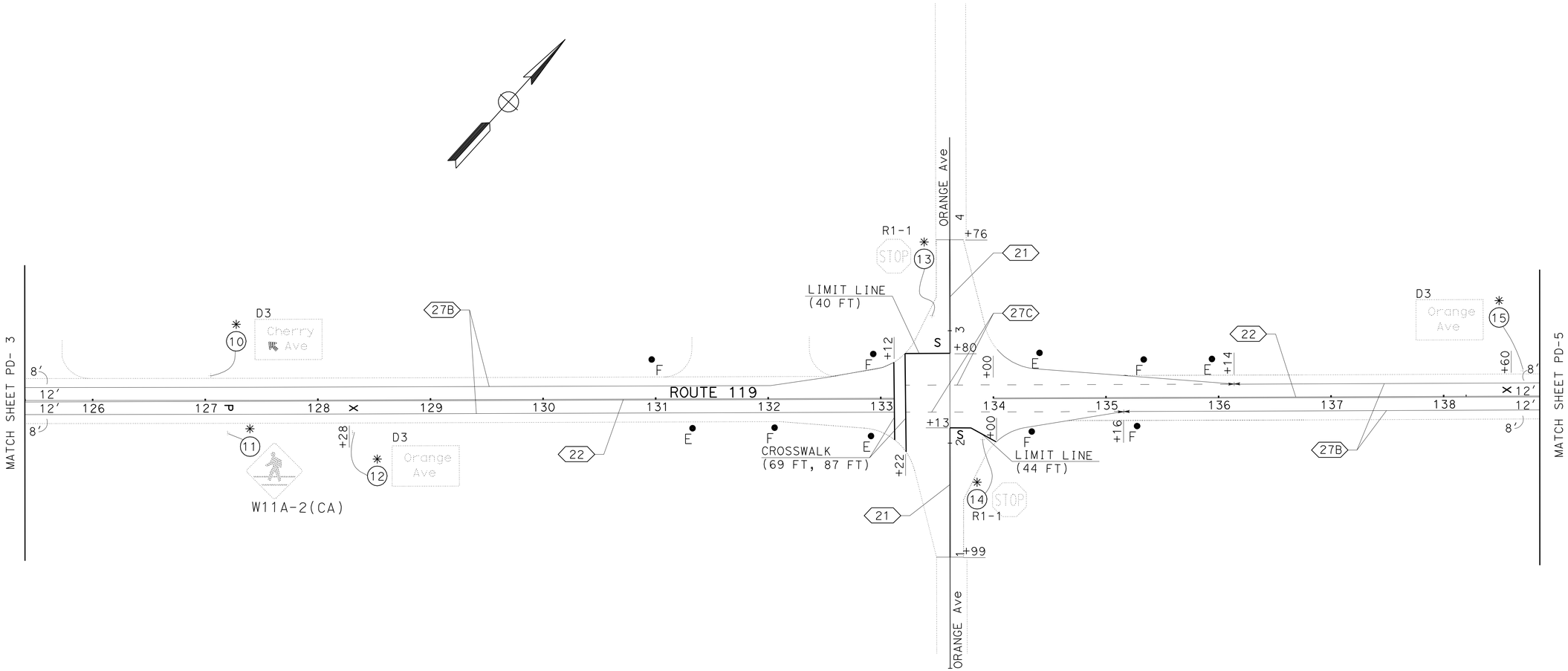

PAVEMENT DELINEATION AND SIGN PLAN

SCALE: 1" = 50'

PD-4

THIS PLAN ACCURATE FOR PAVEMENT DELINEATION & SIGN WORK ONLY.

STATE OF CALIFORNIA - DEPARTMENT OF TRANSPORTATION
Caltrans® TRAFFIC DESIGN

FUNCTIONAL SUPERVISOR: MOHAMMED QATAMI
CALCULATED-DESIGNED BY: ALICIA RODRIGUEZ
CHECKED BY: HASSAN TAHA
REVISED BY
DATE REVISED

LAST REVISION 09-27-10
DATE PLOTTED => 02-NOV-2011
TIME PLOTTED => 16:05

Dist	COUNTY	ROUTE	POST MILES TOTAL PROJECT	SHEET No.	TOTAL SHEETS
06	Ker	119	4.7/8.5	40	56

Hassan Taha 06-29-10
REGISTERED CIVIL ENGINEER DATE

9-19-11
PLANS APPROVAL DATE

REGISTERED PROFESSIONAL ENGINEER
HASSAN M. TAHA
No. 60130
Exp 06/30/12
CIVIL
STATE OF CALIFORNIA

THE STATE OF CALIFORNIA OR ITS OFFICERS OR AGENTS SHALL NOT BE RESPONSIBLE FOR THE ACCURACY OR COMPLETENESS OF SCANNED COPIES OF THIS PLAN SHEET.

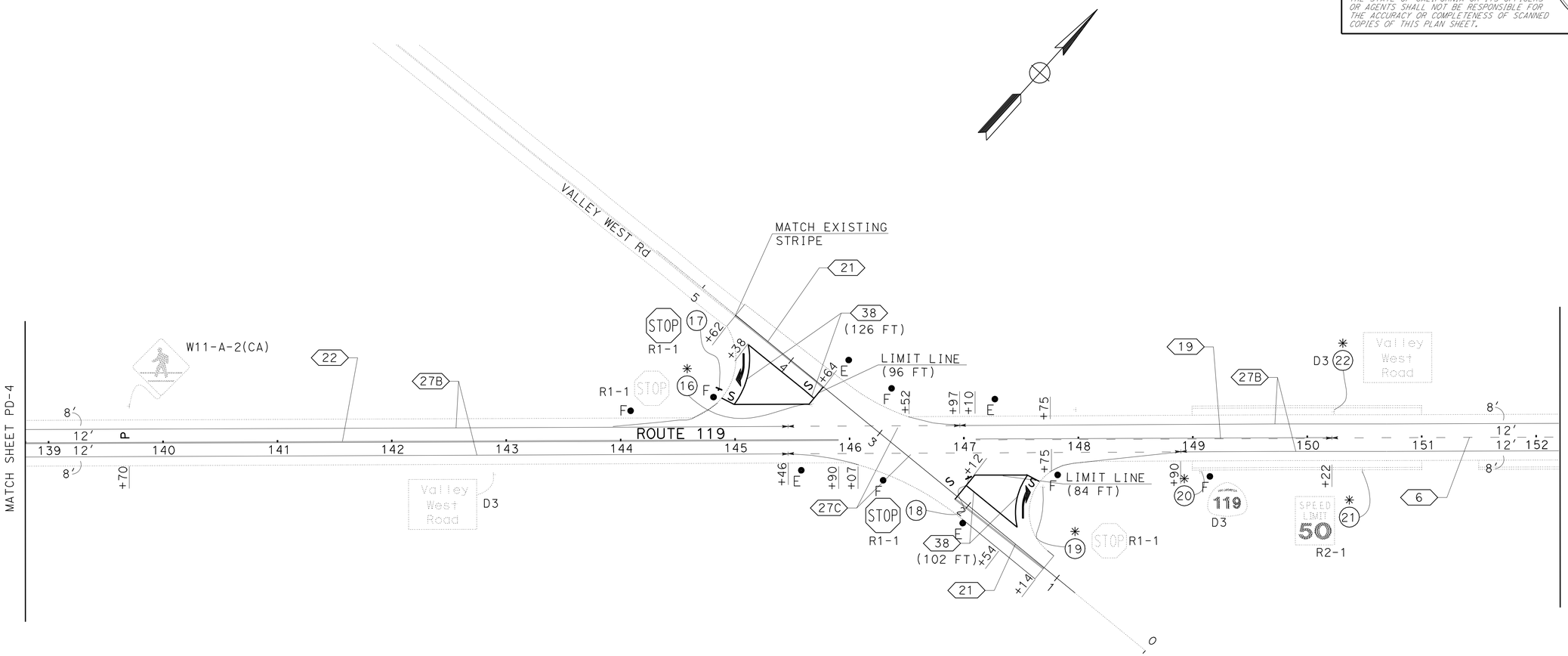

PAVEMENT DELINEATION AND SIGN PLAN

SCALE: 1" = 50'

PD-5

THIS PLAN ACCURATE FOR PAVEMENT DELINEATION & SIGN WORK ONLY.

STATE OF CALIFORNIA - DEPARTMENT OF TRANSPORTATION
Caltrans® TRAFFIC DESIGN

FUNCTIONAL SUPERVISOR: MOHAMMED QATAMI

CALCULATED-DESIGNED BY: ALICIA RODRIGUEZ
CHECKED BY: HASSAN TAHA

REVISED BY
DATE REVISED

LAST REVISION 09-27-10
DATE PLOTTED => 02-NOV-2011
TIME PLOTTED => 16:05

Dist	COUNTY	ROUTE	POST MILES TOTAL PROJECT	SHEET No.	TOTAL SHEETS
06	Ker	119	4.7/8.5	41	56

Hassan Taha 06-29-10
REGISTERED CIVIL ENGINEER DATE

9-19-11
PLANS APPROVAL DATE

REGISTERED PROFESSIONAL ENGINEER HASSAN M. TAHA No. 60130 Exp 06/30/12 CIVIL STATE OF CALIFORNIA

THE STATE OF CALIFORNIA OR ITS OFFICERS OR AGENTS SHALL NOT BE RESPONSIBLE FOR THE ACCURACY OR COMPLETENESS OF SCANNED COPIES OF THIS PLAN SHEET.

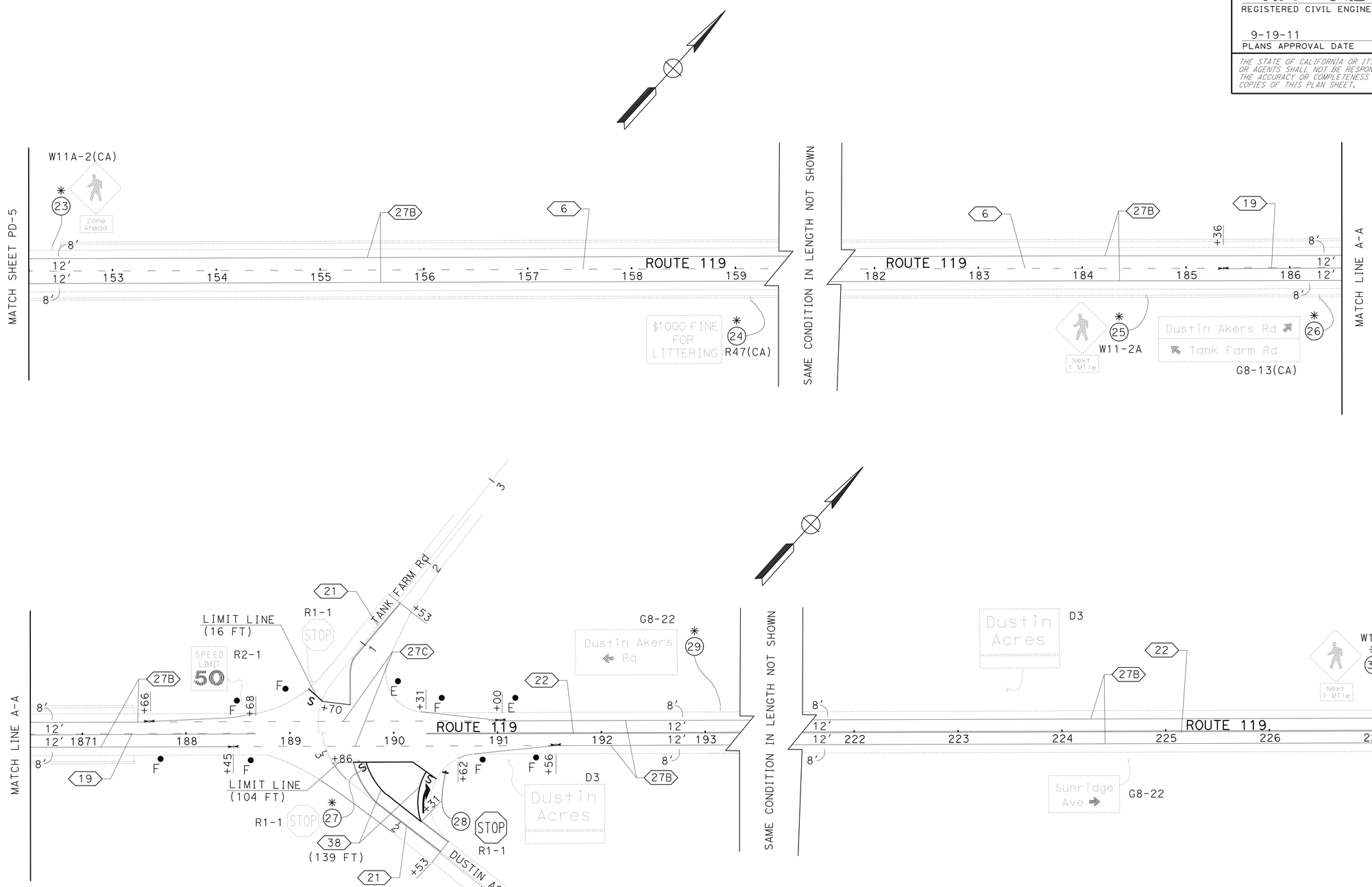

PAVEMENT DELINEATION AND SIGN PLAN

SCALE: 1" = 50'

PD-6

THIS PLAN ACCURATE FOR PAVEMENT DELINEATION & SIGN WORK ONLY.

STATE OF CALIFORNIA - DEPARTMENT OF TRANSPORTATION
Caltrans
TRAFFIC DESIGN

FUNCTIONAL SUPERVISOR: MOHAMMED QATAMI
CALCULATED-DESIGNED BY: ALICIA RODRIGUEZ
CHECKED BY: HASSAN TAHA
REVISED BY
DATE REVISED

LAST REVISION 09-27-10
DATE PLOTTED => 02-NOV-2011
TIME PLOTTED => 16:05

Dist	COUNTY	ROUTE	POST MILES TOTAL PROJECT	SHEET No.	TOTAL SHEETS
06	Ker	119	4.7/8.5	42	56

Hassan Taha 06-29-10
REGISTERED CIVIL ENGINEER DATE

9-19-11
PLANS APPROVAL DATE

REGISTERED PROFESSIONAL ENGINEER
HASSAN M. TAHA
No. 60130
Exp. 06/30/12
CIVIL
STATE OF CALIFORNIA

THE STATE OF CALIFORNIA OR ITS OFFICERS OR AGENTS SHALL NOT BE RESPONSIBLE FOR THE ACCURACY OR COMPLETENESS OF SCANNED COPIES OF THIS PLAN SHEET.

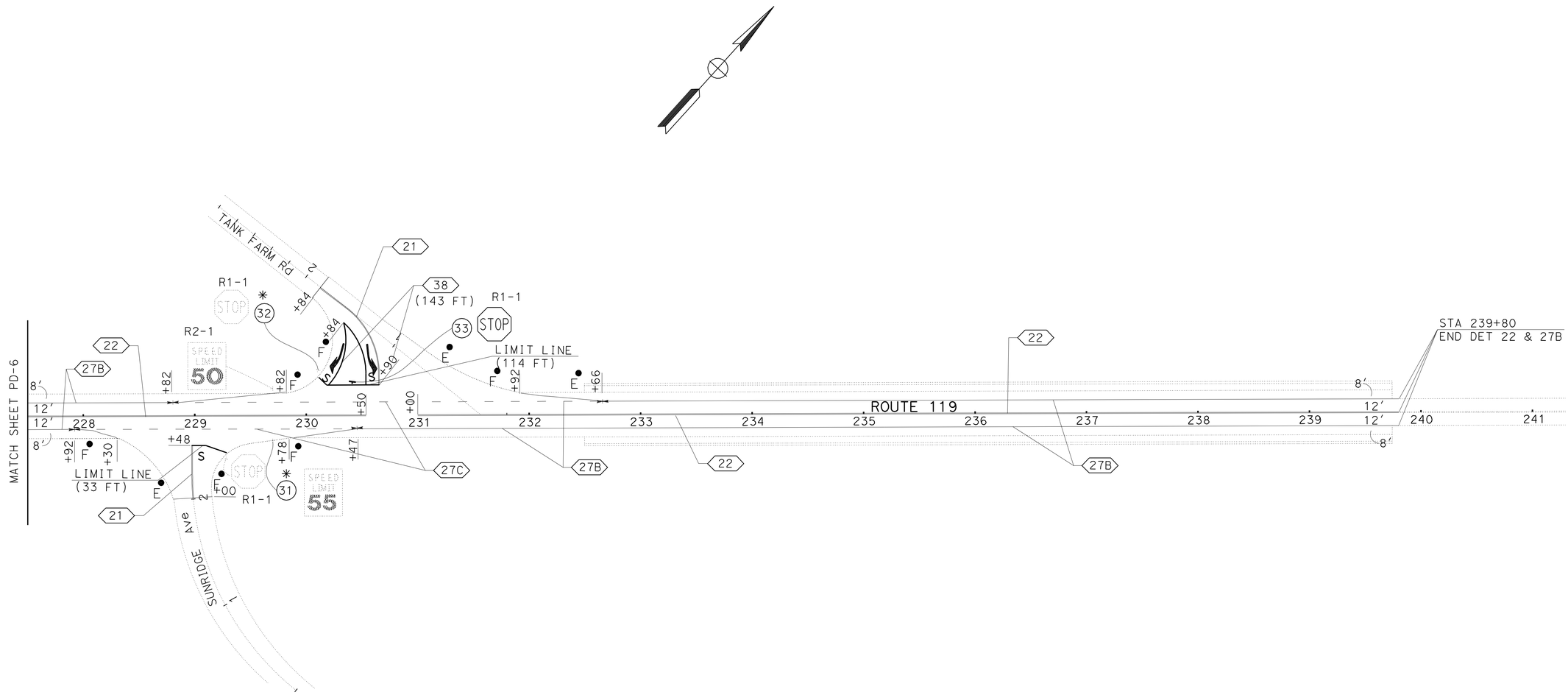

PAVEMENT DELINEATION AND SIGN PLAN

SCALE: 1" = 50'

PD-7

THIS PLAN ACCURATE FOR PAVEMENT DELINEATION & SIGN WORK ONLY.

STATE OF CALIFORNIA - DEPARTMENT OF TRANSPORTATION
Caltrans® **TRAFFIC DESIGN**

FUNCTIONAL SUPERVISOR: MOHAMMED QATAMI
CALCULATED-DESIGNED BY: ALICIA RODRIGUEZ
CHECKED BY: HASSAN TAHA
REVISED BY
DATE REVISED

LAST REVISION 09-27-10
DATE PLOTTED => 02-NOV-2011
TIME PLOTTED => 16:05

Dist	COUNTY	ROUTE	POST MILES TOTAL PROJECT	SHEET No.	TOTAL SHEETS
06	Ker	119	4.7/8.5	43	56

REGISTERED CIVIL ENGINEER 06-29-10 DATE

9-19-11
PLANS APPROVAL DATE

REGISTERED PROFESSIONAL ENGINEER HASSAN M. TAHA No. 60130 Exp. 06/30/12 CIVIL STATE OF CALIFORNIA

THE STATE OF CALIFORNIA OR ITS OFFICERS OR AGENTS SHALL NOT BE RESPONSIBLE FOR THE ACCURACY OR COMPLETENESS OF SCANNED COPIES OF THIS PLAN SHEET.

DELINEATOR

SHEET No.	DELINEATOR (CLASS 1) (TYPE F) EA	(TYPE E) EA
PD-2	6	4
PD-3	6	4
PD-4	6	4
PD-5	6	4
PD-6	6	4
PD-7	6	4
SUBTOTAL	36	24
TOTAL	60	

PAVEMENT DELINEATION QUANTITIES

SHEET No.	ROUTE	LOCATION FROM	LOCATION TO	DIRECTION	DETAIL No.	PAVEMENT MARKER (RETROREFLECTIVE) TYPE D YELLOW (TWO-WAY) EA	TYPE G CLEAR (ONE-WAY) EA	TYPE H YELLOW (ONE-WAY) EA	Temp TRAFFIC STRIPE (PAINT) LF	THERMOPLASTIC TRAFFIC STRIPE 4" SOLID LF	8" SOLID LF	4" (BROKEN 12-3) LF	4" (BROKEN 36-12) LF
PD-1	ROUTE 119	40+80	44+55		19	10		17		375			375
PD-1 TO PD-2	ROUTE 119	44+55	50+60		6	14							605
PD-2	ROUTE 119	50+60	53+61		19	10		14		301			301
PD-2	ROUTE 119	54+35	57+65		19	10		15		330			330
PD-2 TO PD-3	ROUTE 119	57+65	117+97		6	127							6,032
PD-3	ROUTE 119	117+97	120+80		19	8		13		283			283
PD-3 TO PD-4	ROUTE 119	121+83	133+12		22	98				2,258			
PD-4 TO PD-5	ROUTE 119	134+00	145+90		22	102				2,380			
PD-5	ROUTE 119	147+10	150+22		19	10		14		312			312
PD-5 TO PD-6	ROUTE 119	150+22	185+36		6	74							3,514
PD-6	ROUTE 119	185+36	188+68		19	10		15		332			332
PD-6 TO PD-7	ROUTE 119	190+31	230+60		22	338				8,058			
PD-7	ROUTE 119	231+00	239+80		22	76				1,760			
PD-1 TO PD-2	ROUTE 119	40+80	52+74	EB	27B				1,194	1,194			
PD-2	ROUTE 119	51+05	55+64	EB	27C							459	
PD-2 TO PD-3	ROUTE 119	54+35	120+43	EB	27B				6,608	6,608			
PD-3	ROUTE 119	119+43	123+00	EB	27C							357	
PD-3 TO PD-4	ROUTE 119	122+00	133+12	EB	27B				1,112	1,112			
PD-4	ROUTE 119	133+22	135+16	EB	27C							194	
PD-4 TO PD-5	ROUTE 119	134+00	146+07	EB	27B				1,207	1,207			
PD-5	ROUTE 119	145+46	148+90	EB	27C							344	
PD-5 TO PD-6	ROUTE 119	147+75	188+45	EB	27B				4,070	4,070			
PD-6	ROUTE 119	188+45	191+56	EB	27C							311	
PD-6 TO PD-7	ROUTE 119	190+62	228+30	EB	27B				3,768	3,768			
PD-7	ROUTE 119	227+92	230+47	EB	27C							255	
PD-7	ROUTE 119	229+78	239+80	EB	27B				1,002	1,002			
PD-1 TO PD-2	ROUTE 119	40+80	53+67	WB	27B				1,287	1,287			
PD-2	ROUTE 119	52+60	55+53	WB	27C							293	
PD-2 TO PD-4	ROUTE 119	55+24	133+12	WB	27B				7,788	7,788			
PD-4	ROUTE 119	133+22	136+14	WB	27C							292	
PD-4 TO PD-5	ROUTE 119	134+00	145+46	WB	27B				1,146	1,146			
PD-5	ROUTE 119	145+46	146+97	WB	27C							151	
PD-5 TO PD-6	ROUTE 119	146+52	188+68	WB	27B				4,216	4,216			
PD-6	ROUTE 119	187+66	191+00	WB	27C							334	
PD-6 TO PD-7	ROUTE 119	190+31	229+82	WB	27B				3,951	3,951			
PD-7	ROUTE 119	227+82	232+66	WB	27C							484	
PD-7	ROUTE 119	231+92	239+80	WB	27B				788	788			
PD-2	AIRPORT Rd	1+63	2+96		21					266			
PD-2	AIRPORT Rd	4+08	5+80		21					344			
PD-3	CHERRY Ave	0+83	2+14		21					262			
PD-4	ORANGE St	0+99	2+13		21					228			
PD-4	ORANGE St	2+80	3+76		21					192			
PD-5	VALLEY WEST Rd	1+14	2+12		21					196			
PD-5	VALLEY WEST Rd				38		5				112		
PD-5	VALLEY WEST Rd	3+64	4+62		21					196			
PD-5	VALLEY WEST Rd				38		6				102		
PD-6	TANK FARM Rd	0+70	1+53		21					166			
PD-6	DUSTIN ACRES Rd	1+53	2+86		21					266			
PD-6	DUSTIN ACRES Rd				38		6				139		
PD-7	SUNRIDGE Ave	2+00	2+48		21					492			
PD-7	TANK FARM Rd	0+46	1+84		21					96			
PD-7	TANK FARM Rd				38		7				143		
SUBTOTAL						887	24	88	38,137	57,230	496	3474	12,084
TOTAL							999		38,137	57,230	496	3474	12,084

THERMOPLASTIC PAVEMENT MARKING

SHEET No.	LOCATION	DESCRIPTION	SQFT
(PD-2)	AIRPORT Rd	2 - "STOP"	44
(PD-2)	AIRPORT Rd	1 - LIMIT LINE (14 FT)	14
(PD-2)	AIRPORT Rd	1 - LIMIT LINE (18 FT)	18
(PD-3)	CHERRY Ave	1 - LIMIT LINE (36 FT)	36
(PD-3)	CHERRY Ave	1 - "STOP"	22
(PD-4)	ROUTE 119	1 - "PED"	18
(PD-4)	ROUTE 119	2 - "XING"	42
(PD-4)	ROUTE 119	1 - CROSSWALK (69 FT, 87 FT)	156
(PD-4)	ORANGE St	1 - LIMIT LINE (40 FT)	40
(PD-4)	ORANGE St	1 - LIMIT LINE (44 FT)	44
(PD-4)	ORANGE St	2 - "STOP"	44
(PD-5)	ROUTE 119	1 - "PED"	18
(PD-5)	VALLEY WEST Rd	2-TYPE III (L) ARROW	84
(PD-5)	VALLEY WEST Rd	1 - LIMIT LINE (96 FT)	96
(PD-5)	VALLEY WEST Rd	4 - "STOP"	88
(PD-5)	VALLEY WEST Rd	1 - LIMIT LINE (84 FT)	84
(PD-6)	TANK FARM Rd	1 - LIMIT LINE (16 FT)	16
(PD-6)	TANK FARM Rd	1 - "STOP"	22
(PD-6)	DUSTIN ACRES Rd	1 - LIMIT LINE (104 FT)	104
(PD-6)	DUSTIN ACRES Rd	2 - "STOP"	44
(PD-6)	DUSTIN ACRES Rd	1-TYPE III (L)ARROW	42
(PD-7)	SUNRIDGE Ave	1 - LIMIT LINE (33 FT)	33
(PD-7)	SUNRIDGE Ave	1 - "STOP"	22
(PD-7)	TANK FARM Rd	1 - LIMIT LINE (114 FT)	114
(PD-7)	TANK FARM Rd	2-TYPE III (L)ARROW	84
(PD-7)	TANK FARM Rd	2 - "STOP"	44

PAVEMENT DELINEATION QUANTITIES

PDQ-1

STATE OF CALIFORNIA - DEPARTMENT OF TRANSPORTATION
Caltrans TRAFFIC DESIGN

FUNCTIONAL SUPERVISOR: MOHAMMED QATAMI
CALCULATED-DESIGNED BY: ALICIA RODRIGUEZ
CHECKED BY: HASSAN TAHA
REVISED BY
DATE REVISED

LAST REVISION 09-27-10
DATE PLOTTED => 02-NOV-2011
TIME PLOTTED => 16:05

Dist	COUNTY	ROUTE	POST MILES TOTAL PROJECT	SHEET No.	TOTAL SHEETS
06	Ker	119	4.7/8.5	44	56

Hassan Taha 06-29-10
REGISTERED CIVIL ENGINEER DATE

9-19-11
PLANS APPROVAL DATE

REGISTERED PROFESSIONAL ENGINEER HASSAN M. TAHA No. 60130 Exp 06/30/12 CIVIL STATE OF CALIFORNIA

THE STATE OF CALIFORNIA OR ITS OFFICERS OR AGENTS SHALL NOT BE RESPONSIBLE FOR THE ACCURACY OR COMPLETENESS OF SCANNED COPIES OF THIS PLAN SHEET.

ROADSIDE SIGN QUANTITIES

SHEET No.	SIGN No.	SIGN CODE	SIGN MESSAGE	No. OF POST AND POST SIZE	PANEL SIZE	SINGLE FACED	DOUBLE FACED	BACKGROUND SHEETING COLOR	BACKGROUND RETROREFLECTIVITY ASTM TYPE	LEGEND SHEETING COLOR	LEGEND RETROREFLECTIVITY ASTM TYPE	GRAFFITI FLOW STANDARD	GRAFFITI FLOW PREMIUM	FURNISH SINGLE SHEET ALUMINUM SIGN (0.063"-UNFRAMED) SQFT	ROADSIDE SIGN (ONE POST) EA	RESET ROADSIDE SIGN EA
PD-2	1	R1-1	STOP													1
PD-2	2	R1-1	STOP													1
PD-2	3	D3	AIRPORT ROAD													1
PD-3	4	R2-4(CA)	50 ZONE AHEAD													1
PD-3	5	W11-2(CA)	PEDESTRIAN ZONE AHEAD													1
PD-3	6	R2-1	SPEED LIMIT 50													1
PD-3	7	D3	CHERRY AVE													1
PD-3	8	R2-1	SPEED LIMIT 55													1
PD-3	9	R1-1	STOP													1
PD-4	10	D3	CHERRY Ave													1
PD-4	11	W11-2A(CA)	PEDESTRIAN CROSSING													1
PD-4	12	D3	ORANGE Ave													1
PD-4	13	R1-1	STOP													1
PD-4	14	R1-1	STOP													1
PD-4	15	D3	ORANGE Ave													1
PD-5	16	R1-1	STOP													1
PD-5	17	R1-1	STOP	1 - 4" x 4"	30" x 30"	x		RED	VII	WHITE	VII		x	6.25	1	
PD-5	18	R1-1	STOP	1 - 4" x 4"	30" x 30"	x		RED	VII	WHITE	VII		x	6.25	1	
PD-5	19	R1-1	STOP													1
PD-5	20	D3	ROUTE 119													1
PD-5	21	R2-1	SPEED LIMIT 50													1
PD-5	22	D3	VALLEY WEST ROAD													1
PD-6	23	W11-2(CA),	PEDESTRIAN ZONE AHEAD													1
PD-6	24	R47(CA)	$1000 FINE FOR LITTERING													1
PD-6	25	W11-2(CA)	PEDESTRIAN CROSSING NExT 1 MILE													1
PD-6	26	G8-13(CA)	DUSTIN AKERS Rd TANK FARM Rd													1
PD-6	27	R1-1	STOP													1
PD-6	28	R1-1	STOP	1 - 4" x 4"	30" x 30"	x		RED	VII	WHITE	VII		x	6.25	1	
PD-6	29	G8-22(CA)	DUSTIN AKERS Rd													1
PD-6	30	W11-2(CA)	PEDESTRIAN CROSSING NEXT 1 MILE													1
PD-7	31	R2-1	SPEED LIMIT 55													1
PD-7	32	R1-1	STOP													1
PD-7	33	R1-1	STOP	1 - 4" x 4"	30" x 30"	x		RED	VII	WHITE	VII		x	6.25	1	
										TOTAL				25	4	29

SIGN QUANTITIES
SQ-1

STATE OF CALIFORNIA - DEPARTMENT OF TRANSPORTATION
Caltrans® TRAFFIC DESIGN

FUNCTIONAL SUPERVISOR: MOHAMMED QATAMI
CALCULATED-DESIGNED BY: ALICIA RODRIGUEZ
CHECKED BY: HASSAN TAHA
REVISED BY
DATE REVISED

LAST REVISION 05-26-11
DATE PLOTTED => 02-NOV-2011
TIME PLOTTED => 16:05

Dist	COUNTY	ROUTE	POST MILES TOTAL PROJECT	SHEET No.	TOTAL SHEETS
06	Ker	119	4.7/8.5	45	56

REGISTERED CIVIL ENGINEER 10-14-10 DATE

9-19-11
PLANS APPROVAL DATE

REGISTERED PROFESSIONAL ENGINEER D S SANGHA No. 59652 Exp. 12/31/12 CIVIL STATE OF CALIFORNIA

THE STATE OF CALIFORNIA OR ITS OFFICERS OR AGENTS SHALL NOT BE RESPONSIBLE FOR THE ACCURACY OR COMPLETENESS OF SCANNED COPIES OF THIS PLAN SHEET.

ROADWAY QUANTITIES

	LOCATION	HOT MIX ASPHALT	CLASS 2 AGGREGATE BASE	CLASS 2 AGGREGATE SUBBASE	ROADWAY EXCAVATION	EMBANKMENT (N)	RUMBLE STRIP	REMOVE MBGR	PLACE HMA (MISC AREA)	TRANSITION RAILING (TYPE WB)	MBGR (STEEL POST)	ALTERNATIVE FLARED TERMINAL SYSTEM	(N) LAYOUT TYPE	(N) LOCATION OF DRIVEWAY	
	STATION	TON	CY	CY	CY	CY	STA	LF	SQYD	EA	LF	EA		L+	R+
	40+80 - 239+74	18,801	7564	5284	14,152	6138	398								
WESTBOUND	122+57- 123+07							50							
WESTBOUND	124+25 - 124+87.5							62.5							
WESTBOUND	122+69.5 - 122+82									1	12.5	1	12B/BB		
WESTBOUND	124+50 - 124+62.5									1	12.5	1	12B/BB		
WESTBOUND	212+06.5 - 212+31.5										25	2	11E		
EASTBOUND	122+72.5 - 123+47.5							75							
EASTBOUND	124+49.5 - 125+24.5							75							
EASTBOUND	123+10 - 123+22.5									1	12.5	1	12B/BB		
EASTBOUND	124+74.5 - 124+87									1	12.5	1	12B/BB		
EASTBOUND	212+81.5 - 213+06.5								9		25	2	11E		
	125+40 AT CENTER LINE OF DRIVEWAY	278												1	
	130+84 AT CENTER LINE OF DRIVEWAY	435												1	
	AIRPORT Rd	605	246	231	693	13									
	CHERRY Ave	253	109	102	306	7									
	ORANGE St	548	248	232	697	3									
	VALLEY WEST Rd / LOCUST St	556	242	226	679	12									
	TANK FARM Rd / DUSTIN ACRES	542	236	221	664	11									
	SUNRIDGE Ave	133	62	58	173	2									
	TANK FARM Rd	294	127	119	358	5									
	TOTAL	22,445	8834	6473	17,722	6191	398	262.5	9	4	100	8			

(N) NOT A SEPARATE PAY ITEM, FOR INFORMATION ONLY.

COLD PLANE AC PAVEMENT

STATIONING		(N) LENGTH		(N) AVERAGE WIDTH OF PLANE		AREA (SQYD)	
WESTBOUND	EASTBOUND	L+	R+	L+	R+	L+	R+
44+25 - 45+25		100′		3.5′		39	
50+75 - 51+25		50′		3.0′		17	
120+00 - 121+25		125′		5.5′		76.5	
127+25 - 128+75		150′		4.5′		75	
140+75 - 143+25	143+25 - 144+50	250′	125′	5.0′	5.0′	139	69.5
	146+50 - 147+25		75′		5.0′		41.7
149+25 - 165+50		1625′		5.5′		993	
168+25 - 175+00		675′		4.5′		337.5	
181+75 - 186+25		450′		5.0′		250	
	188+50 - 192+75		425′		5.0′		236
193+75 - 195+25	194+25 - 195+75	150′	150′	5.0′	5.0′	83.3	83.3
200+25 - 201+25		100′		2.0′		22.2	
202+25 - 203+75		150′		5.0′		83.3	
208+00 - 209+75		175′		5.0′		97.2	
212+75 - 213+25		50′		2.0′		11.1	
214+25 - 215+25		100′		5.0′		55.6	
	217+75 - 220+25		250′		6.0′		166.7
222+25 - 223+25		100′		3.5′		38.9	
235+00 - 237+70	235+00 - 236+25	270′	125′	5.0′	7.5′	150	104.2
238+75 - 241+75	238+75 - 241+75	300′	300′	5.0′	7.5′	166.7	250
244+50 - 246+75	245+25 - 246+75	225′	150′	6.0′	5.0′	150	83.3
SUBTOTAL						2785.3	1034.7
TOTAL						3820	

IMPORTED MATERIAL (SHOULDER BACKING)

WESTBOUND	(N) LENGTH (LF)	TON	EASTBOUND	(N) LENGTH (LF)	TON
41+80-53+64.5	1185	89	41+80-51+93.5	1014	76
55+28.2-122+40.7	6713	503	54+44.6-120+44.2	6600	495
124+58-124+82	24	2	122+00-122+94	94	7
126+00-131+07	507	38	125+11.8-132+10	698	52
135+00-144+63	963	72	134+66-146+00	1134	85
146+52-188+68	4216	316	148+00-188+76	4076	306
190+32.5-229+81	3949	296	190+75.5-228+31.9	3756	282
231+91.3-238+74	683	51	229+86.5-238+74	888	67
SUBTOTAL (1)		1368	SUBTOTAL (2)		1369
TOTAL (SUB 1 + SUB 2)					2737

TEMPORARY FIBER ROLL

WESTBOUND	LENGTH (LF)	EASTBOUND	LENGTH (LF)
120+00 - 123+00	300	121+80 - 123+30	150
124+20 - 124+80	40	124+40 - 127+40	300
SUBTOTAL(1)	340	SUBTOTAL(2)	450
TOTAL (SUB1+SUB2)			790

TEMPORARY HYDRAULIC MULCH (BONDED FIBER MATRIX)

WESTBOUND	AREA (SQFT)	EASTBOUND	AREA (SQFT)
120+00 - 123+00	7,796	121+80 - 123+30	5,941
124+20 - 124+80	2,547	124+40 - 127+40	12,920
SUBTOTAL(1)	10,316	SUBTOTAL(2)	18,861
TOTAL (SUB1+SUB2)			29,177

TEMPORARY FENCE (TYPE ESA)

WESTBOUND	LENGTH (LF)	EASTBOUND	LENGTH (LF)
122+32 - 125+00	283	122+73 - 125+25	269
157+83 - 159+34	150	158+11 - 159+62	150
182+89 - 186+39	350	183+72 - 187+97	425
237+47 - 238+47	100	237+53 - 238+53	100
SUBTOTAL(1)	883	SUBTOTAL(2)	944
TOTAL (SUB1+SUB2)			1827

SUMMARY OF QUANTITIES
Q-1

REVISED BY | DATE REVISED
AMRITPAL BADHESHA | LARRY CAO
CALCULATED-DESIGNED BY | CHECKED BY
FUNCTIONAL SUPERVISOR: DAVID SANGHA
STATE OF CALIFORNIA - DEPARTMENT OF TRANSPORTATION
DESIGN
Caltrans

LAST REVISION 02-09-11 | DATE PLOTTED => 02-NOV-2011 | TIME PLOTTED => 16:05

Dist	COUNTY	ROUTE	POST MILES TOTAL PROJECT	SHEET No.	TOTAL SHEETS
06	Ker	119	4.7/8.5	46	56

REGISTERED CIVIL ENGINEER 11-24-11 DATE

9-19-11
PLANS APPROVAL DATE

REGISTERED PROFESSIONAL ENGINEER D S SANGHA No. 59652 Exp. 12/31/12 CIVIL STATE OF CALIFORNIA

THE STATE OF CALIFORNIA OR ITS OFFICERS OR AGENTS SHALL NOT BE RESPONSIBLE FOR THE ACCURACY OR COMPLETENESS OF SCANNED COPIES OF THIS PLAN SHEET.

REPLACE ASPHALT CONCRETE SURFACING

Sta	Sta	WB DIG OUT INSIDE (LF)	WB DIG OUT OUTSIDE (LF)	WB LENGTH (LF)	EB DIG OUT INSIDE (LF)	EB DIG OUT OUTSIDE (LF)	EB LENGTH (LF)	VOLUME (CY)
65+02	65+79					4	77	5.7
88+23	88+30		4	7				0.5
88+53	88+78		4	25				1.9
89+97	90+57		4	60				4.4
90+79	91+06		4	27				2.0
89+72	91+16					4	144	10.7
90+72	91+16		4	44				3.3
94+31	94+35		4	4				0.3
94+92	94+96		4	4				0.3
95+17	95+21		4	4				0.3
97+49	97+99		4	50				3.7
98+69	99+48		4	79				5.8
99+62	100+05		4	43				3.2
100+18	100+42		4	24				1.8
100+68	100+72		4	4				0.3
100+87	100+91		4	4				0.3
102+43	102+47		4	4				0.3
102+75	102+97		4	22				1.6
104+03	104+22		4	19				1.4
105+58	105+79		4	21				1.6
106+35	107+09		4	74				5.5
107+20	107+24		4	4				0.3
107+44	107+48		4	4				0.3
108+19	108+50		4	31				2.3
108+88	109+59		4	71				5.3
111+01	111+31				4		30	2.2
109+81	111+03		4	122				9.0
111+28	111+46		4	18				1.3
113+71	113+76		4	5				0.4
114+05	114+05		4	14				1.0
114+23	114+67		4	44				3.3
114+92	114+67					4	25	1.9
115+58	115+73					4	15	1.1
115+95	116+07		4	12				0.9
115+98	116+07					4	9	0.7
116+59	116+69		4	10				0.7
116+74	117+16					4	42	3.1
117+23	117+42		4	19				1.4
117+69	117+84		4	15				1.1
117+96	118+45		4	49				3.6
119+42	119+54					4	12	0.9
119+20	119+82		4	62				4.6
119+92	120+60		4	68				5.0
120+60	120+83	4		23				1.7
120+68	121+63					4	95	7.0
122+12	122+34				4		22	1.6
121+01	122+68		4	167				12.4
122+68	122+91		4	23				1.7
122+91	123+11		4	20				1.5
122+85	123+15					4	30	2.2
123+11	123+36		4	25				1.9
123+29	123+36				4		7	0.5
124+09	124+29					4	20	1.5
124+21	124+29	4		8				0.6
124+08	124+45					4	37	2.7
							SUBTOTAL 1	140.6

REPLACE ASPHALT CONCRETE SURFACING

Sta	Sta	WB DIG OUT INSIDE (LF)	WB DIG OUT OUTSIDE (LF)	WB LENGTH (LF)	EB DIG OUT INSIDE (LF)	EB DIG OUT OUTSIDE (LF)	EB LENGTH (LF)	VOLUME (CY)
125+11	125+15				4		4	0.3
125+29	125+38	4		9				0.7
125+34	125+38				4		4	0.3
125+65	125+69				4		4	0.3
124+05	126+33		4	228				16.9
126+29	126+33				4		4	0.3
124+82	126+97					4	215	15.6
127+33	127+73				4		40	3.0
127+74	127+88	4		14				1.0
128+13	129+24	4		111				8.2
129+30	129+93				4		63	4.7
129+40	130+40		4	100				7.4
130+60	130+68		4	8				0.6
130+88	131+36	4		48				3.6
130+64	131+10					4	46	3.4
131+09	132+23		4	114				8.4
132+69	133+33		4	64				4.7
133+33	133+87		4	54				4.0
131+81	134+14					4	233	17.2
134+26	134+41				4		15	1.1
133+87	134+80		4	93				6.9
134+50	135+84				4		134	9.9
135+84	136+24					4	40	3.0
136+24	136+44				4		20	1.5
136+59	136+67				4		8	0.6
136+58	136+70				4		12	0.9
136+04	137+09		4	105				7.8
136+01	137+27	4		126				9.3
137+20	137+50				4		30	2.2
137+60	137+91					4	31	2.3
137+92	139+12		4	120				8.9
139+12	139+22	4		10				0.7
137+91	139+41					4	150	11.1
139+44	139+95				4		51	3.8
140+35	140+77					4	42	3.1
141+07	141+29					4	22	1.6
140+87	141+96				4		109	8.1
141+98	142+02					4	4	0.3
142+19	142+23					4	4	0.3
142+45	142+49					4	4	0.3
142+32	142+57				4		25	1.9
142+99	144+06		4	107				7.9
139+96	144+18		4	422		4	118	40.0
144+44	144+40				4		4	0.3
147+15	148+33		4	118				8.7
149+36	149+36				4		230	17.0
149+58	149+58					4	40	3.0
151+10	152+00				4		90	7.0
151+53	115+57					4	4	0.3
152+19	152+56		4	37				2.7
154+03	154+94				4		91	6.7
153+95	154+10		4	15				1.1
							SUBTOTAL 2	280.9

NOTE:

THE DEPTH ON ALL DIG OUT LOCATION IS 0.5 FOOT.

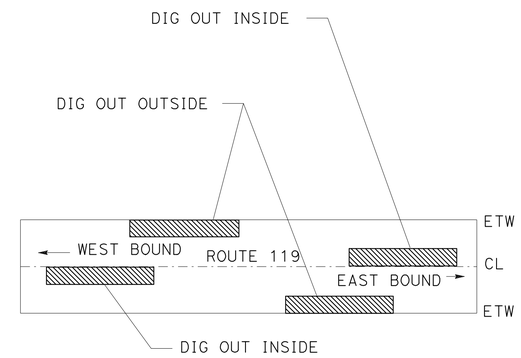

TYPICAL REPLACE AC SURFACING

SUMMARY OF QUANTITIES
Q-2

STATE OF CALIFORNIA - DEPARTMENT OF TRANSPORTATION
Caltrans®
DESIGN

FUNCTIONAL SUPERVISOR: DAVID SANGHA
CALCULATED-DESIGNED BY: AMRITPAL BADHESHA
CHECKED BY: LARRY CAO
REVISED BY
DATE REVISED

LAST REVISION 11-24-11
DATE PLOTTED => 02-NOV-2011
TIME PLOTTED => 16:06

Dist	COUNTY	ROUTE	POST MILES TOTAL PROJECT	SHEET No.	TOTAL SHEETS
06	Ker	119	4.7/8.5	47	56

REGISTERED CIVIL ENGINEER 11-24-11 DATE

9-19-11
PLANS APPROVAL DATE

REGISTERED PROFESSIONAL ENGINEER
D S SANGHA
No. 59652
Exp. 12/31/12
CIVIL
STATE OF CALIFORNIA

THE STATE OF CALIFORNIA OR ITS OFFICERS OR AGENTS SHALL NOT BE RESPONSIBLE FOR THE ACCURACY OR COMPLETENESS OF SCANNED COPIES OF THIS PLAN SHEET.

REPLACE ASPHALT CONCRETE SURFACING

Sta	Sta	WB DIG OUT INSIDE (LF)	WB DIG OUT OUTSIDE (LF)	WB LENGTH (LF)	EB DIG OUT INSIDE (LF)	EB DIG OUT OUTSIDE (LF)	EB LENGTH (LF)	VOLUME (CY)
154+22	154+32				4		10	0.7
154+30	154+40		4	10				0.7
156+80	156+91				4		11	0.8
157+40	157+73				4		33	2.4
158+72	158+76		4	4				0.3
159+20	159+65	4		45				3.3
160+24	160+44		4	20				1.5
160+66	161+40	4		74				5.5
166+61	167+69					4	108	8.0
167+08	167+14		4	6				0.4
167+29	167+64					4	35	2.6
168+70	168+94					4	24	1.8
169+24	169+35					4	11	0.8
170+20	170+90					4	70	5.2
170+54	170+63					4	9	0.7
170+88	171+06					4	18	1.3
171+32	171+37					4	5	0.4
172+75	173+09					4	34	2.5
173+68	174+16				4		48	3.6
173+19	173+74		4	55				4.1
174+33	174+39					4	6	0.4
174+76	174+82					4	6	0.4
174+86	174+92		4	6				0.4
176+18	176+38		4	20				1.5
176+64	176+93					4	29	2.1
176+45	176+68		4	23				1.7
177+29	177+78					4	49	3.6
176+95	177+63		4	68				5.0
178+07	178+07					4	41	3.0
177+75	178+22		4	47				3.5
178+70	178+87		4	17				1.3
179+14	179+55		4	41				3.0
180+02	180+06		4	4				0.3
181+91	183+22					4	131	9.7
183+14	183+22		4	8				0.6
186+62	187+48					4	86	6.4
186+63	187+63		4	100				7.4
187+66	188+52					4	86	6.4
188+02	189+31	4		129				9.5
189+34	190+09	4		75				5.6
192+95	193+21	4		26				1.9
192+87	193+27					4	40	3.0
194+81	195+21					4	40	3.0
195+89	196+36		4	47				3.5
197+61	197+81		4	20				1.5
197+63	197+86		4	23				1.7
197+75	197+92		4	17				1.3
198+17	198+37		4	20				1.5
199+31	201+05					4	174	12.9
203+41	203+68					4	27	2.0
203+62	203+68		4	6				0.4
203+77	204+06		4	29				2.2
204+10	204+18					4	8	0.6
204+47	204+67		4	20				1.5
205+10	205+21					4	11	0.81
							SUBTOTAL 3	156.2

REPLACE ASPHALT CONCRETE SURFACING

Sta	Sta	WB DIG OUT INSIDE (LF)	WB DIG OUT OUTSIDE (LF)	WB LENGTH (LF)	EB DIG OUT INSIDE (LF)	EB DIG OUT OUTSIDE (LF)	EB LENGTH (LF)	VOLUME (CY)
205+43	205+66					4	23	1.7
204+95	205+87		4	92				6.8
206+11	206+39				4		28	2.1
206+11	206+68		4	57				4.2
209+02	209+66					4	64	4.7
208+99	209+38		4	39				2.9
210+17	210+52					4	35	2.6
209+65	210+76		4	111				8.2
210+89	211+16					4	27	2.0
211+31	211+36					4	5	0.4
211+87	212+16					4	29	2.1
214+70	215+30		4	60				4.5
215+17	215+52		4	35				2.6
216+19	216+59					4	40	3.0
215+81	216+69		4	88				6.5
216+90	217+11		4	21				1.6
216+90	217+06	4		16				1.2
217+50	217+86					4	36	2.6
218+55	218+83	4		28				2.0
218+93	220+15		4	122				9.0
221+72	221+36					4	36	2.6
221+32	221+43		4	11				0.8
221+57	221+90		4	33				2.4
222+14	222+78					4	64	4.7
225+94	226+20					4	26	1.9
225+99	226+29		4	30				2.2
227+14	227+30					4	16	1.2
227+30	227+50		4	20				1.5
227+60	227+80		4	20				1.5
228+07	228+37		4	30				2.2
228+08	229+60					4	152	11.2
229+18	229+60		4	42				3.1
230+68	230+75					4	7	0.5
231+44	232+45	4		101				7.5
233+23	233+33		4	10				0.7
232+51	233+68					4	117	8.7
234+63	235+30					4	67	4.9
235+90	237+20					4	130	9.6
236+13	237+20		4	107				7.9
238+27	238+50					4	23	1.7
238+00	238+50	4		50				3.7
							SUBTOTAL 4	151.2
							TOTAL = SUBTOTAL 1+2+3+4	730.0

SUMMARY OF QUANTITIES
Q-3

STATE OF CALIFORNIA - DEPARTMENT OF TRANSPORTATION
Caltrans
DESIGN

FUNCTIONAL SUPERVISOR: DAVID SANGHA
CALCULATED-DESIGNED BY: AMRITPAL BADHESHA
CHECKED BY: LARRY CAO
REVISED BY
DATE REVISED

LAST REVISION 11-24-11
DATE PLOTTED => 02-NOV-2011
TIME PLOTTED => 16:06

DIST	COUNTY	ROUTE	POST MILES TOTAL PROJECT	SHEET NO.	TOTAL SHEETS
06	Ker	119	4.7/8.5	48	56

REGISTERED CIVIL ENGINEER

November 17, 2006
PLANS APPROVAL DATE

REGISTERED PROFESSIONAL ENGINEER Dallas Forester No. C37765 Exp. 12-31-06 CIVIL STATE OF CALIFORNIA

The State of California or its officers or agents shall not be responsible for the accuracy or completeness of electronic copies of this plan sheet.

To accompany plans dated 9-19-11

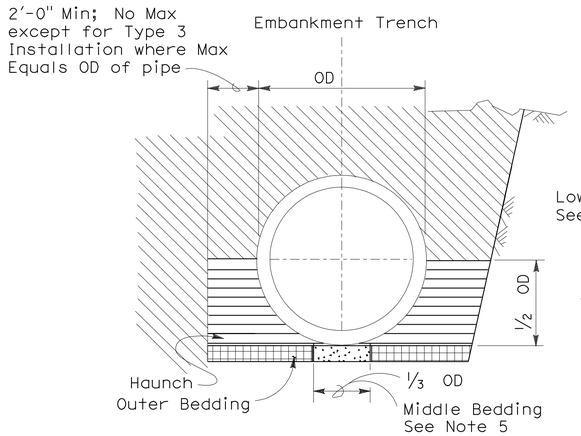

BACKFILL

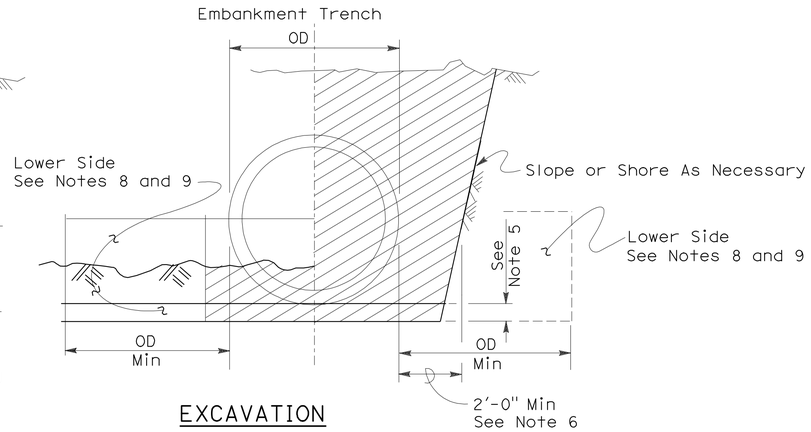

EXCAVATION

Roadway Embankment

Structure Backfill (Culvert) See Note 6

Structure Backfill (Culvert) See Note 6

Loose Backfill

Excavation Structure (Culvert)

TYPE 1 INSTALLATION:

The haunch and outer bedding shall be compacted to a minimum 90 percent relative compaction. In addition, the minimum sand equivalent in these areas shall be 30 and the maximum percentage passing the 75 μm sieve size shall be 12.

TYPE 2 INSTALLATION:

The haunch and outer bedding shall be compacted to a minimum 90 percent relative compaction. In addition, the minimum sand equivalent in these areas shall be 25.

TYPE 3 INSTALLATION:

The haunch and outer bedding shall be compacted to a minimum 85 percent relative compaction. 90 percent relative compaction will be required where the fill over the pipe is less than 4'-0" or 1/2 OD.

NOTES:

1. Unless otherwise shown on the plans or specified in the special provision, the Contractor shall have the option of selecting the class of RCP and the type of installation to be used, provided the height of cover does not exceed the value shown for the RCP selected.
   Example: 24" RCP culvert with maximum cover of 19'-0" the options are:
   a) Class III or stronger with Installation Type 1.
   b) Class III Special or stronger with Installation Type 2.
   c) Class IV Special or stronger with Installation Type 3.
   Cover is defined as the maximum vertical distance from top of the pipe to finished grade within the length of any given culvert.
2. The class of RCP and Installation Type selected shall be the same throughout the length of any given culvert.
3. The "length of any culvert" is defined as the culvert between:
   a) Successive drainage structure (inlets, junction boxes, headwalls, etc.).
   b) A drainage structure and the inlet or outlet end of the culvert.
   c) The inlet and outlet end of the culvert when there are no intervening drainage structures.
4. Oval and arch shaped RCP shall not be used.
5. 1/25 OD Min, not less than 3".
6. Slurry cement backfill may be substituted for backfill in the outer bedding and haunch areas. If slurry is used the outer and middle beddings shall be omitted. Prior to installation the soil under the middle 1/3 of the outside diameter of the pipe shall be softened by scarifying or other means to a minimum depth of 1/25 OD, but not less than 3". Where slurry cement backfill is used clear distance to trench wall may be reduced as set forth in Section 19-3.062 of the Standard Specifications.
7. Backfill shall be placed full width of excavation except where dimensions are shown for backfill width or thickness. Dimensions shown are minimums.
8. Lower side shall be suitable material as determined by the Engineer. Otherwise it shall be considered unsuitable as set forth in Section 19-2.02 of the Standard Specifications. See Note 9.
9. Where the pipe is placed in a trench, if the trench walls are sloped at 5 vertical to 1 horizontal or steeper for at least 90 percent of the trench height or up to not less than 12" from the grading plane, the firmness of the soil in the lower side need not be considered.
10. Non-reinforced precast concrete pipe sizes 3'-0" or smaller may be placed under installation Types 1, 2 or 3.

INSTALLATION TYPE 1

MINIMUM CLASS AND D-LOAD	COVER	
	108" Dia AND SMALLER	OVER 108" Dia
Class II 1000D	14.9'	12.9'
Class III 1350D	15.0' - 20.9'	13.0' - 18.9'
Class III Special 1700D	21.0' - 26.9'	19.0' - 24.9'
Class IV 2000D	27.0' - 31.9'	25.0' - 29.9'
Class IV Special 2500D	32.0' - 40.9'	30.0' - 38.9'
Class V 3000D	41.0' - 49.9'	39.0' - 46.9'
Class V Special 3600D	50.0' - 59.0'	47.0' - 58.0'

INSTALLATION TYPE 2

MINIMUM CLASS AND D-LOAD	COVER
Class II 1000D	9.9'
Class III 1350D	10.0'- 14.9'
Class III Special 1700D	15.0' - 19.9'
Class IV 2000D	20.0' - 24.9'
Class IV Special 2500D	25.0' - 31.9'
Class V 3000D	32.0' - 38.9'
Class V Special 3600D	39.0' - 47.0'

INSTALLATION TYPE 3

MINIMUM CLASS AND D-LOAD	COVER	
	48" Dia AND SMALLER	OVER 48" Dia
Class II 1000D	7.9'	5.9'
Class III 1350D	8.0' - 10.9'	6.0' - 8.9'
Class III Special 1700D	11.0' - 14.9'	9.0' - 12.9'
Class IV 2000D	15.0' - 17.9'	13.0' - 15.9'
Class IV Special 2500D	18.0' - 21.9'	16.0' - 19.9'
Class V 3000D	22.0' - 26.9'	20.0' - 24.9'
Class V Special 3600D	30.0' - 33.0'	25.0' - 31.0'

STATE OF CALIFORNIA
DEPARTMENT OF TRANSPORTATION

EXCAVATION AND BACKFILL CONCRETE PIPE CULVERTS

NO SCALE

RSP A62DA DATED NOVEMBER 17, 2006 SUPERSEDES STANDARD PLAN A62DA DATED MAY 1, 2006 - PAGE 20 OF THE STANDARD PLANS BOOK DATED MAY 2006.

REVISED STANDARD PLAN RSP A62DA

2006 REVISED STANDARD PLAN RSP A62DA

10-26-06

DIST	COUNTY	ROUTE	POST MILES TOTAL PROJECT	SHEET NO.	TOTAL SHEETS
06	Ker	119	4.7/8.5	49	56

Randell D. Hiatt
REGISTERED CIVIL ENGINEER

June 6, 2008
PLANS APPROVAL DATE

REGISTERED PROFESSIONAL ENGINEER
Randell D. Hiatt
No. C50200
Exp. 6-30-09
CIVIL
STATE OF CALIFORNIA

The State of California or its officers or agents shall not be responsible for the accuracy or completeness of electronic copies of this plan sheet.

To accompany plans dated 9-19-11

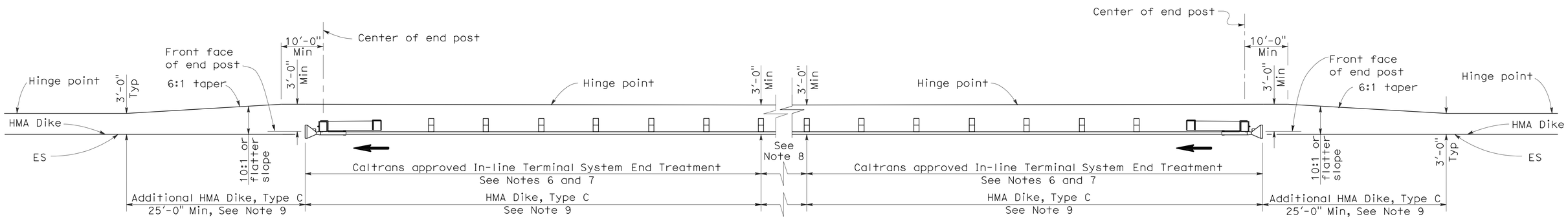

TYPE 11D LAYOUT

(EMBANKMENT GUARD RAILING INSTALLATION WITH
IN-LINE END TREATMENT AT EACH END OF RAILING)
See Note 5

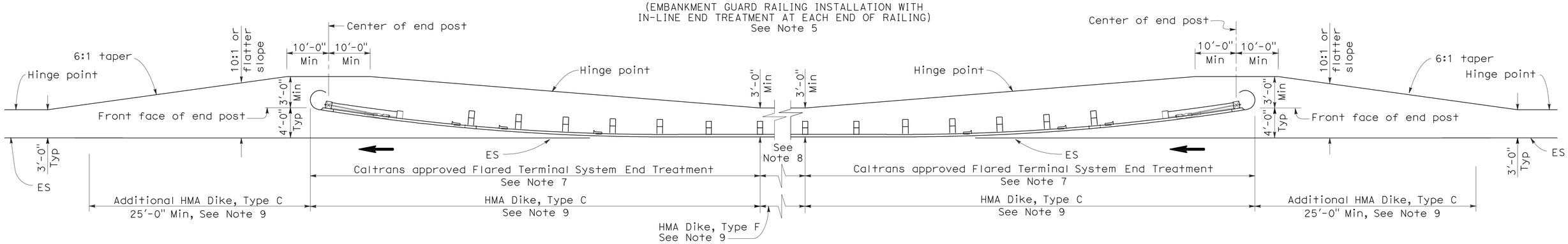

TYPE 11E LAYOUT

(EMBANKMENT GUARD RAILING INSTALLATION WITH
FLARED END TREATMENT AT EACH END OF RAILING)
See Note 5

NOTES:

1. Line post, blocks and hardware to be used are shown on Standard Plans A77A1, A77A2, A77B1, A77C1 and A77C2.
2. Guard rail post spacing to be 6'-3" center to center, except as otherwise noted.
3. Except as noted, line posts are 6" x 8" x 6'-0" wood with 6" x 8" x 1'-2" wood blocks, W6 x 9 steel posts, 6'-0" in length, with 6" x 8" x 1'-2" notched wood blocks or plastic blocks may be used for 6" x 8" x 6'-0" wood post with 6" x 8" x 1'-2" wood blocks where applicable and when specified.
4. Direction of adjacent traffic indicated by ⟶.
5. Layout Types 11D through 11L, shown on the A77E Series of Revised Standard Plans, are typically used where guard railing is recommended to shield embankment slopes and a crashworthy end treatment is required for both directions of traffic.
6. In-line Terminal System End Treatments are used where site conditions will not accommodate a flared end treatment.
7. The type of terminal system end treatment to be used will be shown on the Project Plans.
8. Dependent on site conditions (embankment height and side slope), construction of additional guard railing (length equal to multiples of 12'-6" with 6'-3" post spacing) may be advisable.
9. Where placement of dike is required with guard railing installations, see Revised Standard Plan RSP A77C4 for dike positioning details.

STATE OF CALIFORNIA
DEPARTMENT OF TRANSPORTATION

METAL BEAM GUARD RAILING TYPICAL LAYOUTS FOR EMBANKMENTS

NO SCALE

RSP A77E2 DATED JUNE 6, 2008 SUPERSEDES STANDARD PLAN A77E2
DATED MAY 1, 2006 - PAGE 49 OF THE STANDARD PLANS BOOK DATED MAY 2006.

REVISED STANDARD PLAN RSP A77E2

2006 REVISED STANDARD PLAN RSP A77E2

12-10-07

Dist	COUNTY	ROUTE	POST MILES TOTAL PROJECT	SHEET No.	TOTAL SHEETS
06	Ker	119	4.7/8.5	50	56

Randell D. Hiatt
REGISTERED CIVIL ENGINEER

May 20, 2011
PLANS APPROVAL DATE

REGISTERED PROFESSIONAL ENGINEER Randell D. Hiatt No. C50200 Exp. 6-30-11 CIVIL STATE OF CALIFORNIA

To accompany plans dated 9-19-11

The State of California or its officers or agents shall not be responsible for the accuracy or completeness of electronic copies of this plan sheet.

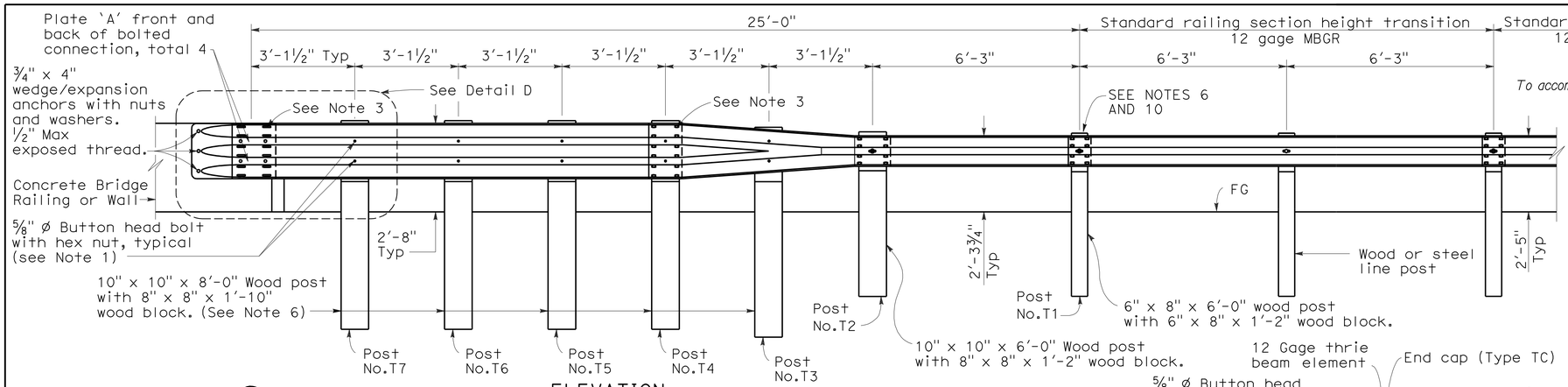

ELEVATION

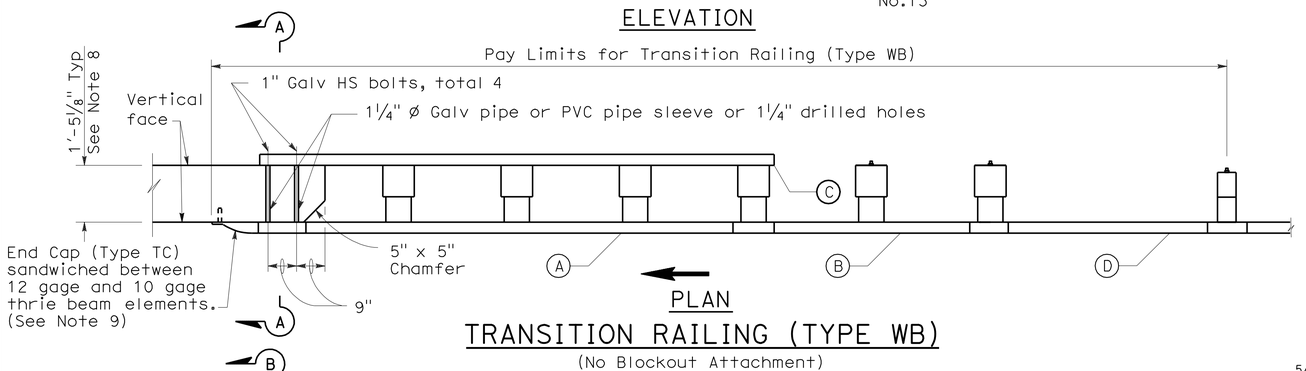

PLAN

TRANSITION RAILING (TYPE WB)

(No Blockout Attachment)

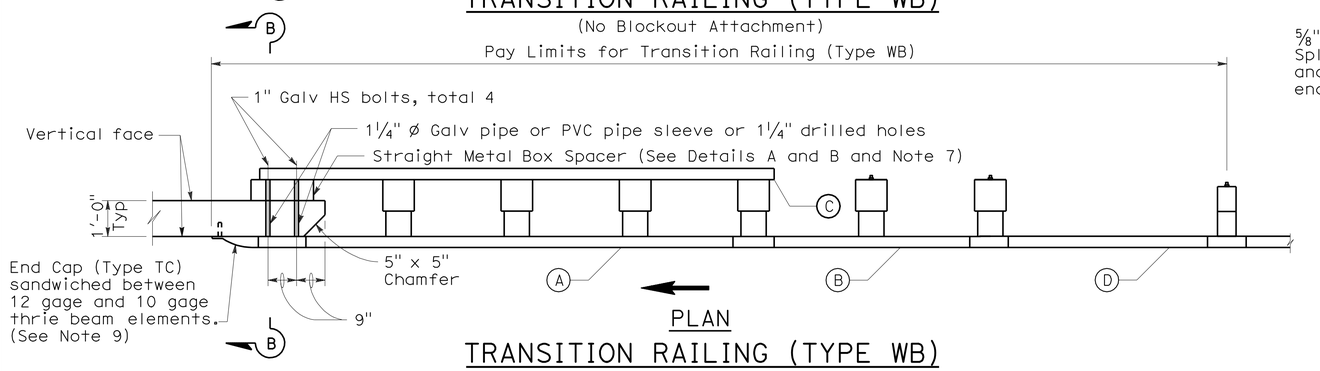

PLAN

TRANSITION RAILING (TYPE WB)

(Blockout Attachment)

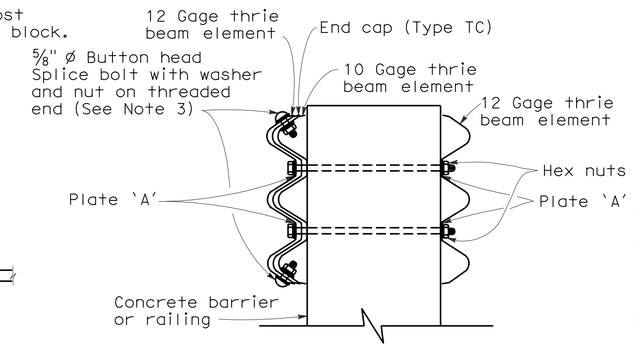

SECTION A-A

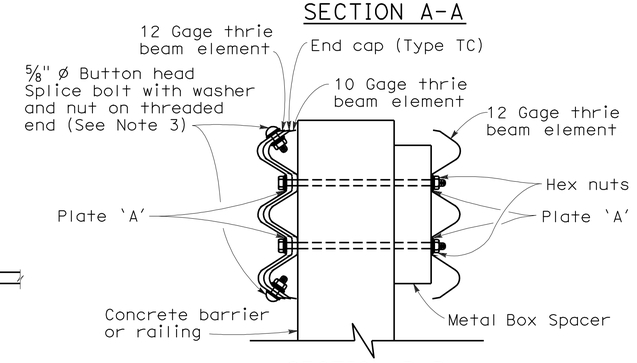

SECTION B-B

NOTES:

1. Use ⅝" ø Button head bolts and hex nuts for connections to posts. No washer on rail face for bolted connections to post.
2. The nested rail elements, end cap, and 'W' beam to thrie beam element may be spliced together prior to bolting the elements to the wood post and concrete barrier or railing.
3. Exterior splice bolt holes for rail element splices at Post No. T4 and the connection to the concrete barrier or railing shall be the standard 29/32" x 1⅛" slot size. Interior splice bolt holes at these locations may be increased up to 1¼" ø. Only the top 2 and the bottom 2 splice bolts with washers and nuts are required for rail splices at Post No. T4 and the connection to the concrete barrier or railing.
4. Direction of adjacent traffic indicated by ➡.
5. The top elevation of Posts No. T2 through No. T7 shall not project more than 1" above the top elevation of the rail element.
6. Typically, the railing connected to Transition Railing (Type WB) will be either standard railing section of metal beam guard railing with height transition ratio of 120:1 or an approved Caltrans end treatment attached to Post No. T1.
7. The depth of the metal box spacer varies from the 5⅛" to 1½" and is dependent on the width of the concrete railing or wall. The combined dimension for the depth of the metal box spacer plus the width of railing or wall is typically 17⅛". Where the space between the backside of the concrete railing or wall and the rear thrie beam element is less than 1½", metal plates similar to Plate 'A' are to be used as spacers.
8. Where the width of the concrete railing or wall is greater than 17⅛", wood blocks are to be used to fill the space created between the backside of Posts No. T4 through No. T7 and the rear thrie beam element. These wood blocks shall be 8" in width and 1'-2" in length. The dimension between the front thrie beam element and the rear thrie beam element is to match the width of the concrete railing or wall.
9. End cap may be installed over 12 gage and 10 gage thrie beam elements where transition railing is installed on the departure end of bridge railing.
10. Conform standard railing section height to 2'-3¾" at Post No. T1 using height transition ratio of 120:1.

LEGEND

(A) Nested thrie beam elements (one 12 gage element nested over one 10 gage element).

(B) One 10 gage "W" beam to thrie beam element.

(C) One 12 gage thrie beam element.

(D) One 10 gage "W" beam rail element (7'-3½" length)

10 gage = 0.135" thick

12 gage = 0.108" thick

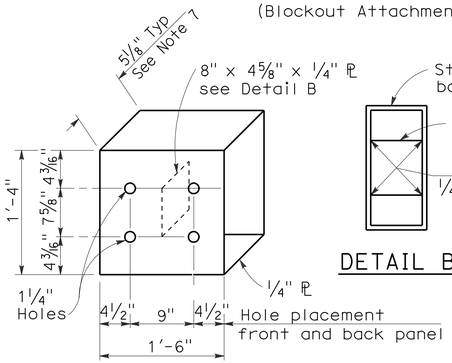

DETAIL A

STRAIGHT METAL BOX SPACER

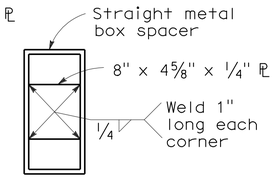

DETAIL B

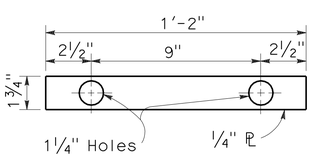

DETAIL C

PLATE 'A'

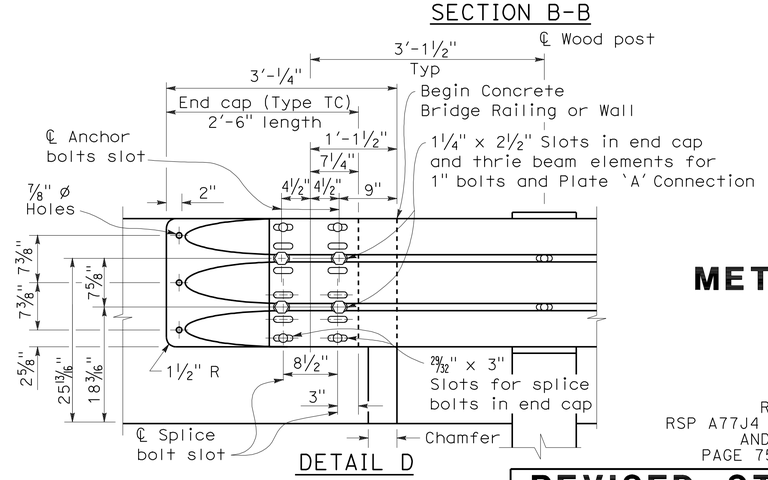

DETAIL D

STATE OF CALIFORNIA
DEPARTMENT OF TRANSPORTATION

METAL BEAM GUARD RAILING TRANSITION RAILING (TYPE WB)

NO SCALE

RSP A77J4 DATED MAY 20, 2011 SUPERSEDES
RSP A77J4 DATED JUNE 5, 2009, RSP A77J4 DATED JUNE 6, 2008
AND STANDARD PLAN A77J4 DATED MAY 1, 2006 -
PAGE 75 OF THE STANDARD PLANS BOOK DATED MAY 2006.

REVISED STANDARD PLAN RSP A77J4

2006 REVISED STANDARD PLAN RSP A77J4

5-14-09

DIST	COUNTY	ROUTE	POST MILES TOTAL PROJECT	SHEET NO.	TOTAL SHEETS
06	Ker	119	4.7/8.5	51	56

Randell D. Hiatt
REGISTERED CIVIL ENGINEER

June 6, 2008
PLANS APPROVAL DATE

REGISTERED PROFESSIONAL ENGINEER
Randell D. Hiatt
No. C50200
Exp. 6-30-09
CIVIL
STATE OF CALIFORNIA

The State of California or its officers or agents shall not be responsible for the accuracy or completeness of electronic copies of this plan sheet.

To accompany plans dated 9-19-11

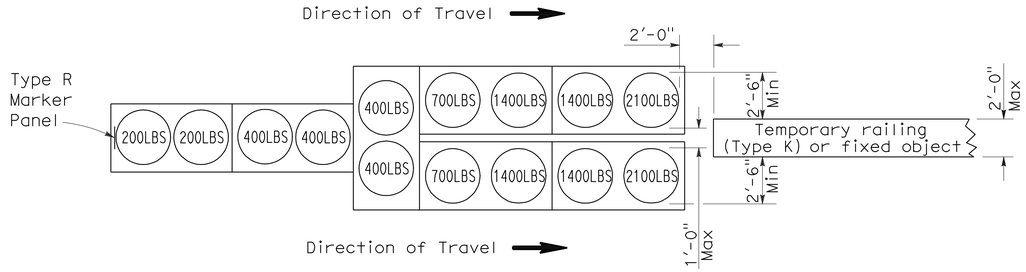

ARRAY 'TU14'

Approach speed 45 mph or more

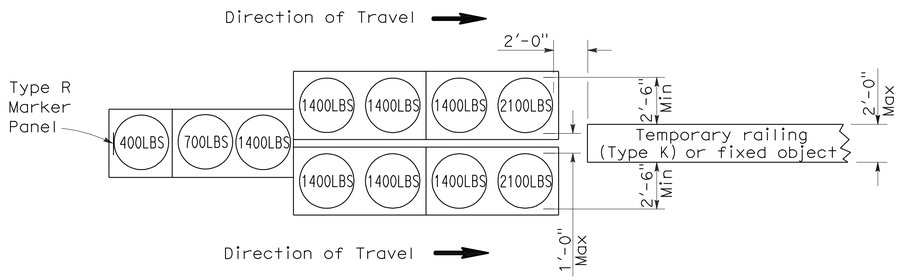

ARRAY 'TU11'

Approach speed less than 45 mph

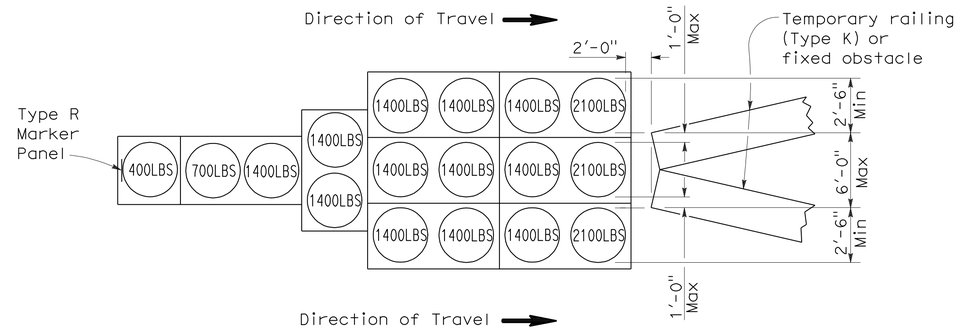

ARRAY 'TU17'

Approach speed less than 45 mph

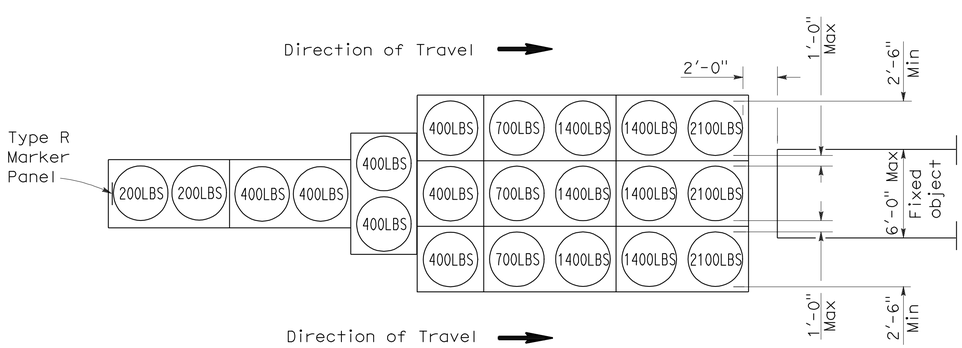

ARRAY 'TU21'

Approach speed 45 mph or more

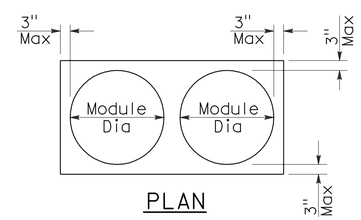

PLAN

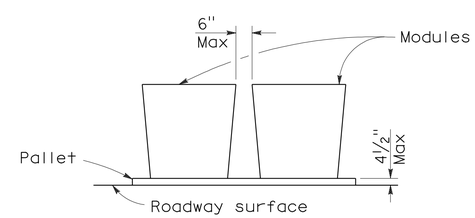

ELEVATION

CRASH CUSHION PALLET DETAIL

See Note 7

NOTES:

1. (XXX) Indicates sand filled module location and weight of sand in pounds for each module. Module spacing is based on the greater diameter of the module.
2. All sand weights are nominal.
3. Temporary crash cushion arrays shall not encroach on the traveled way.
4. Place the top of Type R marker panel 1" below the module lid.
5. Refer to Standard Plan A73B for marker details.
6. Approach speeds indicated conform to NCHRP 350 Report criteria.
7. Use of pallets is optional.

STATE OF CALIFORNIA
DEPARTMENT OF TRANSPORTATION

TEMPORARY CRASH CUSHION, SAND FILLED (UNIDIRECTIONAL)

NO SCALE

RSP T1A DATED JUNE 6, 2008 SUPERSEDES STANDARD PLAN T1A
DATED MAY 1, 2006 - PAGE 211 OF THE STANDARD PLANS BOOK DATED MAY 2006.

REVISED STANDARD PLAN RSP T1A

2006 REVISED STANDARD PLAN RSP T1A

5-15-08

DIST	COUNTY	ROUTE	POST MILES TOTAL PROJECT	SHEET NO.	TOTAL SHEETS
06	Ker	119	4.7/8.5	52	56

Randell D. Hiatt
REGISTERED CIVIL ENGINEER

June 6, 2008
PLANS APPROVAL DATE

REGISTERED PROFESSIONAL ENGINEER
Randell D. Hiatt
No. C50200
Exp. 6-30-09
CIVIL
STATE OF CALIFORNIA

The State of California or its officers or agents shall not be responsible for the accuracy or completeness of electronic copies of this plan sheet.

To accompany plans dated 9-19-11

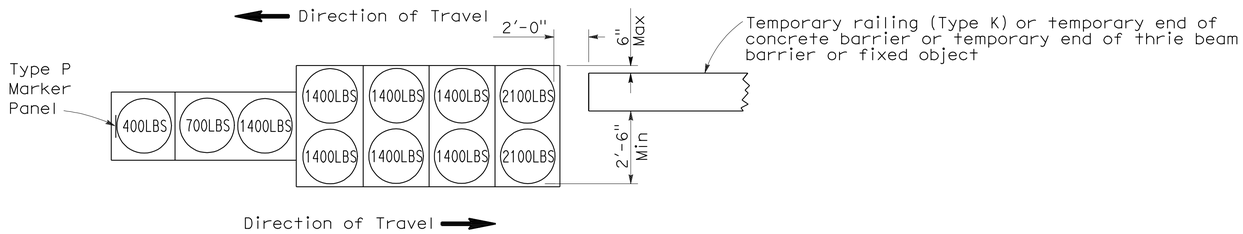

ARRAY 'TB11'

Approach speed less than 45 mph

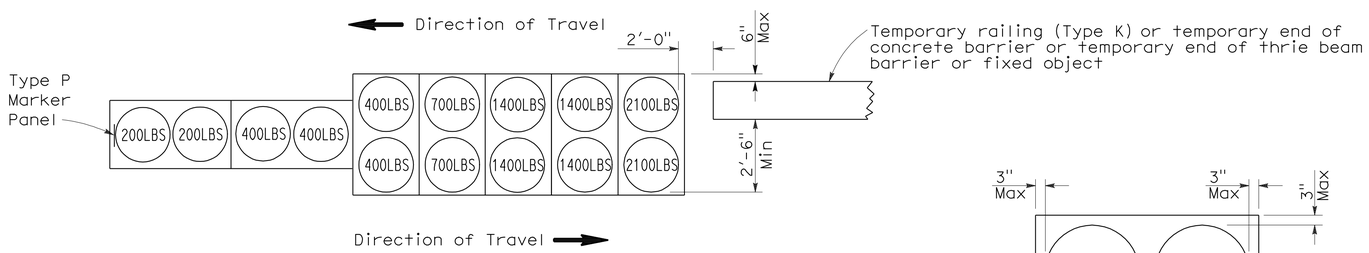

ARRAY 'TB14'

Approach speed 45 mph or more

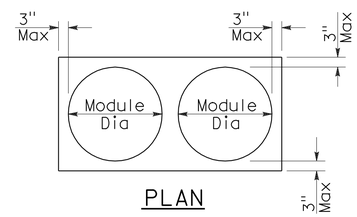

PLAN

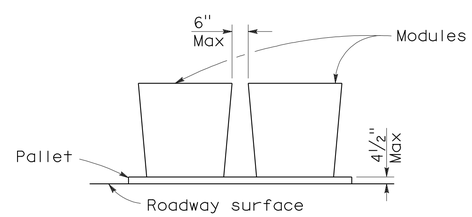

ELEVATION

CRASH CUSHION PALLET DETAIL

See Note 7

NOTES:

1. (XXX) Indicates sand filled module location and weight of sand in pounds for each module. Module spacing is based on the greater diameter of the module.
2. All sand weights are nominal.
3. Temporary crash cushion arrays shall not encroach on the traveled way.
4. Place the Type P marker panel so that the bottom of the panel rests upon the pallet.
5. Refer to Standard Plan A73B for marker details.
6. Approach speeds indicated conform to NCHRP 350 Report criteria.
7. Use of pallets is optional.

STATE OF CALIFORNIA
DEPARTMENT OF TRANSPORTATION

TEMPORARY CRASH CUSHION, SAND FILLED (BIDIRECTIONAL)

NO SCALE

RSP T1B DATED JUNE 6, 2008 SUPERSEDES STANDARD PLAN T1B
DATED MAY 1, 2006 - PAGE 212 OF THE STANDARD PLANS BOOK DATED MAY 2006.

REVISED STANDARD PLAN RSP T1B

2006 REVISED STANDARD PLAN RSP T1B

5-15-08

DIST	COUNTY	ROUTE	POST MILES TOTAL PROJECT	SHEET NO.	TOTAL SHEETS
06	Ker	119	4.7/8.5	53	56

Randell D. Hiatt
REGISTERED CIVIL ENGINEER

June 6, 2008
PLANS APPROVAL DATE

REGISTERED PROFESSIONAL ENGINEER
Randell D. Hiatt
No. C50200
Exp. 6-30-09
CIVIL
STATE OF CALIFORNIA

The State of California or its officers or agents shall not be responsible for the accuracy or completeness of electronic copies of this plan sheet.

To accompany plans dated 9-19-11

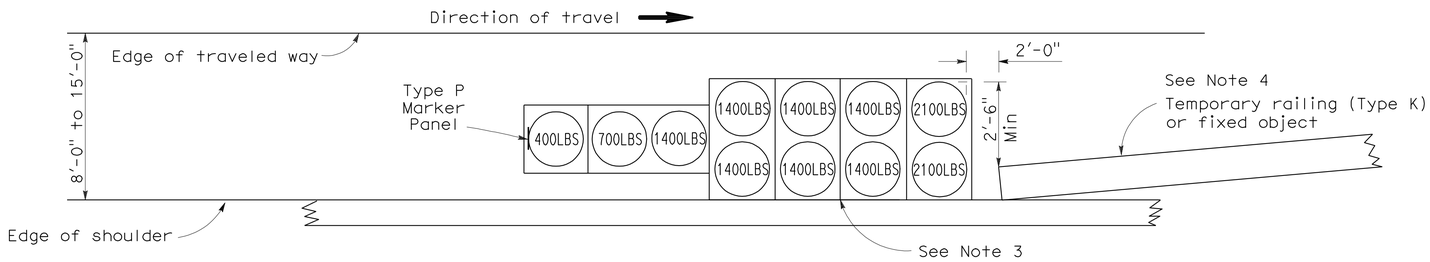

ARRAY 'TS11'

Approach speed less than 45 mph
See Note 9

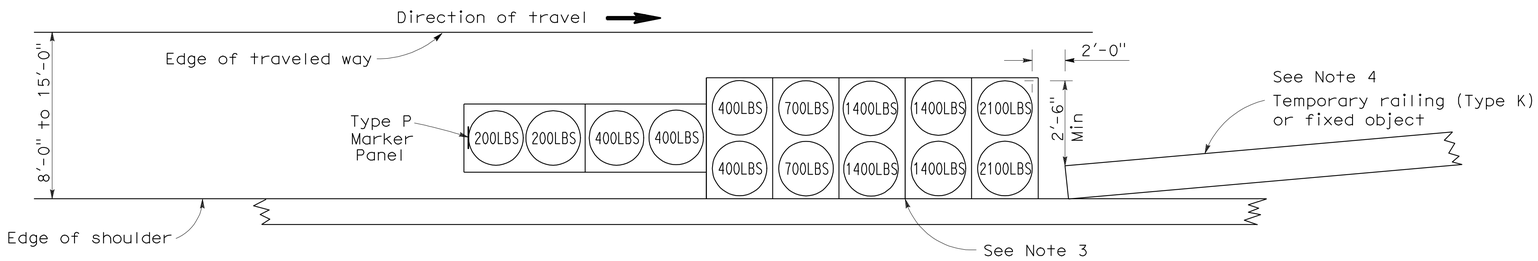

ARRAY 'TS14'

Approach speed 45 mph or more
See Note 9

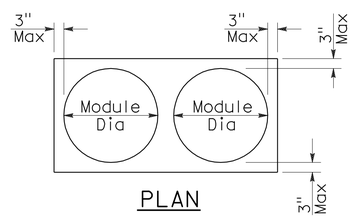

PLAN

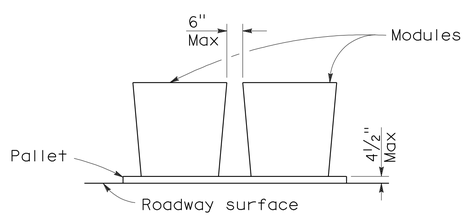

ELEVATION

CRASH CUSHION PALLET DETAIL

See Note 11

NOTES:

1. (XXX) Indicates sand filled module location and weight of sand in pounds for each module. Module spacing is based on the greater diameter of the module.
2. All sand weights are nominal.
3. The temporary crash cushion arrays shown on this plan shall be used only in locations where there will be traffic on one side of the temporary crash cushion array.
4. If the fixed object or approach end of the temporary railing is less than 15'-0" from the edge of traveled way, a temporary crash cushion is required in a construction or work zone.
5. Temporary crash cushion arrays shall not encroach on the traveled way.
6. Arrays for median shoulders shall conform to details shown on this plan for outside shoulders.
7. Place the Type P marker panel so that the bottom of the panel rests upon the pallet and faces traffic.
8. Refer to Standard Plan A73B for marker details.
9. For shoulder widths less than 8'-0", appropriate approved crash cushion protection, other than sand filled modules, shall be provided at fixed objects and at approach ends of temporary railing. The specific type of crash cushion shall be as shown on the project plans or as specified in the Special Provisions, or if not shown on the project plans or specified in the Special Provisions, shall be as approved by the Engineer.
10. Approach speeds indicated conform to NCHRP 350 Report criteria.
11. Use of pallets is optional.

STATE OF CALIFORNIA
DEPARTMENT OF TRANSPORTATION

TEMPORARY CRASH CUSHION, SAND FILLED (SHOULDER INSTALLATIONS)

NO SCALE

RSP T2 DATED JUNE 6, 2008 SUPERSEDES STANDARD PLAN T2
DATED MAY 1, 2006 - PAGE 213 OF THE STANDARD PLANS BOOK DATED MAY 2006.

REVISED STANDARD PLAN RSP T2

2006 REVISED STANDARD PLAN RSP T2

5-15-08

DIST	COUNTY	ROUTE	POST MILES TOTAL PROJECT	SHEET NO.	TOTAL SHEETS
06	Ker	119	4.7/8.5	54	56

REGISTERED CIVIL ENGINEER

November 17, 2006
PLANS APPROVAL DATE

REGISTERED PROFESSIONAL ENGINEER
Greg W. Edwards
No. C36386
Exp. 6-30-08
CIVIL
STATE OF CALIFORNIA

The State of California or its officers or agents shall not be responsible for the accuracy or completeness of electronic copies of this plan sheet.

To accompany plans dated 9-19-11

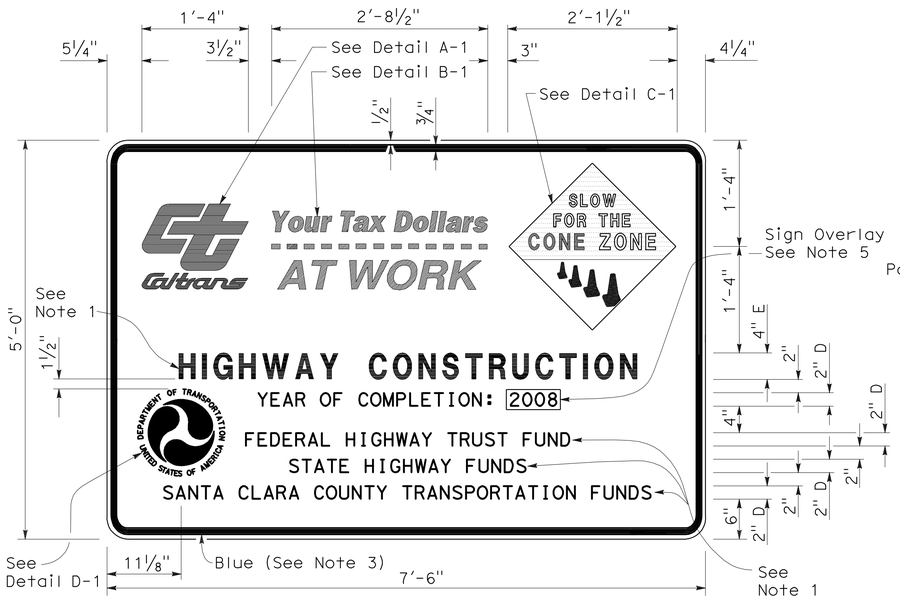

TYPE 1

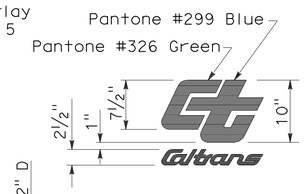

DETAIL A-1

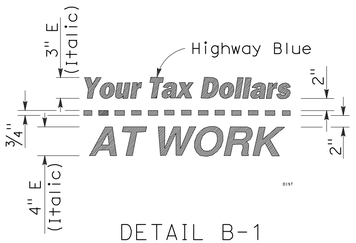

DETAIL B-1
(See Note 3)

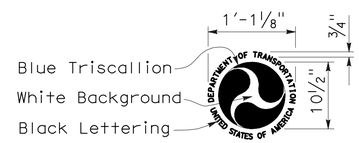

DETAIL D-1
(See Note 6)

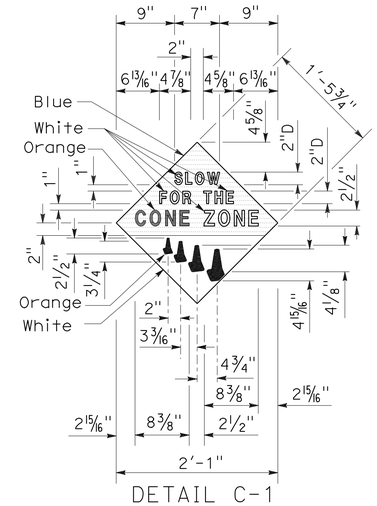

DETAIL C-1
(See Note 4)

NOTES:

1. The sign messages shown for type of project and fund types are examples only. See the Special Provisions for the applicable type of project and fund type messages to be used.
2. Except as otherwise shown, the legend of sign shall be black on a white background (non-reflective).
3. The border of the signs and details "B-1" and "B-2" shall be blue (non-reflective).
4. The diamond in details "C-1" and "C-2" shall be blue for the background of message, " SLOW FOR THE CONE ZONE", and white background for the orange cones. The color and type of font for the "SLOW FOR THE CONE ZONE" message shall be: "SLOW" white D; "FOR THE" white D; "CONE" orange Arial font; "ZONE" white Arial font.
5. Year of completion of project construction shown on the overlay is an example only. See the Special Provisions.
6. Use when the Project involves Federal Highway Trust Fund.

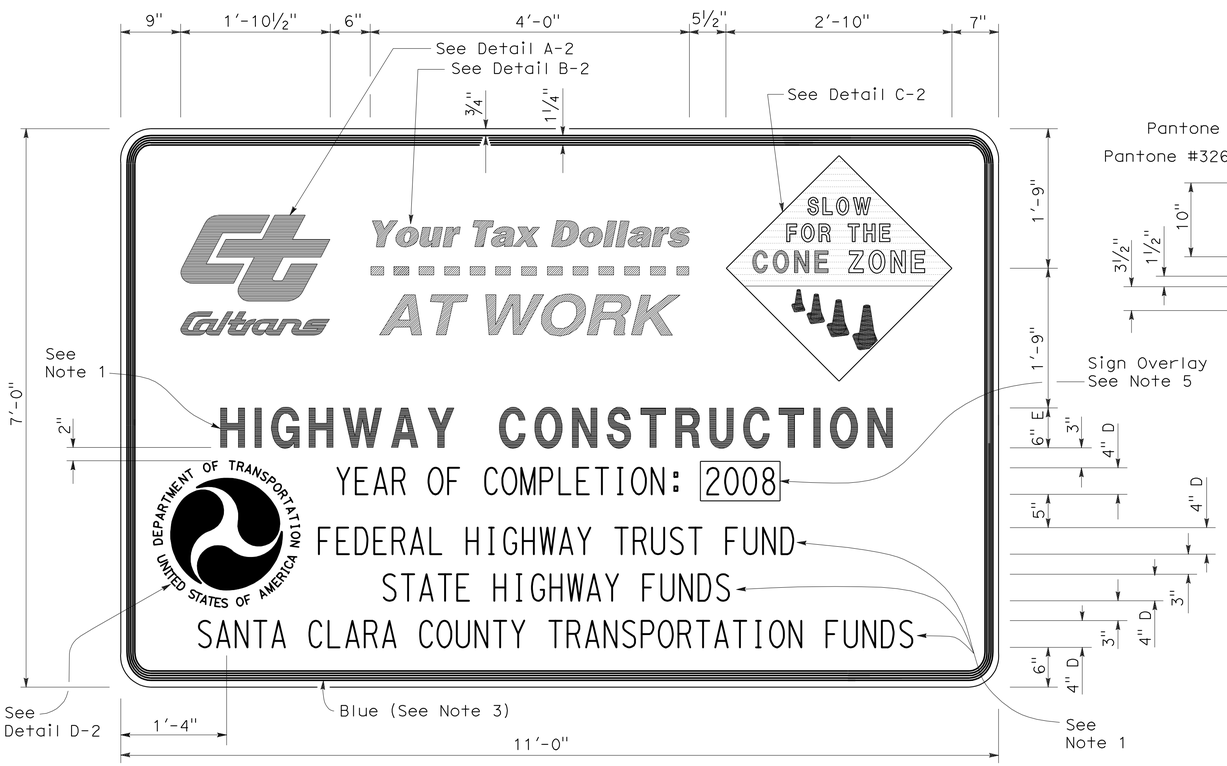

TYPE 2

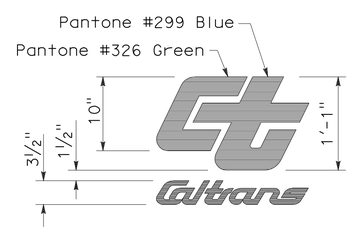

DETAIL A-2

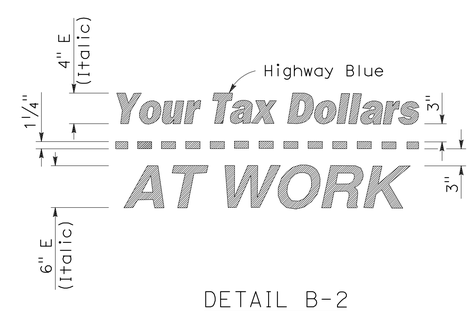

DETAIL B-2
(See Note 3)

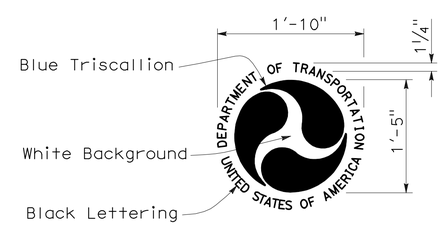

DETAIL D-2
(See Note 6)

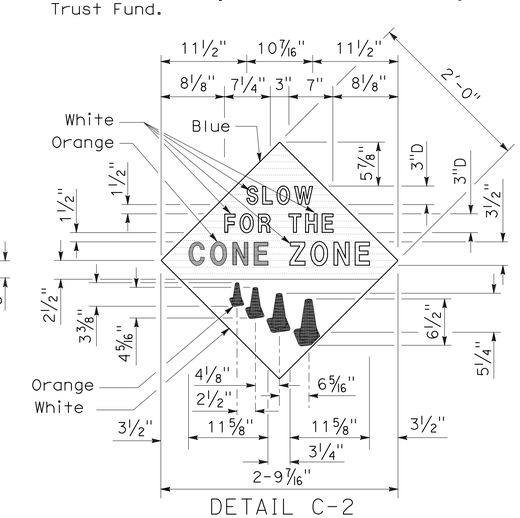

DETAIL C-2
(See Note 4)

STATE OF CALIFORNIA
DEPARTMENT OF TRANSPORTATION

CONSTRUCTION PROJECT FUNDING IDENTIFICATION SIGNS

NO SCALE

RSP T7 DATED NOVEMBER 17, 2006 SUPERSEDES STANDARD PLAN T7
DATED MAY 1, 2006 - PAGE 217 OF THE STANDARD PLANS BOOK DATED MAY 2006.

REVISED STANDARD PLAN RSP T7

2006 REVISED STANDARD PLAN RSP T7

9-7-06

DIST	COUNTY	ROUTE	POST MILES TOTAL PROJECT	SHEET NO.	TOTAL SHEETS
06	Ker	119	4.7/8.5	55	56

LICENSED LANDSCAPE ARCHITECT

April 3, 2009
PLANS APPROVAL DATE

The State of California or its officers or agents shall not be responsible for the accuracy or completeness of electronic copies of this plan sheet.

LICENSED LANDSCAPE ARCHITECT — Robert B. Schott — Signature — 11-30-10 Renewal Date — 2-25-09 Date — STATE OF CALIFORNIA

To accompany plans dated 9-19-11

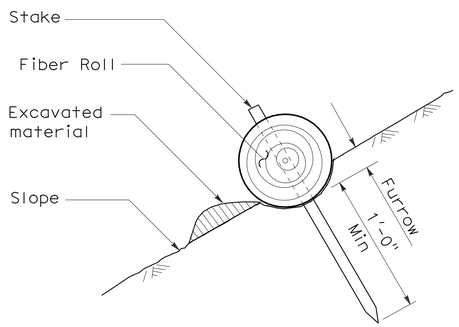

SECTION

TEMPORARY FIBER ROLL (TYPE 1)

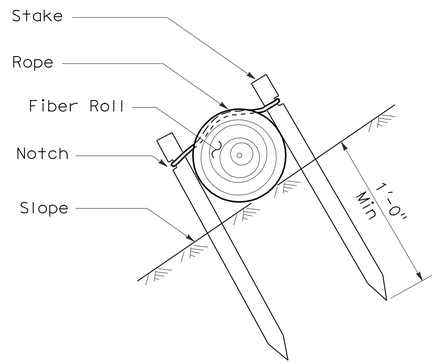

SECTION

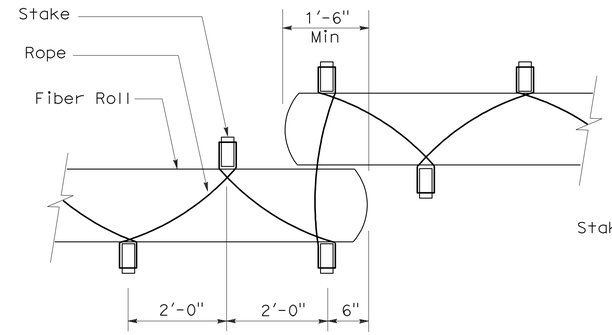

PLAN

TEMPORARY FIBER ROLL (TYPE 2)

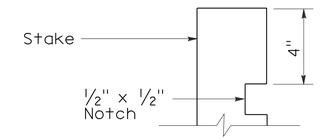

ELEVATION

STAKE NOTCH DETAIL

NOTES:

1. Temporary fiber roll spacing varies depending upon slope inclination.
2. Installations shown in the perspectives are for slope inclination of 10:1 and steeper.

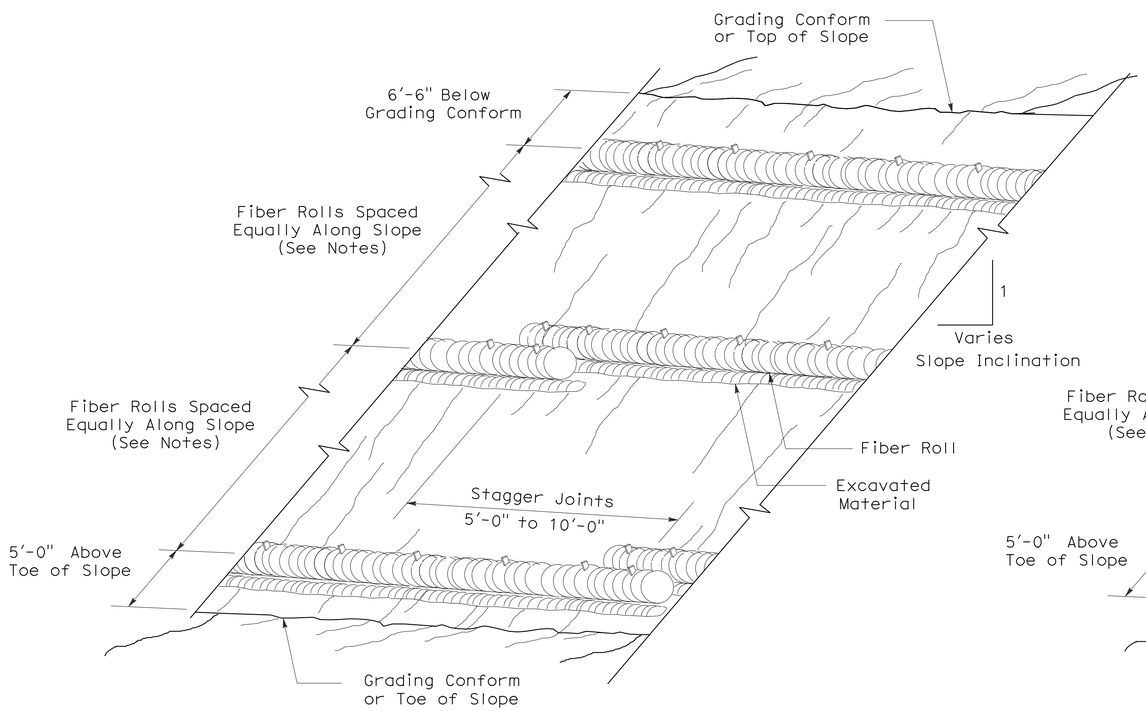

PERSPECTIVE

TEMPORARY FIBER ROLL (TYPE 1)

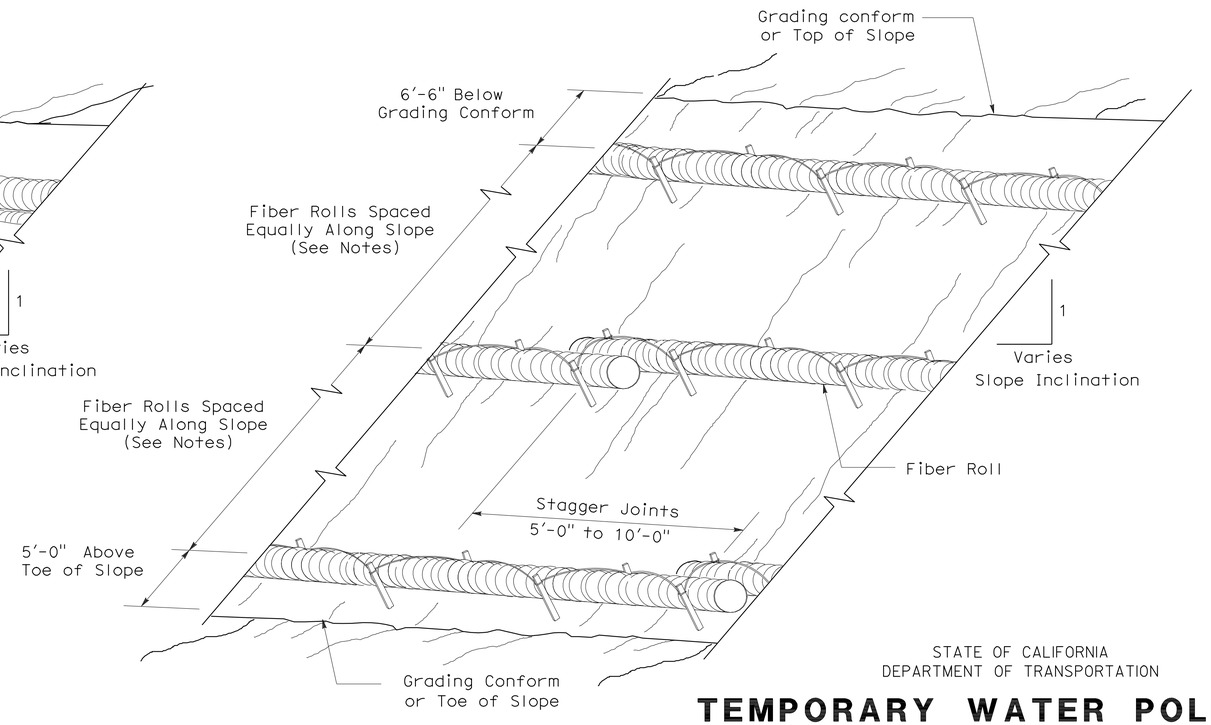

PERSPECTIVE

TEMPORARY FIBER ROLL (TYPE 2)

STATE OF CALIFORNIA
DEPARTMENT OF TRANSPORTATION

TEMPORARY WATER POLLUTION CONTROL DETAILS (TEMPORARY FIBER ROLL)

NO SCALE

RSP T56 DATED APRIL 3, 2009 SUPERSEDES STANDARD PLAN T56
DATED MAY 1, 2006 - PAGE 232 OF THE STANDARD PLANS BOOK DATED MAY 2006.

REVISED STANDARD PLAN RSP T56

2006 REVISED STANDARD PLAN RSP T56

2-23-09

DIST	COUNTY	ROUTE	POST MILES TOTAL PROJECT	SHEET NO.	TOTAL SHEETS
06	Ker	119	4.7/8.5	56	56

LICENSED LANDSCAPE ARCHITECT

April 3, 2009
PLANS APPROVAL DATE

The State of California or its officers or agents shall not be responsible for the accuracy or completeness of electronic copies of this plan sheet.

LICENSED LANDSCAPE ARCHITECT — Robert B. Schott 3025 — Signature — 11-30-10 Renewal Date — 2-25-09 Date — STATE OF CALIFORNIA

To accompany plans dated 9-19-11

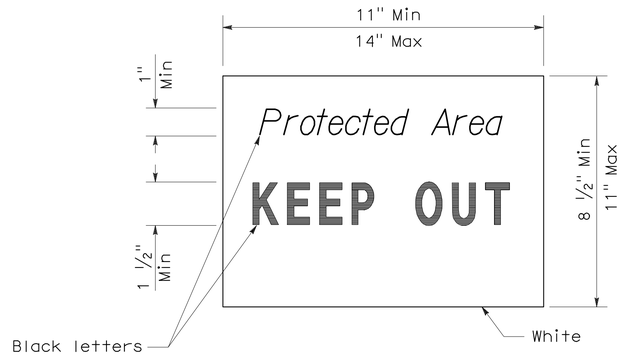

SIGN DETAIL

NOTE:

1. Temporary silt fence and temporary straw bale barrier shown for reference purposes only.

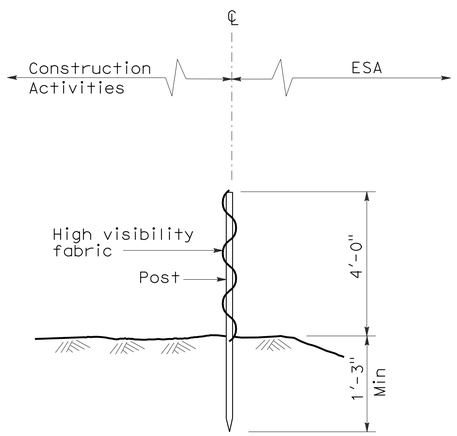

SECTION
TEMPORARY FENCE (TYPE ESA)

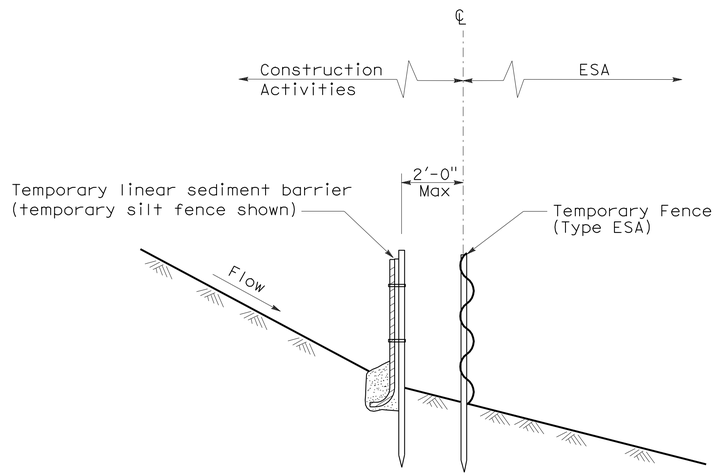

SECTION
PLACEMENT DETAIL
FOR TEMPORARY LINEAR SEDIMENT BARRIER
USED WITH TEMPORARY
FENCE (TYPE ESA)
(See Note 1)

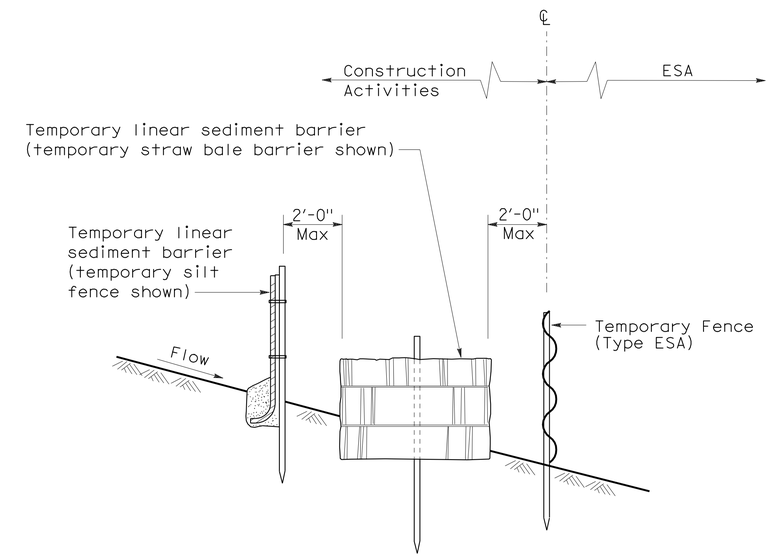

SECTION
PLACEMENT DETAIL
FOR TEMPORARY SILT FENCE
AND TEMPORARY STRAW BALE BARRIER
USED WITH TEMPORARY FENCE (TYPE ESA)
(See Note 1)

STATE OF CALIFORNIA
DEPARTMENT OF TRANSPORTATION

TEMPORARY WATER POLLUTION CONTROL DETAILS [TEMPORARY FENCE (TYPE ESA)]

NO SCALE

NSP T65 DATED APRIL 3, 2009 SUPPLEMENTS
THE STANDARD PLANS BOOK DATED MAY 2006.

NEW STANDARD PLAN NSP T65

2006 NEW STANDARD PLAN NSP T65