ACHSSTP-P168(051)E

Dist	COUNTY	ROUTE	POST MILES TOTAL PROJECT	SHEET No.	TOTAL SHEETS
06	Fre	168S	R4.2/R6.9	1	34

INDEX OF PLANS

SHEET No.	DESCRIPTION
1	TITLE AND LOCATION MAP
2-5	TYPICAL CROSS SECTIONS
6-11	LAYOUTS
12-13	PROFILES
14-16	CONSTRUCTION DETAILS
17-23	CONSTRUCTION AREA SIGNS AND PAVEMENT DELINEATION PLANS AND QUANTITIES
24	SIGN DETAILS
25-26	SUMMARY OF QUANTITIES
27-34	REVISED AND NEW STANDARD PLANS

THE STANDARD PLANS LIST APPLICABLE TO THIS CONTRACT IS INCLUDED IN THE NOTICE TO BIDDERS AND SPECIAL PROVISIONS BOOK.

STATE OF CALIFORNIA
DEPARTMENT OF TRANSPORTATION

PROJECT PLANS FOR CONSTRUCTION ON
STATE HIGHWAY
IN FRESNO COUNTY
IN FRESNO AND CLOVIS
FROM SHAW AVENUE UNDERCROSSING
TO HERNDON AVENUE UNDERCROSSING

TO BE SUPPLEMENTED BY STANDARD PLANS DATED MAY 2006

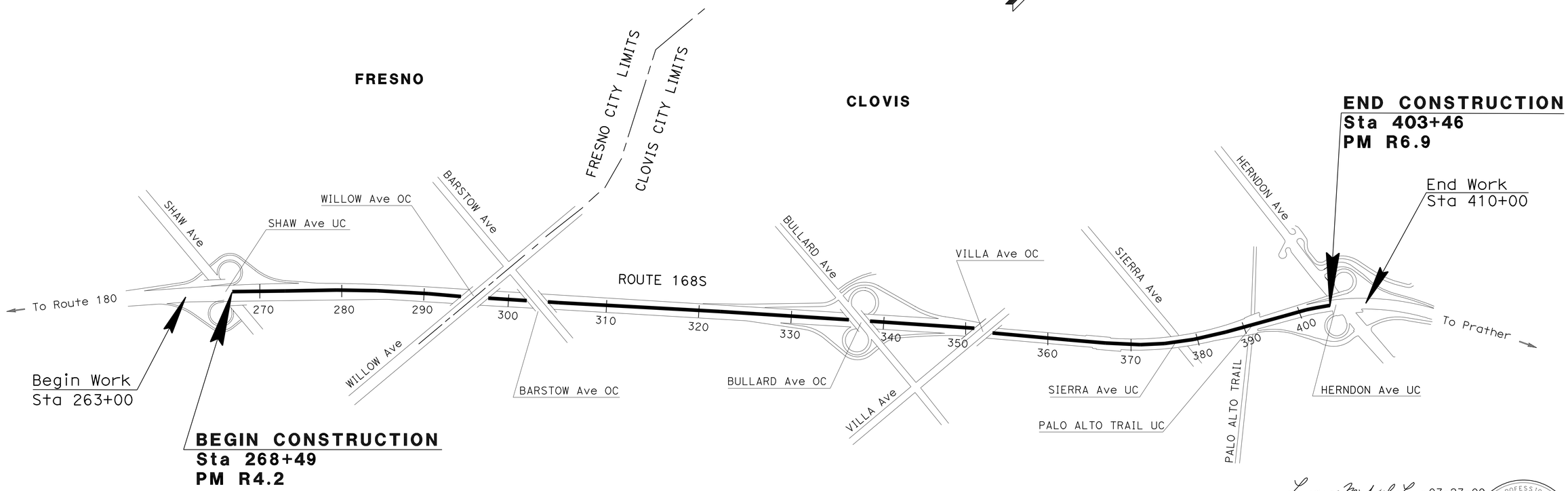

NO SCALE

THE CONTRACTOR SHALL POSSESS THE CLASS (OR CLASSES) OF LICENSE AS SPECIFIED IN THE "NOTICE TO BIDDERS."

Lawrence Michael Lowe 07-27-09
PROJECT ENGINEER DATE
REGISTERED CIVIL ENGINEER

REGISTERED PROFESSIONAL ENGINEER
LAWRENCE MICHAEL LOWE
No. 66753
Exp. 9/30/10
CIVIL
STATE OF CALIFORNIA

August 24, 2009
PLANS APPROVAL DATE

THE STATE OF CALIFORNIA OR ITS OFFICERS OR AGENTS SHALL NOT BE RESPONSIBLE FOR THE ACCURACY OR COMPLETENESS OF ELECTRONIC COPIES OF THIS PLAN SHEET.

PROJECT MANAGER: SUZIE HOLDRIDGE
DESIGN ENGINEER: SANKU MOHAN

LAST REVISION 07-16-09
DATE PLOTTED => 20-OCT-2009
TIME PLOTTED => 11:24

CONTRACT No. 06-0H7304

Dist	COUNTY	ROUTE	POST MILES TOTAL PROJECT	SHEET No.	TOTAL SHEETS
06	Fre	168S	R4.2/R6.9	2	34

Lawrence Michael Lowe 07-27-09
REGISTERED CIVIL ENGINEER DATE

8-24-09
PLANS APPROVAL DATE

REGISTERED PROFESSIONAL ENGINEER
LAWRENCE MICHAEL LOWE
No. 66753
Exp. 9/30/10
CIVIL
STATE OF CALIFORNIA

THE STATE OF CALIFORNIA OR ITS OFFICERS OR AGENTS SHALL NOT BE RESPONSIBLE FOR THE ACCURACY OR COMPLETENESS OF ELECTRONIC COPIES OF THIS PLAN SHEET.

NOTES:

1. DIMENSIONS OF PAVEMENT STRUCTURES (STRUCTURAL SECTIONS) ARE SUBJECT TO TOLERANCES SPECIFIED IN THE STANDARD SPECIFICATIONS.
2. SUPERELEVATION AS SHOWN OR AS DIRECTED BY THE ENGINEER.
3. FOR LOCATION OF CONCRETE BARRIER, SEE LAYOUT SHEETS.
4. FOR LOCATIONS OF MBGR, SEE LAYOUT SHEETS.

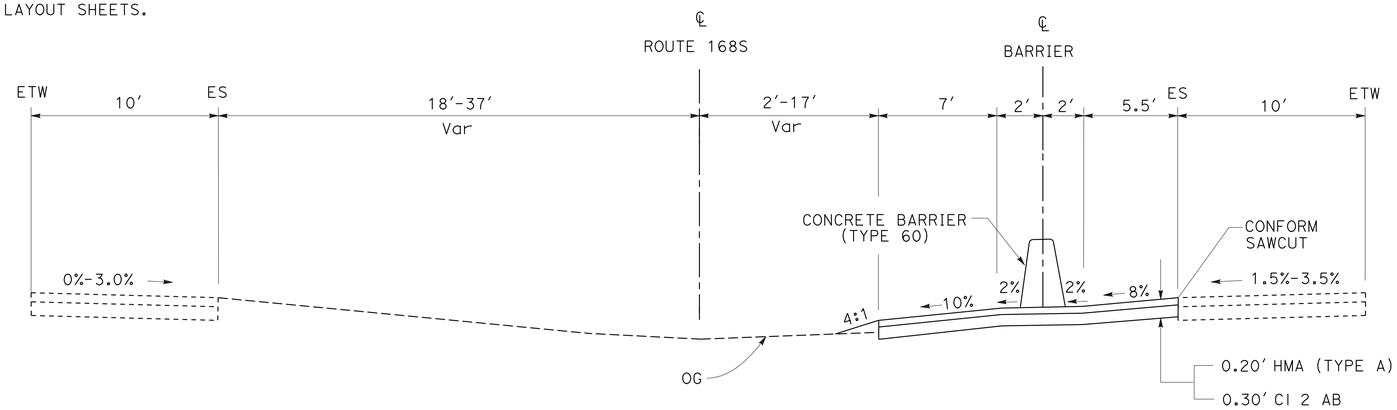

ROUTE 168S

Sta 378+49.02 TO 391+07.55

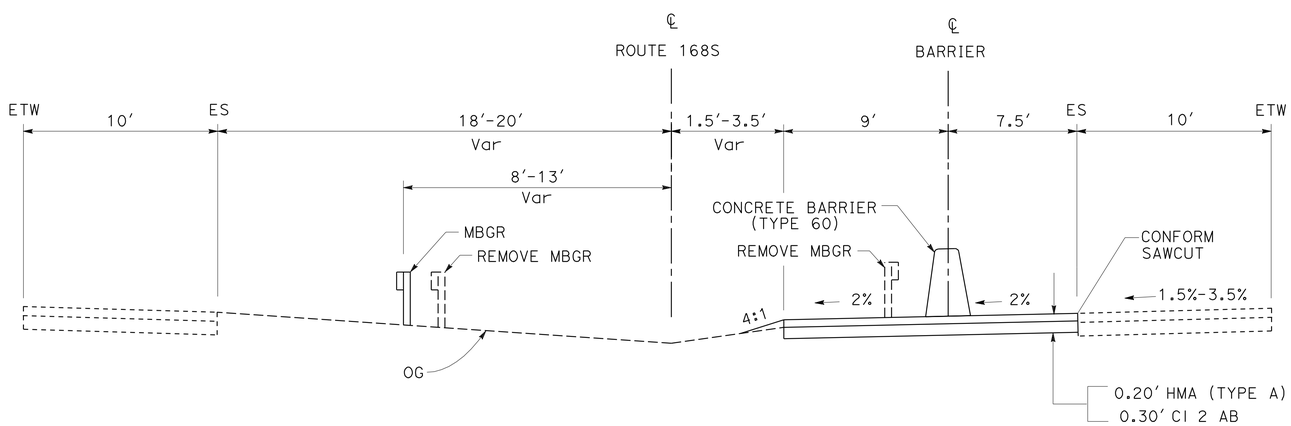

ROUTE 168S

Sta 273+01.78 TO 372+67.43

TYPICAL CROSS SECTION X-1

NO SCALE

STATE OF CALIFORNIA - DEPARTMENT OF TRANSPORTATION
Caltrans DESIGN

FUNCTIONAL SUPERVISOR: SANKU MOHAN
CALCULATED-DESIGNED BY: JOO BAEK
CHECKED BY: LAWRENCE LOWE
REVISED BY
DATE REVISED

LAST REVISION 07-01-09
DATE PLOTTED => 02-SEP-2009
TIME PLOTTED => 13:50

Dist	COUNTY	ROUTE	POST MILES TOTAL PROJECT	SHEET No.	TOTAL SHEETS
06	Fre	168S	R4.2/R6.9	3	34

Lawrence Michael Lowe 07-27-09
REGISTERED CIVIL ENGINEER DATE

8-24-09
PLANS APPROVAL DATE

REGISTERED PROFESSIONAL ENGINEER
LAWRENCE MICHAEL LOWE
No. 66753
Exp 9/30/10
CIVIL
STATE OF CALIFORNIA

THE STATE OF CALIFORNIA OR ITS OFFICERS OR AGENTS SHALL NOT BE RESPONSIBLE FOR THE ACCURACY OR COMPLETENESS OF ELECTRONIC COPIES OF THIS PLAN SHEET.

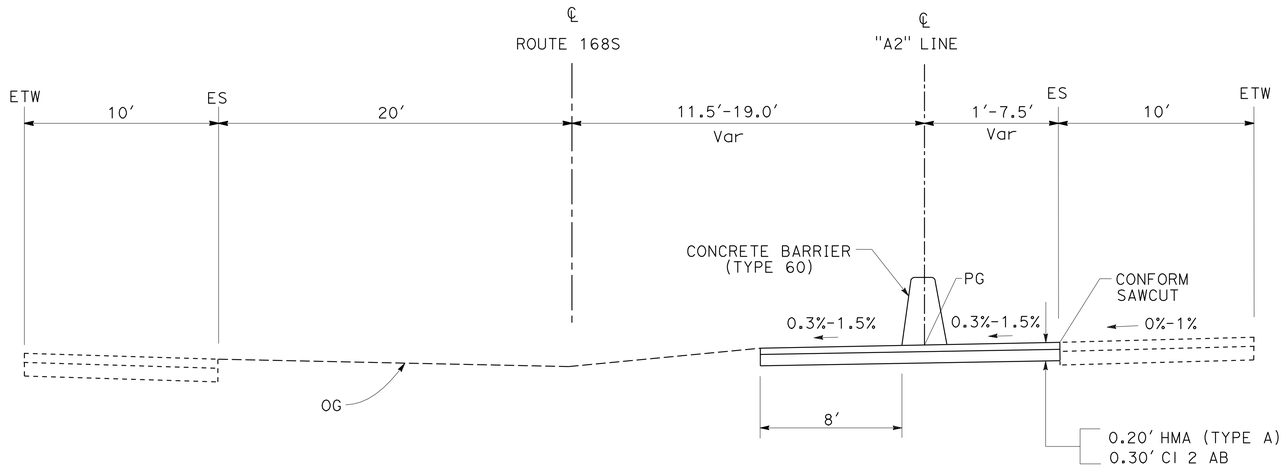

"A2" LINE

Sta 20+00.00 TO 20+93.86

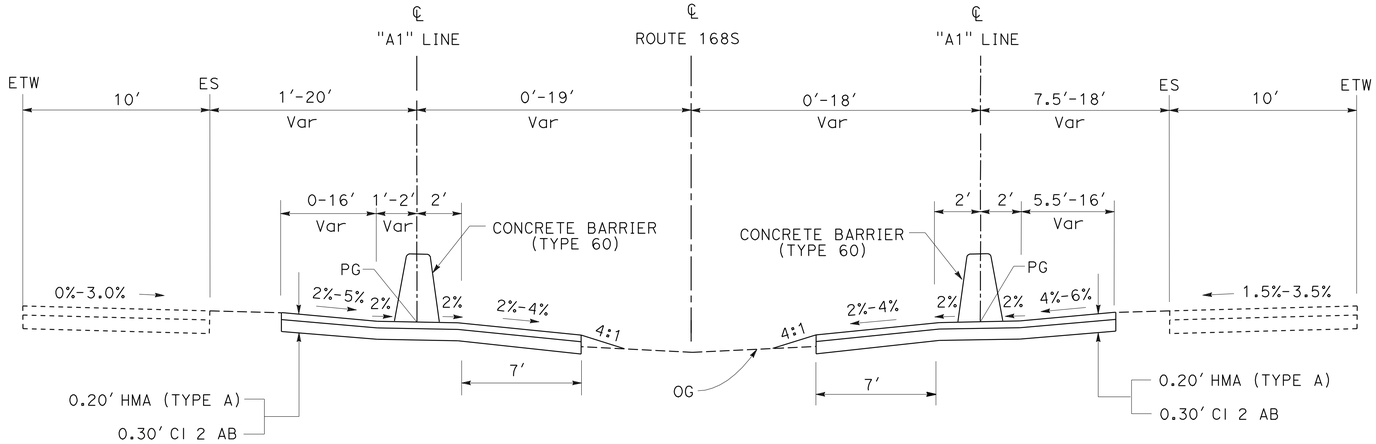

"A1" LINE

Sta 10+00.00 TO 12+67.97

"A1" LINE

Sta 12+67.97 TO 14+52.33

TYPICAL CROSS SECTION X-2

NO SCALE

REVISED BY	DATE REVISED

CALCULATED-DESIGNED BY	CHECKED BY
JOO BAEK	LAWRENCE LOWE

FUNCTIONAL SUPERVISOR: SANKU MOHAN

STATE OF CALIFORNIA - DEPARTMENT OF TRANSPORTATION
Caltrans
DESIGN

LAST REVISION 07-01-09 | DATE PLOTTED => 02-SEP-2009 | TIME PLOTTED => 13:50

Dist	COUNTY	ROUTE	POST MILES TOTAL PROJECT	SHEET No.	TOTAL SHEETS
06	Fre	168S	R4.2/R6.9	4	34

Lawrence Michael Lowe 07-27-09
REGISTERED CIVIL ENGINEER DATE

8-24-09
PLANS APPROVAL DATE

REGISTERED PROFESSIONAL ENGINEER
LAWRENCE MICHAEL LOWE
No. 66753
Exp 9/30/10
CIVIL
STATE OF CALIFORNIA

THE STATE OF CALIFORNIA OR ITS OFFICERS OR AGENTS SHALL NOT BE RESPONSIBLE FOR THE ACCURACY OR COMPLETENESS OF ELECTRONIC COPIES OF THIS PLAN SHEET.

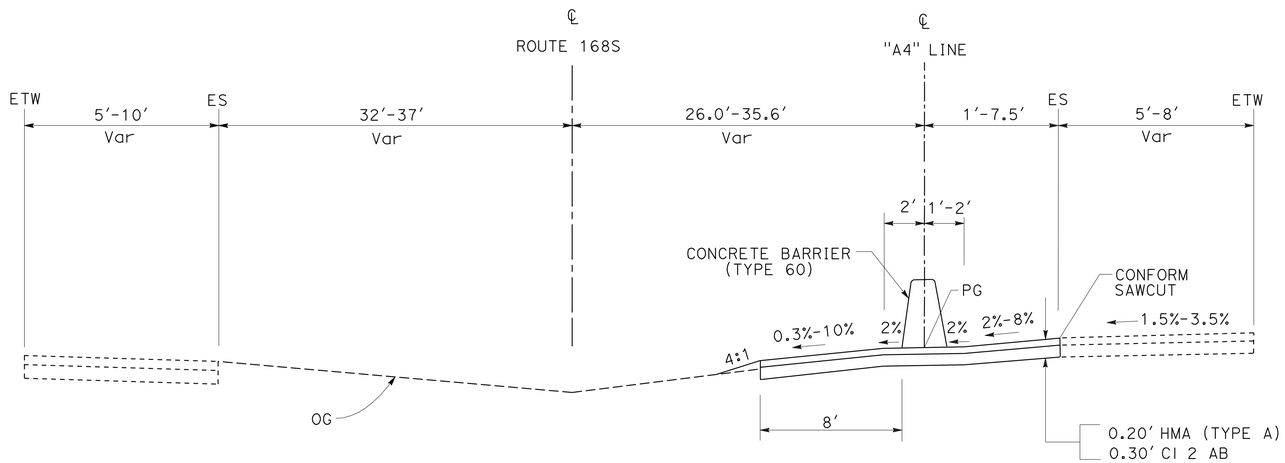

"A4" LINE

Sta 40+00.00 TO 41+22.00

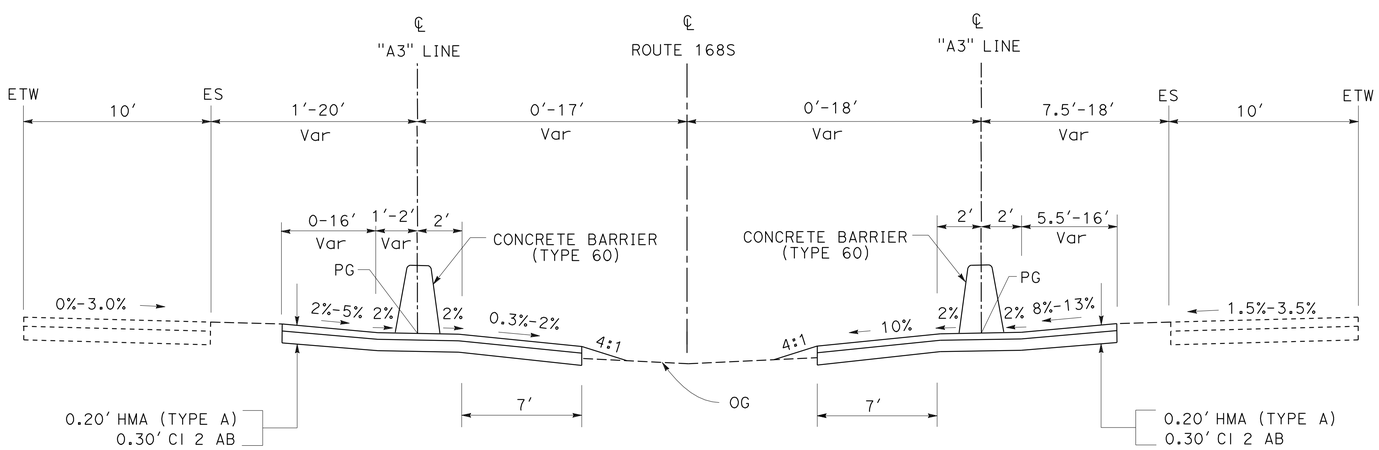

"A3" LINE

Sta 30+00.00 TO 31+73.69

"A3" LINE

Sta 31+73.69 TO 32+48.55

TYPICAL CROSS SECTION X-3

NO SCALE

STATE OF CALIFORNIA - DEPARTMENT OF TRANSPORTATION
Caltrans
DESIGN

FUNCTIONAL SUPERVISOR: SANKU MOHAN

CALCULATED-DESIGNED BY: JOO BAEK
CHECKED BY: LAWRENCE LOWE

REVISED BY
DATE REVISED

LAST REVISION 07-01-09
DATE PLOTTED => 02-SEP-2009
TIME PLOTTED => 13:50

Dist	COUNTY	ROUTE	POST MILES TOTAL PROJECT	SHEET No.	TOTAL SHEETS
06	Fre	168S	R4.2/R6.9	5	34

Lawrence Michael Lowe 07-27-09
REGISTERED CIVIL ENGINEER DATE

8-24-09
PLANS APPROVAL DATE

REGISTERED PROFESSIONAL ENGINEER
LAWRENCE MICHAEL LOWE
No. 66753
Exp 9/30/10
CIVIL
STATE OF CALIFORNIA

THE STATE OF CALIFORNIA OR ITS OFFICERS OR AGENTS SHALL NOT BE RESPONSIBLE FOR THE ACCURACY OR COMPLETENESS OF ELECTRONIC COPIES OF THIS PLAN SHEET.

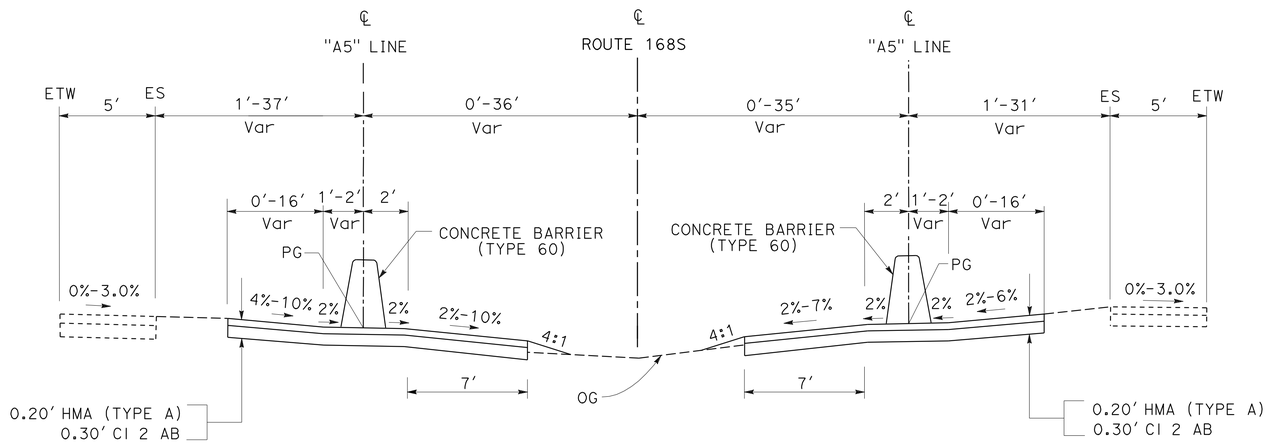

"A5" LINE

Sta 50+00.00 TO 55+04.95

"A5" LINE

Sta 55+04.95 TO 59+23.39

TYPICAL CROSS SECTION X-4

NO SCALE

STATE OF CALIFORNIA - DEPARTMENT OF TRANSPORTATION
Caltrans
DESIGN

FUNCTIONAL SUPERVISOR: SANKU MOHAN

CALCULATED-DESIGNED BY: JOO BAEK
CHECKED BY: LAWRENCE LOWE

REVISED BY
DATE REVISED

LAST REVISION 07-03-09
DATE PLOTTED => 02-SEP-2009
TIME PLOTTED => 13:50

Dist	COUNTY	ROUTE	POST MILES TOTAL PROJECT	SHEET No.	TOTAL SHEETS
06	Fre	168S	R4.2/R6.9	6	34

Lawrence Michael Lowe 07-27-09
REGISTERED CIVIL ENGINEER DATE

8-24-09
PLANS APPROVAL DATE

REGISTERED PROFESSIONAL ENGINEER
LAWRENCE MICHAEL LOWE
No. 66753
Exp 9/30/10
CIVIL
STATE OF CALIFORNIA

THE STATE OF CALIFORNIA OR ITS OFFICERS OR AGENTS SHALL NOT BE RESPONSIBLE FOR THE ACCURACY OR COMPLETENESS OF ELECTRONIC COPIES OF THIS PLAN SHEET.

NOTES: FOR ACCURATE RIGHT OF WAY DATA, CONTACT RIGHT OF WAY ENGINEERING AT THE DISTRICT OFFICE.

[1] - APPROXIMATE LOCATION OF EXISTING UNDERGROUND CALTRANS ELECTRICAL CONDUIT. PROTECT IN PLACE. EXACT LOCATION SHALL BE DETERMINED IN THE FIELD BY THE ENGINEER.

LEGEND

← DIRECTION OF TRAVEL

ABBREVIATION:

dlc - DECTOR LOOP CABLE

UTILITY OWNERSHIP:

—— fo —— —— —— fo —— —— CALTRANS

CURVE DATA

No.	R	Δ	T	L
1	20 013.13	7°33'57"	1323.29	2642.74

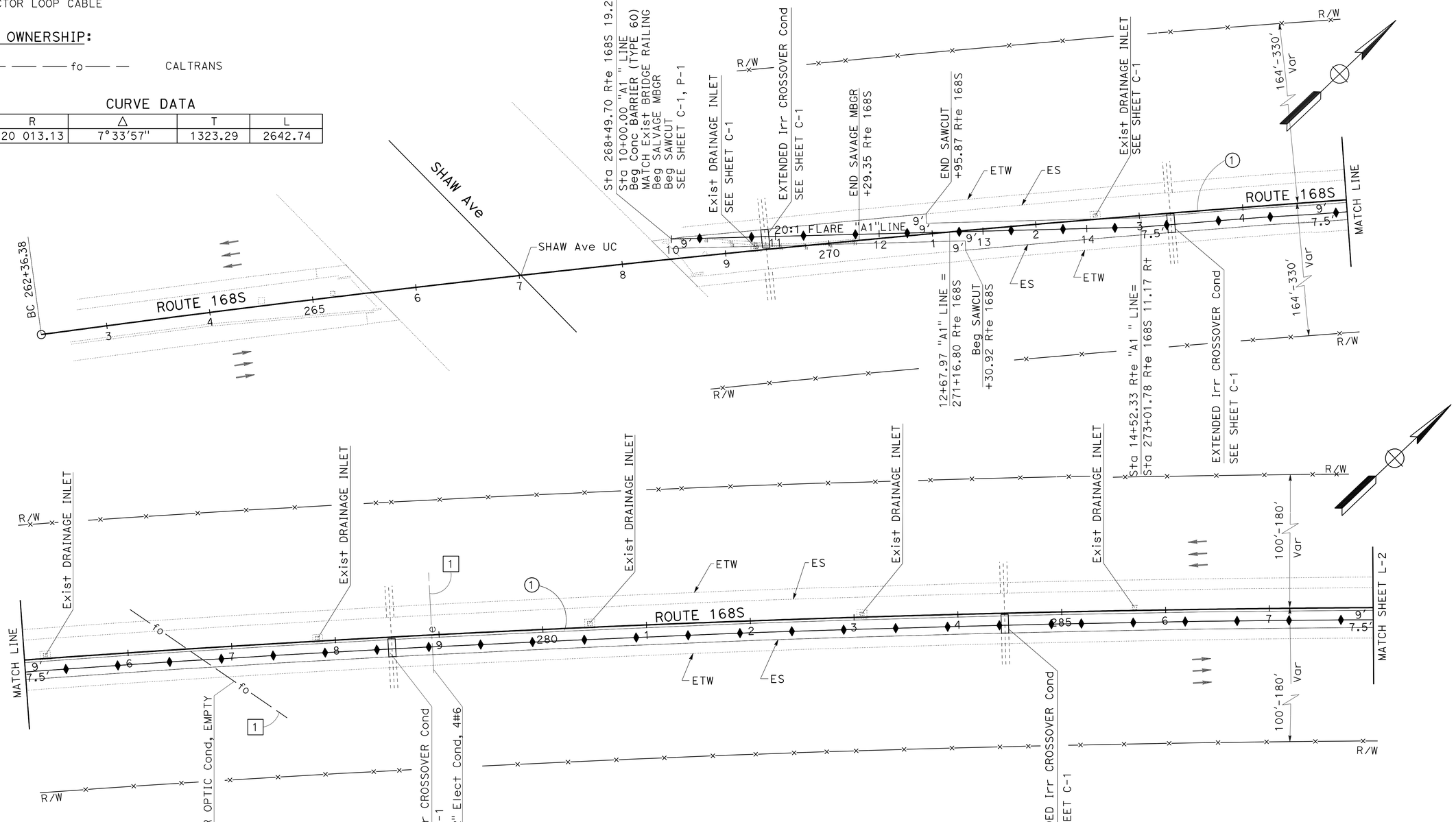

LAYOUT
L-1

SCALE: 1"=50'

STATE OF CALIFORNIA - DEPARTMENT OF TRANSPORTATION
Caltrans
DESIGN

FUNCTIONAL SUPERVISOR: SANKU MOHAN
CALCULATED-DESIGNED BY: JOO BAEK
CHECKED BY: LAWRENCE LOWE
REVISED BY
DATE REVISED

LAST REVISION 07-01-09
DATE PLOTTED => 02-SEP-2009
TIME PLOTTED => 13:50

Dist	COUNTY	ROUTE	POST MILES TOTAL PROJECT	SHEET No.	TOTAL SHEETS
06	Fre	168S	R4.2/R6.9	7	34

Lawrence Michael Lowe 07-27-09
REGISTERED CIVIL ENGINEER DATE

8-24-09
PLANS APPROVAL DATE

REGISTERED PROFESSIONAL ENGINEER LAWRENCE MICHAEL LOWE No. 66753 Exp 9/30/10 CIVIL STATE OF CALIFORNIA

THE STATE OF CALIFORNIA OR ITS OFFICERS OR AGENTS SHALL NOT BE RESPONSIBLE FOR THE ACCURACY OR COMPLETENESS OF ELECTRONIC COPIES OF THIS PLAN SHEET.

NOTES: FOR ACCURATE RIGHT OF WAY DATA, CONTACT RIGHT OF WAY ENGINEERING AT THE DISTRICT OFFICE.

1 - APPROXIMATE LOCATION OF EXISTING UNDERGROUND CALTRANS ELECTRICAL CONDUIT. PROTECT IN PLACE. EXACT LOCATION SHALL BE DETERMINED IN THE FIELD BY THE ENGINEER.

CURVE DATA

No.	R	Δ	T	L
1	20 013.13	7°33'57"	1323.29	2642.74

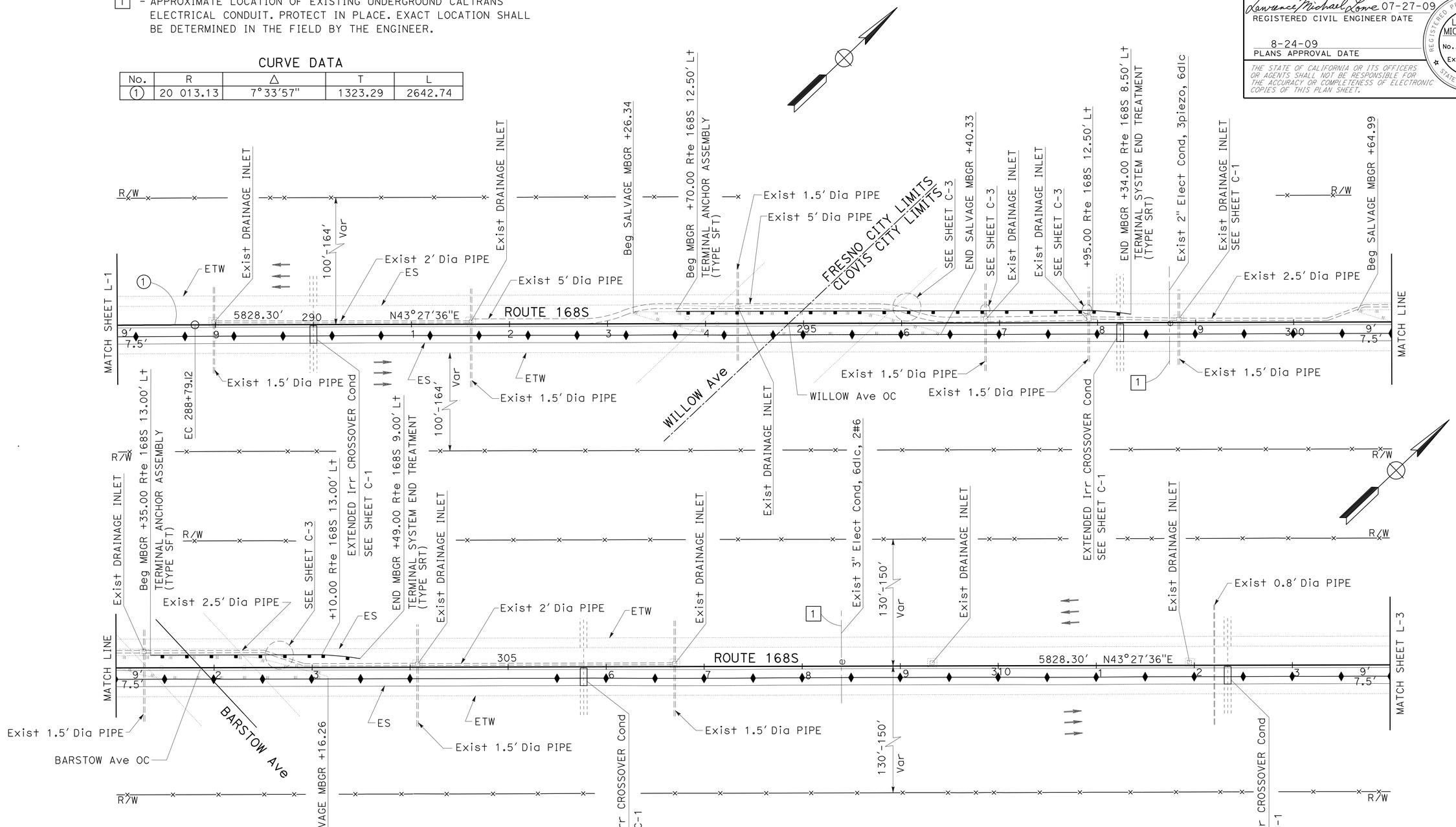

LAYOUT L-2

SCALE: 1"=50'

STATE OF CALIFORNIA - DEPARTMENT OF TRANSPORTATION
Caltrans
DESIGN

FUNCTIONAL SUPERVISOR: SANKU MOHAN
CALCULATED-DESIGNED BY: JOO BAEK
CHECKED BY: LAWRENCE LOWE
REVISED BY
DATE REVISED

LAST REVISION 07-01-09
DATE PLOTTED => 02-SEP-2009
TIME PLOTTED => 13:50

Dist	COUNTY	ROUTE	POST MILES TOTAL PROJECT	SHEET No.	TOTAL SHEETS
06	Fre	168S	R4.2/R6.9	8	34

Lawrence Michael Lowe 07-27-09
REGISTERED CIVIL ENGINEER DATE

8-24-09
PLANS APPROVAL DATE

REGISTERED PROFESSIONAL ENGINEER
LAWRENCE MICHAEL LOWE
No. 66753
Exp. 9/30/10
CIVIL
STATE OF CALIFORNIA

THE STATE OF CALIFORNIA OR ITS OFFICERS OR AGENTS SHALL NOT BE RESPONSIBLE FOR THE ACCURACY OR COMPLETENESS OF ELECTRONIC COPIES OF THIS PLAN SHEET.

NOTES: FOR ACCURATE RIGHT OF WAY DATA, CONTACT RIGHT OF WAY ENGINEERING AT THE DISTRICT OFFICE.

1 - APPROXIMATE LOCATION OF EXISTING UNDERGROUND CALTRANS ELECTRICAL CONDUIT. PROTECT IN PLACE. EXACT LOCATION SHALL BE DETERMINED IN THE FIELD BY THE ENGINEER.

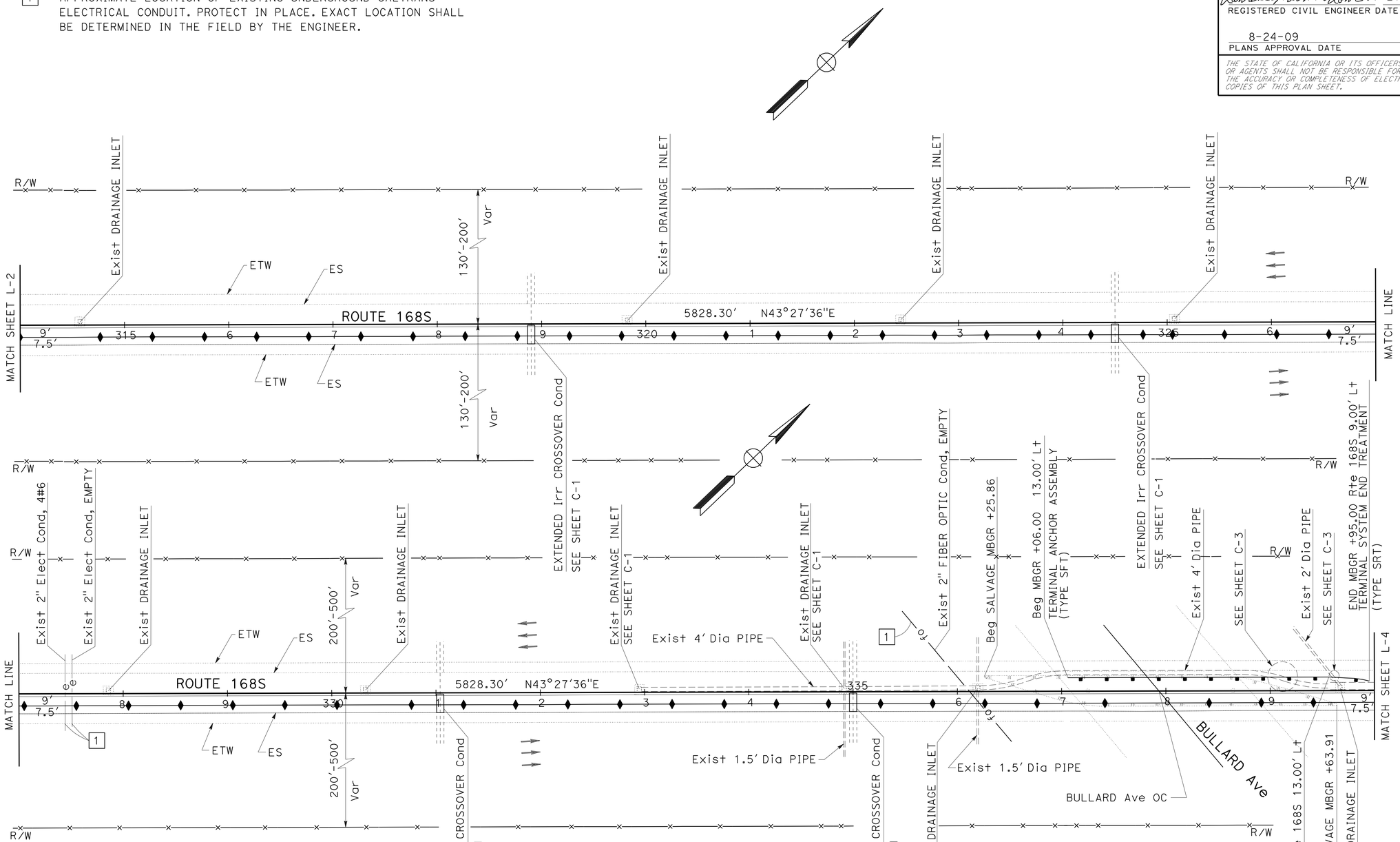

LAYOUT
L-3

SCALE: 1"=50'

REVISED BY	DATE REVISED
JOO BAEK	LAWRENCE LOWE
CALCULATED-DESIGNED BY	CHECKED BY
FUNCTIONAL SUPERVISOR	SANKU MOHAN

STATE OF CALIFORNIA - DEPARTMENT OF TRANSPORTATION
Caltrans **DESIGN**

LAST REVISION 07-01-09 | DATE PLOTTED => 02-SEP-2009 | TIME PLOTTED => 13:50

Dist	COUNTY	ROUTE	POST MILES TOTAL PROJECT	SHEET No.	TOTAL SHEETS
06	Fre	168S	R4.2/R6.9	9	34

Lawrence Michael Lowe 07-27-09
REGISTERED CIVIL ENGINEER DATE

8-24-09
PLANS APPROVAL DATE

REGISTERED PROFESSIONAL ENGINEER
LAWRENCE MICHAEL LOWE
No. 66753
Exp 9/30/10
CIVIL
STATE OF CALIFORNIA

THE STATE OF CALIFORNIA OR ITS OFFICERS OR AGENTS SHALL NOT BE RESPONSIBLE FOR THE ACCURACY OR COMPLETENESS OF ELECTRONIC COPIES OF THIS PLAN SHEET.

NOTES: FOR ACCURATE RIGHT OF WAY DATA, CONTACT RIGHT OF WAY ENGINEERING AT THE DISTRICT OFFICE.

1 - APPROXIMATE LOCATION OF EXISTING UNDERGROUND CALTRANS ELECTRICAL CONDUIT. PROTECT IN PLACE. EXACT LOCATION SHALL BE DETERMINED IN THE FIELD BY THE ENGINEER.

CURVE DATA

No.	R	Δ	T	L
2	35 007.53	1°30'31"	460.89	921.73

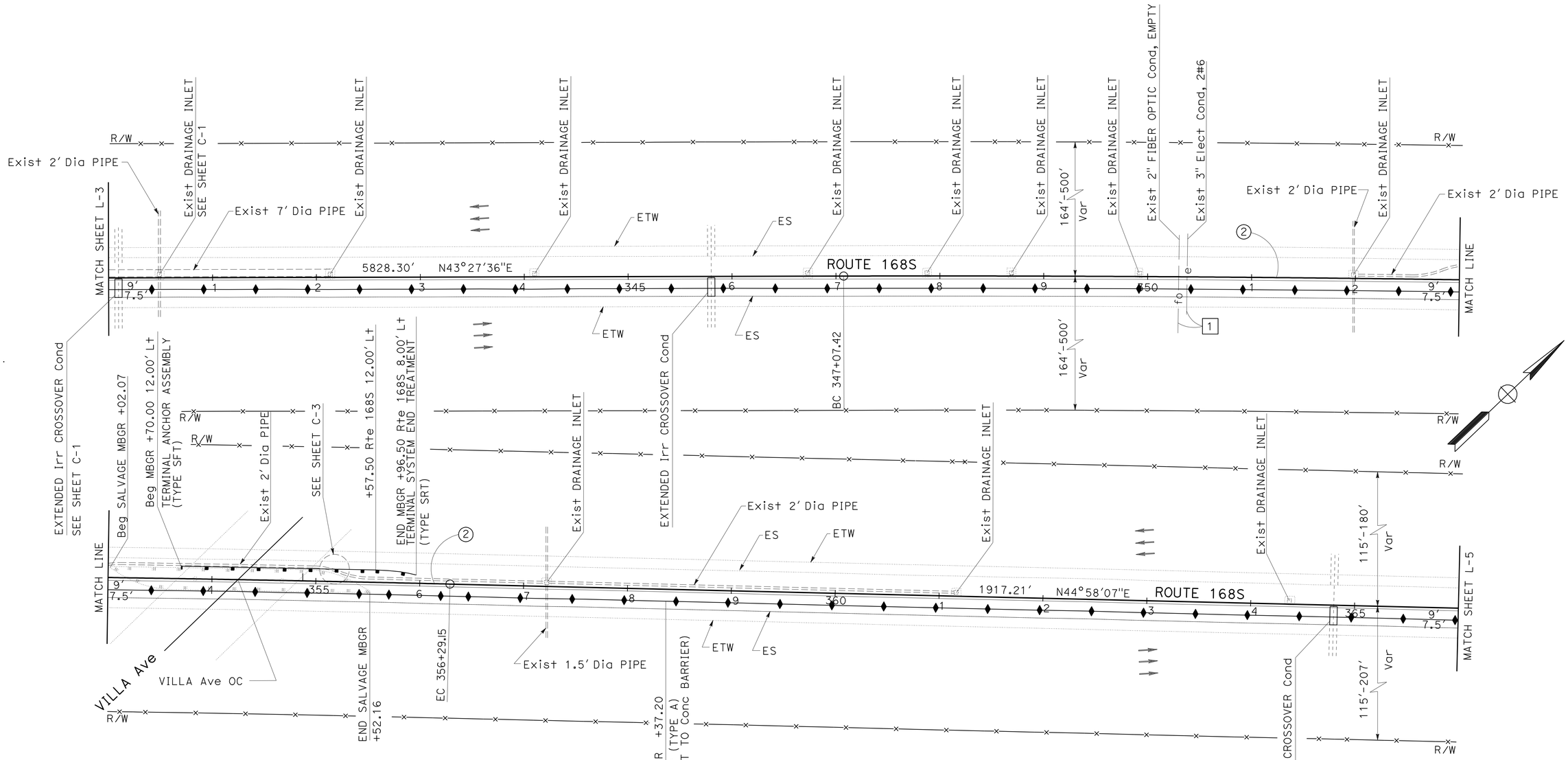

LAYOUT
L-4

SCALE: 1"=50'

REVISED BY	DATE REVISED
JOO BAEK	LAWRENCE LOWE
CALCULATED-DESIGNED BY	CHECKED BY
FUNCTIONAL SUPERVISOR	SANKU MOHAN

STATE OF CALIFORNIA - DEPARTMENT OF TRANSPORTATION
Caltrans
DESIGN

LAST REVISION 07-01-09
DATE PLOTTED => 02-SEP-2009
TIME PLOTTED => 13:51

Dist	COUNTY	ROUTE	POST MILES TOTAL PROJECT	SHEET No.	TOTAL SHEETS
06	Fre	168S	R4.2/R6.9	10	34

Lawrence Michael Lowe 07-27-09
REGISTERED CIVIL ENGINEER DATE

8-24-09
PLANS APPROVAL DATE

REGISTERED PROFESSIONAL ENGINEER
LAWRENCE MICHAEL LOWE
No. 66753
Exp 9/30/10
CIVIL
STATE OF CALIFORNIA

THE STATE OF CALIFORNIA OR ITS OFFICERS OR AGENTS SHALL NOT BE RESPONSIBLE FOR THE ACCURACY OR COMPLETENESS OF ELECTRONIC COPIES OF THIS PLAN SHEET.

NOTES: FOR ACCURATE RIGHT OF WAY DATA, CONTACT RIGHT OF WAY ENGINEERING AT THE DISTRICT OFFICE.

1 - APPROXIMATE LOCATION OF EXISTING UNDERGROUND CALTRANS ELECTRICAL CONDUIT. PROTECT IN PLACE. EXACT LOCATION SHALL BE DETERMINED IN THE FIELD BY THE ENGINEER.

CURVE DATA

No.	R	Δ	T	L
3	4002.61	20°07'57"	710.55	1406.44

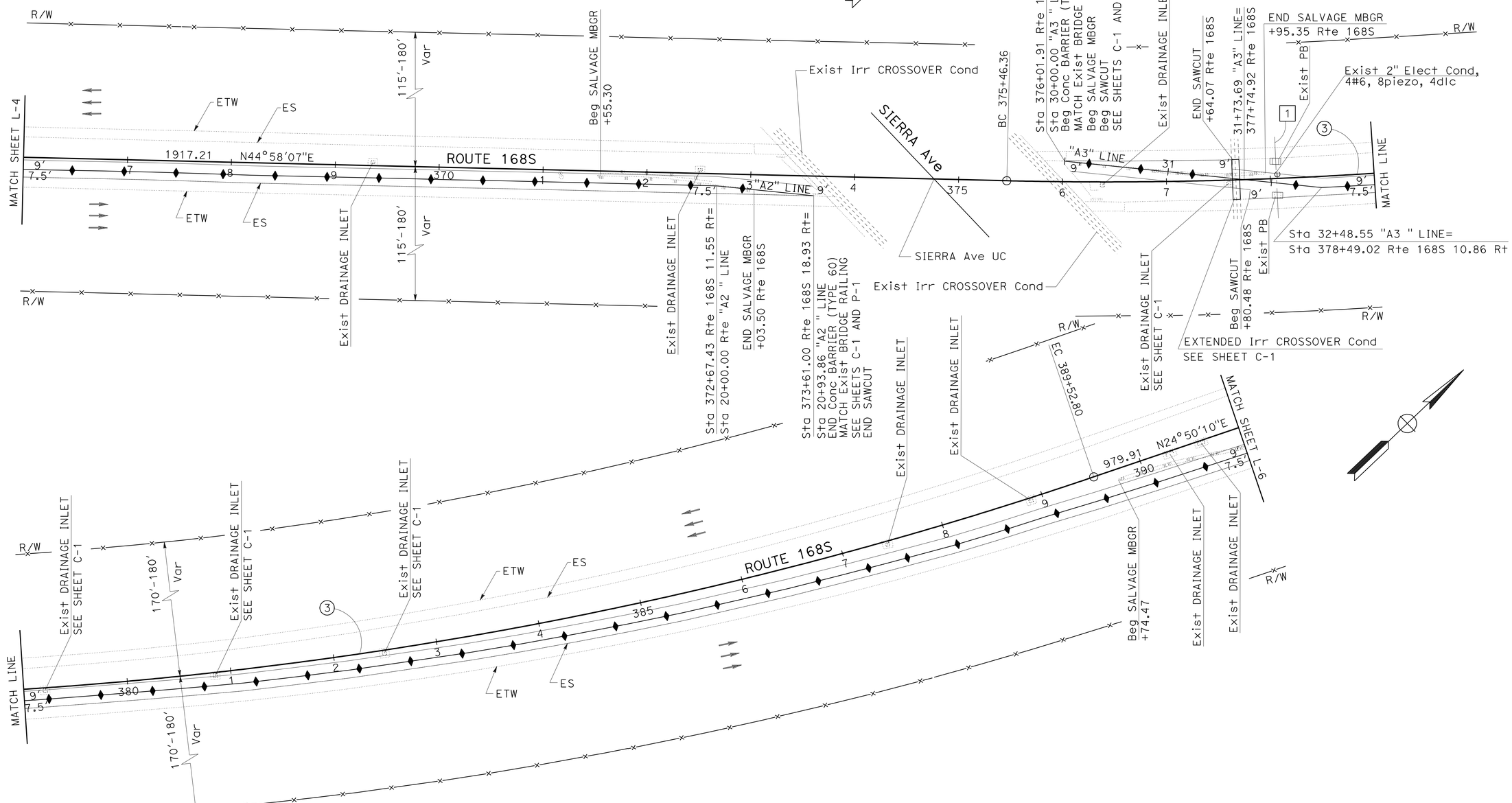

SCALE: 1"=50'

LAYOUT
L-5

STATE OF CALIFORNIA - DEPARTMENT OF TRANSPORTATION
Caltrans DESIGN

FUNCTIONAL SUPERVISOR: SANKU MOHAN
CALCULATED-DESIGNED BY: JOO BAEK
CHECKED BY: LAWRENCE LOWE
REVISED BY
DATE REVISED

LAST REVISION 07-01-09
DATE PLOTTED => 02-SEP-2009
TIME PLOTTED => 13:51

Dist	COUNTY	ROUTE	POST MILES TOTAL PROJECT	SHEET No.	TOTAL SHEETS
06	Fre	168S	R4.2/R6.9	11	34

Lawrence Michael Lowe 07-27-09
REGISTERED CIVIL ENGINEER DATE

8-24-09
PLANS APPROVAL DATE

REGISTERED PROFESSIONAL ENGINEER LAWRENCE MICHAEL LOWE No. 66753 Exp. 9/30/10 CIVIL STATE OF CALIFORNIA

THE STATE OF CALIFORNIA OR ITS OFFICERS OR AGENTS SHALL NOT BE RESPONSIBLE FOR THE ACCURACY OR COMPLETENESS OF ELECTRONIC COPIES OF THIS PLAN SHEET.

NOTES: FOR ACCURATE RIGHT OF WAY DATA, CONTACT RIGHT OF WAY ENGINEERING AT THE DISTRICT OFFICE.

1 - APPROXIMATE LOCATION OF EXISTING UNDERGROUND CALTRANS ELECTRICAL CONDUIT. PROTECT IN PLACE. EXACT LOCATION SHALL BE DETERMINED IN THE FIELD BY THE ENGINEER.

CURVE DATA

No.	R	Δ	T	L
4	3001.96	65°32'57"	1932.75	3434.39
5	2500.00	5°32'1"	120.82	241.45
6	30000.00	0°47'37"	207.78	415.55

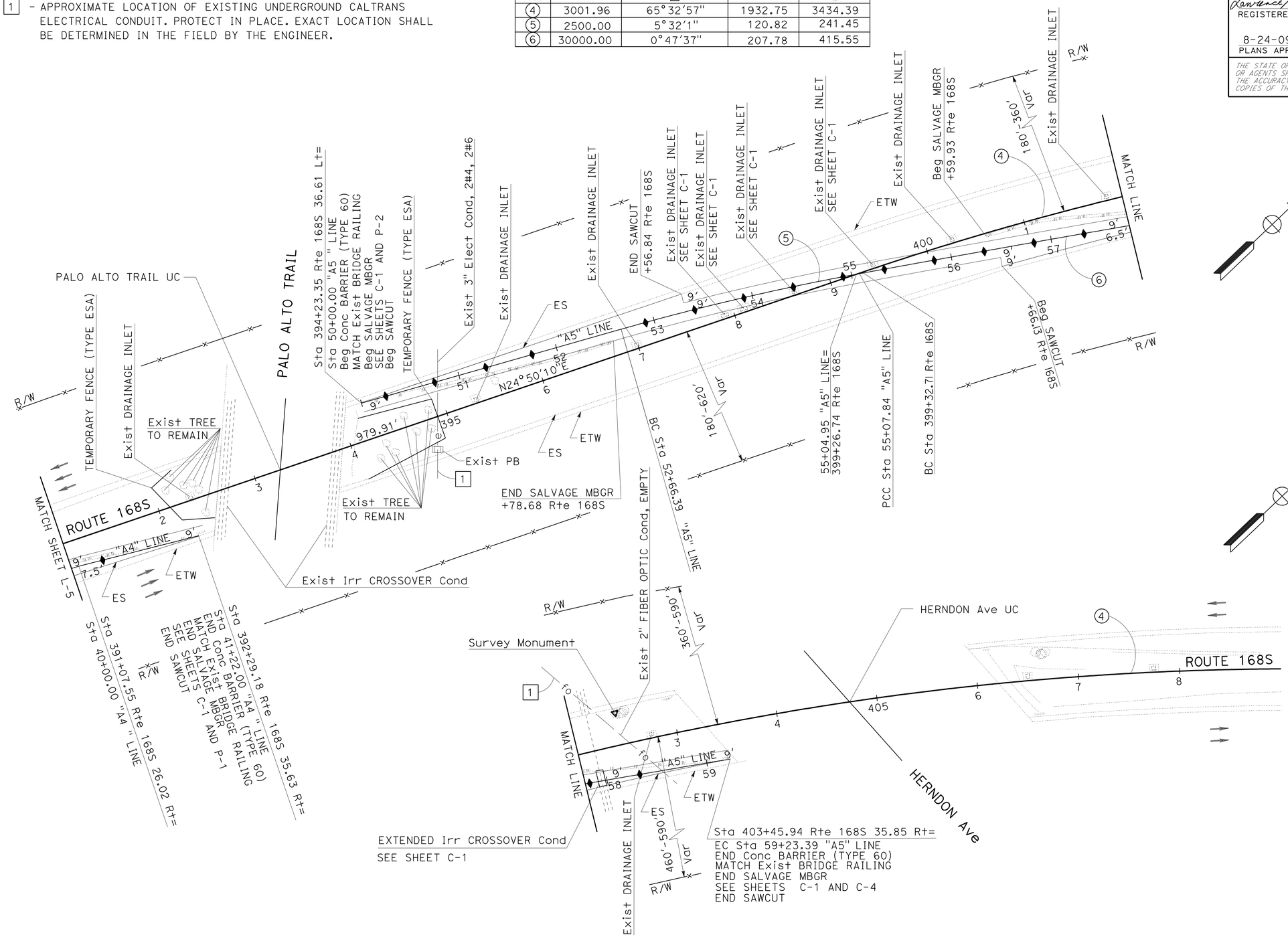

SCALE: 1"=50'

LAYOUT L-6

REVISED BY	DATE REVISED

CALCULATED-DESIGNED BY: JOO BAEK
CHECKED BY: LAWRENCE LOWE
FUNCTIONAL SUPERVISOR: SANKU MOHAN

STATE OF CALIFORNIA - DEPARTMENT OF TRANSPORTATION
Caltrans DESIGN

LAST REVISION 07-01-09 | DATE PLOTTED => 02-SEP-2009 | TIME PLOTTED => 13:51

Dist	COUNTY	ROUTE	POST MILES TOTAL PROJECT	SHEET No.	TOTAL SHEETS
06	Fre	168S	R4.2/R6.9	12	34

Lawrence Michael Lowe 07-27-09
REGISTERED CIVIL ENGINEER DATE

8-24-09
PLANS APPROVAL DATE

REGISTERED PROFESSIONAL ENGINEER
LAWRENCE MICHAEL LOWE
No. 66753
Exp 9/30/10
CIVIL
STATE OF CALIFORNIA

THE STATE OF CALIFORNIA OR ITS OFFICERS OR AGENTS SHALL NOT BE RESPONSIBLE FOR THE ACCURACY OR COMPLETENESS OF ELECTRONIC COPIES OF THIS PLAN SHEET.

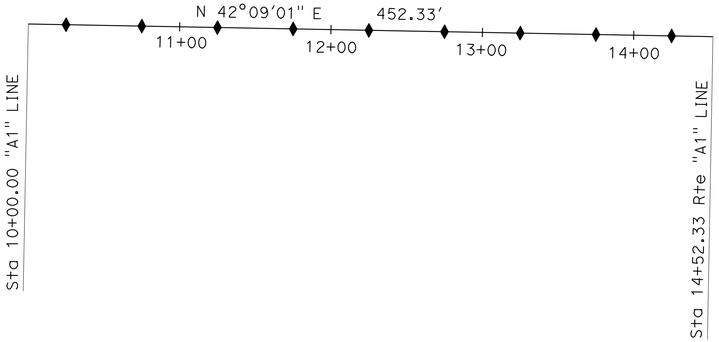

PLAN

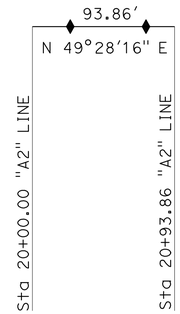

PLAN

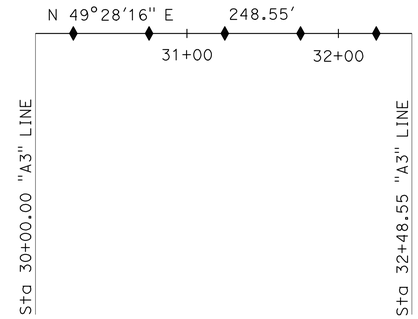

PLAN

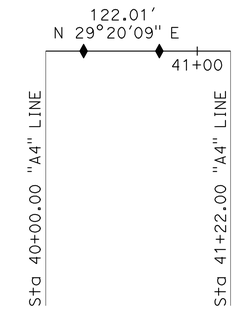

PLAN

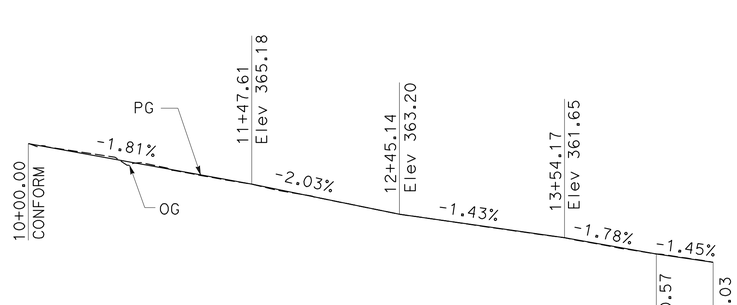

PROFILE

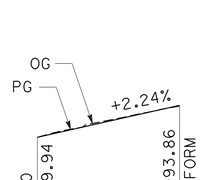

PROFILE

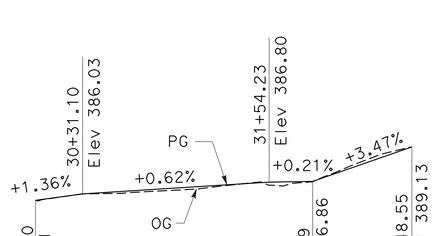

PROFILE

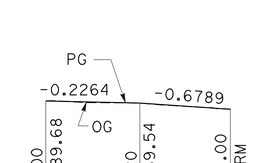

PROFILE

"A1" LINE

"A2" LINE

"A3" LINE

"A4" LINE

PROFILES

NO SCALE **P-1**

STATE OF CALIFORNIA - DEPARTMENT OF TRANSPORTATION
Caltrans **DESIGN**

FUNCTIONAL SUPERVISOR: SANKU MOHAN
CALCULATED-DESIGNED BY: JOO BAEK
CHECKED BY: LAWRENCE LOWE
REVISED BY
DATE REVISED

LAST REVISION 07-01-09 | DATE PLOTTED => 02-SEP-2009 | TIME PLOTTED => 13:51

Dist	COUNTY	ROUTE	POST MILES TOTAL PROJECT	SHEET No.	TOTAL SHEETS
06	Fre	168S	R4.2/R6.9	13	34

Lawrence Michael Lowe 07-27-09
REGISTERED CIVIL ENGINEER DATE

8-24-09
PLANS APPROVAL DATE

REGISTERED PROFESSIONAL ENGINEER
LAWRENCE MICHAEL LOWE
No. 66753
Exp 9/30/10
CIVIL
STATE OF CALIFORNIA

THE STATE OF CALIFORNIA OR ITS OFFICERS OR AGENTS SHALL NOT BE RESPONSIBLE FOR THE ACCURACY OR COMPLETENESS OF ELECTRONIC COPIES OF THIS PLAN SHEET.

CURVE DATA

No.	R	Δ	T	L
1	2500.00	5°32'1"	120.82	241.45
2	30000.00	0°47'37"	207.78	415.55

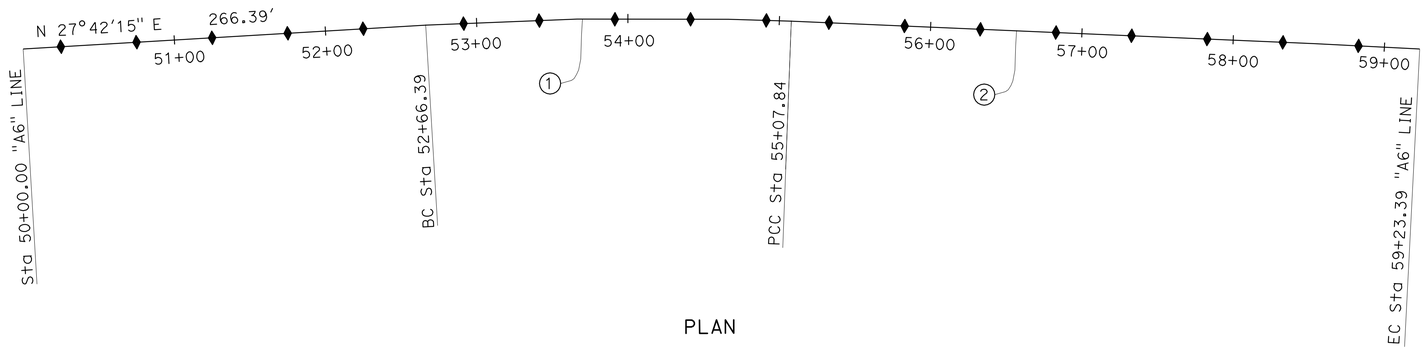

PLAN

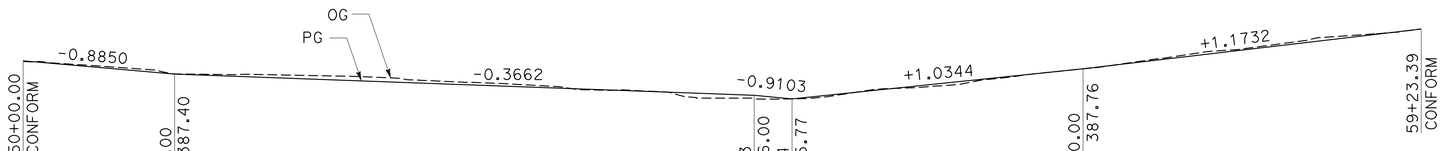

PROFILE

"A5" LINE

PROFILES

NO SCALE **P-2**

STATE OF CALIFORNIA - DEPARTMENT OF TRANSPORTATION
Caltrans **DESIGN**

FUNCTIONAL SUPERVISOR: SANKU MOHAN
CALCULATED-DESIGNED BY: JOO BAEK
CHECKED BY: LAWRENCE LOWE
REVISED BY
DATE REVISED

LAST REVISION 07-01-09
DATE PLOTTED => 02-SEP-2009
TIME PLOTTED => 13:51

Dist	COUNTY	ROUTE	POST MILES TOTAL PROJECT	SHEET No.	TOTAL SHEETS
06	Fre	168S	R4.2/R6.9	14	34

Lawrence Michael Lowe 07-27-09
REGISTERED CIVIL ENGINEER DATE

8-24-09
PLANS APPROVAL DATE

REGISTERED PROFESSIONAL ENGINEER
LAWRENCE MICHAEL LOWE
No. 66753
Exp 9/30/10
CIVIL
STATE OF CALIFORNIA

THE STATE OF CALIFORNIA OR ITS OFFICERS OR AGENTS SHALL NOT BE RESPONSIBLE FOR THE ACCURACY OR COMPLETENESS OF ELECTRONIC COPIES OF THIS PLAN SHEET.

LEGEND

← DIRECTION OF TRAVEL

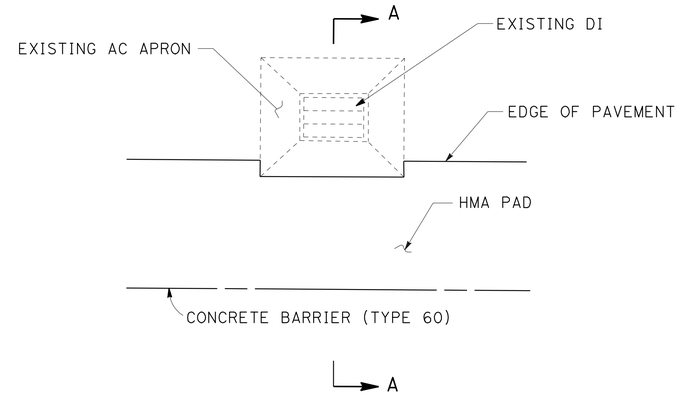

PLAN

Rte 168S Sta 269+29
Rte 168S Sta 272+58
Rte 168S Sta 380+85
Rte 168S Sta 382+49
Rte 168S Sta 397+91
Rte 168S Sta 398+10

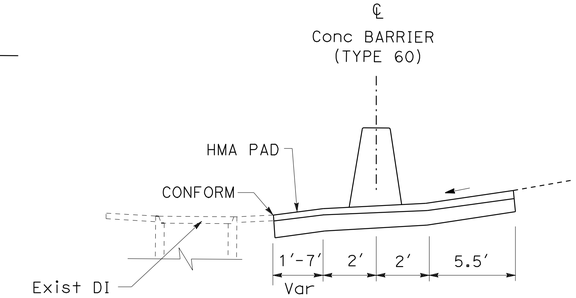

SECTION A-A

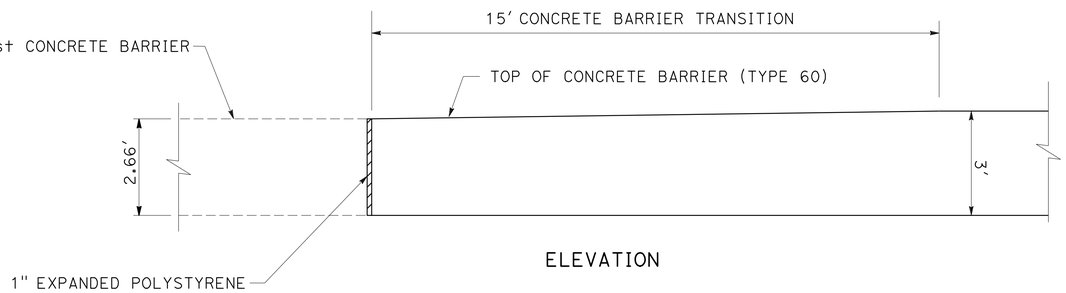

ELEVATION

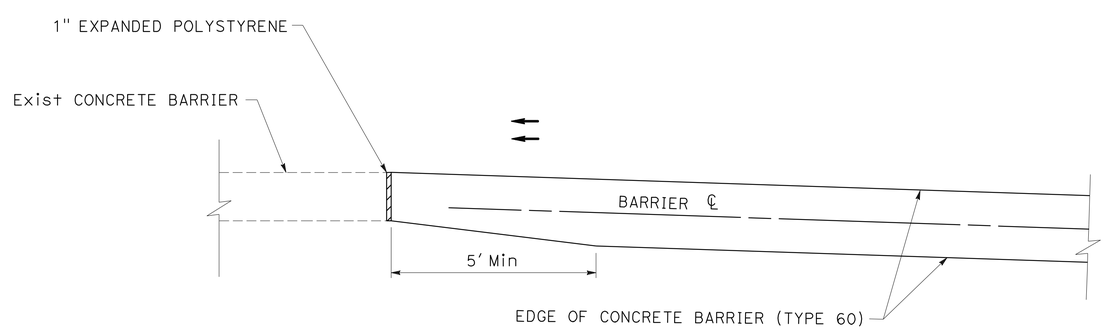

PLAN

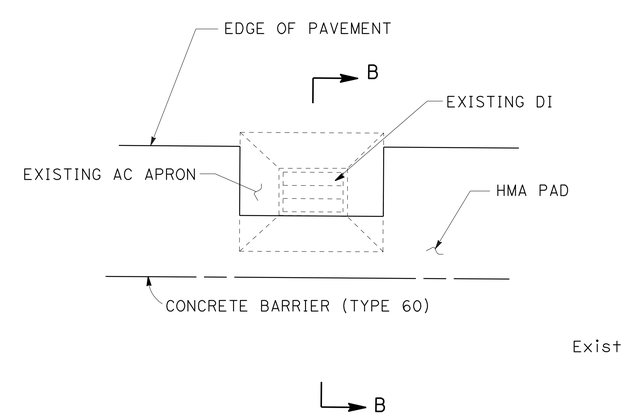

PLAN

Rte 168S Sta 377+60
Rte 168S Sta 398+63
Rte 168S Sta 399+45

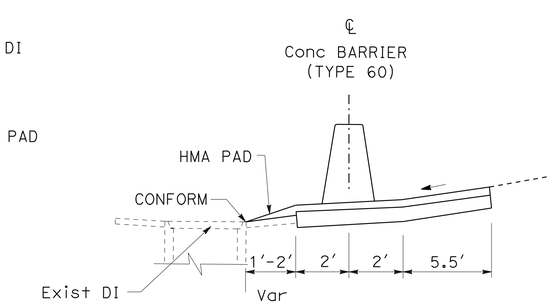

SECTION B-B

CONCRETE BARRIER ON EXISTING DI AC APRON

TYPE 60 BARRIER TRANSITION TO EXISTING BARRIER

CONSTRUCTION DETAILS

NO SCALE

C-1

STATE OF CALIFORNIA - DEPARTMENT OF TRANSPORTATION
Caltrans
DESIGN

FUNCTIONAL SUPERVISOR: SANKU MOHAN
CALCULATED-DESIGNED BY: JESSA DHALIWAL
CHECKED BY: JOO BAEK
REVISED BY
DATE REVISED

LAST REVISION 07-01-09
DATE PLOTTED => 02-SEP-2009
TIME PLOTTED => 13:51

Dist	COUNTY	ROUTE	POST MILES TOTAL PROJECT	SHEET No.	TOTAL SHEETS
06	Fre	168S	R4.2/R6.9	15	34

Lawrence Michael Lowe 07-27-09
REGISTERED CIVIL ENGINEER DATE

8-24-09
PLANS APPROVAL DATE

REGISTERED PROFESSIONAL ENGINEER
LAWRENCE MICHAEL LOWE
No. 66753
Exp 9/30/10
CIVIL
STATE OF CALIFORNIA

THE STATE OF CALIFORNIA OR ITS OFFICERS OR AGENTS SHALL NOT BE RESPONSIBLE FOR THE ACCURACY OR COMPLETENESS OF ELECTRONIC COPIES OF THIS PLAN SHEET.

NOTES:

1. SCUPPERS SHALL BE PLACED CONTINUOUSLY THROUGHOUT THE BARRIER 25 ft ON CENTER. SCUPPER OPENING LENGTH ALONG CENTERLINE IS 2.5 ft.
2. ONE SCUPPER SHALL BE PLACED AT EACH SAG LOCATION OF CONCRETE BARRIER. AN ADJUSTMENT IN SPACING OF ONE OR MORE SCUPPERS BEFORE AND AFTER THIS LOWEST POINT SCUPPER SHOULD BE MADE IF NECESSARY TO ACCOMMODATE THIS CONDITION. THE ADJUSTMENT IN THE SPACING SHALL NOT RESULT IN SCUPPER SPACING LESS THAN 15 ft OR GREATER THAN 30 ft.

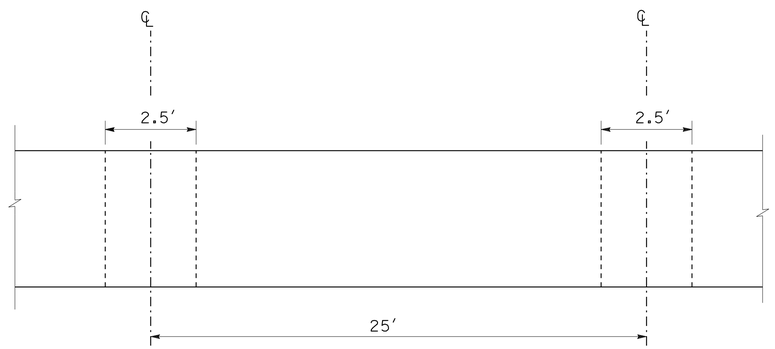

PLAN

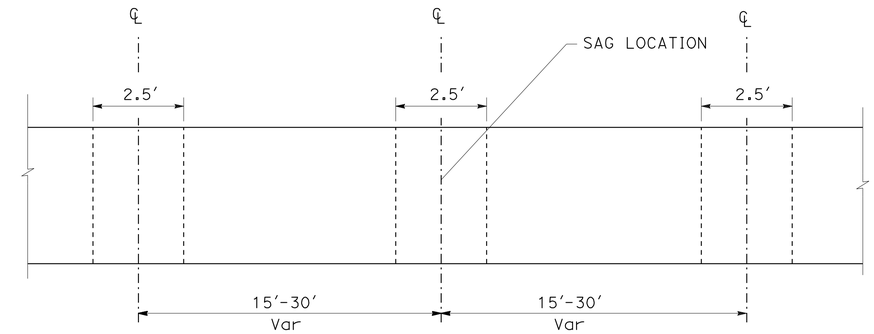

PLAN

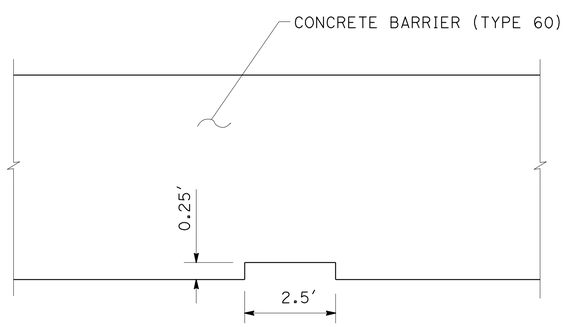

ELEVATION

SCUPPER (TYPICAL)

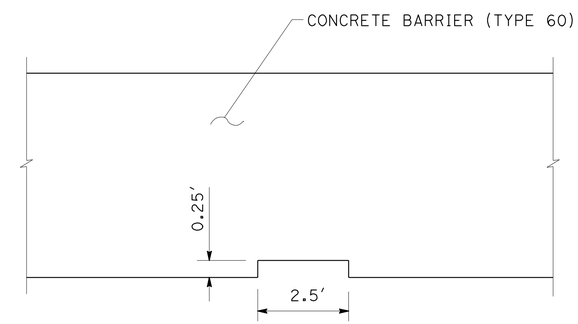

ELEVATION

SCUPPER (SAG LOCATIONS)

Rte 168S Sta 298+37
Rte 168S Sta 348+91
Rte 168S Sta 396+66
Rte 168S Sta 397+92
Rte 168S Sta 400+47
"A3" LINE Sta 31+83
"A5" LINE Sta 55+08

CONSTRUCTION DETAILS

C-2

NO SCALE

STATE OF CALIFORNIA - DEPARTMENT OF TRANSPORTATION
Caltrans
DESIGN

FUNCTIONAL SUPERVISOR: SANKU MOHAN
CALCULATED-DESIGNED BY: JOO BAEK
CHECKED BY: LAWRENCE LOWE
REVISED BY
DATE REVISED

LAST REVISION 07-01-09
DATE PLOTTED => 02-SEP-2009
TIME PLOTTED => 13:52

Dist	COUNTY	ROUTE	POST MILES TOTAL PROJECT	SHEET No.	TOTAL SHEETS
06	Fre	168S	R4.2/R6.9	16	34

Lawrence Michael Lowe 07-27-09
REGISTERED CIVIL ENGINEER DATE

8-24-09
PLANS APPROVAL DATE

REGISTERED PROFESSIONAL ENGINEER
LAWRENCE MICHAEL LOWE
No. 66753
Exp 9/30/10
CIVIL
STATE OF CALIFORNIA

THE STATE OF CALIFORNIA OR ITS OFFICERS OR AGENTS SHALL NOT BE RESPONSIBLE FOR THE ACCURACY OR COMPLETENESS OF ELECTRONIC COPIES OF THIS PLAN SHEET.

NOTES:

1. Use Case 1 or Case 2 when one post omitted.
   Exact Location shall be determined in the Field by the Engineer.
2. Use Case 3 when two posts are omitted.
   Exact Location shall be determined in the Field by the Engineer.

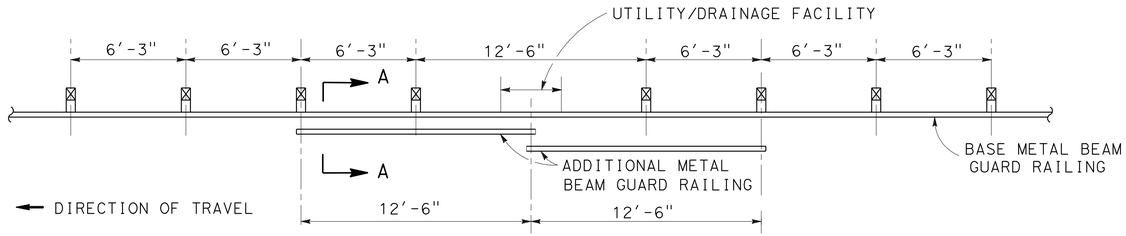

CASE 1
ONE POST OMITTED (SPLICE IN CENTER)

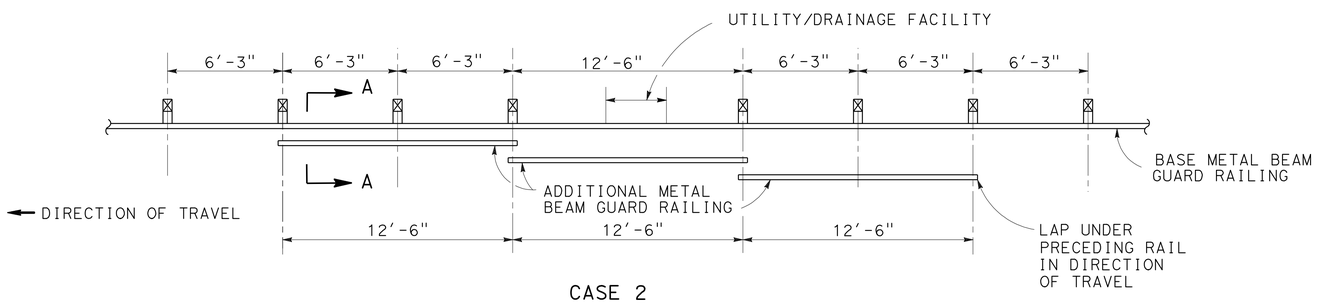

CASE 2
ONE POST OMITTED (SPLICE AT POSTS)

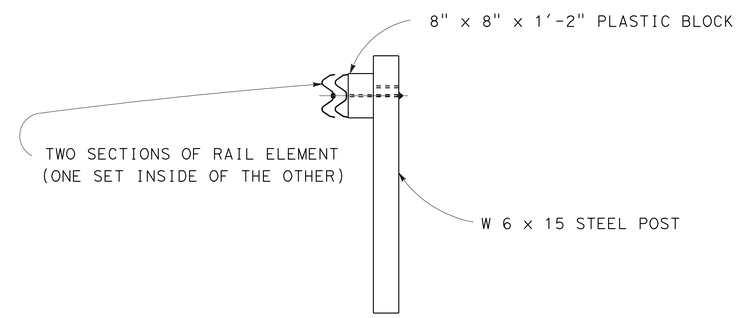

SECTION A-A

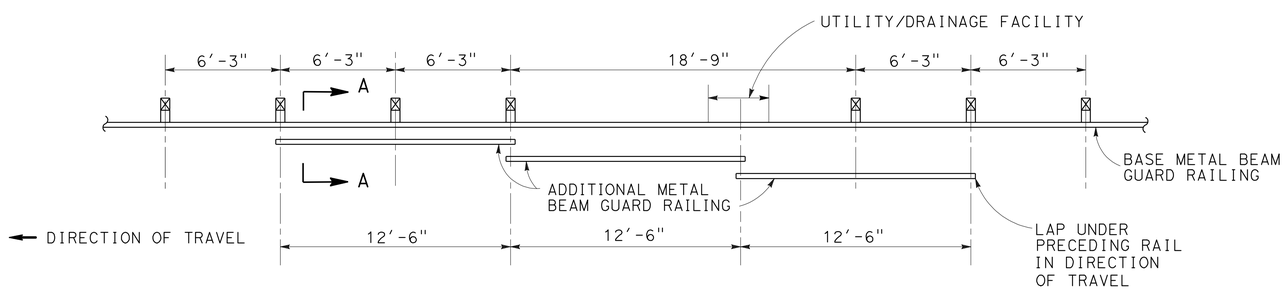

CASE 3
TWO POSTS OMITTED

LONG SPAN NESTED GUARD RAILING

CONSTRUCTION DETAILS

NO SCALE

C-3

REVISED BY	DATE REVISED

CALCULATED-DESIGNED BY	CHECKED BY
JOO BAEK	LAWRENCE LOWE

FUNCTIONAL SUPERVISOR: SANKU MOHAN

STATE OF CALIFORNIA - DEPARTMENT OF TRANSPORTATION
Caltrans
DESIGN

LAST REVISION 07-01-09 | DATE PLOTTED => 02-SEP-2009 | TIME PLOTTED => 13:52

Dist	COUNTY	ROUTE	POST MILES TOTAL PROJECT	SHEET No.	TOTAL SHEETS
06	Fre	168S	R4.2/R6.9	17	34

Hassan Taha 06-08-09
REGISTERED CIVIL ENGINEER DATE

8-24-09
PLANS APPROVAL DATE

REGISTERED PROFESSIONAL ENGINEER HASSAN M. TAHA No. 60130 Exp 06/30/10 CIVIL STATE OF CALIFORNIA

THE STATE OF CALIFORNIA OR ITS OFFICERS OR AGENTS SHALL NOT BE RESPONSIBLE FOR THE ACCURACY OR COMPLETENESS OF SCANNED COPIES OF THIS PLAN SHEET.

NOTES:

1. LOCATIONS OF CONSTRUCTION AREA SIGNS SHOWN ARE APPROXIMATE EXACT LOCATIONS TO BE DETERMINED BY THE ENGINEER.
2. FOR SIGN "C40 (CA)" (TRAFFIC FINES DOUBLED IN CONSTRUCTION ZONE), ALL LETTERS SHALL BE BLACK ON WHITE BACKGROUND.

STATIONARY MOUNTED CONSTRUCTION AREA SIGNS

SIGN No.	SIGN CODE	SIGN MESSAGE	PANEL SIZE	No. OF POST AND SIZE	No. OF SIGNS
A	W20-1	ROAD WORK AHEAD	60" x 60"	2 - 6" x 6"	4
B	W20-1	ROAD WORK AHEAD	48" x 48"	1 - 6" x 6"	5
C	G20-2	END ROAD WORK	48" x 24"	1 - 4" x 6"	2
D	G20-2	END ROAD WORK	36" x 18"	1 - 4" x 4"	4
E	C40(CA)	TRAFFIC FINES DOUBLED IN WORK ZONES	180" x 42"	2 - 6" x 6"	2

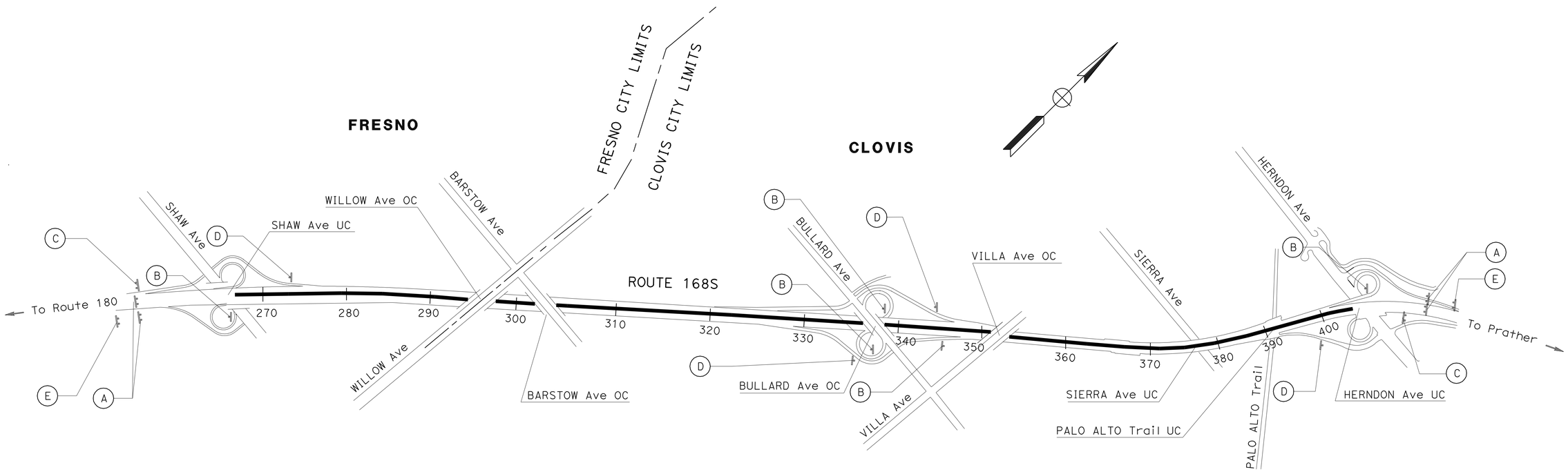

THIS PLAN ACCURATE FOR CONSTRUCTION AREA SIGN WORK ONLY.

NO SCALE

CONSTRUCTION AREA SIGNS

CS-1

STATE OF CALIFORNIA - DEPARTMENT OF TRANSPORTATION
Caltrans
TRAFFIC DESIGN

FUNCTIONAL SUPERVISOR: MOHAMMED QATAMI
CALCULATED-DESIGNED BY: KHALID CHAOUI
CHECKED BY: MUNIR ASSAF
REVISED BY
DATE REVISED

LAST REVISION 07-16-09
DATE PLOTTED => 02-SEP-2009
TIME PLOTTED => 13:52

Dist	COUNTY	ROUTE	POST MILES TOTAL PROJECT	SHEET No.	TOTAL SHEETS
06	Fre	168S	R4.2/R6.9	18	34

REGISTERED CIVIL ENGINEER 06-08-09 DATE

8-24-09
PLANS APPROVAL DATE

REGISTERED PROFESSIONAL ENGINEER HASSAN M. TAHA No. 60130 Exp. 06/30/10 CIVIL STATE OF CALIFORNIA

THE STATE OF CALIFORNIA OR ITS OFFICERS OR AGENTS SHALL NOT BE RESPONSIBLE FOR THE ACCURACY OR COMPLETENESS OF SCANNED COPIES OF THIS PLAN SHEET.

NOTES:

1. SEE STANDARS PLANS FOR APPROPRIATE CRASH CUSHION ARRAY.
2. CHANNELIZERS (SURFACE MOUNTED) SHALL BE MAINTAINED THROUGH THE ENTIRE CLOSURE PERIOD.
3. (*) FOR ADDITIONAL CONSTRUCTION AREA SIGNS, REFER TO SHEET CS-1.
4. (N) NOT A SEPARATE PAY ITEM, FOR INFORMATION ONLY.
5. FOR COMPLETE RIGHT OF WAY AND ACCURATE ACCESS DATA, SEE RIGHT OF WAY RECORD MAPS AT DISTRICT OFFICE.

LEGEND:

- DIRECTION OF TRAVEL.
- CHANNELIZER (SURFACE MOUNTED).
- TEMPORARY CRASH CUSHION ARRAY.
- CONSTRUCTION AREA SIGN.
- TEMPORARY RAILING (TYPE K).

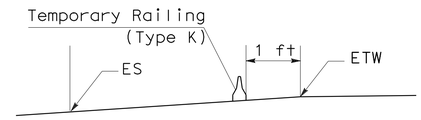

SECTION A-A

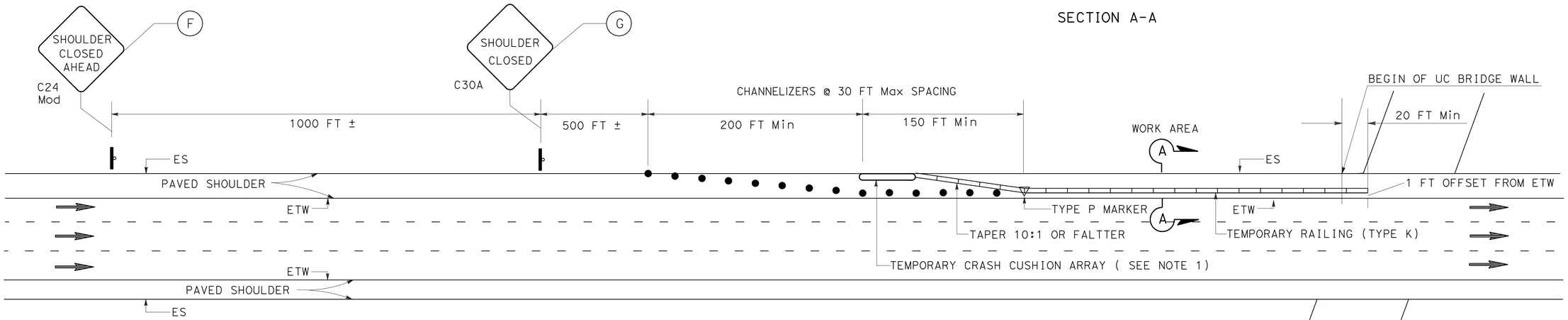

TEMPORARY RAILING (TYPE K)

TEMPORARY RAILING LOCATION	Dir	STATION FROM	STATION TO	LENGTH (FT)
SIERRA Ave UC	EB	373+70	369+60	410
PALO ALTO UC	EB	392+50	388+40	410
HERNDON Ave UC	EB	403+50	399+40	410
SIERRA Ave UC	WB	375+80	379+90	410
PALO ALTO UC	WB	394+00	398+10	410
SHAW Ave UC	WB	268+48	272+58	410
			TOTAL	2460

STATIONARY MOUNTED TRAFFIC CONTROL SIGNS

SIGN No.	SIGN CODE	SIGN MESSAGE	TEMPORARY RAILING LOCATION	Dir	SIGN STATION	PANEL SIZE	No. OF POST AND SIZE	No. OF SIGNS
F	C24 (CA) Mod	SHOULDER CLOSED AHEAD	SIERRA Ave UC	EB	352+20±	48" x 48"	1 - 6" x 6"	1
			PALO ALTO UC	EB	371+00±			1
			HERNDON Ave UC	EB	382+00±			1
			SIERRA Ave UC	WB	397+30±			1
			PALO ALTO UC	WB	415+50±			1
			SHAW Ave UC	WB	291+08±			1
G	C30A (CA)	SHOULDER CLOSED	SIERRA Ave UC	EB	362+20±	48" x 48"	1 - 6" x 6"	1
			PALO ALTO UC	EB	381+00±			1
			HERNDON Ave UC	EB	392+40±			1
			SIERRA Ave UC	WB	387+30±			1
			PALO ALTO UC	WB	405+50±			1
			SHAW Ave UC	WB	281+08±			1
							TOTAL	12(*)

CHANNELIZRES, MARKERS, AND CRASH CUSHIONS

LOCATION	Dir	CHANNELIZERS	MARKERS TYPE P	CRUSH CUSHION (MODULE)
SIERRA Ave UC	EB	14	1	14
PALO ALTO UC	EB	14	1	14
HERNDON Ave UC	EB	14	1	14
SIERRA Ave UC	WB	14	1	14
PALO ALTO UC	WB	14	1	14
SHAW Ave UC	WB	14	1	14
TOTAL		84	6(N)	84

TYPICAL TRAFFIC CONTROL SYSTEM FOR TYPICAL SHOULDER CLOSURES WITH TEMPORARY RAILING TYPE K

NO SCALE

TH-1

REVISED BY | DATE REVISED
KHALID CHAOUI | MUNIR ASSAF
CALCULATED-DESIGNED BY | CHECKED BY
FUNCTIONAL SUPERVISOR: M. QATAMI
STATE OF CALIFORNIA - DEPARTMENT OF TRANSPORTATION
Caltrans® TRAFFIC DESIGN

LAST REVISION 07-16-09 | DATE PLOTTED => 31-AUG-2009 | TIME PLOTTED => 13:38

Dist	COUNTY	ROUTE	POST MILES TOTAL PROJECT	SHEET No.	TOTAL SHEETS
06	Fre	168S	R4.2/R6.9	19	34

Hassan Taha 06-08-09
REGISTERED CIVIL ENGINEER DATE

8-24-09
PLANS APPROVAL DATE

REGISTERED PROFESSIONAL ENGINEER HASSAN M. TAHA No. 60130 Exp. 06/30/10 CIVIL STATE OF CALIFORNIA

THE STATE OF CALIFORNIA OR ITS OFFICERS OR AGENTS SHALL NOT BE RESPONSIBLE FOR THE ACCURACY OR COMPLETENESS OF SCANNED COPIES OF THIS PLAN SHEET.

LEGEND:

- (X) ROADSIDE SIGN No.
- ROADSIDE SIGN (ONE POST/ MEDIAN BARRIER)
- ■ RESET ROADSIDE SIGN.
- DELINEATOR (CLASS 1).
- ● REMOVE ROADSIDE SIGN
- TYPE VI ARROW
- DIRECTION OF TRAVEL

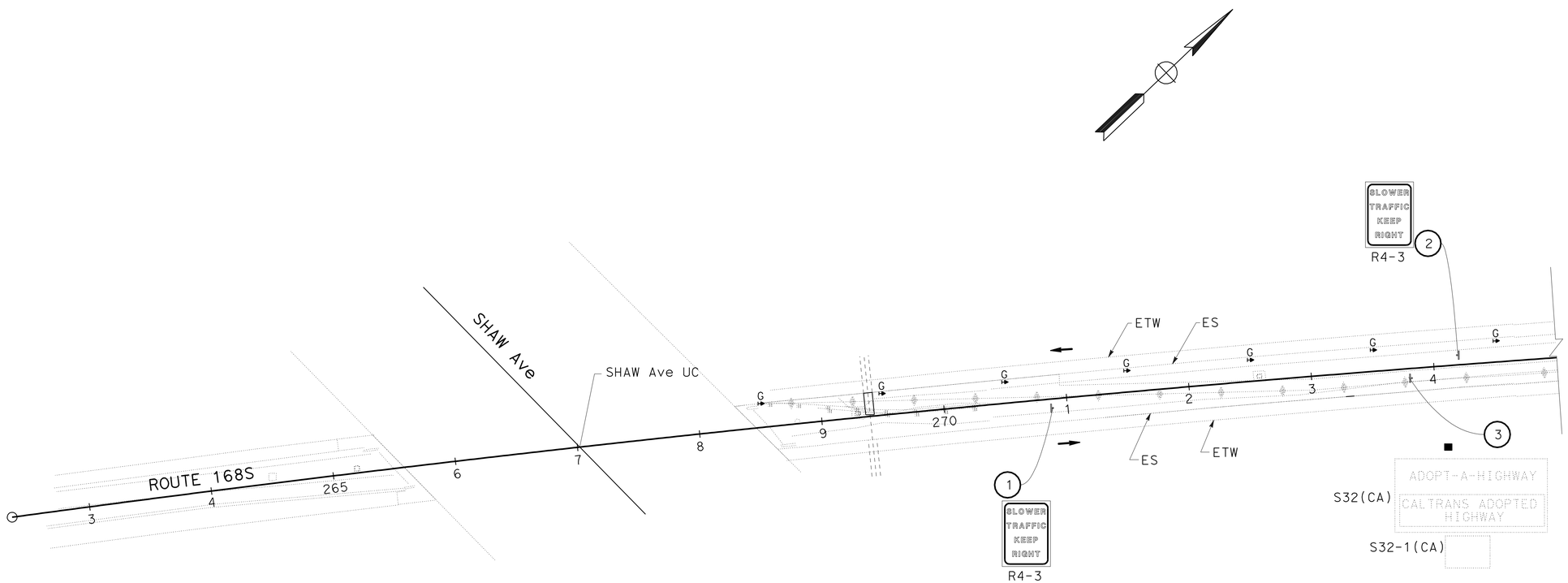

PAVEMENT DELINEATION AND SIGN PLANS

SCALE: 1"=50'

PD-1

THIS PLAN IS ACCURATE FOR PAVEMENT DELINEATION AND SIGN WORK ONLY

STATE OF CALIFORNIA - DEPARTMENT OF TRANSPORTATION
Caltrans® TRAFFIC DESIGN

FUNCTIONAL SUPERVISOR: MOHAMMED QATAMI
CALCULATED-DESIGNED BY: KHALID CHAOUI
CHECKED BY: MUNIR ASSAF
REVISED BY
DATE REVISED

LAST REVISION 07-16-09 | DATE PLOTTED => 31-AUG-2009 | TIME PLOTTED => 13:38

Dist	COUNTY	ROUTE	POST MILES TOTAL PROJECT	SHEET No.	TOTAL SHEETS
06	Fre	168S	R4.2/R6.9	20	34

Hassan Taha 06-08-09
REGISTERED CIVIL ENGINEER DATE

8-24-09
PLANS APPROVAL DATE

REGISTERED PROFESSIONAL ENGINEER HASSAN M. TAHA No. 60130 Exp. 06/30/10 CIVIL STATE OF CALIFORNIA

THE STATE OF CALIFORNIA OR ITS OFFICERS OR AGENTS SHALL NOT BE RESPONSIBLE FOR THE ACCURACY OR COMPLETENESS OF SCANNED COPIES OF THIS PLAN SHEET.

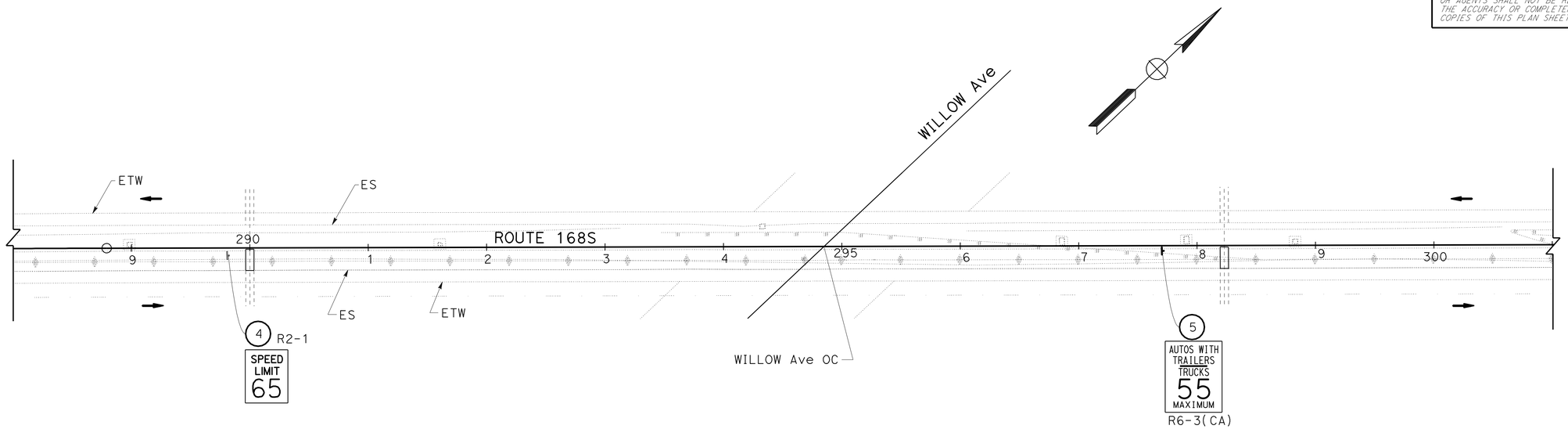

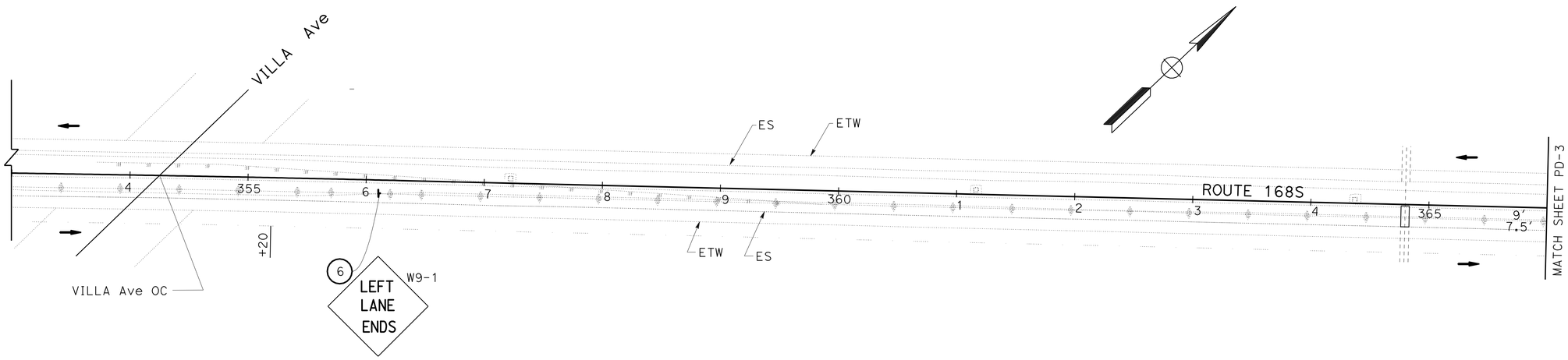

PAVEMENT DELINEATION AND SIGN PLANS

SCALE: 1"=50'

PD-2

THIS PLAN IS ACCURATE FOR PAVEMENT DELINEATION AND SIGN WORK ONLY

STATE OF CALIFORNIA - DEPARTMENT OF TRANSPORTATION
Caltrans
TRAFFIC DESIGN

FUNCTIONAL SUPERVISOR: MOHAMMED QATAMI
CALCULATED-DESIGNED BY: MUNIR ASSAF
CHECKED BY: HASSAN TAHA
REVISED BY
DATE REVISED

LAST REVISION 07-16-09
DATE PLOTTED => 31-AUG-2009
TIME PLOTTED => 13:38

Dist	COUNTY	ROUTE	POST MILES TOTAL PROJECT	SHEET No.	TOTAL SHEETS
06	Fre	168S	R4.2/R6.9	21	34

Hassan Taha 06-08-09
REGISTERED CIVIL ENGINEER DATE

8-24-09
PLANS APPROVAL DATE

REGISTERED PROFESSIONAL ENGINEER HASSAN M. TAHA No. 60130 Exp. 06/30/10 CIVIL STATE OF CALIFORNIA

THE STATE OF CALIFORNIA OR ITS OFFICERS OR AGENTS SHALL NOT BE RESPONSIBLE FOR THE ACCURACY OR COMPLETENESS OF SCANNED COPIES OF THIS PLAN SHEET.

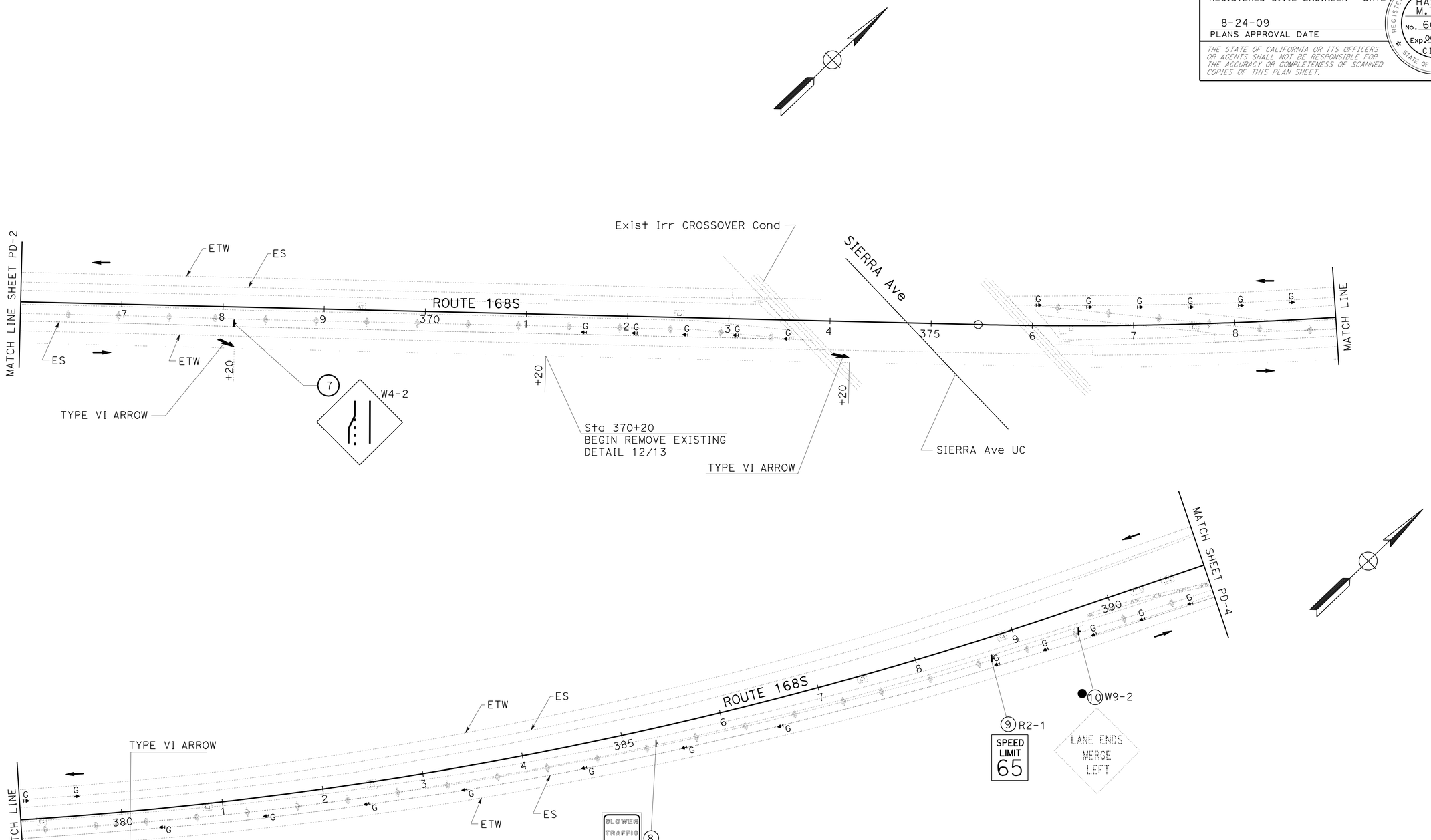

PAVEMENT DELINEATION AND SIGN PLANS

SCALE: 1"=50'

PD-3

THIS PLAN IS ACCURATE FOR PAVEMENT DELINEATION AND SIGN WORK ONLY

STATE OF CALIFORNIA - DEPARTMENT OF TRANSPORTATION
Caltrans
TRAFFIC DESIGN

FUNCTIONAL SUPERVISOR: MOHAMMED QATAMI
CALCULATED-DESIGNED BY: MUNIR ASSAF
CHECKED BY: HASSAN TAHA
REVISED BY
DATE REVISED

LAST REVISION 07-16-09
DATE PLOTTED => 31-AUG-2009
TIME PLOTTED => 13:38

Dist	COUNTY	ROUTE	POST MILES TOTAL PROJECT	SHEET No.	TOTAL SHEETS
06	Fre	168S	R4.2/R6.9	22	34

Hassan Taha 06-08-09
REGISTERED CIVIL ENGINEER DATE

8-24-09
PLANS APPROVAL DATE

REGISTERED PROFESSIONAL ENGINEER
HASSAN M.TAHA
No. 60130
Exp.06/30/10
CIVIL
STATE OF CALIFORNIA

THE STATE OF CALIFORNIA OR ITS OFFICERS OR AGENTS SHALL NOT BE RESPONSIBLE FOR THE ACCURACY OR COMPLETENESS OF SCANNED COPIES OF THIS PLAN SHEET.

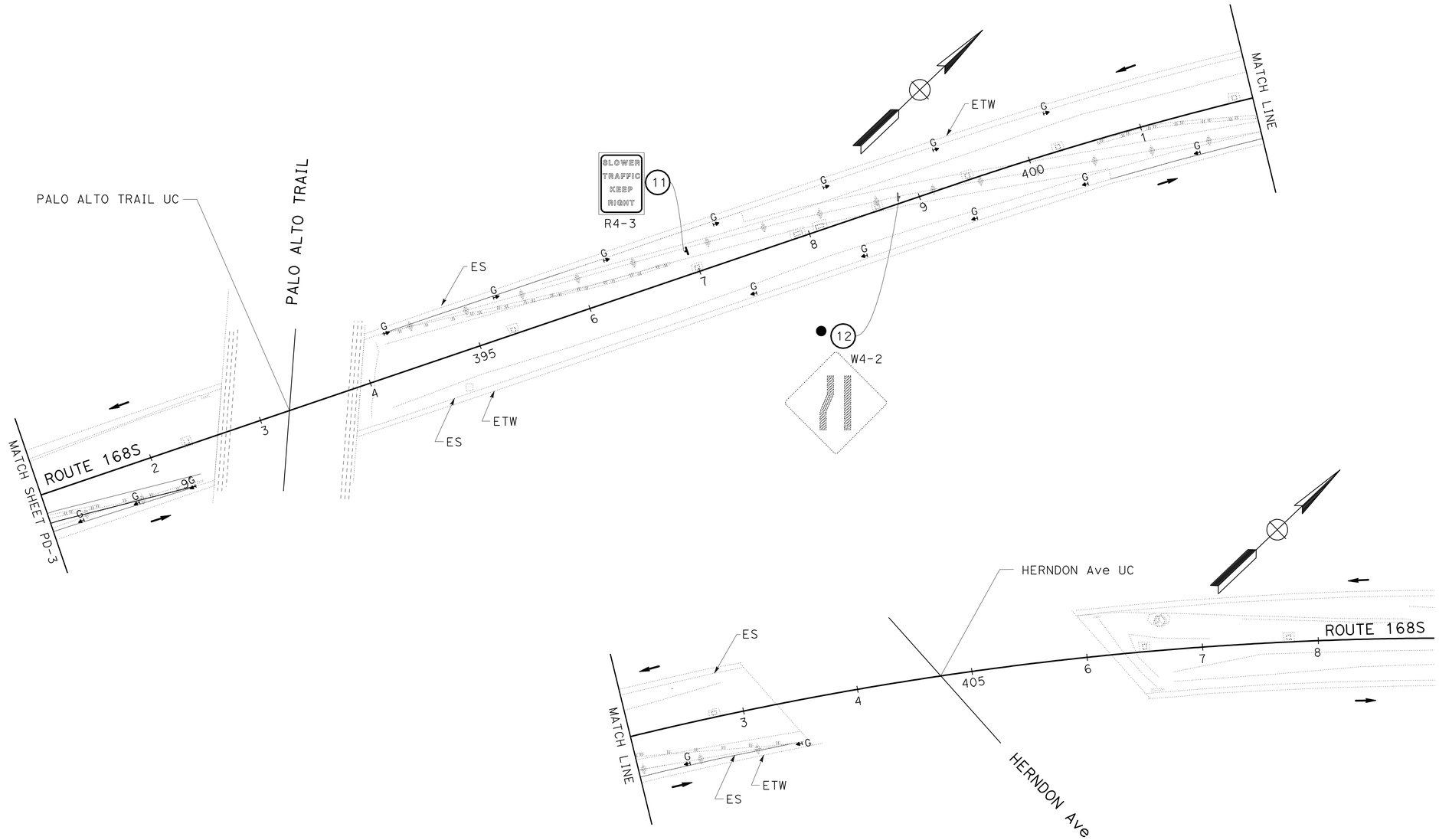

THIS PLAN IS ACCURATE FOR PAVEMENT DELINEATION AND SIGN WORK ONLY

PAVEMENT DELINEATION AND SIGN PLANS

SCALE: 1"=50'

PD-4

STATE OF CALIFORNIA - DEPARTMENT OF TRANSPORTATION
Caltrans
TRAFFIC DESIGN

FUNCTIONAL SUPERVISOR: MOHAMMED QATAMI
CALCULATED-DESIGNED BY: MUNIR ASSAF
CHECKED BY: HASSAN TAH
REVISED BY
DATE REVISED

LAST REVISION 07-16-09
DATE PLOTTED => 31-AUG-2009
TIME PLOTTED => 13:38

Dist	COUNTY	ROUTE	POST MILES TOTAL PROJECT	SHEET No.	TOTAL SHEETS
06	Fre	168S	R4.2/R6.9	23	34

Hassan Taha 06-08-09
REGISTERED CIVIL ENGINEER DATE

8-24-09
PLANS APPROVAL DATE

REGISTERED PROFESSIONAL ENGINEER HASSAN M. TAHA No. 60130 Exp. 06/30/10 CIVIL STATE OF CALIFORNIA

THE STATE OF CALIFORNIA OR ITS OFFICERS OR AGENTS SHALL NOT BE RESPONSIBLE FOR THE ACCURACY OR COMPLETENESS OF SCANNED COPIES OF THIS PLAN SHEET.

ROADSIDE SIGN QUANTITIES

SHEET No.	SIGN No.	SIGN CODE	SIGN MESSAGE	POST SIZE	PANEL SIZE	SINGLE FACED	SIGN MATERIAL BACKGROUND SHEETING COLOR	SIGN MATERIAL BACKGROUND Retroreflectivity ASTM TYPE	SIGN MATERIAL LEGEND SHEETING COLOR	FURNISH SINGLE SHEET ALUMINUM SIGN UNFRAMED (0.08")	REMOVE ROADSIDE SIGN	ROADSIDE SIGN-ONE POST	METAL (BARRIER MOUNTED SIGN)	RESET ROADSIDE SIGN
										SQFT	EA	EA	EA	EA
PD-1	1	R4-3	SLOWER TRAFFIC KEEP RIGHT	6" X 6"	48" X 60"	X	WHITE	III	BLACK	20		1		
	2	R4-3	SLOWER TRAFFIC KEEP RIGHT	6" X 6"	48" X 60"	X	WHITE	III	BLACK	20		1		
	3	S32(CA), S32-1(CA)	CALTRANS ADOPT A HIGHWAY											1
PD-2	4	R2-1	SPEED LIMIT 65 MPH		48" X 60"	X	WHITE	III	BLACK	20			1	
	5	R6-3(CA)	AUTO WITH TRAILER, TRUCKS, MAX 55 MPH	METAL POST	48" X 60"	X	WHITE	III	BLACK	20			1	
	6	W9-1L	LEFT LANE ENDS	METAL POST	48" X 48"	X	YELLOW	III	BLACK	16			1	
PD-3	7	W4-2L	LEFT LANE ENDS SYMBOL	METAL POST	48" X 48"	X	YELLOW	III	BLACK	16			1	
	8	R4-3	SLOWER TRAFFIC KEEP RIGHT	METAL POST	48" X 60"	X	WHITE	III	BLACK	20			1	
	9	R2-1	SPEED LIMIT 65 MPH	METAL POST	48" X 60"	X	WHITE	III	BLACK	20			1	
	10	W75(CA)	LANE ENDS MERGE RIGHT								1			
PD-4	11	R4-3	SLOWER TRAFFIC KEEP RIGHT	6" X 6"	48" X 60"	X	WHITE	III	BLACK	20		1		
	12										1			
TOTAL										172	2	3	6	1

PAVEMENT DELINEATION QUANTITIES

SHEET No.	ROUTE (DIRECTION)	LOCATION	DETAIL No.	REMOVE THERMOPLASTIC TRAFFIC STRIPE	REMOVE PAVEMENT MARKER	THERMOPLASTIC PAVEMENT MARKING	
				FT	EA	DESCRIPTION	SQFT
PD-3	ROUTE 168 (EB)	Sta 370+20 TO 380+20	12/13	250	128	3-TYPE IV ARROW	126
TOTAL				250	128		126

DELINEATORS

SHEET No.	DELINEATORS (CLASS 1) TYPE G
PD-1	7
PD-3	25
PD-4	17
TOTAL	49

PAVEMENT DELINEATION AND SIGN QUANTITIES

PDQ-1

STATE OF CALIFORNIA - DEPARTMENT OF TRANSPORTATION
Caltrans TRAFFIC DESIGN

FUNCTIONAL SUPERVISOR: MOHAMMED QATAMI
CALCULATED-DESIGNED BY: MUNIR ASSAF
CHECKED BY: HASSAN TAHA
REVISED BY / DATE REVISED

LAST REVISION 07-16-09 DATE PLOTTED => 31-AUG-2009 TIME PLOTTED => 13:38

Dist	COUNTY	ROUTE	POST MILES TOTAL PROJECT	SHEET No.	TOTAL SHEETS
06	Fre	168S	R4.2/R6.9	24	34

Hassan Taha 06-08-09
REGISTERED CIVIL ENGINEER DATE

8-24-09
PLANS APPROVAL DATE

REGISTERED PROFESSIONAL ENGINEER HASSAN M. TAHA No. 60130 Exp 06/30/10 CIVIL STATE OF CALIFORNIA

THE STATE OF CALIFORNIA OR ITS OFFICERS OR AGENTS SHALL NOT BE RESPONSIBLE FOR THE ACCURACY OR COMPLETENESS OF SCANNED COPIES OF THIS PLAN SHEET.

NOTES: (BARRIER MOUNTED SIGN)

1. FOR DETAILS NOT SHOWN, SEE STANDARD PLANS.
2. ALL BOLTS SHALL HAVE A WASHER UNDER THE NUT. BOLTS THROUGH POST SHALL BE ½" DIAMETER BOLTS THROUGH SIGN PANEL AND BRACE SHALL BE ⅜" DIAMETER. REAM HOLES IN SIGN AS REQUIRED.
3. ALL STEEL TO BE GALVANIZED.
4. FOR LOCATION OF SIGNS, SEE PROJECT PLANS.

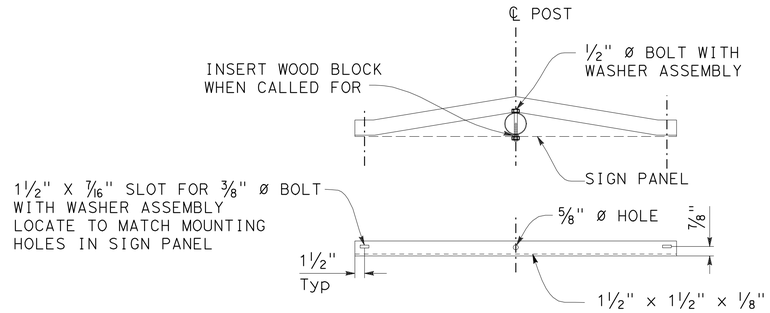

BACK BRACE DETAILS

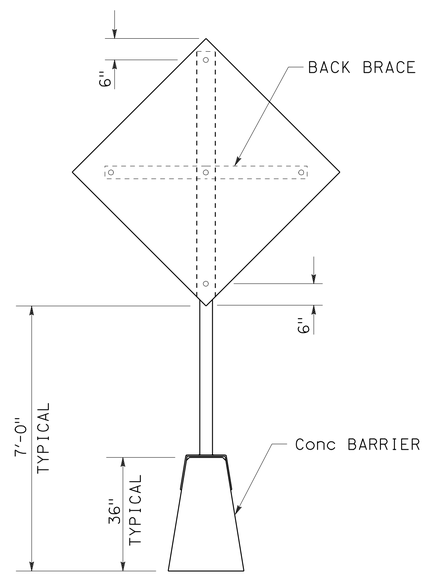

SECTION

SINGLE POST ON CONCRETE BARRIER

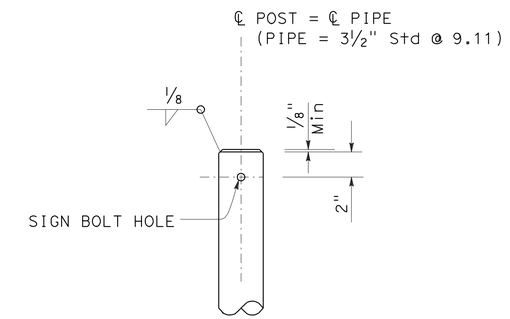

TOP OF POST DETAIL

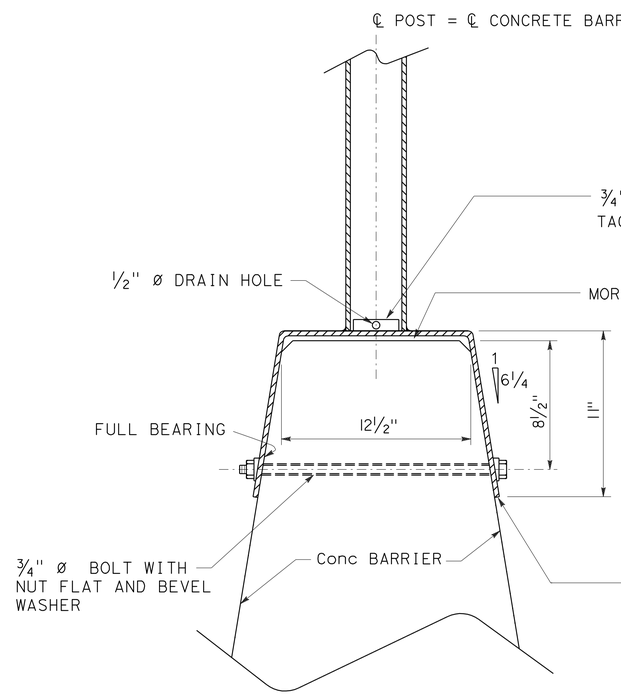

SECTION A-A

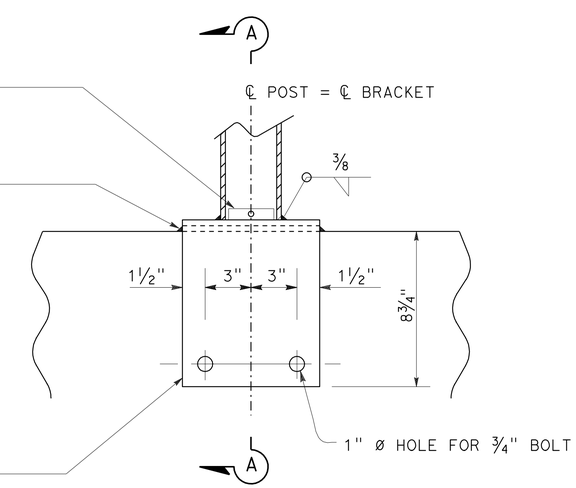

ELEVATION

MOUNTING BRACKET

BARRIER MOUNTED SIGN

BASE PLATE, ANCHORAGE AND TOP OF POST DETAILS

SIGN DETAILS

NO SCALE **SD-1**

STATE OF CALIFORNIA - DEPARTMENT OF TRANSPORTATION
Caltrans® **TRAFFIC DESIGN**

FUNCTIONAL SUPERVISOR: MOHAMMED QATAMI
CALCULATED-DESIGNED BY: KHALID CHAOUI
CHECKED BY: MUNIR ASSAF
REVISED BY
DATE REVISED

LAST REVISION 07-16-09
DATE PLOTTED => 31-AUG-2009
TIME PLOTTED => 06:48

Dist	COUNTY	ROUTE	POST MILES TOTAL PROJECT	SHEET No.	TOTAL SHEETS
06	Fre	168S	R4.2/R6.9	25	34

Lawrence Michael Lome 07-27-09
REGISTERED CIVIL ENGINEER DATE

8-24-09
PLANS APPROVAL DATE

REGISTERED PROFESSIONAL ENGINEER
LAWRENCE MICHAEL LOME
No. 66753
Exp. 9/30/10
CIVIL
STATE OF CALIFORNIA

THE STATE OF CALIFORNIA OR ITS OFFICERS OR AGENTS SHALL NOT BE RESPONSIBLE FOR THE ACCURACY OR COMPLETENESS OF ELECTRONIC COPIES OF THIS PLAN SHEET.

(N) NOT A SEPARATE PAY ITEM, FOR INFORMATION ONLY.

ROADWAY QUANTITIES

STATION FROM	STATION TO	HOT MIX ASPHALT (TYPE A) (N) DEPTH	HOT MIX ASPHALT (TYPE A) (N) AREA	HOT MIX ASPHALT (TYPE A) WEIGHT	CLASS 2 AGGREGATE BASE (N) DEPTH	CLASS 2 AGGREGATE BASE (N) AREA	CLASS 2 AGGREGATE BASE VOLUME	ROADWAY EXCAVATION VOLUME
		LF	SQFT	TON	LF	SQFT	CY	CY
10+00.00 "A1" LINE	14+52.33 "A1" LINE	0.20	8826.65	132.4	0.30	8826.65	98.1	146.0
273+01.78 Rte 168S	372+67.43 Rte 168S	0.20	164,455.50	2466.8	0.30	164,455.50	1827.3	1927.0
20+00.00 "A2" LINE	20+93.86 "A2" LINE	0.20	1177.80	17.7	0.30	1177.80	13.1	3.2
30+00.00 "A3" LINE	32+48.55 "A3" LINE	0.20	4671.37	70.1	0.30	4671.37	51.9	65.0
378+49.02 Rte 168S	391+07.55 Rte 168S	0.20	20,740.50	311.1	0.30	20,740.50	230.5	180.0
40+00.00 "A4" LINE	41+22.00 "A4" LINE	0.20	1619.64	24.3	0.30	1619.64	18.0	27.0
50+00.00 "A5" LINE	59+23.39 "A5" LINE	0.20	16,032.85	240.5	0.30	16,032.85	178.1	300.0
			SUBTOTAL	3262.9				
* FROM MISCELLANEOUS AREA TABLE			SUBTOTAL	16.3				
			TOTAL	3279.2			2417.0	2648.2

SAWCUT

STATION FROM	STATION TO	(N) LENGTH
		LF
268+49.70 Rte 168S	270+95.87 Rte 168S	246.2
271+30.92 Rte 168S	373+61.00 Rte 168S	10,230.1
376+19.77 Rte 168S	377+64.07 Rte 168S	144.3
377+80.48 Rte 168S	392+29.18 Rte 168S	1448.7
394+23.35 Rte 168S	397+56.84 Rte 168S	333.8
400+66.13 Rte 168S	403+45.94 Rte 168S	279.8
	TOTAL	12,682.9

SALVAGE METAL BEAM GUARD RAILING

STATION FROM	STATION TO	SALVAGE METAL BEAM GUARD RAILING
		LF
268+49.70 Rte 168S	270+29.35 Rte 168S	315.6
293+26.34 Rte 168S	296+40.33 Rte 168S	654.5
300+64.99 Rte 168S	303+16.26 Rte 168S	509.8
336+25.86 Rte 168S	339+63.91 Rte 168S	685.3
353+02.07 Rte 168S	355+52.16 Rte 168S	509.7
371+55.30 Rte 168S	373+03.50 Rte 168S	257.8
376+01.91 Rte 168S	377+95.35 Rte 168S	306.4
389+74.47 Rte 168S	392+29.18 Rte 168S	428.6
394+23.35 Rte 168S	396+78.68 Rte 168S	441.3
400+59.93 Rte 168S	403+45.94 Rte 168S	431.0
	TOTAL	4540.0

PLACE HOT MIX ASPHALT (MISCELLANEOUS AREA)

STATION	HOT MIX ASPHALT (TYPE A) LENGTH	WIDTH	AREA	DEPTH	(N) VOLUME	WEIGHT	DESCRIPTION
	LF	LF	SQYD	LF	CF	TON	
269+29 Rte 168S	5.2	10	5.8	0.5	26	2.0	DRAINAGE INLET
272+58 Rte 168S	6.4	10	7.1	0.5	32	2.4	DRAINAGE INLET
377+60 Rte 168S	1.0	10	1.1	1.0	10	0.8	DRAINAGE INLET
380+85 Rte 168S	3.8	10	4.2	0.5	19	1.4	DRAINAGE INLET
382+49 Rte 168S	4.9	10	5.4	0.5	24.5	1.8	DRAINAGE INLET
397+91 Rte 168S	6.8	13	9.8	0.5	44.2	3.3	DRAINAGE INLET
398+10 Rte 168S	4.7	13	6.8	0.5	30.6	2.3	DRAINAGE INLET
398+63 Rte 168S	1.0	10	1.1	1.0	10	0.8	DRAINAGE INLET
399+45 Rte 168S	2.0	10	2.2	1.0	20	1.5	DRAINAGE INLET
		TOTAL	43.5			16.3 *	

* SEE ROADWAY QUANTITIES TABLE

METAL BEAM GUARD RAILING

STATION FROM	STATION TO	METAL BEAM GUARD RAILING (STEEL POST)	END ANCHOR ASSEMBLY (TYPE SFT)	TERMINAL SYSTEM END TREATMENT (TYPE SRT)
		LF	EA	EA
293+70.00 Rte 168S	298+34.00 Rte 168S	464.0	1	1
301+35.00 Rte 168S	303+49.00 Rte 168S	214.0	1	1
337+06.00 Rte 168S	339+95.00 Rte 168S	289.0	1	1
353+70.00 Rte 168S	355+96.50 Rte 168S	226.5	1	1
	TOTAL	1193.5	4	4

CONCRETE BARRIER (TYPE 60)

STATION FROM	STATION TO	LENGTH
		LF
10+00.00 "A1" LINE	14+52.33 "A1" LINE	452.3
273+01.78 Rte 168S	372+67.43 Rte 168S	9965.7
20+00.00 "A2" LINE	20+93.86 "A2" LINE	93.9
30+00.00 "A3" LINE	32+48.55 "A3" LINE	248.6
378+49.02 Rte 168S	391+07.55 Rte 168S	1258.5
40+00.00 "A4" LINE	41+22.00 "A4" LINE	122.0
50+00.00 "A5" LINE	59+23.39 "A6" LINE	923.4
	TOTAL	13,064.4

SUMMARY OF QUANTITIES

Q-1

STATE OF CALIFORNIA - DEPARTMENT OF TRANSPORTATION
Caltrans DESIGN
FUNCTIONAL SUPERVISOR: SANKU MOHAN
CALCULATED-DESIGNED BY: JESSA DHALIWAL
CHECKED BY: JOO BAEK
REVISED BY
DATE REVISED

LAST REVISION 07-01-09
DATE PLOTTED => 31-AUG-2009
TIME PLOTTED => 06:48

Dist	COUNTY	ROUTE	POST MILES TOTAL PROJECT	SHEET No.	TOTAL SHEETS
06	Fre	168S	R4.2/R6.9	26	34

Lawrence Michael Lowe 07-27-09
REGISTERED CIVIL ENGINEER DATE

8-24-09
PLANS APPROVAL DATE

REGISTERED PROFESSIONAL ENGINEER
LAWRENCE MICHAEL LOWE
No. 66753
Exp. 9/30/10
CIVIL
STATE OF CALIFORNIA

THE STATE OF CALIFORNIA OR ITS OFFICERS OR AGENTS SHALL NOT BE RESPONSIBLE FOR THE ACCURACY OR COMPLETENESS OF ELECTRONIC COPIES OF THIS PLAN SHEET.

(N) NOT A SEPARATE PAY ITEM, FOR INFORMATION ONLY.

TEMPORARY DRAINAGE INLET PROTECTION

STATION	EA
269+30.04 Rte 168S	1
272+58.02 Rte 168S	1
275+20.41 Rte 168S	1
277+82.96 Rte 168S	1
280+45.43 Rte 168S	1
283+07.63 Rte 168S	1
285+70.21 Rte 168S	1
288+98.55 Rte 168S	1
291+60.87 Rte 168S	1
294+32.89 Rte 168S	1
296+85.85 Rte 168S	1
297+91.05 Rte 168S	1
298+82.91 Rte 168S	1
301+28.80 Rte 168S	1
304+07.59 Rte 168S	1
306+70.02 Rte 168S	1
309+32.64 Rte 168S	1
311+95.15 Rte 168S	1
314+57.37 Rte 168S	1
319+82.37 Rte 168S	1

STATION	EA
322+44.76 Rte 168S	1
325+07.31 Rte 168S	1
327+85.75 Rte 168S	1
330+32.44 Rte 168S	1
332+95.09 Rte 168S	1
334+91.58 Rte 168S	1
336+19.54 Rte 168S	1
339+66.98 Rte 168S	1
340+48.83 Rte 168S	1
342+13.18 Rte 168S	1
344+09.88 Rte 168S	1
346+72.81 Rte 168S	1
347+87.70 Rte 168S	1
348+69.02 Rte 168S	1
349+91.95 Rte 168S	1
351+98.25 Rte 168S	1
357+22.34 Rte 168S	1
361+16.52 Rte 168S	1
364+37.26 Rte 168S	1
369+36.21 Rte 168S	1

STATION	EA
372+51.08 Rte 168S	1
376+38.19 Rte 168S	1
377+59.88 Rte 168S	1
379+20.47 Rte 168S	1
380+84.83 Rte 168S	1
382+48.90 Rte 168S	1
387+44.25 Rte 168S	1
388+88.41 Rte 168S	1
390+29.16 Rte 168S	1
390+60.97 Rte 168S	1
392+33.73 Rte 168S	1
395+31.77 Rte 168S	1
396+99.00 Rte 168S	1
397+90.72 Rte 168S	1
398+10.18 Rte 168S	1
398+62.85 Rte 168S	1
399+45.09 Rte 168S	1
400+26.86 Rte 168S	1
401+84.68 Rte 168S	1
402+75.02 Rte 168S	1
TOTAL	60

EXTEND 8 INCH CONDUIT

STATION	SIDE		EXTEND CONDUIT	CB	OL	(N) WATER LINE CROSSOVER	(N) SPRINKLER CONTROL CROSSOVER
	R+	L+	LENGTH LF			INCH	INCH
269+39 Rte 168S		X	18	X		2	1
273+30 Rte 168S	X		18	X		2	1
278+54 Rte 168S	X		18	X		2	1
284+45 Rte 168S	X		18	X		2	1
290+00 Rte 168S	X		18	X		2	1
298+23 Rte 168S	X		18	X		2	1
305+77 Rte 168S	X		18	X		2	1
312+34 Rte 168S	X		18	X		2	1
318+90 Rte 168S	X		18	X		2	1
324+50 Rte 168S	X		18	X		2	1
331+04 Rte 168S	X		18	X		2	1
335+00 Rte 168S	X		18	X		2	1
340+09 Rte 168S	X		18	X		2	1
345+80 Rte 168S	X		18	X		2	1
364+80 Rte 168S	X		18	X		2	1
377+67 Rte 168S	X	X	38	X		2	1
402+16 Rte 168S	X		17	X		2	1
TOTAL			325				

X - DENOTES REQUIREMENT
CB - COUPLING BAND
OL - OVERLAP

EROSION CONTROL

STATION		COMPOST (INCORPORATE)	EROSION CONTROL (DRILL SEED) PURE LIVE SEED	
FROM	TO	SQYD	ACRE	LB (N)
268+49 Rte 168S	403+46 Rte 168S	12,100	2.5	63

TEMPORARY FENCE (TYPE ESA)

STATION	LENGTH LF
392+00 Rte 168S	200
394+50 Rte 168S	200
TOTAL	400

TEMPORARY CONCRETE WASHOUT FACILITY

EA	NOTE
2	EXACT LOCATIONS TO BE DETERMINED IN THE FIELD BY THE ENGINEER

TEMPORARY CONSTRUCTION ENTRANCE

EA	NOTE
2	EXACT LOCATIONS TO BE DETERMINED IN THE FIELD BY THE ENGINEER

SUMMARY OF QUANTITIES

Q-2

STATE OF CALIFORNIA - DEPARTMENT OF TRANSPORTATION
Caltrans
DESIGN

FUNCTIONAL SUPERVISOR: SANKU MOHAN
CALCULATED-DESIGNED BY: JESSA DHALIWAL
CHECKED BY: JOO BAEK
REVISED BY
DATE REVISED

LAST REVISION 07-01-09
DATE PLOTTED => 31-AUG-2009
TIME PLOTTED => 06:48

DIST	COUNTY	ROUTE	POST MILES TOTAL PROJECT	SHEET NO.	TOTAL SHEETS
06	Fre	168S	R4.2/R6.9	27	34

Randell D. Hiatt
REGISTERED CIVIL ENGINEER

June 6, 2008
PLANS APPROVAL DATE

REGISTERED PROFESSIONAL ENGINEER
Randell D. Hiatt
No. C50200
Exp. 6-30-09
CIVIL
STATE OF CALIFORNIA

The State of California or its officers or agents shall not be responsible for the accuracy or completeness of electronic copies of this plan sheet.

To accompany plans dated 8-24-09

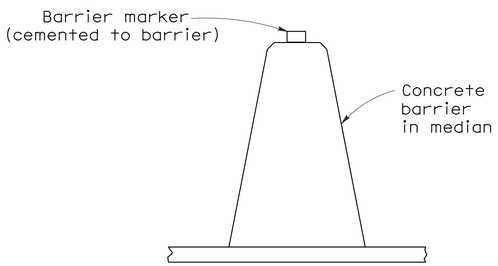

CONCRETE BARRIER TYPE 60 DELINEATION

See Notes 7 and 8

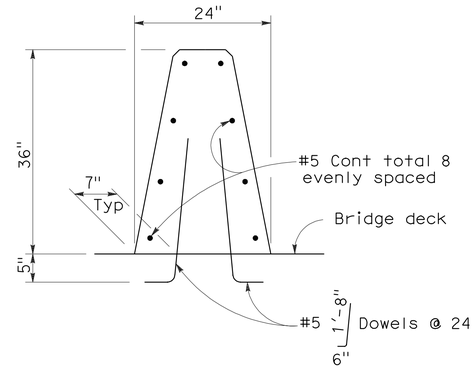

CONCRETE BARRIER TYPE 60A

Details similar to Type 60 except as noted.

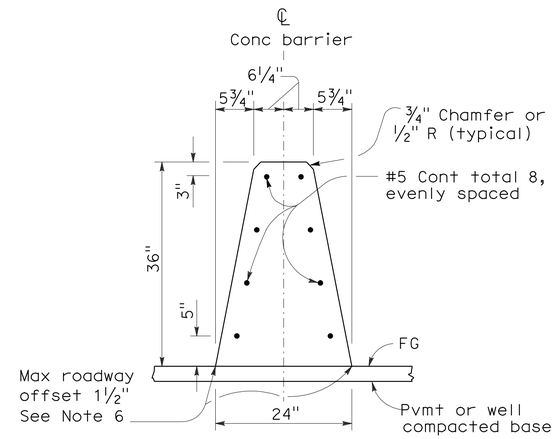

CONCRETE BARRIER TYPE 60

NOTES:

1. See Standard Plan A76B for details of Concrete Barrier Type 60 end anchors, connection to structures and transitions to Concrete Barrier Type 50 and Concrete Barrier Type 60S.
2. See Standard Plan A76C for Concrete Barrier Type 60 transitions at bridge column and sign pedestals.
3. Where glare screen is required on Concrete Barrier Type 60, use Concrete Barrier Type 60G.
4. Where the concrete barrier is added to the face of existing concrete structure, match existing weep holes.
5. Expansion joints in concrete barrier shall be located at all deck, pavement and principal wall joints. Expansion joint filler material shall be the same size as joint or ½" minimum.
6. Where roadway offset is greater than 1½", see Concrete Barrier Type 60C.
7. Barrier delineation to be used when required by the Special Provisions.
8. Spacing of barrier markers to match spacing of raised pavement markers on the adjacent median edgeline pavement delineation.
9. Reinforcing stirrup not required for roadway offsets less than 1'-0".
10. For roadway surfaces offset greater than 1½" to 3", no rebars required. For roadway surfaces offset greater than 3" to 8" use two #4 rebars at 3" above the lower roadway surface. For roadway surfaces offset greater than 8" to 12", use two #4 rebars at 3" above the lower roadway surface and two #4 rebars at 8" above the lower roadway surface. For roadway surfaces offset greater than 12" to 36", use two #4 rebars at 3" above the lower roadway surface and two #4 rebars at every 8" increment vertical spacing above the first two #4 rebars.

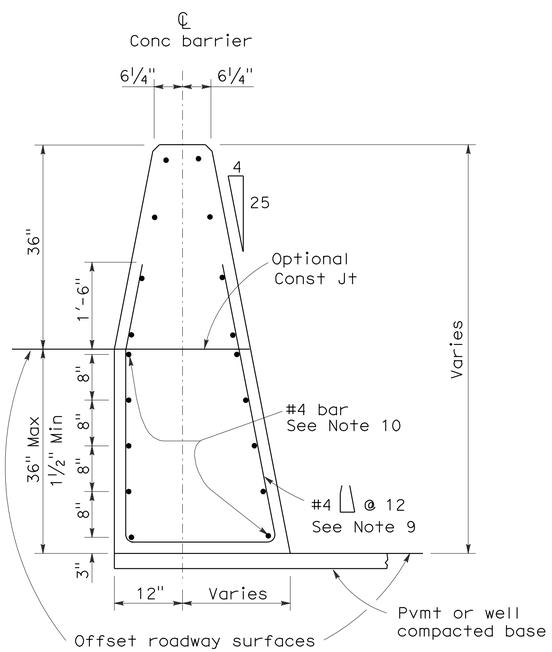

CONCRETE BARRIER TYPE 60C

Details similar to Type 60 except as noted.
Concrete barrier end anchor when necessary.
36" roadway surfaces offset shown.

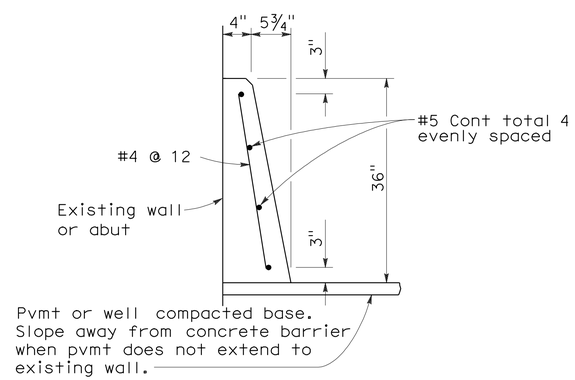

CONCRETE BARRIER TYPE 60D

STATE OF CALIFORNIA
DEPARTMENT OF TRANSPORTATION

CONCRETE BARRIER TYPE 60

NO SCALE

RSP A76A DATED JUNE 6, 2008 SUPERSEDES STANDARD PLAN A76A
DATED MAY 1, 2006 - PAGE 29 OF THE STANDARD PLANS BOOK DATED MAY 2006.

REVISED STANDARD PLAN RSP A76A

2006 REVISED STANDARD PLAN RSP A76A

5-21-08

DIST	COUNTY	ROUTE	POST MILES TOTAL PROJECT	SHEET NO.	TOTAL SHEETS
06	Fre	168S	R4.2/R6.9	28	34

Randell D. Hiatt
REGISTERED CIVIL ENGINEER

June 6, 2008
PLANS APPROVAL DATE

REGISTERED PROFESSIONAL ENGINEER
Randell D. Hiatt
No. C50200
Exp. 6-30-09
CIVIL
STATE OF CALIFORNIA

The State of California or its officers or agents shall not be responsible for the accuracy or completeness of electronic copies of this plan sheet.

To accompany plans dated 8-24-09

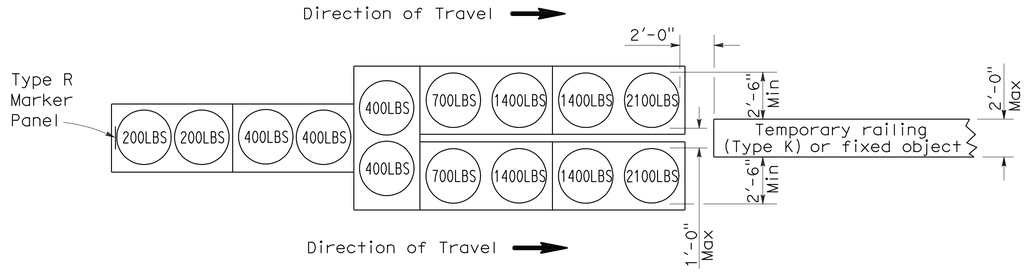

ARRAY 'TU14'

Approach speed 45 mph or more

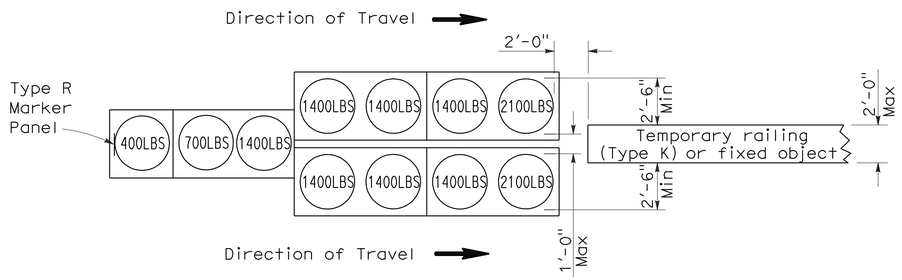

ARRAY 'TU11'

Approach speed less than 45 mph

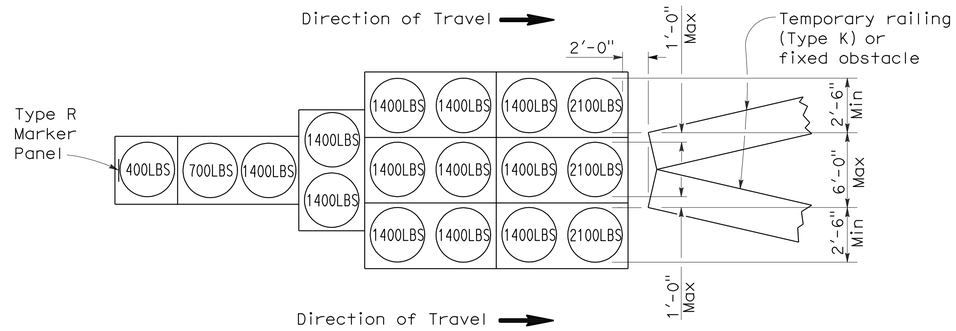

ARRAY 'TU17'

Approach speed less than 45 mph

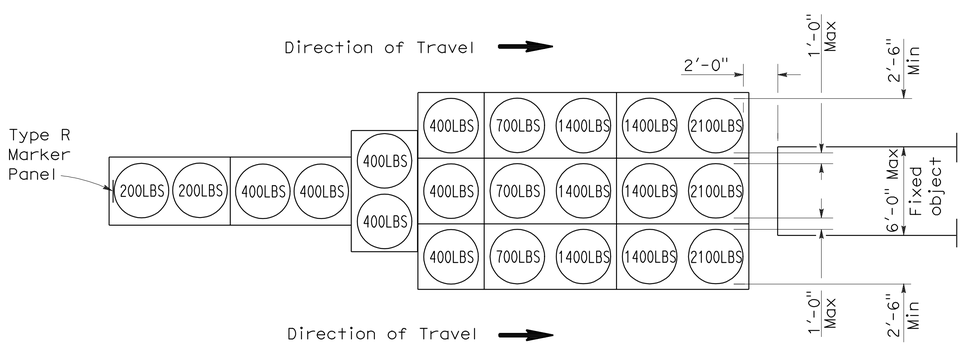

ARRAY 'TU21'

Approach speed 45 mph or more

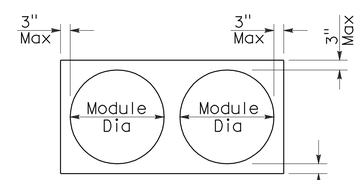

PLAN

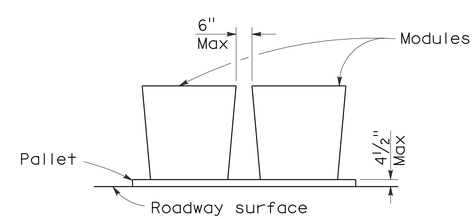

ELEVATION

CRASH CUSHION PALLET DETAIL

See Note 7

NOTES:

1. (XXX) Indicates sand filled module location and weight of sand in pounds for each module. Module spacing is based on the greater diameter of the module.
2. All sand weights are nominal.
3. Temporary crash cushion arrays shall not encroach on the traveled way.
4. Place the top of Type R marker panel 1" below the module lid.
5. Refer to Standard Plan A73B for marker details.
6. Approach speeds indicated conform to NCHRP 350 Report criteria.
7. Use of pallets is optional.

STATE OF CALIFORNIA
DEPARTMENT OF TRANSPORTATION

TEMPORARY CRASH CUSHION, SAND FILLED (UNIDIRECTIONAL)

NO SCALE

RSP T1A DATED JUNE 6, 2008 SUPERSEDES STANDARD PLAN T1A
DATED MAY 1, 2006 - PAGE 211 OF THE STANDARD PLANS BOOK DATED MAY 2006.

REVISED STANDARD PLAN RSP T1A

2006 REVISED STANDARD PLAN RSP T1A

DIST	COUNTY	ROUTE	POST MILES TOTAL PROJECT	SHEET NO.	TOTAL SHEETS
06	Fre	168S	R4.2/R6.9	29	34

Randell D. Hiatt
REGISTERED CIVIL ENGINEER

June 6, 2008
PLANS APPROVAL DATE

REGISTERED PROFESSIONAL ENGINEER
Randell D. Hiatt
No. C50200
Exp. 6-30-09
CIVIL
STATE OF CALIFORNIA

The State of California or its officers or agents shall not be responsible for the accuracy or completeness of electronic copies of this plan sheet.

To accompany plans dated 8-24-09

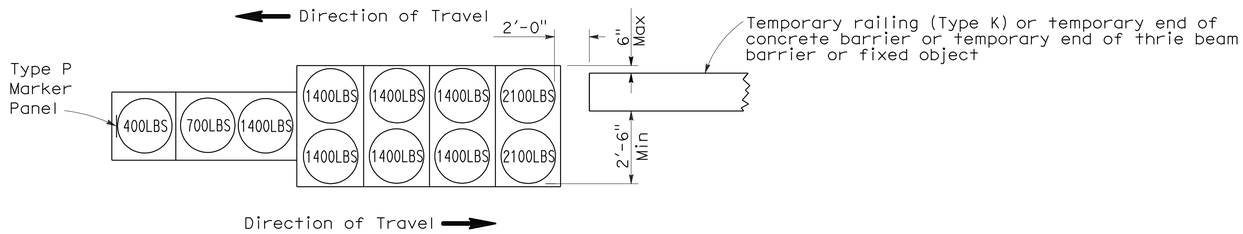

ARRAY 'TB11'

Approach speed less than 45 mph

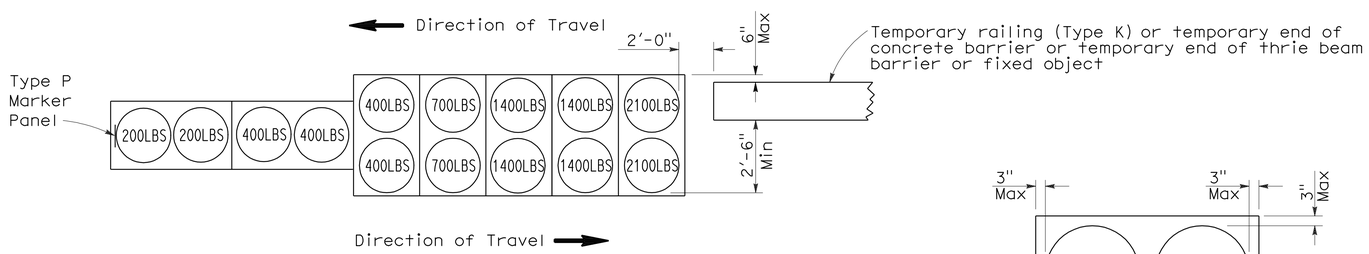

ARRAY 'TB14'

Approach speed 45 mph or more

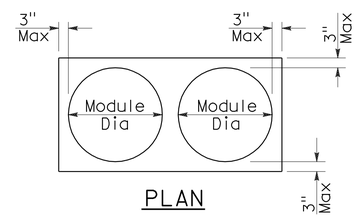

PLAN

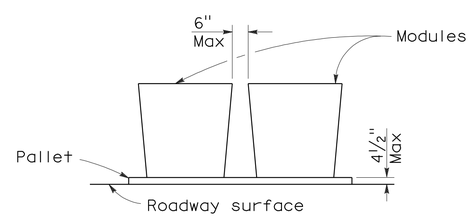

ELEVATION

CRASH CUSHION PALLET DETAIL

See Note 7

NOTES:

1. (XXX) Indicates sand filled module location and weight of sand in pounds for each module. Module spacing is based on the greater diameter of the module.
2. All sand weights are nominal.
3. Temporary crash cushion arrays shall not encroach on the traveled way.
4. Place the Type P marker panel so that the bottom of the panel rests upon the pallet.
5. Refer to Standard Plan A73B for marker details.
6. Approach speeds indicated conform to NCHRP 350 Report criteria.
7. Use of pallets is optional.

STATE OF CALIFORNIA
DEPARTMENT OF TRANSPORTATION

TEMPORARY CRASH CUSHION, SAND FILLED (BIDIRECTIONAL)

NO SCALE

RSP T1B DATED JUNE 6, 2008 SUPERSEDES STANDARD PLAN T1B
DATED MAY 1, 2006 - PAGE 212 OF THE STANDARD PLANS BOOK DATED MAY 2006.

REVISED STANDARD PLAN RSP T1B

2006 REVISED STANDARD PLAN RSP T1B

5-15-08

DIST	COUNTY	ROUTE	POST MILES TOTAL PROJECT	SHEET NO.	TOTAL SHEETS
06	Fre	168S	R4.2/R6.9	30	34

Randell D. Hiatt
REGISTERED CIVIL ENGINEER

June 6, 2008
PLANS APPROVAL DATE

REGISTERED PROFESSIONAL ENGINEER
Randell D. Hiatt
No. C50200
Exp. 6-30-09
CIVIL
STATE OF CALIFORNIA

The State of California or its officers or agents shall not be responsible for the accuracy or completeness of electronic copies of this plan sheet.

To accompany plans dated 8-24-09

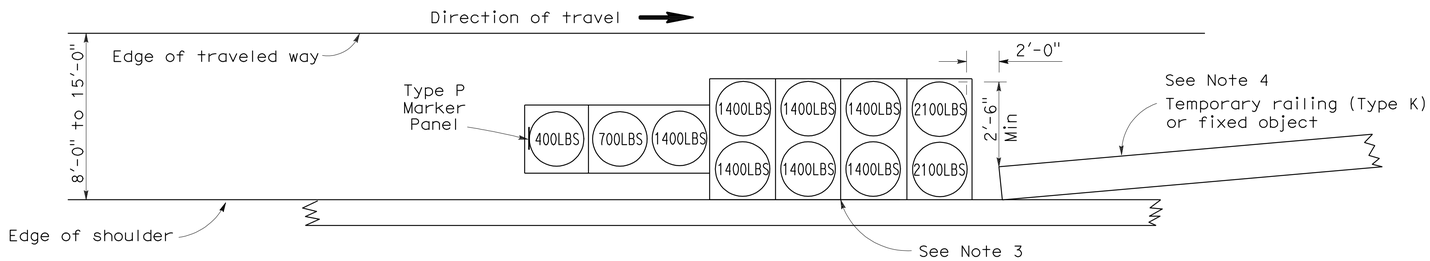

ARRAY 'TS11'

Approach speed less than 45 mph
See Note 9

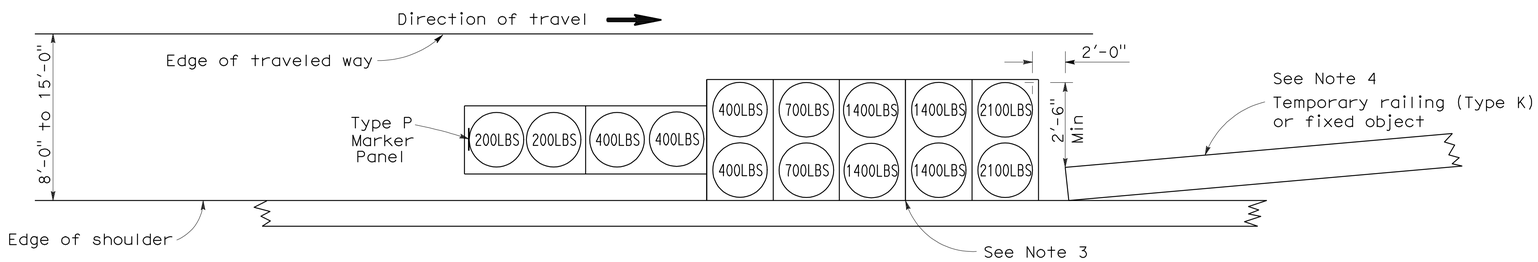

ARRAY 'TS14'

Approach speed 45 mph or more
See Note 9

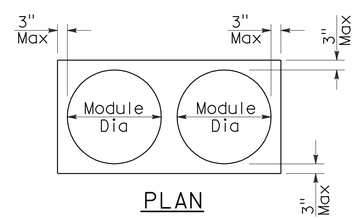

PLAN

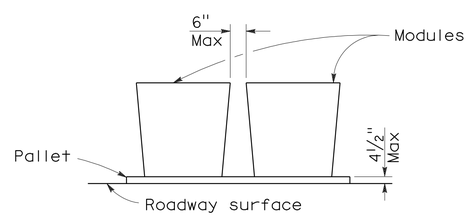

ELEVATION

CRASH CUSHION PALLET DETAIL

See Note 11

NOTES:

1. (XXX) Indicates sand filled module location and weight of sand in pounds for each module. Module spacing is based on the greater diameter of the module.
2. All sand weights are nominal.
3. The temporary crash cushion arrays shown on this plan shall be used only in locations where there will be traffic on one side of the temporary crash cushion array.
4. If the fixed object or approach end of the temporary railing is less than 15'-0" from the edge of traveled way, a temporary crash cushion is required in a construction or work zone.
5. Temporary crash cushion arrays shall not encroach on the traveled way.
6. Arrays for median shoulders shall conform to details shown on this plan for outside shoulders.
7. Place the Type P marker panel so that the bottom of the panel rests upon the pallet and faces traffic.
8. Refer to Standard Plan A73B for marker details.
9. For shoulder widths less than 8'-0", appropriate approved crash cushion protection, other than sand filled modules, shall be provided at fixed objects and at approach ends of temporary railing. The specific type of crash cushion shall be as shown on the project plans or as specified in the Special Provisions, or if not shown on the project plans or specified in the Special Provisions, shall be as approved by the Engineer.
10. Approach speeds indicated conform to NCHRP 350 Report criteria.
11. Use of pallets is optional.

STATE OF CALIFORNIA
DEPARTMENT OF TRANSPORTATION

TEMPORARY CRASH CUSHION, SAND FILLED (SHOULDER INSTALLATIONS)

NO SCALE

RSP T2 DATED JUNE 6, 2008 SUPERSEDES STANDARD PLAN T2
DATED MAY 1, 2006 - PAGE 213 OF THE STANDARD PLANS BOOK DATED MAY 2006.

REVISED STANDARD PLAN RSP T2

2006 REVISED STANDARD PLAN RSP T2

5-15-08

DIST	COUNTY	ROUTE	POST MILES TOTAL PROJECT	SHEET NO.	TOTAL SHEETS
06	Fre	168S	R4.2/R6.9	31	34

Robert B Schott
LICENSED LANDSCAPE ARCHITECT

August 15, 2008
PLANS Approval DATE

LICENSED LANDSCAPE ARCHITECT
Robert B. Schott 3625
Robert B Schott
Signature
11-04-08
Renewal Date
08-11-08
Date
STATE OF CALIFORNIA

The State of California or its officers or agents shall not be responsible for the accuracy or completeness of electronic copies of this plan sheet.

To accompany plans dated 8-24-09

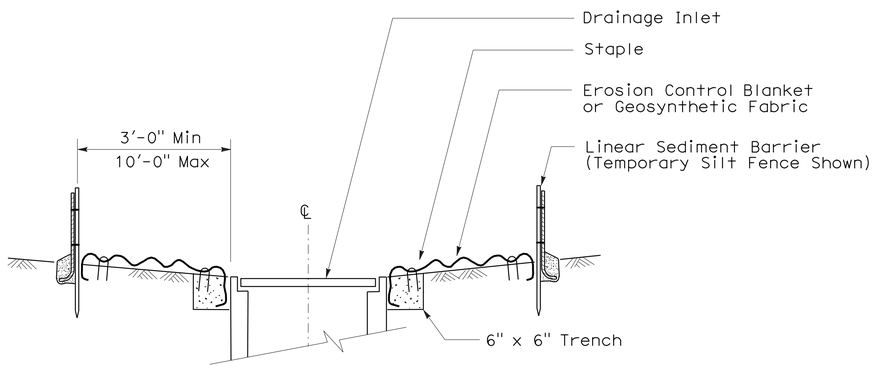

SECTION A-A

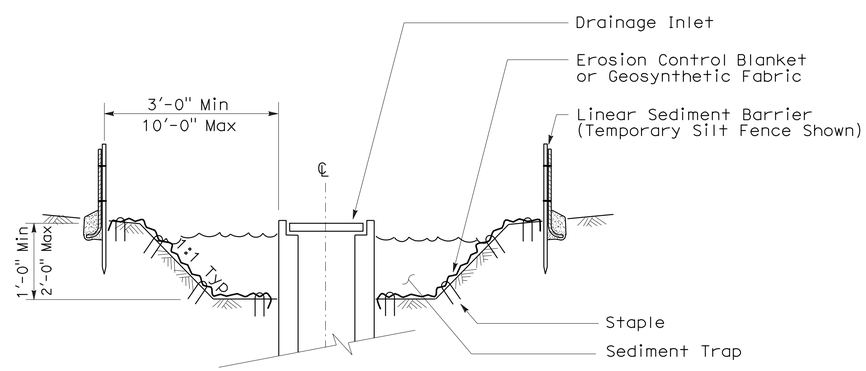

SECTION B-B

NOTES:

1. See Standard Plan T51 for Temporary Silt Fence.
2. Dimensions may vary to fit field conditions.

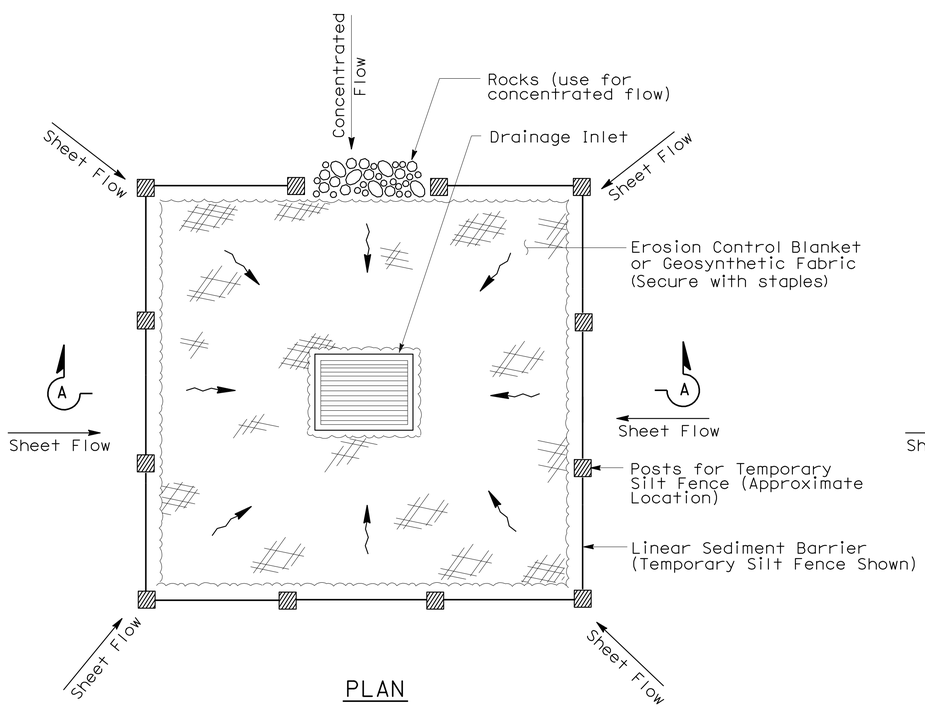

PLAN

TEMPORARY DRAINAGE
INLET PROTECTION (TYPE 1)

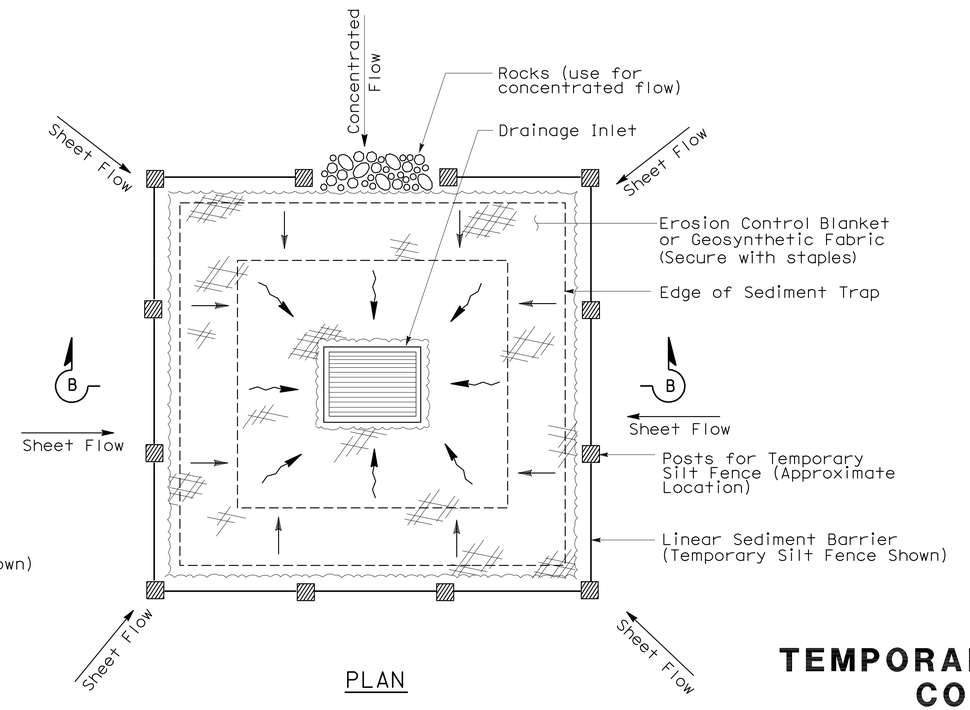

PLAN

TEMPORARY DRAINAGE
INLET PROTECTION (TYPE 2)
(EXCAVATED SEDIMENT TRAP)

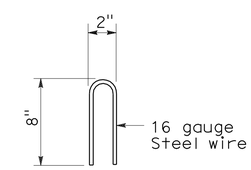

STAPLE DETAIL

STATE OF CALIFORNIA
DEPARTMENT OF TRANSPORTATION

TEMPORARY WATER POLLUTION CONTROL DETAILS (TEMPORARY DRAINAGE INLET PROTECTION)

NO SCALE

NSP T61 DATED AUGUST 15, 2008 SUPPLEMENTS
THE STANDARD PLANS BOOK DATED MAY 2006.

NEW STANDARD PLAN NSP T61

2006 NEW STANDARD PLAN NSP T61

7-11-08

DIST	COUNTY	ROUTE	POST MILES TOTAL PROJECT	SHEET NO.	TOTAL SHEETS
06	Fre	168S	R4.2/R6.9	32	34

LICENSED LANDSCAPE ARCHITECT

August 15, 2008
PLANS APPROVAL DATE

LICENSED LANDSCAPE ARCHITECT Robert B. Schott 3625 Signature 11-04-08 Renewal Date 08-11-08 Date STATE OF CALIFORNIA

The State of California or its officers or agents shall not be responsible for the accuracy or completeness of electronic copies of this plan sheet.

To accompany plans dated 8-24-09

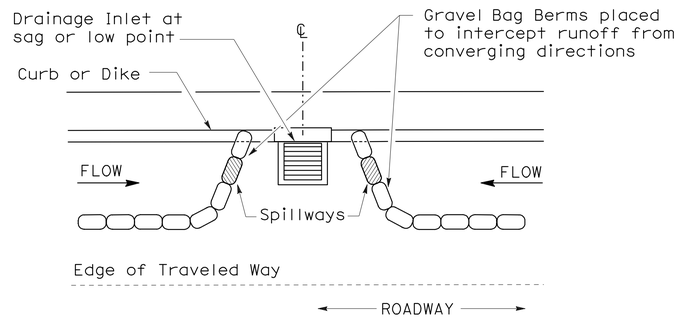

PLAN

CONFIGURATION FOR SAG POINT INLET (GRAVEL BAG BERM)

GRAVEL BAG BERM (TYPE 3A) SPACING TABLE

SLOPE OF ROADWAY (PERCENT)	1 to 3.9	4 to 5.9	6 to 7.9	8 to 10	10+
INTERVAL BETWEEN BERM	100′	75′	50′	25′	12′

For slope of less than 1%, install barriers only if erosion/sediment is prevalent

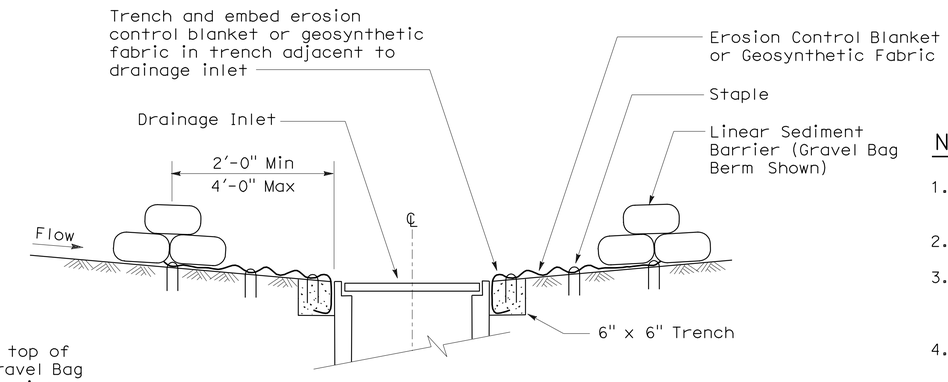

SECTION A-A

NOTES:

1. Place safety cones adjacent to drainage inlet protection.
2. Dimensions may vary to fit field conditions.
3. Install a minimum of 3 gravel bag berms upstream of each drainage inlet to be protected.
4. Position erosion control blanket or geosynthetic fabric at edge of concrete apron and secure in trench.
5. Erosion control blanket or geosynthetic fabric is not required if the area adjacent to the drainage inlet is vegetated or paved.

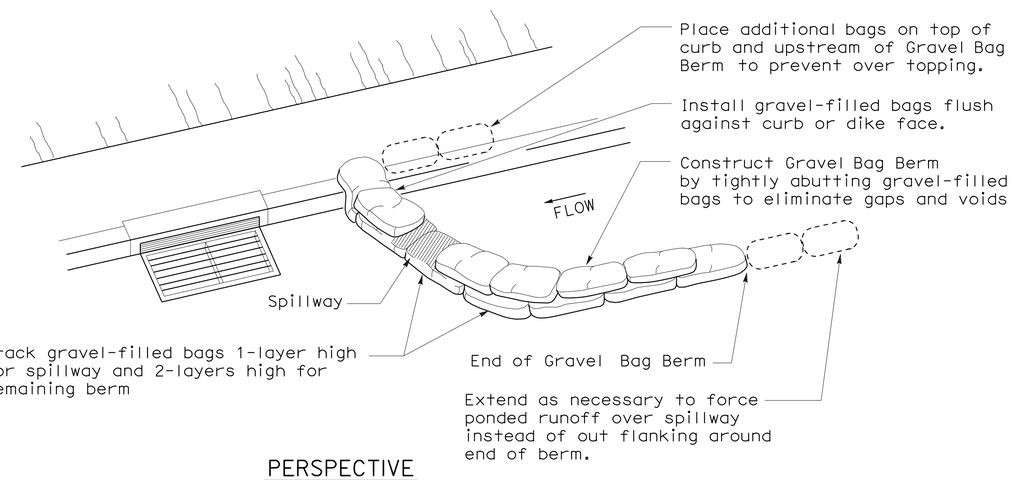

PERSPECTIVE

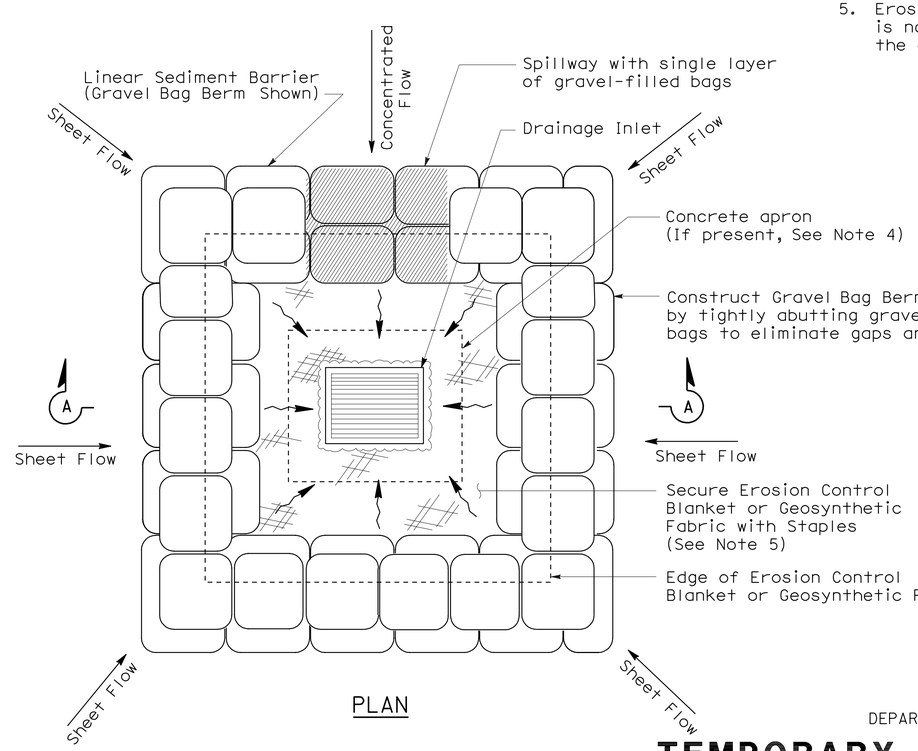

PLAN

TEMPORARY DRAINAGE INLET PROTECTION (TYPE 3B)

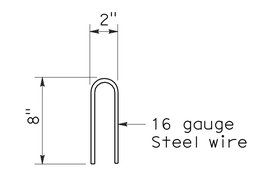

STAPLE DETAIL

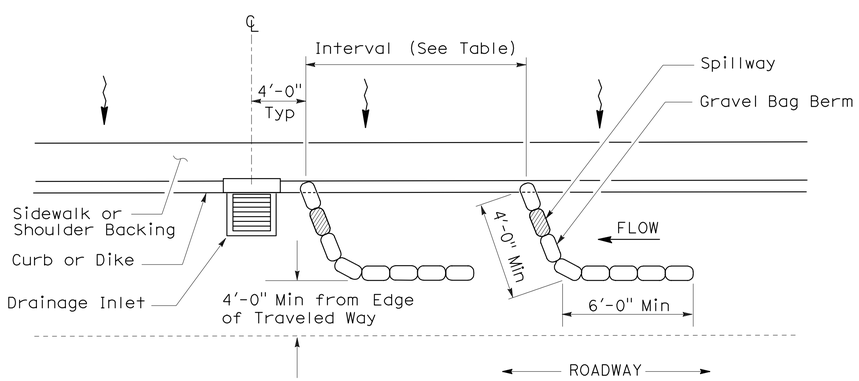

PLAN

TEMPORARY DRAINAGE INLET PROTECTION (TYPE 3A) (GRAVEL BAG BERM)

STATE OF CALIFORNIA
DEPARTMENT OF TRANSPORTATION

TEMPORARY WATER POLLUTION CONTROL DETAILS (TEMPORARY DRAINAGE INLET PROTECTION)

NO SCALE

NSP T62 DATED AUGUST 15, 2008 SUPPLEMENTS THE STANDARD PLANS BOOK DATED MAY 2006.

NEW STANDARD PLAN NSP T62

2006 NEW STANDARD PLAN NSP T62

7-11-08

DIST	COUNTY	ROUTE	POST MILES TOTAL PROJECT	SHEET NO.	TOTAL SHEETS
06	Fre	168S	R4.2/R6.9	33	34

Robert B Schott
LICENSED LANDSCAPE ARCHITECT

August 15, 2008
PLANS APPROVAL DATE

LICENSED LANDSCAPE ARCHITECT Robert B. Schott 3625 Signature 11-04-08 Renewal Date 08-11-08 Date STATE OF CALIFORNIA

The State of California or its officers or agents shall not be responsible for the accuracy or completeness of electronic copies of this plan sheet.

To accompany plans dated 8-24-09

FLEXIBLE SEDIMENT BARRIER SPACING TABLE

SLOPE OF ROADWAY (PERCENT)	0 to 0.9	1 to 1.9	2 to 2.9	3 to 4	5+
INTERVAL BETWEEN BARRIERS	50′	35′	30′	25′	20′
ANGLE FROM FACE OF CURB	70°	70°	70°	45°	45°
SUGGESTED BARRIER LENGTH	6′	6′	6′	6′	6′

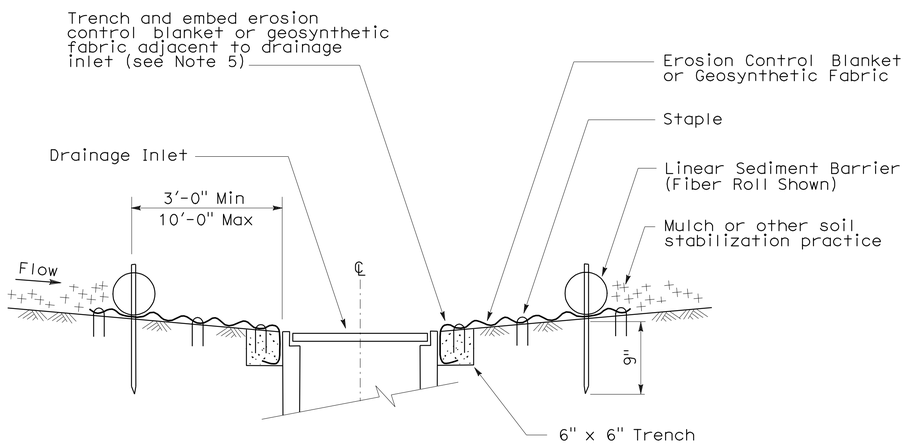

SECTION A-A

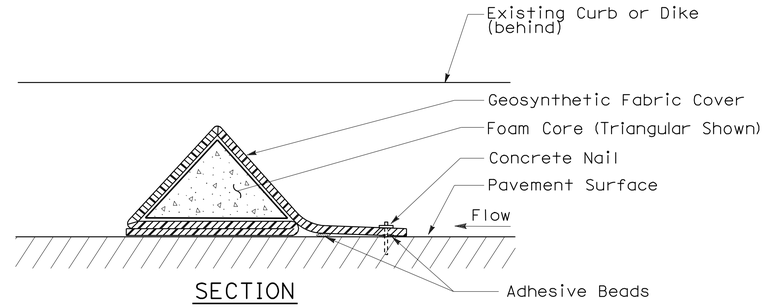

SECTION

FLEXIBLE SEDIMENT BARRIER DETAIL (FOAM BARRIER SHOWN)

NOTES:

1. See Standard Plan T51 for Temporary Silt Fence.
2. Dimensions may vary to fit field conditions.
3. Install a minimum of 3 flexible sediment barriers upstream of each drainage inlet to be protected.
4. Position erosion control blanket or geosynthetic fabric at edge of concrete apron and secure in trench.
5. Erosion control blanket or geosynthetic fabric is not required if the area adjacent to the drainage inlet is vegetated.

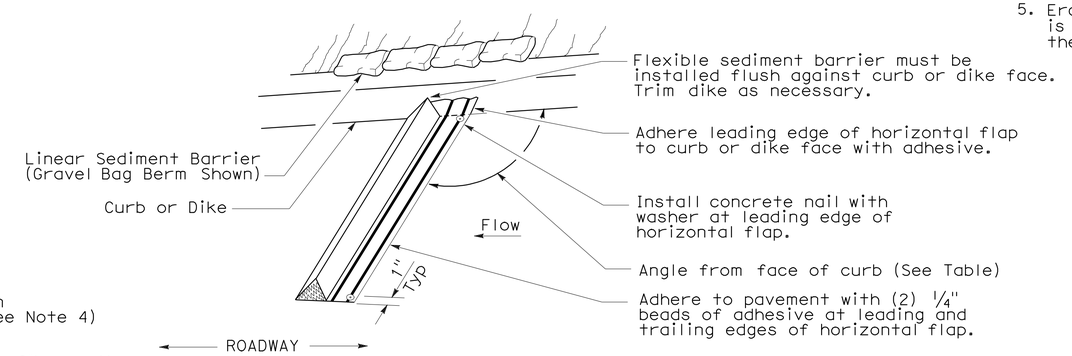

PERSPECTIVE

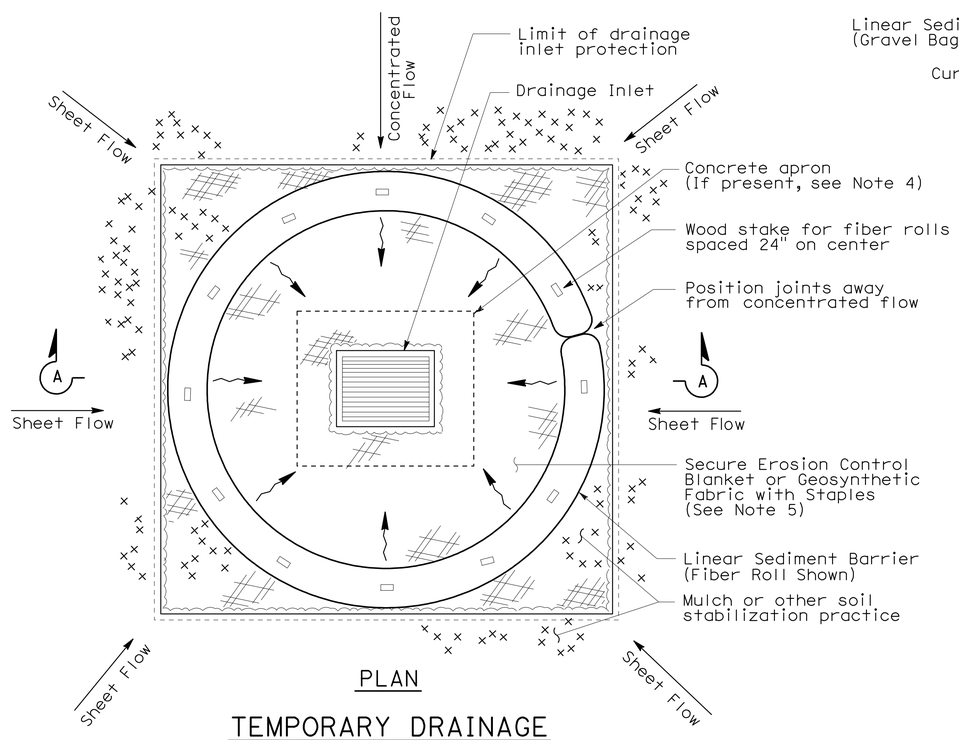

PLAN

TEMPORARY DRAINAGE INLET PROTECTION (TYPE 4A)

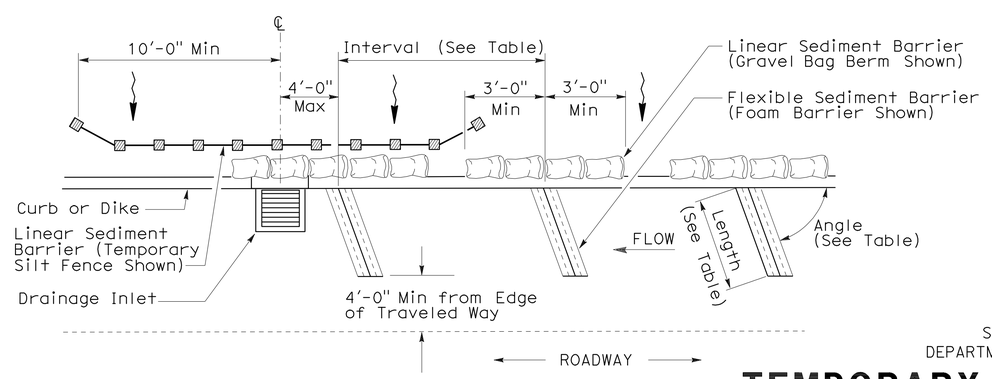

PLAN

TEMPORARY DRAINAGE INLET PROTECTION (TYPE 4B) FLEXIBLE SEDIMENT BARRIER

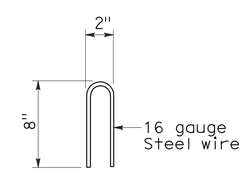

STAPLE DETAIL

STATE OF CALIFORNIA
DEPARTMENT OF TRANSPORTATION

TEMPORARY WATER POLLUTION CONTROL DETAILS (TEMPORARY DRAINAGE INLET PROTECTION)

NO SCALE

NSP T63 DATED AUGUST 15, 2008 SUPPLEMENTS THE STANDARD PLANS BOOK DATED MAY 2006.

NEW STANDARD PLAN NSP T63

2006 NEW STANDARD PLAN NSP T63

DIST	COUNTY	ROUTE	POST MILES TOTAL PROJECT	SHEET NO.	TOTAL SHEETS
06	Fre	168S	R4.2/R6.9	34	34

LICENSED LANDSCAPE ARCHITECT

April 3, 2009
PLANS APPROVAL DATE

LICENSED LANDSCAPE ARCHITECT — Robert B. Schott — 3625 — Signature — 11-30-10 Renewal Date — 2-25-09 Date — STATE OF CALIFORNIA

The State of California or its officers or agents shall not be responsible for the accuracy or completeness of electronic copies of this plan sheet.

To accompany plans dated 8-24-09

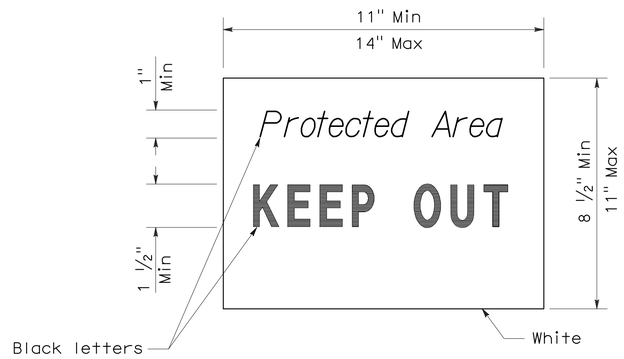

SIGN DETAIL

NOTE:

1. Temporary silt fence and temporary straw bale barrier shown for reference purposes only.

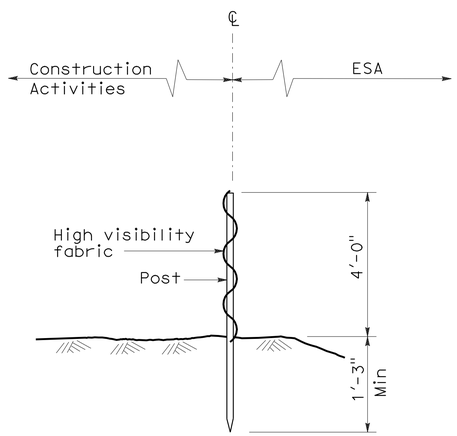

SECTION
TEMPORARY FENCE (TYPE ESA)

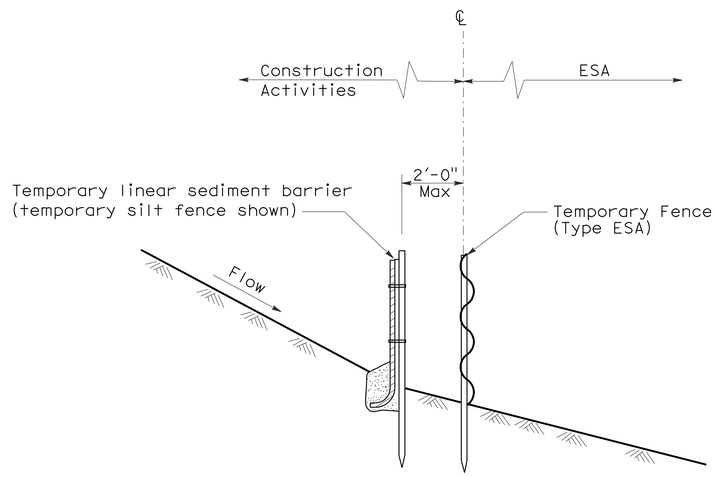

SECTION
PLACEMENT DETAIL
FOR TEMPORARY LINEAR SEDIMENT BARRIER
USED WITH TEMPORARY
FENCE (TYPE ESA)
(See Note 1)

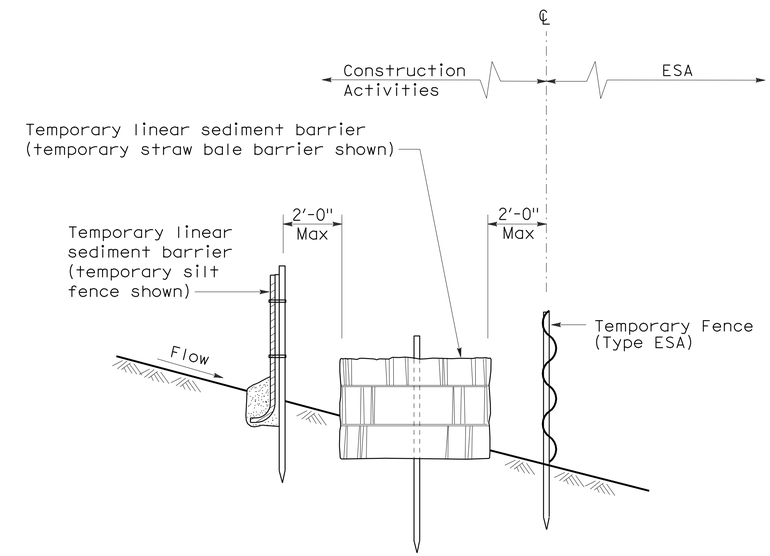

SECTION
PLACEMENT DETAIL
FOR TEMPORARY SILT FENCE
AND TEMPORARY STRAW BALE BARRIER
USED WITH TEMPORARY FENCE (TYPE ESA)
(See Note 1)

STATE OF CALIFORNIA
DEPARTMENT OF TRANSPORTATION

TEMPORARY WATER POLLUTION CONTROL DETAILS [TEMPORARY FENCE (TYPE ESA)]

NO SCALE

NSP T65 DATED APRIL 3, 2009 SUPPLEMENTS
THE STANDARD PLANS BOOK DATED MAY 2006.

NEW STANDARD PLAN NSP T65

2006 NEW STANDARD PLAN NSP T65