Dist	COUNTY	ROUTE	POST MILES TOTAL PROJECT	SHEET No.	TOTAL SHEETS
06	Fre	168	R36.0	1	37

INDEX OF PLANS

SHEET No.	DESCRIPTION
1	TITLE AND LOCATION MAP
2-8	TYPICAL CROSS SECTIONS
9-12	LAYOUTS
13-14	PROFILE
15-18	CONSTRUCTION DETAILS
19	EROSION CONTROL
20	CONSTRUCTION AREA SIGNS
21	PAVEMENT DELINEATION PLAN
22	SUMMARY OF QUANTITIES
23	RETAINING WALL PLAN
24-37	REVISED AND NEW STANDARD PLANS

THE STANDARD PLANS LIST APPLICABLE TO THIS CONTRACT IS INCLUDED IN THE NOTICE TO BIDDERS AND SPECIAL PROVISIONS BOOK.

STATE OF CALIFORNIA

DEPARTMENT OF TRANSPORTATION

PROJECT PLANS FOR CONSTRUCTION ON STATE HIGHWAY

IN FRESNO COUNTY ABOUT 11 MILES EAST OF PRATHER AT MAYNARD MUNGER VISTA POINT

TO BE SUPPLEMENTED BY STANDARD PLANS DATED MAY 2006

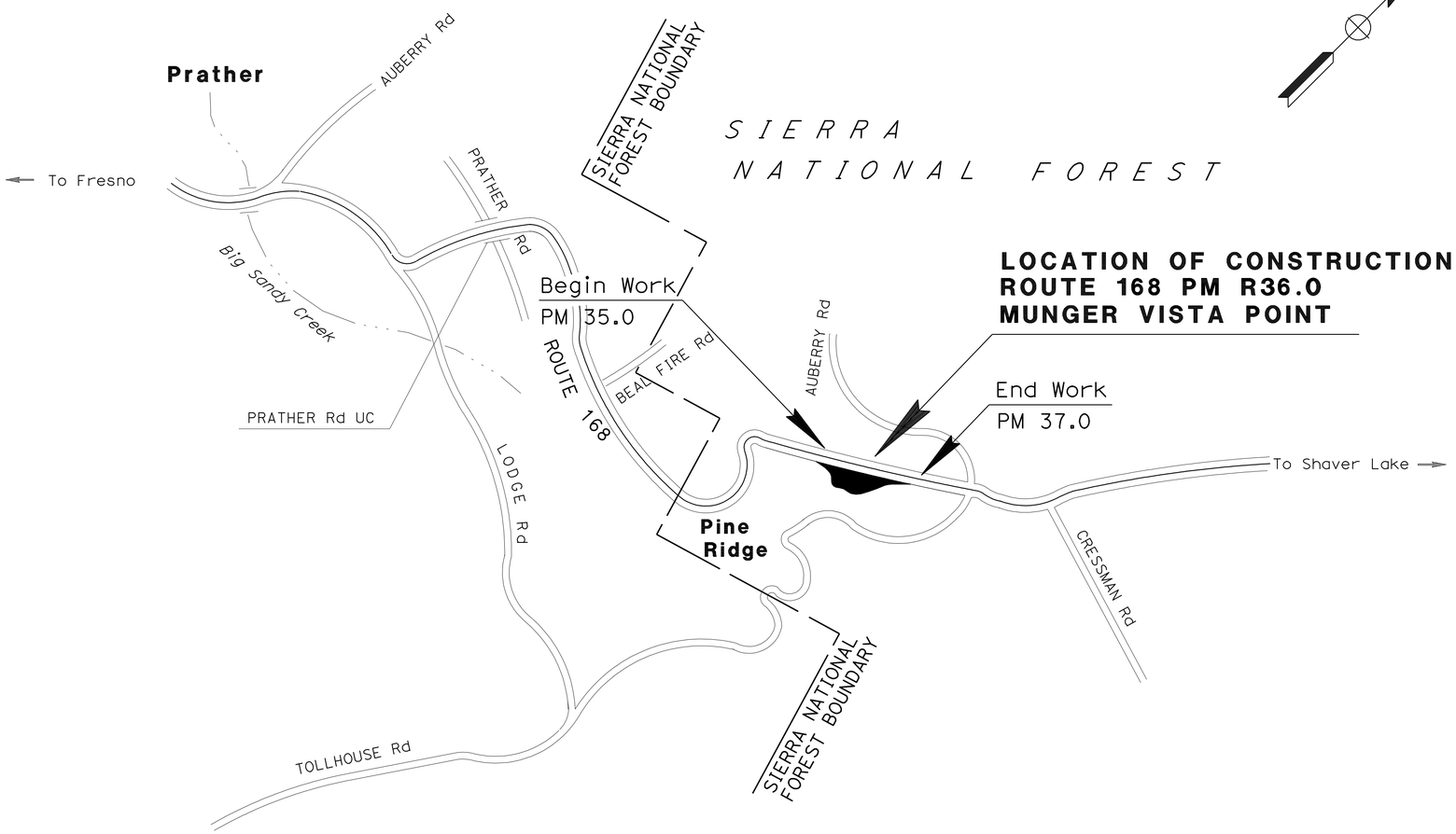

LOCATION OF CONSTRUCTION
ROUTE 168 PM R36.0
MUNGER VISTA POINT

NO SCALE

LOCATION MAP

LICENSED LANDSCAPE ARCHITECT

January 11, 2010
PLANS APPROVAL DATE

THE STATE OF CALIFORNIA OR ITS OFFICERS OR AGENTS SHALL NOT BE RESPONSIBLE FOR THE ACCURACY OR COMPLETENESS OF SCANNED COPIES OF THIS PLAN SHEET.

LICENSED LANDSCAPE ARCHITECT — RICHARD B. COLE No. 3172 — Registration 06/30/10 — Renewal Date 09/22/09 — DATE — STATE OF CALIFORNIA

PROJECT MANAGER: SUZIE HOLDRIDGE

SENIOR LANDSCAPE ARCHITECT: ELBERT COX

THE CONTRACTOR SHALL POSSESS THE CLASS (OR CLASSES) OF LICENSE AS SPECIFIED IN THE "NOTICE TO BIDDERS."

CONTRACT No. 06-0C0904

LAST REVISION 10-15-09 | DATE PLOTTED => 14-JAN-2010 | TIME PLOTTED => 09:14

Dist	COUNTY	ROUTE	POST MILES TOTAL PROJECT	SHEET No.	TOTAL SHEETS
06	Fre	168	R36.0	2	37

LICENSED LANDSCAPE ARCHITECT

1-11-10
PLANS APPROVAL DATE

LICENSED LANDSCAPE ARCHITECT — RICHARD B. COLE No. 3128 — Expiration Date 06/30/10 — Renewal Date 09/22/08 — STATE OF CALIFORNIA

THE STATE OF CALIFORNIA OR ITS OFFICERS OR AGENTS SHALL NOT BE RESPONSIBLE FOR THE ACCURACY OR COMPLETENESS OF SCANNED COPIES OF THIS PLAN SHEET.

NOTES: 1. FOR ADDITIONAL DETAILS, SEE CONSTRUCTION DETAILS SHEETS.
2. FOR RETAINING WALL DETAILS. SEE RETAINING WALL PLAN.

LEGEND

EMBANKMENT

REMOVE Exist ASPHALT AND AGGREGATE BASE

ABBREVIATION:

ADA - AMERICANS WITH DISABILITIES ACT

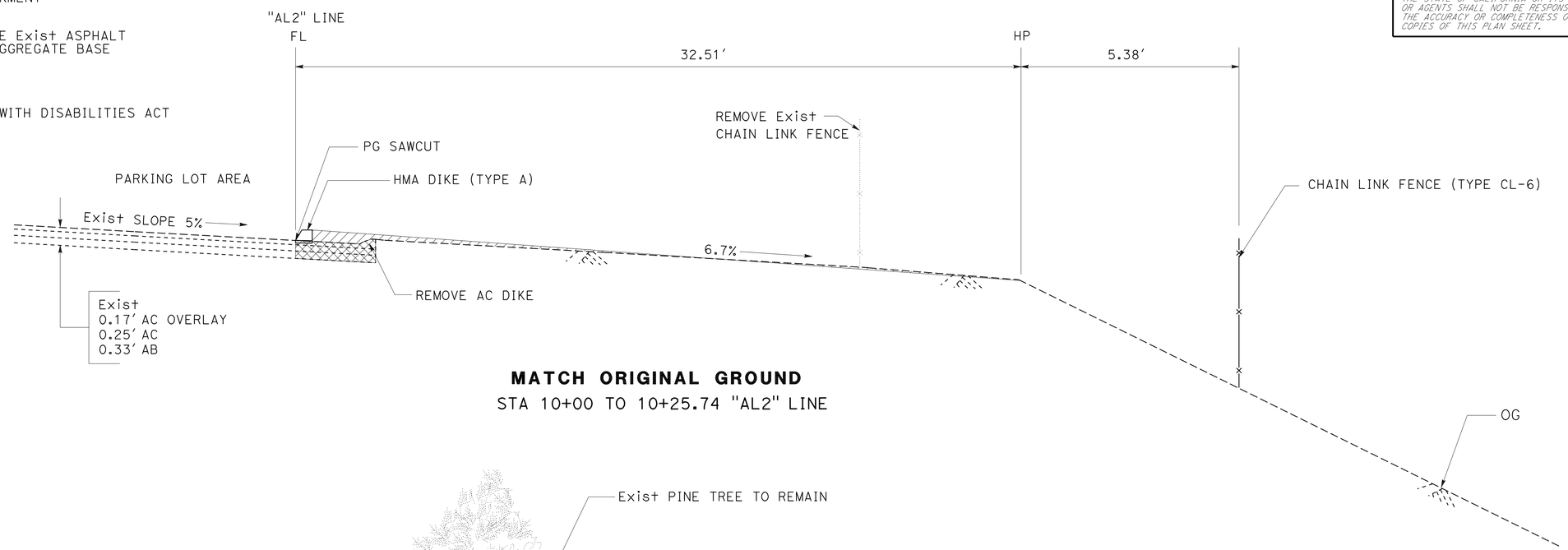

MATCH ORIGINAL GROUND

STA 10+00 TO 10+25.74 "AL2" LINE

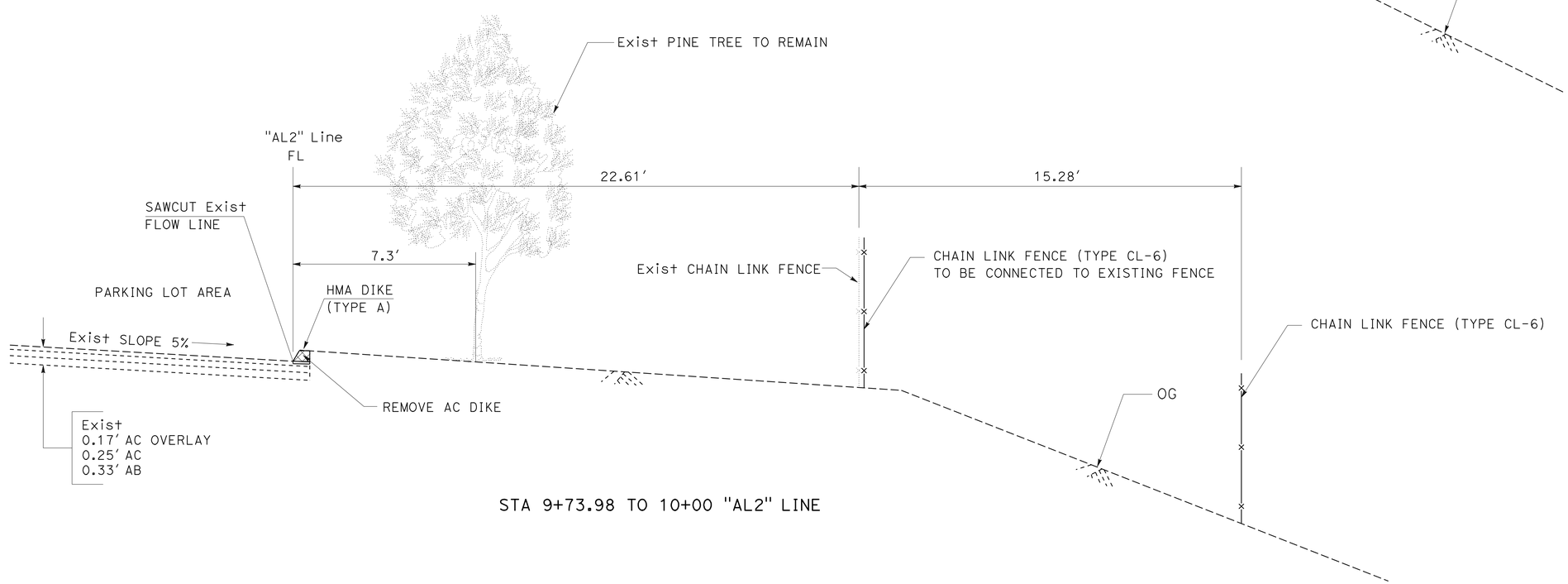

STA 9+73.98 TO 10+00 "AL2" LINE

TYPICAL CROSS SECTION

NO SCALE

X-1

STATE OF CALIFORNIA - DEPARTMENT OF TRANSPORTATION
Caltrans
LANDSCAPE ARCHITECTURE

SENIOR LANDSCAPE ARCHITECT: ELBERT COX

CALCULATED-DESIGNED BY: RAYMOND SEGURA
CHECKED BY: DAVID MARTIN

REVISED BY | DATE REVISED

LAST REVISION 11-02-09 | DATE PLOTTED => 14-JAN-2010 | TIME PLOTTED => 09:15

Dist	COUNTY	ROUTE	POST MILES TOTAL PROJECT	SHEET No.	TOTAL SHEETS
06	Fre	168	R36.0	3	37

LICENSED LANDSCAPE ARCHITECT

1-11-10
PLANS APPROVAL DATE

LICENSED LANDSCAPE ARCHITECT RICHARD B. COLE No. 3128 Expiration Date 06/30/10 Renewal Date 09/22/08 Date STATE OF CALIFORNIA

THE STATE OF CALIFORNIA OR ITS OFFICERS OR AGENTS SHALL NOT BE RESPONSIBLE FOR THE ACCURACY OR COMPLETENESS OF SCANNED COPIES OF THIS PLAN SHEET.

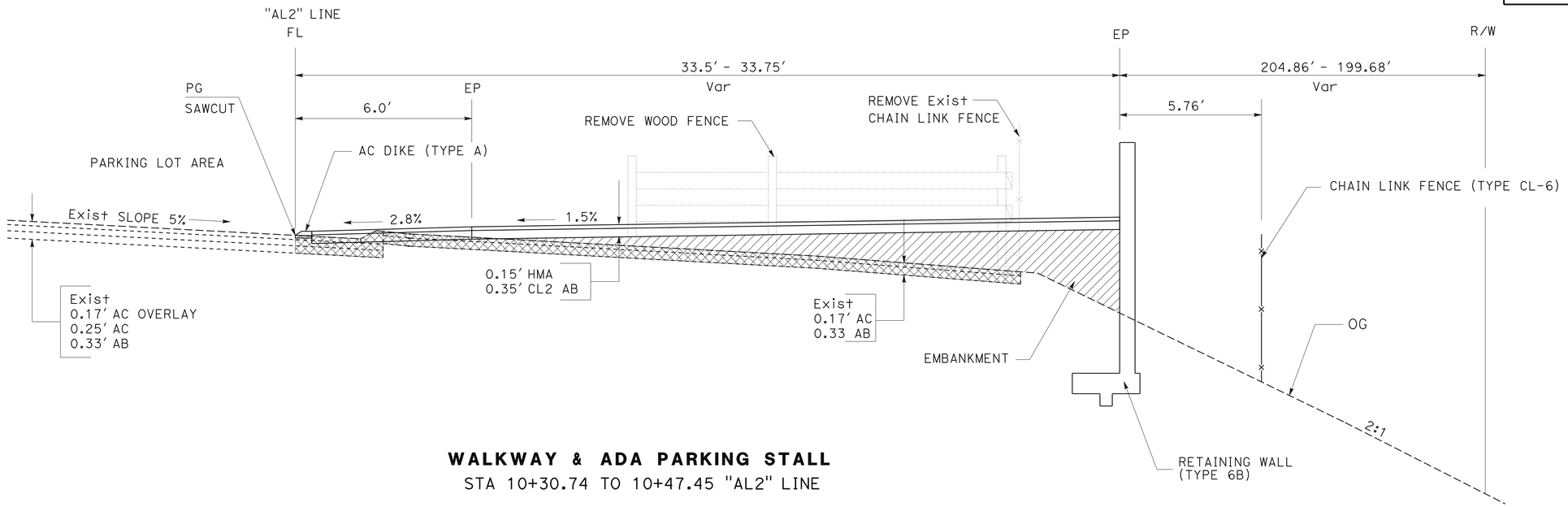

WALKWAY & ADA PARKING STALL

STA 10+30.74 TO 10+47.45 "AL2" LINE

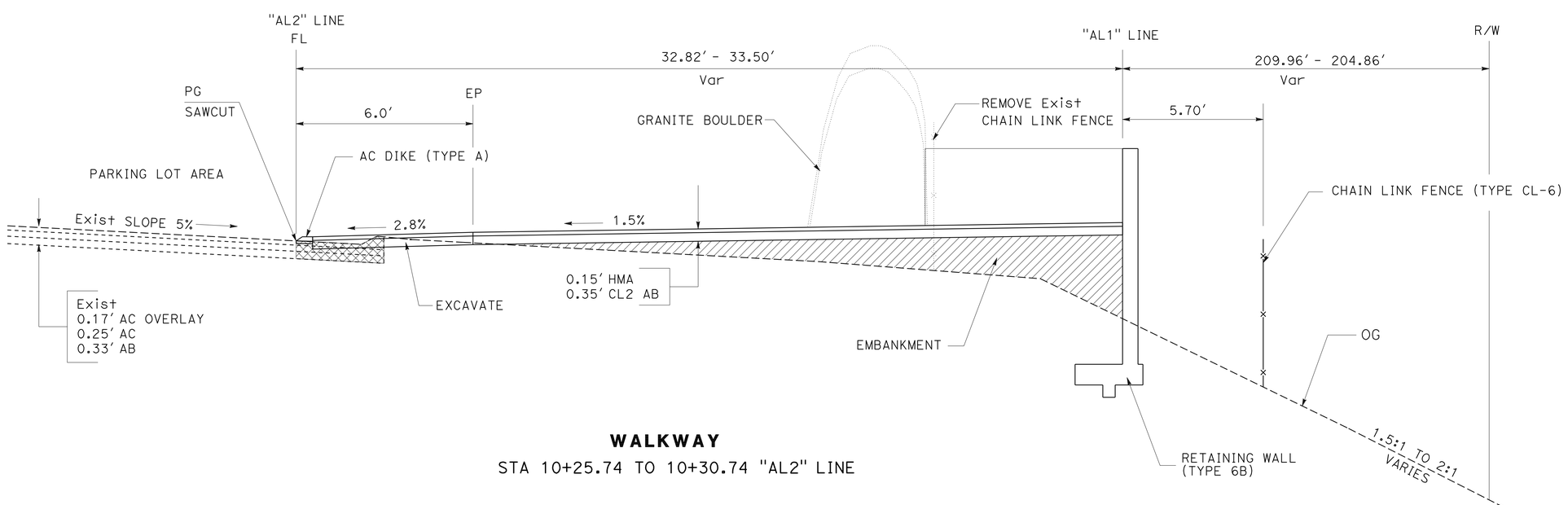

WALKWAY

STA 10+25.74 TO 10+30.74 "AL2" LINE

TYPICAL CROSS SECTION

NO SCALE

X-2

STATE OF CALIFORNIA - DEPARTMENT OF TRANSPORTATION
Caltrans®
LANDSCAPE ARCHITECTURE

SENIOR LANDSCAPE ARCHITECT: ELBERT COX

CALCULATED-DESIGNED BY: RAYMOND SEGURA
CHECKED BY: DAVID MARTIN

REVISED BY | DATE REVISED

LAST REVISION 11-02-09
DATE PLOTTED => 14-JAN-2010
TIME PLOTTED => 09:15

Dist	COUNTY	ROUTE	POST MILES TOTAL PROJECT	SHEET No.	TOTAL SHEETS
06	Fre	168	R36.0	4	37

LICENSED LANDSCAPE ARCHITECT

1-11-10
PLANS APPROVAL DATE

LICENSED LANDSCAPE ARCHITECT
RICHARD B. COLE No. 3128
Expiration Date 06/30/10
Renewal Date 09/22/08
STATE OF CALIFORNIA

THE STATE OF CALIFORNIA OR ITS OFFICERS OR AGENTS SHALL NOT BE RESPONSIBLE FOR THE ACCURACY OR COMPLETENESS OF SCANNED COPIES OF THIS PLAN SHEET.

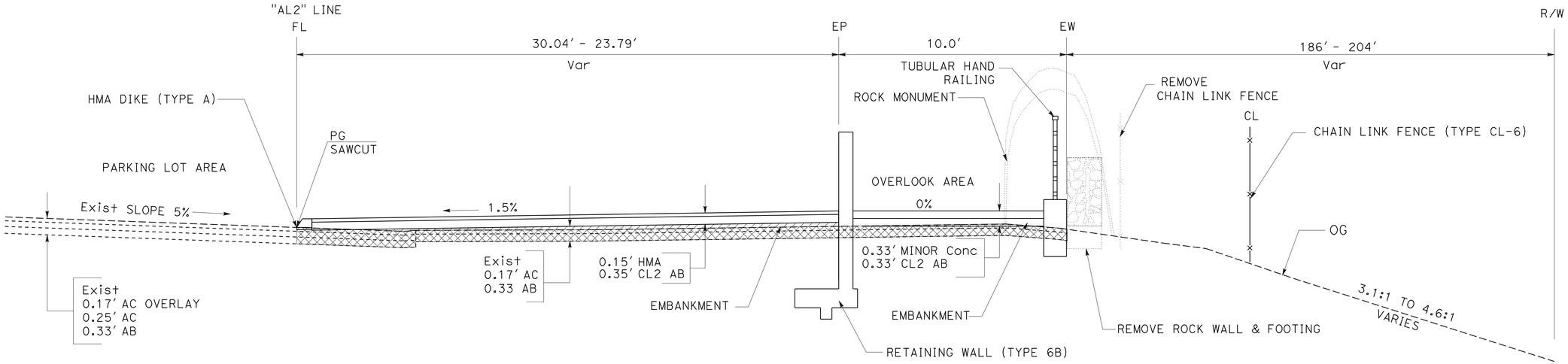

WALKWAY

STA 10+60.00 TO 10+72.98 "AL2" LINE

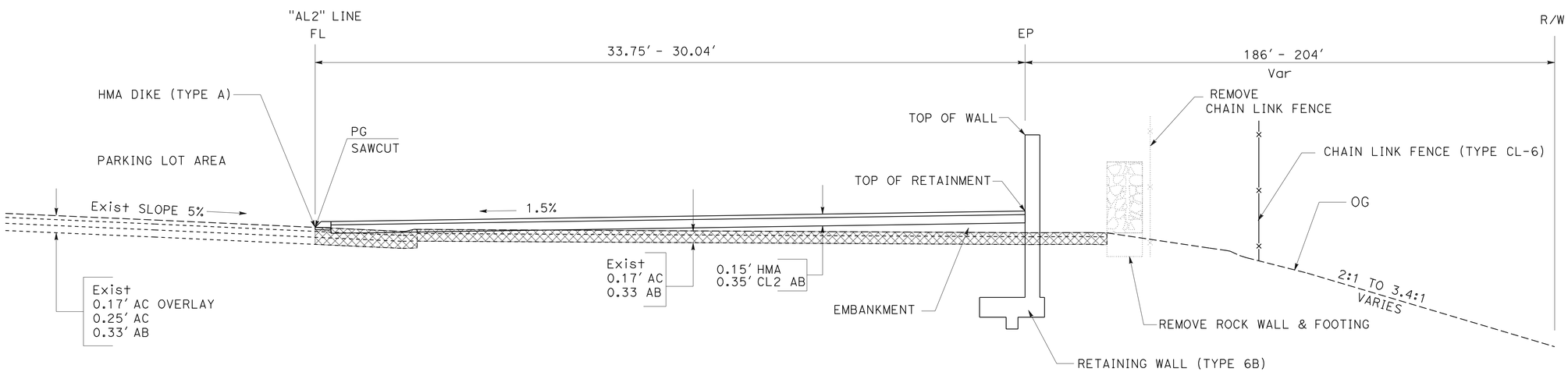

WALKWAY

STA 10+47.45 TO 10+60.00 "AL2" LINE

TYPICAL CROSS SECTION

NO SCALE

X-3

STATE OF CALIFORNIA - DEPARTMENT OF TRANSPORTATION
Caltrans
LANDSCAPE ARCHITECTURE
SENIOR LANDSCAPE ARCHITECT: ELBERT COX
CALCULATED-DESIGNED BY: RAYMOND SEGURA
CHECKED BY: DAVID MARTIN
REVISED BY
DATE REVISED

LAST REVISION 11-02-09
DATE PLOTTED => 14-JAN-2010
TIME PLOTTED => 09:15

Dist	COUNTY	ROUTE	POST MILES TOTAL PROJECT	SHEET No.	TOTAL SHEETS
06	Fre	168	R36.0	5	37

LICENSED LANDSCAPE ARCHITECT

1-11-10
PLANS APPROVAL DATE

LICENSED LANDSCAPE ARCHITECT
RICHARD B. COLE No. 3128
Expiration Date 06/30/10
Renewal Date 09/22/08
Date
STATE OF CALIFORNIA

THE STATE OF CALIFORNIA OR ITS OFFICERS OR AGENTS SHALL NOT BE RESPONSIBLE FOR THE ACCURACY OR COMPLETENESS OF SCANNED COPIES OF THIS PLAN SHEET.

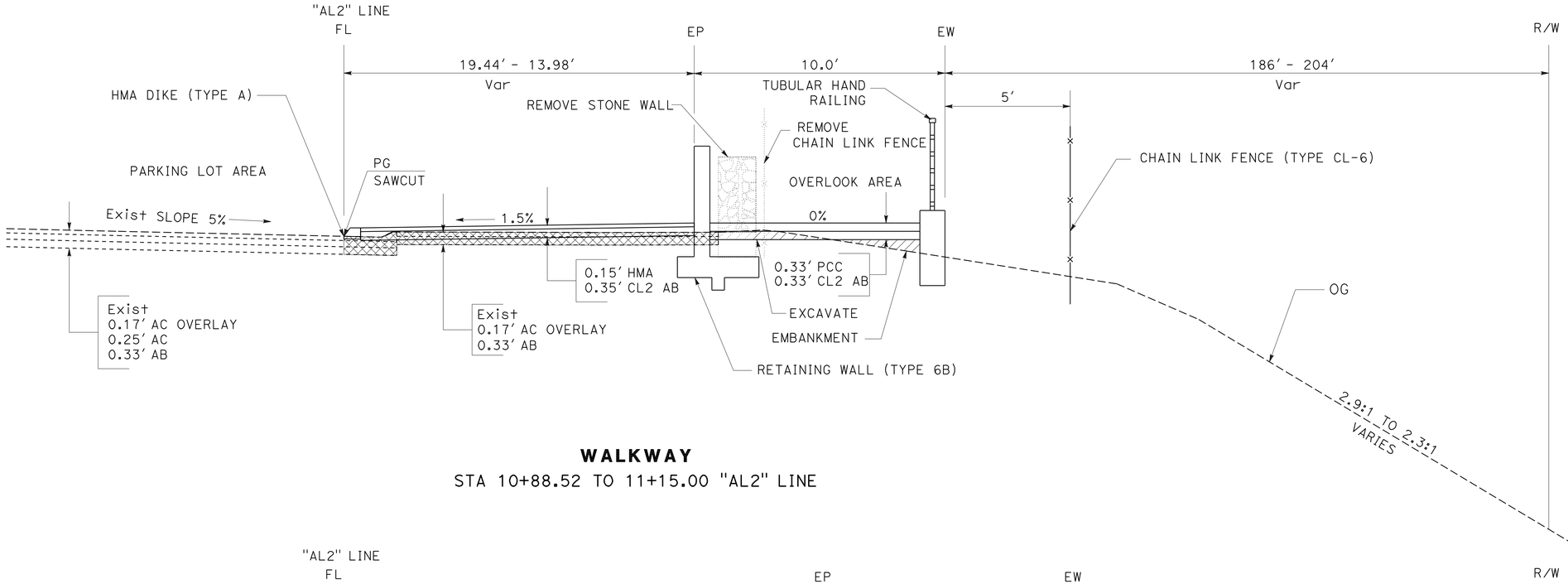

WALKWAY

STA 10+88.52 TO 11+15.00 "AL2" LINE

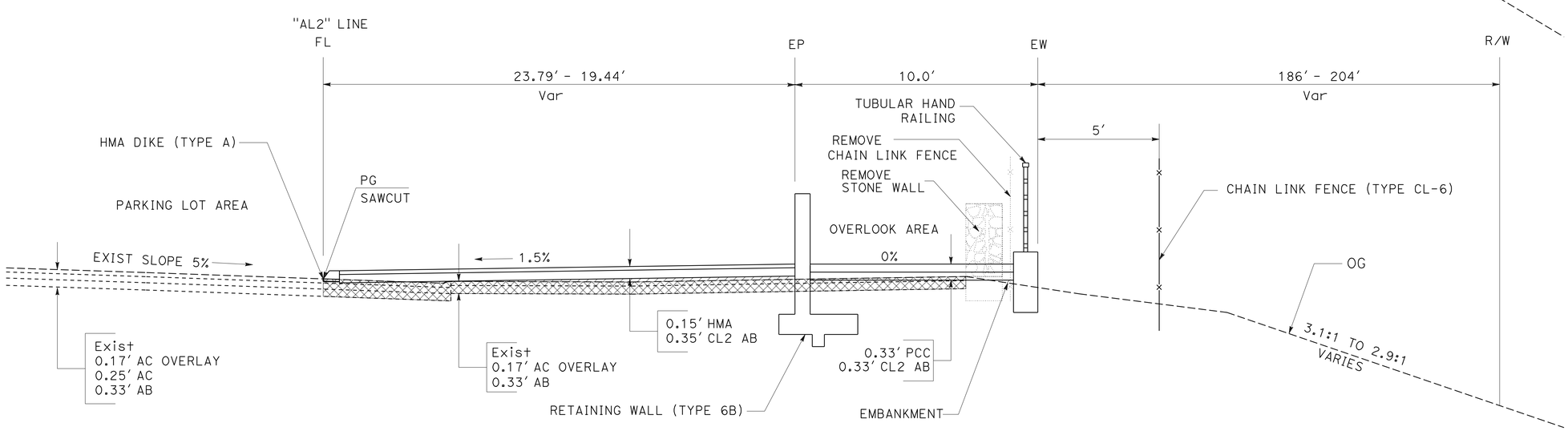

WALKWAY

STA 10+72.98 TO 10+88.52 "AL2" LINE

TYPICAL CROSS SECTION

NO SCALE

X-4

STATE OF CALIFORNIA - DEPARTMENT OF TRANSPORTATION
Caltrans
LANDSCAPE ARCHITECTURE
SENIOR LANDSCAPE ARCHITECT: ELBERT COX
CALCULATED-DESIGNED BY: RAYMOND SEGURA
CHECKED BY: DAVID MARTIN
REVISED BY
DATE REVISED

LAST REVISION 11-02-09
DATE PLOTTED => 14-JAN-2010
TIME PLOTTED => 09:15

Dist	COUNTY	ROUTE	POST MILES TOTAL PROJECT	SHEET No.	TOTAL SHEETS
06	Fre	168	R36.0	6	37

LICENSED LANDSCAPE ARCHITECT

1-11-10
PLANS APPROVAL DATE

LICENSED LANDSCAPE ARCHITECT — RICHARD B. COLE No. 3128 — Expiration Date 06/30/10 — Renewal Date 09/22/08 — Date — STATE OF CALIFORNIA

THE STATE OF CALIFORNIA OR ITS OFFICERS OR AGENTS SHALL NOT BE RESPONSIBLE FOR THE ACCURACY OR COMPLETENESS OF SCANNED COPIES OF THIS PLAN SHEET.

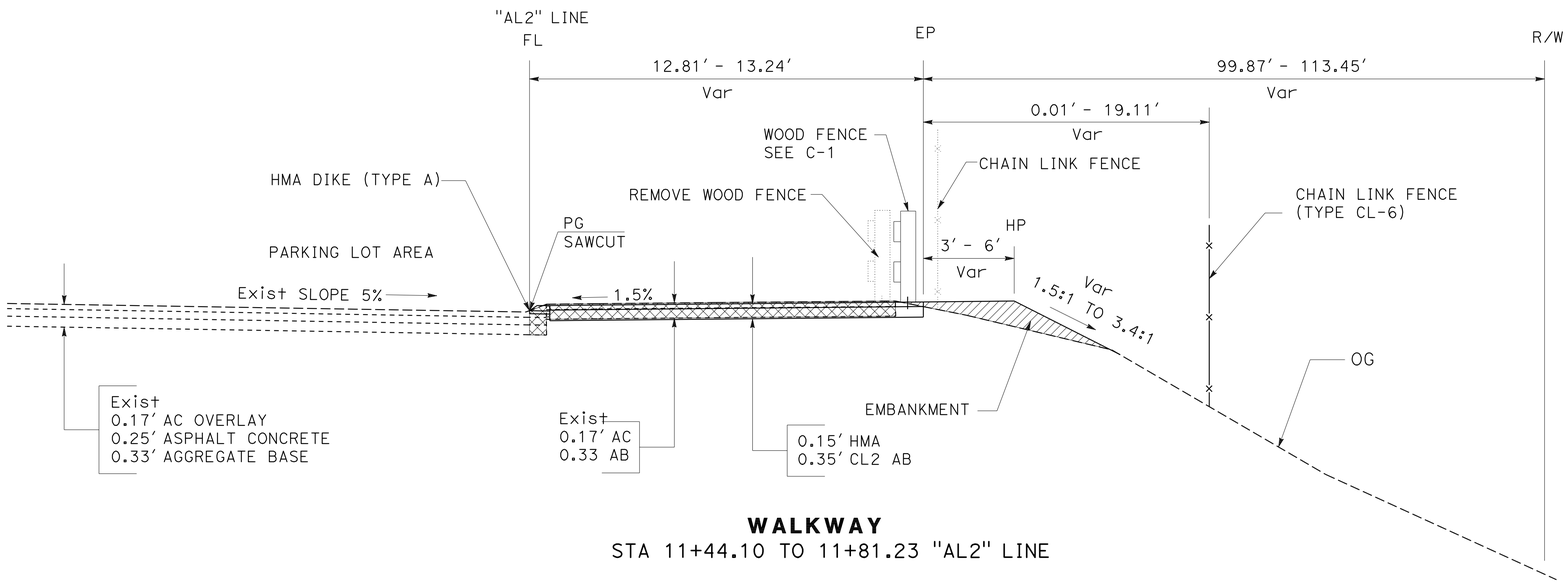

WALKWAY
STA 11+44.10 TO 11+81.23 "AL2" LINE

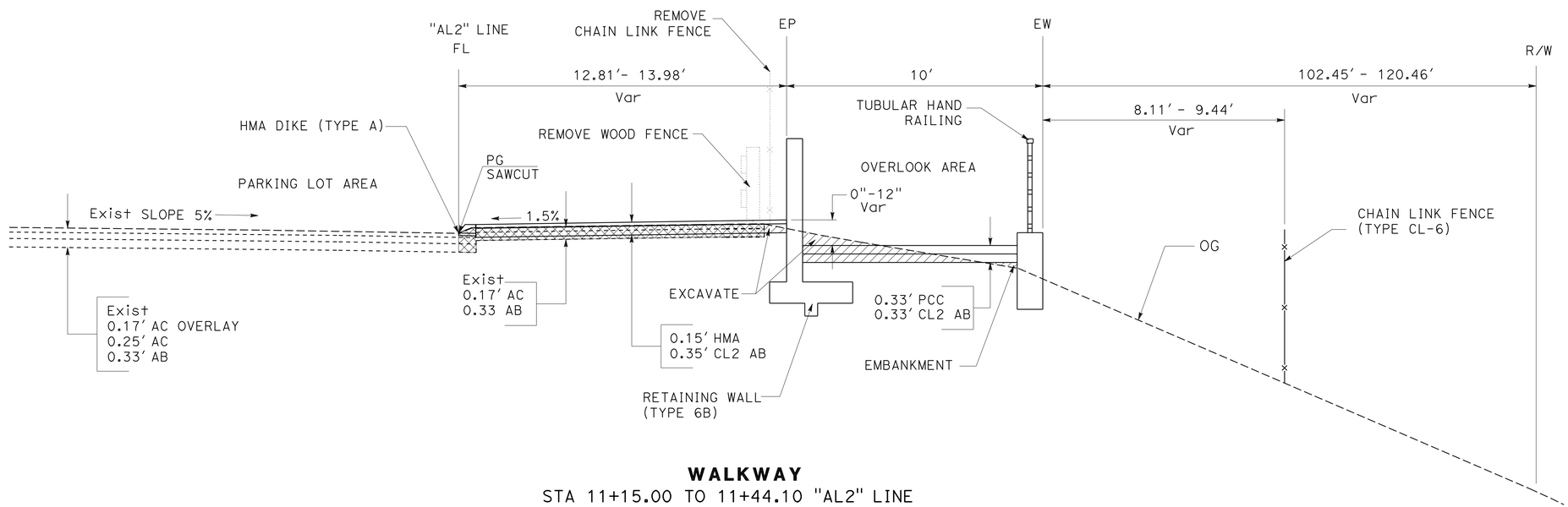

WALKWAY
STA 11+15.00 TO 11+44.10 "AL2" LINE

TYPICAL CROSS SECTION

NO SCALE

X-5

STATE OF CALIFORNIA - DEPARTMENT OF TRANSPORTATION
Caltrans
LANDSCAPE ARCHITECTURE
SENIOR LANDSCAPE ARCHITECT: ELBERT COX
CALCULATED-DESIGNED BY: RAYMOND SEGURA
CHECKED BY: DAVID MARTIN
REVISED BY
DATE REVISED

LAST REVISION 11-02-09
DATE PLOTTED => 14-JAN-2010
TIME PLOTTED => 09:15

Dist	COUNTY	ROUTE	POST MILES TOTAL PROJECT	SHEET No.	TOTAL SHEETS
06	Fre	168	R36.0	7	37

LICENSED LANDSCAPE ARCHITECT

1-11-10
PLANS APPROVAL DATE

LICENSED LANDSCAPE ARCHITECT
RICHARD B. COLE No. 3128
Expiration Date 06/30/10
Renewal Date 09/22/08
Date
STATE OF CALIFORNIA

THE STATE OF CALIFORNIA OR ITS OFFICERS OR AGENTS SHALL NOT BE RESPONSIBLE FOR THE ACCURACY OR COMPLETENESS OF SCANNED COPIES OF THIS PLAN SHEET.

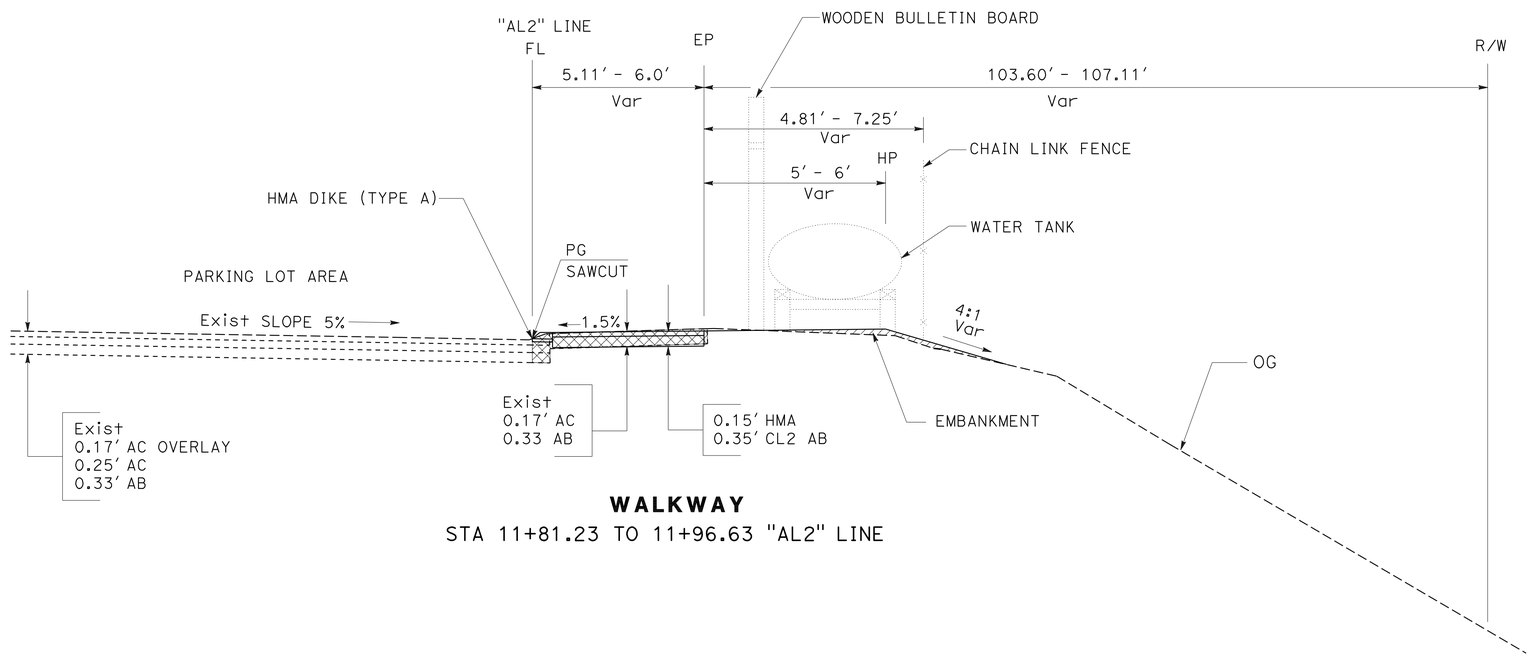

WALKWAY

STA 11+81.23 TO 11+96.63 "AL2" LINE

TYPICAL CROSS SECTION

NO SCALE

X-6

STATE OF CALIFORNIA - DEPARTMENT OF TRANSPORTATION
Caltrans
LANDSCAPE ARCHITECTURE

SENIOR LANDSCAPE ARCHITECT: ELBERT COX

CALCULATED-DESIGNED BY: RAYMOND SEGURA
CHECKED BY: DAVID MARTIN

REVISED BY
DATE REVISED

LAST REVISION 11-02-09
DATE PLOTTED => 14-JAN-2010
TIME PLOTTED => 09:15

Dist	COUNTY	ROUTE	POST MILES TOTAL PROJECT	SHEET No.	TOTAL SHEETS
06	Fre	168	R36.0	8	37

LICENSED LANDSCAPE ARCHITECT

1-11-10
PLANS APPROVAL DATE

LICENSED LANDSCAPE ARCHITECT
RICHARD B. COLE No. 3125
Expiration Date 06/30/10
Renewal Date 09/22/08
Date
STATE OF CALIFORNIA

THE STATE OF CALIFORNIA OR ITS OFFICERS OR AGENTS SHALL NOT BE RESPONSIBLE FOR THE ACCURACY OR COMPLETENESS OF SCANNED COPIES OF THIS PLAN SHEET.

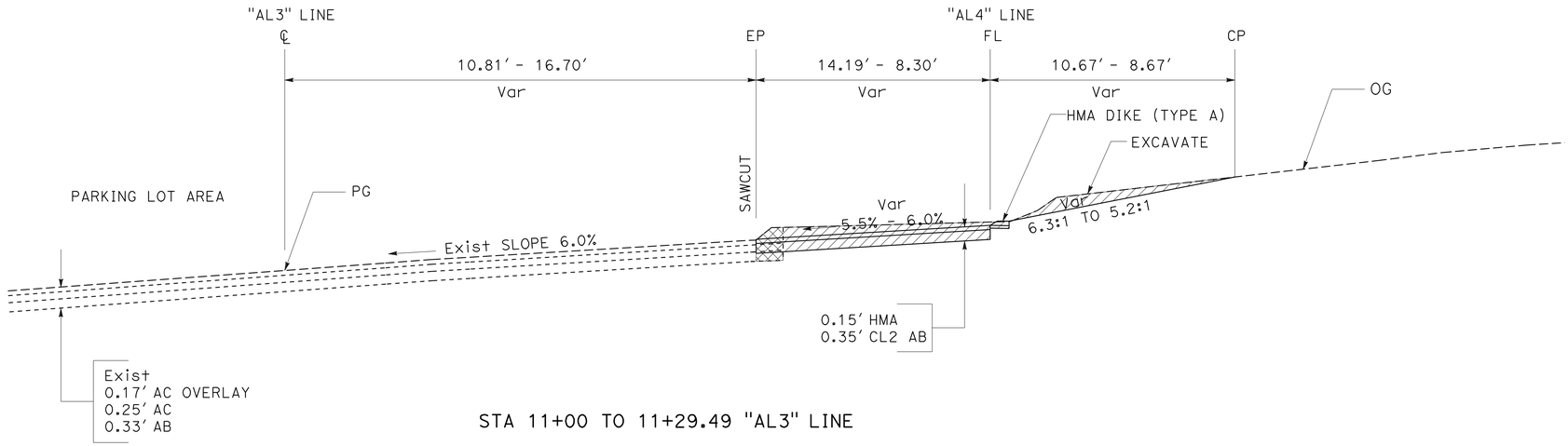

STA 11+00 TO 11+29.49 "AL3" LINE

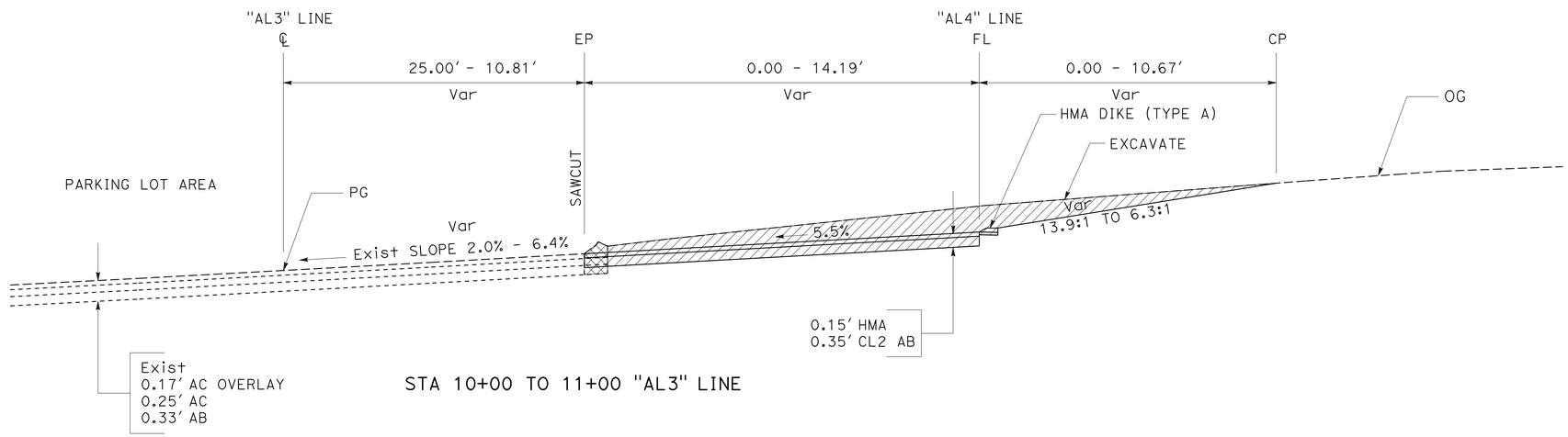

STA 10+00 TO 11+00 "AL3" LINE

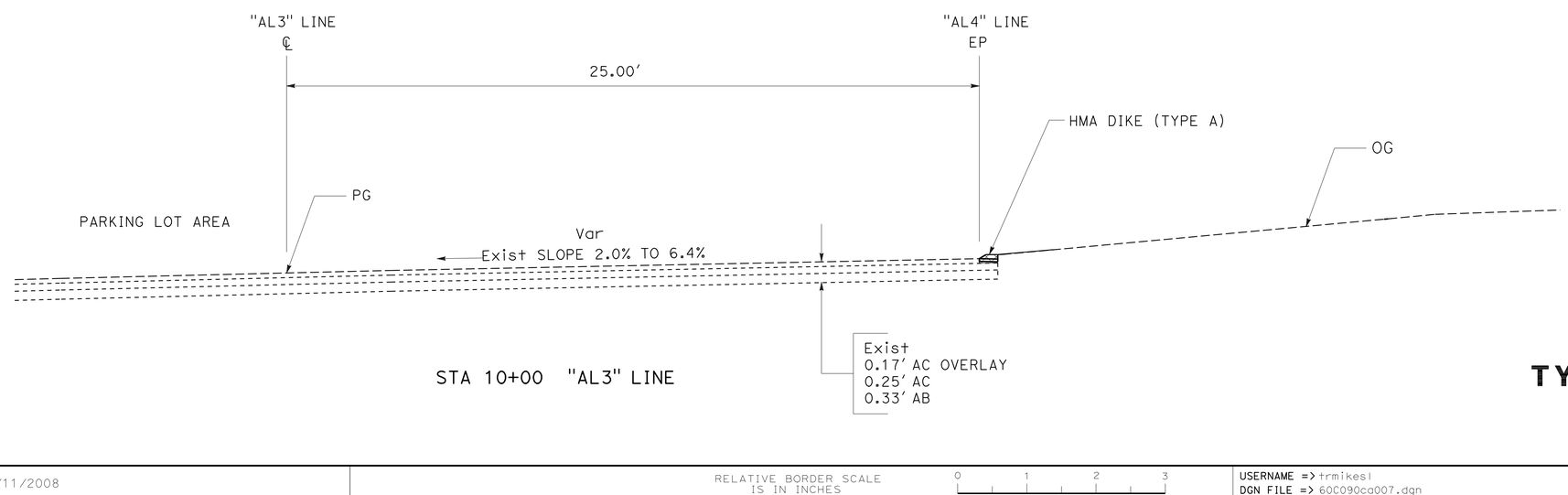

STA 10+00 "AL3" LINE

TYPICAL CROSS SECTION

NO SCALE

X-7

STATE OF CALIFORNIA - DEPARTMENT OF TRANSPORTATION
LANDSCAPE ARCHITECTURE
Caltrans®

SENIOR LANDSCAPE ARCHITECT: ELBERT COX

CALCULATED-DESIGNED BY: RAYMOND SEGURA
CHECKED BY: DAVID MARTIN

REVISED BY
DATE REVISED

LAST REVISION 11-02-09
DATE PLOTTED => 14-JAN-2010
TIME PLOTTED => 09:16

Dist	COUNTY	ROUTE	POST MILES TOTAL PROJECT	SHEET No.	TOTAL SHEETS
06	Fre	168	R36.0	9	37

LICENSED LANDSCAPE ARCHITECT

1-11-10
PLANS APPROVAL DATE

LICENSED LANDSCAPE ARCHITECT
RICHARD B. COLE No. 3128
Expiration Date 06/30/10
Renewal Date 09/22/08
STATE OF CALIFORNIA

THE STATE OF CALIFORNIA OR ITS OFFICERS OR AGENTS SHALL NOT BE RESPONSIBLE FOR THE ACCURACY OR COMPLETENESS OF SCANNED COPIES OF THIS PLAN SHEET.

LEGEND

- SLURRY COAT
- Rdwy Exc (6")
- REMOVE AC DIKE (TYPE A)
- TFR — TEMPORARY FIBER ROLL (TFR)
- TFESA — TEMPORARY FENCE (TYPE ESA)
- TEMPORARY DRAINAGE INLET PROTECTION
- HMA WALKWAY TRANSITION
- SNOW POLE SLEEVE

NOTE: FOR ACCURATE RIGHT OF WAY DATA, CONTACT RIGHT OF WAY ENGINEERING AT THE DISTRICT OFFICE.

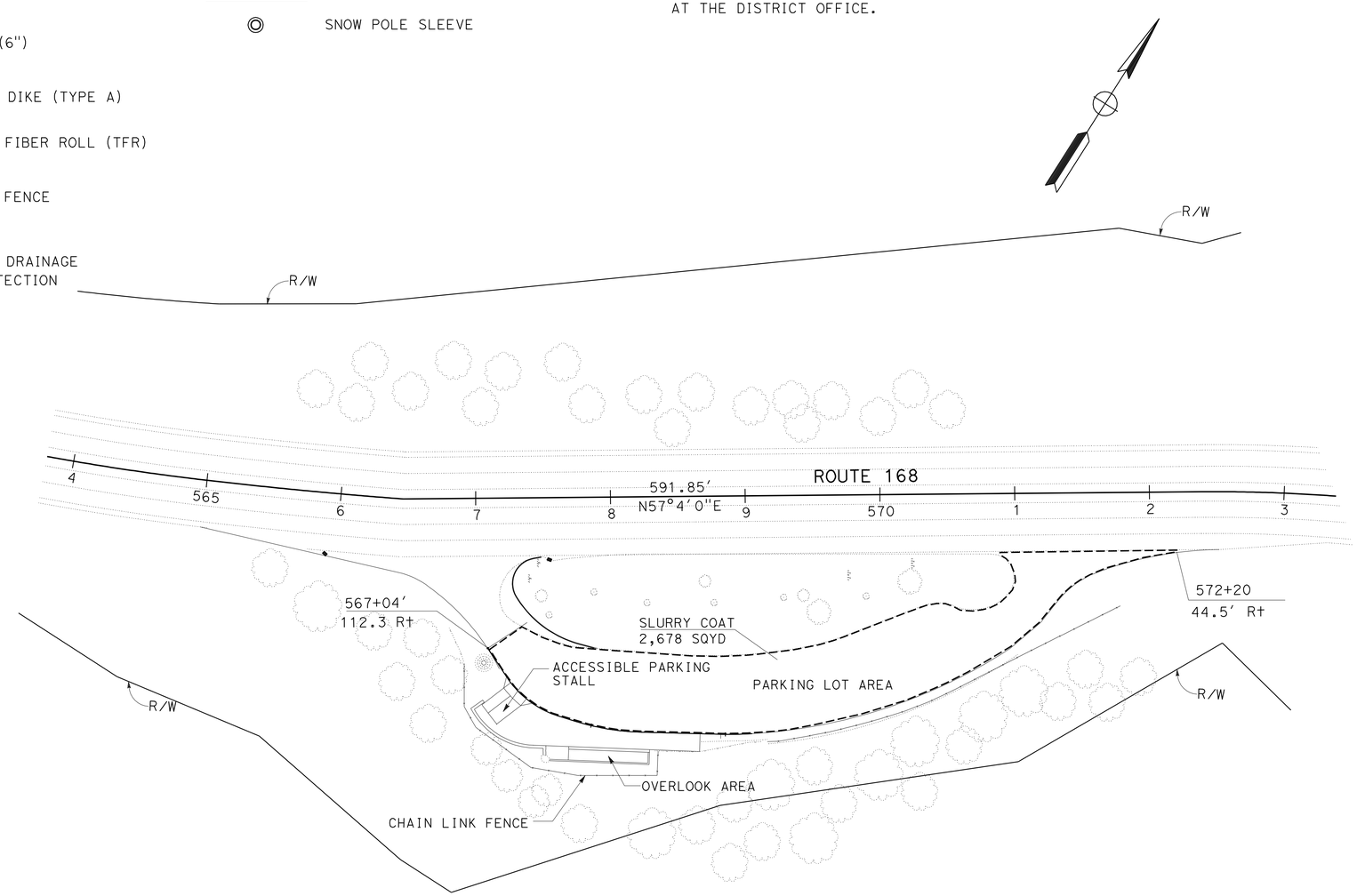

LAYOUT L-1

SCALE: 1" = 50'

STATE OF CALIFORNIA - DEPARTMENT OF TRANSPORTATION
Caltrans®
LANDSCAPE ARCHITECTURE

SENIOR LANDSCAPE ARCHITECT: ELBERT COX

CALCULATED-DESIGNED BY: RAYMOND SEGURA
CHECKED BY: DAVID MARTIN

REVISED BY | DATE REVISED

LAST REVISION 11-02-09
DATE PLOTTED => 14-JAN-2010
TIME PLOTTED => 09:16

Dist	COUNTY	ROUTE	POST MILES TOTAL PROJECT	SHEET No.	TOTAL SHEETS
06	Fre	168	R36.0	10	37

LICENSED LANDSCAPE ARCHITECT

1-11-10
PLANS APPROVAL DATE

LICENSED LANDSCAPE ARCHITECT
RICHARD B. COLE No. 3128
Expiration Date 06/30/10
Renewal Date 09/22/08
Date
STATE OF CALIFORNIA

THE STATE OF CALIFORNIA OR ITS OFFICERS OR AGENTS SHALL NOT BE RESPONSIBLE FOR THE ACCURACY OR COMPLETENESS OF SCANNED COPIES OF THIS PLAN SHEET.

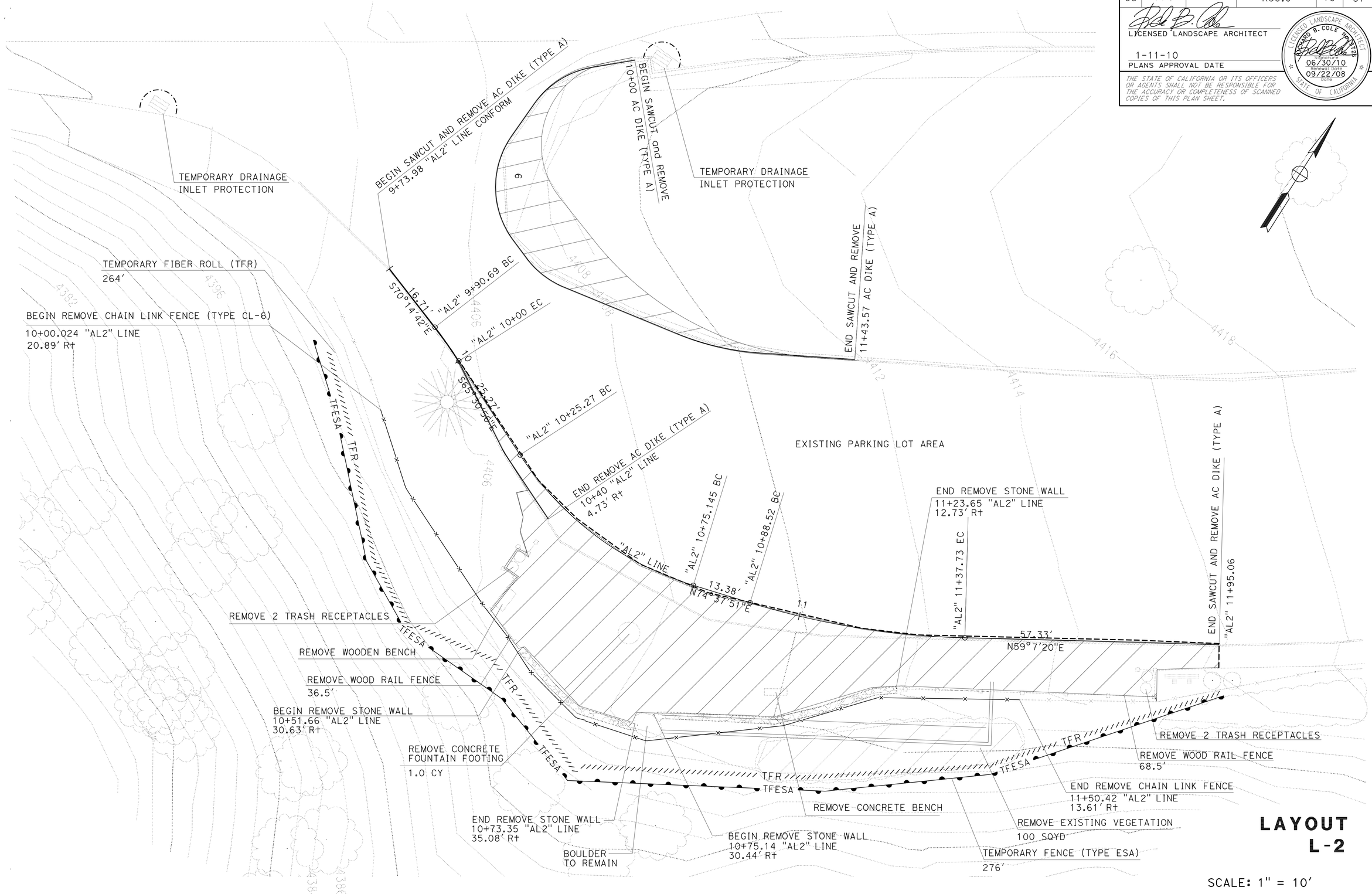

LAYOUT L-2

SCALE: 1" = 10'

STATE OF CALIFORNIA - DEPARTMENT OF TRANSPORTATION
Caltrans
LANDSCAPE ARCHITECTURE

SENIOR LANDSCAPE ARCHITECT: ELBERT COX

CALCULATED-DESIGNED BY: RAYMOND SEGURA
CHECKED BY: DAVID MARTIN

REVISED BY
DATE REVISED

LAST REVISION: 11-02-09
DATE PLOTTED => 14-JAN-2010
TIME PLOTTED => 09:16

Dist	COUNTY	ROUTE	POST MILES TOTAL PROJECT	SHEET No.	TOTAL SHEETS
06	Fre	168	R36.0	11	37

LICENSED LANDSCAPE ARCHITECT

1-11-10
PLANS APPROVAL DATE

LICENSED LANDSCAPE ARCHITECT
RICHARD B. COLE No. 3128
Expiration Date 06/30/10
Renewal Date 09/22/08
Date
STATE OF CALIFORNIA

THE STATE OF CALIFORNIA OR ITS OFFICERS OR AGENTS SHALL NOT BE RESPONSIBLE FOR THE ACCURACY OR COMPLETENESS OF SCANNED COPIES OF THIS PLAN SHEET.

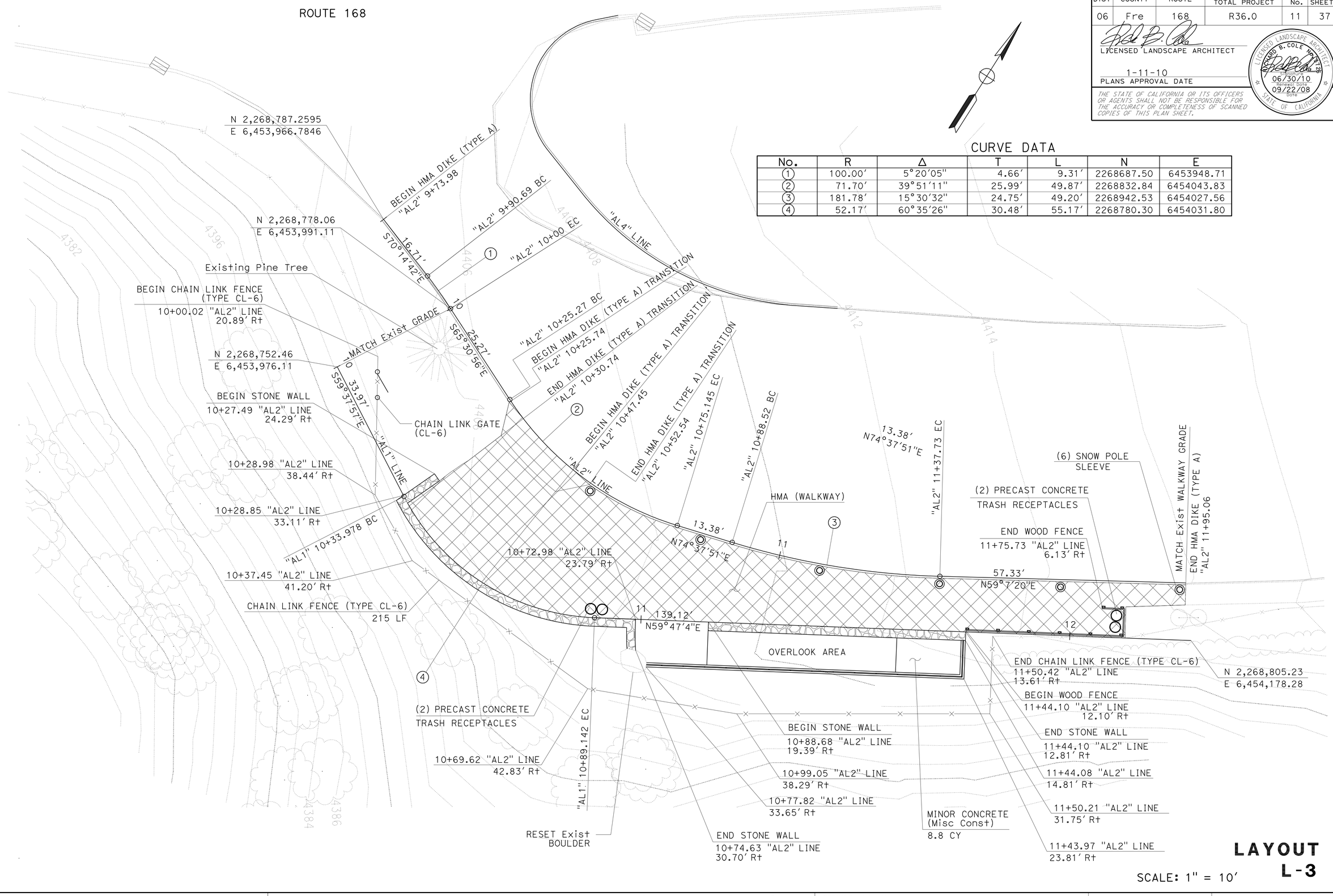

CURVE DATA

No.	R	Δ	T	L	N	E
1	100.00'	5°20'05"	4.66'	9.31'	2268687.50	6453948.71
2	71.70'	39°51'11"	25.99'	49.87'	2268832.84	6454043.83
3	181.78'	15°30'32"	24.75'	49.20'	2268942.53	6454027.56
4	52.17'	60°35'26"	30.48'	55.17'	2268780.30	6454031.80

LAYOUT L-3

STATE OF CALIFORNIA - DEPARTMENT OF TRANSPORTATION
LANDSCAPE ARCHITECTURE
Caltrans

SENIOR LANDSCAPE ARCHITECT: ELBERT COX
CALCULATED-DESIGNED BY: RAYMOND SEGURA
CHECKED BY: DAVID MARTIN
REVISED BY
DATE REVISED

LAST REVISION 11-02-09
DATE PLOTTED => 14-JAN-2010
TIME PLOTTED => 09:16

Dist	COUNTY	ROUTE	POST MILES TOTAL PROJECT	SHEET No.	TOTAL SHEETS
06	Fre	168	R36.0	12	37

LICENSED LANDSCAPE ARCHITECT

1-11-10
PLANS APPROVAL DATE

LICENSED LANDSCAPE ARCHITECT
RICHARD B. COLE No. 3128
Expiration Date 06/30/10
Renewal Date 09/22/08
Date
STATE OF CALIFORNIA

THE STATE OF CALIFORNIA OR ITS OFFICERS OR AGENTS SHALL NOT BE RESPONSIBLE FOR THE ACCURACY OR COMPLETENESS OF SCANNED COPIES OF THIS PLAN SHEET.

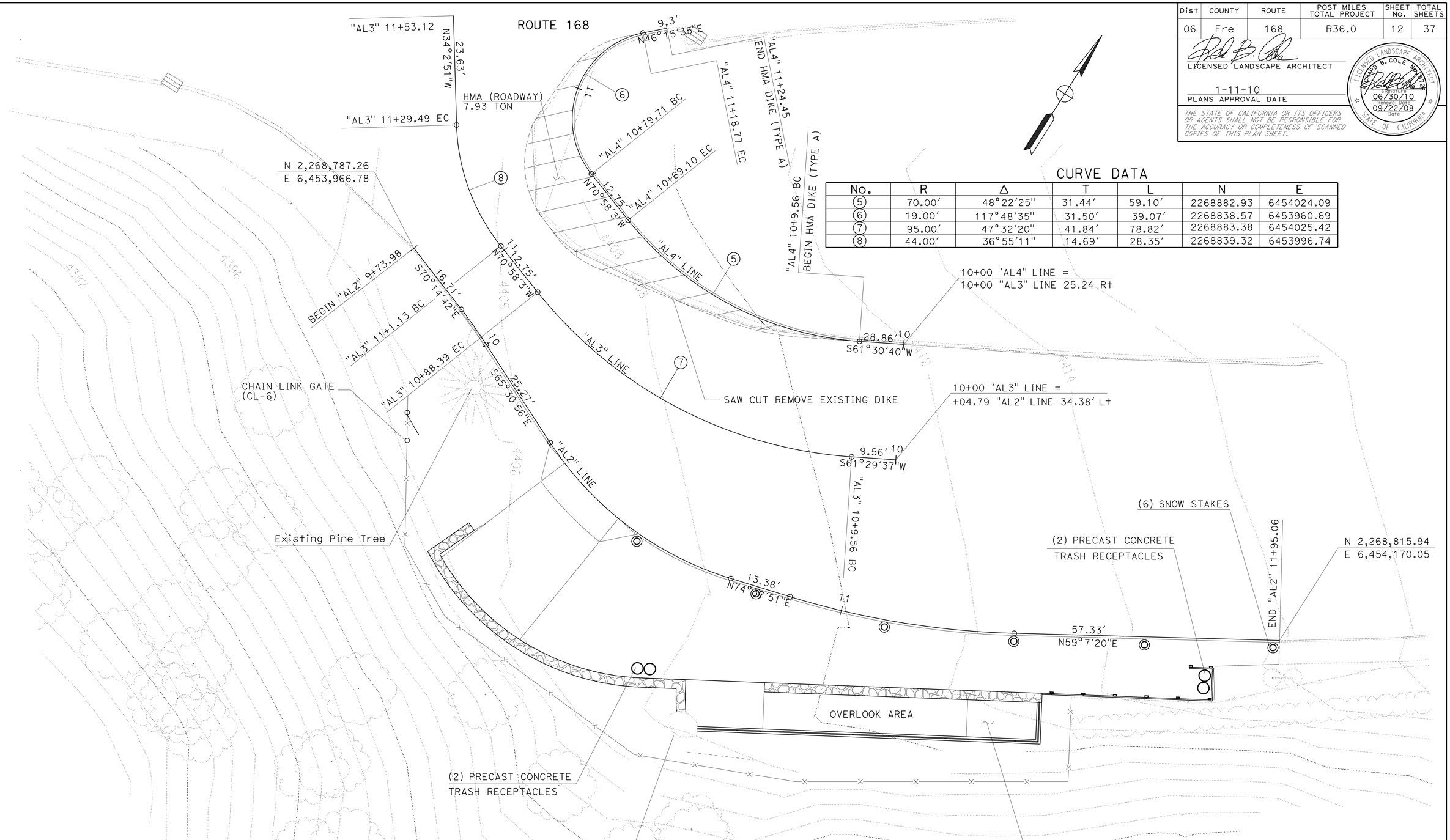

CURVE DATA

No.	R	Δ	T	L	N	E
5	70.00'	48°22'25"	31.44'	59.10'	2268882.93	6454024.09
6	19.00'	117°48'35"	31.50'	39.07'	2268838.57	6453960.69
7	95.00'	47°32'20"	41.84'	78.82'	2268883.38	6454025.42
8	44.00'	36°55'11"	14.69'	28.35'	2268839.32	6453996.74

LAYOUT L-4

SCALE: 1" = 10'

STATE OF CALIFORNIA - DEPARTMENT OF TRANSPORTATION
Caltrans
LANDSCAPE ARCHITECTURE

SENIOR LANDSCAPE ARCHITECT: ELBERT COX

CALCULATED-DESIGNED BY: RAYMOND SEGURA
CHECKED BY: DAVID MARTIN

REVISED BY | DATE REVISED

LAST REVISION 11-02-09 | DATE PLOTTED => 14-JAN-2010 | TIME PLOTTED => 09:16

Dist	COUNTY	ROUTE	POST MILES TOTAL PROJECT	SHEET No.	TOTAL SHEETS
06	Fre	168	R36.0	13	37

LICENSED LANDSCAPE ARCHITECT

1-11-10
PLANS APPROVAL DATE

LICENSED LANDSCAPE ARCHITECT
RICHARD B. COLE No. 3128
06/30/10
Renewal Date
09/22/08
Date
STATE OF CALIFORNIA

THE STATE OF CALIFORNIA OR ITS OFFICERS OR AGENTS SHALL NOT BE RESPONSIBLE FOR THE ACCURACY OR COMPLETENESS OF SCANNED COPIES OF THIS PLAN SHEET.

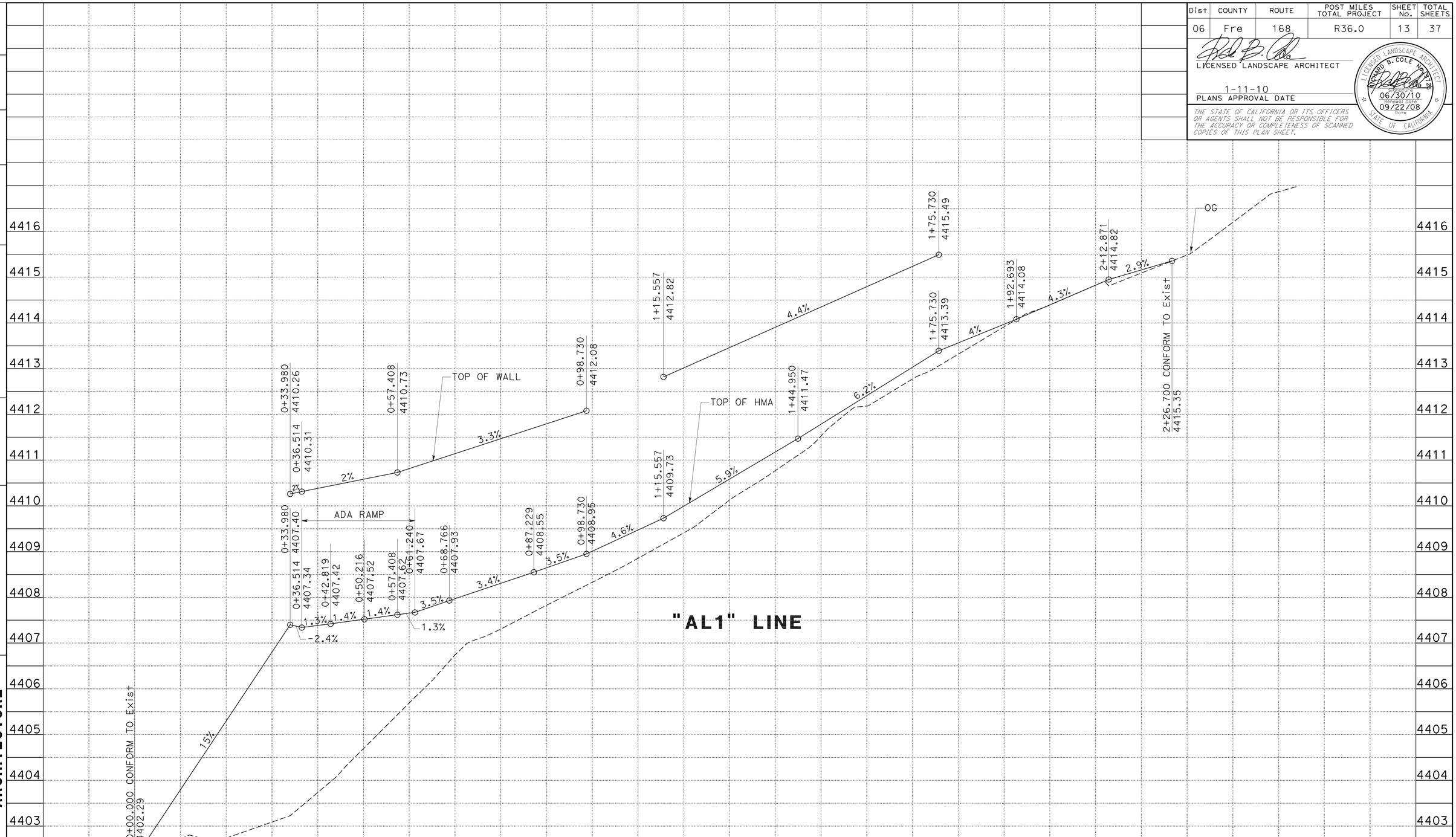

PROFILE P-1
SCALE: Horiz 1" = 10'
Vert 1" = 1'

STATE OF CALIFORNIA - DEPARTMENT OF TRANSPORTATION
Caltrans
LANDSCAPE ARCHITECTURE
FUNCTIONAL SUPERVISOR: ELBERT COX
CALCULATED-DESIGNED BY: RAYMOND SEGURA
CHECKED BY: DAVID MARTIN
REVISED BY
DATE REVISED

LAST REVISION 11-02-09
DATE PLOTTED => 14-JAN-2010
TIME PLOTTED => 09:16

Dist	COUNTY	ROUTE	POST MILES TOTAL PROJECT	SHEET No.	TOTAL SHEETS
06	Fre	168	R36.0	14	37

LICENSED LANDSCAPE ARCHITECT

1-11-10
PLANS APPROVAL DATE

LICENSED LANDSCAPE ARCHITECT
RICHARD B. COLE No. 2526
Expiration Date 06/30/10
Renewal Date 09/22/08
Date
STATE OF CALIFORNIA

THE STATE OF CALIFORNIA OR ITS OFFICERS OR AGENTS SHALL NOT BE RESPONSIBLE FOR THE ACCURACY OR COMPLETENESS OF SCANNED COPIES OF THIS PLAN SHEET.

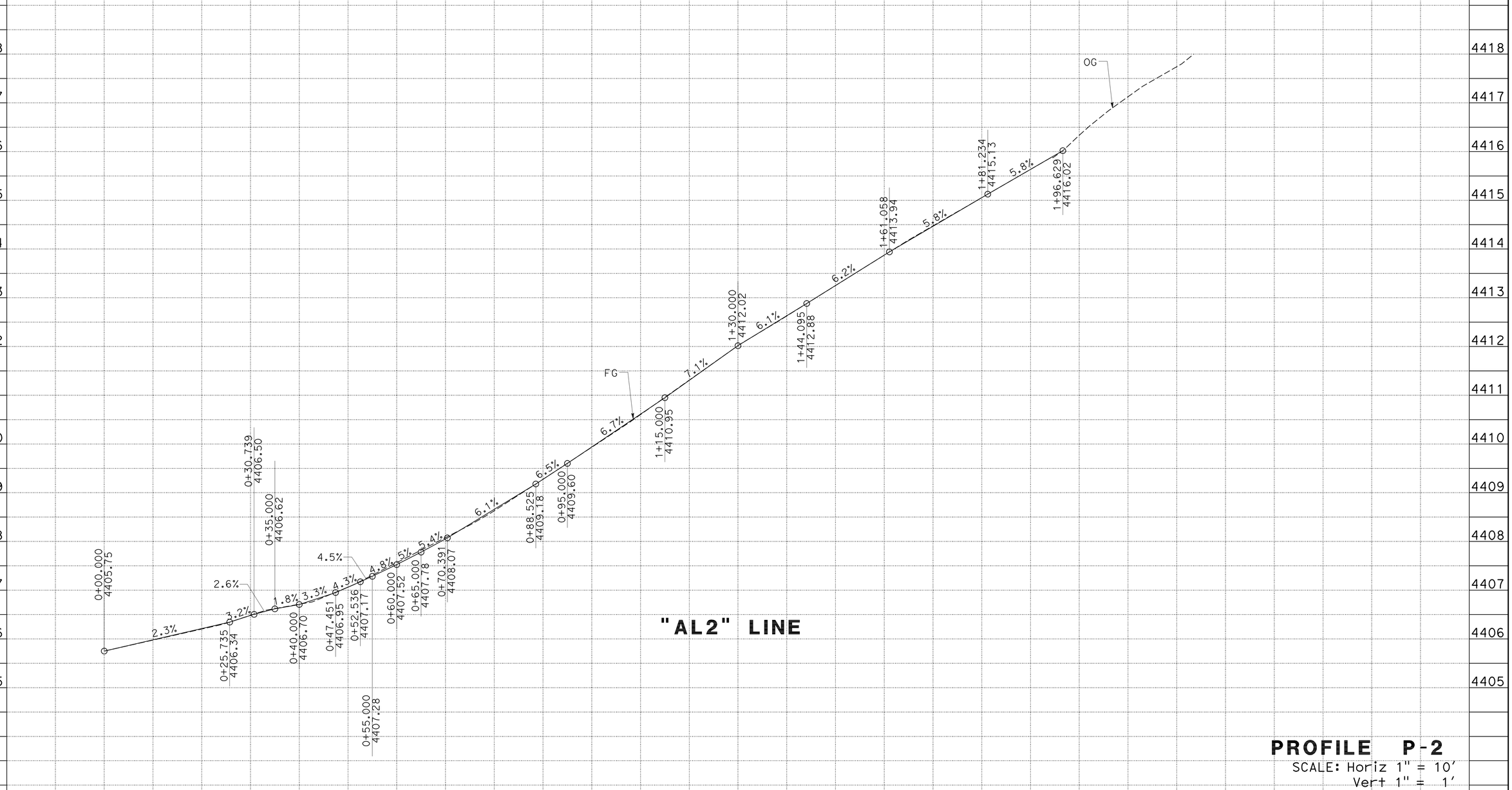

PROFILE P-2

SCALE: Horiz 1" = 10'
Vert 1" = 1'

REVISED BY	DATE REVISED

CALCULATED-DESIGNED BY: RAYMOND SEGURA
CHECKED BY: DAVID MARTIN

FUNCTIONAL SUPERVISOR: ELBERT COX

STATE OF CALIFORNIA - DEPARTMENT OF TRANSPORTATION
LANDSCAPE ARCHITECTURE
Caltrans

LAST REVISION 11-02-09
DATE PLOTTED => 14-JAN-2010
TIME PLOTTED => 09:17

Dist	COUNTY	ROUTE	POST MILES TOTAL PROJECT	SHEET No.	TOTAL SHEETS
06	Fre	168	R36.0	15	37

LICENSED LANDSCAPE ARCHITECT

1-11-10
PLANS APPROVAL DATE

LICENSED LANDSCAPE ARCHITECT R. B. COLE No. 3125 06/30/10 Renewal Date 09/22/08 Date STATE OF CALIFORNIA

THE STATE OF CALIFORNIA OR ITS OFFICERS OR AGENTS SHALL NOT BE RESPONSIBLE FOR THE ACCURACY OR COMPLETENESS OF SCANNED COPIES OF THIS PLAN SHEET.

ABBREVIATIONS:

TW - TOP OF WALL
TP - TOP OF PAVEMENT
TC - TOP OF CURB
FG - FINISH GRADE
AC - ASPHALT CONCRETE
FL - FLOWLINE
ADA - AMERICANS WITH DISABILITIES ACT

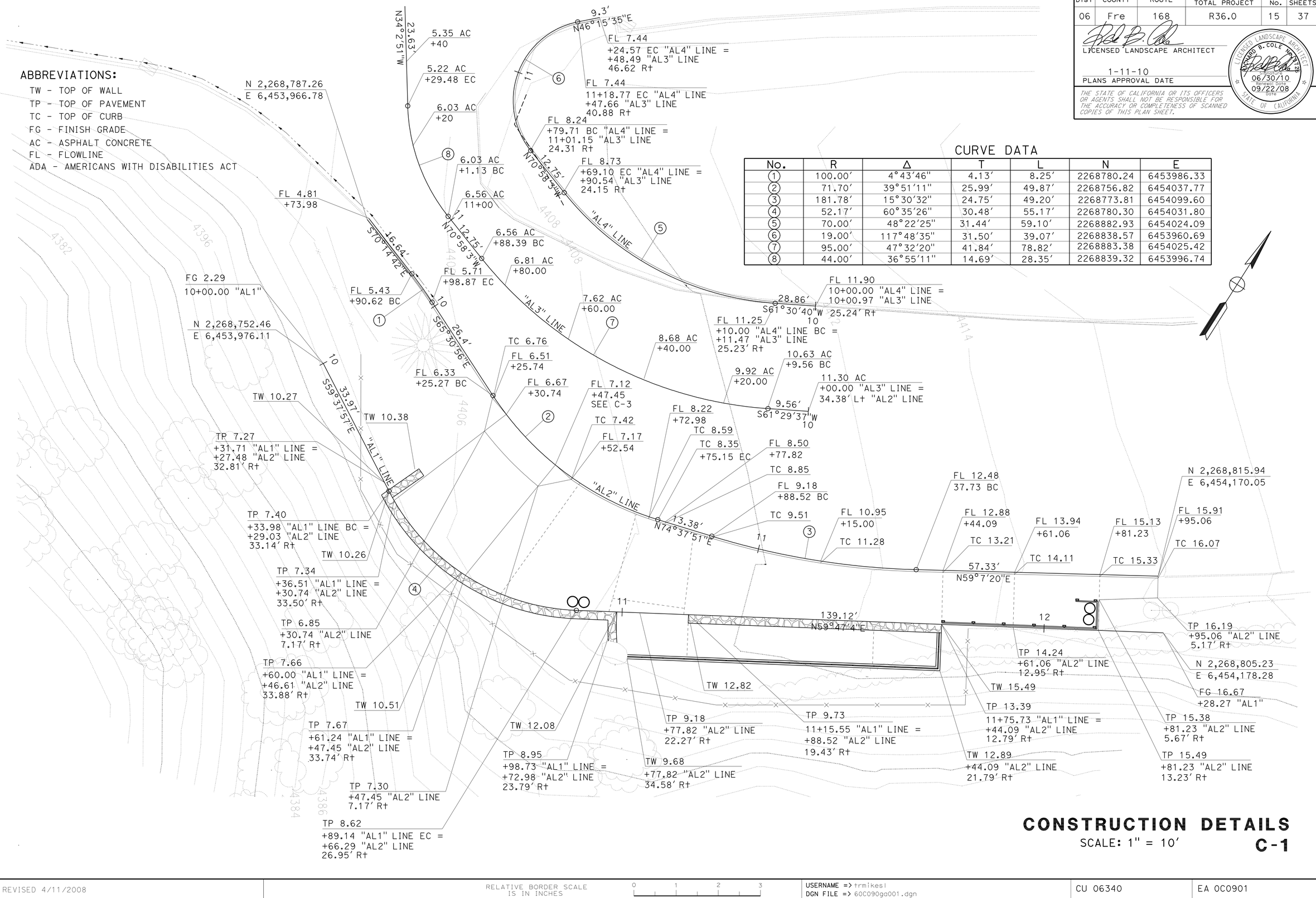

CURVE DATA

No.	R	Δ	T	L	N	E
1	100.00′	4°43′46"	4.13′	8.25′	2268780.24	6453986.33
2	71.70′	39°51′11"	25.99′	49.87′	2268756.82	6454037.77
3	181.78′	15°30′32"	24.75′	49.20′	2268773.81	6454099.60
4	52.17′	60°35′26"	30.48′	55.17′	2268780.30	6454031.80
5	70.00′	48°22′25"	31.44′	59.10′	2268882.93	6454024.09
6	19.00′	117°48′35"	31.50′	39.07′	2268838.57	6453960.69
7	95.00′	47°32′20"	41.84′	78.82′	2268883.38	6454025.42
8	44.00′	36°55′11"	14.69′	28.35′	2268839.32	6453996.74

CONSTRUCTION DETAILS

SCALE: 1" = 10′

C-1

STATE OF CALIFORNIA - DEPARTMENT OF TRANSPORTATION
Caltrans
LANDSCAPE ARCHITECTURE
SENIOR LANDSCAPE ARCHITECT: ELBERT COX
CALCULATED-DESIGNED BY: RAYMOND SEGURA
CHECKED BY: DAVID MARTIN
REVISED BY
DATE REVISED

LAST REVISION 11-02-09
DATE PLOTTED => 14-JAN-2010
TIME PLOTTED => 09:17

Dist	COUNTY	ROUTE	POST MILES TOTAL PROJECT	SHEET No.	TOTAL SHEETS
06	Fre	168	R36.0	16	37

LICENSED LANDSCAPE ARCHITECT

1-11-10
PLANS APPROVAL DATE

LICENSED LANDSCAPE ARCHITECT — RICHARD B. COLE No. 2128 — Expiration Date 06/30/10 — Renewal Date 09/22/08 — STATE OF CALIFORNIA

THE STATE OF CALIFORNIA OR ITS OFFICERS OR AGENTS SHALL NOT BE RESPONSIBLE FOR THE ACCURACY OR COMPLETENESS OF SCANNED COPIES OF THIS PLAN SHEET.

NOTE:

FOR COMPLETE RIGHT OF WAY DATA,
SEE RIGHT OF WAY RECORD MAPS AT DISTRICT OFFICE.

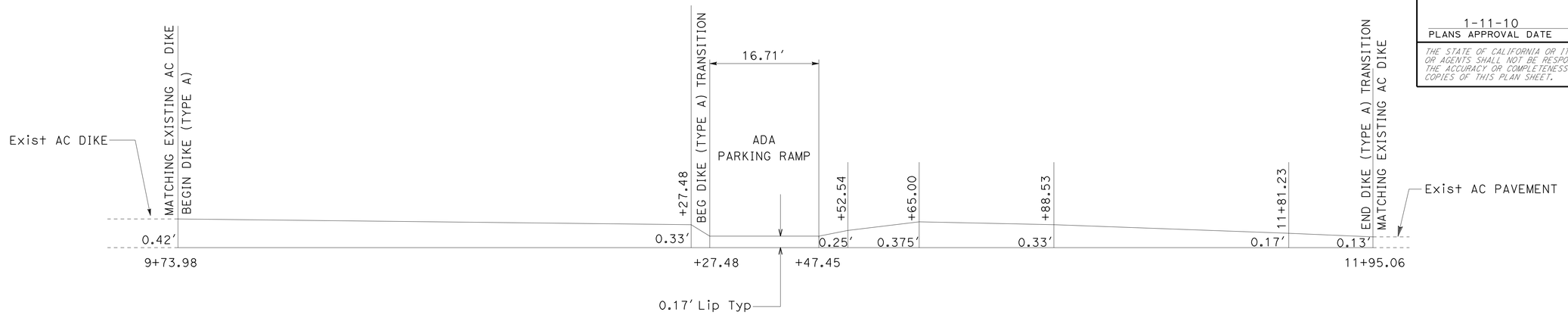

DIKE TRANSITION DETAIL "A"

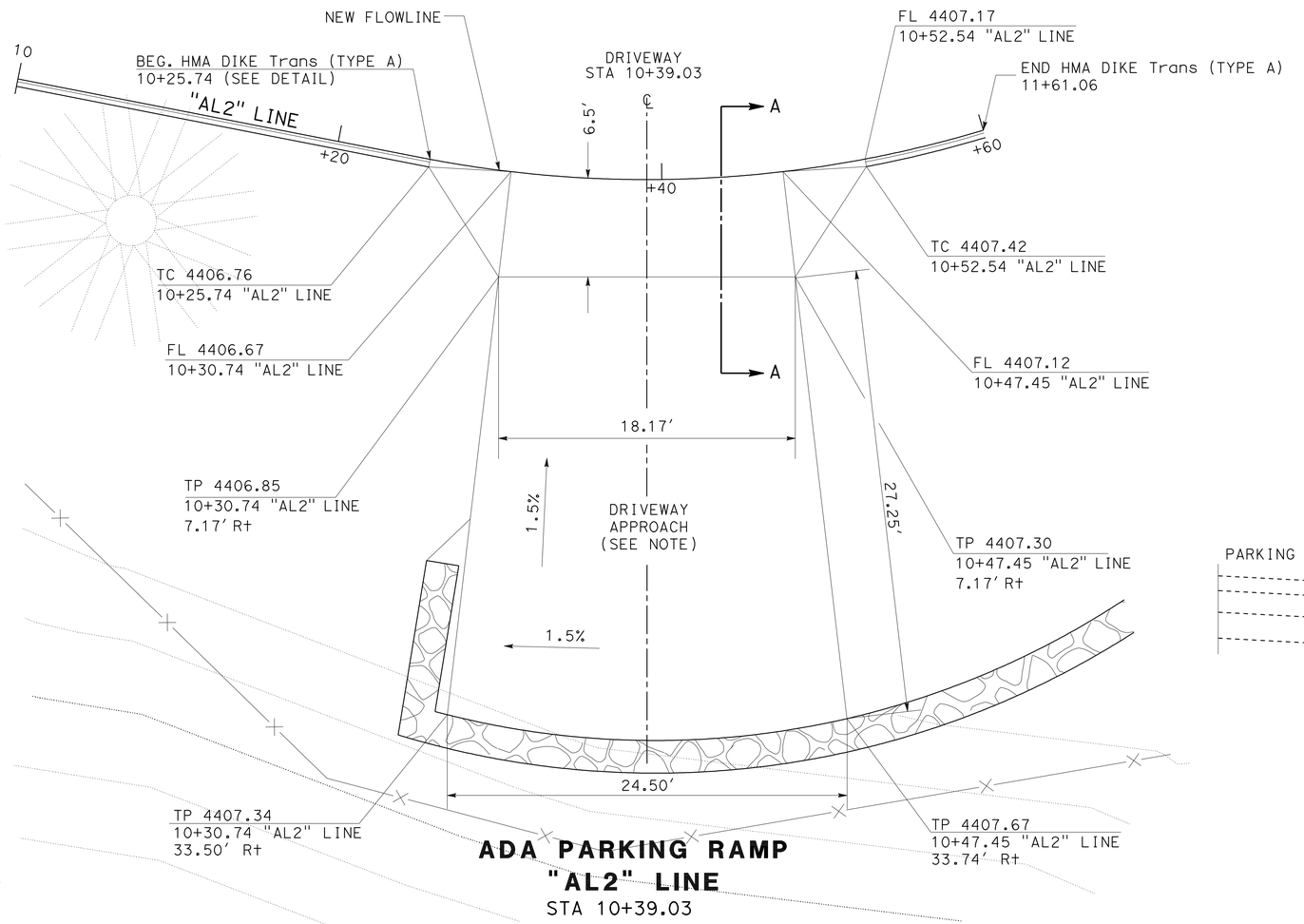

ADA PARKING RAMP "AL2" LINE

STA 10+39.03

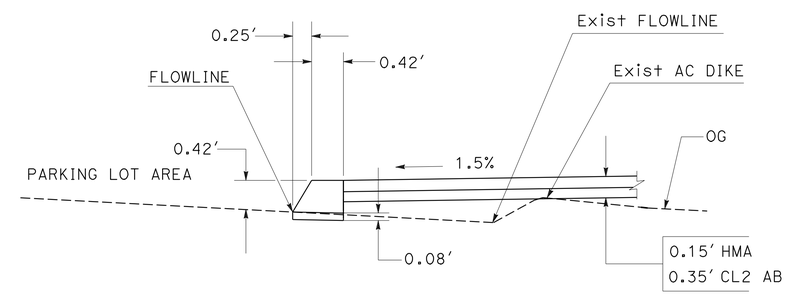

HOT MIX ASPHALT (TYPE A MODIFIED)

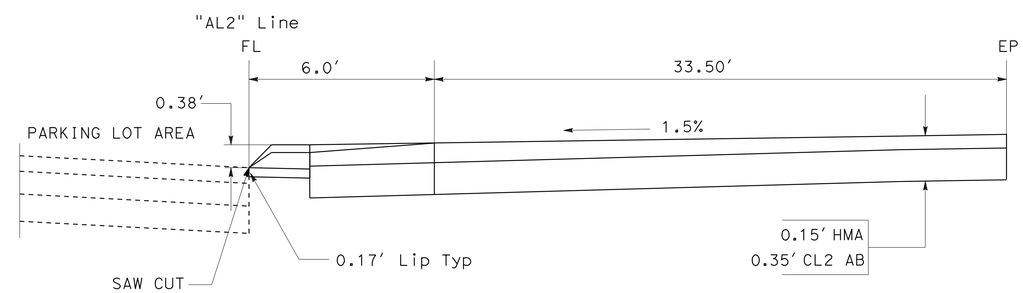

SECTION A-A

CONSTRUCTION DETAILS

NO SCALE

C-2

STATE OF CALIFORNIA - DEPARTMENT OF TRANSPORTATION
LANDSCAPE ARCHITECTURE
Caltrans

FUNCTIONAL SUPERVISOR: ELBERT COX
CALCULATED-DESIGNED BY: RAYMOND SEGURA
CHECKED BY: DAVID MARTIN
REVISED BY
DATE REVISED

LAST REVISION 11-02-09
DATE PLOTTED => 14-JAN-2010
TIME PLOTTED => 09:17

NOTE:

FOR DETAILS AND NOTES NOT SHOWN SEE STANDARD PLAN A90A

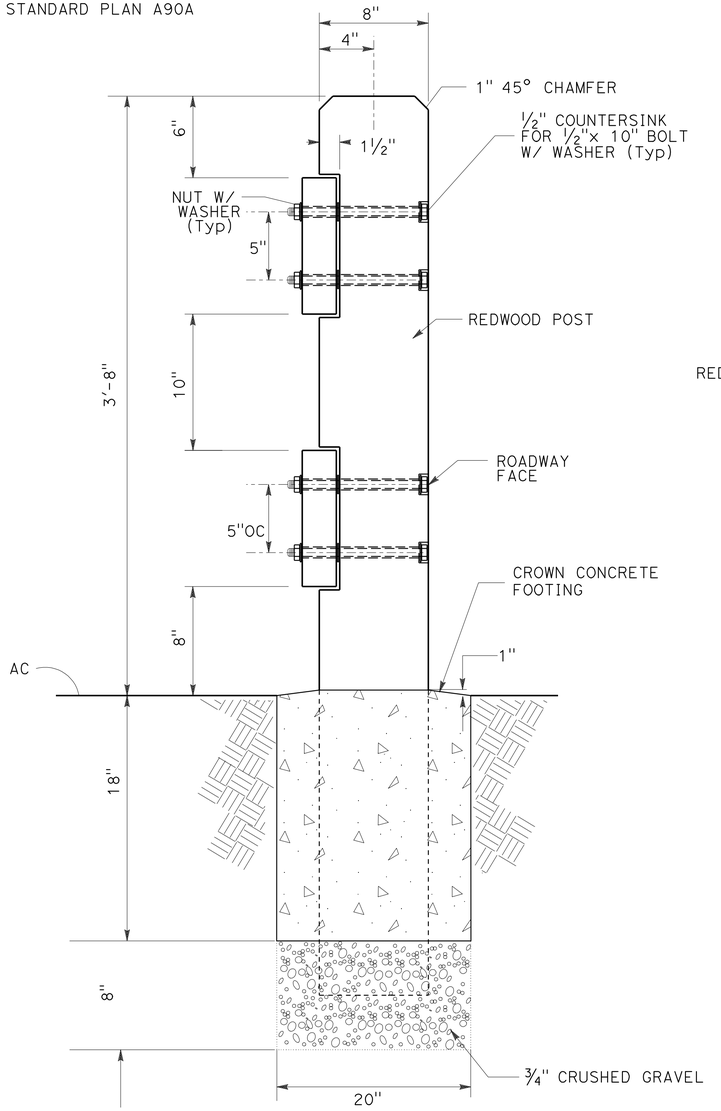

SECTION

TIMBER FENCE

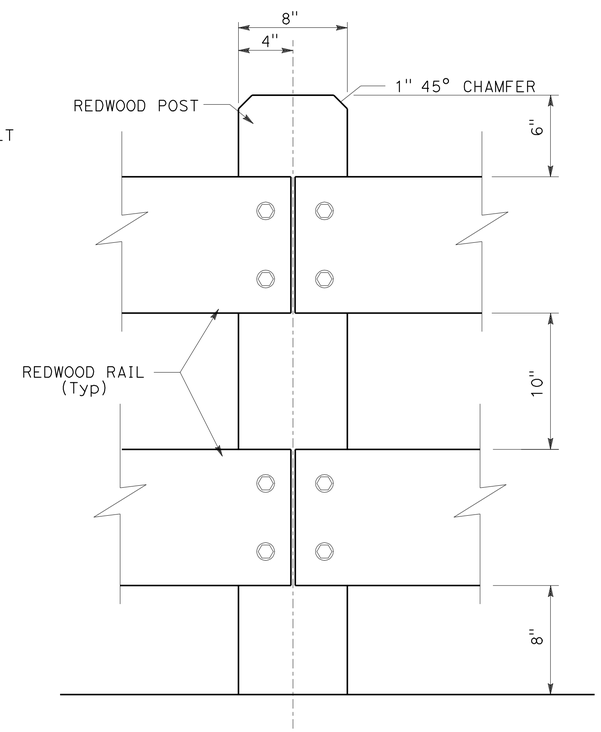

ELEVATION

TIMBER FENCE

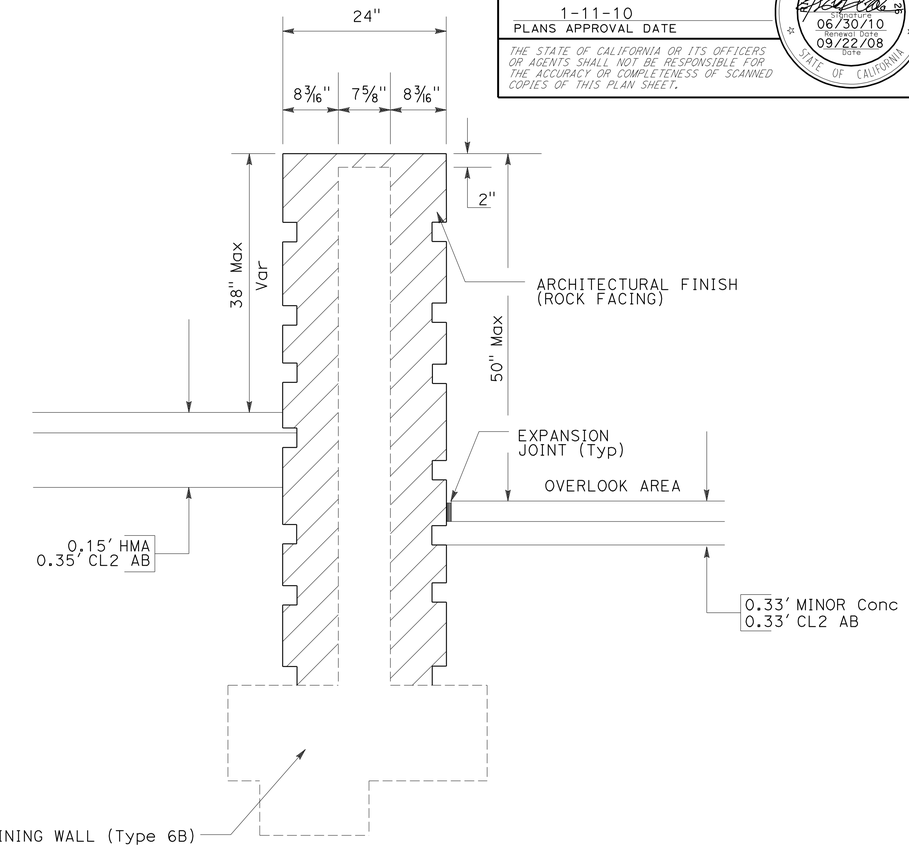

SECTION

STONE WALL ARCHITECTURAL FINISH

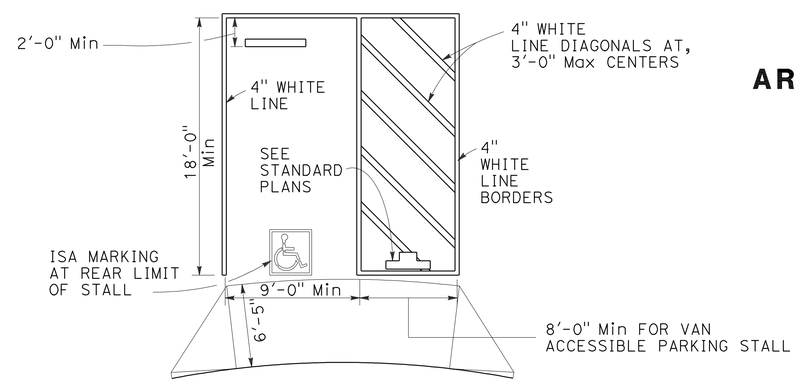

ACCESSIBLE PARKING STALL

Dist	COUNTY	ROUTE	POST MILES TOTAL PROJECT	SHEET No.	TOTAL SHEETS
06	Fre	168	R36.0	17	37

LICENSED LANDSCAPE ARCHITECT

1-11-10
PLANS APPROVAL DATE

LICENSED LANDSCAPE ARCHITECT — RICHARD B. COLE No. 3128 — Expiration Date 06/30/10 — Renewal Date 09/22/08 — Date — STATE OF CALIFORNIA

THE STATE OF CALIFORNIA OR ITS OFFICERS OR AGENTS SHALL NOT BE RESPONSIBLE FOR THE ACCURACY OR COMPLETENESS OF SCANNED COPIES OF THIS PLAN SHEET.

CONSTRUCTION DETAILS

NO SCALE

C-3

STATE OF CALIFORNIA - DEPARTMENT OF TRANSPORTATION
Caltrans®
LANDSCAPE ARCHITECTURE

SENIOR LANDSCAPE ARCHITECT: ELBERT COX
CALCULATED-DESIGNED BY: RAYMOND SEGURA
CHECKED BY: DAVID MARTIN
REVISED BY
DATE REVISED

LAST REVISION 11-02-09
DATE PLOTTED => 14-JAN-2010
TIME PLOTTED => 09:17

Dist	COUNTY	ROUTE	POST MILES TOTAL PROJECT	SHEET No.	TOTAL SHEETS
06	Fre	168	R36.0	18	37

LICENSED LANDSCAPE ARCHITECT

1-11-10
PLANS APPROVAL DATE

LICENSED LANDSCAPE ARCHITECT
RICHARD B. COLE No. 3128
Expiration Date 06/30/10
Renewal Date 09/22/08
STATE OF CALIFORNIA

THE STATE OF CALIFORNIA OR ITS OFFICERS OR AGENTS SHALL NOT BE RESPONSIBLE FOR THE ACCURACY OR COMPLETENESS OF SCANNED COPIES OF THIS PLAN SHEET.

NOTE:

FOR DETAILS AND REINFORCEMENT NOT SHOWN
SEE STANDARD PLANS

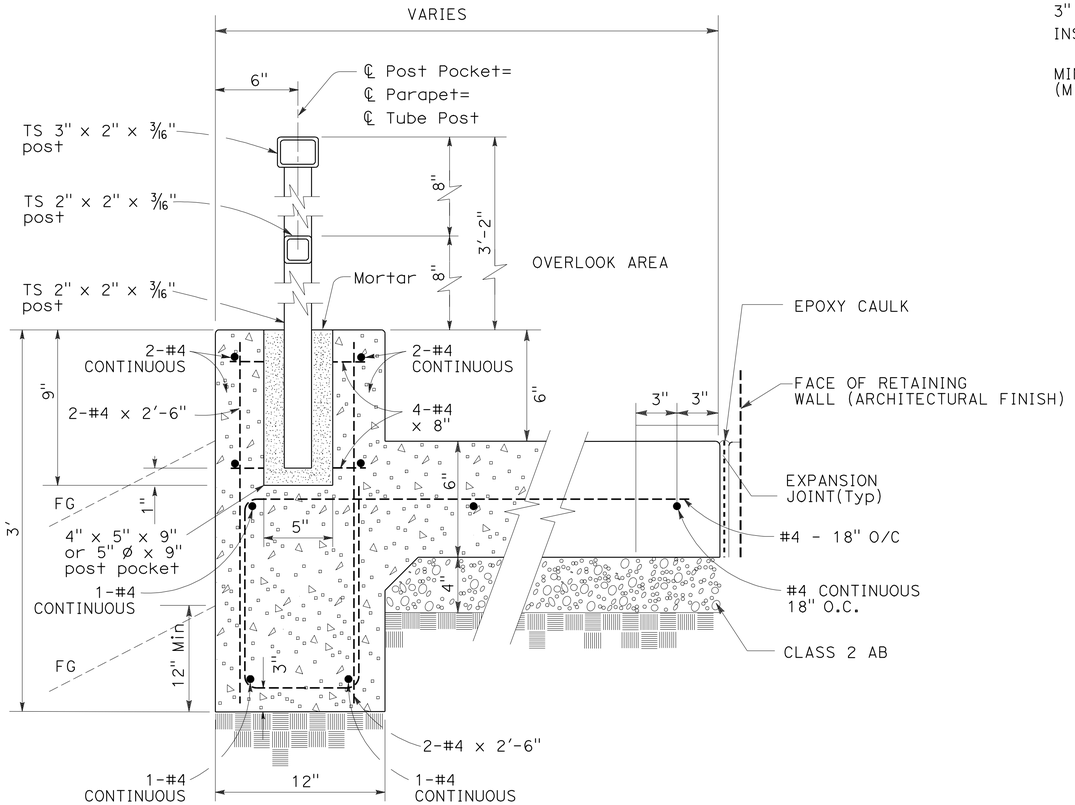

SECTION

TUBULAR HAND RAILING DETAIL

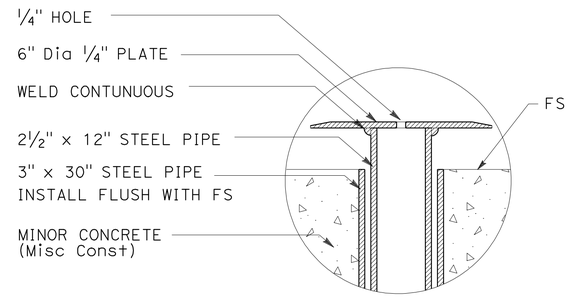

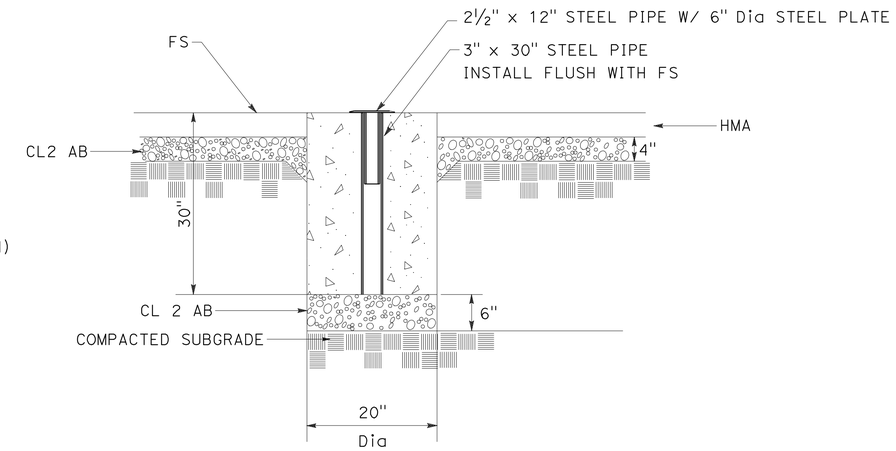

SECTION

SNOW POLE SLEEVE

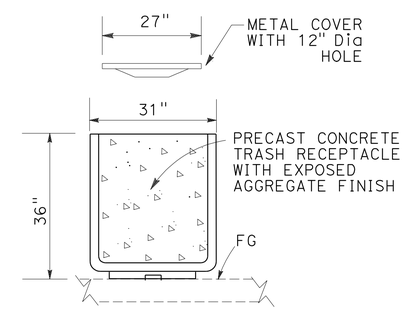

SECTION

PRECAST CONCRETE TRASH CONTAINER

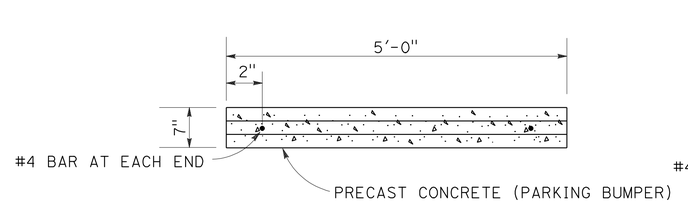

PLAN

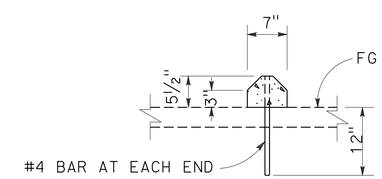

SECTION

PARKING BUMPER (PRECAST CONCRETE)

CONSTRUCTION DETAILS

NO SCALE

C-4

STATE OF CALIFORNIA - DEPARTMENT OF TRANSPORTATION
Caltrans
LANDSCAPE ARCHITECTURE

SENIOR LANDSCAPE ARCHITECT: ELBERT COX
CALCULATED-DESIGNED BY: RAYMOND SEGURA
CHECKED BY: DAVID MARTIN
REVISED BY
DATE REVISED

LAST REVISION 11-02-09
DATE PLOTTED => 14-JAN-2010
TIME PLOTTED => 09:17

Dist	COUNTY	ROUTE	POST MILES TOTAL PROJECT	SHEET No.	TOTAL SHEETS
06	Fre	168	R36.0	19	37

LICENSED LANDSCAPE ARCHITECT

1-11-10
PLANS APPROVAL DATE

LICENSED LANDSCAPE ARCHITECT
RICHARD B. COLE No. 3128
Expiration Date 06/30/10
Renewal Date 09/22/08
Date
STATE OF CALIFORNIA

THE STATE OF CALIFORNIA OR ITS OFFICERS OR AGENTS SHALL NOT BE RESPONSIBLE FOR THE ACCURACY OR COMPLETENESS OF SCANNED COPIES OF THIS PLAN SHEET.

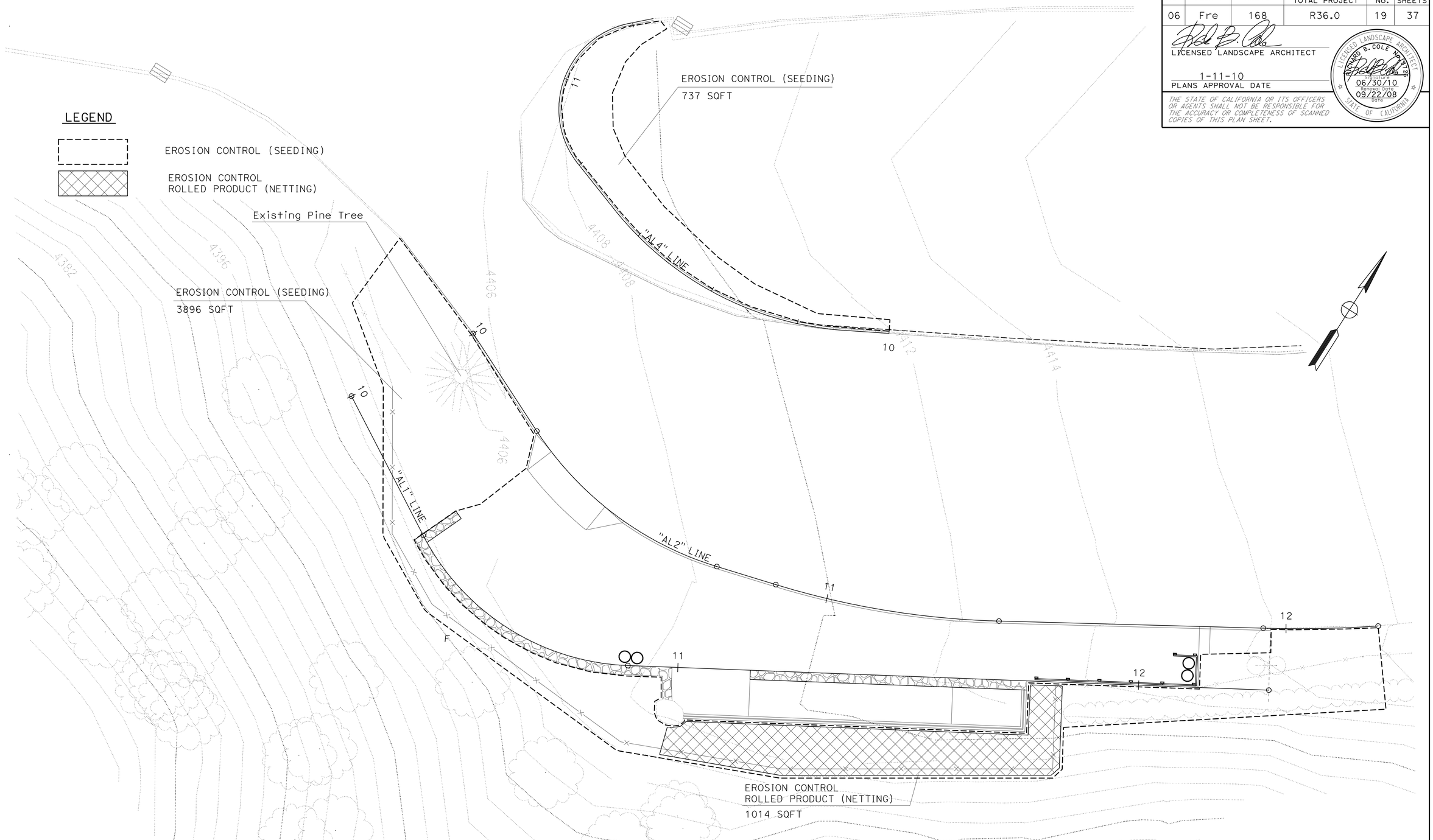

THIS PLAN ACCURATE FOR EROSION CONTROL WORK ONLY

EROSION CONTROL PLAN

SCALE: 1" = 10'

EC-1

STATE OF CALIFORNIA - DEPARTMENT OF TRANSPORTATION
Caltrans
LANDSCAPE ARCHITECTURE

SENIOR LANDSCAPE ARCHITECT: ELBERT COX

CALCULATED-DESIGNED BY: RAYMOND SEGURA
CHECKED BY: DAVID MARTIN

REVISED BY
DATE REVISED

LAST REVISION 11-02-09
DATE PLOTTED => 14-JAN-2010
TIME PLOTTED => 09:18

Dist	COUNTY	ROUTE	POST MILES TOTAL PROJECT	SHEET No.	TOTAL SHEETS
06	Fre	168	R36.0	20	37

Hassan Taha 06-16-08
REGISTERED CIVIL ENGINEER DATE

1-11-10
PLANS APPROVAL DATE

REGISTERED PROFESSIONAL ENGINEER HASSAN M. TAHA No. 60130 Exp. 06/30/10 CIVIL STATE OF CALIFORNIA

THE STATE OF CALIFORNIA OR ITS OFFICERS OR AGENTS SHALL NOT BE RESPONSIBLE FOR THE ACCURACY OR COMPLETENESS OF ELECTRONIC COPIES OF THIS PLAN SHEET.

STATIONARY MOUNTED CONSTRUCTION AREA SIGNS

SIGN No.	SIGN CODE	PANEL SIZE	SIGN MESSAGE	No. OF POSTS	POST SIZE	No. OF SIGNS
A	W20-1	48" x 48"	ROAD WORK AHEAD	2	6" x 6"	1
B	G20-2	48" x 24"	END ROAD WORK	2	4" x 4"	1
C	R11-2	24" x 36"	ROAD CLOSED	ATTACH TO BARRICADE		2

LOCATION	TYPE III BARRICADE
EB ENTRANCE	4
WB ENTRANCE	4
TOTAL	8

NOTE: SIGN LOCATIONS SHOWN ARE APPROXIMATE ONLY. EXACT LOCATIONS TO BE DETERMINED BY THE ENGINEER.

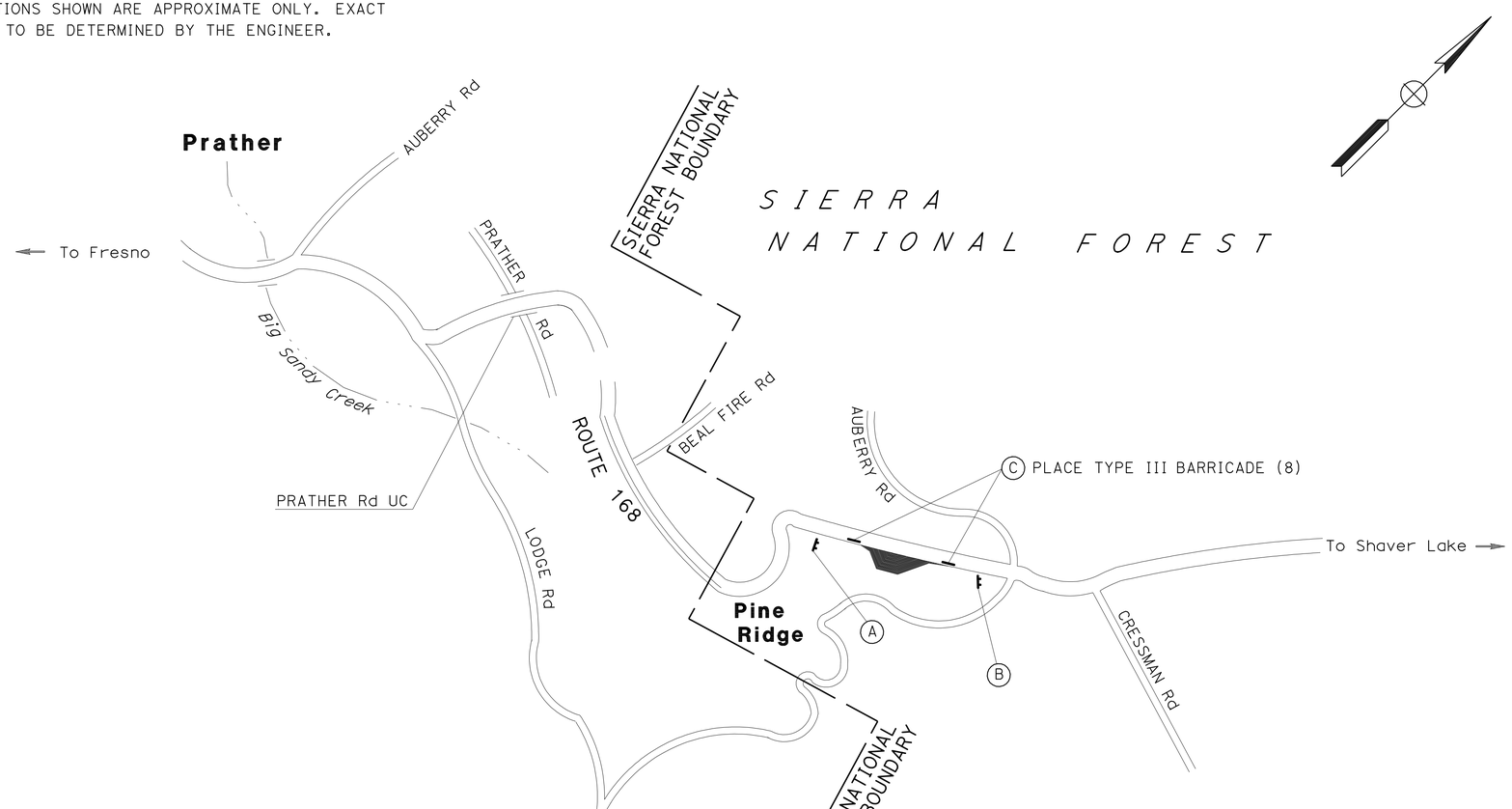

THIS PLAN ACCURATE FOR CONSTRUCTION AREA SIGN ONLY.

CONSTRUCTION AREA SIGNS AND TRAFFIC HANDLING PLAN

NO SCALE

CS-1

STATE OF CALIFORNIA - DEPARTMENT OF TRANSPORTATION
Caltrans
TRAFFIC DESIGN

FUNCTIONAL SUPERVISOR: MOHAMMED QATAMI
CALCULATED-DESIGNED BY: SOFIAN DAWOOD
CHECKED BY: HASSAN TAHA
REVISED BY
DATE REVISED

LAST REVISION 06-16-08
DATE PLOTTED => 14-JAN-2010
TIME PLOTTED => 09:18

Dist	COUNTY	ROUTE	POST MILES TOTAL PROJECT	SHEET No.	TOTAL SHEETS
06	Fre	168	R36.0	21	37

Hassan Taha 10-18-09
REGISTERED CIVIL ENGINEER DATE

1-11-10
PLANS APPROVAL DATE

REGISTERED PROFESSIONAL ENGINEER HASSAN M. TAHA No. 60130 Exp. 06/30/10 CIVIL STATE OF CALIFORNIA

THE STATE OF CALIFORNIA OR ITS OFFICERS OR AGENTS SHALL NOT BE RESPONSIBLE FOR THE ACCURACY OR COMPLETENESS OF SCANNED COPIES OF THIS PLAN SHEET.

NOTE: "NO PARKING" IN Min 12" HIGH WHITE LETTERS TO BE PLACED WITHIN ACCESS AISLE.

LEGEND:

- DISABLED PERSONS PARKING PAINTED PAVEMENT MARKING
- ROADSIDE SIGN ONE-POST
- (X) ROADSIDE SIGN No.

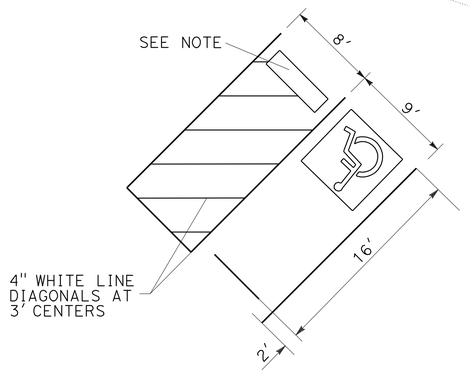

DETAIL "A"

ACCESSIBLE PARKING STALL

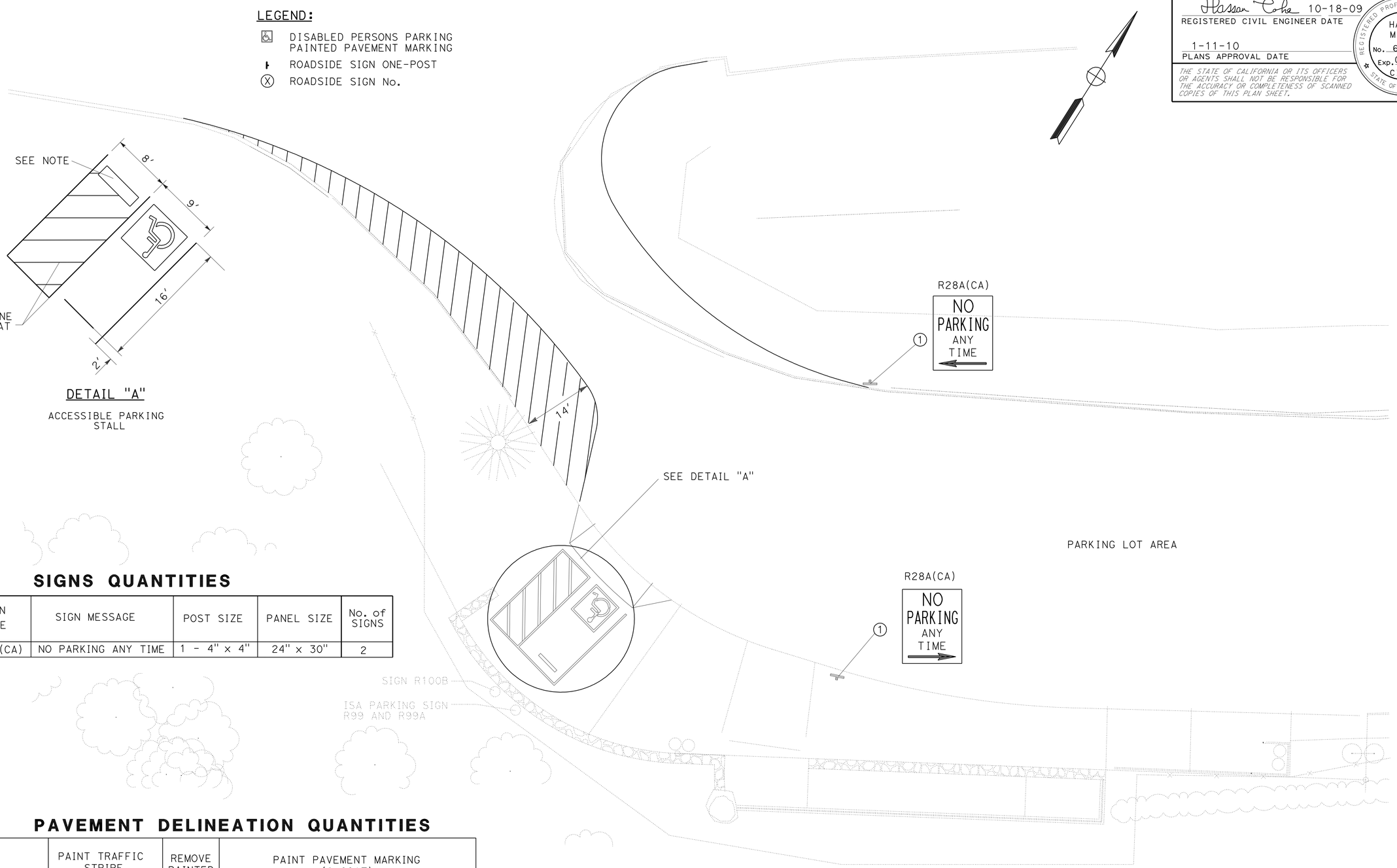

SIGNS QUANTITIES

SIGN No.	SIGN CODE	SIGN MESSAGE	POST SIZE	PANEL SIZE	No. of SIGNS
1	R28A(CA)	NO PARKING ANY TIME	1 - 4" x 4"	24" x 30"	2

PAVEMENT DELINEATION QUANTITIES

SHEET No.	PAINT TRAFFIC STRIPE (2-COAT)	REMOVE PAINTED TRAFFIC STRIPE	PAINT PAVEMENT MARKING (2-COAT)		
	4" WHITE		DESCRIPTION	WHITE	BLUE
	LF	LF		SQFT	
PD-1	600	30	1-NO PARKING	2	
		30	1-HANDICAP PARKING SYMBOL	9	14
TOTAL	600			25	

THIS PLAN ACCURATE FOR TRAFFIC HANDLING ONLY

PAVEMENT DELINEATION PLAN

NO SCALE

PD-1

REVISED BY | DATE REVISED
VANIK POGOSYAN | HASSAN TAHA
CALCULATED-DESIGNED BY | CHECKED BY
SUPERVISING ENGINEER | MOHAMMED QATAMI
STATE OF CALIFORNIA - DEPARTMENT OF TRANSPORTATION
Caltrans TRAFFIC DESIGN

LAST REVISION 10-17-09 | DATE PLOTTED => 14-JAN-2010 TIME PLOTTED => 09:18

Dist	COUNTY	ROUTE	POST MILES TOTAL PROJECT	SHEET No.	TOTAL SHEETS
06	Fre	168	R36.0	22	37

LICENSED LANDSCAPE ARCHITECT

1-11-10
PLANS APPROVAL DATE

LICENSED LANDSCAPE ARCHITECT
RICHARD B. COLE No. 2626
Expiration Date 06/30/10
Renewal Date 09/01/09
Date
STATE OF CALIFORNIA

THE STATE OF CALIFORNIA OR ITS OFFICERS OR AGENTS SHALL NOT BE RESPONSIBLE FOR THE ACCURACY OR COMPLETENESS OF SCANNED COPIES OF THIS PLAN SHEET.

ROADWAY QUANTITIES

LOCATION	WORK DESCRIPTION	ROADWAY EXCAVATION	EMBANKMENT (N)	HMA (TYPE A)	CLASS 2 AB	MINOR CONCRETE (MISC CONSTRUCTION	BAR REINFORCING STEEL	SLURRY SEAL		ASPHALT EMULSION
		CY	CY	TON	CY	CY	LB	SQYD (N)	TON	TON
10+00 TO 11+96.63 "AL2" LINE	WALKWAY	19.6	34.1	37.6	43.3					0.3
10+00 TO 11+24.45 "AL3" LINE	ROADWAY ENTRANCE	48.7	0.1	13.0	12.9					0.1
10+98.73 TO 11+89.14 "AL1" LINE	OVERLOOK	12.2	1.1	-	8.8	18	1180			
567+04 TO 572+20 "RTE 168"	PARKING AREA							2678	15.4	3.1
SITE AMENITIES ****	HMA DIKE (TYPE A MODIFIED)			9.3		6				
	TOTAL	80.5	35.3	59.9	65.0	24	1180	2678	15.4	3.5

HMA DIKE

LOCATION	PLACE HMA DIKE (TYPE A MODIFIED)	HMA (TYPE A) **	* REMOVE AC DIKE (N)
	LF	TON	LF
9+73.98 TO 11+96.63 "AL2" LINE	221	6.0	
10+09.56 TO 11+24.45 "AL4" LINE	115	3.3	
9.73.98 TO 10+40 "AL2" LINE			66
10+00 TO 11+43.57 "AL3" LINE			144
TOTAL	336	9.3	210

REMOVE AND RESET

LOCATION	REMOVE CONCRETE FOUNTAIN FOOTING		REMOVE STONE WALL		REMOVE TRASH CONTAINERS	REMOVE CHAIN LINK FENCE	REMOVE CONCRETE BENCH	REMOVE WOOD RAIL FENCE	REMOVE VEGETATION	RESET BOULDER
	(N)	(N)	(N)	(N)	(N)	(N)	(N)	(N)	(N)	
10+00 TO 11+96.63 "AL2" LINE	CY	EA	CY	LF	EA	LF	EA	LF	SQYD	EA
	1	1	19.6	71	4	180	1	105	100	1

RETAINING WALL QUANTITIES

LOCATION	MASONRY BLOCK WALL	STRUCTURAL CONCRETE (RETAINING WALL)	BAR REINFORCING STEEL (RETAINING WALL)	STRUCTURE BACKFILL (RETAINING WALL)	STRUCTURE EXCAVATION (RETAINING WALL)	EMBANKMENT	ARCHITECTURAL FINISH (ROCK FACING)	
	SQFT	CY	LB	CY	CY	(N)	SQFT	TON (N)
Sta 10+31.71 TO 10+98.73 "AL1"	424.7	9	1636	34.5	42.4	28.8	1038.1	69.2
Sta 11+15.73 TO 11+89.14 "AL1"	352.8	8	1256	27.9	45.9	23.3	870.1	58.1
TOTAL	777.5	17	2892	62.4	88.3	52.1	1908.2	127.3

TIMBER FENCE

LOCATION	LENGTH	POST (N)	RAIL (N)	CONCRETE (N)
	LF	EA	LF	CY
11+44.10 TO 11+81.01 "AL2" LINE	49	8	104	0.7
TOTAL	49	8	104	0.7

EROSION CONTROL

SEEDING	LINER PLANTS (PLANT GROUP M)	ROLLED PRODUCT (NETTING)
SQFT	EA	SQFT
3896	503	1014

RAILING

LOCATION	TUBULAR HAND RAILING	
	LF	LB (N)
10+98.73 TO 11+89.14 "AL1" LINE	83	3122
TOTAL	83	3122

CHAIN LINK FENCE (TYPE CL-6)

LOCATION	FENCE	GATE
	LF	EA
10+10.02 TO 11+50.42 "AL2" LINE	215	1
TOTAL	215	1

TEMPORARY WATER POLLUTION CONTROL

TEMPORARY CONCRETE WASHOUT FACILITY (PORTABLE)	TEMPORARY DRAINAGE INLET PROTECTION	TEMPORARY FIBER ROLL	TEMPORARY FENCE (TYPE ESA)
EA	EA	LF	LF
1	2	264	276

SITE AMENITIES

	SNOW POLE SLEEVE	MINOR CONCRETE (MISC CONSTRUCTION)	PRECAST CONCRETE TRASH CONTAINER	PARKING BUMPER (PRECAST CONCRETE)
	EA	CY ****	EA ***	EA
10+10.02 TO 11+50.42 "AL2" LINE	6	6	4	1
TOTAL	6	6	4	1

(N) NOT A SEPARATE PAY ITEM FOR INFORMATION ONLY
* INCLUDED IN ROADWAY EXCAVATION IN ROADWAY QUANTITIES TABLE
** INCLUDED IN ROADWAY QUANTITIES TABLE, HMA (TYPE A)
*** REFER TO LAYOUT SHEETS FOR LOCATION/LOCATION T.B.D. BY R.E.
**** INCLUDED IN ROADWAY QUANTITIES

SUMMARY OF QUANTITIES
Q-1

STATE OF CALIFORNIA - DEPARTMENT OF TRANSPORTATION
Caltrans® LANDSCAPE ARCHITECTURE
FUNCTIONAL SUPERVISOR: ELBERT COX
DAVID MARTIN · KEVIN GALLO
CALCULATED-DESIGNED BY · CHECKED BY
REVISED BY · DATE REVISED

LAST REVISION 11-01-09
DATE PLOTTED => 14-JAN-2010
TIME PLOTTED => 09:18

Dist	COUNTY	ROUTE	POST MILES TOTAL PROJECT	SHEET No.	TOTAL SHEETS
06	Fre	168	R36.0	23	37

REGISTERED CIVIL ENGINEER 10-06-09 DATE

1-11-10
PLANS APPROVAL DATE

REGISTERED PROFESSIONAL ENGINEER JUNIUS PAUL JENSEN No. 66320 Exp. 4-30-10 CIVIL STATE OF CALIFORNIA

THE STATE OF CALIFORNIA OR ITS OFFICERS OR AGENTS SHALL NOT BE RESPONSIBLE FOR THE ACCURACY OR COMPLETENESS OF SCANNED COPIES OF THIS PLAN SHEET.

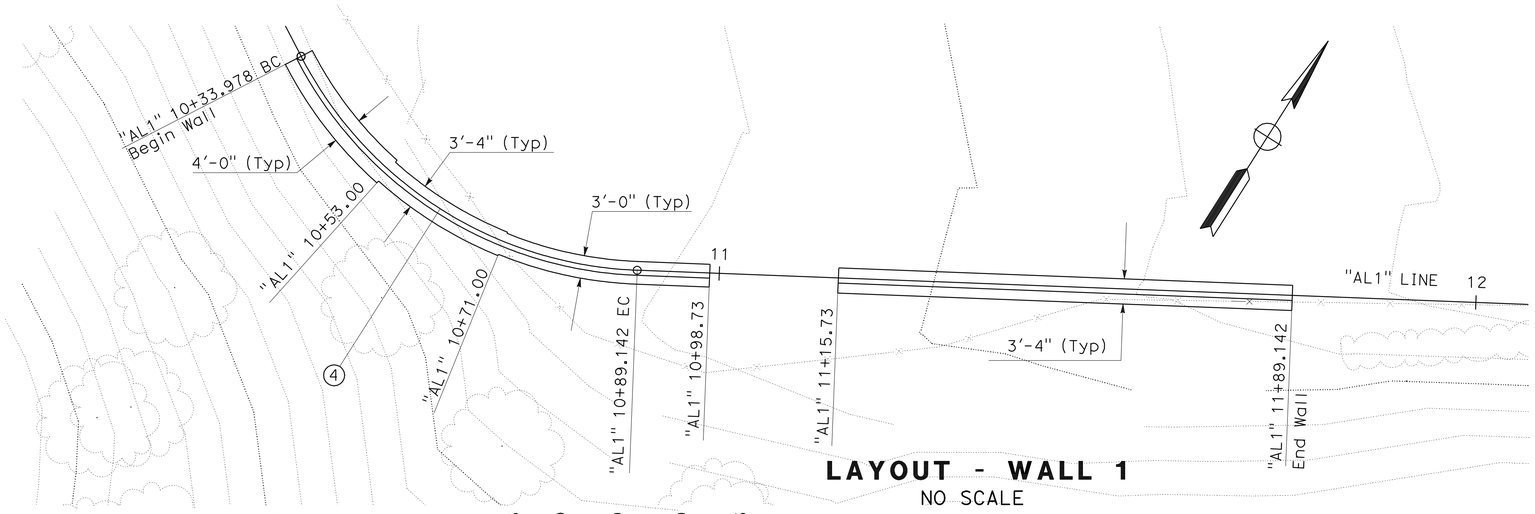

LAYOUT - WALL 1
NO SCALE

CURVE DATA

No.	R	Δ	T	L	N	E
4	52.17'	60°35'26"	30.48'	55.17'	2268780.30	6454031.80

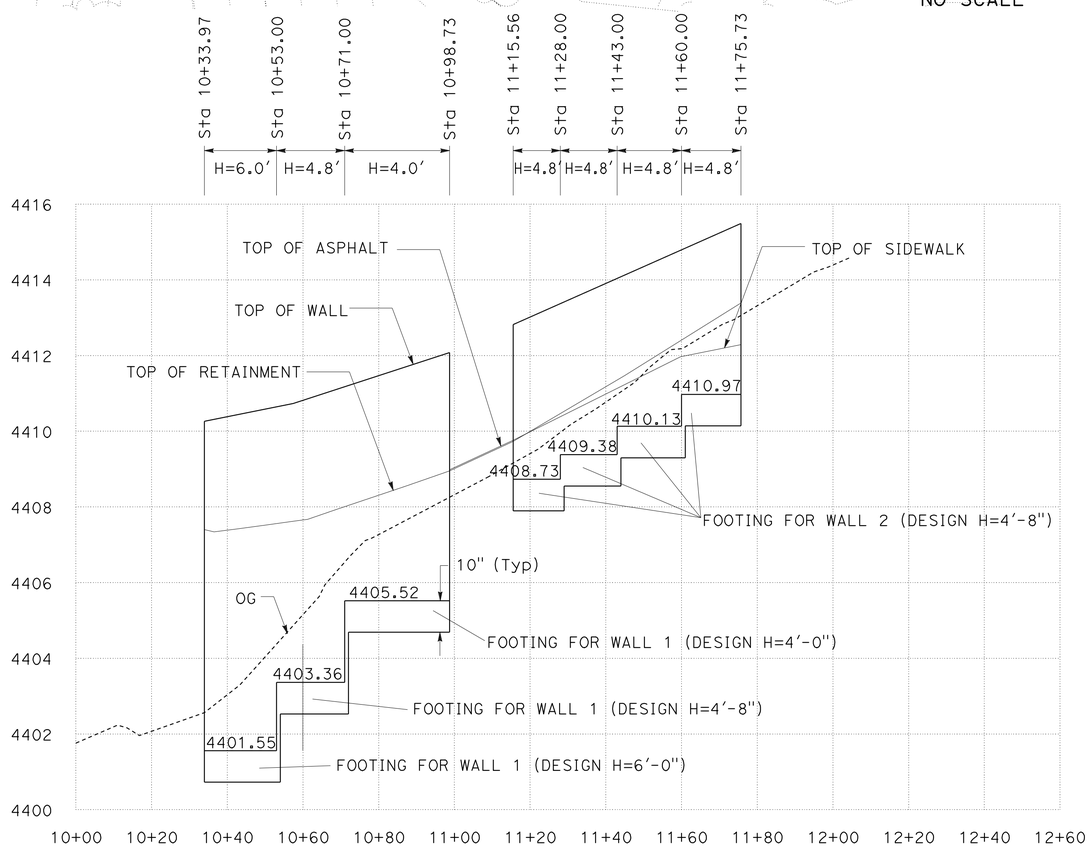

PROFILE VIEW - WALL 1
RETAINING WALL TYPE 6B
SCALE: Horiz 1" = 200'
Vert 1" = 50'

RETAINING WALL PLAN

SCALE AS SHOWN **R-1**

THIS PLAN ACCURATE FOR RETAINING WALL WORK ONLY.

STATE OF CALIFORNIA - DEPARTMENT OF TRANSPORTATION
Caltrans® DESIGN

FUNCTIONAL SUPERVISOR: G. ESHETE

CALCULATED-DESIGNED BY: PAUL JENSEN
CHECKED BY: RAYMOND SEGURA

REVISED BY | DATE REVISED

LAST REVISION 10-05-09
DATE PLOTTED => 14-JAN-2010
TIME PLOTTED => 09:18

DIST	COUNTY	ROUTE	POST MILES TOTAL PROJECT	SHEET NO.	TOTAL SHEETS
06	Fre	168	R36.0	24	37

REGISTERED CIVIL ENGINEER

June 6, 2008
PLANS APPROVAL DATE

REGISTERED PROFESSIONAL ENGINEER Donald E. Howe No. C46402 Exp. 3-31-09 CIVIL STATE OF CALIFORNIA

The State of California or its officers or agents shall not be responsible for the accuracy or completeness of electronic copies of this plan sheet.

To accompany plans dated 1-11-10

2006 REVISED STANDARD PLAN RSP A24C

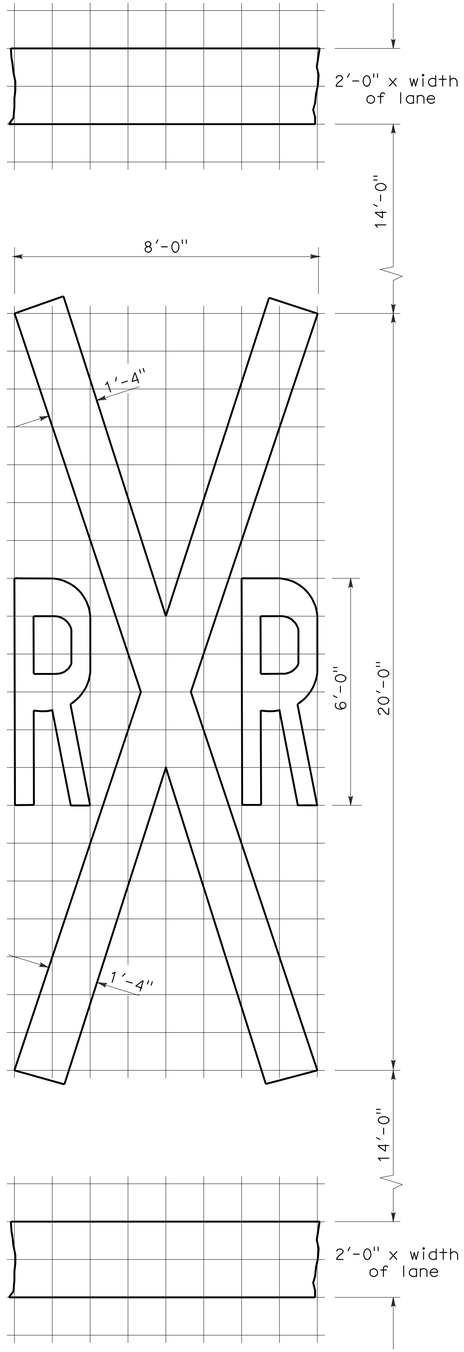

1'-0" GRID
A=70 sq ft ✳

RAILROAD CROSSING SYMBOL

✳70 sq ft DOES NOT INCLUDE THE 2'-0" x VARIABLE WIDTH TRANSVERSE LINES.

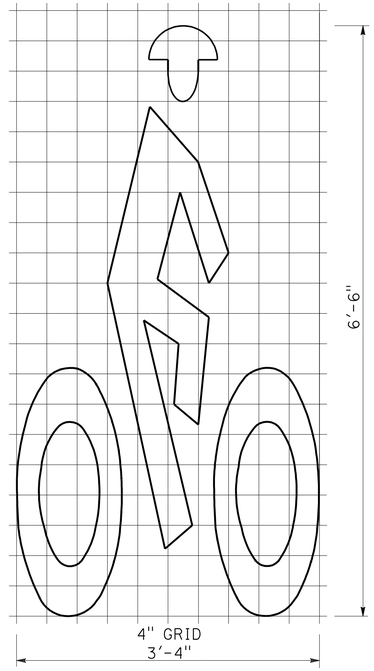

A=7 sq ft

BIKE LANE SYMBOL

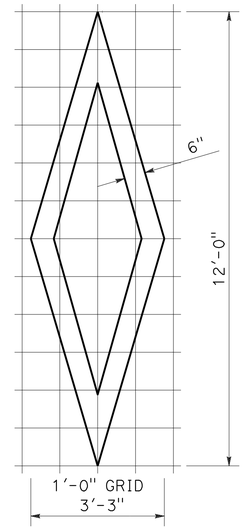

A=11 sq ft

DIAMOND SYMBOL

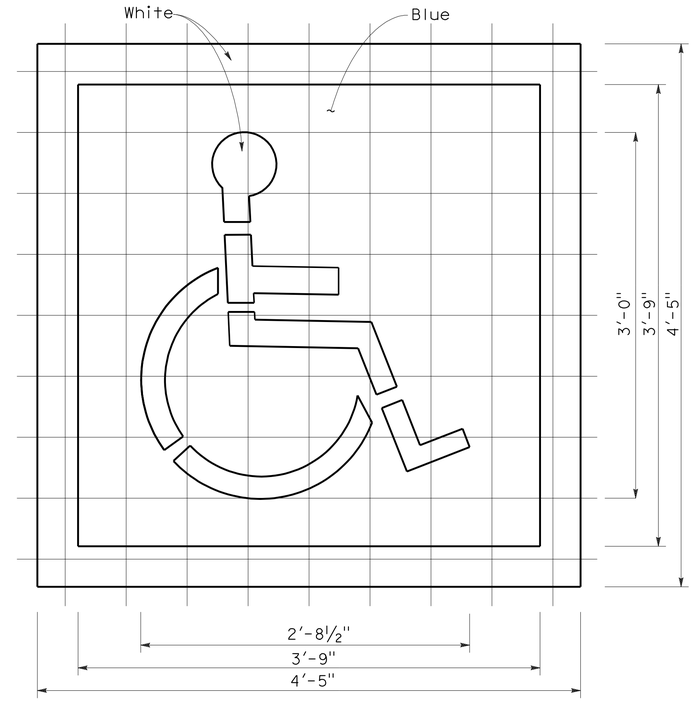

A (White) =9 sq ft
A (Blue) =14 sq ft

INTERNATIONAL SYMBOL OF ACCESSIBILITY MARKING

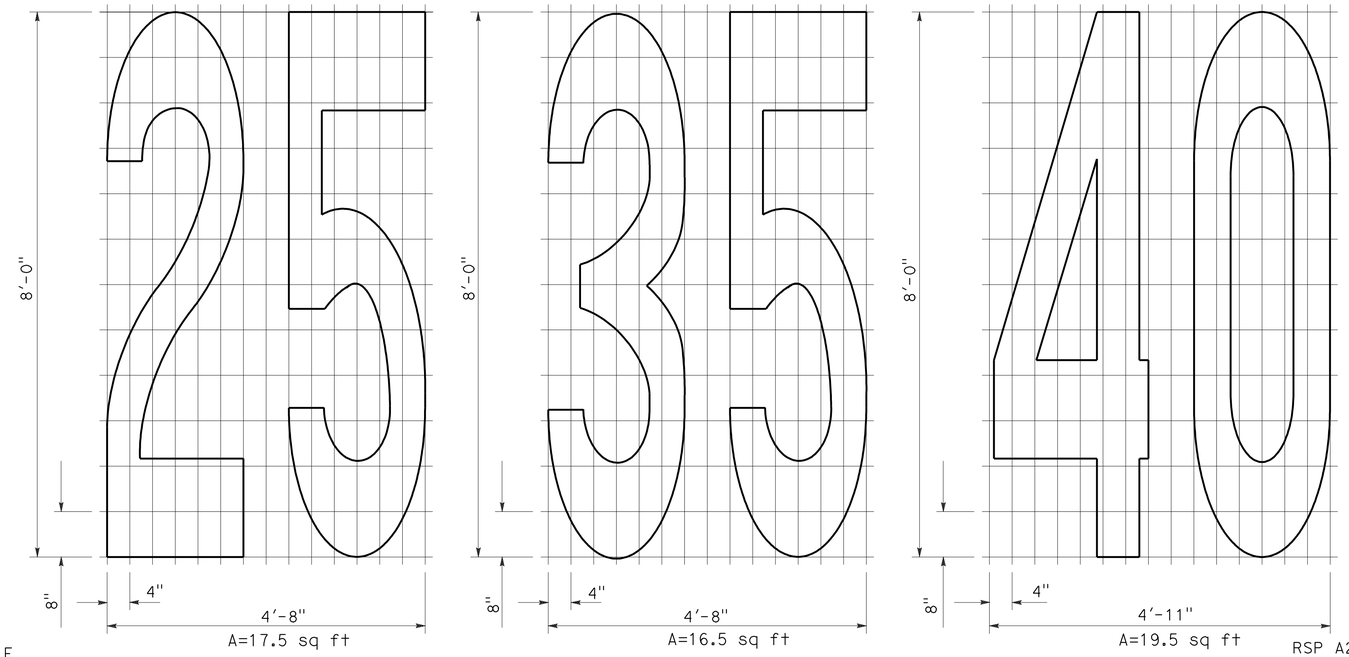

A=17.5 sq ft
A=16.5 sq ft
A=19.5 sq ft

NUMERALS

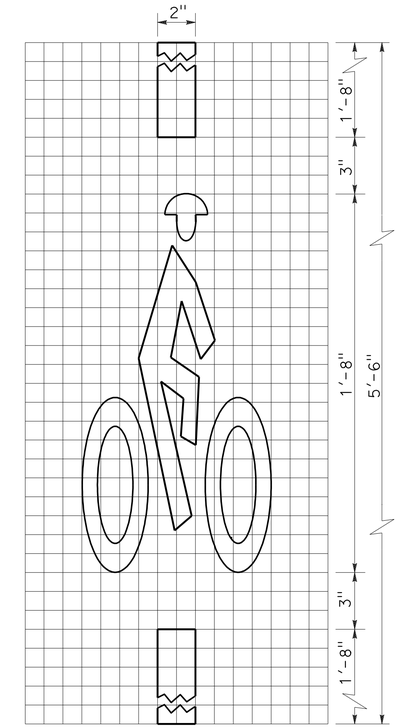

A=2 sq ft

BICYCLE LOOP DETECTOR SYMBOL

NOTE:

1. Minor variations in dimensions may be accepted by the Engineer.

STATE OF CALIFORNIA
DEPARTMENT OF TRANSPORTATION

PAVEMENT MARKINGS SYMBOLS AND NUMERALS

NO SCALE

RSP A24C DATED JUNE 6, 2008 SUPERSEDES STANDARD PLAN A24C DATED MAY 1, 2006 - PAGE 11 OF THE STANDARD PLANS BOOK DATED MAY 2006.

REVISED STANDARD PLAN RSP A24C

5-27-08

DIST	COUNTY	ROUTE	POST MILES TOTAL PROJECT	SHEET NO.	TOTAL SHEETS
06	Fre	168	R36.0	25	37

REGISTERED CIVIL ENGINEER

June 5, 2009
PLANS APPROVAL DATE

REGISTERED PROFESSIONAL ENGINEER Glenn DeCou No. C34547 Exp. 9-30-09 CIVIL STATE OF CALIFORNIA

The State of California or its officers or agents shall not be responsible for the accuracy or completeness of electronic copies of this plan sheet.

To accompany plans dated 1-11-10

2006 REVISED STANDARD PLAN RSP A85

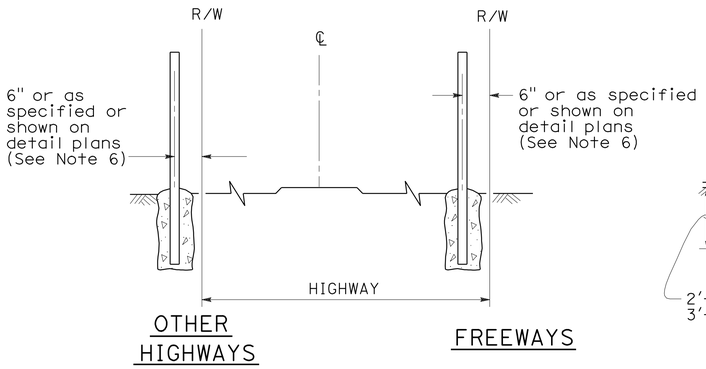

FENCE LOCATION

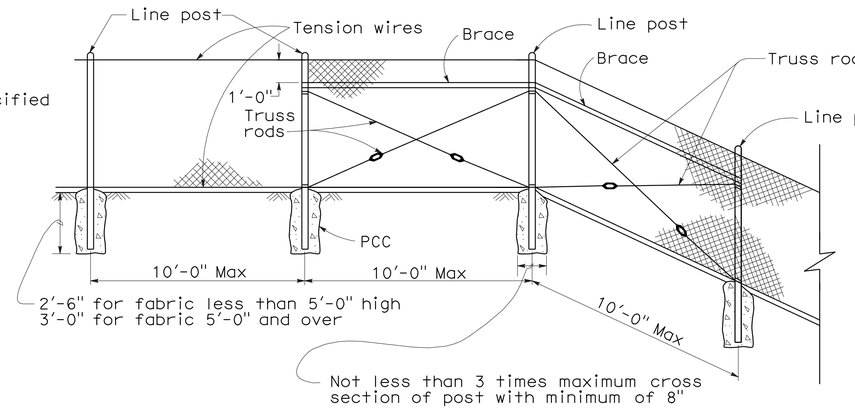

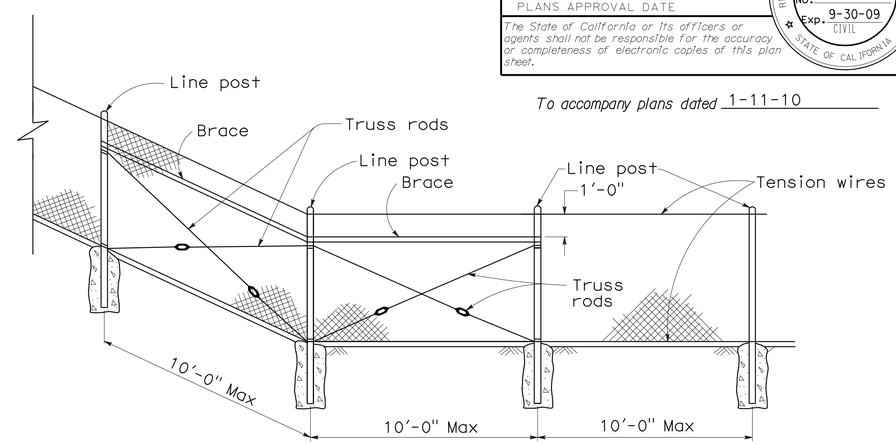

CHAIN LINK FENCE ON SHARP BREAK IN GRADE

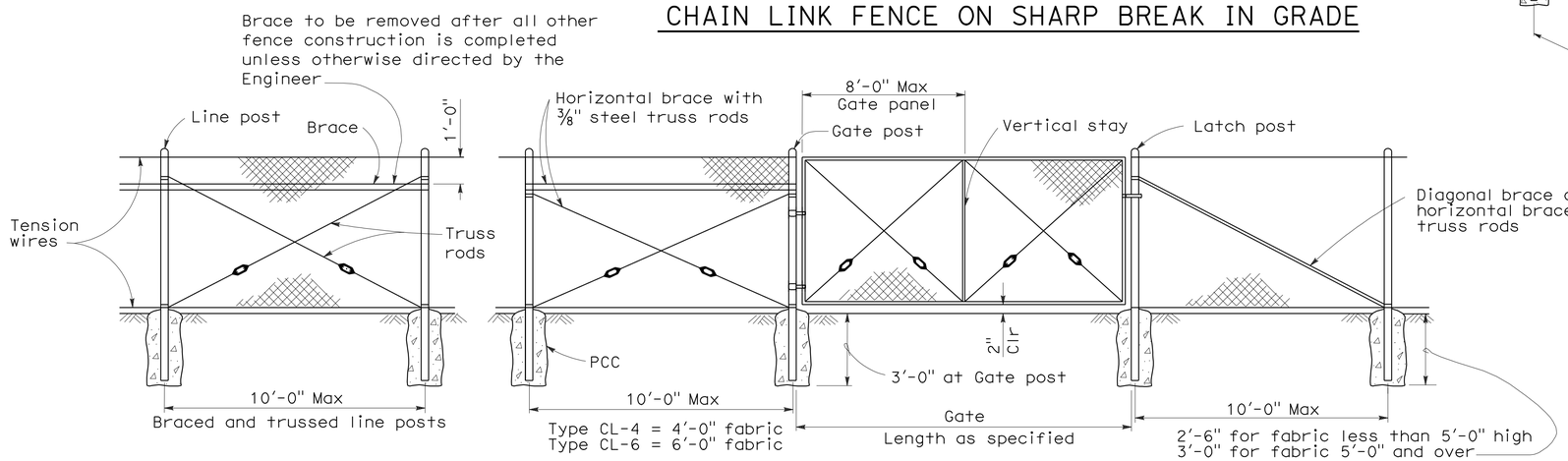

CHAIN LINK GATE INSTALLATION

GATE POST			
FENCE HEIGHT	GATE WIDTHS	NOMINAL ID	WEIGHT PER FOOT
6'-0" and Less	Up thru 6'-0"	2½"	4.95 LB
	Over 6'-0" thru 12'-0"	4"	10.79 LB
	Over 12'-0" thru 18'-0"	5"	14.62 LB
	Over 18'-0" to 24'-0" Max	6"	18.97 LB
Over 6'-0"	Up thru 6'-0"	3"	7.58 LB
	Over 6'-0" thru 12'-0"	5"	14.62 LB
	Over 12'-0" thru 18'-0"	6"	18.97 LB
	Over 18'-0" to 24'-0" Max	8"	28.55 LB

Above post dimensions and weights are minimums. Larger sizes may be used on approval of the Engineer.

NOTES:

1. The below table shows examples of post and brace sections which may comply with the Specifications.
2. Sections shown in the tables must also comply with the strength requirements and other provisions of the Specifications.
3. Other sections which comply with the strength requirements and other provisions of the Specifications may be used on approval of the Engineer.
4. Options exercised shall be uniform on any one project.
5. Dimensions shown are nominal.
6. Offset to be 2'-0" at monument locations, measured at right angles to R/W lines. Taper to achieve offset to be at least 20'-0" long.

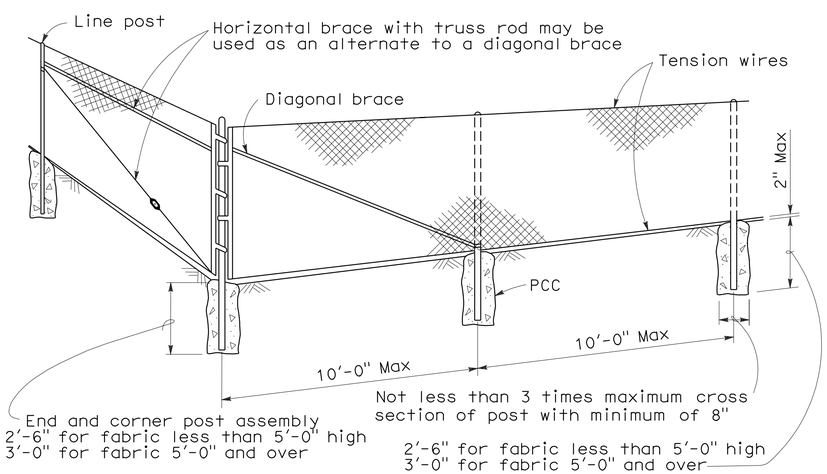

CORNER POST

TYPICAL MEMBER DIMENSIONS (See Notes)											
FENCE HEIGHT	LINE POSTS			END, LATCH & CORNER POSTS				BRACES			
	ROUND ID	H	ROLL FORMED	ROUND ID	ROLL FORMED			ROUND ID	H	ROLL FORMED	
6' & less	1½"	1⅞" × 1⅝"	1⅞" × 1⅝"	2"	3½" × 3½"	2" × 1¾"		1¼"	1½" × 1 5/16"	1⅝" × 1¼"	1¾" × 1¼"
Over 6'	2"	2¼" × 2"	2" × 1¾"	2½"	3½" × 3½"	2½" × 2½"		1¼"	1½" × 1 5/16"	1⅝" × 1¼"	1¾" × 1¼"

STATE OF CALIFORNIA
DEPARTMENT OF TRANSPORTATION

CHAIN LINK FENCE

NO SCALE

RSP A85 DATED JUNE 5, 2009 SUPERSEDES STANDARD PLAN A85
DATED MAY 1, 2006 - PAGE 111 OF THE STANDARD PLANS BOOK DATED MAY 2006.

REVISED STANDARD PLAN RSP A85

5-7-09

DIST	COUNTY	ROUTE	POST MILES TOTAL PROJECT	SHEET NO.	TOTAL SHEETS
06	Fre	168	R36.0	26	37

REGISTERED CIVIL ENGINEER

November 17, 2006
PLANS APPROVAL DATE

REGISTERED PROFESSIONAL ENGINEER Michael Janzen No. 44788 Exp. 03-31-08 CIVIL STATE OF CALIFORNIA

The State of California or its officers or agents shall not be responsible for the accuracy or completeness of electronic copies of this plan sheet.

To accompany plans dated 1-11-10

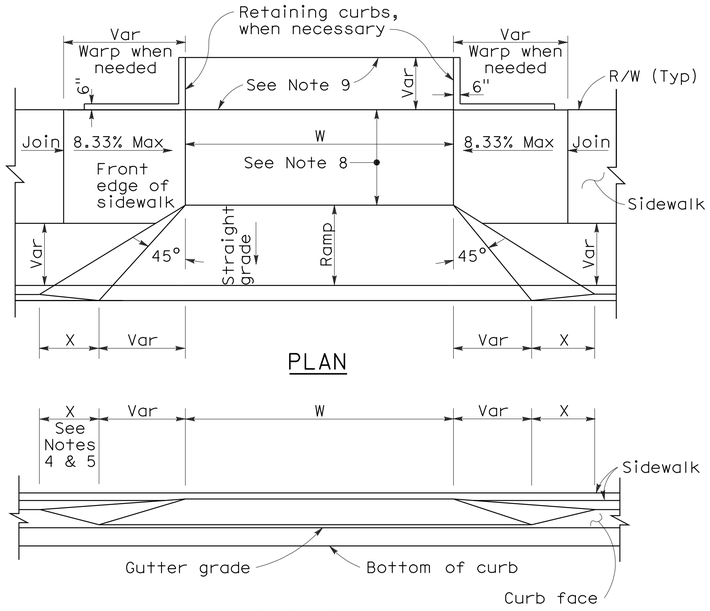

PLAN

ELEVATION

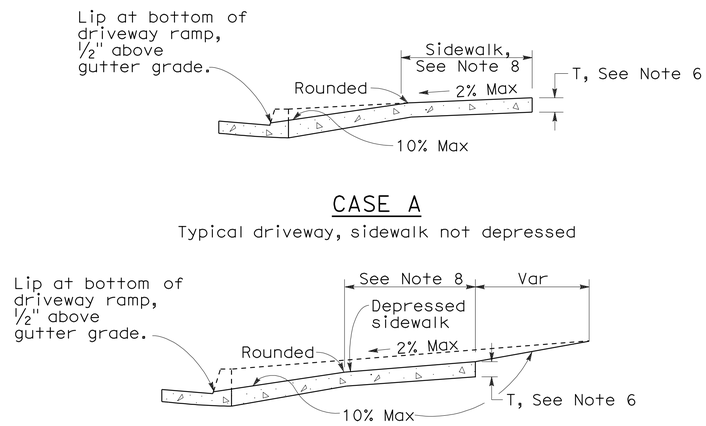

CASE A

Typical driveway, sidewalk not depressed

CASE B

Driveway with depressed sidewalk

SECTIONS

CURB QUANTITIES

TYPE	CUBIC YARDS PER LINEAR FOOT
A1-6	0.02585
A1-8	0.03084
A2-6	0.05903
A2-8	0.06379
A3-6	0.01036
A3-8	0.01435
B1-4	0.02185
B1-6	0.02930
B2-4	0.05515
B2-6	0.06171
B3-4	0.00641
B3-6	0.01074
B4	0.05709
D-4	0.04083
D-6	0.06804
E	0.06661

TABLE A

CURB TYPE	DIMENSIONS "H1"	"H2"	"W1"	"W2"
A1-6	1'-2"	6"	7½"	1½"
A1-8	1'-4"	8"	8"	2"
A2-6	1'-0"	6"	2'-7½"	1½"
A2-8	1'-2"	8"	2'-8"	2"
A3-6	6"	5"	7¼"	1¼"
A3-8	8"	7"	7¾"	1¾"
B1-4	1'-0"	4"	7½"	2½"
B1-6	1'-2"	6"	9"	4"
B2-4	10"	4"	2'-7½"	2½"
B2-6	1'-0"	6"	2'-9"	4"
B3-4	4"	3"	7"	2"
B3-6	6"	5"	8½"	3½"
D-4	10"	4"	1'-6"	1'-1"
D-6	1'-0"	6"	2'-2"	1'-8"

DRIVEWAYS

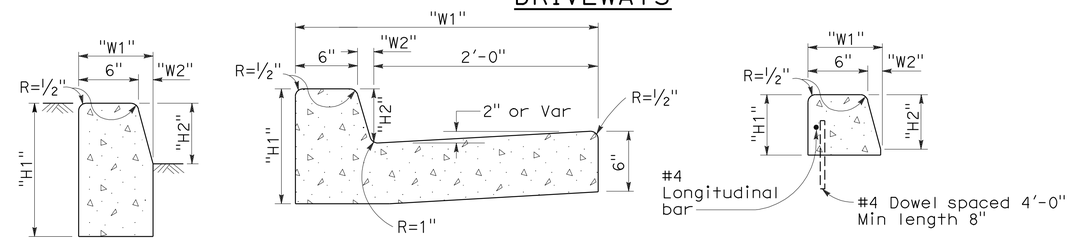

TYPE A1 CURBS
See Table A

TYPE A2 CURBS
See Table A

TYPE A3 CURBS
Superimposed on existing pavement
See Table A

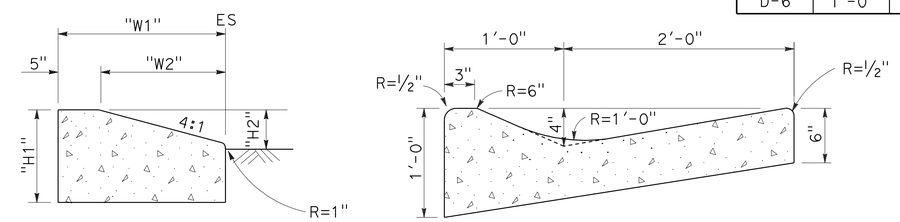

TYPE D CURBS
See Table A

TYPE E CURB

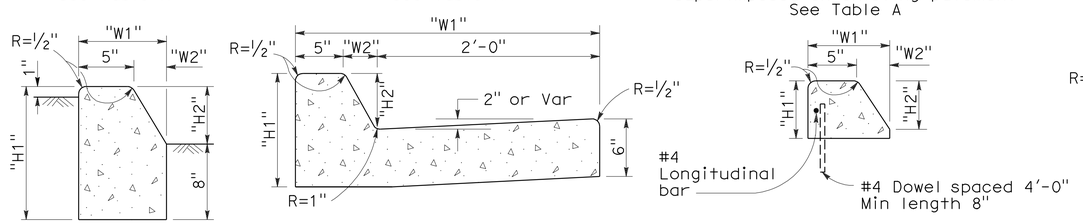

TYPE B1 CURBS
See Table A

TYPE B2 CURBS
See Table A

TYPE B3 CURBS
Superimposed on existing pavement
See Table A

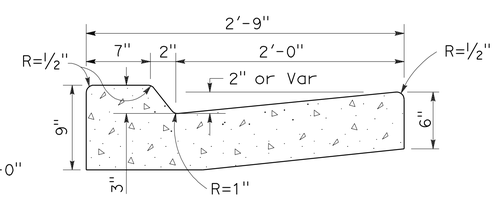

TYPE B4 CURBS

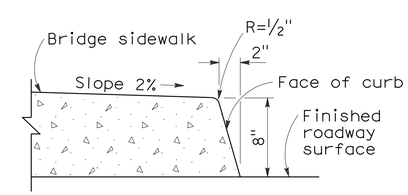

TYPE H CURB
On Bridges

CURBS

NOTES:

1. Case A driveway section typically applies.
2. Use Case B driveway section when ramp slopes would exceed 10% in Case A.
3. Use Case B driveway section when sidewalk cross slope would exceed 2% in Case A.
4. X=3'-0" except for curb heights over 10" where 4:1 slopes shall be used on curb slope.
5. X is a variable when sidewalk is located where wheelchairs may traverse the surface. Slopes shall not exceed 8.33%.
6. Sidewalk and ramp thickness "T" at driveway shall be 4" for residental and 6" for commercial.
7. Difference in slope of the driveway ramp and the slope of a line between the gutter and a point on the roadway 5'-0" from gutter line shall not exceed 15%. Reduce driveway ramp slope, not gutter slope, where required.
8. Minimum width of clear passageway for sidewalk shall be 4'-0".
9. Retaining curbs and acquisition of construction easement may be necessary for narrow sidewalks or curb heights in excess of 6".
10. Across the pedestrian route at curb ramp locations, the gutter pan slope shall not exceed 1" of depth for each 2'-0" of width.

STATE OF CALIFORNIA
DEPARTMENT OF TRANSPORTATION

CURBS AND DRIVEWAYS

NO SCALE

RSP A87A DATED NOVEMBER 17, 2006 SUPERSEDES STANDARD PLAN A87A DATED MAY 1, 2006 - PAGE 113 OF THE STANDARD PLANS BOOK DATED MAY 2006.

REVISED STANDARD PLAN RSP A87A

2006 REVISED STANDARD PLAN RSP A87A

10-25-06

DIST	COUNTY	ROUTE	POST MILES TOTAL PROJECT	SHEET NO.	TOTAL SHEETS
06	Fre	168	R36.0	27	37

REGISTERED CIVIL ENGINEER

June 6, 2008
PLANS APPROVAL DATE

REGISTERED PROFESSIONAL ENGINEER Hector David Cordova No. C41957 Exp. 3-31-10 CIVIL STATE OF CALIFORNIA

The State of California or its officers or agents shall not be responsible for the accuracy or completeness of electronic copies of this plan sheet.

To accompany plans dated 1-11-10

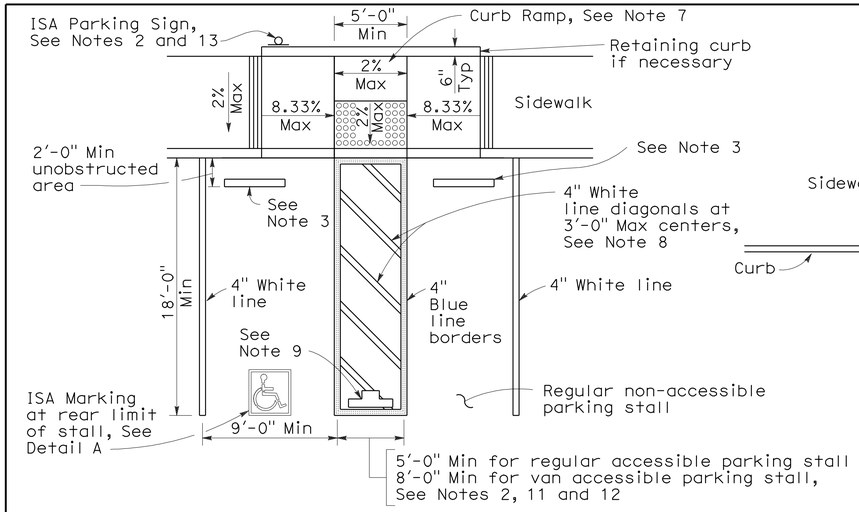

SINGLE PARKING STALL

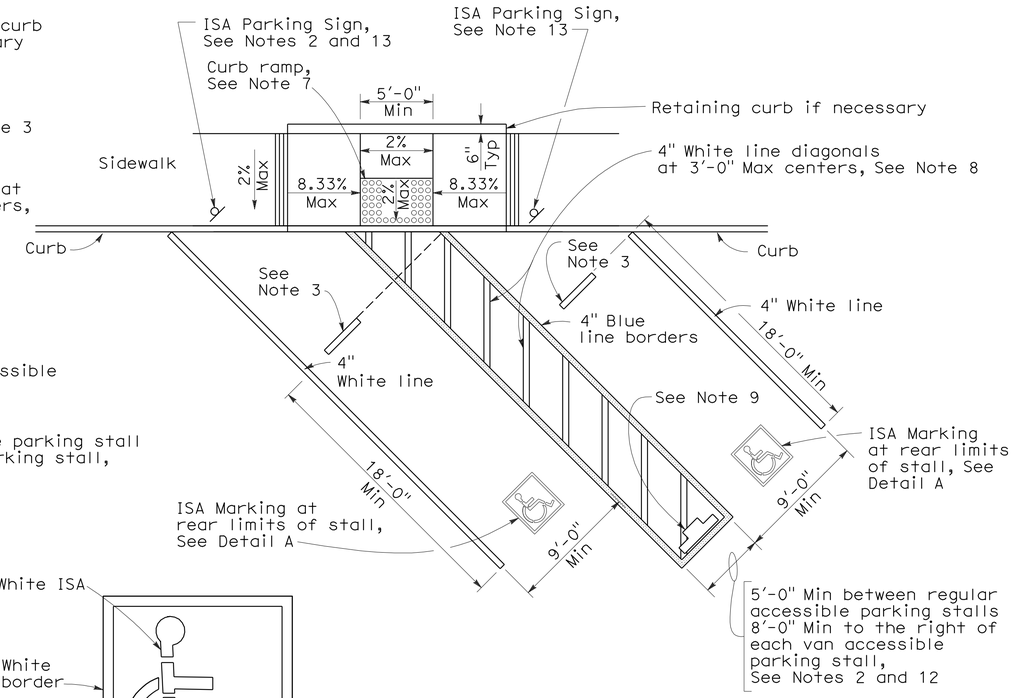

DIAGONAL DOUBLE PARKING STALLS

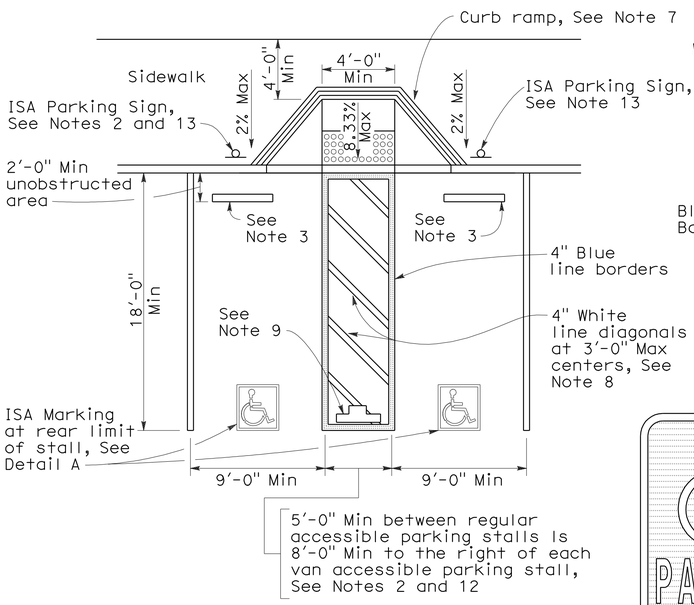

DOUBLE PARKING STALL

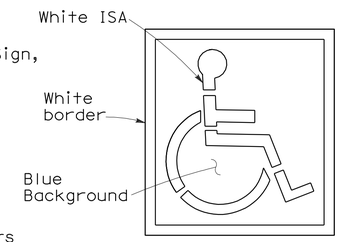

ISA MARKING
See Revised Std Plan RSP A24C

DETAIL A

TABLE A

Total Number of Parking Spaces or Stalls	Minimum Number of Disabled Accessible Parking Spaces or Stalls
1-25	1
26-50	2
51-75	3
76-100	4
101-150	5
151-200	6
201-300	7
301-400	8
401-500	9
501-1000	2 percent of total
Greater than 1001	20 plus 1 for each 100 or fraction thereof over 1001

SIGN R99 (CA)

PLAQUE R99B (CA)

SIGN R99 (CA) with PLAQUE R99B (CA)
See Note 6

SIGN R99C (CA)
See Note 6

UNAUTHORIZED VEHICLES PARKED IN DESIGNATED ACCESSIBLE SPACES NOT DISPLAYING DISTINGUISHING PLACARDS OR SPECIAL LICENSE PLATES ISSUED FOR PERSONS WITH DISABILITIES WILL BE TOWED AWAY AT THE OWNER'S EXPENSE

TOWED VEHICLES MAY BE RECLAIMED AT
(Insert Address)

OR BY TELEPHONING
(Insert Telephone Number)

SIGN R100B (CA)
See Note 10

SIGN R7-8b
See Notes 2 and 6

OFF-STREET PARKING SIGNS
(Parking lot or garage)
See Note 6

ISA = International Symbol of Accessibility

NOTES:

1. Accessible parking spaces serving a particular building shall be located on the shortest accessible route of travel from adjacent parking to an accessible entrance. In parking facilities that do not serve a particular building, accessible parking shall be located on the shortest accessible route of travel to an accessible pedestrian entrance of the parking facility.
2. One in every eight accessible off-street parking stalls, but not less than one, shall be served by an accessible aisle of 8'-0" minimum width and shall be signed van accessible. The R7-8b sign shall be mounted below the R99B (CA) plaque or the R99C (CA) sign.
3. In each parking stall, a curb or bumper shall be provided and located to prevent encroachment of vehicles over the required width of walkways. Parking stalls shall be so located that persons with disabilities are not compelled to wheel or walk behind parked cars other than their own.
4. Surface slopes of accessible off-street parking stalls shall be the minimum possible and shall not exceed 2 percent in any direction.
5. Table A shall be used to determine the required number of accessible parking stalls in each parking lot or garage.
6. Where Plaque R99B (CA), Sign R99C (CA) or Sign R7-8b are installed, the bottom of the sign or plaque panel shall be a minimum of 7'-0" above the surrounding surface.
7. Curb ramps shall conform to the details shown on Revised Standard Plan RSP A88A.
8. Blue paint, instead of white may be used for marking accessibility aisles in areas where snow may cause white markings to not be visible.
9. The words "NO PARKING", shall be painted in white letters no less than 1'-0" high and located so that it is visible to traffic enforcement officials. See Revised Standard Plan RSP A90B for details of the "NO PARKING" pavement marking.
10. A R100B (CA) sign shall be posted in a conspicuous place at each entrance to off-street parking facilities or immediately adjacent to and visible from each stall. The sign shall include the address where the towed vehicle may be reclaimed and the telephone number of the local traffic law enforcement agency.
11. Where a single (non-van) accessible parking space is provided, the loading and unloading access aisle shall be on the passenger side of the vehicle as the vehicle is going forward into the parking space.
12. Where a van accessible parking space is provided, the loading and unloading access aisle shall be 8'-0" wide minimum, and shall be on the passenger side of the vehicle as the vehicle is going forward into the parking space.
13. Accessible Parking Only Sign shall be Sign R99C (CA) or Sign R99 (CA) with Plaque R99B (CA).

STATE OF CALIFORNIA
DEPARTMENT OF TRANSPORTATION

ACCESSIBLE PARKING OFF-STREET

NO SCALE

RSP A90A DATED JUNE 6, 2008 SUPERSEDES STANDARD PLAN A90A
DATED MAY 1, 2006 - PAGE 117 OF THE STANDARD PLANS BOOK DATED MAY 2006.

REVISED STANDARD PLAN RSP A90A

2006 REVISED STANDARD PLAN RSP A90A

6-3-08

DIST	COUNTY	ROUTE	POST MILES TOTAL PROJECT	SHEET NO.	TOTAL SHEETS
06	Fre	168	R36.0	28	37

LICENSED LANDSCAPE ARCHITECT

April 3, 2009
PLANS APPROVAL DATE

The State of California or its officers or agents shall not be responsible for the accuracy or completeness of electronic copies of this plan sheet.

LICENSED LANDSCAPE ARCHITECT
Gregory A. Balzer 2572
Signature
02-28-11
Renewal date
03-04-09
Date
STATE OF CALIFORNIA

To accompany plans dated 1-11-10

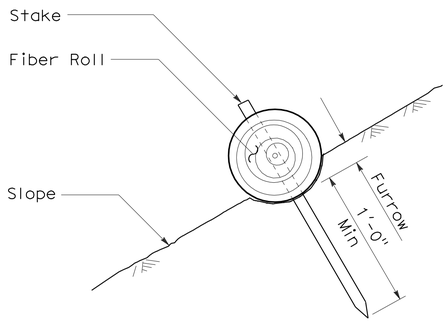

SECTION

FIBER ROLL (TYPE 1)

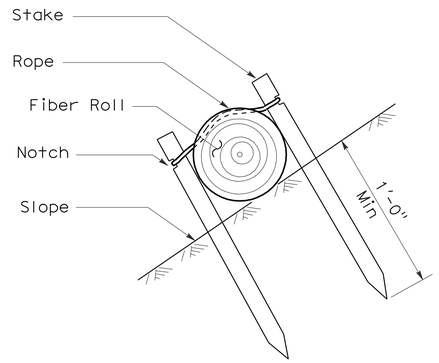

SECTION

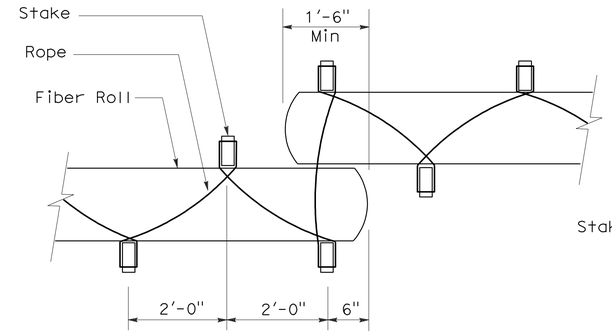

PLAN

FIBER ROLL (TYPE 2)

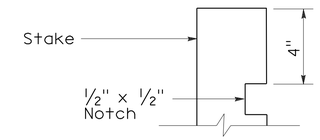

ELEVATION

STAKE NOTCH DETAIL

NOTES:

1. Fiber roll spacing varies depending upon slope inclination.
2. Installations shown in the perspectives are for slope inclination of 10:1 and steeper.

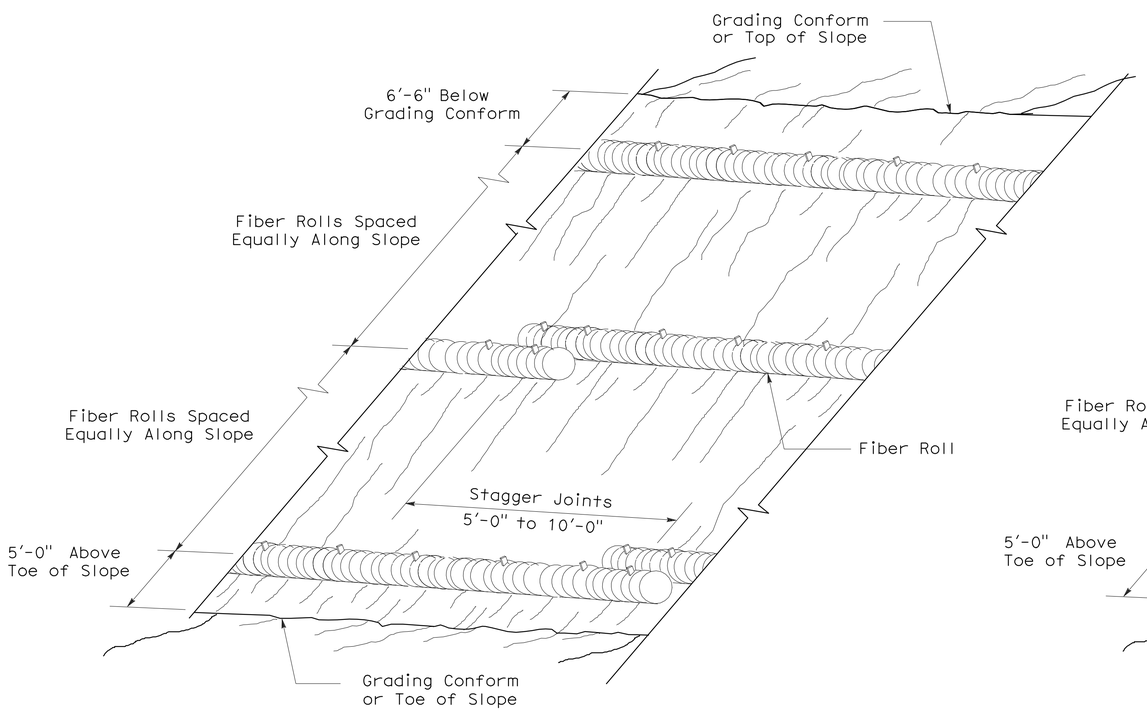

PERSPECTIVE

FIBER ROLL (TYPE 1)

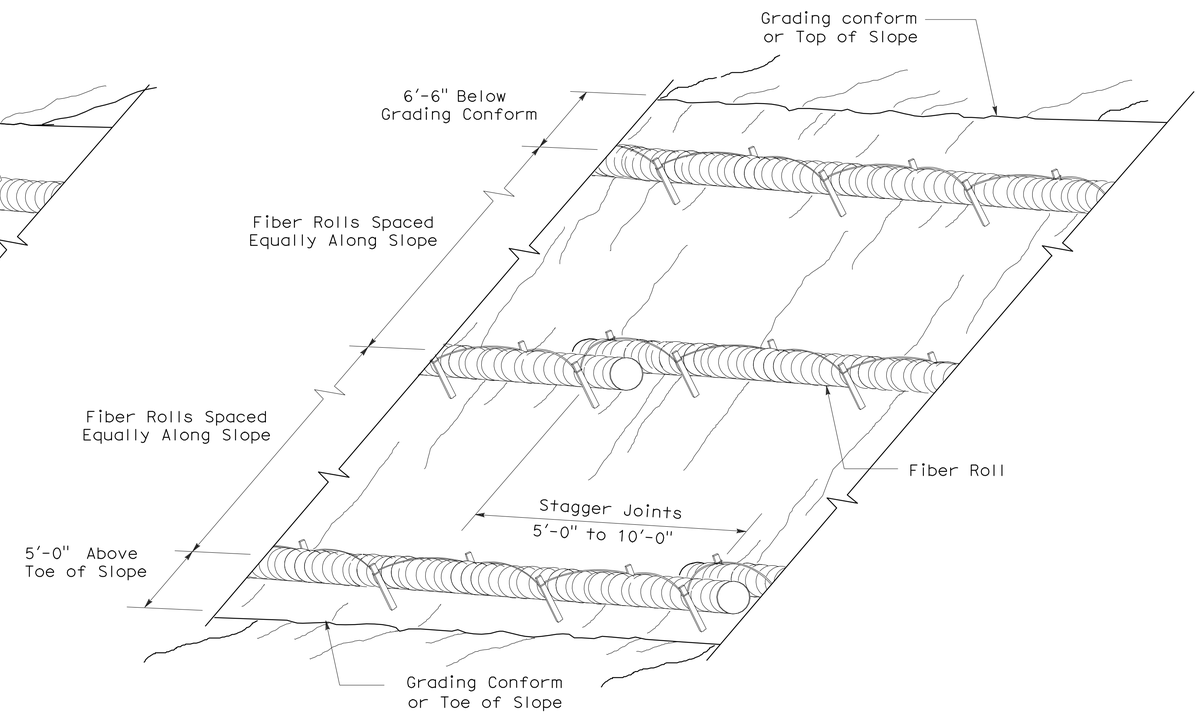

PERSPECTIVE

FIBER ROLL (TYPE 2)

STATE OF CALIFORNIA
DEPARTMENT OF TRANSPORTATION

EROSION CONTROL DETAILS (FIBER ROLL)

NO SCALE

RNSP H51 DATED APRIL 3, 2009 SUPERSEDES NSP H51 DATED DECEMBER 1, 2006 THAT SUPPLEMENTS THE STANDARD PLANS BOOK DATED MAY 2006.

REVISED NEW STANDARD PLAN RNSP H51

2006 REVISED NEW STANDARD PLAN RNSP H51

3-4-09

DIST	COUNTY	ROUTE	POST MILES TOTAL PROJECT	SHEET NO.	TOTAL SHEETS
06	Fre	168	R36.0	29	37

Randell D. Hiatt
REGISTERED CIVIL ENGINEER

June 6, 2008
PLANS APPROVAL DATE

REGISTERED PROFESSIONAL ENGINEER
Randell D. Hiatt
No. C50200
Exp. 6-30-09
CIVIL
STATE OF CALIFORNIA

The State of California or its officers or agents shall not be responsible for the accuracy or completeness of electronic copies of this plan sheet.

To accompany plans dated 1-11-10

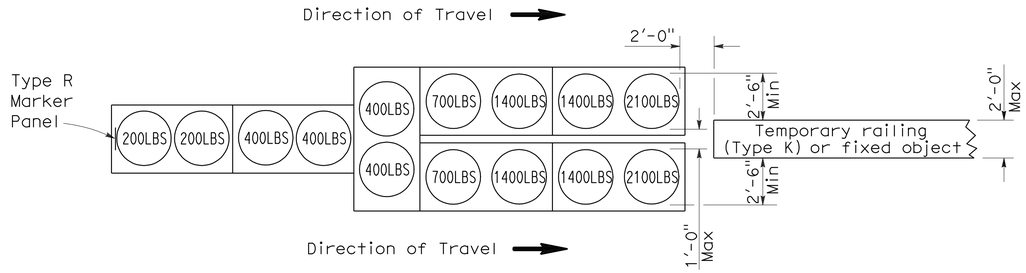

ARRAY 'TU14'

Approach speed 45 mph or more

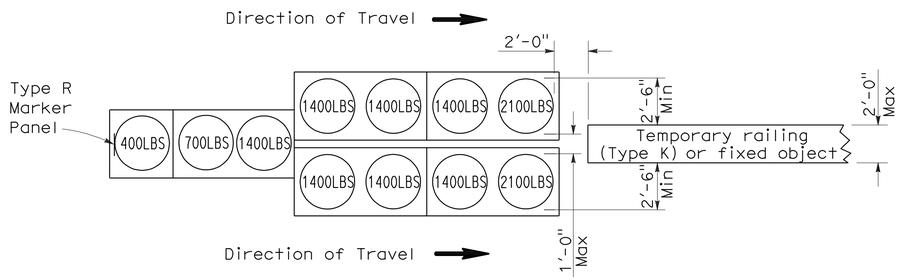

ARRAY 'TU11'

Approach speed less than 45 mph

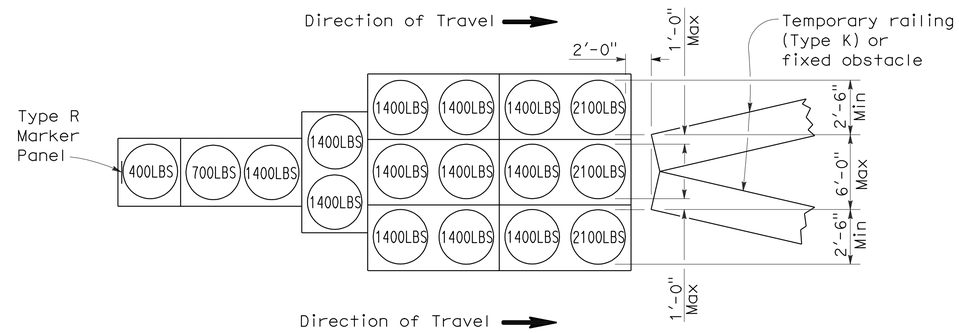

ARRAY 'TU17'

Approach speed less than 45 mph

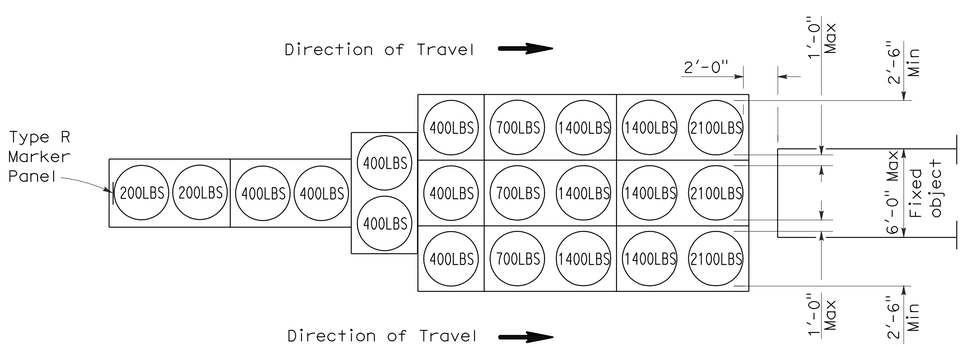

ARRAY 'TU21'

Approach speed 45 mph or more

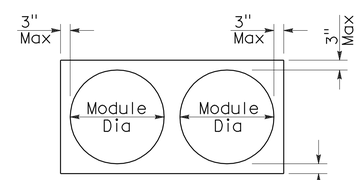

PLAN

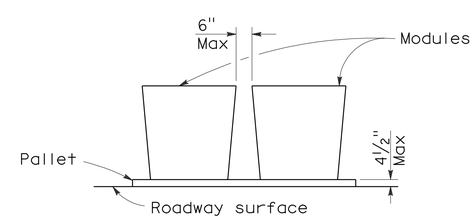

ELEVATION

CRASH CUSHION PALLET DETAIL

See Note 7

NOTES:

1. (XXX) Indicates sand filled module location and weight of sand in pounds for each module. Module spacing is based on the greater diameter of the module.
2. All sand weights are nominal.
3. Temporary crash cushion arrays shall not encroach on the traveled way.
4. Place the top of Type R marker panel 1" below the module lid.
5. Refer to Standard Plan A73B for marker details.
6. Approach speeds indicated conform to NCHRP 350 Report criteria.
7. Use of pallets is optional.

STATE OF CALIFORNIA
DEPARTMENT OF TRANSPORTATION

TEMPORARY CRASH CUSHION, SAND FILLED (UNIDIRECTIONAL)

NO SCALE

RSP T1A DATED JUNE 6, 2008 SUPERSEDES STANDARD PLAN T1A
DATED MAY 1, 2006 - PAGE 211 OF THE STANDARD PLANS BOOK DATED MAY 2006.

REVISED STANDARD PLAN RSP T1A

2006 REVISED STANDARD PLAN RSP T1A

DIST	COUNTY	ROUTE	POST MILES TOTAL PROJECT	SHEET NO.	TOTAL SHEETS
06	Fre	168	R36.0	30	37

Randell D. Hiatt
REGISTERED CIVIL ENGINEER

June 6, 2008
PLANS APPROVAL DATE

REGISTERED PROFESSIONAL ENGINEER
Randell D. Hiatt
No. C50200
Exp. 6-30-09
CIVIL
STATE OF CALIFORNIA

The State of California or its officers or agents shall not be responsible for the accuracy or completeness of electronic copies of this plan sheet.

To accompany plans dated 1-11-10

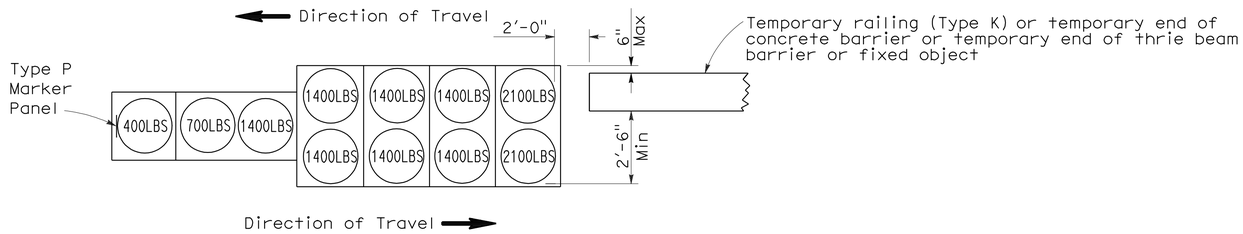

ARRAY 'TB11'

Approach speed less than 45 mph

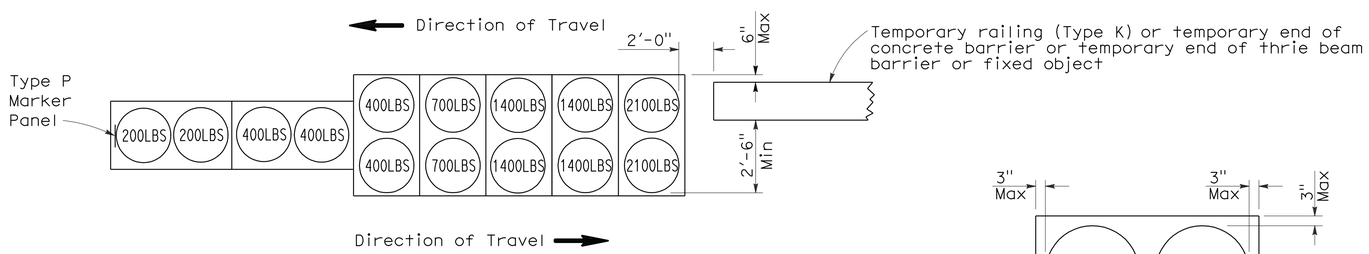

ARRAY 'TB14'

Approach speed 45 mph or more

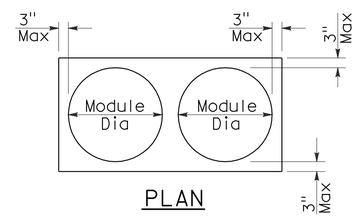

PLAN

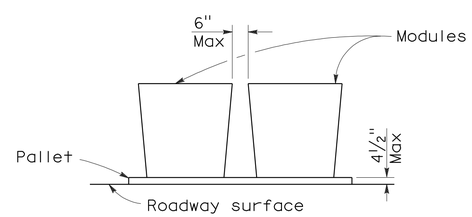

ELEVATION

CRASH CUSHION PALLET DETAIL

See Note 7

NOTES:

1. (XXX) Indicates sand filled module location and weight of sand in pounds for each module. Module spacing is based on the greater diameter of the module.
2. All sand weights are nominal.
3. Temporary crash cushion arrays shall not encroach on the traveled way.
4. Place the Type P marker panel so that the bottom of the panel rests upon the pallet.
5. Refer to Standard Plan A73B for marker details.
6. Approach speeds indicated conform to NCHRP 350 Report criteria.
7. Use of pallets is optional.

STATE OF CALIFORNIA
DEPARTMENT OF TRANSPORTATION

TEMPORARY CRASH CUSHION, SAND FILLED (BIDIRECTIONAL)

NO SCALE

RSP T1B DATED JUNE 6, 2008 SUPERSEDES STANDARD PLAN T1B
DATED MAY 1, 2006 - PAGE 212 OF THE STANDARD PLANS BOOK DATED MAY 2006.

REVISED STANDARD PLAN RSP T1B

2006 REVISED STANDARD PLAN RSP T1B

5-15-08

DIST	COUNTY	ROUTE	POST MILES TOTAL PROJECT	SHEET NO.	TOTAL SHEETS
06	Fre	168	R36.0	31	37

Randell D. Hiatt
REGISTERED CIVIL ENGINEER

June 6, 2008
PLANS APPROVAL DATE

REGISTERED PROFESSIONAL ENGINEER
Randell D. Hiatt
No. C50200
Exp. 6-30-09
CIVIL
STATE OF CALIFORNIA

The State of California or its officers or agents shall not be responsible for the accuracy or completeness of electronic copies of this plan sheet.

To accompany plans dated 1-11-10

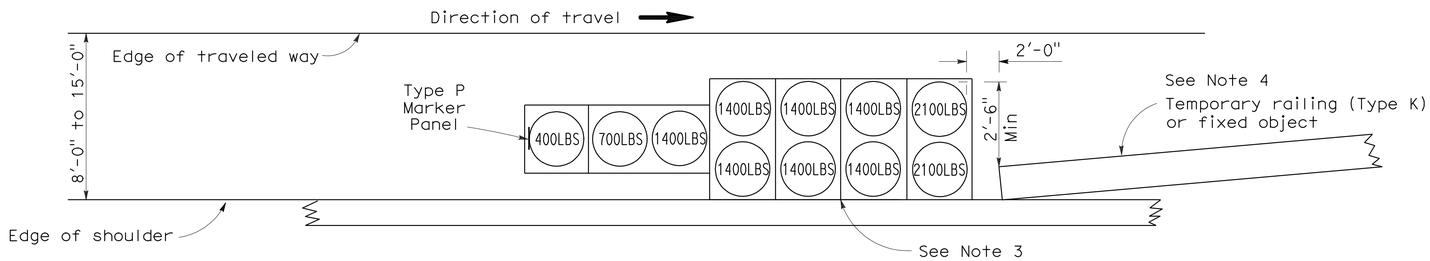

ARRAY 'TS11'

Approach speed less than 45 mph
See Note 9

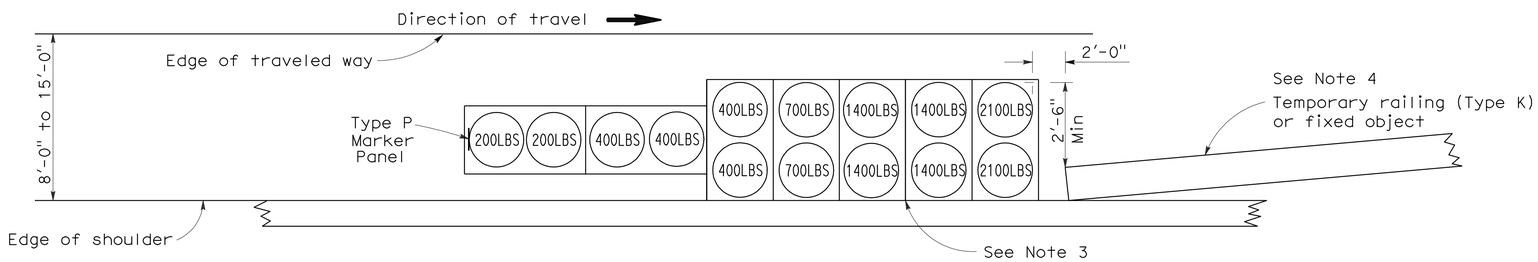

ARRAY 'TS14'

Approach speed 45 mph or more
See Note 9

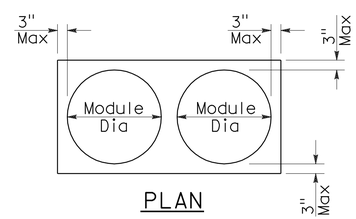

PLAN

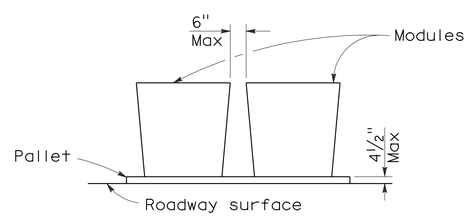

ELEVATION

CRASH CUSHION PALLET DETAIL

See Note 11

NOTES:

1. (XXX) Indicates sand filled module location and weight of sand in pounds for each module. Module spacing is based on the greater diameter of the module.
2. All sand weights are nominal.
3. The temporary crash cushion arrays shown on this plan shall be used only in locations where there will be traffic on one side of the temporary crash cushion array.
4. If the fixed object or approach end of the temporary railing is less than 15'-0" from the edge of traveled way, a temporary crash cushion is required in a construction or work zone.
5. Temporary crash cushion arrays shall not encroach on the traveled way.
6. Arrays for median shoulders shall conform to details shown on this plan for outside shoulders.
7. Place the Type P marker panel so that the bottom of the panel rests upon the pallet and faces traffic.
8. Refer to Standard Plan A73B for marker details.
9. For shoulder widths less than 8'-0", appropriate approved crash cushion protection, other than sand filled modules, shall be provided at fixed objects and at approach ends of temporary railing. The specific type of crash cushion shall be as shown on the project plans or as specified in the Special Provisions, or if not shown on the project plans or specified in the Special Provisions, shall be as approved by the Engineer.
10. Approach speeds indicated conform to NCHRP 350 Report criteria.
11. Use of pallets is optional.

STATE OF CALIFORNIA
DEPARTMENT OF TRANSPORTATION

TEMPORARY CRASH CUSHION, SAND FILLED (SHOULDER INSTALLATIONS)

NO SCALE

RSP T2 DATED JUNE 6, 2008 SUPERSEDES STANDARD PLAN T2
DATED MAY 1, 2006 - PAGE 213 OF THE STANDARD PLANS BOOK DATED MAY 2006.

REVISED STANDARD PLAN RSP T2

2006 REVISED STANDARD PLAN RSP T2

5-15-08

DIST	COUNTY	ROUTE	POST MILES TOTAL PROJECT	SHEET NO.	TOTAL SHEETS
06	Fre	168	R36.0	32	37

Robert B Schott
LICENSED LANDSCAPE ARCHITECT

April 3, 2009
PLANS APPROVAL DATE

LICENSED LANDSCAPE ARCHITECT
Robert B. Schott 3625
Robert B Schott
Registered Date
11-30-10
Renewal Date
2-25-09
Date
STATE OF CALIFORNIA

The State of California or its officers or agents shall not be responsible for the accuracy or completeness of electronic copies of this plan sheet.

To accompany plans dated 1-11-10

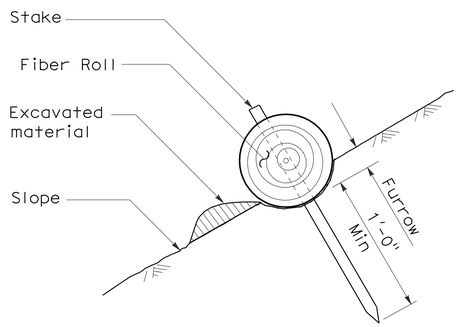

SECTION

TEMPORARY FIBER ROLL (TYPE 1)

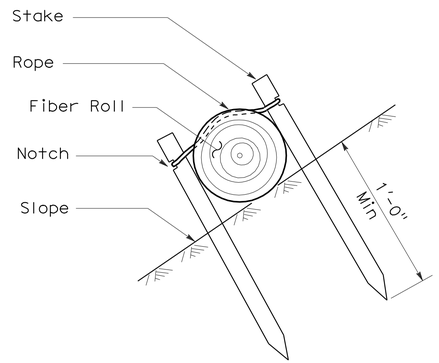

SECTION

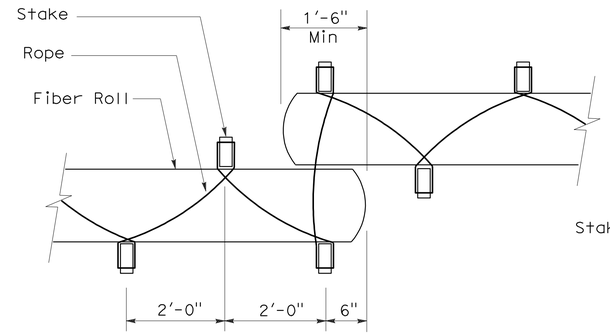

PLAN

TEMPORARY FIBER ROLL (TYPE 2)

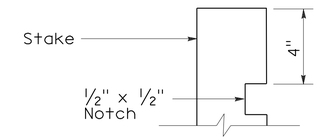

ELEVATION

STAKE NOTCH DETAIL

NOTES:

1. Temporary fiber roll spacing varies depending upon slope inclination.
2. Installations shown in the perspectives are for slope inclination of 10:1 and steeper.

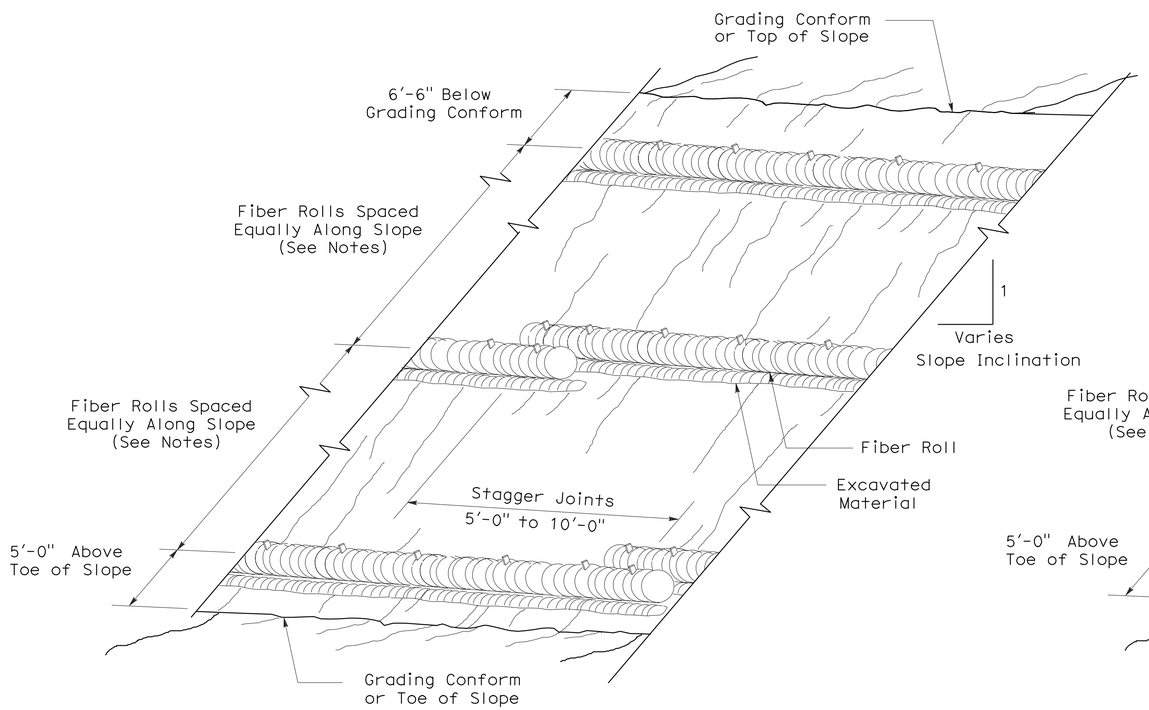

PERSPECTIVE

TEMPORARY FIBER ROLL (TYPE 1)

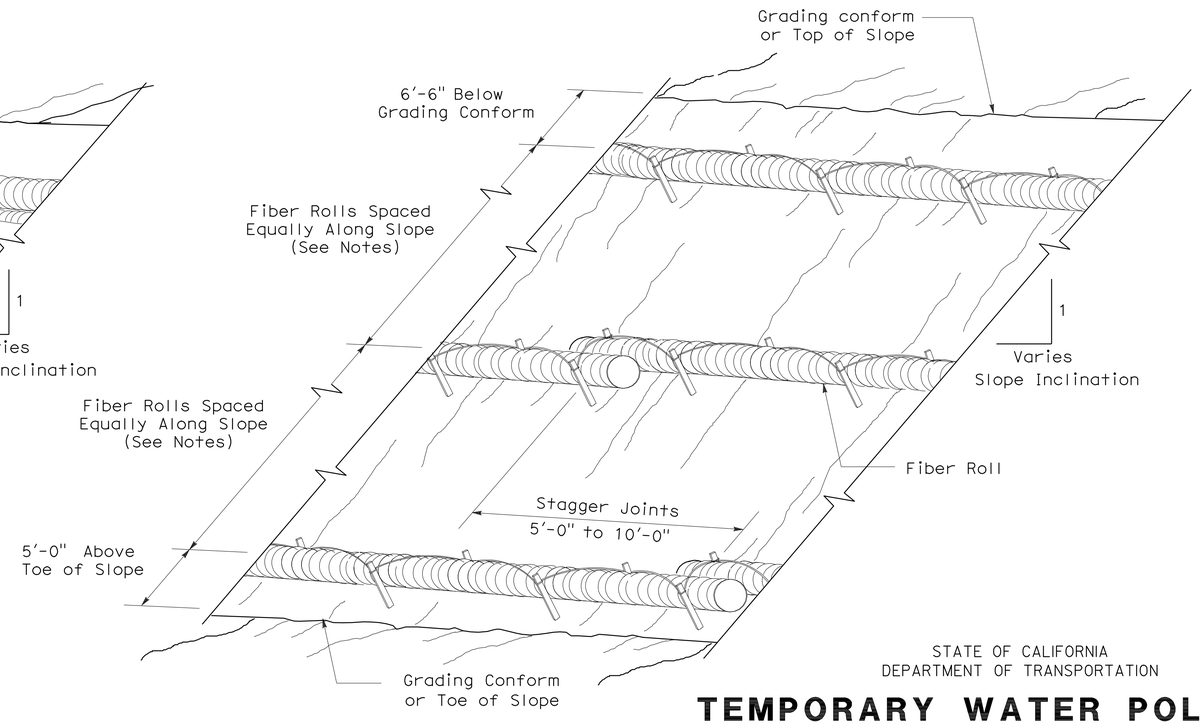

PERSPECTIVE

TEMPORARY FIBER ROLL (TYPE 2)

STATE OF CALIFORNIA
DEPARTMENT OF TRANSPORTATION

TEMPORARY WATER POLLUTION CONTROL DETAILS (TEMPORARY FIBER ROLL)

NO SCALE

RSP T56 DATED APRIL 3, 2009 SUPERSEDES STANDARD PLAN T56
DATED MAY 1, 2006 - PAGE 232 OF THE STANDARD PLANS BOOK DATED MAY 2006.

REVISED STANDARD PLAN RSP T56

2006 REVISED STANDARD PLAN RSP T56

DIST	COUNTY	ROUTE	POST MILES TOTAL PROJECT	SHEET NO.	TOTAL SHEETS
06	Fre	168	R36.0	33	37

Robert B Schott
LICENSED LANDSCAPE ARCHITECT

August 15, 2008
PLANS Approval DATE

LICENSED LANDSCAPE ARCHITECT
Robert B. Schott 3625
Robert B Schott
Signature
11-04-08
Renewal Date
08-11-08
Date
STATE OF CALIFORNIA

The State of California or its officers or agents shall not be responsible for the accuracy or completeness of electronic copies of this plan sheet.

To accompany plans dated 1-11-10

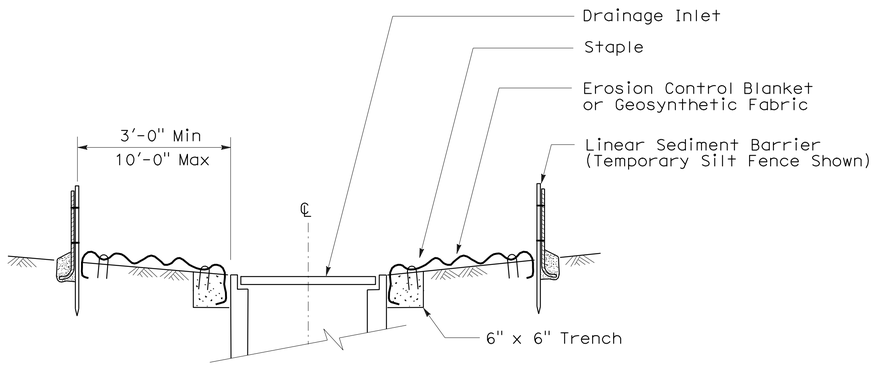

SECTION A-A

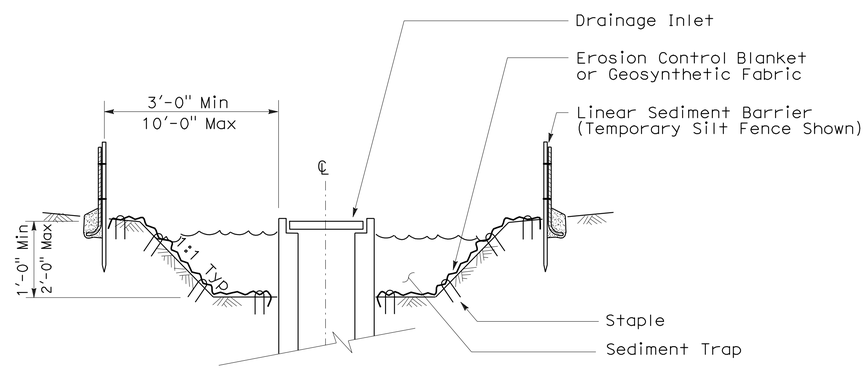

SECTION B-B

NOTES:

1. See Standard Plan T51 for Temporary Silt Fence.
2. Dimensions may vary to fit field conditions.

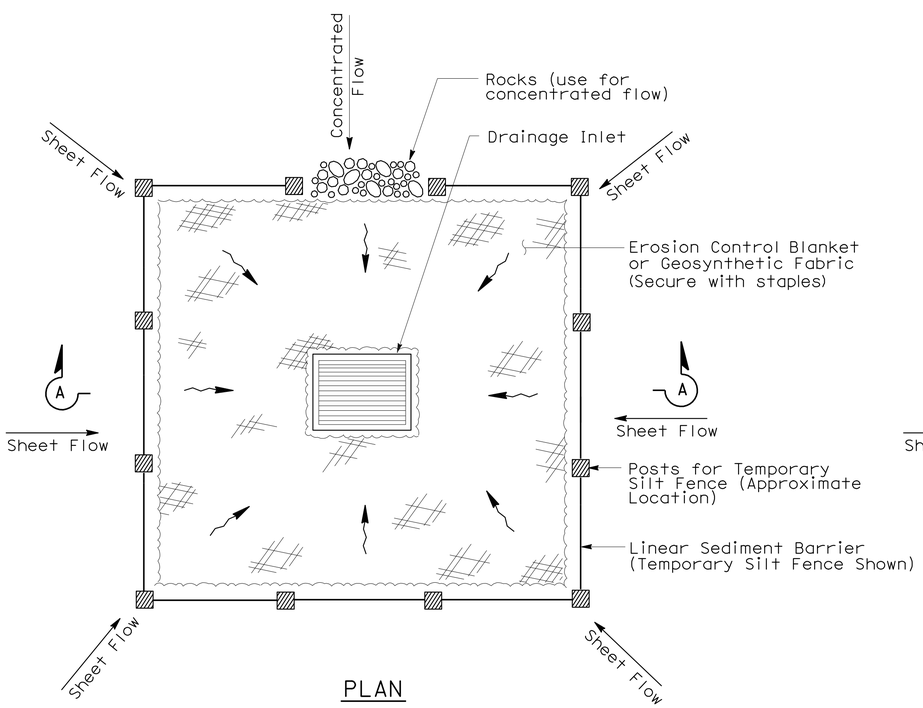

PLAN

TEMPORARY DRAINAGE
INLET PROTECTION (TYPE 1)

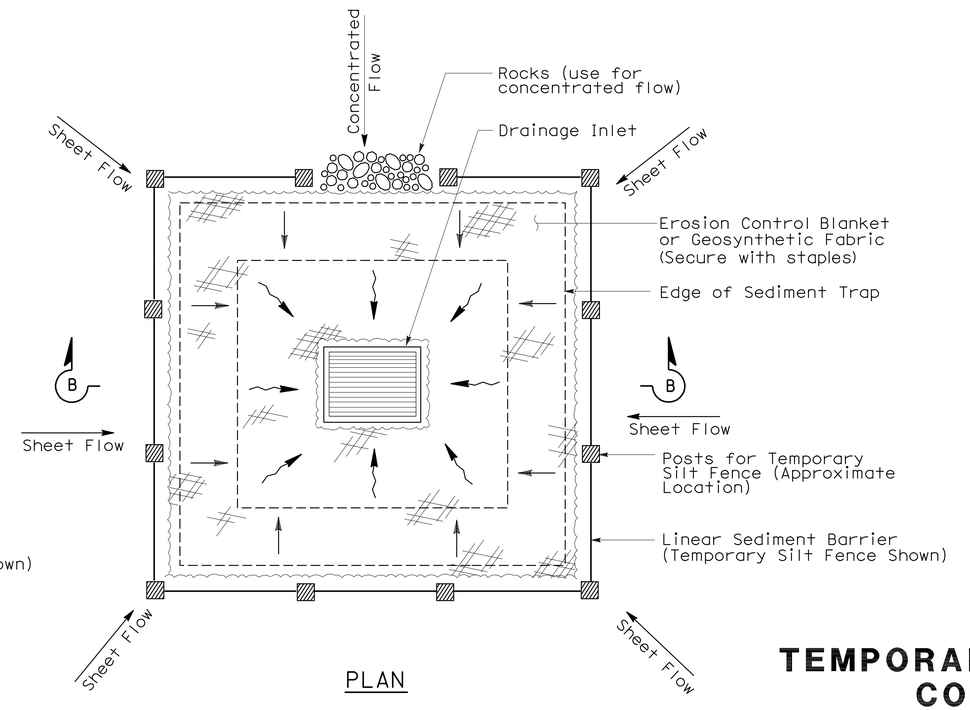

PLAN

TEMPORARY DRAINAGE
INLET PROTECTION (TYPE 2)
(EXCAVATED SEDIMENT TRAP)

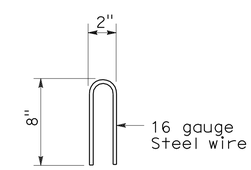

STAPLE DETAIL

STATE OF CALIFORNIA
DEPARTMENT OF TRANSPORTATION

TEMPORARY WATER POLLUTION CONTROL DETAILS (TEMPORARY DRAINAGE INLET PROTECTION)

NO SCALE

NSP T61 DATED AUGUST 15, 2008 SUPPLEMENTS
THE STANDARD PLANS BOOK DATED MAY 2006.

NEW STANDARD PLAN NSP T61

2006 NEW STANDARD PLAN NSP T61

7-11-08

DIST	COUNTY	ROUTE	POST MILES TOTAL PROJECT	SHEET NO.	TOTAL SHEETS
06	Fre	168	R36.0	34	37

LICENSED LANDSCAPE ARCHITECT

August 15, 2008
PLANS APPROVAL DATE

LICENSED LANDSCAPE ARCHITECT Robert B. Schott 3625 Signature 11-04-08 Renewal Date 08-11-08 Date STATE OF CALIFORNIA

The State of California or its officers or agents shall not be responsible for the accuracy or completeness of electronic copies of this plan sheet.

To accompany plans dated 1-11-10

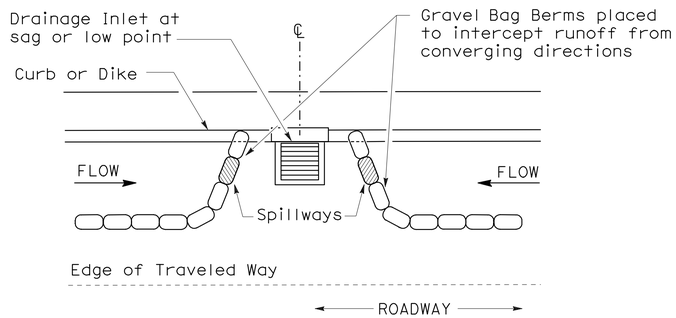

PLAN

CONFIGURATION FOR SAG POINT INLET (GRAVEL BAG BERM)

GRAVEL BAG BERM (TYPE 3A) SPACING TABLE

SLOPE OF ROADWAY (PERCENT)	1 to 3.9	4 to 5.9	6 to 7.9	8 to 10	10+
INTERVAL BETWEEN BERM	100′	75′	50′	25′	12′

For slope of less than 1%, install barriers only if erosion/sediment is prevalent

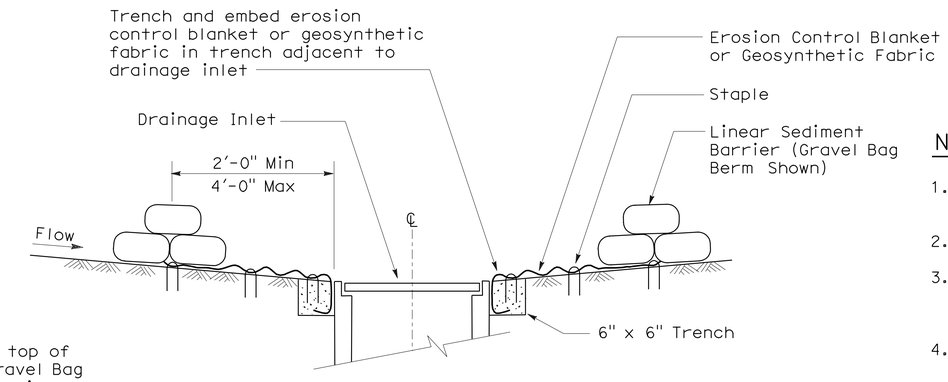

SECTION A-A

NOTES:

1. Place safety cones adjacent to drainage inlet protection.
2. Dimensions may vary to fit field conditions.
3. Install a minimum of 3 gravel bag berms upstream of each drainage inlet to be protected.
4. Position erosion control blanket or geosynthetic fabric at edge of concrete apron and secure in trench.
5. Erosion control blanket or geosynthetic fabric is not required if the area adjacent to the drainage inlet is vegetated or paved.

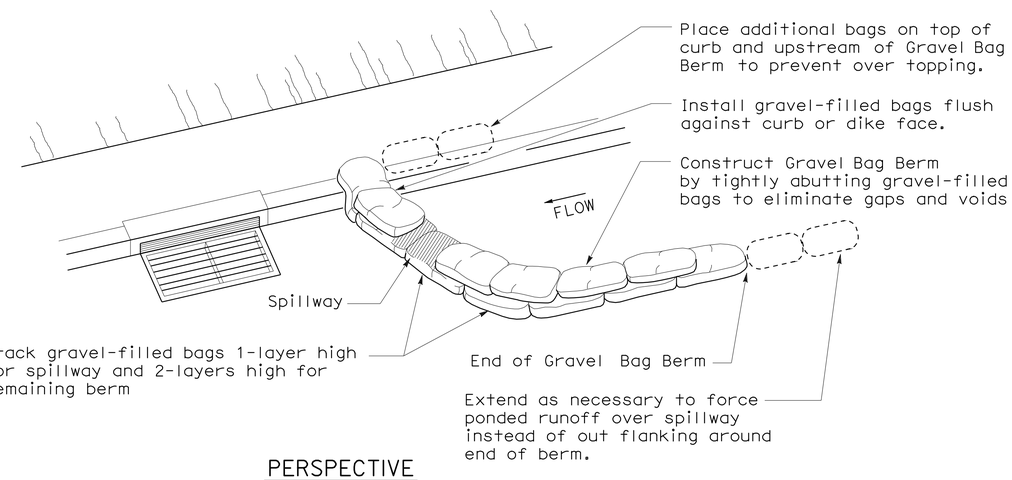

PERSPECTIVE

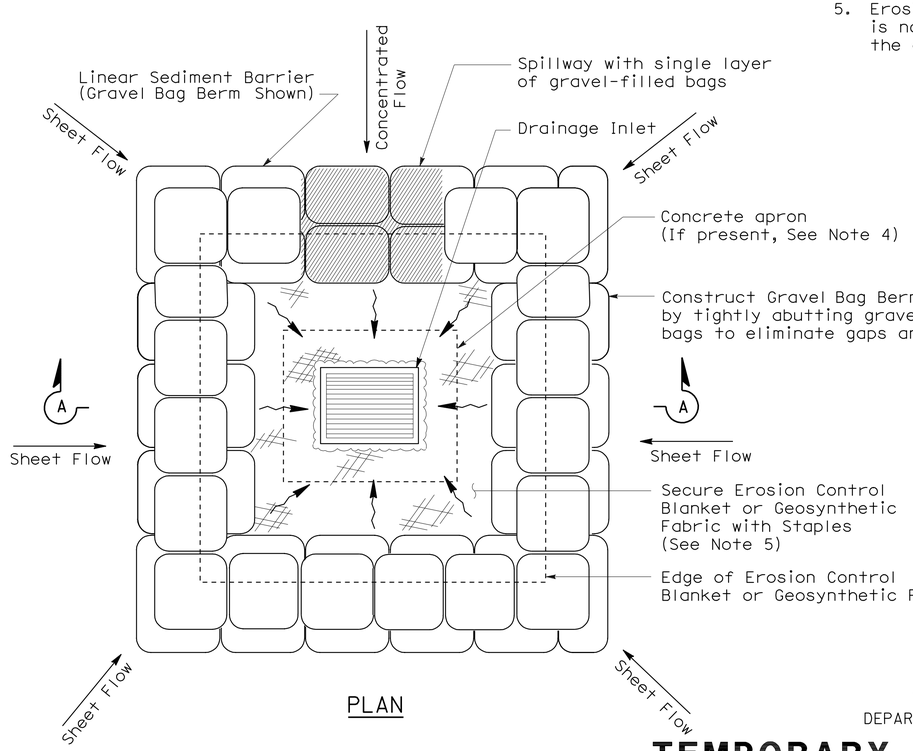

PLAN

TEMPORARY DRAINAGE INLET PROTECTION (TYPE 3B)

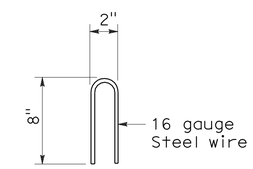

STAPLE DETAIL

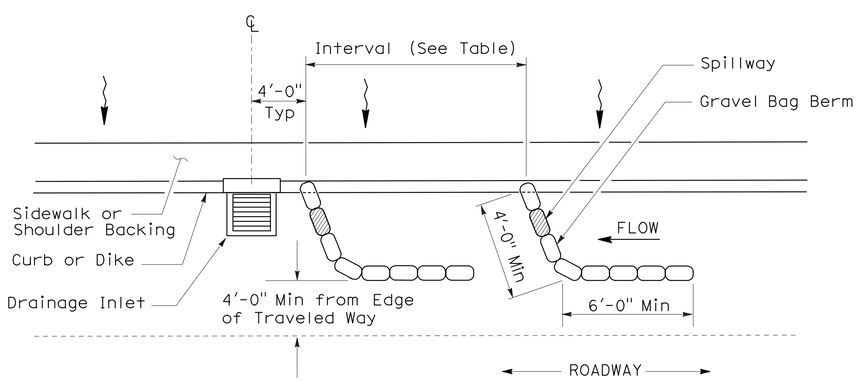

PLAN

TEMPORARY DRAINAGE INLET PROTECTION (TYPE 3A) (GRAVEL BAG BERM)

STATE OF CALIFORNIA
DEPARTMENT OF TRANSPORTATION

TEMPORARY WATER POLLUTION CONTROL DETAILS (TEMPORARY DRAINAGE INLET PROTECTION)

NO SCALE

NSP T62 DATED AUGUST 15, 2008 SUPPLEMENTS THE STANDARD PLANS BOOK DATED MAY 2006.

NEW STANDARD PLAN NSP T62

2006 NEW STANDARD PLAN NSP T62

7-11-08

DIST	COUNTY	ROUTE	POST MILES TOTAL PROJECT	SHEET NO.	TOTAL SHEETS
06	Fre	168	R36.0	35	37

Robert B Schott
LICENSED LANDSCAPE ARCHITECT

August 15, 2008
PLANS APPROVAL DATE

LICENSED LANDSCAPE ARCHITECT Robert B. Schott 3625 Signature 11-04-08 Renewal Date 08-11-08 Date STATE OF CALIFORNIA

The State of California or its officers or agents shall not be responsible for the accuracy or completeness of electronic copies of this plan sheet.

To accompany plans dated 1-11-10

FLEXIBLE SEDIMENT BARRIER SPACING TABLE

SLOPE OF ROADWAY (PERCENT)	0 to 0.9	1 to 1.9	2 to 2.9	3 to 4	5+
INTERVAL BETWEEN BARRIERS	50′	35′	30′	25′	20′
ANGLE FROM FACE OF CURB	70°	70°	70°	45°	45°
SUGGESTED BARRIER LENGTH	6′	6′	6′	6′	6′

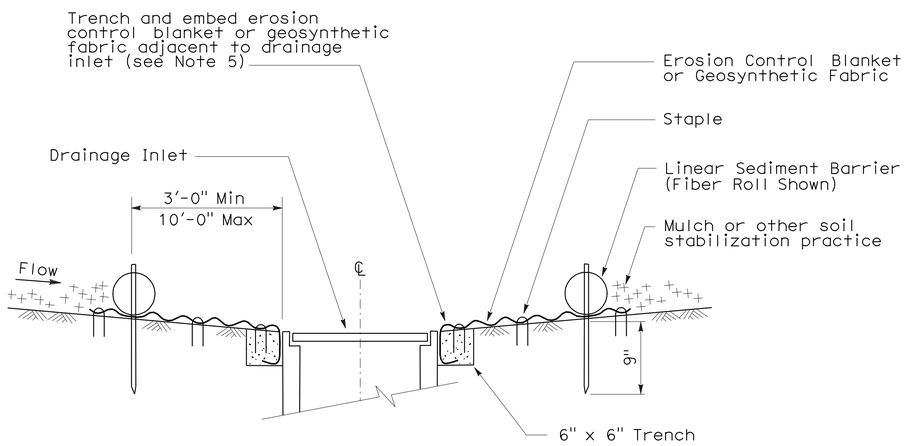

SECTION A-A

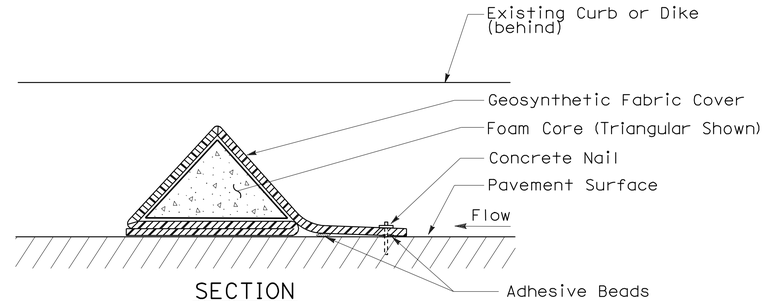

SECTION

FLEXIBLE SEDIMENT BARRIER DETAIL (FOAM BARRIER SHOWN)

NOTES:

1. See Standard Plan T51 for Temporary Silt Fence.
2. Dimensions may vary to fit field conditions.
3. Install a minimum of 3 flexible sediment barriers upstream of each drainage inlet to be protected.
4. Position erosion control blanket or geosynthetic fabric at edge of concrete apron and secure in trench.
5. Erosion control blanket or geosynthetic fabric is not required if the area adjacent to the drainage inlet is vegetated.

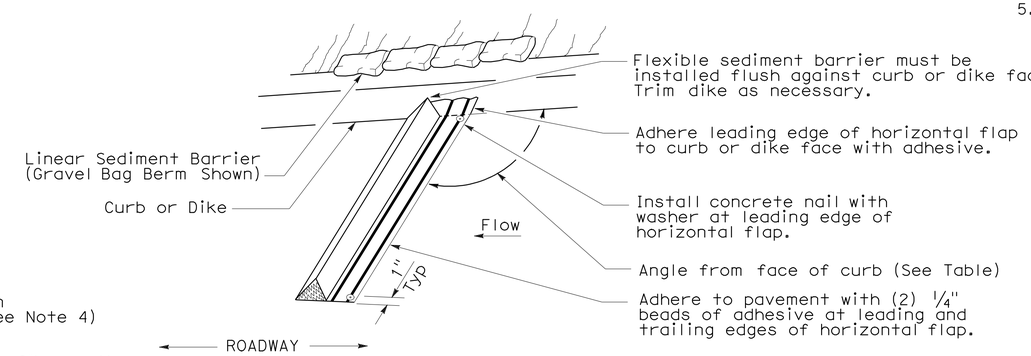

PERSPECTIVE

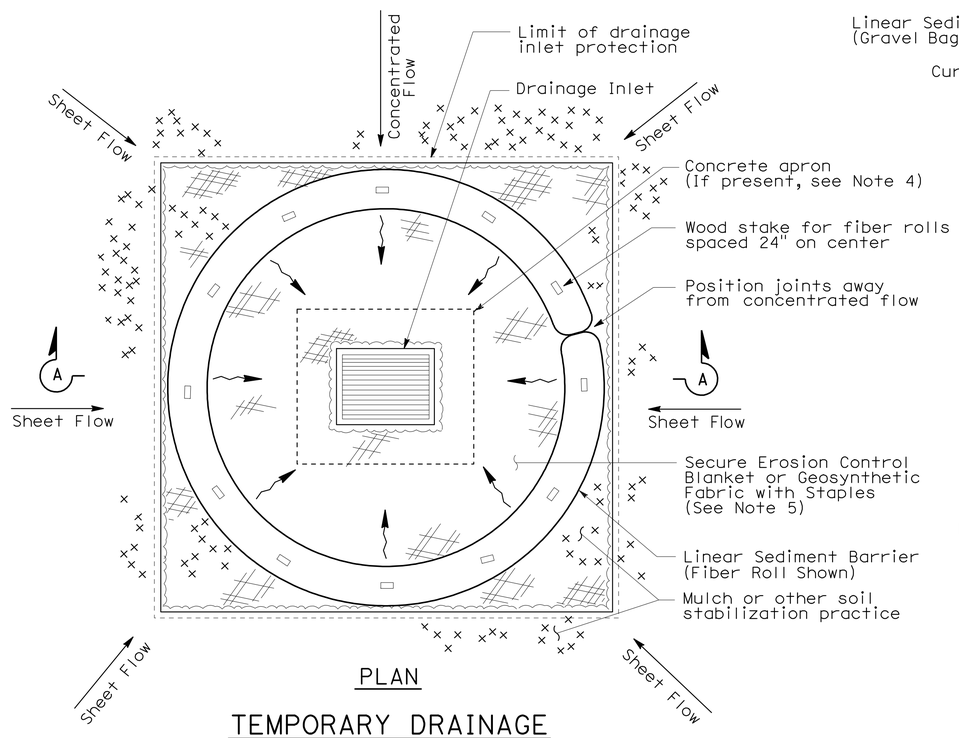

PLAN

TEMPORARY DRAINAGE INLET PROTECTION (TYPE 4A)

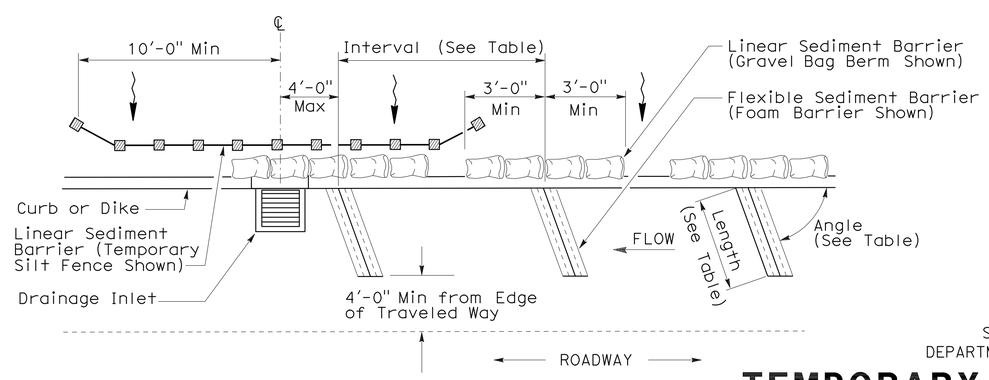

PLAN

TEMPORARY DRAINAGE INLET PROTECTION (TYPE 4B) FLEXIBLE SEDIMENT BARRIER

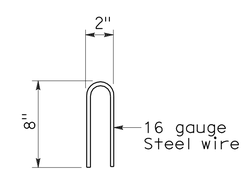

STAPLE DETAIL

STATE OF CALIFORNIA
DEPARTMENT OF TRANSPORTATION

TEMPORARY WATER POLLUTION CONTROL DETAILS (TEMPORARY DRAINAGE INLET PROTECTION)

NO SCALE

NSP T63 DATED AUGUST 15, 2008 SUPPLEMENTS THE STANDARD PLANS BOOK DATED MAY 2006.

NEW STANDARD PLAN NSP T63

2006 NEW STANDARD PLAN NSP T63

DIST	COUNTY	ROUTE	POST MILES TOTAL PROJECT	SHEET NO.	TOTAL SHEETS
06	Fre	168	R36.0	36	37

Robert B Schott
LICENSED LANDSCAPE ARCHITECT

August 15, 2008
PLANS APPROVAL DATE

LICENSED LANDSCAPE ARCHITECT
Robert B. Schott 3625
Robert B Schott
Signature
11-04-08
Renewal Date
08-11-08
Date
STATE OF CALIFORNIA

The State of California or its officers or agents shall not be responsible for the accuracy or completeness of electronic copies of this plan sheet.

To accompany plans dated 1-11-10

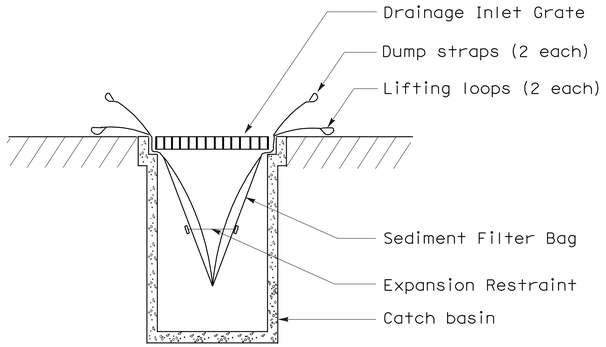

SECTION B-B

SEDIMENT FILTER BAG DETAIL

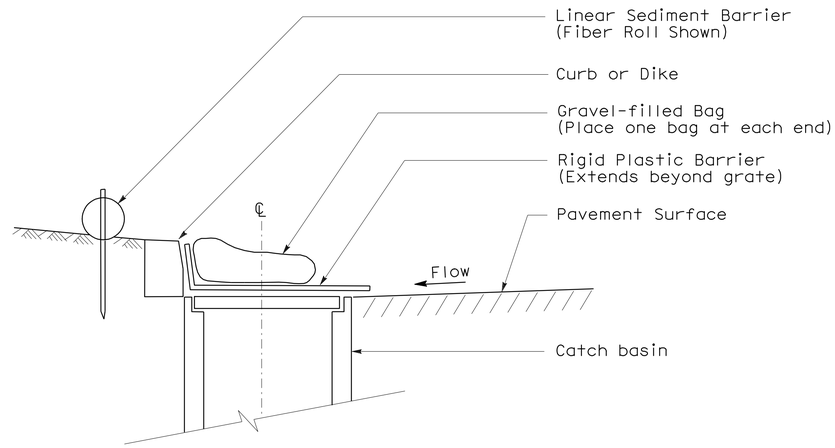

SECTION

TEMPORARY DRAINAGE INLET PROTECTION (TYPE 6A) (CATCH BASIN WITH GRATE)

NOTES:

1. See Standard Plan T51 for Temporary Silt Fence.
2. Dimensions may vary to fit field conditions.

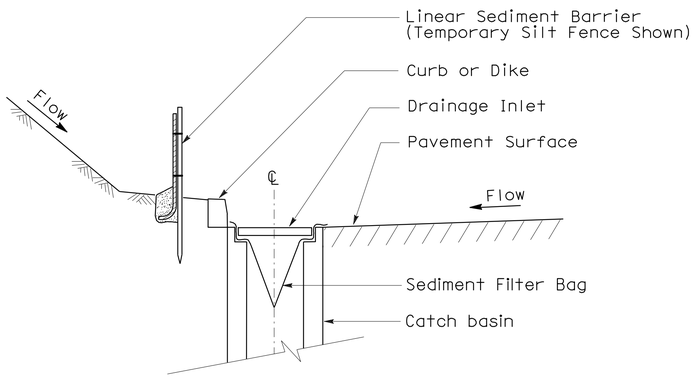

SECTION A-A

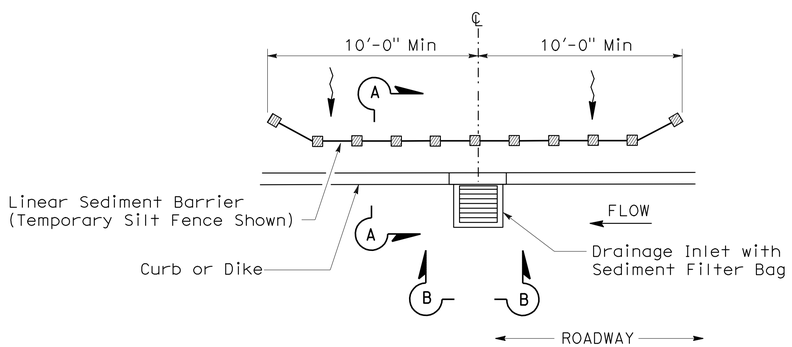

PLAN

TEMPORARY DRAINAGE INLET PROTECTION (TYPE 5) (SEDIMENT FILTER BAG)

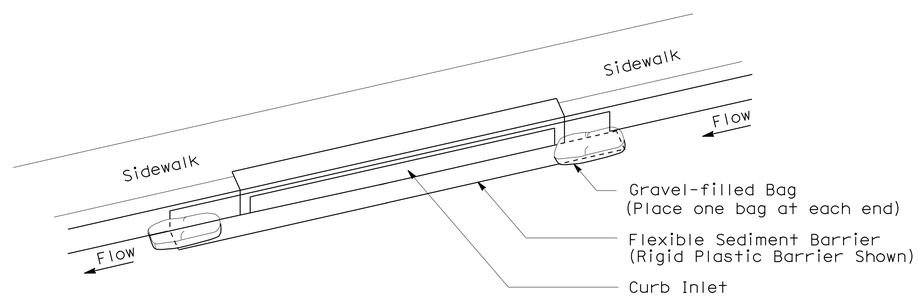

PERSPECTIVE

TEMPORARY DRAINAGE INLET PROTECTION (TYPE 6B) (CURB INLET WITHOUT GRATE)

STATE OF CALIFORNIA
DEPARTMENT OF TRANSPORTATION

TEMPORARY WATER POLLUTION CONTROL DETAILS (TEMPORARY DRAINAGE INLET PROTECTION)

NO SCALE

NSP T64 DATED AUGUST 15, 2008 SUPPLEMENTS
THE STANDARD PLANS BOOK DATED MAY 2006.

NEW STANDARD PLAN NSP T64

2006 NEW STANDARD PLAN NSP T64

7-11-08

DIST	COUNTY	ROUTE	POST MILES TOTAL PROJECT	SHEET NO.	TOTAL SHEETS
06	Fre	168	R36.0	37	37

LICENSED LANDSCAPE ARCHITECT

April 3, 2009
PLANS APPROVAL DATE

LICENSED LANDSCAPE ARCHITECT Robert B. Schott 3625 Signature 11-30-10 Renewal Date 2-25-09 Date STATE OF CALIFORNIA

The State of California or its officers or agents shall not be responsible for the accuracy or completeness of electronic copies of this plan sheet.

To accompany plans dated 1-11-10

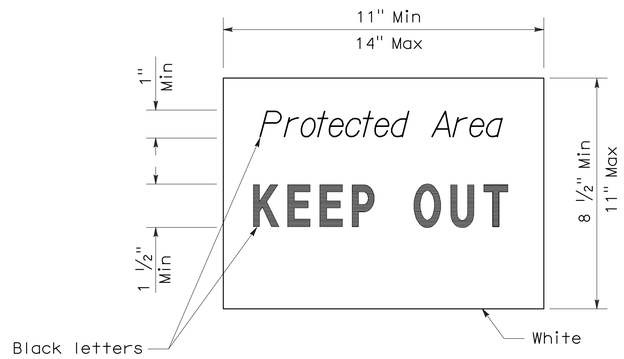

SIGN DETAIL

NOTE:

1. Temporary silt fence and temporary straw bale barrier shown for reference purposes only.

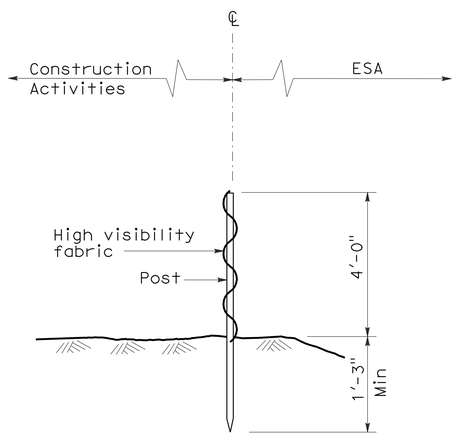

SECTION
TEMPORARY FENCE (TYPE ESA)

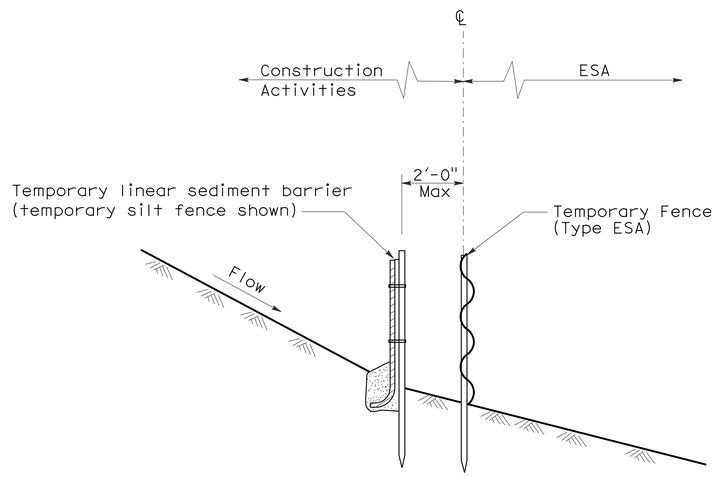

SECTION
PLACEMENT DETAIL
FOR TEMPORARY LINEAR SEDIMENT BARRIER
USED WITH TEMPORARY
FENCE (TYPE ESA)
(See Note 1)

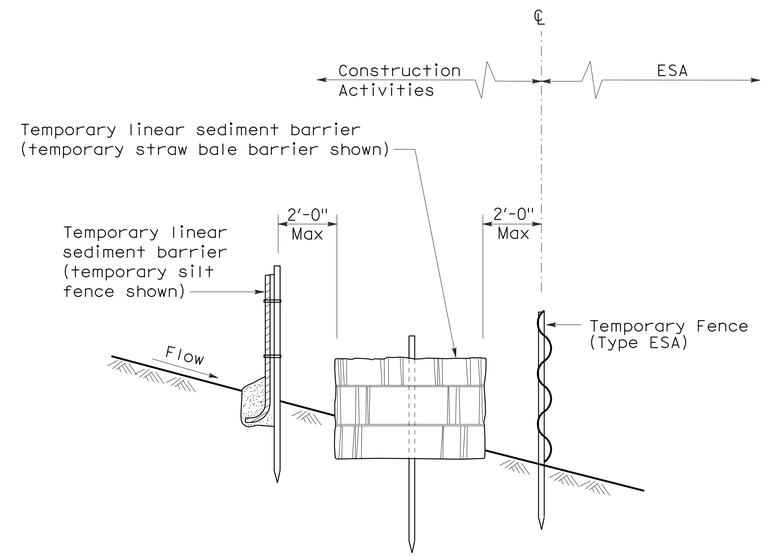

SECTION
PLACEMENT DETAIL
FOR TEMPORARY SILT FENCE
AND TEMPORARY STRAW BALE BARRIER
USED WITH TEMPORARY FENCE (TYPE ESA)
(See Note 1)

STATE OF CALIFORNIA
DEPARTMENT OF TRANSPORTATION

TEMPORARY WATER POLLUTION CONTROL DETAILS [TEMPORARY FENCE (TYPE ESA)]

NO SCALE

NSP T65 DATED APRIL 3, 2009 SUPPLEMENTS
THE STANDARD PLANS BOOK DATED MAY 2006.

NEW STANDARD PLAN NSP T65

2006 NEW STANDARD PLAN NSP T65