| Dist | COUNTY | ROUTE | POST MILES TOTAL PROJECT | SHEET No. | TOTAL SHEETS |
|---|---|---|---|---|---|
| 06 | Tul | 99 | 22.4 | 1 | 335 |

NH-SARRA-STPE-
SARRAE-P099(539)E

STATE OF CALIFORNIA
# DEPARTMENT OF TRANSPORTATION

# PROJECT PLANS FOR CONSTRUCTION ON
# STATE HIGHWAY

## IN TULARE COUNTY
## NEAR TIPTON
## AT THE PHILIP S RAINE SAFETY ROADSIDE REST AREA

TO BE SUPPLEMENTED BY STANDARD PLANS DATED MAY 2006

INDEX OF PLANS


| SHEET No. | DESCRIPTION |
|---|---|
| 1 | TITLE AND LOCATION MAP |
| 2-15 | LAYOUTS |
| 16-80 | CONSTRUCTION DETAILS |
| 81-84 | CONTOUR GRADING |
| 85-98 | DRAINAGE PLANS, PROFILES, DETAILS AND QUANTITIES |
| 99-104 | UTILITY PLANS |
| 105 | CONSTRUCTION AREA SIGNS |
| 106-107 | TRAFFIC HANDLING PLAN AND QUANTITIES |
| 108-109 | PAVEMENT DELINEATION, SIGN PLAN AND QUANTITIES |
| 110 | SIGN DETAILS AND QUANTITIES |
| 111-114 | SUMMARY OF QUANTITIES |
| 115-140 | HIGHWAY PLANTING |
| 141 | ELECTRICAL PLAN |
| 142-160 | REVISED AND NEW STANDARD PLANS |

BUILDING PLANS

| | |
|---|---|
| 161 | GENERAL PLAN |
| 162-212 | ARCHITECTURAL PLANS |
| 213-265 | STRUCTURAL PLANS |
| 266-282 | MECHANICAL PLANS |
| 283-325 | ELECTRICAL PLANS |
| 326-335 | WATER AND SANITARY SEWER |


THE STANDARD PLANS LIST APPLICABLE TO THIS CONTRACT IS INCLUDED IN THE NOTICE TO BIDDERS AND SPECIAL PROVISIONS BOOK.

LOCATION MAP

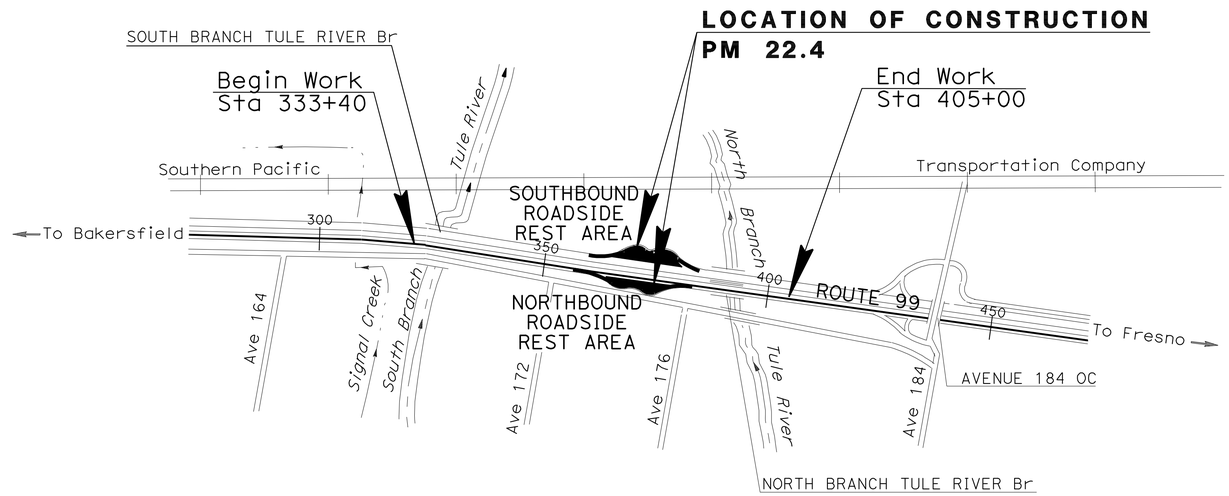


NO SCALE

Gloria Ramirez
LICENSED LANDSCAPE ARCHITECT

August 9, 2010
PLANS APPROVAL DATE

LICENSED LANDSCAPE ARCHITECT
GLORIA RAMIREZ No. 5069
Gloria Ramirez
Signature
04/30/10
Renewal Date
02/01/10
Date
STATE OF CALIFORNIA

*THE STATE OF CALIFORNIA OR ITS OFFICERS OR AGENTS SHALL NOT BE RESPONSIBLE FOR THE ACCURACY OR COMPLETENESS OF SCANNED COPIES OF THIS PLAN SHEET.*

PROJECT MANAGER
PHILLIP SANCHEZ

SENIOR LANDSCAPE ARCHITECT
ELBERT COX

THE CONTRACTOR SHALL POSSESS THE CLASS (OR CLASSES) OF LICENSE AS SPECIFIED IN THE "NOTICE TO BIDDERS."

| | |
|---|---|
| CONTRACT No. | 06-0A9704 |
| PROJECT ID | 0600000019 |

LAST REVISION 02-01-10
DATE PLOTTED => 05-OCT-2010
TIME PLOTTED => 11:13

| Dist | COUNTY | ROUTE | POST MILES TOTAL PROJECT | SHEET No. | TOTAL SHEETS |
|---|---|---|---|---|---|
| 06 | Tul | 99 | 22.4 | 2 | 335 |

Gloria Ramirez
LICENSED LANDSCAPE ARCHITECT

8-9-10
PLANS APPROVAL DATE

LICENSED LANDSCAPE ARCHITECT
GLORIA RAMIREZ No. 5985
Gloria Ramirez
Signature
04/30/10
Renewal Date
02/01/10
Date
STATE OF CALIFORNIA

*THE STATE OF CALIFORNIA OR ITS OFFICERS OR AGENTS SHALL NOT BE RESPONSIBLE FOR THE ACCURACY OR COMPLETENESS OF SCANNED COPIES OF THIS PLAN SHEET.*

## NOTES:

1. FOR ACCURATE RIGHT OF WAY AND ACCESS DATA, CONTACT RIGHT OF WAY ENGINEERING AT THE DISTRICT OFFICE.
2. RESET PULL BOXES, SEE SHEETS L-7 THROUGH L-12.
3. SEE CONSTRUCTION DETAILS SHEETS C-1 THROUGH C-6, C-17 AND C-23 FOR BEGIN AND END ROADWAY EXCAVATION STATION AND OFFSET.

## LEGEND:

- Exist TREE TO REMAIN
- REMOVE CONCRETE
- REMOVE CONCRETE PAVERS
- REMOVE PLANTING (SHRUBS, GROUNDCOVER, SOD)
- REMOVE TREE
- ROADWAY EXCAVATION
- REMOVE RETAINING WALL
- TEMPORARY DRAIN INLET PROTECTION
- (A) REMOVE TRASH CONTAINER
- (B) REMOVE HOSE BIB
- (C) SEE ELECTRICAL PLANS
- (D) REMOVE PICNIC TABLE/BENCHES
- (E) REMOVE MASONRY PLANTER
- (F) REMOVE MEMORIAL SIGN
- (G) REMOVE DEDICATION PLAQUE
- (H) REMOVE RECYCLE CONTAINER
- (I) REMOVE NEWSPAPER RACK
- (X) QUANTITY OF ITEMS BEING REMOVED

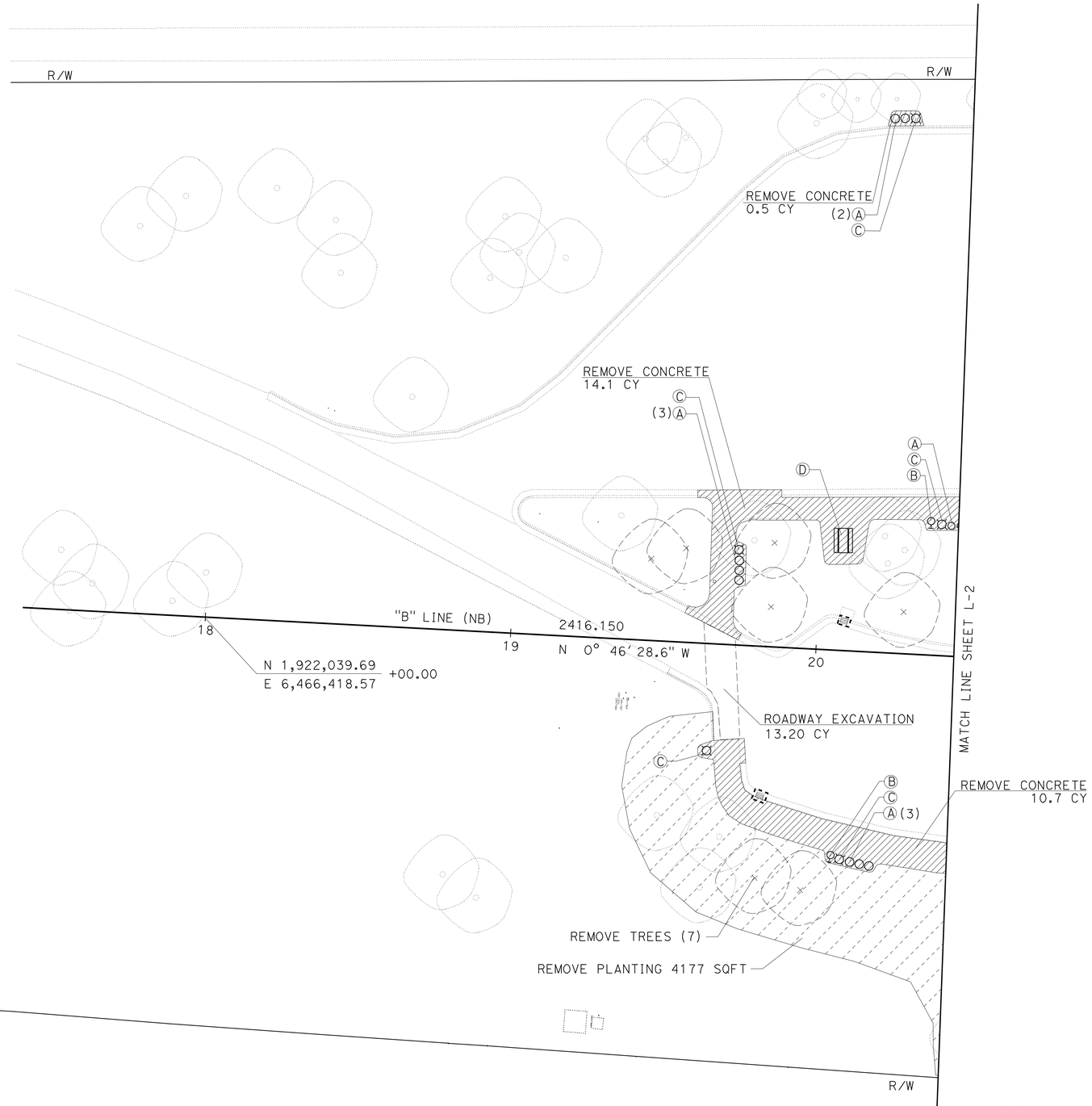


# LAYOUT
## (NORTHBOUND REMOVAL PLAN)

SCALE: 1" = 20'

**L-1**

STATE OF CALIFORNIA - DEPARTMENT OF TRANSPORTATION
Caltrans LANDSCAPE ARCHITECTURE

FUNCTIONAL SUPERVISOR: ELBERT COX
CALCULATED-DESIGNED BY: GLORIA RAMIREZ
CHECKED BY: RICHARD COLE
REVISED BY
DATE REVISED

LAST REVISION DATE PLOTTED => 04-OCT-2010
02-01-10 TIME PLOTTED => 13:39

| Dist | COUNTY | ROUTE | POST MILES TOTAL PROJECT | SHEET No. | TOTAL SHEETS |
|---|---|---|---|---|---|
| 06 | Tul | 99 | 22.4 | 3 | 335 |

Gloria Ramirez
LICENSED LANDSCAPE ARCHITECT

8-9-10
PLANS APPROVAL DATE

LICENSED LANDSCAPE ARCHITECT GLORIA RAMIREZ No. 5893 Gloria Ramirez Signature 04/30/10 Renewal Date 02/01/10 Date STATE OF CALIFORNIA

*THE STATE OF CALIFORNIA OR ITS OFFICERS OR AGENTS SHALL NOT BE RESPONSIBLE FOR THE ACCURACY OR COMPLETENESS OF SCANNED COPIES OF THIS PLAN SHEET.*

**NOTE:** FOR ACCURATE RIGHT OF WAY AND ACCESS DATA, CONTACT RIGHT OF WAY ENGINEERING AT THE DISTRICT OFFICE.

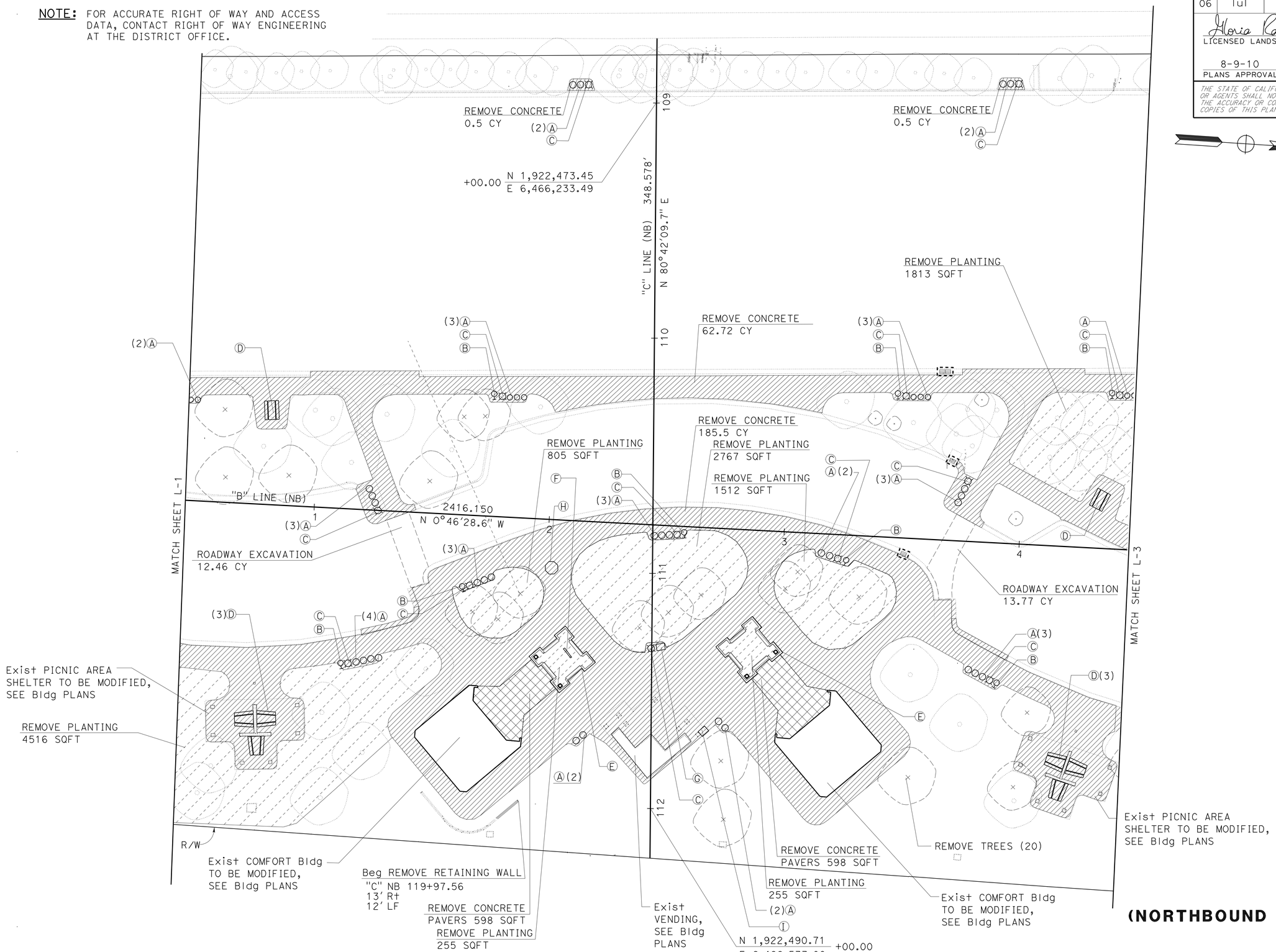


# LAYOUT (NORTHBOUND REMOVAL PLAN)

SCALE: 1" = 20'

**L-2**

STATE OF CALIFORNIA - DEPARTMENT OF TRANSPORTATION
Caltrans LANDSCAPE ARCHITECTURE

FUNCTIONAL SUPERVISOR: ELBERT COX
CALCULATED-DESIGNED BY: GLORIA RAMIREZ
CHECKED BY: RICHARD COLE
REVISED BY
DATE REVISED

LAST REVISION 02-01-10
DATE PLOTTED => 04-OCT-2010
TIME PLOTTED => 13:39

| Dist | COUNTY | ROUTE | POST MILES TOTAL PROJECT | SHEET No. | TOTAL SHEETS |
|---|---|---|---|---|---|
| 06 | Tul | 99 | 22.4 | 4 | 335 |

Gloria Ramirez
LICENSED LANDSCAPE ARCHITECT

8-9-10
PLANS APPROVAL DATE

LICENSED LANDSCAPE ARCHITECT GLORIA RAMIREZ No. 5985 Gloria Ramirez Signature 04/30/10 Renewal Date 02/01/10 Date STATE OF CALIFORNIA

*THE STATE OF CALIFORNIA OR ITS OFFICERS OR AGENTS SHALL NOT BE RESPONSIBLE FOR THE ACCURACY OR COMPLETENESS OF SCANNED COPIES OF THIS PLAN SHEET.*

**NOTE:** FOR ACCURATE RIGHT OF WAY AND ACCESS DATA, CONTACT RIGHT OF WAY ENGINEERING AT THE DISTRICT OFFICE.

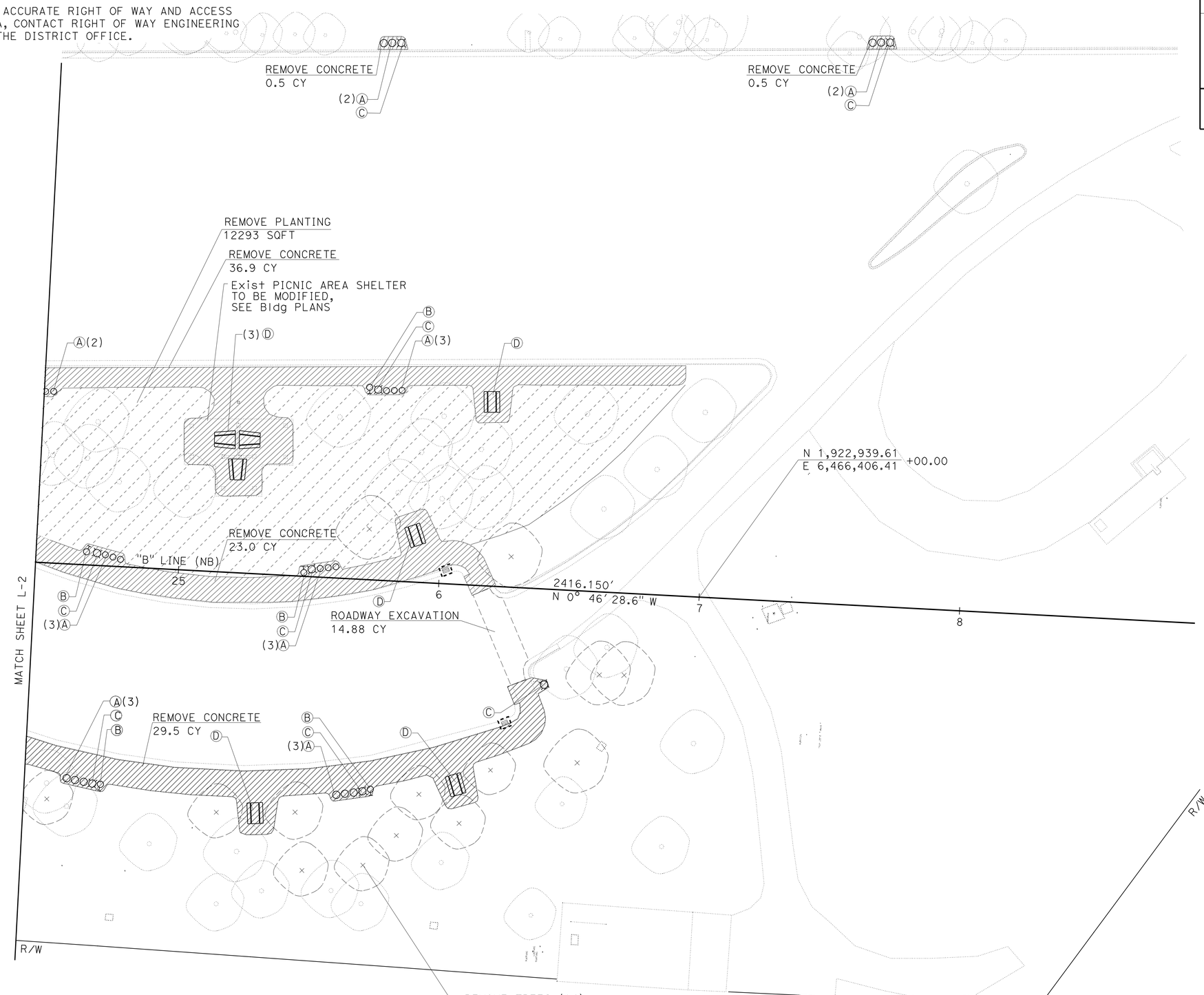


# LAYOUT
## (NORTHBOUND REMOVAL PLAN)

SCALE: 1" = 20'

**L-3**

STATE OF CALIFORNIA - DEPARTMENT OF TRANSPORTATION
Caltrans® LANDSCAPE ARCHITECTURE

FUNCTIONAL SUPERVISOR: ELBERT COX
CALCULATED-DESIGNED BY: GLORIA RAMIREZ
CHECKED BY: RICHARD COLE
REVISED BY
DATE REVISED

LAST REVISION 02-01-10
DATE PLOTTED => 17-AUG-2010
TIME PLOTTED => 06:12

| Dist | COUNTY | ROUTE | POST MILES TOTAL PROJECT | SHEET No. | TOTAL SHEETS |
|---|---|---|---|---|---|
| 06 | Tul | 99 | 22.4 | 5 | 335 |

Gloria Ramirez
LICENSED LANDSCAPE ARCHITECT

8-9-10
PLANS APPROVAL DATE

LICENSED LANDSCAPE ARCHITECT
GLORIA RAMIREZ No. 5985
Gloria Ramirez
Expiration Date
04/30/10
Renewal Date
02/01/10
Date
STATE OF CALIFORNIA

*THE STATE OF CALIFORNIA OR ITS OFFICERS OR AGENTS SHALL NOT BE RESPONSIBLE FOR THE ACCURACY OR COMPLETENESS OF SCANNED COPIES OF THIS PLAN SHEET.*

**NOTE:** FOR ACCURATE RIGHT OF WAY AND ACCESS DATA, CONTACT RIGHT OF WAY ENGINEERING AT THE DISTRICT OFFICE.

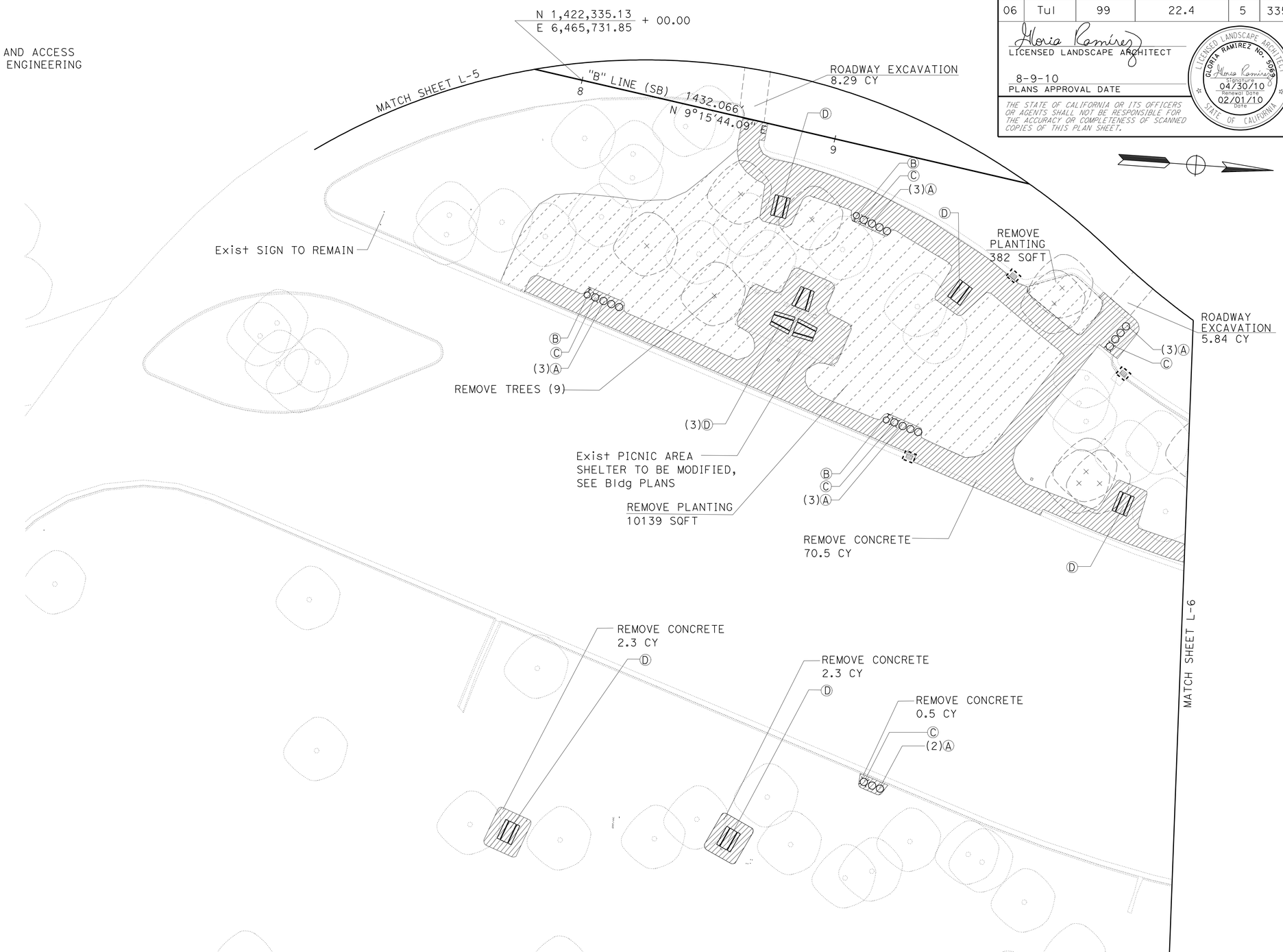


# LAYOUT
## (SOUTHBOUND REMOVAL PLAN)

SCALE: 1" = 20'

**L-4**

STATE OF CALIFORNIA - DEPARTMENT OF TRANSPORTATION
Caltrans® LANDSCAPE ARCHITECTURE

FUNCTIONAL SUPERVISOR: ELBERT COX
CALCULATED-DESIGNED BY: GLORIA RAMIREZ
CHECKED BY: RICHARD COLE
REVISED BY
DATE REVISED

LAST REVISION DATE PLOTTED => 05-OCT-2010
02-01-10 TIME PLOTTED => 11:22

| Dist | COUNTY | ROUTE | POST MILES TOTAL PROJECT | SHEET No. | TOTAL SHEETS |
|---|---|---|---|---|---|
| 06 | Tul | 99 | 22.4 | 6 | 335 |

Gloria Ramirez
LICENSED LANDSCAPE ARCHITECT

8-9-10
PLANS APPROVAL DATE

LICENSED LANDSCAPE ARCHITECT GLORIA RAMIREZ No. 5985 Gloria Ramirez Signature 04/30/10 Renewal Date 02/01/10 Date STATE OF CALIFORNIA

*THE STATE OF CALIFORNIA OR ITS OFFICERS OR AGENTS SHALL NOT BE RESPONSIBLE FOR THE ACCURACY OR COMPLETENESS OF SCANNED COPIES OF THIS PLAN SHEET.*

**NOTE:** FOR ACCURATE RIGHT OF WAY AND ACCESS DATA, CONTACT RIGHT OF WAY ENGINEERING AT THE DISTRICT OFFICE.

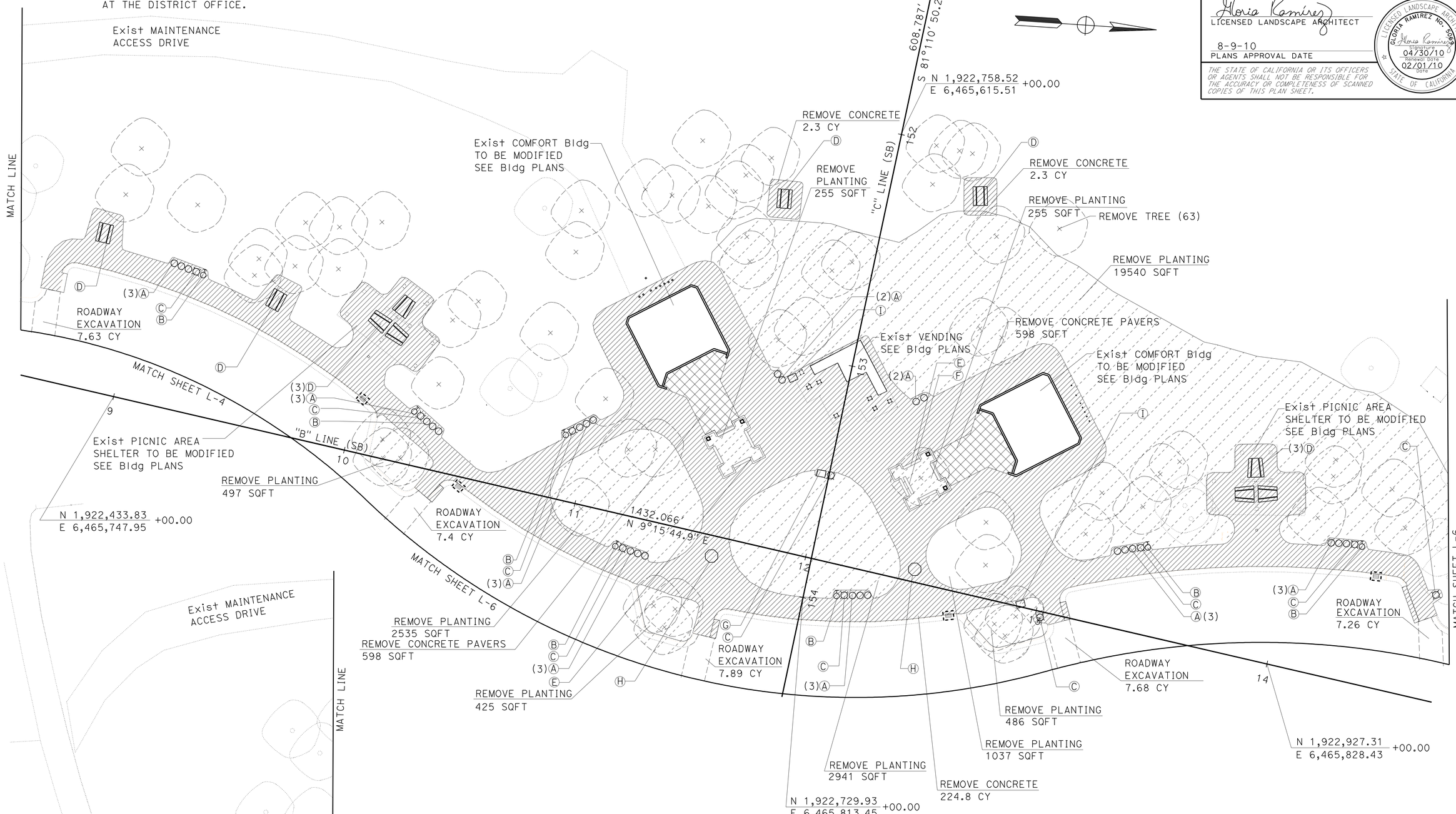


# LAYOUT
## (SOUTHBOUND REMOVAL PLAN)

SCALE: 1" = 20'

**L-5**

STATE OF CALIFORNIA - DEPARTMENT OF TRANSPORTATION
Caltrans® LANDSCAPE ARCHITECTURE

FUNCTIONAL SUPERVISOR: ELBERT COX
CALCULATED-DESIGNED BY: GLORIA RAMIREZ
CHECKED BY: RICHARD COLE
REVISED BY
DATE REVISED

LAST REVISION DATE PLOTTED => 04-OCT-2010
02-01-10 TIME PLOTTED => 13:39

| Dist | COUNTY | ROUTE | POST MILES TOTAL PROJECT | SHEET No. | TOTAL SHEETS |
|---|---|---|---|---|---|
| 06 | Tul | 99 | 22.4 | 7 | 335 |

Gloria Ramirez
LICENSED LANDSCAPE ARCHITECT

8-9-10
PLANS APPROVAL DATE

LICENSED LANDSCAPE ARCHITECT
GLORIA RAMIREZ No. 5985
Gloria Ramirez
Signature
04/30/10
Renewal Date
02/01/10
Date
STATE OF CALIFORNIA

*THE STATE OF CALIFORNIA OR ITS OFFICERS OR AGENTS SHALL NOT BE RESPONSIBLE FOR THE ACCURACY OR COMPLETENESS OF SCANNED COPIES OF THIS PLAN SHEET.*

**NOTE:** FOR ACCURATE RIGHT OF WAY AND ACCESS DATA, CONTACT RIGHT OF WAY ENGINEERING AT THE DISTRICT OFFICE.

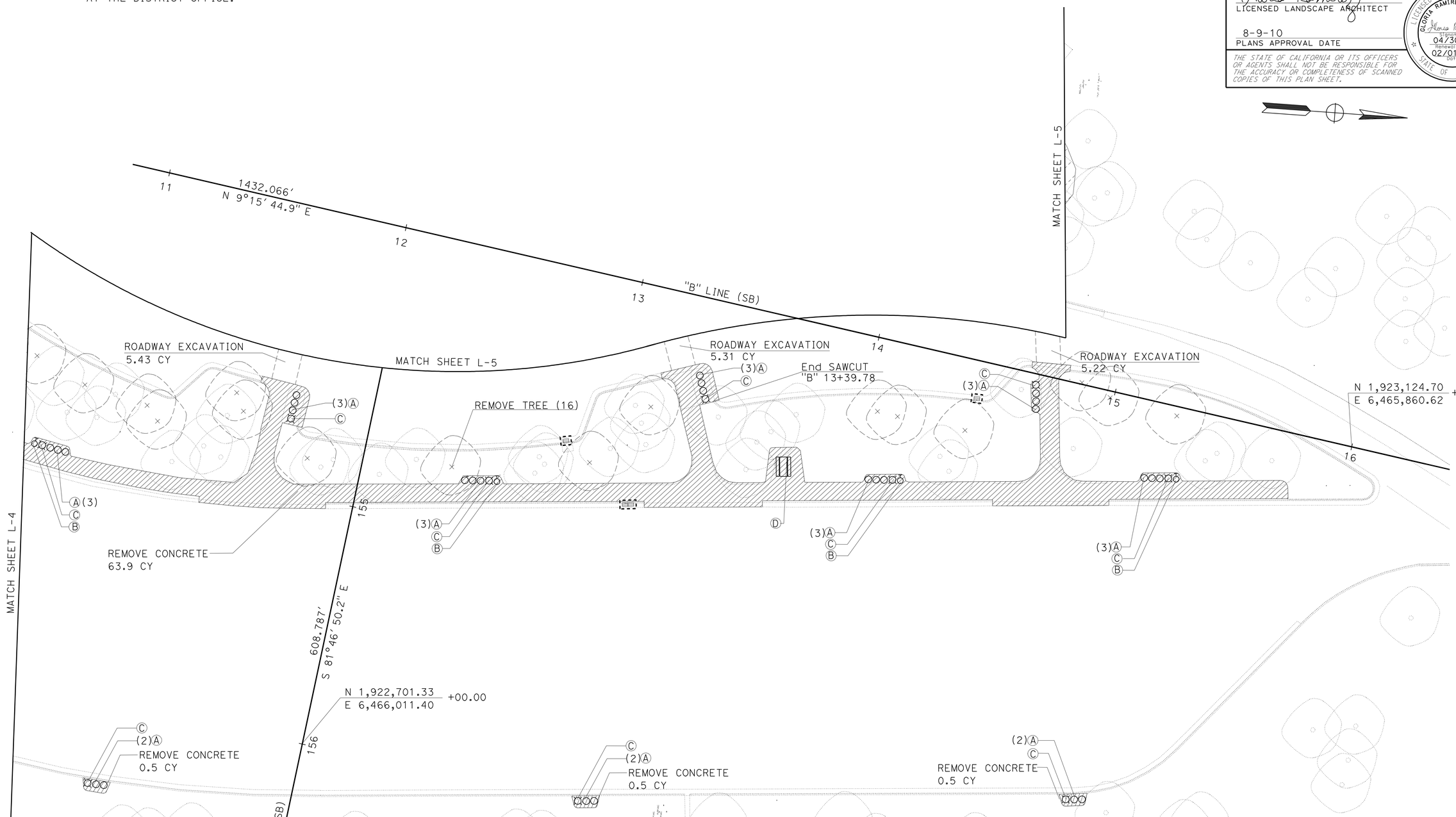


# LAYOUT
## (SOUTHBOUND REMOVAL PLAN)
SCALE: 1" = 20'

**L-6**

STATE OF CALIFORNIA - DEPARTMENT OF TRANSPORTATION
Caltrans® LANDSCAPE ARCHITECTURE

FUNCTIONAL SUPERVISOR: ELBERT COX
CALCULATED-DESIGNED BY: GLORIA RAMIREZ
CHECKED BY: RICHARD COLE
REVISED BY
DATE REVISED

LAST REVISION 02-01-10
DATE PLOTTED => 16-AUG-2010
TIME PLOTTED => 06:56

| Dist | COUNTY | ROUTE | POST MILES TOTAL PROJECT | SHEET No. | TOTAL SHEETS |
|---|---|---|---|---|---|
| 06 | Tul | 99 | 22.4 | 8 | 335 |

Gloria Ramirez
LICENSED LANDSCAPE ARCHITECT

8-9-10
PLANS APPROVAL DATE

LICENSED LANDSCAPE ARCHITECT
GLORIA RAMIREZ No. 5985
Gloria Ramirez
Signature
04/30/10
Renewal Date
02/01/10
Date
STATE OF CALIFORNIA

*THE STATE OF CALIFORNIA OR ITS OFFICERS OR AGENTS SHALL NOT BE RESPONSIBLE FOR THE ACCURACY OR COMPLETENESS OF SCANNED COPIES OF THIS PLAN SHEET.*

**NOTE:** FOR ACCURATE RIGHT OF WAY AND ACCESS DATA, CONTACT RIGHT OF WAY ENGINEERING AT THE DISTRICT OFFICE.

| SYMBOL | DESCRIPTION | DETAIL SHEET |
|---|---|---|
| BP-1 | BRONZE PLAQUE | C-41 |
| BT-1 | BLENDED TRANSITION STYLE 1 | C-42 |
| BT-2 | BLENDED TRANSITION STYLE 2 | C-42 |
| BT-3 | BLENDED TRANSITION STYLE 3 | C-42 |
| BT-4 | BLENDED TRANSITION, STYLE 4 | C-42 |
| BT-5 | BLENDED TRANSITION, STYLE 5 | C-42 |
| DG | DECOMPOSED GRANITE (SEE PP1-PP8) | C-48 |
| DP-1 | INTERPRETIVE DISPLAY FRAME AND PANEL STYLE 1 | C-47 |
| DP-2 | INTERPRETIVE DISPLAY FRAME AND PANEL STYLE 2 | C-35 |
| DP-3 | INTERPRETIVE DISPLAY FRAME AND PANEL STYLE 3, WITH IMAGES C-1 THROUGH C-4 (SEE Q-4) | C-48 |
| DR-1 | 24" ROUND DRAIN GRATE | C-46 |
| DR-2 | GRATED LINE DRAIN | C-46 |
| MC-1 | MINOR CONCRETE (SWALE) | C-30 |
| MC-2.1 | MINOR CONCRETE (RETAINING WALL) (TYPE A) | C-34 |
| MC-2.2 | MINOR (RETAINING WALL) (TYPE B) | C-34 |
| MC-3 | MINOR CONCRETE (MOWCURB) | C-41 |
| MC-4 | MINOR CONCRETE (WITH ARCHITECTURAL TREATMENT, INCLUDES WALKWAY, CONCRETE PAVERS COLORED AGGREGATE, TILE MOSAIC AND BRONZE PLAQUE) | C-24, C-25, C-41 |
| MC-5 | MINOR CONCRETE (CROSSWALK BAND) | C-42 |
| PA | PLANTING AREA | |
| PC-1 | MINOR CONCRETE (PERVIOUS) | C-41 |
| PM-1 | PRECAST CONCRETE (MONUMENT) | C-28, C-29 |
| PP-1 | PRECAST CONCRETE (PEDESTAL) | C-34 |
| PP-2 | PRECAST CONCRETE (PAVERS) | C-41 |
| PS-1 | PRECAST CONCRETE SEATWALL ASSEMBLY (TYPE A) | C-30 |
| PS-2 | PRECAST CONCRETE SEATWALL ASSEMBLY (TYPE B) | C-31 |
| PS-3 | PRECAST CONCRETE SEATWALL ASSEMBLY (TYPE C) | C-32 |

| SYMBOL | DESCRIPTION | DETAIL SHEET |
|---|---|---|
| PS-4 | PRECAST CONCRETE SEATWALL ASSEMBLY (TYPE D) | C-33 |
| PS-5 | PRECAST CONCRETE SEATWALL (TYPE E) | C-33 |
| PS-6 | PRECAST CONCRETE SEATWALL ASSEMBLY (TYPE F) | C-33 |
| PT-1 | PICNIC TABLE, LAYOUT 1 | C-39 |
| PT-2 | PICNIC TABLE, LAYOUT 2 | C-39 |
| PT-3 | PICNIC TABLE, LAYOUT 3 | C-39 |
| PT-4 | PICNIC TABLE, LAYOUT 4 | C-32 |
| RW | TYPE 6B RETAINING WALL (MODIFIED) | C-35 |
| UI-1 | UTILITY ISLAND, "UI-1" | C-36 |
| UI-2 | UTILITY ISLAND, "UI-2" | C-36 |
| UI-3 | UTILITY ISLAND, "UI-3" | C-36 |
| UI-4 | UTILITY ISLAND, "UI-4" | C-36 |
| UI-5 | UTILITY ISLAND, "UI-5" | C-36 |
| UI-6 | UTILITY ISLAND, "UI-6" | C-36 |
| UI-7 | UTILITY ISLAND, "UI-7" | C-37 |
| UI-8 | UTILITY ISLAND, "UI-8" | C-37 |
| UI-9 | UTILITY ISLAND, "UI-9" | C-37 |
| UI-10 | UTILITY ISLAND, "UI-10" | C-37 |
| UI-11 | UTILITY ISLAND, "UI-11" | C-37 |
| UI-12 | UTILITY ISLAND, "UI-12" | C-37 |
| SS-1 | PRECAST CONCRETE SIGN (SS-1) | C-49 |
| SS-2 | PRECAST CONCRETE SIGN (SS-2) | C-49 |
| SS-3 | PRECAST CONCRETE SIGN (SS-3) | C-49 |
| SS-4 | ENTRANCE SIGN | C-56, C-57 |
| DD-1 | DEDICATION PLAQUE | C-43 |
| MS-1 | BLUE STAR MEMORIAL SIGN | C-34 |
| PB-1 | PULL BOX | |
| FN-1 | WIRE MESH FENCE | C-50 |

## LEGEND

| KEY/ SYMBOL | ITEM DESCRIPTION |
|---|---|
| | PICNIC TABLE |
| | TRASH/RECYCLE CONTAINER |
| | LIGHT POLE |
| | WATER FAUCET |
| | PRECAST CONCRETE SIGN |
| | SCORELINE |
| | DEDICATION PLAQUE |

# LAYOUT
## (NORTHBOUND SITE)

SCALE: 1" = 20'

**L-7**

STATE OF CALIFORNIA - DEPARTMENT OF TRANSPORTATION
Caltrans® LANDSCAPE ARCHITECTURE

FUNCTIONAL SUPERVISOR: ELBERT COX
CALCULATED-DESIGNED BY: GLORIA RAMIREZ
CHECKED BY: RICHARD COLE
REVISED BY
DATE REVISED

LAST REVISION 02-01-10 | DATE PLOTTED => 04-OCT-2010 | TIME PLOTTED => 13:52

| Dist | COUNTY | ROUTE | POST MILES TOTAL PROJECT | SHEET No. | TOTAL SHEETS |
|---|---|---|---|---|---|
| 06 | Tul | 99 | 22.4 | 9 | 335 |

Gloria Ramirez
LICENSED LANDSCAPE ARCHITECT

8-9-10
PLANS APPROVAL DATE

LICENSED LANDSCAPE ARCHITECT
GLORIA RAMIREZ No. 5085
Gloria Ramirez
Signature
04/30/10
Renewal Date
02/01/10
Date
STATE OF CALIFORNIA

*THE STATE OF CALIFORNIA OR ITS OFFICERS OR AGENTS SHALL NOT BE RESPONSIBLE FOR THE ACCURACY OR COMPLETENESS OF SCANNED COPIES OF THIS PLAN SHEET.*

**NOTE:** FOR ACCURATE RIGHT OF WAY AND ACCESS DATA, CONTACT RIGHT OF WAY ENGINEERING AT THE DISTRICT OFFICE.

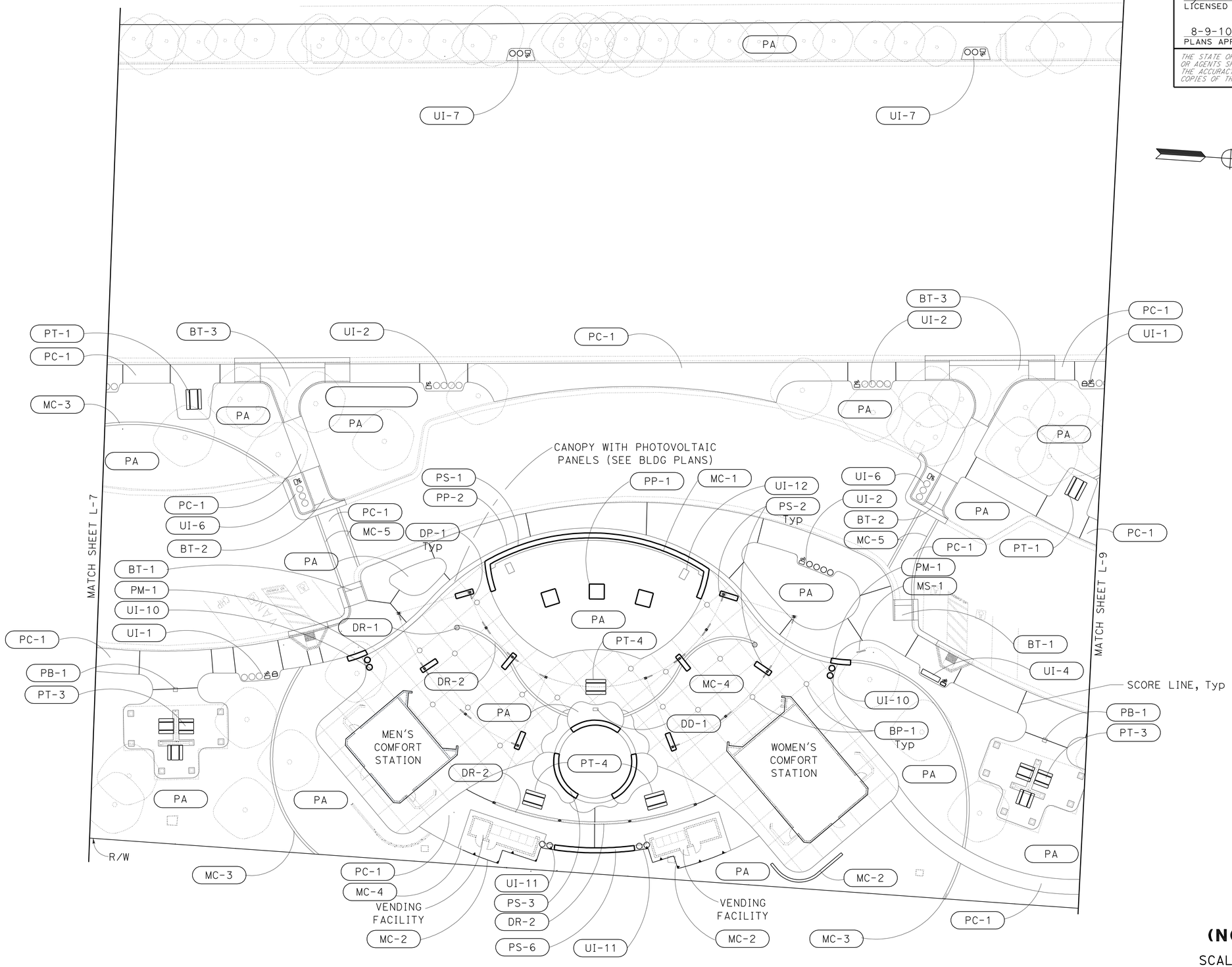


# LAYOUT
## (NORTHBOUND SITE)

SCALE: 1" = 20'

**L-8**

STATE OF CALIFORNIA - DEPARTMENT OF TRANSPORTATION
Caltrans® LANDSCAPE ARCHITECTURE

FUNCTIONAL SUPERVISOR: ELBERT COX
CALCULATED-DESIGNED BY: GLORIA RAMIREZ
CHECKED BY: RICHARD COLE
REVISED BY
DATE REVISED

LAST REVISION 02-01-10
DATE PLOTTED => 04-OCT-2010
TIME PLOTTED => 13:52

| Dist | COUNTY | ROUTE | POST MILES TOTAL PROJECT | SHEET No. | TOTAL SHEETS |
|---|---|---|---|---|---|
| 06 | Tul | 99 | 22.4 | 10 | 335 |

Gloria Ramirez
LICENSED LANDSCAPE ARCHITECT

8-9-10
PLANS APPROVAL DATE

LICENSED LANDSCAPE ARCHITECT
GLORIA RAMIREZ No. 5989
Gloria Ramirez
Expiration Date
04/30/10
Renewal Date
02/01/10
Date
STATE OF CALIFORNIA

*THE STATE OF CALIFORNIA OR ITS OFFICERS OR AGENTS SHALL NOT BE RESPONSIBLE FOR THE ACCURACY OR COMPLETENESS OF SCANNED COPIES OF THIS PLAN SHEET.*

**NOTE:** FOR ACCURATE RIGHT OF WAY AND ACCESS DATA, CONTACT RIGHT OF WAY ENGINEERING AT THE DISTRICT OFFICE.

# LAYOUT
## (NORTHBOUND SITE)

SCALE: 1" = 20'

**L-9**

STATE OF CALIFORNIA - DEPARTMENT OF TRANSPORTATION
Caltrans® LANDSCAPE ARCHITECTURE

FUNCTIONAL SUPERVISOR: ELBERT COX
CALCULATED-DESIGNED BY: GLORIA RAMIREZ
CHECKED BY: RICHARD COLE
REVISED BY
DATE REVISED

LAST REVISION 02-11-10 | DATE PLOTTED => 16-AUG-2010 | TIME PLOTTED => 06:57

| Dist | COUNTY | ROUTE | POST MILES TOTAL PROJECT | SHEET No. | TOTAL SHEETS |
|---|---|---|---|---|---|
| 06 | Tul | 99 | 22.4 | 11 | 335 |

Gloria Ramirez
LICENSED LANDSCAPE ARCHITECT

8-9-10
PLANS APPROVAL DATE

LICENSED LANDSCAPE ARCHITECT
GLORIA RAMIREZ No. 5989
Gloria Ramirez
Signature
04/30/10
Renewal Date
02/01/10
Date
STATE OF CALIFORNIA

*THE STATE OF CALIFORNIA OR ITS OFFICERS OR AGENTS SHALL NOT BE RESPONSIBLE FOR THE ACCURACY OR COMPLETENESS OF SCANNED COPIES OF THIS PLAN SHEET.*

**NOTE:** FOR ACCURATE RIGHT OF WAY AND ACCESS DATA, CONTACT RIGHT OF WAY ENGINEERING AT THE DISTRICT OFFICE.

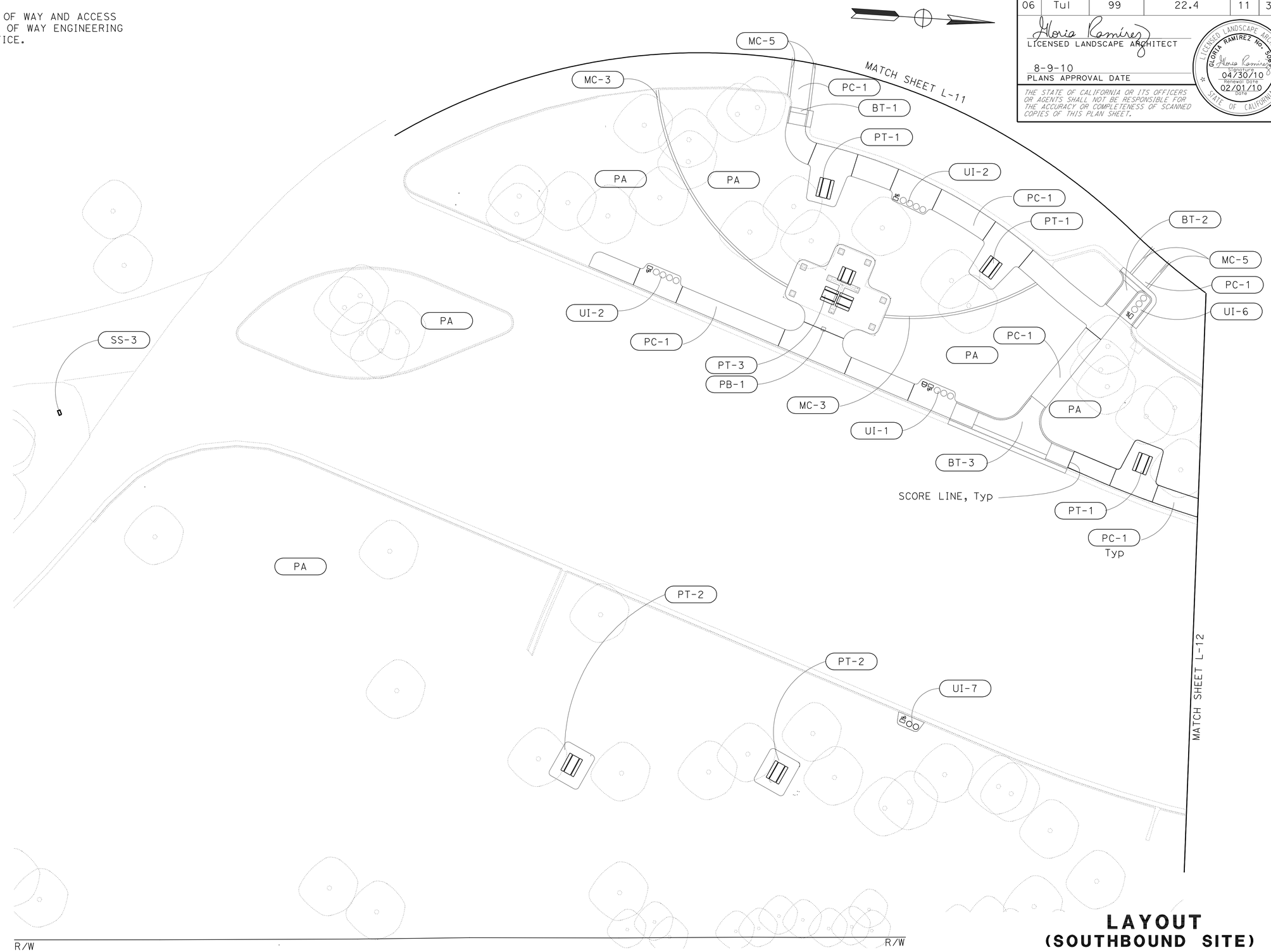


# LAYOUT
## (SOUTHBOUND SITE)

SCALE: 1" = 20'

**L-10**

STATE OF CALIFORNIA - DEPARTMENT OF TRANSPORTATION
Caltrans® LANDSCAPE ARCHITECTURE

FUNCTIONAL SUPERVISOR: ELBERT COX
CALCULATED-DESIGNED BY: GLORIA RAMIREZ
CHECKED BY: RICHARD COLE
REVISED BY
DATE REVISED

LAST REVISION 02-01-10 | DATE PLOTTED => 17-AUG-2010 | TIME PLOTTED => 07:03

| Dist | COUNTY | ROUTE | POST MILES TOTAL PROJECT | SHEET No. | TOTAL SHEETS |
|---|---|---|---|---|---|
| 06 | Tul | 99 | 22.4 | 12 | 335 |

Gloria Ramirez
LICENSED LANDSCAPE ARCHITECT

8-9-10
PLANS APPROVAL DATE

LICENSED LANDSCAPE ARCHITECT
GLORIA RAMIREZ No. 5088
Gloria Ramirez
Signature
04/30/10
Renewal Date
02/01/10
Date
STATE OF CALIFORNIA

*THE STATE OF CALIFORNIA OR ITS OFFICERS OR AGENTS SHALL NOT BE RESPONSIBLE FOR THE ACCURACY OR COMPLETENESS OF SCANNED COPIES OF THIS PLAN SHEET.*

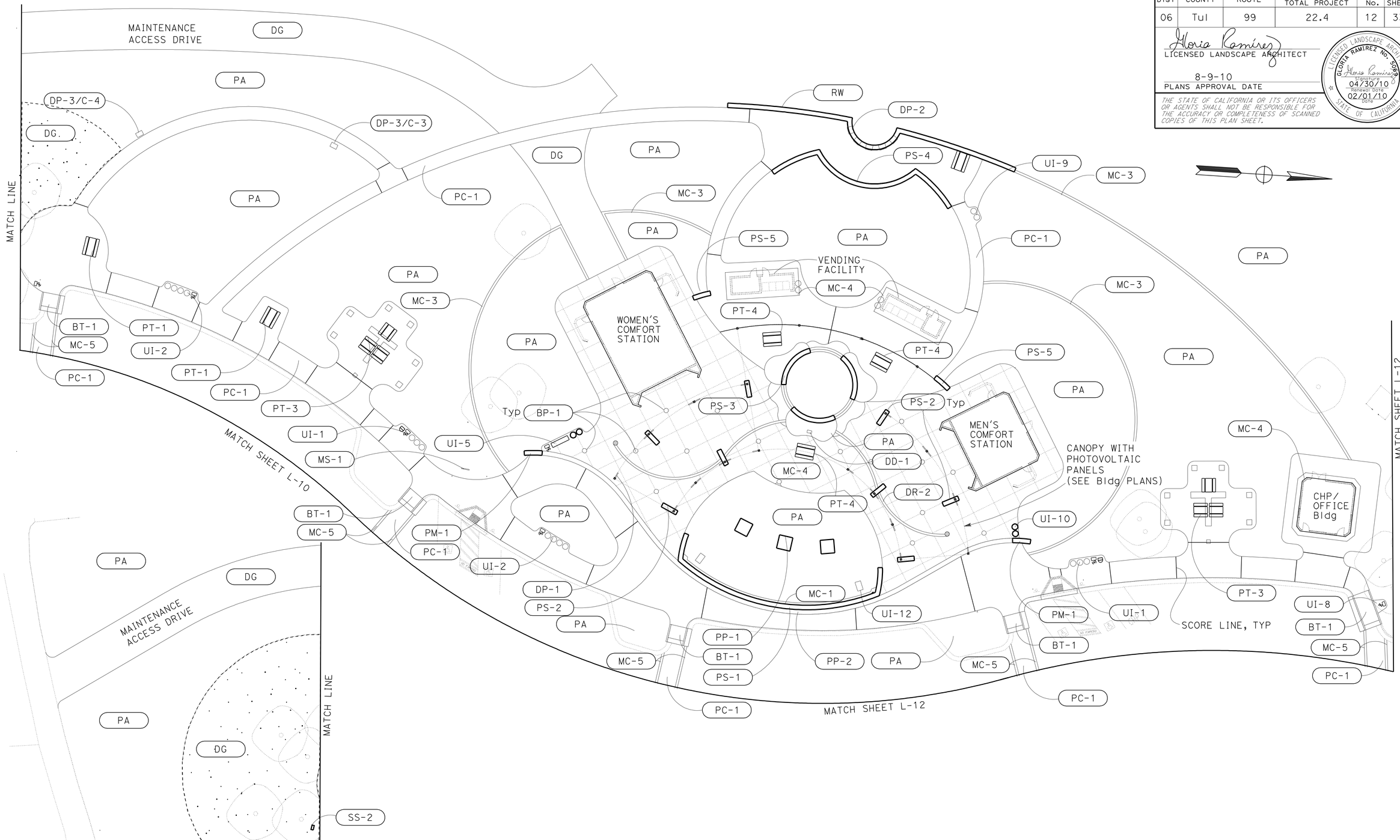


**NOTE:** FOR ACCURATE RIGHT OF WAY AND ACCESS DATA, CONTACT RIGHT OF WAY ENGINEERING AT THE DISTRICT OFFICE.

# LAYOUT
## (SOUTHBOUND SITE)
SCALE: 1" = 20′ **L-11**

STATE OF CALIFORNIA - DEPARTMENT OF TRANSPORTATION
Caltrans® LANDSCAPE ARCHITECTURE

FUNCTIONAL SUPERVISOR: ELBERT COX
CALCULATED-DESIGNED BY: GLORIA RAMIREZ
CHECKED BY: RICHARD COLE
REVISED BY
DATE REVISED

LAST REVISION 02-01-10
DATE PLOTTED => 16-AUG-2010
TIME PLOTTED => 06:57

| Dist | COUNTY | ROUTE | POST MILES TOTAL PROJECT | SHEET No. | TOTAL SHEETS |
|---|---|---|---|---|---|
| 06 | Tul | 99 | 22.4 | 13 | 335 |

Gloria Ramirez
LICENSED LANDSCAPE ARCHITECT

8-9-10
PLANS APPROVAL DATE

LICENSED LANDSCAPE ARCHITECT
GLORIA RAMIREZ No. 5985
Gloria Ramirez
Expiration Date
04/30/10
Renewal Date
02/01/10
Date
STATE OF CALIFORNIA

*THE STATE OF CALIFORNIA OR ITS OFFICERS OR AGENTS SHALL NOT BE RESPONSIBLE FOR THE ACCURACY OR COMPLETENESS OF SCANNED COPIES OF THIS PLAN SHEET.*

**NOTE:** FOR ACCURATE RIGHT OF WAY AND ACCESS DATA, CONTACT RIGHT OF WAY ENGINEERING AT THE DISTRICT OFFICE.

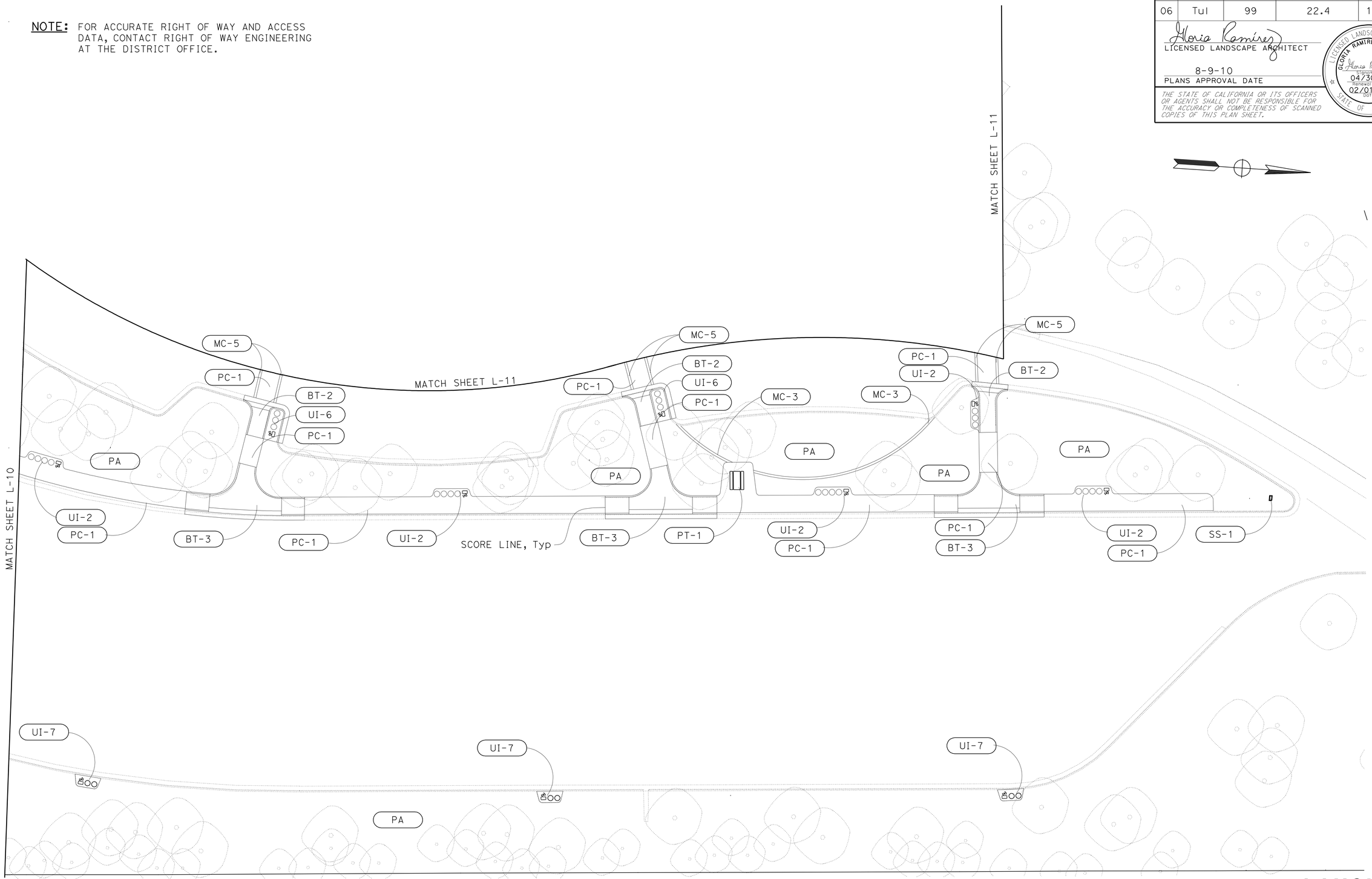


# LAYOUT
## (SOUTHBOUND SITE)
SCALE: 1" = 20'

**L-12**

STATE OF CALIFORNIA - DEPARTMENT OF TRANSPORTATION
Caltrans® LANDSCAPE ARCHITECTURE

FUNCTIONAL SUPERVISOR: ELBERT COX
CALCULATED-DESIGNED BY: GLORIA RAMIREZ
CHECKED BY: RICHARD COLE
REVISED BY
DATE REVISED

LAST REVISION 02-01-10
DATE PLOTTED => 16-AUG-2010
TIME PLOTTED => 06:57

| Dist | COUNTY | ROUTE | POST MILES TOTAL PROJECT | SHEET No. | TOTAL SHEETS |
|---|---|---|---|---|---|
| 06 | Tul | 99 | 22.4 | 14 | 335 |

Gloria Ramirez
LICENSED LANDSCAPE ARCHITECT

8-9-10
PLANS APPROVAL DATE

LICENSED LANDSCAPE ARCHITECT GLORIA RAMIREZ No. 5989 Gloria Ramirez Signature 04/30/10 Renewal Date 12/10/09 Date STATE OF CALIFORNIA

*THE STATE OF CALIFORNIA OR ITS OFFICERS OR AGENTS SHALL NOT BE RESPONSIBLE FOR THE ACCURACY OR COMPLETENESS OF SCANNED COPIES OF THIS PLAN SHEET.*

**NOTE:** SEE CONSTRUCTION DETAILS SHEET C-48 FOR HMA (TYPE A) OVERLAY TYPICAL CROSS SECTIONS

LEGEND

LIMIT OF COLD PLANE

LIMIT OF HMA (TYPE A) OVERLAY

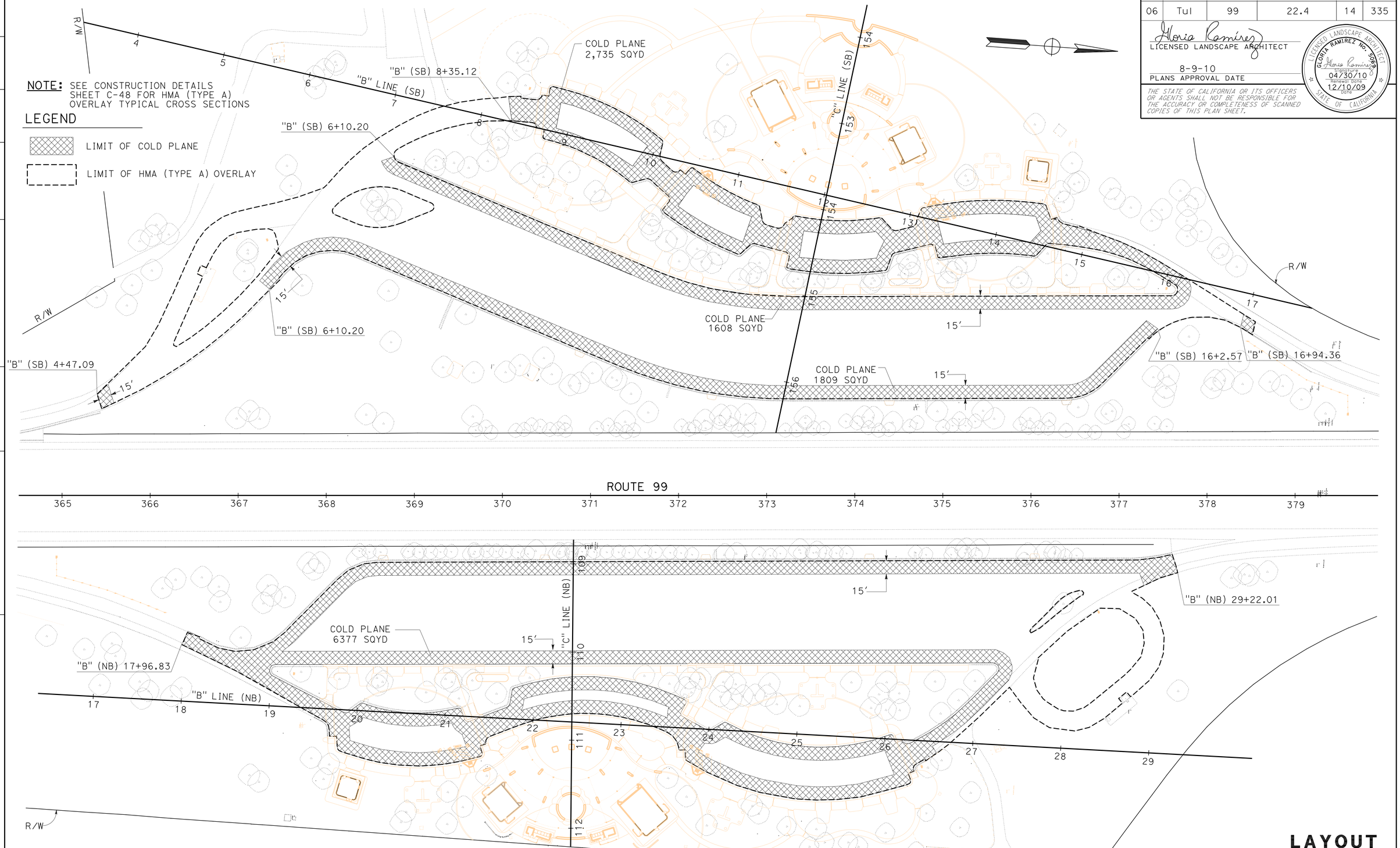


# LAYOUT
## (PARKING LOT OVERLAY)

SCALE: 1" = 50'

**L-13**

STATE OF CALIFORNIA - DEPARTMENT OF TRANSPORTATION
Caltrans® LANDSCAPE ARCHITECTURE

FUNCTIONAL SUPERVISOR: ELBERT COX
CALCULATED-DESIGNED BY: GLORIA RAMIREZ
CHECKED BY: RICHARD COLE
REVISED BY
DATE REVISED

LAST REVISION DATE PLOTTED => 04-OCT-2010
12-10-09 TIME PLOTTED => 13:39

| Dist | COUNTY | ROUTE | POST MILES TOTAL PROJECT | SHEET No. | TOTAL SHEETS |
|---|---|---|---|---|---|
| 06 | Tul | 99 | 22.4 | 15 | 335 |

Gloria Ramirez
LICENSED LANDSCAPE ARCHITECT

8-9-10
PLANS APPROVAL DATE

LICENSED LANDSCAPE ARCHITECT
GLORIA RAMIREZ No. 5089
Signature
04/30/12
Renewal Date
07/12/10
Date
STATE OF CALIFORNIA

*THE STATE OF CALIFORNIA OR ITS OFFICERS OR AGENTS SHALL NOT BE RESPONSIBLE FOR THE ACCURACY OR COMPLETENESS OF SCANNED COPIES OF THIS PLAN SHEET.*

**NOTE:** FOR ACCURATE RIGHT OF WAY AND ACCESS DATA, CONTACT RIGHT OF WAY ENGINEERING AT THE DISTRICT OFFICE.

**ABBREVIATION:**

ESA - ENVIRONMENTALLY SENSITIVE AREA

LEED - LEADERSHIP IN ENERGY AND ENVIRONMENTAL DESIGN

**LEGEND:**

ESA

LEED PROJECT AREA (2,055,000 SQFT) (47 ACRES)

TFESA — TEMPORARY FENCE (TYPE ESA)

Exist TREES TO REMAIN

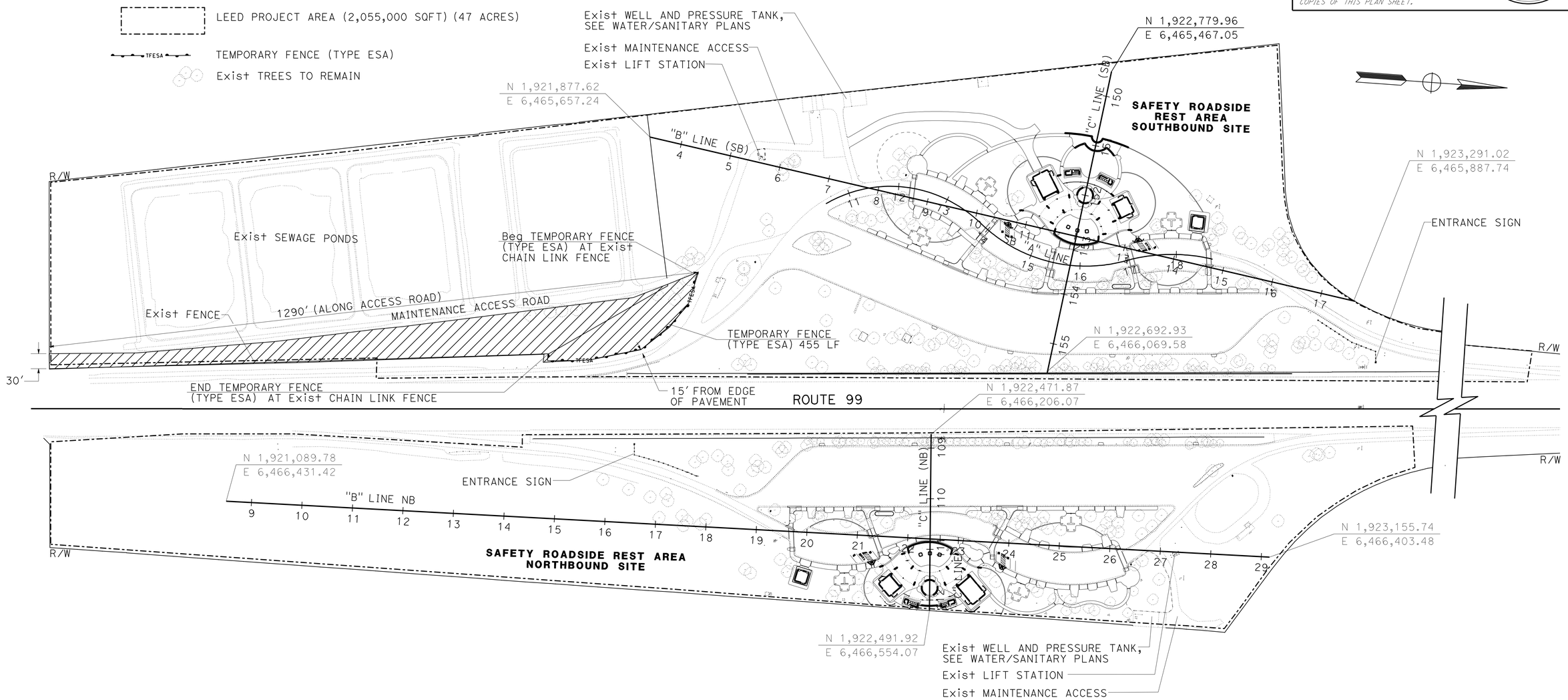


# LAYOUT

SCALE: 1" = 100'

**L-14**

STATE OF CALIFORNIA - DEPARTMENT OF TRANSPORTATION
Caltrans® LANDSCAPE ARCHITECTURE

FUNCTIONAL SUPERVISOR: ELBERT COX

CALCULATED-DESIGNED BY: GLORIA RAMIREZ

CHECKED BY: RICHARD COLE

REVISED BY

DATE REVISED

LAST REVISION 07-12-10

DATE PLOTTED => 04-OCT-2010
TIME PLOTTED => 13:40

| Dist | COUNTY | ROUTE | POST MILES TOTAL PROJECT | SHEET No. | TOTAL SHEETS |
|---|---|---|---|---|---|
| 06 | Tul | 99 | 22.4 | 16 | 335 |

Gloria Ramirez
LICENSED LANDSCAPE ARCHITECT

8-9-10
PLANS APPROVAL DATE

LICENSED LANDSCAPE ARCHITECT
GLORIA RAMIREZ No. 5985
Gloria Ramirez
Signature of
04/30/10
Renewal Date
02/01/10
Date
STATE OF CALIFORNIA

*THE STATE OF CALIFORNIA OR ITS OFFICERS OR AGENTS SHALL NOT BE RESPONSIBLE FOR THE ACCURACY OR COMPLETENESS OF SCANNED COPIES OF THIS PLAN SHEET.*

NOTE: 1. FOR ACCURATE RIGHT OF WAY AND ACCESS DATA, CONTACT RIGHT OF WAY ENGINEERING AT THE DISTRICT OFFICE.

2. FOR EXISTING UTILITIES SEE BUILDING PLANS.

3. REFER TO SHEETS C-13 THROUGH C-23 FOR CURVE DATA, ELEVATION INFORMATION, INTERSECTION POINT INFORMATION, AND STATION AND OFFSET INFORMATION.

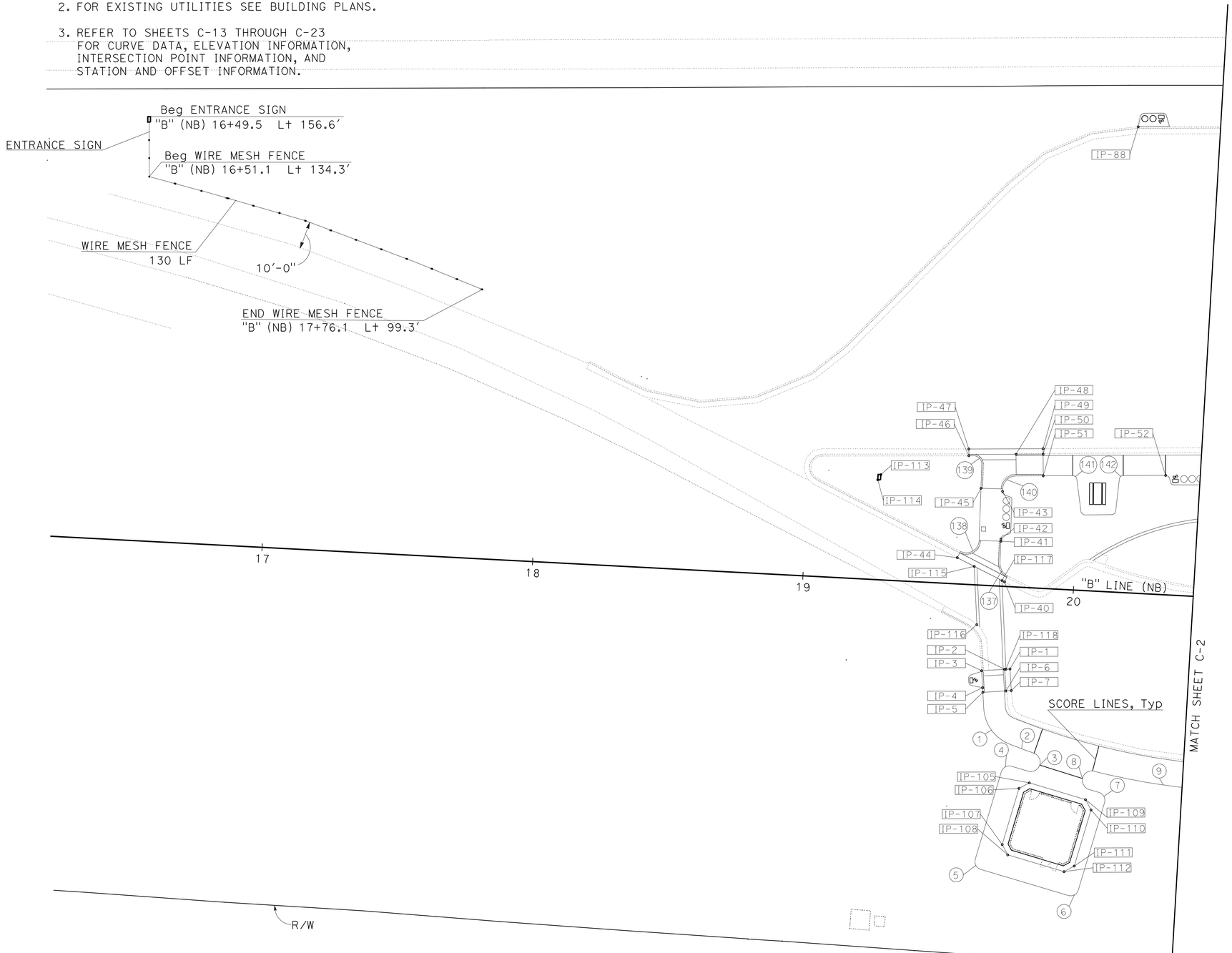


# CONSTRUCTION DETAILS
## (NORTHBOUND SITE)

SCALE: 1" = 20'

**C-1**

STATE OF CALIFORNIA - DEPARTMENT OF TRANSPORTATION
Caltrans® LANDSCAPE ARCHITECTURE

FUNCTIONAL SUPERVISOR: ELBERT COX

CALCULATED-DESIGNED BY: HENRY BARNES
CHECKED BY: GLORIA RAMIREZ

REVISED BY | DATE REVISED

LAST REVISION 02-01-10 | DATE PLOTTED => 04-OCT-2010 | TIME PLOTTED => 13:52

| Dist | COUNTY | ROUTE | POST MILES TOTAL PROJECT | SHEET No. | TOTAL SHEETS |
|---|---|---|---|---|---|
| 06 | Tul | 99 | 22.4 | 17 | 335 |

Gloria Ramirez
LICENSED LANDSCAPE ARCHITECT

8-9-10
PLANS APPROVAL DATE

LICENSED LANDSCAPE ARCHITECT
GLORIA RAMIREZ No. 5985
Expiration Date 04/30/10
Renewal Date 02/01/10
Date
STATE OF CALIFORNIA

*THE STATE OF CALIFORNIA OR ITS OFFICERS OR AGENTS SHALL NOT BE RESPONSIBLE FOR THE ACCURACY OR COMPLETENESS OF SCANNED COPIES OF THIS PLAN SHEET.*

NOTE: 1. FOR ACCURATE RIGHT OF WAY AND ACCESS DATA, CONTACT RIGHT OF WAY ENGINEERING AT THE DISTRICT OFFICE.

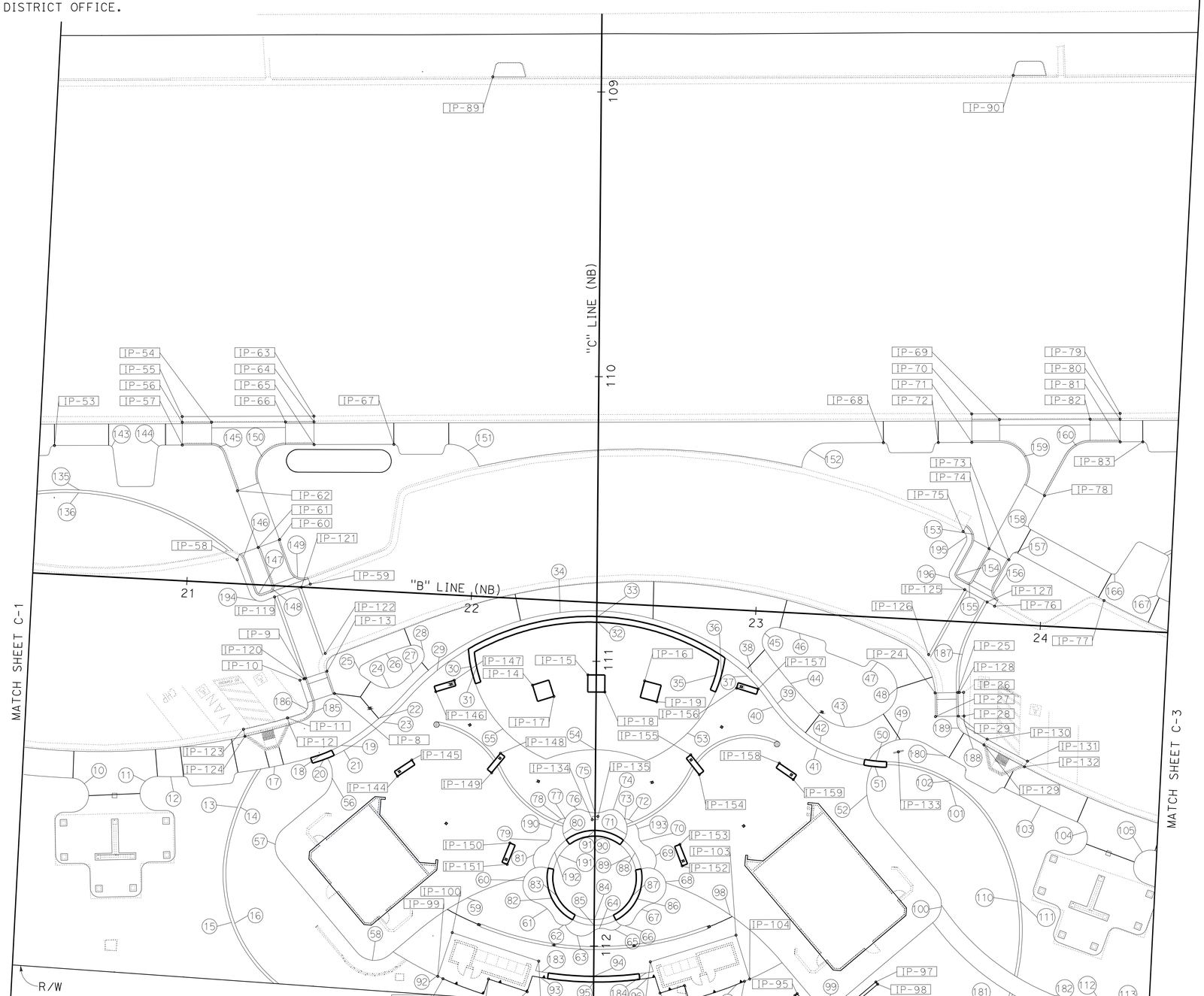


# CONSTRUCTION DETAILS
## (NORTHBOUND SITE)

SCALE: 1" = 20'

**C-2**

STATE OF CALIFORNIA - DEPARTMENT OF TRANSPORTATION
Caltrans® LANDSCAPE ARCHITECTURE

FUNCTIONAL SUPERVISOR: ELBERT COX
CALCULATED-DESIGNED BY: HENRY BARNES
CHECKED BY: GLORIA RAMIREZ
REVISED BY
DATE REVISED

LAST REVISION 02-01-10 | DATE PLOTTED => 16-AUG-2010 | TIME PLOTTED => 06:58

| Dist | COUNTY | ROUTE | POST MILES TOTAL PROJECT | SHEET No. | TOTAL SHEETS |
|---|---|---|---|---|---|
| 06 | Tul | 99 | 22.4 | 18 | 335 |

Gloria Ramirez
LICENSED LANDSCAPE ARCHITECT

8-9-10
PLANS APPROVAL DATE

LICENSED LANDSCAPE ARCHITECT
GLORIA RAMIREZ No. 5985
Gloria Ramirez
Expiration Date
04/30/10
Renewal Date
02/01/10
Date
STATE OF CALIFORNIA

*THE STATE OF CALIFORNIA OR ITS OFFICERS OR AGENTS SHALL NOT BE RESPONSIBLE FOR THE ACCURACY OR COMPLETENESS OF SCANNED COPIES OF THIS PLAN SHEET.*

NOTE: FOR ACCURATE RIGHT OF WAY AND ACCESS DATA, CONTACT RIGHT OF WAY ENGINEERING AT THE DISTRICT OFFICE.

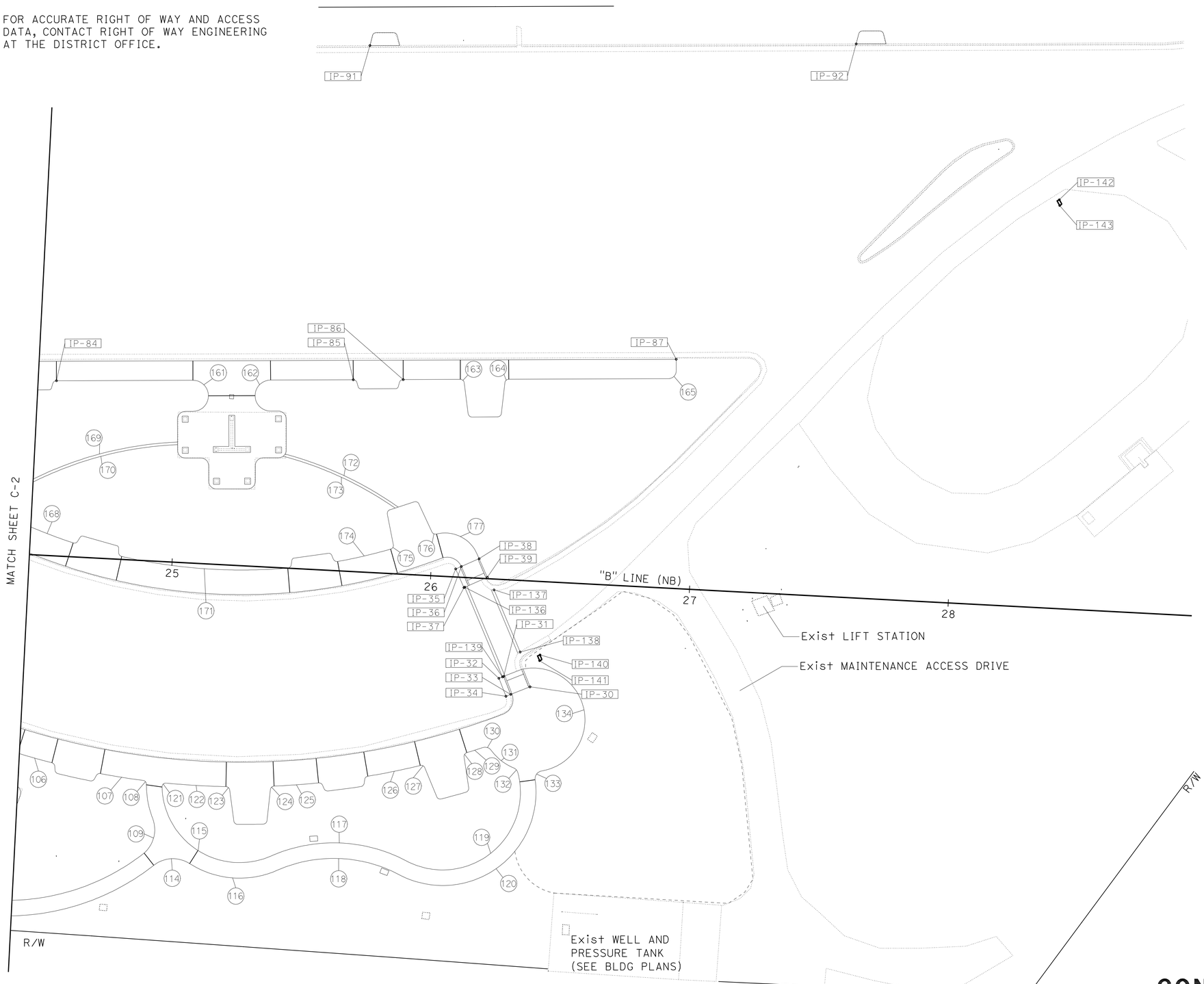


# CONSTRUCTION DETAILS
## (NORTHBOUND SITE)

SCALE: 1" = 20'

**C-3**

STATE OF CALIFORNIA - DEPARTMENT OF TRANSPORTATION
Caltrans LANDSCAPE ARCHITECTURE

FUNCTIONAL SUPERVISOR: ELBERT COX

CALCULATED-DESIGNED BY: HENRY BARNES
CHECKED BY: GLORIA RAMIREZ

REVISED BY
DATE REVISED

LAST REVISION 02-01-10
DATE PLOTTED => 16-AUG-2010
TIME PLOTTED => 06:58

| Dist | COUNTY | ROUTE | POST MILES TOTAL PROJECT | SHEET No. | TOTAL SHEETS |
|---|---|---|---|---|---|
| 06 | Tul | 99 | 22.4 | 19 | 335 |

Gloria Ramirez
LICENSED LANDSCAPE ARCHITECT

8-9-10
PLANS APPROVAL DATE

LICENSED LANDSCAPE ARCHITECT
GLORIA RAMIREZ No. 5985
Gloria Ramirez
Signature
04/30/10
Renewal Date
02/01/10
Date
STATE OF CALIFORNIA

*THE STATE OF CALIFORNIA OR ITS OFFICERS OR AGENTS SHALL NOT BE RESPONSIBLE FOR THE ACCURACY OR COMPLETENESS OF SCANNED COPIES OF THIS PLAN SHEET.*

NOTE: FOR ACCURATE RIGHT OF WAY AND ACCESS DATA, CONTACT RIGHT OF WAY ENGINEERING AT THE DISTRICT OFFICE.

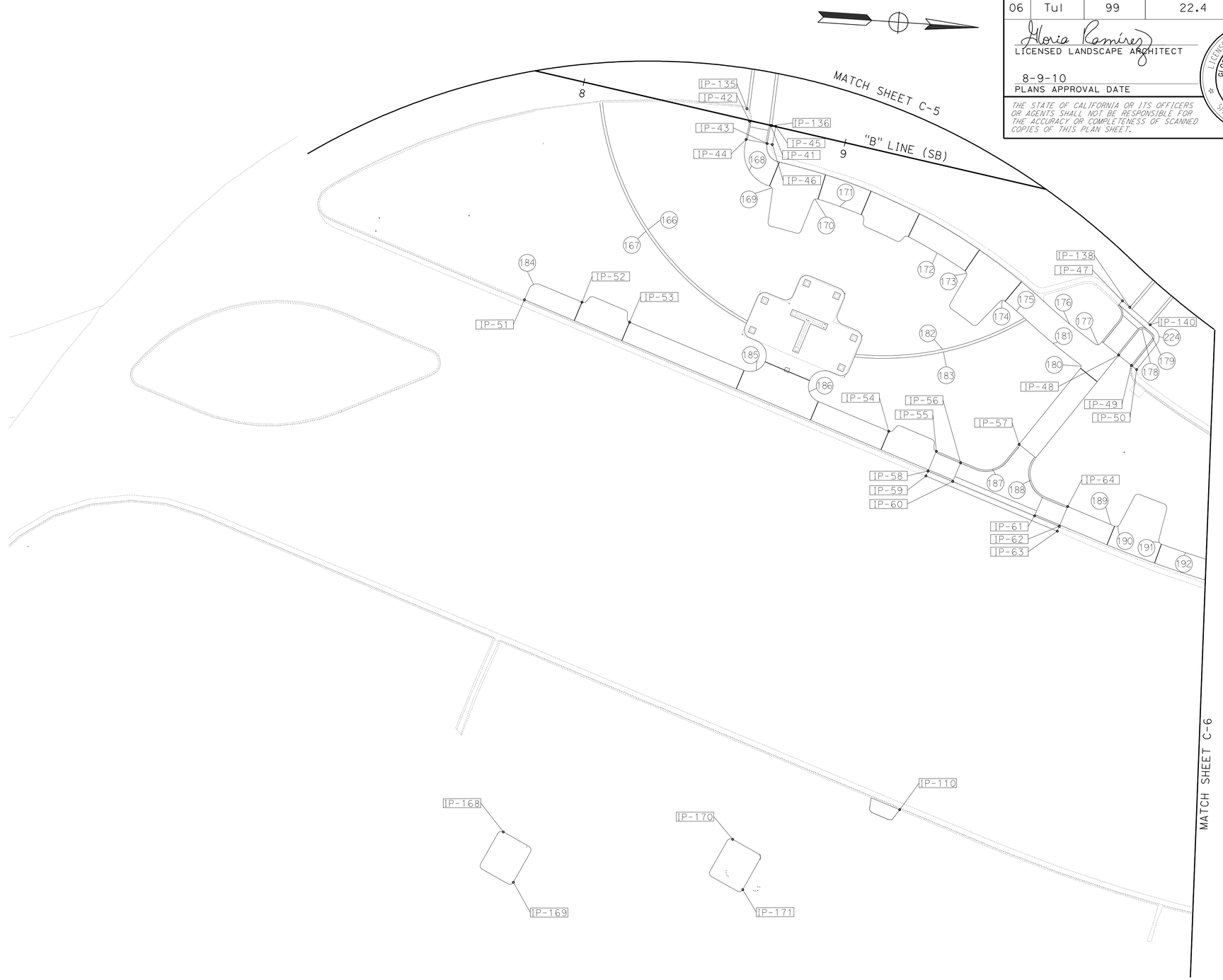


# CONSTRUCTION DETAILS
## (SOUTHBOUND SITE)

SCALE: 1" = 20'

**C-4**

STATE OF CALIFORNIA - DEPARTMENT OF TRANSPORTATION
Caltrans® LANDSCAPE ARCHITECTURE

FUNCTIONAL SUPERVISOR: ELBERT COX

CALCULATED-DESIGNED BY: HENRY BARNES
CHECKED BY: GLORIA RAMIREZ

REVISED BY
DATE REVISED

LAST REVISION 02-01-10
DATE PLOTTED => 16-AUG-2010
TIME PLOTTED => 06:58

| Dist | COUNTY | ROUTE | POST MILES TOTAL PROJECT | SHEET No. | TOTAL SHEETS |
|---|---|---|---|---|---|
| 06 | Tul | 99 | 22.4 | 20 | 335 |

Gloria Ramirez
LICENSED LANDSCAPE ARCHITECT

8-9-10
PLANS APPROVAL DATE

LICENSED LANDSCAPE ARCHITECT
GLORIA RAMIREZ No. 3095
Gloria Ramirez
Signature
04/30/10
Renewal Date
02/01/10
Date
STATE OF CALIFORNIA

*THE STATE OF CALIFORNIA OR ITS OFFICERS OR AGENTS SHALL NOT BE RESPONSIBLE FOR THE ACCURACY OR COMPLETENESS OF SCANNED COPIES OF THIS PLAN SHEET.*

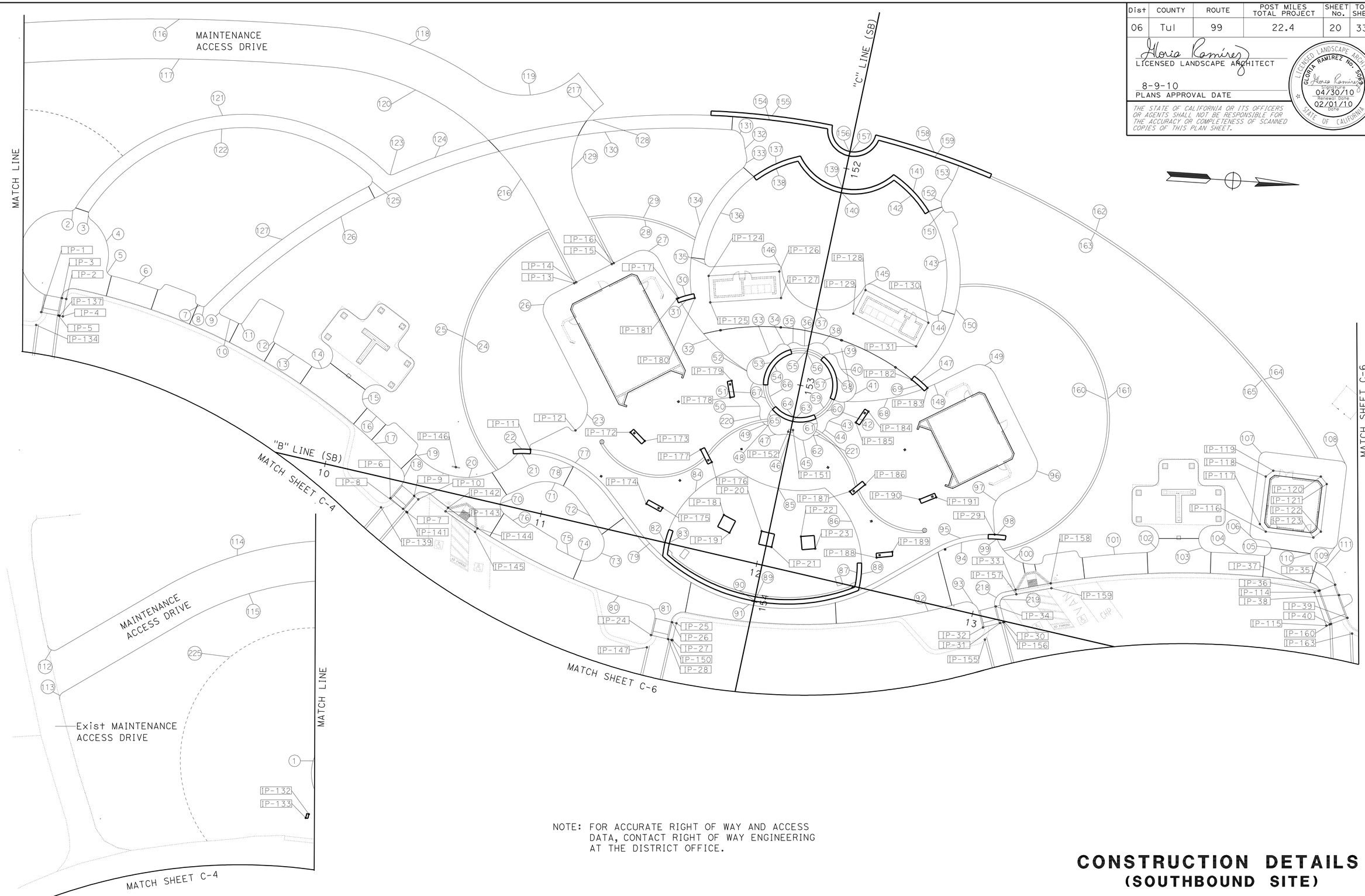


NOTE: FOR ACCURATE RIGHT OF WAY AND ACCESS DATA, CONTACT RIGHT OF WAY ENGINEERING AT THE DISTRICT OFFICE.

# CONSTRUCTION DETAILS
## (SOUTHBOUND SITE)

SCALE: 1" = 20'

**C-5**

STATE OF CALIFORNIA - DEPARTMENT OF TRANSPORTATION
Caltrans® LANDSCAPE ARCHITECTURE

FUNCTIONAL SUPERVISOR: ELBERT COX
CALCULATED-DESIGNED BY: HENRY BARNES
CHECKED BY: GLORIA RAMIREZ
REVISED BY
DATE REVISED

LAST REVISION 02-01-10
DATE PLOTTED => 04-OCT-2010
TIME PLOTTED => 13:52

| Dist | COUNTY | ROUTE | POST MILES TOTAL PROJECT | SHEET No. | TOTAL SHEETS |
|---|---|---|---|---|---|
| 06 | Tul | 99 | 22.4 | 21 | 335 |

Gloria Ramirez
LICENSED LANDSCAPE ARCHITECT

8-9-10
PLANS APPROVAL DATE

LICENSED LANDSCAPE ARCHITECT
GLORIA RAMIREZ No. 5985
Gloria Ramirez
Signature
04/30/10
Renewal Date
02/01/10
Date
STATE OF CALIFORNIA

*THE STATE OF CALIFORNIA OR ITS OFFICERS OR AGENTS SHALL NOT BE RESPONSIBLE FOR THE ACCURACY OR COMPLETENESS OF SCANNED COPIES OF THIS PLAN SHEET.*

NOTE: FOR ACCURATE RIGHT OF WAY AND ACCESS DATA, CONTACT RIGHT OF WAY ENGINEERING AT THE DISTRICT OFFICE.

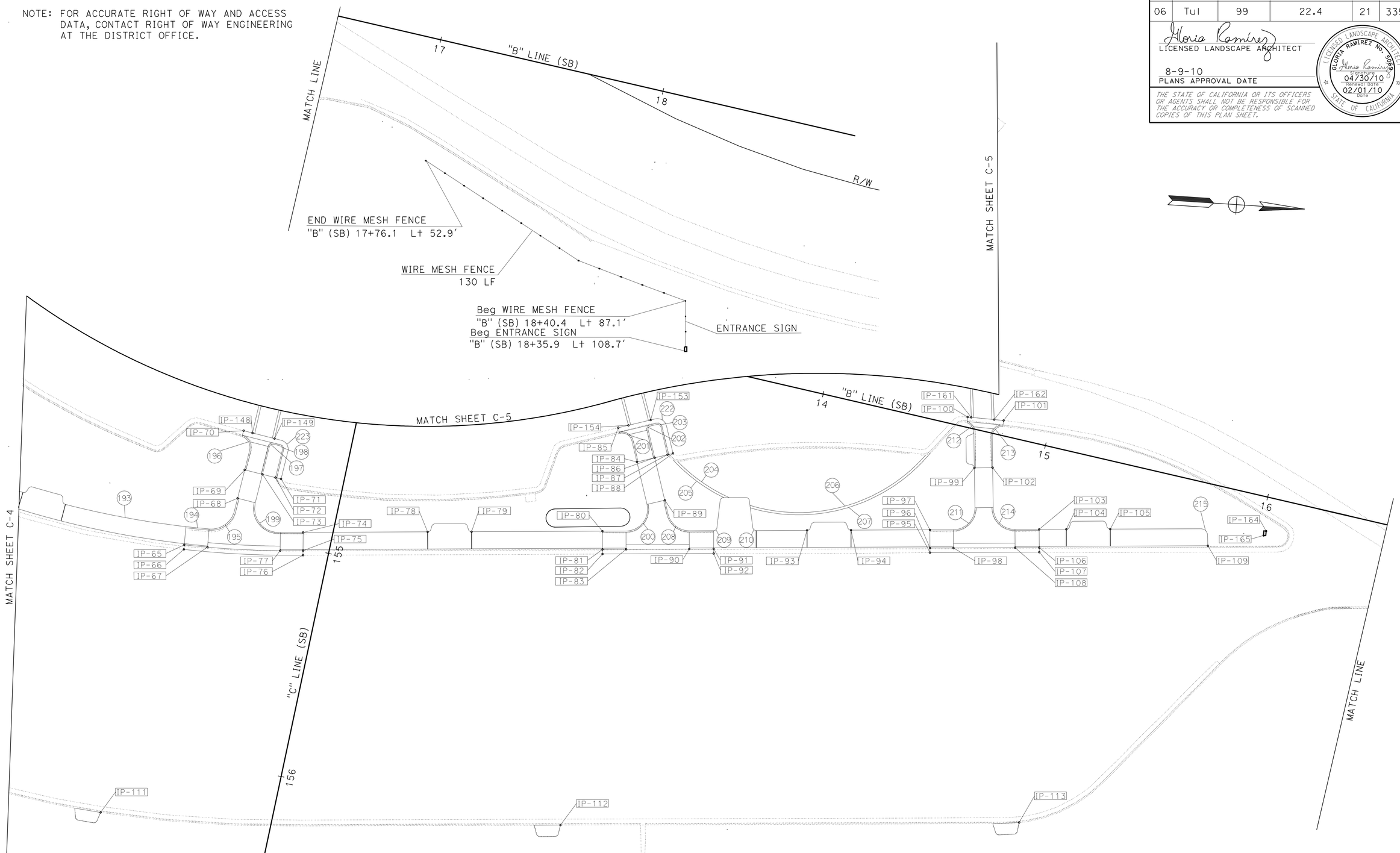


# CONSTRUCTION DETAILS
## (SOUTHBOUND SITE)

SCALE: 1" = 20'

C-6

STATE OF CALIFORNIA - DEPARTMENT OF TRANSPORTATION
Caltrans® LANDSCAPE ARCHITECTURE

FUNCTIONAL SUPERVISOR: ELBERT COX
CALCULATED-DESIGNED BY: HENRY BARNES
CHECKED BY: GLORIA RAMIREZ
REVISED BY
DATE REVISED

LAST REVISION 02-01-10
DATE PLOTTED => 16-AUG-2010
TIME PLOTTED => 06:58

| Dist | COUNTY | ROUTE | POST MILES TOTAL PROJECT | SHEET No. | TOTAL SHEETS |
|---|---|---|---|---|---|
| 06 | Tul | 99 | 22.4 | 22 | 335 |

Gloria Ramirez
LICENSED LANDSCAPE ARCHITECT

8-9-10
PLANS APPROVAL DATE

LICENSED LANDSCAPE ARCHITECT
GLORIA RAMIREZ No. 5985
Gloria Ramirez
Expiration Date
04/30/10
Renewal Date
02/01/10
Date
STATE OF CALIFORNIA

*THE STATE OF CALIFORNIA OR ITS OFFICERS OR AGENTS SHALL NOT BE RESPONSIBLE FOR THE ACCURACY OR COMPLETENESS OF SCANNED COPIES OF THIS PLAN SHEET.*

NOTE: FOR ACCURATE RIGHT OF WAY AND ACCESS DATA, CONTACT RIGHT OF WAY ENGINEERING AT THE DISTRICT OFFICE.

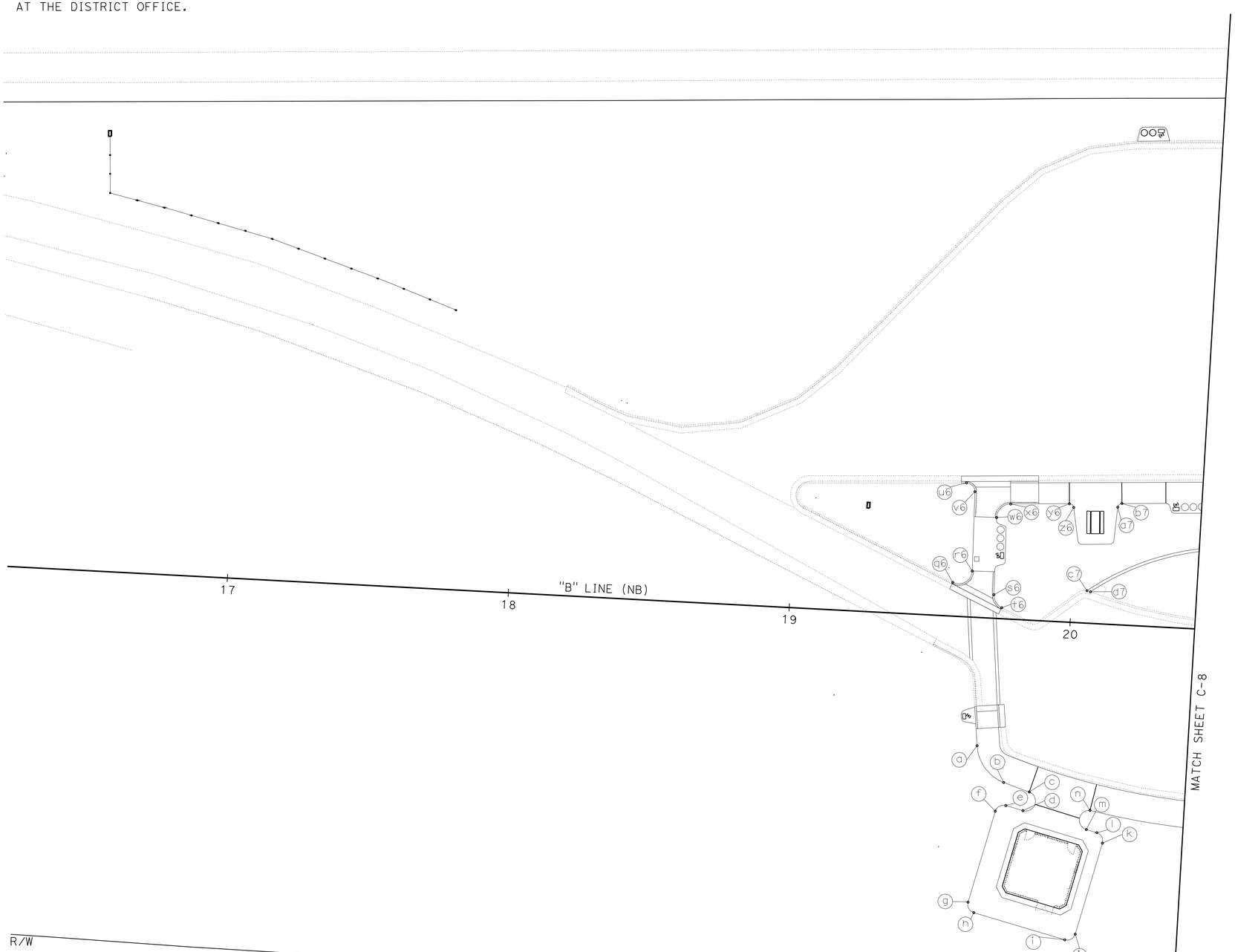


# CONSTRUCTION DETAILS
## (NORTHBOUND SITE)

SCALE: 1" = 20'

C-7

STATE OF CALIFORNIA - DEPARTMENT OF TRANSPORTATION
Caltrans® LANDSCAPE ARCHITECTURE

FUNCTIONAL SUPERVISOR: ELBERT COX

CALCULATED-DESIGNED BY: HENRY BARNES
CHECKED BY: GLORIA RAMIREZ

REVISED BY
DATE REVISED

LAST REVISION 02-01-10
DATE PLOTTED => 16-AUG-2010
TIME PLOTTED => 06:58

| Dist | COUNTY | ROUTE | POST MILES TOTAL PROJECT | SHEET No. | TOTAL SHEETS |
|---|---|---|---|---|---|
| 06 | Tul | 99 | 22.4 | 23 | 335 |

Gloria Ramirez
LICENSED LANDSCAPE ARCHITECT

8-9-10
PLANS APPROVAL DATE

LICENSED LANDSCAPE ARCHITECT
GLORIA RAMIREZ No. 5985
Gloria Ramirez
Expiration Date
04/30/10
Renewal Date
02/01/10
Date
STATE OF CALIFORNIA

*THE STATE OF CALIFORNIA OR ITS OFFICERS OR AGENTS SHALL NOT BE RESPONSIBLE FOR THE ACCURACY OR COMPLETENESS OF SCANNED COPIES OF THIS PLAN SHEET.*

NOTE: FOR ACCURATE RIGHT OF WAY AND ACCESS DATA, CONTACT RIGHT OF WAY ENGINEERING AT THE DISTRICT OFFICE.

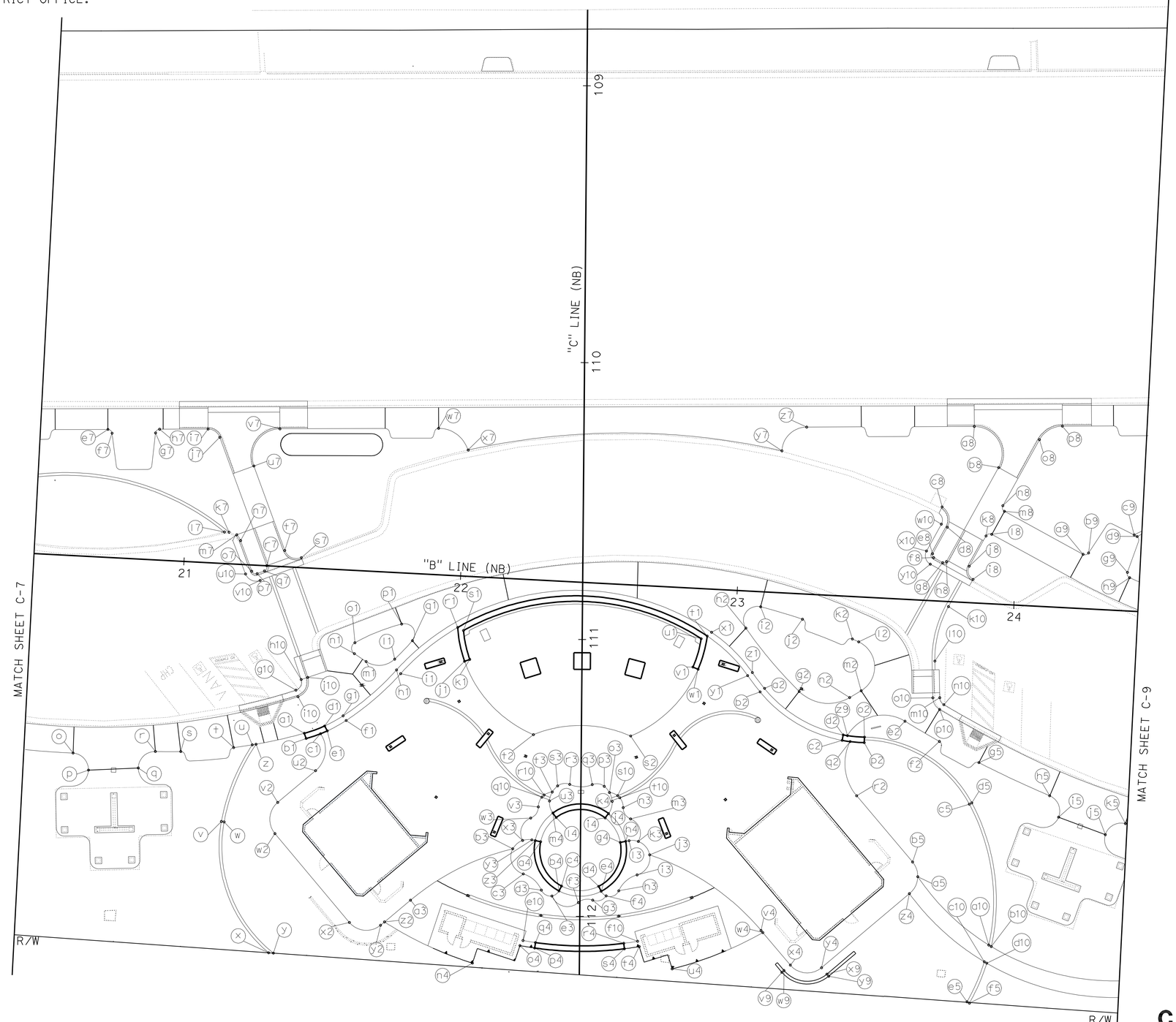


# CONSTRUCTION DETAILS
## (NORTHBOUND SITE)

SCALE: 1" = 20'

**C-8**

STATE OF CALIFORNIA - DEPARTMENT OF TRANSPORTATION
Caltrans® LANDSCAPE ARCHITECTURE

FUNCTIONAL SUPERVISOR: ELBERT COX

CALCULATED-DESIGNED BY: HENRY BARNES
CHECKED BY: GLORIA RAMIREZ

REVISED BY
DATE REVISED

LAST REVISION 02-01-10
DATE PLOTTED => 16-AUG-2010
TIME PLOTTED => 06:58

| Dist | COUNTY | ROUTE | POST MILES TOTAL PROJECT | SHEET No. | TOTAL SHEETS |
|---|---|---|---|---|---|
| 06 | Tul | 99 | 22.4 | 24 | 335 |

Gloria Ramirez
LICENSED LANDSCAPE ARCHITECT

8-9-10
PLANS APPROVAL DATE

LICENSED LANDSCAPE ARCHITECT
GLORIA RAMIREZ No. 5085
Gloria Ramirez
Signature
04/30/10
Renewal Date
02/01/10
Date
STATE OF CALIFORNIA

*THE STATE OF CALIFORNIA OR ITS OFFICERS OR AGENTS SHALL NOT BE RESPONSIBLE FOR THE ACCURACY OR COMPLETENESS OF SCANNED COPIES OF THIS PLAN SHEET.*

NOTE: FOR ACCURATE RIGHT OF WAY AND ACCESS DATA, CONTACT RIGHT OF WAY ENGINEERING AT THE DISTRICT OFFICE.

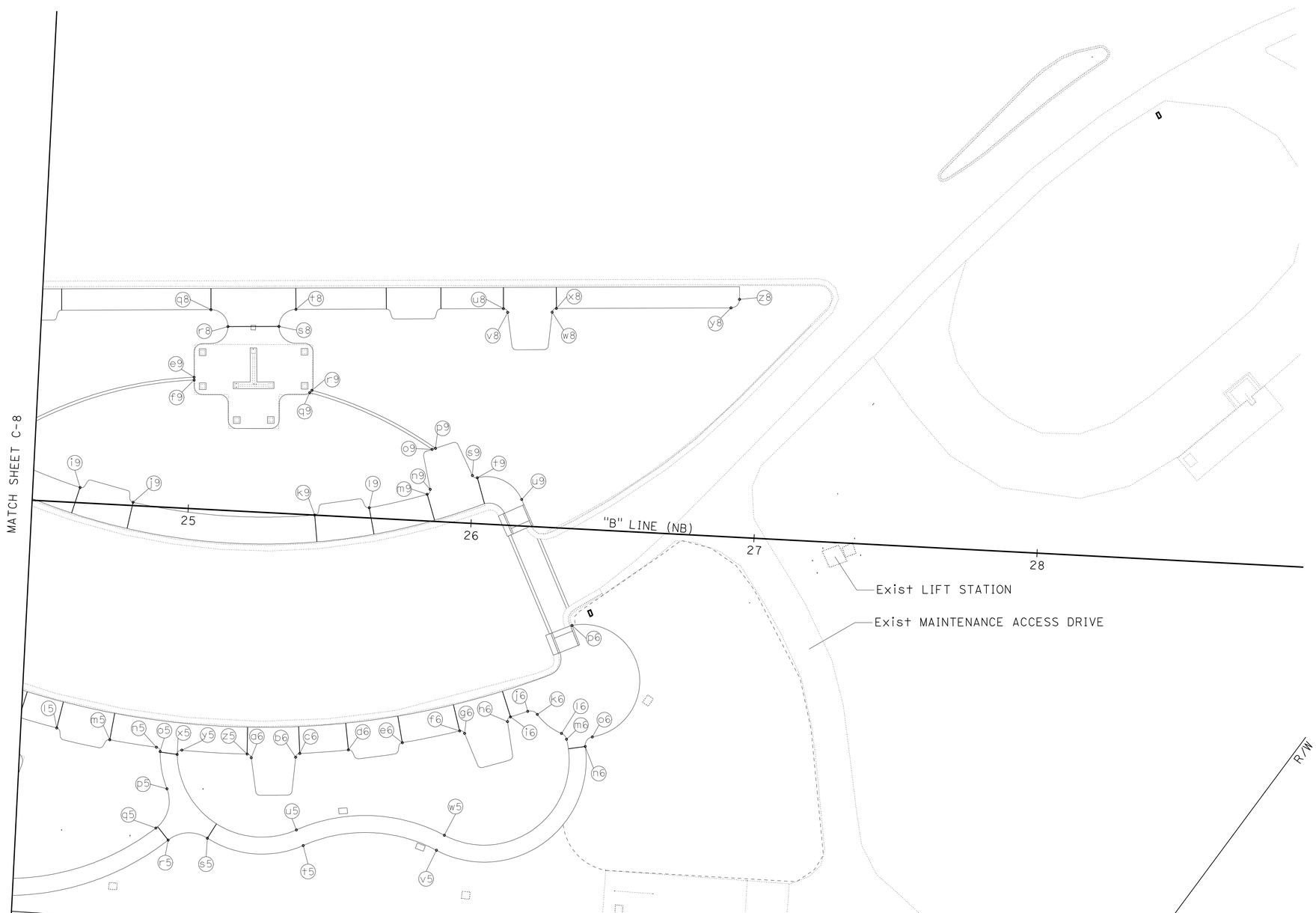


# CONSTRUCTION DETAILS
## (NORTHBOUND SITE)

SCALE: 1" = 20'

**C-9**

STATE OF CALIFORNIA - DEPARTMENT OF TRANSPORTATION
Caltrans® LANDSCAPE ARCHITECTURE

FUNCTIONAL SUPERVISOR: ELBERT COX

CALCULATED-DESIGNED BY: HENRY BARNES
CHECKED BY: GLORIA RAMIREZ

REVISED BY
DATE REVISED

LAST REVISION 02-01-10 | DATE PLOTTED => 16-AUG-2010 | TIME PLOTTED => 06:59

| Dist | COUNTY | ROUTE | POST MILES TOTAL PROJECT | SHEET No. | TOTAL SHEETS |
|---|---|---|---|---|---|
| 06 | Tul | 99 | 22.4 | 25 | 335 |

Gloria Ramirez
LICENSED LANDSCAPE ARCHITECT

8-9-10
PLANS APPROVAL DATE

LICENSED LANDSCAPE ARCHITECT
GLORIA RAMIREZ No. 5895
Gloria Ramirez
Signature
04/30/10
Renewal Date
02/01/10
Date
STATE OF CALIFORNIA

*THE STATE OF CALIFORNIA OR ITS OFFICERS OR AGENTS SHALL NOT BE RESPONSIBLE FOR THE ACCURACY OR COMPLETENESS OF SCANNED COPIES OF THIS PLAN SHEET.*

NOTE: FOR ACCURATE RIGHT OF WAY AND ACCESS DATA, CONTACT RIGHT OF WAY ENGINEERING AT THE DISTRICT OFFICE.

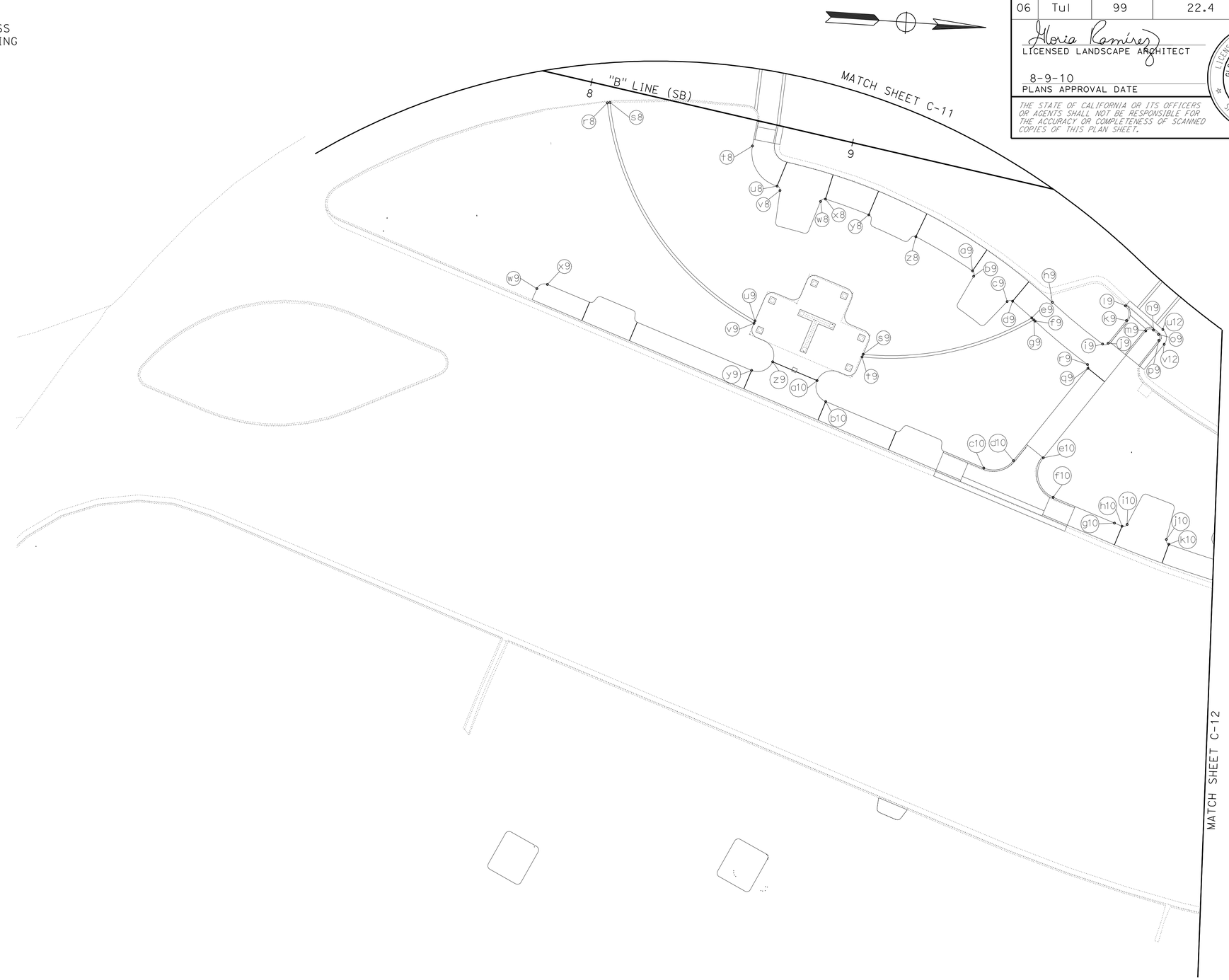


# CONSTRUCTION DETAILS
## (SOUTHBOUND SITE)

SCALE: 1" = 20'

C-10

STATE OF CALIFORNIA - DEPARTMENT OF TRANSPORTATION
Caltrans® LANDSCAPE ARCHITECTURE

FUNCTIONAL SUPERVISOR: ELBERT COX

CALCULATED-DESIGNED BY: HENRY BARNES
CHECKED BY: GLORIA RAMIREZ

REVISED BY
DATE REVISED

LAST REVISION 02-01-10
DATE PLOTTED => 16-AUG-2010
TIME PLOTTED => 06:59

| Dist | COUNTY | ROUTE | POST MILES TOTAL PROJECT | SHEET No. | TOTAL SHEETS |
|---|---|---|---|---|---|
| 06 | Tul | 99 | 22.4 | 26 | 335 |

Gloria Ramirez
LICENSED LANDSCAPE ARCHITECT

8-9-10
PLANS APPROVAL DATE

LICENSED LANDSCAPE ARCHITECT
GLORIA RAMIREZ No. 3056
Gloria Ramirez
Signature
04/30/10
Renewal Date
02/01/10
Date
STATE OF CALIFORNIA

*THE STATE OF CALIFORNIA OR ITS OFFICERS OR AGENTS SHALL NOT BE RESPONSIBLE FOR THE ACCURACY OR COMPLETENESS OF SCANNED COPIES OF THIS PLAN SHEET.*

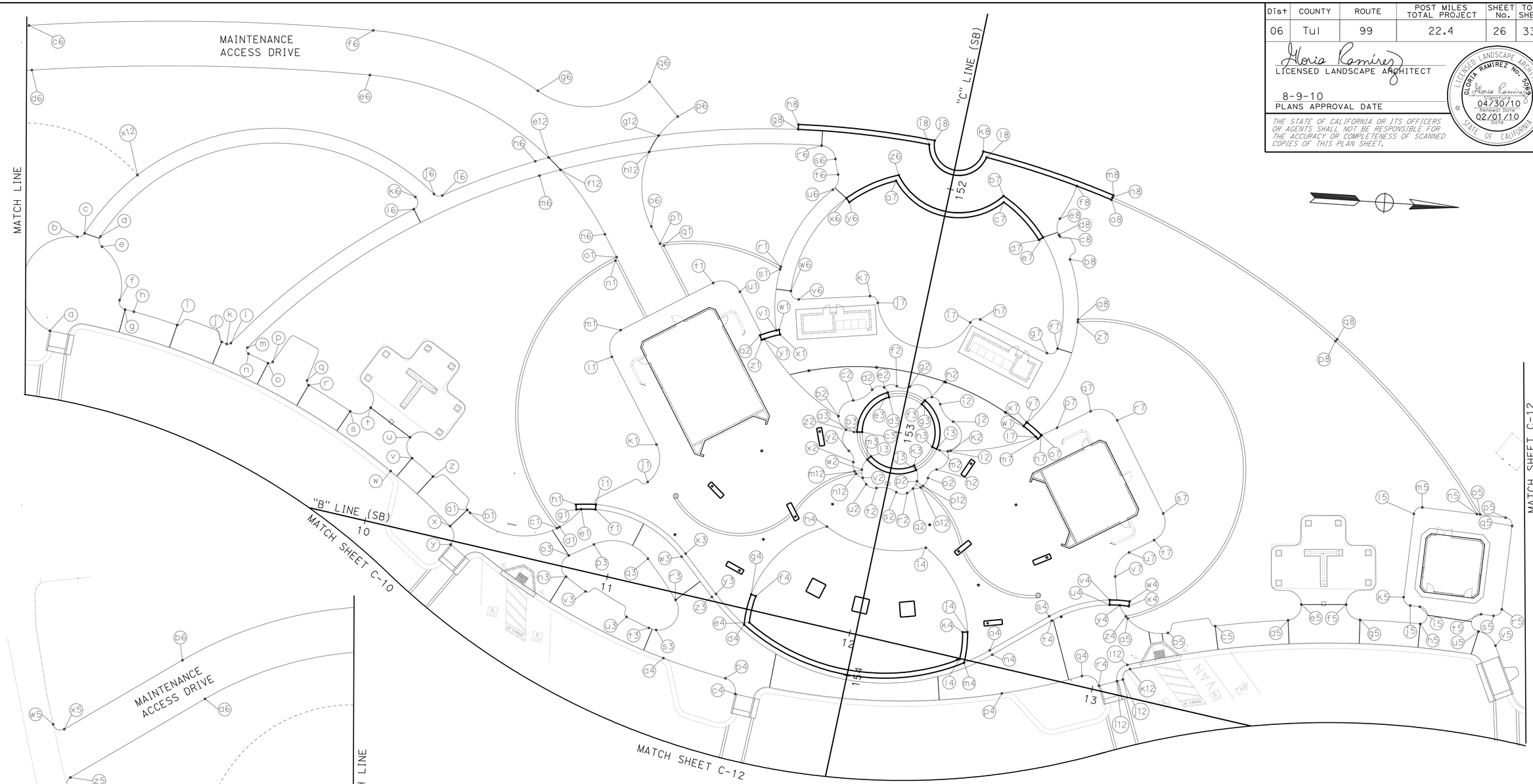


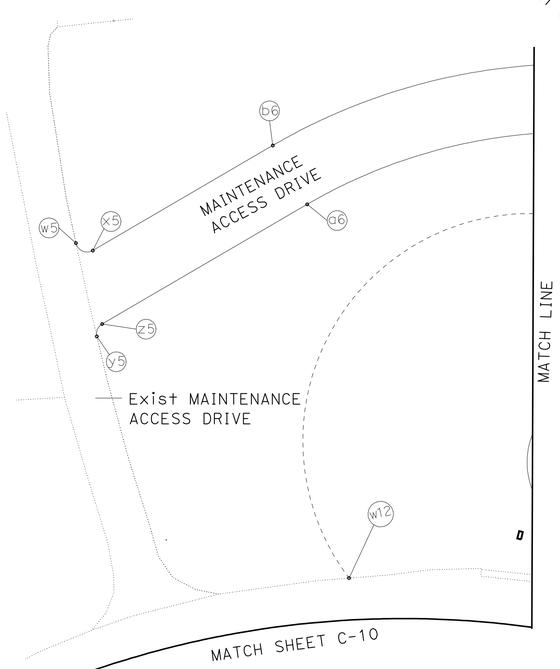


NOTE: FOR ACCURATE RIGHT OF WAY AND ACCESS DATA, CONTACT RIGHT OF WAY ENGINEERING AT THE DISTRICT OFFICE.

# CONSTRUCTION DETAILS
## (SOUTHBOUND SITE)

SCALE: 1" = 20'

**C-11**

STATE OF CALIFORNIA - DEPARTMENT OF TRANSPORTATION
Caltrans® LANDSCAPE ARCHITECTURE

FUNCTIONAL SUPERVISOR: ELBERT COX
CALCULATED-DESIGNED BY: HENRY BARNES
CHECKED BY: GLORIA RAMIREZ
REVISED BY
DATE REVISED

LAST REVISION 02-01-10
DATE PLOTTED => 16-AUG-2010
TIME PLOTTED => 06:59

| Dist | COUNTY | ROUTE | POST MILES TOTAL PROJECT | SHEET No. | TOTAL SHEETS |
|---|---|---|---|---|---|
| 06 | Tul | 99 | 22.4 | 27 | 335 |

Gloria Ramirez
LICENSED LANDSCAPE ARCHITECT

8-9-10
PLANS APPROVAL DATE

LICENSED LANDSCAPE ARCHITECT
GLORIA RAMIREZ No. 5989
Gloria Ramirez
Signature
04/30/10
Renewal Date
02/01/10
Date
STATE OF CALIFORNIA

*THE STATE OF CALIFORNIA OR ITS OFFICERS OR AGENTS SHALL NOT BE RESPONSIBLE FOR THE ACCURACY OR COMPLETENESS OF SCANNED COPIES OF THIS PLAN SHEET.*

NOTE: FOR ACCURATE RIGHT OF WAY AND ACCESS DATA, CONTACT RIGHT OF WAY ENGINEERING AT THE DISTRICT OFFICE.

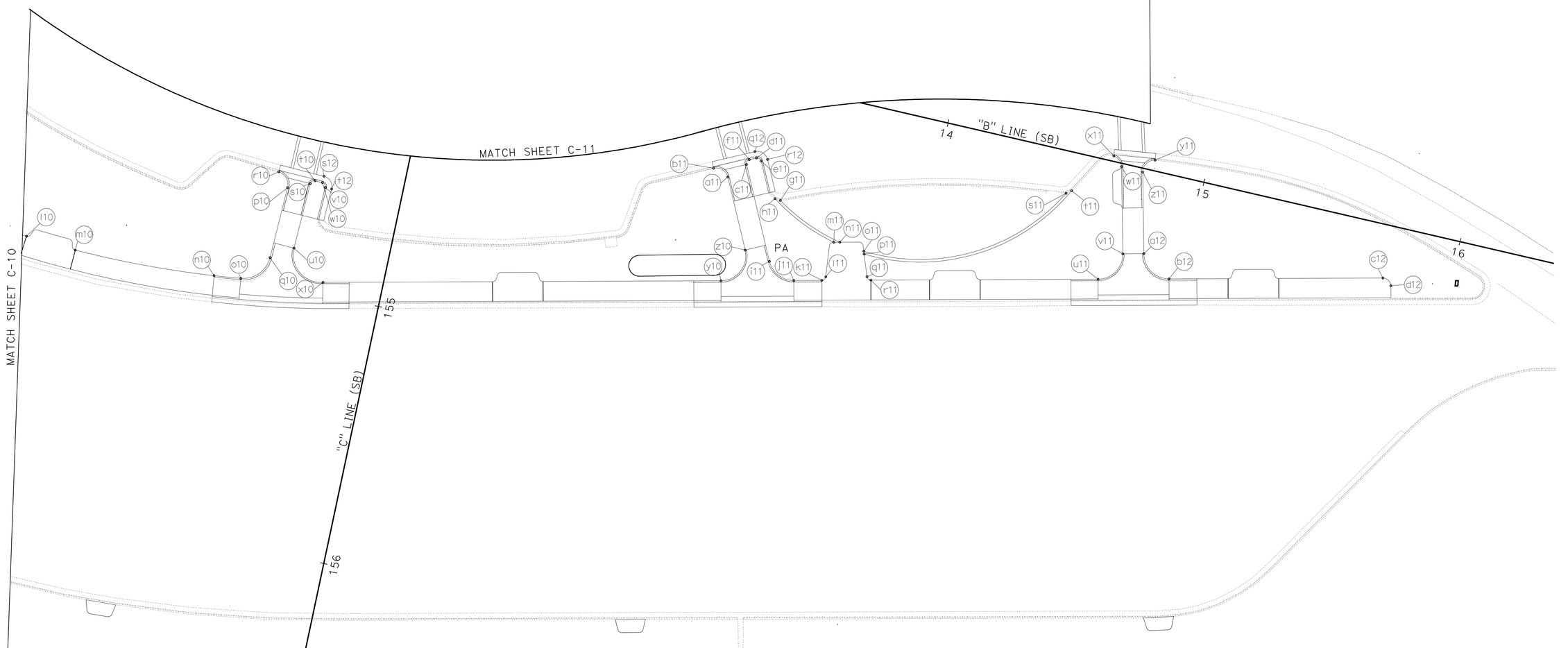


# CONSTRUCTION DETAILS
## (SOUTHBOUND SITE)

SCALE: 1" = 20'

**C-12**

STATE OF CALIFORNIA - DEPARTMENT OF TRANSPORTATION
Caltrans LANDSCAPE ARCHITECTURE

FUNCTIONAL SUPERVISOR: ELBERT COX

CALCULATED-DESIGNED BY: HENRY BARNES
CHECKED BY: GLORIA RAMIREZ

REVISED BY
DATE REVISED

LAST REVISION 02-01-10
DATE PLOTTED => 16-AUG-2010
TIME PLOTTED => 06:59

| Dist | COUNTY | ROUTE | POST MILES TOTAL PROJECT | SHEET No. | TOTAL SHEETS |
|---|---|---|---|---|---|
| 06 | Tul | 99 | 22.4 | 28 | 335 |

Gloria Ramirez
LICENSED LANDSCAPE ARCHITECT

8-9-10
PLANS APPROVAL DATE

LICENSED LANDSCAPE ARCHITECT
GLORIA RAMIREZ No. 5985
Signature
04/30/10
Renewal Date
02/01/10
Date
STATE OF CALIFORNIA

*THE STATE OF CALIFORNIA OR ITS OFFICERS OR AGENTS SHALL NOT BE RESPONSIBLE FOR THE ACCURACY OR COMPLETENESS OF SCANNED COPIES OF THIS PLAN SHEET.*

## NORTHBOUND CURVE DATA

| No. O | R | Δ | T | L | STATION | OFFSET (Ft) |
|---|---|---|---|---|---|---|
| 1 | 15.00′ | 65°6′04" | 9.57′ | 17.04′ | 19+84.19 "B" | 43.87 |
| 2 | 253.83′ | 2°11′18" | 4.85′ | 9.70′ | 20+60.06 "B" | 182.59 |
| 3 | 3.50′ | 175°57′52" | 99.34′ | 10.75′ | 19+87.62 "B" | 64.33 |
| 4 | 3.00′ | 90°0′00" | 3.00′ | 4.71′ | 19+79.91 "B" | 69.15 |
| 5 | 3.00′ | 90°0′00" | 3.00′ | 4.71′ | 19+71.95 "B" | 101.95 |
| 6 | 3.00′ | 90°0′00" | 3.00′ | 4.71′ | 20+04.75 "B" | 109.90 |
| 7 | 3.00′ | 90°0′00" | 3.00′ | 4.71′ | 20+12.70 "B" | 77.10 |
| 8 | 3.50′ | 168°35′26" | 35.04′ | 10.30′ | 20+10.47 "B" | 69.87 |
| 9 | 253.83′ | 12°2′26" | 26.77′ | 53.34′ | 20+60.06 "B" | 182.59 |
| 10 | 6.00′ | 87°20′04" | 5.73′ | 9.15′ | 20+63.50 "B" | 77.21 |
| 11 | 6.00′ | 91°24′12" | 6.15′ | 9.57′ | 20+93.42 "B" | 75.08 |
| 12 | 180.00′ | 2°54′53" | 4.58′ | 9.16′ | 20+89.10 "B" | 110.87 |
| 13 | 75.00′ | 22°57′37" | 15.23′ | 30.05′ | 21+92.76 "B" | 102.85 |
| 14 | 74.00′ | 23°39′25" | 15.50′ | 30.55′ | 21+92.76 "B" | 102.85 |
| 15 | 50.00′ | 60°32′17" | 29.18′ | 52.83′ | 21+67.97 "B" | 99.59 |
| 16 | 49.00′ | 62°11′09" | 29.55′ | 53.18′ | 21+67.97 "B" | 99.59 |
| 17 | 180.00′ | 8°17′28" | 13.05′ | 26.05′ | 20+89.08 "B" | 110.86 |
| 18 | 48.00′ | 9°19′19" | 3.91′ | 7.81′ | 21+31.80 "B" | 14.04 |
| 19 | 48.00′ | 9°4′23" | 3.81′ | 7.60′ | 21+31.80 "B" | 14.04 |
| 20 | 50.00′ | 9°19′03" | 4.07′ | 8.13′ | 21+31.80 "B" | 14.04 |
| 21 | 50.00′ | 9°4′23" | 3.97′ | 7.92′ | 21+31.80 "B" | 14.04 |
| 22 | 100.00′ | 14°37′15" | 12.83′ | 25.52′ | 21+00.96 "B" | 27.83 |
| 23 | 102.00′ | 14°37′15" | 13.09′ | 26.03′ | 21+00.96 "B" | 27.83 |
| 24 | 8.31′ | 77°10′29" | 6.63′ | 11.19′ | 21+71.79 "B" | 25.50 |
| 25 | 2.30′ | 118°13′25" | 3.84′ | 4.74′ | 21+64.34 "B" | 28.06 |
| 26 | 69.26′ | 15°4′49" | 9.17′ | 18.23′ | 22+00.23 "B" | 84.59 |
| 27 | 92.34′ | 5°43′46" | 4.62′ | 9.23′ | 21+10.94 "B" | 32.46 |
| 28 | 3.72′ | 147°25′25" | 12.72′ | 9.57′ | 21+80.90 "B" | 21.96 |
| 29 | 85.00′ | 17°56′40" | 13.42′ | 26.62′ | 22+46.28 "B" | 89.86 |
| 30 | 45.08′ | 15°53′10" | 6.29′ | 12.50′ | 22+44.71 "B" | 13.50 |
| 31 | 43.08′ | 14°14′20" | 5.38′ | 10.71′ | 22+44.71 "B" | 13.50 |
| 32 | 83.00′ | 62°18′05" | 50.17′ | 90.25′ | 22+46.28 "B" | 89.86 |
| 33 | 85.00′ | 64°1′45" | 53.14′ | 94.99′ | 22+46.28 "B" | 89.86 |
| 34 | 87.00′ | 82°20′38" | 76.09′ | 125.03′ | 22+46.28 "B" | 89.86 |
| 35 | 43.08′ | 14°14′20" | 5.38′ | 10.71′ | 22+45.08 "B" | 13.49 |
| 36 | 45.08′ | 15°53′10" | 6.29′ | 12.50′ | 22+45.08 "B" | 13.49 |
| 37 | 56.00′ | 21°3′34" | 10.41′ | 20.58′ | 22+61.37 "B" | 65.09 |
| 38 | 58.00′ | 20°29′55" | 10.49′ | 20.75′ | 22+61.37 "B" | 65.09 |
| 39 | 100.00′ | 4°8′48" | 3.62′ | 7.24′ | 23+85.61 "B" | 32.52 |
| 40 | 102.00′ | 4°8′48" | 3.69′ | 7.38′ | 23+85.61 "B" | 32.52 |
| 41 | 50.00′ | 40°13′58" | 18.31′ | 35.11′ | 23+47.15 "B" | 2.48 |
| 42 | 48.00′ | 40°16′08" | 17.60′ | 33.74′ | 23+47.15 "B" | 2.48 |
| 43 | 15.00′ | 75°30′04" | 11.61′ | 19.77′ | 23+34.21 "B" | 24.02 |
| 44 | 164.00′ | 10°27′26" | 15.01′ | 29.93′ | 24+33.31 "B" | 87.25 |
| 45 | 5.00′ | 139°10′52" | 13.44′ | 12.15′ | 23+07.77 "B" | 10.33 |
| 46 | 201.00′ | 4°29′37" | 7.89′ | 15.76′ | 22+69.28 "B" | 202.51 |
| 47 | 201.00′ | 0°42′56" | 1.26′ | 2.51′ | 22+69.28 "B" | 202.51 |
| 48 | 10.00′ | 124°7′39" | 18.86′ | 21.66′ | 23+41.01 "B" | 25.49 |
| 49 | 15.00′ | 91°10′25" | 15.31′ | 23.87′ | 23+55.81 "B" | 57.13 |
| 50 | 48.00′ | 9°14′12" | 3.88′ | 7.74′ | 23+47.15 "B" | 2.48 |

## NORTHBOUND CURVE DATA

| No. O | R | Δ | T | L | STATION | OFFSET (Ft) |
|---|---|---|---|---|---|---|
| 51 | 50.00′ | 9°12′44" | 4.03′ | 8.04′ | 23+47.15 "B" | 2.48 |
| 52 | 18.00′ | 66°27′24" | 11.79′ | 20.88′ | 23+60.07 "B" | 59.46 |
| 53 | 45.45′ | 44°17′30" | 18.50′ | 35.13′ | 110+92.88 "C" | 0.00 |
| 54 | 45.00′ | 45°53′28" | 19.05′ | 36.04′ | 111+76.05 "C" | 0.00 |
| 55 | 45.08′ | 47°32′54" | 19.86′ | 37.41′ | 110+92.88 "C" | 0.00 |
| 56 | 10.00′ | 84°47′11" | 9.13′ | 14.80′ | 21+44.58 "B" | 65.67 |
| 57 | 8.00′ | 90°0′00" | 8.00′ | 12.57′ | 21+43.79 "B" | 90.99 |
| 58 | 8.00′ | 90°0′00" | 8.00′ | 12.57′ | 111+97.72 "C" | 77.09 |
| 59 | 90.00′ | 26°32′12" | 21.22′ | 41.68′ | 120+63.17 "C" | 2.80 |
| 60 | 6.35′ | 175°11′41" | 151.34′ | 19.42′ | 111+78.75 "C" | 18.78 |
| 61 | 10.26′ | 50°36′39" | 4.85′ | 9.06′ | 111+94.70 "C" | 23.38 |
| 62 | 3.52′ | 129°26′52" | 7.45′ | 7.95′ | 111+89.26 "C" | 10.73 |
| 63 | 5.98′ | 110°27′57" | 8.62′ | 11.54′ | 111+90.55 "C" | 4.56 |
| 64 | 5.00′ | 63°21′57" | 3.09′ | 5.53′ | 111+98.75 "C" | 2.76 |
| 65 | 3.99′ | 79°8′14" | 3.30′ | 5.51′ | 111+90.39 "C" | 6.07 |
| 66 | 3.52′ | 129°26′52" | 7.45′ | 7.95′ | 111+89.26 "C" | 10.74 |
| 67 | 10.26′ | 50°36′39" | 4.85′ | 9.06′ | 111+94.70 "C" | 23.39 |
| 68 | 6.35′ | 175°11′41" | 151.34′ | 19.42′ | 111+78.75 "C" | 18.79 |
| 69 | 5.68′ | 98°15′02" | 6.57′ | 9.75′ | 111+69.94 "C" | 15.96 |
| 70 | 4.26′ | 69°42′35" | 2.97′ | 5.19′ | 111+60.68 "C" | 19.59 |
| 71 | 6.42′ | 41°5′56" | 2.41′ | 4.61′ | 111+58.92 "C" | 4.91 |
| 72 | 5.32′ | 34°27′49" | 1.65′ | 3.20′ | 111+60.49 "C" | 10.01 |
| 73 | 7.69′ | 47°28′51" | 3.38′ | 6.37′ | 111+58.97 "C" | 3.64 |
| 74 | 4.27′ | 61°47′51" | 2.56′ | 4.61′ | 111+56.30 "C" | 5.77 |
| 75 | 10.26′ | 46°43′28" | 4.43′ | 8.36′ | 111+42.96 "C" | 0.00 |
| 76 | 4.27′ | 61°47′51" | 2.56′ | 4.61′ | 111+56.30 "C" | 5.76 |
| 77 | 7.69′ | 47°28′51" | 3.38′ | 6.37′ | 111+58.98 "C" | 3.63 |
| 78 | 5.32′ | 34°20′08" | 1.64′ | 3.19′ | 111+60.49 "C" | 10.01 |
| 79 | 4.26′ | 69°42′35" | 2.97′ | 5.19′ | 111+60.69 "C" | 19.59 |
| 80 | 6.42′ | 41°5′56" | 2.41′ | 4.61′ | 111+58.92 "C" | 4.90 |
| 81 | 5.68′ | 98°15′20" | 6.57′ | 9.75′ | 111+69.94 "C" | 15.95 |
| 82 | 16.67′ | 74°13′29" | 12.61′ | 21.59′ | 111+76.05 "C" | 0.01 |
| 83 | 14.67′ | 74°13′29" | 11.10′ | 19.00′ | 111+76.05 "C" | 0.01 |
| 84 | 14.67′ | 54°19′11" | 7.52′ | 13.90′ | 111+76.05 "C" | 0.01 |
| 85 | 16.67′ | 54°19′59" | 8.55′ | 15.80′ | 111+76.05 "C" | 0.01 |
| 86 | 16.67′ | 74°13′29" | 12.61′ | 21.59′ | 111+76.05 "C" | 0.01 |
| 87 | 14.67′ | 74°13′29" | 11.10′ | 19.00′ | 111+76.05 "C" | 0.01 |
| 88 | 16.67′ | 41°30′28" | 6.32′ | 12.07′ | 111+76.05 "C" | 0.01 |
| 89 | 14.67′ | 41°29′46" | 5.56′ | 10.62′ | 111+76.05 "C" | 0.01 |
| 90 | 14.67′ | 74°13′29" | 11.10′ | 19.00′ | 111+76.05 "C" | 0.01 |
| 91 | 16.67′ | 74°12′05" | 12.61′ | 21.58′ | 111+76.05 "C" | 0.01 |
| 92 | 132.19′ | 15°14′22" | 17.68′ | 35.16′ | 110+90.80 "C" | 0.02 |
| 93 | 121.85′ | 2°32′50" | 2.71′ | 5.42′ | 110+90.80 "C" | 0.02 |
| 94 | 119.85′ | 15°16′41" | 16.08′ | 31.96′ | 110+90.80 "C" | 0.02 |
| 95 | 121.85′ | 15°16′41" | 16.34′ | 32.49′ | 110+90.80 "C" | 0.02 |
| 96 | 121.85′ | 2°32′52" | 2.71′ | 5.42′ | 110+90.80 "C" | 0.02 |
| 97 | 132.19′ | 15°19′48" | 17.79′ | 35.37′ | 110+90.80 "C" | 0.02 |
| 98 | 90.00′ | 31°19′16" | 25.23′ | 49.20′ | 112+63.17 "C" | 2.80 |
| 99 | 8.00′ | 90°0′04" | 8.00′ | 12.57′ | 112+11.75 "C" | 82.22 |
| 100 | 8.00′ | 91°48′44" | 8.26′ | 12.82′ | 23+62.52 "B" | 100.06 |

# CONSTRUCTION DETAILS
## (NORTHBOUND SITE)

C-13

STATE OF CALIFORNIA - DEPARTMENT OF TRANSPORTATION
Caltrans® LANDSCAPE ARCHITECTURE

FUNCTIONAL SUPERVISOR: ELBERT COX
CALCULATED-DESIGNED BY: HENRY BARNES
CHECKED BY: GLORIA RAMIREZ
REVISED BY
DATE REVISED

LAST REVISION 02-01-10 | DATE PLOTTED => 16-AUG-2010 | TIME PLOTTED => 06:59

| Dist | COUNTY | ROUTE | POST MILES TOTAL PROJECT | SHEET No. | TOTAL SHEETS |
|---|---|---|---|---|---|
| 06 | Tul | 99 | 22.4 | 29 | 335 |

Gloria Ramirez
LICENSED LANDSCAPE ARCHITECT

8-9-10
PLANS APPROVAL DATE

LICENSED LANDSCAPE ARCHITECT
GLORIA RAMIREZ No. 5085
Signature
04/30/10
Renewal Date
02/01/10
Date
STATE OF CALIFORNIA

*THE STATE OF CALIFORNIA OR ITS OFFICERS OR AGENTS SHALL NOT BE RESPONSIBLE FOR THE ACCURACY OR COMPLETENESS OF SCANNED COPIES OF THIS PLAN SHEET.*

## NORTHBOUND CURVE DATA

| No. O | R | Δ | T | L | STATION | OFFSET (Ft) |
|---|---|---|---|---|---|---|
| 101 | 44.00′ | 60°38′26" | 25.73′ | 46.57′ | 23+50.08 "B" | 95.43 |
| 102 | 45.00′ | 60°38′26" | 26.32′ | 47.63′ | 23+50.08 "B" | 95.43 |
| 103 | 310.00′ | 5°12′18" | 14.09′ | 28.16′ | 25+23.51 "B" | 222.86 |
| 104 | 6.00′ | 88°22′54" | 5.83′ | 9.26′ | 24+14.48 "B" | 73.74 |
| 105 | 6.00′ | 87°17′02" | 5.72′ | 9.14′ | 24+43.14 "B" | 82.59 |
| 106 | 280.00′ | 2°48′36" | 6.87′ | 13.73′ | 25+13.08 "B" | 194.73 |
| 107 | 293.75′ | 3°15′04" | 8.34′ | 16.67′ | 25+15.90 "B" | 208.19 |
| 108 | 1.50′ | 82°56′09" | 1.33′ | 2.17′ | 24+93.14 "B" | 86.19 |
| 109 | 12.00′ | 73°30′35" | 8.96′ | 15.40′ | 24+86.78 "B" | 104.06 |
| 110 | 74.00′ | 40°36′35" | 27.38′ | 52.45′ | 23+24.41 "B" | 110.96 |
| 111 | 75.00′ | 40°52′28" | 27.95′ | 53.50′ | 23+24.41 "B" | 110.96 |
| 112 | 85.68′ | 93°28′56" | 91.05′ | 139.79′ | 24+38.84 "B" | 48.11 |
| 113 | 91.68′ | 91°52′39" | 94.73′ | 147.01′ | 24+38.84 "B" | 48.11 |
| 114 | 12.00′ | 70°33′28" | 8.49′ | 14.78′ | 25+06.98 "B" | 126.25 |
| 115 | 30.00′ | 112°9′41" | 44.61′ | 58.73′ | 25+30.60 "B" | 84.46 |
| 116 | 36.00′ | 56°14′18" | 19.24′ | 35.34′ | 25+30.60 "B" | 84.46 |
| 117 | 60.00′ | 51°38′40" | 29.03′ | 54.08′ | 25+71.13 "B" | 164.81 |
| 118 | 54.00′ | 51°38′40" | 26.13′ | 48.67′ | 25+71.13 "B" | 164.81 |
| 119 | 30.00′ | 132°7′29" | 67.58′ | 69.18′ | 26+08.99 "B" | 83.16 |
| 120 | 36.00′ | 125°34′35" | 70.01′ | 78.90′ | 26+08.99 "B" | 83.16 |
| 121 | 1.50′ | 97°16′07" | 1.70′ | 2.55′ | 25+02.19 "B" | 86.75 |
| 122 | 293.75′ | 4°30′12" | 11.55′ | 23.09′ | 25+15.90 "B" | 208.16 |
| 123 | 1.50′ | 81°19′40" | 1.29′ | 2.13′ | 25+25.39 "B" | 86.91 |
| 124 | 1.50′ | 81°19′40" | 1.29′ | 2.13′ | 25+44.02 "B" | 85.72 |
| 125 | 293.75′ | 3°21′33" | 8.61′ | 17.22′ | 25+15.90 "B" | 208.19 |
| 126 | 293.75′ | 4°2′02" | 10.34′ | 20.68′ | 25+15.90 "B" | 208.19 |
| 127 | 1.50′ | 81°19′40" | 1.29′ | 2.13′ | 26+00.26 "B" | 74.76 |
| 128 | 1.50′ | 81°19′40" | 1.29′ | 2.13′ | 26+17.97 "B" | 68.86 |
| 129 | 293.75′ | 1°15′02" | 3.21′ | 6.41′ | 25+15.90 "B" | 208.19 |
| 130 | 3.00′ | 72°22′13" | 2.19′ | 3.79′ | 26+24.54 "B" | 67.96 |
| 131 | 20.00′ | 31°33′32" | 5.65′ | 11.02′ | 26+42.39 "B" | 53.45 |
| 132 | 3.00′ | 53°24′58" | 1.51′ | 2.80′ | 26+34.78 "B" | 75.16 |
| 133 | 3.00′ | 88°20′47" | 2.91′ | 4.63′ | 26+47.31 "B" | 75.92 |
| 134 | 20.00′ | 183°27′13" | 663.38′ | 64.04′ | 26+42.39 "B" | 53.45 |
| 135 | 91.53′ | 74°5′21" | 69.08′ | 118.35′ | 20+60.43 "B" | 61.59 |
| 136 | 90.53′ | 72°42′23" | 66.63′ | 114.88′ | 20+60.43 "B" | 61.59 |
| 137 | 5.00′ | 65°19′20" | 3.21′ | 5.70′ | 19+77.46 "B" | 8.49 |
| 138 | 4.75′ | 115°8′23" | 7.48′ | 9.55′ | 19+59.56 "B" | 16.34 |
| 139 | 3.00′ | 92°9′41" | 3.12′ | 4.83′ | 19+60.80 "B" | 44.57 |
| 140 | 5.00′ | 87°50′19" | 4.81′ | 7.67′ | 19+76.96 "B" | 35.96 |
| 141 | 1.50′ | 82°45′15" | 1.32′ | 2.17′ | 19+97.67 "B" | 40.62 |
| 142 | 1.50′ | 80°54′21" | 1.28′ | 2.12′ | 20+16.29 "B" | 41.67 |
| 143 | 1.53′ | 82°56′33" | 1.35′ | 2.22′ | 20+70.11 "B" | 44.65 |
| 144 | 1.50′ | 83°17′34" | 1.33′ | 2.18′ | 20+88.78 "B" | 45.73 |
| 145 | 4.50′ | 70°8′05" | 3.16′ | 5.51′ | 21+06.41 "B" | 43.71 |
| 146 | 5.50′ | 26°33′15" | 1.30′ | 2.55′ | 21+14.95 "B" | 6.49 |
| 147 | 1.50′ | 90°0′00" | 1.50′ | 2.36′ | 21+25.99 "B" | 1.64 |
| 148 | 1.50′ | 88°5′11" | 1.45′ | 2.31′ | 21+28.52 "B" | 0.56 |
| 149 | 4.50′ | 92°48′24" | 4.73′ | 7.29′ | 21+40.25 "B" | 7.63 |
| 150 | 10.00′ | 109°59′55" | 14.28′ | 19.20′ | 21+32.59 "B" | 39.67 |

## NORTHBOUND CURVE DATA

| No. O | R | Δ | T | L | STATION | OFFSET (Ft) |
|---|---|---|---|---|---|---|
| 151 | 11.00′ | 73°36′28" | 8.23′ | 14.13′ | 21+89.88 "B" | 41.85 |
| 152 | 9.00′ | 87°13′48" | 8.58′ | 13.70′ | 23+22.45 "B" | 51.30 |
| 153 | 5.50′ | 86°45′51" | 5.20′ | 8.33′ | 23+69.60 "B" | 29.24 |
| 154 | 1.00′ | 90°0′00" | 1.00′ | 1.57′ | 23+70.63 "B" | 16.50 |
| 155 | 1.00′ | 90°0′00" | 1.00′ | 1.57′ | 23+73.99 "B" | 14.86 |
| 156 | 3.50′ | 90°0′00" | 3.50′ | 5.50′ | 23+86.32 "B" | 11.63 |
| 157 | 1.50′ | 89°40′20" | 1.49′ | 2.35′ | 23+90.01 "B" | 23.75 |
| 158 | 1.50′ | 90°19′40" | 1.51′ | 2.36′ | 23+95.49 "B" | 34.99 |
| 159 | 10.00′ | 119°12′44" | 17.05′ | 20.81′ | 23+82.92 "B" | 53.68 |
| 160 | 9.50′ | 60°47′16" | 5.57′ | 10.08′ | 24+14.63 "B" | 55.96 |
| 161 | 6.00′ | 89°56′05" | 5.99′ | 9.42′ | 25+04.68 "B" | 64.51 |
| 162 | 6.00′ | 90°0′00" | 6.00′ | 9.42′ | 25+34.63 "B" | 66.18 |
| 163 | 1.50′ | 82°56′33" | 1.33′ | 2.17′ | 26+07.51 "B" | 74.77 |
| 164 | 1.50′ | 83°17′34" | 1.33′ | 2.18′ | 26+26.15 "B" | 75.81 |
| 165 | 3.00′ | 89°49′32" | 2.99′ | 4.70′ | 26+87.45 "B" | 83.75 |
| 166 | 1.50′ | 85°17′04" | 1.39′ | 2.24′ | 24+24.65 "B" | 20.97 |
| 167 | 1.53′ | 85°31′08" | 1.42′ | 2.29′ | 24+41.79 "B" | 13.49 |
| 168 | 208.25′ | 5°53′06" | 10.70′ | 21.39′ | 25+16.22 "B" | 206.35 |
| 169 | 137.96′ | 25°22′36" | 31.06′ | 61.10′ | 25+12.60 "B" | 90.99 |
| 170 | 136.96′ | 25°4′25" | 30.46′ | 59.94′ | 25+12.60 "B" | 90.99 |
| 171 | 208.25′ | 17°44′47" | 32.51′ | 64.50′ | 25+16.22 "B" | 206.35 |
| 172 | 137.96′ | 20°6′21" | 24.46′ | 48.41′ | 25+12.60 "B" | 90.99 |
| 173 | 136.96′ | 20°0′46" | 24.17′ | 47.84′ | 25+12.60 "B" | 90.99 |
| 174 | 208.25′ | 5°46′52" | 10.52′ | 21.01′ | 25+16.22 "B" | 206.35 |
| 175 | 1.52′ | 85°13′22" | 1.40′ | 2.26′ | 25+83.48 "B" | 10.86 |
| 176 | 1.49′ | 79°14′21" | 1.23′ | 2.06′ | 26+00.89 "B" | 17.60 |
| 177 | 13.50′ | 80°28′51" | 11.42′ | 18.96′ | 26+05.34 "B" | 3.29 |
| 178 | 12.00′ | 90°0′04" | 12.00′ | 18.85′ | 23+32.08 "B" | 128.63 |
| 179 | 11.00′ | 90°0′04" | 11.00′ | 17.28′ | 23+32.08 "B" | 128.63 |
| 180 | 400.00′ | 2°3′55" | 7.21′ | 14.42′ | 25+53.70 "B" | 307.65 |
| 181 | 74.00′ | 12°12′24" | 7.91′ | 15.77′ | 23+24.41 "B" | 110.96 |
| 182 | 75.00′ | 12°1′41" | 7.90′ | 15.74′ | 23+24.41 "B" | 110.96 |
| 183 | 119.85′ | 2°10′43" | 2.28′ | 4.56′ | 113+09.20 "C" | 0.02 |
| 184 | 119.85′ | 2°25′12" | 2.53′ | 5.06′ | 113+09.20 "C" | 0.02 |
| 185 | 5.50′ | 90°31′54" | 5.55′ | 8.69′ | 21+41.69 "B" | 41.50 |
| 186 | 3.00′ | 90°31′54" | 3.03′ | 4.74′ | 21+41.69 "B" | 41.50 |
| 187 | 39.00′ | 30°9′14" | 10.51′ | 20.53′ | 24+11.49 "B" | 18.88 |
| 188 | 3.00′ | 58°20′08" | 1.67′ | 3.05′ | 23+78.04 "B" | 34.60 |
| 189 | 5.00′ | 58°16′47" | 2.79′ | 5.09′ | 23+77.54 "B" | 34.62 |
| 190 | 5.32′ | 41°31′58" | 2.02′ | 3.86′ | 111+60.49 "B" | 10.01 |
| 191 | 14.67′ | 41°29′46" | 5.56′ | 10.62′ | 111+76.05 "C" | 0.01 |
| 192 | 16.67′ | 41°30′28" | 6.32′ | 12.07′ | 111+76.05 "C" | 0.01 |
| 193 | 5.32′ | 41°24′48" | 2.01′ | 3.84′ | 111+60.49 "C" | 10.01 |
| 194 | 4.00′ | 91°54′50" | 4.14′ | 6.42′ | 21+26.10 "B" | 1.80 |
| 195 | 3.01′ | 84°33′32" | 2.74′ | 4.45′ | 23+69.64 "B" | 29.14 |
| 196 | 3.50′ | 90°0′00" | 3.50′ | 5.50′ | 23+70.63 "B" | 16.32 |

# CONSTRUCTION DETAILS
## (NORTHBOUND SITE)
## C-14

STATE OF CALIFORNIA - DEPARTMENT OF TRANSPORTATION
Caltrans® LANDSCAPE ARCHITECTURE

FUNCTIONAL SUPERVISOR: ELBERT COX
CALCULATED-DESIGNED BY: HERNY BARNES
CHECKED BY: GLORIA RAMIREZ
REVISED BY
DATE REVISED

LAST REVISION 02-01-10 | DATE PLOTTED => 16-AUG-2010 | TIME PLOTTED => 06:59

| Dist | COUNTY | ROUTE | POST MILES TOTAL PROJECT | SHEET No. | TOTAL SHEETS |
|---|---|---|---|---|---|
| 06 | Tul | 99 | 22.4 | 30 | 335 |

Gloria Ramirez
LICENSED LANDSCAPE ARCHITECT

8-9-10
PLANS APPROVAL DATE

LICENSED LANDSCAPE ARCHITECT
GLORIA RAMIREZ No. 5989
Signature
04/30/10
Renewal Date
02/01/10
Date
STATE OF CALIFORNIA

*THE STATE OF CALIFORNIA OR ITS OFFICERS OR AGENTS SHALL NOT BE RESPONSIBLE FOR THE ACCURACY OR COMPLETENESS OF SCANNED COPIES OF THIS PLAN SHEET.*

## NORTHBOUND BC, EC SCHEDULE

| No. | STATION | OFFSET | ELEVATION | | |
|---|---|---|---|---|---|
| | | | | TOP OF FOOTING | TOP OF WALL |
| | - | Ft | Ft | Ft | Ft |
| a | 19+69.29 "B" | 45.53 | 263.76 | - | - |
| b | 19+79.43 "B" | 58.09 | 263.74 | - | - |
| c | 19+88.68 "B" | 61.00 | 263.76 | - | - |
| d | 19+86.79 "B" | 67.73 | 264.09 | - | - |
| e | 19+80.61 "B" | 66.23 | 264.09 | - | - |
| f | 19+76.99 "B" | 68.44 | 264.09 | - | - |
| g | 19+69.04 "B" | 101.24 | 264.09 | - | - |
| h | 19+71.24 "B" | 104.86 | 264.09 | - | - |
| i | 20+04.04 "B" | 112.82 | 264.09 | - | - |
| j | 20+07.67 "B" | 110.61 | 264.09 | - | - |
| k | 20+15.62 "B" | 77.81 | 264.09 | - | - |
| l | 20+13.41 "B" | 74.18 | 264.09 | - | - |
| m | 20+09.65 "B" | 73.27 | 264.09 | - | - |
| n | 20+10.61 "B" | 66.37 | 263.80 | - | - |
| o | 20+63.63 "B" | 71.21 | 263.90 | - | - |
| p | 20+69.49 "B" | 77.06 | 264.00 | - | - |
| q | 20+87.43 "B" | 75.36 | 264.04 | - | - |
| r | 20+93.29 "B" | 69.09 | 263.96 | - | - |
| s | 21+02.43 "B" | 68.64 | 264.00 | - | - |
| t | 21+21.43 "B" | 66.21 | 264.04 | - | - |
| u | 21+28.11 "B" | 64.86 | 264.09 | - | - |
| v | 21+18.40 "B" | 93.07 | 263.50 | - | - |
| w | 21+19.39 "B" | 93.20 | 263.50 | - | - |
| x | 21+37.92 "B" | 139.54 | 262.80 | - | - |
| y | 21+39.66 "B" | 139.58 | 262.80 | - | - |
| z | 21+29.43 "B" | 64.57 | 264.10 | - | - |

## NORTHBOUND BC, EC SCHEDULE

| No. | STATION | OFFSET | ELEVATION | | |
|---|---|---|---|---|---|
| | | | | TOP OF FOOTING | TOP OF WALL |
| | - | Ft | Ft | Ft | Ft |
| a1 | 21+46.62 "B" | 56.59 | 264.11 | 263.70 | 270.37 |
| b1 | 21+47.39 "B" | 61.55 | 263.86 | 263.70 | 270.37 |
| c1 | 21+52.49 "B" | 59.55 | 263.98 | - | - |
| d1 | 21+53.82 "B" | 56.69 | 264.13 | 263.70 | 270.37 |
| e1 | 21+54.88 "B" | 58.39 | 264.17 | 263.70 | 270.37 |
| f1 | 21+61.46 "B" | 54.29 | 264.17 | - | - |
| g1 | 21+60.27 "B" | 52.68 | 264.13 | - | - |
| h1 | 21+78.67 "B" | 35.11 | 264.15 | - | - |
| i1 | 21+80.23 "B" | 36.36 | 264.17 | - | - |
| j1 | 22+03.03 "B" | 30.68 | 264.12 | 263.70 | 265.70 |
| k1 | 22+04.88 "B" | 29.92 | 264.79 | 263.70 | 265.70 |
| l1 | 21+77.81 "B" | 31.24 | 264.12 | - | - |
| m1 | 21+67.54 "B" | 32.64 | 264.10 | - | - |
| n1 | 21+63.15 "B" | 30.03 | 264.10 | - | - |
| o1 | 21+63.16 "B" | 26.09 | 264.10 | - | - |
| p1 | 21+79.65 "B" | 18.46 | 264.07 | - | - |
| q1 | 21+83.83 "B" | 24.24 | 264.10 | - | - |
| r1 | 21+99.92 "B" | 18.62 | 264.17 | 263.70 | 265.70 |
| s1 | 22+02.07 "B" | 19.62 | ***** | 263.70 | 265.70 |
| t1 | 22+90.03 "B" | 16.98 | 264.10 | 263.70 | 265.70 |
| u1 | 22+87.92 "B" | 18.06 | ***** | 263.70 | 265.70 |
| v1 | 22+85.48 "B" | 28.46 | 264.67 | 263.70 | 265.70 |
| w1 | 22+87.36 "B" | 29.16 | 264.00 | 263.70 | 265.70 |
| x1 | 22+91.54 "B" | 15.56 | 264.09 | - | - |
| y1 | 23+05.40 "B" | 30.49 | 263.98 | - | - |
| z1 | 23+06.98 "B" | 29.26 | 263.99 | - | - |

## NORTHBOUND BC, EC SCHEDULE

| No. | STATION | OFFSET | ELEVATION | | |
|---|---|---|---|---|---|
| | | | | TOP OF FOOTING | TOP OF WALL |
| | - | Ft | Ft | Ft | Ft |
| a4 | 111+73.15 "C" | 14.37 | 264.55 | 264.00 | 266.00 |
| b4 | 111+90.88 "C" | 7.60 | 264.31 | 264.00 | 266.00 |
| c4 | 111+89.10 "C" | 6.70 | 264.35 | 264.00 | 266.00 |
| d4 | 111+89.10 "C" | 6.70 | 264.33 | 264.00 | 266.00 |
| e4 | 111+90.88 "C" | 7.60 | 264.29 | 264.00 | 266.00 |
| f4 | 111+92.53 "C" | 9.43 | 264.23 | - | - |
| g4 | 111+73.15 "C" | 14.38 | 264.33 | 264.00 | 266.00 |
| h4 | 111+72.76 "C" | 16.34 | 264.30 | 264.00 | 266.00 |
| i4 | 111+64.35 "C" | 8.85 | 264.25 | 264.00 | 266.00 |
| j4 | 111+62.76 "C" | 10.06 | 264.15 | 264.00 | 266.00 |
| k4 | 111+58.43 "C" | 11.36 | 263.92 | - | - |
| l4 | 111+64.36 "C" | 8.85 | 264.25 | 264.00 | 266.00 |
| m4 | 111+62.76 "C" | 10.05 | 264.15 | 264.00 | 266.00 |
| n4 | 112+17.22 "C" | 38.63 | 264.16 | - | - |
| o4 | 112+10.73 "C" | 21.55 | 264.27 | - | - |
| p4 | 112+11.57 "C" | 16.20 | 264.23 | 263.40 | 265.40 |
| q4 | 112+09.59 "C" | 15.93 | 264.22 | 263.40 | 265.40 |
| r4 | 112+09.60 "C" | 15.93 | 264.15 | 263.40 | 265.40 |
| s4 | 112+11.58 "C" | 16.20 | 264.16 | 263.40 | 265.40 |
| t4 | 112+10.74 "C" | 21.55 | 264.17 | - | - |
| u4 | 112+18.69 "C" | 33.50 | 264.06 | - | - |
| v4 | 112+04.53 "C" | 65.47 | 264.10 | - | - |
| w4 | 112+05.28 "C" | 66.12 | 264.10 | - | - |
| x4 | 112+16.96 "C" | 76.15 | 264.10 | - | - |
| y4 | 112+17.82 "C" | 87.43 | 264.10 | - | - |
| z4 | 23+67.82 "B" | 106.06 | 264.10 | - | - |

## NORTHBOUND BC, EC SCHEDULE

| No. | STATION | OFFSET | ELEVATION | | |
|---|---|---|---|---|---|
| | | | | TOP OF FOOTING | TOP OF WALL |
| | - | Ft | Ft | Ft | Ft |
| a2 | 23+11.65 "B" | 34.78 | 263.81 | - | - |
| b2 | 23+10.17 "B" | 36.13 | 263.80 | - | - |
| c2 | 23+40.65 "B" | 52.05 | 263.85 | 263.70 | 270.37 |
| d2 | 23+40.94 "B" | 50.07 | 263.85 | 263.70 | 270.37 |
| e2 | 23+62.96 "B" | 43.95 | 263.65 | - | - |
| f2 | 23+75.75 "B" | 50.59 | 263.60 | - | - |
| g2 | 23+24.24 "B" | 35.23 | 263.90 | - | - |
| h2 | 23+03.82 "B" | 13.40 | 264.10 | - | - |
| i2 | 23+08.75 "B" | 5.42 | 264.00 | - | - |
| j2 | 23+24.07 "B" | 9.12 | 263.91 | - | - |
| k2 | 23+42.43 "B" | 15.29 | 263.81 | - | - |
| l2 | 23+44.76 "B" | 16.22 | 263.80 | - | - |
| m2 | 23+46.57 "B" | 33.80 | 263.80 | - | - |
| n2 | 23+42.56 "B" | 36.49 | 263.84 | - | - |
| o2 | 23+48.66 "B" | 50.45 | 263.75 | 263.70 | 270.37 |
| p2 | 23+48.67 "B" | 52.45 | 263.58 | 263.70 | 270.37 |
| q2 | 23+43.54 "B" | 52.35 | 263.83 | - | - |
| r2 | 23+46.95 "B" | 71.78 | 264.10 | - | - |
| s2 | 111+34.71 "C" | 17.78 | 264.05 | - | - |
| t2 | 111+34.51 "C" | 17.31 | 264.14 | - | - |
| u2 | 21+51.39 "B" | 72.99 | 264.20 | - | - |
| v2 | 21+38.34 "B" | 85.31 | 264.18 | - | - |
| w2 | 21+37.94 "B" | 96.44 | 264.15 | - | - |
| x2 | 112+02.91 "C" | 83.18 | 264.15 | - | - |
| y2 | 112+03.81 "C" | 71.90 | 264.18 | - | - |
| z2 | 112+02.61 "C" | 70.50 | 264.19 | - | - |

## NORTHBOUND BC, EC SCHEDULE

| No. | STATION | OFFSET | ELEVATION | | |
|---|---|---|---|---|---|
| | | | | TOP OF FOOTING | TOP OF WALL |
| | - | Ft | Ft | Ft | Ft |
| a3 | 111+94.66 "C" | 61.16 | 264.26 | - | - |
| b3 | 111+75.80 "C" | 24.41 | 264.40 | - | - |
| c3 | 111+84.85 "C" | 20.54 | 264.38 | - | - |
| d3 | 111+90.65 "C" | 13.96 | 264.28 | - | - |
| e3 | 111+92.73 "C" | 10.13 | 264.26 | - | - |
| f3 | 111+95.02 "C" | 0.57 | 264.20 | - | - |
| g3 | 111+94.10 "C" | 4.60 | 264.21 | - | - |
| h3 | 111+90.65 "C" | 13.97 | 264.21 | - | - |
| i3 | 111+84.85 "C" | 20.55 | 264.27 | - | - |
| j3 | 111+77.59 "C" | 25.03 | 264.30 | - | - |
| k3 | 111+72.75 "C" | 20.90 | 264.30 | - | - |
| l3 | 111+72.52 "C" | 17.54 | 264.30 | - | - |
| m3 | 111+64.65 "C" | 18.04 | 264.11 | - | - |
| n3 | 111+60.59 "C" | 15.33 | 263.98 | - | - |
| o3 | 111+55.18 "C" | 10.33 | 263.92 | - | - |
| p3 | 111+52.95 "C" | 8.42 | 264.07 | - | - |
| q3 | 111+52.37 "C" | 4.07 | 264.07 | - | - |
| r3 | 111+52.37 "C" | 4.07 | 264.07 | - | - |
| s3 | 111+52.95 "C" | 8.42 | 264.07 | - | - |
| t3 | 111+55.18 "C" | 10.33 | 263.92 | - | - |
| u3 | 111+58.43 "C" | 11.31 | 263.92 | - | - |
| v3 | 111+60.60 "C" | 15.33 | 263.98 | - | - |
| w3 | 111+64.65 "C" | 18.04 | 264.11 | - | - |
| x3 | 111+72.76 "C" | 20.90 | 264.32 | - | - |
| y3 | 111+72.52 "C" | 17.54 | 264.33 | - | - |
| z3 | 111+72.76 "C" | 16.33 | 264.34 | 264.00 | 266.00 |

* CONFORM TO EXISTING
** CONFORM TO GUTTER PROFILE
*** CONFORM TO PARKING LOT OVERLAY
**** SEE DETAIL
***** SEE DRAINAGE PROFILE
****** CONFORM TO LAYOUT DETAIL

# CONSTRUCTION DETAILS
## (NORTHBOUND SITE)

C-15

STATE OF CALIFORNIA - DEPARTMENT OF TRANSPORTATION
Caltrans® LANDSCAPE ARCHITECTURE

FUNCTIONAL SUPERVISOR: ELBERT COX
CALCULATED-DESIGNED BY: HENRY BARNES
CHECKED BY: GLORIA RAMIREZ
REVISED BY
DATE REVISED

LAST REVISION 02-01-10
DATE PLOTTED => 16-AUG-2010
TIME PLOTTED => 06:59

| Dist | COUNTY | ROUTE | POST MILES TOTAL PROJECT | SHEET No. | TOTAL SHEETS |
|---|---|---|---|---|---|
| 06 | Tul | 99 | 22.4 | 31 | 335 |

Gloria Ramirez
LICENSED LANDSCAPE ARCHITECT

8-9-10
PLANS APPROVAL DATE

LICENSED LANDSCAPE ARCHITECT GLORIA RAMIREZ No. 5085 Signature 04/30/10 Renewal Date 02/01/10 Date STATE OF CALIFORNIA

*THE STATE OF CALIFORNIA OR ITS OFFICERS OR AGENTS SHALL NOT BE RESPONSIBLE FOR THE ACCURACY OR COMPLETENESS OF SCANNED COPIES OF THIS PLAN SHEET.*

* CONFORM TO EXISTING
** CONFORM TO GUTTER PROFILE
*** CONFORM TO PARKING LOT OVERLAY
**** SEE DETAIL
***** SEE DRAINAGE PROFILE
****** CONFORM TO LAYOUT DETAIL

## NORTHBOUND BC, EC SCHEDULE

| No. | STATION | OFFSET | ELEVATION |
|---|---|---|---|
| | - | Ft | Ft |
| a5 | 23+70.52 "B" | 99.80 | 264.00 |
| b5 | 23+68.35 "B" | 94.58 | 264.00 |
| c5 | 23+87.73 "B" | 72.66 | 263.00 |
| d5 | 23+88.59 "B" | 72.14 | 263.00 |
| e5 | 23+90.64 "B" | 143.97 | 261.00 |
| f5 | 23+91.54 "B" | 144.42 | 261.00 |
| g5 | 23+90.40 "B" | 57.50 | 263.00 |
| h5 | 24+16.54 "B" | 68.10 | 263.00 |
| i5 | 24+20.16 "B" | 75.67 | 263.00 |
| j5 | 24+37.33 "B" | 81.09 | 263.00 |
| k5 | 24+44.36 "B" | 76.71 | 263.00 |
| l5 | 24+57.75 "B" | 79.75 | 263.00 |
| m5 | 24+76.68 "B" | 82.94 | 263.00 |
| n5 | 24+93.25 "B" | 94.69 | 263.00 |
| o5 | 24+94.63 "B" | 86.12 | 263.00 |
| p5 | 24+97.73 "B" | 99.16 | 262.00 |
| q5 | 24+94.59 "B" | 113.17 | 262.00 |
| r5 | 24+99.10 "B" | 117.20 | 262.00 |
| s5 | 25+12.89 "B" | 115.80 | 262.00 |
| t5 | 25+46.81 "B" | 117.60 | 262.00 |
| u5 | 25+44.11 "B" | 111.24 | 262.00 |
| v5 | 25+93.85 "B" | 115.82 | 262.00 |
| w5 | 25+96.37 "B" | 110.38 | 262.00 |
| x5 | 25+00.69 "B" | 86.87 | 263.00 |
| y5 | 25+02.26 "B" | 82.25 | 263.00 |
| z5 | 25+25.34 "B" | 85.41 | 263.00 |

## NORTHBOUND BC, EC SCHEDULE

| No. | STATION | OFFSET | ELEVATION |
|---|---|---|---|
| | - | Ft | Ft |
| a6 | 25+26.28 "B" | 86.64 | 263.18 |
| b6 | 25+42.52 "B" | 85.64 | 263.16 |
| c6 | 25+43.88 "B" | 84.23 | 263.14 |
| d6 | 25+60.96 "B" | 82.09 | 263.11 |
| e6 | 25+79.82 "B" | 78.53 | 263.07 |
| f6 | 25+99.83 "B" | 73.32 | 263.04 |
| g6 | 26+01.62 "B" | 74.12 | 263.06 |
| h6 | 26+16.50 "B" | 69.16 | 263.01 |
| i6 | 26+17.45 "B" | 67.45 | 262.99 |
| j6 | 26+23.44 "B" | 65.17 | 262.98 |
| k6 | 26+26.87 "B" | 66.07 | 262.97 |
| l6 | 26+35.77 "B" | 72.32 | 262.95 |
| m6 | 26+37.64 "B" | 74.27 | 262.94 |
| n6 | 26+44.36 "B" | 76.48 | 262.82 |
| o6 | 26+46.67 "B" | 72.99 | 262.80 |
| p6 | 26+37.46 "B" | 34.07 | * |
| q6 | 19+57.63 "B" | 12.00 | * |
| r6 | 19+64.31 "B" | 16.42 | 263.73 |
| s6 | 19+72.46 "B" | 8.40 | 263.81 |
| t6 | 19+75.46 "B" | 3.91 | * |
| u6 | 19+60.63 "B" | 47.57 | 263.88 |
| v6 | 19+63.80 "B" | 44.62 | 263.92 |
| w6 | 19+71.96 "B" | 35.87 | 264.01 |
| x6 | 19+76.68 "B" | 40.95 | 264.01 |
| y6 | 19+97.58 "B" | 42.12 | 263.97 |
| z6 | 19+99.14 "B" | 40.90 | 263.99 |

## NORTHBOUND BC, EC SCHEDULE

| No. | STATION | OFFSET | ELEVATION |
|---|---|---|---|
| | - | Ft | Ft |
| a9 | 24+24.00 "B" | 19.61 | 263.67 |
| b9 | 24+25.95 "B" | 20.21 | 263.69 |
| c9 | 24+42.06 "B" | 27.57 | ****** |
| d9 | 24+43.17 "B" | 27.07 | ****** |
| e9 | 24+99.68 "B" | 46.37 | ****** |
| f9 | 24+99.74 "B" | 45.37 | ****** |
| g9 | 24+40.33 "B" | 13.96 | 263.31 |
| h9 | 24+41.21 "B" | 12.07 | 263.29 |
| i9 | 24+61.53 "B" | 5.41 | 263.21 |
| j9 | 24+80.48 "B" | 1.18 | 263.14 |
| k9 | 25+44.72 "B" | 0.05 | 263.14 |
| l9 | 25+63.81 "B" | 3.61 | 263.08 |
| m9 | 25+83.99 "B" | 9.43 | 263.02 |
| n9 | 25+84.95 "B" | 11.25 | 263.04 |
| o9 | 25+84.88 "B" | 25.35 | ****** |
| p9 | 25+86.04 "B" | 25.80 | ****** |
| q9 | 25+40.70 "B" | 43.06 | ****** |
| r9 | 25+41.42 "B" | 43.93 | ****** |
| s9 | 25+99.58 "B" | 16.89 | 263.03 |
| t9 | 26+01.34 "B" | 16.19 | 263.01 |
| u9 | 26+17.39 "B" | 9.36 | 263.00 |
| v9 | 112+19.57 "B" | 73.11 | 263.93 |
| w9 | 112+18.92 "B" | 73.87 | 263.93 |
| x9 | 112+20.09 "B" | 89.38 | 263.93 |
| y9 | 112+20.85 "B" | 90.04 | 263.93 |
| z9 | 23+42.48 "B" | 50.25 | 263.84 |

## NORTHBOUND BC, EC SCHEDULE

| No. | STATION | OFFSET | ELEVATION |
|---|---|---|---|
| | - | Ft | Ft |
| a7 | 20+14.80 "B" | 41.82 | 263.90 |
| b7 | 20+16.21 "B" | 43.17 | 263.88 |
| c7 | 20+05.40 "B" | 11.54 | * |
| d7 | 20+06.68 "B" | 11.25 | * |
| e7 | 20+70.05 "B" | 46.18 | 263.73 |
| f7 | 20+71.62 "B" | 44.89 | 263.75 |
| g7 | 20+87.28 "B" | 45.82 | 263.74 |
| h7 | 20+88.69 "B" | 47.22 | 263.72 |
| i7 | 21+06.16 "B" | 48.20 | 263.81 |
| j7 | 21+10.55 "B" | 45.47 | 263.86 |
| k7 | 21+15.67 "B" | 11.38 | * |
| l7 | 21+14.00 "B" | 11.38 | * |
| m7 | 21+18.51 "B" | 10.63 | * |
| n7 | 21+20.01 "B" | 8.59 | ** |
| o7 | 21+24.61 "B" | 2.22 | ** |
| p7 | 21+26.58 "B" | 3.02 | ** |
| q7 | 21+29.16 "B" | 1.92 | ** |
| r7 | 21+29.90 "B" | 0.03 | 264.16 |
| s7 | 21+42.22 "B" | 3.58 | * |
| t7 | 21+36.11 "B" | 5.87 | 264.01 |
| u7 | 21+23.39 "B" | 35.75 | 264.00 |
| v7 | 21+32.05 "B" | 49.65 | 263.83 |
| w7 | 21+89.26 "B" | 52.83 | 263.58 |
| x7 | 22+00.24 "B" | 45.54 | * |
| y7 | 23+13.45 "B" | 51.33 | * |
| z7 | 23+21.95 "B" | 60.28 | 263.47 |

## NORTHBOUND BC, EC SCHEDULE

| No. | STATION | OFFSET | ELEVATION |
|---|---|---|---|
| | - | Ft | Ft |
| a8 | 23+82.36 "B" | 63.67 | 263.00 |
| b8 | 23+91.91 "B" | 49.30 | 263.00 |
| c8 | 23+72.29 "B" | 34.03 | * |
| d8 | 23+74.55 "B" | 26.82 | ** |
| e8 | 23+69.73 "B" | 16.94 | ** |
| f8 | 23+70.19 "B" | 15.61 | ** |
| g8 | 23+73.55 "B" | 13.96 | ** |
| h8 | 23+74.89 "B" | 14.42 | 263.00 |
| i8 | 23+84.79 "B" | 8.48 | * |
| j8 | 23+83.18 "B" | 13.16 | 263.00 |
| k8 | 23+88.67 "B" | 24.41 | 263.00 |
| l8 | 23+90.66 "B" | 25.10 | 263.00 |
| m8 | 23+94.84 "B" | 33.63 | 263.00 |
| n8 | 23+94.15 "B" | 35.64 | 263.00 |
| o8 | 24+06.09 "B" | 60.12 | 263.00 |
| p8 | 24+14.10 "B" | 65.44 | 263.00 |
| q8 | 25+04.36 "B" | 70.50 | 263.00 |
| r8 | 25+10.67 "B" | 64.83 | 263.00 |
| s8 | 25+28.64 "B" | 65.84 | 263.00 |
| t8 | 25+34.30 "B" | 72.17 | 263.00 |
| u8 | 26+07.43 "B" | 76.27 | 263.00 |
| v8 | 26+08.99 "B" | 75.04 | 263.00 |
| w8 | 26+24.65 "B" | 75.90 | 263.00 |
| x8 | 26+26.07 "B" | 77.31 | 263.00 |
| y8 | 26+87.62 "B" | 80.76 | 263.00 |
| z8 | 26+90.45 "B" | 83.91 | 263.00 |

## NORTHBOUND BC, EC SCHEDULE

| No. | STATION | OFFSET | ELEVATION |
|---|---|---|---|
| | - | Ft | Ft |
| a10 | 23+97.41 "B" | 123.10 | 262.50 |
| b10 | 23+98.34 "B" | 123.60 | 262.50 |
| c10 | 23+96.12 "B" | 129.22 | 262.38 |
| d10 | 23+97.04 "B" | 129.69 | 262.38 |
| e10 | 112+08.90 "B" | 20.44 | 264.27 |
| f10 | 112+08.82 "B" | 20.94 | 264.17 |
| g10 | 21+42.77 "B" | 44.30 | ** |
| h10 | 21+44.48 "B" | 40.39 | ** |
| i10 | 21+43.67 "B" | 46.63 | ** |
| j10 | 21+46.81 "B" | 39.47 | ** |
| k10 | 23+76.44 "B" | 1.78 | *** |
| l10 | 23+72.60 "B" | 21.70 | *** |
| m10 | 23+75.05 "B" | 34.82 | ** |
| n10 | 23+76.66 "B" | 37.26 | ** |
| o10 | 23+72.56 "B" | 34.97 | ** |
| p10 | 23+75.23 "B" | 39.06 | ** |
| q10 | 11+57.04 "C" | 14.06 | ***** |
| r10 | 11+56.28 "C" | 13.26 | ***** |
| s10 | 11+56.29 "C" | 13.28 | ***** |
| t10 | 11+57.04 "C" | 14.07 | ***** |
| u9 | 21+22.42 "B" | 3.36 | ** |
| v9 | 21+27.77 "B" | 5.42 | ** |
| w9 | 23+72.34 "B" | 27.80 | ** |
| x9 | 23+67.48 "B" | 17.85 | ** |
| y9 | 23+69.09 "B" | 13.17 | ** |

# CONSTRUCTION DETAILS
## (NORTHBOUND SITE)
## C-16

STATE OF CALIFORNIA - DEPARTMENT OF TRANSPORTATION
Caltrans® LANDSCAPE ARCHITECTURE

FUNCTIONAL SUPERVISOR: ELBERT COX
CALCULATED-DESIGNED BY: HENRY BARNES
CHECKED BY: GLORIA RAMIREZ
REVISED BY
DATE REVISED

LAST REVISION 02-01-10
DATE PLOTTED => 16-AUG-2010
TIME PLOTTED => 07:00

| Dist | COUNTY | ROUTE | POST MILES TOTAL PROJECT | SHEET No. | TOTAL SHEETS |
|---|---|---|---|---|---|
| 06 | Tul | 99 | 22.4 | 32 | 335 |

Gloria Ramirez
LICENSED LANDSCAPE ARCHITECT

8-9-10
PLANS APPROVAL DATE

LICENSED LANDSCAPE ARCHITECT GLORIA RAMIREZ No. 5089 Signature 04/30/10 Renewal Date 02/01/10 Date STATE OF CALIFORNIA

*THE STATE OF CALIFORNIA OR ITS OFFICERS OR AGENTS SHALL NOT BE RESPONSIBLE FOR THE ACCURACY OR COMPLETENESS OF SCANNED COPIES OF THIS PLAN SHEET.*

## NORTHBOUND SITE INTERSECTION POINT SCHEDULE

| No. | STATION | OFFSET | ELEVATION | | |
|---|---|---|---|---|---|
| | | | | TOP OF FOOTING | TOP OF WALL |
| | - | Ft | Ft | Ft | Ft |
| IP-1 | 19+78.16 "B" | 30.39 | ** | - | - |
| IP-2 | 19+76.17 "B" | 30.61 | ** | - | - |
| IP-3 | 19+67.73 "B" | 31.56 | 263.82 | - | - |
| IP-4 | 19+68.45 "B" | 37.81 | 263.65 | - | - |
| IP-5 | 19+68.61 "B" | 39.51 | 263.63 | - | - |
| IP-6 | 19+77.06 "B" | 38.57 | * | - | - |
| IP-7 | 19+79.05 "B" | 38.34 | ** | - | - |
| IP-8 | 21+53.78 "B" | 36.72 | 264.11 | - | - |
| IP-9 | 21+43.30 "B" | 31.96 | ** | - | - |
| IP-10 | 21+41.44 "B" | 32.70 | ** | - | - |
| IP-11 | 21+37.78 "B" | 46.15 | ** | - | - |
| IP-12 | 21+38.62 "B" | 48.50 | 263.89 | - | - |
| IP-13 | 21+50.74 "B" | 29.02 | * | - | - |
| IP-14 | 111+08.55 "C" | 22.36 | 266.00 | 265.00 | 267.00 |
| IP-15 | 111+04.78 "C" | 2.97 | 266.00 | 265.00 | 267.00 |
| IP-16 | 111+06.73 "C" | 17.00 | 266.00 | 265.00 | 267.00 |
| IP-17 | 111+12.44 "C" | 14.81 | 265.33 | 265.00 | 267.00 |
| IP-18 | 111+10.77 "C" | 3.05 | 265.33 | 265.00 | 267.00 |
| IP-19 | 111+14.04 "C" | 21.32 | 265.33 | 265.00 | 267.00 |
| IP-20 | 112+16.27 "C" | 23.33 | 264.27 | - | - |
| IP-21 | 112+11.91 "C" | 36.93 | 264.27 | - | - |
| IP-22 | 112+16.34 "C" | 23.35 | 264.17 | - | - |
| IP-23 | 112+13.61 "C" | 31.87 | 264.17 | - | - |
| IP-24 | 23+64.35 "B" | 25.44 | * | - | - |
| IP-25 | 23+72.32 "B" | 24.86 | ** | - | - |
| IP-26 | 23+74.33 "B" | 24.72 | ** | - | - |
| IP-27 | 23+64.95 "B" | 33.73 | 263.40 | - | - |
| IP-28 | 23+74.92 "B" | 33.01 | ** | - | - |
| IP-29 | 23+72.93 "B" | 33.12 | * | - | - |
| IP-30 | 26+40.52 "B" | 40.78 | 262.70 | - | - |
| IP-31 | 26+30.15 "B" | 37.31 | ** | - | - |
| IP-32 | 26+28.33 "B" | 38.14 | ** | - | - |
| IP-33 | 26+33.25 "B" | 44.09 | * | - | - |
| IP-34 | 26+31.43 "B" | 44.92 | ** | - | - |
| IP-35 | 26+09.48 "B" | 3.14 | ** | - | - |
| IP-36 | 26+11.60 "B" | 4.22 | * | - | - |
| IP-37 | 26+13.02 "B" | 3.89 | ** | - | - |
| IP-38 | 26+18.29 "B" | 7.58 | 262.99 | - | - |
| IP-39 | 26+21.83 "B" | 0.55 | 263.10 | - | - |
| IP-40 | 19+74.47 "B" | 9.65 | ** | - | - |
| IP-41 | 19+72.31 "B" | 16.57 | 263.77 | - | - |
| IP-42 | 19+72.30 "B" | 17.36 | 263.75 | - | - |
| IP-43 | 19+71.98 "B" | 34.98 | 264.00 | - | - |
| IP-44 | 19+56.57 "B" | 9.65 | ** | - | - |
| IP-45 | 19+63.96 "B" | 35.72 | 264.01 | - | - |
| IP-46 | 19+58.86 "B" | 47.47 | * | - | - |
| IP-47 | 19+58.71 "B" | 49.96 | ** | - | - |
| IP-48 | 19+76.24 "B" | 48.84 | ** | - | - |
| IP-49 | 19+86.21 "B" | 51.50 | ** | - | - |
| IP-50 | 19+86.23 "B" | 49.50 | * | - | - |
| IP-51 | 19+86.68 "B" | 41.51 | 264.02 | - | - |
| IP-52 | 20+31.79 "B" | 44.04 | 263.80 | - | - |
| IP-53 | 20+51.04 "B" | 45.12 | 263.74 | - | - |
| IP-54 | 21+05.71 "B" | 56.19 | ** | - | - |
| IP-55 | 20+95.21 "B" | 57.61 | ** | - | - |
| IP-56 | 20+95.40 "B" | 55.61 | * | - | - |
| IP-57 | 20+95.85 "B" | 47.62 | 263.71 | - | - |
| IP-58 | 21+17.20 "B" | 8.42 | ** | - | - |
| IP-59 | 21+43.26 "B" | 1.20 | ** | - | - |
| IP-60 | 21+31.69 "B" | 16.24 | 263.93 | - | - |
| IP-61 | 21+24.33 "B" | 13.11 | 263.95 | - | - |
| IP-62 | 21+16.02 "B" | 32.61 | 264.02 | - | - |
| IP-63 | 21+41.47 "B" | 60.19 | ** | - | - |
| IP-64 | 21+41.59 "B" | 58.20 | * | - | - |
| IP-65 | 21+42.03 "B" | 50.21 | 263.75 | - | - |

## NORTHBOUND SITE INTERSECTION POINT SCHEDULE

| No. | STATION | OFFSET | ELEVATION | | |
|---|---|---|---|---|---|
| | | | | TOP OF FOOTING | TOP OF WALL |
| | - | Ft | Ft | Ft | Ft |
| IP-66 | 21+31.60 "B" | 57.64 | ** | - | - |
| IP-67 | 21+70.02 "B" | 51.76 | 263.59 | - | - |
| IP-68 | 23+41.62 "B" | 61.39 | 263.42 | - | - |
| IP-69 | 23+81.91 "B" | 71.66 | ** | - | - |
| IP-70 | 23+72.05 "B" | 73.11 | ** | - | - |
| IP-71 | 23+72.61 "B" | 63.12 | 263.38 | - | - |
| IP-72 | 23+60.87 "B" | 62.46 | 263.33 | - | - |
| IP-73 | 23+87.81 "B" | 22.65 | 263.68 | - | - |
| IP-74 | 23+80.62 "B" | 26.15 | 263.59 | - | - |
| IP-75 | 23+71.22 "B" | 31.70 | ** | - | - |
| IP-76 | 23+83.62 "B" | 6.08 | ** | - | - |
| IP-77 | 24+21.86 "B" | 10.10 | * | - | - |
| IP-78 | 23+99.10 "B" | 45.79 | 263.61 | - | - |
| IP-79 | 24+24.05 "B" | 76.02 | ** | - | - |
| IP-80 | 24+24.16 "B" | 74.02 | * | - | - |
| IP-81 | 24+24.61 "B" | 66.03 | 263.31 | - | - |
| IP-82 | 24+13.64 "B" | 73.44 | ** | - | - |
| IP-83 | 24+32.54 "B" | 66.46 | 263.32 | - | - |
| IP-84 | 24+51.78 "B" | 67.55 | 263.33 | - | - |
| IP-85 | 25+66.15 "B" | 73.95 | 263.52 | - | - |
| IP-86 | 25+85.40 "B" | 75.03 | 263.55 | - | - |
| IP-87 | 26+90.22 "B" | 88.42 | * | - | - |
| IP-88 | 20+14.92 "B" | 172.07 | * | - | - |
| IP-89 | 21+97.93 "B" | 182.48 | * | - | - |
| IP-90 | 23+80.34 "B" | 192.60 | * | - | - |
| IP-91 | 25+65.81 "B" | 203.06 | * | - | - |
| IP-92 | 27+53.20 "B" | 213.56 | * | - | - |
| IP-93 | 112+11.93 "C" | 52.92 | 264.16 BW | - | - |
| IP-94 | 112+11.94 "C" | 52.93 | 264.06 EW | - | - |
| IP-95 | 112+16.12 "C" | 71.47 | 263.93 | - | - |
| IP-96 | 112+16.77 "C" | 70.71 | 263.93 | - | - |
| IP-97 | 112+11.77 "C" | 99.07 | 263.93 | - | - |
| IP-98 | 112+12.55 "C" | 99.72 | 263.93 | - | - |
| IP-99 | 112+11.11 "C" | 52.92 | 264.17 | - | - |
| IP-100 | 111+95.70 "C" | 52.93 | 264.26 | - | - |
| IP-101 | 112+05.48 "C" | 71.47 | 264.26 | - | - |
| IP-102 | 112+05.39 "C" | 70.71 | 264.16 | - | - |
| IP-103 | 111+95.76 "C" | 99.07 | 264.16 | - | - |
| IP-104 | 112+11.13 "C" | 99.72 | 264.10 | - | - |
| IP-105 | 19+87.49 "B" | 72.01 | 264.14 | - | - |
| IP-106 | 19+83.81 "B" | 74.26 | 264.14 | - | - |
| IP-107 | 19+78.71 "B" | 95.30 | 264.14 | - | - |
| IP-108 | 19+80.95 "B" | 98.98 | 264.14 | - | - |
| IP-109 | 20+08.54 "B" | 77.12 | 264.14 | - | - |
| IP-110 | 20+10.78 "B" | 80.80 | 264.14 | - | - |
| IP-111 | 20+05.68 "B" | 101.84 | 264.14 | - | - |
| IP-112 | 20+02.00 "B" | 104.09 | 264.14 | - | - |
| IP-113 | 19+26.77 "B" | 38.82 | **** | - | - |
| IP-114 | 19+25.73 "B" | 36.84 | **** | - | - |
| IP-115 | 19+62.99 "B" | 6.78 | *** | - | - |
| IP-116 | 19+65.07 "B" | 14.66 | *** | - | - |
| IP-117 | 19+73.49 "B" | 2.08 | *** | - | - |
| IP-118 | 19+76.67 "B" | 30.56 | *** | - | - |
| IP-119 | 21+31.08 "B" | 3.95 | *** | - | - |
| IP-120 | 21+42.84 "B" | 32.15 | *** | - | - |
| IP-121 | 21+40.24 "B" | 0.07 | *** | - | - |
| IP-122 | 21+49.78 "B" | 22.85 | *** | - | - |
| IP-123 | 21+22.52 "B" | 50.46 | ** | - | - |
| IP-124 | 21+23.19 "B" | 53.37 | * | - | - |
| IP-125 | 23+72.86 "B" | 11.34 | *** | - | - |
| IP-126 | 23+61.39 "B" | 12.13 | *** | - | - |
| IP-127 | 23+80.92 "B" | 7.40 | *** | - | - |
| IP-128 | 23+72.82 "B" | 24.83 | *** | - | - |
| IP-129 | 23+82.44 "B" | 42.74 | ** | - | - |
| IP-130 | 23+83.44 "B" | 40.73 | ** | - | - |

## NORTHBOUND SITE INTERSECTION POINT SCHEDULE

| No. | STATION | OFFSET | ELEVATION | | |
|---|---|---|---|---|---|
| | | | | TOP OF FOOTING | TOP OF WALL |
| | - | Ft | Ft | Ft | Ft |
| IP-131 | 23+98.00 "B" | 47.67 | ** | - | - |
| IP-132 | 23+97.04 "B" | 49.71 | * | - | - |
| IP-133 | 23+52.56 "B" | 46.78 | **** | - | - |
| IP-134 | 111+55.63 "C" | 76.23 | **** | - | - |
| IP-135 | 111+54.46 "C" | 74.98 | **** | - | - |
| IP-136 | 26+13.35 "B" | 3.73 | *** | - | - |
| IP-137 | 26+24.67 "B" | 4.17 | *** | - | - |
| IP-138 | 26+35.99 "B" | 27.57 | *** | - | - |
| IP-139 | 26+29.69 "B" | 37.52 | *** | - | - |
| IP-140 | 26+43.70 "B" | 28.30 | **** | - | - |
| IP-141 | 26+43.67 "B" | 30.53 | **** | - | - |
| IP-142 | 26+34.66 "B" | 157.63 | **** | - | - |
| IP-143 | 26+34.89 "B" | 155.41 | **** | - | - |

| | |
|---|---|
| * | CONFORM TO EXISTING |
| ** | CONFORM TO GUTTER PROFILE |
| *** | CONFORM TO PARKING LOT OVERLAY |
| **** | SEE DETAIL |
| ***** | SEE DRAINAGE PROFILE |
| ****** | CONFORM TO LAYOUT DETAIL |
| BW | BEGIN WALL |
| EW | END WALL |

## NORTHBOUND SITE SEATWALL INTERSECTION POINT SCHEDULE

| No. | STATION | OFFSET | ELEVATION | |
|---|---|---|---|---|
| | | | TOP OF FOOTING | TOP OF WALL |
| | - | Ft | Ft | Ft |
| IP-144 | 21+77.41 "B" | 64.60 | 263.70 | 265.70 |
| IP-145 | 21+82.11 "B" | 58.62 | 263.70 | 265.70 |
| IP-146 | 21+89.29 "B" | 34.22 | 263.70 | 265.70 |
| IP-147 | 21+95.53 "B" | 29.88 | 263.70 | 265.70 |
| IP-148 | 22+13.10 "B" | 54.59 | 263.70 | 265.70 |
| IP-149 | 22+10.35 "B" | 61.67 | 263.70 | 265.70 |
| IP-150 | 22+18.04 "B" | 85.92 | 263.70 | 265.70 |
| IP-151 | 22+17.49 "B" | 93.50 | 263.70 | 265.70 |
| IP-152 | 22+78.88 "B" | 90.79 | 263.70 | 265.70 |
| IP-153 | 22+77.66 "B" | 83.29 | 263.70 | 265.70 |
| IP-154 | 22+83.19 "B" | 58.46 | 263.70 | 265.70 |
| IP-155 | 22+79.83 "B" | 51.64 | 263.70 | 265.70 |
| IP-156 | 22+94.65 "B" | 27.42 | 263.70 | 265.70 |
| IP-157 | 23+02.24 "B" | 27.32 | 263.70 | 265.70 |
| IP-158 | 23+11.04 "B" | 52.93 | 263.70 | 265.70 |
| IP-159 | 23+16.26 "B" | 58.47 | 263.70 | 265.70 |

# CONSTRUCTION DETAILS
## (NORTHBOUND SITE)
## C-17

STATE OF CALIFORNIA - DEPARTMENT OF TRANSPORTATION
Caltrans® LANDSCAPE ARCHITECTURE

FUNCTIONAL SUPERVISOR: ELBERT COX
CALCULATED-DESIGNED BY: HENRY BARNES
CHECKED BY: GLORIA RAMIREZ
REVISED BY
DATE REVISED

LAST REVISION DATE PLOTTED => 16-AUG-2010
02-01-10 TIME PLOTTED => 07:00

| Dist | COUNTY | ROUTE | POST MILES TOTAL PROJECT | SHEET No. | TOTAL SHEETS |
|---|---|---|---|---|---|
| 06 | Tul | 99 | 22.4 | 33 | 335 |

Gloria Ramirez
LICENSED LANDSCAPE ARCHITECT

8-9-10
PLANS APPROVAL DATE

LICENSED LANDSCAPE ARCHITECT
GLORIA RAMIREZ No. 5085
Signature
04/30/10
Renewal Date
02/01/10
Date
STATE OF CALIFORNIA

*THE STATE OF CALIFORNIA OR ITS OFFICERS OR AGENTS SHALL NOT BE RESPONSIBLE FOR THE ACCURACY OR COMPLETENESS OF SCANNED COPIES OF THIS PLAN SHEET.*

## SOUTHBOUND CURVE DATA

| No. O | R | Δ | T | L | STATION | OFFSET (Ft) |
|---|---|---|---|---|---|---|
| 1 | 20.00′ | 160°8′09" | 114.22′ | 55.90′ | 8+63.92 "B" | 65.25 |
| 2 | 3.00′ | 64°16′57" | 1.88′ | 3.37′ | 8+61.27 "B" | 88.09 |
| 3 | 3.00′ | 86°25′43" | 2.82′ | 4.53′ | 8+73.35 "B" | 86.22 |
| 4 | 20.00′ | 69°3′40" | 13.76′ | 24.11′ | 8+63.92 "B" | 65.25 |
| 5 | 3.00′ | 92°48′52" | 3.15′ | 4.86′ | 8+86.88 "B" | 63.93 |
| 6 | 293.50′ | 3°33′12" | 9.10′ | 18.20′ | 8+78.79 "B" | 232.37 |
| 7 | 293.50′ | 0°25′08" | 1.07′ | 2.15′ | 8+78.79 "B" | 232.37 |
| 8 | 1.50′ | 68°36′40" | 1.02′ | 1.80′ | 9+30.05 "B" | 58.14 |
| 9 | 1.50′ | 110°13′25" | 2.15′ | 2.89′ | 9+39.50 "B" | 56.32 |
| 10 | 293.50′ | 1°42′04" | 4.36′ | 8.71′ | 8+78.79 "B" | 232.37 |
| 11 | 1.50′ | 81°19′32" | 1.29′ | 2.13′ | 9+48.05 "B" | 54.39 |
| 12 | 1.50′ | 81°19′30" | 1.29′ | 2.13′ | 9+66.06 "B" | 49.43 |
| 13 | 293.50′ | 3°51′27" | 9.88′ | 19.76′ | 8+78.79 "B" | 232.37 |
| 14 | 6.00′ | 88°28′36" | 5.84′ | 9.27′ | 9+86.43 "B" | 47.12 |
| 15 | 6.00′ | 88°28′36" | 5.84′ | 9.27′ | 10+15.49 "B" | 34.12 |
| 16 | 293.50′ | 2°11′08" | 5.60′ | 11.20′ | 8+78.79 "B" | 232.37 |
| 17 | 284.00′ | 6°34′53" | 16.33′ | 32.62′ | 8+78.79 "B" | 232.37 |
| 18 | 5.50′ | 84°17′09" | 4.98′ | 8.09′ | 10+30.82 "B" | 0.98 |
| 19 | 293.50′ | 0°18′14" | 0.78′ | 1.56′ | 8+78.79 "B" | 232.37 |
| 20 | 30.00′ | 96°33′12" | 33.64′ | 50.56′ | 10+56.90 "B" | 37.69 |
| 21 | 48.00′ | 9°12′34" | 3.87′ | 7.72′ | 10+96.42 "B" | 22.14 |
| 22 | 50.00′ | 9°12′34" | 4.03′ | 8.04′ | 10+96.42 "B" | 22.14 |
| 23 | 12.00′ | 80°18′27" | 10.12′ | 16.82′ | 10+98.04 "B" | 48.58 |
| 24 | 69.00′ | 105°4′09" | 90.03′ | 126.53′ | 11+17.57 "B" | 70.80 |
| 25 | 70.00′ | 105°40′30" | 92.35′ | 129.11′ | 11+17.57 "B" | 70.80 |
| 26 | 8.00′ | 90°0′00" | 8.00′ | 12.57′ | 10+87.94 "B" | 91.73 |
| 27 | 8.00′ | 90°2′19" | 8.01′ | 12.57′ | 152+62.96 "C" | 80.39 |
| 28 | 69.00′ | 40°29′00" | 25.44′ | 48.75′ | 153+10.67 "C" | 83.61 |
| 29 | 70.00′ | 41°22′31" | 26.43′ | 50.55′ | 153+10.67 "C" | 83.61 |
| 30 | 50.00′ | 9°12′34" | 4.03′ | 8.04′ | 153+15.42 "C" | 35.60 |
| 31 | 48.00′ | 9°12′34" | 3.87′ | 7.72′ | 153+15.42 "C" | 35.60 |
| 32 | 90.00′ | 27°40′59" | 22.18′ | 43.48′ | 152+14.22 "C" | 6.22 |
| 33 | 10.26′ | 50°36′39" | 4.85′ | 9.06′ | 152+81.35 "C" | 23.39 |
| 34 | 3.52′ | 129°26′52" | 7.45′ | 7.95′ | 152+86.79 "C" | 10.73 |
| 35 | 3.99′ | 79°8′14" | 3.30′ | 5.51′ | 152+85.67 "C" | 6.06 |
| 36 | 5.00′ | 63°21′57" | 3.09′ | 5.53′ | 152+77.31 "C" | 6.06 |
| 37 | 19.90′ | 145°54′20" | 64.90′ | 50.68′ | 152+44.93 "C" | 2.76 |
| 38 | 5.98′ | 110°27′57" | 8.62′ | 11.54′ | 152+85.50 "C" | 0.00 |
| 39 | 3.52′ | 129°26′52" | 7.45′ | 7.95′ | 152+86.79 "C" | 4.56 |
| 40 | 10.26′ | 50°36′39" | 4.85′ | 9.06′ | 152+81.35 "C" | 23.39 |
| 41 | 6.35′ | 175°11′41" | 151.34′ | 19.42′ | 152+97.31 "C" | 18.78 |
| 42 | 5.68′ | 98°15′20" | 6.57′ | 9.75′ | 153+06.12 "C" | 15.95 |
| 43 | 4.26′ | 69°42′35" | 2.97′ | 5.19′ | 153+15.37 "C" | 19.59 |
| 44 | 5.32′ | 41°28′23" | 2.01′ | 3.85′ | 153+15.57 "C" | 10.01 |
| 45 | 4.27′ | 61°47′51" | 2.56′ | 4.61′ | 153+19.76 "C" | 5.76 |
| 46 | 10.26′ | 46°43′28" | 4.43′ | 8.36′ | 153+33.10 "C" | 0.00 |
| 47 | 4.27′ | 61°47′51" | 2.56′ | 4.61′ | 153+19.76 "C" | 5.76 |
| 48 | 7.69′ | 47°28′51" | 3.38′ | 6.37′ | 153+17.08 "C" | 3.64 |
| 49 | 5.32′ | 34°23′58" | 1.65′ | 3.19′ | 153+15.57 "C" | 10.01 |
| 50 | 4.26′ | 69°42′35" | 2.97′ | 5.19′ | 153+15.37 "C" | 19.59 |
| 51 | 5.68′ | 98°15′02" | 6.57′ | 9.75′ | 153+06.12 "C" | 15.95 |
| 52 | 6.35′ | 175°11′41" | 151.34′ | 19.42′ | 152+97.31 "C" | 18.78 |
| 53 | 16.67′ | 74°13′29" | 12.61′ | 21.59′ | 153+00.00 "C" | 0.00 |
| 54 | 14.67′ | 74°13′29" | 11.10′ | 19.00′ | 153+00.00 "C" | 0.00 |
| 55 | 16.67′ | 54°19′59" | 8.55′ | 15.80′ | 153+00.00 "C" | 0.00 |
| 56 | 14.67′ | 54°19′11" | 7.52′ | 13.90′ | 153+00.00 "C" | 0.00 |
| 57 | 14.67′ | 74°13′29" | 11.10′ | 19.00′ | 153+00.00 "C" | 0.00 |
| 58 | 16.67′ | 74°13′29" | 12.61′ | 21.59′ | 153+00.00 "C" | 0.00 |
| 59 | 14.67′ | 41°29′46" | 5.56′ | 10.62′ | 153+00.00 "C" | 0.00 |
| 60 | 16.67′ | 41°30′28" | 6.32′ | 12.07′ | 153+00.00 "C" | 0.00 |

## SOUTHBOUND CURVE DATA

| No. O | R | Δ | T | L | STATION | OFFSET (Ft) |
|---|---|---|---|---|---|---|
| 61 | 6.42′ | 41°5′56" | 2.41′ | 4.61′ | 153+17.14 "C" | 4.91 |
| 62 | 7.69′ | 47°28′51" | 3.38′ | 6.37′ | 153+17.08 "C" | 3.64 |
| 63 | 16.67′ | 74°12′05" | 12.61′ | 21.58′ | 153+00.00 "C" | 0.00 |
| 64 | 14.67′ | 74°13′29" | 11.10′ | 19.00′ | 153+00.00 "C" | 0.00 |
| 65 | 6.42′ | 41°5′56" | 2.41′ | 4.61′ | 153+17.14 "C" | 4.91 |
| 66 | 14.67′ | 41°29′46" | 5.56′ | 10.62′ | 153+00.00 "C" | 0.00 |
| 67 | 16.67′ | 41°30′28" | 6.32′ | 12.07′ | 153+00.00 "C" | 0.00 |
| 68 | 90.00′ | 22°19′19" | 17.76′ | 35.06′ | 152+14.22 "C" | 6.22 |
| 69 | 48.00′ | 9°12′34" | 3.87′ | 7.72′ | 153+30.60 "C" | 28.40 |
| 70 | 5.00′ | 118°13′25" | 8.36′ | 10.32′ | 10+85.97 "B" | 0.84 |
| 71 | 18.00′ | 77°10′29" | 14.36′ | 24.25′ | 11+02.61 "B" | 2.92 |
| 72 | 200.00′ | 5°43′46" | 10.01′ | 20.00′ | 9+84.95 "B" | 141.78 |
| 73 | 8.00′ | 127°59′47" | 16.40′ | 17.87′ | 11+23.08 "B" | 8.41 |
| 74 | 10.00′ | 17°16′01" | 1.52′ | 3.01′ | 11+22.87 "B" | 6.43 |
| 75 | 150.00′ | 3°49′41" | 5.01′ | 10.02′ | 11+50.22 "B" | 130.88 |
| 76 | 237.10′ | 2°21′46" | 4.89′ | 9.78′ | 11+85.23 "B" | 210.65 |
| 77 | 50.00′ | 48°33′43" | 22.56′ | 42.38′ | 10+96.42 "B" | 22.14 |
| 78 | 48.00′ | 48°33′43" | 21.65′ | 40.68′ | 10+96.42 "B" | 22.14 |
| 79 | 85.00′ | 11°18′16" | 8.41′ | 16.77′ | 11+98.68 "B" | 68.29 |
| 80 | 268.00′ | 5°36′45" | 13.14′ | 26.25′ | 11+65.91 "B" | 238.75 |
| 81 | 5.50′ | 84°48′54" | 5.02′ | 8.14′ | 11+55.24 "B" | 34.55 |
| 82 | 45.00′ | 15°54′56" | 6.29′ | 12.50′ | 12+02.48 "B" | 0.16 |
| 83 | 43.00′ | 14°34′24" | 5.50′ | 10.94′ | 12+02.48 "B" | 0.16 |
| 84 | 45.00′ | 53°59′22" | 22.92′ | 12.40′ | 12+02.48 "B" | 0.16 |
| 85 | 47.59′ | 50°36′23" | 22.50′ | 42.04′ | 12+00.96 "B" | 82.99 |
| 86 | 45.00′ | 49°43′57" | 20.86′ | 39.06′ | 12+02.48 "B" | 0.16 |
| 87 | 43.00′ | 14°34′24" | 5.50′ | 10.94′ | 12+02.48 "B" | 0.16 |
| 88 | 45.00′ | 15°54′56" | 6.29′ | 12.50′ | 12+02.48 "B" | 0.16 |
| 89 | 83.00′ | 62°17′25" | 50.16′ | 90.24′ | 11+98.68 "B" | 68.29 |
| 90 | 85.00′ | 63°41′46" | 52.80′ | 94.50′ | 11+98.68 "B" | 68.29 |
| 91 | 87.00′ | 82°46′16" | 76.66′ | 125.68′ | 11+98.68 "B" | 68.29 |
| 92 | 266.00′ | 7°5′56" | 16.50′ | 32.96′ | 11+66.79 "B" | 237.32 |
| 93 | 5.50′ | 91°5′06" | 5.61′ | 8.74′ | 12+97.52 "B" | 0.64 |
| 94 | 48.00′ | 29°7′15" | 12.47′ | 24.40′ | 13+10.61 "B" | 12.07 |
| 95 | 50.00′ | 29°10′07" | 13.01′ | 25.45′ | 13+10.61 "B" | 12.07 |
| 96 | 8.00′ | 90°0′00" | 8.00′ | 12.57′ | 13+05.72 "B" | 70.21 |
| 97 | 10.00′ | 67°52′04" | 6.73′ | 11.85′ | 13+08.41 "B" | 49.16 |
| 98 | 50.00′ | 9°12′25" | 4.03′ | 8.03′ | 13+10.61 "B" | 12.07 |
| 99 | 48.00′ | 9°12′25" | 3.86′ | 7.71′ | 13+10.61 "B" | 12.07 |
| 100 | 17.50′ | 79°6′06" | 14.45′ | 24.16′ | 13+17.84 "B" | 45.05 |
| 101 | 383.50′ | 4°23′37" | 14.71′ | 29.41′ | 14+72.60 "B" | 324.88 |
| 102 | 6.00′ | 86°53′15" | 5.68′ | 9.10′ | 13+68.53 "B" | 50.44 |
| 103 | 6.00′ | 87°51′24" | 5.78′ | 9.20′ | 13+97.72 "B" | 57.35 |
| 104 | 383.50′ | 3°37′34" | 12.14′ | 24.27′ | 14+72.60 "B" | 324.88 |
| 105 | 3.50′ | 162°48′57" | 23.16′ | 9.95′ | 14+21.23 "B" | 58.57 |
| 106 | 3.00′ | 90°0′00" | 3.00′ | 4.71′ | 14+16.69 "B" | 64.62 |
| 107 | 3.00′ | 90°0′00" | 3.00′ | 4.71′ | 14+13.57 "B" | 94.21 |
| 108 | 3.00′ | 90°0′00" | 3.00′ | 4.71′ | 14+47.14 "B" | 97.75 |
| 109 | 3.00′ | 90°0′00" | 3.00′ | 4.71′ | 14+50.26 "B" | 68.16 |
| 110 | 3.50′ | 176°39′10" | 119.79′ | 10.79′ | 14+45.95 "B" | 61.17 |

# CONSTRUCTION DETAILS
## (SOUTHBOUND SITE)
## C-18

REVISED BY | DATE REVISED
HENRY BARNES | GLORIA RAMIREZ
CALCULATED-DESIGNED BY | CHECKED BY
FUNCTIONAL SUPERVISOR
ELBERT COX

STATE OF CALIFORNIA - DEPARTMENT OF TRANSPORTATION
Caltrans® LANDSCAPE ARCHITECTURE

LAST REVISION 02-01-10 | DATE PLOTTED => 16-AUG-2010 | TIME PLOTTED => 07:00

| Dist | COUNTY | ROUTE | POST MILES TOTAL PROJECT | SHEET No. | TOTAL SHEETS |
|---|---|---|---|---|---|
| 06 | Tul | 99 | 22.4 | 34 | 335 |

Gloria Ramirez
LICENSED LANDSCAPE ARCHITECT

8-9-10
PLANS APPROVAL DATE

LICENSED LANDSCAPE ARCHITECT GLORIA RAMIREZ No. 5085 Signature 04/30/10 Renewal Date 02/01/10 Date STATE OF CALIFORNIA

*THE STATE OF CALIFORNIA OR ITS OFFICERS OR AGENTS SHALL NOT BE RESPONSIBLE FOR THE ACCURACY OR COMPLETENESS OF SCANNED COPIES OF THIS PLAN SHEET.*

## SOUTHBOUND CURVE DATA

| No. O | R | Δ | T | L | STATION | OFFSET (Ft) |
|---|---|---|---|---|---|---|
| 111 | 9.00′ | 59°18′17" | 5.12′ | 9.32′ | 14+46.53 "B" | 48.69 |
| 112 | 3.00′ | 108°3′02" | 4.13′ | 5.66′ | 7+18.05 "B" | 91.46 |
| 113 | 3.00′ | 73°6′00" | 2.22′ | 3.83′ | 7+28.95 "B" | 68.76 |
| 114 | 158.00′ | 26°44′47" | 37.56′ | 73.76′ | 8+68.55 "B" | 12.09 |
| 115 | 140.00′ | 26°44′47" | 33.28′ | 65.35′ | 8+68.55 "B" | 12.09 |
| 116 | 911.34′ | 8°42′29" | 69.39′ | 138.51′ | 10+83.43 "B" | 709.95 |
| 117 | 893.34′ | 8°43′37" | 68.17′ | 136.07′ | 10+83.43 "B" | 709.95 |
| 118 | 136.34′ | 29°57′19" | 36.48′ | 71.28′ | 9+77.38 "B" | 57.76 |
| 119 | 35.09′ | 79°53′40" | 29.39′ | 48.93′ | 10+41.95 "B" | 216.56 |
| 120 | 118.00′ | 39°10′34" | 41.99′ | 80.68′ | 9+77.59 "B" | 58.13 |
| 121 | 90.40′ | 102°49′07" | 113.29′ | 162.23′ | 9+49.53 "B" | 57.51 |
| 122 | 84.40′ | 98°16′15" | 97.56′ | 144.77′ | 9+49.53 "B" | 57.51 |
| 123 | 3.00′ | 69°16′32" | 2.07′ | 3.63′ | 9+98.93 "B" | 136.77 |
| 124 | 281.00′ | 8°7′43" | 19.97′ | 39.87′ | 10+71.19 "B" | 89.02 |
| 125 | 3.00′ | 111°8′29" | 4.38′ | 5.82′ | 9+88.90 "B" | 128.75 |
| 126 | 275.00′ | 28°41′18" | 70.32′ | 137.69′ | 11+71.19 "B" | 89.02 |
| 127 | 281.00′ | 18°40′24" | 46.20′ | 91.58′ | 11+71.19 "B" | 89.02 |
| 128 | 331.00′ | 18°30′44" | 53.94′ | 106.95′ | 11+95.59 "B" | 132.66 |
| 129 | 35.03′ | 50°45′25" | 16.62′ | 31.03′ | 11+12.23 "B" | 163.74 |
| 130 | 325.00′ | 20°13′08" | 57.95′ | 114.69′ | 11+95.59 "B" | 132.66 |
| 131 | 6.00′ | 79°47′28" | 5.02′ | 8.36′ | 151+99.59 "C" | 53.41 |
| 132 | 50.00′ | 7°16′56" | 3.18′ | 6.36′ | 151+82.14 "C" | 0.20 |
| 133 | 6.00′ | 65°17′31" | 3.84′ | 6.84′ | 152+06.19 "C" | 50.77 |
| 134 | 61.00′ | 59°55′15" | 35.16′ | 63.79′ | 152+49.13 "C" | 0.67 |
| 135 | 3.00′ | 100°18′41" | 3.60′ | 5.25′ | 152+53.15 "C" | 51.18 |
| 136 | 55.00′ | 46°33′46" | 23.67′ | 44.70′ | 152+49.13 "C" | 0.67 |
| 137 | 55.00′ | 24°8′54" | 11.77′ | 23.18′ | 152+49.13 "C" | 0.67 |
| 138 | 53.00′ | 22°31′22" | 10.55′ | 20.83′ | 152+49.13 "C" | 0.67 |
| 139 | 27.00′ | 105°23′53" | 35.44′ | 49.67′ | 151+82.14 "C" | 0.20 |
| 140 | 29.00′ | 99°7′29" | 34.03′ | 50.17′ | 151+82.14 "C" | 0.20 |
| 141 | 55.00′ | 24°8′54" | 11.77′ | 23.18′ | 152+49.13 "C" | 0.67 |
| 142 | 53.00′ | 22°31′22" | 10.55′ | 20.83′ | 152+49.13 "C" | 0.67 |
| 143 | 55.00′ | 48°25′32" | 24.73′ | 46.49′ | 152+49.13 "C" | 0.67 |
| 144 | 3.00′ | 99°55′56" | 3.57′ | 5.23′ | 152+53.49 "C" | 52.48 |
| 145 | 3.00′ | 87°42′12" | 2.88′ | 4.59′ | 152+51.64 "C" | 21.90 |
| 146 | 3.00′ | 87°42′08" | 2.88′ | 4.59′ | 152+51.64 "C" | 21.90 |
| 147 | 50.00′ | 9°12′34" | 4.03′ | 8.04′ | 153+30.60 "C" | 28.40 |
| 148 | 90.00′ | 4°29′26" | 3.53′ | 7.05′ | 152+14.22 "C" | 6.22 |
| 149 | 8.00′ | 90°0′00" | 8.00′ | 12.57′ | 152+81.90 "C" | 78.67 |
| 150 | 61.00′ | 67°33′43" | 40.81′ | 71.93′ | 152+49.13 "C" | 0.67 |
| 151 | 61.00′ | 0°45′51" | 0.41′ | 0.81′ | 152+49.13 "C" | 0.67 |
| 152 | 6.00′ | 65°17′31" | 3.84′ | 6.84′ | 152+04.88 "C" | 50.97 |
| 153 | 50.00′ | 17°1′59" | 7.49′ | 14.86′ | 151+82.14 "C" | 0.20 |
| 154 | 360.00′ | 8°26′51" | 26.59′ | 53.08′ | 155+44.11 "C" | 4.43 |
| 155 | 362.00′ | 8°44′34" | 27.67′ | 55.24′ | 155+44.11 "C" | 4.43 |
| 156 | 10.00′ | 178°20′47" | 692.92′ | 31.13′ | 151+82.14 "C" | 0.20 |
| 157 | 12.00′ | 158°55′56" | 64.53′ | 33.29′ | 151+82.14 "C" | 0.20 |
| 158 | 362.00′ | 8°44′38" | 27.68′ | 55.25′ | 155+44.11 "C" | 4.43 |
| 159 | 360.00′ | 8°26′56" | 26.59′ | 53.09′ | 155+44.11 "C" | 4.43 |
| 160 | 60.00′ | 175°25′15" | 1500.71′ | 183.70′ | 152+98.62 "C" | 80.07 |
| 161 | 61.00′ | 174°50′45" | 1355.31′ | 186.15′ | 152+98.62 "C" | 80.07 |
| 162 | 332.00′ | 18°30′44" | 54.11′ | 107.27′ | 155+15.64 "C" | 1.10 |
| 163 | 331.00′ | 18°30′44" | 53.94′ | 106.95′ | 155+15.64 "C" | 1.10 |
| 164 | 282.00′ | 19°33′52" | 48.62′ | 96.29′ | 154+72.13 "C" | 25.73 |
| 165 | 281.00′ | 19°24′59" | 48.07′ | 95.23′ | 154+72.13 "C" | 25.73 |
| 166 | 105.30′ | 55°21′11" | 55.23′ | 101.73′ | 9+08.06 "B" | 28.35 |
| 167 | 106.30′ | 55°22′51" | 55.79′ | 102.75′ | 9+08.06 "B" | 28.35 |
| 168 | 13.00′ | 85°0′34" | 11.91′ | 19.29′ | 8+76.88 "B" | 9.18 |
| 169 | 1.50′ | 82°5′12" | 1.31′ | 2.15′ | 8+76.15 "B" | 23.66 |
| 170 | 1.50′ | 85°40′46" | 1.39′ | 2.24′ | 8+94.79 "B" | 24.30 |

## SOUTHBOUND CURVE DATA

| No. O | R | Δ | T | L | STATION | OFFSET (Ft) |
|---|---|---|---|---|---|---|
| 171 | 206.53′ | 4°46′25" | 8.61′ | 17.21′ | 8+78.76 "B" | 228.71 |
| 172 | 206.53′ | 6°51′01" | 12.36′ | 24.69′ | 8+78.76 "B" | 228.71 |
| 173 | 1.50′ | 85°41′57" | 1.39′ | 2.24′ | 9+53.85 "B" | 37.92 |
| 174 | 1.50′ | 85°41′57" | 1.39′ | 2.24′ | 9+70.87 "B" | 45.53 |
| 175 | 206.53′ | 3°6′03" | 5.59′ | 11.18′ | 8+78.76 "B" | 228.71 |
| 176 | 220.00′ | 6°20′33" | 12.19′ | 24.35′ | 10+95.43 "B" | 149.68 |
| 177 | 1.50′ | 87°35′43" | 1.44′ | 2.29′ | 10+08.47 "B" | 50.77 |
| 178 | 2.00′ | 91°28′18" | 2.05′ | 3.19′ | 10+24.24 "B" | 44.60 |
| 179 | 1.50′ | 91°54′50" | 1.55′ | 2.41′ | 10+26.68 "B" | 45.29 |
| 180 | 1.00′ | 92°24′14" | 1.04′ | 1.61′ | 10+03.69 "B" | 61.77 |
| 181 | 229.50′ | 6°20′30" | 12.71′ | 25.40′ | 10+95.43 "B" | 149.68 |
| 182 | 105.30′ | 35°35′44" | 33.80′ | 65.42′ | 9+08.06 "B" | 28.35 |
| 183 | 106.30′ | 35°55′56" | 34.47′ | 66.67′ | 9+08.06 "B" | 28.35 |
| 184 | 3.00′ | 89°26′58" | 2.97′ | 4.68′ | 8+00.49 "B" | 80.21 |
| 185 | 6.00′ | 89°42′42" | 5.97′ | 9.39′ | 8+83.50 "B" | 85.38 |
| 186 | 6.00′ | 89°44′05" | 5.97′ | 9.40′ | 9+13.07 "B" | 90.47 |
| 187 | 9.50′ | 73°54′53" | 7.15′ | 12.26′ | 9+76.74 "B" | 97.89 |
| 188 | 9.50′ | 106°5′07" | 12.63′ | 17.59′ | 10+04.43 "B" | 102.66 |
| 189 | 412.50′ | 0°25′33" | 1.53′ | 3.07′ | 10+97.28 "B" | 290.29 |
| 190 | 1.50′ | 84°24′18" | 1.36′ | 2.21′ | 10+30.53 "B" | 115.26 |
| 191 | 1.50′ | 84°24′18" | 1.36′ | 2.21′ | 10+48.99 "B" | 117.87 |
| 192 | 412.50′ | 2°41′04" | 9.67′ | 19.33′ | 10+97.28 "B" | 290.29 |
| 193 | 392.50′ | 7°50′49" | 26.92′ | 53.76′ | 10+96.45 "B" | 270.30 |
| 194 | 393.51′ | 1°29′24" | 5.12′ | 10.23′ | 10+96.36 "B" | 271.31 |
| 195 | 10.50′ | 80°58′13" | 8.96′ | 14.84′ | 11+49.70 "B" | 107.97 |
| 196 | 5.00′ | 86°40′30" | 4.72′ | 7.56′ | 11+55.69 "B" | 80.60 |
| 197 | 1.50′ | 90°0′00" | 1.50′ | 2.36′ | 11+70.25 "B" | 77.31 |
| 198 | 1.50′ | 90°0′00" | 1.50′ | 2.36′ | 11+73.15 "B" | 77.36 |
| 199 | 10.50′ | 104°18′22" | 13.51′ | 19.12′ | 11+78.80 "B" | 102.76 |
| 200 | 9.50′ | 103°5′57" | 11.96′ | 17.09′ | 13+27.18 "B" | 68.76 |
| 201 | 4.50′ | 90°8′02" | 4.51′ | 7.08′ | 13+18.97 "B" | 40.94 |
| 202 | 1.50′ | 90°0′00" | 1.50′ | 2.36′ | 13+30.16 "B" | 32.00 |
| 203 | 1.50′ | 90°0′00" | 1.50′ | 2.36′ | 13+32.62 "B" | 30.78 |
| 204 | 74.00′ | 21°32′48" | 14.08′ | 27.83′ | 13+84.58 "B" | 19.07 |
| 205 | 75.00′ | 21°22′51" | 14.16′ | 27.99′ | 13+84.58 "B" | 19.07 |
| 206 | 74.00′ | 65°30′33" | 47.61′ | 84.61′ | 13+84.58 "B" | 19.07 |
| 207 | 75.00′ | 66°48′48" | 49.47′ | 87.46′ | 13+84.58 "B" | 19.07 |
| 208 | 9.50′ | 76°54′03" | 7.54′ | 12.75′ | 13+54.16 "B" | 62.39 |
| 209 | 1.50′ | 83°8′44" | 1.33′ | 2.18′ | 13+66.39 "B" | 67.72 |
| 210 | 1.50′ | 83°5′34" | 1.33′ | 2.18′ | 13+84.55 "B" | 63.43 |
| 211 | 9.50′ | 90°37′37" | 9.60′ | 15.03′ | 14+66.83 "B" | 35.79 |
| 212 | 4.50′ | 67°41′30" | 3.02′ | 5.32′ | 14+63.72 "B" | 2.44 |
| 213 | 4.50′ | 93°23′55" | 4.78′ | 7.34′ | 14+80.74 "B" | 0.43 |
| 214 | 9.50′ | 91°9′19" | 9.69′ | 15.11′ | 14+93.11 "B" | 29.59 |
| 215 | 3.00′ | 88°47′23" | 2.94′ | 4.65′ | 15+75.22 "B" | 23.04 |
| 216 | 118.00′ | 15°19′45" | 15.88′ | 31.57′ | 9+77.59 "B" | 58.13 |
| 217 | 35.03′ | 17°44′41" | 5.47′ | 10.85′ | 11+12.23 "B" | 163.74 |
| 218 | 5.50′ | 89°41′17" | 5.47′ | 8.61′ | 13+14.01 "B" | 7.75 |
| 219 | 3.50′ | 92°18′09" | 3.64′ | 5.64′ | 13+14.41 "B" | 8.06 |
| 220 | 5.32′ | 41°28′23" | 2.01′ | 3.85′ | 153+15.57 "C" | 10.01 |
| 221 | 5.32′ | 34°23′58" | 1.65′ | 3.19′ | 153+15.57 "C" | 10.01 |
| 222 | 4.00′ | 90°0′00" | 4.00′ | 6.28′ | 13+32.62 "B" | 30.78 |
| 223 | 4.00′ | 90°0′00" | 4.00′ | 6.28′ | 11+73.15 "B" | 77.36 |
| 224 | 4.00′ | 87°26′54" | 3.83′ | 6.11′ | 11+26.66 "B" | 45.32 |
| 225 | 60.00′ | 176°33′54" | 2001.06′ | 184.90′ | 8+63.92 "B" | 65.25 |

# CONSTRUCTION DETAILS
## (SOUTHBOUND SITE)

C-19

STATE OF CALIFORNIA - DEPARTMENT OF TRANSPORTATION
Caltrans® LANDSCAPE ARCHITECTURE

FUNCTIONAL SUPERVISOR: ELBERT COX
CALCULATED-DESIGNED BY: HENRY BARNES
CHECKED BY: GLORIA RAMIREZ
REVISED BY
DATE REVISED

LAST REVISION 02-01-10
DATE PLOTTED => 16-AUG-2010
TIME PLOTTED => 07:00

| Dist | COUNTY | ROUTE | POST MILES TOTAL PROJECT | SHEET No. | TOTAL SHEETS |
|---|---|---|---|---|---|
| 06 | Tul | 99 | 22.4 | 35 | 335 |

Gloria Ramirez
LICENSED LANDSCAPE ARCHITECT

8-9-10
PLANS APPROVAL DATE

LICENSED LANDSCAPE ARCHITECT
GLORIA RAMIREZ No. 5089
Signature
04/30/10
Renewal Date
02/01/10
Date
STATE OF CALIFORNIA

*THE STATE OF CALIFORNIA OR ITS OFFICERS OR AGENTS SHALL NOT BE RESPONSIBLE FOR THE ACCURACY OR COMPLETENESS OF SCANNED COPIES OF THIS PLAN SHEET.*

## SOUTHBOUND BC, EC SCHEDULE

| No. | STATION | OFFSET | ELEVATION | | |
|---|---|---|---|---|---|
| | | | | TOP OF FOOTING | TOP OF WALL |
| | - - | Ft | Ft | Ft | Ft |
| a | 8+59.32 "B" | 45.78 | 263.63 | - | - |
| b | 8+61.62 "B" | 85.11 | 261.87 | - | - |
| c | 8+64.11 "B" | 87.11 | 261.78 | - | - |
| d | 8+70.55 "B" | 87.28 | 261.90 | - | - |
| e | 8+72.12 "B" | 83.49 | 262.11 | - | - |
| f | 8+83.88 "B" | 64.10 | 263.22 | - | - |
| g | 8+86.85 "B" | 60.93 | 263.41 | - | - |
| h | 8+91.51 "B" | 60.90 | 263.63 | - | - |
| i | 9+08.66 "B" | 59.61 | 263.59 | - | - |
| j | 9+27.68 "B" | 57.03 | 263.56 | - | - |
| k | 9+27.79 "B" | 56.67 | 263.55 | - | - |
| l | 9+31.33 "B" | 57.36 | 263.54 | - | - |
| m | 9+38.23 "B" | 57.11 | 263.51 | - | - |
| n | 9+39.20 "B" | 54.85 | 263.50 | - | - |
| o | 9+47.69 "B" | 52.93 | 263.48 | - | - |
| p | 9+49.43 "B" | 53.82 | 263.50 | - | - |
| q | 9+64.57 "B" | 49.65 | 263.54 | - | - |
| r | 9+65.61 "B" | 48.00 | 263.52 | - | - |
| s | 9+84.28 "B" | 41.52 | 263.47 | - | - |
| t | 9+91.97 "B" | 44.82 | 263.42 | - | - |
| u | 10+10.08 "B" | 36.71 | 263.34 | - | - |
| v | 10+12.75 "B" | 28.78 | 263.41 | - | - |
| w | 10+05.53 "B" | 21.79 | * | - | - |
| x | 10+33.82 "B" | 5.59 | 263.21 | - | - |
| y | 10+35.70 "B" | 1.55 | 263.25 | - | - |
| z | 10+22.62 "B" | 23.49 | 263.45 | - | - |

## SOUTHBOUND BC, EC SCHEDULE

| No. | STATION | OFFSET | ELEVATION | | |
|---|---|---|---|---|---|
| | | | | TOP OF FOOTING | TOP OF WALL |
| | - | Ft | Ft | Ft | Ft |
| a1 | 10+39.08 "B" | 13.50 | 263.48 | - | - |
| b1 | 10+40.38 "B" | 12.64 | 263.47 | - | - |
| c1 | 10+75.95 "B" | 14.51 | 263.68 | - | - |
| d1 | 10+76.74 "B" | 15.18 | 263.70 | - | - |
| e1 | 10+83.67 "B" | 24.14 | 263.80 | - | - |
| f1 | 10+89.26 "B" | 25.32 | 263.89 | 263.70 | 270.37 |
| g1 | 10+81.75 "B" | 23.57 | 263.70 | 263.70 | 270.37 |
| h1 | 10+81.14 "B" | 25.47 | 263.60 | 263.70 | 270.37 |
| i1 | 10+88.96 "B" | 27.30 | 263.90 | 263.70 | 270.37 |
| j1 | 11+07.20 "B" | 40.82 | 264.10 | - | - |
| k1 | 11+07.24 "B" | 56.29 | 264.10 | - | - |
| l1 | 10+81.81 "B" | 86.59 | 264.00 | - | - |
| m1 | 10+82.79 "B" | 97.86 | 264.00 | - | - |
| n1 | 10+74.47 "B" | 124.69 | 262.65 | - | - |
| o1 | 10+74.61 "B" | 126.08 | 262.65 | - | - |
| p1 | 152+45.69 "C" | 109.62 | 262.81 | - | - |
| q1 | 152+46.13 "C" | 107.99 | 262.87 | - | - |
| r1 | 152+44.71 "C" | 60.18 | 263.42 | - | - |
| s1 | 152+45.75 "C" | 60.24 | 263.45 | - | - |
| t1 | 152+56.74 "C" | 85.42 | 264.00 | - | - |
| u1 | 152+57.93 "C" | 74.16 | 264.00 | - | - |
| v1 | 152+70.06 "C" | 56.63 | 264.02 | - | - |
| w1 | 152+69.58 "C" | 55.57 | 264.03 | - | - |
| x1 | 152+71.42 "C" | 54.75 | 264.06 | - | - |
| y1 | 152+74.47 "C" | 60.64 | 264.13 | - | - |
| z1 | 152+75.05 "C" | 61.57 | 264.14 | - | - |

## SOUTHBOUND BC, EC SCHEDULE

| No. | STATION | OFFSET | ELEVATION | | |
|---|---|---|---|---|---|
| | | | | TOP OF FOOTING | TOP OF WALL |
| | - | Ft | Ft | Ft | Ft |
| a4 | 11+29.31 "B" | 26.74 | 263.40 | - | - |
| b4 | 11+55.45 "B" | 29.05 | 263.53 | - | - |
| c4 | 11+60.73 "B" | 34.26 | 263.62 | - | - |
| d4 | 11+57.90 "B" | 6.29 | 264.05 | 263.70 | 265.70 |
| e4 | 11+59.75 "B" | 5.01 | ***** | 263.70 | 265.70 |
| f4 | 11+57.90 "B" | 5.89 | 264.67 | 263.70 | 265.70 |
| g4 | 11+57.92 "B" | 6.19 | 264.00 | 263.70 | 265.70 |
| h4 | 11+81.41 "B" | 39.60 | 264.10 | - | - |
| i4 | 12+22.08 "B" | 40.34 | 264.10 | - | - |
| j4 | 12+46.06 "B" | 11.06 | 264.07 | 263.70 | 265.70 |
| k4 | 12+44.12 "B" | 10.56 | 264.74 | 263.70 | 265.70 |
| l4 | 12+45.48 "B" | 0.26 | ***** | 263.70 | 265.70 |
| m4 | 12+47.46 "B" | 1.32 | 264.10 | 263.70 | 265.70 |
| n4 | 12+57.78 "B" | 4.45 | 264.07 | - | - |
| o4 | 12+56.43 "B" | 5.91 | 264.08 | - | - |
| p4 | 12+65.08 "B" | 9.86 | * | - | - |
| q4 | 12+94.87 "B" | 4.19 | 263.43 | - | - |
| r4 | 13+02.39 "B" | 1.92 | 263.44 | - | - |
| s4 | 12+76.64 "B" | 24.63 | 264.04 | - | - |
| t4 | 12+78.00 "B" | 23.17 | 264.03 | - | - |
| u4 | 12+99.26 "B" | 34.57 | 264.00 | 263.70 | 270.37 |
| v4 | 12+98.83 "B" | 36.54 | 264.01 | 263.70 | 270.37 |
| w4 | 13+37.79 "B" | 37.79 | 263.85 | 263.70 | 270.37 |
| x4 | 13+35.79 "B" | 35.79 | 263.85 | 263.70 | 270.37 |
| y4 | 13+03.26 "B" | 35.37 | 263.95 | - | - |
| z4 | 13+06.65 "B" | 31.60 | 263.87 | - | - |

## SOUTHBOUND BC, EC SCHEDULE

| No. | STATION | OFFSET | ELEVATION | | |
|---|---|---|---|---|---|
| | | | | TOP OF FOOTING | TOP OF WALL |
| | - | Ft | Ft | Ft | Ft |
| a2 | 152+73.37 "C" | 62.65 | 264.13 | - | - |
| b2 | 152+98.63 "C" | 25.00 | 264.30 | - | - |
| c2 | 152+91.21 "C" | 20.54 | 264.29 | - | - |
| d2 | 152+85.41 "C" | 13.97 | 264.29 | - | - |
| e2 | 152+83.53 "C" | 9.43 | 264.28 | - | - |
| f2 | 152+81.96 "C" | 4.60 | 264.28 | - | - |
| g2 | 152+81.04 "C" | 0.58 | 264.28 | - | - |
| h2 | 152+83.33 "C" | 10.14 | 264.28 | - | - |
| i2 | 152+85.41 "C" | 13.97 | 264.29 | - | - |
| j2 | 152+91.21 "C" | 20.54 | 264.29 | - | - |
| k2 | 153+02.84 "C" | 21.90 | 264.30 | - | - |
| l2 | 153+03.30 "C" | 20.89 | 264.30 | - | - |
| m2 | 153+03.54 "C" | 17.54 | 264.30 | - | - |
| n2 | 153+11.41 "C" | 18.03 | 264.24 | - | - |
| o2 | 153+15.46 "C" | 15.33 | 264.21 | - | - |
| p2 | 153+17.63 "C" | 11.31 | 264.19 | - | - |
| q2 | 153+20.88 "C" | 10.33 | 264.20 | - | - |
| r2 | 153+23.11 "C" | 8.42 | 264.20 | - | - |
| s2 | 153+23.68 "C" | 4.07 | 264.20 | - | - |
| t2 | 153+23.69 "C" | 4.07 | 264.20 | - | - |
| u2 | 153+23.11 "C" | 8.42 | 264.20 | - | - |
| v2 | 153+20.88 "C" | 10.33 | 264.20 | - | - |
| w2 | 153+17.63 "C" | 11.31 | 264.19 | - | - |
| x2 | 153+15.46 "C" | 15.33 | 264.21 | - | - |
| y2 | 153+11.41 "C" | 18.03 | 264.24 | - | - |
| z2 | 153+03.30 "C" | 20.89 | 264.29 | - | - |

## SOUTHBOUND BC, EC SCHEDULE

| No. | STATION | OFFSET | ELEVATION | | |
|---|---|---|---|---|---|
| | | | | TOP OF FOOTING | TOP OF WALL |
| | - | Ft | Ft | Ft | Ft |
| a3 | 153+03.53 "C" | 20.89 | 264.30 | - | - |
| b3 | 153+03.30 "C" | 16.34 | 264.30 | 264.20 | 266.20 |
| c3 | 153+02.90 "C" | 14.38 | 264.35 | 264.20 | 266.20 |
| d3 | 152+86.95 "C" | 6.69 | 264.35 | 264.20 | 266.20 |
| e3 | 152+85.18 "C" | 7.61 | 264.30 | 264.20 | 266.20 |
| f3 | 152+86.96 "C" | 6.70 | 264.35 | 264.20 | 266.20 |
| g3 | 152+85.18 "C" | 7.61 | 264.30 | 264.20 | 266.20 |
| h3 | 153+02.90 "C" | 14.38 | 264.35 | 264.20 | 266.20 |
| i3 | 153+03.30 "C" | 16.34 | 264.30 | 264.20 | 266.20 |
| j3 | 153+13.30 "C" | 10.05 | 264.30 | 264.20 | 266.20 |
| k3 | 153+11.70 "C" | 8.85 | 264.35 | 264.20 | 266.20 |
| l3 | 153+11.70 "C" | 8.85 | 264.35 | 264.20 | 266.20 |
| m3 | 153+13.30 "C" | 10.05 | 264.30 | 264.20 | 266.20 |
| n3 | 10+83.87 "B" | 3.69 | 263.53 | - | - |
| o3 | 10+82.97 "B" | 4.84 | 263.59 | - | - |
| p3 | 10+91.80 "B" | 11.74 | 263.69 | - | - |
| q3 | 11+14.25 "B" | 10.81 | 263.94 | - | - |
| r3 | 11+28.83 "B" | 2.86 | 263.76 | - | - |
| s3 | 11+23.91 "B" | 16.37 | 263.59 | - | - |
| t3 | 11+20.92 "B" | 16.23 | 263.56 | - | - |
| u3 | 11+11.16 "B" | 13.95 | 263.54 | - | - |
| v3 | 10+92.79 "B" | 7.69 | 263.54 | - | - |
| w3 | 11+27.26 "B" | 14.64 | 264.02 | - | - |
| x3 | 11+28.54 "B" | 16.17 | 264.03 | - | - |
| y3 | 11+44.07 "B" | 3.16 | 264.04 | - | - |
| z3 | 11+42.78 "B" | 1.62 | 264.03 | - | - |

* CONFORM TO EXISTING
** CONFORM TO GUTTER PROFILE
*** CONFORM TO PARKING LOT OVERLAY
**** SEE DETAIL
***** SEE DRAINAGE PROFILE
****** CONFORM TO LAYOUT DETAIL

# CONSTRUCTION DETAILS
## (SOUTHBOUND SITE)

C-20

REVISED BY | DATE REVISED
HENRY BARNES | GLORIA RAMIREZ
CALCULATED-DESIGNED BY | CHECKED BY
FUNCTIONAL SUPERVISOR
ELBERT COX

STATE OF CALIFORNIA - DEPARTMENT OF TRANSPORTATION
Caltrans® LANDSCAPE ARCHITECTURE

LAST REVISION 02-01-10 | DATE PLOTTED => 16-AUG-2010 | TIME PLOTTED => 07:00

| Dist | COUNTY | ROUTE | POST MILES TOTAL PROJECT | SHEET No. | TOTAL SHEETS |
|---|---|---|---|---|---|
| 06 | Tul | 99 | 22.4 | 36 | 335 |

Gloria Ramirez
LICENSED LANDSCAPE ARCHITECT

8-9-10
PLANS APPROVAL DATE

LICENSED LANDSCAPE ARCHITECT
GLORIA RAMIREZ No. 5985
Signature
04/30/10
Renewal Date
02/01/10
Date
STATE OF CALIFORNIA

*THE STATE OF CALIFORNIA OR ITS OFFICERS OR AGENTS SHALL NOT BE RESPONSIBLE FOR THE ACCURACY OR COMPLETENESS OF SCANNED COPIES OF THIS PLAN SHEET.*

## SOUTHBOUND BC, EC SCHEDULE

| No. | STATION | OFFSET | ELEVATION | | |
|---|---|---|---|---|---|
| | | | | TOP OF FOOTING | TOP OF WALL |
| | - - | Ft | Ft | Ft | Ft |
| a5 | 13+07.53 "B" | 30.91 | 263.85 | - | - |
| b5 | 13+24.59 "B" | 28.91 | 263.57 | - | - |
| c5 | 13+42.51 "B" | 35.88 | 263.45 | - | - |
| d5 | 13+70.53 "B" | 44.79 | 263.37 | - | - |
| e5 | 13+74.28 "B" | 52.14 | 263.40 | - | - |
| f5 | 13+91.83 "B" | 56.19 | 263.40 | - | - |
| g5 | 13+98.66 "B" | 51.43 | 263.37 | - | - |
| h5 | 14+22.61 "B" | 55.35 | 263.35 | - | - |
| i5 | 14+20.86 "B" | 62.05 | 263.53 | - | - |
| j5 | 14+17.01 "B" | 61.64 | 263.53 | - | - |
| k5 | 14+13.71 "B" | 64.31 | 263.53 | - | - |
| l5 | 14+10.17 "B" | 97.87 | 263.47 | - | - |
| m5 | 14+12.84 "B" | 101.17 | 263.45 | - | - |
| n5 | 14+34.87 "B" | 103.49 | 263.45 | - | - |
| o5 | 14+36.13 "B" | 103.62 | 263.45 | - | - |
| p5 | 14+46.40 "B" | 104.71 | 263.45 | - | - |
| q5 | 14+49.70 "B" | 102.04 | 263.45 | - | - |
| r5 | 14+53.24 "B" | 68.48 | 263.45 | - | - |
| s5 | 14+50.57 "B" | 65.18 | 263.47 | - | - |
| t5 | 14+45.58 "B" | 64.65 | 263.53 | - | - |
| u5 | 14+46.11 "B" | 57.68 | 263.45 | - | - |
| v5 | 14+54.04 "B" | 53.64 | 263.23 | - | - |
| w5 | 7+15.33 "B" | 90.18 | 259.30 | - | - |
| x5 | 7+20.10 "B" | 89.28 | 259.30 | - | - |
| y5 | 7+26.27 "B" | 67.42 | 260.04 | - | - |
| z5 | 7+26.90 "B" | 70.94 | 259.99 | - | - |

## SOUTHBOUND BC, EC SCHEDULE

| No. | STATION | OFFSET | ELEVATION | | |
|---|---|---|---|---|---|
| | | | | TOP OF FOOTING | TOP OF WALL |
| | - - | Ft | Ft | Ft | Ft |
| a6 | 7+72.50 "B" | 113.95 | 259.30 | - | - |
| b6 | 7+60.15 "B" | 127.04 | 259.20 | - | - |
| c6 | 8+23.48 "B" | 163.53 | 259.20 | - | - |
| d6 | 8+28.62 "B" | 146.28 | 259.30 | - | - |
| e6 | 9+61.48 "B" | 175.02 | 259.30 | - | - |
| f6 | 9+58.72 "B" | 192.81 | 259.20 | - | - |
| g6 | 10+28.65 "B" | 184.09 | 260.20 | - | - |
| h6 | 10+34.05 "B" | 156.24 | 260.66 | - | - |
| i6 | 10+00.75 "B" | 134.39 | 260.65 | - | - |
| j6 | 9+97.34 "B" | 134.23 | 260.56 | - | - |
| k6 | 9+90.35 "B" | 131.38 | 260.49 | - | - |
| l6 | 9+90.82 "B" | 126.45 | 261.68 | - | - |
| m6 | 10+36.98 "B" | 151.01 | 260.80 | - | - |
| n6 | 10+67.97 "B" | 133.99 | 262.14 | - | - |
| o6 | 152+39.70 "C" | 114.47 | 262.44 | - | - |
| p6 | 151+94.25 "C" | 113.30 | 260.50 | - | - |
| q6 | 151+82.89 "C" | 127.26 | 260.10 | - | - |
| r6 | 151+93.65 "C" | 54.24 | 260.77 | - | - |
| s6 | 151+97.72 "C" | 47.71 | 261.20 | - | - |
| t6 | 152+03.62 "C" | 45.36 | 261.45 | - | - |
| u6 | 152+10.04 "C" | 46.17 | 261.80 | - | - |
| v6 | 152+56.05 "C" | 50.42 | 263.78 | - | - |
| w6 | 152+53.38 "C" | 54.17 | 263.62 | - | - |
| x6 | 152+12.24 "C" | 40.13 | 261.75 | 261.00 | 263.00 |
| y6 | 152+13.58 "C" | 38.65 | 261.90 | 261.00 | 263.00 |
| z6 | 151+98.78 "C" | 21.47 | 261.30 | 261.00 | 263.00 |

## SOUTHBOUND BC, EC SCHEDULE

| No. | STATION | OFFSET | ELEVATION | | |
|---|---|---|---|---|---|
| | | | | TOP OF FOOTING | TOP OF WALL |
| | - - | Ft | Ft | Ft | Ft |
| a9 | 9+54.40 "B" | 36.52 | 263.44 | - | - |
| b9 | 9+55.28 "B" | 38.36 | 263.46 | - | - |
| c9 | 9+69.58 "B" | 44.76 | 263.40 | - | - |
| d9 | 9+71.54 "B" | 44.19 | 263.38 | - | - |
| e9 | 9+79.91 "B" | 48.64 | 263.46 | - | - |
| f9 | 9+81.39 "B" | 49.48 | 263.47 | - | - |
| g9 | 9+80.82 "B" | 49.15 | 263.46 | - | - |
| h9 | 9+86.11 "B" | 41.23 | * | - | - |
| i9 | 10+07.87 "B" | 52.14 | 263.52 | - | - |
| j9 | 10+09.82 "B" | 51.42 | 263.53 | - | - |
| k9 | 10+14.59 "B" | 41.57 | 263.59 | - | - |
| l9 | 10+12.95 "B" | 36.34 | * | - | - |
| m9 | 10+22.44 "B" | 43.72 | 263.58 | - | - |
| n9 | 10+25.15 "B" | 42.82 | ** | - | - |
| o9 | 10+27.37 "B" | 43.96 | ** | - | - |
| p9 | 10+27.99 "B" | 46.03 | ** | - | - |
| q9 | 10+04.59 "B" | 62.21 | 263.68 | - | - |
| r9 | 10+04.09 "B" | 60.86 | 263.69 | - | - |
| s9 | 9+21.67 "B" | 76.07 | ****** | - | - |
| t9 | 9+21.50 "B" | 77.10 | ****** | - | - |
| u9 | 8+79.56 "B" | 73.02 | ****** | - | - |
| v9 | 8+79.39 "B" | 74.02 | ****** | - | - |
| w9 | 7+97.54 "B" | 79.67 | 264.40 | - | - |
| x9 | 8+01.00 "B" | 77.25 | 264.50 | - | - |
| y9 | 8+82.48 "B" | 91.29 | 264.40 | - | - |
| z9 | 8+89.41 "B" | 86.42 | 264.48 | - | - |

## SOUTHBOUND BC, EC SCHEDULE

| No. | STATION | OFFSET | ELEVATION | | |
|---|---|---|---|---|---|
| | | | | TOP OF FOOTING | TOP OF WALL |
| | - - | Ft | Ft | Ft | Ft |
| a7 | 152+01.23 "C" | 22.03 | 262.80 | 261.00 | 263.00 |
| b7 | 151+98.22 "C" | 21.48 | 261.30 | 261.00 | 263.00 |
| c7 | 152+00.66 "C" | 22.11 | 262.80 | 261.00 | 263.00 |
| d7 | 152+12.57 "C" | 39.04 | 261.82 | 261.00 | 263.00 |
| e7 | 152+11.19 "C" | 40.49 | 261.75 | 261.00 | 263.00 |
| f7 | 152+53.74 "C" | 55.47 | 263.93 | - | - |
| g7 | 152+56.39 "C" | 51.72 | 264.18 | - | - |
| h7 | 152+48.74 "C" | 22.66 | 264.19 | - | - |
| i7 | 152+50.76 "C" | 19.02 | 264.16 | - | - |
| j7 | 152+50.76 "C" | 19.02 | 264.10 | - | - |
| k7 | 152+48.74 "C" | 22.66 | 264.12 | - | - |
| l7 | 152+90.25 "C" | 54.38 | 264.14 | - | - |
| m7 | 152+90.87 "C" | 55.33 | 264.13 | - | - |
| n7 | 152+89.06 "C" | 56.21 | 264.10 | - | - |
| o7 | 152+89.22 "C" | 56.45 | 264.11 | - | - |
| p7 | 152+84.91 "C" | 61.92 | 264.09 | - | - |
| q7 | 152+75.61 "C" | 73.72 | 264.06 | - | - |
| r7 | 152+76.95 "C" | 84.96 | 264.05 | - | - |
| s7 | 13+11.92 "B" | 75.27 | 264.05 | - | - |
| t7 | 13+10.79 "B" | 64.02 | 264.05 | - | - |
| u7 | 13+02.08 "B" | 56.90 | 263.99 | - | - |
| v7 | 12+98.86 "B" | 46.21 | 263.98 | - | - |
| w7 | 152+87.08 "C" | 48.63 | 264.18 | - | - |
| x7 | 152+85.26 "C" | 49.47 | 264.16 | - | - |
| y7 | 152+85.38 "C" | 49.73 | 264.15 | - | - |
| z7 | 152+41.66 "C" | 61.21 | 263.35 | - | - |

## SOUTHBOUND BC, EC SCHEDULE

| No. | STATION | OFFSET | ELEVATION | | |
|---|---|---|---|---|---|
| | | | | TOP OF FOOTING | TOP OF WALL |
| | - - | Ft | Ft | Ft | Ft |
| a8 | 152+40.65 "C" | 61.07 | 263.29 | - | - |
| b8 | 152+17.62 "C" | 52.90 | 262.14 | - | - |
| c8 | 152+09.45 "C" | 47.00 | 261.75 | - | - |
| d8 | 152+08.84 "C" | 46.47 | 261.73 | - | - |
| e8 | 152+02.44 "C" | 45.49 | 261.52 | - | - |
| f8 | 151+88.16 "C" | 49.43 | 261.06 | - | - |
| g8 | 151+89.21 "C" | 64.82 | 260.58 | - | - |
| h8 | 151+87.24 "C" | 65.15 | 260.25 | - | - |
| i8 | 151+84.19 "C" | 12.03 | 260.95 | - | - |
| j8 | 151+82.16 "C" | 10.20 | 255.40 | - | - |
| k8 | 151+82.39 "C" | 9.79 | 255.40 | - | - |
| l8 | 151+84.47 "C" | 11.57 | 261.44 | - | - |
| m8 | 151+88.76 "C" | 64.62 | 259.50 | - | - |
| n8 | 151+00.00 "C" | 64.42 | 259.80 | - | - |
| o8 | 151+00.00 "C" | 64.23 | 259.50 | - | - |
| p8 | 152+00.00 "C" | 164.13 | 259.20 | - | - |
| q8 | 152+00.00 "C" | 164.62 | 259.20 | - | - |
| r8 | 8+07.53 "B" | 6.21 | * | - | - |
| s8 | 8+08.46 "B" | 5.83 | * | - | - |
| t8 | 8+63.89 "B" | 9.66 | 263.85 | - | - |
| u8 | 8+76.23 "B" | 22.16 | 263.83 | - | - |
| v8 | 8+77.65 "B" | 23.53 | 263.85 | - | - |
| w8 | 8+93.31 "B" | 24.07 | 263.62 | - | - |
| x8 | 8+94.91 "B" | 22.80 | 263.60 | - | - |
| y8 | 9+11.99 "B" | 24.86 | 263.62 | - | - |
| z8 | 9+30.93 "B" | 28.87 | 263.51 | - | - |

* CONFORM TO EXISTING
** CONFORM TO GUTTER PROFILE
*** CONFORM TO PARKING LOT OVERLAY
**** SEE DETAIL
***** SEE DRAINAGE PROFILE
****** CONFORM TO LAYOUT DETAIL

# CONSTRUCTION DETAILS
## (SOUTHBOUND SITE)
## C-21

STATE OF CALIFORNIA - DEPARTMENT OF TRANSPORTATION
Caltrans® LANDSCAPE ARCHITECTURE

FUNCTIONAL SUPERVISOR: ELBERT COX
CALCULATED-DESIGNED BY: GLORIA RAMIREZ
CHECKED BY:
REVISED BY: HENRY BARNES
DATE REVISED:

LAST REVISION 02-01-10
DATE PLOTTED => 16-AUG-2010
TIME PLOTTED => 07:01

| Dist | COUNTY | ROUTE | POST MILES TOTAL PROJECT | SHEET No. | TOTAL SHEETS |
|---|---|---|---|---|---|
| 06 | Tul | 99 | 22.4 | 37 | 335 |

Gloria Ramirez
LICENSED LANDSCAPE ARCHITECT

8-9-10
PLANS APPROVAL DATE

LICENSED LANDSCAPE ARCHITECT
GLORIA RAMIREZ No. 5985
Signature
04/30/10
Renewal Date
02/01/10
Date
STATE OF CALIFORNIA

*THE STATE OF CALIFORNIA OR ITS OFFICERS OR AGENTS SHALL NOT BE RESPONSIBLE FOR THE ACCURACY OR COMPLETENESS OF SCANNED COPIES OF THIS PLAN SHEET.*

## SOUTHBOUND BC, EC SCHEDULE

| No. | STATION | | OFFSET | ELEVATION |
|---|---|---|---|---|
| | - | | Ft | Ft |
| a10 | 09+07.16 | "B" | 89.47 | 264.43 |
| b10 | 09+12.05 | "B" | 96.38 | 264.35 |
| c10 | 09+75.13 | "B" | 107.25 | 264.07 |
| d10 | 09+85.29 | "B" | 102.03 | 264.17 |
| e10 | 09+95.88 | "B" | 98.51 | 264.13 |
| f10 | 10+02.82 | "B" | 112.02 | 264.04 |
| g10 | 10+27.26 | "B" | 116.23 | 263.80 |
| h10 | 10+30.28 | "B" | 116.74 | 263.79 |
| i10 | 10+31.98 | "B" | 115.64 | 263.81 |
| j10 | 10+47.49 | "B" | 117.84 | 263.76 |
| k10 | 10+48.82 | "B" | 119.36 | 263.74 |
| l10 | 10+68.06 | "B" | 121.18 | 263.68 |
| m10 | 10+87.35 | "B" | 122.09 | 263.58 |
| n10 | 11+41.01 | "B" | 119.66 | 263.45 |
| o10 | 11+51.16 | "B" | 118.37 | 263.45 |
| p10 | 11+60.20 | "B" | 108.16 | 263.80 |
| q10 | 11+60.69 | "B" | 80.68 | 263.60 |
| r10 | 11+56.07 | "B" | 75.61 | * |
| s10 | 11+68.75 | "B" | 77.28 | 263.81 |
| t10 | 11+70.28 | "B" | 75.81 | ** |
| u10 | 11+73.17 | "B" | 75.86 | 263.64 |
| v10 | 11+74.65 | "B" | 77.39 | ** |
| w10 | 11+68.30 | "B" | 102.57 | ** |
| x10 | 11+81.93 | "B" | 112.81 | 263.37 |
| y10 | 13+78.00 | "B" | 78.00 | 263.13 |
| z10 | 13+35.69 | "B" | 64.53 | 263.29 |

## SOUTHBOUND BC, EC SCHEDULE

| No. | STATION | | OFFSET | ELEVATION |
|---|---|---|---|---|
| | - | | Ft | Ft |
| a11 | 13+23.00 | "B" | 38.94 | 263.61 |
| b11 | 13+16.96 | "B" | 36.91 | * |
| c11 | 13+28.82 | "B" | 32.67 | 263.77 |
| d11 | 13+31.96 | "B" | 29.43 | ** |
| e11 | 13+33.97 | "B" | 30.11 | ** |
| f11 | 13+29.49 | "B" | 30.66 | ** |
| g11 | 13+44.48 | "B" | 43.12 | * |
| h11 | 13+42.35 | "B" | 42.90 | * |
| i11 | 13+45.65 | "B" | 66.61 | 263.32 |
| j11 | 13+56.34 | "B" | 71.63 | 263.15 |
| k11 | 13+66.74 | "B" | 69.18 | 263.19 |
| l11 | 13+67.88 | "B" | 67.55 | 263.21 |
| m11 | 13+67.85 | "B" | 54.04 | ****** |
| n11 | 13+70.12 | "B" | 53.50 | ****** |
| o11 | 13+79.77 | "B" | 54.77 | ****** |
| p11 | 13+80.14 | "B" | 55.80 | ****** |
| q11 | 13+83.14 | "B" | 63.95 | 263.25 |
| r11 | 13+84.90 | "B" | 64.89 | 263.23 |
| s11 | 14+49.79 | "B" | 15.92 | * |
| t11 | 14+51.66 | "B" | 14.48 | * |
| u11 | 14+69.02 | "B" | 45.03 | 263.43 |
| v11 | 14+76.06 | "B" | 33.50 | 263.50 |
| w11 | 14+68.05 | "B" | 1.23 | 263.51 |
| x11 | 14+64.28 | "B" | 2.03 | * |
| y11 | 14+79.93 | "B" | 3.99 | * |
| z11 | 14+76.37 | "B" | 1.51 | 263.47 |

## SOUTHBOUND BC, EC SCHEDULE

| No. | STATION | | OFFSET | |
|---|---|---|---|---|
| | - | | Ft | Ft |
| a12 | 14+83.83 | "B" | 31.58 | 263.53 |
| b12 | 14+95.30 | "B" | 38.83 | 263.54 |
| c12 | 14+74.53 | "B" | 20.12 | 263.76 |
| d12 | 14+78.13 | "B" | 22.29 | 263.68 |
| e12 | 10+38.94 | "B" | 158.92 | 260.71 |
| f12 | 10+44.70 | "B" | 155.19 | 260.83 |
| g12 | 10+80.03 | "B" | 177.51 | 260.70 |
| h12 | 10+77.82 | "B" | 170.25 | 260.90 |
| i12 | 13+09.04 | "B" | 5.41 | ** |
| j12 | 13+11.25 | "B" | 6.57 | ** |
| k12 | 13+13.05 | "B" | 11.28 | ** |
| l12 | 13+11.65 | "B" | 12.71 | ** |
| m12 | 153+19.01 | "C" | 14.06 | 264.18 |
| n12 | 153+19.77 | "C" | 13.27 | 264.18 |
| o12 | 153+19.77 | "C" | 13.27 | 264.18 |
| p12 | 153+19.01 | "C" | 14.06 | 264.18 |
| q12 | 13+30.84 | "B" | 27.19 | ** |
| r12 | 13+36.21 | "B" | 29.00 | ** |
| s12 | 11+73.22 | "B" | 73.36 | ** |
| t12 | 11+77.15 | "B" | 77.43 | ** |
| u12 | 10+28.54 | "B" | 41.79 | ** |
| v12 | 10+30.27 | "B" | 47.03 | ** |
| w12 | 10+28.54 | "B" | 41.79 | **** |
| x12 | 10+30.27 | "B" | 47.03 | **** |

* CONFORM TO EXISTING
** CONFORM TO GUTTER PROFILE
*** CONFORM TO PARKING LOT OVERLAY
**** SEE DETAIL
***** SEE DRAINAGE PROFILE
****** CONFORM TO LAYOUT DETAIL

# CONSTRUCTION DETAILS
## (SOUTHBOUND SITE)
## C-22

REVISED BY | DATE REVISED
HENRY BARNES | GLORIA RAMIREZ
CALCULATED-DESIGNED BY | CHECKED BY
FUNCTIONAL SUPERVISOR
ELBERT COX

STATE OF CALIFORNIA - DEPARTMENT OF TRANSPORTATION
Caltrans® LANDSCAPE ARCHITECTURE

LAST REVISION 02-01-10 | DATE PLOTTED => 16-AUG-2010 | TIME PLOTTED => 07:01

| Dist | COUNTY | ROUTE | POST MILES TOTAL PROJECT | SHEET No. | TOTAL SHEETS |
|---|---|---|---|---|---|
| 06 | Tul | 99 | 22.4 | 38 | 335 |

Gloria Ramirez
LICENSED LANDSCAPE ARCHITECT

8-9-10
PLANS APPROVAL DATE

LICENSED LANDSCAPE ARCHITECT GLORIA RAMIREZ No. 5985 Signature 04/30/10 Renewal Date 02/01/10 Date STATE OF CALIFORNIA

*THE STATE OF CALIFORNIA OR ITS OFFICERS OR AGENTS SHALL NOT BE RESPONSIBLE FOR THE ACCURACY OR COMPLETENESS OF SCANNED COPIES OF THIS PLAN SHEET.*

## SOUTHBOUND SITE INTERSECTION POINT SCHEDULE

| No. | STATION | OFFSET | ELEVATION | |
|---|---|---|---|---|
| | | | TOP OF FOOTING | TOP OF WALL |
| | - | Ft | Ft | Ft | Ft |
| IP-1 | 8+59.59 "B" | 37.79 | 263.76 | - | - |
| IP-2 | 8+69.32 "B" | 46.12 | ** | - | - |
| IP-3 | 8+67.32 "B" | 46.05 | * | - | - |
| IP-4 | 8+69.59 "B" | 38.12 | ** | - | - |
| IP-5 | 8+67.59 "B" | 38.05 | ** | - | - |
| IP-6 | 10+32.15 "B" | 8.42 | * | - | - |
| IP-7 | 10+41.03 "B" | 13.02 | * | - | - |
| IP-8 | 10+38.81 "B" | 11.87 | ** | - | - |
| IP-9 | 10+42.37 "B" | 5.00 | * | - | - |
| IP-10 | 10+44.59 "B" | 6.15 | ** | - | - |
| IP-11 | 10+88.74 "B" | 27.27 | 263.90 | - | - |
| IP-12 | 11+06.69 "B" | 40.22 | 264.10 | - | - |
| IP-13 | 11+91.12 "B" | 104.85 | 264.00 | - | - |
| IP-14 | 11+91.92 "B" | 105.49 | 264.00 | - | - |
| IP-15 | 152+64.20 "C" | 94.62 | 264.00 | - | - |
| IP-16 | 152+63.57 "C" | 93.86 | 264.00 | - | - |
| IP-17 | 152+72.97 "C" | 62.02 | 264.30 | - | - |
| IP-18 | 11+80.54 "B" | 21.60 | 265.33 | 265.00 | 267.00 |
| IP-19 | 11+84.86 "B" | 17.42 | 266.00 | 265.00 | 267.00 |
| IP-20 | 11+98.80 "B" | 3.40 | 265.33 | 265.00 | 267.00 |
| IP-21 | 12+04.82 "B" | 2.51 | 266.00 | 265.00 | 267.00 |
| IP-22 | 12+16.67 "B" | 14.50 | 265.33 | 265.00 | 267.00 |
| IP-23 | 12+24.21 "B" | 21.97 | 266.00 | 265.00 | 267.00 |
| IP-24 | 11+60.72 "B" | 42.13 | 263.79 | - | - |
| IP-25 | 11+70.74 "B" | 34.29 | ** | - | - |
| IP-26 | 11+68.74 "B" | 34.28 | * | - | - |
| IP-27 | 11+70.72 "B" | 42.16 | ** | - | - |
| IP-28 | 11+68.78 "B" | 42.15 | ** | - | - |
| IP-29 | 13+01.66 "B" | 37.14 | ** | - | - |
| IP-30 | 13+14.84 "B" | 0.29 | ** | - | - |
| IP-31 | 13+13.07 "B" | 1.22 | ** | - | - |
| IP-32 | 13+05.99 "B" | 4.93 | 263.67 | - | - |
| IP-33 | 13+16.45 "B" | 14.96 | ** | - | - |
| IP-34 | 13+09.47 "B" | 5.64 | * | - | - |
| IP-35 | 14+56.58 "B" | 49.79 | 263.25 | - | - |
| IP-36 | 14+49.90 "B" | 45.39 | * | - | - |
| IP-37 | 14+50.31 "B" | 45.66 | * | - | - |
| IP-38 | 14+59.32 "B" | 45.63 | 263.36 | - | - |
| IP-39 | 14+65.36 "B" | 36.49 | * | - | - |
| IP-40 | 14+58.68 "B" | 32.06 | ** | - | - |
| IP-41 | 8+71.49 "B" | 0.01 | ** | - | - |
| IP-42 | 8+63.49 "B" | 0.30 | * | - | - |
| IP-43 | 8+71.72 "B" | 6.90 | * | - | - |
| IP-44 | 8+63.75 "B" | 7.19 | 263.83 | - | - |
| IP-45 | 8+73.48 "B" | 0.07 | * | - | - |
| IP-46 | 8+73.74 "B" | 6.82 | ** | - | - |
| IP-47 | 10+14.14 "B" | 34.13 | ** | - | - |
| IP-48 | 10+17.36 "B" | 54.19 | 263.44 | - | - |
| IP-49 | 10+22.84 "B" | 56.85 | * | - | - |
| IP-50 | 10+25.09 "B" | 57.94 | ** | - | - |
| IP-51 | 7+96.73 "B" | 84.13 | * | - | - |
| IP-52 | 8+17.86 "B" | 80.16 | 264.53 | - | - |
| IP-53 | 8+36.84 "B" | 83.43 | 264.46 | - | - |
| IP-54 | 9+40.21 "B" | 101.23 | 264.21 | - | - |
| IP-55 | 9+59.19 "B" | 104.50 | 264.13 | - | - |
| IP-56 | 9+68.96 "B" | 106.69 | 263.78 | - | - |
| IP-57 | 9+88.68 "B" | 95.02 | 264.15 | - | - |
| IP-58 | 9+57.84 "B" | 112.39 | * | - | - |
| IP-59 | 9+57.50 "B" | 114.36 | ** | - | - |
| IP-60 | 9+67.69 "B" | 114.08 | ** | - | - |
| IP-61 | 10+00.34 "B" | 119.71 | ** | - | - |
| IP-62 | 10+10.20 "B" | 121.41 | * | - | - |
| IP-63 | 10+09.86 "B" | 123.38 | ** | - | - |
| IP-64 | 10+11.56 "B" | 113.52 | 263.89 | - | - |
| IP-65 | 11+42.12 "B" | 127.58 | * | - | - |

## SOUTHBOUND SITE INTERSECTION POINT SCHEDULE

| No. | STATION | OFFSET | ELEVATION |
|---|---|---|---|
| | - | Ft | Ft |
| IP-66 | 11+42.40 "B" | 129.57 | ** |
| IP-67 | 11+52.26 "B" | 126.29 | ** |
| IP-68 | 11+60.30 "B" | 102.43 | 263.65 |
| IP-69 | 11+60.53 "B" | 89.59 | 263.64 |
| IP-70 | 11+56.19 "B" | 72.97 | ** |
| IP-71 | 11+76.92 "B" | 89.88 | ** |
| IP-72 | 11+74.42 "B" | 89.84 | * |
| IP-73 | 11+68.55 "B" | 89.73 | 263.30 |
| IP-74 | 11+91.73 "B" | 110.51 | 263.32 |
| IP-75 | 11+93.41 "B" | 118.32 | * |
| IP-76 | 11+93.84 "B" | 120.27 | ** |
| IP-77 | 11+83.67 "B" | 120.59 | ** |
| IP-78 | 12+44.75 "B" | 97.98 | 263.23 |
| IP-79 | 12+63.49 "B" | 93.55 | 263.19 |
| IP-80 | 12+19.31 "B" | 80.38 | 263.12 |
| IP-81 | 13+21.15 "B" | 88.16 | * |
| IP-82 | 13+21.61 "B" | 90.11 | ** |
| IP-83 | 13+31.20 "B" | 85.79 | ** |
| IP-84 | 13+27.25 "B" | 47.46 | 263.36 |
| IP-85 | 13+15.83 "B" | 34.64 | ** |
| IP-86 | 13+34.37 "B" | 43.86 | 263.36 |
| IP-87 | 13+39.52 "B" | 41.30 | * |
| IP-88 | 13+41.76 "B" | 40.19 | ** |
| IP-89 | 13+42.88 "B" | 61.01 | 263.34 |
| IP-90 | 13+58.17 "B" | 79.42 | ** |
| IP-91 | 13+68.58 "B" | 76.96 | * |
| IP-92 | 13+69.04 "B" | 78.91 | ** |
| IP-93 | 14+06.60 "B" | 59.77 | 263.27 |
| IP-94 | 14+25.35 "B" | 55.34 | 263.32 |
| IP-95 | 14+61.39 "B" | 57.13 | ** |
| IP-96 | 14+60.83 "B" | 55.19 | * |
| IP-97 | 14+58.99 "B" | 47.40 | 263.44 |
| IP-98 | 14+70.85 "B" | 52.82 | ** |
| IP-99 | 14+71.86 "B" | 16.57 | 263.59 |
| IP-100 | 14+63.95 "B" | 4.49 | ** |
| IP-101 | 14+79.65 "B" | 6.59 | ** |
| IP-102 | 14+79.63 "B" | 14.65 | 263.51 |
| IP-103 | 15+05.63 "B" | 36.39 | 263.55 |
| IP-104 | 15+17.19 "B" | 33.66 | 263.60 |
| IP-105 | 15+35.94 "B" | 29.23 | 263.67 |
| IP-106 | 15+07.47 "B" | 44.18 | * |
| IP-107 | 15+07.93 "B" | 46.12 | ** |
| IP-108 | 14+97.13 "B" | 46.62 | ** |
| IP-109 | 15+79.27 "B" | 26.71 | * |
| IP-110 | 9+76.05 "B" | 237.91 | * |
| IP-111 | 11+32.89 "B" | 250.14 | * |
| IP-112 | 13+30.47 "B" | 210.02 | * |
| IP-113 | 15+26.08 "B" | 163.54 | * |
| IP-114 | 14+48.28 "B" | 44.32 | ** |
| IP-115 | 14+56.86 "B" | 30.88 | ** |
| IP-116 | 14+20.61 "B" | 66.04 | 263.61 |
| IP-117 | 14+17.26 "B" | 68.75 | 263.61 |
| IP-118 | 14+15.00 "B" | 90.29 | 263.61 |
| IP-119 | 14+17.70 "B" | 93.64 | 263.61 |
| IP-120 | 14+39.24 "B" | 95.91 | 263.61 |
| IP-121 | 14+42.59 "B" | 93.20 | 263.61 |
| IP-122 | 14+44.86 "B" | 71.66 | 263.61 |
| IP-123 | 14+42.15 "B" | 68.31 | 263.61 |
| IP-124 | 152+60.31 "C" | 50.77 | 264.25 |
| IP-125 | 152+71.87 "C" | 47.55 | 264.25 |
| IP-126 | 152+51.74 "C" | 19.94 | 264.25 |
| IP-127 | 152+63.30 "C" | 16.72 | 264.25 |
| IP-128 | 152+51.83 "C" | 19.87 | 264.30 |
| IP-129 | 152+63.40 "C" | 16.66 | 264.30 |
| IP-130 | 152+60.39 "C" | 50.71 | 264.30 |

## SOUTHBOUND SITE INTERSECTION POINT SCHEDULE

| No. | STATION | OFFSET | ELEVATION |
|---|---|---|---|
| | - | Ft | Ft |
| IP-131 | 152+71.95 "C" | 47.50 | 264.30 |
| IP-132 | 8+47.51 "B" | 42.51 | **** |
| IP-133 | 8+46.48 "B" | 40.52 | **** |
| IP-134 | 8+58.72 "B" | 31.63 | *** |
| IP-135 | 8+61.52 "B" | 4.05 | *** |
| IP-136 | 8+71.99 "B" | 0.01 | *** |
| IP-137 | 8+68.09 "B" | 38.07 | *** |
| IP-138 | 10+17.38 "B" | 35.86 | *** |
| IP-139 | 10+28.99 "B" | 13.43 | *** |
| IP-140 | 10+26.21 "B" | 40.55 | *** |
| IP-141 | 10+40.58 "B" | 12.79 | *** |
| IP-142 | 10+58.52 "B" | 6.79 | * |
| IP-143 | 10+57.73 "B" | 8.63 | ** |
| IP-144 | 10+73.53 "B" | 12.83 | * |
| IP-145 | 10+72.86 "B" | 14.67 | ** |
| IP-146 | 10+57.81 "B" | 11.86 | **** |
| IP-147 | 11+60.21 "B" | 47.90 | *** |
| IP-148 | 11+60.18 "B" | 73.06 | *** |
| IP-149 | 11+70.17 "B" | 73.29 | *** |
| IP-150 | 11+70.22 "B" | 42.15 | *** |
| IP-151 | 153+20.46 "C" | 1.00 | **** |
| IP-152 | 153+21.63 "C" | 1.00 | **** |
| IP-153 | 13+28.91 "B" | 28.15 | *** |
| IP-154 | 13+19.95 "B" | 32.60 | *** |
| IP-155 | 13+08.10 "B" | 10.02 | *** |
| IP-156 | 13+14.40 "B" | 0.52 | *** |
| IP-157 | 13+17.30 "B" | 13.08 | ** |
| IP-158 | 13+31.30 "B" | 21.40 | * |
| IP-159 | 13+32.11 "B" | 19.32 | ** |
| IP-160 | 14+58.21 "B" | 31.77 | *** |
| IP-161 | 14+65.56 "B" | 4.71 | *** |
| IP-162 | 14+75.56 "B" | 6.04 | *** |
| IP-163 | 14+69.04 "B" | 30.04 | *** |
| IP-164 | 16+02.69 "B" | 14.67 | **** |
| IP-165 | 16+02.03 "B" | 16.81 | **** |
| IP-166 | 5+95.34 "B" | 192.35 | **** |
| IP-167 | 5+95.63 "B" | 194.57 | **** |
| IP-168 | 8+33.86 "B" | 279.37 | 259.50 |
| IP-169 | 8+41.78 "B" | 296.80 | 259.45 |
| IP-170 | 9+17.85 "B" | 262.73 | 259.90 |
| IP-171 | 9+25.76 "B" | 280.17 | 259.85 |

* CONFORM TO EXISTING
** CONFORM TO GUTTER PROFILE
*** CONFORM TO PARKING LOT OVERLAY
**** SEE DETAIL
***** SEE DRAINAGE PROFILE
****** CONFORM TO LAYOUT DETAIL

## SOUTHBOUND SITE SEATWALL INTERSECTION POINT SCHEDULE

| No. | STATION | OFFSET | ELEVATION | |
|---|---|---|---|---|
| | | | TOP OF FOOTING | TOP OF WALL |
| | - | Ft | Ft | Ft |
| IP-172 | 11+31.03 "B" | 44.97 | 263.70 | 265.70 |
| IP-173 | 11+38.28 "B" | 42.65 | 263.70 | 265.70 |
| IP-174 | 11+45.32 "B" | 15.14 | 263.70 | 265.70 |
| IP-175 | 11+52.92 "B" | 15.05 | 263.70 | 265.70 |
| IP-176 | 11+69.89 "B" | 40.16 | 263.70 | 265.70 |
| IP-177 | 11+63.65 "B" | 44.49 | 263.70 | 265.70 |
| IP-178 | 11+71.35 "B" | 70.46 | 263.70 | 265.70 |
| IP-179 | 11+70.32 "B" | 77.99 | 263.70 | 265.70 |
| IP-180 | 11+45.68 "B" | 110.58 | 263.70 | 265.70 |
| IP-181 | 11+37.84 "B" | 108.48 | 263.70 | 265.70 |
| IP-182 | 12+49.35 "B" | 96.80 | 263.70 | 265.70 |
| IP-183 | 12+57.21 "B" | 94.80 | 263.70 | 265.70 |
| IP-184 | 12+33.63 "B" | 78.39 | 263.70 | 265.70 |
| IP-185 | 12+29.14 "B" | 72.26 | 263.70 | 265.70 |
| IP-186 | 12+39.66 "B" | 45.88 | 263.70 | 265.70 |
| IP-187 | 12+33.57 "B" | 41.32 | 263.70 | 265.70 |
| IP-188 | 12+52.07 "B" | 14.94 | 263.70 | 265.70 |
| IP-189 | 12+58.42 "B" | 19.11 | 263.70 | 265.70 |
| IP-190 | 12+65.07 "B" | 44.96 | 263.70 | 265.70 |
| IP-191 | 12+72.23 "B" | 47.54 | 263.70 | 265.70 |

# CONSTRUCTION DETAILS
## (SOUTHBOUND SITE)
## C-23

STATE OF CALIFORNIA - DEPARTMENT OF TRANSPORTATION
Caltrans LANDSCAPE ARCHITECTURE
FUNCTIONAL SUPERVISOR: ELBERT COX
CALCULATED-DESIGNED BY: HENRY BARNES
CHECKED BY: GLORIA RAMIREZ
REVISED BY / DATE REVISED

LAST REVISION 02-01-10
DATE PLOTTED => 16-AUG-2010
TIME PLOTTED => 07:01

| Dist | COUNTY | ROUTE | POST MILES TOTAL PROJECT | SHEET No. | TOTAL SHEETS |
|---|---|---|---|---|---|
| 06 | Tul | 99 | 22.4 | 39 | 335 |

Gloria Ramirez
LICENSED LANDSCAPE ARCHITECT

8-9-10
PLANS APPROVAL DATE

LICENSED LANDSCAPE ARCHITECT
GLORIA RAMIREZ No. 5085
Gloria Ramirez
Expiration Date
04/30/10
Renewal Date
02/01/10
Date
STATE OF CALIFORNIA

*THE STATE OF CALIFORNIA OR ITS OFFICERS OR AGENTS SHALL NOT BE RESPONSIBLE FOR THE ACCURACY OR COMPLETENESS OF SCANNED COPIES OF THIS PLAN SHEET.*

## LEGEND DESCRIPTION

- CONCRETE PAVERS (GRID) SEE SHEET C-43
- MINOR CONCRETE (SANDBLAST FINISH)
- MINOR CONCRETE (COLORED AGGREGATE)
- MINOR CONCRETE (BROOM FINISH)
- PERVIOUS CONCRETE

## LEGEND DESCRIPTION

- CONCRETE PAVERS (BAND)
- BRONZE PLAQUE
- EJ EXPANSION JOINT
- SL SCORE LINE
- PA PLANTING AREA
- IRON RAIL, SEE C-41 AND C-63
- 24" ROUND DRAIN GRATE
- GRATED LINE DRAIN

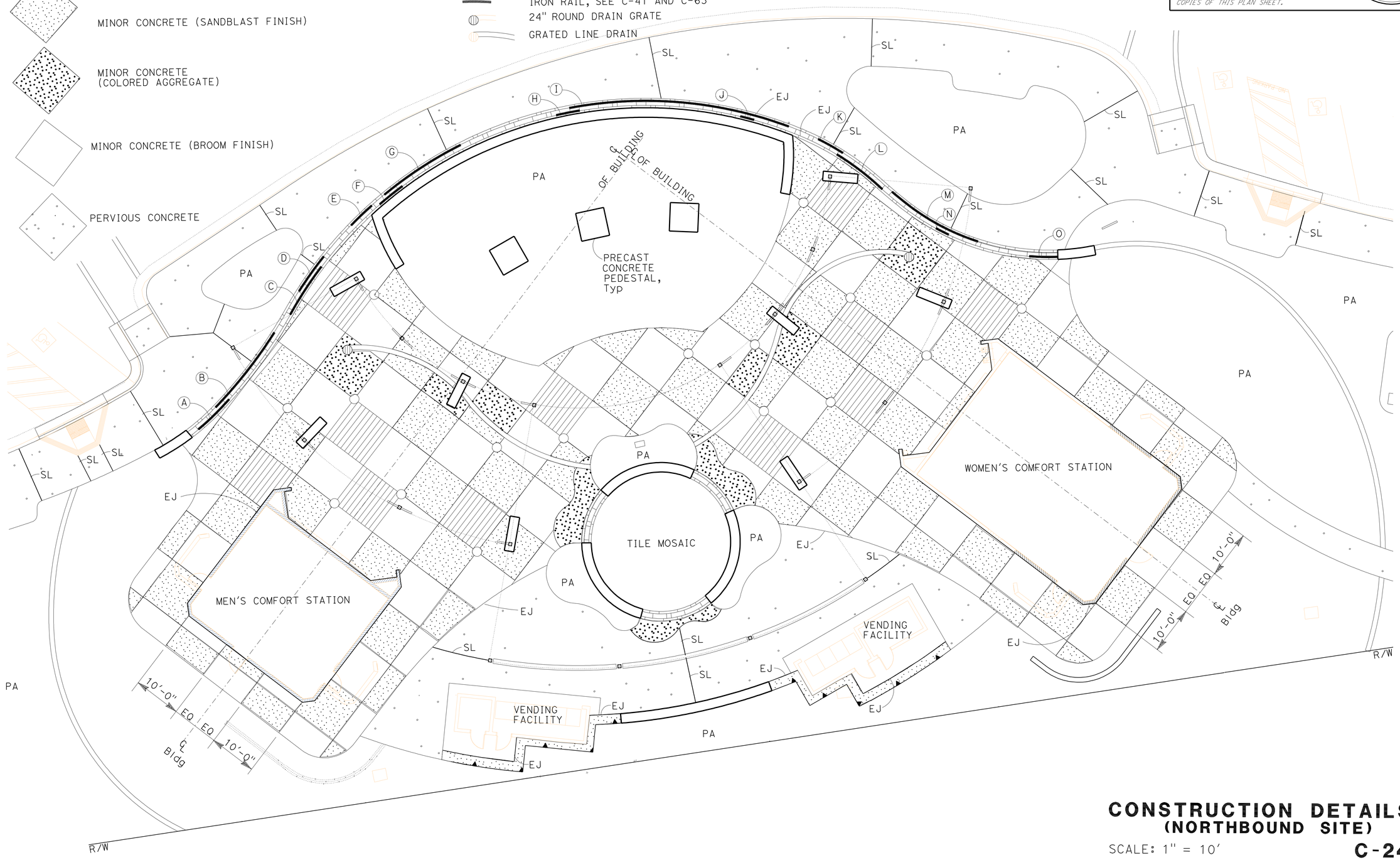


# CONSTRUCTION DETAILS
## (NORTHBOUND SITE)

SCALE: 1" = 10'

**C-24**

STATE OF CALIFORNIA - DEPARTMENT OF TRANSPORTATION
Caltrans® LANDSCAPE ARCHITECTURE

FUNCTIONAL SUPERVISOR: ELBERT COX
CALCULATED-DESIGNED BY: GLORIA RAMIREZ
CHECKED BY: RICHARD COLE
REVISED BY
DATE REVISED

LAST REVISION 02-01-10
DATE PLOTTED => 04-OCT-2010
TIME PLOTTED => 13:40

| Dist | COUNTY | ROUTE | POST MILES TOTAL PROJECT | SHEET No. | TOTAL SHEETS |
|---|---|---|---|---|---|
| 06 | Tul | 99 | 22.4 | 40 | 335 |

Gloria Ramirez
LICENSED LANDSCAPE ARCHITECT

8-9-10
PLANS APPROVAL DATE

LICENSED LANDSCAPE ARCHITECT
GLORIA RAMIREZ No. 5985
Gloria Ramirez
Signature
04/30/10
Renewal Date
02/01/10
Date
STATE OF CALIFORNIA

*THE STATE OF CALIFORNIA OR ITS OFFICERS OR AGENTS SHALL NOT BE RESPONSIBLE FOR THE ACCURACY OR COMPLETENESS OF SCANNED COPIES OF THIS PLAN SHEET.*

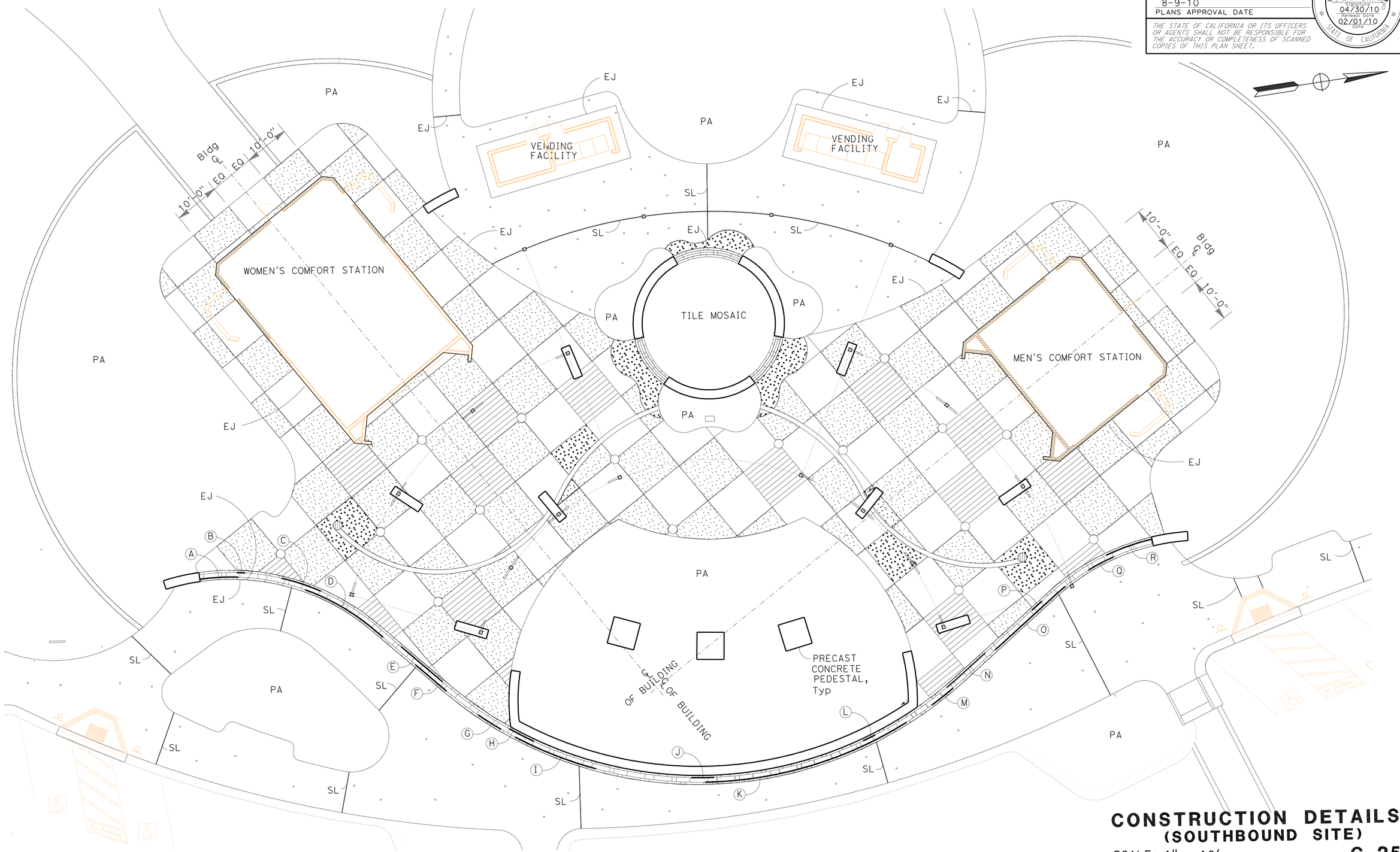


# CONSTRUCTION DETAILS
## (SOUTHBOUND SITE)

SCALE: 1" = 10'

C-25

STATE OF CALIFORNIA - DEPARTMENT OF TRANSPORTATION
Caltrans® LANDSCAPE ARCHITECTURE

FUNCTIONAL SUPERVISOR: ELBERT COX
CALCULATED-DESIGNED BY: GLORIA RAMIREZ
CHECKED BY: RICHARD COLE
REVISED BY
DATE REVISED

LAST REVISION 02-01-10
DATE PLOTTED => 17-AUG-2010
TIME PLOTTED => 08:06

| Dist | COUNTY | ROUTE | POST MILES TOTAL PROJECT | SHEET No. | TOTAL SHEETS |
|---|---|---|---|---|---|
| 06 | Tul | 99 | 22.4 | 41 | 335 |

Gloria Ramirez
LICENSED LANDSCAPE ARCHITECT

8-9-10
PLANS APPROVAL DATE

LICENSED LANDSCAPE ARCHITECT GLORIA RAMIREZ No. 5085 Gloria Ramirez Expiration Date 04/30/12 Renewal Date 06/14/10 Date STATE OF CALIFORNIA

*THE STATE OF CALIFORNIA OR ITS OFFICERS OR AGENTS SHALL NOT BE RESPONSIBLE FOR THE ACCURACY OR COMPLETENESS OF SCANNED COPIES OF THIS PLAN SHEET.*

## LEGEND DESCRIPTION

- XX.X — GRAPHIC IMAGE NUMBER, SEE Q-4
- DISPLAY PANEL AT ARBOR COLUMNS
- DISPLAY PANEL AT RETAINING WALL
- SEATWALL OR MONUMENT WITH GRAPHIC IMAGE
- BRONZE PLAQUE WITH GRAPHIC IMAGE
- T1 — CONCRETE PAVER GRAPHIC IMAGE NUMBER

## ABBREVIATION:

EQ EQUAL

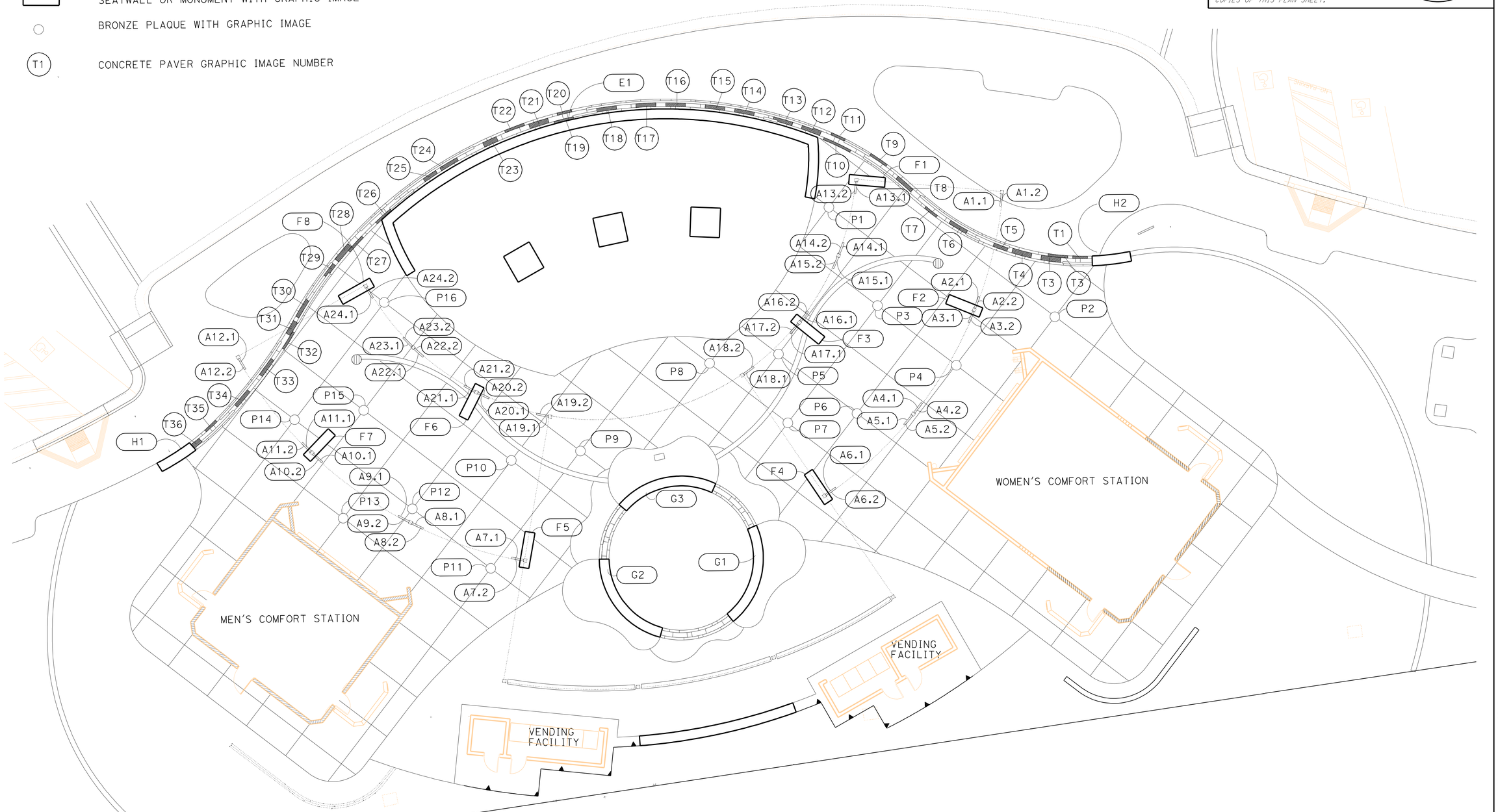


## DISPLAY PANELS AND IMAGES
(SEE SHEET Q-4)

## CONSTRUCTION DETAILS
(NORTHBOUND SITE)

SCALE: 1" = 10'

C-26

STATE OF CALIFORNIA - DEPARTMENT OF TRANSPORTATION
Caltrans LANDSCAPE ARCHITECTURE

FUNCTIONAL SUPERVISOR: ELBERT COX

CALCULATED-DESIGNED BY: GLORIA RAMIREZ
CHECKED BY: RICHARD COLE

REVISED BY
DATE REVISED

LAST REVISION 02-01-10 | DATE PLOTTED => 17-AUG-2010 | TIME PLOTTED => 08:09

BORDER LAST REVISED 4/11/2008

RELATIVE BORDER SCALE IS IN INCHES 0 1 2 3

USERNAME => trmikesl
DGN FILE => 60A970ga026.dgn

CU 06340

EA 0A9701

| Dist | COUNTY | ROUTE | POST MILES TOTAL PROJECT | SHEET No. | TOTAL SHEETS |
|---|---|---|---|---|---|
| 06 | Tul | 99 | 22.4 | 42 | 335 |

Gloria Ramirez
LICENSED LANDSCAPE ARCHITECT

8-9-10
PLANS APPROVAL DATE

LICENSED LANDSCAPE ARCHITECT
GLORIA RAMIREZ No. 5985
Gloria Ramirez
Signature
04/30/12
Renewal Date
06/14/10
Date
STATE OF CALIFORNIA

*THE STATE OF CALIFORNIA OR ITS OFFICERS OR AGENTS SHALL NOT BE RESPONSIBLE FOR THE ACCURACY OR COMPLETENESS OF SCANNED COPIES OF THIS PLAN SHEET.*

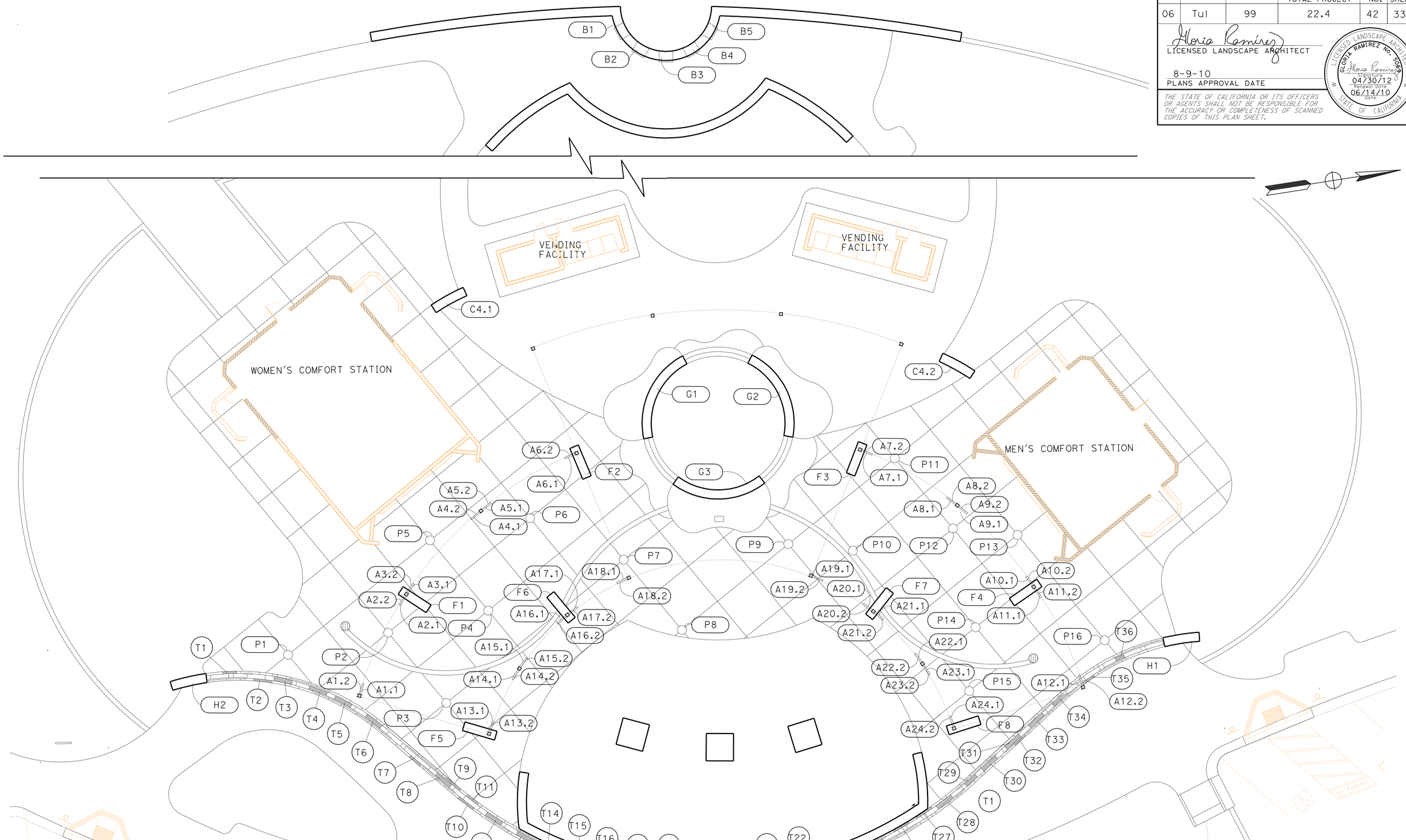


## DISPLAY PANELS AND IMAGES
(SEE SHEET Q-4)

# CONSTRUCTION DETAILS
## (SOUTHBOUND SITE)
SCALE: 1" = 10'

**C-27**

STATE OF CALIFORNIA - DEPARTMENT OF TRANSPORTATION
Caltrans® LANDSCAPE ARCHITECTURE

FUNCTIONAL SUPERVISOR: ELBERT COX

CALCULATED-DESIGNED BY: GLORIA RAMIREZ
CHECKED BY: RICHARD COLE

REVISED BY
DATE REVISED

LAST REVISION 02-01-10
DATE PLOTTED => 17-AUG-2010
TIME PLOTTED => 08:10

| Dist | COUNTY | ROUTE | POST MILES TOTAL PROJECT | SHEET No. | TOTAL SHEETS |
|---|---|---|---|---|---|
| 06 | Tul | 99 | 22.4 | 43 | 335 |

Gloria Ramirez
LICENSED LANDSCAPE ARCHITECT

8-9-10
PLANS APPROVAL DATE

LICENSED LANDSCAPE ARCHITECT
GLORIA RAMIREZ No. 5985
Signature
04/30/12
Renewal Date
06/14/10
Date
STATE OF CALIFORNIA

*THE STATE OF CALIFORNIA OR ITS OFFICERS OR AGENTS SHALL NOT BE RESPONSIBLE FOR THE ACCURACY OR COMPLETENESS OF SCANNED COPIES OF THIS PLAN SHEET.*

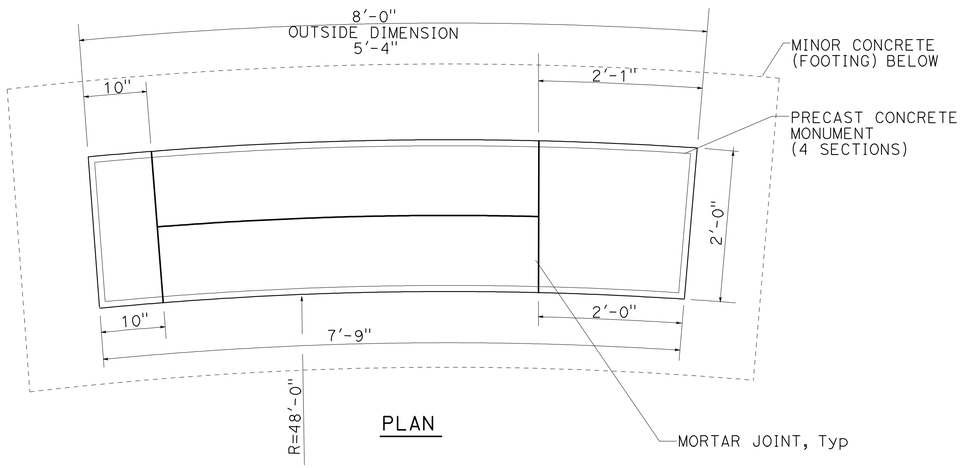


PLAN

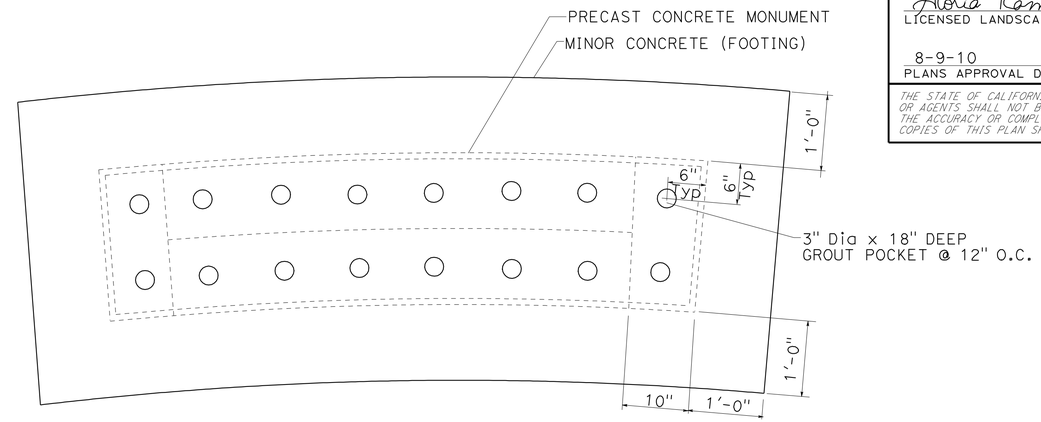


FOOTING PLAN

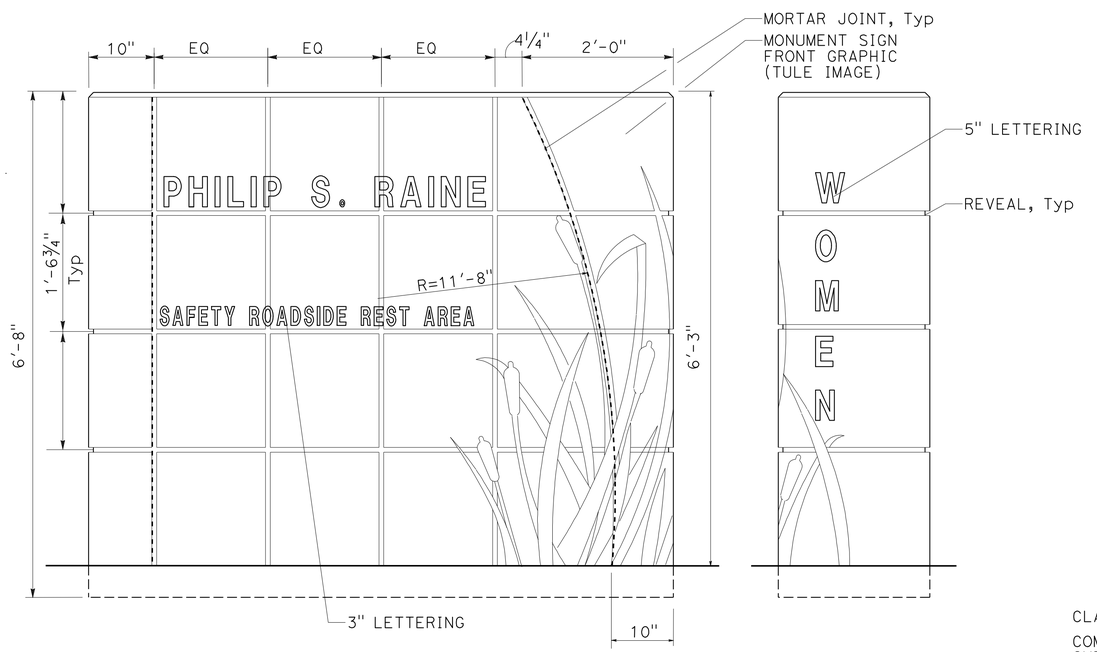


FRONT ELEVATION

END ELEVATION

FOR NB: LETTERING AND TULE IMAGE ON SOUTH END ELEVATION ONLY.
FOR SB: LETTERING AND TULE IMAGE ON NORTH END ELEVATION ONLY.

**PRECAST CONCRETE MONUMENT (GRAPHIC IMAGE H2)**

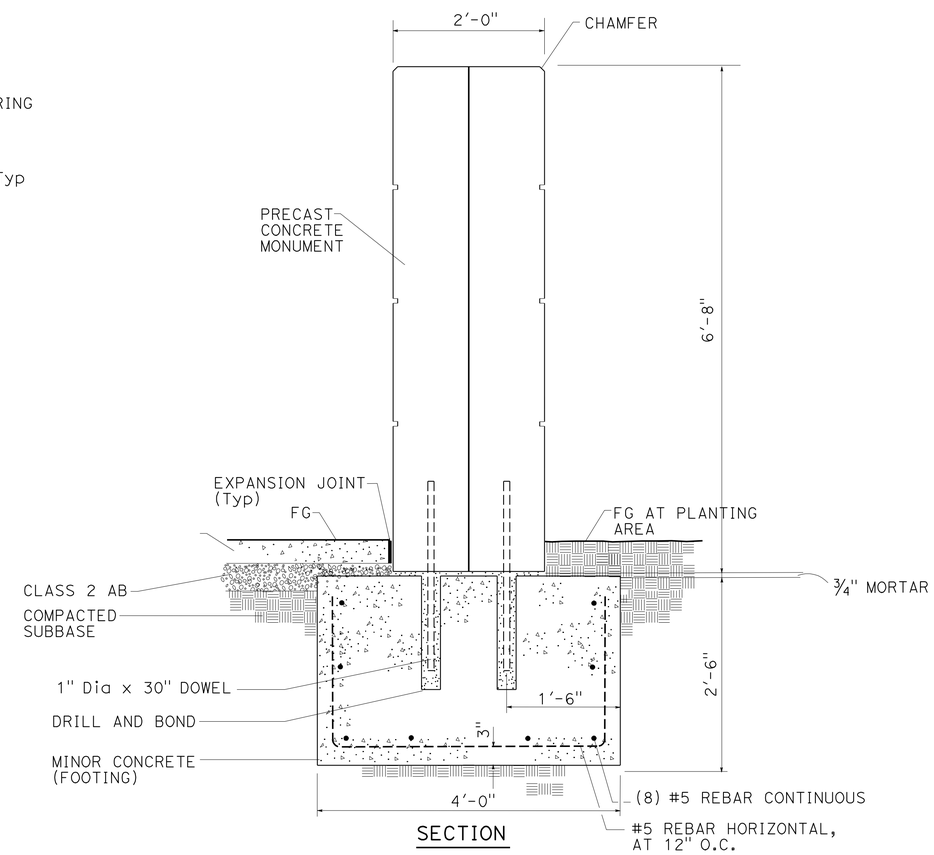


SECTION

# CONSTRUCTION DETAILS

NO SCALE

C-28

STATE OF CALIFORNIA - DEPARTMENT OF TRANSPORTATION
Caltrans® LANDSCAPE ARCHITECTURE

FUNCTIONAL SUPERVISOR: ELBERT COX
CALCULATED-DESIGNED BY: GLORIA RAMIREZ
CHECKED BY: RICHARD COLE
REVISED BY
DATE REVISED

LAST REVISION 02-01-10
DATE PLOTTED => 04-OCT-2010
TIME PLOTTED => 13:52

| Dist | COUNTY | ROUTE | POST MILES TOTAL PROJECT | SHEET No. | TOTAL SHEETS |
|---|---|---|---|---|---|
| 06 | Tul | 99 | 22.4 | 44 | 335 |

Gloria Ramirez
LICENSED LANDSCAPE ARCHITECT

8-9-10
PLANS APPROVAL DATE

LICENSED LANDSCAPE ARCHITECT
GLORIA RAMIREZ No. 5085
Signature
04/30/12
Renewal Date
06/14/10
Date
STATE OF CALIFORNIA

*THE STATE OF CALIFORNIA OR ITS OFFICERS OR AGENTS SHALL NOT BE RESPONSIBLE FOR THE ACCURACY OR COMPLETENESS OF SCANNED COPIES OF THIS PLAN SHEET.*

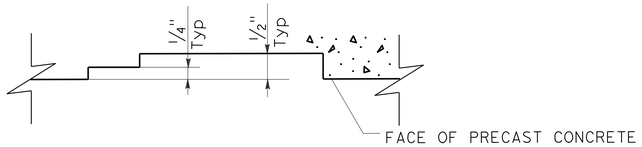


PLAN

**TYPICAL CAST IMAGE DEPTH (TULE GRAPHIC)**

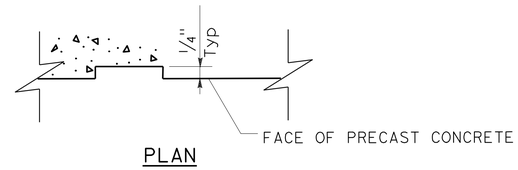


PLAN

**TYPICAL CAST IMAGE DEPTH (TEXT)**

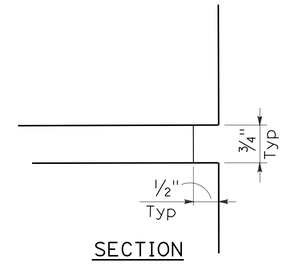


SECTION

**TYPICAL REVEAL DETAIL**

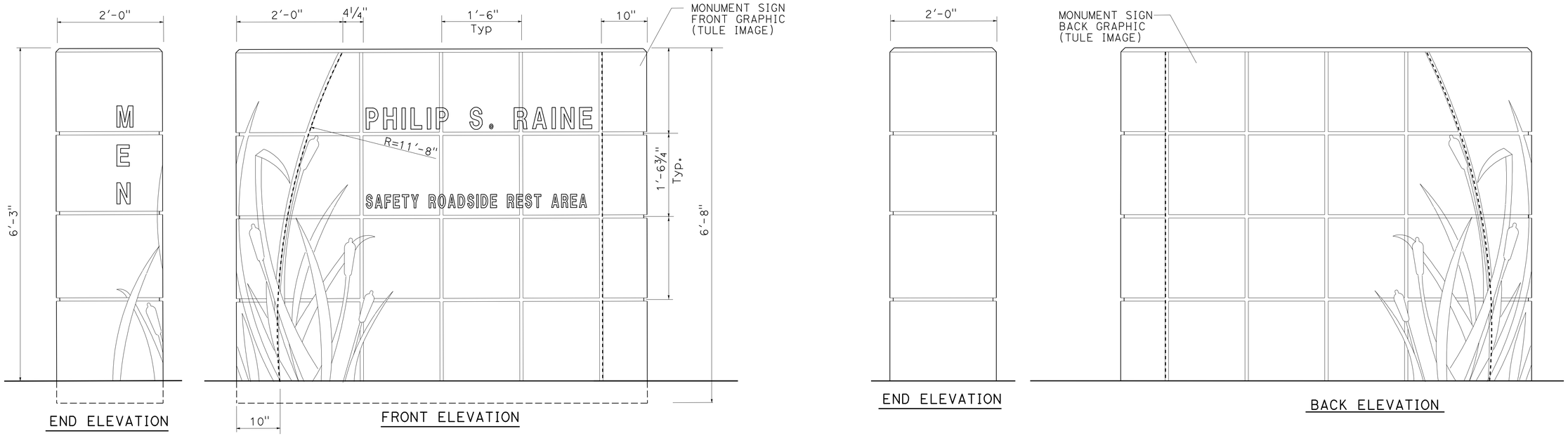


**PRECAST CONCRETE MONUMENT (GRAPHIC IMAGE H1)**

# CONSTRUCTION DETAILS

NO SCALE

**C-29**

STATE OF CALIFORNIA - DEPARTMENT OF TRANSPORTATION
Caltrans® LANDSCAPE ARCHITECTURE

FUNCTIONAL SUPERVISOR: ELBERT COX
CALCULATED-DESIGNED BY: GLORIA RAMIREZ
CHECKED BY: RICHARD COLE
REVISED BY
DATE REVISED

LAST REVISION 02-01-10
DATE PLOTTED => 17-AUG-2010
TIME PLOTTED => 08:13

| Dist | COUNTY | ROUTE | POST MILES TOTAL PROJECT | SHEET No. | TOTAL SHEETS |
|---|---|---|---|---|---|
| 06 | Tul | 99 | 22.4 | 45 | 335 |

Gloria Ramirez
LICENSED LANDSCAPE ARCHITECT

8-9-10
PLANS APPROVAL DATE

LICENSED LANDSCAPE ARCHITECT GLORIA RAMIREZ No. 5089 Signature 04/30/12 Renewal Date 07/12/10 Date STATE OF CALIFORNIA

*THE STATE OF CALIFORNIA OR ITS OFFICERS OR AGENTS SHALL NOT BE RESPONSIBLE FOR THE ACCURACY OR COMPLETENESS OF SCANNED COPIES OF THIS PLAN SHEET.*

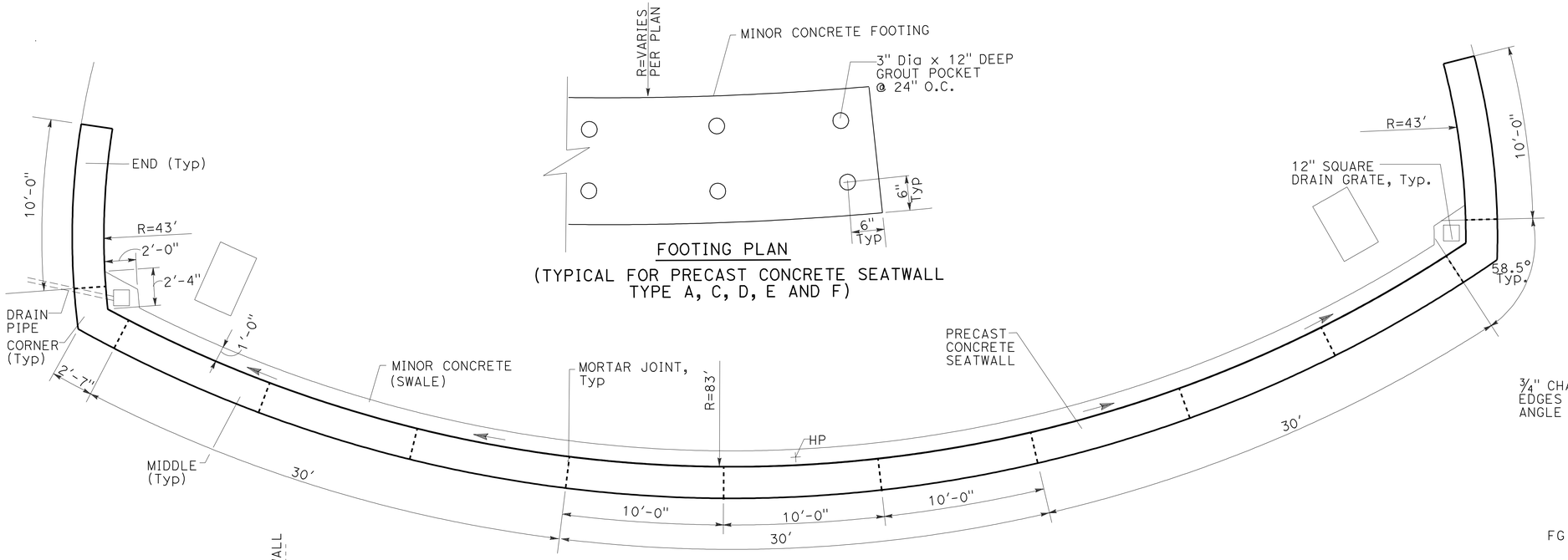


FOOTING PLAN
(TYPICAL FOR PRECAST CONCRETE SEATWALL TYPE A, C, D, E AND F)

PLAN

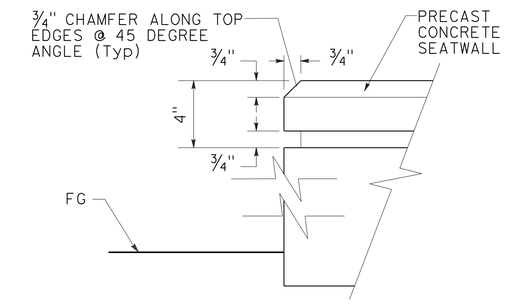


CHAMFER AND REVEAL DETAIL

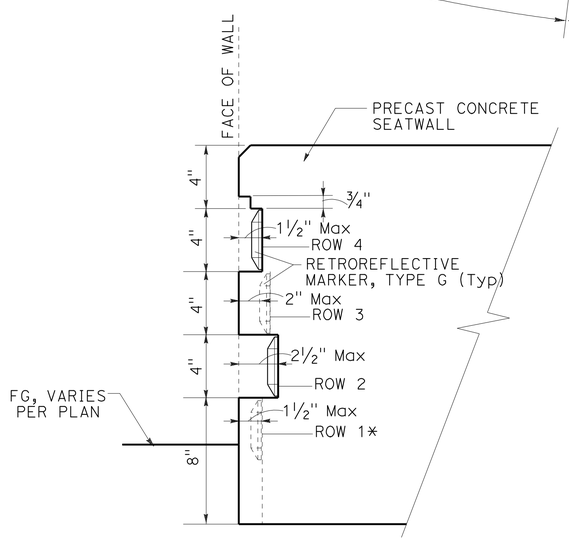


SECTION

WALL TEXTURE UNDULATION

| ROW | A | B |
|---|---|---|
| 1* | 12" | 1.5" |
| 2 | 20" | 2.5" |
| 3 | 15" | 2.0" |
| 4 | 12" | 1.5" |

*INSTALL REFLECTORS ON ROW 1 ON TOP 4" OF ROW

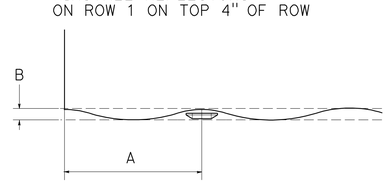


WALL TEXTURE UNDULATION
PLAN

RETROREFLECTIVE MARKER, TYPE G

| ROW | DISTANCE FROM START OF PATTERN IN INCHES | | | | |
|---|---|---|---|---|---|
| 1* | 18 | 42 | 66 | 78 | 114 |
| 2 | 0 | 40 | 60 | 100 | - |
| 3 | 22.5 | 37.5 | 82.5 | 112.5 | - |
| 4 | 6 | 18 | 52 | 78 | 102 |

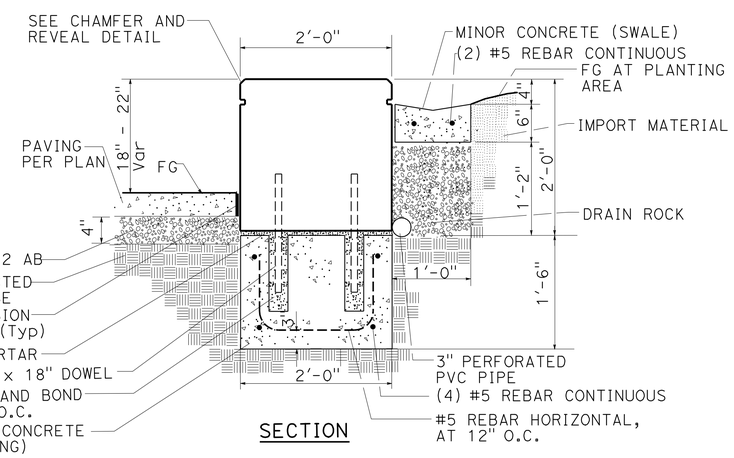


SECTION

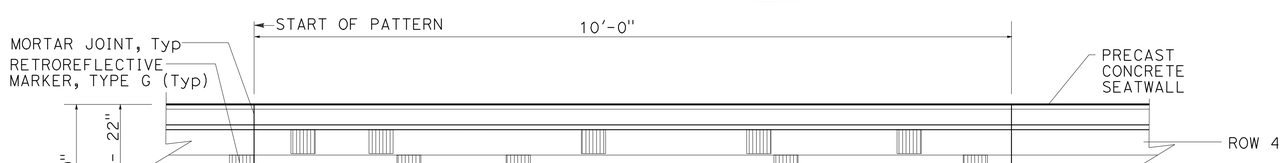


ELEVATION

**PRECAST CONCRETE SEATWALL (TYPE A)**

# CONSTRUCTION DETAILS

NO SCALE

**C-30**

STATE OF CALIFORNIA - DEPARTMENT OF TRANSPORTATION
Caltrans® LANDSCAPE ARCHITECTURE

FUNCTIONAL SUPERVISOR: ELBERT COX
CALCULATED-DESIGNED BY: GLORIA RAMIREZ
CHECKED BY: RICHARD COLE
REVISED BY
DATE REVISED

LAST REVISION 07-12-10 | DATE PLOTTED => 17-AUG-2010 | TIME PLOTTED => 08:15

| Dist | COUNTY | ROUTE | POST MILES TOTAL PROJECT | SHEET No. | TOTAL SHEETS |
|---|---|---|---|---|---|
| 06 | Tul | 99 | 22.4 | 46 | 335 |

Gloria Ramirez
LICENSED LANDSCAPE ARCHITECT

8-9-10
PLANS APPROVAL DATE

LICENSED LANDSCAPE ARCHITECT GLORIA RAMIREZ No. 5085 Signature Gloria Ramirez Renewal Date 04/30/12 Date 06/14/10 STATE OF CALIFORNIA

*THE STATE OF CALIFORNIA OR ITS OFFICERS OR AGENTS SHALL NOT BE RESPONSIBLE FOR THE ACCURACY OR COMPLETENESS OF SCANNED COPIES OF THIS PLAN SHEET.*

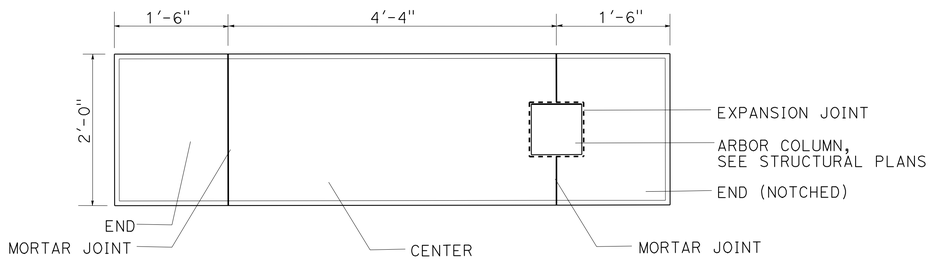


PLAN

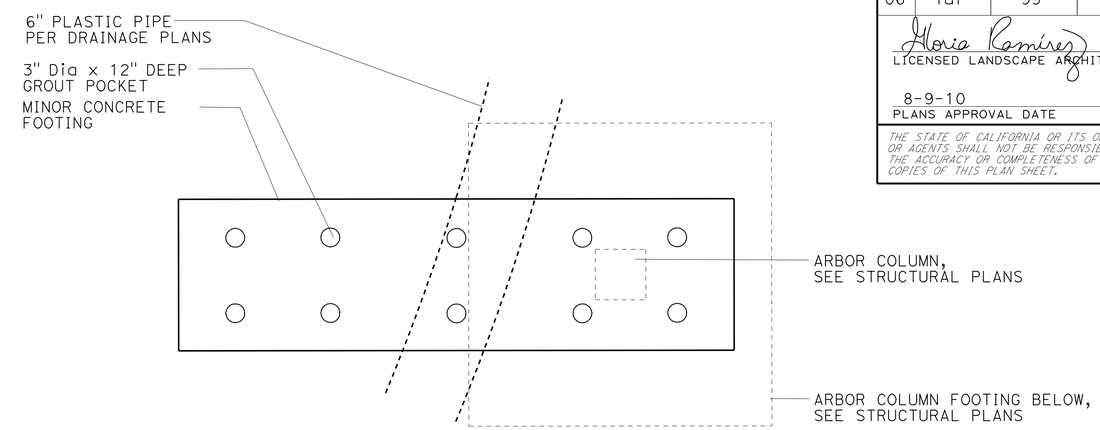


FOOTING PLAN

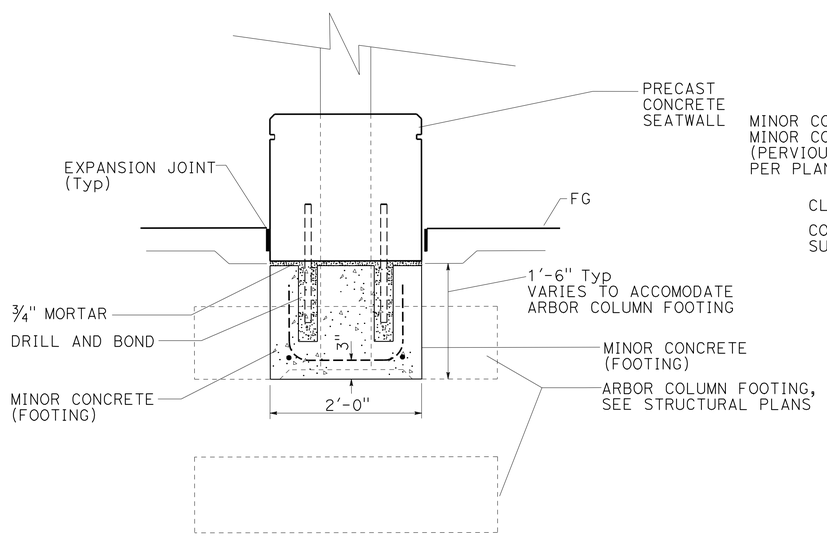


END SECTION

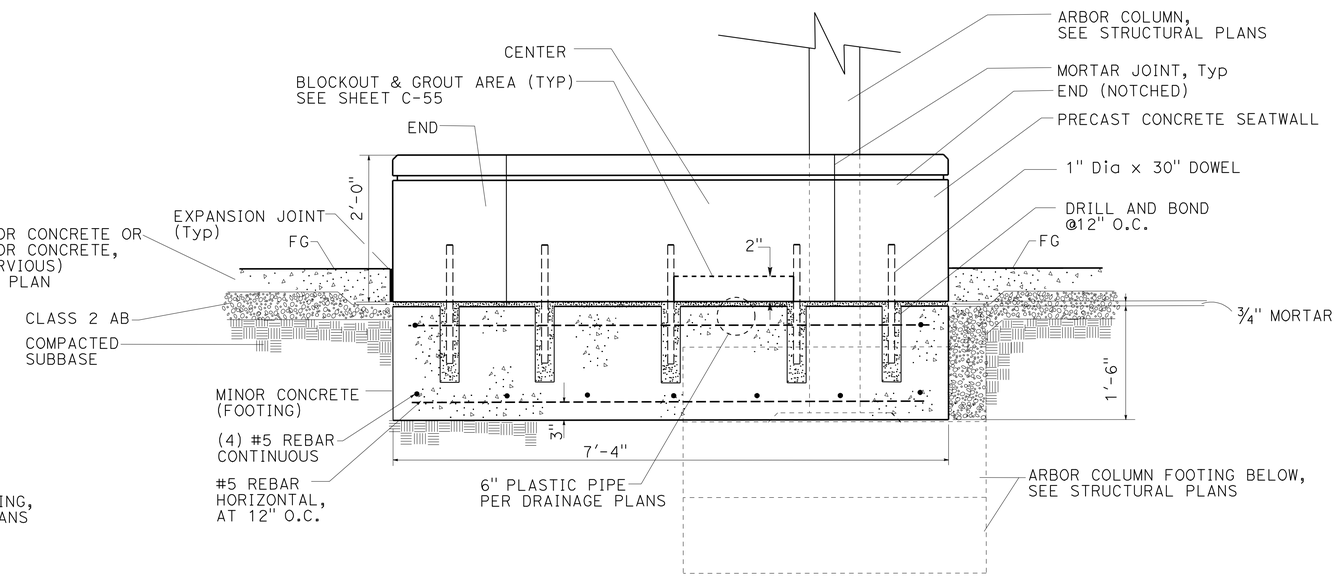


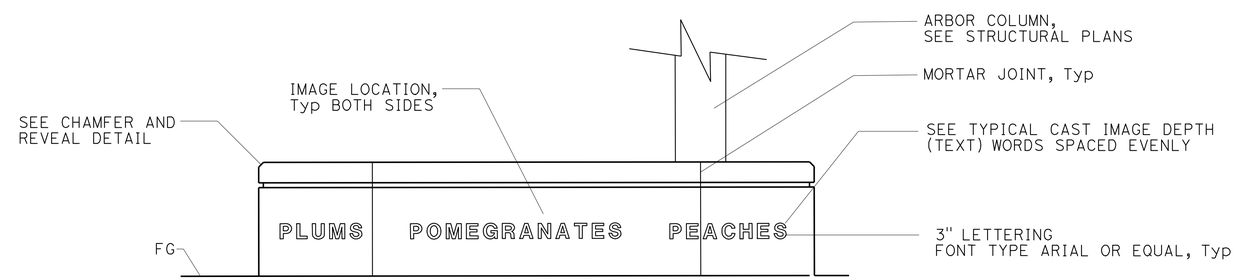


ELEVATION

# PRECAST CONCRETE SEATWALL (TYPE B)

# CONSTRUCTION DETAILS

NO SCALE

C-31

STATE OF CALIFORNIA - DEPARTMENT OF TRANSPORTATION
Caltrans® LANDSCAPE ARCHITECTURE

FUNCTIONAL SUPERVISOR: ELBERT COX
CALCULATED-DESIGNED BY: GLORIA RAMIREZ
CHECKED BY: RICHARD COLE
REVISED BY
DATE REVISED

LAST REVISION 02-01-10 | DATE PLOTTED => 04-OCT-2010 | TIME PLOTTED => 14:12

| Dist | COUNTY | ROUTE | POST MILES TOTAL PROJECT | SHEET No. | TOTAL SHEETS |
|---|---|---|---|---|---|
| 06 | Tul | 99 | 22.4 | 47 | 335 |

Gloria Ramirez
LICENSED LANDSCAPE ARCHITECT

8-9-10
PLANS APPROVAL DATE

LICENSED LANDSCAPE ARCHITECT GLORIA RAMIREZ No. 5985 Signature 04/30/10 Renewal Date 02/01/10 Date STATE OF CALIFORNIA

*THE STATE OF CALIFORNIA OR ITS OFFICERS OR AGENTS SHALL NOT BE RESPONSIBLE FOR THE ACCURACY OR COMPLETENESS OF SCANNED COPIES OF THIS PLAN SHEET.*

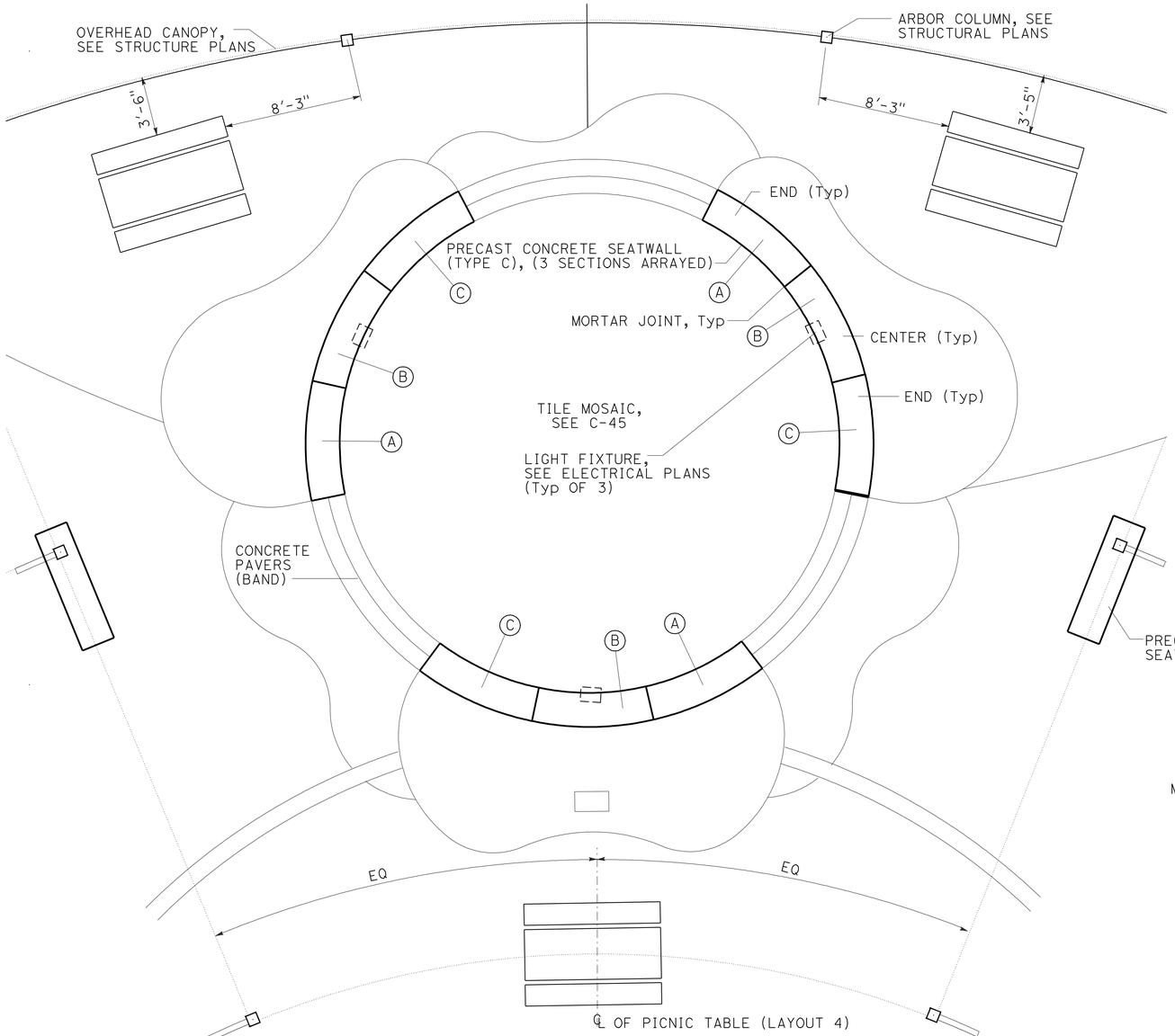


SEATWALL LAYOUT

## LEGEND:

(#) CAST WILDLIFE GRAPHIC ½" DEPTH, SEE GRAPHICS ON C-38.

## WILD LIFE GRAPHICS (SEATWALL TYPE C)

| SEATWALL SECTION | GRAPHIC LOCATION | | | | | | | |
|---|---|---|---|---|---|---|---|---|
| | (1) | (2) | (3) | (4) | (5) | (6) | (7) | (8) |
| A | BIRD | FROG | DRAGONFLY | KANGAROO RAT | BUTTERFLY | OWL | HUMMING BIRD | DUCK |
| B | BIRD | FROG | HUMMING BIRD | OWL | BIRD | FROG | — | — |
| C | DRAGONFLY | OWL | BIRD | FROG | HUMMING BIRD | FROG | HUMMING BIRD | OWL |

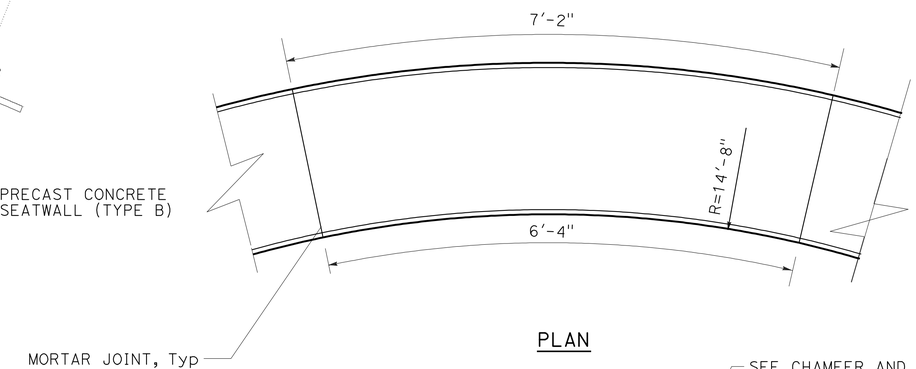


PLAN

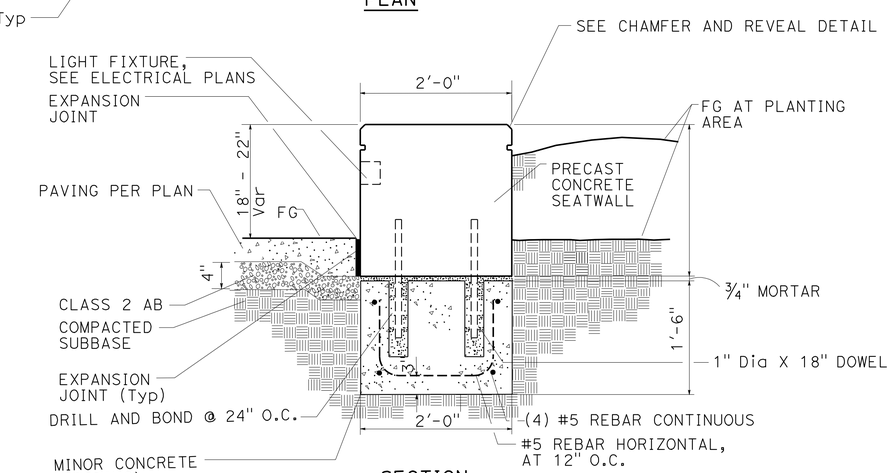


SECTION

(TYPICAL FOR PRECAST CONCRETE SEATWALL TYPE C, D AND E)

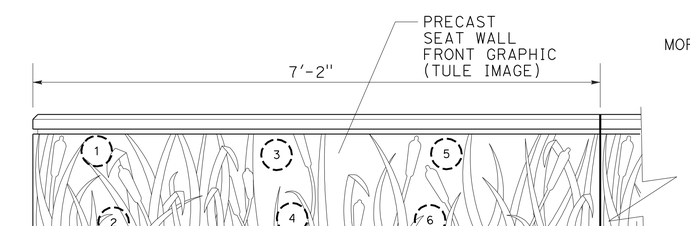


FRONT ELEVATION

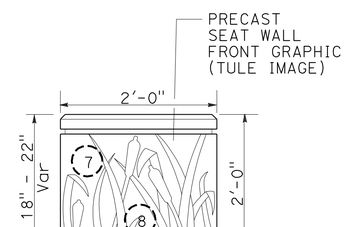


END ELEVATION

# PRECAST CONCRETE SEATWALL (TYPE C)

# CONSTRUCTION DETAILS

NO SCALE

C-32

STATE OF CALIFORNIA - DEPARTMENT OF TRANSPORTATION
Caltrans® LANDSCAPE ARCHITECTURE
FUNCTIONAL SUPERVISOR: ELBERT COX
CALCULATED-DESIGNED BY: GLORIA RAMIREZ
CHECKED BY: RICHARD COLE
REVISED BY
DATE REVISED

LAST REVISION 02-01-10 | DATE PLOTTED => 04-OCT-2010 | TIME PLOTTED => 14:01

| Dist | COUNTY | ROUTE | POST MILES TOTAL PROJECT | SHEET No. | TOTAL SHEETS |
|---|---|---|---|---|---|
| 06 | Tul | 99 | 22.4 | 48 | 335 |

Gloria Ramirez
LICENSED LANDSCAPE ARCHITECT

8-9-10
PLANS APPROVAL DATE

LICENSED LANDSCAPE ARCHITECT GLORIA RAMIREZ No. 5089 Signature 04/30/10 Renewal Date 02/01/10 Date STATE OF CALIFORNIA

*THE STATE OF CALIFORNIA OR ITS OFFICERS OR AGENTS SHALL NOT BE RESPONSIBLE FOR THE ACCURACY OR COMPLETENESS OF SCANNED COPIES OF THIS PLAN SHEET.*

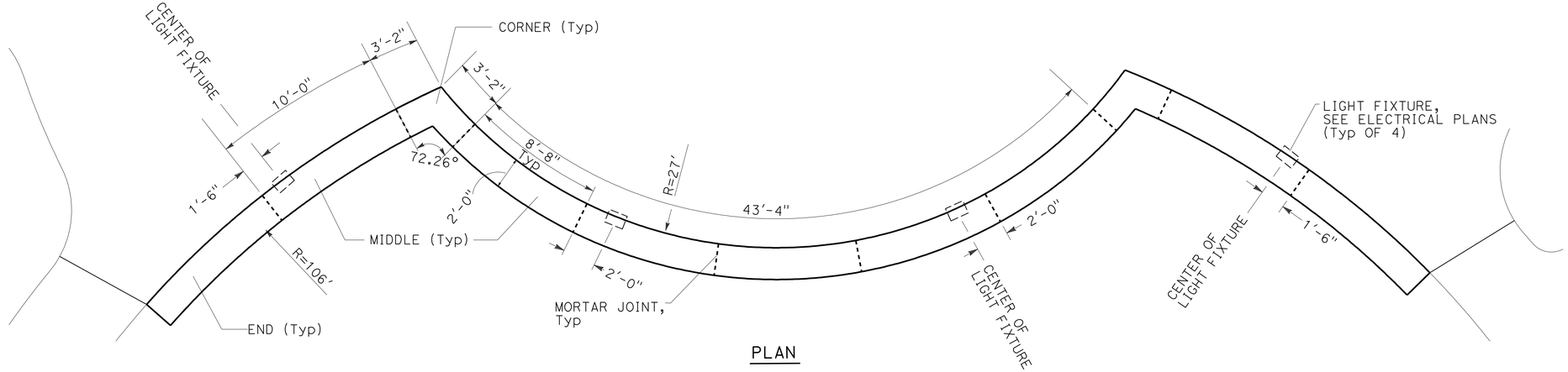


PLAN

## PRECAST CONCRETE SEATWALL (TYPE D)

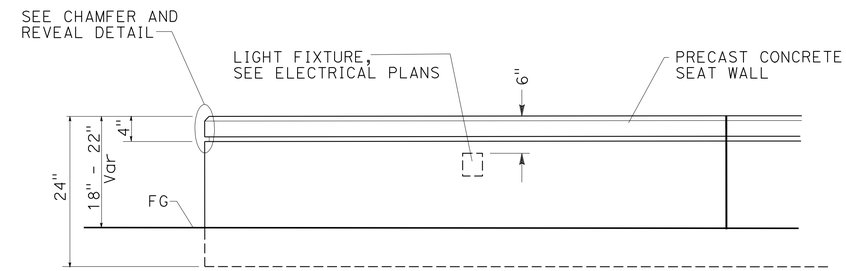


FRONT ELEVATION

(TYPICAL FOR PRECAST CONCRETE SEATWALL TYPE D, E AND F)

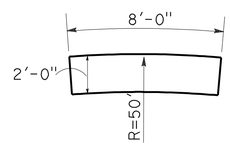


PLAN

## PRECAST CONCRETE SEATWALL (TYPE E)

## PRECAST CONCRETE IMAGES

| SEATWALL/ MONUMENT/ SIGN TYPE | IMAGE NUMBER | THEME | SUBTOTAL (EA) NB | SUBTOTAL (EA) SB | TOTAL (EA) |
|---|---|---|---|---|---|
| TYPE B (PS-2) | F1 | "ALMONDS", "TANGERINES", "PISTACHIOS" | 1 | 1 | 16 |
| | F2 | "APPLES", "POMEGRANATES", "KIWI" | 1 | 1 | |
| | F3 | "APRICOTS", "NECTARINES", "PLUMBS" | 1 | 1 | |
| | F4 | "AVOCADOS", "OLIVES", "QUINCE" | 1 | 1 | |
| | F5 | "BLUEBERRIES", "FIGS", "WALNUTS" | 1 | 1 | |
| | F6 | "CHERRIES", "PEARS", "GRAPEFRUIT" | 1 | 1 | |
| | F7 | "PEACHES", "PECANS", "LEMONS" | 1 | 1 | |
| | F8 | "GRAPES", "PERSIMMONS", "ORANGES" | 1 | 1 | |
| TYPE C (PS-3) | G1 | TULE | 1 | 1 | 6 |
| | G2 | TULE | 1 | 1 | |
| | G3 | TULE | 1 | 1 | |
| MONUMENT PM-1 | H1 | TULE | 1 | 1 | 4 |
| | H2 | TULE | 1 | 1 | |
| SIGN TYPE A (SS-1) | RS-32, RS-36 | TULE | 1 | 1 | 2 |
| SIGN TYPE B (SS-2) | RS-35 | TULE | 1 | 1 | 2 |
| SIGN TYPE C (SS-3) | RS-34 | TULE | 1 | 1 | 2 |

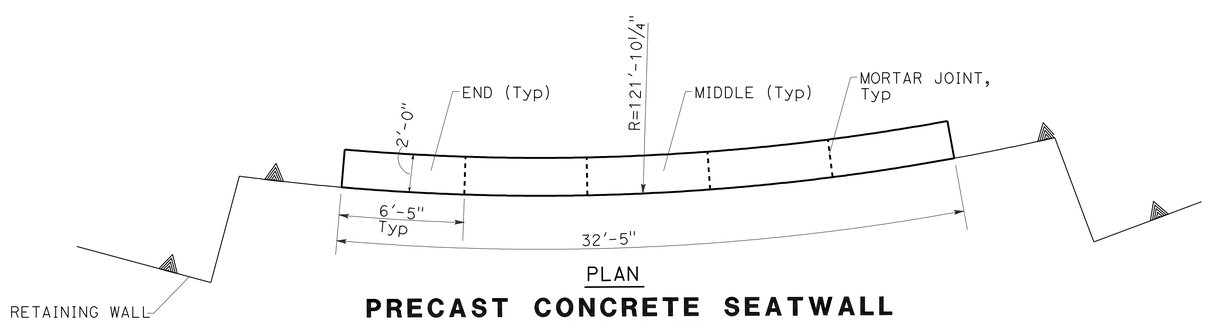


PLAN

## PRECAST CONCRETE SEATWALL (TYPE F)

# CONSTRUCTION DETAILS

NO SCALE

C-33

STATE OF CALIFORNIA - DEPARTMENT OF TRANSPORTATION
Caltrans® LANDSCAPE ARCHITECTURE

FUNCTIONAL SUPERVISOR: ELBERT COX
CALCULATED-DESIGNED BY: GLORIA RAMIREZ
CHECKED BY: RICHARD COLE
REVISED BY
DATE REVISED

LAST REVISION 02-01-10
DATE PLOTTED => 05-OCT-2010
TIME PLOTTED => 12:36

| Dist | COUNTY | ROUTE | POST MILES TOTAL PROJECT | SHEET No. | TOTAL SHEETS |
|---|---|---|---|---|---|
| 06 | Tul | 99 | 22.4 | 49 | 335 |

Gloria Ramirez
LICENSED LANDSCAPE ARCHITECT

8-9-10
PLANS APPROVAL DATE

LICENSED LANDSCAPE ARCHITECT
GLORIA RAMIREZ No. 5989
Signature
04/30/10
Renewal Date
02/01/10
Date
STATE OF CALIFORNIA

*THE STATE OF CALIFORNIA OR ITS OFFICERS OR AGENTS SHALL NOT BE RESPONSIBLE FOR THE ACCURACY OR COMPLETENESS OF SCANNED COPIES OF THIS PLAN SHEET.*

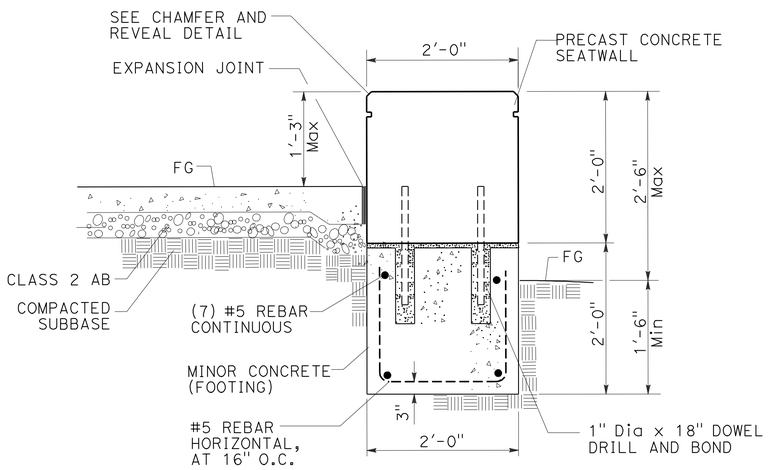


SECTION

## PRECAST CONCRETE SEATWALL (TYPE F)

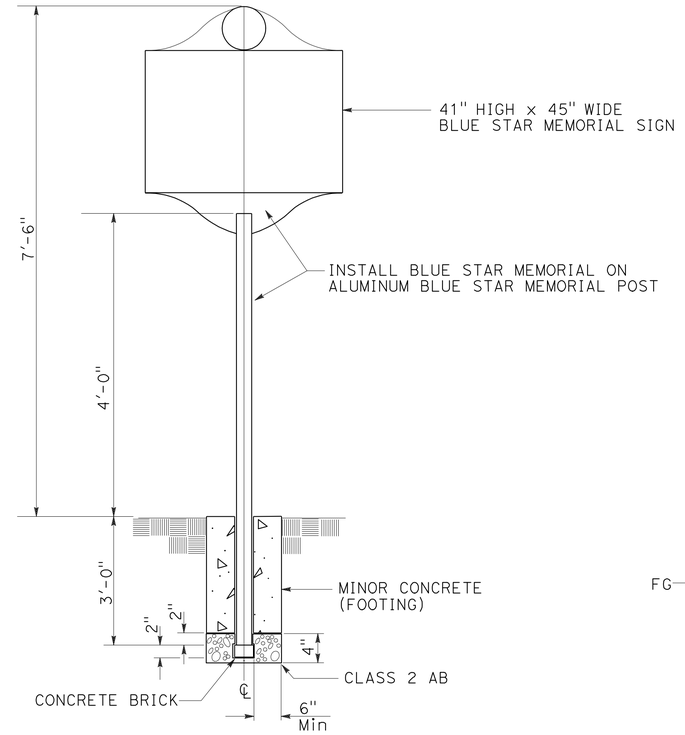


SECTION

## BLUE STAR MEMORIAL SIGN

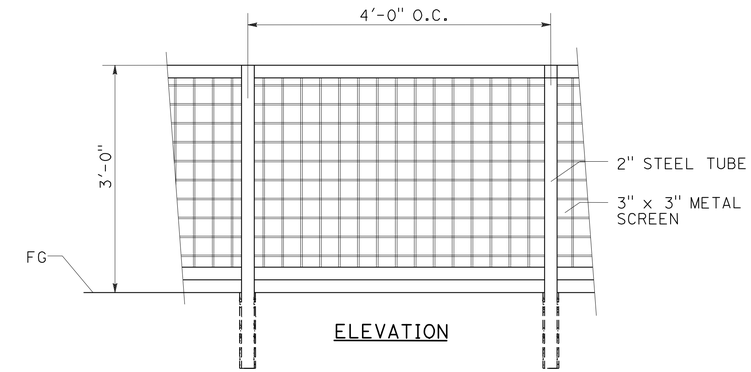


ELEVATION

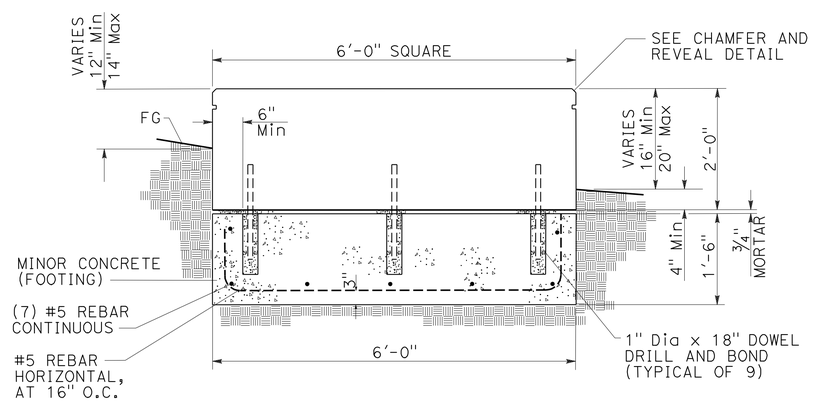


SECTION

## PRECAST CONCRETE PEDESTAL

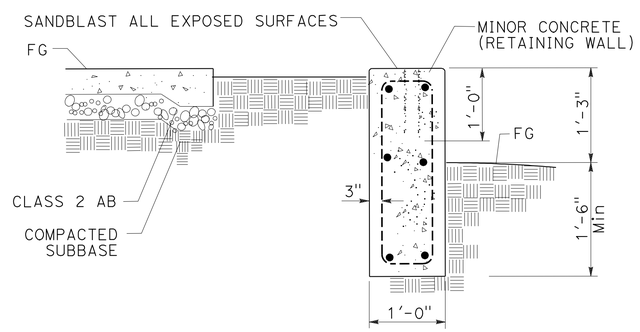


SECTION

## MINOR CONCRETE RETAINING WALL (TYPE A)

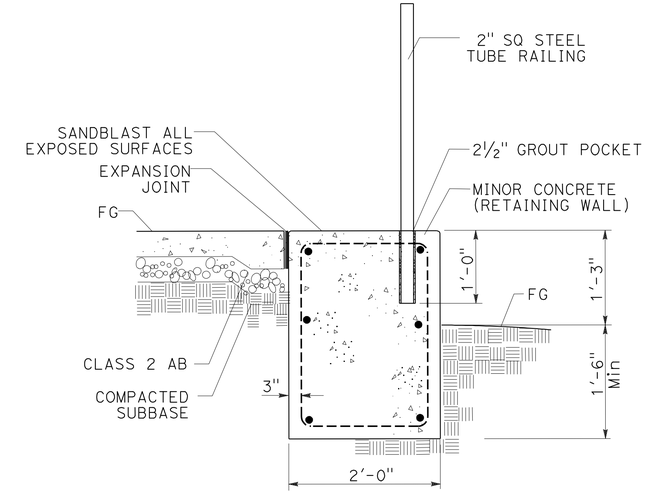


SECTION

## MINOR CONCRETE RETAINING WALL (TYPE B)

# CONSTRUCTION DETAILS

NO SCALE

C-34

STATE OF CALIFORNIA - DEPARTMENT OF TRANSPORTATION
Caltrans LANDSCAPE ARCHITECTURE

FUNCTIONAL SUPERVISOR: ELBERT COX
CALCULATED-DESIGNED BY: GLORIA RAMIREZ
CHECKED BY: RICHARD COLE
REVISED BY
DATE REVISED

LAST REVISION 02-01-10
DATE PLOTTED => 04-OCT-2010
TIME PLOTTED => 14:01

| Dist | COUNTY | ROUTE | POST MILES TOTAL PROJECT | SHEET No. | TOTAL SHEETS |
|---|---|---|---|---|---|
| 06 | Tul | 99 | 22.4 | 50 | 335 |

Gloria Ramirez
LICENSED LANDSCAPE ARCHITECT

8-9-10
PLANS APPROVAL DATE

LICENSED LANDSCAPE ARCHITECT GLORIA RAMIREZ No. 5093 Signature 04/30/12 Renewal Date 07/14/10 Date STATE OF CALIFORNIA

*THE STATE OF CALIFORNIA OR ITS OFFICERS OR AGENTS SHALL NOT BE RESPONSIBLE FOR THE ACCURACY OR COMPLETENESS OF SCANNED COPIES OF THIS PLAN SHEET.*

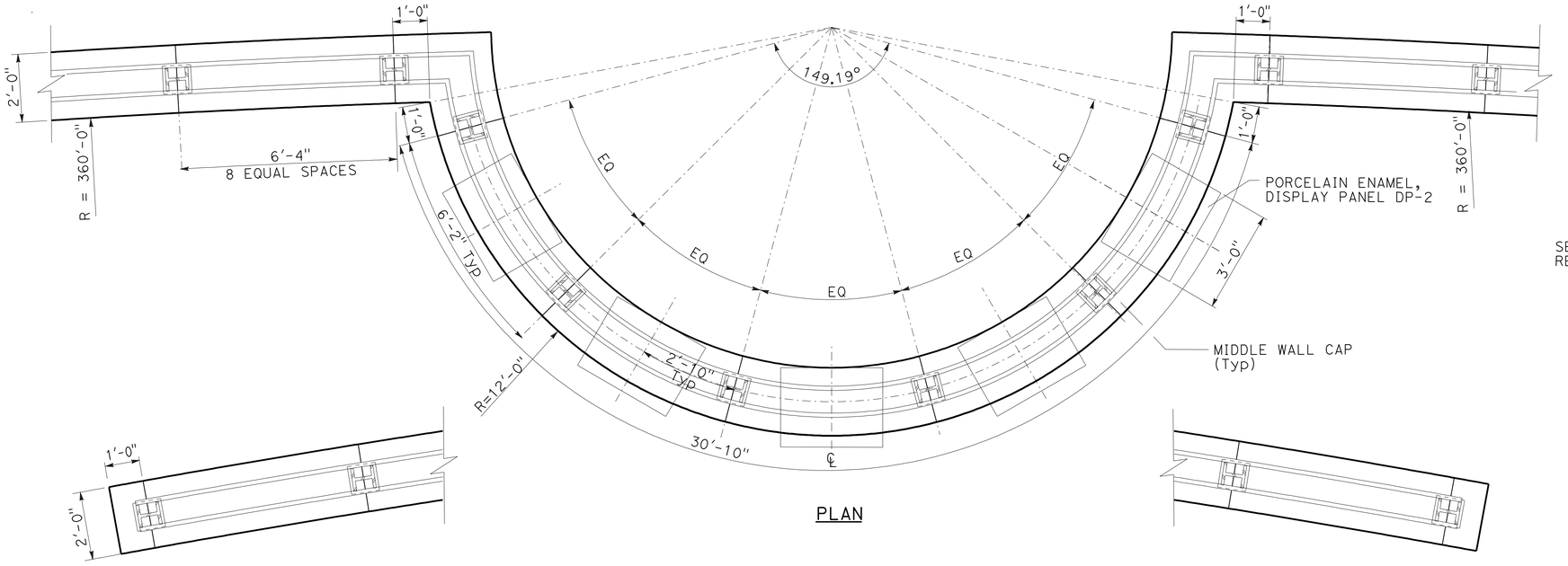


PLAN

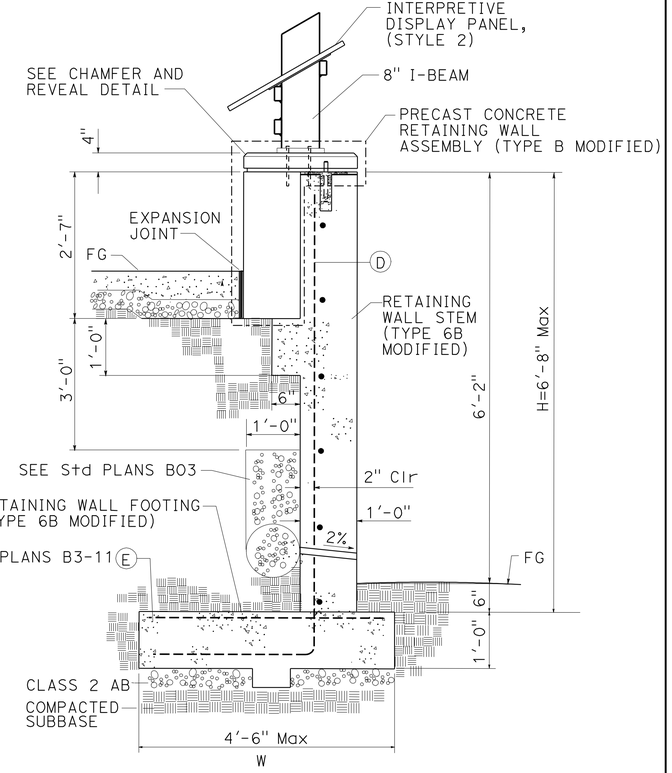


SECTION

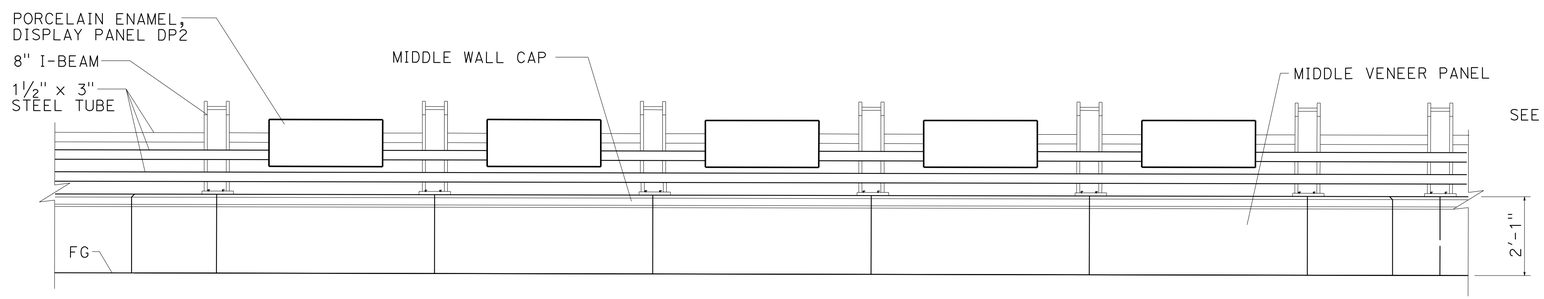


ELEVATION

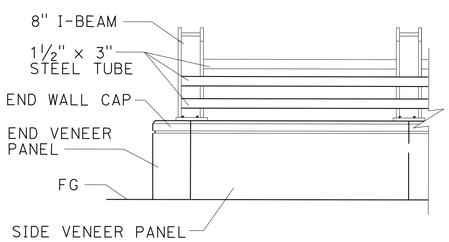


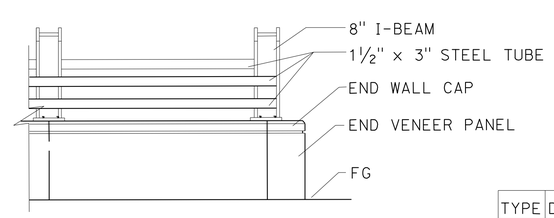


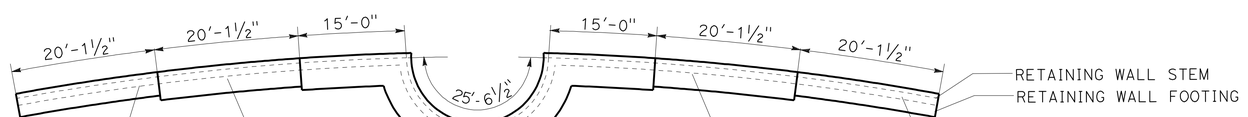


RETAINING WALL TYPE 6B MODIFIED FOOTING

## WALL REINFORCEMENT

| TYPE | DESIGN H | 3'-4" | 4'-0" | 4'-8" | 5'-4" | 6'-0" | 6'-8" |
|---|---|---|---|---|---|---|---|
| 6B | W | 2'-9" | 3'-0" | 3'-4" | 3'-9" | 4'-0" | 4'-6" |
| 6B | A | | | | #5 @ 16 | #5 @ 16 | #5 @ 12 |
| 6B | B | | | | #5 @ 16 | #5 @ 16 | #5 @ 12 |
| 6B | C | #5 @ 16 | #5 @ 16 | #5 @ 16 | | | |
| 6B | D | #5 @ 15 | #5 @ 15 | #5 @ 15 | #5 @ 15 | #5 @ 12 | #5 @ 8 |
| 6B | E | #5 @ 15 | #5 @ 15 | #5 @ 15 | #5 @ 15 | #5 @ 12 | #5 @ 8 |

# RETAINING WALL TYPE 6B MODIFIED

# CONSTRUCTION DETAILS
NO SCALE

C-35

STATE OF CALIFORNIA - DEPARTMENT OF TRANSPORTATION
Caltrans® LANDSCAPE ARCHITECTURE

FUNCTIONAL SUPERVISOR: ELBERT COX
CALCULATED-DESIGNED BY: GLORIA RAMIREZ
CHECKED BY: RICHARD COLE
REVISED BY
DATE REVISED

LAST REVISION 07-14-10 | DATE PLOTTED => 12-AUG-2010 | TIME PLOTTED => 18:09

| Dist | COUNTY | ROUTE | POST MILES TOTAL PROJECT | SHEET No. | TOTAL SHEETS |
|---|---|---|---|---|---|
| 06 | Tul | 99 | 22.4 | 51 | 335 |

Gloria Ramirez
LICENSED LANDSCAPE ARCHITECT

8-9-10
PLANS APPROVAL DATE

LICENSED LANDSCAPE ARCHITECT GLORIA RAMIREZ No. 5989 Registration 04/30/10 Renewal Date 02/01/10 Date STATE OF CALIFORNIA

*THE STATE OF CALIFORNIA OR ITS OFFICERS OR AGENTS SHALL NOT BE RESPONSIBLE FOR THE ACCURACY OR COMPLETENESS OF SCANNED COPIES OF THIS PLAN SHEET.*

**LEGEND:**

IP - INTERSECTION POINT, SEE SHEETS C-1 THROUGH C-23

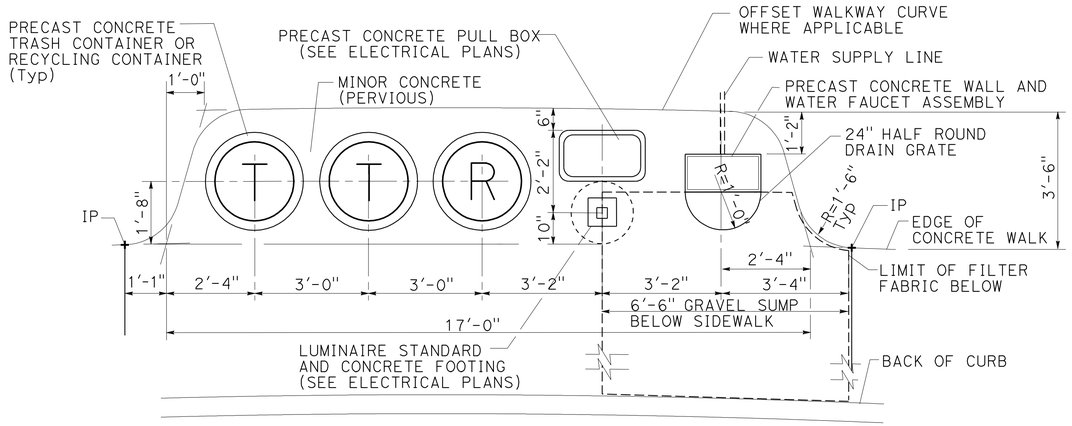


PLAN

## UTILITY ISLAND "UI-1"

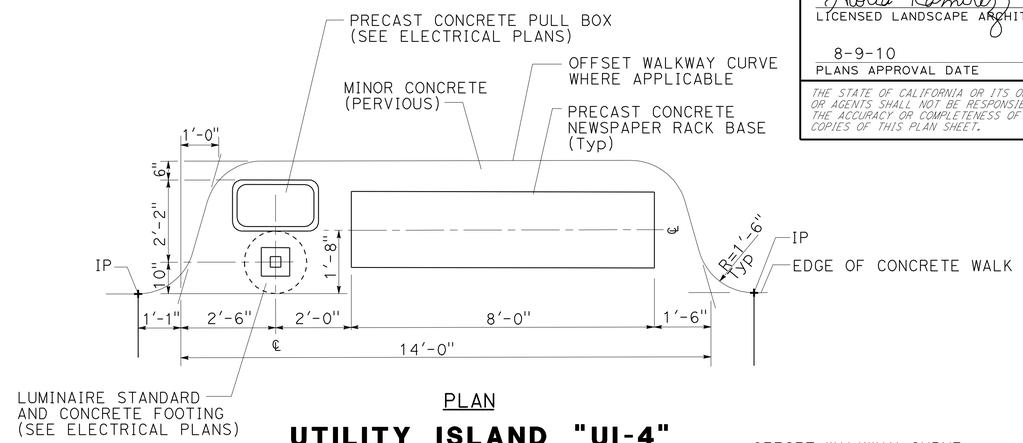


PLAN

## UTILITY ISLAND "UI-4"

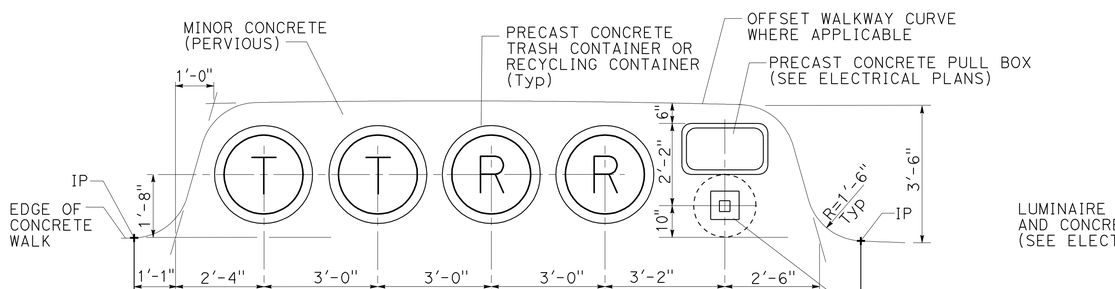


PLAN

## UTILITY ISLAND "UI-2"

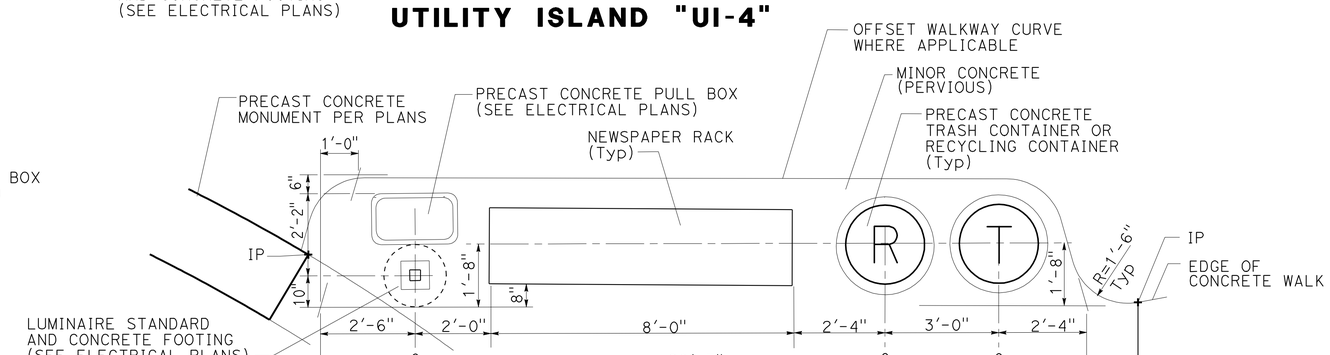


PLAN

## UTILITY ISLAND "UI-5"

PLAN

## UTILITY ISLAND "UI-3"

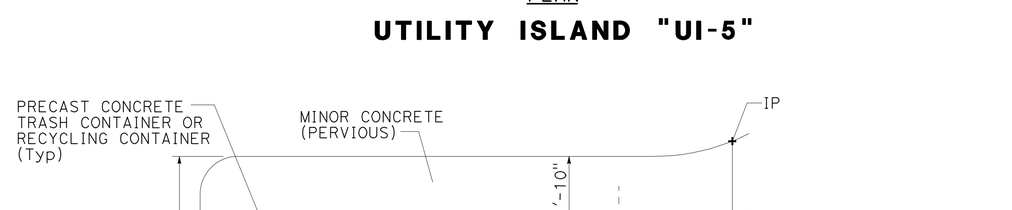


PLAN

## UTILITY ISLAND "UI-6"

# CONSTRUCTION DETAILS

NO SCALE

C-36

STATE OF CALIFORNIA - DEPARTMENT OF TRANSPORTATION
Caltrans® LANDSCAPE ARCHITECTURE

FUNCTIONAL SUPERVISOR: ELBERT COX
CALCULATED-DESIGNED BY: GLORIA RAMIREZ
CHECKED BY: RICHARD COLE
REVISED BY
DATE REVISED

LAST REVISION 02-01-10
DATE PLOTTED => 04-OCT-2010
TIME PLOTTED => 14:01

| Dist | COUNTY | ROUTE | POST MILES TOTAL PROJECT | SHEET No. | TOTAL SHEETS |
|---|---|---|---|---|---|
| 06 | Tul | 99 | 22.4 | 52 | 335 |

Gloria Ramirez
LICENSED LANDSCAPE ARCHITECT

8-9-10
PLANS APPROVAL DATE

LICENSED LANDSCAPE ARCHITECT GLORIA RAMIREZ No. 5085 Gloria Ramirez Signature 04/30/12 Renewal Date 06/14/10 Date STATE OF CALIFORNIA

*THE STATE OF CALIFORNIA OR ITS OFFICERS OR AGENTS SHALL NOT BE RESPONSIBLE FOR THE ACCURACY OR COMPLETENESS OF SCANNED COPIES OF THIS PLAN SHEET.*

**LEGEND:**

IP - INTERSECTION POINT, SEE SHEETS C-1 THROUGH C-23

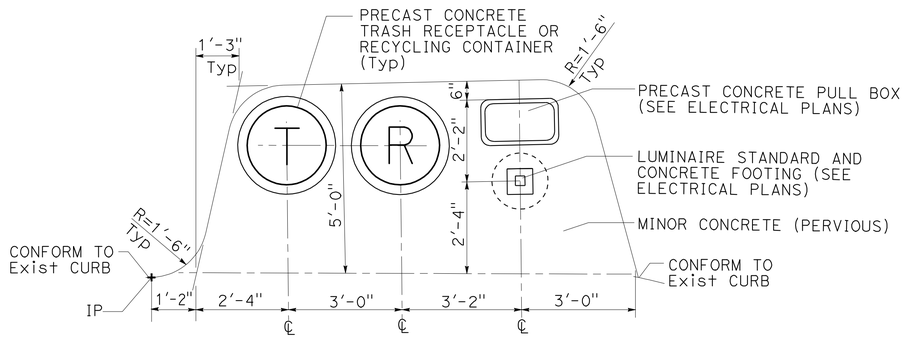


PLAN

## UTILITY ISLAND "UI-7"

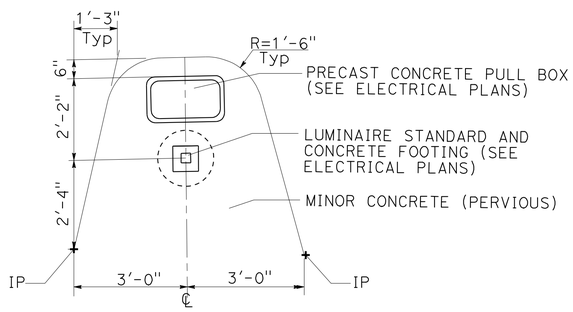


PLAN

## UTILITY ISLAND "UI-8"

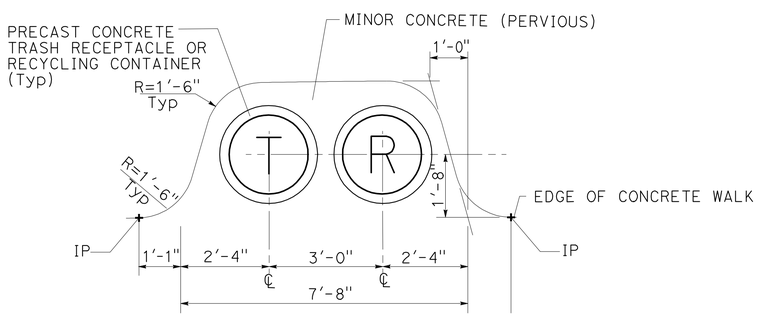


PLAN

## UTILITY ISLAND "UI-9"

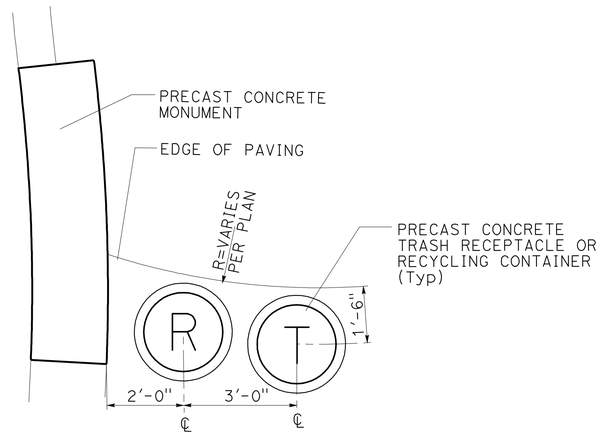


PLAN

## UTILITY ISLAND "UI-10"

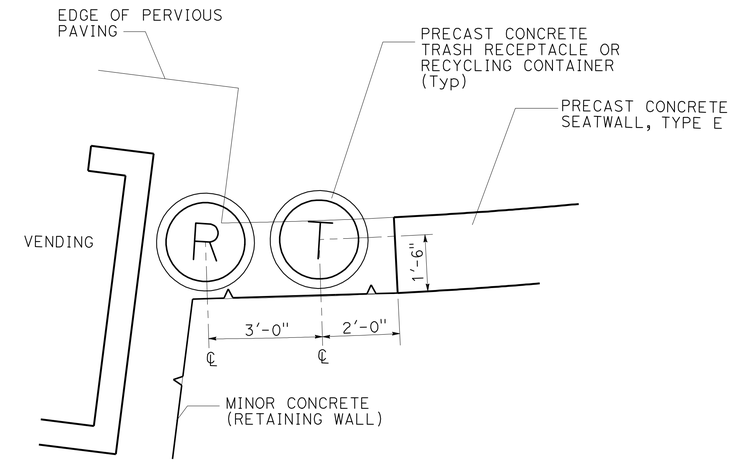


PLAN

## UTILITY ISLAND "UI-11"

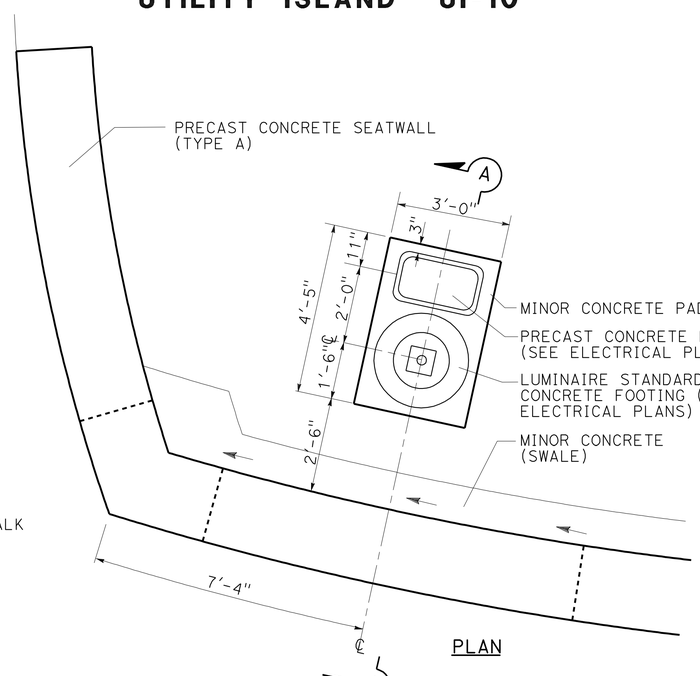


PLAN

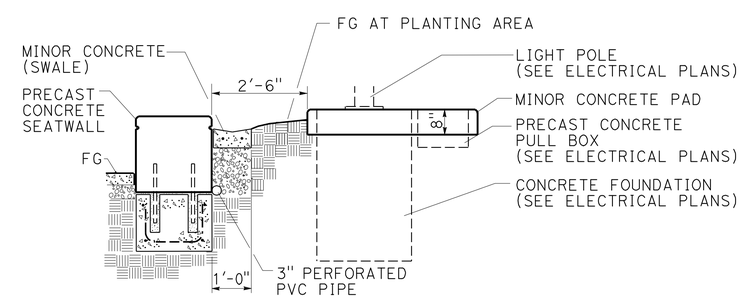


SECTION A-A

## UTILITY ISLAND "UI-12"

# CONSTRUCTION DETAILS

NO SCALE

C-37

STATE OF CALIFORNIA - DEPARTMENT OF TRANSPORTATION
Caltrans LANDSCAPE ARCHITECTURE

FUNCTIONAL SUPERVISOR: ELBERT COX
CALCULATED-DESIGNED BY: GLORIA RAMIREZ
CHECKED BY: RICHARD COLE
REVISED BY
DATE REVISED

LAST REVISION 02-01-10
DATE PLOTTED => 12-AUG-2010
TIME PLOTTED => 18:09

| Dist | COUNTY | ROUTE | POST MILES TOTAL PROJECT | SHEET No. | TOTAL SHEETS |
|---|---|---|---|---|---|
| 06 | Tul | 99 | 22.4 | 53 | 335 |

Gloria Ramirez
LICENSED LANDSCAPE ARCHITECT

8-9-10
PLANS APPROVAL DATE

LICENSED LANDSCAPE ARCHITECT GLORIA RAMIREZ No. 5085 Signature 04/30/10 Renewal Date 02/01/10 Date STATE OF CALIFORNIA

*THE STATE OF CALIFORNIA OR ITS OFFICERS OR AGENTS SHALL NOT BE RESPONSIBLE FOR THE ACCURACY OR COMPLETENESS OF SCANNED COPIES OF THIS PLAN SHEET.*

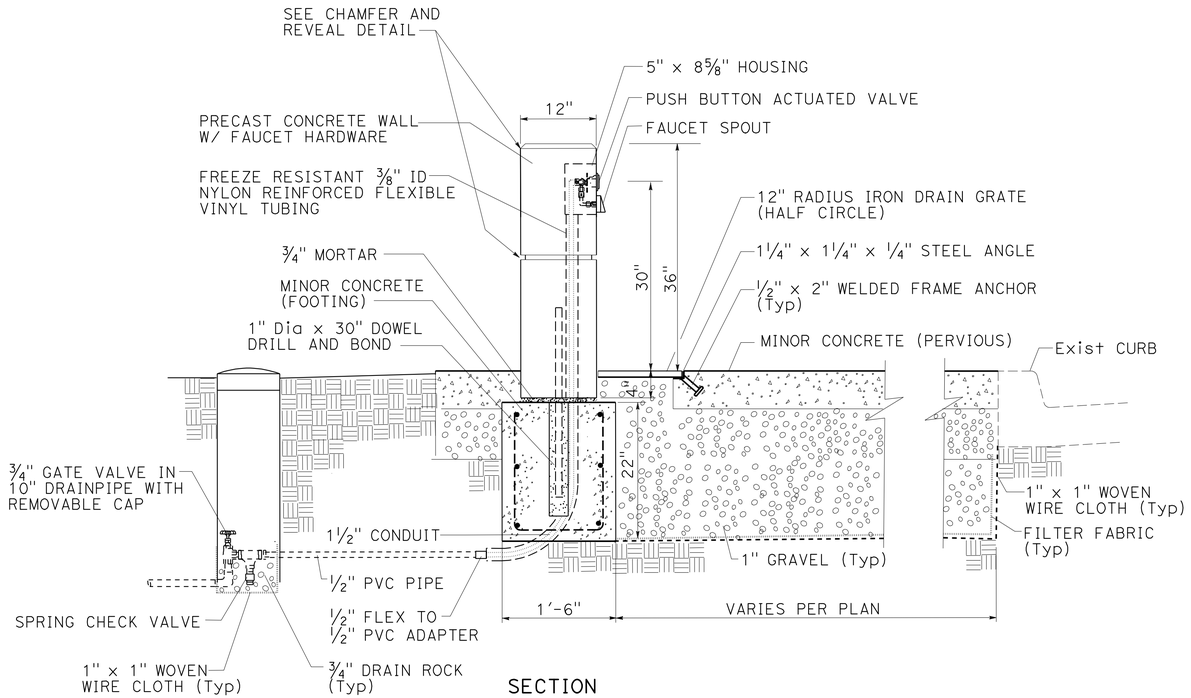


SECTION

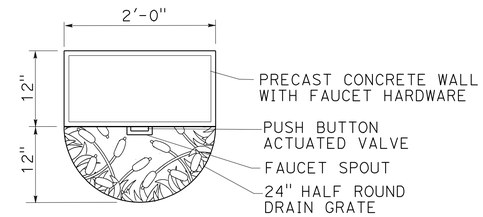


PLAN VIEW

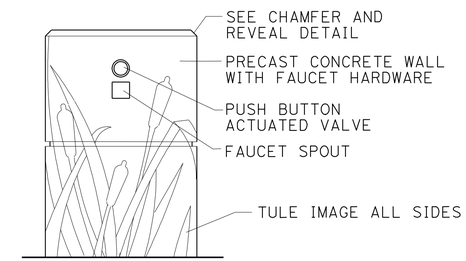


FRONT ELEVATION

## WATER FAUCET ASSEMBLY

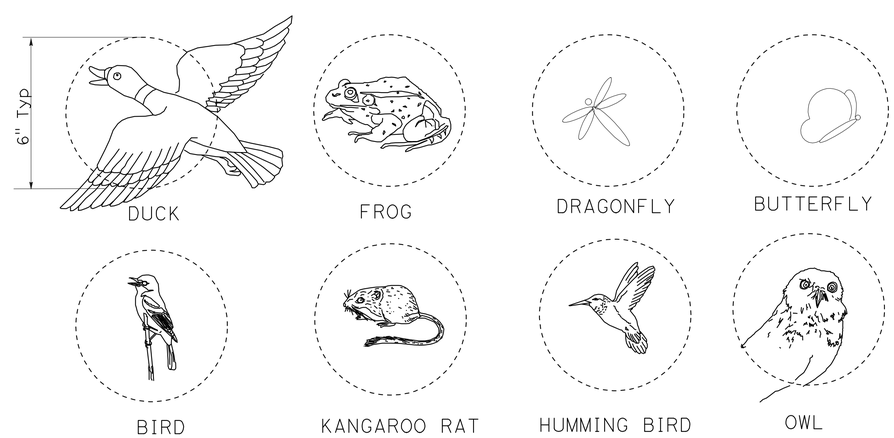


## WILD LIFE GRAPHICS (SEATWALL TYPE C)

# CONSTRUCTION DETAILS

NO SCALE

C-38

STATE OF CALIFORNIA - DEPARTMENT OF TRANSPORTATION
Caltrans LANDSCAPE ARCHITECTURE

FUNCTIONAL SUPERVISOR: ELBERT COX

CALCULATED-DESIGNED BY: GLORIA RAMIREZ
CHECKED BY: RICHARD COLE

REVISED BY
DATE REVISED

LAST REVISION 02-01-10
DATE PLOTTED => 12-AUG-2010
TIME PLOTTED => 18:09

| Dist | COUNTY | ROUTE | POST MILES TOTAL PROJECT | SHEET No. | TOTAL SHEETS |
|---|---|---|---|---|---|
| 06 | Tul | 99 | 22.4 | 54 | 335 |

Gloria Ramirez
LICENSED LANDSCAPE ARCHITECT

8-9-10
PLANS APPROVAL DATE

LICENSED LANDSCAPE ARCHITECT
GLORIA RAMIREZ No. 5089
Gloria Ramirez
Signature
04/30/10
Renewal Date
02/01/10
Date
STATE OF CALIFORNIA

*THE STATE OF CALIFORNIA OR ITS OFFICERS OR AGENTS SHALL NOT BE RESPONSIBLE FOR THE ACCURACY OR COMPLETENESS OF SCANNED COPIES OF THIS PLAN SHEET.*

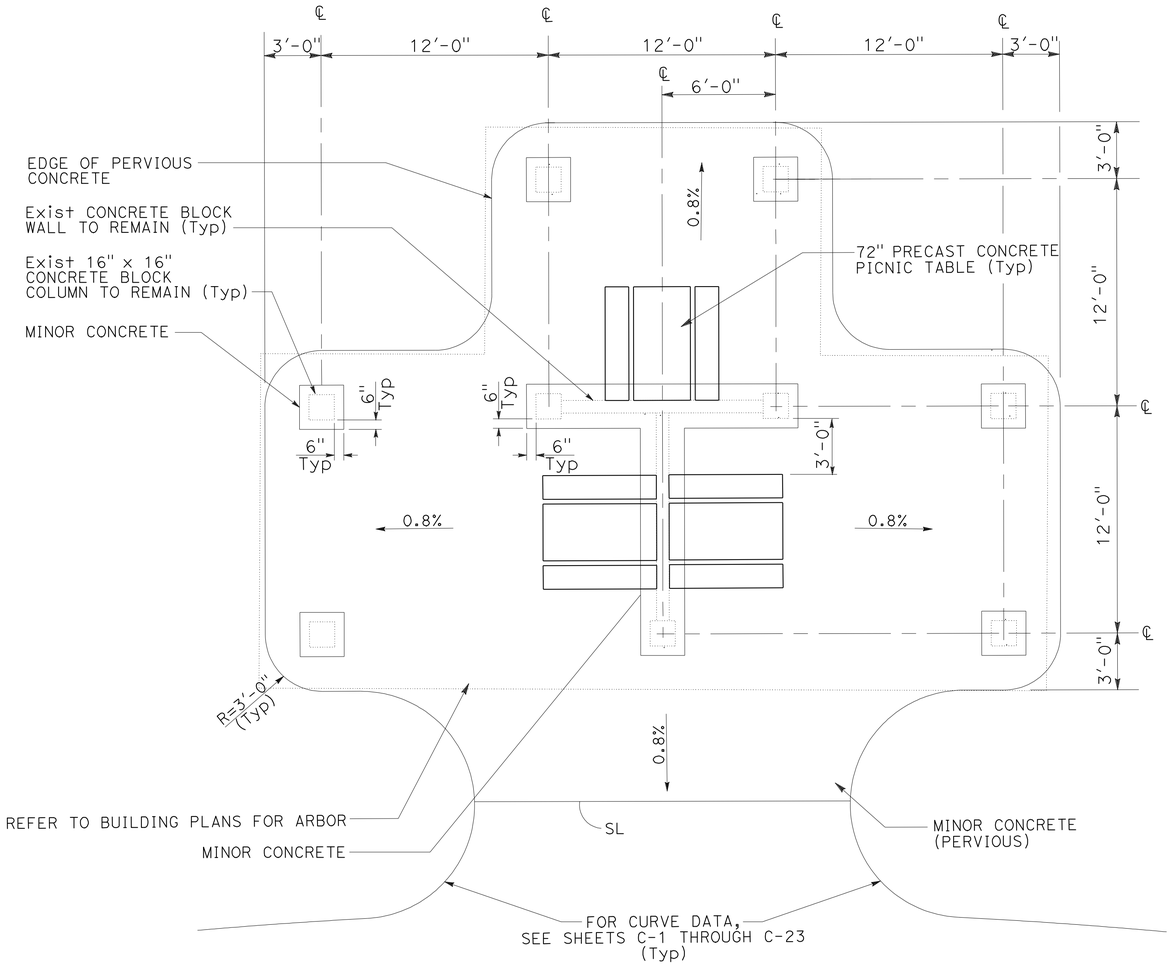


PLAN

## PICNIC SHELTER PICNIC TABLE, LAYOUT 3

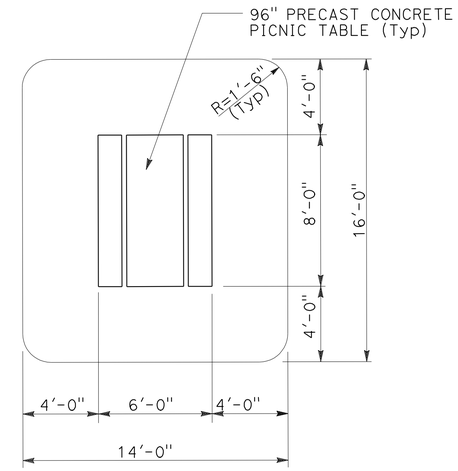


PLAN

## PICNIC TABLE, LAYOUT 2

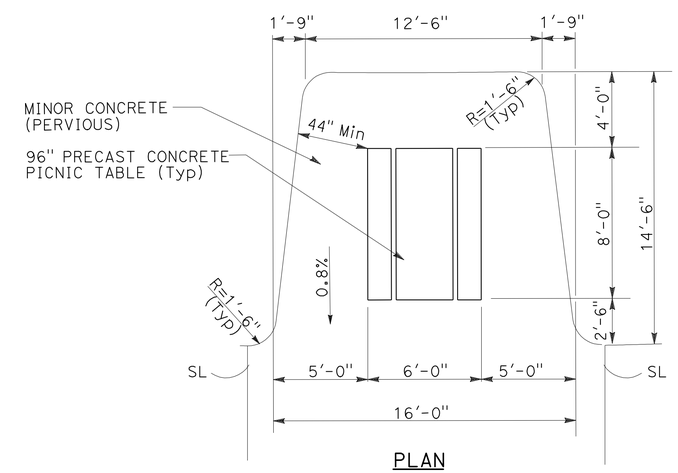


PLAN

## PICNIC TABLE, LAYOUT 1

# CONSTRUCTION DETAILS

NO SCALE

C-39

STATE OF CALIFORNIA - DEPARTMENT OF TRANSPORTATION
Caltrans LANDSCAPE ARCHITECTURE

FUNCTIONAL SUPERVISOR: ELBERT COX
CALCULATED-DESIGNED BY: GLORIA RAMIREZ
CHECKED BY: RICHARD COLE
REVISED BY
DATE REVISED

LAST REVISION 02-01-10
DATE PLOTTED => 12-AUG-2010
TIME PLOTTED => 18:10

| Dist | COUNTY | ROUTE | POST MILES TOTAL PROJECT | SHEET No. | TOTAL SHEETS |
|---|---|---|---|---|---|
| 06 | Tul | 99 | 22.4 | 55 | 335 |

Gloria Ramirez
LICENSED LANDSCAPE ARCHITECT

8-9-10
PLANS APPROVAL DATE

LICENSED LANDSCAPE ARCHITECT
GLORIA RAMIREZ No. 5985
Gloria Ramirez
Expiration Date
04/30/10
Renewal Date
02/01/10
Date
STATE OF CALIFORNIA

*THE STATE OF CALIFORNIA OR ITS OFFICERS OR AGENTS SHALL NOT BE RESPONSIBLE FOR THE ACCURACY OR COMPLETENESS OF SCANNED COPIES OF THIS PLAN SHEET.*

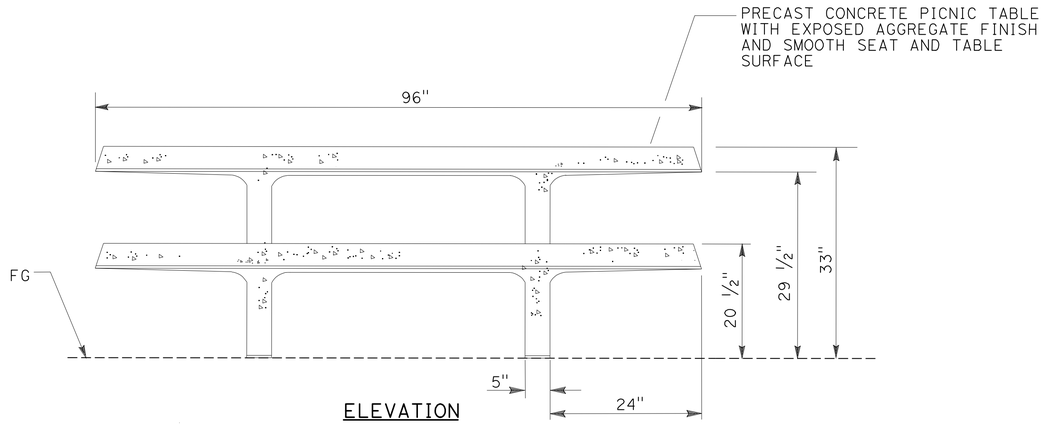


ELEVATION

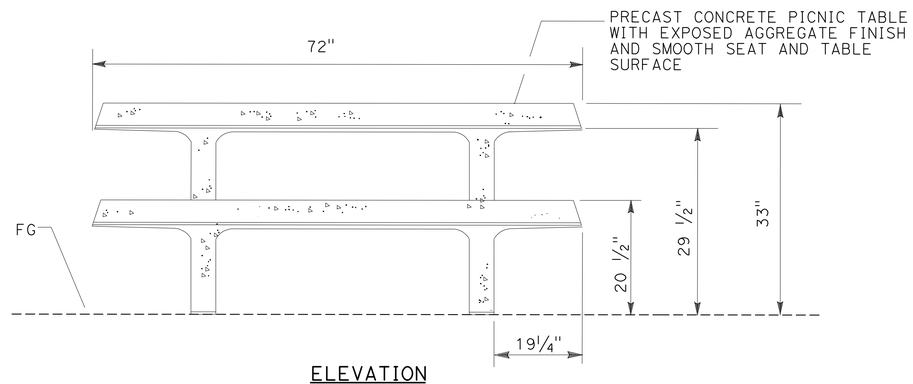


ELEVATION

TABLES WITHIN PICNIC SHELTER (Typ)

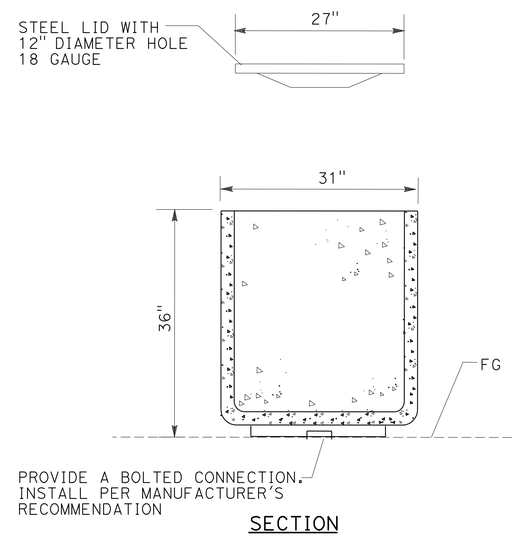


SECTION

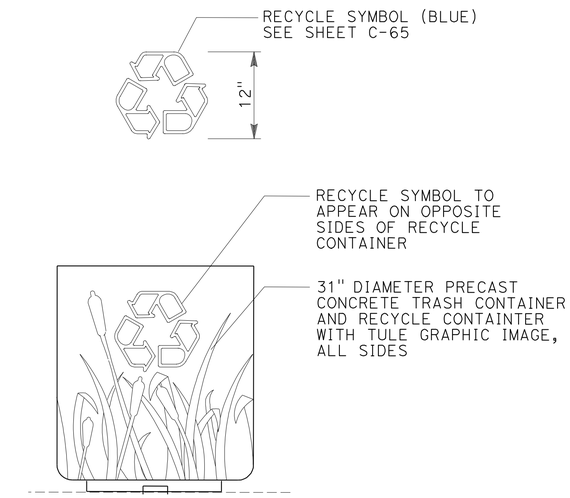


ELEVATION

**PRECAST CONCRETE TRASH AND RECYCLING CONTAINER**

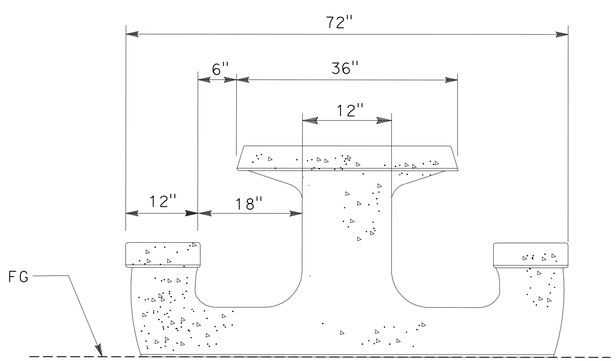


SIDE ELEVATION

**PRECAST CONCRETE PICNIC TABLE**

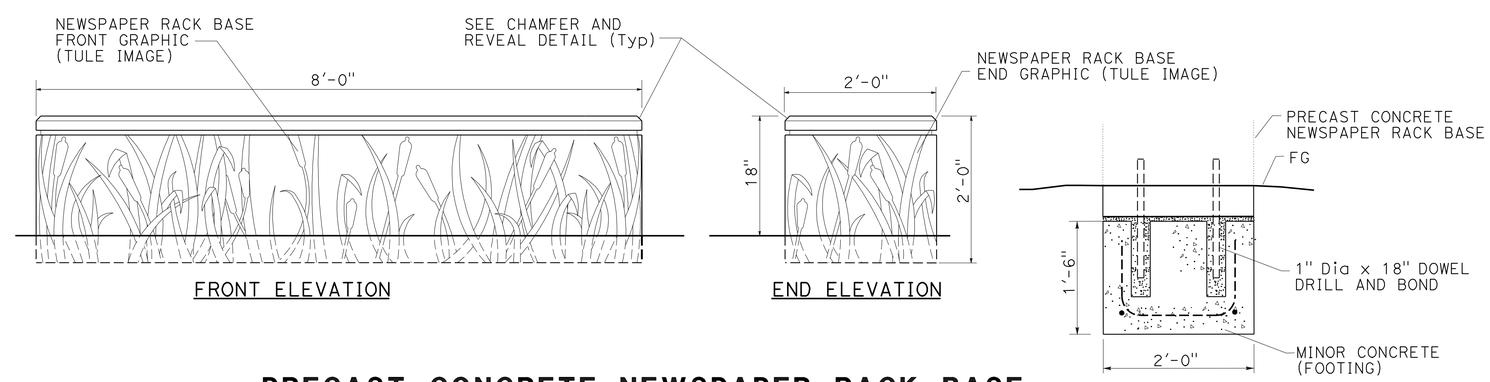


FRONT ELEVATION

END ELEVATION

SECTION

**PRECAST CONCRETE NEWSPAPER RACK BASE**

# CONSTRUCTION DETAILS

NO SCALE

**C-40**

STATE OF CALIFORNIA - DEPARTMENT OF TRANSPORTATION
Caltrans® LANDSCAPE ARCHITECTURE

FUNCTIONAL SUPERVISOR: ELBERT COX
CALCULATED-DESIGNED BY: GLORIA RAMIREZ
CHECKED BY: RICHARD COLE
REVISED BY
DATE REVISED

LAST REVISION 02-01-10
DATE PLOTTED => 04-OCT-2010
TIME PLOTTED => 14:01

| Dist | COUNTY | ROUTE | POST MILES TOTAL PROJECT | SHEET No. | TOTAL SHEETS |
|---|---|---|---|---|---|
| 06 | Tul | 99 | 22.4 | 56 | 335 |

Gloria Ramirez
LICENSED LANDSCAPE ARCHITECT
8-9-10
PLANS APPROVAL DATE

LICENSED LANDSCAPE ARCHITECT GLORIA RAMIREZ No. 5989 Gloria Ramirez Signature 04/30/10 Renewal Date 02/01/10 Date STATE OF CALIFORNIA

*THE STATE OF CALIFORNIA OR ITS OFFICERS OR AGENTS SHALL NOT BE RESPONSIBLE FOR THE ACCURACY OR COMPLETENESS OF SCANNED COPIES OF THIS PLAN SHEET.*

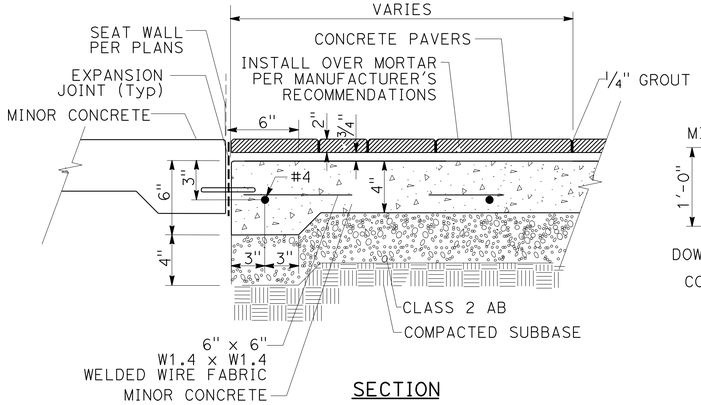


SECTION

## CONCRETE PAVERS

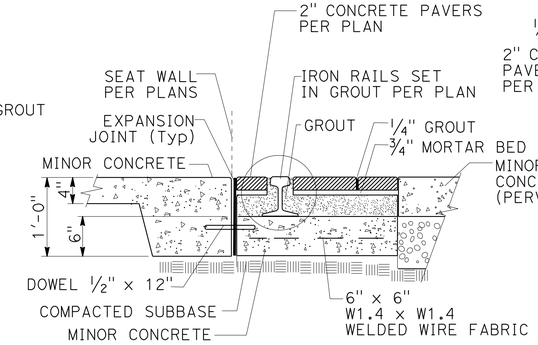


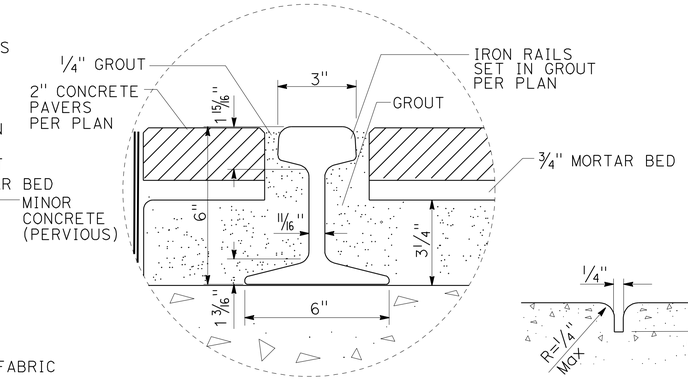


SECTION

## IRON RAIL AND CONCRETE PAVERS

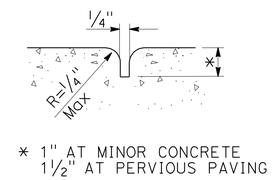


* 1" AT MINOR CONCRETE
1 1/2" AT PERVIOUS PAVING

SECTION

## SCORE LINE

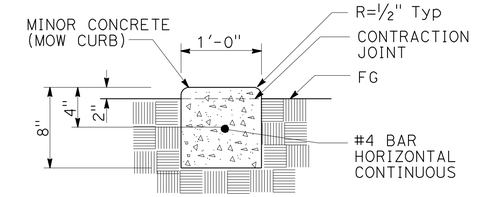


SECTION

## MINOR CONCRETE (MOW CURB)

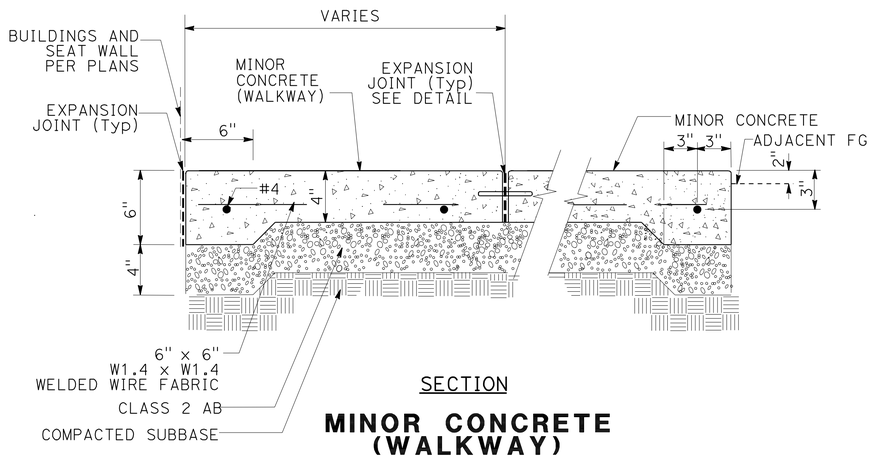


SECTION

## MINOR CONCRETE (WALKWAY)

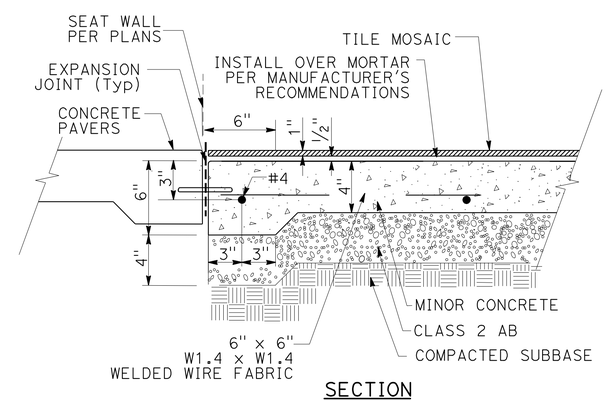


SECTION

## TILE MOSAIC

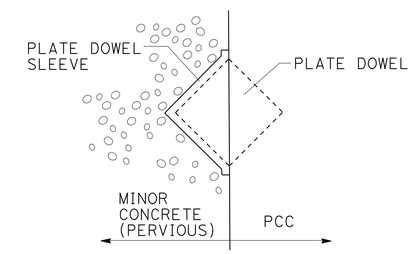


PLAN VIEW

## PLATE DOWEL

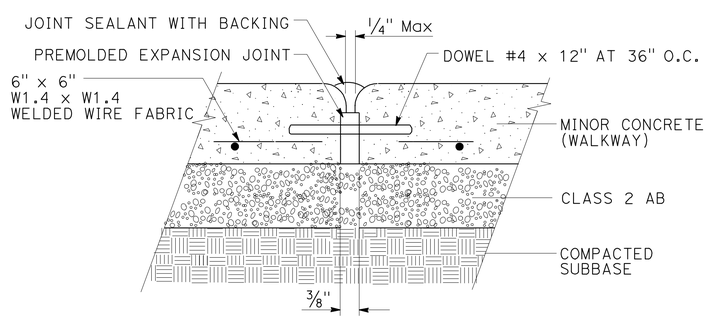


SECTION

## MINOR CONCRETE (WALKWAY) EXPANSION JOINT

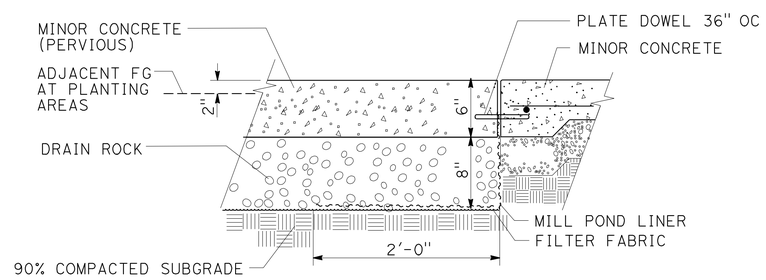


SECTION

## MINOR CONCRETE (PERVIOUS)

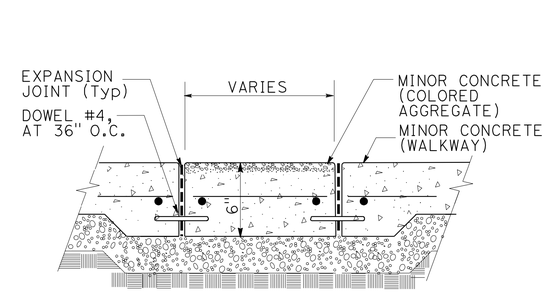


SECTION

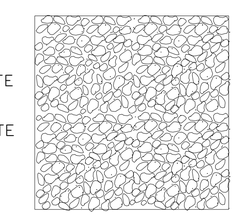

MINOR CONCRETE (COLORED AGGREGATE) TYPICAL DENSITY PER SQUARE FOOT

PLAN VIEW

## MINOR CONCRETE (COLORED AGGREGATE)

# CONSTRUCTION DETAILS

NO SCALE

C-41

STATE OF CALIFORNIA - DEPARTMENT OF TRANSPORTATION
Caltrans LANDSCAPE ARCHITECTURE
FUNCTIONAL SUPERVISOR: ELBERT COX
CALCULATED-DESIGNED BY: GLORIA RAMIREZ
CHECKED BY: RICHARD COLE
REVISED BY / DATE REVISED

LAST REVISION 02-01-10 | DATE PLOTTED => 13-AUG-2010 | TIME PLOTTED => 13:01

| Dist | COUNTY | ROUTE | POST MILES TOTAL PROJECT | SHEET No. | TOTAL SHEETS |
|---|---|---|---|---|---|
| 06 | Tul | 99 | 22.4 | 57 | 335 |

Gloria Ramirez
LICENSED LANDSCAPE ARCHITECT

8-9-10
PLANS APPROVAL DATE

LICENSED LANDSCAPE ARCHITECT GLORIA RAMIREZ No. 5985 Gloria Ramirez Expiration Date 04/30/12 Renewal Date 06/14/10 Date STATE OF CALIFORNIA

*THE STATE OF CALIFORNIA OR ITS OFFICERS OR AGENTS SHALL NOT BE RESPONSIBLE FOR THE ACCURACY OR COMPLETENESS OF SCANNED COPIES OF THIS PLAN SHEET.*

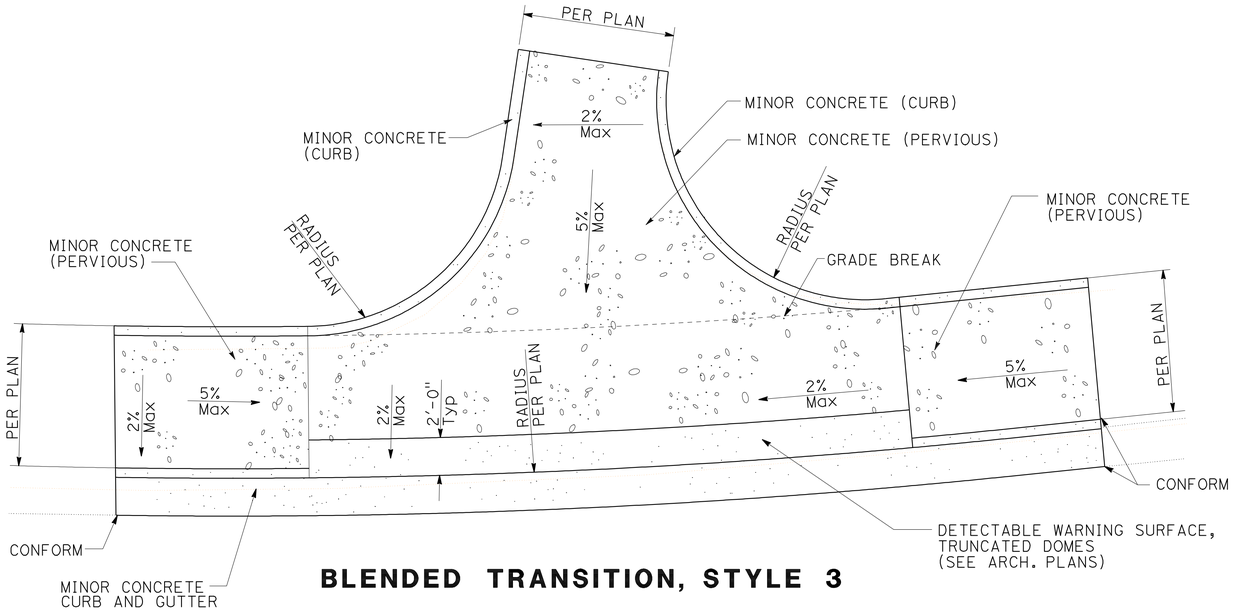


**BLENDED TRANSITION, STYLE 3**

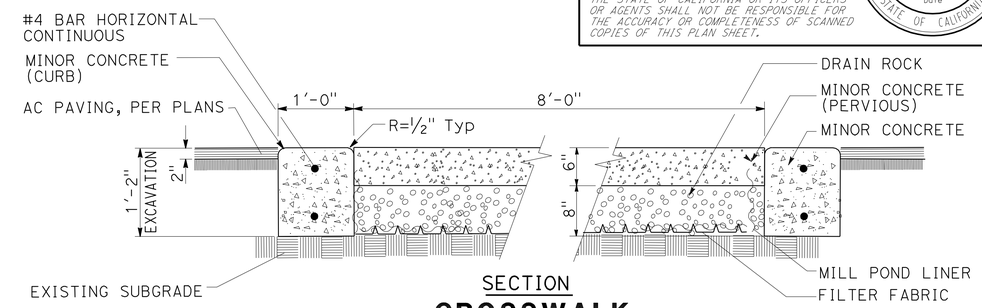


SECTION
**CROSSWALK**

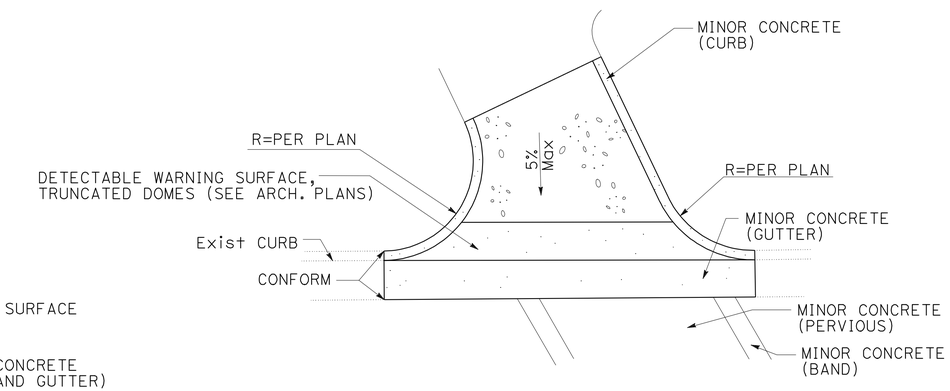


**BLENDED TRANSITION, STYLE 4**

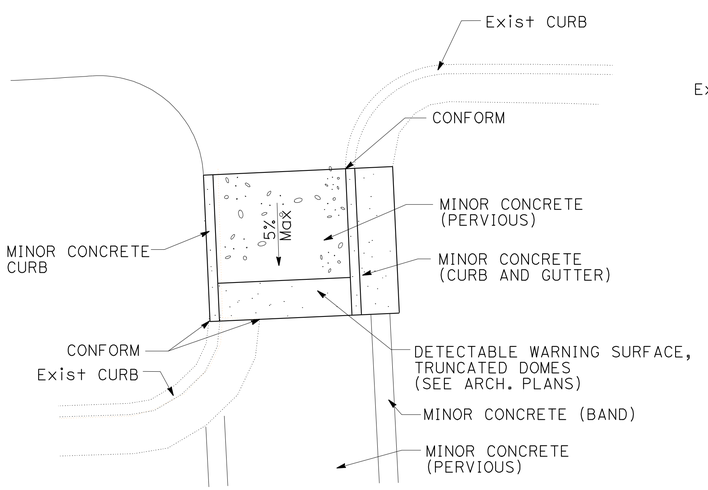


**BLENDED TRANSITION, STYLE 1**

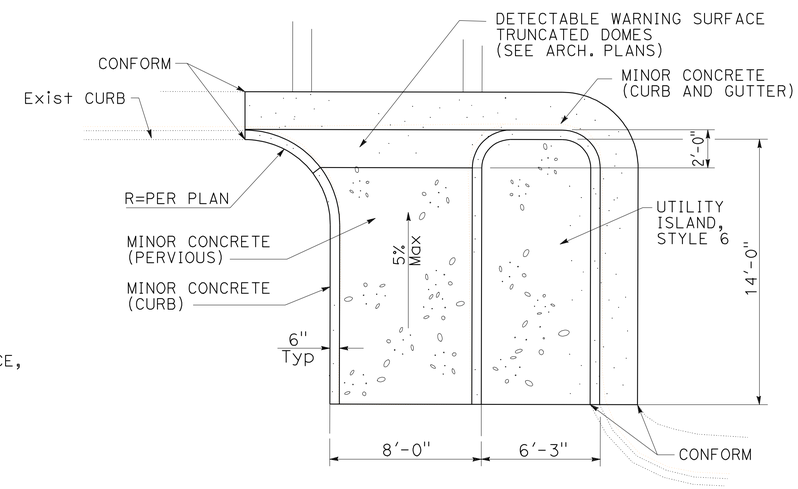


**BLENDED TRANSITION, STYLE 2**

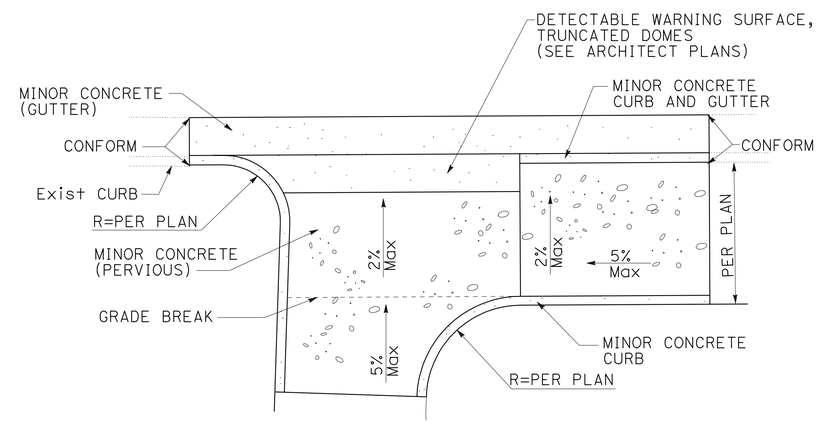


**BLENDED TRANSITION, STYLE 5**

# CONSTRUCTION DETAILS

SCALE: 1" = 10'

**C-42**

STATE OF CALIFORNIA - DEPARTMENT OF TRANSPORTATION
Caltrans® LANDSCAPE ARCHITECTURE

FUNCTIONAL SUPERVISOR: ELBERT COX
CALCULATED-DESIGNED BY: GLORIA RAMIREZ
CHECKED BY: RICHARD COLE
REVISED BY
DATE REVISED

LAST REVISION 02-01-10
DATE PLOTTED => 13-AUG-2010
TIME PLOTTED => 13:02

| Dist | COUNTY | ROUTE | POST MILES TOTAL PROJECT | SHEET No. | TOTAL SHEETS |
|---|---|---|---|---|---|
| 06 | Tul | 99 | 22.4 | 58 | 335 |

Gloria Ramirez
LICENSED LANDSCAPE ARCHITECT

8-9-10
PLANS APPROVAL DATE

LICENSED LANDSCAPE ARCHITECT
GLORIA RAMIREZ No. 5985
Gloria Ramirez
Signature
04/30/12
Renewal Date
07/12/10
Date
STATE OF CALIFORNIA

*THE STATE OF CALIFORNIA OR ITS OFFICERS OR AGENTS SHALL NOT BE RESPONSIBLE FOR THE ACCURACY OR COMPLETENESS OF SCANNED COPIES OF THIS PLAN SHEET.*

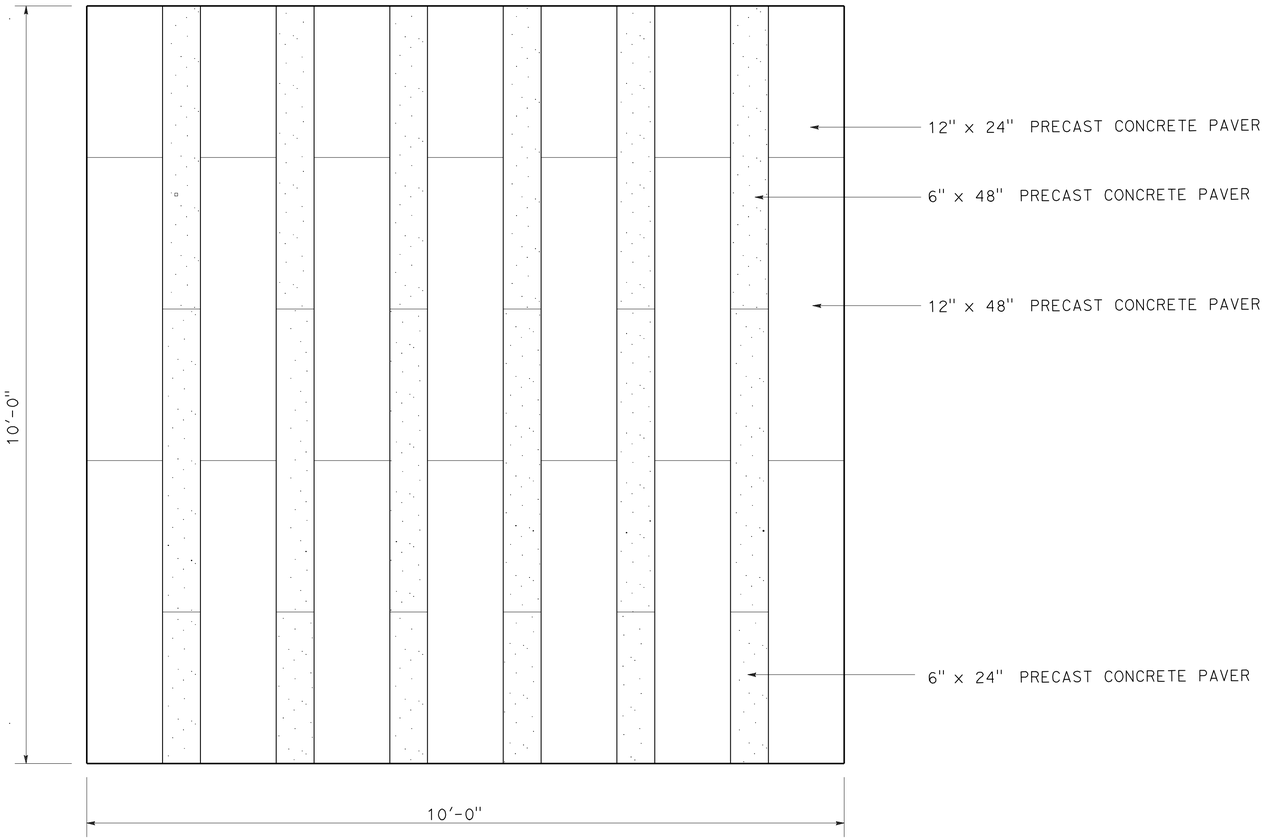


PLAN VIEW

## CONCRETE PAVERS (GRID)

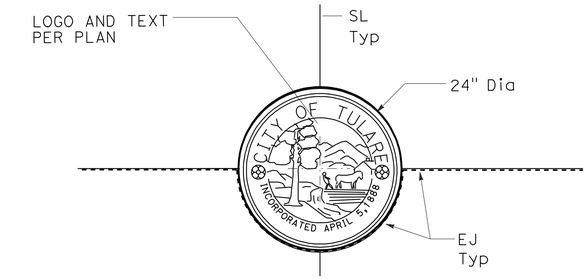


PLAN VIEW

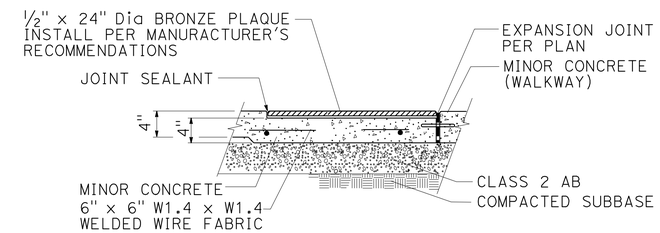


SECTION

## BRONZE PLAQUE

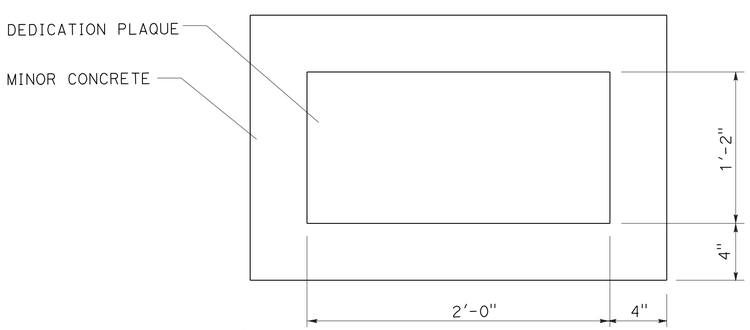


PLAN VIEW

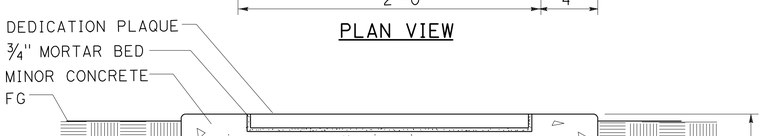


SECTION

## RELOCATE DEDICATION PLAQUE

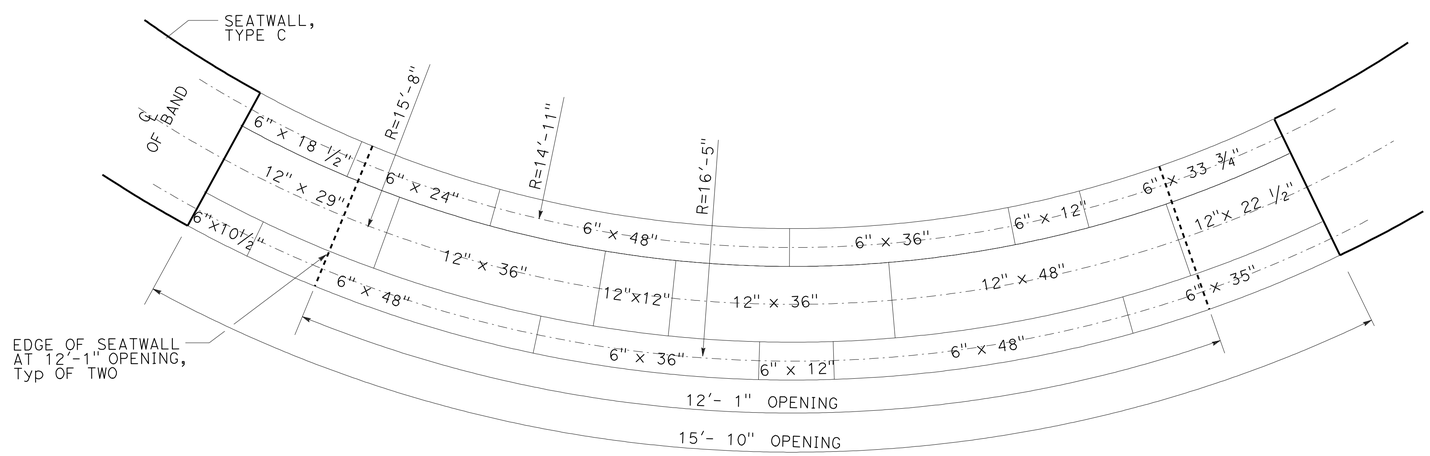


PLAN VIEW

## CONCRETE PAVERS (CIRCLE BAND)

# CONSTRUCTION DETAILS

NO SCALE

**C-43**

STATE OF CALIFORNIA - DEPARTMENT OF TRANSPORTATION
Caltrans® LANDSCAPE ARCHITECTURE

FUNCTIONAL SUPERVISOR: ELBERT COX
CALCULATED-DESIGNED BY: GLORIA RAMIREZ
CHECKED BY: RICHARD COLE
REVISED BY
DATE REVISED

LAST REVISION 07-12-10
DATE PLOTTED => 13-AUG-2010
TIME PLOTTED => 13:02

| Dist | COUNTY | ROUTE | POST MILES TOTAL PROJECT | SHEET No. | TOTAL SHEETS |
|---|---|---|---|---|---|
| 06 | Tul | 99 | 22.4 | 59 | 335 |

Gloria Ramirez
LICENSED LANDSCAPE ARCHITECT

8-9-10
PLANS APPROVAL DATE

LICENSED LANDSCAPE ARCHITECT GLORIA RAMIREZ No. 5067 STATE OF CALIFORNIA
Signature 04/30/12
Renewal Date 02/01/10
Date

*THE STATE OF CALIFORNIA OR ITS OFFICERS OR AGENTS SHALL NOT BE RESPONSIBLE FOR THE ACCURACY OR COMPLETENESS OF SCANNED COPIES OF THIS PLAN SHEET.*

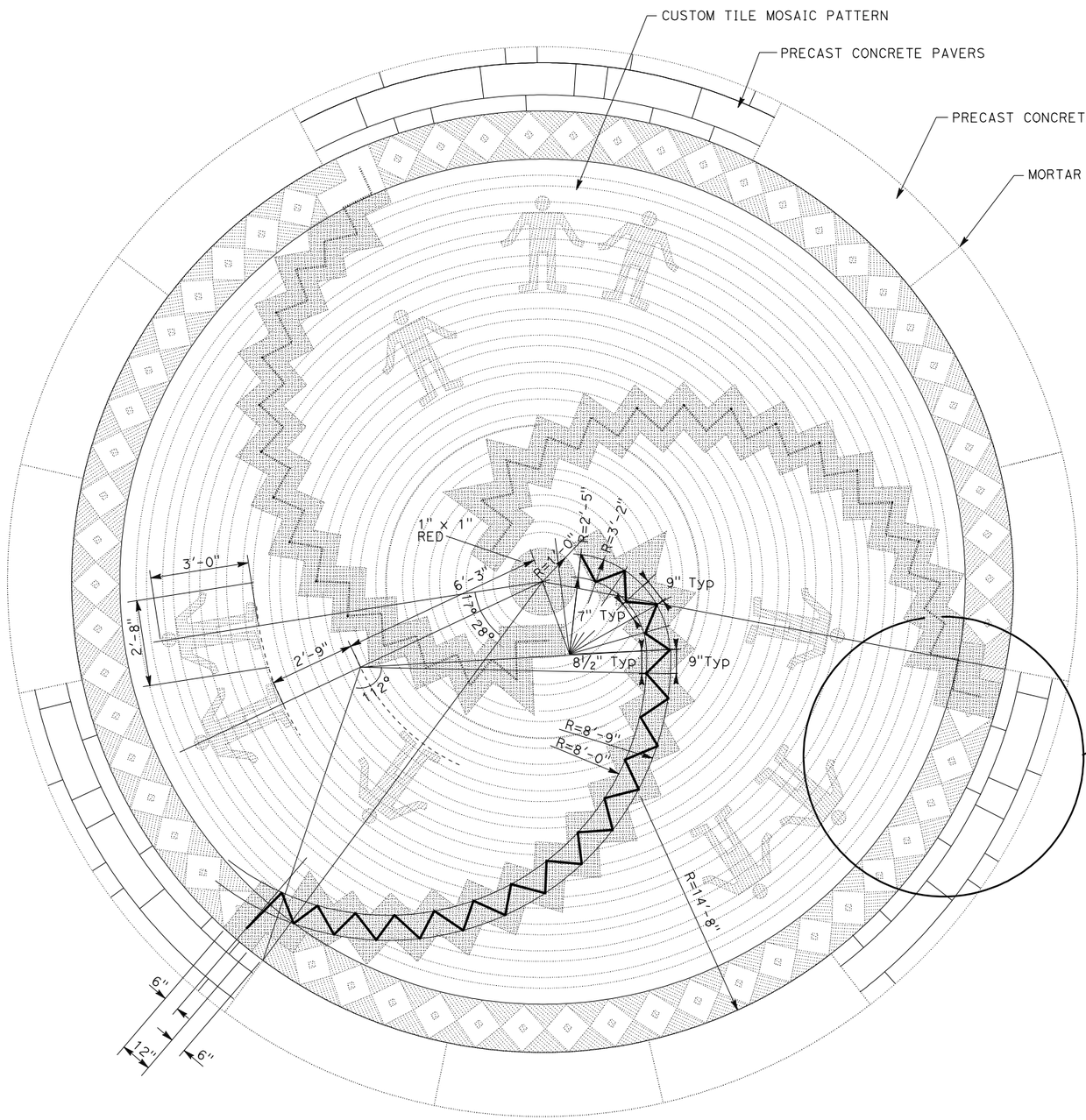


## TILE MOSAIC

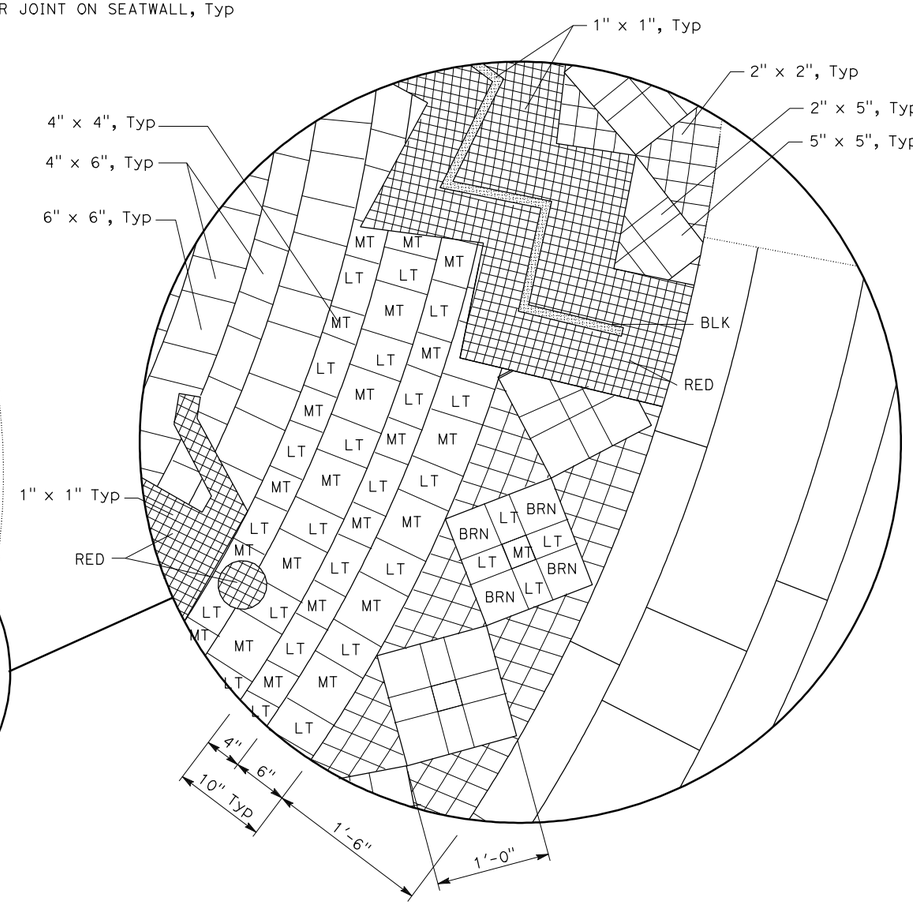


## TILE MOSAIC COLOR SCHEDULE

| COLOR KEY | COLOR DESCRIPTION | FEDERAL STANDARD 595B COLOR No. |
|---|---|---|
| LT | LIGHT TAN | 33578 |
| MT | MEDIUM TAN | 33446 |
| BRN | BROWN | 30145 |
| RED | BRICK RED | 30166 |
| YEL | GOLDEN YELLOW | 23540 |
| BLK | BLACK | 14056 |

# CONSTRUCTION DETAILS

NO SCALE

**C-44**

| REVISED BY | DATE REVISED |
|---|---|
| | |

GLORIA RAMIREZ — CALCULATED-DESIGNED BY
RICHARD COLE — CHECKED BY
ELBERT COX — FUNCTIONAL SUPERVISOR

STATE OF CALIFORNIA - DEPARTMENT OF TRANSPORTATION
Caltrans LANDSCAPE ARCHITECTURE

LAST REVISION 02-01-10
DATE PLOTTED => 05-OCT-2010
TIME PLOTTED => 11:07

| Dist | COUNTY | ROUTE | POST MILES TOTAL PROJECT | SHEET No. | TOTAL SHEETS |
|---|---|---|---|---|---|
| 06 | Tul | 99 | 22.4 | 60 | 335 |

Gloria Ramirez
LICENSED LANDSCAPE ARCHITECT

8-9-10
PLANS APPROVAL DATE

LICENSED LANDSCAPE ARCHITECT
GLORIA RAMIREZ No. 5989
Gloria Ramirez
Expiration Date 04/30/10
Renewal Date 02/01/10
Date
STATE OF CALIFORNIA

*THE STATE OF CALIFORNIA OR ITS OFFICERS OR AGENTS SHALL NOT BE RESPONSIBLE FOR THE ACCURACY OR COMPLETENESS OF SCANNED COPIES OF THIS PLAN SHEET.*

NOTE: ALL GRATES TO BE ADA COMPLIANT

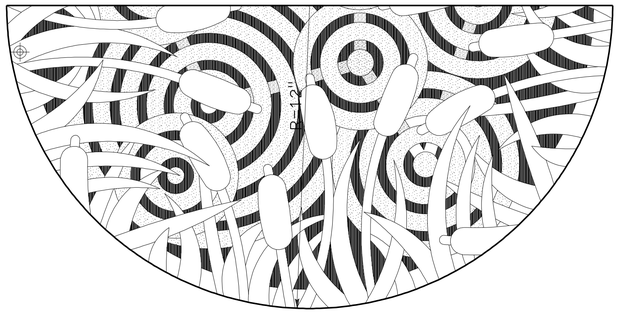


PLAN VIEW

## 24" HALF ROUND DRAIN GRATE

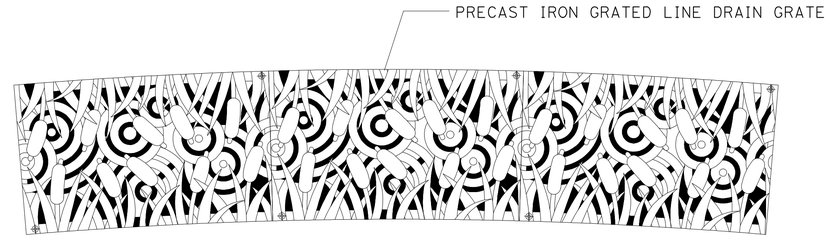


3 GRATES ARRAYED

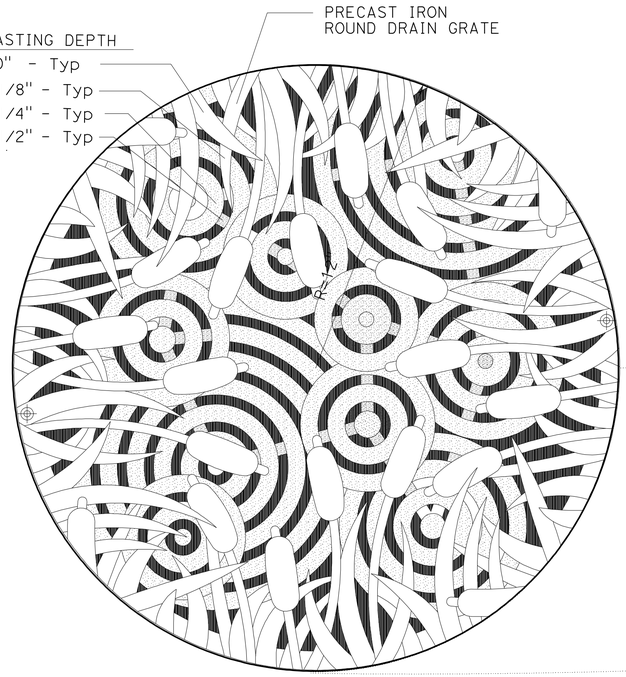


PLAN VIEW

## 24" ROUND DRAIN GRATE

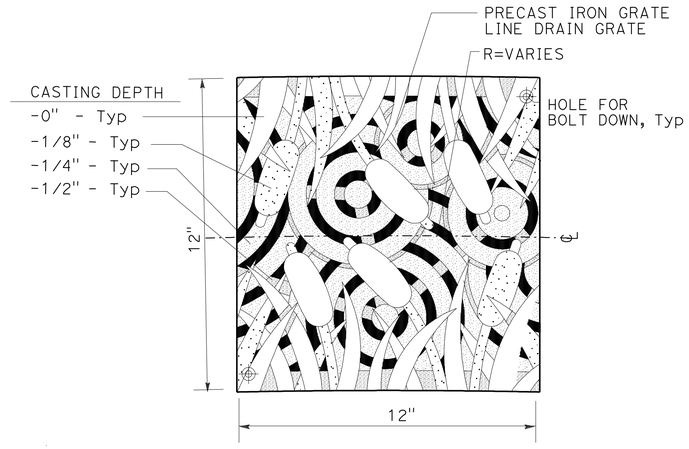


PLAN VIEW

## 12" SQUARE DRAIN GRATE

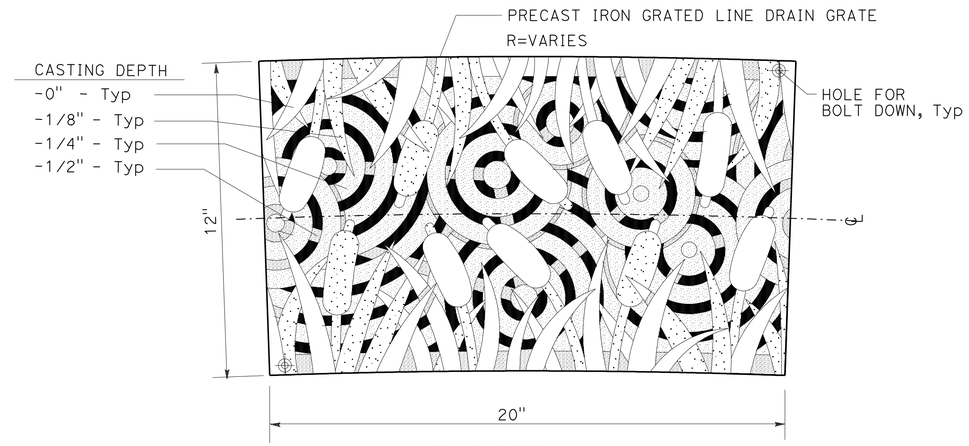


PLAN VIEW

## GRATED LINE DRAIN

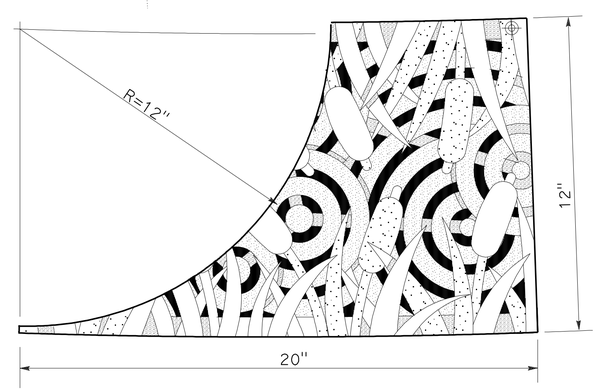


PLAN VIEW

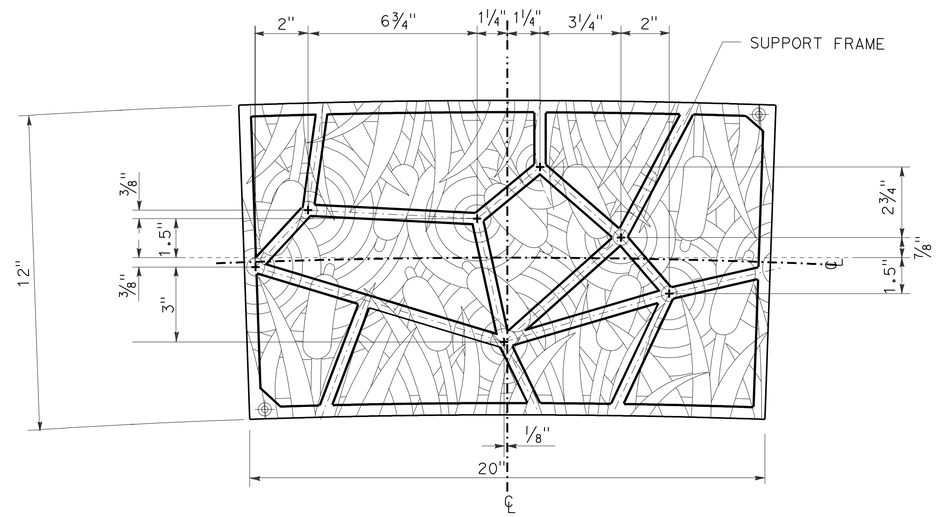


RADIAL PATTERN LAYOUT

## GRATED LINE DRAIN

## GRATED LINE DRAIN AT 24" ROUND DRAIN GRATE

# CONSTRUCTION DETAILS

NO SCALE

**C-45**

STATE OF CALIFORNIA - DEPARTMENT OF TRANSPORTATION
Caltrans® LANDSCAPE ARCHITECTURE

FUNCTIONAL SUPERVISOR: ELBERT COX
CALCULATED-DESIGNED BY: GLORIA RAMIREZ
CHECKED BY: RICHARD COLE
REVISED BY
DATE REVISED

LAST REVISION 02-01-10
DATE PLOTTED => 13-AUG-2010
TIME PLOTTED => 13:03

| Dist | COUNTY | ROUTE | POST MILES TOTAL PROJECT | SHEET No. | TOTAL SHEETS |
|---|---|---|---|---|---|
| 06 | Tul | 99 | 22.4 | 61 | 335 |

Gloria Ramirez
LICENSED LANDSCAPE ARCHITECT

8-9-10
PLANS APPROVAL DATE

LICENSED LANDSCAPE ARCHITECT GLORIA RAMIREZ No. 5085 Gloria Ramirez Signature 04/30/10 Renewal Date 02/01/10 Date STATE OF CALIFORNIA

*THE STATE OF CALIFORNIA OR ITS OFFICERS OR AGENTS SHALL NOT BE RESPONSIBLE FOR THE ACCURACY OR COMPLETENESS OF SCANNED COPIES OF THIS PLAN SHEET.*

NOTE: ALL GRATES TO BE ADA COMPLIANT

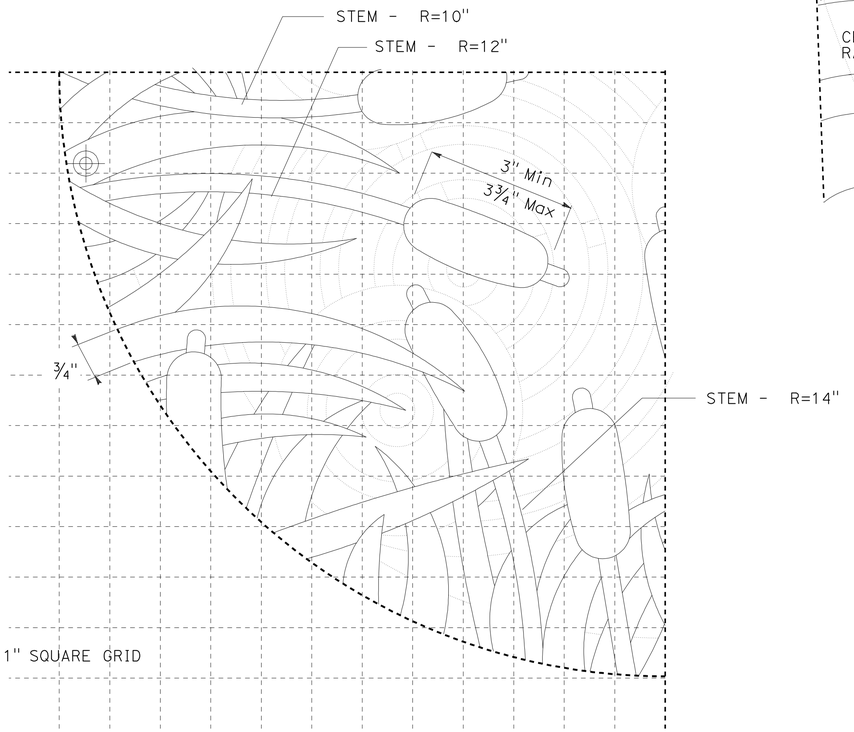


TULE GRAPHIC PATTERN

**24" ROUND DRAIN GRATE/**
**24" HALF ROUND DRAIN GRATE**

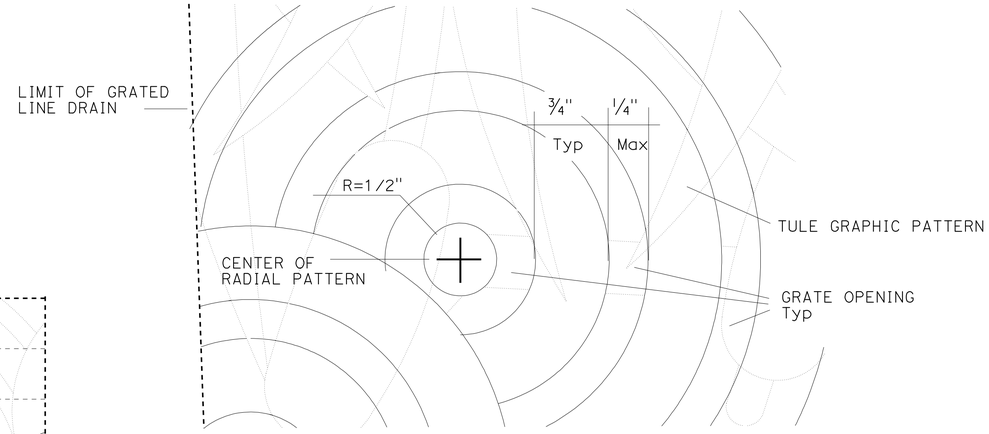


RADIAL PATTERN

**GRATED LINE DRAIN/ DRAIN GRATES**

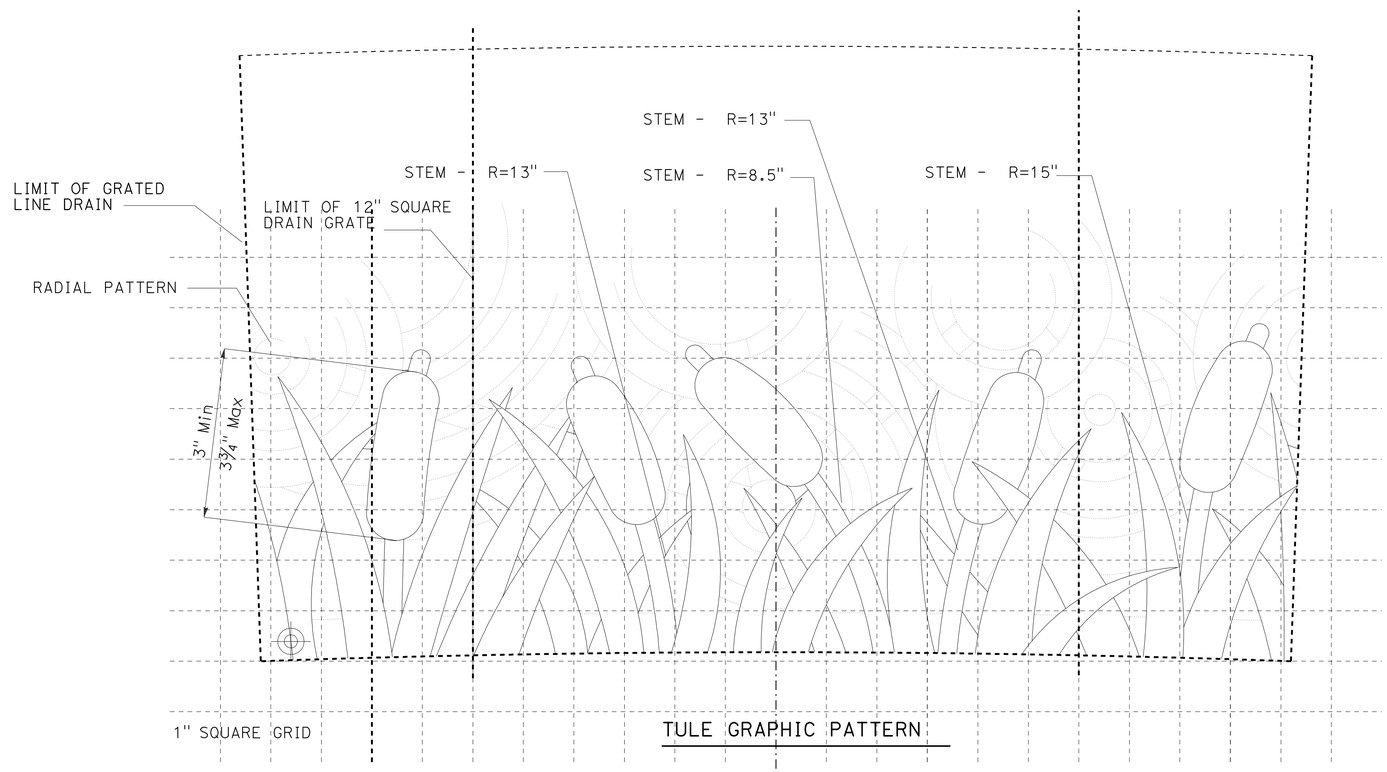


TULE GRAPHIC PATTERN

**GRATED LINE DRAIN/ 12" SQUARE DRAIN GRATE**

# CONSTRUCTION DETAILS

NO SCALE

**C-46**

STATE OF CALIFORNIA - DEPARTMENT OF TRANSPORTATION
Caltrans® LANDSCAPE ARCHITECTURE

FUNCTIONAL SUPERVISOR: ELBERT COX
CALCULATED-DESIGNED BY: GLORIA RAMIREZ
CHECKED BY: RICHARD COLE
REVISED BY
DATE REVISED

LAST REVISION 02-01-10 | DATE PLOTTED => 12-AUG-2010 | TIME PLOTTED => 16:58

| Dist | COUNTY | ROUTE | POST MILES TOTAL PROJECT | SHEET No. | TOTAL SHEETS |
|---|---|---|---|---|---|
| 06 | Tul | 99 | 22.4 | 62 | 335 |

Gloria Ramirez
LICENSED LANDSCAPE ARCHITECT

8-9-10
PLANS APPROVAL DATE

LICENSED LANDSCAPE ARCHITECT
GLORIA RAMIREZ No. 5085
Signature
04/30/12
Renewal Date
02/01/10
Date
STATE OF CALIFORNIA

*THE STATE OF CALIFORNIA OR ITS OFFICERS OR AGENTS SHALL NOT BE RESPONSIBLE FOR THE ACCURACY OR COMPLETENESS OF SCANNED COPIES OF THIS PLAN SHEET.*

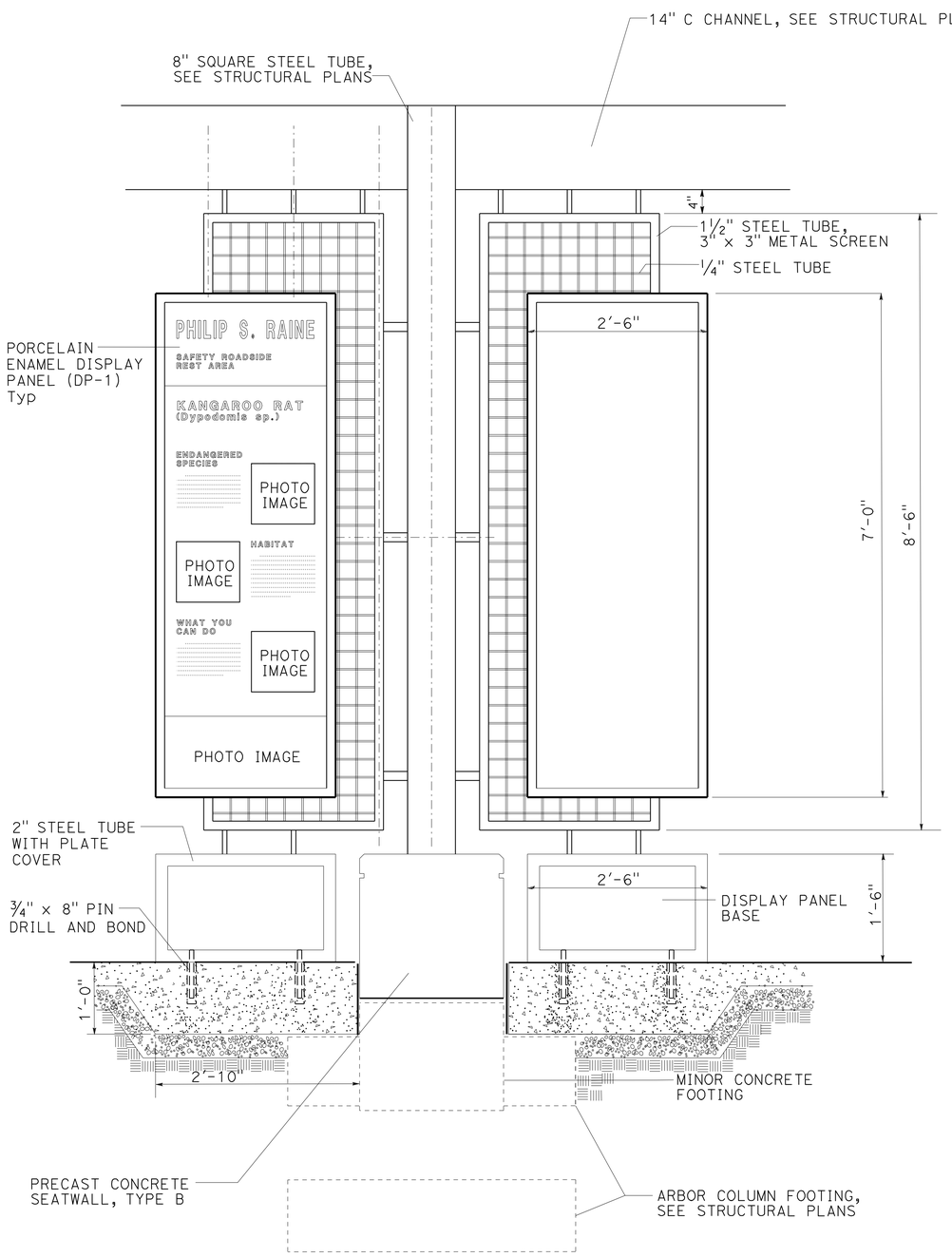


FRONT ELEVATION

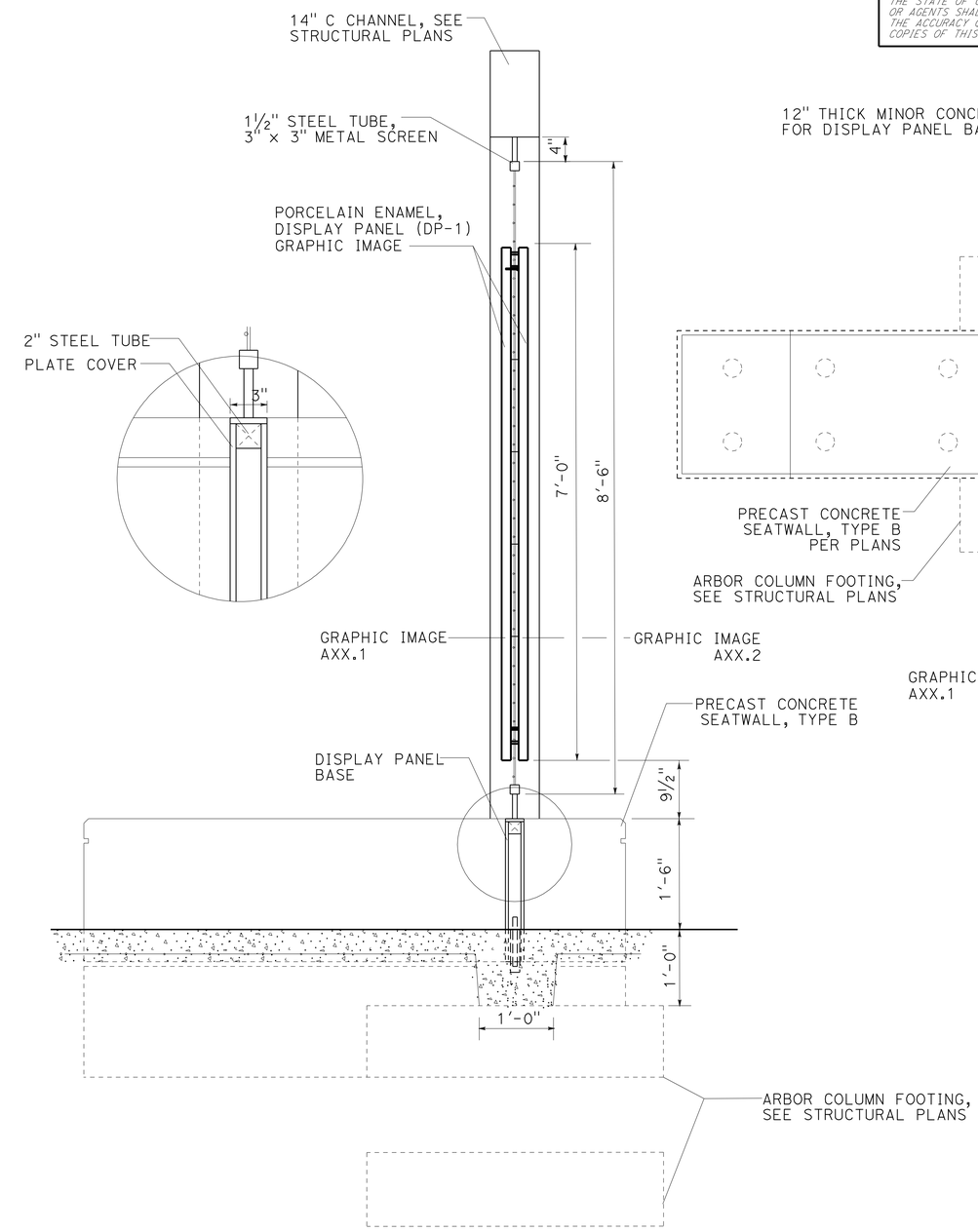


SECTION

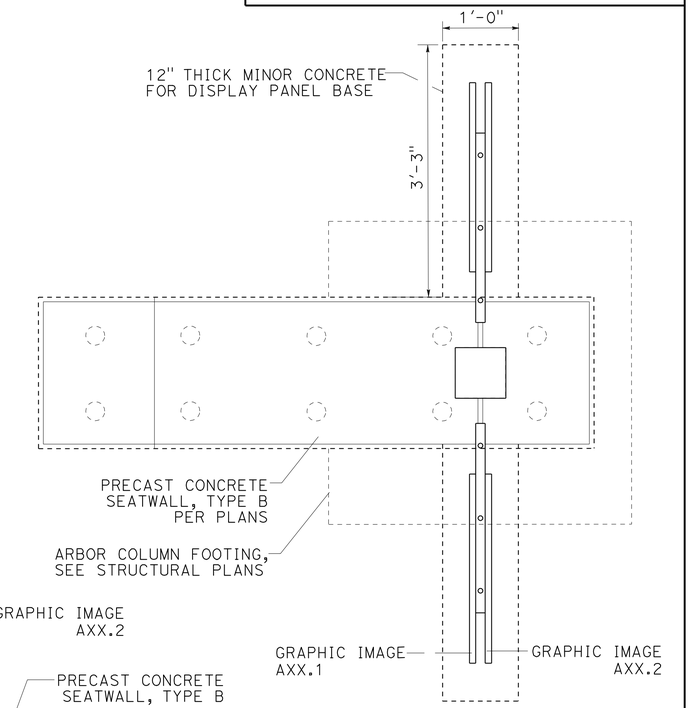


PLAN

**INTERPRETIVE DISPLAY PANEL STYLE 1 (DP-1)**

# CONSTRUCTION DETAILS

NO SCALE

**C-47**

STATE OF CALIFORNIA - DEPARTMENT OF TRANSPORTATION
Caltrans® LANDSCAPE ARCHITECTURE

FUNCTIONAL SUPERVISOR: ELBERT COX
CALCULATED-DESIGNED BY: GLORIA RAMIREZ
CHECKED BY: RICHARD COLE
REVISED BY
DATE REVISED

LAST REVISION 02-01-10 | DATE PLOTTED => 04-OCT-2010 | TIME PLOTTED => 14:02

| Dist | COUNTY | ROUTE | POST MILES TOTAL PROJECT | SHEET No. | TOTAL SHEETS |
|---|---|---|---|---|---|
| 06 | Tul | 99 | 22.4 | 63 | 335 |

Gloria Ramirez
LICENSED LANDSCAPE ARCHITECT

8-9-10
PLANS APPROVAL DATE

LICENSED LANDSCAPE ARCHITECT GLORIA RAMIREZ No. 5085 Signature 04/30/12 Renewal Date 06/14/10 Date STATE OF CALIFORNIA

*THE STATE OF CALIFORNIA OR ITS OFFICERS OR AGENTS SHALL NOT BE RESPONSIBLE FOR THE ACCURACY OR COMPLETENESS OF SCANNED COPIES OF THIS PLAN SHEET.*

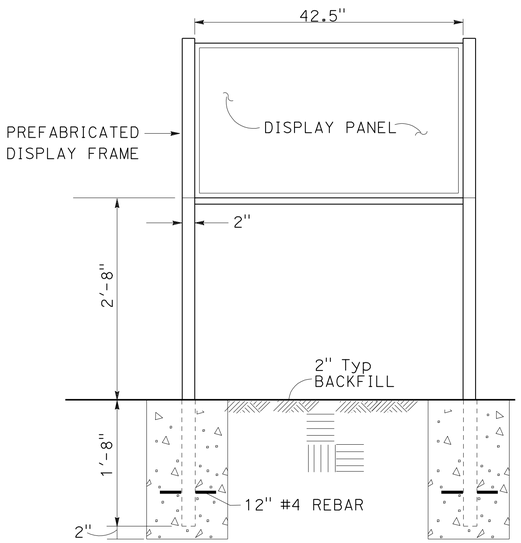


ELEVATION

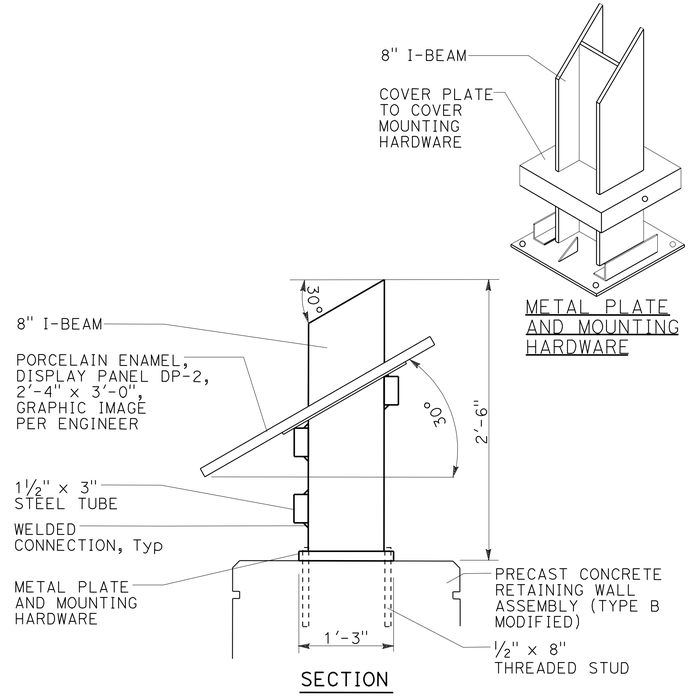


SECTION

## INTERPRETIVE DISPLAY PANEL (STYLE 2) (DP-2)

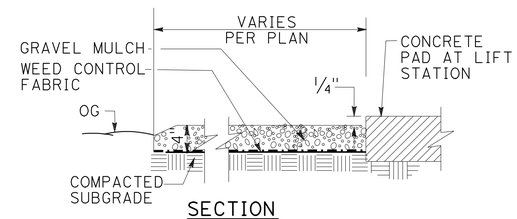


SECTION

## GRAVEL MULCH

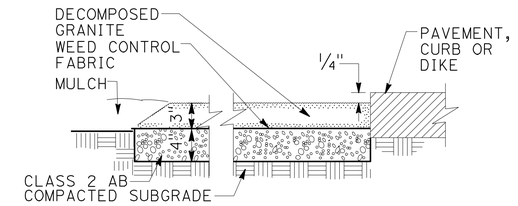


SECTION

## DECOMPOSED GRANITE

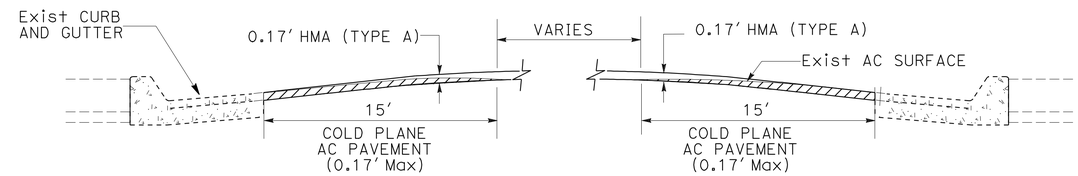


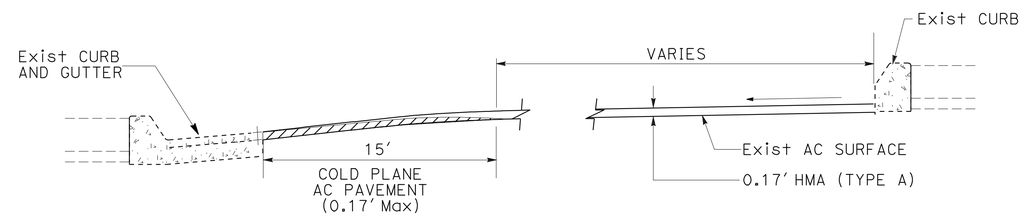


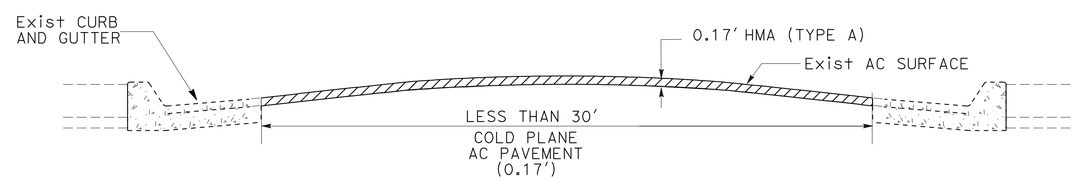


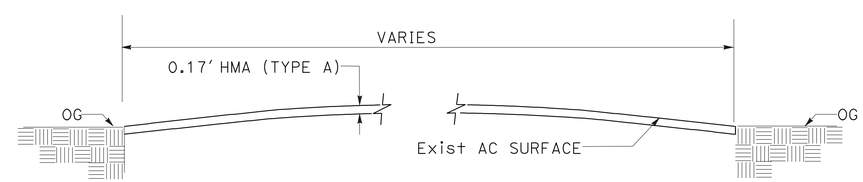


## HMA (TYPE A OVERLAY) TYPICAL CROSS SECTIONS

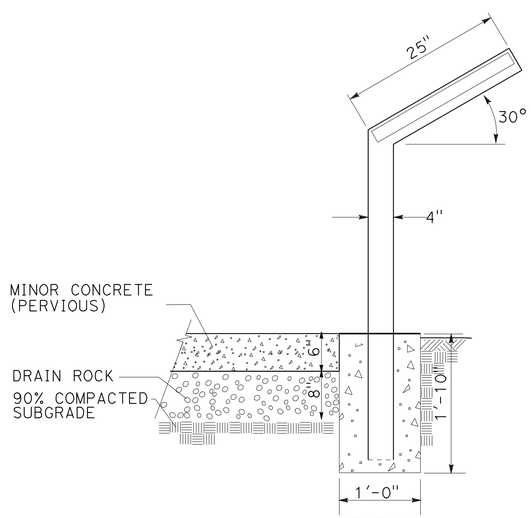


SECTION

## INTERPRETIVE DISPLAY PANEL (STYLE 3) (DP-3)

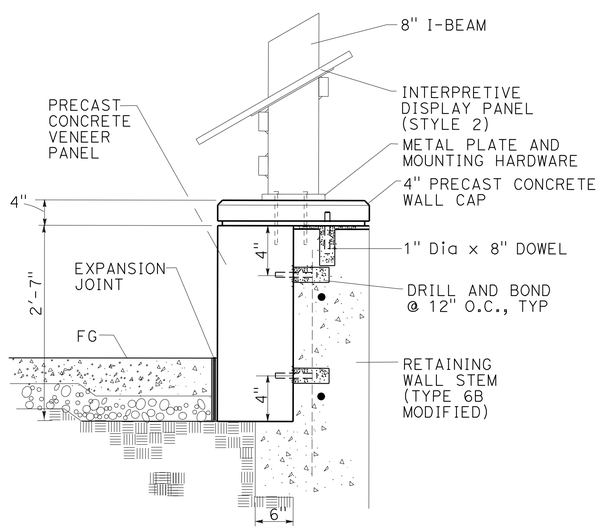


SECTION

## PRECAST CONCRETE RETAINING WALL ASSEMBLY (TYPE B MODIFIED)

# CONSTRUCTION DETAILS

NO SCALE

**C-48**

REVISED BY | DATE REVISED
GLORIA RAMIREZ | RICHARD COLE
CALCULATED-DESIGNED BY | CHECKED BY
FUNCTIONAL SUPERVISOR
ELBERT COX

STATE OF CALIFORNIA - DEPARTMENT OF TRANSPORTATION
Caltrans® LANDSCAPE ARCHITECTURE

LAST REVISION 02-01-10 | DATE PLOTTED => 04-OCT-2010 | TIME PLOTTED => 14:02

| Dist | COUNTY | ROUTE | POST MILES TOTAL PROJECT | SHEET No. | TOTAL SHEETS |
|---|---|---|---|---|---|
| 06 | Tul | 99 | 22.4 | 64 | 335 |

Gloria Ramirez
LICENSED LANDSCAPE ARCHITECT

8-9-10
PLANS APPROVAL DATE

LICENSED LANDSCAPE ARCHITECT
GLORIA RAMIREZ No. 5088
Signature
04/30/10
Renewal Date
02/01/10
Date
STATE OF CALIFORNIA

*THE STATE OF CALIFORNIA OR ITS OFFICERS OR AGENTS SHALL NOT BE RESPONSIBLE FOR THE ACCURACY OR COMPLETENESS OF SCANNED COPIES OF THIS PLAN SHEET.*

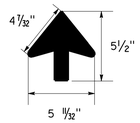


TYPICAL ARROWHEAD DETAIL

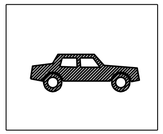

RS-32

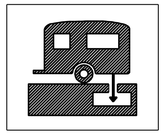

RS-34

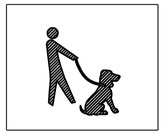

RS-35

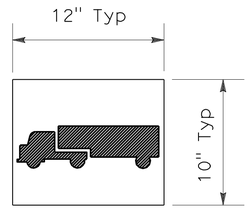


RS-36

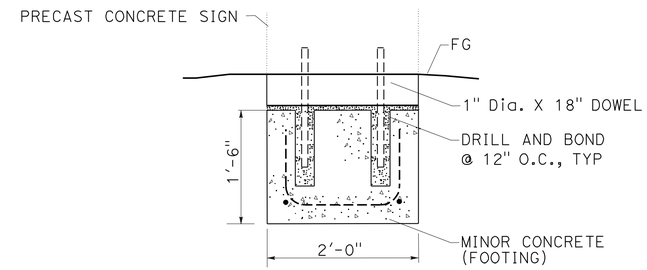


SECTION

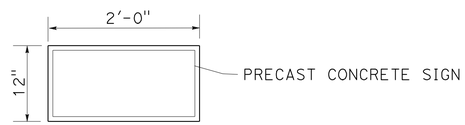


PLAN VIEW

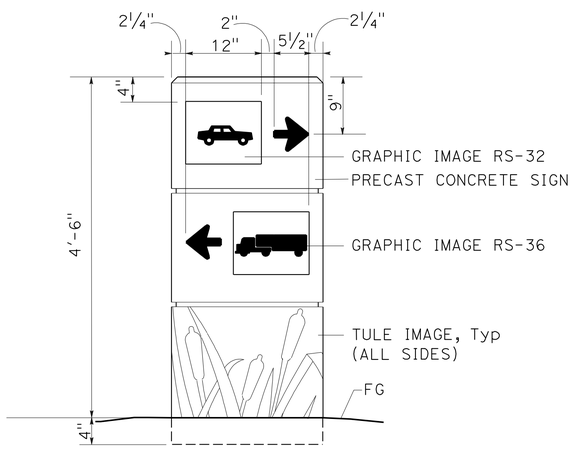


FRONT ELEVATION

**PRECAST CONCRETE SIGN (SS-1)**

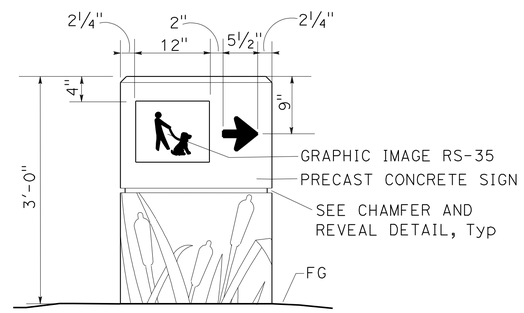


FRONT ELEVATION

**PRECAST CONCRETE SIGN (SS-2)**

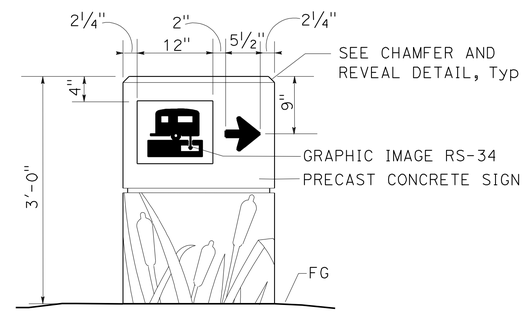


FRONT ELEVATION

**PRECAST CONCRETE SIGN (SS-3)**

# CONSTRUCTION DETAILS

NO SCALE

C-49

STATE OF CALIFORNIA - DEPARTMENT OF TRANSPORTATION
Caltrans® LANDSCAPE ARCHITECTURE

FUNCTIONAL SUPERVISOR: ELBERT COX
CALCULATED-DESIGNED BY: GLORIA RAMIREZ
CHECKED BY: RICHARD COLE
REVISED BY
DATE REVISED

LAST REVISION 02-01-10
DATE PLOTTED => 04-OCT-2010
TIME PLOTTED => 14:02

| Dist | COUNTY | ROUTE | POST MILES TOTAL PROJECT | SHEET No. | TOTAL SHEETS |
|---|---|---|---|---|---|
| 06 | Tul | 99 | 22.4 | 65 | 335 |

Gloria Ramirez
LICENSED LANDSCAPE ARCHITECT

8-9-10
PLANS APPROVAL DATE

LICENSED LANDSCAPE ARCHITECT
GLORIA RAMIREZ No. 5989
Signature
04/30/10
Renewal Date
02/01/10
Date
STATE OF CALIFORNIA

*THE STATE OF CALIFORNIA OR ITS OFFICERS OR AGENTS SHALL NOT BE RESPONSIBLE FOR THE ACCURACY OR COMPLETENESS OF SCANNED COPIES OF THIS PLAN SHEET.*

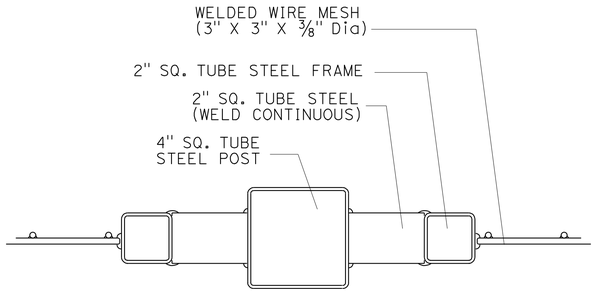


POST AND PANEL DETAIL
(TOP SECTION)
PLAN VIEW

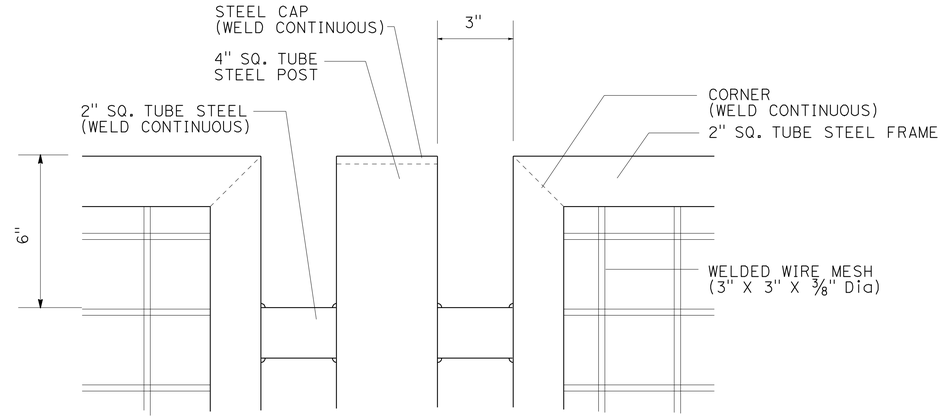


POST AND PANEL DETAIL
ELEVATION

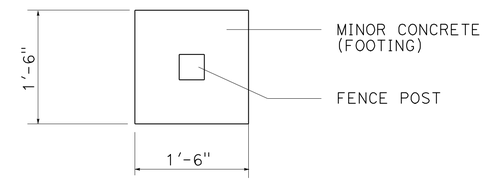


FENCE POST
FOOTING PLAN

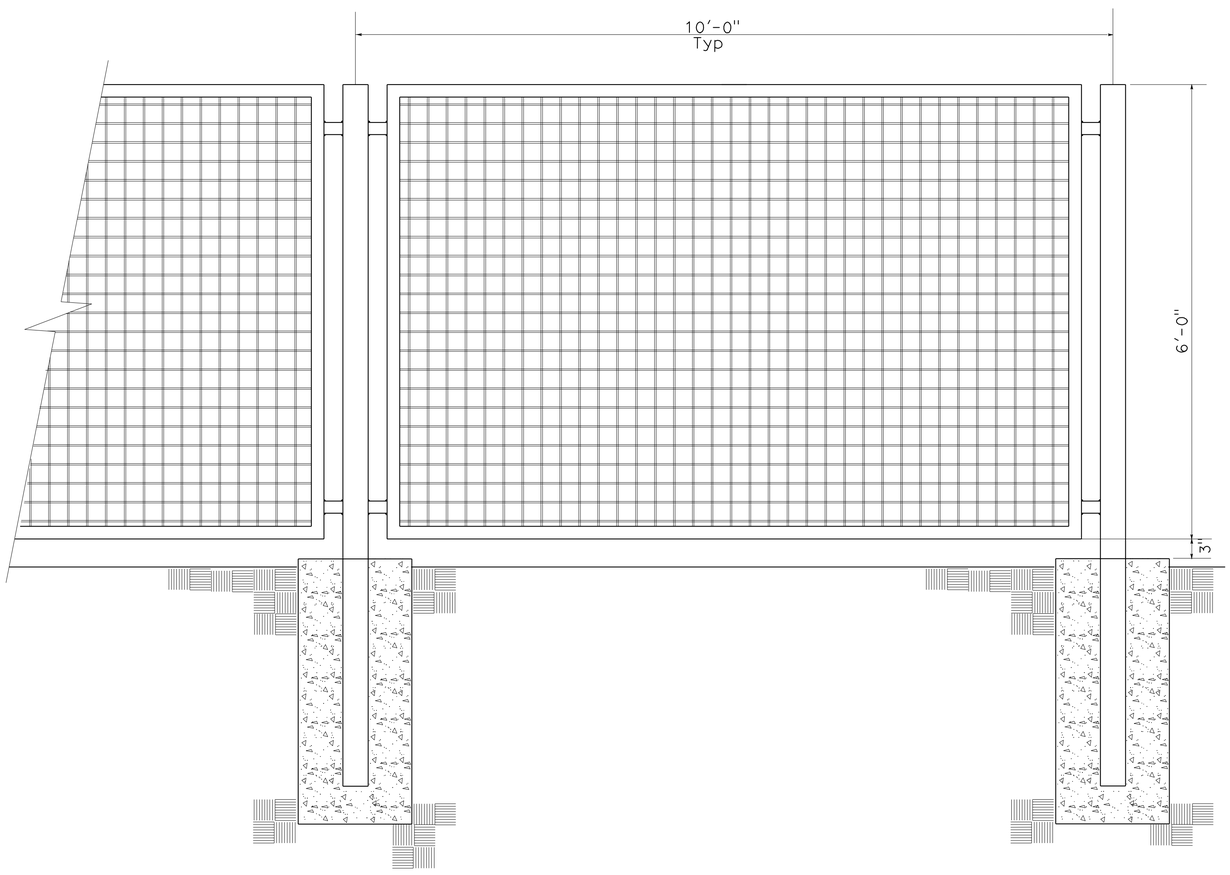


WIRE MESH FENCE

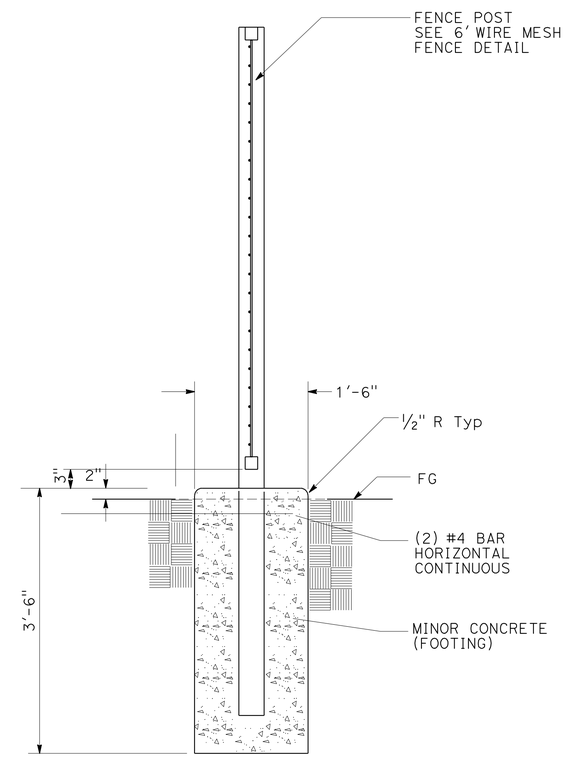


SECTION

# CONSTRUCTION DETAILS
NO SCALE

C-50

STATE OF CALIFORNIA - DEPARTMENT OF TRANSPORTATION
Caltrans® LANDSCAPE ARCHITECTURE

FUNCTIONAL SUPERVISOR: ELBERT COX
CALCULATED-DESIGNED BY: GLORIA RAMIREZ
CHECKED BY: RICHARD COLE
REVISED BY
DATE REVISED

LAST REVISION 02-01-10
DATE PLOTTED => 12-AUG-2010
TIME PLOTTED => 16:59

| Dist | COUNTY | ROUTE | POST MILES TOTAL PROJECT | SHEET No. | TOTAL SHEETS |
|---|---|---|---|---|---|
| 06 | Tul | 99 | 22.4 | 66 | 335 |

Gloria Ramirez
LICENSED LANDSCAPE ARCHITECT

8-9-10
PLANS APPROVAL DATE

LICENSED LANDSCAPE ARCHITECT
GLORIA RAMIREZ No. 5085
Gloria Ramirez
Signature
04/30/10
Renewal Date
02/01/10
Date
STATE OF CALIFORNIA

*THE STATE OF CALIFORNIA OR ITS OFFICERS OR AGENTS SHALL NOT BE RESPONSIBLE FOR THE ACCURACY OR COMPLETENESS OF SCANNED COPIES OF THIS PLAN SHEET.*

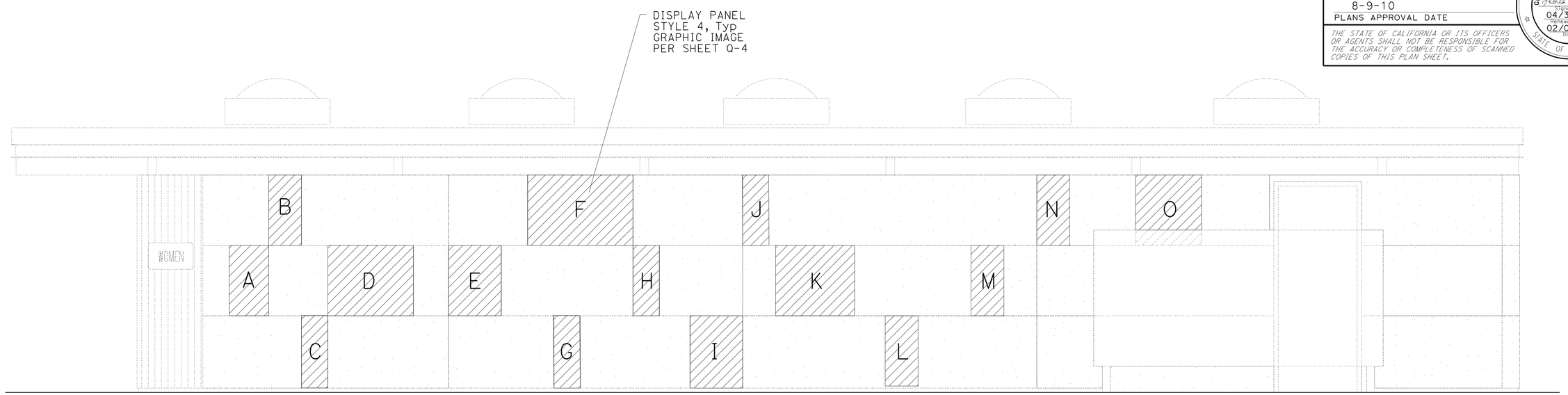


EAST ELEVATION

**NORTHBOUND COMFORT STATION A DISPLAY PANELS**

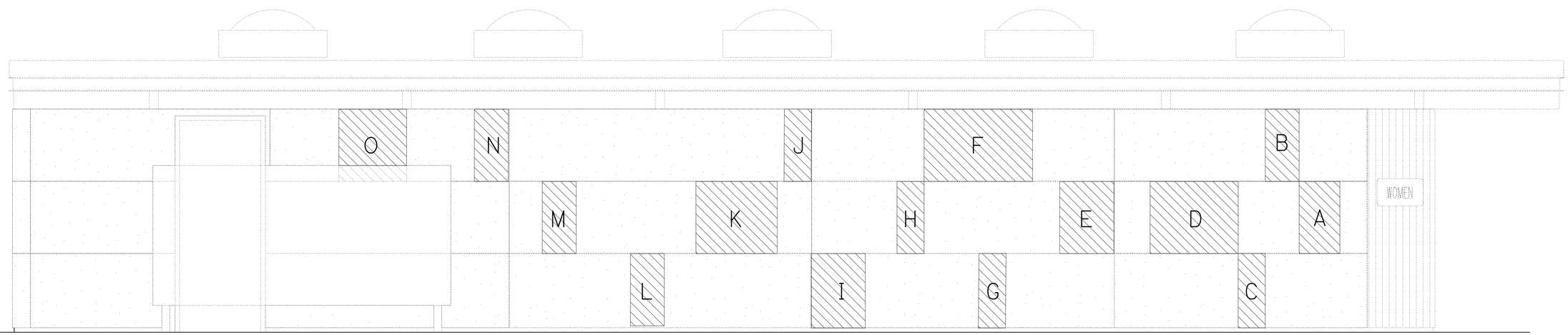


WEST ELEVATION

**NORTHBOUND COMFORT STATION A DISPLAY PANELS**

# CONSTRUCTION DETAILS

NO SCALE

**C-51**

REVISED BY | DATE REVISED
GLORIA RAMIREZ | RICHARD COLE
CALCULATED-DESIGNED BY | CHECKED BY
FUNCTIONAL SUPERVISOR
ELBERT COX

STATE OF CALIFORNIA - DEPARTMENT OF TRANSPORTATION
Caltrans® LANDSCAPE ARCHITECTURE

LAST REVISION 02-01-10 | DATE PLOTTED => 12-AUG-2010 | TIME PLOTTED => 16:59

| Dist | COUNTY | ROUTE | POST MILES TOTAL PROJECT | SHEET No. | TOTAL SHEETS |
|---|---|---|---|---|---|
| 06 | Tul | 99 | 22.4 | 67 | 335 |

Gloria Ramirez
LICENSED LANDSCAPE ARCHITECT

8-9-10
PLANS APPROVAL DATE

LICENSED LANDSCAPE ARCHITECT
GLORIA RAMIREZ No. 5085
Gloria Ramirez
Signature
04/30/10
Renewal Date
02/01/10
Date
STATE OF CALIFORNIA

*THE STATE OF CALIFORNIA OR ITS OFFICERS OR AGENTS SHALL NOT BE RESPONSIBLE FOR THE ACCURACY OR COMPLETENESS OF SCANNED COPIES OF THIS PLAN SHEET.*

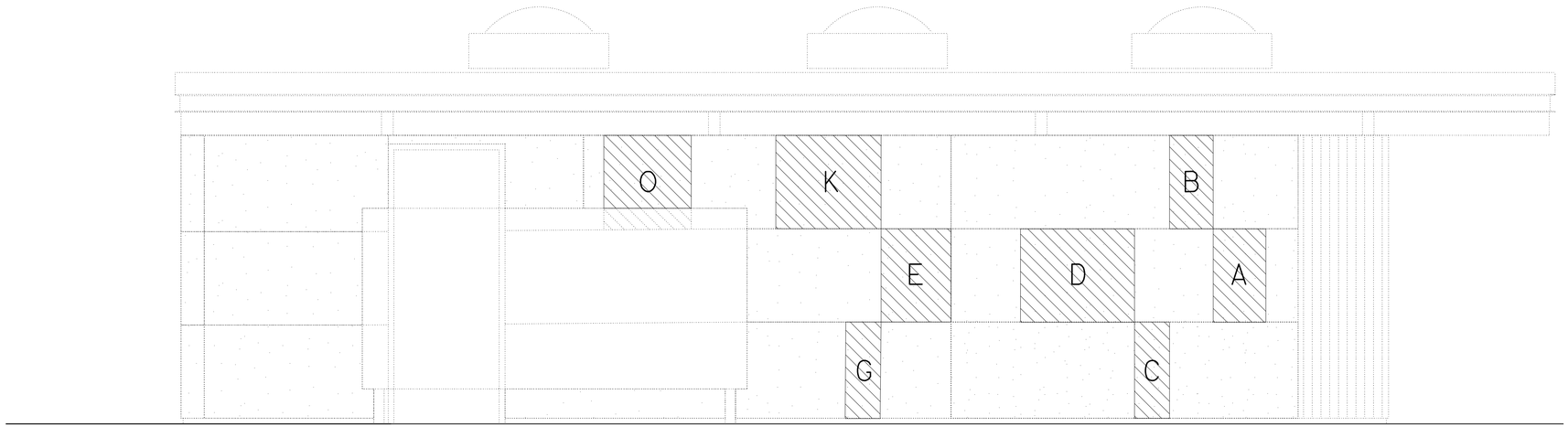


EAST ELEVATION

**NORTHBOUND COMFORT STATION B DISPLAY PANELS**

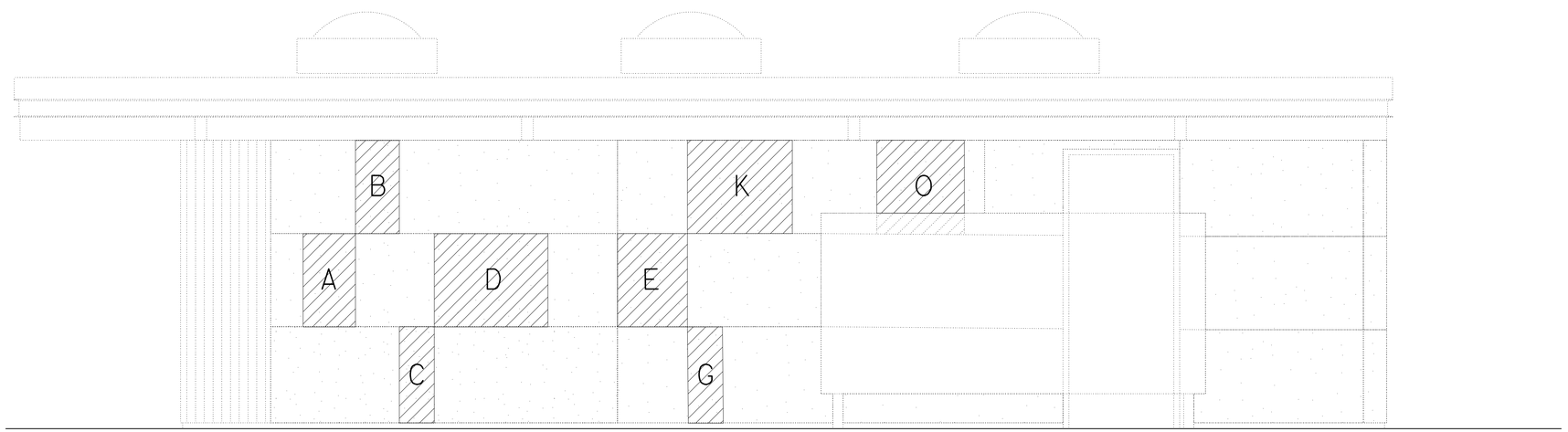


WEST ELEVATION

**NORTHBOUND COMFORT STATION B DISPLAY PANELS**

# CONSTRUCTION DETAILS

NO SCALE

**C-52**

STATE OF CALIFORNIA - DEPARTMENT OF TRANSPORTATION
Caltrans® LANDSCAPE ARCHITECTURE

FUNCTIONAL SUPERVISOR: ELBERT COX

CALCULATED-DESIGNED BY: GLORIA RAMIREZ
CHECKED BY: RICHARD COLE

REVISED BY
DATE REVISED

LAST REVISION 02-01-10
DATE PLOTTED => 12-AUG-2010
TIME PLOTTED => 16:59

| Dist | COUNTY | ROUTE | POST MILES TOTAL PROJECT | SHEET No. | TOTAL SHEETS |
|---|---|---|---|---|---|
| 06 | Tul | 99 | 22.4 | 68 | 335 |

Gloria Ramirez
LICENSED LANDSCAPE ARCHITECT

8-9-10
PLANS APPROVAL DATE

LICENSED LANDSCAPE ARCHITECT
GLORIA RAMIREZ No. 5085
Gloria Ramirez
Signature
04/30/10
Renewal Date
02/01/10
Date
STATE OF CALIFORNIA

*THE STATE OF CALIFORNIA OR ITS OFFICERS OR AGENTS SHALL NOT BE RESPONSIBLE FOR THE ACCURACY OR COMPLETENESS OF SCANNED COPIES OF THIS PLAN SHEET.*

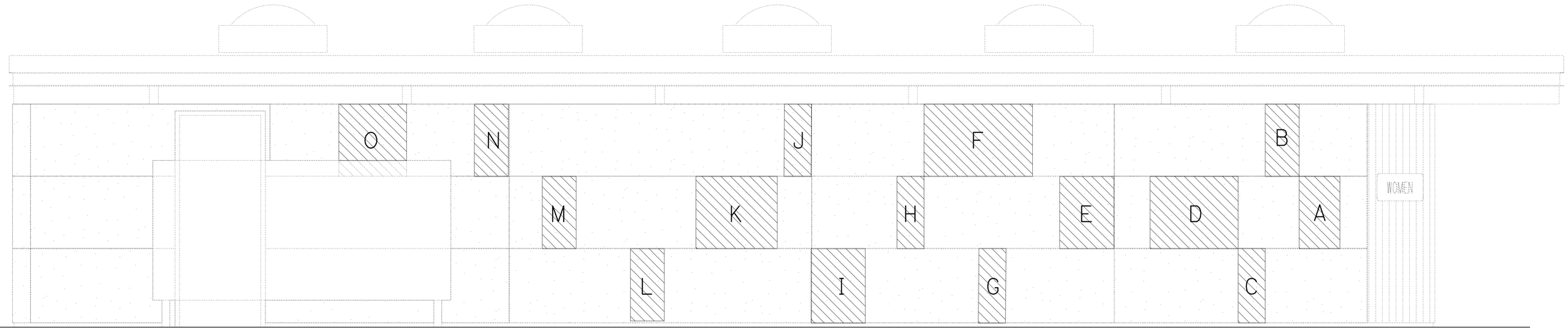


EAST ELEVATION

**SOUTHBOUND COMFORT STATION A DISPLAY PANELS**

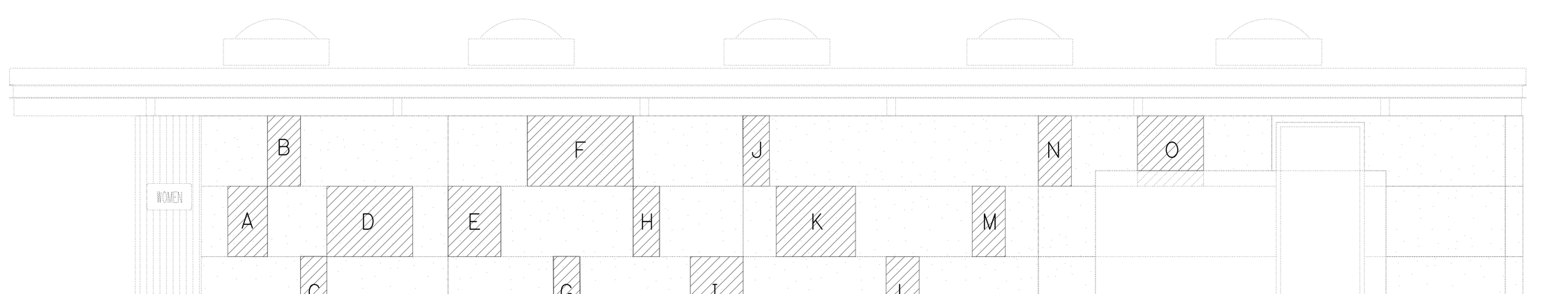


WEST ELEVATION

**SOUTHBOUND COMFORT STATION A DISPLAY PANELS**

# CONSTRUCTION DETAILS

NO SCALE

**C-53**

STATE OF CALIFORNIA - DEPARTMENT OF TRANSPORTATION
Caltrans® LANDSCAPE ARCHITECTURE

FUNCTIONAL SUPERVISOR: ELBERT COX
CALCULATED-DESIGNED BY: GLORIA RAMIREZ
CHECKED BY: RICHARD COLE
REVISED BY
DATE REVISED

LAST REVISION 02-01-10 | DATE PLOTTED => 12-AUG-2010 | TIME PLOTTED => 17:00

| Dist | COUNTY | ROUTE | POST MILES TOTAL PROJECT | SHEET No. | TOTAL SHEETS |
|---|---|---|---|---|---|
| 06 | Tul | 99 | 22.4 | 69 | 335 |

Gloria Ramirez
LICENSED LANDSCAPE ARCHITECT

8-9-10
PLANS APPROVAL DATE

LICENSED LANDSCAPE ARCHITECT
GLORIA RAMIREZ No. 5985
Signature
04/30/10
Renewal Date
02/01/10
Date
STATE OF CALIFORNIA

*THE STATE OF CALIFORNIA OR ITS OFFICERS OR AGENTS SHALL NOT BE RESPONSIBLE FOR THE ACCURACY OR COMPLETENESS OF SCANNED COPIES OF THIS PLAN SHEET.*

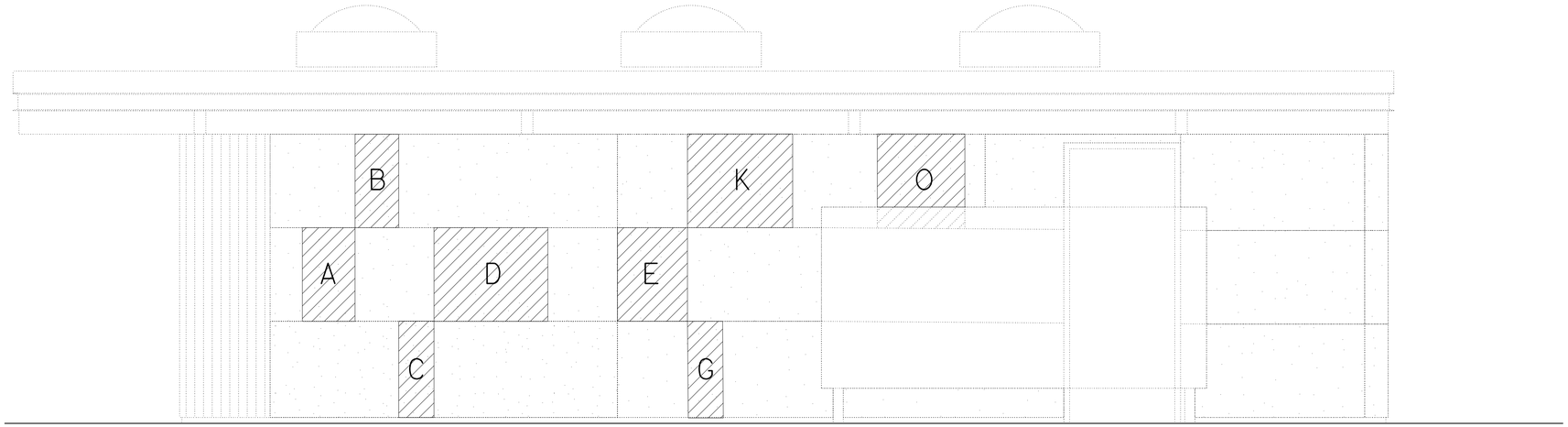


EAST ELEVATION

**SOUTHBOUND COMFORT STATION B DISPLAY PANELS**

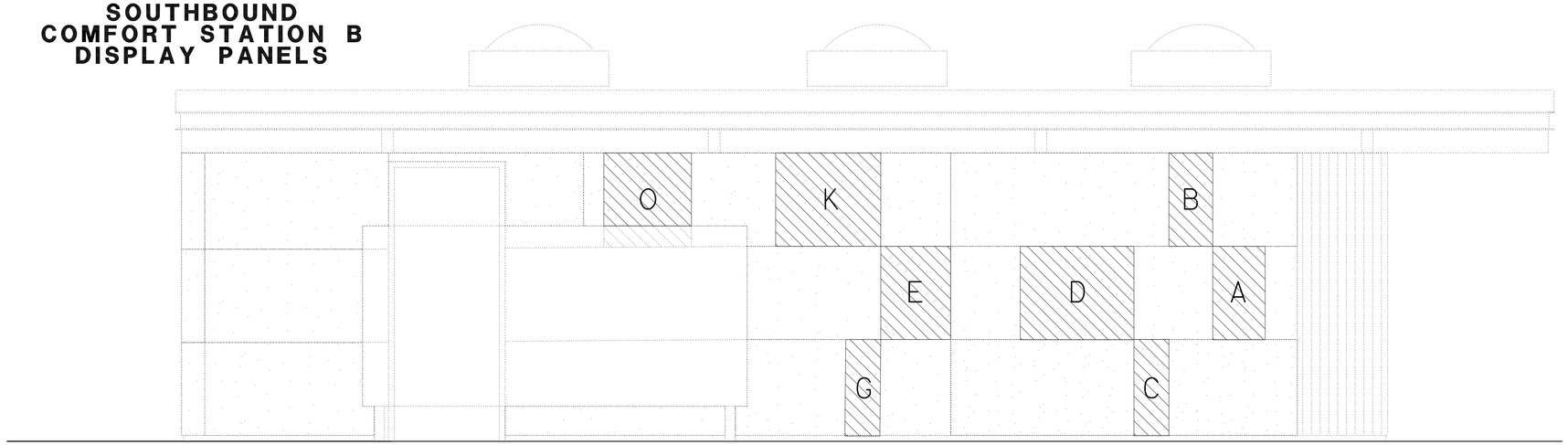


WEST ELEVATION

**SOUTHBOUND COMFORT STATION B DISPLAY PANELS**

## BUILDING DISPLAY PANELS

| LOCATION | IMAGE NUMBER * | | | | | | | | WIDTH (IN) | HEIGHT (IN) | AREA (SQFT) | SUBTOTAL (EA) |
|---|---|---|---|---|---|---|---|---|---|---|---|---|
| | NORTHBOUND | | | | SOUTHBOUND | | | | | | | |
| | COMFORT STATION A | | COMFORT STATION B | | COMFORT STATION A | | COMFORT STATION B | | | | | |
| | EAST | WEST | EAST | WEST | EAST | WEST | EAST | WEST | | | | |
| A | D-1 | D-16 | D-31 | D-39 | D-47 | D-62 | D-77 | D-85 | 18 | 31.5 | 3.94 | 8 |
| B | D-2 | D-17 | D-32 | D-40 | D-48 | D-63 | D-78 | D-86 | 15 | 31.5 | 3.29 | 8 |
| C | D-3 | D-18 | D-33 | D-41 | D-49 | D-64 | D-79 | D-87 | 12 | 31.5 | 2.63 | 8 |
| D | D-4 | D-19 | D-34 | D-42 | D-50 | D-65 | D-80 | D-88 | 39 | 31.5 | 8.54 | 8 |
| E | D-5 | D-20 | D-35 | D-43 | D-51 | D-66 | D-81 | D-89 | 24 | 31.5 | 5.25 | 8 |
| F | D-6 | D-21 | - | - | D-52 | D-67 | - | - | 48 | 31.5 | 10.50 | 4 |
| G | D-7 | D-22 | D-36 | D-44 | D-53 | D-68 | D-82 | D-90 | 12 | 31.5 | 2.63 | 8 |
| H | D-8 | D-23 | - | - | D-54 | D-69 | - | - | 12 | 31.5 | 2.63 | 4 |
| I | D-9 | D-24 | - | - | D-55 | D-70 | - | - | 24 | 31.5 | 5.25 | 4 |
| J | D-10 | D-25 | - | - | D-56 | D-71 | - | - | 12 | 31.5 | 2.63 | 4 |
| K | D-11 | D-26 | D-37 | D-45 | D-57 | D-72 | D-83 | D-91 | 36 | 31.5 | 7.88 | 8 |
| L | D-12 | D-27 | - | - | D-58 | D-73 | - | - | 15 | 31.5 | 3.29 | 4 |
| M | D-13 | D-28 | - | - | D-59 | D-74 | - | - | 15 | 31.5 | 3.29 | 4 |
| N | D-14 | D-29 | - | - | D-60 | D-75 | - | - | 15 | 31.5 | 3.29 | 4 |
| O | D-15 | D-30 | D-38 | D-46 | D-61 | D-76 | D-84 | D-92 | 30 | 31.5 | 6.57 | 8 |

* UNIQUE IMAGES, TOTAL 92 (N)

# CONSTRUCTION DETAILS

NO SCALE

**C-54**

STATE OF CALIFORNIA - DEPARTMENT OF TRANSPORTATION
Caltrans LANDSCAPE ARCHITECTURE

FUNCTIONAL SUPERVISOR: ELBERT COX

CALCULATED-DESIGNED BY: GLORIA RAMIREZ
CHECKED BY: RICHARD COLE

REVISED BY
DATE REVISED

LAST REVISION 02-01-10
DATE PLOTTED => 13-AUG-2010
TIME PLOTTED => 13:52

| Dist | COUNTY | ROUTE | POST MILES TOTAL PROJECT | SHEET No. | TOTAL SHEETS |
|---|---|---|---|---|---|
| 06 | Tul | 99 | 22.4 | 70 | 335 |

Gloria Ramirez
LICENSED LANDSCAPE ARCHITECT

8-9-10
PLANS APPROVAL DATE

LICENSED LANDSCAPE ARCHITECT
GLORIA RAMIREZ No. 5989
Gloria Ramirez
Expiration Date
04/30/10
Renewal Date
12/10/09
Date
STATE OF CALIFORNIA

*THE STATE OF CALIFORNIA OR ITS OFFICERS OR AGENTS SHALL NOT BE RESPONSIBLE FOR THE ACCURACY OR COMPLETENESS OF SCANNED COPIES OF THIS PLAN SHEET.*

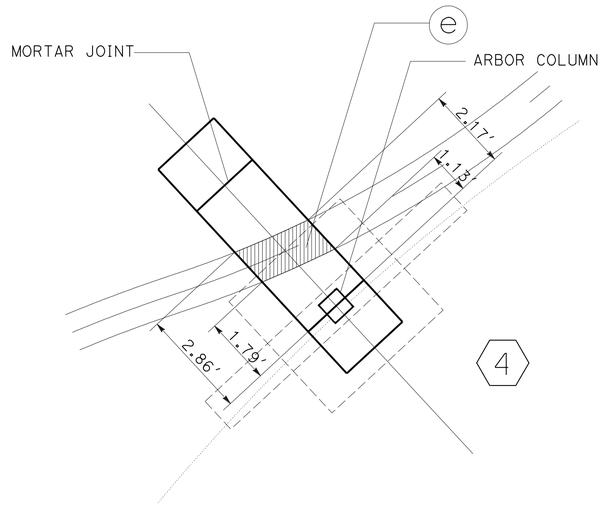


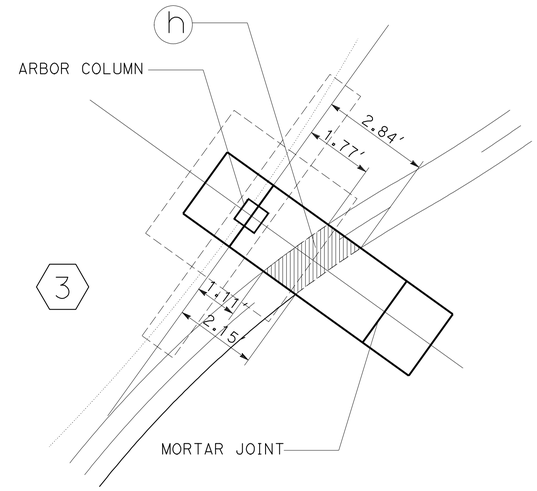


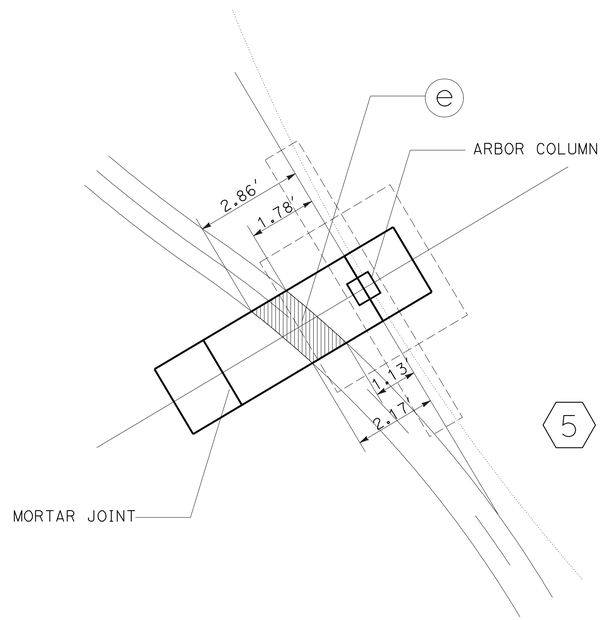


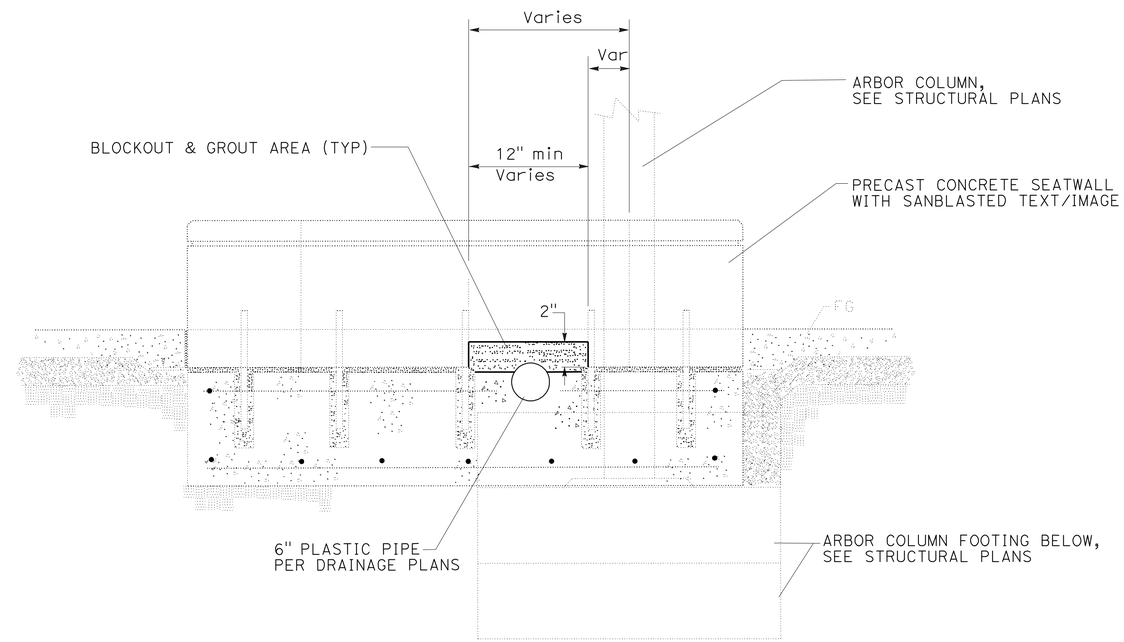


NOTES:

- DRAINAGE SYSTEM No.
- DRAINAGE SYSTEM ITEM
- BLOCKOUT AREA

**PRECAST CONCRETE SEATWALL**
**(TYPE B)**

**BLOCK OUT DETAILS**

# CONSTRUCTION DETAILS

NO SCALE

**C-55**

STATE OF CALIFORNIA - DEPARTMENT OF TRANSPORTATION
Caltrans® LANDSCAPE ARCHITECTURE

FUNCTIONAL SUPERVISOR: ELBERT COX

CALCULATED-DESIGNED BY: RAYMOND SEGURA
CHECKED BY: RICHARD COLE

REVISED BY
DATE REVISED

LAST REVISION: DATE PLOTTED => 04-OCT-2010
01-06-10 TIME PLOTTED => 14:12

| Dist | COUNTY | ROUTE | POST MILES TOTAL PROJECT | SHEET No. | TOTAL SHEETS |
|---|---|---|---|---|---|
| 06 | Tul | 99 | 22.4 | 71 | 335 |

Gloria Ramirez
LICENSED LANDSCAPE ARCHITECT

8-9-10
PLANS APPROVAL DATE

LICENSED LANDSCAPE ARCHITECT
GLORIA RAMIREZ No. 5989
Signature
04/30/12
Renewal Date
06/14/10
Date
STATE OF CALIFORNIA

*THE STATE OF CALIFORNIA OR ITS OFFICERS OR AGENTS SHALL NOT BE RESPONSIBLE FOR THE ACCURACY OR COMPLETENESS OF SCANNED COPIES OF THIS PLAN SHEET.*

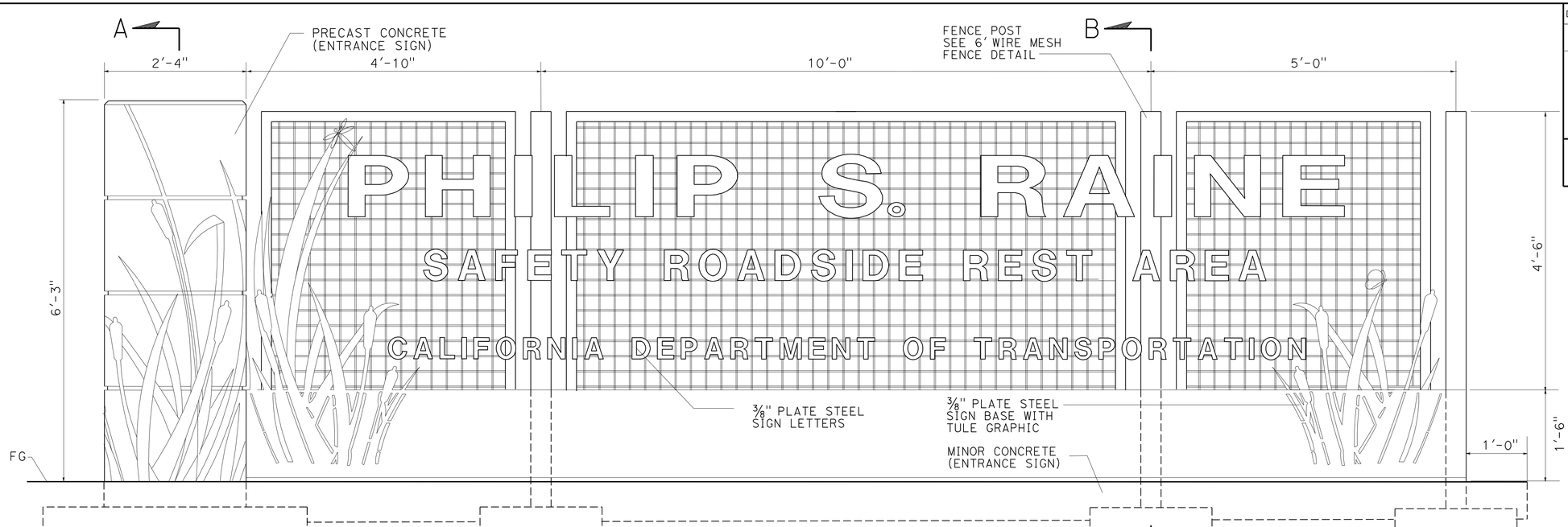


FRONT ELEVATION

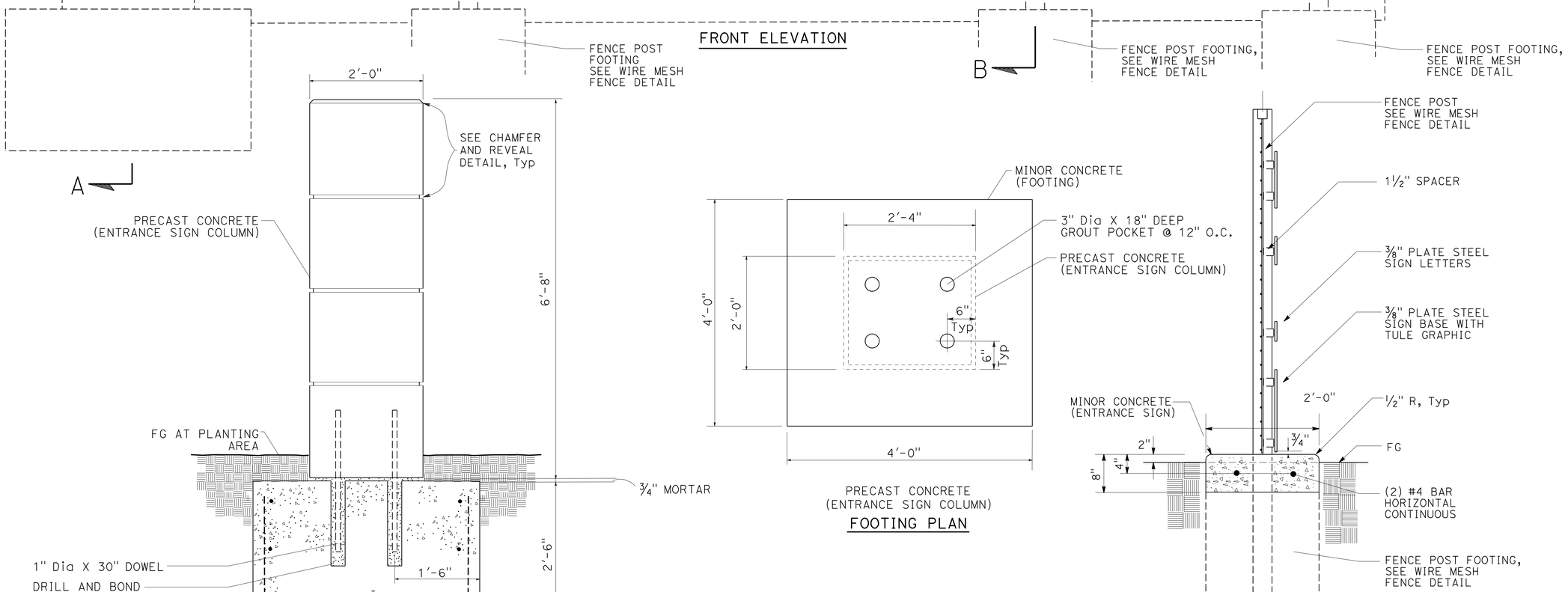


**ENTRANCE SIGN**

# CONSTRUCTION DETAILS

NO SCALE

**C-56**

STATE OF CALIFORNIA - DEPARTMENT OF TRANSPORTATION
Caltrans® LANDSCAPE ARCHITECTURE

FUNCTIONAL SUPERVISOR: ELBERT COX
CALCULATED-DESIGNED BY: GLORIA RAMIREZ
CHECKED BY: RICHARD COLE
REVISED BY
DATE REVISED

LAST REVISION 02-01-10 | DATE PLOTTED => 04-OCT-2010 | TIME PLOTTED => 14:14

| Dist | COUNTY | ROUTE | POST MILES TOTAL PROJECT | SHEET No. | TOTAL SHEETS |
|---|---|---|---|---|---|
| 06 | Tul | 99 | 22.4 | 72 | 335 |

Gloria Ramirez
LICENSED LANDSCAPE ARCHITECT

8-9-10
PLANS APPROVAL DATE

LICENSED LANDSCAPE ARCHITECT
GLORIA RAMIREZ No. 5083
Signature
04/30/10
Renewal Date
02/01/10
Date
STATE OF CALIFORNIA

*THE STATE OF CALIFORNIA OR ITS OFFICERS OR AGENTS SHALL NOT BE RESPONSIBLE FOR THE ACCURACY OR COMPLETENESS OF SCANNED COPIES OF THIS PLAN SHEET.*

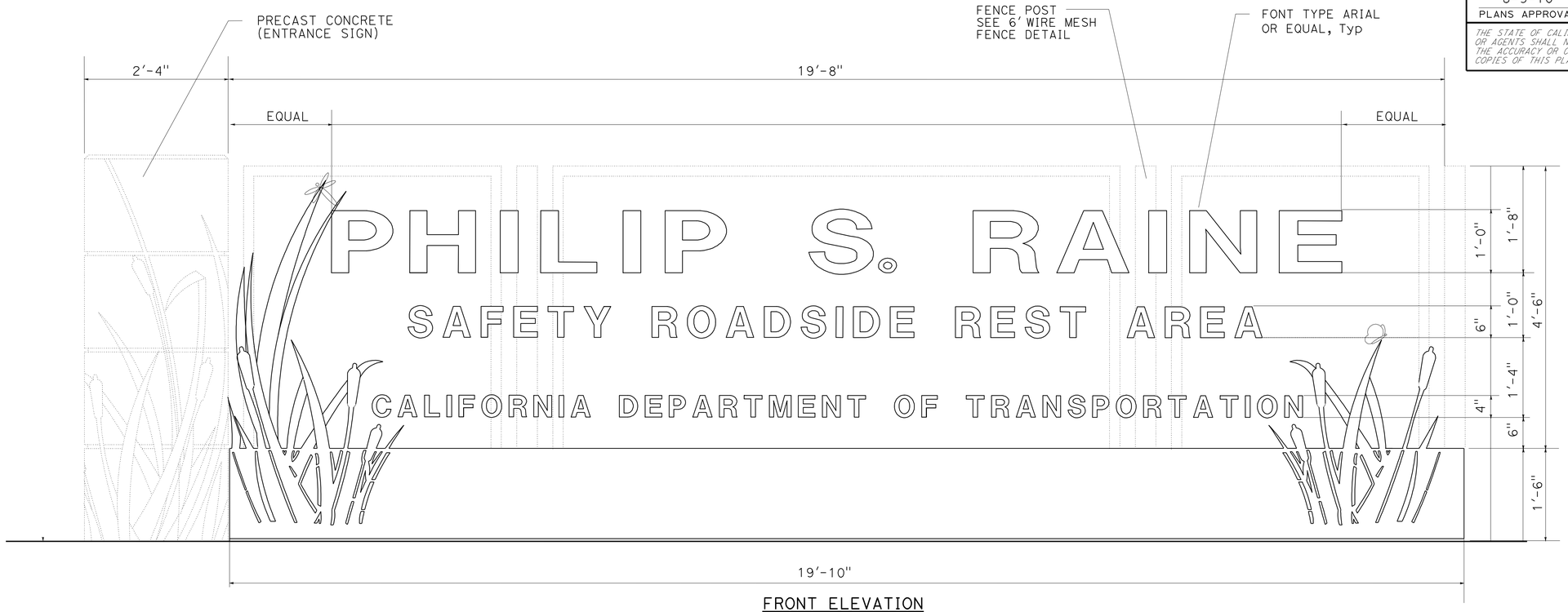


FRONT ELEVATION

**ENTRANCE SIGN**

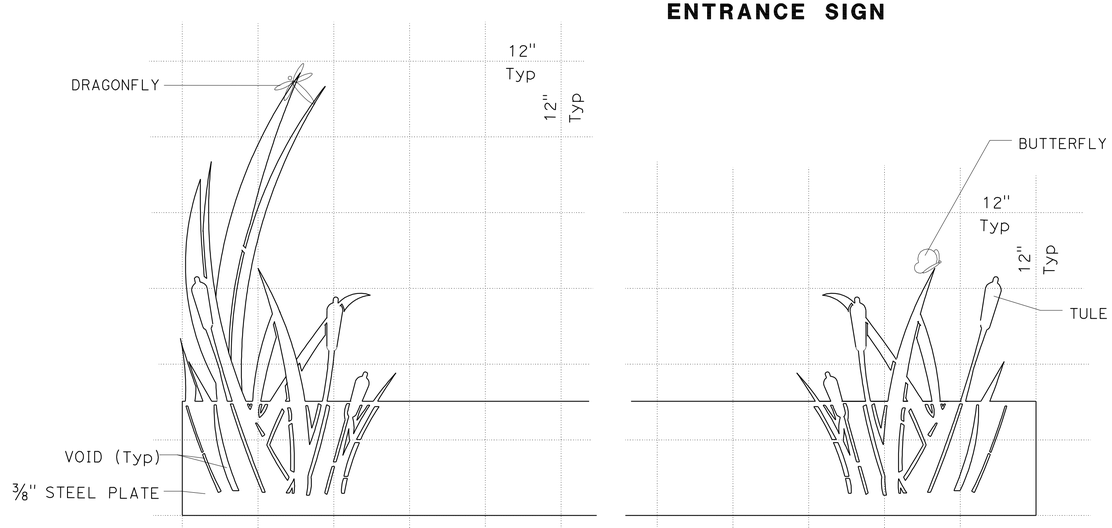


**TULE GRAPHIC**

# CONSTRUCTION DETAILS

NO SCALE

**C-57**

REVISED BY | DATE REVISED
GLORIA RAMIREZ | RICHARD COLE
CALCULATED-DESIGNED BY | CHECKED BY
FUNCTIONAL SUPERVISOR
ELBERT COX

STATE OF CALIFORNIA - DEPARTMENT OF TRANSPORTATION
Caltrans® LANDSCAPE ARCHITECTURE

LAST REVISION 02-01-10 | DATE PLOTTED => 13-AUG-2010 | TIME PLOTTED => 10:48

| Dist | COUNTY | ROUTE | POST MILES TOTAL PROJECT | SHEET No. | TOTAL SHEETS |
|---|---|---|---|---|---|
| 06 | Tul | 99 | 22.4 | 73 | 335 |

Gloria Ramirez
LICENSED LANDSCAPE ARCHITECT

8-9-10
PLANS APPROVAL DATE

LICENSED LANDSCAPE ARCHITECT
GLORIA RAMIREZ No. 5985
Gloria Ramirez
Signature
04/30/10
Renewal Date
02/01/10
Date
STATE OF CALIFORNIA

*THE STATE OF CALIFORNIA OR ITS OFFICERS OR AGENTS SHALL NOT BE RESPONSIBLE FOR THE ACCURACY OR COMPLETENESS OF SCANNED COPIES OF THIS PLAN SHEET.*

## FINISH/COLOR SCHEDULE

| ITEMS | POSTS | BEAMS | FRAME | WIRE MESH | RAILS | TEXT | PLATE STEEL | IMAGE |
|---|---|---|---|---|---|---|---|---|
| ARBOR | 5 | 5 | 5 | | | | | |
| INTERPRETIVE DISPLAY FRAME AND PANEL STYLE 1 | | | 5 | | | | | |
| INTERPRETIVE DISPLAY FRAME AND PANEL STYLE 2 | | | 5 | | | | | |
| INTERPRETIVE DISPLAY FRAME AND PANEL STYLE 3 | | | 16 | | | | | |
| PRECAST CONCRETE SIGN (TYPE A) | | | | | | 17 | | 14 |
| PRECAST CONCRETE SIGN (TYPE B) | | | | | | 17 | | 14 |
| PRECAST CONCRETE SIGN (TYPE C) | | | | | | 17 | | 14 |
| ENTRANCE SIGN | 5 | | 5 | | | 18 | 19 | 14 |
| WIRE MESH FENCE | 5 | | 5 | 5 | | | | |
| TUBE RAILING | 5 | | 5 | 5 | 5 | | | |
| TUBE RAILING | | | | | | | | |

## FINISH/COLOR

1. TAN - FEDERAL 595B COLOR No. 20318
2. DARK GREEN - FEDERAL 595B COLOR No. 34097
3. LIGHT GREEN - FEDERAL 595B COLOR No. 34424
4. LIGHT BLUE - FEDERAL 595B COLOR No. 35526
5. GREY - FEDERAL 595B COLOR No. 26231
6. WHEAT - FEDERAL 595B COLOR No. 23697
14. NATURAL GRAY CONCRETE
15. TAN - FEDERAL 595B COLOR No. 33717
16. BROWN - FEDERAL 595B COLOR No. 20095
17. GREEN - FEDERAL 595B COLOR No. 24373
18. BLUE - FEDERAL 595B COLOR No. 25177
19. NATURAL RUST

# CONSTRUCTION DETAILS

C-58

REVISED BY | DATE REVISED
GLORIA RAMIREZ | RICHARD COLE
CALCULATED-DESIGNED BY | CHECKED BY
FUNCTIONAL SUPERVISOR | ELBERT COX
STATE OF CALIFORNIA - DEPARTMENT OF TRANSPORTATION
Caltrans® LANDSCAPE ARCHITECTURE

LAST REVISION 02-01-10 | DATE PLOTTED => 13-AUG-2010 | TIME PLOTTED => 11:11

| Dist | COUNTY | ROUTE | POST MILES TOTAL PROJECT | SHEET No. | TOTAL SHEETS |
|---|---|---|---|---|---|
| 06 | Tul | 99 | 22.4 | 74 | 335 |

Gloria Ramirez
LICENSED LANDSCAPE ARCHITECT

8-9-10
PLANS APPROVAL DATE

LICENSED LANDSCAPE ARCHITECT GLORIA RAMIREZ No. 3989 Gloria Ramirez Expiration Date 04/30/12 Renewal Date 02/01/10 Date STATE OF CALIFORNIA

*THE STATE OF CALIFORNIA OR ITS OFFICERS OR AGENTS SHALL NOT BE RESPONSIBLE FOR THE ACCURACY OR COMPLETENESS OF SCANNED COPIES OF THIS PLAN SHEET.*

## LEGEND:

PRECAST CONCRETE PAVER WITH GRAPHIC IMAGE, SEE SHEET C-63.

IRON RAIL, SEE C-24, C-25 AND C-63.

## NOTE:

FOR CURVE DATA, OFFSET INFORMATION, AND INTERSECTION POINT INFORMATION, SEE SHEETS C-1THROUGH C-23.

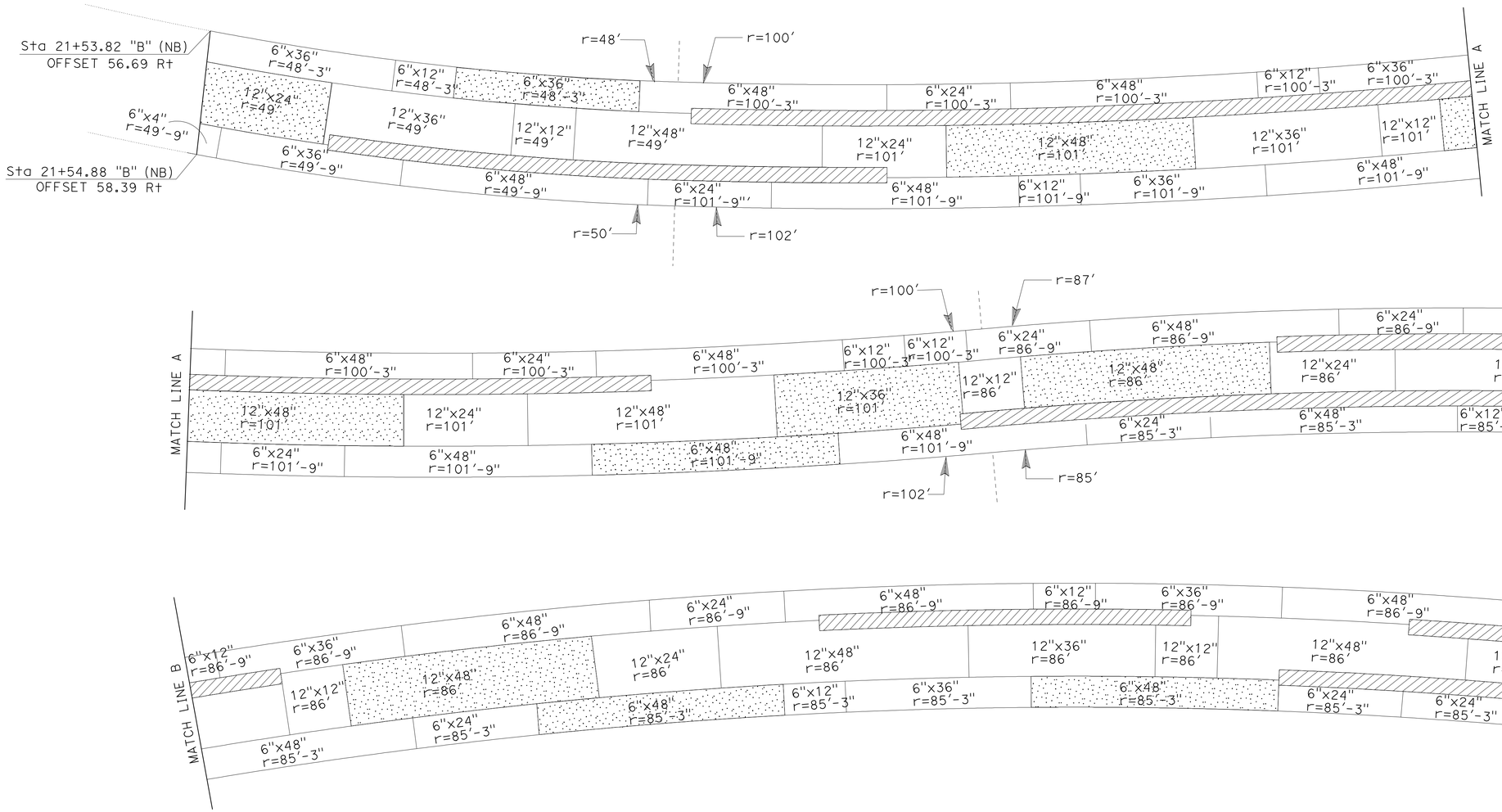


## PRECAST CONCRETE PAVERS LAYOUT
(SEE SHEET Q-2)

## CONSTRUCTION DETAILS
## (NORTHBOUND SITE)
SCALE: 1" = 10′

C-59

STATE OF CALIFORNIA - DEPARTMENT OF TRANSPORTATION
Caltrans LANDSCAPE ARCHITECTURE

FUNCTIONAL SUPERVISOR: ELBERT COX
CALCULATED-DESIGNED BY: GLORIA RAMIREZ
CHECKED BY: RICHARD COLE
REVISED BY / DATE REVISED

LAST REVISION 02-01-10 | DATE PLOTTED => 04-OCT-2010 | TIME PLOTTED => 14:14

| Dist | COUNTY | ROUTE | POST MILES TOTAL PROJECT | SHEET No. | TOTAL SHEETS |
|---|---|---|---|---|---|
| 06 | Tul | 99 | 22.4 | 75 | 335 |

Gloria Ramirez
LICENSED LANDSCAPE ARCHITECT

8-9-10
PLANS APPROVAL DATE

LICENSED LANDSCAPE ARCHITECT GLORIA RAMIREZ No. 5089 Gloria Ramirez Signature 04/30/12 Renewal Date 02/01/10 Date STATE OF CALIFORNIA

*THE STATE OF CALIFORNIA OR ITS OFFICERS OR AGENTS SHALL NOT BE RESPONSIBLE FOR THE ACCURACY OR COMPLETENESS OF SCANNED COPIES OF THIS PLAN SHEET.*

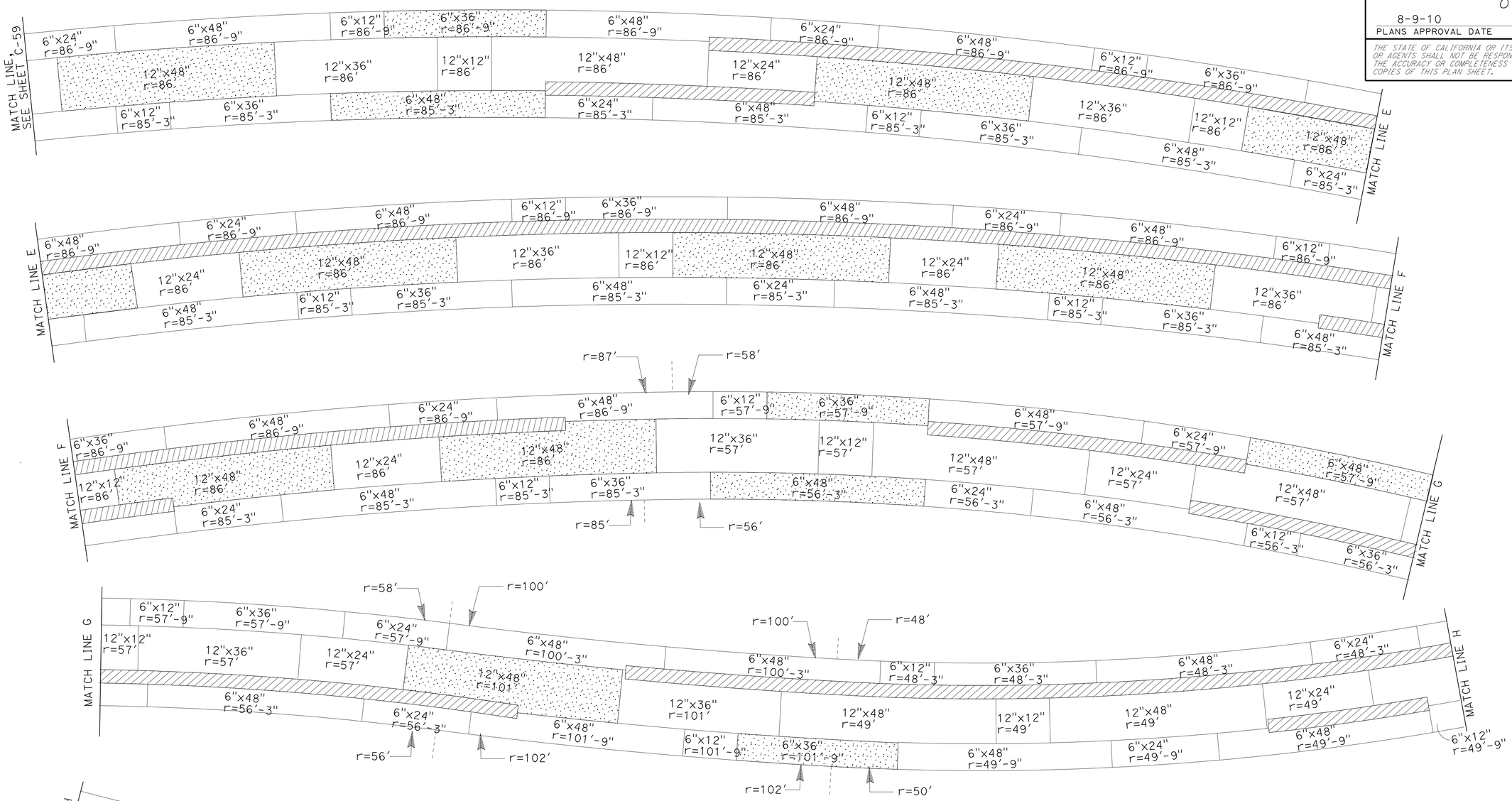


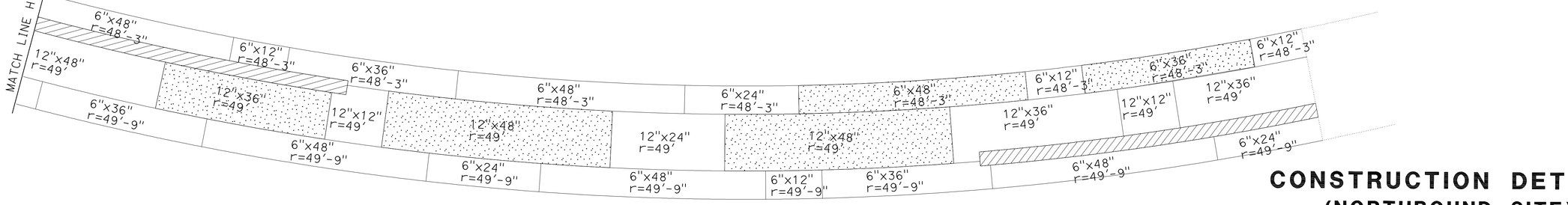


## PRECAST CONCRETE PAVERS LAYOUT (CONTINUED)

(SEE SHEET Q-2)

## CONSTRUCTION DETAILS

(NORTHBOUND SITE)

SCALE: 1" = 10′

C-60

STATE OF CALIFORNIA - DEPARTMENT OF TRANSPORTATION
Caltrans LANDSCAPE ARCHITECTURE

FUNCTIONAL SUPERVISOR: ELBERT COX
CALCULATED-DESIGNED BY: GLORIA RAMIREZ
CHECKED BY: RICHARD COLE
REVISED BY
DATE REVISED

LAST REVISION 02-01-10
DATE PLOTTED => 13-AUG-2010
TIME PLOTTED => 10:49

| Dist | COUNTY | ROUTE | POST MILES TOTAL PROJECT | SHEET No. | TOTAL SHEETS |
|---|---|---|---|---|---|
| 06 | Tul | 99 | 22.4 | 76 | 335 |

Gloria Ramirez
LICENSED LANDSCAPE ARCHITECT

8-9-10
PLANS APPROVAL DATE

LICENSED LANDSCAPE ARCHITECT
GLORIA RAMIREZ No. 5095
Gloria Ramirez
Expiration Date 04/30/12
Renewal Date 02/01/10
Date
STATE OF CALIFORNIA

*THE STATE OF CALIFORNIA OR ITS OFFICERS OR AGENTS SHALL NOT BE RESPONSIBLE FOR THE ACCURACY OR COMPLETENESS OF SCANNED COPIES OF THIS PLAN SHEET.*

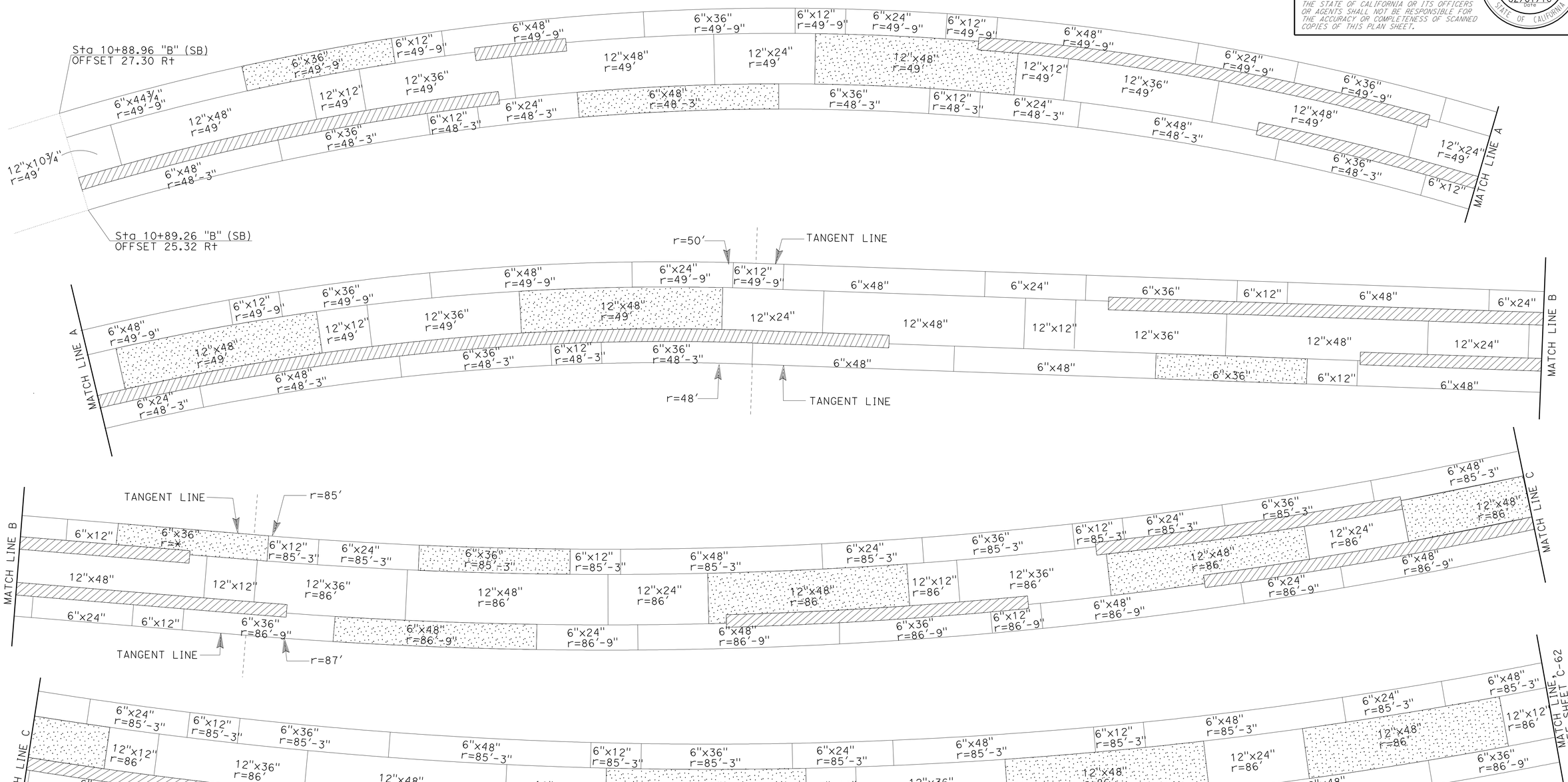


## PRECAST CONCRETE PAVERS LAYOUT
(SEE SHEET Q-2)

# CONSTRUCTION DETAILS
## (SOUTHBOUND SITE)

SCALE: 1" = 10'

**C-61**

STATE OF CALIFORNIA - DEPARTMENT OF TRANSPORTATION
Caltrans® LANDSCAPE ARCHITECTURE

FUNCTIONAL SUPERVISOR: ELBERT COX
CALCULATED-DESIGNED BY: GLORIA RAMIREZ
CHECKED BY: RICHARD COLE
REVISED BY
DATE REVISED

LAST REVISION 02-01-10 | DATE PLOTTED => 04-OCT-2010 | TIME PLOTTED => 14:14

| Dist | COUNTY | ROUTE | POST MILES TOTAL PROJECT | SHEET No. | TOTAL SHEETS |
|---|---|---|---|---|---|
| 06 | Tul | 99 | 22.4 | 77 | 335 |

Gloria Ramirez
LICENSED LANDSCAPE ARCHITECT

8-9-10
PLANS APPROVAL DATE

LICENSED LANDSCAPE ARCHITECT
GLORIA RAMIREZ No. 3062
Gloria Ramirez
Expiration Date
04/30/12
Renewal Date
02/01/10
Date
STATE OF CALIFORNIA

*THE STATE OF CALIFORNIA OR ITS OFFICERS OR AGENTS SHALL NOT BE RESPONSIBLE FOR THE ACCURACY OR COMPLETENESS OF SCANNED COPIES OF THIS PLAN SHEET.*

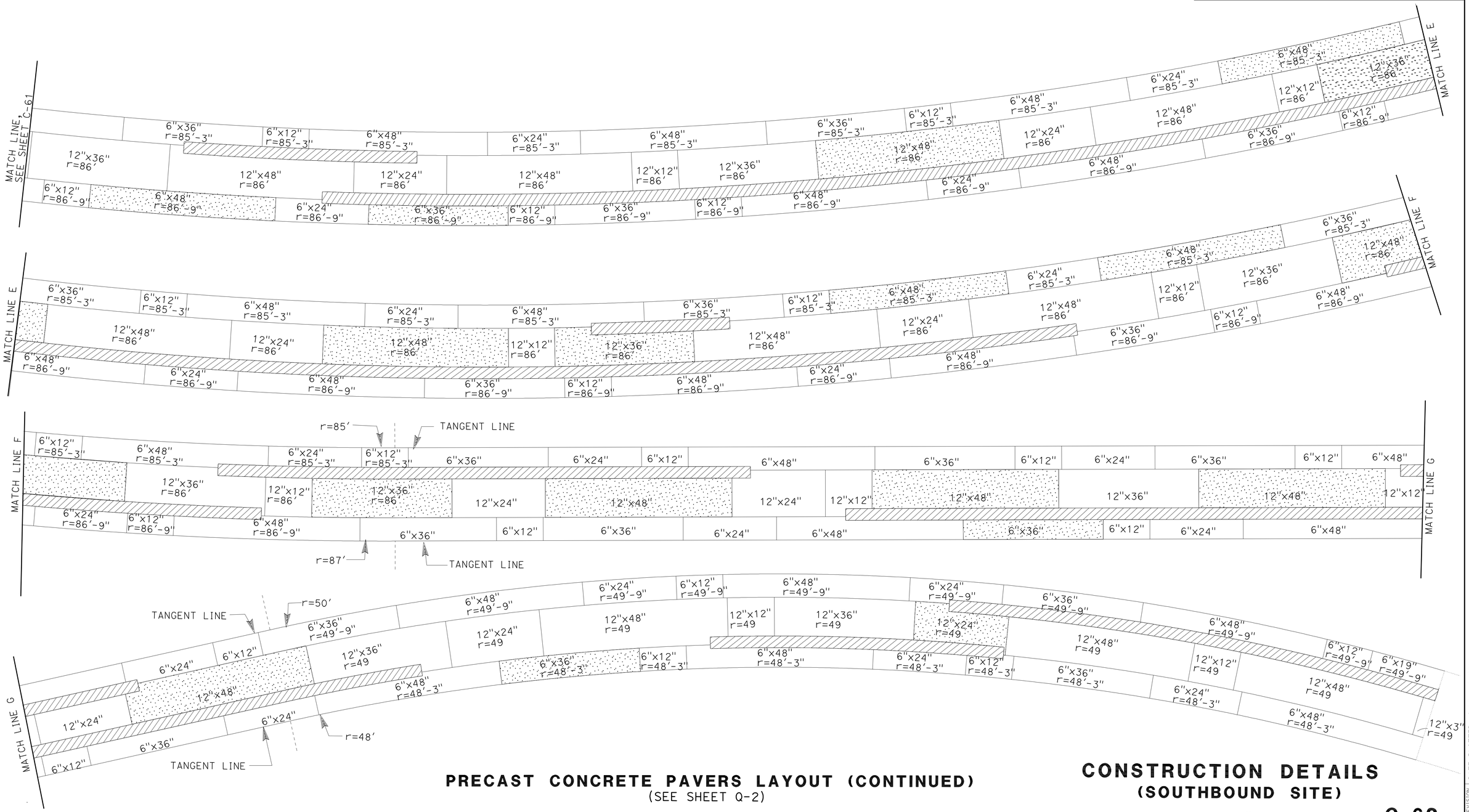


## PRECAST CONCRETE PAVERS LAYOUT (CONTINUED)

(SEE SHEET Q-2)

## CONSTRUCTION DETAILS
### (SOUTHBOUND SITE)

SCALE: 1" = 10′

C-62

STATE OF CALIFORNIA - DEPARTMENT OF TRANSPORTATION
Caltrans® LANDSCAPE ARCHITECTURE

FUNCTIONAL SUPERVISOR: ELBERT COX
CALCULATED-DESIGNED BY: GLORIA RAMIREZ
CHECKED BY: RICHARD COLE
REVISED BY
DATE REVISED

LAST REVISION 02-01-10
DATE PLOTTED => 13-AUG-2010
TIME PLOTTED => 10:50

| Dist | COUNTY | ROUTE | POST MILES TOTAL PROJECT | SHEET No. | TOTAL SHEETS |
|---|---|---|---|---|---|
| 06 | Tul | 99 | 22.4 | 78 | 335 |

Gloria Ramirez
LICENSED LANDSCAPE ARCHITECT

8-9-10
PLANS APPROVAL DATE

LICENSED LANDSCAPE ARCHITECT GLORIA RAMIREZ No. 5088 Signature 04/30/12 Renewal Date 02/01/10 Date STATE OF CALIFORNIA

*THE STATE OF CALIFORNIA OR ITS OFFICERS OR AGENTS SHALL NOT BE RESPONSIBLE FOR THE ACCURACY OR COMPLETENESS OF SCANNED COPIES OF THIS PLAN SHEET.*

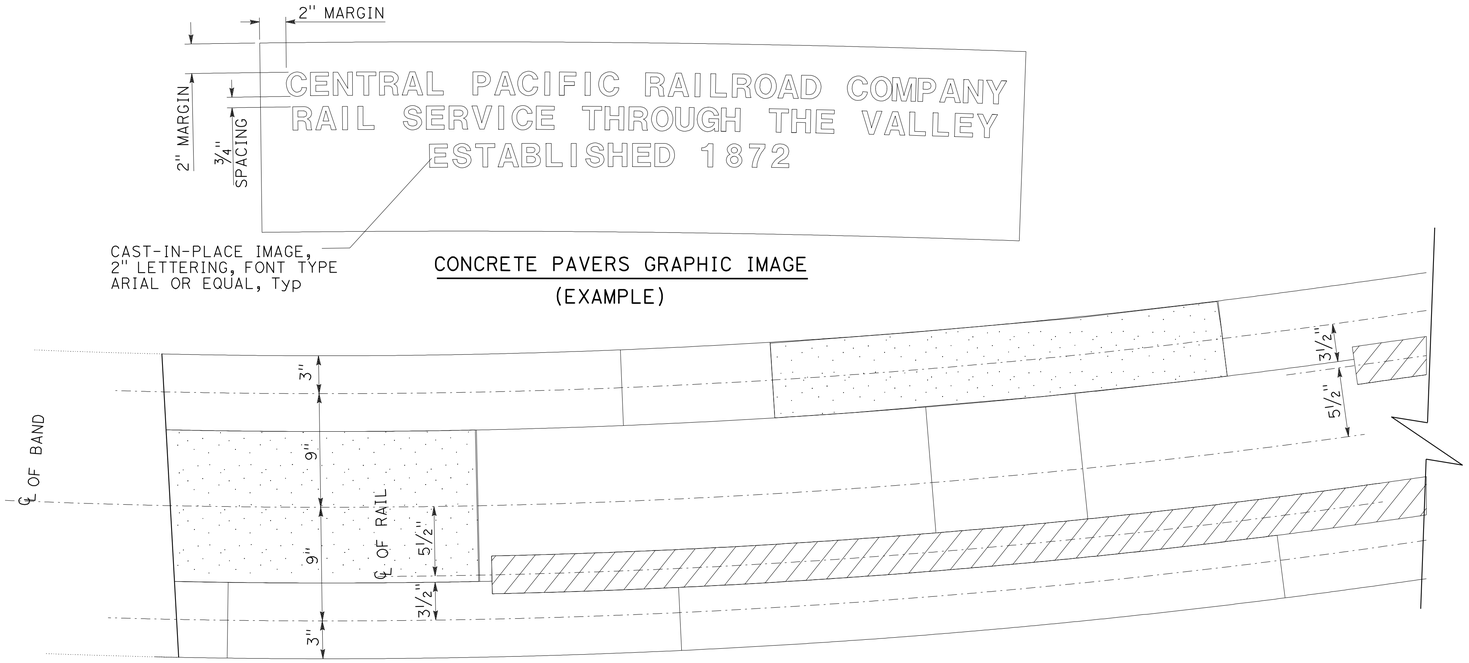


## CONCRETE PAVERS (BAND)

### IRON RAIL - NORTHBOUND

| RAIL | BEGIN STATION "B" (NB) LINE | LENGTH (FT) | RADIUS (FT) | ℄ OFFSET (FT) | WEIGHT (LBS) |
|---|---|---|---|---|---|
| A | 21+56.43 | 5.62 | 49.46 | 1.5 | 196.70 |
| | 21+61.14 | 3.41 | 101.46 | 1.5 | 122.76 |
| B | 21+60.77 | 20.04 | 100.54 | 0.5 | 701.40 |
| C | 21+79.51 | 12.03 | 85.54 | 1.5 | 421.05 |
| D | 21+82.17 | 8.98 | 86.46 | 0.5 | 314.30 |
| E | 21+95.30 | 6.00 | 86.46 | 0.5 | 210.00 |
| F | 22+02.00 | 6.10 | 85.54 | 1.5 | 213.50 |
| G | 22+03.26 | 19.17 | 86.46 | 0.5 | 670.95 |
| H | 22+41.73 | 5.00 | 85.54 | 1.5 | 175.00 |
| I | 22+44.71 | 46.87 | 86.46 | 0.5 | 1640.45 |
| J | 22+79.85 | 2.97 | 85.54 | 1.5 | 103.95 |
| K | 22+95.23 | 5.95 | 57.46 | 0.5 | 208.25 |
| L | 22+98.54 | 10.60 | 56.54 | 1.5 | 371.00 |
| | 23+05.83 | 1.46 | 101.46 | 1.5 | 52.56 |
| M | 23+08.67 | 3.92 | 100.54 | 0.5 | 145.04 |
| | 23+11.25 | 17.10 | 48.54 | 0.5 | 649.80 |
| N | 23+16.50 | 3.00 | 49.46 | 1.5 | 105.00 |
| O | 23+34.84 | 6.00 | 49.46 | 1.5 | 210.00 |

### IRON RAIL - SOUTHBOUND

| RAIL | BEGIN STATION "B" (SB) LINE | LENGTH (FT) | RADIUS (FT) | ℄ OFFSET (FT) | WEIGHT (LBS) |
|---|---|---|---|---|---|
| A | 10+89.18 | 8.48 | 48.54 | 0.5 | 296.80 |
| B | 10+97.29 | 1.81 | 49.45 | 1.5 | 63.35 |
| C | 11+07.20 | 9.07 | 49.45 | 1.5 | 317.45 |
| D | 11+12.42 | 17.53 | 48.54 | 0.5 | 596.02 |
| | 11+27.58 | 2.69 | 0.00 | 0.5 | 94.15 |
| E | 11+33.60 | 12.01 | 0.00 | 1.5 | 420.35 |
| F | 11+36.81 | 8.22 | 0.00 | 0.5 | 287.70 |
| | 11+43.10 | 0.77 | 86.45 | 0.5 | 27.72 |
| G | 11+50.70 | 6.00 | 86.45 | 0.5 | 210.00 |
| H | 11+57.56 | 6.12 | 85.54 | 1.5 | 214.20 |
| I | 11+58.90 | 19.18 | 86.45 | 0.5 | 671.30 |
| J | 11+97.78 | 5.00 | 85.54 | 1.5 | 175.00 |
| K | 12+00.80 | 46.90 | 86.45 | 0.5 | 1641.50 |
| L | 12+35.57 | 2.97 | 85.50 | 1.5 | 103.95 |
| M | 12+50.66 | 5.97 | 86.45 | 0.5 | 208.95 |
| N | 12+53.93 | 3.79 | 85.54 | 1.5 | 128.86 |
| | 12+56.76 | 7.62 | 0.00 | 1.5 | 266.70 |
| O | 12+64.53 | 17.89 | 0.00 | 0.5 | 608.26 |
| | 12+77.66 | 2.98 | 48.54 | 0.5 | 104.30 |
| P | 12+72.58 | 2.98 | 0.00 | 1.5 | 104.30 |
| Q | 12+84.96 | 6.29 | 48.54 | 0.5 | 220.15 |
| R | 12+88.94 | 10.62 | 49.61 | 1.5 | 371.70 |

## CONCRETE PAVER GRAPHIC IMAGES

| IMAGE No. | THEME | PAVER DIMENSION | SUB-TOTAL SB | SUB-TOTAL NB | TOTAL |
|---|---|---|---|---|---|
| T1 | WILDLIFE CORRIDOR | 6" x 36" | 1 | 1 | 2 |
| T2 | WILDLIFE CORRIDOR | 6" x 48" | 1 | 1 | 2 |
| T3 | WILDLIFE CORRIDOR | 12" x 48" | 1 | 1 | 2 |
| T4 | WILDLIFE CORRIDOR | 12" x 48" | 1 | 1 | 2 |
| T5 | WILDLIFE CORRIDOR | 12" x 36" | 1 | 1 | 2 |
| T6 | WILDLIFE CORRIDOR | 12" x 48" | 1 | 1 | 2 |
| T7 | EARLY TRAILS - YOKUT | 6" x 36" | 1 | 1 | 2 |
| T8 | EARLY TRAILS - YOKUT | 12" x 48" | 1 | 1 | 2 |
| T9 | EARLY TRAILS - YOKUT | 6" x 48" | 1 | 1 | 2 |
| T10 | EARLY TRAILS - YOKUT | 6" x 48" | 1 | 1 | 2 |
| T11 | TRAILS - SETTLERS | 6" x 36" | 1 | 1 | 2 |
| T12 | TRAILS - SETTLERS | 12" x 48" | 1 | 1 | 2 |
| T13 | TRAILS - SETTLERS | 12" x 48" | 1 | 1 | 2 |
| T14 | TRAILS - SETTLERS | 12" x 48" | 1 | 1 | 2 |
| T15 | TRAILS - SETTLERS | 12" x 48" | 1 | 1 | 2 |
| T16 | TRAILS - SETTLERS | 12" x 48" | 1 | 1 | 2 |
| T17 | FERRY - RAILROAD | 12" x 48" | 1 | 1 | 2 |
| T18 | FERRY - RAILROAD | 12" x 48" | 1 | 1 | 2 |
| T19 | FERRY - RAILROAD | 6" x 48" | 1 | 1 | 2 |
| T20 | FERRY - RAILROAD | 6" x 36" | 1 | 1 | 2 |
| T21 | FERRY - RAILROAD | 12" x 48" | 1 | 1 | 2 |
| T22 | FERRY - RAILROAD | 6" x 48" | 1 | 1 | 2 |
| T23 | FERRY - RAILROAD | 12" x 36" | 1 | 1 | 2 |
| T24 | FERRY - RAILROAD | 12" x 48" | 1 | 1 | 2 |
| T25 | FERRY - RAILROAD | 12" x 36" | 1 | 1 | 2 |
| T26 | 99 CORRIDOR | 6" x 48" | 1 | 1 | 2 |
| T27 | 99 CORRIDOR | 6" x 48" | 1 | 1 | 2 |
| T28 | 99 CORRIDOR | 12" x 48" | 1 | 1 | 2 |
| T29 | 99 CORRIDOR | 12" x 36" | 1 | 1 | 2 |
| T30 | 99 CORRIDOR | 12" x 48" | 1 | 1 | 2 |
| T31 | 99 CORRIDOR | 12" x 36" | 1 | 1 | 2 |
| T32 | 99 CORRIDOR | 6" x 48" | 1 | 1 | 2 |
| T33 | 99 CORRIDOR | 12" x 48" | 1 | 1 | 2 |
| T34 | 99 CORRIDOR | 12" x 48" | 1 | 1 | 2 |
| T35 | 99 CORRIDOR | 6" x 36" | 1 | 1 | 2 |
| T36 | 99 CORRIDOR | 12" x 24" | 1 | 1 | 2 |

## CONSTRUCTION DETAILS

NO SCALE

C-63

REVISED BY | DATE REVISED
GLORIA RAMIREZ | RICHARD COLE
CALCULATED-DESIGNED BY | CHECKED BY
FUNCTIONAL SUPERVISOR
ELBERT COX

STATE OF CALIFORNIA - DEPARTMENT OF TRANSPORTATION
Caltrans LANDSCAPE ARCHITECTURE

LAST REVISION 02-01-10 | DATE PLOTTED => 04-OCT-2010 | TIME PLOTTED => 14:15

| Dist | COUNTY | ROUTE | POST MILES TOTAL PROJECT | SHEET No. | TOTAL SHEETS |
|---|---|---|---|---|---|
| 06 | Tul | 99 | 22.4 | 79 | 335 |

Gloria Ramirez
LICENSED LANDSCAPE ARCHITECT

8-9-10
PLANS APPROVAL DATE

LICENSED LANDSCAPE ARCHITECT
GLORIA RAMIREZ No. 5089
Gloria Ramirez
Signature
04/30/12
Renewal Date
02/01/10
Date
STATE OF CALIFORNIA

*THE STATE OF CALIFORNIA OR ITS OFFICERS OR AGENTS SHALL NOT BE RESPONSIBLE FOR THE ACCURACY OR COMPLETENESS OF SCANNED COPIES OF THIS PLAN SHEET.*

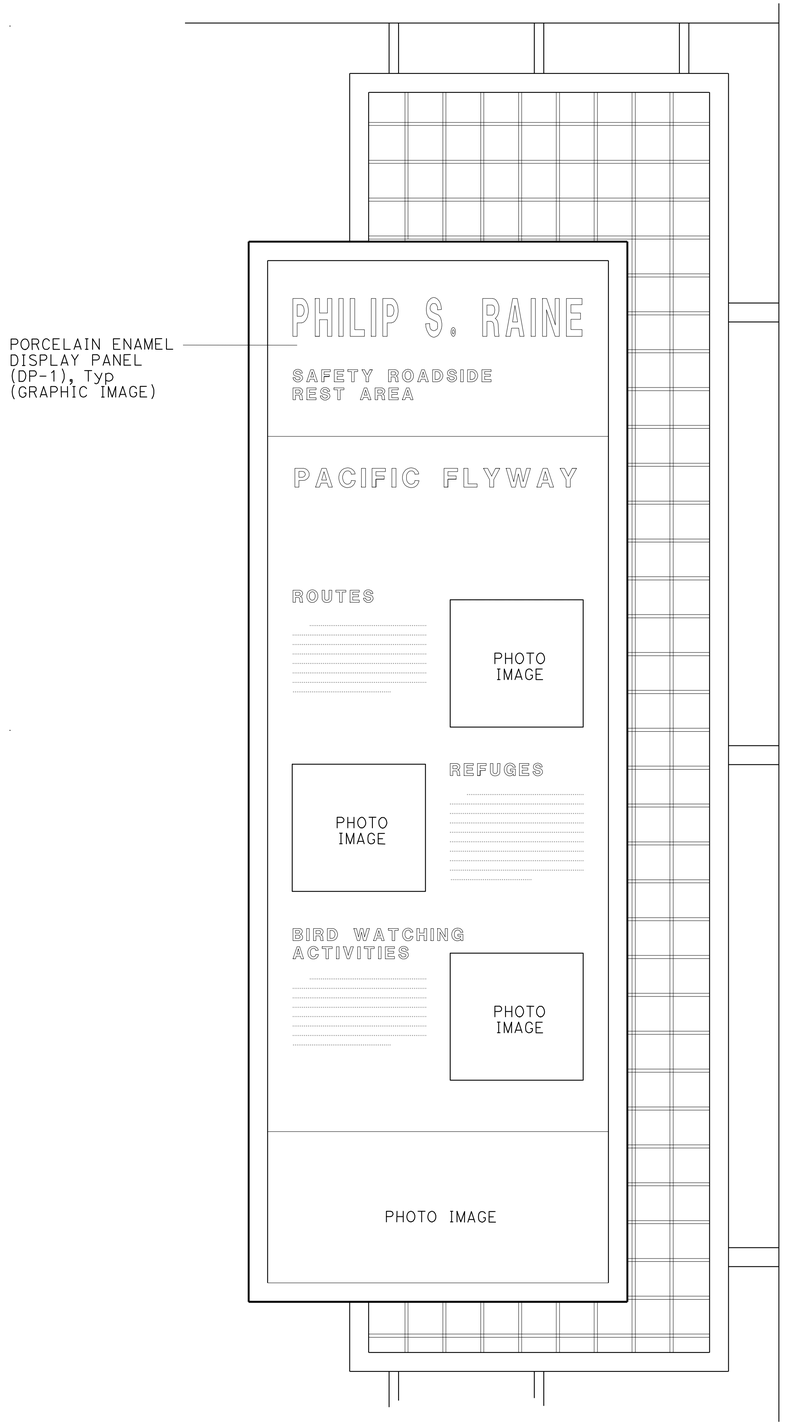


FRONT ELEVATION

**DISPLAY PANEL (DP-1)**

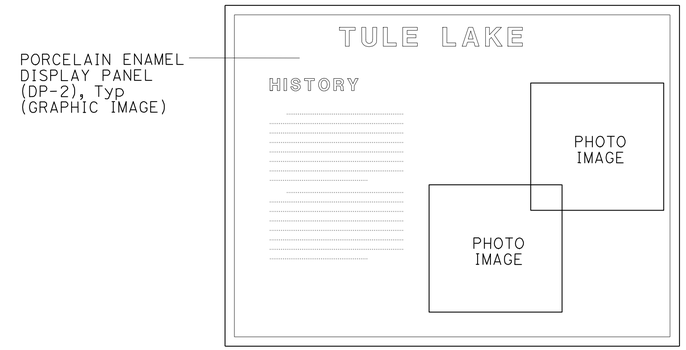


FRONT ELEVATION

**DISPLAY PANEL (DP-2)**

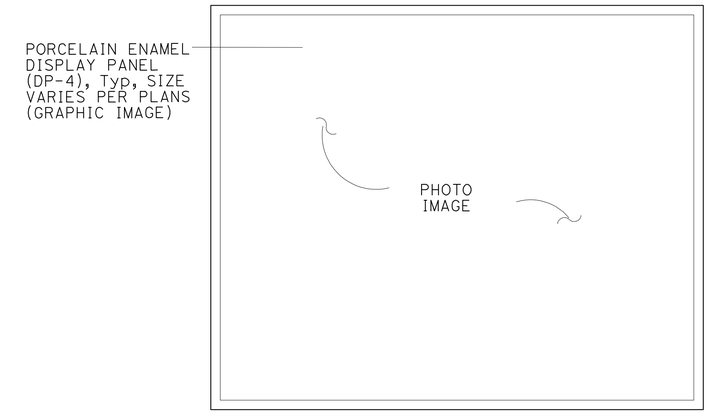


FRONT ELEVATION

**BUILDING DISPLAY PANEL (DP-4)**

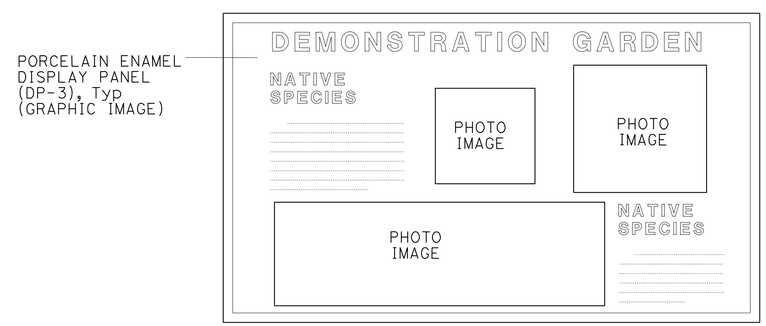


FRONT ELEVATION

**DISPLAY PANEL (DP-3)**

**DISPLAY PANEL GRAPHICS**

# CONSTRUCTION DETAILS

NO SCALE

**C-64**

| REVISED BY | DATE REVISED |
|---|---|
| | |

GLORIA RAMIREZ — RICHARD COLE

CALCULATED-DESIGNED BY — CHECKED BY

FUNCTIONAL SUPERVISOR: ELBERT COX

STATE OF CALIFORNIA - DEPARTMENT OF TRANSPORTATION
Caltrans® LANDSCAPE ARCHITECTURE

LAST REVISION 02-01-10 | DATE PLOTTED => 13-AUG-2010 | TIME PLOTTED => 10:50

| Dist | COUNTY | ROUTE | POST MILES TOTAL PROJECT | SHEET No. | TOTAL SHEETS |
|---|---|---|---|---|---|
| 06 | Tul | 99 | 22.4 | 80 | 335 |

Gloria Ramirez
LICENSED LANDSCAPE ARCHITECT

8-9-10
PLANS APPROVAL DATE

LICENSED LANDSCAPE ARCHITECT GLORIA RAMIREZ No. 5083 Gloria Ramirez Expiration Date 04/30/10 Renewal Date 02/01/10 Date STATE OF CALIFORNIA

*THE STATE OF CALIFORNIA OR ITS OFFICERS OR AGENTS SHALL NOT BE RESPONSIBLE FOR THE ACCURACY OR COMPLETENESS OF SCANNED COPIES OF THIS PLAN SHEET.*

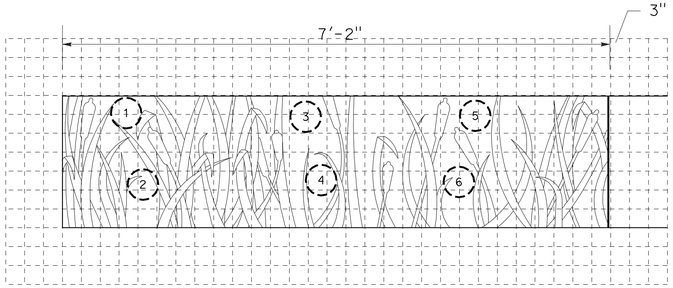


FRONT AND BACK ELEVATION

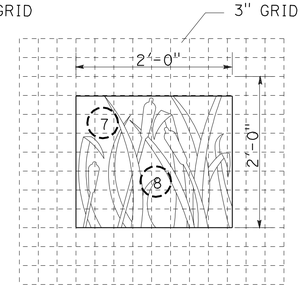


END ELEVATION

## TULE GRAPHIC IMAGE
## PRECAST CONCRETE SEATWALL
## (TYPE C)

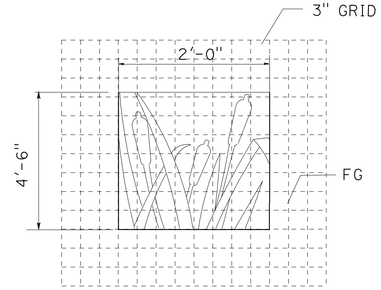


FRONT AND BACK ELEVATION

## TULE GRAPHIC IMAGE
## PRECAST CONCRETE SIGN
## AND FAUCET ASSEMBLY

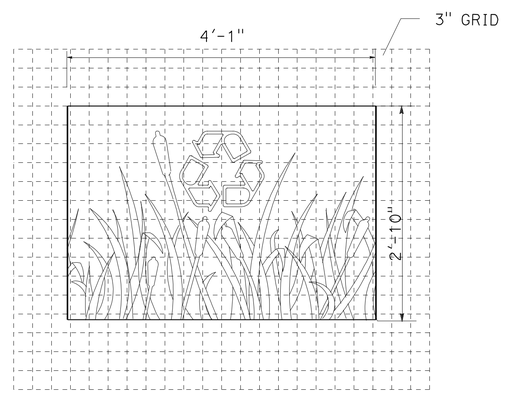


FRONT ELEVATION

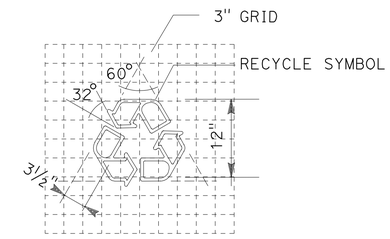


RECYCLE IMAGE

## TULE GRAPHIC IMAGE
## PRECAST CONCRETE TRASH
## AND RECYCLING CONTAINER

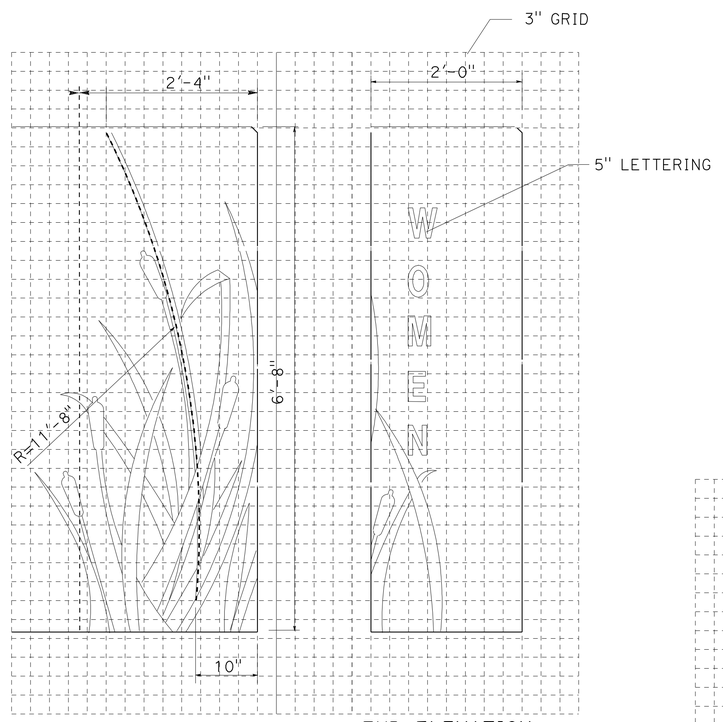


FRONT AND BACK ELEVATION

END ELEVATION

## TULE GRAPHIC IMAGE
## MONUMENT AND ENTRY SIGN POST

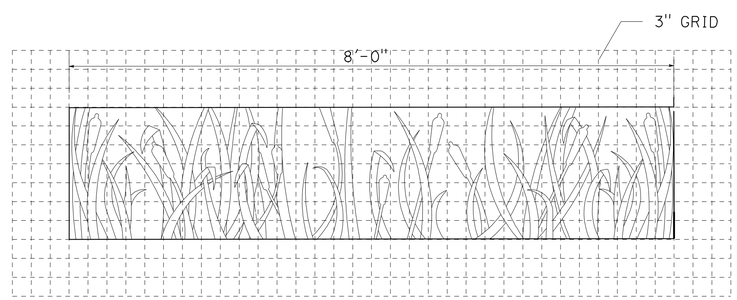


FRONT AND BACK ELEVATION

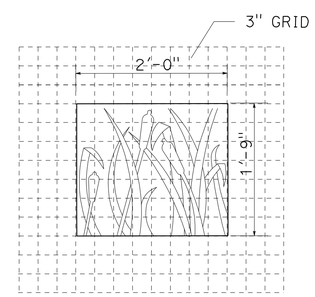


END ELEVATION

## TULE GRAPHIC IMAGE
## PRECAST CONCRETE NEWSPAPER RACK BASE

# CONSTRUCTION DETAILS

NO SCALE

**C-65**

STATE OF CALIFORNIA - DEPARTMENT OF TRANSPORTATION
Caltrans® LANDSCAPE ARCHITECTURE

FUNCTIONAL SUPERVISOR: ELBERT COX
CALCULATED-DESIGNED BY: GLORIA RAMIREZ
CHECKED BY: RICHARD COLE
REVISED BY
DATE REVISED

LAST REVISION 02-01-10 | DATE PLOTTED => 13-AUG-2010 | TIME PLOTTED => 10:50

| Dist | COUNTY | ROUTE | POST MILES TOTAL PROJECT | SHEET No. | TOTAL SHEETS |
|---|---|---|---|---|---|
| 06 | Tul | 99 | 22.4 | 81 | 335 |

Gloria Ramirez
LICENSED LANDSCAPE ARCHITECT

8-9-10
PLANS APPROVAL DATE

LICENSED LANDSCAPE ARCHITECT
GLORIA RAMIREZ No. 5985
Gloria Ramirez
Signature
04/30/10
Renewal Date
02/01/10
Date
STATE OF CALIFORNIA

*THE STATE OF CALIFORNIA OR ITS OFFICERS OR AGENTS SHALL NOT BE RESPONSIBLE FOR THE ACCURACY OR COMPLETENESS OF SCANNED COPIES OF THIS PLAN SHEET.*

**LEGEND:**

HP HIGH POINT

FFE FINISH FLOOR ELEVATION

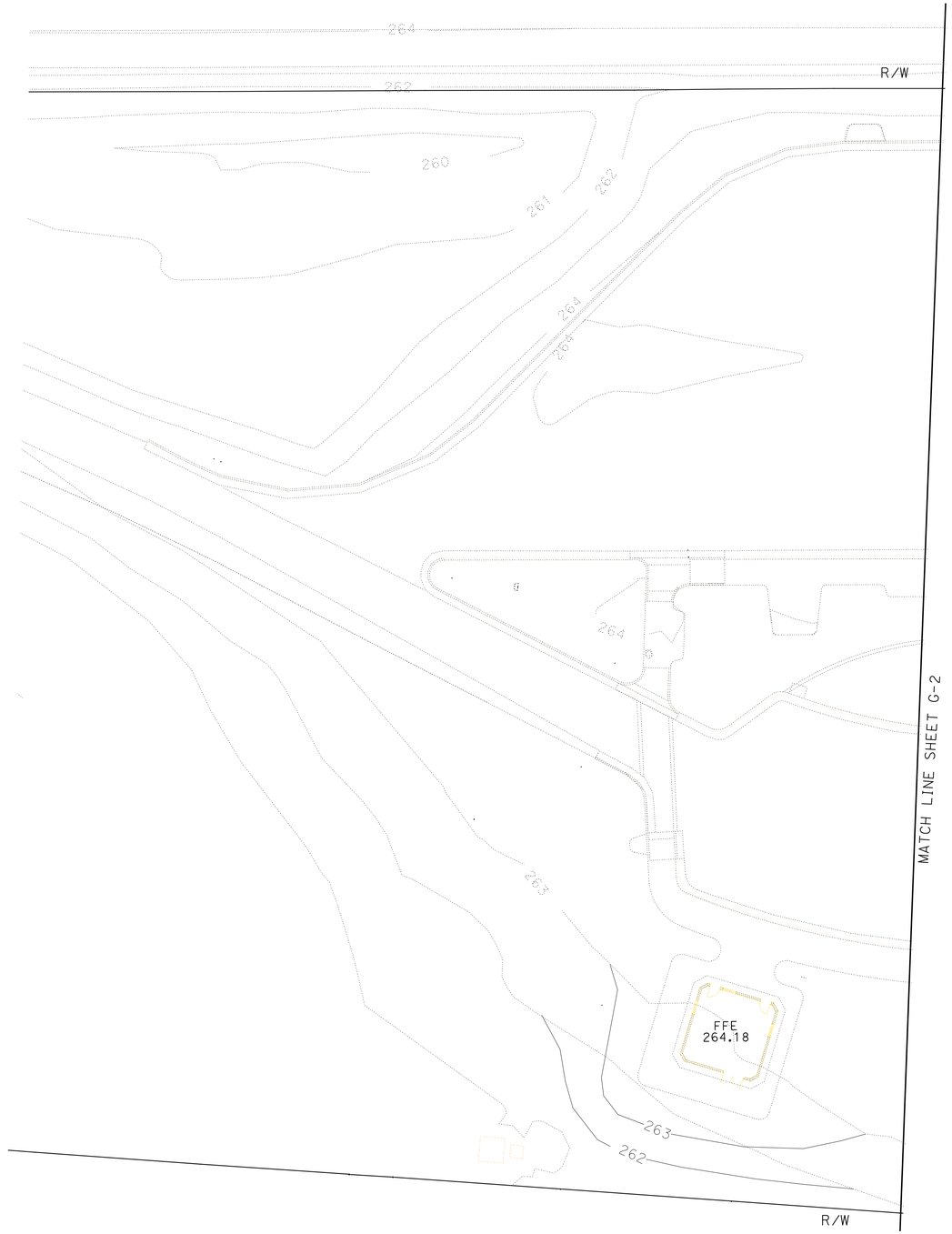


THIS PLAN ACCURATE FOR CONTOUR GRADING WORK ONLY.

# CONTOUR GRADING
## (NORTHBOUND SITE)

SCALE: 1" = 20'

**G-1**

STATE OF CALIFORNIA - DEPARTMENT OF TRANSPORTATION
Caltrans® LANDSCAPE ARCHITECTURE

FUNCTIONAL SUPERVISOR: ELBERT COX

CALCULATED-DESIGNED BY: GLORIA RAMIREZ
CHECKED BY: RICHARD COLE

REVISED BY
DATE REVISED

LAST REVISION 02-01-10
DATE PLOTTED => 13-AUG-2010
TIME PLOTTED => 11:11

| Dist | COUNTY | ROUTE | POST MILES TOTAL PROJECT | SHEET No. | TOTAL SHEETS |
|---|---|---|---|---|---|
| 06 | Tul | 99 | 22.4 | 82 | 335 |

Gloria Ramirez
LICENSED LANDSCAPE ARCHITECT

8-9-10
PLANS APPROVAL DATE

LICENSED LANDSCAPE ARCHITECT
GLORIA RAMIREZ No. 5085
Gloria Ramirez
Signature
04/30/10
Renewal Date
02/01/10
Date
STATE OF CALIFORNIA

*THE STATE OF CALIFORNIA OR ITS OFFICERS OR AGENTS SHALL NOT BE RESPONSIBLE FOR THE ACCURACY OR COMPLETENESS OF SCANNED COPIES OF THIS PLAN SHEET.*

THIS PLAN ACCURATE FOR CONTOUR GRADING WORK ONLY.

# CONTOUR GRADING
## (NORTHBOUND SITE)
SCALE: 1" = 20'

**G-2**

| | |
|---|---|
| REVISED BY | |
| DATE REVISED | |
| GLORIA RAMIREZ | |
| RICHARD COLE | |
| CALCULATED-DESIGNED BY | |
| CHECKED BY | |
| FUNCTIONAL SUPERVISOR | |
| ELBERT COX | |

STATE OF CALIFORNIA - DEPARTMENT OF TRANSPORTATION
Caltrans® LANDSCAPE ARCHITECTURE

LAST REVISION 02-01-10
DATE PLOTTED => 13-AUG-2010
TIME PLOTTED => 08:10

| Dist | COUNTY | ROUTE | POST MILES TOTAL PROJECT | SHEET No. | TOTAL SHEETS |
|---|---|---|---|---|---|
| 06 | Tul | 99 | 22.4 | 83 | 335 |

Gloria Ramirez
LICENSED LANDSCAPE ARCHITECT

8-9-10
PLANS APPROVAL DATE

LICENSED LANDSCAPE ARCHITECT
GLORIA RAMIREZ No. 3088
Gloria Ramirez
Signature
04/30/10
Renewal Date
02/01/10
Date
STATE OF CALIFORNIA

*THE STATE OF CALIFORNIA OR ITS OFFICERS OR AGENTS SHALL NOT BE RESPONSIBLE FOR THE ACCURACY OR COMPLETENESS OF SCANNED COPIES OF THIS PLAN SHEET.*

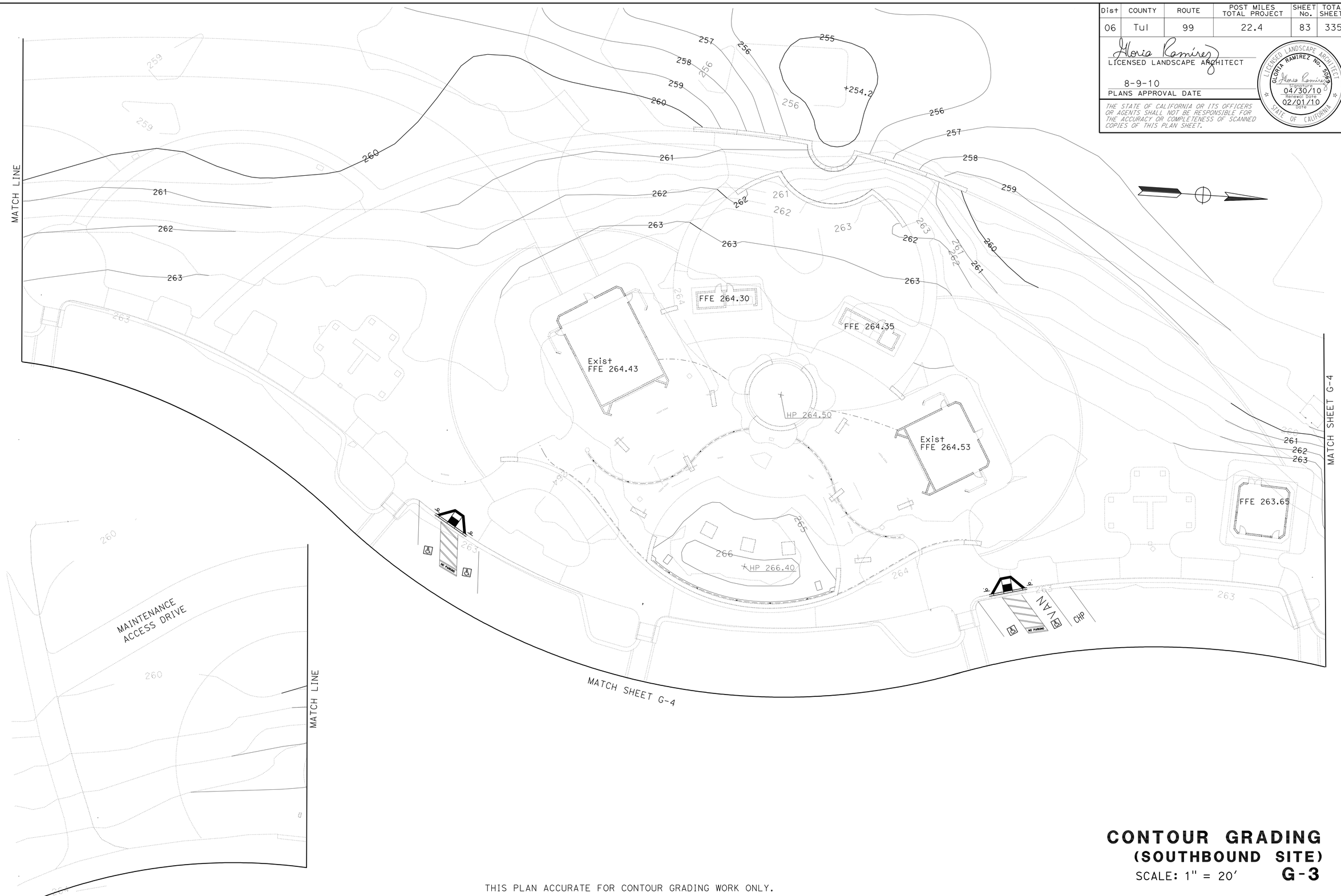


THIS PLAN ACCURATE FOR CONTOUR GRADING WORK ONLY.

# CONTOUR GRADING
## (SOUTHBOUND SITE)

SCALE: 1" = 20′ **G-3**

| REVISED BY | DATE REVISED |
|---|---|
| | |

CALCULATED-DESIGNED BY: GLORIA RAMIREZ
CHECKED BY: RICHARD COLE
FUNCTIONAL SUPERVISOR: ELBERT COX

STATE OF CALIFORNIA - DEPARTMENT OF TRANSPORTATION
Caltrans LANDSCAPE ARCHITECTURE

LAST REVISION 02-01-10
DATE PLOTTED => 13-AUG-2010
TIME PLOTTED => 08:10

| Dist | COUNTY | ROUTE | POST MILES TOTAL PROJECT | SHEET No. | TOTAL SHEETS |
|---|---|---|---|---|---|
| 06 | Tul | 99 | 22.4 | 84 | 335 |

Gloria Ramirez
LICENSED LANDSCAPE ARCHITECT

8-9-10
PLANS APPROVAL DATE

LICENSED LANDSCAPE ARCHITECT
GLORIA RAMIREZ No. 5083
Gloria Ramirez
Signature
04/30/10
Renewal Date
02/01/10
Date
STATE OF CALIFORNIA

*THE STATE OF CALIFORNIA OR ITS OFFICERS OR AGENTS SHALL NOT BE RESPONSIBLE FOR THE ACCURACY OR COMPLETENESS OF SCANNED COPIES OF THIS PLAN SHEET.*

**NOTE:** FOR ACCURATE RIGHT OF WAY AND ACCESS DATA, CONTACT RIGHT OF WAY ENGINEERING AT THE DISTRICT OFFICE.

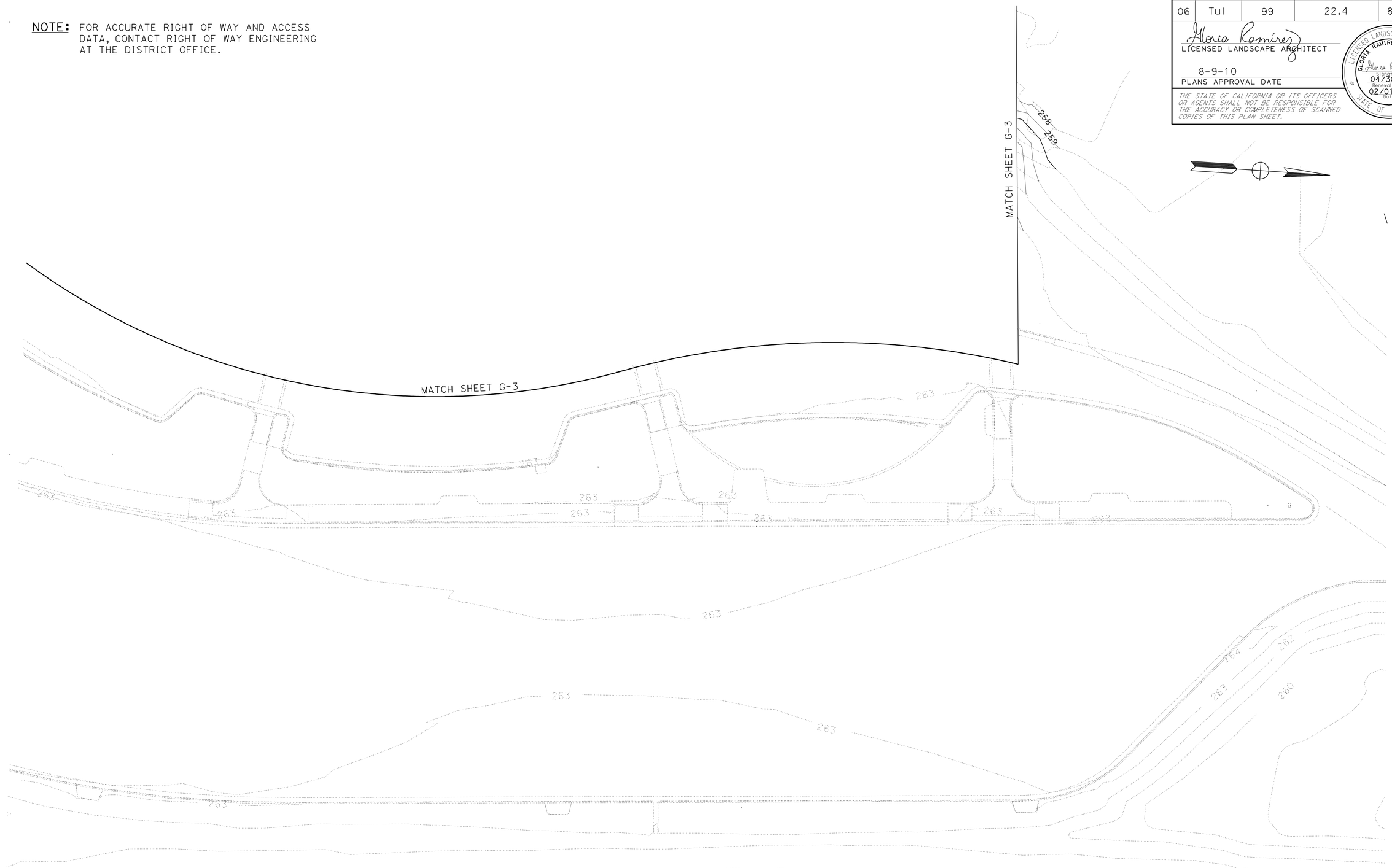


THIS PLAN ACCURATE FOR CONTOUR GRADING WORK ONLY.

# CONTOUR GRADING
## (SOUTHBOUND SITE)

SCALE: 1" = 20'

**G-4**

STATE OF CALIFORNIA - DEPARTMENT OF TRANSPORTATION
Caltrans® LANDSCAPE ARCHITECTURE

FUNCTIONAL SUPERVISOR: ELBERT COX

CALCULATED-DESIGNED BY: GLORIA RAMIREZ
CHECKED BY: RICHARD COLE

REVISED BY
DATE REVISED

LAST REVISION: 02-01-10 | DATE PLOTTED => 13-AUG-2010 | TIME PLOTTED => 08:10

| Dist | COUNTY | ROUTE | POST MILES TOTAL PROJECT | SHEET No. | TOTAL SHEETS |
|---|---|---|---|---|---|
| 06 | Tul | 99 | 22.4 | 85 | 335 |

REGISTERED CIVIL ENGINEER 2-17-10 DATE

8-9-10
PLANS APPROVAL DATE

REGISTERED PROFESSIONAL ENGINEER
JAMES MAGNUS ORR
No. 67928
Exp. 6/30/11
CIVIL
STATE OF CALIFORNIA

*THE STATE OF CALIFORNIA OR ITS OFFICERS OR AGENTS SHALL NOT BE RESPONSIBLE FOR THE ACCURACY OR COMPLETENESS OF SCANNED COPIES OF THIS PLAN SHEET.*

## LEGEND:

- (XX) DRAINAGE SYSTEM ITEM
- (No.) DRAINAGE SYSTEM NUMBER
- □ COB TYPE I
- ○ COB TYPE II
- ⊗ COB TYPE III

## ABBREVIATIONS:

COB CLEAN OUT BOX
GLD GRATED LINE DRAIN

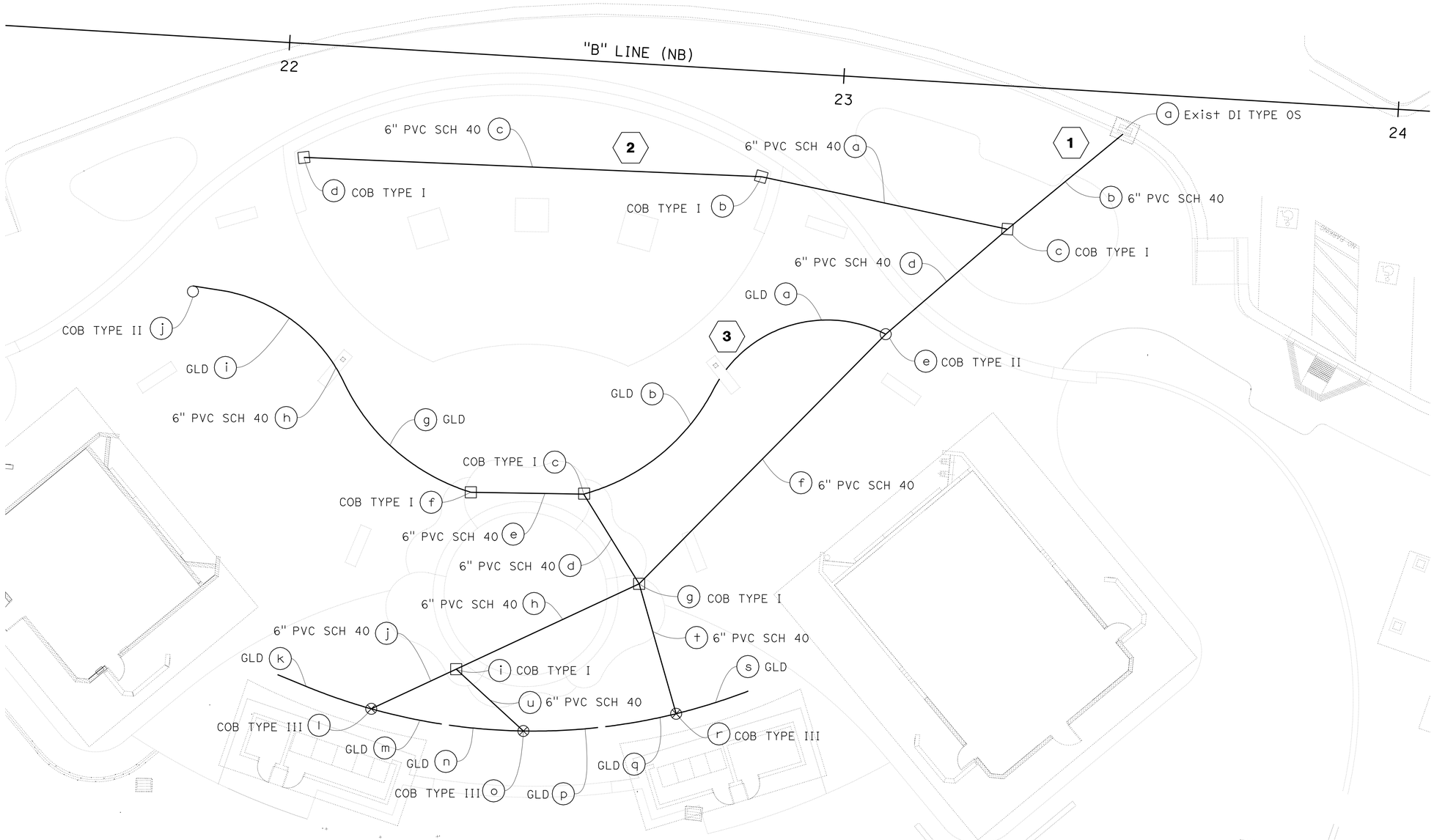


# DRAINAGE PLAN
## (NORTHBOUND SIDE)

SCALE: 1" = 10′ **D-1**

THIS PLAN ACCURATE FOR DRAINAGE WORK ONLY.

STATE OF CALIFORNIA - DEPARTMENT OF TRANSPORTATION
Caltrans
DESIGN

FUNCTIONAL SUPERVISOR: SCOTT SHAVER
CALCULATED-DESIGNED BY: JAMES M. ORR
CHECKED BY: JASON CASTILLO
REVISED BY
DATE REVISED

LAST REVISION 02-17-10
DATE PLOTTED => 04-OCT-2010
TIME PLOTTED => 14:15

| Dist | COUNTY | ROUTE | POST MILES TOTAL PROJECT | SHEET No. | TOTAL SHEETS |
|---|---|---|---|---|---|
| 06 | Tul | 99 | 22.4 | 86 | 335 |

REGISTERED CIVIL ENGINEER 2-17-10 DATE

8-9-10
PLANS APPROVAL DATE

REGISTERED PROFESSIONAL ENGINEER
JAMES MAGNUS ORR
No. 67928
Exp. 6/30/11
CIVIL
STATE OF CALIFORNIA

*THE STATE OF CALIFORNIA OR ITS OFFICERS OR AGENTS SHALL NOT BE RESPONSIBLE FOR THE ACCURACY OR COMPLETENESS OF SCANNED COPIES OF THIS PLAN SHEET.*

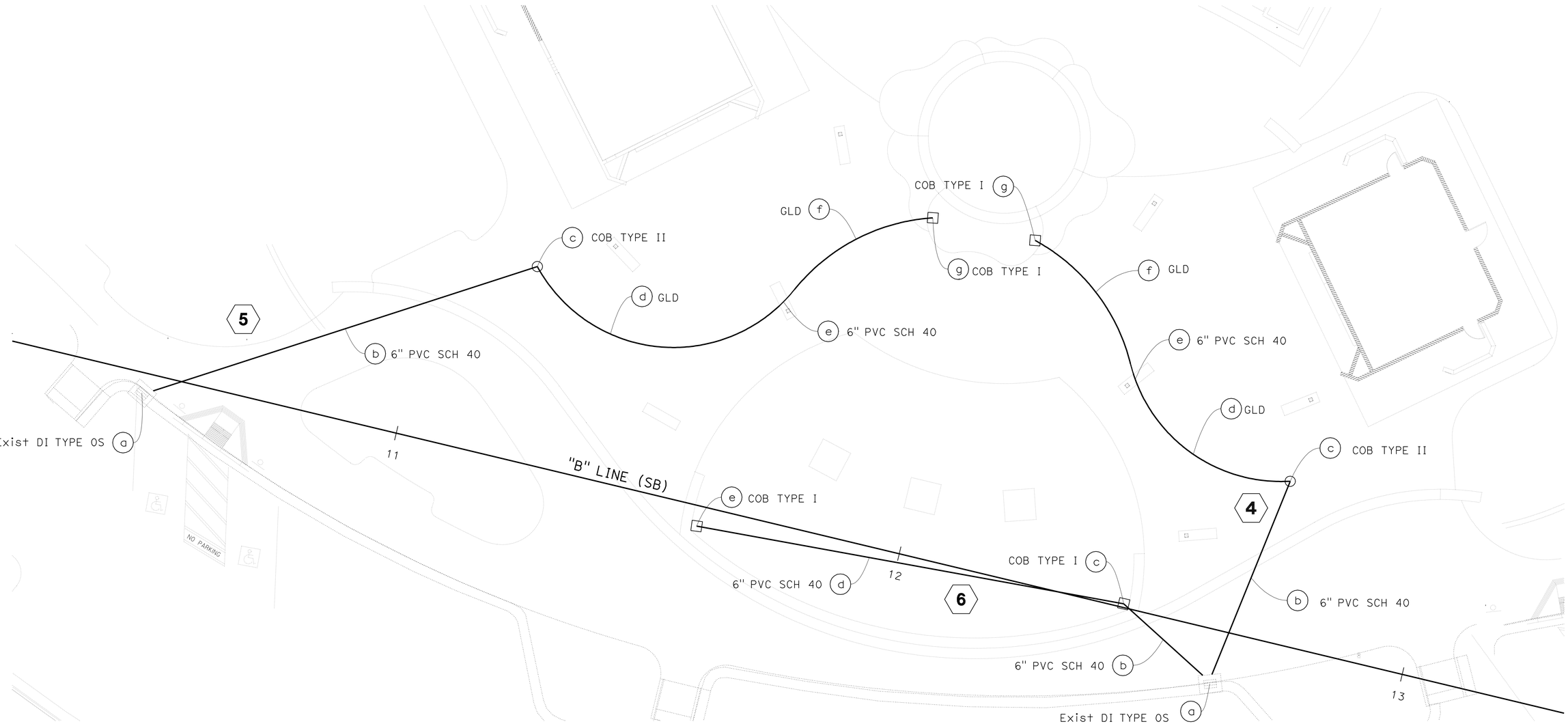


THIS PLAN ACCURATE FOR DRAINAGE WORK ONLY.

# DRAINAGE PLAN
## (SOUTHBOUND SIDE)

SCALE: 1" = 10′ **D-2**

STATE OF CALIFORNIA - DEPARTMENT OF TRANSPORTATION
Caltrans® **DESIGN**

FUNCTIONAL SUPERVISOR: SCOTT SHAVER
CALCULATED-DESIGNED BY: JAMES M. ORR
CHECKED BY: JASON CASTILLO
REVISED BY
DATE REVISED

LAST REVISION 02-17-10
DATE PLOTTED => 13-AUG-2010
TIME PLOTTED => 08:37

| Dist | COUNTY | ROUTE | POST MILES TOTAL PROJECT | SHEET No. | TOTAL SHEETS |
|---|---|---|---|---|---|
| 06 | Tul | 99 | 22.4 | 87 | 335 |

REGISTERED CIVIL ENGINEER DATE 2-17-10

8-9-10
PLANS APPROVAL DATE

REGISTERED PROFESSIONAL ENGINEER JAMES MAGNUS ORR No. 67928 Exp. 6/30/11 CIVIL STATE OF CALIFORNIA

*THE STATE OF CALIFORNIA OR ITS OFFICERS OR AGENTS SHALL NOT BE RESPONSIBLE FOR THE ACCURACY OR COMPLETENESS OF SCANNED COPIES OF THIS PLAN SHEET.*

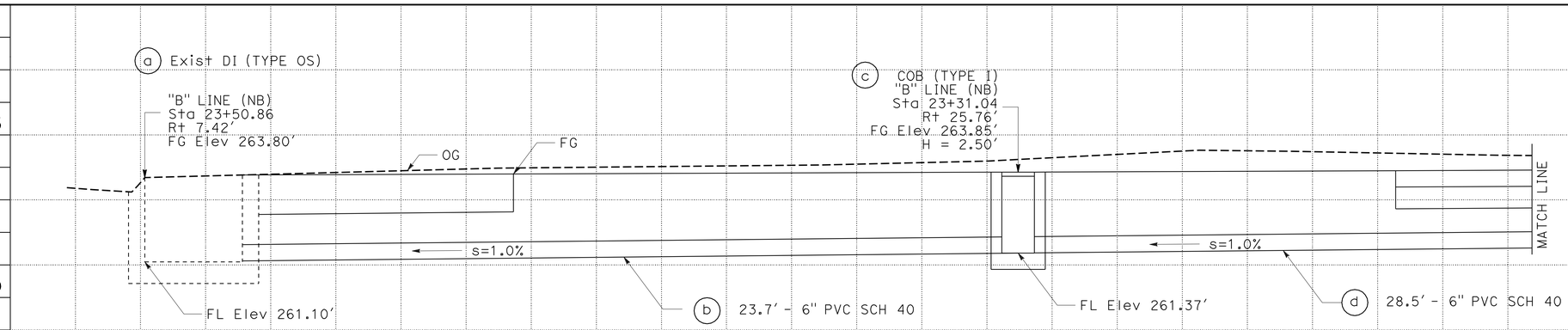


## DRAINAGE SYSTEM No. 1

ABBREVIATIONS

COB CLEANOUT BOX
GLD GRATED LINE DRAIN

NOTE: 1. ALL JOINTS STANDARD, WATERTIGHT, SOLVENT WELD

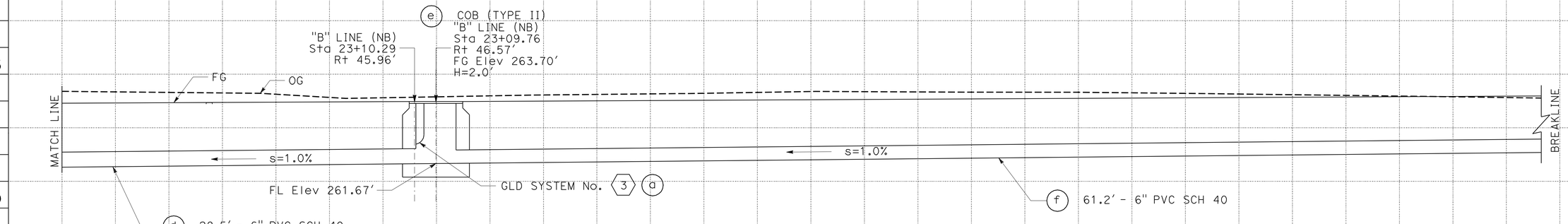


## DRAINAGE SYSTEM No. 1

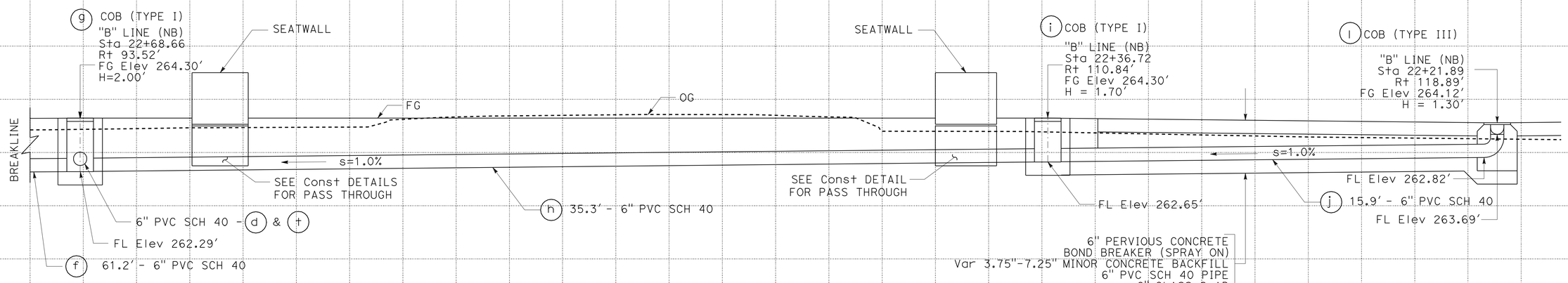


## DRAINAGE SYSTEM No. 1

THIS PLAN ACCURATE FOR DRAINAGE WORK ONLY

# DRAINAGE PROFILE

SCALE Horiz 1" = 2'
Vert 1" = 2'

**DP-1**

REVISED BY | DATE REVISED
JAMES M. ORR | JASON CASTILLO
CALCULATED-DESIGNED BY | CHECKED BY
FUNCTIONAL SUPERVISOR | SCOTT SHAVER

STATE OF CALIFORNIA - DEPARTMENT OF TRANSPORTATION
Caltrans
DESIGN

LAST REVISION 02-17-10 | DATE PLOTTED => 13-AUG-2010 | TIME PLOTTED => 08:10

| Dist | COUNTY | ROUTE | POST MILES TOTAL PROJECT | SHEET No. | TOTAL SHEETS |
|---|---|---|---|---|---|
| 06 | Tul | 99 | 22.4 | 88 | 335 |

REGISTERED CIVIL ENGINEER 2-17-10 DATE

8-9-10
PLANS APPROVAL DATE

REGISTERED PROFESSIONAL ENGINEER JAMES MAGNUS ORR No. 67928 Exp. 6/30/11 CIVIL STATE OF CALIFORNIA

*THE STATE OF CALIFORNIA OR ITS OFFICERS OR AGENTS SHALL NOT BE RESPONSIBLE FOR THE ACCURACY OR COMPLETENESS OF SCANNED COPIES OF THIS PLAN SHEET.*

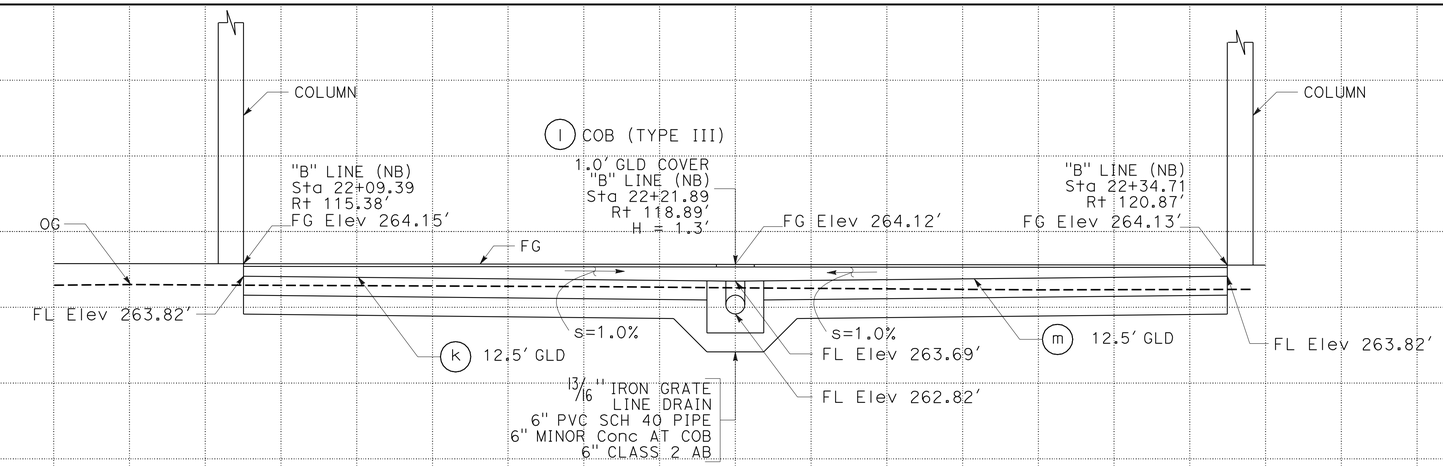


**DRAINAGE SYSTEM No. 1**

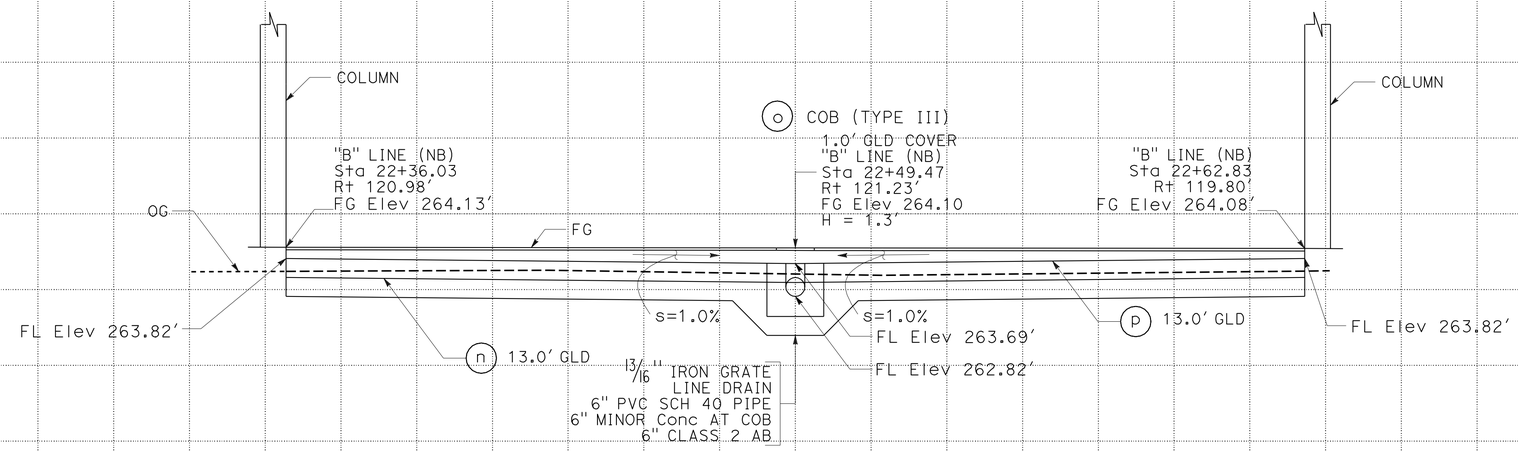


**DRAINAGE SYSTEM No. 1**

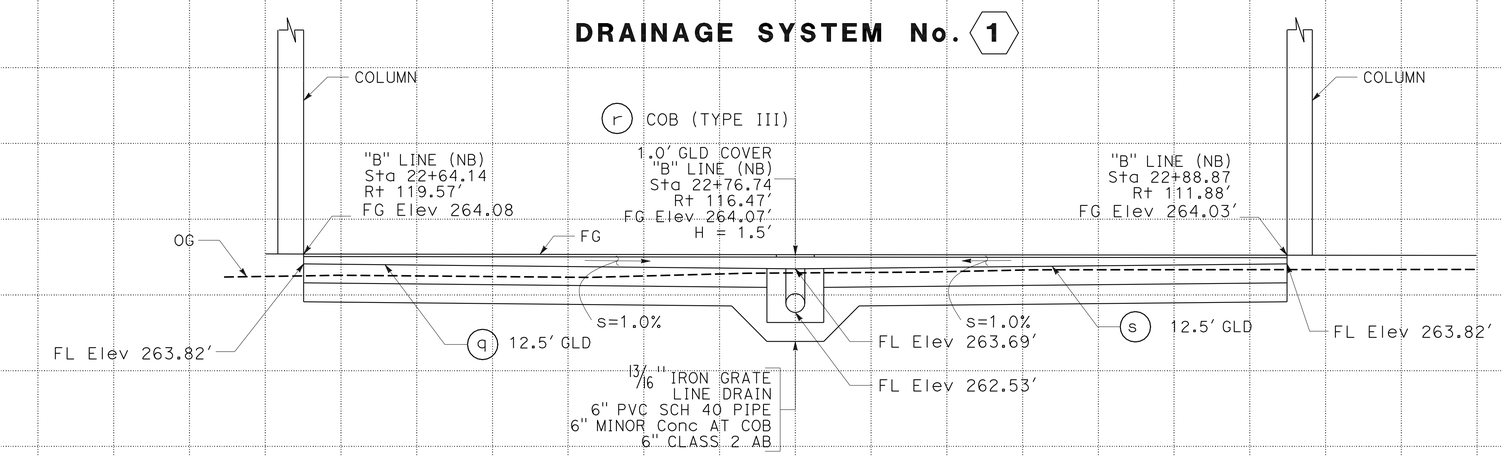


**DRAINAGE SYSTEM No. 1**

THIS PLAN ACCURATE FOR DRAINAGE WORK ONLY

# DRAINAGE PROFILE
# DP-2

SCALE Horiz 1" = 2'
Vert 1" = 2'

REVISED BY | DATE REVISED
JAMES M. ORR | JASON CASTILLO
CALCULATED-DESIGNED BY | CHECKED BY
FUNCTIONAL SUPERVISOR | SCOTT SHAVER
STATE OF CALIFORNIA - DEPARTMENT OF TRANSPORTATION
Caltrans
DESIGN

LAST REVISION 02-17-10 | DATE PLOTTED => 13-AUG-2010 | TIME PLOTTED => 08:10

| Dist | COUNTY | ROUTE | POST MILES TOTAL PROJECT | SHEET No. | TOTAL SHEETS |
|---|---|---|---|---|---|
| 06 | Tul | 99 | 22.4 | 89 | 335 |

REGISTERED CIVIL ENGINEER 2-17-10 DATE

8-9-10
PLANS APPROVAL DATE

REGISTERED PROFESSIONAL ENGINEER
JAMES MAGNUS ORR
No. 67928
Exp. 6/30/11
CIVIL
STATE OF CALIFORNIA

*THE STATE OF CALIFORNIA OR ITS OFFICERS OR AGENTS SHALL NOT BE RESPONSIBLE FOR THE ACCURACY OR COMPLETENESS OF SCANNED COPIES OF THIS PLAN SHEET.*

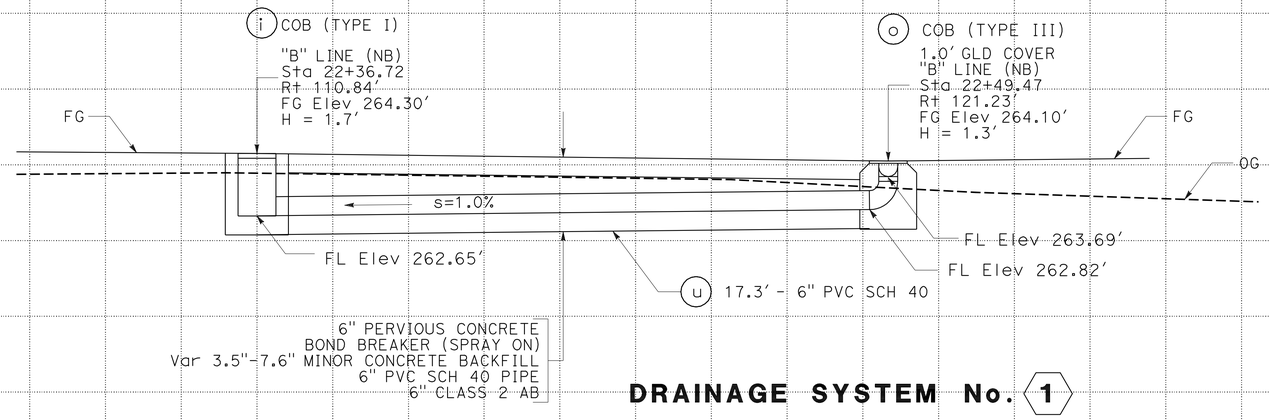


**DRAINAGE SYSTEM No. 1**

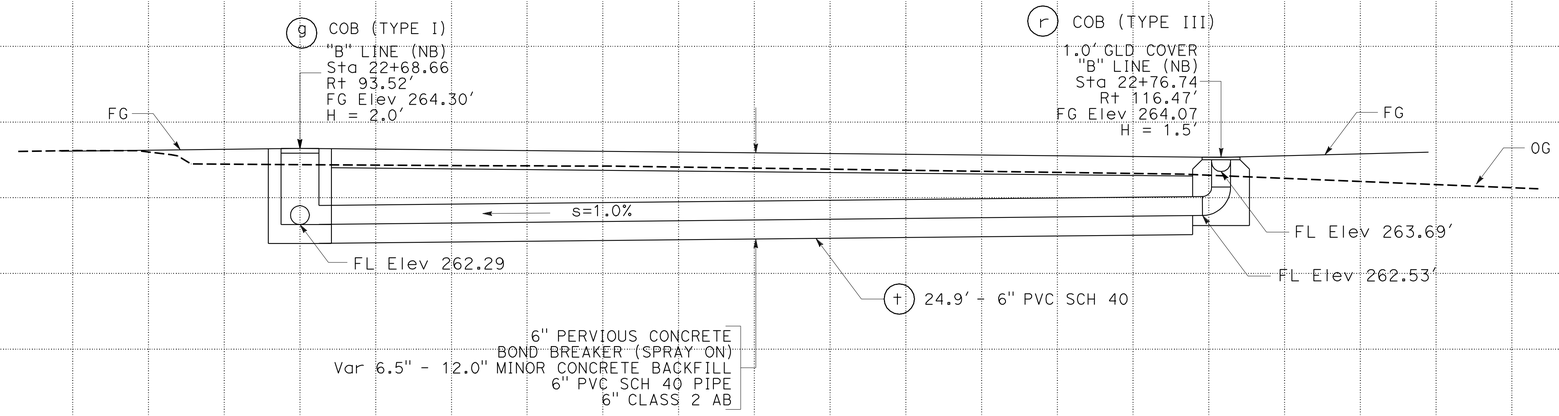


**DRAINAGE SYSTEM No. 1**

THIS PLAN ACCURATE FOR DRAINAGE WORK ONLY

# DRAINAGE PROFILE
# DP-3

SCALE Horiz 1" = 2'
Vert 1" = 2'

STATE OF CALIFORNIA - DEPARTMENT OF TRANSPORTATION
Caltrans
DESIGN

FUNCTIONAL SUPERVISOR: SCOTT SHAVER
CALCULATED-DESIGNED BY: JAMES M. ORR
CHECKED BY: JASON CASTILLO
REVISED BY
DATE REVISED

LAST REVISION 02-17-10
DATE PLOTTED => 13-AUG-2010
TIME PLOTTED => 08:11

| Dist | COUNTY | ROUTE | POST MILES TOTAL PROJECT | SHEET No. | TOTAL SHEETS |
|---|---|---|---|---|---|
| 06 | Tul | 99 | 22.4 | 90 | 335 |

James M. Orr 2-17-10
REGISTERED CIVIL ENGINEER DATE

8-9-10
PLANS APPROVAL DATE

REGISTERED PROFESSIONAL ENGINEER
JAMES MAGNUS ORR
No. 67928
Exp. 6/30/11
CIVIL
STATE OF CALIFORNIA

*THE STATE OF CALIFORNIA OR ITS OFFICERS OR AGENTS SHALL NOT BE RESPONSIBLE FOR THE ACCURACY OR COMPLETENESS OF SCANNED COPIES OF THIS PLAN SHEET.*

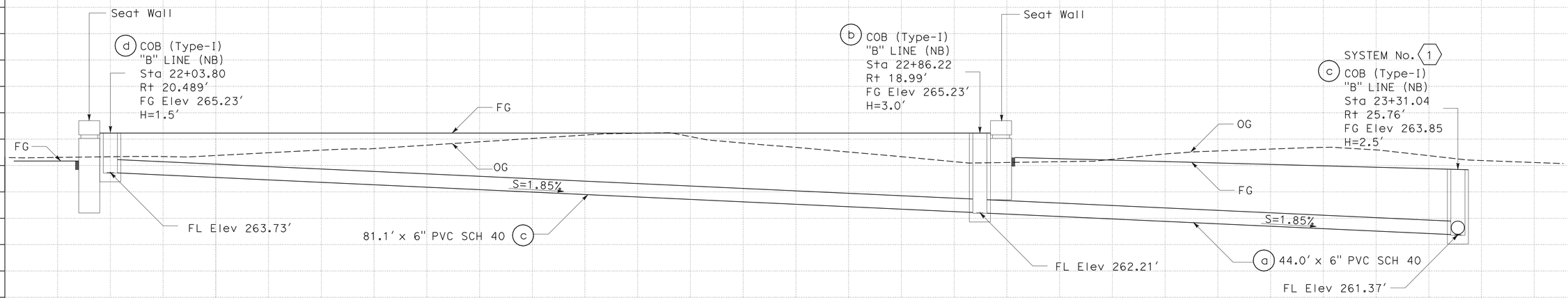


## DRAINAGE SYSTEM No. 2

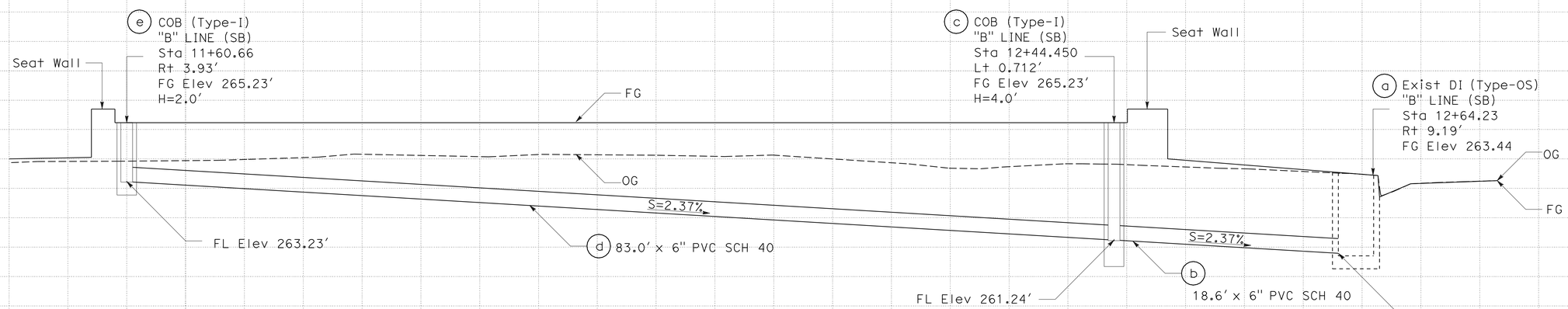


## DRAINAGE SYSTEM No. 6

THIS PLAN ACCURATE FOR DRAINAGE WORK ONLY.

# DRAINAGE PROFILE

SCALE Horiz 1" = 5'
Vert 1" = 2'

**DP-4**

| Station | | |
|---|---|---|
| CY | Exc | |
| | Emb | |

REVISED BY | DATE REVISED
KHONDOKER I UDDIN | JAMES ORR
CALCULATED-DESIGNED BY | CHECKED BY
FUNCTIONAL SUPERVISOR | SCOTT SHAVER
STATE OF CALIFORNIA - DEPARTMENT OF TRANSPORTATION
Caltrans® DESIGN

LAST REVISION 02-17-10 | DATE PLOTTED => 13-AUG-2010 | TIME PLOTTED => 08:11

| Dist | COUNTY | ROUTE | POST MILES TOTAL PROJECT | SHEET No. | TOTAL SHEETS |
|---|---|---|---|---|---|
| 06 | Tul | 99 | 22.4 | 91 | 335 |

James M. Orr 2-17-10
REGISTERED CIVIL ENGINEER DATE

8-9-10
PLANS APPROVAL DATE

REGISTERED PROFESSIONAL ENGINEER
JAMES MAGNUS ORR
No. 67928
Exp. 6/30/11
CIVIL
STATE OF CALIFORNIA

*THE STATE OF CALIFORNIA OR ITS OFFICERS OR AGENTS SHALL NOT BE RESPONSIBLE FOR THE ACCURACY OR COMPLETENESS OF SCANNED COPIES OF THIS PLAN SHEET.*

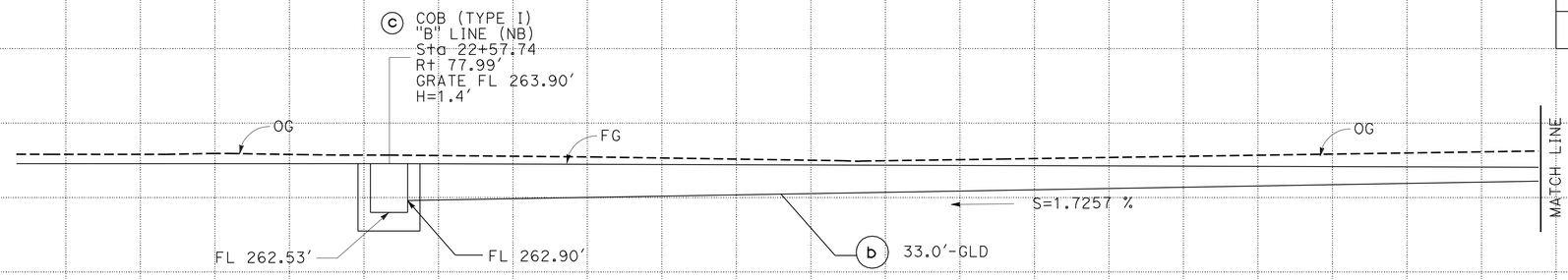


NOTE: 1. ALL JOINTS STANDARD, WATERTIGHT, SOLVENT WELD

## DRAINAGE SYSTEM No. 3

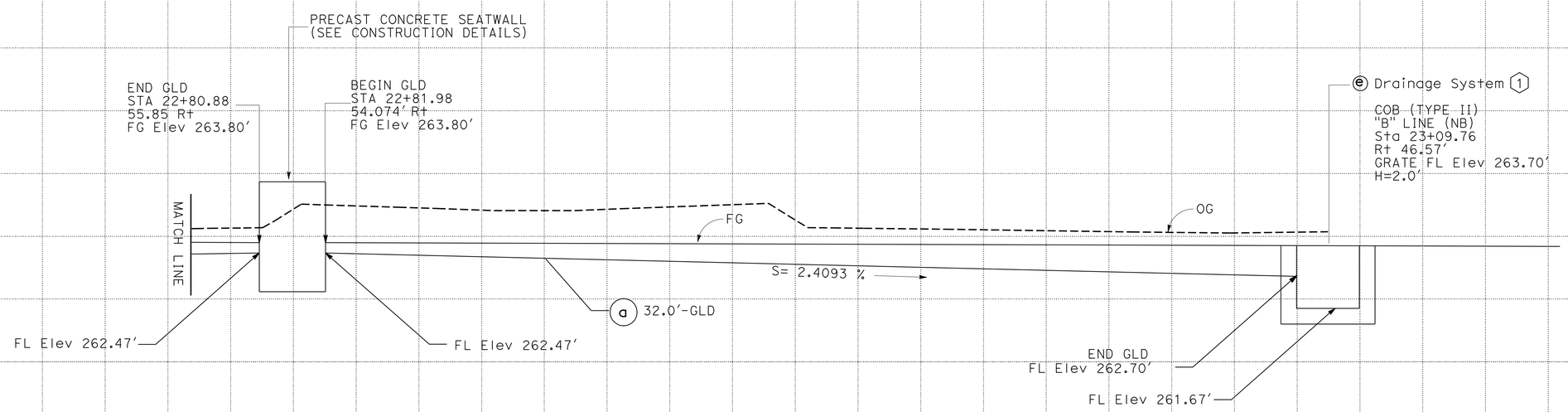


## DRAINAGE SYSTEM No 3

THIS PLAN ACCURATE FOR DRAINAGE WORK ONLY

# DRAINAGE PROFILE
# DP-5

SCALE Horiz 1" = 2'
Vert 1" = 2"

STATE OF CALIFORNIA - DEPARTMENT OF TRANSPORTATION
Caltrans DESIGN

FUNCTIONAL SUPERVISOR: SCOTT SHAVER
CALCULATED-DESIGNED BY: JASON CASTILLO
CHECKED BY: JAMES M. ORR
REVISED BY
DATE REVISED

LAST REVISION 02-17-10
DATE PLOTTED => 13-AUG-2010
TIME PLOTTED => 08:11

| Dist | COUNTY | ROUTE | POST MILES TOTAL PROJECT | SHEET No. | TOTAL SHEETS |
|---|---|---|---|---|---|
| 06 | Tul | 99 | 22.4 | 92 | 335 |

James M. Orr 2-17-10
REGISTERED CIVIL ENGINEER DATE

8-9-10
PLANS APPROVAL DATE

REGISTERED PROFESSIONAL ENGINEER
JAMES MAGNUS ORR
No. 67928
Exp. 6/30/11
CIVIL
STATE OF CALIFORNIA

THE STATE OF CALIFORNIA OR ITS OFFICERS OR AGENTS SHALL NOT BE RESPONSIBLE FOR THE ACCURACY OR COMPLETENESS OF SCANNED COPIES OF THIS PLAN SHEET.

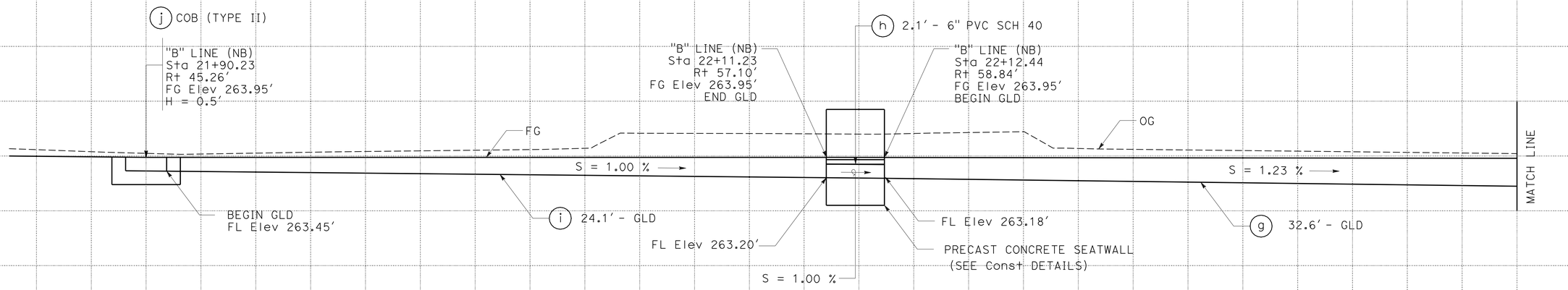


## DRAINAGE SYSTEM No. 3

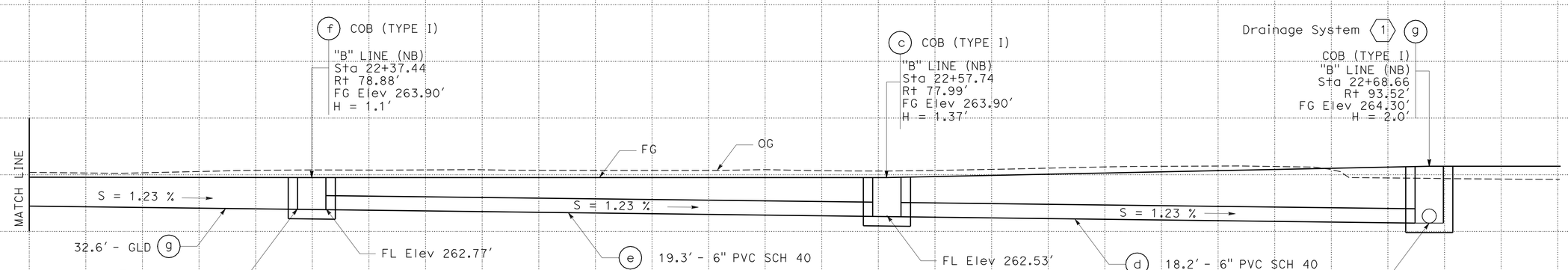


## DRAINAGE SYSTEM No. 3

THIS PLAN ACCURATE FOR DRAINAGE WORK ONLY

# DRAINAGE PROFILE

SCALE Horiz 1" = 2'
Vert 1" = 2'

**DP-6**

STATE OF CALIFORNIA - DEPARTMENT OF TRANSPORTATION
Caltrans
DESIGN

FUNCTIONAL SUPERVISOR: SCOTT SHAVER
CALCULATED-DESIGNED BY: JASON CASTILLO
CHECKED BY: JAMES M. ORR
REVISED BY
DATE REVISED

LAST REVISION 02-17-10
DATE PLOTTED => 13-AUG-2010
TIME PLOTTED => 08:26

| Dist | COUNTY | ROUTE | POST MILES TOTAL PROJECT | SHEET No. | TOTAL SHEETS |
|---|---|---|---|---|---|
| 06 | Tul | 99 | 22.4 | 93 | 335 |

James M. Orr 2-17-10
REGISTERED CIVIL ENGINEER DATE

8-9-10
PLANS APPROVAL DATE

REGISTERED PROFESSIONAL ENGINEER
JAMES MAGNUS ORR
No. 67928
Exp. 6/30/11
CIVIL
STATE OF CALIFORNIA

*THE STATE OF CALIFORNIA OR ITS OFFICERS OR AGENTS SHALL NOT BE RESPONSIBLE FOR THE ACCURACY OR COMPLETENESS OF SCANNED COPIES OF THIS PLAN SHEET.*

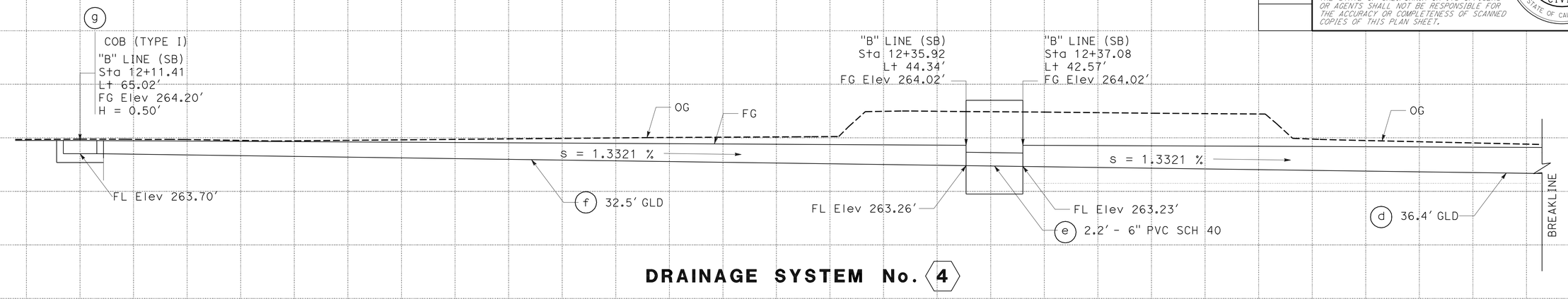


**DRAINAGE SYSTEM No. 4**

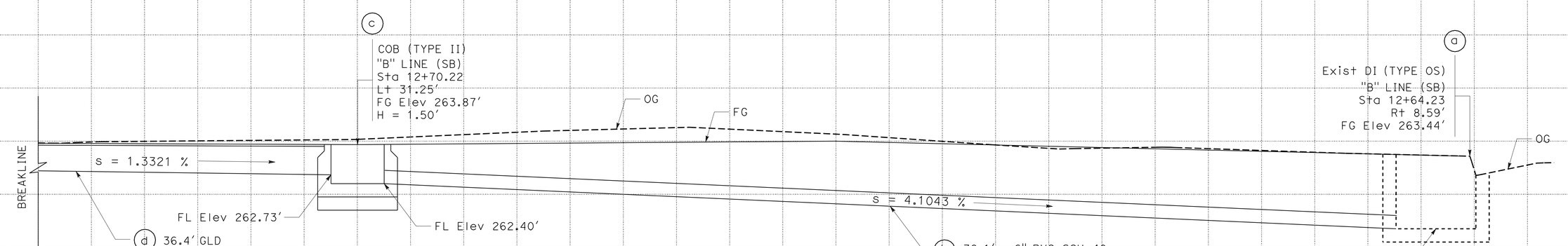


**DRAINAGE SYSTEM No. 4**

THIS PLAN ACCURATE FOR DRAINAGE WORK ONLY

# DRAINAGE PROFILE
## DP-7

SCALE: Horiz 1" = 2'
Vert 1" = 2'

| REVISED BY | DATE REVISED |
|---|---|
| JASON CASTILLO | JAMES M. ORR |
| CALCULATED-DESIGNED BY | CHECKED BY |
| FUNCTIONAL SUPERVISOR | SCOTT SHAVER |

STATE OF CALIFORNIA - DEPARTMENT OF TRANSPORTATION
Caltrans
DESIGN

LAST REVISION 02-17-10 | DATE PLOTTED => 13-AUG-2010 | TIME PLOTTED => 08:26

| Dist | COUNTY | ROUTE | POST MILES TOTAL PROJECT | SHEET No. | TOTAL SHEETS |
|---|---|---|---|---|---|
| 06 | Tul | 99 | 22.4 | 94 | 335 |

REGISTERED CIVIL ENGINEER 2-17-10 DATE

8-9-10
PLANS APPROVAL DATE

REGISTERED PROFESSIONAL ENGINEER
JAMES MAGNUS ORR
No. 67928
Exp. 6/30/11
CIVIL
STATE OF CALIFORNIA

*THE STATE OF CALIFORNIA OR ITS OFFICERS OR AGENTS SHALL NOT BE RESPONSIBLE FOR THE ACCURACY OR COMPLETENESS OF SCANNED COPIES OF THIS PLAN SHEET.*

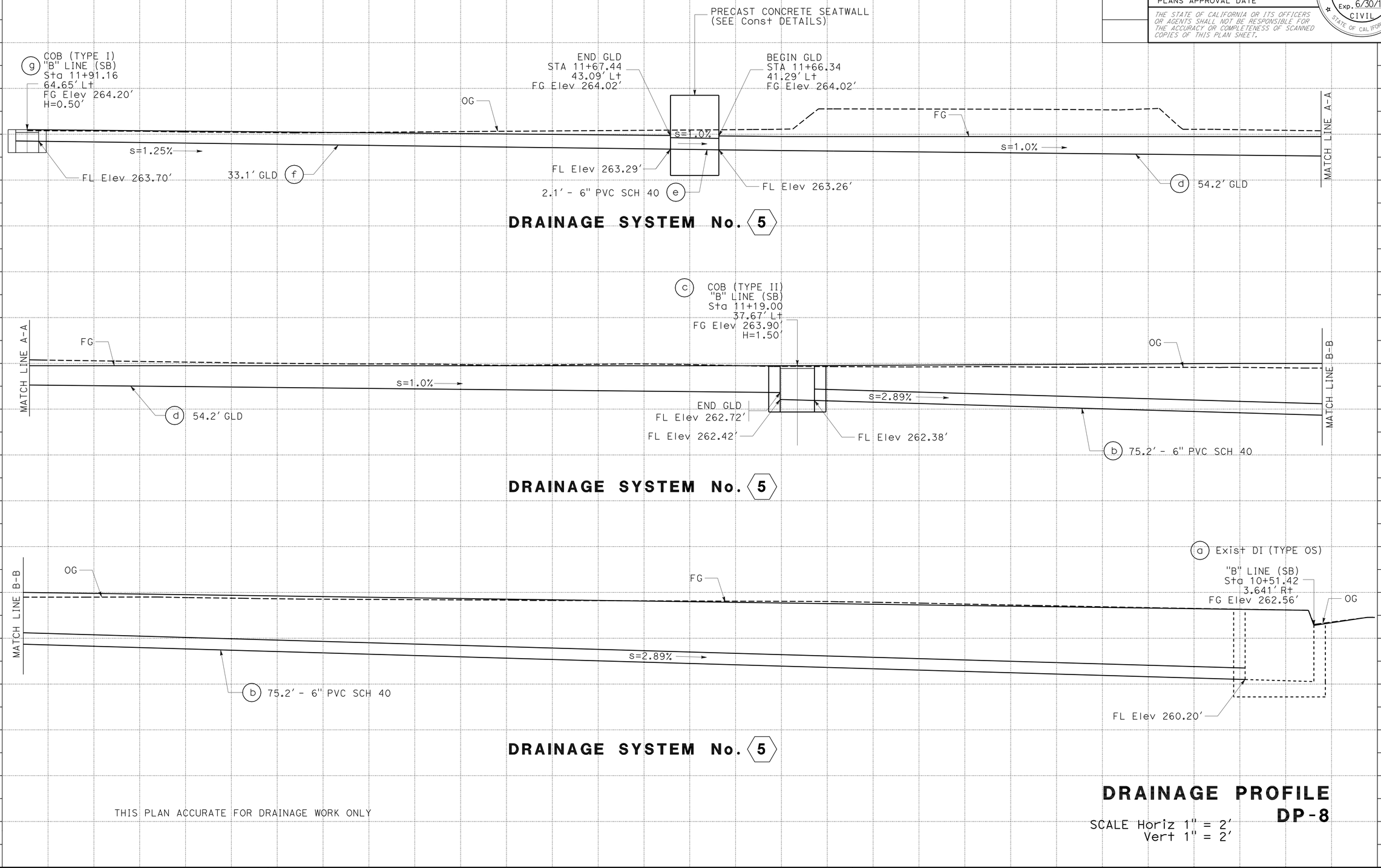


THIS PLAN ACCURATE FOR DRAINAGE WORK ONLY

# DRAINAGE PROFILE
## DP-8

SCALE Horiz 1" = 2'
Vert 1" = 2'

REVISED BY | DATE REVISED

JAMES M. ORR | JASON CASTILLO

CALCULATED-DESIGNED BY | CHECKED BY

FUNCTIONAL SUPERVISOR | SCOTT SHAVER

STATE OF CALIFORNIA - DEPARTMENT OF TRANSPORTATION
Caltrans
DESIGN

LAST REVISION 02-17-10 | DATE PLOTTED => 13-AUG-2010 | TIME PLOTTED => 08:26

| Dist | COUNTY | ROUTE | POST MILES TOTAL PROJECT | SHEET No. | TOTAL SHEETS |
|---|---|---|---|---|---|
| 06 | Tul | 99 | 22.4 | 95 | 335 |

REGISTERED CIVIL ENGINEER 2-17-10 DATE

8-9-10
PLANS APPROVAL DATE

REGISTERED PROFESSIONAL ENGINEER
JAMES MAGNUS ORR
No. 67928
Exp. 6/30/11
CIVIL
STATE OF CALIFORNIA

*THE STATE OF CALIFORNIA OR ITS OFFICERS OR AGENTS SHALL NOT BE RESPONSIBLE FOR THE ACCURACY OR COMPLETENESS OF SCANNED COPIES OF THIS PLAN SHEET.*

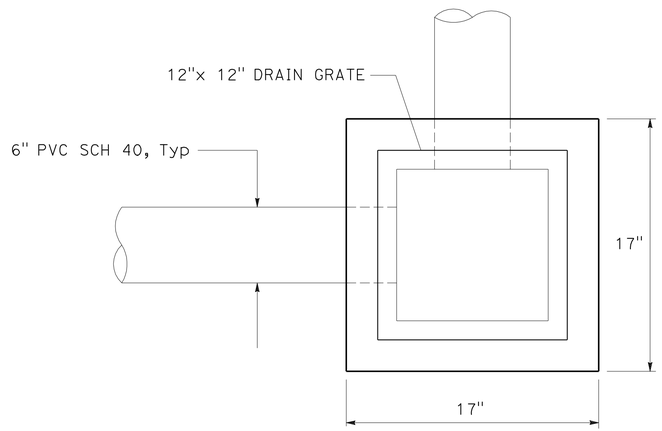


PLAN VIEW

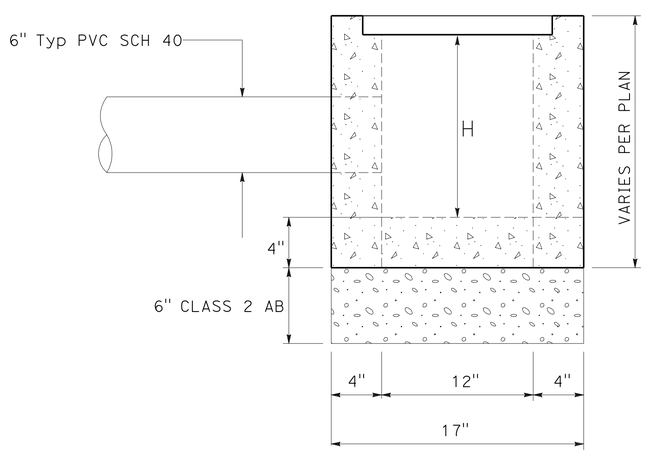


**CLEANOUT BOX (TYPE I)**

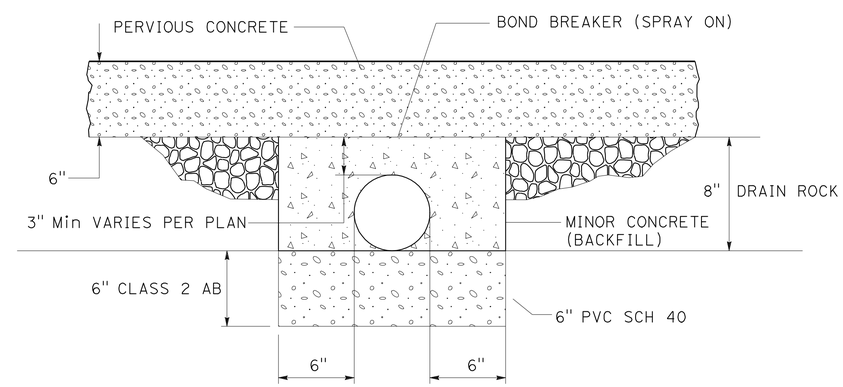


**MINOR CONCRETE BACKFILL DETAIL**

# DRAINAGE DETAILS

NO SCALE

**DD-1**

THIS PLAN ACCURATE FOR DRAINAGE WORK ONLY

STATE OF CALIFORNIA - DEPARTMENT OF TRANSPORTATION
Caltrans
DESIGN

FUNCTIONAL SUPERVISOR: SCOTT SHAVER
CALCULATED-DESIGNED BY: JAMES M. ORR
CHECKED BY: RAY SEGURA
REVISED BY
DATE REVISED

LAST REVISION 02-16-10
DATE PLOTTED => 17-AUG-2010
TIME PLOTTED => 08:44

| Dist | COUNTY | ROUTE | POST MILES TOTAL PROJECT | SHEET No. | TOTAL SHEETS |
|---|---|---|---|---|---|
| 06 | Tul | 99 | 22.4 | 96 | 335 |

REGISTERED CIVIL ENGINEER 2-17-10 DATE

8-9-10
PLANS APPROVAL DATE

REGISTERED PROFESSIONAL ENGINEER JAMES MAGNUS ORR No. 67928 Exp. 6/30/11 CIVIL STATE OF CALIFORNIA

*THE STATE OF CALIFORNIA OR ITS OFFICERS OR AGENTS SHALL NOT BE RESPONSIBLE FOR THE ACCURACY OR COMPLETENESS OF SCANNED COPIES OF THIS PLAN SHEET.*

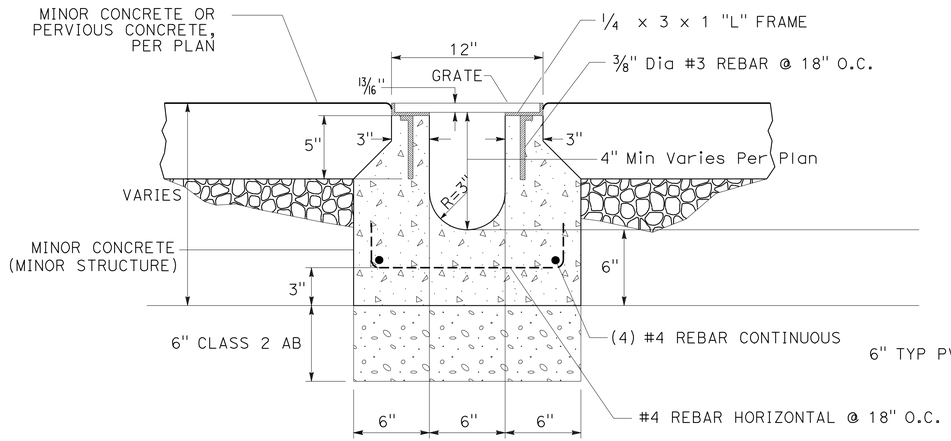


SECTION A-A

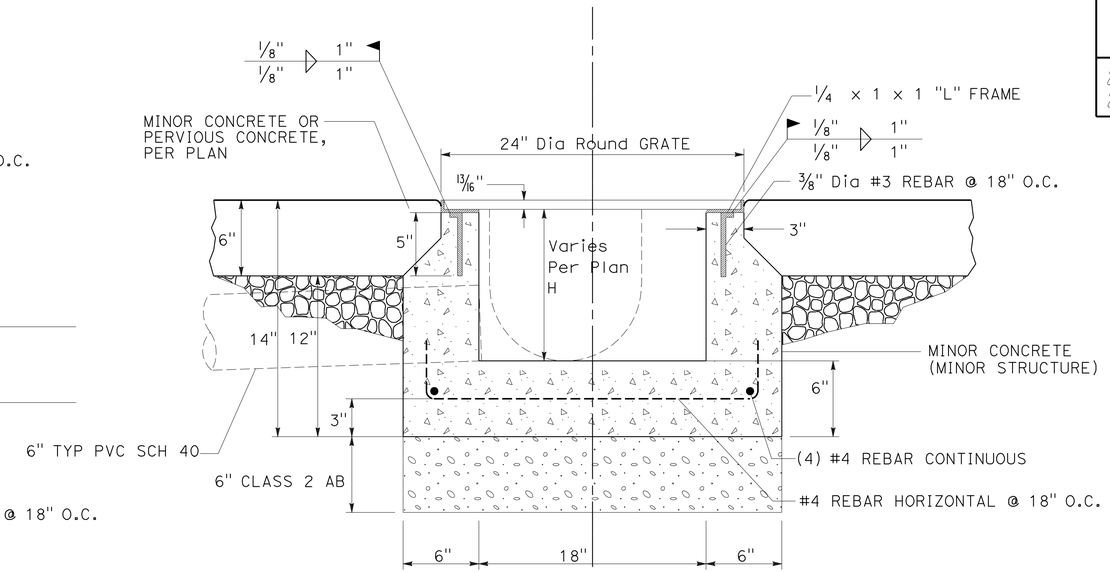


SECTION B-B

## GRATED LINE DRAIN DETAIL

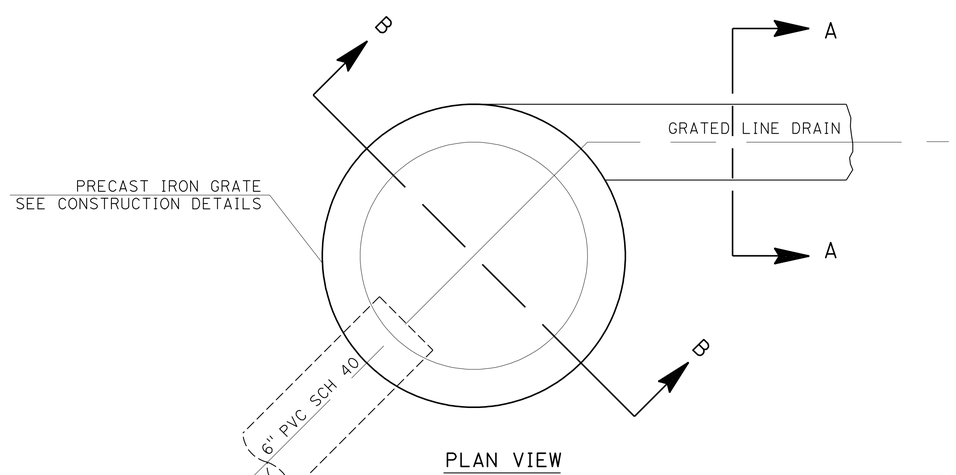


PLAN VIEW

## CLEANOUT BOX (TYPE II)

THIS PLAN ACCURATE FOR DRAINAGE WORK ONLY

# DRAINAGE DETAILS DD-2

NO SCALE

STATE OF CALIFORNIA - DEPARTMENT OF TRANSPORTATION
Caltrans® DESIGN

FUNCTIONAL SUPERVISOR: SCOTT SHAVER
CALCULATED-DESIGNED BY: RAY SEGURA
CHECKED BY: JAMES M. ORR
REVISED BY
DATE REVISED

LAST REVISION 02-17-10
DATE PLOTTED => 13-AUG-2010
TIME PLOTTED => 08:27

| Dist | COUNTY | ROUTE | POST MILES TOTAL PROJECT | SHEET No. | TOTAL SHEETS |
|---|---|---|---|---|---|
| 06 | Tul | 99 | 22.4 | 97 | 335 |

REGISTERED CIVIL ENGINEER 2-17-10 DATE

8-9-10
PLANS APPROVAL DATE

REGISTERED PROFESSIONAL ENGINEER
JAMES MAGNUS ORR
No. 67928
Exp. 6/30/11
CIVIL
STATE OF CALIFORNIA

*THE STATE OF CALIFORNIA OR ITS OFFICERS OR AGENTS SHALL NOT BE RESPONSIBLE FOR THE ACCURACY OR COMPLETENESS OF SCANNED COPIES OF THIS PLAN SHEET.*

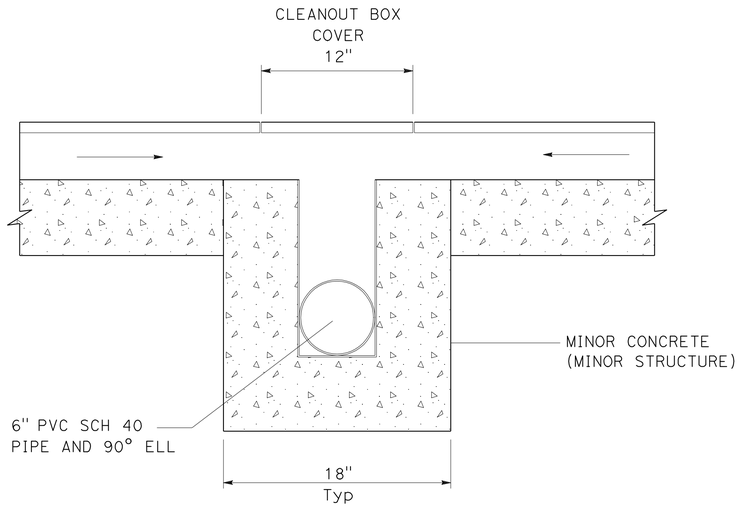


SECTION A-A

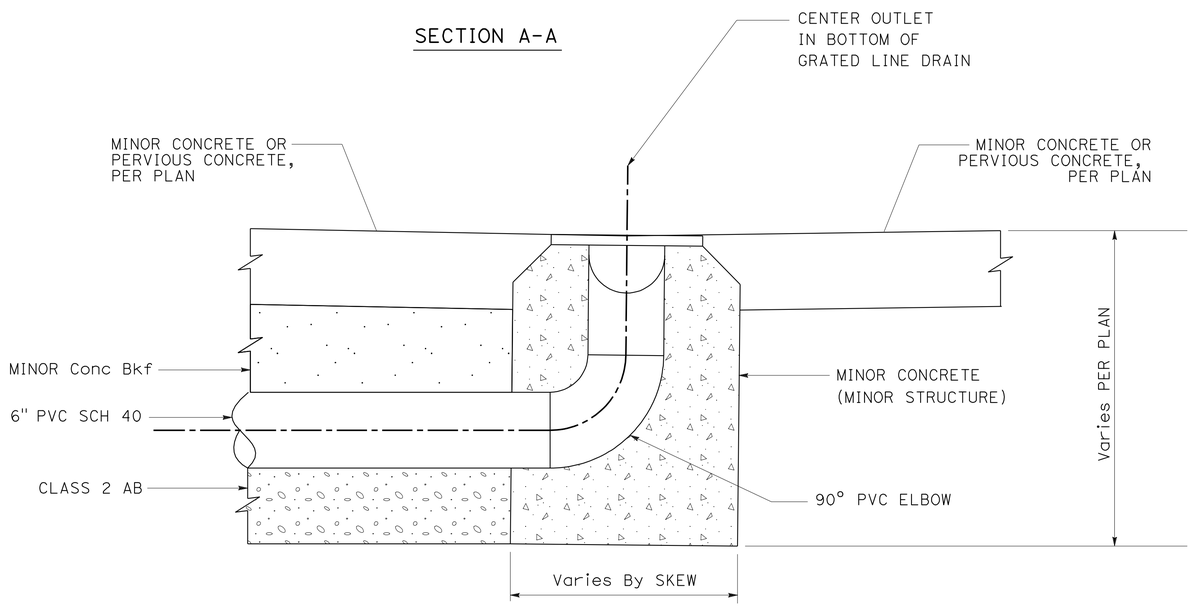


SECTION B-B

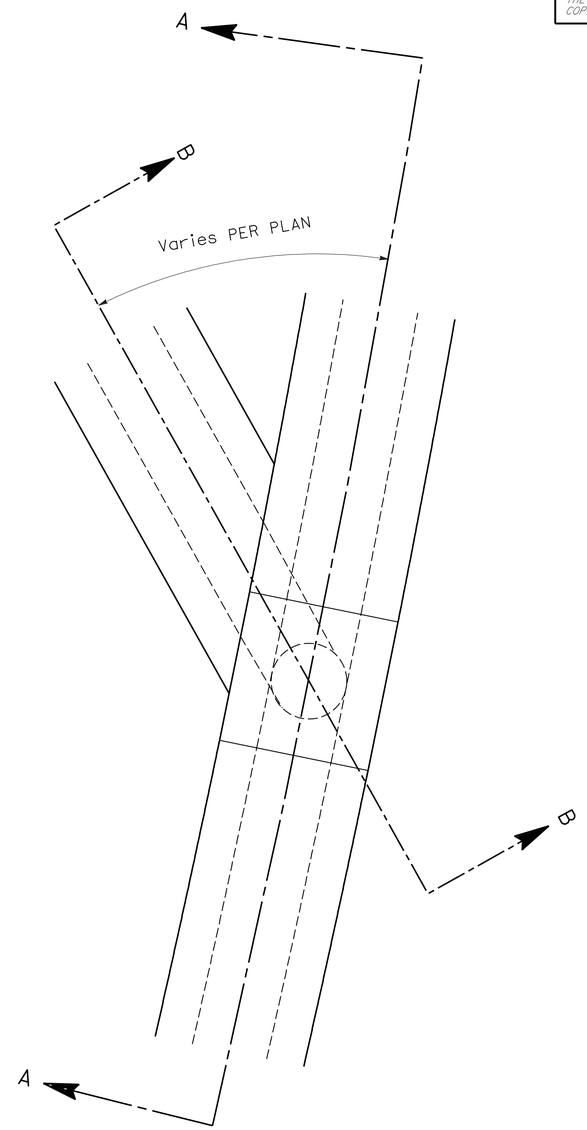


PLAN VIEW

# CLEANOUT BOX (TYPE III)

THIS PLAN ACCURATE FOR DRAINAGE WORK ONLY

## DRAINAGE DETAILS
NO SCALE

**DD-3**

STATE OF CALIFORNIA - DEPARTMENT OF TRANSPORTATION
Caltrans
DESIGN

FUNCTIONAL SUPERVISOR: SCOTT SHAVER
CALCULATED-DESIGNED BY: RAY SEGURA
CHECKED BY: JAMES M. ORR
REVISED BY
DATE REVISED

LAST REVISION 02-17-10
DATE PLOTTED => 13-AUG-2010
TIME PLOTTED => 08:27

| Dist | COUNTY | ROUTE | POST MILES TOTAL PROJECT | SHEET No. | TOTAL SHEETS |
|---|---|---|---|---|---|
| 06 | Tul | 99 | 22.4 | 98 | 335 |

REGISTERED CIVIL ENGINEER 2-17-10 DATE

8-9-10
PLANS APPROVAL DATE

REGISTERED PROFESSIONAL ENGINEER JAMES MAGNUS ORR No. 67928 Exp. 6/30/11 CIVIL STATE OF CALIFORNIA

*THE STATE OF CALIFORNIA OR ITS OFFICERS OR AGENTS SHALL NOT BE RESPONSIBLE FOR THE ACCURACY OR COMPLETENESS OF SCANNED COPIES OF THIS PLAN SHEET.*

# DRAINAGE QUANTITIES

| DRAINAGE PLAN SHEET No. | ⬡ DRAINAGE SYSTEM No. | ○ DRAINAGE SYSTEM ITEM | * MINOR CONCRETE (MINOR STRUCTURE) CY | (N) CLASS 2 AGGREGATE BASE CY | * Misc IRON AND STEEL LB | (N) CLEAN OUT BOX TYPE I EA | (N) CLEAN OUT BOX TYPE II EA | (N) CLEAN OUT BOX TYPE III EA | (N) GRATED LINE DRAIN LF | (N) HEIGHT OF INLET LF | 6" PLASTIC PIPE LF | * MINOR CONCRETE (BACKFILL) CY | DESCRIPTION | STATION | ○ DRAINAGE SYSTEM ITEM | ⬡ DRAINAGE SYSTEM No. |
|---|---|---|---|---|---|---|---|---|---|---|---|---|---|---|---|---|
| | | a | | | | | | | | | | | Exist DI TYPE OS | 7.42' Rt, 23+50.86 "B" LINE (NB) | a | |
| | | b | | | | | | | | | 23.7 | | 6" PVC SCH 40 | | b | |
| | | c | 0.2 | 0.1 | | 1 | | | | 2.5 | | | COB TYPE I | 25.76' Rt, 25+31.04 "B" LINE (NB) | c | |
| | | d | | | | | | | | | 28.5 | | 6" PVC SCH 40 | | d | |
| | | e | 0.2 | 0.1 | | | 1 | | | 2.0 | | | COB TYPE II | 46.57' Rt, 23+09.76 "B" LINE (NB) | e | |
| | | f | | | | | | | | | 61.2 | | 6" PVC SCH 40 | | f | |
| | | g | 0.2 | 0.1 | 21 | 1 | | | | 2.0 | | | COB TYPE I | 93.52' Rt, 22+68.66 "B" LINE (NB) | g | |
| | | h | | | | | | | | | 35.3 | | 6" PVC SCH 40 | | h | |
| | | i | | 0.1 | 21 | 1 | | | | 1.7 | | | COB TYPE I | 110.84' Rt, 22+36.72 "B" LINE (NB) | i | |
| | | j | | 0.5 | | | | | | | 15.9 | 0.8 | 6" PVC SCH 40 | | j | |
| | | k | 0.5 | 0.4 | 262.5 | | | | 12.5 | | | | GLD | | k | |
| D-1 | 1 | l | 0.2 | 0.1 | | | | 1 | | 1.3 | | | COB TYPE III | 118.89' Rt, 22+21.89 "B" LINE (NB) | l | 1 |
| | | m | 0.5 | 0.4 | 262.5 | | | | 12.5 | | | | GLD | | m | |
| | | n | 0.5 | 0.4 | 273.0 | | | | 13.0 | | | | GLD | | n | |
| | | o | 0.2 | 0.1 | | | | 1 | | 1.3 | | | COB TYPE III | 121.23' Rt, 22+49.47 "B" LINE (NB) | o | |
| | | p | 0.5 | 0.4 | 273.0 | | | | 13.0 | | | | GLD | | p | |
| | | q | 0.5 | 0.4 | 262.5 | | | | 12.5 | | | | GLD | | q | |
| | | r | 0.2 | 0.1 | | | | 1 | | 1.5 | | | COB TYPE III | 116.47' Rt, 22+76.74 "B" LINE (NB) | r | |
| | | s | 0.5 | 0.4 | 262.5 | | | | 12.5 | | | | GLD | | s | |
| | | t | | 0.7 | | | | | | | 24.9 | 1.5 | 6" PVC SCH 40 | | t | |
| | | u | | 0.5 | | | | | | | 17.3 | 0.7 | 6" PVC SCH 40 | | u | |
| | | a | | | | | | | | | 44.0 | | 6" PVC SCH 40 | | a | |
| D-1 | 2 | b | 0.2 | 0.1 | 21 | 1 | | | | 3.0 | | | COB TYPE I | 18.99' Rt, 22+86.22 "B" LINE (NB) | b | 2 |
| | | c | | | | | | | | | 81.1 | | 6" PVC SCH 40 | | c | |
| | | d | 0.3 | 0.1 | 21 | 1 | | | | 1.5 | | | COB TYPE I | 20.49' Rt, 22+03.80 "B" LINE (NB) | d | |
| | | a | 1.6 | 0.9 | 672.0 | | | | 32.0 | | | | GLD | | a | |
| | | b | 1.6 | 0.9 | 693.0 | | | | 33.0 | | | | GLD | | b | |
| | | c | 0.2 | 0.1 | 21 | 1 | | | | 1.4 | | | COB TYPE I | 77.99' Rt, 22+57.74 "B" LINE (NB) | c | |
| | | d | | | | | | | | | 18.2 | | 6" PVC SCH 40 | | d | |
| D-1 | 3 | e | | | | | | | | | 19.3 | | 6" PVC SCH 40 | | e | 3 |
| | | f | 0.2 | 0.1 | 21 | 1 | | | | 1.1 | | | COB TYPE I | 78.88' Rt, 22+37.44 "B" LINE (NB) | f | |
| | | g | 1.9 | 0.9 | 684.6 | | | | 32.6 | | | | GLD | | g | |
| | | h | | | | | | | | | 2.1 | | 6" PVC SCH 40 | | h | |
| | | i | 1.1 | 0.70 | 506.1 | | | | 24.1 | | | | GLD | | i | |
| | | j | 0.2 | 0.1 | | | 1 | | | 0.5 | | | COB TYPE II | 45.26' Rt, 21+90.23 "B" LINE (NB) | j | |
| | | a | | | | | | | | | | | Exist DI TYPE OS | 8.59' Rt, 12+64.23 "B" LINE (SB) | a | |
| | | b | | | | | | | | | 38.1 | | 6" PVC SCH 40 | | b | |
| | | c | 0.4 | 0.1 | | | 1 | | | 1.5 | | | COB TYPE II | 31.25' Lt, 12+70.22 "B" LINE (SB) | c | |
| D-2 | 4 | d | 2.2 | 1.0 | 764.4 | | | | 36.4 | | | | GLD | | d | 4 |
| | | e | | | | | | | | | 2.2 | | 6" PVC SCH 40 | | e | |
| | | f | 1.5 | 0.9 | 682.5 | | | | 32.5 | | | | GLD | | f | |
| | | g | 0.1 | 0.1 | 21 | 1 | | | | 0.5 | | | COB TYPE I | 65.02' Lt, 12+11.41 "B" LINE (SB) | g | |
| | | a | | | | | | | | | | | Exist DI TYPE OS | 3.64' Rt, 10+51.42 "B" LINE (SB) | a | |
| | | b | | | | | | | | | 75.2 | | 6" PVC SCH 40 | | b | |
| | | c | 0.4 | 0.1 | | | 1 | | | 1.5 | | | COB TYPE II | 25.76' Rt, 11+19.00 "B" LINE (SB) | c | |
| D-2 | 5 | d | 3.0 | 1.5 | 1138.2 | | | | 54.2 | | | | GLD | | d | 5 |
| | | e | | | | | | | | | 2.1 | | 6" PVC SCH 40 | | e | |
| | | f | 1.5 | 1.0 | 695.1 | | | | 33.1 | | | | GLD | | f | |
| | | g | 0.1 | 0.1 | 21 | 1 | | | | 0.5 | | | COB TYPE I | 64.65' Rt, 11+91.16 "B" LINE (SB) | g | |
| | | a | | | | | | | | | | | Exist DI TYPE OS | 9.19' Rt, 12+62.53 "B" LINE (SB) | a | |
| | | b | | | | | | | | | 18.6 | | 6" PVC SCH 40 | | b | |
| D-2 | 6 | c | 0.4 | 0.1 | 21 | 1 | | | | 4.0 | | | COB TYPE I | 0.71' Lt, 12+44.45 "B" LINE (SB) | c | 6 |
| | | d | | | | | | | | | 83.0 | | 6" PVC SCH 40 | | d | |
| | | e | 0.2 | 0.1 | 21 | 1 | | | | 2.0 | | | COB TYPE I | 3.93' Rt, 11+60.66 "B" LINE (SB) | e | |
| | | TOTAL | 21.3 | | 7641.9 | | | | | | 590.7 | 3.0 | | | | |

* QUANTITIES INCLUDED IN MINOR CONCRETE AND Misc IRON AND STEEL TABLES, SEE SHEET Q-3

(N) NOT A SEPARATE PAY ITEM, FOR INFOMATION ONLY.

## DRAINAGE QUANTITIES

## DQ-1

REVISED BY | DATE REVISED

JAMES M. ORR | JASON CASTILLO

CALCULATED-DESIGNED BY | CHECKED BY

FUNCTIONAL SUPERVISOR: SCOTT SHAVER

STATE OF CALIFORNIA - DEPARTMENT OF TRANSPORTATION

Caltrans® DESIGN

LAST REVISION 02-17-10 | DATE PLOTTED => 17-AUG-2010 | TIME PLOTTED => 08:56

| Dist | COUNTY | ROUTE | POST MILES TOTAL PROJECT | SHEET No. | TOTAL SHEETS |
|---|---|---|---|---|---|
| 06 | Tul | 99 | 22.4 | 99 | 335 |

Michael F Sheridan 6-16-10
REGISTERED CIVIL ENGINEER DATE

8-9-10
PLANS APPROVAL DATE

REGISTERED PROFESSIONAL ENGINEER
MICHAEL SHERIDAN
No. 42948
Exp. 3/31/12
CIVIL
STATE OF CALIFORNIA

*THE STATE OF CALIFORNIA OR ITS OFFICERS OR AGENTS SHALL NOT BE RESPONSIBLE FOR THE ACCURACY OR COMPLETENESS OF SCANNED COPIES OF THIS PLAN SHEET.*

**NOTE:** FOR ACCURATE RIGHT OF WAY AND ACCESS DATA, CONTACT RIGHT OF WAY ENGINEERING AT THE DISTRICT OFFICE.

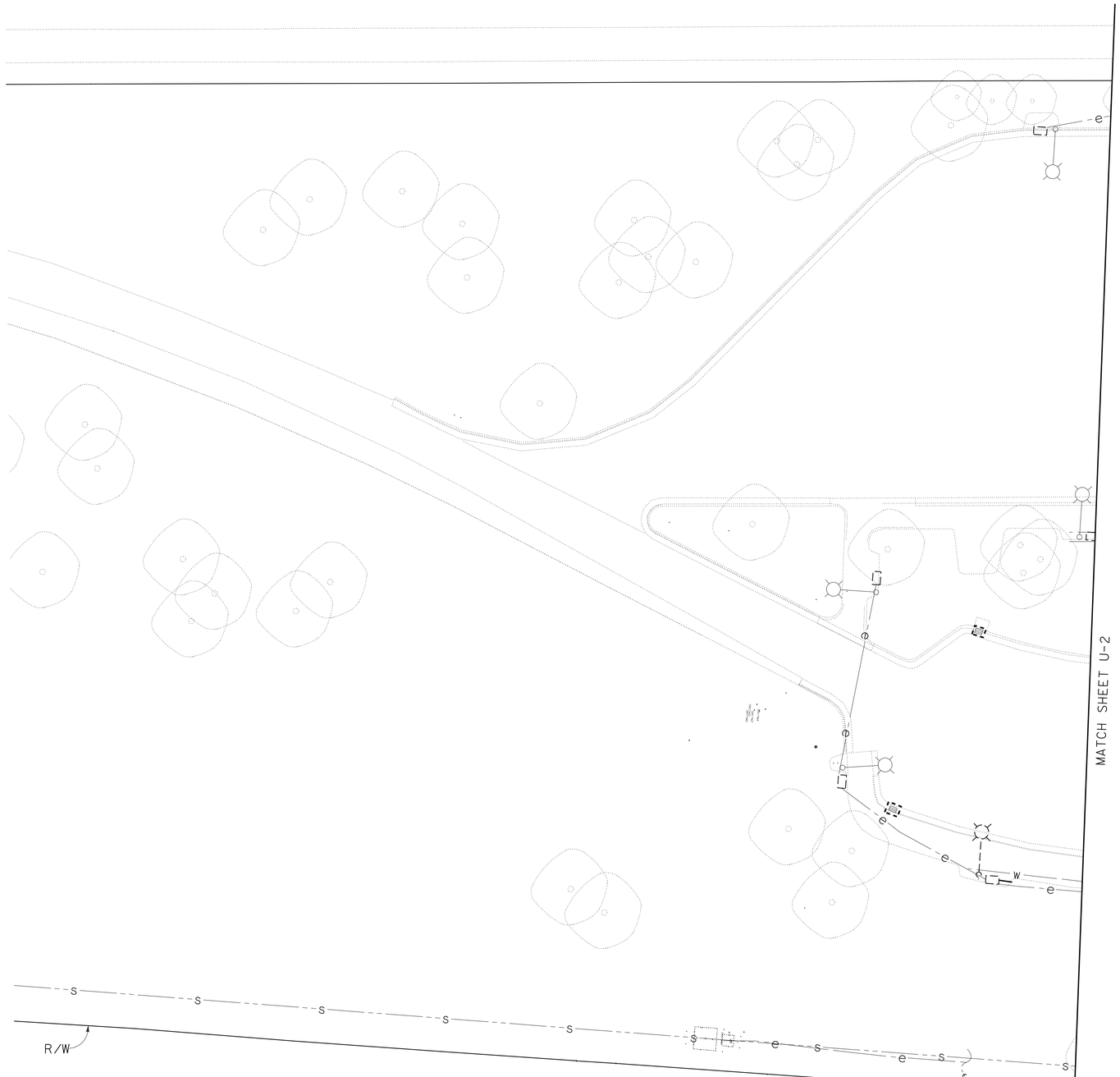


# UTILITY PLAN
## (NORTHBOUND)
SCALE: 1"=20' **U-1**

STATE OF CALIFORNIA - DEPARTMENT OF TRANSPORTATION
Caltrans®
**DESIGN**

FUNCTIONAL SUPERVISOR: MICHAEL SHERIDAN
CALCULATED-DESIGNED BY: GLORIA RAMIREZ
CHECKED BY: RICHARD COLE
REVISED BY
DATE REVISED

LAST REVISION 06-16-10
DATE PLOTTED => 13-AUG-2010
TIME PLOTTED => 11:06

| Dist | COUNTY | ROUTE | POST MILES TOTAL PROJECT | SHEET No. | TOTAL SHEETS |
|---|---|---|---|---|---|
| 06 | Tul | 99 | 22.4 | 100 | 335 |

REGISTERED CIVIL ENGINEER 6-16-10 DATE

8-9-10
PLANS APPROVAL DATE

REGISTERED PROFESSIONAL ENGINEER MICHAEL SHERIDAN No. 42948 Exp. 3/31/12 CIVIL STATE OF CALIFORNIA

*THE STATE OF CALIFORNIA OR ITS OFFICERS OR AGENTS SHALL NOT BE RESPONSIBLE FOR THE ACCURACY OR COMPLETENESS OF SCANNED COPIES OF THIS PLAN SHEET.*

**NOTE:** FOR ACCURATE RIGHT OF WAY AND ACCESS DATA, CONTACT RIGHT OF WAY ENGINEERING AT THE DISTRICT OFFICE.

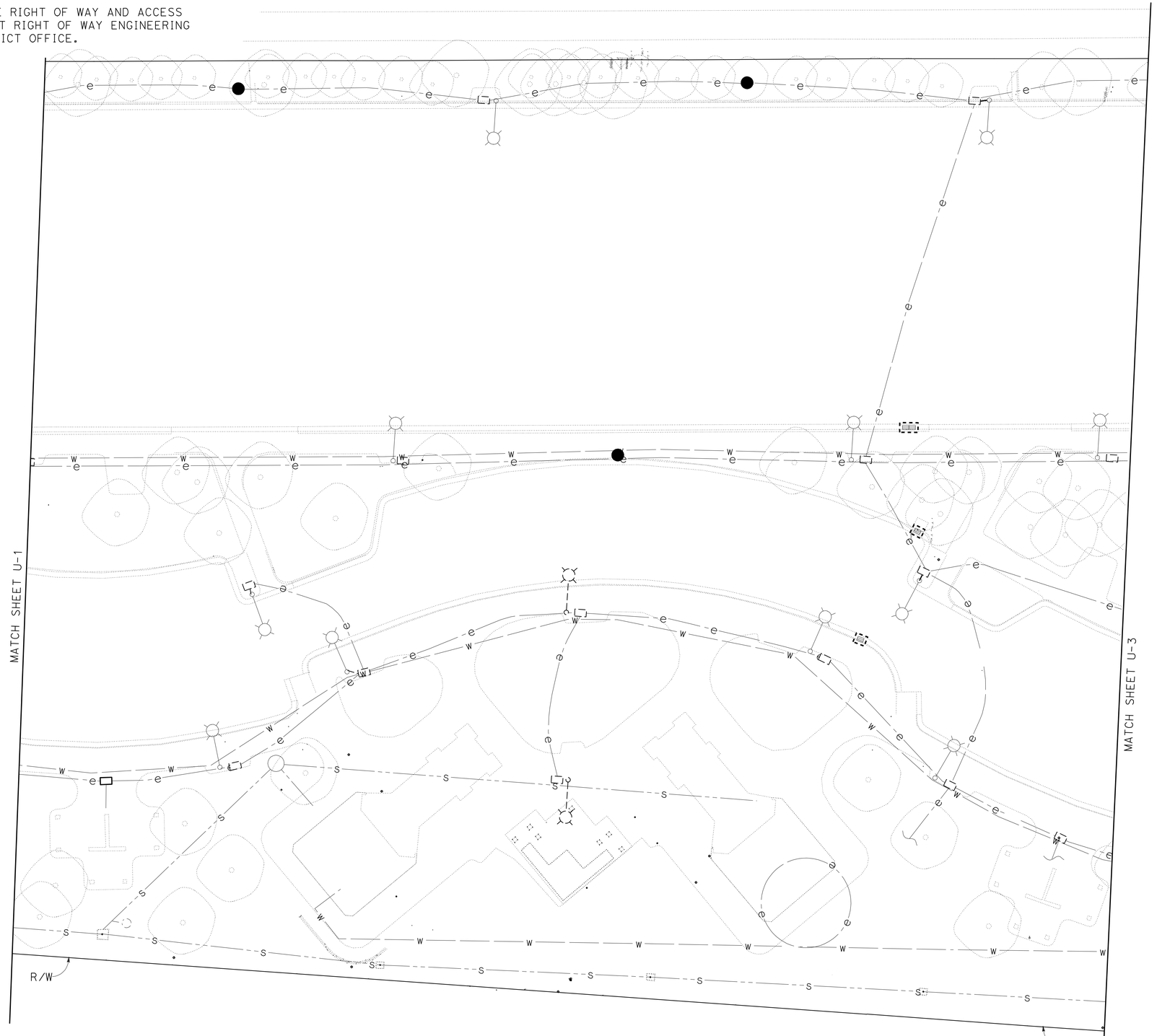


# UTILITY PLAN (NORTHBOUND) U-2

SCALE: 1"=20'

STATE OF CALIFORNIA - DEPARTMENT OF TRANSPORTATION
Caltrans
DESIGN

FUNCTIONAL SUPERVISOR: MICHAEL SHERIDAN
CALCULATED-DESIGNED BY: GLORIA RAMIREZ
CHECKED BY: RICHARD COLE
REVISED BY
DATE REVISED

LAST REVISION 06-16-10
DATE PLOTTED => 13-AUG-2010
TIME PLOTTED => 11:06

BORDER LAST REVISED 4/11/2008
RELATIVE BORDER SCALE IS IN INCHES 0 1 2 3
USERNAME => trcarol
DGN FILE => 60A970ka002.dgn
CU 06340
EA 0A9701